STATE OF CALIFORNIA - DEPARTMENT OF TRANSPORTATION

CONTRACT CHANGE ORDER

Change Requested by: Engineer

CCO: 1 | Suppl. No. 0 | Contract No. 04 - 012024 | Road SF, Ala-80-13.9/14.3, 0.0/1.6 | FED. AID LOC.: ACBRIM-080-1(090)8N

To: Kiewit/FCI/Manson, a JV

You are directed to make the following changes from the plans and specifications or do the following described work not included in the plans and specifications for this contract. ***NOTE: This change order is not effective until approved by the Engineer.***

Description of work to be done, estimate of quantities and prices to be paid. (Segregate between additional work at contract price, agreed price and force account.) Unless otherwise stated, rates for rental of equipment cover only such time as equipment is actually used and no allowance will be made for idle time. This last percentage shown is the net accumulated increase or decrease from the original quantity in the Engineer's Estimate

This is a maintain traffic CCO for the project.

Extra Work at Force Account:

Maintain the roadway and provide additional traffic control for the sole convenience and direction of the public in accordance with Section 7-1.08, Public Convenience, of the Standard Specifications and as authorized by the Engineer.

Provide for the State's share of flagging costs in accordance with Section 12-2.02, Flagging Cost, of the Standard Specifications, and Section 5-1.21, "Force Account Payment" of the Special Provisions.

Estimated cost of Extra Work at Force Account.....$50,000.00

RECEIVED

MAR 25 2002

Estimated Cost: Increase ☑ Decrease ☐ $50,000.00

By reason of this order the time of completion will be adjusted as follows: 0 days

Submitted by

Signature	Resident Engineer: Douglas B. Coe	Date 3-25-02

Approval Recommended by

Signature	Construction Engineer: Douglas B. Coe	Date

Engineer Approval by

Signature P. R. Siegenthaler	(Print name and title) Peter Siegenthaler - Chief	Date 6/10/02

We the undersigned contractor, have given careful consideration to the change proposed and agree, if this proposal is approved, that we will provide all equipment, furnish the materials, except as may otherwise be noted above, and perform all services necessary for the work above specified, and will accept as full payment therefor the prices shown above.

NOTE: If you, the contractor, do not sign acceptance of this order, your attention is directed to the requirements of the specifications as to proceeding with the ordered work and filing a written protest within the time therein specified.

Contractor Acceptance by

Signature	(Print name and title) A.T. Sakoro, Project Director	Date 6/3/02

STATE OF CALIFORNIA - DEPARTMENT OF TRANSPORTATION

CONTRACT CHANGE ORDER MEMORANDUM

DATE: 8/7/02

TO: Peter Siegenthaler / Douglas B. Coe	FILE: E.A. 04 - 012024
	CO-RTE-PM SF, Ala-80-13.9/14.3, 0.0/1.6
FROM: Douglas B. Coe	FED. NO. ACBRIM-080-1(090)8N
CCO#: 1 SUPPLEMENT#: 0 Category Code: 1H3	CONTINGENCY BALANCE (incl. this change) **$53,714,485.80**
COST: **$50,000.00** INCREASE ☑ DECREASE ☐	HEADQUARTERS APPROVAL REQUIRED? ☐ YES ☑ NO
SUPPLEMENTAL FUNDS PROVIDED: **$50,000.00**	IS THIS REQUEST IN ACCORDANCE WITH ENVIRONMENTAL DOCUMENTS? ☑ YES ☐ NO
CCO DESCRIPTION: Flagging & Traffic Control	**PROJECT DESCRIPTION:** SFOBB Skyway

LOCATION: In the City and County of San Francisco and Alameda County in San Francisco and Oakland from 1.3 km to 3.3 km east of the Yerba Buena I

THIS CHANGE ORDER PROVIDES FOR:

Maintain the roadway and provide additional traffic control for the sole convenience and direction of the public in accordance with Section 7-1.08, "Public Convenience", of the Standard Specifications and as authorized by the Engineer.

Payment for the State's share of flagging costs in accordance with Section 12-2.02 "Flagging Costs" of the Standard Specifications, and Section 5-1.21 "Force Account Payment" of the Special Provisions.

This work will be performed as Extra Work at Force Account for an estimated cost of $50,000.00 and can be financed from supplemental funds provided for in the contract.

No adjustment of the contract time is warranted, as this change does not affect the controlling operation.

Maintenance concurrence is not required as this work is anticipated by the contract documents.

The Resident Engineer recommends this change order be approved.

RECEIVED
001706 SEP 17 20

CONCURRED BY:

Construction Engineer:	Douglas Coe	Date 3/25/02
Bridge Engineer:	N/A	Date
FHWA Representative:	Bill Wong	Date
Project Engineer:		Date
Other (specify):		Date
		Date
		Date
District Prior Approval By:	N/A	Date
HQ (Issue Approve) By:	N/A	Date
Resident Engineer's Signature:		Date 8-8-02

ESTIMATE OF COST

	THIS REQUEST	TOTAL TO DATE
ITEMS	$0.00	$0.00
FORCE ACCOUNT	$50,000.00	$50,000.00
AGREED PRICE	$0.00	$0.00
ADJUSTMENT	$0.00	$0.00
TOTAL	$50,000.00	$50,000.00

FEDERAL PARTICIPATION

☑ PARTICIPATING ☐ PARTICIPATING IN PART ☐ NONE
☐ NON-PARTICIPATING (MAINTENANCE) ☐ NON-PARTICIPATING

FEDERAL SEGREGATION (if more than one Funding Source or P.I.P. type)
☑ CCO FUNDED PER CONTRACT ☐ CCO FUNDED AS FOLLOWS

FEDERAL FUNDING SOURCE	PERCENT

STATE OF CALIFORNIA - DEPARTMENT OF TRANSPORTATION

CONTRACT CHANGE ORDER

Change Requested by: Engineer

CCO: 2	Suppl. No. 0	Contract No. 04 - 012024	Road SF, Ala-80-13.9/14.3, 0.0/1.6	FED. AID LOC.: ACIM-080-1(085)N

To: Kiewit/FCI/Manson, a JV

You are directed to make the following changes from the plans and specifications or do the following described work not included in the plans and specifications for this contract. ***NOTE: This change order is not effective until approved by the Engineer.***

Description of work to be done, estimate of quantities and prices to be paid. (Segregate between additional work at contract price, agreed price and force account.) Unless otherwise stated, rates for rental of equipment cover only such time as equipment is actually used and no allowance will be made for idle time. This last percentage shown is the net accumulated increase or decrease from the original quantity in the Engineer's Estimate

Extra Work at Force Account:

Provide labor, crane and pipe pile as approved by the Engineer to accommodate the project groundbreaking ceremony on January 29, 2002 at Treasure Island. The pipe pile shall be 2 foot diameter by 32 feet in length and shall be sand blasted clean and painted with silver paint. The pile will be delivered to the State, to a site yet to be determined, for proper storage after the ceremony.

Payment for this work shall be in accordance with Section 5-1.21, "Extra Work at Force Account" of the Special Provisions.

Estimated cost of Extra Work at Force Account $15,000.00

Estimated Cost: Increase ☑ Decrease ☐ $15,000.00

By reason of this order the time of completion will be adjusted as follows: 0 days

Submitted by

Signature	Resident Engineer: Douglas B. Coe	Date 2-25-02

Approval Recommended by

Signature	Construction Engineer: Douglas B. Coe	Date 5/7/02

Engineer Approval by

Signature	(Print name and title) Peter Siegenthaler - Chief	Date 5/7/02

We the undersigned contractor, have given careful consideration to the change proposed and agree, if this proposal is approved, that we will provide all equipment, furnish the materials, except as may otherwise be noted above, and perform all services necessary for the work above specified, and will accept as full payment therefor the prices shown above.

NOTE: If you, the contractor, do not sign acceptance of this order, your attention is directed to the requirements of the specifications as to proceeding with the ordered work and filing a written protest within the time therein specified.

Contractor Acceptance by

Signature	(Print name and title) A.T. SKORO, Project Director	Date 2/28/02

STATE OF CALIFORNIA - DEPARTMENT OF TRANSPORTATION

CONTRACT CHANGE ORDER

Change Requested by: Engineer

CCO: 2	Suppl. No. 0	Contract No. 04 - 012024	Road SF, Ala-80-13.9/14.3, 0.0/1.6	FED. AID LOC.: ACIM-080-1(085)N

To: Kiewit/FCI/Manson, a JV

You are directed to make the following changes from the plans and specifications or do the following described work not included in the plans and specifications for this contract. ***NOTE: This change order is not effective until approved by the Engineer.***

Description of work to be done, estimate of quantities and prices to be paid. (Segregate between additional work at contract price, agreed price and force account.) Unless otherwise stated, rates for rental of equipment cover only such time as equipment is actually used and no allowance will be made for idle time. This last percentage shown is the net accumulated increase or decrease from the original quantity in the Engineer's Estimate

Extra Work at Force Account:

Provide labor, crane and pipe pile as approved by the Engineer to accommodate the project groundbreaking ceremony on January 29, 2002 at Treasure Island. The pipe pile shall be 2 foot diameter by 32 feet in length and shall be sand blasted clean and painted with silver paint. The pile will be delivered to the State, to a site yet to be determined, for proper storage after the ceremony.

Payment for this work shall be in accordance with Section 5-1.21, "Extra Work at Force Account" of the Special Provisions.

Estimated cost of Extra Work at Force Account $15,000.00

Estimated Cost: Increase ☑ Decrease ☐ $15,000.00

By reason of this order the time of completion will be adjusted as follows: 0 days

Submitted by

Signature	Resident Engineer: Douglas B. Coe	Date 2-25-02

Approval Recommended by

Signature	Construction Engineer: Douglas B. Coe	Date 5/7/02

Engineer Approval by

Signature	(Print name and title) Peter Siegenthaler - Chief	Date 5/7/02

We the undersigned contractor, have given careful consideration to the change proposed and agree, if this proposal is approved, that we will provide all equipment, furnish the materials, except as may otherwise be noted above, and perform all services necessary for the work above specified, and will accept as full payment therefor the prices shown above.

NOTE: If you, the contractor, do not sign acceptance of this order, your attention is directed to the requirements of the specifications as to proceeding with the ordered work and filing a written protest within the time therein specified.

Contractor Acceptance by

Signature	(Print name and title) A.T. SKORO, Project Director	Date 2/28/02

STATE OF CALIFORNIA - DEPARTMENT OF TRANSPORTATION

CONTRACT CHANGE ORDER MEMORANDUM

DATE: 6/22/2006 Page 1 of 1

TO: PETER SIEGENTHALER / DOUG COE, Supervising Br. Eng.

FROM: DOUG COE, Supervising Br. Eng.

FILE: E.A. 04 - 012024
CO-RTE-PM 04-SF,Ala-80-13.9/14.3,0.0/1.6
FED. NO. ACIM-080-1(085)8N

CCO#: 2 | SUPPLEMENT#: 1 | Category Code: **AWZZ**

CONTINGENCY BALANCE (incl. this change) **$28,427,539.58**

COST: **$5,168.00** INCREASE ☑ DECREASE ☐

HEADQUARTERS APPROVAL REQUIRED? ☐ YES ☑ NO

SUPPLEMENTAL FUNDS PROVIDED: **$0.00**

IS THIS REQUEST IN ACCORDANCE WITH ENVIRONMENTAL DOCUMENTS? ☑ YES ☐ NO

CCO DESCRIPTION:
Groundbreaking Ceremony Close-out

PROJECT DESCRIPTION:
REPLACE SFOBB EAST SPAN

LOCATION: IN SAN FRANCISCO AND ALAMEDA COUNTIES IN SAN FRANCISCO AND OAKLAND FROM 1.3 KM EAST OF THE YERBA BUENA ISL

THIS CHANGE ORDER PROVIDES FOR:

Provide labor, crane and a pipe pile as approved by the Engineer to accommodate the January 29, 2002 project groundbreaking ceremony at Treasure Island.

Change Order 2, Supplement 0 was executed at estimated cost of extra work at force account for $15,000.00.

This change order will provide additional funds necessary to cover the cost over-run.

Payment for the work described can be financed from the contract contingency fund.

No Adjustment in contract time is warranted by this change.

No Maintenance approval is required for this change as this does not affect any permanent facility.

RECEIVED 056637 OCT-2 90

CONCURRED BY:

Construction Engineer:	Douglas Coe		Date 6-20-06
Bridge Engineer:	Douglas Coe		Date 6-20-06
FHWA Representative:			Date
Project Engineer:			Date
Other (specify):			Date
			Date
			Date
District Prior Approval By:			Date
HQ (Issue Approve) By:			Date
Resident Engineer's Signature:			Date 6-30-06

ESTIMATE OF COST

	THIS REQUEST	TOTAL TO DATE
ITEMS	$0.00	$0.00
FORCE ACCOUNT	$5,168.00	$20,168.00
AGREED PRICE	$0.00	$0.00
ADJUSTMENT	$0.00	$0.00
TOTAL	$5,168.00	$20,168.00

FEDERAL PARTICIPATION

☑ PARTICIPATING ☐ PARTICIPATING IN PART ☐ NONE
☐ NON-PARTICIPATING (MAINTENANCE) ☐ NON-PARTICIPATING

FEDERAL SEGREGATION (if more than one Funding Source or P.I.P. type)
☑ CCO FUNDED PER CONTRACT ☐ CCO FUNDED AS FOLLOWS

FEDERAL FUNDING SOURCE	PERCENT

STATE OF CALIFORNIA - DEPARTMENT OF TRANSPORTATION

CONTRACT CHANGE ORDER

Change Requested by: Engineer

CCO 2	Suppl. No. 1	Contract No. 04 - 012024	Road 04-SF,Ala-80-13.9/14.3,0.0/1.6	FED. AID LOC.: ACIM-080-1(085)8N

To: KIEWIT / FCI / MANSON a JV

You are directed to make the following changes from the plans and specifications or do the following described work not included in the plans and specifications for this contract. ***NOTE: This change order is not effective until approved by the Engineer.***

Description of work to be done, estimate of quantities and prices to be paid. (Segregate between additional work at contract price, agreed price and force account.) Unless otherwise stated, rates for rental of equipment cover only such time as equipment is actually used and no allowance will be made for idle time. This last percentage shown is the net accumulated increase or decrease from the original quantity in the Engineer's Estimate.

Extra Work at Force Account:

Provide labor, crane and a pipe pile as approved by the Engineer to accommodate the January 29, 2002 project groundbreaking ceremony at Treasure Island.

Payment for this work shall be in accordance with Section 5-1.21, "Extra Work at Force Account" of the Special Provisions.

Provide Additional Funds $5,168.00

Estimated Cost: Increase ☑ Decrease ☐ $5,168.00

By reason of this order the time of completion will be adjusted as follows: 0 days

Submitted by

Signature	Resident Engineer: DOUG COE, Supervising Br. Eng.	Date 6-30-06

Approval Recommended by

Signature	Construction Engineer: DOUG COE, Supervising Br. Eng.	Date 6-30-06

Engineer Approval by

Signature	(Print name and title) PETER SIEGENTHALER - Chief	Date 7-13-06

We the undersigned contractor, have given careful consideration to the change proposed and agree, if this proposal is approved, that we will provide all equipment, furnish the materials, except as may otherwise be noted above, and perform all services necessary for the work above specified, and will accept as full payment therefor the prices shown above.

NOTE: If you, the contractor, do not sign acceptance of this order, your attention is directed to the requirements of the specifications as to proceeding with the ordered work and filing a written protest within the time therein specified.

Contractor Acceptance by

Signature	(Print name and title) Lee Zink Project Director	Date 7/7/06

STATE OF CALIFORNIA - DEPARTMENT OF TRANSPORTATION

CONTRACT CHANGE ORDER MEMORANDUM

DATE: 6/22/2006 Page 1 of 1

TO: PETER SIEGENTHALER / DOUG COE, Supervising Br. Eng.

FROM: DOUG COE, Supervising Br. Eng.

FILE: E.A. 04 - 012024
CO-RTE-PM 04-SF,Ala-80-13.9/14.3,0.0/1.6
FED. NO. ACIM-080-1(085)8N

CCO#: 2 | SUPPLEMENT#: 1 | Category Code: **AWZZ**

CONTINGENCY BALANCE (incl. this change) **$28,427,539.58**

COST: **$5,168.00** INCREASE ☑ DECREASE ☐

HEADQUARTERS APPROVAL REQUIRED? ☐ YES ☑ NO

SUPPLEMENTAL FUNDS PROVIDED: **$0.00**

IS THIS REQUEST IN ACCORDANCE WITH ENVIRONMENTAL DOCUMENTS? ☑ YES ☐ NO

CCO DESCRIPTION:
Groundbreaking Ceremony Close-out

PROJECT DESCRIPTION:
REPLACE SFOBB EAST SPAN

LOCATION: IN SAN FRANCISCO AND ALAMEDA COUNTIES IN SAN FRANCISCO AND OAKLAND FROM 1.3 KM EAST OF THE YERBA BUENA ISL

THIS CHANGE ORDER PROVIDES FOR:

Provide labor, crane and a pipe pile as approved by the Engineer to accommodate the January 29, 2002 project groundbreaking ceremony at Treasure Island.

Change Order 2, Supplement 0 was executed at estimated cost of extra work at force account for $15,000.00.

This change order will provide additional funds necessary to cover the cost over-run.

Payment for the work described can be financed from the contract contingency fund.

No Adjustment in contract time is warranted by this change.

No Maintenance approval is required for this change as this does not affect any permanent facility.

RECEIVED 056637 OCT-2 90

CONCURRED BY:

Construction Engineer:	Douglas Coe		Date 6-20-06
Bridge Engineer:	Douglas Coe		Date 6-20-06
FHWA Representative:			Date
Project Engineer:			Date
Other (specify):			Date
			Date
			Date
District Prior Approval By:			Date
HQ (Issue Approve) By:			Date
Resident Engineer's Signature:			Date 6-30-06

ESTIMATE OF COST

	THIS REQUEST	TOTAL TO DATE
ITEMS	$0.00	$0.00
FORCE ACCOUNT	$5,168.00	$20,168.00
AGREED PRICE	$0.00	$0.00
ADJUSTMENT	$0.00	$0.00
TOTAL	$5,168.00	$20,168.00

FEDERAL PARTICIPATION

☑ PARTICIPATING ☐ PARTICIPATING IN PART ☐ NONE
☐ NON-PARTICIPATING (MAINTENANCE) ☐ NON-PARTICIPATING

FEDERAL SEGREGATION (if more than one Funding Source or P.I.P. type)
☑ CCO FUNDED PER CONTRACT ☐ CCO FUNDED AS FOLLOWS

FEDERAL FUNDING SOURCE	PERCENT

STATE OF CALIFORNIA - DEPARTMENT OF TRANSPORTATION

CONTRACT CHANGE ORDER

Change Requested by: Engineer

CCO: 3 | Suppl. No. 0 | Contract No. 04 - 012024 | Road SF, Ala-80-13.9/14.3, 0.0/1.6 | FED. AID LOC.: ACBRIM-080-1(090)8N

To: Kiewit/FCI/Manson, a JV

You are directed to make the following changes from the plans and specifications or do the following described work not included in the plans and specifications for this contract. ***NOTE: This change order is not effective until approved by the Engineer.***

Description of work to be done, estimate of quantities and prices to be paid. (Segregate between additional work at contract price, agreed price and force account.) Unless otherwise stated, rates for rental of equipment cover only such time as equipment is actually used and no allowance will be made for idle time. This last percentage shown is the net accumulated increase or decrease from the original quantity in the Engineer's Estimate

Extra Work at Force Account:

In accordance with Section 5-1.11, "Partnering" of the Special Provisions, a one day "Training in Partnering Concepts" forum will be conducted for this contract. If "Partnering" is approved by the Engineer, "Partnering Workshops" will be conducted as needed throughout the life of the contract.

The State will reimburse the Contractor for the full cost involved in providing a trainer and a workshop site for the "Training in Partnering Concepts" forum in accordance with Section 5-1.11, "Partnering" of the Special Provisions.

The State will reimburse the Contractor for the State's share of the cost involved in providing a "Partnering Workshop", including a facilitator and workshop site in accordance with section 5-1.11, "Partnering" of the Special Provisions.

Costs will be reimbursed as Extra Work at Force Account in accordance with Section 5-1.21, "Force Account Payment" of the Special Provisions except that no markups or surcharges will be allowed.

Estimated cost of Extra Work at Force Account $75,000.00

RECEIVED
MAR 25 2002

Estimated Cost: Increase ☑ Decrease ☐ $75,000.00

By reason of this order the time of completion will be adjusted as follows: 0 days

Submitted by

Signature	Resident Engineer: Douglas B. Coe	Date 3-25-02

Approval Recommended by

Signature	Construction Engineer: Douglas B. Coe	Date

Engineer Approval by

Signature	(Print name and title) Peter Siegenthaler - Chief	Date 6/10/02

We the undersigned contractor, have given careful consideration to the change proposed and agree, if this proposal is approved, that we will provide all equipment, furnish the materials, except as may otherwise be noted above, and perform all services necessary for the work above specified, and will accept as full payment therefor the prices shown above.

NOTE: If you, the contractor, do not sign acceptance of this order, your attention is directed to the requirements of the specifications as to proceeding with the ordered work and filing a written protest within the time therein specified.

Contractor Acceptance by

Signature	(Print name and title) A.T. Skoro, Project Director	Date 6/3/02

STATE OF CALIFORNIA - DEPARTMENT OF TRANSPORTATION

CONTRACT CHANGE ORDER MEMORANDUM

DATE: 8/7/02

TO: Peter Siegenthaler / Douglas B. Coe	FILE: E.A. 04 - 012024
	CO-RTE-PM SF, Ala-80-13.9/14.3, 0.0/1.6
FROM: Douglas B. Coe	FED. NO. ACBRIM-080-1(090)8N
CCO#: 3 SUPPLEMENT#: 0 Category Code: 1D3	CONTINGENCY BALANCE (incl. this change) $53,714,485.80
COST: $75,000.00 INCREASE ☑ DECREASE ☐	HEADQUARTERS APPROVAL REQUIRED? ☐ YES ☑ NO
SUPPLEMENTAL FUNDS PROVIDED: $75,000.00	IS THIS REQUEST IN ACCORDANCE WITH ENVIRONMENTAL DOCUMENTS? ☑ YES ☐ NO
CCO DESCRIPTION: Partnering	**PROJECT DESCRIPTION:** SFOBB Skyway

LOCATION: In the City and County of San Francisco and Alameda County in San Francisco and Oakland from 1.3 km to 3.3 km east of the Yerba Buena I

THIS CHANGE ORDER PROVIDES FOR:

reimbursing the Contractor for the State's share of the costs involved with the initial partnering session and additional progress sessions throughout the life of the contract in accordance with Section 5-1.11, "Partnering", of the Special Provisions.

This work will be performed as Extra Work at Force Account at an estimated cost of $75,000.00 which will be financed from supplemental funds provided for in this contract.

No adjustment of contract time is warranted by this change.

Maintenance concurrence is not required as this work is anticipated by the contract documents.

The Resident Engineer recommends this change order be approved.

RECEIVED
001711 SEP 17 20

CONCURRED BY:

Construction Engineer:	Douglas Coe	Date
Bridge Engineer:	N/A	Date
FHWA Representative:	Bill Wong	Date
Project Engineer:		Date
Other (specify):		Date
		Date
		Date
District Prior Approval By:		Date
HQ (Issue Approve) By:	N/A	Date
Resident Engineer's Signature:		Date 8-8-02

ESTIMATE OF COST

	THIS REQUEST	TOTAL TO DATE
ITEMS	$0.00	$0.00
FORCE ACCOUNT	$75,000.00	$75,000.00
AGREED PRICE	$0.00	$0.00
ADJUSTMENT	$0.00	$0.00
TOTAL	$75,000.00	$75,000.00

FEDERAL PARTICIPATION

☑ PARTICIPATING ☐ PARTICIPATING IN PART ☐ NONE
☐ NON-PARTICIPATING (MAINTENANCE) ☐ NON-PARTICIPATING

FEDERAL SEGREGATION (if more than one Funding Source or P.I.P. type)
☑ CCO FUNDED PER CONTRACT ☐ CCO FUNDED AS FOLLOWS

FEDERAL FUNDING SOURCE	PERCENT

CONTRACT CHANGE ORDER

Change Requested by: Engineer

CCO: 3	Suppl. No. 1	Contract No. 04 - 012024	Road 04-SF,Ala-80-13.9/14.3,0.0/1.6	FED. AID LOC.: ACIM-080-1(085)8N

To: **KIEWIT / FCI / MANSON a JV**

You are directed to make the following changes from the plans and specifications or do the following described work not included in the plans and specifications for this contract. ***NOTE: This change order is not effective until approved by the Engineer.***

Description of work to be done, estimate of quantities and prices to be paid. (Segregate between additional work at contract price, agreed price and force account.) Unless otherwise stated, rates for rental of equipment cover only such time as equipment is actually used and no allowance will be made for idle time. This last percentage shown is the net accumulated increase or decrease from the original quantity in the Engineer's Estimate.

Extra Work at Force Account:

In accordance with Section 5-1.11, "Partnering", of the Special Provisions, reimburse the Contractor for the State's share of the costs involved with the initial partnering session and additional progress sessions throughout the life of the contract.

This work will be performed as Extra Work at Force Account at an estimated cost of $75,000.00 which will be financed from supplemental funds provided for in this contract.

No adjustment of contract time is warranted by this change.

SUPPLEMENT No. 1
The accrued cost through April 2003 is $93,000.00. Supplement No. 1 increases the budget by $75,000.00, for a total of $150,000.00.

Estimated cost of Extra Work at Force Account $75,000.00

Total estimated cost of this change, including this Supplement 1.....$ 150,000.00

Estimated Cost: Increase ☑ **Decrease** ☐ **$75,000.00**

By reason of this order the time of completion will be adjusted as follows: 0 days

Submitted by

Signature	Resident Engineer: COE D.	Date 5-16-03

Approval Recommended by

Signature	Construction Engineer: COE D.	Date

Engineer Approval by

Signature	(Print name and title) PETER SIEGENTHALER - Chief	Date

We the undersigned contractor, have given careful consideration to the change proposed and agree, if this proposal is approved, that we will provide all equipment, furnish the materials, except as may otherwise be noted above, and perform all services necessary for the work above specified, and will accept as full payment therefor the prices shown above.

NOTE: If you, the contractor, do not sign acceptance of this order, your attention is directed to the requirements of the specifications as to proceeding with the ordered work and filing a written protest within the time therein specified.

Contractor Acceptance by

Signature	(Print name and title) A.T. Skoro, Project Director	Date 5/20/03

STATE OF CALIFORNIA - DEPARTMENT OF TRANSPORTATION

CONTRACT CHANGE ORDER MEMORANDUM

DATE: 5/16/03

TO: PETER SIEGENTHALER / COE D.	FILE: E.A. 04 - 012024
FROM: COE D.	CO-RTE-PM 04-SF,Ala-80-13.9/14.3,0.0/1.6
	FED. NO. ACIM-080-1(085)8N
CCO#: 3 SUPPLEMENT#: 1 Category Code: AUZZ	CONTINGENCY BALANCE (incl. this change) $63,806,109.32
COST: $75,000.00 INCREASE ☑ DECREASE ☐	HEADQUARTERS APPROVAL REQUIRED? ☐ YES ☑ NO
SUPPLEMENTAL FUNDS PROVIDED: $0.00	IS THIS REQUEST IN ACCORDANCE WITH ENVIRONMENTAL DOCUMENTS? ☑ YES ☐ NO
CCO DESCRIPTION: Partnering - additional costs	**PROJECT DESCRIPTION:** REPLACE SFOBB EAST SPAN

LOCATION: IN SAN FRANCISCO AND ALAMEDA COUNTIES IN SAN FRANCISCO AND OAKLAND FROM 1.3 KM EAST OF THE YERBA BUENA ISL

THIS CHANGE ORDER PROVIDES FOR:

reimbursing the Contractor for the State's share of the costs involved with the initial partnering session and additional progress sessions throughout the life of the contract in accordance with Section 5-1.11, "Partnering", of the Special Provisions.

This work will be performed as Extra Work at Force Account at an estimated cost of $75,000.00 which will be financed from supplemental funds provided for in this contract.

No adjustment of contract time is warranted by this change.

Maintenance concurrence is not required as this work is anticipated by the contract documents.

The Resident Engineer recommends this change order be approved.

SUPPLEMENT No. 1
The accrued cost through April 2003 is $93,000.00. Supplement No. 1 increases the budget by $75,000.00, for a total of $150,000.00.

RECEIVED 03 MAY 16 PM 4:00

CONCURRED BY:	
Construction Engineer:	Date
Bridge Engineer:	Date
FHWA Representative:	Date
Project Engineer:	Date
Other (specify):	Date
	Date
	Date
District Prior Approval By:	Date
HQ (Issue Approve) By:	Date
Resident Engineer's Signature:	Date 5-16-03

ESTIMATE OF COST

	THIS REQUEST	TOTAL TO DATE
ITEMS	$0.00	$0.00
FORCE ACCOUNT	$75,000.00	$150,000.00
AGREED PRICE	$0.00	$0.00
ADJUSTMENT	$0.00	$0.00
TOTAL	$75,000.00	$150,000.00

FEDERAL PARTICIPATION

☑ PARTICIPATING ☐ PARTICIPATING IN PART ☐ NONE
☐ NON-PARTICIPATING (MAINTENANCE) ☐ NON-PARTICIPATING

FEDERAL SEGREGATION (if more than one Funding Source or P.I.P. type)
☑ CCO FUNDED PER CONTRACT ☐ CCO FUNDED AS FOLLOWS

FEDERAL FUNDING SOURCE	PERCENT

CONTRACT CHANGE ORDER

Change Requested by: Engineer

CCO: 4 | Suppl. No. 0 | Contract No. 04 - 012024 | Road SF, Ala-80-13.9/14.3, 0.0/1.6 | FED. AID LOC.: ACBRIM-080-1(090)8N

To: Kiewit/FCI/Manson, a JV

You are directed to make the following changes from the plans and specifications or do the following described work not included in the plans and specifications for this contract. ***NOTE: This change order is not effective until approved by the Engineer.***

Description of work to be done, estimate of quantities and prices to be paid. (Segregate between additional work at contract price, agreed price and force account.) Unless otherwise stated, rates for rental of equipment cover only such time as equipment is actually used and no allowance will be made for idle time. This last percentage shown is the net accumulated increase or decrease from the original quantity in the Engineer's Estimate

Extra Work at Force Account:

Establish a Dispute Review Board (DRB) for this contract as provided in Section 5-1.12, "Dispute Review Board" of the Special Provisions.

The DRB agreement and certifications of the Contractor, State and DRB members (see sheets 2 thru 9 of this change order) shall be executed by the parties and made a part of this contract upon full execution.

The cost of this work shall be borne equally by the contractor and the State, as provided in the above agreement. No markups or surcharges will be allowed in payment of the State's share of the cost of the work provided herein.

Estimated cost of Extra Work at Force Account $100,000.00

RECEIVED
MAR 25 2002

Estimated Cost: Increase ☑ Decrease ☐ $100,000.00

By reason of this order the time of completion will be adjusted as follows: 0 days

Submitted by

Signature	Resident Engineer: Douglas B. Coe	Date 3-25-02

Approval Recommended by

Signature	Construction Engineer: Douglas B. Coe	Date

Engineer Approval by

Signature	(Print name and title) Peter Siegenthaler - Chief	Date 8/16/02

We the undersigned contractor, have given careful consideration to the change proposed and agree, if this proposal is approved, that we will provide all equipment, furnish the materials, except as may otherwise be noted above, and perform all services necessary for the work above specified, and will accept as full payment therefor the prices shown above.

NOTE: If you, the contractor, do not sign acceptance of this order, your attention is directed to the requirements of the specifications as to proceeding with the ordered work and filing a written protest within the time therein specified.

Contractor Acceptance by

Signature	(Print name and title) A.T. Skolo, Project Director	Date 7/1/02

STATE OF CALIFORNIA - DEPARTMENT OF TRANSPORTATION

CONTRACT CHANGE ORDER MEMORANDUM

DATE: 8/7/02

TO: Peter Siegenthaler / Douglas B. Coe	FILE: E.A. 04 - 012024
FROM: Douglas B. Coe	CO-RTE-PM SF, Ala-80-13.9/14.3, 0.0/1.6
	FED. NO. ACBRIM-080-1(090)8N
CCO#: 4 SUPPLEMENT#: 0 Category Code: 1D3	CONTINGENCY BALANCE (incl. this change) **$53,714,485.80**
COST: **$100,000.00** INCREASE ☑ DECREASE ☐	HEADQUARTERS APPROVAL REQUIRED? ☐ YES ☑ NO
SUPPLEMENTAL FUNDS PROVIDED: **$100,000.00**	IS THIS REQUEST IN ACCORDANCE WITH ENVIRONMENTAL DOCUMENTS? ☑ YES ☐ NO
CCO DESCRIPTION: DRB - Disputes Resolution Board	**PROJECT DESCRIPTION:** SFOBB Skyway

LOCATION: In the City and County of San Francisco and Alameda County in San Francisco and Oakland from 1.3 km to 3.3 km east of the Yerba Buena I

THIS CHANGE ORDER PROVIDES FOR:

establishing a Disputes Review Board (DRB) in accordance with the terms specified in the DRB specifications, guidelines, Agreement and Certifications as specified in Section 5-1.12 of the Special Provisions. The purpose of the Board is to assist in the resolution of disputes and potential claims arising from the contract work.

The cost of providing a DRB for this contract shall be borne equally by the Contractor and the State. The State's portion will be paid as Extra Work at Force Account. Monies for this work has been provided for through Supplemental Funds in the amount of $100,000.00.

No adjustment of contract time is warranted by this change.

Design and Maintenance concurrence is not required as this work is anticipated by the contract documents.

The Resident Engineer recommends this change order be approved.

RECEIVED
001705 SEP 17 02

CONCURRED BY:			
Construction Engineer:	Douglas Coe	Date	8/7/02
Bridge Engineer:	N/A	Date	
FHWA Representative:	Bill Wong	Date	
Project Engineer:		Date	
Other (specify):		Date	
		Date	
		Date	
District Prior Approval By:		Date	
HQ (Issue Approve) By:		Date	
Resident Engineer's Signature:		Date	8-8-02

ESTIMATE OF COST

	THIS REQUEST	TOTAL TO DATE
ITEMS	$0.00	$0.00
FORCE ACCOUNT	$100,000.00	$100,000.00
AGREED PRICE	$0.00	$0.00
ADJUSTMENT	$0.00	$0.00
TOTAL	$100,000.00	$100,000.00

FEDERAL PARTICIPATION

☑ PARTICIPATING ☐ PARTICIPATING IN PART ☐ NONE
☐ NON-PARTICIPATING (MAINTENANCE) ☐ NON-PARTICIPATING

FEDERAL SEGREGATION (if more than one Funding Source or P.I.P. type)
☑ CCO FUNDED PER CONTRACT ☐ CCO FUNDED AS FOLLOWS

FEDERAL FUNDING SOURCE	PERCENT

CONTRACT CHANGE ORDER

CCO: 4	Suppl. No. 1	Contract No, 04 - 012024	Road 04-SF,Ala-80-13.9/14.3,0.0/1.6	FED. AID LOC.: ACIM-080-1(085)8N

To: **KIEWIT / FCI / MANSON a JV**

You are directed to make the following changes from fhe plans and specifications or do fhe following described work not included in the plans and specifications for this contract. **NOTE: This change order is not effective until approved by the Engineer.**

Description of work to be done, estimate of quantities and prices to be paid. (Segregate between additional work at contract price, agreed price and force account.) Unless otherwise stated, rates for rental of equipment cover only such time as equipment is actually used and no allowance will be made for idle time. This last percentage shown is the net accumulated increase or decrease from the original quantity in the Engineer's Estimate

Adjustment of Compensation at Lump Sum:

Replace the existing section; 5-1.12, "Disputes Review Board" in the Contract Special Provisions with the revised section 5-1.12, "DISPUTES REVIEW BOARD" as attached to this contract change order.

This change constitutes a Zero cost adjustment for both the Contractor and the State.

Adustment of Compensation at an Agreed Lump Sum: $0.00

Estimated Cost: Increase ☐ Decrease ☐ $0.00

By reason of this order the time of completion will be adjusted as follows: 0 days

Submitted by

Signature	Resident Engineer: COE D.	Date 5-25-03

Approval Recommended by

Signature	Construction Engineer: COE D.	Date 5-25-03

Engineer Approval by

Signature	(Print name and title) PETER SIEGENTHALER - Chief	Date

We the undersigned contractor, have given careful consideration to the change proposed and agree, if this proposal is approved, that we will provide all equipment, furnish the materials, except as may otherwise be noted above, and perform all services necessary for the work above specified, and will accept as full payment therefor the prices shown above.

NOTE: If you, the contractor, do not sign acceptance of this order, your attention is directed to the requirements of the specifications as to proceeding with the ordered work and filing a written protest within the time therein specified.

Contractor Acceptance by

Signature	(Print name and title) A.T. Sikes Project Director	Date 6/5/03

STATE OF CALIFORNIA - DEPARTMENT OF TRANSPORTATION

CONTRACT CHANGE ORDER MEMORANDUM

DATE: 8/26/02

TO: PETER SIEGENTHALER / COE D.	FILE: E.A. 04 - 012024
	CO-RTE-PM 04-SF,Ala-80-13.9/14.3,0.0/1.6
FROM: COE D.	FED. NO. ACIM-080-1(085)8N
CCO#: 4 SUPPLEMENT#: 1 Category Code: AR ZZ	CONTINGENCY BALANCE (incl. this change) $53,714,485.80
COST: $0.00 INCREASE ☐ DECREASE ☐	HEADQUARTERS APPROVAL REQUIRED? ☑ YES ☐ NO
SUPPLEMENTAL FUNDS PROVIDED: $0.00	IS THIS REQUEST IN ACCORDANCE WITH ENVIRONMENTAL DOCUMENTS? ☑ YES ☐ NO
CCO DESCRIPTION: DRB Specification Change	**PROJECT DESCRIPTION:** REPLACE SFOBB EAST SPAN

LOCATION: IN SAN FRANCISCO AND ALAMEDA COUNTIES IN SAN FRANCISCO AND OAKLAND FROM 1.3 KM EAST OF THE

THIS CHANGE ORDER PROVIDES FOR:

replacing the existing Section: 5-1.12, "Disputes Review Board" in the contract Special Provisions with the revised Section 5-1.12, "Disputes Review Board", attached hereto.

This Contract was awarded on January 17, 2002, after which the most recent DRB SSP was approved containing the new rates of compensation for the DRB members.

This change constitutes a Zero cost adjustment for both the Contractor and the State.

No adjustment of contract time is warranted by this change.

Maintenance concurrence is not required as this change is related to contract administration and does not effect any permanent facility.

The Resident Engineer recommends this change order be approved.

CONCURRED BY:

Construction Engineer:	Douglas Coe	Date 5-21-03
Bridge Engineer:	N/A	Date
FHWA Representative:	Bill Wong	Date
Project Engineer:		Date
Other (specify):		Date
		Date
		Date
District Prior Approval By:		Date
HQ (Issue Approve) By:		Date
Resident Engineer's Signature:		Date 5-21-03

ESTIMATE OF COST

	THIS REQUEST	TOTAL TO DATE
ITEMS	$0.00	$0.00
FORCE ACCOUNT	$0.00	$100,000.00
AGREED PRICE	$0.00	$0.00
ADJUSTMENT	$0.00	$0.00
TOTAL	$0.00	$100,000.00

FEDERAL PARTICIPATION

☑ PARTICIPATING ☐ PARTICIPATING IN PART ☐ NONE
☐ NON-PARTICIPATING (MAINTENANCE) ☐ NON-PARTICIPATING

FEDERAL SEGREGATION (if more than one Funding Source or P.I.P. type)
☑ CCO FUNDED PER CONTRACT ☐ CCO FUNDED AS FOLLOWS

FEDERAL FUNDING SOURCE	PERCENT

STATE OF CALIFORNIA - DEPARTMENT OF TRANSPORTATION

CONTRACT CHANGE ORDER

Change Requested by: Engineer

CCO: 4 Suppl. No. 2 Contract No 04 - 012024 Road 04-SF,Ala-80-13.9/14.3,0.0/1.6 FED. AID LOC.: ACIM-080-1(085)8N

To: KIEWIT / FCI / MANSON a JV

You are directed to make the following changes from the plans and specifications or do the following described work not included in the plans and specifications for this contract. ***NOTE: This change order is not effective until approved by the Engineer.***

Description of work to be done, estimate of quantities and prices to be paid. (Segregate between additional work at contract price, agreed price and force account.) Unless otherwise stated, rates for rental of equipment cover only such time as equipment is actually used and no allowance will be made for idle time. This last percentage shown is the net accumulated increase or decrease from the original

Extra Work at Force Account:

Continue the DRB process as provided for in Contract Change Order No. 4 Supplement 0.

Payments to the DRB will be made in accordance with the Contract Change Order No. 4 Supplement 1 revised Section 5-1.12, "Dispute Review Board" of the Special Provisions.

The cost of this work shall be borne equally by the contractor and the State, as provided in the above agreement. No markups or surcharges will be allowed in payment of the State's share of the cost of the work provided herein.

Estimated cost of Extra Work at Force Account $50,000.00

Estimated Cost: Increase ☑ Decrease ☐ $50,000.00

By reason of this order the time of completion will be adjusted as follows: 0 days

Submitted by

Signature	Resident Engineer	Date
	DOUG COE, Supervising Br. Eng	2-14-07

Approval Recommended by

Signature	Construction Engineer	Date
	DOUG COE	2-14-07

Engineer Approval by

Signature	Construction Manager	Date
	PETER SIEGENTHALER	3/16/07

We the undersigned contractor, have given careful consideration to the change proposed and agree, if this proposal is approved that we will provide all equipment, furnish the materials, except as may otherwise be noted above, and perform all services necessary for the work above specified, and will accept as full payment therefor the prices shown above.

NOTE: If you, the contractor, do not sign acceptance of this order, your attention is directed to the requirements of the specifications as to proceeding with the ordered work and filing a written protest within the time therein specified.

Contractor Acceptance by

Signature	(Print name and title)	Date
	Lee Zink Project Director	2/24/07

STATE OF CALIFORNIA - DEPARTMENT OF TRANSPORTATION

CONTRACT CHANGE ORDER MEMORANDUM

DATE: 2/14/2007 Page 1 of 1

TO: PETER SIEGENTHALER / DOUG COE, Supervising Br. Eng.

FROM: DOUG COE, Supervising Br. Eng.

FILE: E.A. 04 - 012024
CO-RTE-PM 04-SF,Ala-80-13.9/14.3,0.0/1.6
FED. NO. ACIM-080-1(085)8N

CCO# 4 SUPPLEMENT#: 2 Category Cod CXSA

CONTINGENCY BALANCE (incl. this change $8,527,845.09

COST: $50,000.00 INCREASE ☑ DECREASE ☐

HEADQUARTERS APPROVAL REQUIRED? ☐ YES ☑ NO

SUPPLEMENTAL FUNDS PROVIDED: $0.00

IS THIS REQUEST IN ACCORDANCE WITH ENVIRONMENTAL DOCUMENTS? ☑ YES ☐ NO

CCO DESCRIPTION:
Additional Funds for DRB

PROJECT DESCRIPTION:
REPLACE SFOBB EAST SPAN

Original Contract Time	Time Adj. This Change:	Previously Approved CCO Time Adjustments:	Percentage Time Adjusted (including this change)	Total # of Unreconciled Deferred Time CCO(s): (including this change)
1000 Day(s)	0 Day(s)	424 Day(s)	42 %	0

THIS CHANGE ORDER PROVIDES FOR:

Additional funds to continue the Disputes Review Board (DRB) in accordance with the terms specified in the DRB specifications, guidelines, Agreement and Certifications as specified in the per Contract Change Order No. 4 Supplement 1 revised Section 5-1.12 of the Special Provisions.

This change is necessary to continue the Disputes Review Board (DRB) on the project through the revised anticipated contract completion date of December 6, 2007.

The cost of providing a DRB for this contract shall be borne equally by the Contractor and the State. The State's portion will be paid as Extra Work at Force Account for an estimated cost of $50,000.00, which can be financed from the contingency fund. A detailed cost analysis is on file in the project records.

Prior approval was obtained from Mr. Doug Coe, Supervising Bridge Engineer, on February 1, 2007. A copy of the prior approval is attached.

FHWA Prior approval is not required, as this is a minor change order.

Design and Maintenance concurrence is not required as this work is anticipated by the contract documents.

No adjustment of contract time is warranted by this change.

CONCURRED BY:

Construction Engineer:	Douglas Coe	DJC	Date 2-14-07
Bridge Engineer:	Douglas Coe	DJC	Date 2-14-07
Project Engineer:			Date
Project Manager:			Date
FHWA Rep.:			Date
Environmental:			Date
Other (specify):			Date
Other (specify):			Date
District Prior Approval By:	Douglas Coe		Date 2/1/07
HQ (Issue Approve) By:			Date
Resident Engineer's Signature:			Date

ESTIMATE OF COST

	THIS REQUEST	TOTAL TO DATE
ITEMS	$0.00	$0.00
FORCE ACCOUNT	$50,000.00	$150,000.00
AGREED PRICE	$0.00	$0.00
ADJUSTMENT	$0.00	$0.00
TOTAL	$50,000.00	$150,000.00

FEDERAL PARTICIPATION

☑ PARTICIPATING ☐ PARTICIPATING IN PART ☐ NONE
☐ NON-PARTICIPATING (MAINTENANCE) ☐ NON-PARTICIPATING

FEDERAL SEGREGATION (if more than one Funding Source or P I P type)
☑ CCO FUNDED PER CONTRACT ☐ CCO FUNDED AS FOLLOWS

FEDERAL FUNDING SOURCE PERCENT

RECEIVED
061042 MAR 15 6

ADA Notice: For individuals with sensory disabilities, this document is available in alternate formats. For information call (916) 654-6410 or TDD (916) 654-3880 or write Records and Forms Management, 1120 N Street, MS-89, Sacramento, CA 95814

STATE OF CALIFORNIA - DEPARTMENT OF TRANSPORTATION

CONTRACT CHANGE ORDER

Change Requested by: Engineer

CCO: 5 Suppl. No. 0 Contract No. 04 - 012024 Road SF, Ala-80-13.9/14.3, 0.0/1.6 FED. AID LOC.: ACBRIM-080-1(090)8N

To: Kiewit/FCI/Manson, a JV

You are directed to make the following changes from the plans and specifications or do the following described work not included in the plans and specifications for this contract. ***NOTE: This change order is not effective until approved by the Engineer.***

Description of work to be done, estimate of quantities and prices to be paid. (Segregate between additional work at contract price, agreed price and force account.) Unless otherwise stated, rates for rental of equipment cover only such time as equipment is actually used and no allowance will be made for idle time. This last percentage shown is the net accumulated increase or decrease from the original quantity in the Engineer's Estimate

Extra Work at Unit Price:

Submit reports to the Engineer summarizing participation of State Certified Small Business and Disabled Business Enterprises in accordance with Section 2-1.05, "Small Business and Disabled Veteran Business Enterprise Utilization and Reporting", of the Special Provisions.

For this work, the contractor will be paid $2,500.00 per report in accordance with Secion 2-1.05 of the Special Provisions for an estimated total cost of $42,500.00. This price constitutes full compensation, including all markups, for doing all work involved in preparing and submitting the report, including accounting, tracking, maintaining, and reporting certified Small Business and Disabled Veteran Business Enterprise use.for the work of this change.

Estimated cost of Extra Work at Agreed Unit Price $42,500.00

RECEIVED

MAR 25 2002

Estimated Cost: Increase ☑ Decrease ☐ $42,500.00

By reason of this order the time of completion will be adjusted as follows: 0 days

Submitted by

Signature	Resident Engineer: Douglas B. Coe	Date 3-25-02

Approval Recommended by

Signature	Construction Engineer: Douglas B. Coe	Date

Engineer Approval by

Signature P. Siegenthaler	(Print name and title) Peter Siegenthaler - Chief	Date 6/10/02

We the undersigned contractor, have given careful consideration to the change proposed and agree, if this proposal is approved, that we will provide all equipment, furnish the materials, except as may otherwise be noted above, and perform all services necessary for the work above specified, and will accept as full payment therefor the prices shown above.

NOTE: If you, the contractor, do not sign acceptance of this order, your attention is directed to the requirements of the specifications as to proceeding with the ordered work and filing a written protest within the time therein specified.

Contractor Acceptance by

Signature	(Print name and title) A.T. Skoro, Project Director	Date 6/3/02

STATE OF CALIFORNIA - DEPARTMENT OF TRANSPORTATION

CONTRACT CHANGE ORDER MEMORANDUM

DATE: 8/6/02

TO: Peter Siegenthaler / Douglas B. Coe	FILE: E.A. 04 - 012024
FROM: Douglas B. Coe	CO-RTE-PM SF, Ala-80-13.9/14.3, 0.0/1.6
	FED. NO. ACBRIM-080-1(090)8N
CCO#: 5 SUPPLEMENT#: 0 Category Code: 113	CONTINGENCY BALANCE (incl. this change) $53,714,485.80
COST: $42,500.00 INCREASE ☑ DECREASE ☐	HEADQUARTERS APPROVAL REQUIRED? ☐ YES ☑ NO
SUPPLEMENTAL FUNDS PROVIDED: $35,000.00	IS THIS REQUEST IN ACCORDANCE WITH ENVIRONMENTAL DOCUMENTS? ☑ YES ☐ NO
CCO DESCRIPTION: DVBE Quarterly Reports	**PROJECT DESCRIPTION:** SFOBB Skyway

LOCATION: In the City and County of San Francisco and Alameda County in San Francisco and Oakland from 1.3 km to 3.3 km east of the Yerba Buena I

THIS CHANGE ORDER PROVIDES FOR:

compensating the Contractor to provide Small Business/Disabled Veterans Business Enterprise Utilization and Usage reports on a quarterly basis as specified in Section 2-1.05 of the Special Provisions.

This report was contemplated as anticipated supplemental work in the detailed estimate of the contract award summary and shall be paid as Extra Work at agreed unit price.

Payment of the work described can be financed from the contract contingency fund and from supplemental funds provided.

For each quarterly report submitted to the engineer, the contractor will receive $2,500.00.
Estimated cost is 17 quarters @ $2,500.00 = $42,500.00

No adjustment in contract time is warranted by this change.

No Maintenance approval is required for this change as this does not affect any permanent facility.

This change order was field approved by the Resident Engineer, Mr. Douglas Coe, on March 25, 2002.

RECEIVED
001712 SEP 17 20

CONCURRED BY:			
Construction Engineer:	Douglas Coe	Date	8/6/02
Bridge Engineer:	N/A	Date	
FHWA Representative:	Bill Wong	Date	
Project Engineer:		Date	
Other (specify):		Date	
		Date	
		Date	
District Prior Approval By:		Date	
HQ (Issue Approve) By:	N/A	Date	
Resident Engineer's Signature:		Date	8-8-02

ESTIMATE OF COST

	THIS REQUEST	TOTAL TO DATE
ITEMS	$0.00	$0.00
FORCE ACCOUNT	$0.00	$0.00
AGREED PRICE	$42,500.00	$42,500.00
ADJUSTMENT	$0.00	$0.00
TOTAL	$42,500.00	$42,500.00

FEDERAL PARTICIPATION

☑ PARTICIPATING ☐ PARTICIPATING IN PART ☐ NONE
☐ NON-PARTICIPATING (MAINTENANCE) ☐ NON-PARTICIPATING

FEDERAL SEGREGATION (if more than one Funding Source or P.I.P. type)
☑ CCO FUNDED PER CONTRACT ☐ CCO FUNDED AS FOLLOWS

FEDERAL FUNDING SOURCE	PERCENT

CCO #6
04-012024
Pg 2 of 8

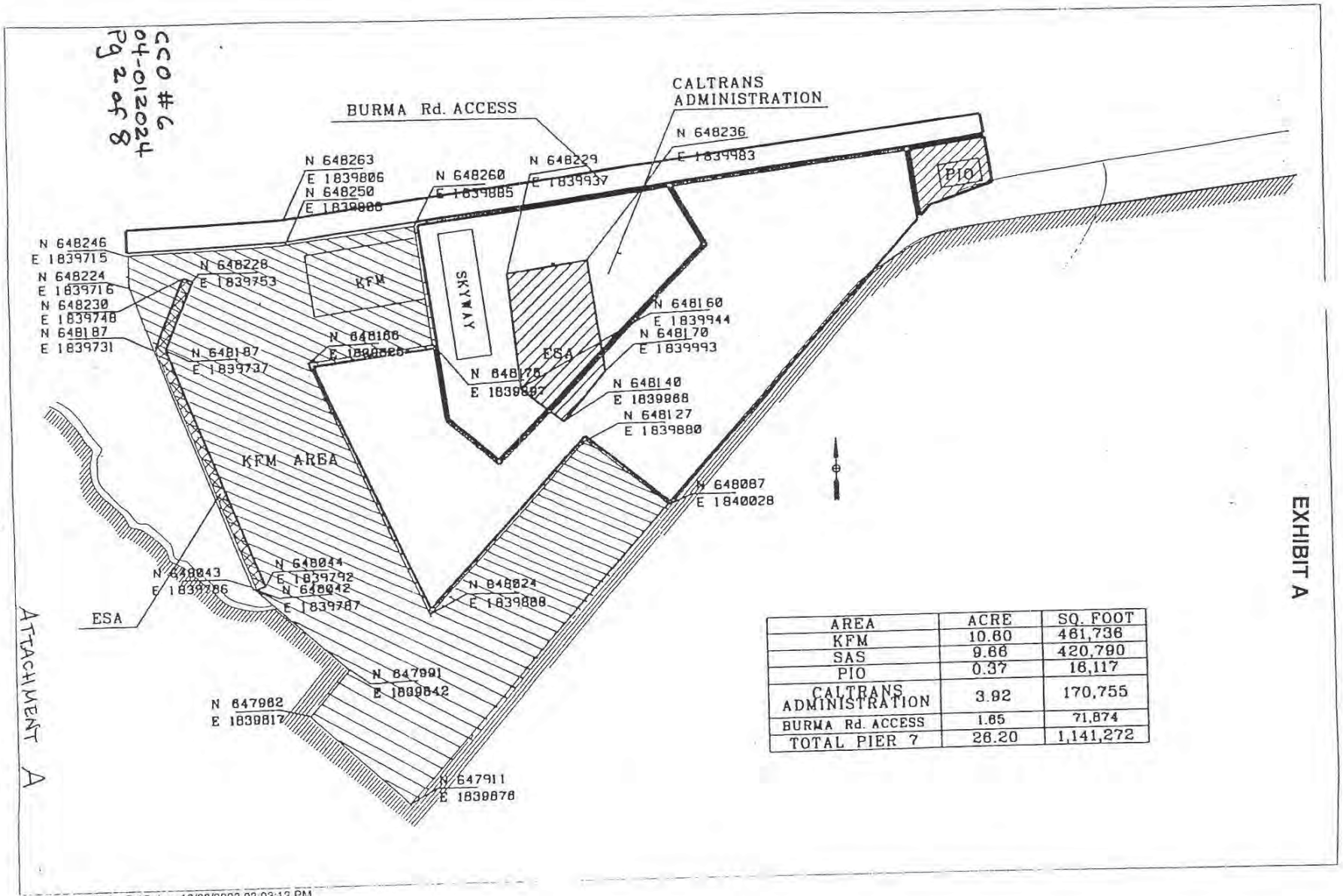

AREA	ACRE	SQ. FOOT
KFM	10.60	461,736
SAS	9.66	420,790
PIO	0.37	16,117
CALTRANS ADMINISTRATION	3.92	170,755
BURMA Rd. ACCESS	1.65	71,874
TOTAL PIER 7	26.20	1,141,272

EXHIBIT A

ATTACHMENT A

d:\VINCE\Pier7\pier 7-15.dgn 10/08/2002 02:03:12 PM

SHEET 2

CONFIDENTIAL
This document contains personal information and pursuant to Civil Code 1798.21 it shall be kept confidential in order to protect against unauthorized disclosure.

District	County	Route	K.P.
04	Ala	80	13.9/14.3

Deed Number: 058277

Project Number: 012024

THIS LEASE is made and entered into this 29th day of October, 2002, in Oakland, California, by and between the State of California Department of Transportation, hereinafter known as Lessor, and Kiewit/FCI/Manson, a joint venture hereinafter known as Lessee, whose address is 220 Burma Road, Oakland CA, California.

WITNESSETH

1) **DESCRIPTION:** The Lessor, in consideration of the payment of the rent hereinafter specified to be paid by the Lessee, and the covenants and agreements herein contained, does hereby lease, demise, and let unto Lessee that certain property in the County of Alameda, State of California, the address of which is 220 Burma Road, shown as outlined in red on the attached map of Pier 7 marked as "**EXHIBIT A**."

2) **TERM:** This lease shall be for a term of 49.5 months, commencing on the 1st day of June, 2002, and ending on the 14th day of February, 2006, with the right of cancellation and termination in both Lessor and Lessee as hereinafter set forth.

3) **RENT:** The rent shall be paid by the Lessee monthly, in advance, on the 1st day of each month during said term, in lawful money of the United States, as follows: $55,408.54 per month. If additional time is required beyond February 14, 2006, a price adjustment reflecting current market value will be negotiated.

   Rent payable or refundable hereunder for any period of time less than one month shall be determined by prorating the monthly rental herein specified based on a 30-day month.

4) **RECEIPT OF RENT PAID:** Receipt is hereby acknowledged by the Lessor of the sum of $55,408.54 from the Lessee, in payment for the first month's rental under this lease.

5) **Deleted**

CCO #6
04-012024
Pg 3 of 8

LEASE AGREEMENT (Cont.)

RW 11-2 (REV 12/2001)

6) **RENTAL PAYMENTS:** All rental payments shall be made in accordance with the provisions outlined in attached **"EXHIBIT A"**.

7) **Deleted**

8) **Deleted**

9) **UTILITIES:** Lessee shall pay when due all water, electric, gas, and other lighting, heating, and power, rents and charges accruing or payable in connection with said property during the term of this lease.

10) **USE:**

a) Lessee shall use the property for the following purposes only:
   i) Erect and maintain an administration office and parking for employees of the Kiewit/FCI/Manson, a joint venture.
   ii) Store material and perform fabrication for elements required for the Skyway Project.

b) Lessee shall not commit, suffer, or permit any waste on said property.

c) Lessee shall comply with all State laws and local ordinances concerning said property and the use thereof.

11) **RIGHT OF ENTRY:** Lessee shall permit Lessor or its agents to enter upon the property at any reasonable time.

12) **TERMINATION:** This lease shall be subject to cancellation and termination by either party at any time during the term hereof by giving the other party notice in writing at least 90 days next prior to the date when such termination shall become effective.

13) **NOTICES:** All notices herein provided to be given, or which may be given, by either party to the other, shall be deemed to have been fully given when served personally, or when made in writing and mailed addressed as follows: To Lessee at the address above stated and to Lessor c/o California Department of Transportation, at 345 Burma Road Oakland, CA 94607. The address to which the notices shall be mailed to either party shall be changed by written notice by either party to the other, but nothing herein shall preclude the giving of notice by personal service. Lessor shall also be able to serve notices by posting and subsequent mailing to Lessee.

13A) The Lessee shall agree to accept the property on an "as is" basis, based on the Pier Survey dated May 18, 2002.

14) **CONDITION AND REPAIRS:** Lessee shall not call on Lessor to make any improvements or repairs on the property, but Lessee hereby specifically covenants and agrees to keep the property including furnishings and equipment, if applicable, in good order and condition at Lessee's cost and expense. Lessee further agrees to provide an adequate number of garbage and trash receptacles in clean condition and good repair. Lessee agrees to maintain the exterior walls, roof, main sewer and water service lines to building, and any other major repairs as deemed necessary and in the best interest of Lessor.

LEASE AGREEMENT (Cont.)

RW 11-2 (REV 12/2001)

15) **ASSIGNMENT AND SUBLETTING:** Lessee shall not assign or sublet this lease without Lessor's written consent.

Any request by Lessee to assign this lease shall be subject to the following:

a) An assignment will only be allowed to a person or entity of equal or greater financial responsibility than Lessee.
b) The proposed use must be the same or similar to that employed by Lessee.
c) A written application from the proposed assignee is required. Lessee will pay all charges incurred for verifying information in the application process.
d) Lessor has the right to raise the rent to current market value upon Lessee's exercise of a right to assign.
e) Assignment does not relieve the Lessee of any duties or obligations under the lease.
f) Any assignment is not deemed a consent to any subsequent assignment.

16) **ALTERATIONS:** Lessee shall not make or suffer any alteration to be made in or on the property without Lessor's written consent.

17) **LITIGATION COSTS:** In the event that a suit is necessary to enforce any of the provisions herein contained, or to recover possession of the premises, the prevailing party shall be entitled to reasonable attorney's fees in addition to costs and necessary disbursements.

18) **VACATING THE PROPERTY:** At the expiration of the term, or any sooner termination of this lease, Lessee shall quit and surrender possession of the property and its appurtenances to Lessor in as good order and condition as the property was delivered to the Lessee, reasonable wear and tear and damage by the elements excepted.

19) **HOLD OVER:** Should Lessee hold over after the expiration of the term of this lease with Lessor's consent, express or implied, the tenancy shall be deemed to be a tenancy only from month to month, subject otherwise to all the terms and conditions of this lease so far as applicable.

20) **FIRE INSURANCE:** Lessor will not keep the property insured against fire or any other insurable risk, and Lessee will make no claim of any nature against Lessor by reason of any damage to Lessee's property in the event it is damaged or destroyed by fire or by any other cause.

21) **PREVIOUS AGREEMENTS:** In the event there is any existing lease or rental agreement between Lessee and Lessor (or its predecessor in interest) covering the property, it is agreed and understood that this lease shall cancel and terminate said prior lease or rental agreement as of the effective date of this lease.

22) **RELOCATION PAYMENT:** Lessee acknowledges the following: Lessee commenced occupancy of the premises after Lessor acquired title to it, Lessor acquired the premises for a public project, Lessee may be required to vacate the premises to allow construction of the public project, and Lessee is not entitled to receive any payments under either the state or the federal Uniform Relocation Assistance Act. (Gov. Code, Section 7260, et seq.; 42 U.S.C., Section 4601, et seq.)

23) **POSSESSORY INTEREST:** Lessee's interest is subject to a possessory interest tax (tax) that may be imposed by the City or County. However, Lessor is required to pay any such tax directly to the City or County on Lessee's behalf. The amount of rent charged Lessee reflects the cost of this added responsibility to Lessor.

Tax bills inadvertently received by Lessee should be forwarded to Lessor for payment.

24) **INDEMNIFICATION:** Lessee shall indemnify, defend, and hold the Lessor, its officers, agents and employees harmless from and against any loss, cost, or expense, including, but not limited to, attorney fees and court costs, resulting from any claim by any third party arising out of or connected to the actions of Lessee, notwithstanding Lessor's, its officers' agents' and employees' active or passive negligence, and/or regarding all acts and omission, including but not limited, to the willful misconduct or negligence of Lessee.

Further, it is the parties' intent that the indemnity provisions stated herein, apply to losses resulting from Lessee's negligence or any cause other than the willful misconduct or sole negligence of Lessor, its officers, agents or employees.

LEASE AGREEMENT (Cont.)

RW 11-2 (REV 12/2001)

25) **LIABILITY AND PROPERTY DAMAGE INSURANCE:** Lessee shall, at Lessee's expense, take out and keep in force during the within tenancy:

General liability insurance providing coverage in the amount of $1,000,000 per occurrence for Bodily Injury and Property Liability combined, in a company or companies to be approved by the Lessor, to protect Lessor, its officers, agents and employees against all claims, suits or actions of every name, kind, and description brought forth, or on account of, injuries to or death of any person occurring in or about the property or on account of damage to property incident to the use of, or resulting from, any and every cause occurring in or about the property which is the subject of this lease, including any and all claims, suits or actions for damage to vehicles on the property.

With respect to third-party claims against Lessee, Lessee waives any and all rights to any type of express or implied indemnity against Lessor, its officers or employees.

It is the intent of the parties that Lessee will indemnify, defend and hold harmless the Lessor, its officers and employees from any and all claims, suits or actions as set forth above regardless of the existence or degree of fault or negligence on the part of Lessor, Lessee, the officers or employees of either of these, other than the sole negligence of Lessor, its officers and employees.

Nothing in this lease is intended to create the public or any member thereof a third-party beneficiary hereunder, nor is any term or condition or other provision of the lease intended to establish a standard of care owed to the public or any member thereof.

Said policies shall name Lessor as an additional insured and shall inure to the contingent liabilities, if any, of Lessor and the officers, agents and employees of Lessor and shall obligate the insurance carriers to notify Lessor, in writing, not less than thirty (30) days prior to the cancellation thereof, or any other change affecting the coverage of the policies. Lessee shall furnish to Lessor either a certified copy of each and every such policy or a fully executed "CERTIFICATE OF INSURANCE WITH ENDORSEMENT FOR LEASE OF STATE-OWNED PROPERTY" within not more than ten (10) days after the effective date of the policy. Lessee agrees that if Lessee does not keep such insurance in full force and effect, Lessor shall have the right to immediately terminate this lease.

26) **NONDISCRIMINATION:** The Lessee, for himself, his heirs, personal representatives, successors in interest, and assigns as a part of the consideration hereof, does hereby covenant and agree, as a covenant running with the land, that Lessee shall maintain and operate any facilities on the land or services offered thereon in compliance with all other requirements imposed pursuant to Title 49, Code of Federal Regulations, Department of Transportation, Subtitle A, Office of the Secretary, Part 21, Nondiscrimination in federally assisted programs of the Department of Transportation-Effectuation of Title VI of the Civil Rights Act of 1964, and as said Regulations may be amended.

That in the event of breach of any of the above nondiscrimination covenants, the State of California shall have the right to terminate the lease and to re-enter and repossess said land and the facilities thereon and hold the same as if said lease had never been made or issued.

27) **WAIVER:** If any part of this Lease is invalid by reason of law or governmental regulation, or if any provisions hereof are waived by Lessor, the remaining portions of this Lease shall remain in full force and effect. Lessor's receipt of rent with the knowledge of any breach of a provision of this Lease shall not constitute a waiver of such breach.

28) **ENCUMBRANCES:** Lessee shall not encumber the leased premises in any manner whatsoever.

29) **ASSIGNMENT FOR BENEFIT OF CREDITORS, INSOLVENCY, OR BANKRUPTCY:** Appointment of a receiver to take possession of Lessee's assets, Lessee's general assignment for benefit of creditors, or Lessee's insolvency or taking or suffering action under the Bankruptcy Act is a breach of this lease and this lease shall terminate.

LEASE AGREEMENT (Cont.)

RW 11-2 (REV 12/2001)

30) **POSTING OF PROPERTY:** Lessor or its agents shall at all times have right to go upon and inspect the leased property and to serve or to post thereon any notice required or permitted by law for protection of any right or interest of Lessor.

31) **HAZARDOUS MATERIALS:** Hazardous materials are those substances listed in California Code of Regulations, Title 22, Section 66261.126, Appendix X, or those which meet the toxicity, reactivity, corrosivity or flammability criteria of Article 11 of the above Code, as well as any other substance which poses a hazard to health or environment.

Except as stated otherwise herein, Lessee shall not use, create, store or allow said substances on the property. Fuel stored in a motor vehicle for the exclusive use in such vehicle is excepted.

In no case shall Lessee cause or allow the deposit or disposal of said substances on the property. Household products necessary for routine cleaning and maintenance of the property may be kept on the property in quantities reasonable for current needs.

Lessor, or its agents or contractors, shall at all times have the right to go upon and inspect the leased property and the operations conducted thereon to assure compliance with the requirements herein stated. This inspection may include taking samples of substances and materials present for testing, and/or testing soils or underground tanks on the leased property.

Where hazardous waste is generated on site, the lessee shall comply with the permit requirements of the California Department Toxic Substances Control.

Breach of any of these covenants, terms and conditions shall give Lessor authority to immediately terminate this lease. It is the intent of the parties hereto that Lessee shall be responsible for and bear the entire cost of removal and disposal of hazardous materials or waste introduced to the property during Lessee's period of use and possession as owner, operator or Lessee of the property. Lessee shall also be responsible for any cleanup and decontamination on or off the property necessitated by such materials or waste.

Lessee shall further hold the State, and any officer or employee, harmless from all responsibility, liability and claim for damages resulting from the presence or use of hazardous materials on the property during Lessee's period of use and possession.

31A) **AREAS CONTAMINATED WITH HAZARDOUS SUBSTANCES:** Hazardous substances may be present on the property in the areas shown as Environmentally Sensitive Areas (ESAs) as shown on **EXHIBIT A**. The lessee shall have no permanent anchorage or occupation and shall vacate said areas within 48 hours notice of the Engineer.

The lessee shall cooperate and coordinate with the lessor, or its agents or contractors or third parties, including, but not limited to the City of Oakland, the United States Department of the Army and the California Department of Toxic Substances Control in the remediation of said ESAs.

31B) **SEMI-ANNUAL SURVEY:** The Lessee shall conduct a semi-annual survey of the property describing the current and planned uses of the property, including a listing of all materials used and stored on the property, or transported to and through the pier. Material Safety Data Sheets for the hazardous materials stored on the property shall be submitted to the Engineer. Material storage sites shall be identified and shown on a site map. The Lessee shall comply with all Storm Water Pollution Prevention Plan (SWPPP) requirements, as stipulated in the Special Provisions for Caltrans Contract 04-012024. The Lessee shall implement Best Management Practices, as stipulated in said SWPPP to assure adequate housekeeping, dust control, debris management and disposal measures are maintained.

32) **AMENDMENTS:** Anything herein contained to the contrary notwithstanding, this lease may be terminated, and the provisions of this lease may be, in writing, altered, changed, or amended by mutual consent of the parties hereto.

33) **HEADINGS:** The marginal or clause headings of this lease are not a part of this lease and shall have no effect upon the construction or interpretation of any part hereof.

34) **THIS LEASE IS SUBJECT TO THE TERMS OF THE CONTRACT CHANGE ORDER ATTACHED AS "EXHIBIT A".**

LEASE AGREEMENT (Cont.)
RW 11-2 (REV 12/2001)

BREACH OF ANY OF THE ABOVE COVENANTS, TERMS, AND CONDITIONS SHALL GIVE EITHER PARTY AUTHORITY TO IMMEDIATELY TERMINATE THIS LEASE.

STATE OF CALIFORNIA
DEPARTMENT OF TRANSPORTATION

PETER SIEGENTHALER
District Division Chief, SFOBB Construction

Date

TOM SKORO
KIEWIT/FCI/MANSON, a joint venture (Lessee)

CCO#6
04-012024
Pg 8 of 8

ADA Notice For individuals with disabilities, this document is available in alternate formats. For information call (916) 654-5413 Voice, CRS: 1-800-735-2929, or write Right of Way, 1120 N Street, MS-37, Sacramento, CA 95814.

STATE OF CALIFORNIA - DEPARTMENT OF TRANSPORTATION

EXHIBIT A

Page

CONTRACT CHANGE ORDER

Change Requested by: Engine

CCO: 6	Suppl. No. 0	Contract No. 04 - 012024	Road 04-SF,Ala-80-13.9/14.3,0.0/1.6	FED. AID LOC.: ACIM-080-1(085)8N

To: KIEWIT / FCI / MANSON a JV

You are directed to make the following changes from the plans and specifications or do the following described work not included in the plans and specifications for this contract. ***NOTE: This change order is not effective until approved by the Engineer.***

Description of work to be done, estimate of quantities and prices to be paid. (Segregate between additional work at contract price, agreed price and force account.) Unless otherwise stated, rates for rental of equipment cover only such time as equipment is actually used and no allowance will be made for idle time. This last percentage shown is the net accumulated increase or decrease from the original quantity in the Engineer's Estimate

Extra Work at Force Account:

Provide labor, equipment and materials to provide fencing, service for water, sewer, electricity and telecommunications to Caltrans facilities as authorized by the Engineer's representative. Payment for this work will be made in accordance with Section 5-1.21 "FORCE ACCOUNT PAYMENT" of the contract Special Provisions and Section 9-1.03 of the Standard Specifications.

Estimated cost of Extra Work at Force Account $450,000.00

Adjustment of Compensation at Unit Price:

For the property herein referred to as the "KFM Area", used by Kiewit/FCI/Manson, a JV (KFM) at the Pier 7 location as shown on page 2 of this contract change order, KFM shall compensate the State the agreed unit price of $0.12 per square foot per month to the State from June 1, 2002, through February 14, 2006.

If additional time is required beyond February 14, 2006, a price adjustment reflecting current market value will be negotiated.

Estimate of Adjustment of Compensation at Agreed Unit Price:

461,738 sq ft. @ $0.12/month = $55,408.54/month <credit>

49.5 months @ $55,408.54/month = $2,742,722.72 <credit>

The State will be compensated the agreed unit price of $55,408.54 per month during the terms of this agreement.

Estimated Cost: Increase ☐ Decrease ☑ ($2,292,722.72)

reason of this order the time of completion will be adjusted as follows: 0 days

mitted by

ature | Resident Engineer: COE D. | Date 12-17-02

val Recommended by

ure | Construction Engineer: COE D. | Date 12-17-02

r Approval by

e | (Print name and title) PETER SIEGENTHALER - Chief | Date 2-11-03

dersigned contractor, have given careful consideration to the change proposed and agree, if this proposal is approved, that we will provide all furnish the materials, except as may otherwise be noted above, and perform all services necessary for the work above specified, and will accept ent therefor the prices shown above.

u, the contractor, do not sign acceptance of this order, your attention is directed to the requirements of the specificatio with the ordered work and filing a written protest within the time therein specified.

ceptance by

(Print name and

CONTRACT CHANGE ORDER

Change Requested by: Engineer

CCO: 6	Suppl. No. 1	Contract No. 04 - 012024	Road 04-SF,Ala-80-13.9/14.3,0.0/1.6	FED. AID LOC.: ACIM-080-1 (085)8N

To: KIEWIT / FCI / MANSON a JV

You are directed to make the following changes from the plans and specifications or do the following described work not included in the plans and specifications for this contract. ***NOTE: This change order is not effective until approved by the Engineer.***

Description of work to be done, estimate of quantities and prices to be paid. (Segregate between additional work at contract price, agreed price and force account.) Unless otherwise stated, rates for rental of equipment cover only such time as equipment is actually used and no allowance will be made for idle time. This last percentage shown is the net accumulated increase or decrease from the original quantity in the Engineer's Estimate.

Extra Work at Force Account:

Provide labor, equipment, and material to provide service for water, sewer, electricity, telecommunications, and other site improvements for Caltrans facilities as authorized by the Engineer's representative. Payment for this work will be made in accordance with Section 5-1.21 "FORCE ACCOUNT PAYMENT" of the contract Special Provisions and Section 9-1.03 of the Standard Specifications.

Estimated cost of Extra Work at Force Account $276,500.00

This additional work does not affect the overall project schedule; therefore, no additional contract time will be granted for this change order.

This sum constitutes full and complete compensation, including markups for all direct and indirect costs, all associated project impacts and Time Related Overhead (TRO) expenses.

Estimated Cost: Increase ☑ Decrease ☐ $276,500.00

By reason of this order the time of completion will be adjusted as follows: 0 days

Submitted by

Signature	Resident Engineer: COE D.	Date 6-13-03

Approval Recommended by

Signature	Construction Engineer: COE D.	Date 6-13-03

Engineer Approval by

Signature	(Print name and title) PETER SIEGENTHALER - Chief	Date

We the undersigned contractor, have given careful consideration to the change proposed and agree, if this proposal is approved, that we will provide all equipment, furnish the materials, except as may otherwise be noted above, and perform all services necessary for the work above specified, and will accept as full payment therefor the prices shown above.

NOTE: If you, the contractor, do not sign acceptance of this order, your attention is directed to the requirements of the specifications as to proceeding with the ordered work and filing a written protest within the time therein specified.

Contractor Acceptance by

Signature	(Print name and title) A.T. Okoro, Project Director	Date 6/25/03

CONTRACT NO. 04-012024
CCO NO. 6 51
PAGE 2 OF 4

EXTRA WORK BILL TRACKING

Skyway Project

EWB #	Date Performed	CCO #	Description	Date Sent	Amount Billed	Pay Est # Paid	Amount Paid	Cost Code	Subcontractor	Comments
281	02/19/03	1	Traffic Control	03/10/03	$ 132.30	15	$ 132.30	7001.01		Labor & Material
309	12/17/02	1	Traffic Control	03/10/03	$ 628.26	15	$ 628.26	7001.01		Correction for bill 90
8	02/04/02	2	Groundbreaking Ceremony	04/09/02	$ 751.10	5	$ 751.10	7002.01		Norcal Invoice
9	02/05/02	2	Groundbreaking Ceremony	04/09/02	$ 210.49	5	$ 210.49	7002.01		Norcal Invoice
10	02/06/02	2	Groundbreaking Ceremony	04/09/02	$ 1,481.47	5	$ 1,481.47	7002.01		Norcal Invoice
11	01/28/02	2	Groundbreaking Ceremony	04/09/02	$ 906.84	5	$ 906.84	7002.01		Norcal Invoice
12	01/29/02	2	Groundbreaking Ceremony	04/09/02	$ 3,054.45	5	$ 3,054.45	7002.01		Norcal Invoice
13	01/28/02	2	Groundbreaking Ceremony	04/09/02	$ 4,939.28	5	$ 4,939.28	7002.01		Norcal Invoice
14	01/31/02	2	Groundbreaking Ceremony	04/09/02	$ 895.95	5	$ 895.95	7002.01		Norcal Invoice
15	01/25/02	2	Groundbreaking Ceremony	07/02/02	$ 2,912.80	7	$ 2,912.80	7002.01		Norcal Invoice
20	01/25/02	2	Groundbreaking Ceremony	09/06/02	$ 1,058.60	8	$ 1,058.60	7002.01		Norcal Invoice
21	01/24/02	2	Groundbreaking Ceremony	09/06/02	$ 183.67	8	$ 183.97	7002.01		Norcal Invoice
22	01/25/02	2	Groundbreaking Ceremony	09/06/02	$ 430.02	8	$ 430.02	7002.01		Norcal Invoice
23	01/28/02	2	Groundbreaking Ceremony	09/06/02	$ 2,143.07	8	$ 2,143.07	7002.01		Norcal Invoice
24	01/29/02	2	Groundbreaking Ceremony	09/06/02	$ 702.34	8	$ 702.34	7002.01		Norcal Invoice
25	01/30/02	2	Groundbreaking Ceremony	09/06/02	$ 497.62	8	$ 497.62	7002.01		Norcal Invoice
121	10/02/02	3	Partnering/Team Building	01/21/03	$ 55,104.40	13	$ 55,104.40	7003.01		(2)Corporate Edge-1/2 Cost
123	08/22/02	3	Partnering/Team Building	01/30/03	$ 410.61	14	$ 410.61	7003.01		Lunches
475	04/21/03	3	Partnering/Team Building	05/14/03	$ 566.75	16	$ 566.75	7003.01		Chartworks
476	04/01/03	3	Partnering/Team Building	05/14/03	$ 35,000.00			7003.01		Corporate Edge
542	05/16/03	3	Partnering/Team Building	06/13/03	$ 1,356.90			7003.01		BBQ/Meeting Expenses
29	08/21/02	4	DRB - Lewis	10/14/02	$ 662.50	9	$ 662.50	7004.01	Lewis	
30	08/21/02	4	DRB - Graebe	10/14/02	$ 600.00	9	$ 600.00	7004.01	Graebe	
37	09/10/02	4	DRB - Lewis	11/08/02	$ 2,506.25	10	$ 2,506.25	7004.01	Lewis	
38	09/10/02	4	DRB - Graebe	11/08/02	$ 2,850.00	10	$ 2,850.00	7004.01	Graebe	
41	11/07/02	4	DRB - Lewis	11/27/02	$ 312.50	11	$ 312.50	7004.01	Lewis	
42	11/24/02	4	DRB - BULLOCK	12/02/02	$ 2,825.00	11	$ 2,825.00	7004.01	Bullock	
86	12/11/02	4	DRB - Lewis	01/02/03	$ 600.00	12	$ 600.00	7004.01	Lewis	
87	12/11/02	4	DRB - BULLOCK	01/02/03	$ 600.00	12	$ 600.00	7004.01	Bullock	
88	12/11/02	4	DRB - Graebe	01/02/03	$ 600.00	12	$ 600.00	7004.01	Graebe	
321	03/26/03	4	DRB Graebe	03/31/03	$ 950.00	15	$ 950.00	7004.01	Graebe	
356	03/28/03	4	DRB Lewis	04/07/03	$ 950.00	15	$ 950.00	7004.01	Lewis	Lewis
460	05/15/03	4	DRB Lunches	05/15/03	$ 48.37	16	$ 48.37	7004.01		Togos Lunches
489	05/14/03	4	DRB - BULLOCK	05/19/03	$ 1,012.50	16	$ 1,012.50	7004.01	Bullock	
16	03/15/02	5	Small Business Report #1	07/16/02	$ 2,500.00	7	$ 2,500.00	7005.01		Overhead Cost
17	06/26/02	5	Small Business Report #2	07/16/02	$ 2,500.00	7	$ 2,500.00	7005.01		Overhead Cost
28	10/14/02	5	Small Business Report #3	10/14/02	$ 2,500.00	9	$ 2,500.00	7005.01		Overhead Cost
89	10/14/02	5	Small Business Report #4	01/10/03	$ 2,500.00	12	$ 2,500.00	7005.01		Overhead Cost
357	03/01/03	5	Small Business Report #5	04/07/03	$ 2,500.00	15	$ 2,500.00	7005.01		Overhead Cost
124	10/30/02	6	Yard Set Up	01/30/03	$ 295,867.77	14	$ 295,867.77	7006.01		Contra Costa Electric
125	09/05/02	6	Yard Set Up	01/31/03	$ 100,607.55	14	$ 100,607.55	7006.01		Focus Construction
126	07/19/02	6	Yard Set Up	01/31/03	$ 20,666.84	14	$ 20,666.84	7006.01		Simonds Machinery
358	03/31/03	6	Yard Set Up	04/07/03	$ 2,085.38	15	$ 2,085.38	7006.03		Contra Costa Electric
398	03/31/03	6	Caltrans Rent March	04/17/03	$ (55,408.54)	15	$ (55,408.45)	7006.01		Calltrans Rent
402	04/18/03	6	Yard Set Up	04/23/03	$ 3,520.00	16	$ 3,520.00	7006.01		Focus Construction
399	04/10/03	6	Yard Set Up	04/17/03	$ 62,214.90			7006.01		Focus Construction
541	04/08/03	6	Yard Set Up	06/13/03	$ 5,214.11			7006.01		Simonds Machinery
27	09/06/02	10	Access Dredging	09/19/02	$ 1,200,410.00	8	$ 1,200,410.00	various		EW @ LS
31	08/26/02	11	Paiges - Gate Guard	10/18/02	$ 8,704.52			7011.01		
40	11/20/02	11	Paiges - Gate Guard	11/20/02	$ 5,313.00			7011.01		
43	11/30/02	11	Paiges - Gate Guard	12/10/02	$ 1,680.00			7011.01		
91	12/31/02	11	Paiges - Gate Guard	01/13/03	$ 2,310.00			7011.01		
224	01/31/03	11	Paiges - Gate Guard	01/06/03	$ 5,379.04			7011.01		Paiges 1/01/03-/1/31/03
317	08/16/02	11	Paiges - Gate Guard	03/19/03	$ 22,133.01			7011.01		Paiges 50%'s, office in file
318	01/15/03	11	Paiges - Gate Guard	03/19/03	$ 12,032.46			7011.01		Paiges 50%'s, office in file
319	01/15/03	11	Paiges - Gate Guard	03/19/03	$ 10,899.15			7011.01		Paige's 100% Caltrans Yard
354	03/31/03	11	Paiges - Gate Guard	04/07/03	$ 2,645.88			7011.01		Paiges 50%'s, office in file
355	03/31/03	11	Paiges - Gate Guard	04/07/03	$ 8,042.76			7011.01		Paige's 100% Caltrans Yard
400	04/15/03	11	Paiges - Gate Guard	04/18/03	$ 2,393.89			7011.01		Paiges 50%'s, office in file
401	04/15/03	11	Paiges - Gate Guard	04/18/03	$ 7,559.64			7011.01		Paige's 100% Caltrans Yard
473	04/30/03	11	Paiges - Gate Guard	05/14/03	$ 2,393.89			7011.01		Paiges 50%'s, office in file
474	04/30/03	11	Paiges - Gate Guard	05/14/03	$ 7,559.64			7011.01		Paige's 100% Caltrans Yard
491	05/15/03	11	Paiges - Gate Guard	05/23/03	$ 2,393.89			7011.01		Paiges 50% office
492	05/15/03	11	Paiges - Gate Guard	05/23/03	$ 7,559.64			7011.01		Paiges 100% yard
539	05/31/03	11	Paiges - Gate Guard	06/12/03	$ 2,708.91			7011.01		Paiges 50% office
540	05/31/03	11	Paiges - Gate Guard	06/12/03	$ 8,315.74			7011.01		Paiges 100% yard

CONTRACT NO. 04-012024
CCO NO. 6 51
PAGE 2 OF 4

EXTRA WORK BILL TRACKING

Skyway Project

EWB #	Date Performed	CCO #	Description	Date Sent	Amount Billed	Pay Est # Paid	Amount Paid	Cost Code	Subcontractor	Comments
281	02/19/03	1	Traffic Control	03/10/03	$ 132.30	15	$ 132.30	7001.01		Labor & Material
309	12/17/02	1	Traffic Control	03/10/03	$ 628.26	15	$ 628.26	7001.01		Correction for bill 90
8	02/04/02	2	Groundbreaking Ceremony	04/09/02	$ 751.10	5	$ 751.10	7002.01		Norcal Invoice
9	02/05/02	2	Groundbreaking Ceremony	04/09/02	$ 210.49	5	$ 210.49	7002.01		Norcal Invoice
10	02/06/02	2	Groundbreaking Ceremony	04/09/02	$ 1,481.47	5	$ 1,481.47	7002.01		Norcal Invoice
11	01/28/02	2	Groundbreaking Ceremony	04/09/02	$ 906.84	5	$ 906.84	7002.01		Norcal Invoice
12	01/29/02	2	Groundbreaking Ceremony	04/09/02	$ 3,054.45	5	$ 3,054.45	7002.01		Norcal Invoice
13	01/28/02	2	Groundbreaking Ceremony	04/09/02	$ 4,939.28	5	$ 4,939.28	7002.01		Norcal Invoice
14	01/31/02	2	Groundbreaking Ceremony	04/09/02	$ 895.95	5	$ 895.95	7002.01		Norcal Invoice
15	01/25/02	2	Groundbreaking Ceremony	07/02/02	$ 2,912.80	7	$ 2,912.80	7002.01		Norcal Invoice
20	01/25/02	2	Groundbreaking Ceremony	09/06/02	$ 1,058.60	8	$ 1,058.60	7002.01		Norcal Invoice
21	01/24/02	2	Groundbreaking Ceremony	09/06/02	$ 183.67	8	$ 183.97	7002.01		Norcal Invoice
22	01/25/02	2	Groundbreaking Ceremony	09/06/02	$ 430.02	8	$ 430.02	7002.01		Norcal Invoice
23	01/28/02	2	Groundbreaking Ceremony	09/06/02	$ 2,143.07	8	$ 2,143.07	7002.01		Norcal Invoice
24	01/29/02	2	Groundbreaking Ceremony	09/06/02	$ 702.34	8	$ 702.34	7002.01		Norcal Invoice
25	01/30/02	2	Groundbreaking Ceremony	09/06/02	$ 497.62	8	$ 497.62	7002.01		Norcal Invoice
121	10/02/02	3	Partnering/Team Building	01/21/03	$ 55,104.40	13	$ 55,104.40	7003.01		(2)Corporate Edge-1/2 Cost
123	08/22/02	3	Partnering/Team Building	01/30/03	$ 410.61	14	$ 410.61	7003.01		Lunches
475	04/21/03	3	Partnering/Team Building	05/14/03	$ 566.75	16	$ 566.75	7003.01		Chartworks
476	04/01/03	3	Partnering/Team Building	05/14/03	$ 35,000.00			7003.01		Corporate Edge
542	05/16/03	3	Partnering/Team Building	06/13/03	$ 1,356.90			7003.01		BBQ/Meeting Expenses
29	08/21/02	4	DRB - Lewis	10/14/02	$ 662.50	9	$ 662.50	7004.01	Lewis	
30	08/21/02	4	DRB - Graebe	10/14/02	$ 600.00	9	$ 600.00	7004.01	Graebe	
37	09/10/02	4	DRB - Lewis	11/08/02	$ 2,506.25	10	$ 2,506.25	7004.01	Lewis	
38	09/10/02	4	DRB - Graebe	11/08/02	$ 2,850.00	10	$ 2,850.00	7004.01	Graebe	
41	11/07/02	4	DRB - Lewis	11/27/02	$ 312.50	11	$ 312.50	7004.01	Lewis	
42	11/24/02	4	DRB - BULLOCK	12/02/02	$ 2,825.00	11	$ 2,825.00	7004.01	Bullock	
86	12/11/02	4	DRB - Lewis	01/02/03	$ 600.00	12	$ 600.00	7004.01	Lewis	
87	12/11/02	4	DRB - BULLOCK	01/02/03	$ 600.00	12	$ 600.00	7004.01	Bullock	
88	12/11/02	4	DRB - Graebe	01/02/03	$ 600.00	12	$ 600.00	7004.01	Graebe	
321	03/26/03	4	DRB Graebe	03/31/03	$ 950.00	15	$ 950.00	7004.01	Graebe	
356	03/28/03	4	DRB Lewis	04/07/03	$ 950.00	15	$ 950.00	7004.01	Lewis	Lewis
460	05/15/03	4	DRB Lunches	05/15/03	$ 48.37	16	$ 48.37	7004.01		Togos Lunches
489	05/14/03	4	DRB - BULLOCK	05/19/03	$ 1,012.50	16	$ 1,012.50	7004.01	Bullock	
16	03/15/02	5	Small Business Report #1	07/16/02	$ 2,500.00	7	$ 2,500.00	7005.01		Overhead Cost
17	06/26/02	5	Small Business Report #2	07/16/02	$ 2,500.00	7	$ 2,500.00	7005.01		Overhead Cost
28	10/14/02	5	Small Business Report #3	10/14/02	$ 2,500.00	9	$ 2,500.00	7005.01		Overhead Cost
89	10/14/02	5	Small Business Report #4	01/10/03	$ 2,500.00	12	$ 2,500.00	7005.01		Overhead Cost
357	03/01/03	5	Small Business Report #5	04/07/03	$ 2,500.00	15	$ 2,500.00	7005.01		Overhead Cost
124	10/30/02	6	Yard Set Up	01/30/03	$ 295,867.77	14	$ 295,867.77	7006.01		Contra Costa Electric
125	09/05/02	6	Yard Set Up	01/31/03	$ 100,607.55	14	$ 100,607.55	7006.01		Focus Construction
126	07/19/02	6	Yard Set Up	01/31/03	$ 20,666.84	14	$ 20,666.84	7006.01		Simonds Machinery
358	03/31/03	6	Yard Set Up	04/07/03	$ 2,085.38	15	$ 2,085.38	7006.03		Contra Costa Electric
398	03/31/03	6	Caltrans Rent March	04/17/03	$ (55,408.54)	15	$ (55,408.45)	7006.01		Calltrans Rent
402	04/18/03	6	Yard Set Up	04/23/03	$ 3,520.00	16	$ 3,520.00	7006.01		Focus Construction
399	04/10/03	6	Yard Set Up	04/17/03	$ 62,214.90			7006.01		Focus Construction
541	04/08/03	6	Yard Set Up	06/13/03	$ 5,214.11			7006.01		Simonds Machinery
27	09/06/02	10	Access Dredging	09/19/02	$ 1,200,410.00	8	$ 1,200,410.00	various		EW @ LS
31	08/26/02	11	Paiges - Gate Guard	10/18/02	$ 8,704.52			7011.01		
40	11/20/02	11	Paiges - Gate Guard	11/20/02	$ 5,313.00			7011.01		
43	11/30/02	11	Paiges - Gate Guard	12/10/02	$ 1,680.00			7011.01		
91	12/31/02	11	Paiges - Gate Guard	01/13/03	$ 2,310.00			7011.01		
224	01/31/03	11	Paiges - Gate Guard	01/06/03	$ 5,379.04			7011.01		Paiges 1/01/03-/1/31/03
317	08/16/02	11	Paiges - Gate Guard	03/19/03	$ 22,133.01			7011.01		Paiges 50%'s, office in file
318	01/15/03	11	Paiges - Gate Guard	03/19/03	$ 12,032.46			7011.01		Paiges 50%'s, office in file
319	01/15/03	11	Paiges - Gate Guard	03/19/03	$ 10,899.15			7011.01		Paige's 100% Caltrans Yard
354	03/31/03	11	Paiges - Gate Guard	04/07/03	$ 2,645.88			7011.01		Paiges 50%'s, office in file
355	03/31/03	11	Paiges - Gate Guard	04/07/03	$ 8,042.76			7011.01		Paige's 100% Caltrans Yard
400	04/15/03	11	Paiges - Gate Guard	04/18/03	$ 2,393.89			7011.01		Paiges 50%'s, office in file
401	04/15/03	11	Paiges - Gate Guard	04/18/03	$ 7,559.64			7011.01		Paige's 100% Caltrans Yard
473	04/30/03	11	Paiges - Gate Guard	05/14/03	$ 2,393.89			7011.01		Paiges 50%'s, office in file
474	04/30/03	11	Paiges - Gate Guard	05/14/03	$ 7,559.64			7011.01		Paige's 100% Caltrans Yard
491	05/15/03	11	Paiges - Gate Guard	05/23/03	$ 2,393.89			7011.01		Paiges 50% office
492	05/15/03	11	Paiges - Gate Guard	05/23/03	$ 7,559.64			7011.01		Paiges 100% yard
539	05/31/03	11	Paiges - Gate Guard	06/12/03	$ 2,708.91			7011.01		Paiges 50% office
540	05/31/03	11	Paiges - Gate Guard	06/12/03	$ 8,315.74			7011.01		Paiges 100% yard

Stockton Yard Grading Paving

5/12/2003

Heading	Descr	Name	Q	Unit	$/Unit	Extension
Labor	FM-Labor	R. Peacock	1.5	HR	$40.15	$60.23
KFM	Labor	R. Silva	1.5	HR	$38.81	$58.22
	Oper	S. Morrison	1	HR	$59.96	$59.96
	Oper	T. Horton	2	HR	$59.96	$119.92
Matls						
Freight						
Equip	TH 103 Forklift		1	HR	$54.12	$54.12
	JD 670 Blade		2	HR	$28.47	$56.94
Other						
Total	Labor Cost Sub-Total:					$298.32
	Labor Surcharge:19 % + Spec: 5%				19%	
	Subtotal					$298.32
	Labor Mark Up @ 28 %				28%	$83.53
	Prime Mark Up @ 7%					
	Total Labor					$381.85
	Mat & Equip & Other Sub-Total					$111.06
	Mark Up for Matl & Equip @ 10%				10%	$11.11
	Total Matls					$122.17
	Total per Unit					$504.02
	TOTAL					**$505.00**

5/13/2003

Heading	Descr	Name	Q	Unit	$/Unit	Extension
Labor	FM-Labor	R. Peacock		HR		$0.00
KFM	Labor	R. Silva		HR		$0.00
	Oper	S. Morrison		HR		$0.00
	Oper	T. Horton	3.5	HR	$59.96	$209.86
Matls						
Freight						
Equip	TH 103 Forklift			HR		$0.00
	JD 670 Blade		3.5	HR	$28.47	$99.65
Other						
Total	Labor Cost Sub-Total:					$209.86
	Labor Surcharge:19 % + Spec: 5%				19%	
	Subtotal					$209.86
	Labor Mark Up @ 28 %				28%	$58.76
	Prime Mark Up @ 7%					
	Total Labor					$268.62
	Mat & Equip & Other Sub-Total					$99.65
	Mark Up for Matl & Equip @ 10%				10%	$9.96
	Total Matls					$109.61
	Total per Unit					$378.23
	TOTAL					**$380.00**

CONTRACT NO. UT-01-0001
CCO NO. 6 S1
PAGE 3 OF 4

012024:CCO 6
Stockton Yard EW FA
Estimate.xls
6/2/20032:27 PM

Stockton Yard Grading Paving

5/14/2003

Heading	Descr	Name	Q	Unit	$/Unit	Extension
Labor	FM-Labor	R. Peacock		HR		$0.00
KFM	Labor	R. Silva	8	HR	$38.81	$310.48
	Oper	S. Morrison	8	HR	$59.96	$479.68
	Oper	T. Horton		HR		$0.00
Matls						
Freight						
Equip	JD 210 Skip Loader OSR		8	HR	$19.50	$156.00
	84" Flat Drum Roller OSR		8	HR	$62.66	$501.28
Other						
Total	Labor Cost Sub-Total:					$790.16
	Labor Surcharge:19 % + Spec: 5%				19%	
	Subtotal					$790.16
	Labor Mark Up @ 28 %				28%	$221.24
	Prime Mark Up @ 7%					
	Total Labor					$1,011.40
	Mat & Equip & Other Sub-Total					$657.28
	Mark Up for Matl & Equip @ 10%				10%	$65.73
	Total Matls					$723.01
	Total per Unit					$1,734.41
	TOTAL					$1,735.00

5/15/2003

Heading	Descr	Name	Q	Unit	$/Unit	Extension
Labor	FM-Labor	R. Peacock		HR		$0.00
KFM	Labor	R. Silva		HR		$0.00
	Oper	S. Morrison	8	HR	$59.96	$479.68
	Oper	T. Horton		HR		$0.00
	Labor	GCU Transfer	6.5	HR	$38.81	$252.27
	Labor	GCU Transfer	6.5	HR	$38.81	$252.27
Matls	3/4" AB		216.03	TON	$10.00	$2,160.30
Freight						
Equip	JD 210 Skip Loader OSR		8	HR	$19.50	$156.00
	84" Flat Drum Roller OSR		8	HR	$62.66	$501.28
Other						
Total	Labor Cost Sub-Total:					$984.21
	Labor Surcharge:19 % + Spec: 5%				19%	
	Subtotal					$984.21
	Labor Mark Up @ 28 %				28%	$275.58
	Prime Mark Up @ 7%					
	Total Labor					$1,259.79
	Mat & Equip & Other Sub-Total					$2,817.58
	Mark Up for Matl & Equip @ 10%				10%	$281.76
	Total Matls					$3,099.34
	Total per Unit					$4,359.13
	TOTAL					$4,360.00

* Rate includes 19% surcharge

*AB- ENR (2002) $7.83/ton

CONTRACT NO. 04-012024
CCO NO. 6 S1
PAGE 4 OF 4

	$9,000.00	Fencing-PR (5/23/03)
	$6,980.00	4 day total fr. spreadsheet
	$8,000.00	4 days@$2k/day-DN 5/27/03
	$2,000.00	AB -DN 5/27/03
	$6,495.00	add 25% per BHowe
TOTAL	$32,475.00	
SAY	$33,000.00	

012024:CCO 6
Stockton Yard EW FA
Estimate.xls
6/2/20032:27 PM

STATE OF CALIFORNIA - DEPARTMENT OF TRANSPORTATION

CONTRACT CHANGE ORDER MEMORANDUM

TO: PETER SIEGENTHALER / COE D.	FILE: E.A. 04 - 012024
FROM: COE D.	CO-RTE-PM 04-SF,Ala-80-13.9/14.3,0.0/1.6
	FED. NO. ACIM-080-1(085)8N
CCO#: 6 SUPPLEMENT#: 2 Category Code: CGAX	CONTINGENCY BALANCE (incl. this change) $30,202,395.34
COST: ($5,493.00) INCREASE ☐ DECREASE ☑	HEADQUARTERS APPROVAL REQUIRED? ☐ YES ☑ NO
SUPPLEMENTAL FUNDS PROVIDED: $0.00	IS THIS REQUEST IN ACCORDANCE WITH ENVIRONMENTAL DOCUMENTS? ☑ YES ☐ NO
CCO DESCRIPTION: Land lease- storage & assembly	**PROJECT DESCRIPTION:** REPLACE SFOBB EAST SPAN

LOCATION: IN SAN FRANCISCO AND ALAMEDA COUNTIES IN SAN FRANCISCO AND OAKLAND FROM 1.3 KM EAST OF THE YERBA BUENA ISL

THIS CHANGE ORDER PROVIDES FOR:

Leasing the "Permanent Form Lay Down Area" and "Temporary Form Assemble Area," at the southeast corner of the warehouse at Pier 7, as shown on page 2 of Contract Change Order 6. These areas are 37 ft x 43 ft and 43 ft and 60 ft, respectively.

Due to their ideal location for loading onto and unloading from barges, these areas will be used to store and assemble forms. The lease will run from November 15, 2003, through January 1, 2005. All conditions and stipulations agreed upon in Contract Change Order #6 shall apply. In addition, it is agreed that this space can be vacated within 72 hours of written notice.

Supplement	Description	Amount	Pmt. Method	Status
2	Land lease- storage & assembly	$ (5,493.00)	ACUP	Pending
1	Set up of Pier 7 and Precast yard	$ 276,500.00	EWFA	In pay system
0	Set up of Pier 7	$ 450,000.00	EWFA	In pay system
	Land lease to KFM	($2,742,722.73)	ACUP	In pay system
TOTAL		($2,021,715.73)		

KFM shall compensate the State the agreed unit price of $0.12 per square foot per month for 13.5 months for a total of $5,493.00.

Maintenance concurrence is not required, as this work is not related to any permanent Caltrans facility. This CCO does not include any of the agreed-upon FHWA concurrence criteria and; therefore, FHWA concurrence is not required. In addition, design concurrence is not required because this CCO is not a design related CCO.

No adjustment in contract time is warranted as this change does not affect the contract time.

The Resident Engineer field approved this change order on 11/10/03.

COPY

CONTRACT CHANGE ORDER

Change Requested by: Engineer

CCO: 6	Suppl. No. 1	Contract No. 04 - 012024	Road 04-SF,Ala-80-13.9/14.3,0.0/1.6	FED. AID LOC.: ACIM-080-1 (085)8N

To: KIEWIT / FCI / MANSON a JV

You are directed to make the following changes from the plans and specifications or do the following described work not included in the plans and specifications for this contract. ***NOTE: This change order is not effective until approved by the Engineer.***

Description of work to be done, estimate of quantities and prices to be paid. (Segregate between additional work at contract price, agreed price and force account.) Unless otherwise stated, rates for rental of equipment cover only such time as equipment is actually used and no allowance will be made for idle time. This last percentage shown is the net accumulated increase or decrease from the original quantity in the Engineer's Estimate.

Extra Work at Force Account:

Provide labor, equipment, and material to provide service for water, sewer, electricity, telecommunications, and other site improvements for Caltrans facilities as authorized by the Engineer's representative. Payment for this work will be made in accordance with Section 5-1.21 "FORCE ACCOUNT PAYMENT" of the contract Special Provisions and Section 9-1.03 of the Standard Specifications.

Estimated cost of Extra Work at Force Account $276,500.00

This additional work does not affect the overall project schedule; therefore, no additional contract time will be granted for this change order.

This sum constitutes full and complete compensation, including markups for all direct and indirect costs, all associated project impacts and Time Related Overhead (TRO) expenses.

Estimated Cost: Increase ☑ Decrease ☐ $276,500.00

By reason of this order the time of completion will be adjusted as follows: 0 days

Submitted by

Signature	Resident Engineer: COE D.	Date 6-13-03

Approval Recommended by

Signature	Construction Engineer: COE D.	Date 6-13-03

Engineer Approval by

Signature	(Print name and title) PETER SIEGENTHALER - Chief	Date

We the undersigned contractor, have given careful consideration to the change proposed and agree, if this proposal is approved, that we will provide all equipment, furnish the materials, except as may otherwise be noted above, and perform all services necessary for the work above specified, and will accept as full payment therefor the prices shown above.

NOTE: If you, the contractor, do not sign acceptance of this order, your attention is directed to the requirements of the specifications as to proceeding with the ordered work and filing a written protest within the time therein specified.

Contractor Acceptance by

Signature	(Print name and title) A.T. Okoro, Project Director	Date 6/25/03

STATE OF CALIFORNIA - DEPARTMENT OF TRANSPORTATION

CONTRACT CHANGE ORDER MEMORANDUM

TO: PETER SIEGENTHALER / COE D.	FILE: E.A. 04 - 012024
FROM: COE D.	CO-RTE-PM 04-SF,Ala-80-13.9/14.3,0.0/1.6
	FED. NO. ACIM-080-1(085)8N
CCO#: 6 SUPPLEMENT#: 1 Category Code: AHZZ	CONTINGENCY BALANCE (incl. this change) $55,643,036.73
COST: $276,500.00 INCREASE ☑ DECREASE ☐	HEADQUARTERS APPROVAL REQUIRED? ☑ YES ☐ NO
SUPPLEMENTAL FUNDS PROVIDED: $0.00	IS THIS REQUEST IN ACCORDANCE WITH ENVIRONMENTAL DOCUMENTS? ☑ YES ☐ NO
CCO DESCRIPTION: Pier 7 and Stockton Yard Build Out	**PROJECT DESCRIPTION:** REPLACE SFOBB EAST SPAN

LOCATION: IN SAN FRANCISCO AND ALAMEDA COUNTIES IN SAN FRANCISCO AND OAKLAND FROM 1.3 KM EAST OF THE YERBA BUENA ISL

THIS CHANGE ORDER PROVIDES FOR:

Labor, equipment, and material to provide for water, sewer, electricity, and telecommunication services for the development of the Pier 7 administrative offices of Caltrans at the Port of Oakland and grading, paving, and fencing of the parking lot as part of the set-up/build out of the Resident Engineer office at the Stockton precast yard.

Supplemental 0 of this change order provided for the build out of Pier 7 for the administrative offices of Caltrans and the land lease of Kiewit/FCI/Manson, a JV (KFM). Supplement 1 compensates the contractor for the additional costs associated with the utility set-up of the Pier 7 office and the grading, paving, and fencing of the parking lot for the RE's inspection facility at the Stockton precast yard. Payment will be by extra work at force account. The following table summarizes the status of Change Order 6:

Supplement	Description	Amount	Pmt. Method	Status
1	Set up of Pier 7 and Precast yard	$ 276,500.00	EWFA	Pending
0	Set up of Pier 7	$ 450,000.00	EWFA	In pay system
	Land lease to KFM	($2,742,722.73)	ACUP	In pay system
TOTAL		($2,016,222.73)		

SUPPLEMENTAL NUMBER 1

EXTRA WORK AT FORCE ACCOUNT

Pier 7: Utility Set Up	$ 243,500.00
Precast yard: Security Set Up	$ 33,000.00
Total Force Account Compensation for CCO 6-Supp 1:	$ 276,500.00

Payment constitutes full compensation including all markups. The extra work bill tracking sheet for the Pier 7 set up and an analysis of the Stockton precast yard force account work are attached.

This contract change order does not affect the overall project schedule; therefore, no additional contract time is required. Concurrence from Maintenance is not required because this work is not related to any permanent Caltrans facility. Concurrence from Nancy Bobb, FHWA was received on July 25, 2003.

COPY

STATE OF CALIFORNIA - DEPARTMENT OF TRANSPORTATION

CONTRACT CHANGE ORDER MEMORANDUM

EA: 012024 CCO: 6 - 1 DATE: 7/25/2003

CONCURRED BY:

Construction Engineer:	Douglas Coe	Date 7-25-03
Bridge Engineer:		Date
FHWA Representative:	Nancy Bobb	Date7/25/2003
Project Engineer:		Date
Other (specify):		Date
		Date
trict Prior Approval By:		Date
(Issue Approve) By:		Date
dent Engineer's Signature:		Date 7-25-03

ESTIMATE OF COST

ITEMS	THIS REQUEST	TOTAL TO DATE
FORCE ACCOUNT	$0.00	$0.00
AGREED PRICE	$276,500.00	$726,500.00
ADJUSTMENT	$0.00	$0.00
TOTAL	$0.00	($2,742,722.73)
	$276,500.00	($2,016,222.73)

FEDERAL PARTICIPATION

☑ PARTICIPATING ☐ PARTICIPATING IN PART ☐ NONE

☐ NON-PARTICIPATING (MAINTENANCE) ☐ NON-PARTICIPATING

FEDERAL SEGREGATION (if more than one Funding Source or P.I.P. type)

☑ CCO FUNDED PER CONTRACT ☐ CCO FUNDED AS FOLLOWS

FEDERAL FUNDING SOURCE	PERCENT

CONTRACT NO. 012024
CCO NO. 6-S2
PAGE 2 OF 2

Berth 7 Overview
SCALE: No Scale

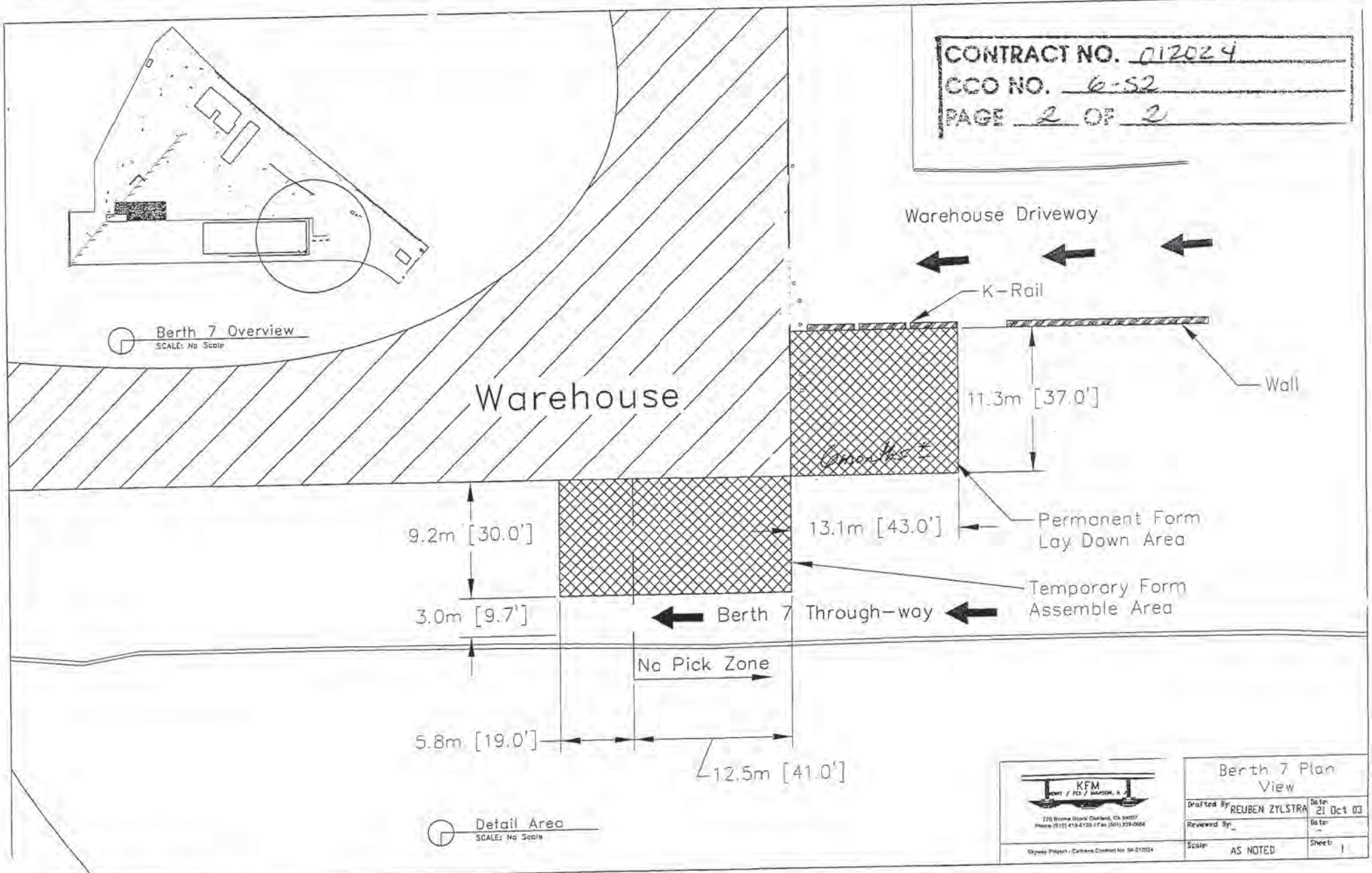

Detail Area
SCALE: No Scale

KFM
KONI / FCI / MAYSON, A J
720 Broma Road Oakland, CA 94607
Phone (510) 419-6120 / Fax (510) 339-0660

Skyway Project - Caltrans Contract No 04-012024

Berth 7 Plan View

Drafted By: REUBEN ZYLSTRA	Date: 21 Oct 03
Reviewed By:	Date: -
Scale: AS NOTED	Sheet: 1

Department of Transportation
EAST SPAN SEISMIC SAFETY PROJECT

CONCURRENCE FOR CHANGE ORDERS

Contract No. 04-012024
Co. & Rte Ala-80-13.9/14.3, 0.0/1.6

CCO#: 6 **S#:** 2
Title: Additional space rental at the south corner of the warehouse.
Date: 11/04/03

To: DOUGLAS COE, Resident Engineer

Requested By: Bill Howe, Senior Engineer (initials WBH)

Description of Work:
Contractor requsted 30 ft x 60 ft and 37 ft x 43 ft areas adjacent to the warehouse for form storage. Also, 23 ft x 110 ft at the north of Caltrans building at pier 7, to be used for parking.
Rate of rental = $0.12/FT^2$
This is a credit Due to the State of $710.52 per month.

Reason for Change:
The additional space for storage of forms was requested by KFM with the understanding that the space would be subject to a 72 hours notice to vacate, however, the parking space is not under that stipulation. There will be a financial benefit for the State and a benefit to the State and KFM by loading and unloading forms faster.

Discussed with persons noted below:

FHWA:	Date	Br. Const:	Date
District:	Date	Br. Design:	Date
Other:	Date	Br. Geology:	Date
		Br. Maintenance:	Date

Estimated Cost: CREDIT AMOUNT APPROX. $18,474.00

Recommended Method of Payment:
- ☐ Contract Items
- ☐ Extra Work at Force Account
- ☒ Agreed Price (LS or UP)
- ☐ Other:

Recommended Time Adjustment: 0 Working Days

Prior Approvals:

1. This represents an acknowledgement that the individuals below are in concurrence with the change order.
2. This represents an acknowledgement that I am in concurrence with this change order which must be approved before any work is done.

Comments:

11-5-03 — 1. ___ 2. X
Douglas Coe, Resident Engineer — Date

11/10/03 — 1. ✓ 2. ___
Pete Siegenthaler, Principal Construction Engineer — Date

1. ___ 2. ___
Robert Kobal, HQ Construction Coordinator — Date

STATE OF CALIFORNIA - DEPARTMENT OF TRANSPORTATION

CONTRACT CHANGE ORDER

Change Requested by: Contractor

CCO: 6	Suppl. No. 2	Contract No, 04 - 012024	Road 04-SF,Ala-80-13.9/14.3,0.0/1.6	FED. AID LOC.: ACIM-080-1(085)8N

Description of work to be done, estimate of quantities and prices to be paid. (Segregate between additional work at contract price, agreed price and force account.) Unless otherwise stated, rates for rental of equipment cover only such time as equipment is actually used and no allowance will be made for idle time. This last percentage shown is the net accumulated increase or decrease from the original quantity in the Engineer's Estimate.

Adjustment of Compensation at Unit Price:

Lease two (2) areas referred to as the "Permanent Form Lay Down Area" and "Temporary Form Assemble Area," as shown on page 2 of this contract change order. All conditions and stipulations agreed upon in Contract Change Order #6 shall apply. It is agreed that this space shall be vacated within 72 hours of written notice.

KFM shall compensate the State the agreed unit price of $0.12 per square foot per month to the State from November 15, 2003, through January 1, 2005.

Permanent Form Lay Down Area: 37 ft x 43 ft = 1591 sq. ft.
Temporary Form Assemble Area: 30 ft x 60 ft = 1800 sq. ft.
Total area = 3391 sq. ft.

3391 sq. ft. @ $0.12/month = $406.92/month for 13.5 months = $5,493.00

Cost of Adjustment of Compensation at Agreed Unit Price ..... ($5,493.00) (Credit)

Estimated Cost: **Increase** ☐ **Decrease** ☑ **($5,493.00)**

By reason of this order the time of completion will be adjusted as follows: 0 days

Submitted by		
Signature	**Resident Engineer:** COE D.	Date 12-3-03
Approval Recommended by		
Signature	**Construction Engineer:** COE D.	Date 12-3-03
Engineer Approval by		
Signature	**(Print name and title)** PETER SIEGENTHALER - Chief	Date 12-7-03

We the undersigned contractor, have given careful consideration to the change proposed and agree, if this proposal is approved, that we will provide all equipment, furnish the materials, except as may otherwise be noted above, and perform all services necessary for the work above specified, and will accept as full payment therefor the prices shown above.

NOTE: If you, the contractor, do not sign acceptance of this order, your attention is directed to the requirements of the specifications as to proceeding with the ordered work and filing a written protest within the time therein specified.

Contractor Acceptance by		
Signature	(Print name and title) A.T. Skoro, Project Director	Date 12/8/03

CONTRACT NO. 012024
CCO NO. 6-S2
PAGE 2 OF 2

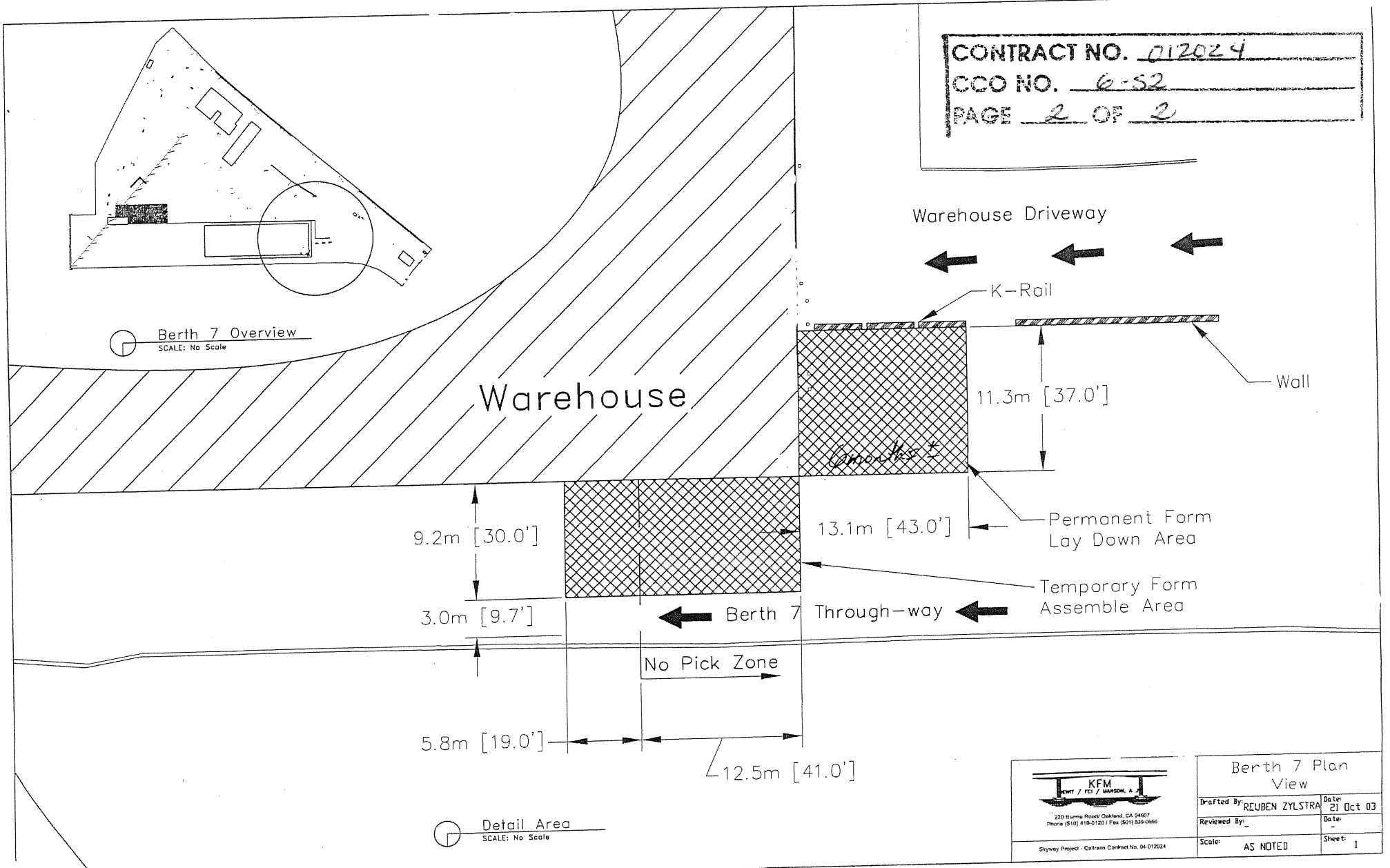

KFM
KWT / FCI / MARSON, A
720 Burma Road/ Oakland, CA 94607
Phone (510) 419-0120 / Fax (501) 839-0666

Skyway Project - Caltrans Contract No. 04-012024

Berth 7 Plan View	
Drafted By: REUBEN ZYLSTRA	Date: 21 Oct 03
Reviewed By: _	Date: _
Scale: AS NOTED	Sheet: 1

STATE OF CALIFORNIA - DEPARTMENT OF TRANSPORTATION

CONTRACT CHANGE ORDER MEMORANDUM

TO: PETER SIEGENTHALER / COE D.	FILE: E.A. 04 - 012024
FROM: COE D.	CO-RTE-PM 04-SF,Ala-80-13.9/14.3,0.0/1.6
	FED. NO. ACIM-080-1(085)8N
CCO#: 6 SUPPLEMENT#: 2 Category Code: CGAX	CONTINGENCY BALANCE (incl. this change) $30,202,395.34
COST: ($5,493.00) INCREASE ☐ DECREASE ☑	HEADQUARTERS APPROVAL REQUIRED? ☐ YES ☑ NO
SUPPLEMENTAL FUNDS PROVIDED: $0.00	IS THIS REQUEST IN ACCORDANCE WITH ENVIRONMENTAL DOCUMENTS? ☑ YES ☐ NO
CCO DESCRIPTION: Land lease- storage & assembly	**PROJECT DESCRIPTION:** REPLACE SFOBB EAST SPAN

LOCATION: IN SAN FRANCISCO AND ALAMEDA COUNTIES IN SAN FRANCISCO AND OAKLAND FROM 1.3 KM EAST OF THE YERBA BUENA ISL

THIS CHANGE ORDER PROVIDES FOR:

Leasing the "Permanent Form Lay Down Area" and "Temporary Form Assemble Area," at the southeast corner of the warehouse at Pier 7, as shown on page 2 of Contract Change Order 6. These areas are 37 ft x 43 ft and 43 ft and 60 ft, respectively.

Due to their ideal location for loading onto and unloading from barges, these areas will be used to store and assemble forms. The lease will run from November 15, 2003, through January 1, 2005. All conditions and stipulations agreed upon in Contract Change Order #6 shall apply. In addition, it is agreed that this space can be vacated within 72 hours of written notice.

Supplement	Description	Amount	Pmt. Method	Status
2	Land lease- storage & assembly	$ (5,493.00)	ACUP	Pending
1	Set up of Pier 7 and Precast yard	$ 276,500.00	EWFA	In pay system
0	Set up of Pier 7	$ 450,000.00	EWFA	In pay system
	Land lease to KFM	($2,742,722.73)	ACUP	In pay system
TOTAL		($2,021,715.73)		

KFM shall compensate the State the agreed unit price of $0.12 per square foot per month for 13.5 months for a total of $5,493.00.

Maintenance concurrence is not required, as this work is not related to any permanent Caltrans facility. This CCO does not include any of the agreed-upon FHWA concurrence criteria and; therefore, FHWA concurrence is not required. In addition, design concurrence is not required because this CCO is not a design related CCO.

No adjustment in contract time is warranted as this change does not affect the contract time.

The Resident Engineer field approved this change order on 11/10/03.

COPY

CONCURRED BY:	
Construction Engineer: Douglas Coe	Date 12-3-03
Bridge Engineer:	Date
FHWA Representative:	Date
Project Engineer:	Date
Other (specify):	Date
	Date
	Date
District Prior Approval By:	Date
HQ (Issue Approve) By:	Date
Resident Engineer's Signature:	Date 12-11-03

ESTIMATE OF COST

	THIS REQUEST	TOTAL TO DATE
ITEMS	$0.00	$0.00
FORCE ACCOUNT	$0.00	$726,500.00
AGREED PRICE	$0.00	$0.00
ADJUSTMENT	($5,493.00)	($2,748,215.73)
TOTAL	($5,493.00)	($2,021,715.73)

FEDERAL PARTICIPATION

☑ PARTICIPATING ☐ PARTICIPATING IN PART ☐ NONE
☐ NON-PARTICIPATING (MAINTENANCE) ☐ NON-PARTICIPATING

FEDERAL SEGREGATION (if more than one Funding Source or P.I.P. type)
☑ CCO FUNDED PER CONTRACT ☐ CCO FUNDED AS FOLLOWS

FEDERAL FUNDING SOURCE	PERCENT

CONTRACT CHANGE ORDER

Change Requested by: Engineer

CCO: 6	Suppl. No. 3	Contract No 04- 012024	Road 04-SF,Ala-80-13 9/14.3,0.0/1.6	FED. AID LOC.: ACIM-080-1(085)8N

To: **KIEWIT / FCI / MANSON a JV**

You are directed *to* make the following changes from the plans and specifications or do the following described work not included in the plans and *specifications for this contract.* ***NOTE:*** **This change order *is* not effective until approved *by* the Engineer.**

Description of work to be done, estimate of quantities and prices to be paid. (Segregate between additional work at contract price, agreed price and force account.) Unless otherwise stated, rates for rental of equipment cover only such time as equipment is actually used and no allowance will be made for idle time. This last percentage shown is the net accumulated increase or decrease from the original quantity in the Engineer's Estimate.

Adjustment of Compensation at Unit Price:

Lease added area referred to as the "AREA INCLUDED FOR LEASE IN THIS SUPPL.03," as shown on page 2 of this contract change order. All conditions and stipulations in Contract Change Order #6 shall apply to this supplement. It is agreed that this space shall be vacated within 72 hours of written notice.

KFM shall compensate the State the agreed unit price of $0.12 per square foot per month to the State from November 1, 2002, through February 14, 2006.

133,729 sq. ft. @ $0.12/month = $16,047.48/month for 39.5 months = $633,875.46

Cost of Adjustment of Compensation at Agreed Unit Price .....($633,875.46) (Credit)

Estimated Cost: Increase ☐ Decrease ☑ **($633,875.46)**

By reason of this order the time of completion will be adjusted as follows: 0 days

Submitted by

Signature	Resident Engineer: DOUG COE, Supervising Br. Eng.	Date 1-25-05

Approval Recommended by

Signature	Construction Engineer: DOUG COE, Supervising Br. Eng.	Date 1-25-05

Engineer Approval by

Signature	(Print name and title) PETER SIEGENTHALER - Chief	Date

We the undersigned contractor. have given careful consideration to the change proposed and agree, if this proposal is approved, that we will provide all equipment, furnish the materials, except as may otherwise be noted above, and perform all services necessary for the work above specified, and will accept as full payment therefor the prices shown above.

NOTE: If you, the contractor, do not sign acceptance of this order, your attention is directed to the requirements of the specifications as to proceeding with the ordered work and filing a written protest within the time therein specified.

Contractor Acceptance by

Signature	(Print name and title) Chris Villa, Deputy Project Director	Date 2-9-05

CONTRACT # 04-012024

CCO 6 SUPPLEMENT 03
PAGE 2 OF 2

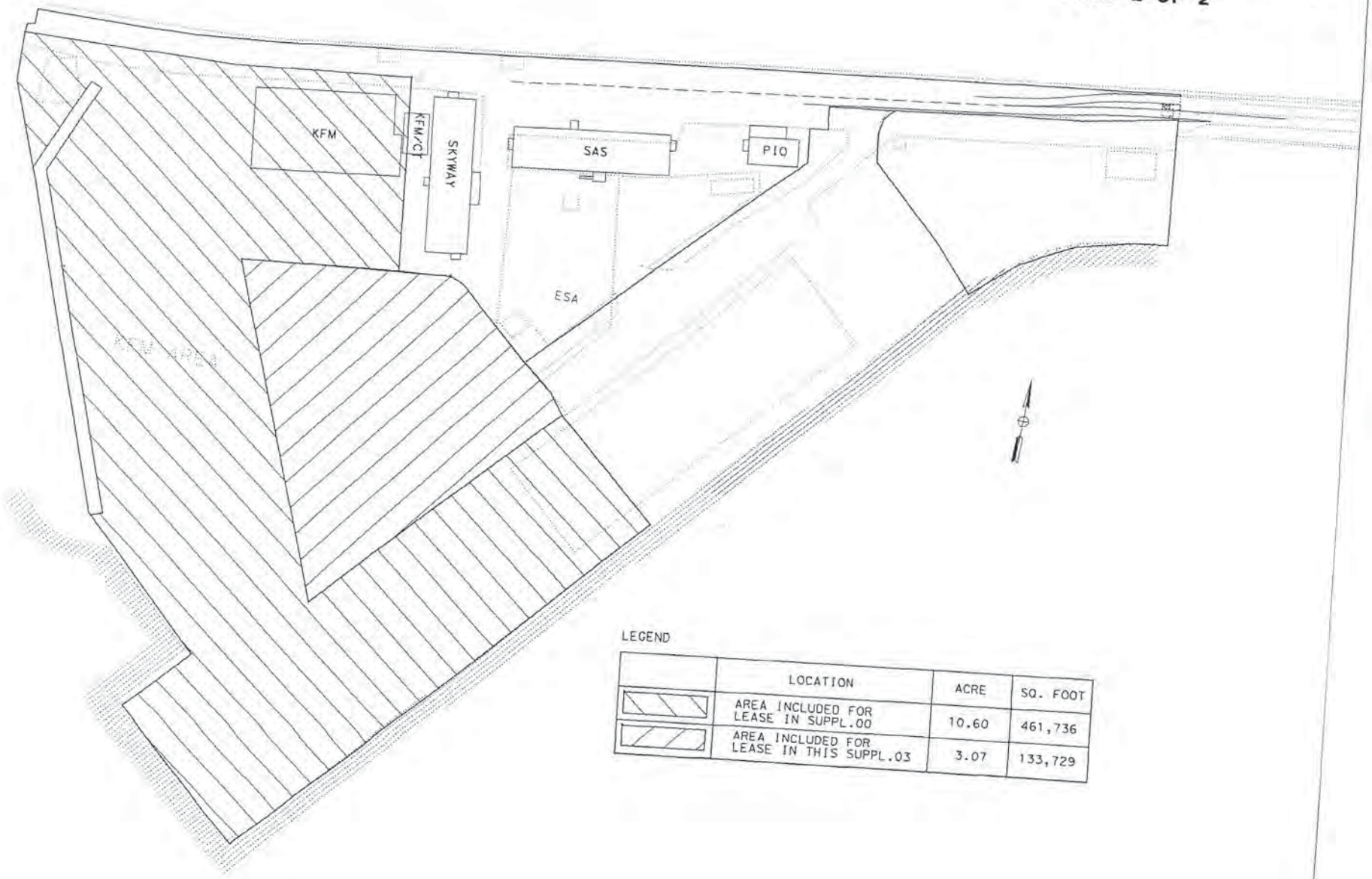

LEGEND

	LOCATION	ACRE	SQ. FOOT
	AREA INCLUDED FOR LEASE IN SUPPL.00	10.60	461,736
	AREA INCLUDED FOR LEASE IN THIS SUPPL.03	3.07	133,729

STATE OF CALIFORNIA - DEPARTMENT OF TRANSPORTATION

CONTRACT CHANGE ORDER MEMORANDUM

DATE: 12/17/2004 Page 1 of 1

TO: PETER SIEGENTHALER / COE D.	FILE: E.A. 04 - 012024
FROM: COE D.	CO-RTE-PM 04-SF,Ala-80-13.9/14.3,0.0/1.6
	FED. NO. ACIM-080-1(085)8N
CCO#: 6 SUPPLEMENT#: 3 Category Code: AHZZ	CONTINGENCY BALANCE (incl. this change) **$61,497,778.93**
COST: **($633,875.46)** INCREASE ☐ DECREASE ☑	HEADQUARTERS APPROVAL REQUIRED? ☐ YES ☑ NO
SUPPLEMENTAL FUNDS PROVIDED: **$0.00**	IS THIS REQUEST IN ACCORDANCE WITH ENVIRONMENTAL DOCUMENTS? ☑ YES ☐ NO
CCO DESCRIPTION: Added lease area inluded into Pier7	**PROJECT DESCRIPTION:** REPLACE SFOBB EAST SPAN

LOCATION: IN SAN FRANCISCO AND ALAMEDA COUNTIES IN SAN FRANCISCO AND OAKLAND FROM 1.3 KM EAST OF THE YERBA BUENA ISL

THIS CHANGE ORDER PROVIDES FOR:

Lease added area referred to as the "AREA INCLUDED FOR LEASE IN THIS SUPPL.03," as shown on page 2 of this contract change order. All conditions and stipulations in Contract Change Order #6 shall apply to this supplement. It is agreed that this space shall be vacated within 72 hours of written notice.

KFM shall compensate the State the agreed unit price of $0.12 per square foot per month to the State from November 1, 2002, through February 14, 2006.

133,729 sq. ft. @ $0.12/month = $16,047.48/month for 39.5 months = $633,875.46

Cost of Adjustment of Compensation at Unit Price.....($633,875.46) (Credit)

Maintenance concurrence is not required because this work is not related to any permanent Caltrans facility.

No adjustment in contract time is warranted as this change does not affect the contract time.

COPY

RECEIVED 03 4932 MAR-9 90

CONCURRED BY:		
Construction Engineer:	Douglas Coe	Date 1-3-05
Bridge Engineer:	Douglas Coe	Date 1-3-05
FHWA Representative:		Date
Project Engineer:		Date
Other (specify):		Date
		Date
		Date
District Prior Approval By:		Date
HQ (Issue Approval) By:		Date
Resident Engineer's Signature:		Date 1-3-05

ESTIMATE OF COST

	THIS REQUEST	TOTAL TO DATE
ITEMS	$0.00	$0.00
FORCE ACCOUNT	$0.00	$726,500.00
AGREED PRICE	$0.00	$0.00
ADJUSTMENT	($633,875.46)	($3,382,091.19)
TOTAL	($633,875.46)	($2,655,591.19)

FEDERAL PARTICIPATION

☑ PARTICIPATING ☐ PARTICIPATING IN PART ☐ NONE
☐ NON-PARTICIPATING (MAINTENANCE) ☐ NON-PARTICIPATING

FEDERAL SEGREGATION (if more than one Funding Source or P.I.P. type)
☑ CCO FUNDED PER CONTRACT ☐ CCO FUNDED AS FOLLOWS

FEDERAL FUNDING SOURCE	PERCENT

CONTRACT CHANGE ORDER

Change Requested by: Engineer

CCO: 6	Suppl. No. 4	Contract No. 04 - 012024	Road 04-SF,Ala-80-13.9/14.3,0.0/1.6	FED. AID LOC.: ACIM-080-1(085)8N

To: **KIEWIT / FCI / MANSON a JV**

You are directed to make the following changes from the plans and specifications or do the following described work not included in the plans and specifications for this contract. ***NOTE: This change order is not effective until approved by the Engineer.***

Description of work to be done, estimate of quantities and prices to be paid. (Segregate between additional work at contract price, agreed price and force account.) Unless otherwise stated, rates for rental of equipment cover only such time as equipment is actually used and no allowance will be made for idle time. This last percentage shown is the net accumulated increase or decrease from the original quantity in the Engineer's Estimate.

Extra Work at Force Account:

Provide additional funds for labor, equipment, and materials for the water, sewer, electrical, and telecommunications utility services and other site improvements for Caltrans facilities as authorized by the Engineer's representative for the East Span Skyway Bridge Replacement Project, Bridge Nos. 34-0006L/R. Payment for this work will be made in accordance with Section 5-1.21 "FORCE ACCOUNT PAYMENT," of the contract Special Provisions and Section 9-1.03 of the Standard Specifications.

Estimated cost of Extra Work at Force Account $600,000.00

Estimated Cost: Increase ☑ **Decrease** ☐ **$600,000.00**

By reason of this order the time of completion will be adjusted as follows: 0 days

Submitted by

Signature	Resident Engineer: DOUG COE, Supervising Br. Eng.	Date 11-16-05

Approval Recommended by

Signature	Construction Engineer: PETER SIEGENTHALER, Chief	Date 11-16-05

Engineer Approval by

Signature	(Print name and title) PETER SIEGENTHALER - Chief	Date 12-7-05

We the undersigned contractor, have given careful consideration to the change proposed and agree, if this proposal is approved, that we will provide all equipment, furnish the materials, except as may otherwise be noted above, and perform all services necessary for the work above specified, and will accept as full payment therefor the prices shown above.

NOTE: If you, the contractor, do not sign acceptance of this order, your attention is directed to the requirements of the specifications as to proceeding with the ordered work and filing a written protest within the time therein specified.

Contractor Acceptance by

Signature	(Print name and title) CHRISTOPHER J. VILLA Deputy Project Director	Date 11/28/05

STATE OF CALIFORNIA - DEPARTMENT OF TRANSPORTATION

CONTRACT CHANGE ORDER MEMORANDUM

TO: PETER SIEGENTHALER / DOUG COE, Supervising Br. Eng.	FILE: E.A. 04 - 012024
FROM: DOUG COE, Supervising Br. Eng.	CO-RTE-PM 04-SF,Ala-80-13.9/14.3,0.0/1.6 FED. NO. ACIM-080-1(085)8N
CCO# 6 SUPPLEMENT#: 4 Category Code: AHZZ	CONTINGENCY BALANCE (incl. this change) $57,662,565.67
COST $600,000.00 INCREASE ☑ DECREASE ☐	HEADQUARTERS APPROVAL REQUIRED? ☑ YES ☐ NO
SUPPLEMENTAL FUNDS PROVIDED: $0.00	IS THIS REQUEST IN ACCORDANCE WITH ENVIRONMENTAL DOCUMENTS? ☑ YES ☐ NO
CCO DESCRIPTION: Pier 7 Utility Payments	PROJECT DESCRIPTION: REPLACE SFOBB EAST SPAN

LOCATION: IN SAN FRANCISCO AND ALAMEDA COUNTIES IN SAN FRANCISCO AND OAKLAND FROM 1.3 KM EAST OF THE YERBA BUENA ISL

THIS CHANGE ORDER PROVIDES FOR:

additional funds for labor, equipment, and materials that will provide for water, sewer, electrical, and telecommunications utilities services, and other site improvements as authorized by the Engineer for Caltrans facilities.

This change order is needed to provide additional funds for Contract Change Order No. 6, Supplement No. 0, "Berth 7 Buildout," and Contract Change Order No. 6, Supplement No. 1, "Pier 7 and Stockton Yard Build Out", in order to provide for utilities services and site improvements to Caltrans facilities. Contract Change Order No. 6, Supplement No. 2, "Land Lease - Storage and Assembly," and Contract Change Order No. 6, Supplement No. 3, "Added Lease Area Included Into Pier 7," are for land lease issues only and do not include provisions for site utilities or improvements.

The additional funds are needed to pay for the current utility bills, which total approximately $140,000.00, and also for utility use and site improvements until project completion in April 2007. The cost of utility services for the Caltrans facilities through the completion of the contract are estimated to be $460,000.00.

For this work, the Contractor will be paid an estimated amount of $600,000.00. This increase in project costs can be financed from the contingency funds. Payment for this work will be made in accordance with Section 5-1.21, "Force Account Payment," of the contract Special Provisions, and Section 9-1.03, "Force Account Payment," of the Standard Specifications.

Janet Adams, SFOBB Toll Bridge Project Manager, provided concurrence on _____, 2005. A copy of the concurrence provided by Ms. Adams is attached.

FHWA did not provide concurrence for this change order because the "Final Estimate of Cost" lists an item under "State Furnished Materials and Expenses" for the Resident Engineers Office, which includes payment for utilities. However, there are restrictions that preclude the ability for the Department to pay the electrical utiltiy directly because of the electrical meter established for the project site identifies the Contractor as the customer, and the Department does not have an account set up directly with the electrical utility company. The Contractor is permitted to pay the electrical utility bills and then request payment from the Department for its share of the power used on the project site. This "share" is a percentage that has been agreed on between the Engineer and the Contractor. This contract change order is needed to compensate the Contractor for the electrical power consumed by the Resident Engineers Office located at the project site.

Design concurrence is not required as this change order does not modify the original design intent.

Concurrence from Maintenance is not required as this change order does not use maintenance funds or affect maintenance facilities or operations.

This contract change order does not affect the overall project schedule; therefore, no additional contract time is required.

CONCURRED BY:		
Construction Engineer	Douglas Coe	Date
Bridge Engineer	Douglas Coe	Date
FHWA Representative	Nancy Bobb	Date
Project Engineer		Date
Other (specify) Janet Adams	GLENN TAPPIAS	Date 11/14/05
		Date
		Date
District Prior Approval By		Date
HQ (Issue, Approve) By		Date
Resident Engineer's Signature		Date

ESTIMATE OF COST

	THIS REQUEST	TOTAL TO DATE
ITEMS	$0.00	$0.00
FORCE ACCOUNT	$600,000.00	$1,326,500.00
AGREED PRICE	$0.00	$0.00
ADJUSTMENT	$0.00	($3,382,091.19)
TOTAL	$600,000.00	($2,055,591.19)

FEDERAL PARTICIPATION

☐ PARTICIPATING ☐ PARTICIPATING IN PART ☑ NONE
☐ NON-PARTICIPATING (MAINTENANCE) ☑ NON-PARTICIPATING

FEDERAL SEGREGATION (if more than one Funding Source or P.I.P. Type)
☑ CCO FUNDED PER CONTRACT ☐ CCO FUNDED AS FOLLOWS

FEDERAL FUNDING SOURCE	PERCENT

STATE OF CALIFORNIA • DEPARTMENT OF TRANSPORTATION

CONTRACT CHANGE ORDER INPUT

CEM-4901 REV 5/1993 CT# 7541-3516-2

ADA Notice

For individuals with sensory disabilities, this document is available in alternate formats. For information call (916) 263-2041 or TDD (916) 263-2044 or write Records and Forms Managment, 1120 N Street, MS-89, Sacramento, CA 95814.

CASOAC

CONTRACT NO. 04 01202 4 (1–6) CCO NO. 006 (9–13) SUPPL. 05

CONSTRUCTION DEPT. USE ONLY ☐ FUNCTION (14) ☐ OVERRIDE (15)

CARD TYPE 1 (16)

C. C. O. DESCRIPTION: ADDITIONAL SPACE RENTAL AT PIER 7 (17–56)

NET $ CHANGE THIS CCO: - 8870.00 (57–66)

APPROVAL DATE: - - (67)

TIME EXTENSION DAYS: - 0 (74)

CATEGORY: CGA (77)

CARD TYPE 2 (16)

	PAYMENT METHOD			$ AMOUNT
EW ☐ (17)	AC ☒ (18)	FA ☐ (19)	LS ☐ (20)	UP ☒	- 8870.00 (23–31)
EW ☐	AC ☐	FA ☐	LS ☐	UP ☐	.
EW ☐	AC ☐	FA ☐	LS ☐	UP ☐	.

CARD TYPE 4 (16)

NET $ AMOUNT BRIDGE WORK THIS CCO: 0.00 (18–26)

CARD TYPE 3 (16)

ITEM NUMBER (17–19)	QUANTITY (21–32)	ITEM NUMBER (17–19)	QUANTITY (21–32)
	.		.
	.		.
	.		.
	.		.
	.		.
	.		.
	.		.
	.		.
	.		.
	.		.

CARD TYPE 5 (16)

FEDERAL PARTICIPATION: P (17)

P = PARTICIPATING

M = NON-PARTICIPATING (MAINTENANCE)

N = NON-PARTICIPATING (OTHER THAN MAINTENANCE)

R = NON-PARTICIPATING (REIMBURSEMENT BY OTHERS)

S = PARTICIPATING IN PART

IF PARTICIPATING IN PART (S), BREAKDOWN COST AS FOLLOWS: (INPUT TYPE AS P,M,N,R)

TYPE (18)	COST (19–27)
	.
	.
	.
	.

FEDERAL SEGREGATION (IF MORE THAN ONE FUNDING SOURCE)

E (28) E = CCO to be funded as per contract

☐ (29) F = CCO to be funded as follows:

FEDERAL FUNDING SOURCE (30–44)	PERCENT (45)

IN CASE OF QUESTIONS CONTACT: *NAME*

Doug Coe / Kannu Balan *{Sent to D04 on 9/18/2006 by Bahram Foadi, (510)622-5142}*

BUSINESS PHONE: (510) 622-5151

VERIFY:

Department of Transportation
EAST SPAN SEISMIC SAFETY PROJECT
CONCURRENCE FOR CHANGE ORDERS (08/04)

CCO#: 6 **S#:** 5
Title: Additional space rental in Pier 7
Date: 01/24/06

Contract No. 04-012024
Co. & Rte Ala-80-13.9/14.3, 0.0/1.6

To: DOUGLAS COE, Resident Engineer

Requested By: BILL HOWE, Senior Engineer (initials WSH)

Description of Work:
Providing a 80 ft x 84 ft area northeast of the Pier 7 warehouse, to be used for staging for disassembling wale frames.
Rate of rental = $0.12/sq ft per month.
This lease aggreement is effective from 3/15/05 to 2/14/06 with a credit due to the State of $ 806.40 per month.

Reason for Change:
The additional space for staging was requested by KFM, which will facilitate their wale frame disassembling operation. This space will be subject to a 72 hours notice to vacate. There will be a financial benefit for the State renting this unutilized space to the Contractor.

Approvals Required By:
- [x] Division of Construction, HQ
- [x] FHWA
- [ ] District

Concurrence Required By:
- [ ] Design
- [ ] Maintenance
- [ ]

Discussed with persons noted below:

FHWA:	Date	Br. Design:	Date
District:	Date	Br. Geology:	Date
Other:	Date	Br. Maintenance:	Date

Estimated Cost: ($8870.40) (Credit)

Recommended Method of Payment:
- [ ] Contract Items
- [x] Agreed Price (LS or UP)
- [ ] Extra Work at Force Account
- [ ] Other:

Recommended Time Adjustment: 0 Working Days

Prior Approvals:
- [ ] This represents Prior Approval to proceed with the work.
- [x] This represents an acknowledgement that the individuals below are in concurrence with this change order, which requires Division of Construction approval before proceeding with the work.

Comments:

Douglas Coe, Resident Engineer	2-3-06 Date	Pete Siegenthaler, Principal Construction Engineer	2-3-06 Date
David Salladay, District Representative	1-31-06 Date	Patrick Treacy, Division of Construction	2/05/06 Date

U.S. DEPARTMENT OF TRANSPORTATION FEDERAL HIGHWAY ADMINISTRATION CALIFORNIA DIVISION OFFICE

RECORD OF PRIOR APPROVAL FOR MAJOR CONTRACT CHANGE ORDERS

PROJECT NO.	CCO NO.	CONTRACT NO.	DIST-CO-RTE-PM
ACIM-080-1(085)8N	6 Suppl 5	04-012024	04-SF,Ala-80-13.9/14.3,0.0/1.6

REQUESTED BY:	CALTRANS HQ	DATE
Jake VanEnckevort	X RE/DISTRICT	2/15/06

PROPOSED CHANGE:

This change order provides for leasing the "Staging Area for Disassembling of Wale Frames," at the southeast corner of the warehouse at Pier 7, as shown on page 2 of the Contract Change Order. This area occupies 80 A x 84 ft. (6720 sq. ft.)

REASON FOR CHANGE:

Due to the ideal location for loading onto and unloading from barges, this area will be used to disassemble wale frames. The lease will run from March 15, 2005, through February 14, 2006.

This lease is part of the overall lease of land at Pier 7 to KFM, covered in previous supplements to this CCO.

AS DISCUSSED IN FIELD (REPORT NO. ____)

TIME EXTENSIONS	ACTIVITY ON CRITICAL PATH AFFECTED BY CCO (IF TIME EXTENSION INVOLVED)
* NONE __ DAYS __ DEFERRED	

ESTIMATE OF COST:	CCO:	METHOD OF PAYMENT
$__ INCREASE $ 8,870.40 DECREASE	CONTRACT ITEM AGREED PRICE	X ADJUSTMENT OF COMPENSATION EXTRA WORK AT FORCE ACCOUNT

THE WORK COVERED BY THE PROPOSED REVISION AS DESCRIBED ABOVE IS APPROVED SUBJECT TO SUBMISSION OF SUPPORTING DOCUMENTATION INCLUDING COST EVALUATION AND JUSTIFICATION OF TIME EXTENSIONS.

OTHER CONDITIONS:

PRIOR APPROVAL TO PROCEED GRANTED BY:	DATE OF AUTHORIZATION:
Nancy E. Bobb	2/23/06

Kannu Balan

03/24/2006 08:23 AM

To: Jake VanEnckevort/D04/Caltrans/CAGov@DOT
cc:
Subject: Re: CCO 6S5 - Pier 7 (Additional Land Lease)

Kannu Balan
Senior Transportation Engineer
CCO/Claims/Schedule Coordination
SFOBB - Skyway
(510) 622-5151
Cell# (510) 867-6774

----- Forwarded by Kannu Balan/D03/Caltrans/CAGov on 03/24/2006 08:20 AM -----

Ken Terpstra

03/24/2006 07:58 AM

To: Kannu Balan/D03/Caltrans/CAGov@DOT
cc: Peter Siegenthaler/D04/Caltrans/CAGov@DOT, David Salladay/D04/Caltrans/CAGov@DOT, Donald Coe/HQ/Caltrans/CAGov@DOT
Subject: Re: CCO 6S5 - Pier 7 (Additional Land Lease)

concur

TELECOPY

California Department of Transportation

CONSTRUCTION DIVISION

TO: District 4 CCO Desk

Date: 4/3/2006

Contract No.: 4 - 012024

Road: SF, ALA-80-13.9/14.3, 0.0/1.6

FED. No.: ACIM-080-1(085)8N

To: SARTIPI - 04

Attention: 04 - BELTRAN

HQ Direction: **TO ISSUE AND APPROVE**

CCO No. 006 **Sup. No.** 5 **Rev. No.** 1

Per Your Submittal Dated: 3/30/2006 **CCO Category Code:** C - G - A - X

PROVIDES AN 11 MONTH LEASE AGREEMENT FOR THE CONTRACTOR'S RENTAL OF AN AREA AT PIER 7 TO DISASSEMBLE WALE FRAMES. THIS CCO IS BEING EXECUTED IN ORDER TO BACK CHARGE THE CONTRACTOR FOR THE USE OF THE AREA.

TOTAL CREDIT TO THE STATE FOR THIS CHANGE, INCLUDING THIS SUPPLEMENTAL, IS SHOWN AS $2,364,461.59 WITH NO TIME ADJUSTMENT.

Items:	$0.00
Force Account:	$0.00
Agreed Price:	$0.00
Adj. of Comp.	($8,870.40)
Total:	**($8,870.40)**
Time:	**(NONE)**

EUGENE MALLETTE,
by: Assistant Division Chief

Bob Molera

Bob Molera

Division of Construction
1120 "N" Street, MS-44, Sacramento, CA 95814
Fax Number: (916) 654-5735
To Confirm Transmission, Call (916) 654-2735

KFM
KIEWIT / FCI / MANSON, A JV

P.O. BOX 23223 Oakland, CA 94623
Phone (510) 419-0120 / Fax (510) 839-0666

LETTER OF TRANSMITTAL
KFM Skyway Project # 04-012024

Run Date 14-Sep-06
Time 11:41 AM

Dated: 14-Sep-2006

TRANSMITTAL No: KFM-TRN-003642 **Rev:** 00

To: Doug Coe
Caltrans-Skyway Project
345 Burma Road
Oakland CA 94607
Phone: Fax:

Co/Job # 364-3726
Contract # 04-012024
Sub/Supplier:
Sub/Supplier No:

Subject: Contract Change Order 006; Supplement 5 (returned with signature)

Special Provis. (SP) REF:
Standard Spec. (SS) REF:
RESUBMITTAL/SUPPLEMENTAL REF:

We are sending the following attached items: ☑ Attached ☐ Via Fax

- ☐ Contract Plans/Specs
- ☐ Drawings/Calculations
- ☑ Change Order
- ☐ Copy of Letter
- ☐ Certs of Compl./Samples
- ☐ Schedule
- ☐ Progress Estimate Request
- ☐ Payroll Information
- ☐ Working Drawings
- ☐ WQCP and/or Addenda
- ☐ Weekly Welding Reports
- ☐ CWR Procedure

Item	Date	Copies	Description	Pages
01	14-Sep-2006	1	Contract Change Order 006; Supplement 5 (returned with signature)	2

These are transmitted as checked below:

- ☑ For Approval
- ☐ For Your Use
- ☐ For Review/Comment
- ☐ As Requested
- ☐ Return For Correction
- ☐ For Information

Remarks:

CC:

Submitted By: Shelley Burks
(KFM Staff Member – Originator of Transmittal)

Checked & Sent By: Shelley Burks
Contract Admin/DCS Staff

Copy To: Job Office Files

An Equal Opportunity Employer

STATE OF CALIFORNIA - DEPARTMENT OF TRANSPORTATION

CONTRACT CHANGE ORDER

Change Requested by: Contractor

CCO: 6	Suppl. No. 5	Contract No. 04 - 012024	Road 04-SF,Ala-80-13.9/14.3,0.0/1.6	FED. AID LOC.: ACIM-080-1(085)8N

To: **KIEWIT / FCI / MANSON a JV**

You are directed to make the following changes from the plans and specifications or do the following described work not included in the plans and specifications for this contract. ***NOTE: This change order is not effective until approved by the Engineer.***

Description of work to be done, estimate of quantities and prices to be paid. (Segregate between additional work at contract price, agreed price and force account.) Unless otherwise stated, rates for rental of equipment cover only such time as equipment is actually used and no allowance will be made for idle time. This last percentage shown is the net accumulated increase or decrease from the original quantity in the Engineer's Estimate.

Adjustment of Compensation at Unit Price:

Lease the area referred to as the "Staging Area for Disassembling of Wale Frames," at the southeast corner of the warehouse at Pier 7, as shown on page 2 of this Contract Change Order. All conditions and stipulations agreed upon in Contract Change Order No. 6 shall apply. It is agreed that this space shall be vacated within 72 hours of written notice.

KFM shall compensate the State the agreed unit price of $0.12 per square foot per month from March 15, 2005, through February 14, 2006.

Staging Area for Disassembling of Wale Frames: 80 ft x 84 ft = 6720 sq. ft.

6720 sq. ft. @ $0.12/month = $806.40/month for 11 months = $8,870.40

Adjustment of Compensation at Agreed Unit Price .....($8,870.40) (Credit)

Estimated Cost: Increase ☐ Decrease ☑ **($8,870.40)**

By reason of this order the time of completion will be adjusted as follows: 0 days

Submitted by		
Signature	**Resident Engineer:** DOUG COE, Supervising Br. Eng.	**Date** 3-28-06
Approval Recommended by		
Signature	**Construction Engineer:** DOUG COE, Supervising Br. Eng.	**Date** 3-28-06
Engineer's Approval by		
Signature	**(Print name and title)** DOUG COE, Supervising Br. Eng. - Construction Engin	**Date**

We the undersigned contractor, have given careful consideration to the change proposed and agree, if this proposal is approved, that we will provide all equipment, furnish the materials, except as may otherwise be noted above, and perform all services necessary for the work above specified, and will accept as full payment therefor the prices shown above.

NOTE: If you, the contractor, do not sign acceptance of this order, your attention is directed to the requirements of the specifications as to proceeding with the ordered work and filing a written protest within the time therein specified.

Contractor Acceptance by		
Signature	**(Print name and title)** Lee Zink Project Director	**Date** 9/12/06

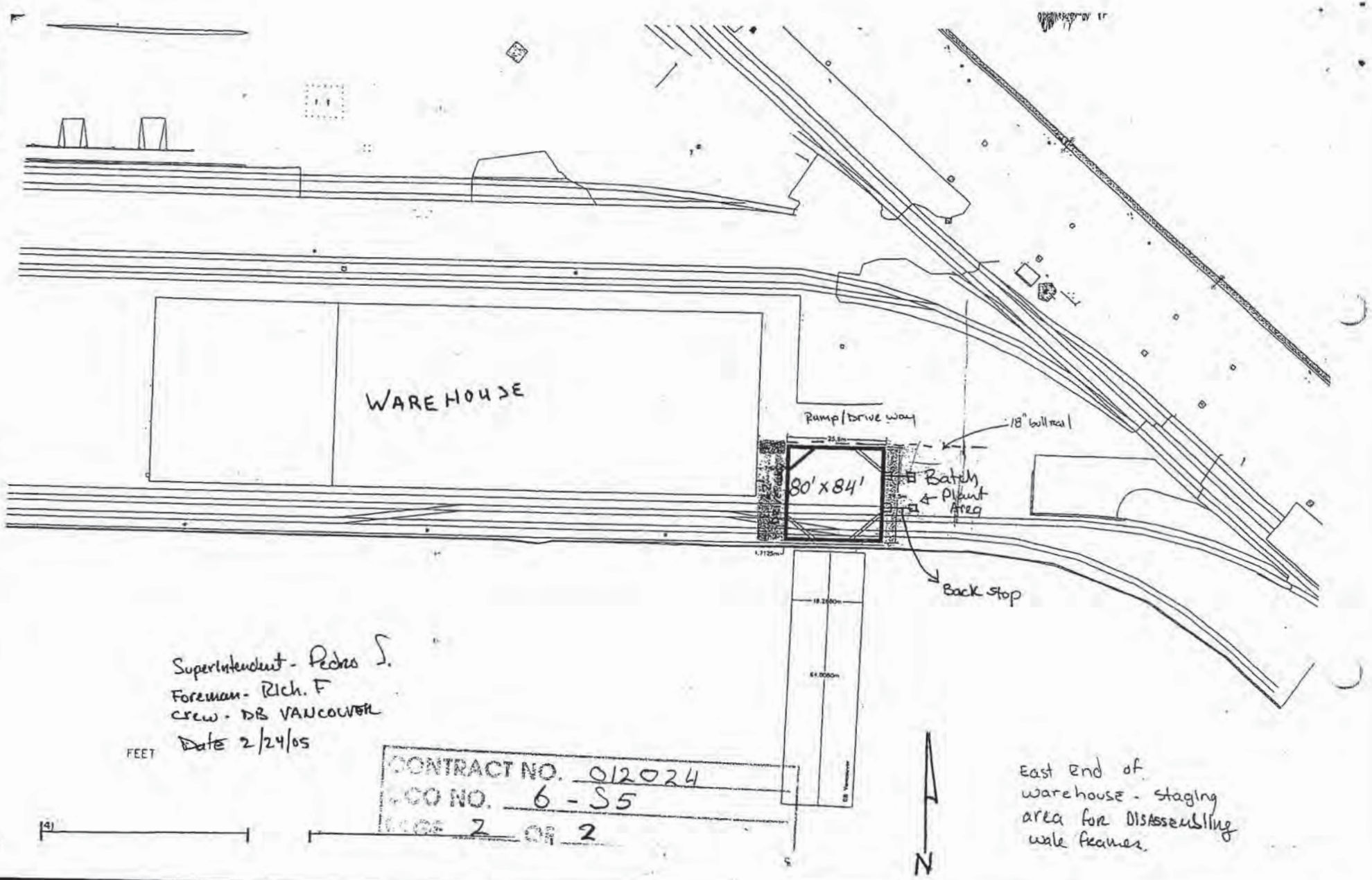

Superintendent - Pedro S.
Foreman - Rich. F
crew - DB VANCOUVER
Date 2/24/05

FEET

CONTRACT NO. 012024
CO NO. 6 - S5
PAGE 2 OF 2

East end of warehouse - staging area for disassembling wale frames.

TELECOPY

California Department of Transportation

CONSTRUCTION DIVISION

TO: District 4 CCO Desk

Date: 9/12/2006

Contract No.: 4 - 012024

Road: SF-ALA-80-13.9/14.3, 0.0/1.6

FED. No.: ACIM-080-1(085)8N

To: SARTIPI - 04

Attention: 04 - SARWARY

HQ Direction: RATIFY POST PERFORMANCE

CCO No. 006 **Sup. No.** 6 **Rev. No.** 2

Per Your Submittal Dated: 9/11/2006 **CCO Category Code:** A - H - Z - Z

PROVIDES AN EXTENSION OF LAND LEASE AGREEMENTS FOR THE CONTRACTOR'S LAY DOWN YARD AND FIELD OFFICE FROM FEBRUARY 14, 2006 THROUGH JULY 10, 2007 AS DESCRIBED FULLY IN THE CCO.

NOTE:

1. IN THE FUTURE PLEASE ENSURE THAT THE CCO IS ISSUED IN A TIMELY FASHION.

THE TOTAL CREDIT FOR THIS CHANGE, INCLUDING THIS SUPPLEMENTAL, IS SHOWN AS $3,071,976.99 WITH NO TIME ADJUSTMENT.

Items:	$0.00
Force Account:	$0.00
Agreed Price:	$0.00
Adj. of Comp.	($1,007,515.40)
Total:	**($1,007,515.40)**
Time:	**(NONE)**

EUGENE MALLETTE,
by: Assistant Division Chief

Ken Darby

Ken Darby

Division of Construction
1120 "N" Street, MS-44, Sacramento, CA 95814
Fax Number: (916) 654-5735
To Confirm Transmission, Call (916) 654-5259

"Bobb, Nancy" <Nancy.Bobb@fhwa.dot.gov>
09/19/2006 02:07 PM

To: "Jake VanEnckevort" <Jake_VanEnckevort@dot.ca.gov>
cc: "Bobb, Nancy" <Nancy.Bobb@fhwa.dot.gov>
Subject: RE: REQUEST FOR FHWA PRIOR APPROVAL FOR CCO NO. 6S6, Revised per CCO 200

Attached is a revised prior approval for CCO #6 S6. Sorry for the delay.

Nancy E. Bobb
Bay Bridge Project Oversight Manager
Federal Highway Administration
650 Capitol Mall, Suite 4-100
Sacramento, CA 95814
Phone: 916-498-5033 FAX: 916-498-5008

-----Original Message-----
From: Jake VanEnckevort [mailto:Jake_VanEnckevort@dot.ca.gov]
Sent: Monday, September 11, 2006 9:25 AM
To: Bobb, Nancy
Cc: Doug Coe; Kannu Balan; Bill Howe
Subject: REQUEST FOR FHWA PRIOR APPROVAL FOR CCO NO. 6S6, Revised per CCO 200

Ms. Bobb,

I am requesting your review of the attached documents for Contract Change
Order No. 6S6, "Berth 7 Build-out Lease Extension", for FHWA Prior Approval, if needed, for the SFOBB East Span Skyway Bridge Replacement Project, Federal Aid Project No. ACIM-080-1(085)8N

Contract Change Order No. 200 changed the completion date of the contract.
The Contractor requested a revision of this CCO to reflect the new project
completion date. Please issue a revised FHWA Prior Approval if necessary.

Please E-mail or telephone me at (510) 622-5111 or (209) 743-0871 if you have questions or require additional information.

Thank you,

Jake

(See attached file: CCO_6_S6_FHWA_Report_Rev.pdf)(See attached file: CCO_6_S6_FHWA_Memo_Rev.pdf)

CCO #6 S6 Rev. prior approval.dc

Kannu Balan
07/03/2006 07:50 AM

To: Jake VanEnckevort/D04/Caltrans/CAGov@DOT
cc:
Subject: Re: CCO 6S6 - C93, Drawing, Report and Memo for Ken Terpstra concurrence

Concur from Ken for CCO 6S6 & 152

Kannu Balan
Senior Transportation Engineer
CCO/Claims/Schedule Coordination
SFOBB - Skyway
(510) 622-5151
Cell# (510) 867-6774
----- Forwarded by Kannu Balan/D03/Caltrans/CAGov on 07/03/2006 07:45 AM -----

Ken Terpstra
07/02/2006 05:42 PM

To: Kannu Balan/D03/Caltrans/CAGov@DOT
cc: Peter Siegenthaler/D04/Caltrans/CAGov@DOT
Subject: Re: CCO 6S6 - C93, Drawing, Report and Memo for Ken Terpstra concurrence

concur
Kannu Balan

Kannu Balan
06/26/2006 11:25 AM

To: Ken Terpstra/D04/Caltrans/CAGov@DOT
cc: Peter Siegenthaler/D04/Caltrans/CAGov@DOT
Subject: CCO 6S6 - C93, Drawing, Report and Memo for Ken Terpstra concurrence

Ken,

Need your concurrence to process CCO's 6S6 and 152 as sent below.

let me know if you need help.
Thanks

Kannu Balan
Senior Transportation Engineer
CCO/Claims/Schedule Coordination
SFOBB - Skyway
(510) 622-5151
Cell# (510) 867-6774

----- Forwarded by Kannu Balan/D03/Caltrans/CAGov on 06/14/2006 08:20 AM -----

Kannu Balan
06/13/2006 09:17 AM

To: Ken Terpstra/D04/Caltrans/CAGov
cc: Peter Siegenthaler/D04/Caltrans/CAGov@DOT, David Salladay/D04/Caltrans/CAGov@DOT, Doug Coe/D04/Caltrans/CAGov@DOT, Gary Pursell/D02/Caltrans/CAGov@DOT
Subject: CCO 6S6 - C93, Drawing, Report and Memo for Ken Terpstra concurrence

Ken,

please concur the CCO to process, Pete has concurred as indicated in the C93, also I discussed with Gary Pursell as well.

CCO_6_S6_PM_Report.pc CCO_6_S6_PM_Memo.pc CCO_6_S6_PM_Dgn.pd CCO_6_S6_C-93.pd

Let me know if you have any questions.

Kannu Balan
Senior Transportation Engineer
CCO/Claims/Schedule Coordination
SFOBB - Skyway
(510) 622-5151
Cell# (510) 867-6774

----- Forwarded by Kannu Balan/D03/Caltrans/CAGov on 06/26/2006 11:17 AM -----

Kannu Balan

06/14/2006 01:30 PM

To: Ken Terpstra/D04/Caltrans/CAGov
cc: Peter Siegenthaler/D04/Caltrans/CAGov@DOT, Doug Coe/D04/Caltrans/CAGov@DOT, David Salladay/D04/Caltrans/CAGov@DOT
Subject: CCO 152S0 "Pier Table Pre-cast Panel Warping"-- Ken Terpstra concurrence

Ken,

please review and concur the CCO, Pete has concurred.

CCO_152S0_C93.pd CCO_152S0_PM_Report.pc CCO_152S0_PM_Memo.pc

Let me know if you have any questions.

Kannu Balan
Senior Transportation Engineer
CCO/Claims/Schedule Coordination
SFOBB - Skyway
(510) 622-5151
Cell# (510) 867-6774

RESIDENT ENGINEER COE, DOUG

CONTRACT CHANGE ORDER 006-065

CONTRACT NO. 04-012024

PHONE NUMBER 510 622-5101

FILING DATE 10/16/06

DESCRIPTION EXTENSION OF LAND LEASE FOR LAYDOWN YARD CCO CATEGORY AHZZ

APPROVAL DATE 10/16/06

TIME EXTENSION DAY NONE

ITEM NO.	DESCRIPTION OF CHANGE	APPROVED CHANGE QUANTITY	APPROVED CHANGE AMOUNT	CHANGES TO DATE CCO	CHANGES TO DATE QB	AUTHORIZED QUANTITY	QUANTITY PAID TO DATE	EST NO.
	ADJUSTMENT OF COMPENSATION -- UNIT PRICE (-)		$1,007,515.40CR					
	NET CHANGE THIS C.C.O.		$1,007,515.40CR					
	AMOUNT OF 'BRIDGEWORK'		$0.00					

*** C.C.O. ACCEPTED AND FILED. ***

FEDERAL PARTICIPATION				FEDERAL SEGREGATION			
DISP	TYPE	COST	TYPE	COST	TYPE	FUNDING SOURCE	PCT	FUNDING SOURCE	PCT
NEW	P	1,007,515.40		.00					

PROGRAM CAS131
DATE 10-14/94
TIME 02:45 PM

* * * C.C.D. EDIT ERROR LIST * * *

CONTRACT 04 - 012024

C. C. D. 006 - 06 S

ERROR CARD IMAGE	TYPE	FIELD	DESCRIPTION
0401202400606 X1EXTENSION OF LAND LEASE FOR LAYDOWN YARD-100751540101606 000	WARN	DISTRICT	CONTRACT ALREADY COMPLETED

CONTRACT CHANGE ORDER

Change Requested by: Engineer

CCO: 6	Suppl. No. 6	Contract No. 04 - 012024	Road 04-SF,Ala-80-13.9/14.3,0.0/1.6	FED. AID LOC.: ACIM-080-1(085)8N

To: **KIEWIT / FCI / MANSON a JV**

You are directed to make the following changes from the plans and specifications or do the following described work not included in the plans and specifications for this contract. ***NOTE: This change order is not effective until approved by the Engineer.***

Description of work to be done, estimate of quantities and prices to be paid. (Segregate between additional work at contract price, agreed price and force account.) Unless otherwise stated, rates for rental of equipment cover only such time as equipment is actually used and no allowance will be made for idle time. This last percentage shown is the net accumulated increase or decrease from the original

Adjustment of Compensation at Unit Price:

For extending the land lease agreements of CCO No. 6 Supplement 0 and Supplement 3, for the Contractor's lay down yard and field office. The new lease area is compriced of: Area 1 - 396,428 square feet, until July 10, 2007, Area 2 - 91,945 square feet, until March 31, 2006, Area 5 - 56,769 square feet, until December 31, 2006, and Area 6A - 84,830 square feet, until July 10, 2007, as shown on page 2 of this change order.

After July 10, 2007, area 1 and area 6A will become part of contract no. 04-0120E4. No further payments for the land lease will be required under contract no. 04-012024 after the expiration of this lease agreement.

All of the conditions and stipulations agreed to in CCO No. 6 Supplement 0 and Supplement 3, shall remain into effect for the duration of this lease extension.

The State will be compensated the agreed unit price of $0.12 per square foot / per month during the terms of this agreement.

Estimate of Adjustment of Compensation at Agreed Unit Price:

Area 1	369,428 sq ft. @ $0.12/month = $44,331.36/month	@ 16.867 months =	$ 747,737.05
Area 2	91,945 sq ft. @ $0.12/month = $11,033.40/month	@ 1.500 months =	$ 16,550.10
Area 5	56,769 sq ft. @ $0.12/month = $ 6,812.28/month	@ 10.500 months =	$ 71,528.94
Area 6A	84,830 sq ft. @ $0.12/month = $10,179.60/month	@ 16.867 months =	$ 171,699.31

Total credit to the State for the duration of the lease extension $1,007,515.40

Total Adjustment of Compensation at Agreed Unit Price .....($1,007,515.40)(Credit)

Estimated Cost: Increase ☐ Decrease ☑ ($1,007,515.40)

By reason of this order the time of completion will be adjusted as follows: 0 days

Submitted by

Signature	Resident Engineer: DOUG COE, Supervising Br. Eng.	Date 9-6-06

Approval Recommended by

Signature	Construction Engineer: DOUG COE, Supervising Br. Eng.	Date 9-6-06

Engineer Approval by

Signature	(Print name and title) PETER SIEGENTHALER - Chief	Date 10-16-06

We the undersigned contractor, have given careful consideration to the change proposed and agree, if this proposal is approved, that we will provide all equipment, furnish the materials, except as may otherwise be noted above, and perform all services necessary for the work above specified, and will accept as full payment therefor the prices shown above.

NOTE: If you, the contractor, do not sign acceptance of this order, your attention is directed to the requirements of the specifications as to proceeding with the ordered work and filing a written protest within the time therein specified.

Contractor Acceptance by

Signature	(Print name and title) LEE ZINK, PROJECT DIRECTOR	Date 10-4-06

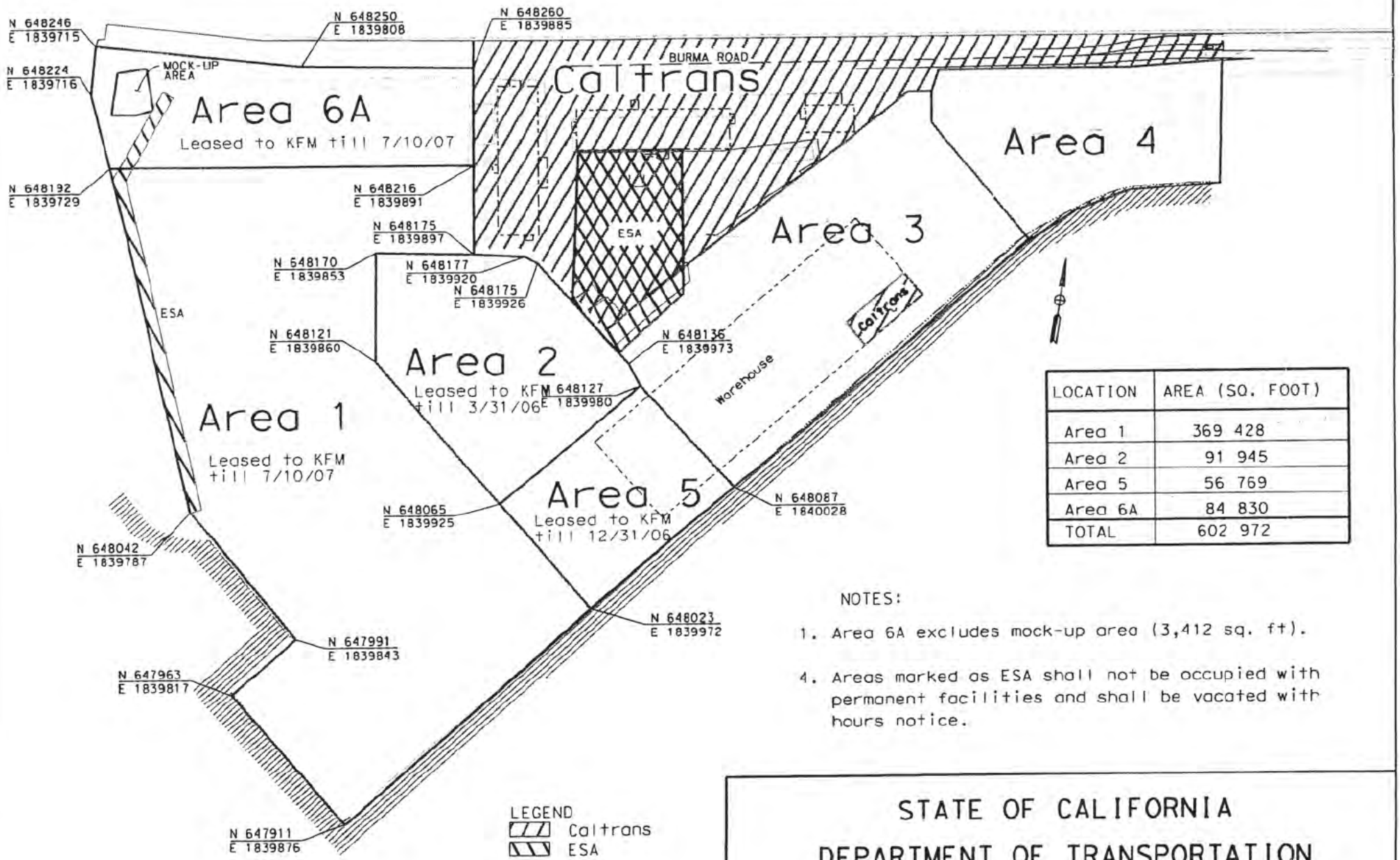

LOCATION	AREA (SQ. FOOT)
Area 1	369 428
Area 2	91 945
Area 5	56 769
Area 6A	84 830
TOTAL	602 972

NOTES:

1. Area 6A excludes mock-up area (3,412 sq. ft).

4. Areas marked as ESA shall not be occupied with permanent facilities and shall be vacated with hours notice.

CCO NO. 6 S6
PAGE 2 OF 2

STATE OF CALIFORNIA
DEPARTMENT OF TRANSPORTATION
DISTRICT 4 TOLL BRIDGE PROGRAM

PIER 7-AREAS FOR CONTRACTOR'S USE

...\pier 7 leased area CCO6_S6.dgn 09/07/2006 08:59:41 AM

STATE OF CALIFORNIA - DEPARTMENT OF TRANSPORTATION

CONTRACT CHANGE ORDER MEMORANDUM

TO: PETER SIEGENTHALER / DOUG COE, Supervising Br. Eng.

FROM: DOUG COE, Supervising Br. Eng.

FILE: **E.A.** 04 - 012024
CO-RTE-PM 04-SF,Ala-80-13.9/14.3,0.0/1.6
FED. NO. ACIM-080-1(085)8N

CCO# **6** SUPPLEMENT#: **6** Category Cod **AHZZ**

CONTINGENCY BALANCE (incl. this change **$23,094,360.26**

COST: **($1,007,515.40)** INCREASE ☐ DECREASE ☑

HEADQUARTERS APPROVAL REQUIRED? ☑ YES ☐ NO

SUPPLEMENTAL FUNDS PROVIDED: **$0.00**

IS THIS REQUEST IN ACCORDANCE WITH ENVIRONMENTAL DOCUMENTS? ☑ YES ☐ NO

CCO DESCRIPTION:
Berth 7 Build-out Lease Extension

PROJECT DESCRIPTION:
REPLACE SFOBB EAST SPAN

LOCATION: IN SAN FRANCISCO AND ALAMEDA COUNTIES IN SAN FRANCISCO AND OAKLAND FROM 1.3 KM EAST OF THE YERBA BUENA ISL

THIS CHANGE ORDER PROVIDES FOR:

Extending the land lease agreements of CCO No. 6 Supplement 0 and Supplement 3, for the Contractor's lay down yard and field office.

The current lease agreement expired on February 14, 2006. Work on this project is still ongoing and the Contractor is requesting an extension of the lease agreement until July 10, 2007. This is the revised date resulting from the additional 120 work days of full Time Related Overhead (TRO) payments per bid item 7 granted as part of the resolution CCO No. 200. The negotiated lower TRO payment for the last 100 work days which goes into effect after July 10, 2007 does not include compensation for the land lease since the majority of the area will be used for the E2T1 contract by that time.

Due to the area set aside for the Self-Anchored Suspension Bridge Project (SAS) (Contract No. 04-0120F4) the areas available for the lease extension are slightly different than the area currently leased. Therefore, a new lease area drawing has been developed and is attached as page 2 of 2 of the change order.

The Contractor is requesting the use of:
Area 1 until July 10, 2007, this area becomes part of the E2T1 contract no. 04-0120E4 after this date.
Area 2 until March 31, 2006, this area becomes available to the SAS contract on April 1, 2006.
Area 5 until December 31, 2006, this area becomes available to the SAS contract on January 1, 2007.
Area 6A until July 10, 2007, this area becomes part of the E2T1 contract no. 04-0120E4 after this date.
All of these areas are consistent with the SAS contract (04-0120F4).

All of the conditions and stipulations agreed to in CCO No. 6 Supplement 0 and Supplement 3, shall remain in effect for the duration of this lease extension.

Compensation to the State for the land lease will be based on an agreed unit price of $0.12 per square foot per month.

The Pier 7 lease extension to the Contractor will result in an estimated decrease in cost to the project of $1,007,515.40. A cost analysis supporting the agreed unit price and total credit is on file in the project records.

Mr. Pete Siegenthaler, SFOBB Construction Manager, concurs with this change. A copy of the concurrence signed by Mr. Siegenthaler on April 14, 2006, is attached.

Prior Approval was obtained from Ms. Nancy Bobb, FHWA Bay Bridge Project Manager, via electronic message on June 6, 2006. A printed copy of the prior approval provided by Ms. Bobb is attached.

Prior Approval was obtained from Mr. Ken Terpstra, SFOBB Project Manager, via electronic message on July 2, 2006. A printed copy of the prior approval provided by Mr. Terpstra is attached.

Concurrence from Maintenance is not required as this change order does not use maintenance funds or affect maintenance facilities or operations.

No time adjustment is warranted for this change as it does not affect the controlling operation.

CONCURRED BY:		
Construction Engineer:	Douglas Coe	Date 9-6-06
Bridge Engineer:	Douglas Coe	Date 9-6-06
FHWA Representative:	Nancy Bobb	Date 6/6/2006
Project Engineer:		Date
Other (specify): Ken Terpstra, SFOBB Project Manager		Date 7/2/2006
		Date
		Date
District Prior Approval By:		Date
HQ (Issue Approve) By:	Ken Darby	Date
Resident Engineer's Signature:		Date 9-6-06

ESTIMATE OF COST

	THIS REQUEST	TOTAL TO DATE
ITEMS	$0.00	$0.00
FORCE ACCOUNT	$0.00	$1,326,500.00
AGREED PRICE	$0.00	$0.00
ADJUSTMENT	($1,007,515.40)	($4,398,476.99)
TOTAL	($1,007,515.40)	($3,071,976.99)

FEDERAL PARTICIPATION

☑ PARTICIPATING ☐ PARTICIPATING IN PART ☐ NONE
☐ NON-PARTICIPATING (MAINTENANCE) ☐ NON-PARTICIPATING

FEDERAL SEGREGATION (if more than one Funding Source or P.I.P. type)
☑ CCO FUNDED PER CONTRACT ☐ CCO FUNDED AS FOLLOWS

FEDERAL FUNDING SOURCE	PERCENT

T·Y·LIN INTERNATIONAL
MOFFATT & NICHOL
a joint venture

To: Sajid Abbas

From: Madon Sah

Date: July 15,2002

Subject: Fender Revisions: 100% Submittal

copy:

MEMORANDUM

Paul,

Attached please find the following for the 100% submittal for the fender revisions due to the pile cap redesign:

1. Plans (3 hard copies). This includes the following drawings:

   a) Fender System Layout (Sheet No. 492)
   b) Precast Fender Modules Details No. 1 (Sheet No. 493)
   c) Precast Fender Modules Details No. 2 (Sheet No. 494)
   d) Precast Fender Modules Details No. 3 (Sheet No. 495)
   e) Fender Slab Details (Sheet No. 498)

2. Electronic Copy of the Plans (CD-1 Copy).

Regards

Madon Sah

DIST.	COUNTY	ROUTE	KILOMETER POST TOTAL PROJECT	SHEET NO.	TOTAL SHEETS
04	SF, Ala	80	3.9/14.3, 0.0/1.6	924R1	978

REGISTERED ENGINEER - CIVIL

6-4-01
PLANS APPROVAL DATE

The State of California or the officers or agents shall not be responsible for the accuracy or completeness of electronic copies of this plan sheet.

REGISTERED PROFESSIONAL ENGINEER A.L. ELY No. 16680 Exp. 9-30-05 CIVIL STATE OF CALIFORNIA

T.Y. LIN / MOFFATT & NICHOL
825 BATTERY STREET
SAN FRANCISCO, CA 94111

Caltrans now has a web site! To get to the web site, go to: http://www.dot.ca.gov

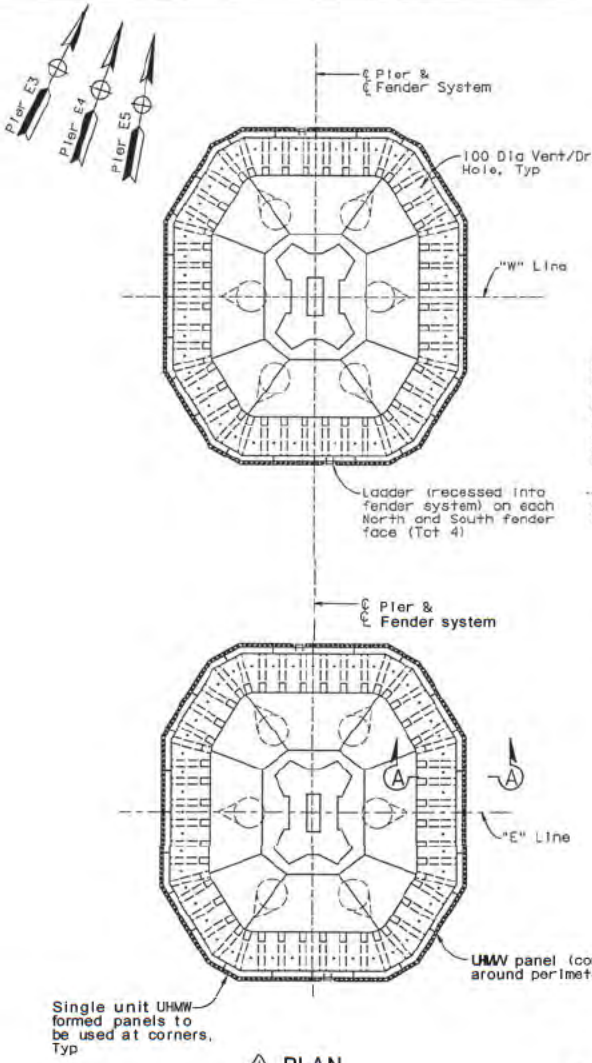

⚠ PLAN
1:200

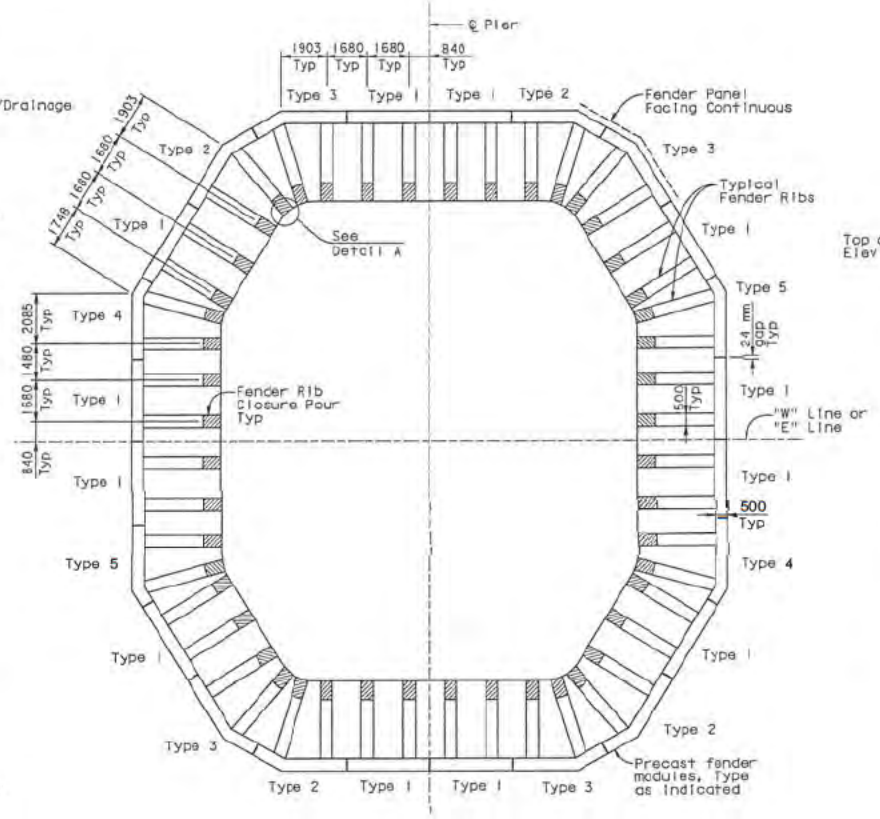

⚠ TYPICAL PLAN BELOW FENDER SLAB
1:100

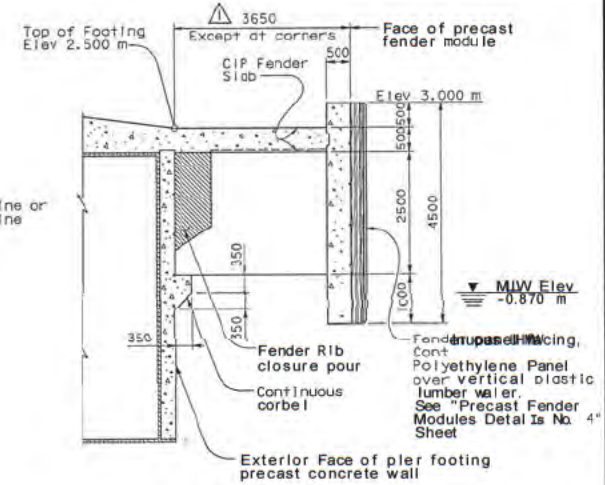

TYPICAL SECTION A-A
1:50

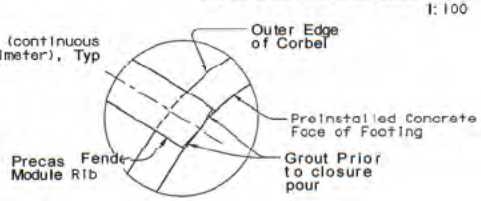

DETAIL A
1:25

NOTES:

1. Fendering system for skyway structures required at piers E3, E4, and E5.
2. Confirm precast concrete footing dimensions before finalizing precast fender module dimensions.

MARK	DATE	DESCRIPTIONS REVISIONS	BY	CHKD
1	07/01/02	REVISED FENDER MODULE GEOMETRY		

CONTRACT CHANGE ORDER NO. ____
SHEET ____ OF ____

ALL DIMENSIONS ARE IN MILLIMETERS UNLESS OTHERWISE SHOWN

SAN FRANCISCO OAKLAND BAY BRIDGE
EAST SPAN SEISMIC SAFETY PROJECT

SKYWAY STRUCTURES
FENDER SYSTEM LAYOUT

R.S. Bagha
SIGN OVERSIGHT
SIGN OFF DATE 11/17/00

DESIGN A. Ely/E. Nichol — CHECKED M. Harris
DETAILS M. Harris — CHECKED S. Nichol
QUANTITIES U. Harris — CHECKED E. Nichol

PREPARED FOR THE STATE OF CALIFORNIA DEPARTMENT OF TRANSPORTATION

Sajid Abbas
PROJECT ENGINEER

BRIDGE NO. 34-0006
KILOMETER POST 3.9/14.3, 0.0/1.6

CU 04
EA 012021

FILE => d:\aa\akfen01.dgn

Rev. Date 5-18-00

SHEET 492 OF

DATE PLOTTED => 12 JUL 1902 TIME PLOTTED => 18:14:03
USER NAME => ALeo

Caltrans now has a web site! To get to the web site, go to http://www.dot.ca.gov

Caltrans Metric

DIST.	COUNTY	ROUTE	KILOMETER POST TOTAL PROJECT	SHEET NO.	TOTAL SHEETS
04	SF, Ala	80	13.9/14.3. 0.0/1.6	925R1	978

A.L. Ely
REGISTERED ENGINEER - CIVIL
6-4-01
PLANS APPROVAL DATE
The State of California or its officers or agents shall not be responsible for the accuracy or completeness of electronic copies of this plan sheet.

REGISTERED PROFESSIONAL ENGINEER A.L. ELY No. 18880 Exp. 3-30-06 CIVIL STATE OF CALIFORNIA

T.Y. LIN / MOFFATT & NICHOL
825 BATTERY STREET
SAN FRANCISCO, CA 94171

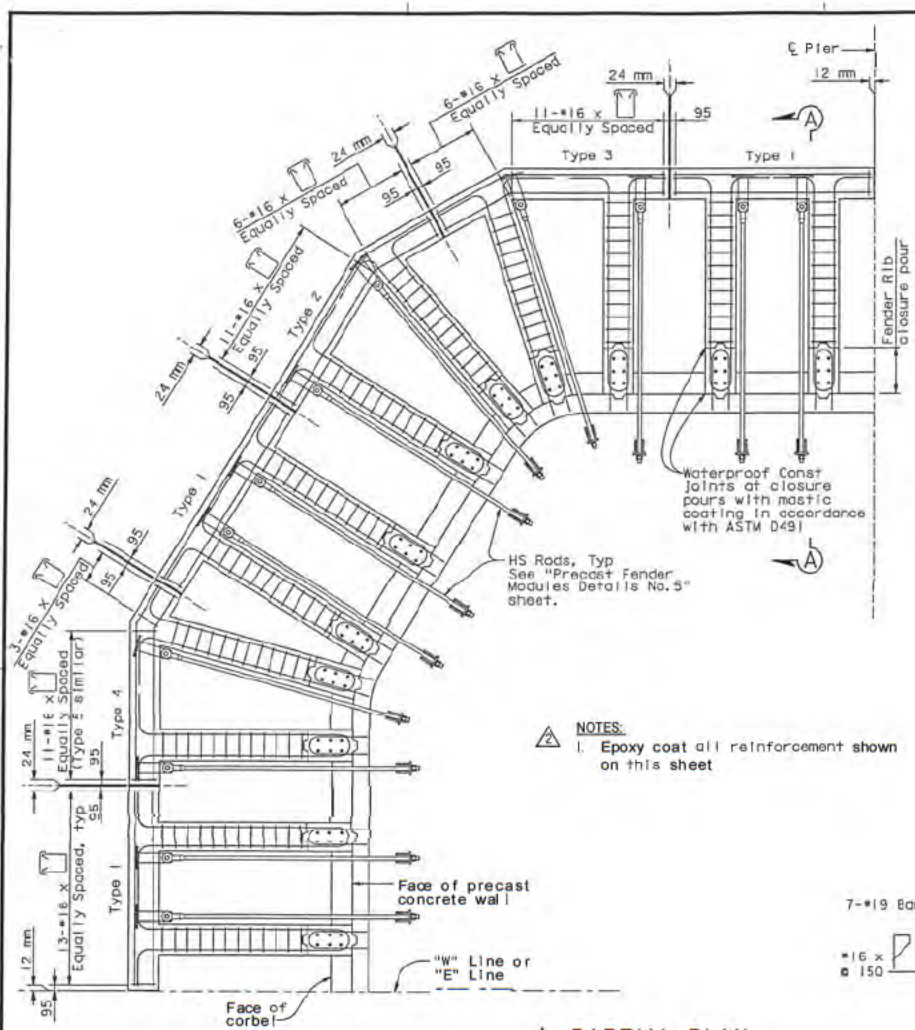

NOTES:
1. Epoxy coat all reinforcement shown on this sheet

1 2 PARTIAL PLAN
1:40

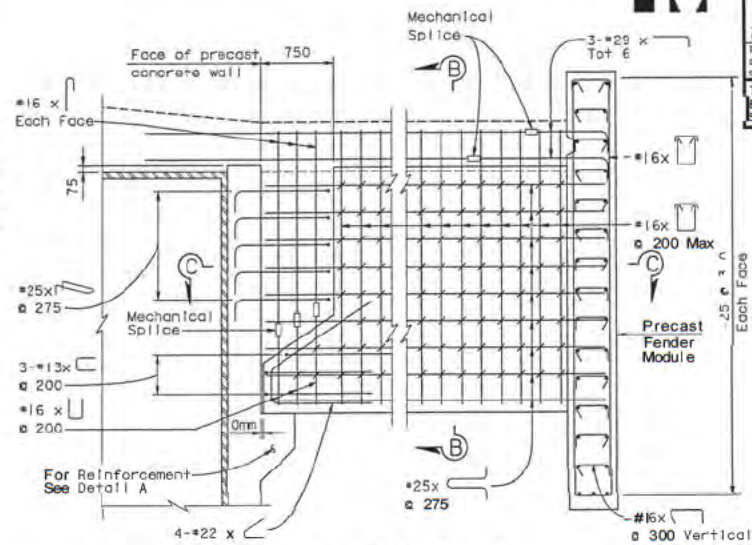

1 SECTION A-A
1:25

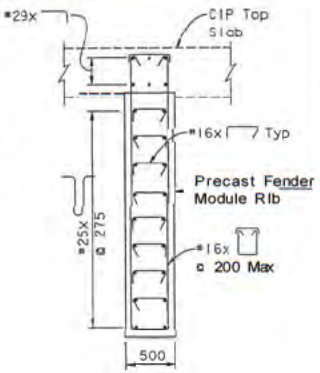

SECTION B-B
1:25

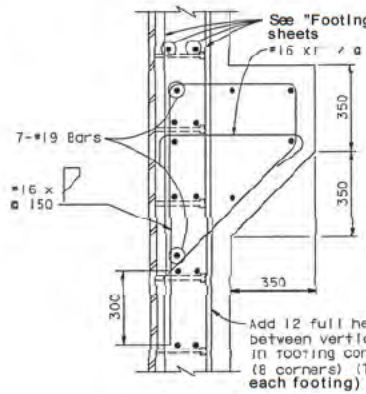

2 DETAIL A
1:10

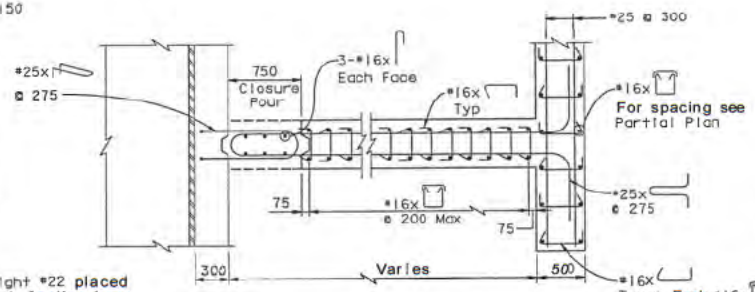

1 SECTION C-C
1:25

MARK	DATE	DESCRIPTIONS	BY	CH'D
2	07/01/02	REVISED REINFORCEMENT	MD	AKJ
1	07/01/02	REVISED FENDER MODULE GEOMETRY	MD	AKJ

REVISIONS

CONTRACT CHANGE ORDER NO. ____
SHEET ____ OF ____

ALL DIMENSIONS ARE IN MILLIMETERS UNLESS OTHERWISE SHOWN

R.S. Bogha
DESIGN OVERSIGHT
R.S. Bogha
SIGN OFF DATE 11/17/00
Rev. Date 6-22-00

DESIGN A. Ely/M. Harris — CHECKED E. Nichol
DETAILS M. Harris — CHECKED K. Nichol
QUANTITIES F. Nichol — CHECKED M. Harris

PREPARED FOR THE STATE OF CALIFORNIA DEPARTMENT OF TRANSPORTATION

Solicitation PROJECT ENGINEER

BRIDGE NO. 34-0006
KILOMETER POST 13.9/14.3. 0.0/1.6
DISPLAYED DRAWS BEARING REVISED REVISION DATES

SAN FRANCISCO OAKLAND BAY BRIDGE
EAST SPAN SEISMIC SAFETY PROJECT

SKYWAY STRUCTURES

PRECAST FENDER MODULES DETAILS NO. 1

CU 04
EA 012021
FILE > c:\oa\akfen02.dgn

SHEET 493 OF

100% ESA

DATE PLOTTED => 12 JUL 102
TIME PLOTTED => 16:36:35

MARK	DATE	DESCRIPTIONS	BY	CH'D
1	07/01/02	REVISED FENDER MODULE GEOMETRY	EAN	KA

REVISIONS

CONTRACT CHANGE ORDER NO. ____
SHEET ____ OF ____

DIST.	COUNTY	ROUTE	KILOMETER POST TOTAL PROJECT	SHEET NO.	TOTAL SHEETS
04	SF, Alc	80	13.9/14.3, 0.0/1.6	926R1	978

N. Ely
REGISTERED ENGINEER - CIVIL
6-4-01
PLANS APPROVAL DATE

REGISTERED PROFESSIONAL ENGINEER A.L. ELY No. 18880 Exp. 9-30-05 CIVIL STATE OF CALIFORNIA

The State of California or its officers or agents shall not be responsible for the accuracy or completeness of electronic copies of this plan sheet.

T.Y. LIN / MOFFATT & NICHOL
825 BATTERY STREET
SAN FRANCISCO, CA 94111

Caltrans now has a web site! To get to the web site, go to http://www.dot.ca.gov

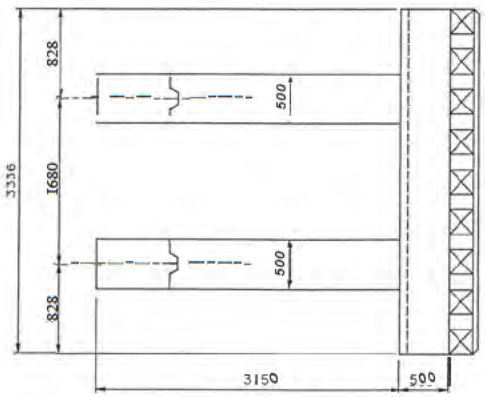

1 TYPE 1 PLAN
1:25

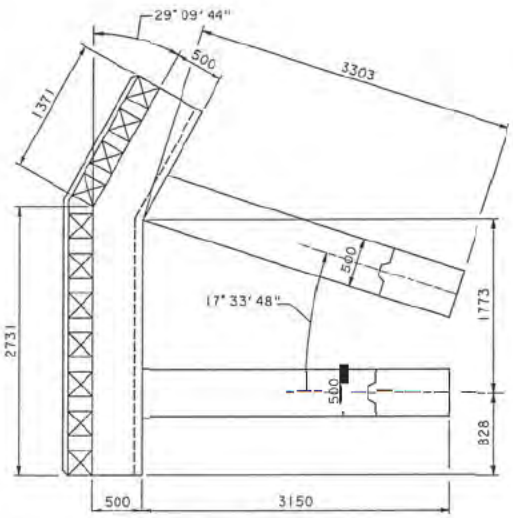

1 TYPE 2 PLAN
1:25

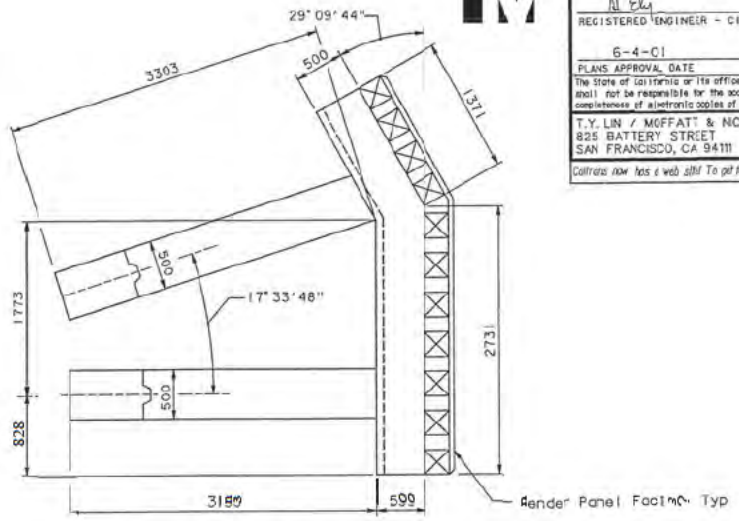

1 TYPE 3 PLAN
1:25

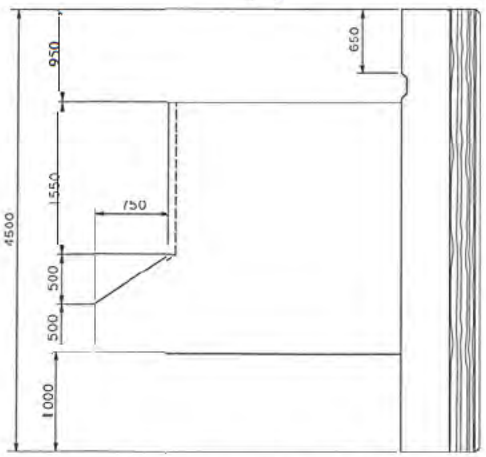

1 TYPE ELEVATION
1:25

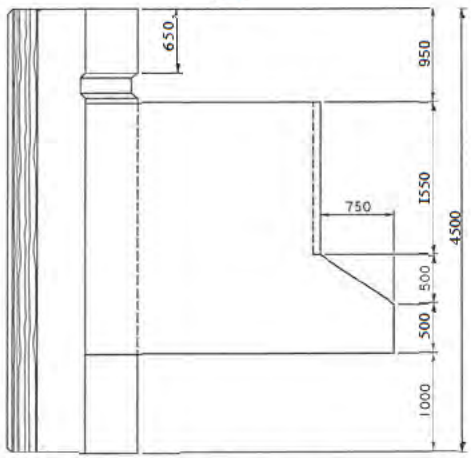

1 TYPE 2 ELEVATION
1:25

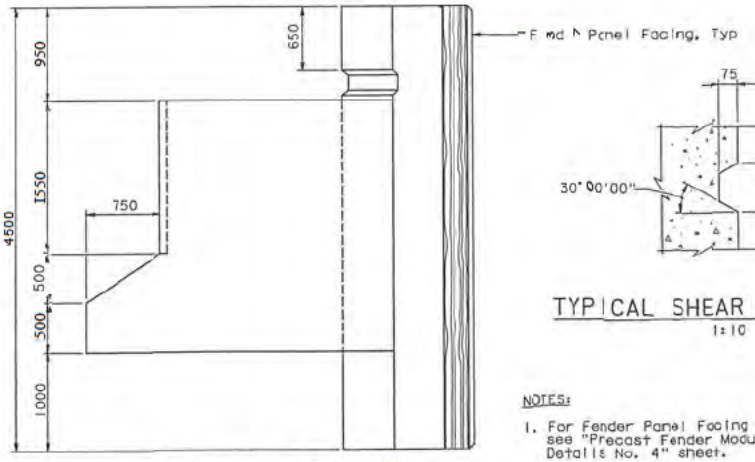

1 TYPE 3 ELEVATION
1:25

ALL DIMENSIONS ARE IN MILLIMETERS UNLESS OTHERWISE SHOWN

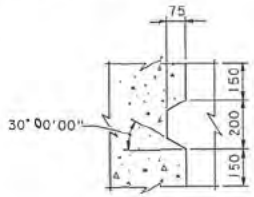

TYPICAL SHEAR KEY DETAIL
1:10

NOTES:

1. For Fender Panel Facing details, see "Precast Fender Modules Details No. 4" sheet.

SAN FRANCISCO OAKLAND BAY BRIDGE
EAST SPAN SEISMIC SAFETY PROJECT

SKYWAY STRUCTURES

PRECAST FENDER MODULES DETAILS NO. 2

R.S. Bagha
DESIGN OVERSIGHT
R.S. Bagha
SIGN OFF DATE 11/17/00

DESIGN	BY A. Ely/E. Nichol	CHECKED M. Harris	
DETAILS	BY M. Harris	CHECKED E. Nichol	
QUANTITIES	BY M. Harris	CHECKED E. Nichol	

PREPARED FOR THE STATE OF CALIFORNIA DEPARTMENT OF TRANSPORTATION

Sajid Abbas
PROJECT ENGINEER

BRIDGE NO. 34-0006
KILOMETER POST 3.9/14.3, 0.0/1.6

CU 04
EA 012021

DISREGARD PRINTS BEARING EARLIER REVISION DATES

REVISION DATES PRELIMINARY STAGE ONLY!

SHEET 494 OF

Rev. Date: 5-15-98

ORIGINAL SCALE IN MILLIMETERS FOR REDUCED PLANS

FILE => ci\oa\oakfen03.dgn

100% Page

DATE PLOTTED => 12 JUL 102 TIME PLOTTED => 16:36:51

USERNAME => ALeo

DIST.	COUNTY	ROUTE	KILOMETER POST / TOTAL PROJECT	SHEET NO.	TOTAL SHEETS
04	SF, Ala	80	3.9/14.3 / 0.0/1.6	927R1	978

REGISTERED ENGINEER - CIVIL

6-4-01

PLANS APPROVAL DATE

The State of California or its officers or agents shall not be responsible for the accuracy or completeness of electronic copies of this plan sheet.

A.L. ELY No. 18880 Exp. 9-30-05 CIVIL STATE OF CALIFORNIA

925 BATTERY STREET NICHOL

SAN FRANCISCO, CA 94111

Caltrans now has a web site! To get to the web site, go to: http://www.dot.ca.gov

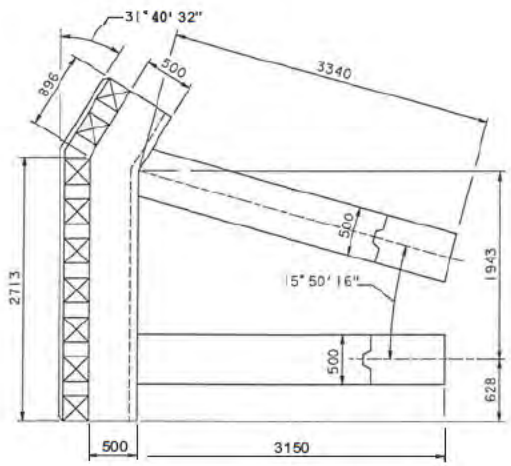

⚠ TYPE 4 PLAN

1:25

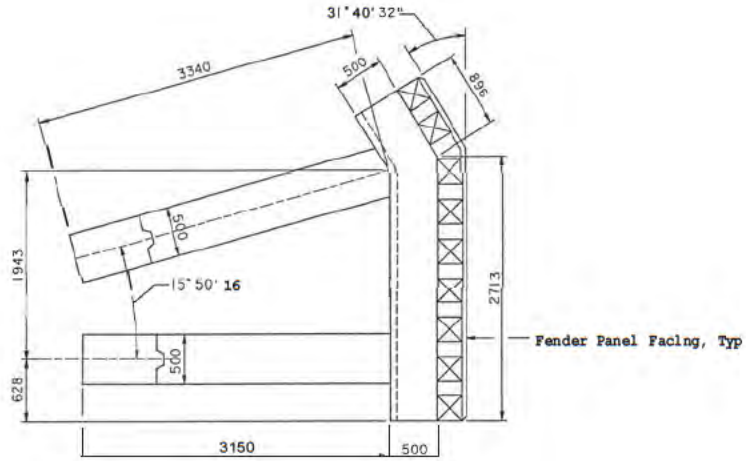

⚠ TYPE 5 PLAN

1:25

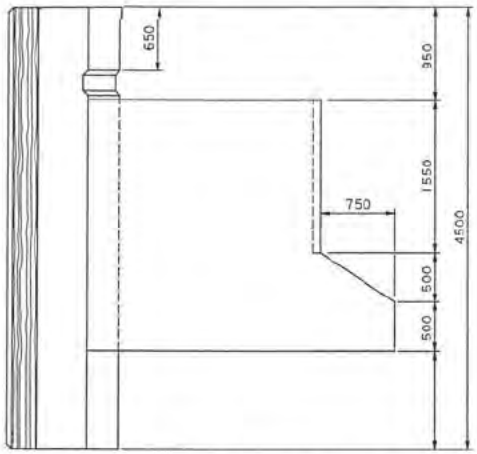

⚠ TYPE 4 ELEVATION

1:25

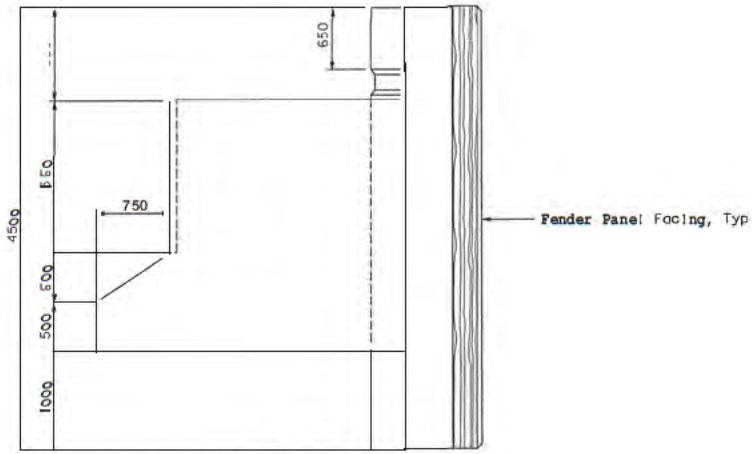

⚠ TYPE 5 ELEVATION

1:25

NOTES:

1. For Fender Panel Facing details, see "Precast Fender Modules Details No. 4" sheet.

MARK	DATE	DESCRIPTIONS	BY	CHK'D
1	07/01/02	REVISED FENDER MODULE GEOMETRY	KAN	KR

REVISIONS

CONTRACT CHANGE ORDER NO. ____
SHEET ____ OF ____

100% PS&E

R.S. Bagha
DESIGN OVERSIGHT
R S Bagha
SIGN OFF DATE 11/17/00

Rev Date 5-18-95

DESIGN	BY A. Ely/E. Nichol	CHECKED M HARRIS	
DETAILS	BY M Harris	CHECKED E Nichol	
QUANTITIES	BY M harris	CHECKED E Nichol	

PREPARED FOR THE STATE OF CALIFORNIA DEPARTMENT OF TRANSPORTATION

Salid Abbas
PROJECT ENGINEER

CU 04
EA 012021

BRIDGE NO. 34-0006

KILOMETER POST 3.9/14.3 / 0.0/1.6

DISREGARD PRIN. & BEARING EARLIER REVISION DATES

SKYWAY STRUCTURES

PRECAST FENDER MODULES DETAILS NO. 3

SHEET 495

USERNAME = J.ALEW

DATE PLOTTED = 5-12-JUL-102

TIME PLOTTED = 15:37:17

DIST.	COUNTY	ROUTE	KILOMETER POST TOTAL PROJECT	SHEET NO.	TOTAL SHEETS
04	SF, Ala	80	13.9/14.3, 0.0/1.6	930R1	978

Caltrans Metric

N ELY
REGISTERED ENGINEER - CIVIL
6-04-01
PLANS APPROVAL DATE

REGISTERED PROFESSIONAL ENGINEER A.L. ELY 16880 Exp. 1-30-05 CIVIL STATE OF CALIFORNIA

The State of California or its officers or agents shall not be responsible for the accuracy or completeness of electronic copies of this plan sheet.

T.Y. LIN / NOFFATT & NICHOL
825 BATTERY STREET
SAN FRANCISCO, CA 94111

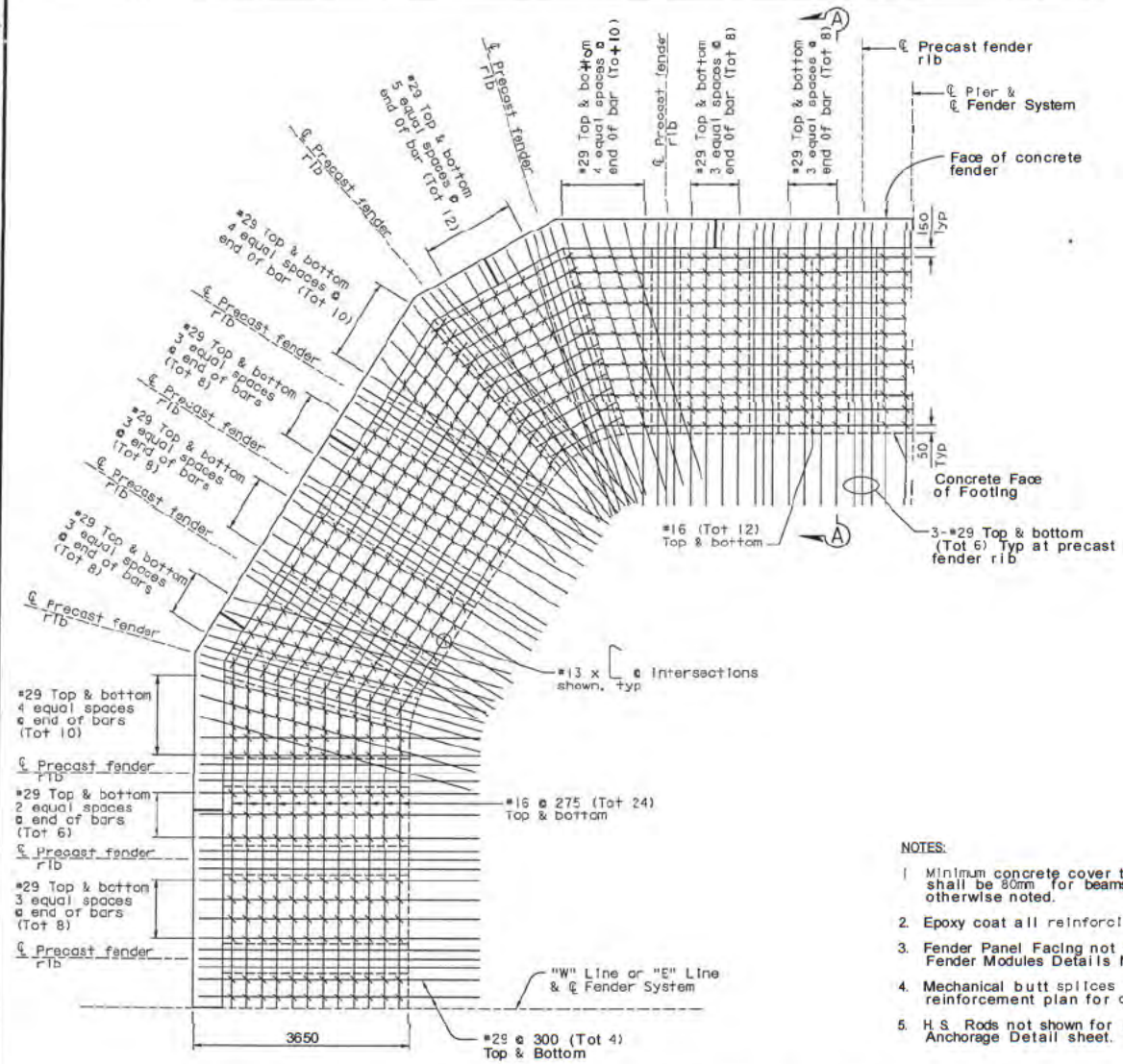

⚠1 ⚠2 FENDER SLAB REINFORCEMENT PARTIAL PLAN
1:40

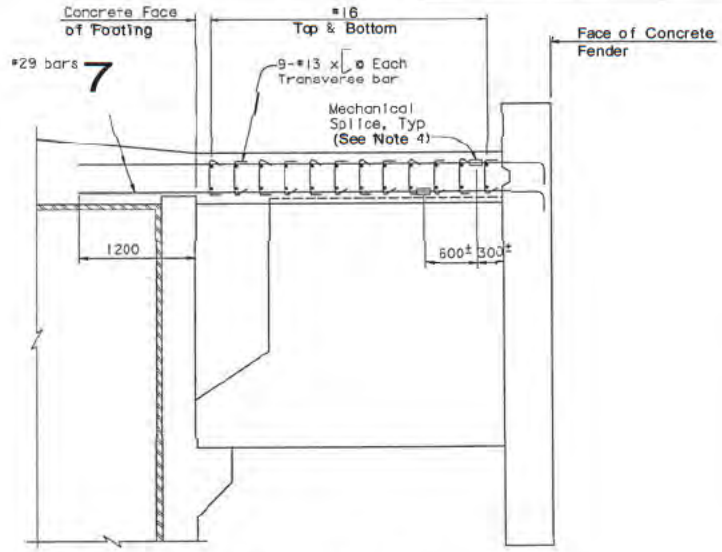

⚠1 SECTION A-A
1:25

NOTES:

1. Minimum concrete cover to the main reinforcing shall be 80mm for beams and slabs unless otherwise noted.
2. Epoxy coat all reinforcing shown on this sheet.
3. Fender Panel Facing not shown. See " Precast Fender Modules Details No. 4" sheet.
4. Mechanical butt splices are not shown on reinforcement plan for clarity.
5. H.S. Rods not shown for clarity. See Fender Anchorage Detail sheet.

MARK	DATE	DESCRIPTIONS	BY	CH'D
2	07/01/02	REVISED REINFORCEMENT	EAN	AKJ
1	07/01/02	REVISED FENDER MODULE GEOMETRY	EAN	AKJ

REVISIONS

CONTRACT CHANGE ORDER NO. _____
SHEET ___ OF ___

100% PS&E

ALL DIMENSIONS ARE IN MILLIMETERS UNLESS OTHERWISE SHOWN

SAN FRANCISCO OAKLAND BAY BRIDGE
EAST SPAN SEISMIC SAFETY PROJECT

SKYWAY STRUCTURES
FENDER SLAB DETAILS

R.S. Bagha
DESIGN OVERSIGHT
R.S. Bagha
SIGN OFF DATE 11/17/00

DESIGN A. Ely/E. Nichol — CHECKED M. Harris
DETAILS M. Harris — CHECKED E. Nichol
QUANTITIES M. Harris — CHECKED E. Nichol

PREPARED FOR THE STATE OF CALIFORNIA DEPARTMENT OF TRANSPORTATION

Sajid Abbas
PROJECT ENGINEER

BRIDGE NO. 34-0006
KILOMETER POS 13.9/14.3, 0.0/1.6

CU 04
EA 012021
FILE => e:\oa\okfen07.dgn

DISREGARD PRIN. & BEARING EARLIER REVISION DATES

REVISION AT PRELIMINARY TA ONLY!

SHEET 498

Rev. Date: 5-18-88

ORIGINAL SCALE IN MILLIMETERS FOR REDUCED PLANS

T.Y.LIN INTERNATIONAL
MOFFATT & NICHOL
a joint venture

RECEIVED
OCT 08 2002
002238
DEPARTMENT OF TRANSPORTATION
TOLL BRIDGE PROGRAM

To: Sajid Abbas

From: John Chan John Chan

Date: Oct 7th, 2002

Subject: SFOBB Skyway CCO#7 :Match-Ca t Decl Joint: Final Plans submittal Drawing List

copy:

MEMORANDUM

Attached please find the CCO#7 **Final Plans** submittal for the alternate design of the Match-Cast Deck Joint. The drawing list of the CCO Final Plans in the submittal are listed as followings (Total drawings 172 sheets):

Drawing List

1. Index To Plans---------- 434R1-435R1
2. General Notes No. 2 ---------- 437R2
3. Cantilever Tendon Layout E3W(2) - E16W---------- 566R1-579R1
4. Cantilever Tendon Layout E3E(2) - E16E---------- 581R1-594R1
5. Top Span Tendon Layout E4W - E17E---------- 595R1-622R1
6. Bottom Span Tendon Layout E3W - E17E ---------- 623R1-652R1
7. Cantilever Tendon Details No. 1 - 3 ---------- 686R1-688R1
8. Cantilever Tendon Details No. 3A – 3B ---------- 688A-688B
9. Cantilever Tendon Details No. 4 –8 ---------- 688C-688G
10. Top Span Tendon Details---------- 689R1-691R1
11. Transverse Tendon Details No.1 - 3 ---------- 699R1-701R1
12. Transverse Tendon Details No. 5---------- 703R1
13. Transition Span Details No. 8 - 9---------- 721R1-722R1
14. Transition Span Details No. 11 - 12 ---------- 724R1-725R1
15. Pier Table Details No. 18 ---------- 752R1
16. Precast Panel Details No. 5 ---------- 761R1
17. Hinge B, C Details No. 1 - 2 ---------- 786R2-787R2
18. Hinge B, C Details No. 7 - 13 ---------- 792R1-798R2
19. Hinge B, C Details No. 15 - 21 ---------- 800R1-806R1
20. Hinge D Details No. 1 - 2 ---------- 808R2-809R2
21. Hinge D Details No. 7 - 13 ---------- 814R1-820R1
22. Hinge D Details No. 15 – 21---------- 822R1-828R1
23. Hinge E Details No. 1 - 2 ---------- 830R1-831R1
24. Hinge E Details No. 7 - 13 ---------- 836R1-842R1
25. Hinge E Details No. 15 – 21---------- 844R2-850R1
26. Girder Reinforcement No. 1 – 9 ---------- 852R1-860R1
27. Girder Reinforcement No. 12 ---------- 863R1
28. Girder Details No. 1 and 2 ---------- 865R1-866R1

RECEIVED
002238 OCT -8 02

5.10 2
49.0007

Attached please find the CCO#7 **Final Plans** submittal for the alternate design of the Match-Cast Deck Joint. The drawing list of the CCO Final Plans in the submittal are listed as followings (Total drawings 172 sheets):

Drawing List

1. Index To Plans---------- 434R1-435R1
2. General Notes No. 2 ---------- 437R2
3. Cantilever Tendon Layout E3W(2) - E16W---------- 566R1-579R1
4. Cantilever Tendon Layout E3E(2) - E16E---------- 581R1-594R1
5. Top Span Tendon Layout E4W - E17E---------- 595R1-622R1
6. Bottom Span Tendon Layout E3W - E17E ---------- 623R1-652R1
7. Cantilever Tendon Details No. 1 - 3 ---------- 686R1-688R1
8. Cantilever Tendon Details No. 3A – 3B ---------- 688A-688B
9. Cantilever Tendon Details No. 4 –8 ---------- 688C-688G
10. Top Span Tendon Details---------- 689R1-691R1
11. Transverse Tendon Details No.1 - 3 ---------- 699R1-701R1
12. Transverse Tendon Details No. 5---------- 703R1
13. Transition Span Details No. 8 - 9---------- 721R1-722R1
14. Transition Span Details No. 11 - 12 ---------- 724R1-725R1
15. Pier Table Details No. 18 ---------- 752R1
16. Precast Panel Details No. 5 ---------- 761R1
17. Hinge B, C Details No. 1 - 2 ---------- 786R2-787R2
18. Hinge B, C Details No. 7 - 13 ---------- 792R1-798R2
19. Hinge B, C Details No. 15 - 21 ---------- 800R1-806R1
20. Hinge D Details No. 1 - 2 ---------- 808R2-809R2
21. Hinge D Details No. 7 - 13 ---------- 814R1-820R1
22. Hinge D Details No. 15 – 21---------- 822R1-828R1
23. Hinge E Details No. 1 - 2 ---------- 830R1-831R1
24. Hinge E Details No. 7 - 13 ---------- 836R1-842R1
25. Hinge E Details No. 15 – 21---------- 844R2-850R1
26. Girder Reinforcement No. 1 – 9 ---------- 852R1-860R1
27. Girder Reinforcement No. 12 ---------- 863R1
28. Girder Details No. 1 and 2 ---------- 865R1-866R1

STATE OF CALIFORNIA - DEPARTMENT OF TRANSPORTATION

TRANSMITTAL MEMORANDUM

DIVISION OF STRUCTURES

Structure Contract Management Branch
1801 30th Street – MS12
Sacramento, CA 95816

TO: **Doug Coe**	DATE: **10/08/2002**
	NAME OF PROJECT: SFOBB Seismic Retrofit - Skyway Project
	BRIDGE NAME AND NUMBER: San Francisco Oakland Bay Bridge
ATTENTION	DIST: 04 / CO: SFO/ALA / RTE: 80 / PM:
SUBJECT: SFOBB-Skyway CCO#7 – Match Cast Deck Joint Final Plans	EXPENDITURE AUTHORIZATION (EA): 04-012024

- ☐ FC MAIL
- ☐ UPS
- ☐ OVERNIGHT MAIL
- ☐ MESSENGER
- ☐ PP
- ☐ OTHER
- ☐ UNDER SEPARATE COVER
- ☐ ROUTE SLIP

FOR:

- ☐ APPROVAL
- X YOUR USE
- ☐ AS REQUESTED
- ☐ REVIEW AND COMMENT
- ☐ INFORMATION ONLY
- ☐ APPROVED AS SUBMITTED
- ☐ APPROVED AS NOTED
- ☐ RETURNED FOR CORRECTIONS
- ☐ REVIEWED-NO ADDITIONAL COMMENTS
- ☐ REVIEWED-SEE ADDITIONAL COMMENTS
- ☐ RETURN _____ CORRECTED PLANS
- ☐ SIGN AND RETURN _____ COPIES

ENCLOSURES:

Attached Please find the following:

- Skyway CCO#7 – Match Cast Deck Joint Final Plans
- Skyway CCO#7 – Match Cast Deck Joint Drawings List

This is for your use & processing. If you have any questions please call me at 322-6490 or Jason at 322-9261.

Two hard copies.

cc:

BY

Jason Fan for

Hasan El-Natur
Skyway Project Engineer, Senior

File

T.Y.LIN INTERNATIONAL
MOFFATT & NICHOL
a joint venture

To: Hasan El-Natur
Caltrans
Division of Engineering Services, M/S 12
Office of Structure Contract Management
801- 12th Street
Sacramento, CA 95814
Tel: (916) 322-6490
Fax: (916) 445-7286

From: Sajid Abbas

Date: October 7,2002

Subject: SFOBB – Skyway CCO #7 - Match Cast Deck Joint Final Plans

Job No: 1535.CM

cc: N/A

TRANSMITTAL

Reviewed ☐
For your use ☒
As per your request ☐

VIA:
Personal Delivery ☐
Special Delivery ☐
Messenger ☐
U.S. Mail ☐
U.S. Express Mail ☐
Overnight Express ☐
Airborne Express ☐
UPS ☐
In-Person ☒
Fax ☐
Email ☐

Item/Description	Copies	Dated
Hasan: Attached please find the following:		
• Skyway CCO #7 - Match Cast Deck Joint Final Plans	3	10/7/02
• Skyway CCO #7 – Match Cast Deck Joint Electronic Files	1	10/7/02
• Skyway CCO #7 – Match Cast Deck Joint Drawings List	3	10/7/02

825 Battery Street San Francisco, CA 94111 Fax (415) 433-0807 Tel (415) 291-3700

CALTRANS SFOBB - Skyway
Contract 04-012024

Estimate of Proposed Modifications
CCO 7

	DESCRIPTION	Original Estimate Budget QUANTITY	UNIT	TOTAL	U/P	Modified Footing Design QUANTITY	UNIT	Unit Price	TOTAL	Delta	Comments
	STEEL FOOTING BOX - FURN AND INSTALL									-	
1	FURN STRUCTURAL STEEL FOOTING	21,600,000	KG	121,157,191	6	21,600,000	KG	5.61	121,157,191	-	
						(4,425,000)	KG	1.12	(4,956,000)	(4,956,000)	Deleted Quantity
2											
3	CONN STEEL AT FDN BOXES	20	EA	320,000	16,000	-	EA	16,000.00	-	(320,000)	Deleted Follower Cofferdam
4	FABRICATOR INST SP FLANGES	112	EA	262,080	2,340	-	EA	2,340.00	-	(262,080)	Deleted Follower Cofferdam
5	CATAMARAN HORSE CONSTRUCTION	1	LS	2,000,000	2,000,000	1	LS	2,000,000.00	2,000,000	-	
6	BARGE RENT FOR CATAMARAN	173	HRS	-	-	173	HRS	-	-	-	
7	FURN FOLLOWER MATRL	1	LS	2,497,208	2,497,208	-	LS	2,497,208.00	-	(2,497,208)	Deleted Follower Cofferdam
8	HANDLE & PRE ASSEMBLE WALES	24	EA	232,374	9,682	-	EA	9,682.24	-	(232,374)	Deleted Follower Cofferdam
9	HANDLE FOLLOWER PANELS	144	EA	19,543	136	-	EA	135.71	-	(19,543)	Deleted Follower Cofferdam
10	FURNISH STOVE PIPE UNITS	1,212,708	LBS	970,166	1	-	LBS	0.80	-	(970,166)	Deleted Follower Cofferdam
11	RECV & HANDLE STOVE PIPES	1,212,708	LBS	20,942	0	-	LBS	0.02	-	(20,942)	Deleted Follower Cofferdam
12	FURN PILE COLLARS SEAL HRDWR	160	EA	1,170,560	7,316	48	EA	7,316.00	351,168	(819,392)	Deleted Follower Cofferdam
13	HANDLE/RECV HDWR MATERIAL	160	EA	2,199	14	48	EA	13.74	660	(1,539)	Deleted Follower Cofferdam
14	AS-BUILT PILE LOCATIONS	20	EA	147,252	7,363	-	EA	7,362.61	-	(147,252)	Deleted Follower Cofferdam
15	HANDLE COLLARS TO BARGE	112	EA	26,258	234	-	EA	234.45	-	(26,258)	Deleted Follower Cofferdam
16	INST COLLARS AT PIERS 16-7	112	PILE	1,174,332	10,485	-	PILE	10,485.10	-	(1,174,332)	Deleted Follower Cofferdam
17	PILE COLLAR SEALS	1	LS	156,437	156,437	1	LS	156,437.00	156,437	-	
18	HANDLE COLLARS TO BARGE	48	EA	11,253	234	48	EA	234.45	11,253	-	
19	INST COLLARS AT PIERS 6-3	48	EA	143,562	2,991	48	EA	2,990.87	143,562	-	
20	SETUP CATAMARAN ANCHORS	20	LOC	123,321	6,166	20	LOC	6,166.05	123,321	-	
21	RECV FDN BOX & POSITION @ PILE	20	EA	160,944	8,047	20	EA	8,047.20	160,944	-	
22	LWR FDN BOX STEP 1	20	EA	858,812	42,941	20	EA	42,940.59	858,812	-	
23	LWR FDN BOX STEP 2	112	EA	151,151	1,350	112	EA	1,349.56	151,151	-	
24	LWR FDN BOX TO FINAL SET	20	EA	283,587	14,179	20	EA	14,179.33	283,587	-	
25	SETUP CATAMARAN ANCHORS	8	LOC	49,328	6,166	8	LOC	6,166.05	49,328	-	
26	RECV FDN BOX & POSITION @ PILE	8	EA	64,378	8,047	8	EA	8,047.20	64,378	-	
27	LWR FDN BOX OVER PILES	8	EA	236,173	29,522	8	EA	29,521.65	236,173	-	
28	FURN FDN ACCESS	20	EA	121,920	6,096	20	EA	6,096.00	121,920	-	
29	PREASSEMBLE STAIR TOWERS	280	VF	8,712	31	280	VF	31.12	8,712	-	
30	INST/MOVE/REM STAIR TOWERS	20	EA	34,090	1,704	20	EA	1,704.49	34,090	-	
31	INST/MOVE/REM ACCESS LADDERS	20	EA	34,090	1,704	20	EA	1,704.49	34,090	-	
32	SAFETY GEAR AT STOVE PIPES	24	EA	57,840	2,410	-	EA	2,410.00	-	(57,840)	Deleted Follower Cofferdam
33	FOLLOWER DEWATER SETUP & MAINT	20	EA	210,399	10,520	-	EA	10,519.97	-	(210,399)	Deleted Follower Cofferdam
34	FURN ACCESS FOR PILE HEAD WELD	1	LS	205,518	205,518	1	LS	205,518.49	205,518	-	
35	SET/MOVE/REMOVE PLATFORMS	1,600	EA	288,613	180	1,600	EA	180.38	288,613	-	
36	MOCK UP COSTS	1	LS	100,000	100,000	1	LS	100,000.00	100,000	-	
37	CUT OFF PILE	160	EA	304,121	1,901	160	EA	1,900.76	304,121	-	
38	VENTILATION	1	LS	63,600	63,600	1	LS	63,600.00	63,600	-	
39	COOLING SUITS	1	LS	261,600	261,600	-	LS	261,600.00	-	(261,600)	Not Needed
40	FQR COSTS	8	HR	64,641	8,080	8	HR	8,080.11	64,641	-	
41	LAY OUT SLOT CUTS	1,280	EA	106,333	83	1,280	EA	83.07	106,333	-	
42	SET-UP AND DRILL 2.75" HOLES	742	HR	169,998	229	742	HR	229.11	169,998	-	
43	SET-UP AND CUT SLOTS	1,280	EA	2,427,016	1,896	1,280	EA	1,706.50	2,184,314	(242,702)	Kept 90 % of Cost
44	SET PLATE FINAL FIT-UP & TACK	1,280	EA	3,943,498	3,081	1,280	EA	1,016.68	1,301,354	(2,642,144)	Half of the plate size, 1/3 of work remaining
45	PREHEAT WELD METAL	1,280	EA	1,262,001	986	1,280	EA	325.36	416,460	(845,541)	Half of the plate size, 1/3 of work remaining
46	PREHEAT BLANKET COST	1	LS	783,964	783,964	1	LS	391,982.00	391,982	(391,982)	Need half of blanket
47	WELD UP SHEAR PLATES	208,000	#	21,906,316	105	68,640	#	105.32	7,229,084	(14,677,232)	1/3 of work remaining
48	WELD UP SHEAR PLATES - ADDITIONAL	20,800	#	3,154,131	152	5,200	#	151.64	788,533	(2,365,598)	Half of the plate size, Half of the welding = 1/4
49	GROUT SLEEVE POCKETS	112	EA	10,518	94	112	EA	8,929.00	1,000,048	989,530	Sealing between sleeve and pile with grout
50	INST STUDS ANLR SPC & DECK	115,456	EA	1,204,000	10	76,700	EA	10.43	799,844	(404,156)	Leave studs for deck
						1	LS	600,000.00	600,000	600,000	Bulkhead for welding access
51									-	-	
52	SET/MOVE/RESET SERVICE CRANES	28	EA	348,242	12,437	28	EA	12,437.20	348,242	-	
53	SERVICE CRN NO 1-PILE HD CONST	619	HRMO	1,827,569	2,951	154.80	HRMO	2,951.50	456,892	(1,370,677)	1/4 of work remaining
54	SERVICE CRN NO 2-PILE HD CONST	206	HRMO	548,731	2,659	51.60	HRMO	2,658.58	137,183	(411,548)	1/4 of work remaining
55	SERVICE CRN NO 3-PILE HD CONST	206	HRMO	198,774	963	51.60	HRMO	963.05	49,694	(149,081)	1/4 of work remaining
56	REM FOLLOWER & DISASSEMBLE	20	EA	520,536	26,027	-	EA	26,026.79	-	(520,536)	Deleted Follower Cofferdam
57	REM STOVE PIPES	112	EA	38,135	340	-	EA	340.49	-	(38,135)	Deleted Follower Cofferdam
58	REM STOVE PIPE FLANGES	112	EA	10,677	95	-	EA	95.33	-	(10,677)	Deleted Follower Cofferdam
59	SMALL TOOLS	1	LS	1,288,242	1,288,242	1	LS	1,288,241.70	1,288,242	-	
60	MARINE EQUIPMENT RENT	176	HR/MO	3,194,910	18,153	176	HR/MO	13,614.67	2,396,183	(798,728)	
										(35,256,129)	

CALTRANS SFOBB - Skyway
Contract 04-012024

Estimate of Proposed Modifications
CCO 7

	DESCRIPTION	Original Estimate Budget QUANTITY	UNIT	TOTAL	U/P	Modified Footing Design QUANTITY	UNIT	Unit Price	TOTAL	Delta	Comments
	EXCAVATION & COFFERCELLS									-	
1	Pre dredge soundings	1	LS	16,000	16,000	1	LS	16,000.00	16,000	355,182	Plug 1,500 Tn for Framing, pending design
2	Furnish Wale 'Jacket' System	1	LS	2,344,838	2,344,838	1	LS	2,700,000.00	2,700,000	571,260	Plug 3,000 Tn for Sheets, pending design
3	Furnish Sheet Piles	2,719	Ton	1,228,740	452	3,000	Ton	600.00	1,800,000	-	
4	Receive and Assemble Frames	10	Ea	237,636	23,764	10	Ea	23,763.61	237,636	6,872	Quantity Change
5	Receive Sheetpiles	2,719	Ton	66,549	24	3,000	Ton	24.47	73,421	6,511	Quantity Change
6	Load and Tow Sheets	2,719	Ton	63,049	23	3,000	Ton	23.19	69,560	6,511	Quantity Change
7	Tow Sheets Offload	2,719	Ton	63,049	23	3,000	Ton	23.19	69,560	6,872	Quantity Change
8	Loadout Sheetpiles	2,719	Ton	66,549	24	3,000	Ton	24.47	73,421	-	
9	Set Wale frames & Drive Spuds	40	Ea	342,444	8,561	40	Ea	8,561.10	342,444	-	
10	Anchor Drills	20	Pier	43,944	2,197	20	Pier	2,197.18	43,944	(95,211)	Smaller Cofferdam
11	Set & Drive Sheets	1,700	Pair	622,535	366	1,440	Pair	366.20	527,324	-	
12	Set & Drive Sheet Corners	160	EA	87,887	549	160	EA	549.30	87,887	301,730	Glory Hole Excavation- Alcatraz Disposal
13	Glory Hole Excavation	0	CY			143,000	CY	2.11	301,730	(104,709)	Structure Excavation - Alcatraz Disposal
14	Dig and Dispose Sheeted Holes	110,514	CY	462,309	4	89,400	CY	4.00	357,600		
15	Dig and Dispose Upland	7,850	CY	214,059	27	7,850	CY	27	214,059.00	(59,782)	Smaller Cofferdam
16	Pull, Stack & Clean Sheets	1,700	Pair	390,879	230	1,440	Pair	229.93	331,098	-	
17	Remove Wale frames	20	Ea	98,623	4,931	20	Ea	4,931.17	98,623	-	
18	Anchor Drills- DB Seattle	20	Pier	53,552	2,678	20	Pier	2,677.58	53,552	-	
19	Install/Remove Silt Curtain	24	Pier	34,263	1,428	24	Pier	1,427.62	34,263	-	
20	SMALL TOOLS	1	LS	97,259	97,259	1	LS	97,259.40	97,259	-	
21	MARINE EQUIPMENT RENT	1	LS	2,411,700	2,411,700	1	LS	2,411,700.00	2,411,700	1,104,000	Place screeded foundations
22	Dig/Place Base Rock/Screed bottom					18,400	CY	60.00	1,104,000	800,000	Backfill between sheets and box
23	Place Locking Fill					20,000	CY	40.00	800,000	787,839	Dewatering for cofferdam
24	Dewater Setup & Initial Draw down					20	Ea	39,391.95	787,839	1,512,777	Dewatering for cofferdam
25	Dewater Maintenance					20	Ea	75,638.85	1,512,777	200,000	Install relief wells
26	Relief Wells / Piezometers					1	LS	200,000.00	200,000	300,000	Additional Turbidity control
27	Turbidity Control					1	LS	300,000.00	300,000	5,699,832	

CALTRANS SFOBB - Skyway
Contract 04-012024

Estimate of Proposed Modifications
CCO 7

	DESCRIPTION	Original Estimate Budget QUANTITY	UNIT	TOTAL	U/P	Modified Footing Design QUANTITY	UNIT	Unit Price	TOTAL	Delta	Comments
	FURNISH & INSTALL PILING									-	
1	FURN 2.5M CISSC	15,260	M	62,000,000	4,063	15,260	M	4,062.91	62,000,000	-	
2	Additional Pile for hammer follower					321	M	4,062.91	1,304,194	1,304,194	Additional Pile for hammer follower
3	Shear Bars in lieu of weld Beads					1	LS	1,000,000.00	1,000,000	1,000,000	Shear Bars in lieu of weld Beads
4	SMALL TOOLS	1	LS	-	-	1	LS			-	
5	CRANE BOOM EXT	1	LS	350,000	350,000	1	LS	350,000.00	350,000	-	
6	BUILD/INSTALL TIPPING PIVOT	48	HOUR	37,705	786	48	HOUR	785.51	37,705	-	
7	INSTALL BEAM RECOVERY SYSTEM	40	HOUR	89,474	2,237	40	HOUR	2,236.86	89,474	-	
8	REMOVE TIPPING FRAME AND WINCH	40	HOUR	31,421	786	40	HOUR	785.51	31,421	-	
9	DECK GRILLAGE & PILE SHIFTER	48	HOUR	339,409	7,071	48	HOUR	7,071.01	339,409	-	
10	FURNISH PILE PICKING SADDLE	1	LS	160,000	160,000	1	LS	160,000.00	160,000	-	
11	FURNISH TEMPLATE(S)	4	EA	2,891,214	722,804	4	EA	722,803.50	2,891,214	-	
12	FURNISH INSTALL HYDRAULICS	44	EA	226,877	5,156	44	EA	5,156.30	226,877	-	
13	FURNISH TEMPLATE(S)TOWERS	3	EA	375,000	125,000	3	EA	125,000.00	375,000	-	
14	ASSY OUT TEMPLATES	5	EA	123,606	24,721	5	EA	24,721.25	123,606	-	
15	LOAD OUT TEMPLATES TO SCOW	4	EA	30,017	7,504	4	EA	7,504.30	30,017	-	
16	BARGE SHUFFLING	16	HOUR	7,475	467	16	HOUR	467.18	7,475	-	
17	ANCHOR DRILLS FIRST THREE TMPL	4	EA	18,587	4,647	4	EA	4,646.63	18,587	-	
18	TEMPLATE SHUFFLE AFTER INITIAL	24	FTG	89,698	3,737	24	FTG	3,737.40	89,698	-	
19	ANCHOR DRILLS REMAINING FTG	24	EA	55,760	2,323	24	EA	2,323.31	55,760	-	
20	ANCHOR DRILLS IN AND OUT CRN2	28	EA	60,349	2,155	28	EA	2,155.31	60,349	-	
21	POSITION TEMPLATES PIN W/PILE	28	EA	88,186	3,149	28	EA	3,149.48	88,186	-	
22	VIBRO REMAINING PILING	112	EA	88,186	787	112	EA	787.37	88,186	-	
23	PROOF DRIVE PILES	168	EA	205,469	1,223	168	EA	1,223.03	205,469	-	
24	LOCK OFF TEMPLATE/DISCONNECT	28	EA	119,020	4,251	28	EA	4,250.70	119,020	-	
25	TWEAK TEMPLATE ON LOCATION	28	EA	60,349	2,155	28	EA	2,155.31	60,349	-	
26	Install Pile guide on box					1	LS	250,000.00	250,000	250,000	Three wheels on top of footing box for template
27	Modify one template to support box					1	EA	1,000,000.00	1,000,000	1,000,000	Modifying template for piers 3 to 8 box support
28	INSTALL PILE SPLICE TOWER	56	EA	325,264	5,809	56	EA	5,808.28	325,264	-	
29	REMOVE SPLICE TOWER	56	EA	162,632	2,904	56	EA	2,904.14	162,632	-	
30	CONNECT TO TEMPLATE	28	EA	119,020	4,251	28	EA	4,250.70	119,020	-	
31	EXTRACT TEMPLATE PILING	224	EA	481,903	2,151	224	EA	2,151.35	481,903	-	
32	PUT TEMPLATES ON BEACH	4	EA	18,884	4,721	4	EA	4,720.90	18,884	-	
33	FURN/INSTALL HYDR WINCHES GENL	40	HOUR	116,720	2,918	40	HOUR	2,918.01	116,720	-	
34	INSTALL PILE BASE PIECES	160	EA	2,119,828	13,249	160	EA	13,248.93	2,119,828	-	
35	DRIVE SECONDARY PILE PIECE	120	EA	1,059,914	8,833	120	EA	8,832.62	1,059,914	-	
36	FURNISH WASTED PILE/HANDLE	160	EA	34,359	215	160	EA	214.75	34,359	-	
37	FRESH HEAD PILE	120	EA	449,448	3,745	120	EA	3,745.40	449,448	-	
38	PREP PILE FOR SPLICE PIECE	120	EA	169,521	1,413	120	EA	1,412.68	169,521	-	
39	PICK-UP STAB SECOND PILE PIECE	120	EA	146,657	1,222	120	EA	1,222.14	146,657	-	
40	INSTALL BLANKET/SHELTER/HEAT	120	EA	426,657	3,555	120	EA	3,555.47	426,657	-	
41	WELD OF JOINT	32,674	LB	2,704,946	83	32,674	LB	82.79	2,704,946	-	
42	COOL DOWN FOR TEST OF WELD	120	EA	292,994	2,442	120	EA	2,441.62	292,994	-	
43	REHEAT FOR REPAIR OF WELD	32	EA	72,798	2,275	32	EA	2,274.95	72,798	-	
44	REWELD OF JOINT	7,000	LB	573,821	82	7,000	LB	81.97	573,821	-	
45	SHOP SPLICE FULL LGTH PILES	40	EA	500,000	12,500	40	EA	12,500.00	500,000	-	
46	BUILD AUGER SYSTEM	60	HR	277,113	4,619	60	HR	4,618.55	277,113	-	
47	BUY/INSTALL JETS HI/LO PRESS	4	EA	264,885	66,221	4	EA	66,221.28	264,885	-	
48	BUILD AIRLIFTS/BUY JET EQUIP	4	EA	83,459	20,865	4	EA	20,864.78	83,459	-	
49	LOAD OUT GEAR FOR EXCAVATION	1	DAY	9,292	9,292	1	DAY	9,291.60	9,292	-	
50	ANCHOR DRILLS IN AND OUT	224	HOUR	120,698	539	224	HOUR	538.83	120,698	-	
51	EXCAVATE MATERIAL	44,000	CM	822,125	19	44,000	CM	18.68	822,125	-	
52	CLEAN PILE WITH JET	28	FTG	73,036	2,608	28	FTG	2,608.44	73,036	-	
53	FINAL CLEANING OF PILING	28	PILE	42,179	1,506	28	PILE	1,506.40	42,179	-	
54	RIG UP TO POUR CONCRETE SEAL	28	FTG	115,618	4,129	28	FTG	4,129.23	115,618	-	
55	POUR CONCRETE TREMIE SEAL	160	EA	358,219	2,239	160	EA	2,238.87	358,219	-	
56	CLEANING OF PILE SEAL/SET PUMP	160	PILE	136,056	850	160	PILE	850.35	136,056	-	
57	ROV INSPECTION OF PILE	160	PILE	26,560	166	160	PILE	166.00	26,560	-	
58	PUMP DOWN PILE WATER	4,451,355	GAL	63,875	0	4,451,355	GAL	0.01	63,875	-	
59	PUMP REMOVAL	160	PILE	13,972	87	160	PILE	87.33	13,972	-	
60	POUR CONCRETE IN PILE	160	EA	1,673,828	10,461	160	EA	10,461.42	1,673,828	-	
61	CLEAN OFF TOP OF PILE CONCRETE	297	CY	109,381	368	297	CY	368.29	109,381	-	
62	HOIST CONCRETE SET TO SCOW	297	CUYD	9,686	33	297	CUYD	32.61	9,686	-	
63	TOW,HANDLE,HAUL,WASTE CONCRETE	297	CY	14,850	50	297	CY	50.00	14,850	-	
64	SET RINGS AND BARS IN ANNULAR	160	EA	55,889	349	160	EA	349.30	55,889	-	
65	CRANE BARGE SHUFFLING	108	HOUR	77,740	720	108	HOUR	719.82	77,740	-	
66	GENL ANCHOR DRILLS IN AND OUT	336	HOUR	157,735	469	336	HOUR	469.45	157,735	-	
67	ANCHOR DRILLS IN AND OUT CRN2	28	EA	41,255	1,473	28	EA	1,473.40	41,255	-	
68	PICK,STAND UP AND SET CAGES	160	EA	1,297,699	8,111	160	EA	8,110.62	1,297,699	-	
69	REMOVE RESET PLATFORMS	160	EA	31,886	199	160	EA	199.29	31,886	-	
70	SET STUDS IN HOLE	160	EA	122,541	766	160	EA	765.88	122,541	-	
71	NELSON STUDS INSIDE PILE	239,360	EA	2,878,920	12	239,360	EA	12.03	2,878,920	-	
72	ASSIST W/CSL TUBES	20	HR	17,659	883	20	HR	882.94	17,659	-	
73	SMALL TOOLS	1	LS	644,472	644,472	1	LS	644,471.75	644,472	-	
74	MARINE EQUIPMENT RENT	176	MO	14,662,680	83,311	176	MO	83,310.68	14,662,680	-	
										3,554,194	

CALTRANS SFOBB - Skyway
Contract 04-012024

Estimate of Proposed Modifications
CCO 7

	DESCRIPTION	Original Estimate Budget QUANTITY	UNIT	TOTAL	U/P	Modified Footing Design QUANTITY	UNIT	Unit Price	TOTAL	Delta	Comments
	SUBSTRUCTURE CONCRETE									-	
1	ADD COVERS TO BOX ACCESS PORTS	28	EA	101,922	3,640	28	EA	3,640.08	101,922	-	
2	LWR FDN BOX & PL STRUCT CONC	8,592	M3	546,382	64	8,592	M3	63.59	546,382	-	
3	PREP/CLNUP-CONC POUR @ SLEEVES	28	EA	28,619	1,022	28	EA	1,022.11	28,619	-	
4	PL STRUCT CONC @ PILE SLEEVES	8,328	M3	341,268	41	-	M3	40.98	-	(341,268)	Deleted annulus space between pile and sleeve
5						120,000	CF	15.00	1,800,000	1,800,000	High Per formance Concrete for annulus space betwe
6						1	LS	533,000.00	533,000	533,000	Place High Performace Concrete
7	PREP/CLNUP-CONC POUR @ SOCKET	28	EA	28,619	1,022	28	EA	1,022.11	28,619	-	
8	PL STRUCT CONC @ PIER SOCKET	6,170	M3	256,834	42	6,170	M3	41.63	256,834	-	
9	SANDBLAST CONSTR JOINT	30,108	SF	51,130	2	30,108	SF	1.70	51,130	-	
10	SET SCREEDS @ BOX DECK POURS	28	EA	39,375	1,406	28	EA	1,406.24	39,375	-	
11	PREP/CLNUP-CONC POUR @ BOX DK	28	EA	28,619	1,022	28	EA	1,022.11	28,619	-	
12	PL STRUCT CONC @ BOX DECK	7,731	M3	331,550	43	7,731	M3	42.89	331,550	-	
13	FINISH BOX DECK SLABS	91,116	SF	71,648	1	91,116	SF	0.79	71,648	-	
14	CURE CONC DECK SLABS	91,116	SF	23,527	0	91,116	SF	0.26	23,527	-	
15	SET SIP FORM AT FDR SLAB	9,364	SF	133,223	14	9,364	SF	14.23	133,223	-	
16	PL STRUCT CONC @ FDR SLAB	586	M3	21,808	37	586	M3	37.22	21,808	-	
17	FINISH FENDER SLABS	12,604	SF	7,113	1	12,604	SF	0.56	7,113	-	
18	CURE CONC DECK SLABS	12,604	SF	3,255	0	12,604	SF	0.26	3,255	-	
19	SACK FINSH	12,604	SF	12,215	1	12,604	SF	0.97	12,215	-	
20	SMALL TOOLS	31,000	M3	67,163	2	31,000	M3	2.17	67,163	-	
21	MARINE EQUIPMENT RENTAL	173	MO	228,880	1,323	173	MO	1,323.01	228,880	-	
22	LWR FDN BOX & PL LW CONC	22,247	M3	475,767	21	14,247	M3	21.39	304,682	(171,085)	Reduced volume
23	SMALL TOOLS	23,000	M3	23,712	1	23,000	M3	1.03	23,712	-	
24	MARINE EQUIPMENT RENTAL	173	MO	126,420	731	173	MO	730.75	126,420	-	
										1,820,647	
	SOUND ATTENUATOR									-	
1	Fabricate Bubble Curtain	12,000	LF	938,604	78	12,000	LF	78.22	938,604	-	
2	Assemble Compressor Barge	40	Hrs	34,639	866	40	Hrs	865.97	34,639	-	
3	Operate Bubble Screen	160	Pile	873,643	5,460	48	Pile	5,460.27	262,093	(611,550)	No sound attenuator operation required in cofferda
4	SMALL TOOLS	1	LS	29,196	29,196	1	LS	29,195.70	29,196	-	
5	MARINE EQUIPMENT RENT	1	LS	126,550	126,550	1	LS	126,550.00	126,550	-	
6	Pre/Post dredge Soundings	1	LS	7,500	7,500	1	LS	7,500.00	7,500	-	
7	Locate & Mark Utilities	1	LS	20,559	20,559	1	LS	20,559.12	20,559	-	
8	Replace Digging Wires	8	Hr	5,760	720	8	Hr	720.06	5,760	-	
9	Dig for Disposal @ SF-DODS	97,776	CY	131,848	1	97,776	CY	1.35	131,848	-	
10	Dig and Dispose Upland	10,000	CY	204,611	20	10,000	CY	20.46	204,611	-	
11	Towing - SF-DODS	1,404	Hr	-	-	1,404	Hr	-	-	-	
12	SMALL TOOLS	82,401	M3	6,252	0	82,401	M3	0.08	6,252	-	
13	Monthly Equipment Rental	1	LS	337,312	337,312	1	LS	337,312.00	337,312	-	
										(611,550)	
	Light Weight Concrete PM					(8,000)	M3	155.00	(1,240,000)	(1,240,000)	Lightweight Conc PM from Other
	Structural Concrete PM					(8,328)	M3	100.00	(832,800)	(832,800)	Lightweight Conc PM from Other
	Indirect					(13,333)	MH	125.00	(1,666,625)	(1,666,625)	15:1 Craft to Supv Ratio - Reduced 200,000 Craft H
						(200,000)	MH	3.75	(750,000)	(750,000)	Craft Travel Pay Deduct
										(4,489,425)	
	Footing Modification Total									(29,282,431)	
	Eliminate Top Deck Closures									(2,000,000)	
	Additional Formwork, Build & Erect									2,500,000	
	Extended KFM Overhead 44 Working Days									1,980,000	
	Redesign (TY Lin)									2,000,000	
	Net Estimated Cost Savings									(24,802,431)	
	Estimated Credit to State									(12,401,216)	

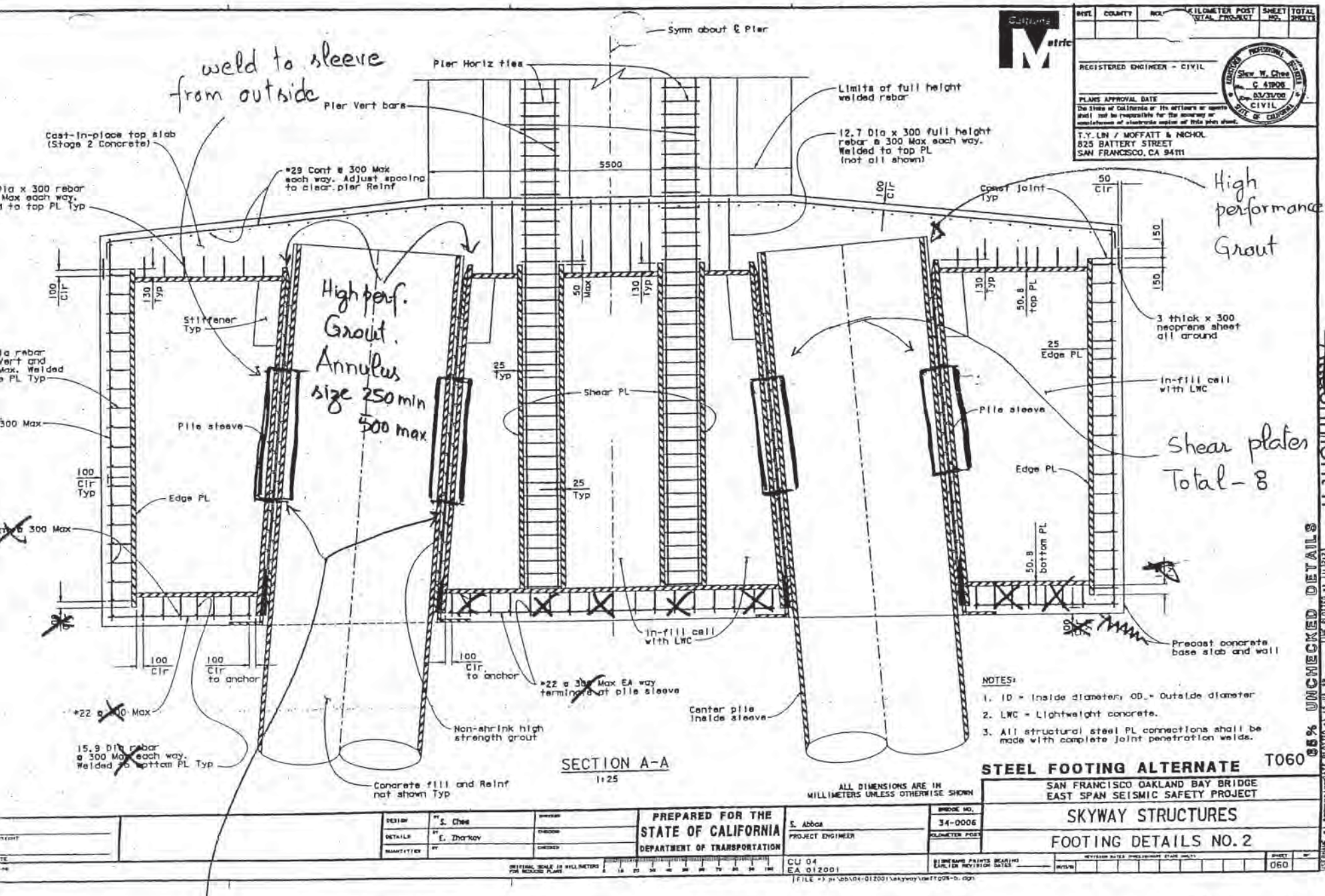

SECTION A-A
1:25

NOTES:
1. ID = Inside diameter; OD = Outside diameter
2. LWC = Lightweight concrete.
3. All structural steel PL connections shall be made with complete joint penetration welds.

ALL DIMENSIONS ARE IN MILLIMETERS UNLESS OTHERWISE SHOWN

T060

STEEL FOOTING ALTERNATE

SAN FRANCISCO OAKLAND BAY BRIDGE
EAST SPAN SEISMIC SAFETY PROJECT

SKYWAY STRUCTURES

FOOTING DETAILS NO. 2

PREPARED FOR THE STATE OF CALIFORNIA DEPARTMENT OF TRANSPORTATION

S. Chee — DESIGN
E. Zharkov — DETAILS
S. Abbas — PROJECT ENGINEER

BRIDGE NO. 34-0006
CU 04
EA 012001

REGISTERED ENGINEER - CIVIL
PLANS APPROVAL DATE
T.Y. LIN / MOFFATT & NICHOL
825 BATTERY STREET
SAN FRANCISCO, CA 94111

Attachment

CONTRACT CHANGE ORDER No.7
Sheet 8 of 12

9

~~Attachment 11~~

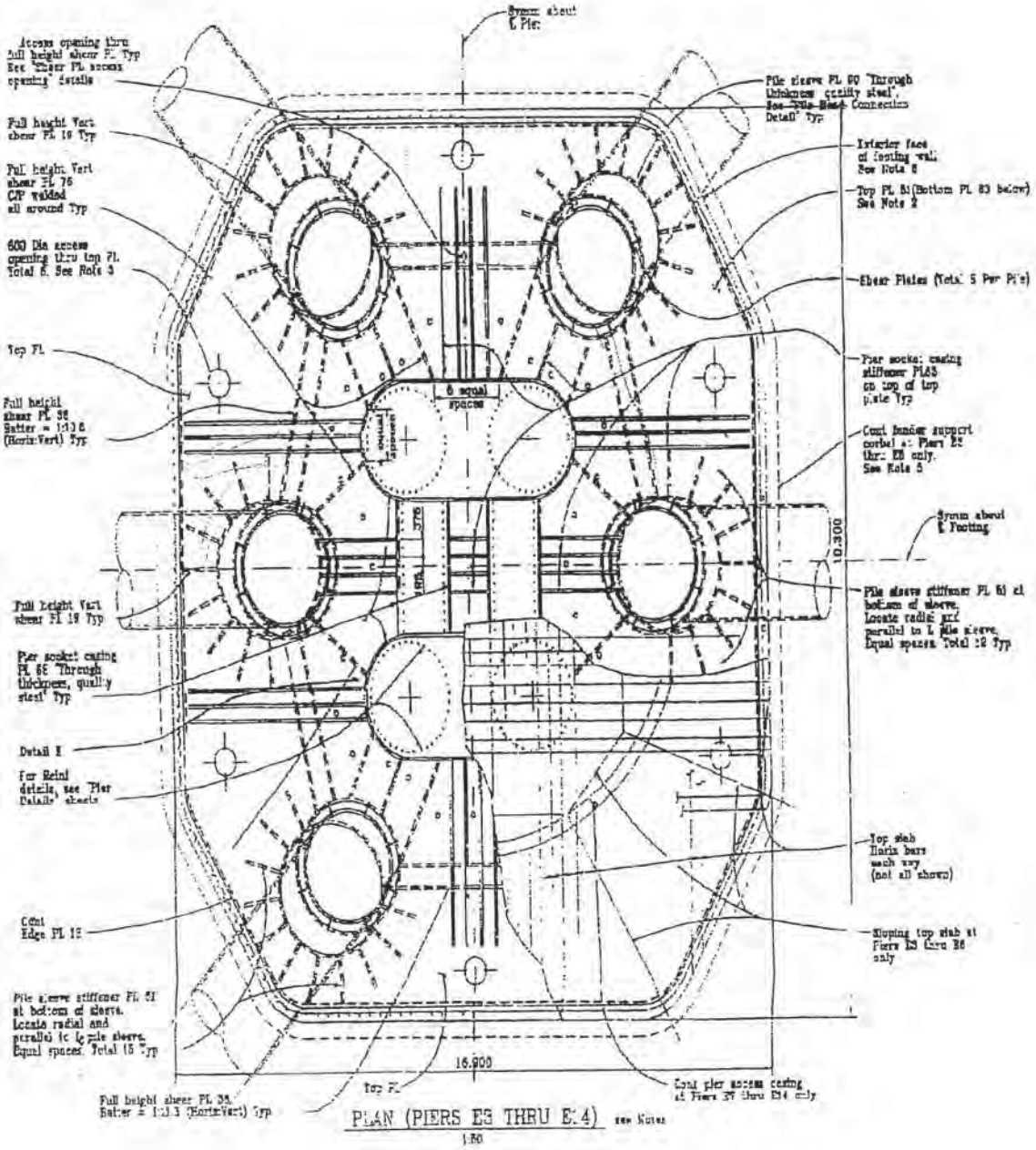

PLAN (PIERS E3 THRU E.4) see Notes

1:50

Draft

Not for Construction

CONTRACT CHANGE ORDER No.7

Sheet 9 of 12

2

Summary of Quantites - Contractor's Proposed Alternate Design (Grouted Connection)

DRAFT

Summary of Quantities - Structural Steel

1. Items Removed From Original Design

Item	Total Mass (KG)
1. Pile Sleeve	5,629,760
2. Shear PLs in Pile Sleeve	1,783,200
3. Pile Collar Assembly	984,640
4. Top Flange PL	549,276
5. Bottom Flange PL	692,384
Total =	9,619,260

2. Items Added in Proposed Concept

Item	Total Mass (KG)
1. Pile Sleeve	3,731,380
2. Shear PLs in Pile Sleeve	208,000
3. Full Height Shear PLs	1,254,060
Total =	5,193,440

Net Savings = 4,425,820 KG

~~Attachment H~~

CONTRACT CHANGE ORDER No.7

Sheet 10 of 12

4

~~Attachment 11~~

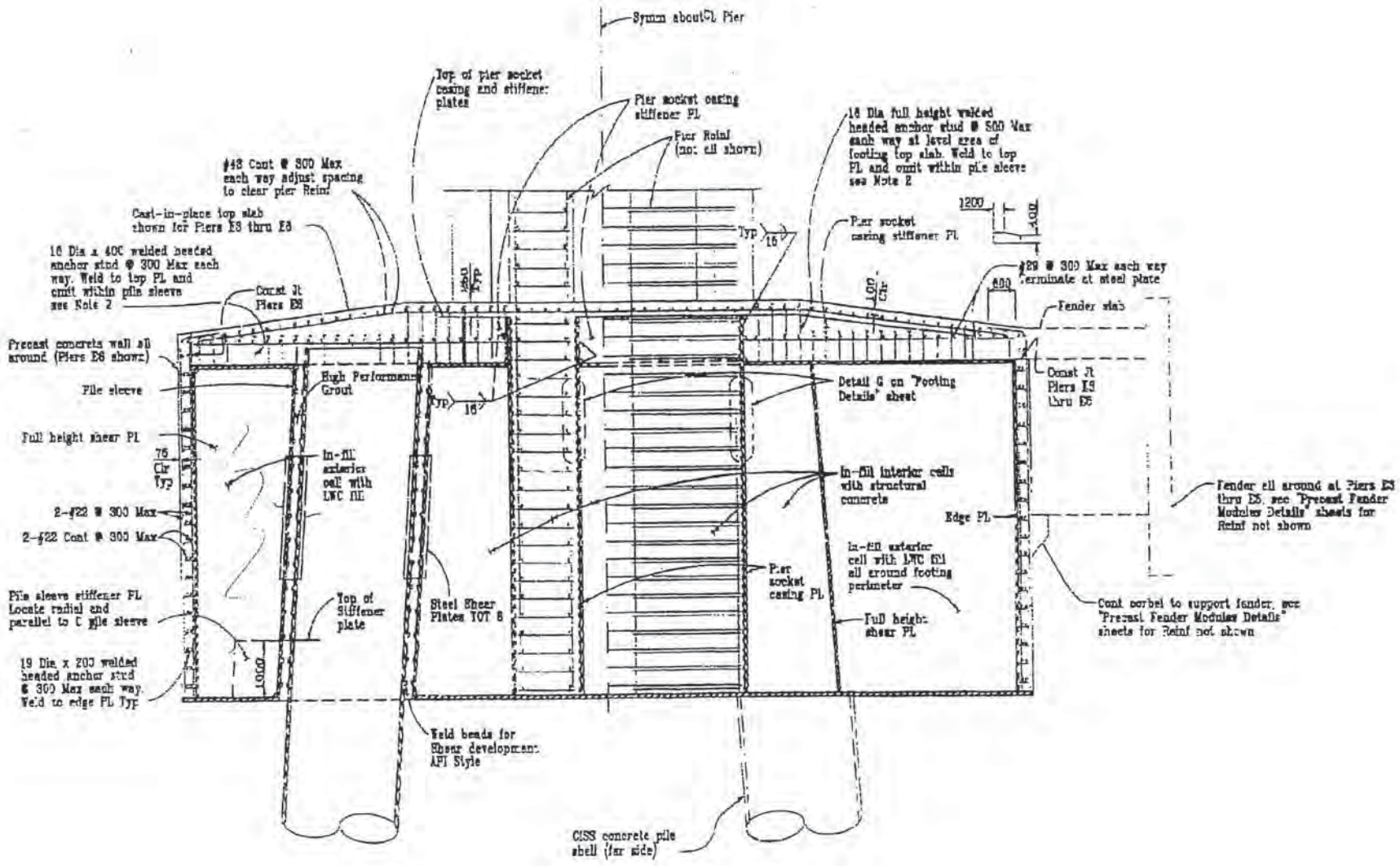

SECTION A-A

NTS

CONTRACT CHANGE ORDER No.7

Sheet 11 of 12

Draft

Not for Construction

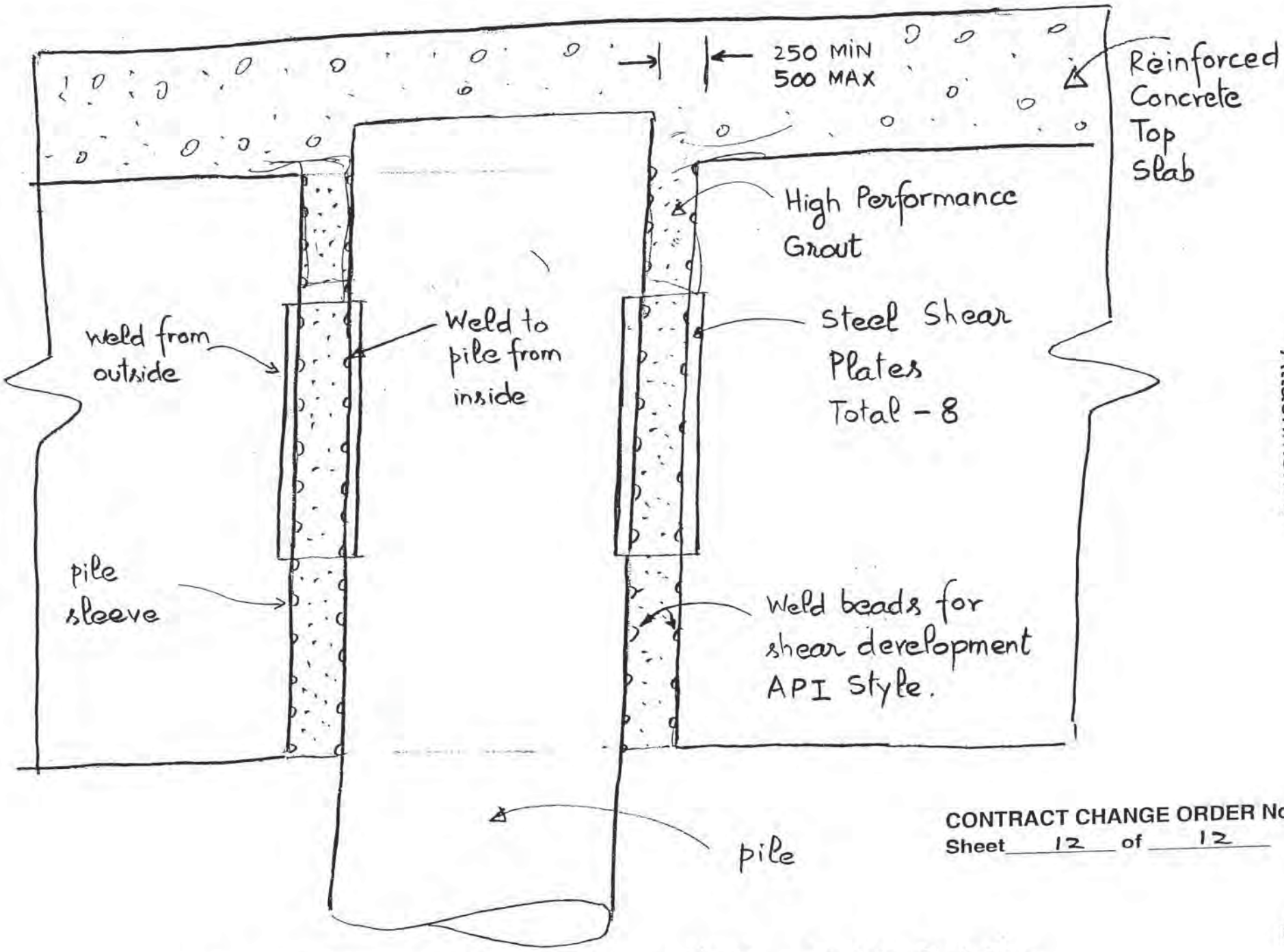

GROUTED CONNECTION WITH SHEAR PLATES

CONTRACT CHANGE ORDER No.7
Sheet 12 of 12

~~Attachment~~

STA . : OF CALIFORNIA
DEPA RTMENT OF TRANSPORTATION

CONTRACT CHANGE ORDER NO. 7 SUPPL. NO. 0

ROAD 04-SF, Ala – 80 –13.9/14.3, 0.0/1.6 SHEET 1 OF 12 SHEETS

CONTRACT NO. 04-012024 TO: Kiewit/FCI/Manson - A Joint Venture (KFM).

You are hereby instructed to make the herein described changes from the plans and specifications or do the following described work not included in the plans and specifications of this contract.

NOTE: This change order is not effective until approved by The Chief Engineer.

Description of work to be done, estimate of quantities, and prices to be paid. Segregate between additional work at contract price and force account. Unless otherwise stated, rates for rental of equipment cover only such time as equipment is actually used and no allowance will be made for idle time.

CHANGE REQUESTED BY THE: **ENGINEER**

In accordance with a potential saving resulting from a "Value Engineering Analysis", a time extension not to exceed 44 working days shall be granted. This adjustment covers the time period from March 29, 2002 to not later than May 31, 2002 to considering and evaluating proposed footing and top deck closure modifications.

The Contractor and the Department of Transportation (Department) have mutually agreed that the proposed footing and top deck closure modifications as outlined in this change order could benefit both parties and result in significant contract savings.

ADJUSTMENT OF COMPENSATION ~~DEFERRED~~: LUMP SUM DBL

During this 44 working day period, the Department and the Contractor shall continue to work towards agreement on the "Value Engineering Analysis" of the proposed modifications.

Should the "Value Engineering Analysis" result in acceptable terms and conditions for both parties, a supplemental Change Order shall be issued detailing the agreed modifications and changes to the contract. The full and final savings associated with the "Value Engineering Analysis" will be determined by adjusting the estimated cost savings shown on sheets 4 to 7 of this Change Order due to deviations from the assumptions listed below or deviations from the proposed footing modifications shown on sheets 8 to 12 of this Change Order. The current estimated net savings to the project is approximately $24,800,000.00 which will be shared equally with the Contractor. The State's portion of the savings shall be credited on a prorated bases at the completion of each footing and/or top deck closure pour.

If a mutual agreement between the State and the Contractor is <u>not obtained</u> in regards to the proposed footing and top deck closure pour modifications, the State shall pay the Contractor the agreed unit price of $45,000.00 per day, not to exceed 44 days, in a supplemental change order as payment in full for any and all additional costs, both direct and indirect, that may result from delay to the project during the evaluation of the proposed footing and top deck closure modifications. The total cost of the supplemental change shall not exceed $1,980,000.00 (44 days x $45,000.00/day). No additional compensation shall be provided for any additional costs including field or home office overhead, other direct and indirect costs and any other impacts or delay to the project that may be claimed from the time extension not to exceed 44 days granted in this change order. Bid Item No. 7 "Time-Related Overhead" (TRO) shall not apply to the time extension not to exceed 44 days granted by the is change order. Furthermore, the Contractor assumes all risk associated with this time extension, including but not limited to any and all inefficiencies and/or consequential cost impacts associated with equipment, labor , and materials, whether direct or indirect, with the exception of the extended overhead costs expressly agreed to as a result of this change. Neither this change order or supplement to this change order shall relieve the Contractor of its responsibility to meet all other project deadlines and schedules, including but not limited to the preparation and submittal of working drawings on all other portions of the work that are not directly affected by the design modifications contemplated by this change order.

All other costs associated with the "Value Engineering Analysis" proposals shall be borne separately by the party incurring the costs, including but not limited to wages and travel expenses, and no additional compensation will be allowed therefore.

By signing this change order the Contractor acknowledges and agrees, on behalf of itself, all subcontractors and all suppliers that the stipulated compensation includes payment for all the work involved in the evaluation and design of the proposed modifications plus payment for the interruption of schedules, extended and unabsorbed overhead costs, delay, disruption, and all impact, ripple impact or cumulative impact on all other work that may be impacted by the delay to the project. The signing of the change order indicates that the change order constitutes full mutual accord and satisfaction for the costs that may result from delay to the project during the period of the evaluation and design of the proposed modifications; and the Contractor, on behalf of itself, all subcontractors and all suppliers, agrees to waive all rights, without exception or reservation of any kind, to file any further claim related to the issues addressed in this change order or supplemental change order.

The following proposed modifications have been agreed in principle by the Contractor and the Department and are the basis of the cost savings associated with the value analysis proposal. The proposed footing modifications are shown pictorially on sheets 8 through 12 of this Change Order.

1) The proposed footing design is complete enough to start shop drawings and order steel by April 29,2002.
2) The proposed final designs are compete and signed by the Engineer by May 31,2002.
3) Foundation box per the drawings shown on sheets 8 through 12 of this Change Order (reduced weight and size accounted for & included in the proposal).
4) Concrete at the bottom of the box has been excluded per the drawings on sheets 8 through 12 of this Change Order.
5) Pile collar assemblies will be necessary only at Piers 3 to 6.
6) Reduced quantity of lightweight and structural concrete has been accounted for and included in this proposal.
7) High performance concrete will be required in the pile sleeves.
8) Pile cutoff section shall be utilized in the permanent pile.
9) Allows the Contractor to design a system of locking (securing) the pile cap using engineered fill.
10) Allows use of 1" x 1" weld bars at 12" spacing in lieu of shear beads.
11) Allows for a seal at the bottom of box annulus.
12) Engineered fill to remain in place after removal of the coffer dam.
13) Pile connection shear plates will be approximately 6 feet long x 15 inches wide x 1¼ inch thick.
14) Additional excavation, structure excavation and pile excavation go to Alcatraz in accordance with contract requirements.
15) The Contractor will provide additional column forms and necessary resources to complete the project work without delay or additional costs to the Department.
16) Contractor will provide an acceptable revised CPM schedule incorporating the changes 15 days after the finalized drawings are received.
17) An acceptable KFM employee will collocate with the design engineers during the "Value Engineering Analysis" review at no additional expense to the Department.
18) This change along with any agreed subsequent supplemental change order shall not slow down or stop progress on any other working drawing submittal / review and approval process.
19) A contract adjustment is deferred until the revised design is substantially complete.
20) Top Deck Closure pour modifications eliminate rebar coupling and cast in place concrete pour.
21) Top Deck Closure pour modifications utilize post tension strand (10 each x 12 strands).
22) The Contractor's cost of $45,000.00 per day for any and all additional costs, both direct and indirect shall be considered in the final cost savings. Bid Item No. 7 Time Related Overhead shall not be adjusted or applied towards the time extension not to exceed 44 working days.

Other items that have not been included in the enclosed estimate but shall be included in the final project savings, include but are not limited to a reduction in bar reinforcing steel epoxy, bridge, welded stud connections, and headed bar reinforcement.

The Department shall be responsible for final design of any footing and or deck closure pour modifications; the Contractor acknowledges that final design will be incorporated into a supplemental change order.

TOTAL ESTIMATED COST SAVINGS OF THIS CHANGE = $ ~~12~~ 9,400,000.00 (Decrease)

By reason of this order, the time of completion will be adjusted as follows: 44 Working Days (estimate)

Submitted By: _____ Date: 4/10/02
Doug Coe, Resident Engineer

Approval Recommended: _____ Date: 7/18/03
Peter Siegenthaler, Area Construction Manager

Approved By: _____ Date: _____
Andrew Fremier, Deputy Director of Construction

We, the undersigned contractor, have given careful consideration to the change proposed and hereby agree, if this proposal is approved, that we will provide all equipment, furnish all materials, except as may be otherwise noted above, and perform all services necessary for the work above specified, and will accept as full payment therefore the prices shown above.

Accepted, Date: 4/10/02 Contractor: Kiewit/FCI/Manson - A Joint Venture (KFM)

By: _____ Title: PROJECT DIRECTOR

If the Contractor does not sign acceptance of this change order, his attention is directed to the requirements of the specifications as to proceeding with the ordered work and filing a written protest within the time therein specified.

STATE OF CALIFORNIA - DEPARTMENT OF TRANSPORTATION

CONTRACT CHANGE ORDER MEMORANDUM

DATE: 3/25/2002

TO: Peter Siegenthaler / Douglas B. Coe	FILE: E.A. 04 - 012024 CO-RTE-PM SF, Ala-80-13.9/14.3, 0.0/1.6 FED. NO. ACBRIM-080-1(090)8N
FROM: Douglas B. Coe	
CCO#: 7 SUPPLEMENT#: 0 Category Code: CHPE	CONTINGENCY BALANCE (incl. this change) **$64,994,361.00**
COST: **($12,400,000.00)** INCREASE ☐ DECREASE ☑	HEADQUARTERS APPROVAL REQUIRED? ☑ YES ☐ NO
SUPPLEMENTAL FUNDS PROVIDED: **$0.00**	IS THIS REQUEST IN ACCORDANCE WITH ENVIRONMENTAL DOCUMENTS? ☑ YES ☐ NO
CCO DESCRIPTION: Footing & Deck Closure Modification (VA)	**PROJECT DESCRIPTION:** SFOBB Skyway

LOCATION: In the City and County of San Francisco and Alameda County in San Francisco and Oakland from 1.3 km to 3.3 km east of the Yerba Buena

THIS CHANGE ORDER PROVIDES FOR:

A credit to the Department for proposed footing and top deck closure pour modifications.

BACKGROUND

At time of contract award in mid-January of this year the KFM Joint Venture (Kiewit-FCI-Manson) was encouraged to submit changes to the Department in accordance with the contract specifications for Value Analysis.

Following a series of meetings over the last 7 weeks the Contractor provided a list on March 14, 2002 which included 24 items proposed for change. These changes can be roughly characterized as 12 design changes, 7 specification changes, and 5 other changes (see attachment for description of proposals). The proposed changes total a gross saving of approximately $32.8 million and a net contract extension of 44 days. The impact of implementing these changes would initially cause a delay to the contract of 92 days, but would ultimately be reduced by 48 days as a result of the efficiencies derived from the implemented changes, if approved. Currently, there is a commitment at the job level to implement as many value analyses changes as are feasible. Furthermore, the efficiencies derived from the proposed changes, if approved, would reduce the risk of future problems of construction. The reduction of future problems is difficult to quantify but most likely would offset the 44-day time extension due to:

- Reduced quantity of steel - reduces the cost of materials and labor.
- Less welding reduces cost of materials and labor.
- Less welding also reduces the need for QC inspection by the contractor, and QA oversight by the Department.
- Fewer potential problems/conflicts with QC/AQ issues will result in fewer delays – and thus reduce risk to the work and improve the opportunity for delivering the project on time and within budget.

It will take about 5 weeks to work through all the technical issues, especially considering the complexities of the various proposals, the time consuming efforts required in obtaining the needed detailing changes and the necessary concurrence

from the multiple internal and external parties (e.g. The Design Joint Venture, Translab, FHWA, Specifications, and HQ). Thus, KFM has requested a commitment, Contract Change Order, for a 44-day contract time extension as soon as possible or they will start to build the project as planned.

RECOMMENDATION

Since the anticipated cost savings and reduction of risk are a benefit to the Department and ultimately the public, it is recommended that we issue a CCO granting a 44-day time extension with compensations limited to the actual overhead costs during the redesign stage. The cost of the current overhead will be reflected as a cost to the over net project savings. During this 44-day time extension, the design joint venture will finalize (or substantially complete) the changes that are most beneficial so that an agreement on the character of the work, quantities and price can be made. Once agreement is reached, a supplemental CCO will be executed. There is a risk as the designs are finalized that an agreement may not be reached or the cost savings and reduction of risk will be determined not to be beneficial. In this case, the contractor will proceed as originally planned. Based on the meeting with the design joint venture and the contractor, issuance of a 44-day extension CCO is recommended.

EXPECTATIONS

The proposed modifications will achieve the following:

	Cost	Benefit
1. Footing Modifications (+92 days)		
Design Changes (65%)	$ -0-	$29,280,000
Cost of Redesign	$ 2,000,000	$ -0-
Cost of added OH	$ 1,980,000	$ -0-
2. Eliminate Top Deck Closures (-9 days)	$ -0-	$ 2,000,000
3. Change Pier Table Closure Specs (-1 day)	$ -0-	$ -0-
4. Additional Formwork (-38 days)	$ 2,500,000	$ -0-
Net days extension = 44 days		
Savings to the project =		$24,800,000

The Net Savings shall be shared between the Contractor and the State.

CONCURRED BY:

Construction Engineer:	Douglas Coe	Date
Bridge Engineer:	Douglas Coe	Date
FHWA Representative:	Bill Wong	Date
Project Engineer:		Date
Other (specify):		Date
		Date
		Date
District Prior Approval By:		Date
HQ (Issue Approve) By:	Jon Tapping	Date4/10/2002
Resident Engineer's Signature:		Date 4-16-02

ESTIMATE OF COST

	THIS REQUEST	TOTAL TO DATE
ITEMS	$0.00	$0.00
FORCE ACCOUNT	$0.00	$0.00
AGREED PRICE	($12,400,000.00)	($12,400,000.00)
ADJUSTMENT	$0.00	$0.00
TOTAL	($12,400,000.00)	($12,400,000.00)

FEDERAL PARTICIPATION

☑ PARTICIPATING ☐ PARTICIPATING IN PART ☐ NONE
☐ NON-PARTICIPATING (MAINTENANCE) ☐ NON-PARTICIPATING

FEDERAL SEGREGATION (if more than one Funding Source or P.I.P. type)
☑ CCO FUNDED PER CONTRACT ☐ CCO FUNDED AS FOLLOWS

FEDERAL FUNDING SOURCE PERCENT

STATE OF CALIFORNIA - DEPARTMENT OF TRANSPORTATION

CONTRACT CHANGE ORDER

Change Requested by: Engineer

CCO: 7	Suppl. No. 1	Contract No. 04 - 012024	Road 04-SF,Ala-80-13.9/14.3,0.0/1.6	FED. AID LOC.: ACIM-080-1(085)8N

To: KIEWIT / FCI / MANSON a JV

You are directed to make the following changes from the plans and specifications or do the following described work not included in the plans and specifications for this contract. ***NOTE: This change order is not effective until approved by the Engineer.***

Description of work to be done, estimate of quantities and prices to be paid. (Segregate between additional work at contract price, agreed force account.) Unless otherwise stated, rates for rental of equipment cover only such time as equipment is actually used and no allowance made for idle time. This last percentage shown is the net accumulated increase or decrease from the original quantity in the Engineer's Estimc

Adjustment of Compensation at Lump Sum:

The Contractor and the Department of Transportation (Department) have mutually agreed that the proposed footing and to deck closure modifications as outlined in Contract Change Order 7 could benefit both parties and result in significant contract savings. The Department and the Contractor continue to work towards agreement on the "Value Engineering Analysis" of the proposed modifications.

The final net savings to the project is $24,800,000.00, which will be shared equally with the Contractor ($12,400,000.00 each). The method of payment will be an Adjustment of Compensation at Agreed Lump Sum. The credit will be accounte for as follows: CCO 7 for ($9,400,000.00) and CCO 7 Supplement 1 as ($3,000,000.00).

No additional compensation shall be provided for any impacts, delays, or overheads as a result of these changes.

No additional days are warranted for this supplement.

Estimated cost of Adjustment of Compensation at Lump Sum .....($3,000,000.00)

Estimated Cost: Increase ☐ Decrease ☑ ($3,000,000.00)

By reason of this order the time of completion will be adjusted as follows: 0 days

Submitted by

Signature	Resident Engineer: COE D.	Date 6-10-03

Approval Recommended by

Signature	Construction Engineer: COE D.	Date 6-10-03

Engineer Approval by

Signature	(Print name and title) PETER SIEGENTHALER - Chief	Date

We the undersigned contractor, have given careful consideration to the change proposed and agree, if this proposal is approved, that we will pr equipment, furnish the materials, except as may otherwise be noted above, and perform all services necessary for the work above specified, and as full payment therefor the prices shown above.

NOTE: If you, the contractor, do not sign acceptance of this order, your attention is directed to the requirements of the specifications as to proceeding with the ordered work and filing a written protest within the time therein specified.

Contractor Acceptance by

Signature	(Print name and title) Project Director, A.T. Skoro	Date 6/25/03

STATE OF CALIFORNIA - DEPARTMENT OF TRANSPORTATION

CONTRACT CHANGE ORDER MEMORANDUM

DATE: 5/27/03 Page 1 of 1

TO: PETER SIEGENTHALER / COE D.	FILE: E.A. 04 - 012024
	CO-RTE-PM 04-SF,Ala-80-13.9/14.3,0.0/1.6
FROM: COE D.	FED. NO. ACIM-080-1(085)8N
CCO#: 7 SUPPLEMENT#: 1 Category Code: **DXPR**	CONTINGENCY BALANCE (incl. this change) **$52,927,820.27**
COST: **($3,000,000.00)** INCREASE ☐ DECREASE ☑	HEADQUARTERS APPROVAL REQUIRED? ☑ YES ☐ NO
SUPPLEMENTAL FUNDS PROVIDED: **$0.00**	IS THIS REQUEST IN ACCORDANCE WITH ENVIRONMENTAL DOCUMENTS? ☑ YES ☐ NO
CCO DESCRIPTION: Revised Footing Fender design	**PROJECT DESCRIPTION:** REPLACE SFOBB EAST SPAN

LOCATION: IN SAN FRANCISCO AND ALAMEDA COUNTIES IN SAN FRANCISCO AND OAKLAND FROM 1.3 KM EAST OF THE YERBA BUENA ISL

THIS CHANGE ORDER PROVIDES FOR:

modifies the method of payment of Change Order 7 as follows:

Delete the words in the third paragraph "ADJUSTMENT OF COMPENSATION DEFERRED". This title shall be changed to "Adjustment of Compensation, Agreed Lump Sum". This Lump Sum will be a credit to the State. This change is necessary as the payment method "ADJUSTMENT OF COMPENSATION DEFERRED" cannot be entered in CADb. Additionally, the CAS system cannot accept figures in excess of $9,999,999.99; therefore, Change Order 7 credits the State ($9,400,000.00) and the value of the Agreed Lump Sum for Supplement 1 is ($3,000,000.00) credit to the State.

Maintenance concurrence for this change order is not required.

No additional time adjustment is warranted for this supplement, as it does not affect the controlling operation.

CONCURRED BY:

Construction Engineer:	Douglas Coe	Date
Bridge Engineer:		Date
FHWA Representative:		Date
Project Engineer:		Date
Other (specify):		Date
		Date
		Date
District Prior Approval By:		Date
HQ (Issue Approve) By:		Date
Resident Engineer's Signature:		Date 5-25-03

ESTIMATE OF COST

	THIS REQUEST	TOTAL TO DATE
ITEMS	$0.00	$0.00
FORCE ACCOUNT	$0.00	$0.00
AGREED PRICE	$0.00	$0.00
ADJUSTMENT	($3,000,000.00)	($13,277,800.00)
TOTAL	($3,000,000.00)	($13,277,800.00)

FEDERAL PARTICIPATION

☑ PARTICIPATING ☐ PARTICIPATING IN PART ☐ NONE
☐ NON-PARTICIPATING (MAINTENANCE) ☐ NON-PARTICIPATING

FEDERAL SEGREGATION (if more than one Funding Source or P.I.P. type)
☑ CCO FUNDED PER CONTRACT ☐ CCO FUNDED AS FOLLOWS

FEDERAL FUNDING SOURCE	PERCENT

CONTRACT CHANGE ORDER

Change Requested by: Engineer

CCO: 7	Suppl. No. 2	Contract No. 04 - 012024	Road 04-SF,Ala-80-13.9/14.3,0.0/1.6	FED. AID LOC.: ACIM-080-1(085)8N

To: KIEWIT / FCI / MANSON a JV

You are directed to make the following changes from the plans and specifications or do the following described work not included in the plans and specifications for this contract. ***NOTE: This change order is not effective until approved by the Engineer.***

Description of work to be done, estimate of quantities and prices to be paid. (Segregate between additional work at contract price, agreed price and force account.) Unless otherwise stated, rates for rental of equipment cover only such time as equipment is actually used and no allowance will be made for idle time. This last percentage shown is the net accumulated increase or decrease from the original quantity in the Engineer's Estimate.

Adjustment of Compensation at Lump Sum:

Implement the changes in the attached specifications and drawings as shown on sheets 3 through 226 of this contract change order.

There was an additional change to one of the 22 modifications listed in the CCO. This item is amended as follows:

14. Additional excavation, structure excavation, and pile excavation go to the SF-11 Alcatraz disposal site in accordance with contract requirements. The limit of material to be received at Alcatraz is 143,038 cubic meters, minus the amount (6002 cubic meters) from the upper twelve feet of Piers E1-E6. Any material over this limit will be disposed at the approvec deep ocean disposal site.

The final net savings to the project is $1,755,600.00 which will be shared equally with the Contractor. The method of payment will be an Adjustment of Compensation at Agreed Lump Sum.

The following Table summarizes the revised value analysis:

	Cost	Savings
1) Footing Modifications		
Design changes (100%)	$ -	$ 8,401,000
Cost of Redesign	$ 900,000	$ -
Cost of Added OH	$ 1,980,000	$ -
2) Eliminate Top Deck Closures	$ 1,497,400	$ -
3) Change Pier Table Closure Specs	$ -	$ -
4) Additional Formwork	$ 2,268,000	$ -
Total Savings to Project		$1,755,600

To process the actual realized savings of $877,800.00, CCO 7-S2 and CCO 7-S3 will be processed for $9,000,000 and $2,522,200 respectively.

All additional labor, materials, and equipment necessary to complete the work as shown in this finalized supplemental change order shall not be subject to negotiation.

No additional compensation shall be provided for any impacts, delays, or overheads as a result of these changes.

No additional days are warranted for this supplement.

Adjustment of Compensation at Agreed Lump Sum $9,000,000.00

CONTRACT CHANGE ORDER

Change Requested by: Engineer

CCO: 7	Suppl. No. 2	Contract No. 04 - 012024	Road 04-SF,Ala-80-13.9/14.3,0.0/1.6	FED. AID LOC.: ACIM-080-1(085)8N

Estimated Cost: **Increase** ☑ **Decrease** ☐ **$9,000,000.00**

By reason of this order the time of completion will be adjusted as follows: 0 days

Submitted by

Signature	**Resident Engineer:** COE D.	**Date** 9-24-03

Approval Recommended by

Signature	**Construction Engineer:** COE D.	**Date** 9-24-03

Engineer Approval by

Signature	**(Print name and title)** PETER SIEGENTHALER - Chief	**Date** 11/18/03

We the undersigned contractor, have given careful consideration to the change proposed and agree, if this proposal is approved, that we will provide all equipment, furnish the materials, except as may otherwise be noted above, and perform all services necessary for the work above specified, and will accept as full payment therefor the prices shown above.

NOTE: If you, the contractor, do not sign acceptance of this order, your attention is directed to the requirements of the specifications as to proceeding with the ordered work and filing a written protest within the time therein specified.

Contractor Acceptance by

Signature	**(Print name and title)** A.T. Skoro, Project Director	**Date** 10/1/03

STATE OF CALIFORNIA - DEPARTMENT OF TRANSPORTATION

CONTRACT CHANGE ORDER

Change Requested by: Engineer

CCO: 7	Suppl. No. 3	Contract No. 04 - 012024	Road 04-SF,Ala-80-13.9/14.3,0.0/1.6	FED. AID LOC.: ACIM-080-1(085)8N

To: **KIEWIT / FCI / MANSON a JV**

You are directed to make the following changes from the plans and specifications or do the following described work not included in the plans and specifications for this contract. ***NOTE: This change order is not effective until approved by the Engineer.***

Description of work to be done, estimate of quantities and prices to be paid. (Segregate between additional work at contract price, agreed price and force account.) Unless otherwise stated, rates for rental of equipment cover only such time as equipment is actually used and no allowance will be made for idle time. This last percentage shown is the net accumulated increase or decrease from the original quantity in the Engineer's Estimate.

Adjustment of Compensation at Lump Sum:

The Contractor and the Department of Transportation (Department) have mutually agreed that the proposed footing and top deck closure modifications as outlined in Contract Change Order 7, Supplement 2 could benefit both parties and result in contract savings. The Department and the Contractor have finalized the agreement on the "Value Engineering Analysis" of the proposed modifications.

The final net savings to the project is $1,755,600.00, which will be shared equally with the Contractor ($877,800 each). The method of payment will be an Adjustment of Compensation at Agreed Lump Sum.

To process the actual realized savings of $877,800.00, CCO 7-S2 and CCO 7-S3 will be processed for $9,000,000 and $2,522,200 respectively.

All additional labor, materials, and equipment necessary to complete the work as shown in this finalized supplemental change order shall not be subject to negotiation. No additional compensation shall be provided for any impacts, delays, or overheads as a result of these changes. No additional days are warranted for this supplement.

Adjustment of Compensation at Agreed Lump Sum $2,522,200.00

Estimated Cost: Increase ☑ **Decrease** ☐ **$2,522,200.00**

By reason of this order the time of completion will be adjusted as follows: 0 days

Submitted by

Signature	Resident Engineer: COE D.	Date 9-26-03

Approval Recommended by

Signature	Construction Engineer: COE D.	Date 9-26-03

Engineer Approval by

Signature	(Print name and title) PETER SIEGENTHALER - Chief	Date 11/18/03

We the undersigned contractor, have given careful consideration to the change proposed and agree, if this proposal is approved, that we will provide all equipment, furnish the materials, except as may otherwise be noted above, and perform all services necessary for the work above specified, and will accept as full payment therefor the prices shown above.

NOTE: If you, the contractor, do not sign acceptance of this order, your attention is directed to the requirements of the specifications as to proceeding with the ordered work and filing a written protest within the time therein specified.

Contractor Acceptance by

Signature	(Print name and title) A.T. Skoro, Project Director	Date 10/1/03

California Department of Transportation

SFOBB New East Span

Contract: 04-012024, Skyway

CCO 7(4)

Deleted

California Department of Transportation

SFOBB New East Span

Contract: 04-012024, Skyway

CCO 7(5)

Deleted

STATE OF CALIFORNIA - DEPARTMENT OF TRANSPORTATION

CONTRACT CHANGE ORDER

Change Requested by: Engineer

CCO: 8	Suppl. No. 0	Contract No. 04 - 012024	Road 04-SF,Ala-80-13.9/14.3,0.0/1.6	FED. AID LOC.: ACIM-080-1(085)8N

To: KIEWIT / FCI / MANSON a JV

You *are directed to make the following changes from the plans and specifications or do the following described work not included in the plans and specifications for this contract.* NOTE: This change order is not effective until approved by the Engineer.

Description of work to be done, estimate of quantities and prices to be paid. (Segregate between additional work at contract price, agreed price and force account.) Unless otherwise stated, rates for rental of equipment cover only such time as equipment is actually used and no allowance will be made for idle time. This last percentage shown is the net accumulated increase or decrease from the original quantity in the Engineer's Estimate

Adjustment of Compensation at Lump Sum:

Modifications to Contract Special Provisions:

I. Section 10-1.44 "Steel Structures", Subsection "Materials" , paragraph 6, section "B" is modified to read:

"The sulfur content shall not exceed 0.01% by weight."

II. Section 10-1.44 "Steel Structures", Subsection "Materials", paragraph 7, section "F" is modified to read:

"The ratio of Yield Strength to Ultimate Strength shall be within the range of 0.73 to 0.85."

These modifications represent a Zero cost adjustment to both the State and contractor.

Estimated Cost: Increase ☐ Decrease ☐ $0.00

By reason of this order the time of completion will be adjusted as follows: 0 days

Submitted by

Signature	Resident Engineer: COE D.	Date 9-12-02

Approval Recommended by

Signature	Construction Engineer: COE D.	Date 10-15-02

Engineer Approval by

Signature	(Print name and title) PETER SIEGENTHALER - Chief	Date 10/18/02

We the undersigned contractor, have given careful consideration to the change proposed and agree, if this proposal is approved, that we will provide all equipment, furnish the materials, except as may otherwise be noted above, and perform all services necessary for the work above specified, and will accept as full payment therefor the prices shown above.

NOTE: If you, the contractor, do not sign acceptance of this order, your attention is directed to the requirements of the specifications as to proceeding with the ordered work and filing a written protest within the time therein specified.

Contractor Acceptance by

Signature	(Print name and title) A.T. Skoro, Project Director	Date 9/18/02

STATE OF CALIFORNIA - DEPARTMENT OF TRANSPORTATION

CONTRACT CHANGE ORDER MEMORANDUM

DATE: 9/6/2002

TO: PETER SIEGENTHALER / COE D.	FILE: E.A. 04 - 012024
FROM: COED.	CO-RTE-PM 04-SF,Ala-80-13.9/14.3,0.0/1.6
	FED. NO. ACIM-080-1(085)8N
CCO#: 8 SUPPLEMENT#: 0 Category Code: 4C4	CONTINGENCY BALANCE (incl. this change) $53,656,832.53
COST: $0.00 INCREASE ☐ DECREASE ☐	HEADQUARTERS APPROVAL REQUIRED? ☑ YES ☐ NO
SUPPLEMENTAL FUNDS PROVIDED: $0.00	IS THIS REQUEST IN ACCORDANCE WITH ENVIRONMENTAL DOCUMENTS? ☑ YES ☐ NO
CCO DESCRIPTION: Pipe Beam Steel Material Spec. Changes	PROJECT DESCRIPTION: REPLACE SFOBB EAST SPAN

LOCATION: IN SAN FRANCISCO AND ALAMEDA COUNTIES IN SAN FRANCISCO AND OAKLAND FROM 1.3KM EAST OF THE YERBA BUENA ISL

YHIS CHANGE ORDER PROVIDES FOR:

the modification of Section 10 - 1.44, "Steel Structures," of the contract Special Provisions requirements for Grads 50 steel of the pipe beam. These modifications are as follows:

(a) Allow carbon content to exceed 0.12%. Quenching and tempering shall not be used to lower carbon content; toughness requirements per Section 10-1.44 of the Special Provisions will be adhered to; and carbon content may not exceed levels specified in ASTM Designation A709 (0.23%).

(b) Expand range of Yield Strength to Ultimate Strength ratio to 0.73 to 0.85 (formerly 0.75 to 0.85).

Design (TY-Lin) and the Caltrans Office of Structural Materials are in concurrence with these modifications.

No adjustment of contract time is warranted by this change.

This change represents a Zero cost adjustment to both the State and the contractor.

Samad Hamoud of Maintenance has reviewed this change and is in concurrence.

The Resident Engineer recommends approval of this change order.

CONCURRED BY:		ESTIMATE OF COST	
Construction Engineer: Douglas Coe	Date 9/6/2002	THIS REQUEST	TOTAL TO DATE
Bridge Engineer.	Date	ITEMS $0.00	$0.00
FHWA Representative:	Date	$0.00	$0.00
Project Engineer:	Date	$0.00	$0.00
Other (specify): Sajid Abbas - TY Lin	Date 4/8/2002	$0.00	$0.00
		TOTAL $0.00	$0.00
Venkatesh Iyer - METS	Date3/27/2002	FEDERAL PARTICIPATION	
		☑ PARTICIPATING ☐ PARTICIPATING IN PART ☐ NONE	
		☐ NON-PARTICIPATING (MAINTENANCE) ☐ NON-PARTICIPATING	
Samad Hamoud, Maintenance	Date0/15/2002	FEDERAL SEGREGATION (if more than one Funding Source or P.I.P. type)	
		☑ CCO FUNDED PER CONTRACT ☐ CCO FUNDED AS FOLLOWS	
District Prior Approval By:	Date	FEDERAL FUNDING SOURCE	PERCENT
HQ (Issue Approve) By: Ronald Bacani	Date9/10/2002		
Resident Engineer's Signature:	Date 10-15-02		

DIST.	COUNTY	ROUTE	POST MILE TOTAL PROJECT	SHEET NO.	TOTAL SHEETS
04	SF, ALA	80	13.9/14.3, 0.0/1.6	447R1	978

REGISTERED ENGINEER - CIVIL

6-4-01

PLANS APPROVAL DATE

Sajid Abbas No. C 055274 Exp. 12/31/04 CIVIL STATE OF CALIFORNIA

The State of California or its officers or agents shall not be responsible for the accuracy or completeness of electronic copies of this plan sheet.

T.Y. LIN / MOFFATT & NICHOL
825 BATTERY STREET SAN FRANCISCO, CA 94111

Caltrans has no web site. To get to its web site, go to http://www.dot.ca.gov

NOTES:

1. ⟹ Indicates direction of travel.
2. For luminaire, see "Road Plans".
3. For Pier and Navigation Channel Marker Light details, see "Road Plans", "Precast Panel Details", "Transition Span Details" and "Footing Layout Piers E3 thru E6" sheets.
4. For fender details, see "Fender Details" sheets.
5. For deck drain locations, see "Structure Plan Frame E4" and "Girder Layout" sheets. Drain locations may be adjusted to miss prestressing tendons as approved by the Engineer. For prestressing tendons, see "Cantilever Tendon Layout" sheets.
6. For service platform details, see "Road Plans".
7. For deck access openings and preformed loop detector, see "Girder Layout" sheets.
8. For luminaire supports, see "Luminaire Support Details" sheets; for sign supports, see "Sign support Details" sheet.
9. For Strong Motion Detection System, see "Road Plans".

For total length, see "General Plan" sheet

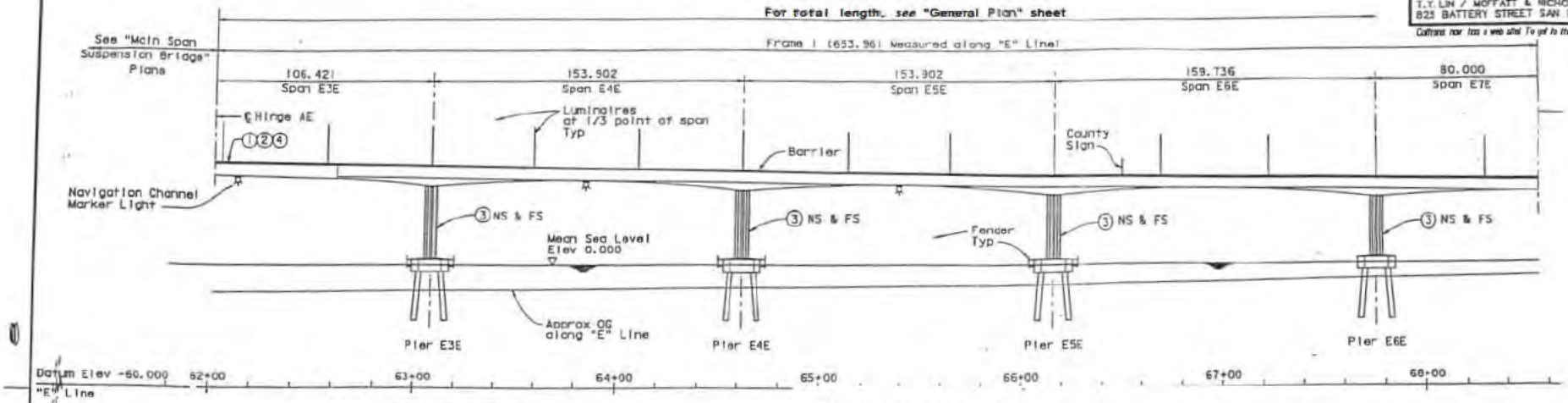

MARK	DATE	DESCRIPTIONS	BY	CH'D
1	03/06/02	REMOVE COUNTY SIGN	TM	SC

REVISIONS

DEVELOPED ELEVATION

1:1000

① Paint "Bridge No. 34-0006 R".

② Paint "San Francisco Oakland Bay Bridge East Span Seismic Safety Project" and year constructed.

③ Paint pier number.

④ Paint Hinge name "Hinge AE", "Hinge BE" or "Hinge CE" as applicable.

res

Deck drain, Type D-2 (Mod)

CONTRACT CHANGE ORDER NO. 9
SHEET 2 OF 42

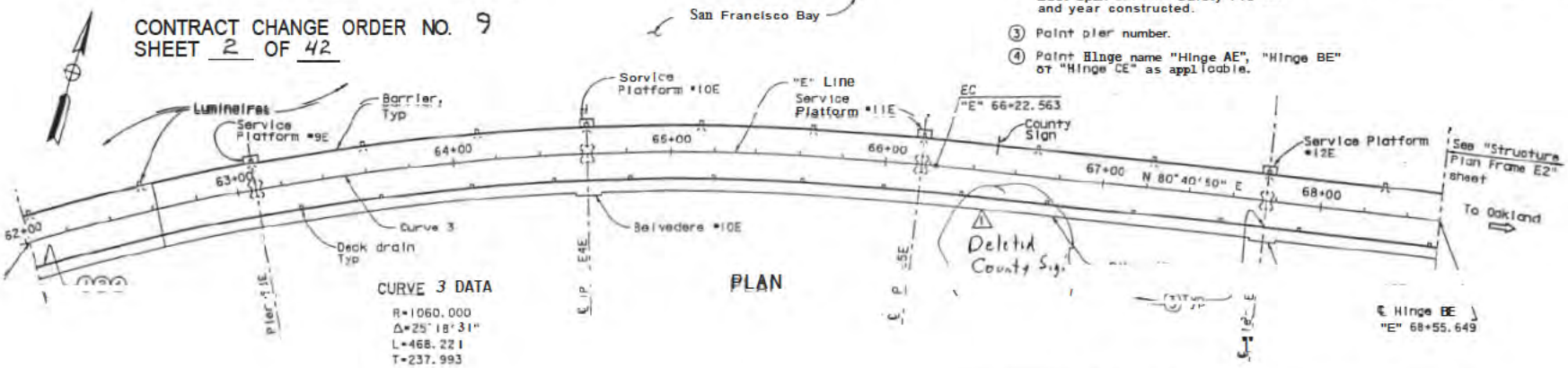

PLAN

CURVE 3 DATA

R=1060.000
Δ=25°18'31"
L=468.221
T=237.993

10 % PGAE

C 38107 Exp. 6/30/04 CIVIL STATE OF CALIFORNIA

ALL DIMENSIONS ARE IN METERS UNLESS OTHERWISE SHOWN

R.S. Bagha
DESIGN OVERSIGHT

DESIGN	S. Abbas	CHECKED	K. Lamont
DETAILS	E. Zharkov	CHECKED	K. Lamont

PREPARED FOR THE STATE OF CALIFORNIA
DEPARTMENT OF TRANSPORTATION

Sajid Abbas
PROJECT ENGINEER

BRIDGE NO. 34-0006L/R
KILOMETER POST 13.9/14.3

EAST SPAN SEISMIC SAFETY PROJECT

SKYWAY STRUCTURES

STRUCTURE PLAN FRAME E1

DIST.	COUNTY	ROUTE	TOTAL PROJECT	NO.	SHEETS
04	SF, Ala	80	13.9/14.3, 0.0/1.6	50281	978

REGISTERED ENGINEER - CIVIL
6-4-01
PLANS APPROVAL DATE

Raza Janab
No. C 50936
Exp. 09/30/01
CIVIL
STATE OF CALIFORNIA

The State of California or its officers or agents shall not be responsible for the accuracy or completeness of electronic copies of this sheet.

T.Y. LIN / MOFFATT & NICHOL
825 BATTERY STREET
SAN FRANCISCO, CA 94111

Caltrans now has a web site. To get to the web site, go to http://www.dot.ca.gov

Caltrans Metric

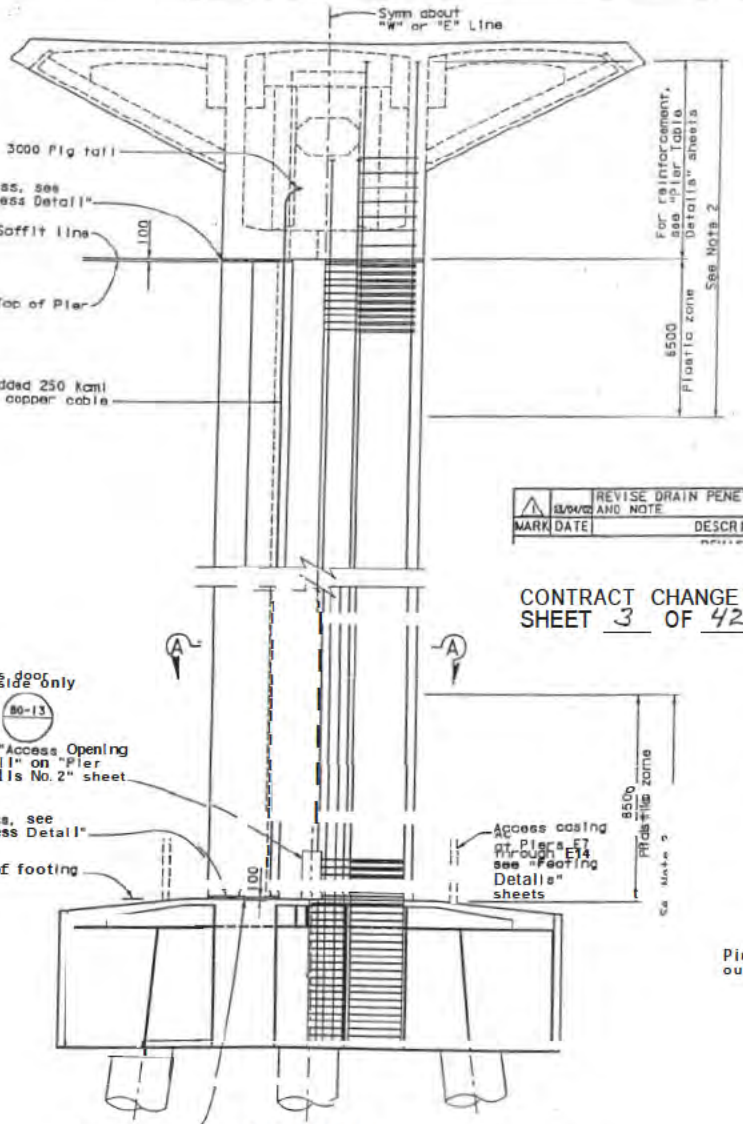

ELEVATION (Piers E3 through E14)
1:100

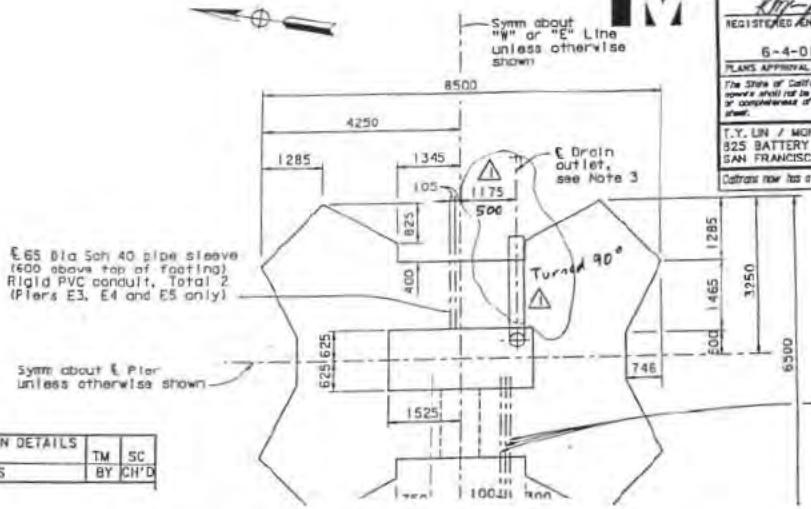

SECTION A-A
1:50

MARK	DATE	DESCRIPTIONS	BY	CH'D
1	03/04/02	REVISE DRAIN PENETRATION DETAILS AND NOTE	TM	SC

CONTRACT CHANGE ORDER NO. 9
SHEET 3 OF 42

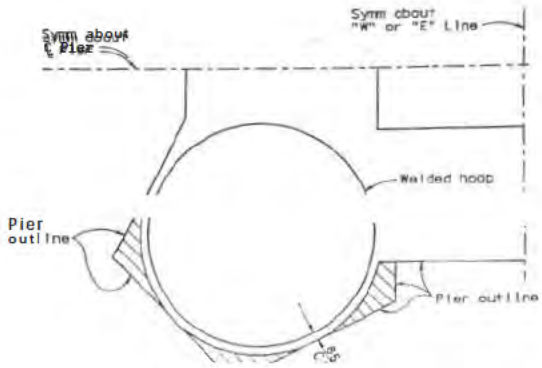

RECESS DETAIL (Partial plan)
1:25

100 Polystyrene blockout. Polystyrene to be removed at top of pier.

NOTES:

1. For Section A-A reinforcement, see "Pier Details" sheets.
2. No splices allowed in main vert reinforcement. All other splices shall meet "Ultimate Splice" requirements.
3. Location varies. For pipe location and size, see "Girder Layout" sheets. Locate pipe 200 above top of footings at piers E4 thru E6 and 200 above access casing top slab at piers E8 thru E14. Extend 500 beyond face of the pier.
4. For ground cable connection to the footing, see "Footing Layout" sheets.

ALL DIMENSIONS ARE IN

SAN FRANCISCO OAKLAND BAY BRIDGE

R.S. Bagho
DESIGN OVERSIGHT

DESIGN	R. Janab	CHECKED G. Saraggina	PREPARED FOR THE STATE OF CALIFORNIA DEPARTMENT OF TRANSPORTATION
DETAILS	E. Zharkov	CHECKED G. Saraggina	
QUANTITIES	E. Carbler	CHECKED A. Yoder	

Sajid Abbas
PROJECT ENGINEER

34-0006L/R
KILOMETER POST 13.9/14.3, 0.0/1.6

SKYWAY STRUCTURES

PIER LAYOUT NO. 1

SHEET 070

CU 04

100 % PSAE

DIST.	COUNTY	ROUTE	KILOMETER POST TOTAL PROJECT	SHEET NO.	TOTAL SHEETS
04	SF, Ala	80	13.9/14.3. 0.0/1.6	503R1	978

REGISTERED ENGINEER - CIVIL

6-4-01

PLANS APPROVAL DATE

The State of California or its officers or agents shall not be responsible for the accuracy or completeness of electronic copies of this plan sheet.

REGISTERED PROFESSIONAL ENGINEER Reza Janab No. C 50936 Exp. 09/30/01 CIVIL STATE OF CALIFORNIA

T.Y. LIN / MOFFATT & NICHOL
823 BATTERY STREET
SAN FRANCISCO, CA 94111

Caltrans now has a web site! To get to the web site, go to: http://www.dot.ca.gov

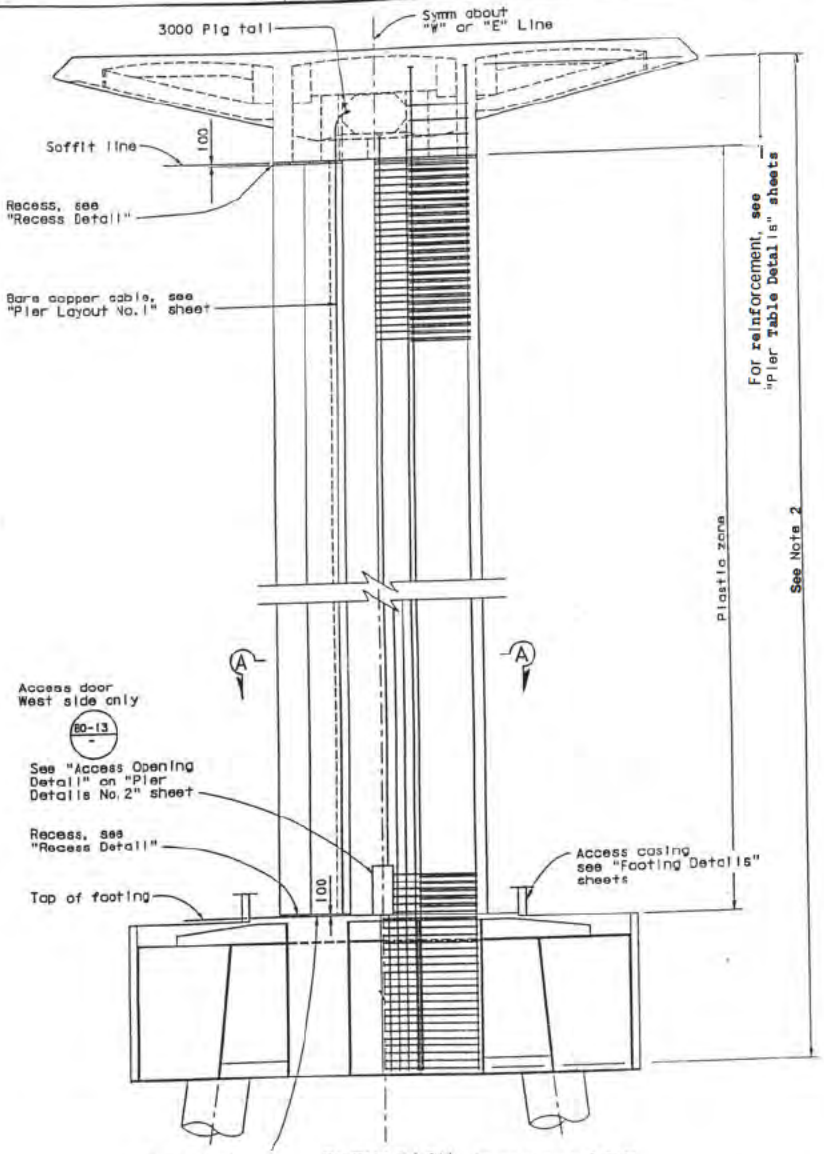

See Not 5

ELEVATION (Pier E15, and E16)
1:100

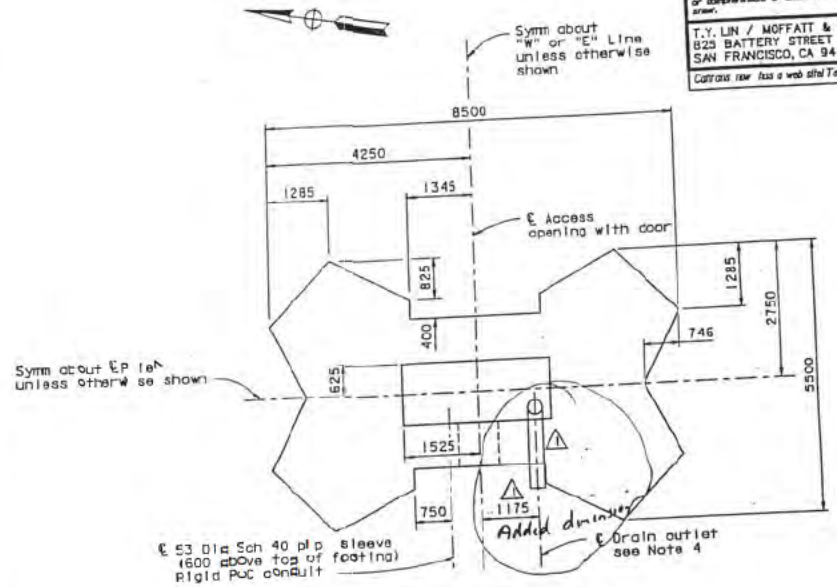

SECTION A-A
1:50

NOTES:

1. For Section A-A reinforcement, see 'Pier Details" sheets.
2. No splices allowed in main vert reinforcement. All other splices shall meet "Ultimate Splice" requirements.
3. For "Recess Detail", see "Pier Layout No.1" sheet.
4. Location varies. For pipe location and size, see "Girder Layout" sheets. Locate pipe 200 above access casing top slab. Extend 500 beyond face of the pier.
5. For ground cable connection to the footing, see "Footing Layout" sheets.

MARK	DATE	DESCRIPTIONS	BY	CH'D
1	03/04/02	REVISE DRAIN PENETRATION DETAILS AND NOTE	TM	SC

REVISIONS

CONTRACT CHANGE ORDER NO. 9
SHEET 4 OF 42

ALL DIMENSIONS ARE IN MILLIMETERS UNLESS OTHERWISE SHOWN

SAN FRANCISCO OAKLAND BAY BRIDGE
EAST SPAN SEISMIC SAFETY PROJECT

SKYWAY STRUCTURES

PIER LAYOUT NO. 2

DESIGN	R. Janab	CHECKED	G. Scroggins
DETAILS	E. Zharkov	CHECKED	G. Scroggins
QUANTITIES	K. Cormier	CHECKED	A. Yoder

PREPARED FOR THE STATE OF CALIFORNIA DEPARTMENT OF TRANSPORTATION

Sajid Abbas
PROJECT ENGINEER

BRIDGE NO. 34-0006L/R
KILOMETER POST 3.9/14.3. 0.0/1.6

SHEET 071

R.S. Bacha
DESIGN OVERSIGHT

100 % PS&E

TIME PLOTTED => 09:16:32

04	SF.Alo	80	13.9/14.3, 0.0/1.6	504R1	978

REGISTERED ENGINEER - CIVIL

6-4-01

PLANS APPROVAL DATE

The State of California or its officers or agents shall not be responsible for the accuracy or completeness of electronic copies of this plan sheet.

REGISTERED PROFESSIONAL ENGINEER Reza Jenab No. C 50936 Exp. 06/30/01 CIVIL STATE OF CALIFORNIA

T.Y. LIN / MOFFATT & NICHOL
825 BATTERY STREET
SAN FRANCISCO, CA 94111

Caltrans now has a web site! To get to the web site, go to: http://www.dot.ca.gov

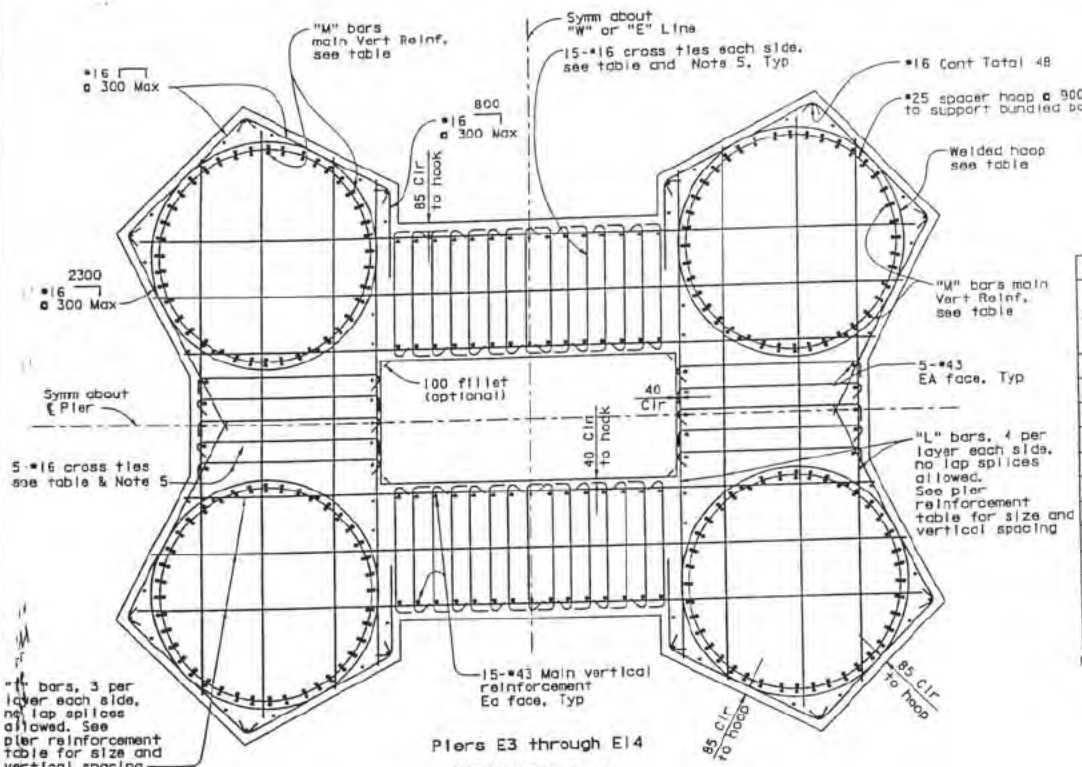

Piers E3 through E14

SECTION A-A

1:25

Piers	Pier reinforcement: Cross ties, Plastic zone, Size	Cross ties, Plastic zone, Spacing	Cross ties, Non-plastic zone, Size	Cross ties, Non-plastic zone, Spacing	"M" bars, No.-Size	"M" bars, Total per pier	"T" bars, Size	"T" bars, Spacing	"L" bars, Size	"L" bars, Spacing	Continuous welded hoop, Plastic zone, No.-Size	Plastic zone, Spacing	Non-plastic zone, Size	Non-plastic zone, Spacing
E3	#16	100	#16	200	40x2-#43**	320	#19	100	#19	100	2-#25*	100	#25	100
E4	#16	100	#16	200	40x2-#43**	320	#19	100	#22	100	2-#25*	100	#25	100
E5	#16	100	#16	200	40x2-#43**	320	#19	100	#22	100	2-#25*	100	#25	100
E6	#16	100	#16	200	40x2-#43**	320	#19	100	#25	100	2-#25*	100	#25	100
E7	#16	100	#16	200	40x2-#43**	320	#19	100	#22	100	2-#25*	100	#25	100
E8	#16	100	#16	200	40x2-#43**	320	#19	100	#22	100	2-#25*	100	#25	100
E9	#16	100	#16	200	40x2-#43**	320	#19	100	#22	100	2-#25*	100	#25	100
E10	#16	100	#16	200	40x2-#43**	320	#25	100	#25	100	2-#25*	100	#25	100
E11	#16	100	#16	200	40x2-#43**	320	#22	100	#29	100	2-#25*	100	#25	100
E12	#16	100	#16	200	40x2-#43**	320	#22	100	#25	100	2-#25*	100	#25	100
E13	#16	100	#16	200	40x2-#43**	320	#22	100	#25	100	2-#25*	100	#25	100
E14	#16	100	#16	200	40x2-#43**	320	#22	100	#25	100	2-#25*	100	#25	100

Notes: 1. * Indicates bundled continuous welded hoops. Two per bundle. All hoops shall meet "Ultimate Splice" requirements.

2. Spacing given on centers.

3. ** Indicates bundled Vert bars. Two per bundle.

4. See "Pier Layout" sheets for limits of plastic and non-plastic zones.

5. Alternate 90° and 135° seismic hook horizontally and vertically, hook shall engage both Horiz and Vert bars.

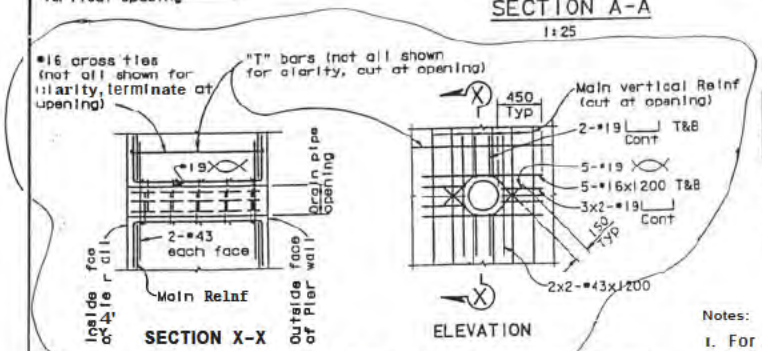

⚠ ADDITIONAL REINFORCEMENT (at drain pipe penetration)

1:25

Added detail

MARK	DATE	DESCRIPTIONS	BY	CH'D
1	03/04/02	ADD ADDITIONAL REINFORCEMENT AT DRAIN PENETRATION	TM	SC

REVISIONS

CONTRACT CHANGE ORDER NO. 9
SHEET 5 OF 42

Notes:

1. For drain pipe penetration location, see "Pier Layout" sheets.
2. Additional reinforcement similar for Piers E15 and E16.

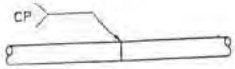

BUTT WELDED CONTINUOUS HOOP

No scale

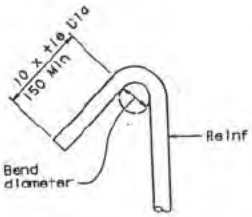

135° SEISMIC HOOK

No scale

ALL DIMENSIONS ARE IN MILLIMETERS UNLESS OTHERWISE SHOWN

SAN FRANCISCO OAKLAND BAY BRIDGE
EAST SPAN SEISMIC SAFETY PROJECT

SKYWAY STRUCTURES

PIER DETAILS NO. 1

R.S. Bache, DESIGN OVERSIGHT	DESIGN: R. Jenab	CHECKED: G. Saroggins	PREPARED FOR THE STATE OF CALIFORNIA DEPARTMENT OF TRANSPORTATION
	DETAILS: E. Zharkov	CHECKED: G. Saroggins	
	QUANTITIES: K. Corbler	CHECKED: A. Toder	

Salid Abbas, PROJECT ENGINEER

BRIDGE NO. 34-0006

KILOMETER POST 13.9/14.3, 0.0/1.6

CU 04
EA 04-012021

DISREGARD PRINTS BEARING EARLIER REVISION DATES

REVISION DATES (PRELIMINARY STAGE ONLY)

SHEET 072 OF

ORIGINAL SCALE IN MILLIMETERS FOR ARCHIVE PLANS

100 % PS&E

MARK	DATE	DESCRIPTIONS	BY	CH'D
1	03/04/02	ADD NOTE		

REVISIONS

CONTRACT CHANGE ORDER NO. 1
SHEET 6 OF 42

Note: For additional reinforcement at drain pipe penetration, see Detail No. 1 sheet.

REGISTERED ENGINEER - CIVIL
6-4-01
PLANS APPROVAL DATE

T.Y. LIN / MOFFATT & NICHOL
825 BATTERY STREET
SAN FRANCISCO, CA 94111

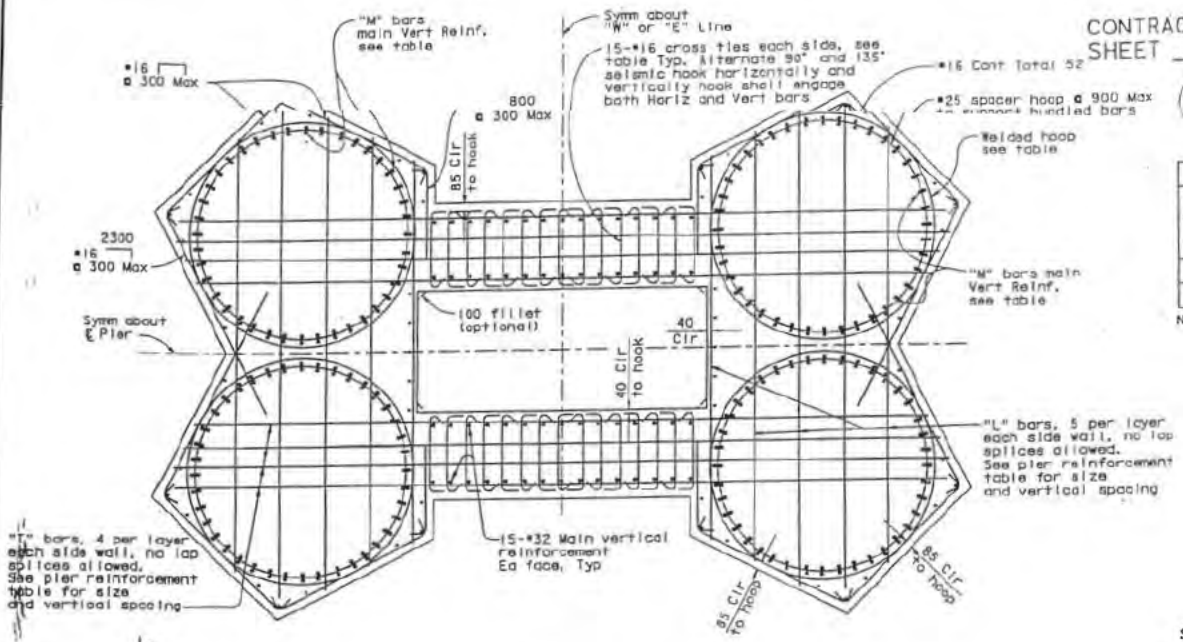

Piers E15 and E16

SECTION A-A

1:25

Pier reinforcement

Piers	Cross ties		"M" bars		"T" bars		"L" bars		Continuous welded hoop			
									Plastic zone		Non-plastic zone	
	Size	Spacing	No.-Size	Total per pier	Size	Spacing	Size	Spacing	No.-Size	Spacing	Size	Spacing
E15	#16	100	40x2-#43**	320	#22	100	#25	100	2-#25*	100	#25	100
E16	#16	100	40x2-#43**	320	#25	100	#25	100	2-#25*	100	#25	100

Notes: 1. * Indicates bundled continuous welded hoops. Two per bundle. All hoops shall meet "Ultimate Splice" requirements.
2. Spacing given on centers.
3. ** Indicates bundled Vert bars. Two per bundle.

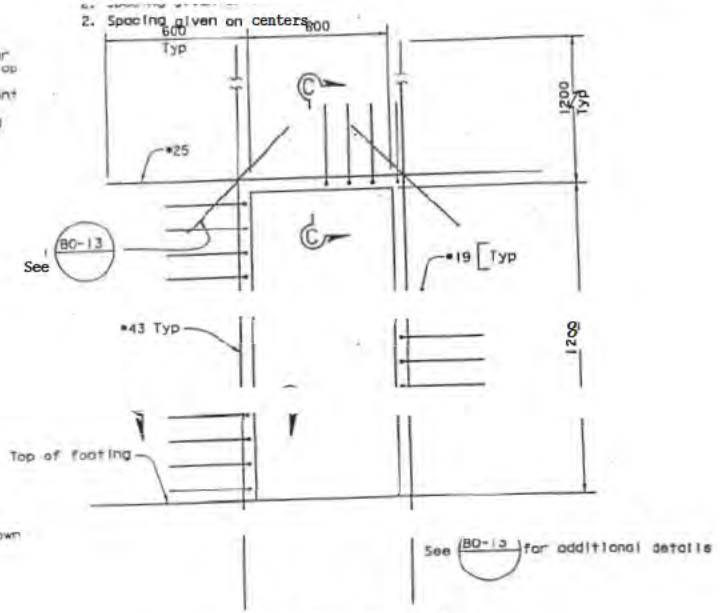

ACCESS OPENING DETAIL

1:10

NOTE: Typ pier reinforcing not shown

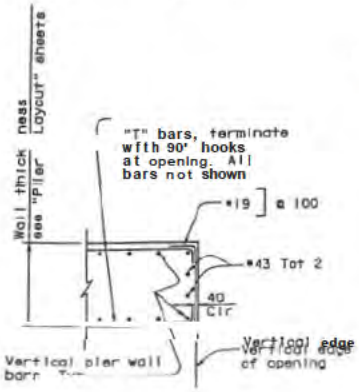

SECTION B-B

No scale

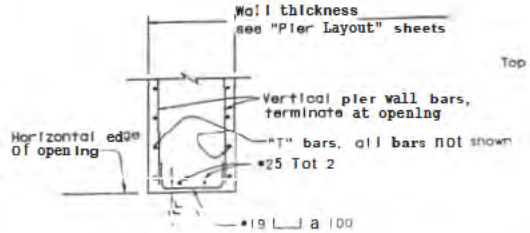

SECTION C-C

No scale

ALL DIMENSIONS ARE IN MILLIMETERS UNLESS OTHERWISE

SAN FRANCISCO OAKLAND BAY BRIDGE
EAST SPAN SEISMIC SAFETY PROJECT

SKYWAY STRUCTURES

PIER DETAILS NO. 2

PREPARED FOR THE STATE OF CALIFORNIA DEPARTMENT OF TRANSPORTATION

Solid Abbas
PROJECT ENGINEER

R.S. Bagha
DESIGN OVERSIGHT

DESIGN: R. Jenab
DETAILS: E. Zharkov
QUANTITIES: K. Corsiar
CHECKED: G. Saroggins
CHECKED: G. Saroggins
CHECKED: A. Yoder

34-0006
34-0006
2.5/14.3
0.0/1.5

SHEET 073

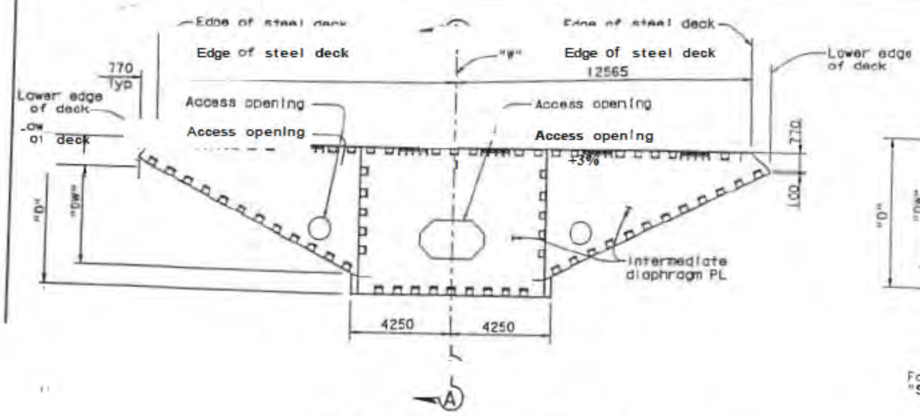

Section at Intermediate diaphragm

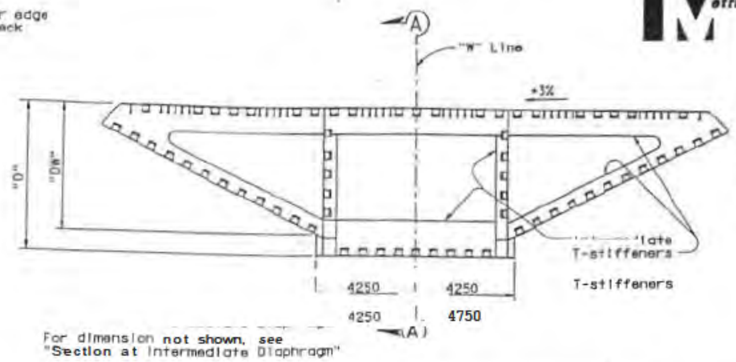

Section at I[redacted]iate T-stiffeners

SECTION
1:100

⚠	01/04/02	REVISE VALUES IN TABLE	TM	SC
MARK	DATE	DESCRIPTIONS	BY	CH'D

CONTRACT CHANGE ORDER NO. 9
SHEET 7 OF 42

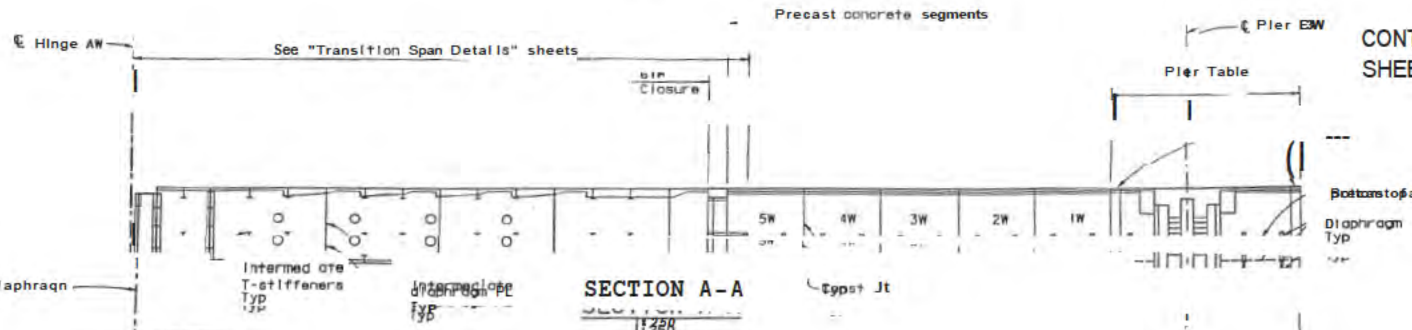

SECTION A-A
1:250

Dimension Table

	⚠			⚠								
Distance from ℄ Pier E3W	109715	107520	107685	101910	102016	90000	78000	66000	54000	50000	48000	For "Dimension Table" see "Typical Sections E3W(2)" sheet
Overall depth "D"	5520	5520		5520	5520	5520	5520	5659	6010	6153	6269	
Bottom slab thickness "T"												
Girder thickness "GT"												
[illegible]	[illegible]	[illegible]		[illegible]		[illegible]	[illegible]	[illegible]	[illegible]	[illegible]	[illegible]	
External web depth "DW"	5320	5320		5320		5320	5320	5320	5320	5320	5350	

1. E3W details not shown, see "Typical Sections
2. For dimensions "D" & "DW", see Dimension Table
3. Segment nomenclature: 1 W
   Segment No. — West (East)
4. Dimensions are vertical and horizontal. Dimensions are symmetrical about "W" Line.
5. Construction joints between segments are in vertical plane.

04 | SF/Ala | 80 | 13.9/14.3, 0.0/1.6 | 507RI | 978

REGISTERED ENGINEER - CIVIL
6-4-01
PLANS APPROVAL DATE
The State of California or its officers or agents shall not be responsible for the accuracy or completeness of electronic copies of this plan sheet.

Sajid Abbas
No. C 055274
Exp. 12/31/04
CIVIL
STATE OF CALIFORNIA

T.Y. LIN / MOFFATT & NICHOL
825 BATTERY STREET
SAN FRANCISCO, CA 94111

Caltrans now has a web site! To get to the web site, go to http://www.dot.ca.gov

ALL DIMENSIONS ARE IN MILLIMETERS UNLESS OTHERWISE SHOWN

SAN FRANCISCO OAKLAND BAY BRIDGE
EAST SPAN SEISMIC SAFETY PROJECT
SKYWAY STRUCTURES
TYPICAL SECTIONS E3W(1)

R. S. Bagha
DESIGN OVERSIGHT
DESIGN: S. Abbas | CHECKED: C. Werts
DETAILS: A. Lishchinsky | CHECKED: C. Werts
PREPARED FOR THE STATE OF CALIFORNIA
Sajid Abbas
PROJECT ENGINEER
BRIDGE NO. 34-0006L/R
KILOMETER POST

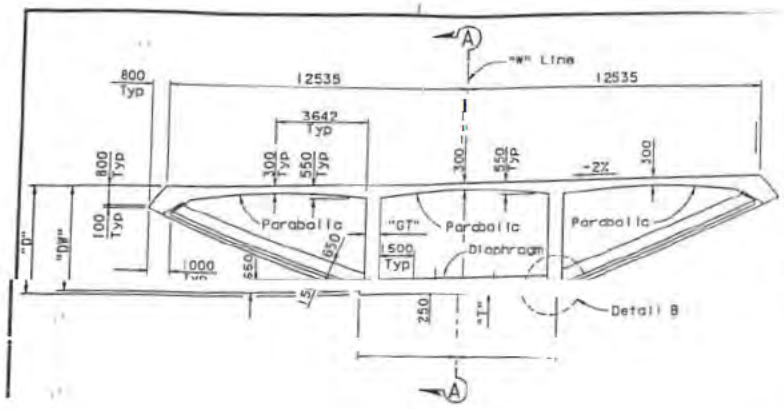

In Span

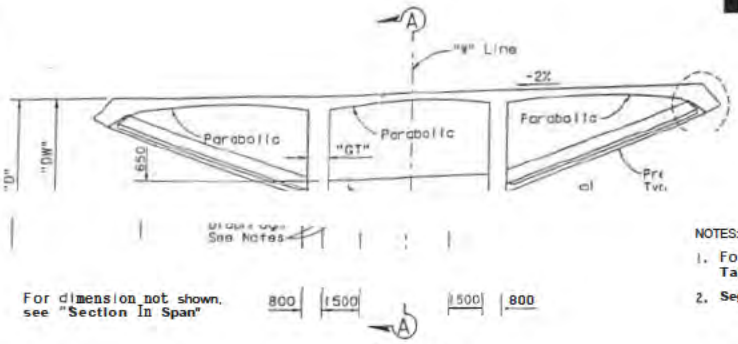

For dimension not shown, see "Section In Span"

At Pier

SECTION
1:100

NOTES:

1. For dimensions "D","T","GT" & "DW", see "Dimension Table".
2. Segment nomenclature: 1 E or W
   Segment No. — East or West
3. Dimensions are vertical and horizontal. Dimensions are symmetrical about "W" Line.
4. For Detail A and Detail B, see "Typical Sections E3W(2)" sheet.
5. For counterweight diaphragm geometry and reinforcement, see "Diaphragm Details" sheets.
6. Construction Joints between segments are in vertical plane.

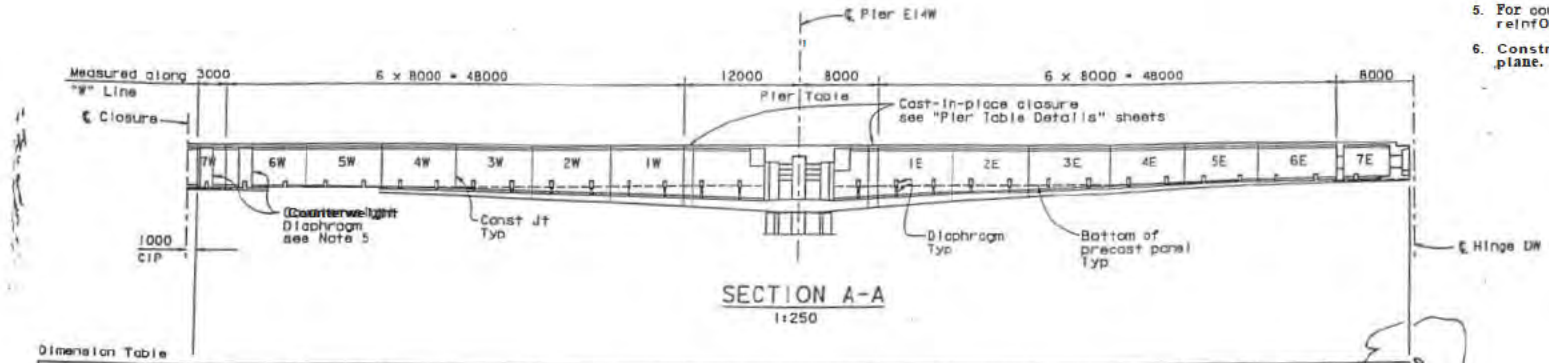

SECTION A-A
1:250

Dimension Table

Distance from ℄ Pier E14W	63000	60000	52000	44000	36000	28000	20000	12000	1965	0	1965	8000	16000	24000	32000	40000	48000	56000	63500
Overall depth "D"	4721	4726	4812	4980	5217	5517	5876	6289	6880	6880	6880	6447	5917	5441	5022	4664	4372	4155	4038
Bottom slab thickness "T"	251	257	238	363	451	558	683	826	See "Pier Table Details" sheets			903	753	619	502	405	328	274	See "Hinge D Details" sheets
Girder thickness "GT"	603	613	640	666	692	719	745	771				784	758	732	705	679	653	626	
External web depth "DW"	4569	4553	4509	4466	4423	4380	4337	4294	4240	4229	4219	4186	4143	4100	4057	4014	3911	3928	3886

ALL DIMENSIONS ARE IN MILLIMETERS UNLESS OTHERWISE SHOWN

CONTRACT CHANGE ORDER NO. 9
SHEET 8 OF 42

SC
CH'D

04 | SF/AIC | 80 | 3.9/1.5

REGISTERED ENGINEER - CIVIL
6-4-01
PLANS APPROVAL DATE
The State of California or its officers or agents shall not be responsible for the accuracy or completeness of electronic copies of this plan sheet.

Sajid Abbas
No. C 055274
Exp. 12/31/04
CIVIL
STATE OF CALIFORNIA

T.Y. LIN / MOFFATT & NICHOL
825 BATTERY STREET

R.S. Bogha
DESIGN OVERSIGHT

DESIGN	S. Abbas	CHECKED	C. Ferris
DETAILS	A. Lishansky	CHECKED	C. Ferris
QUANTITIES	E. Corsiler	CHECKED	S. Shi

PREPARED FOR THE
STATE OF CALIFORNIA
DEPARTMENT OF TRANSPORTATION

Sajid Abbas
PROJECT ENGINEER

BRIDGE NO. 34-0006L/R
KILOMETER POST 3.9/14.3, 0.0/1.5

SAN FRANCISCO OAKLAND BAY BRIDGE
EAST SPAN SEISMIC SAFETY PROJECT

SKYWAY STRUCTURES

TYPICAL SECTIONS E14W

100 % PDA&E

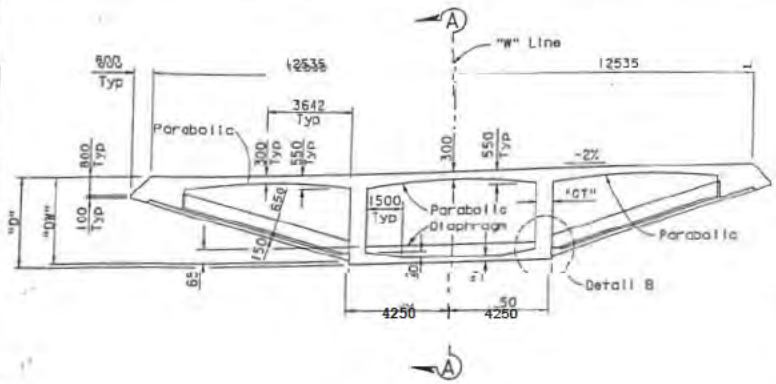

In Span

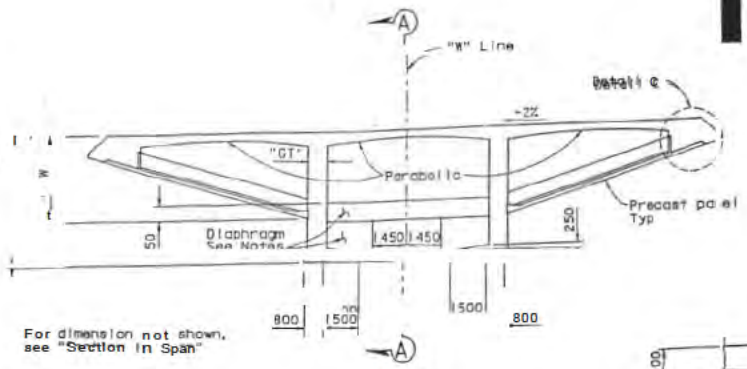

For dimension not shown, see "Section In Span"

At Pier

SECTION

1:100

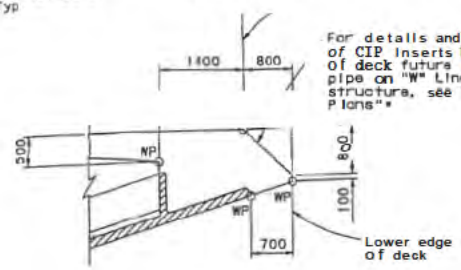

DETAIL C

1:40

*Location of insert may be adjusted, as approved by the Engineer, to clear prestressing anchor.

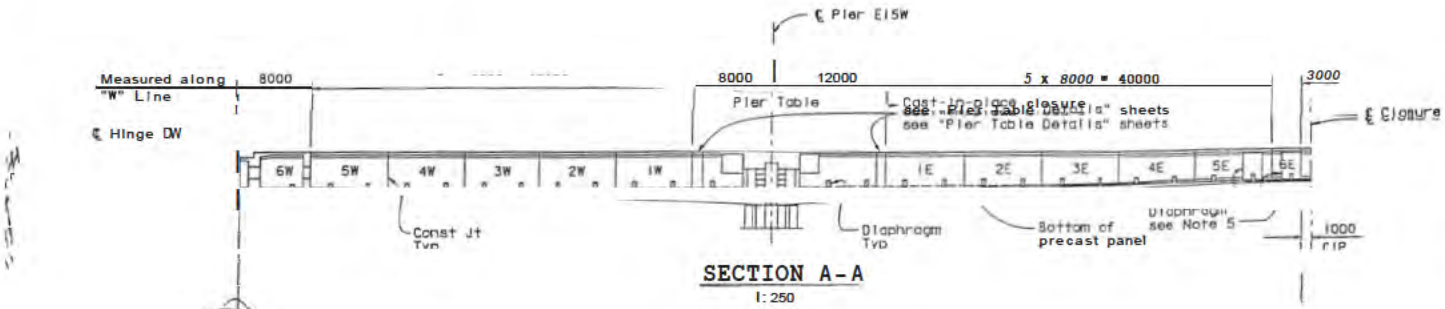

SECTION A-A

1:250

Dimension Table ⚠

Distance from ℄ Pier E15W	55650 / 55560	48000	40000	32000	24000	16000	8000	1465 / 0 / 1465	12000	20000	28000	36000	44000	52000	55000
Overall depth "D"	4033	4075	4217	4441	4735	5094	5514	5900 / 5400 / 5900	5178	4693	4282	3934	3662	3478	3439
Bottom slab thickness "T"	See "Hinge D Details" sheets	280	347	443	566	711	879	See "Pier Table Details" sheets	792	636	501	392	310	259	251
Girder thickness "GT"		630	660	690	720	750	780		765	735	705	675	645	615	604
External web depth "DW"	3883 / 3882	3841	3798	3755	3712	3669	3626	3591 / 3583 / 3575	3518	3475	3432	3389	3346	3303	1286

⚠

MARK	DATE	DESCRIPTIONS	BY	CH'D
1	8/00	REVISE VALUES IN TABLE	TM	SC

CONTRACT CHANGE ORDER NO. 9
SHEET 9 OF 42

NOTES:

1. For dimensions "D", "T", "GT" & "DW", see "Dimension
2. Segment nomenclature: 1 E or W
   Segment No. — East or West
3. Dimensions are vertical and horizontal. Dimensions are symmetrical about "W" Line.
4. For Detail E, see "Typical Sections E3W(2)" sheet.
5. For counterweight diaphragm geometry and reinforcement, see "Diaphragm Details" sheets.
6. Construction Joints between segments are in vertical plane.

ALL DIMENSIONS ARE IN MILLIMETERS UNLESS OTHERWISE SHOWN

Caltrans Metric

04	SF/Alc	80	13.9/14.3, 0.0/1.6	520R1	978

REGISTERED ENGINEER - CIVIL
Sajid Abbas No. C 055274 Exp. 12/31/04 CIVIL STATE OF CALIFORNIA
6-4-01
PLANS APPROVAL DATE
The State of California or the officers or agents shall not be responsible for the accuracy or completeness of this plan sheet.
J. T. LIN / MURRAY & NICHOL
825 BATTERY STREET
SAN FRANCISCO, CA 94111
Caltrans now has a web site! To get to the web site, go to http://www.dot.ca.gov

R.S. Sahe
DESIGN OVERSIGHT

DESIGN	S. Abbas	CHECKED	C. Hertz
DETAILS	A. Lishansky	CHECKED	C. Hertz
QUANTITIES	E. Corsiter	CHECKED	S. Shi

PREPARED FOR THE STATE OF CALIFORNIA DEPARTMENT OF TRANSPORTATION

Sajid Abbas
PROJECT ENGINEER

BRIDGE NO. 34-0006L/R
KILOMETER POST 13.9/14.3, 0.0/1.6

SAN FRANCISCO OAKLAND BAY BRIDGE
EAST SPAN SEISMIC SAFETY PROJECT

SKYWAY STRUCTURES

TYPICAL SECTIONS E15W

REVISION DATED PRELIMINARY STAGE ONLY!

SHEET OF

100 % PS&E

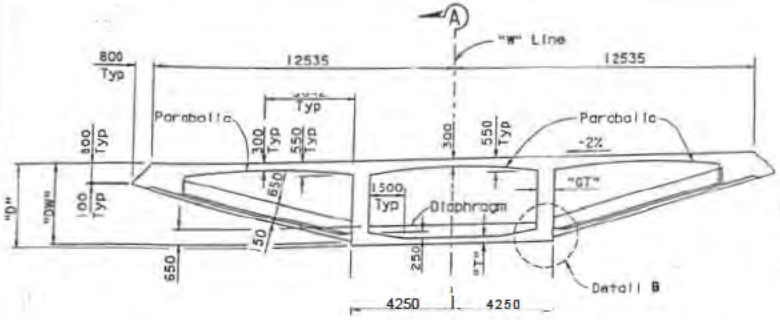

In Span

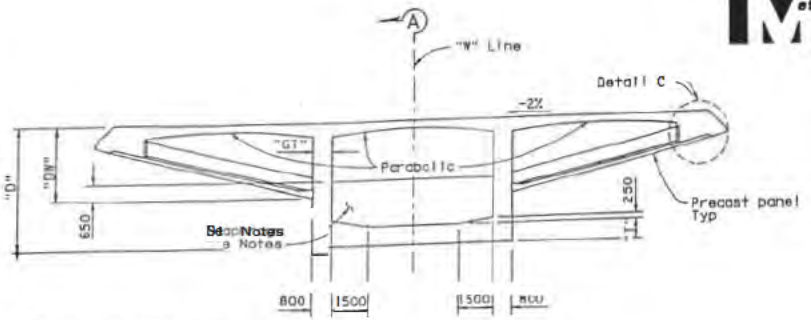

For dimension not shown, see "Section In Span"

Af P er

SECTION

1:100

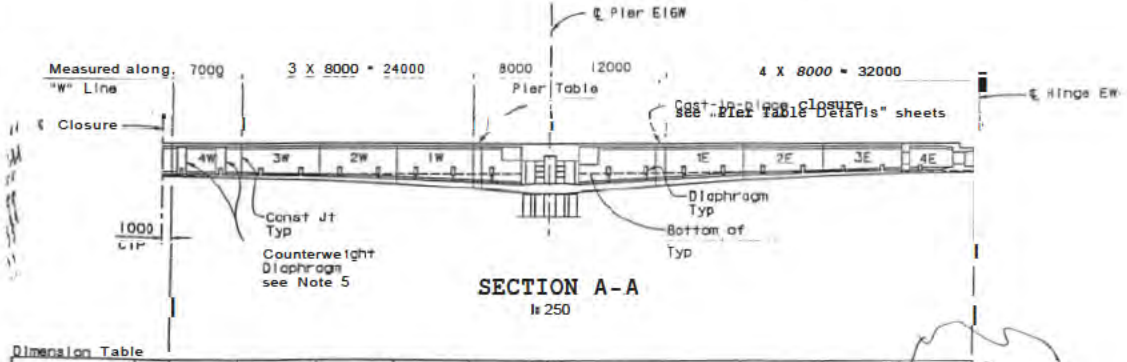

SECTION A-A

1:250

Dimension Table

Distance from ℄ Pier E16W	0	8000	16000	24000	32000	40000	48000	56000	64000	72000	80000
Overall depth "D"	3429	3518	3766	4141	4627	5100	5100	4250	3728	3325	3042
Bottom slab thickness "T"	251	290	381	510	675	See "Pier Table Details" sheets		589	441	330	262
Girder thickness "GT"	605	643	686	729	772			750	707	664	621
External web depth "DW"	3276	3238	3195	3152	3109	3073	3066	3001	2958	2915	2872

Distance from ℄ Pier E16W	88000	96000	104000	112000	120000	128000	136000	144000	152000	160000	168000
Overall depth "D"	3000										
Bottom slab thickness "T"	See "Hinge E Details" sheets										
Girder thickness "GT"											
External web depth "DW"	2850										

MARK	DATE	DESCRIPTIONS	BY	CH'D
1	03/04/02	REVISE VALUE IN TABLE	TM	SC

REVISIONS

CONTRACT CHANGE ORDER NO. 9
SHEET 10 OF 42

NOTES:

1. For dimensions "D", "T", "GT" & "DW", see "Dimension Table".
2. Segment nomenclature: 1 E or W (Segment No. — East or West)
3. Dimensions are vertical and horizontal. Dimensions are symmetrical about "W" Line.
4. For Detail B, see "Typical Sections E3W(2)" sheet, for Detail C, see "Typical Sections E15W" sheet.
5. For counterweight diaphragm geometry and reinforcement, see "Diaphragm Details" sheets.
6. Construction joints between segments are in

ALL DIMENSIONS ARE IN MILLIMETERS UNLESS OTHERWISE SHOWN

Caltrans Metric

04	SF/Ala	80	13.9/14.3, 0.0/1.6	521R1	978

REGISTERED ENGINEER - CIVIL
6-4-01
DATE
The State of California or its officers or agents shall not be responsible for the accuracy or completeness of electronic copies of this plan sheet.

Salid Abbas No. C 055274 Exp. 12/31/04 CIVIL STATE OF CALIFORNIA PROFESSIONAL ENGINEER

T.Y. LIN / MOFFATT & NICHOL
825 BATTERY STREET
SAN FRANCISCO, CA 94111

Caltrans now has a web site! To get to the web site, go to http://www.dot.ca.gov

R.S. Bagha
DESIGN OVERSIGHT
R.S. Bagha
SIGN OFF DATE 11/17/00

DESIGN	S. Abbas	CHECKED	L. Werts
DETAILS	A. Lisikovsky	CHECKED	L. Werts
QUANTITIES	E. Carsler	CHECKED	S. Shi

PREPARED FOR THE STATE OF CALIFORNIA DEPARTMENT OF TRANSPORTATION

Salid Abbas
PROJECT ENGINEER

BRIDGE NO. 34-0006L/R
KILOMETER POST 13.9/14.3, 0.0/1.6

CU 04
EA 04-012021

SAN FRANCISCO OAKLAND BAY BRIDGE
EAST SPAN SEISMIC SAFETY PROJECT

SKYWAY STRUCTURES

TYPICAL SECTIONS E16W

SHEET 089 OF

TUO % PGAE

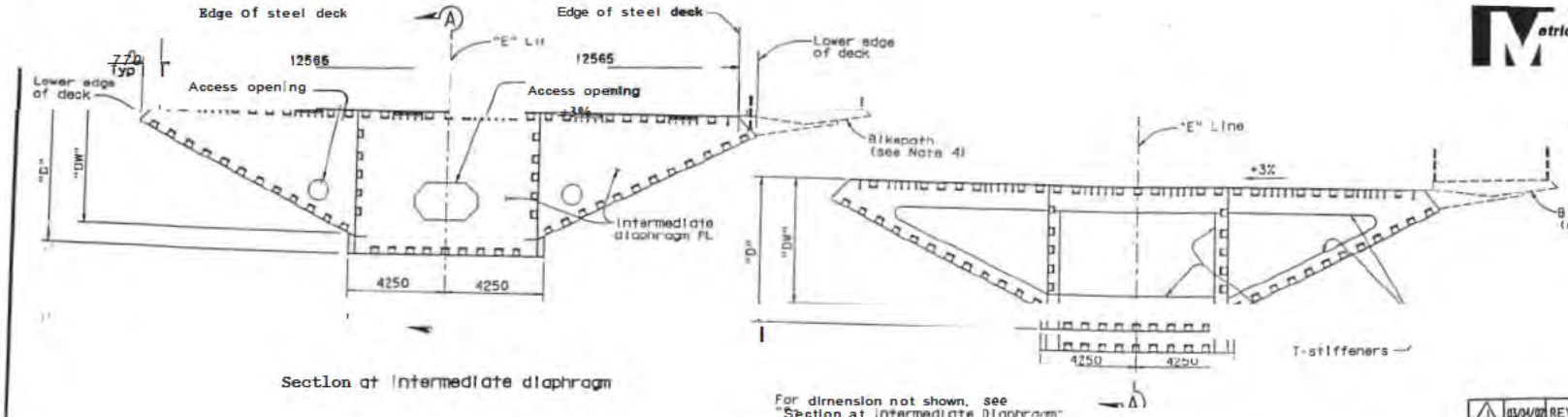

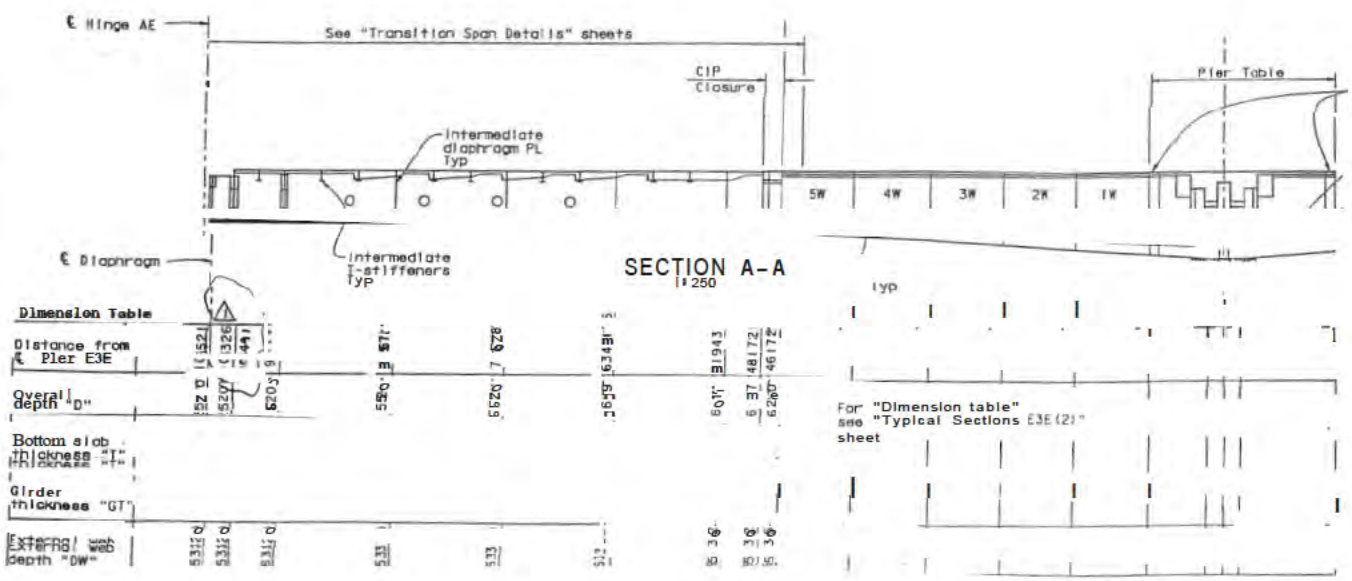

MARK	DATE	DESCRIPTIONS	BY	CH'D
1	01/04/02	REVISE VALUE IN TABLE	TM	SC

CONTRACT CHANGE ORDER NO. 9
SHEET 11 OF 42

NOTES:

1. Bar details not shown, see "Typical Sections
2. For dimensions "D"&"DW", see "Dimension Table."
3. Segment nomenclature: W — Segment No. — West (East)
4. Dimensions are vertical and horizontal. Dimensions are symmetrical about "E" Line.
5. For bikepath dimensions, see "Bikepath Details"
6. Construction Joints between segments are in vertical plane. between segments are in

ALL DIMENSIONS ARE IN MILLIMETERS UNLESS OTHERWISE SHOWN

SAN FRANCISCO OAKLAND BAY BRIDGE
EAST SPAN SEISMIC SAFETY PROJECT

SKYWAY STRUCTURES

TYPICAL SECTIONS E3E(1)

PREPARED FOR THE STATE OF CALIFORNIA DEPARTMENT OF TRANSPORTATION

Sajid Abbas, PROJECT ENGINEER

BRIDGE NO. 34-0006L/R

R.S. Bagha, DESIGN OVERSIGHT

DESIGN: S. Abbas — CHECKED: C. Marts
DETAILS: L. Lishansky — CHECKED: C. Marts
QUANTITIES: L. Cormier — CHECKED: S. Shi

Metric

REGISTERED ENGINEER - CIVIL
6-4-01
Sajid Abbas C 055274 Exp. 12/31/04

T.Y. LIN / MOFFATT & NICHOL
825 BATTERY STREET
SAN FRANCISCO, CA 94111

Caltrans now has a web site! To get to the web site, go to: http://www.dot.ca.gov

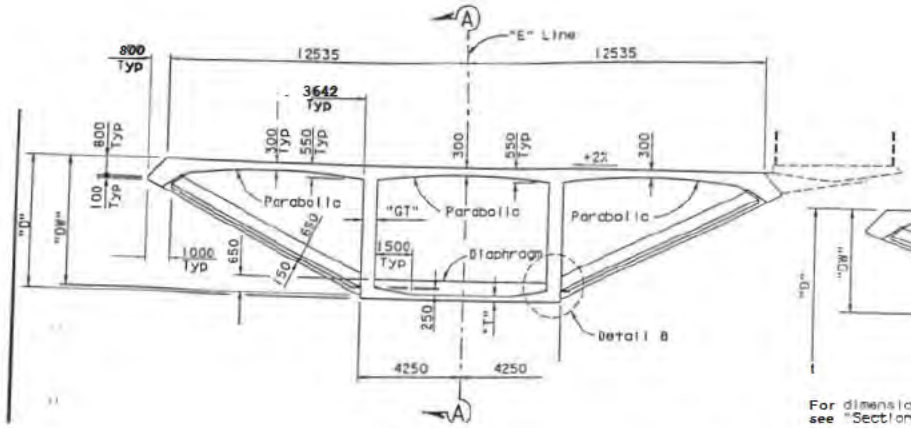

In Span

SECTION
1:100

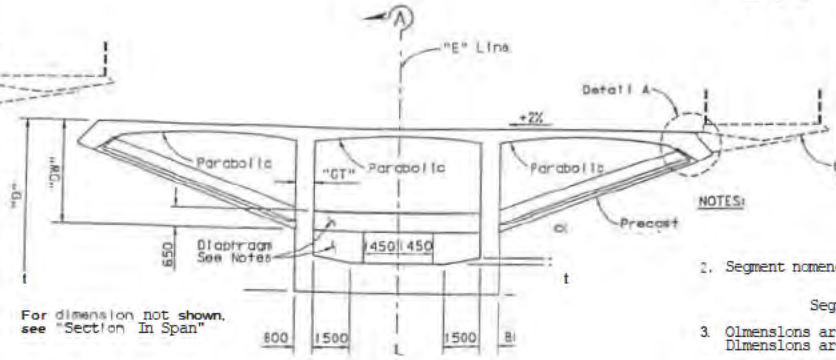

For dimension not shown, see "Section In Span"

At Pier

NOTES:

see "Dimension

2. Segment nomenclature: E or W
   Segment No. — East or West
3. Dimensions are vertical and horizontal. Dimensions are symmetrical about "E" Line.
4. For counterweight diaphragm geometry and reinforcement, see "Diaphragm Details" sheets.
5. For bikepath dimensions, see "Bikepath Details" sheets.
6. For Detail A and Detail B, see "Typical Sections EW(2)" sheet.
7. Construction Joints between segments are in vertical plane.

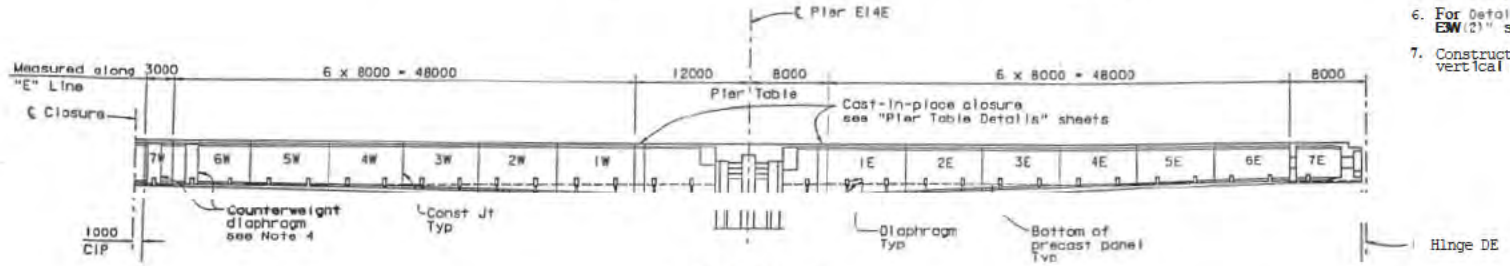

SECTION A-A
1:250

Dimension Table

Distance from ℄ Pier E14E	63000	60000	52000	44000	36000	28000	20000	12000	1965	0	1965	8000	16000	24000	32000	40000	48000	56000	63365	49439	63365			
Overall depth "D"	4719	4724	4810	4978	5216	5516	5875	6288	6880	6880	6880	6446	5915	5439	5019	4660	4368	4151	4032					
Bottom slab thickness "T"	251	257	298	363	451	558	683	826	See "Pier Table Details" sheets			903	753	619	502	405	328	274	See "Hinge D Details" sheets					
Girder thickness "GT"	603	613	640	666	692	719	745	771				784	758	732	705	679	653	626						
Bottom of web depth "DW"	4561	4550	4507	4464	4421	4377	4334	4291	4237	4226	4215	4183	4140	4096	4053	4010	3967	3924	3882		3883			

MARK	DATE	DESCRIPTIONS	BY	CHKD
1	01/04/02	REVISE VALUES IN TABLE	TM	SC

CONTRACT CHANGE ORDER NO. 9
SHEET 12 OF 42

ALL DIMENSIONS ARE IN MILLIMETERS UNLESS OTHERWISE SHOWN

R.S. Bagha
DESIGN OVERSIGHT
R.S. Bagha
SIGN OFF DATE 11/17/00

DESIGN	S. Abbas	CHECKED	C. Wertz
DETAILS	A. Lishansky	CHECKED	C. Wertz
QUANTITIES	K. Cormier	CHECKED	S. Shi

PREPARED FOR THE STATE OF CALIFORNIA DEPARTMENT OF TRANSPORTATION

Sajid Abbas
PROJECT ENGINEER

BRIDGE NO. 34-0006L/R
KILOMETER POST 13.9/14.3, 0.0/1.6

SAN FRANCISCO OAKLAND BAY BRIDGE
EAST SPAN SEISMIC SAFETY PROJECT

SKYWAY STRUCTURES

TYPICAL SECTIONS E14E

ORIGINAL SCALE IN MILLIMETERS

CU 04

DISREGARD PRINTS BEARING

04 SF/Alc 80 0.0/1.6 534R1 978

Metric

REGISTERED ENGINEER - CIVIL
6-4-01
PLANS APPROVAL DATE
Sajid Abbas No. C 055274 Exp. 12/31/04 CIVIL STATE OF CALIFORNIA

The State of California or its officers or agents shall not be responsible for the accuracy or completeness of electronic copies of this plan sheet.

T.Y. LIN / MOFFATT & NICHOL
825 BATTERY STREET
SAN FRANCISCO, CA 94111

Caltrans now has a web site! To get to

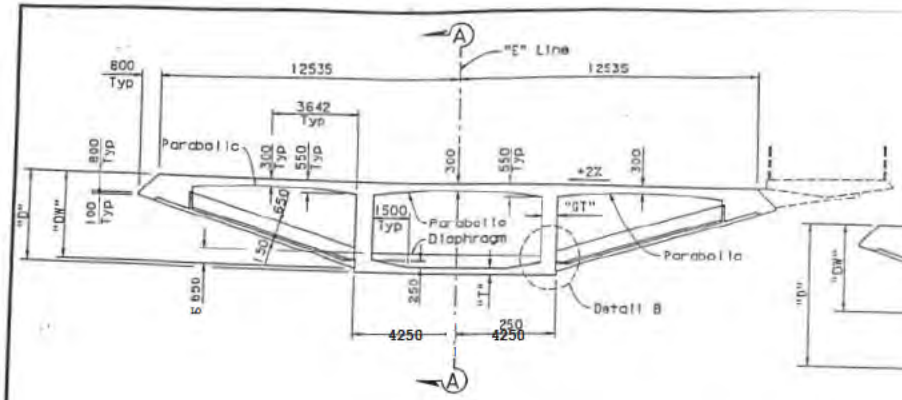

SECTION

1:100

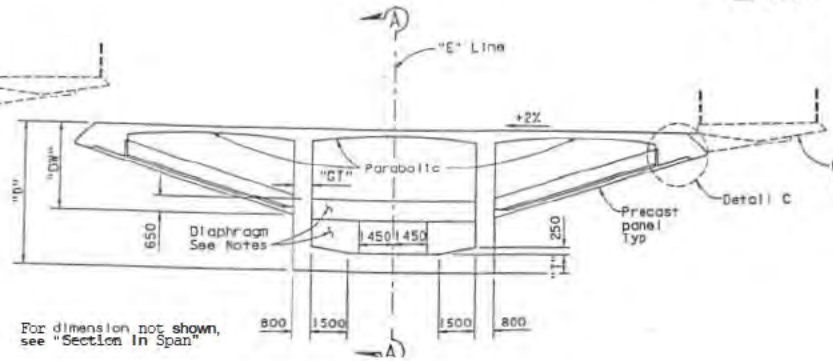

For dimension not shown, see "Section In Span"

At Pier

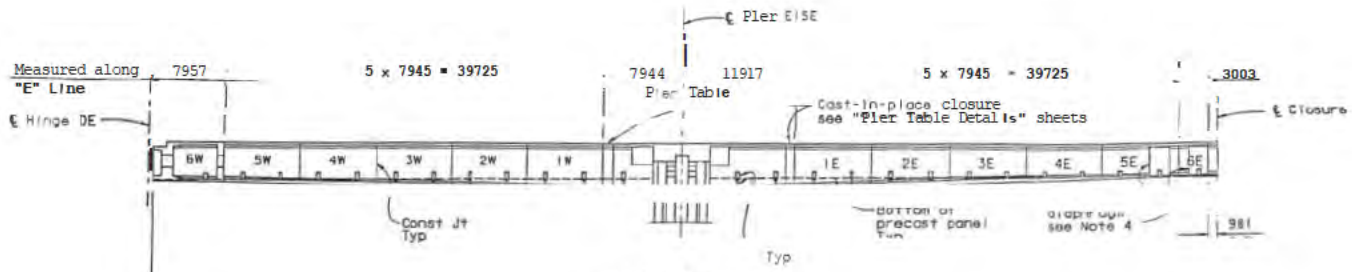

SECTION A-A

1:250

Dimension Table

Distance from ℄ Pier E15E	55276 / 55149	47669	39724	31779	23834	15889	7944	1465	0	1465	11917	19862	27807	35752	43697	51642	54645
Overall depth "D"	4029 / 4028	4070	4213	4437	4733	5091	5514	5900	5900	5900	5178	4698	4281	3933	3680	3476	3437
Bottom slab thickness "T"	See "Hinge D Details" sheets	290	347	444	566	711	879	See "Pier Table Details" sheets			793	636	502	392	310	259	251
Girder thickness "GT"		630	660	690	720	750	780				765	735	705	675	645	615	604
External web depth "DW"	3879 / 3878	3837	3794	3751	3709	3666	3623	3588	3580	3572	3515	3472	3429	3387	3344	3301	3284

MARK	DATE	DESCRIPTIONS	BY	CH'D
1	6/6/06	REVISE VALUES IN TABLE	TM	SC

REVISIONS

CONTRACT CHANGE ORDER NO. 9

NOTES:

1. For dimensions "D", "T", "GT" & "DW", see "Dimension Table".
2. Segment nomenclature: E or W — East or West; Segment No.
3. Dimensions are vertical and horizontal. Dimensions are symmetrical about "E" Line.
4. For counterweight diaphragm geometry and reinforcemnt, see "Diaphragm Details" sheets.
5. For bikepath dimensions, see "Bikepath Details" sheets.
6. For Detail E, see "Typical Sections E3W(2)" sheet, for Detail C, see "Typical Sections E15W" sheet.
7. Construction joints between segments are in vertical plane.

ALL DIMENSIONS ARE IN MILLIMETERS UNLESS OTHERWISE SHOWN

100 % PSAE

R. S. Bogha
DESIGN OVERSIGHT
R. S. Bogha
DATE 11/17/00

DESIGN	S. Abbas	CHECKED	C. Morris
DETAILS	A. Lishansky	CHECKED	C. Morris
QUANTITIES	K. Carmier	CHECKED	S. Shi

PREPARED FOR THE STATE OF CALIFORNIA DEPARTMENT OF TRANSPORTATION

Sajid Abbas
PROJECT ENGINEER

BRIDGE NO. 34-0006L/R
KILOMETER POST 13.9/14.3, 0.0/1.6

DISREGARD PRINTS BEARING

SAN FRANCISCO OAKLAND BAY BRIDGE
EAST SPAN SEISMIC SAFETY PROJECT

SKYWAY STRUCTURES

TYPICAL SECTIONS E15E

Caltrans Metric

04	SF/Ala	80	13.9/14.3, 0.0/1.6	535R1	978

REGISTERED ENGINEER - CIVIL
6-4-01
PLANS APPROVAL DATE
The State of California or its officers or agents shall not be responsible for the accuracy or completeness of electronic copies of this plan sheet.

REGISTERED PROFESSIONAL ENGINEER Sajid Abbas C 059274 Exp. 12/31/04 CIVIL STATE OF CALIFORNIA

T.Y. LIN / MOFFATT & NICHOL
825 BATTERY STREET
SAN FRANCISCO, CA 94111

Caltrans now has a web site! To get to its web site, go to http://www.dot.ca.gov

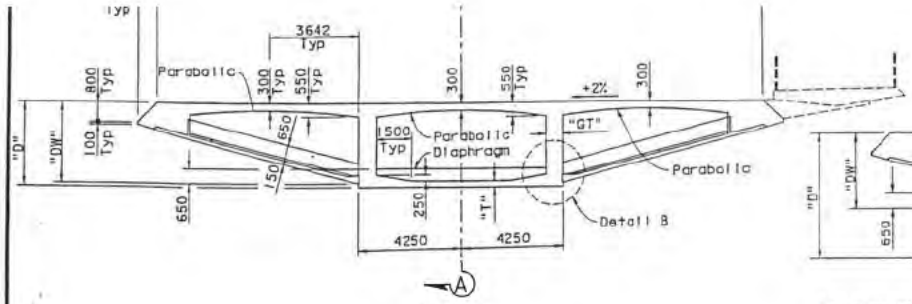

In Span

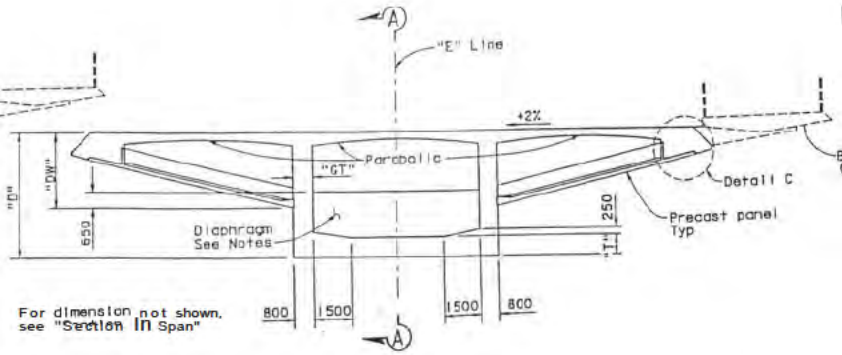

For dimension not shown, see "Section In Span"

At Pier

SECTION

1:100

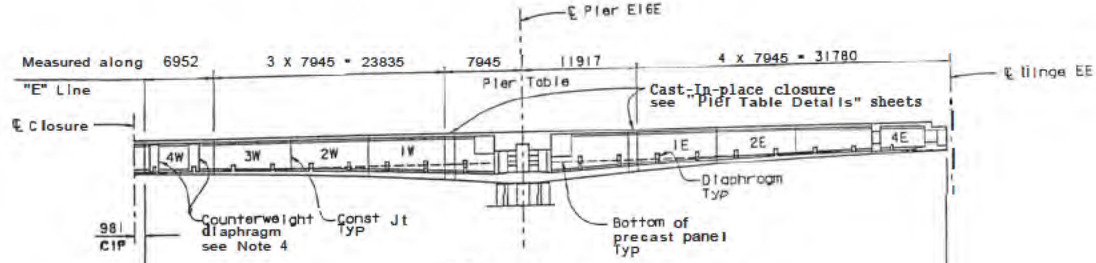

SECTION A-A

1:250

Dimension Table

Distance from ℄ Pier E16E	38732	31780	23835	15890	7945	1455 / 0 / 1455	11917	19862	27807	35752	43497	43452
Overall depth "D"	3427	3516	3764	4140	4627	5100 / 5100 / 5100	4251	3728	3325	3061	3000	
Bottom slab thickness "T"	251	290	381	511	675	See "Pier Table Details" sheets	569	441	330	262	See "Hinge Details" sheets	
Girder thickness "GT"	605	643	686	729	772		750	707	664	621		
External web depth "DW"	3274	3236	3193	3150	3108	3072 / 3065 / 3057	3000	2957	2914	2871	2850	

MARK	DATE	DESCRIPTIONS	BY	CH'D
1	03/14/02	REVISE VALUE IN TABLE	TM	SC

REVISIONS

CONTRACT CHANGE ORDER NO. 9
SHEET 14 OF 42

NOTES:

1. For dimensions "D","T","GT" & "DW", see "Dimension Table".
2. Segment nomenclature: 1 E or W
   Segment No. — East or West
3. Dimensions are vertical and horizontal. Dimensions are symmetrical about "E" Line.
4. For counterweight diaphragm geometry and reinforcement, see "Diaphragm Details" sheets.
5. For bikepath dimensions, see "Bikepath Details" sheets.
6. For Detail B, see "Typical Sections E3W(2)" sheet. for Detail C, see "Typical Sections E15W" sheet.
7. Construction joints between segments are in vertical plane.

ALL DIMENSIONS ARE IN MILLIMETERS UNLESS OTHERWISE SHOWN

PLANS APPROVAL DATE 6-4-01

The State of California or its officers or agents shall not be responsible for the accuracy or completeness of electronic copies of this plan sheet.

12/31/04 CIVIL STATE OF CALIFORNIA

T.Y. LIN / MOFFATT & NICHOL
825 BATTERY STREET
SAN FRANCISCO, CA 94111

Caltrans now has a web site! To get to the web site, go to: http://www.dot.ca.gov

R.S. Bagha
DESIGN OVERSIGHT
R.S. Bagha

DESIGN	S. Abbas	CHECKED	C. Werts
DETAILS	A. Lishansky	CHECKED	C. Werts
QUANTITIES	K. Cormier	CHECKED	S. Shi

PREPARED FOR THE STATE OF CALIFORNIA DEPARTMENT OF TRANSPORTATION

Sajid Abbas
PROJECT ENGINEER

CU 04

BRIDGE NO. 34-0006L/R
KILOMETER POST 13.9/14.3, 0.9/1.5

DISREGARD PRINTS BEARING EARLIER REVISION DATES

SAN FRANCISCO OAKLAND BAY BRIDGE
EAST SPAN SEISMIC SAFETY PROJECT

SKYWAY STRUCTURES

TYPICAL SECTIONS E16E

REVISION DATES (PRELIMINARY STAGE ONLY)

SHEET 104

100% PS&E

DIST.	COUNTY	ROUTE	KILOMETER POST TOTAL PROJECT	SHEET NO.	TOTAL SHEETS
04	SF/Ala	80	13.9/14.3, 0.0/1.6	541R1	978

Caltrans Metric

Sajid Abbas
REGISTERED ENGINEER - CIVIL
6-4-01
PLANS APPROVAL DATE

REGISTERED PROFESSIONAL ENGINEER Sajid Abbas No. C 055274 Exp. 12/31/04 CIVIL STATE OF CALIFORNIA

The State of California or its officers or agents shall not be responsible for the accuracy or completeness of electronic copies of this plan sheet.

T.Y. LIN / MOFFATT & NICHOL
825 BATTERY STREET
SAN FRANCISCO, CA 94111

Caltrans now has a web site! To get to the web site, go to: http://www.dot.ca.gov

NOTES:

1. For notes, see "Girder Layout E3W" sheet.
2. For vent details, see "Girder Layout E3W" sheet.
3. Key to segment nomenclature: | E or W
   Segment No. — East or West
4. For deck manhole details, see (87-11).
5. Orientation of diaphragm and precast panel rib shall be normal to "W" Line.
6. For steel grating detail, see "Miscellaneous Details" sheets.

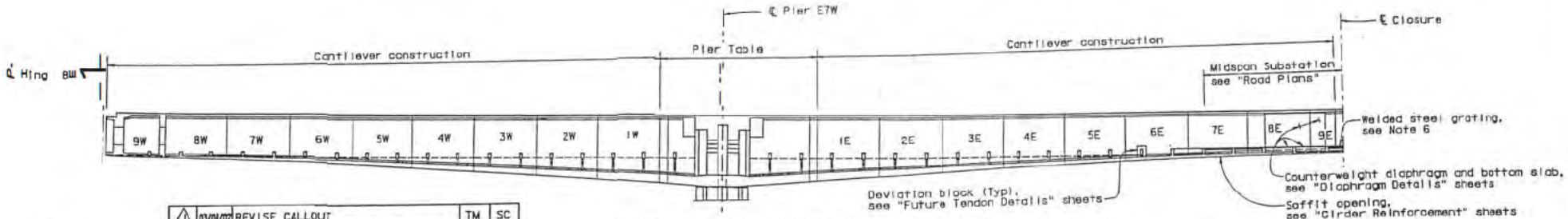

MARK	DATE	DESCRIPTIONS	BY	CH'D
1	03/01/02	REVISE CALLOUT	TM	SC

REVISIONS

LONGITUDINAL SECTION
1:250

CONTRACT CHANGE ORDER NO. 9
SHEET 15 OF 42

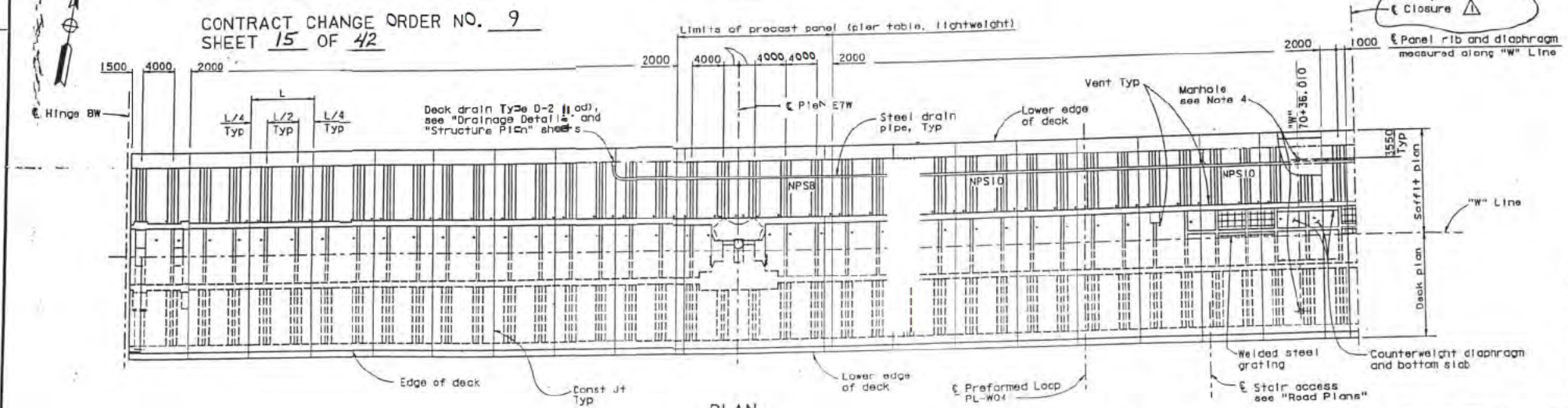

PLAN
1:250

ALL DIMENSIONS ARE IN MILLIMETERS UNLESS OTHERWISE SHOWN

R.S. Bagha
DESIGN OVERSIGHT
R.S. Bagha

DESIGN	S. ADDOS	CHECKED	N. Lanant
DETAILS	A. Lisnansky	CHECKED	N. Lanant
QUANTITIES	K. Cornier	CHECKED	S. Shi

PREPARED FOR THE STATE OF CALIFORNIA DEPARTMENT OF TRANSPORTATION

Sajid Abbas
PROJECT ENGINEER

BRIDGE NO. 34-0006L/R
KILOMETER POST 13.9/14.3, 0.0/1.6

SAN FRANCISCO OAKLAND BAY BRIDGE
EAST SPAN SEISMIC SAFETY PROJECT

SKYWAY STRUCTURES

GIRDER LAYOUT E7W

SHEET 109

100 % PS&E

DATE PLOTTED => 05 MAR 102 TIME PLOTTED => 11:11:36

NOTES:

1. For notes, see "Girder Layout E3W" sheet.
2. For vent details, see "Girder Layout E3W" sheet.
3. Key to segment nomenclature: 1 E or W
   Segment No. — East or West
4. For web manhole details, see "Miscellaneous Details" sheets.
5. For deck manhole details, see (87-11).
6. Orientation of diaphragm and precast panel rib shall be normal to "W" Line.

04	SF/AIC	80	13.9/14.3, 0.0/1.6	548R1	978

REGISTERED ENGINEER - CIVIL
6-4-01
PLANS APPROVAL DATE
The State of California or its officers or agents shall not be responsible for the accuracy or completeness of electronic copies of this plan sheet.

Sajid Abbas, C 055274, Exp. 12/31/04, CIVIL, STATE OF CALIFORNIA

T.Y. LIN / MOFFATT & NICHOL
825 BATTERY STREET
SAN FRANCISCO, CA 94111

Caltrans now has a web site! To get to the web site, go to http://www.dot.ca.gov

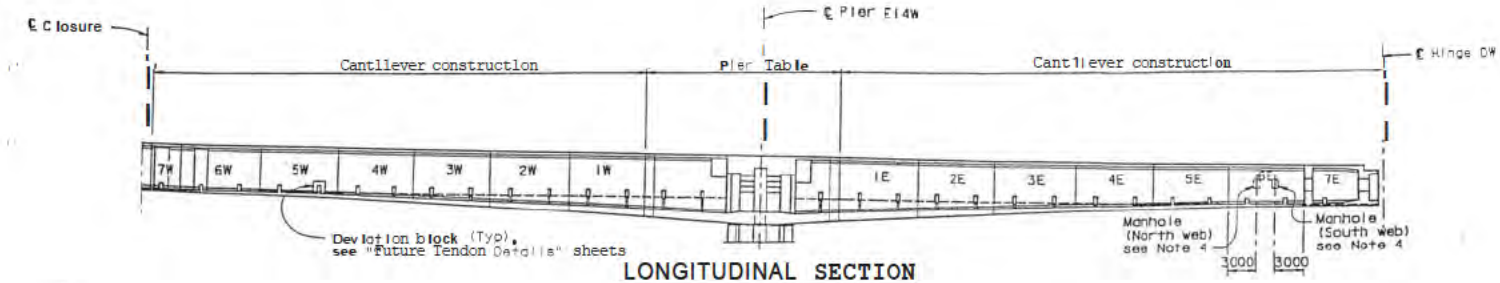

LONGITUDINAL SECTION
1: 250

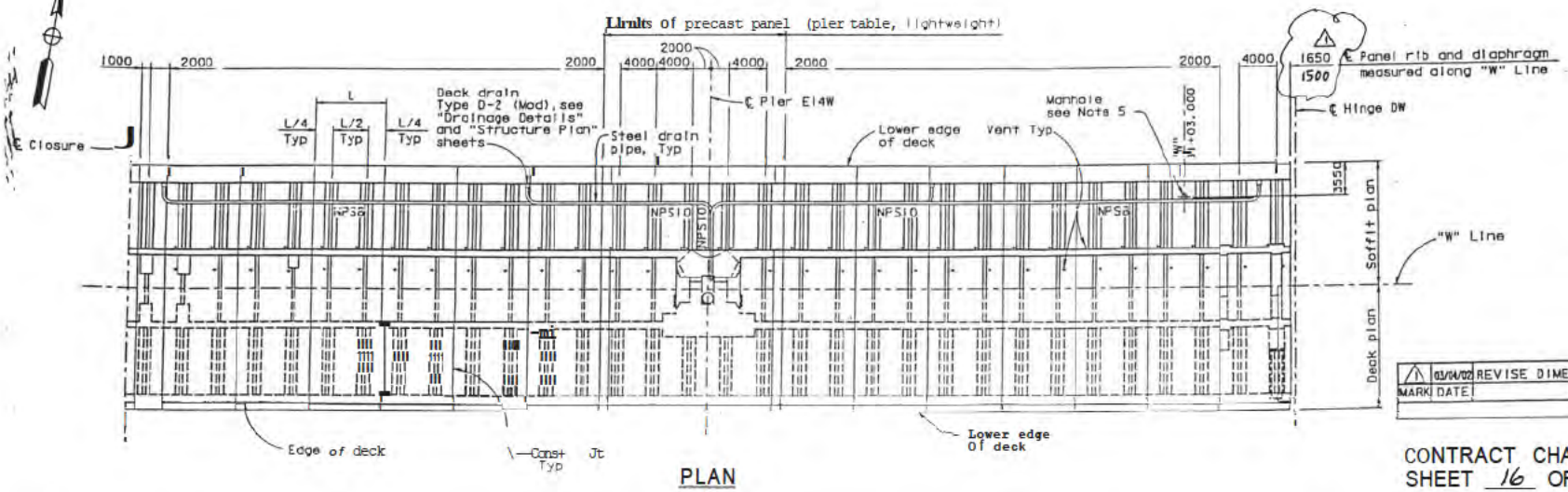

PLAN
1: 250

MARK	DATE	REVISIONS	BY	CH'D
1	03/04/02	REVISE DIMENSION	TM	SC

CONTRACT CHANGE ORDER NO. 9
SHEET 16 OF 42

ALL DIMENSIONS ARE IN MILLIMETERS UNLESS OTHERWISE SHOWN

R. S. Bagha
DESIGN OVERSIGHT
R. S. Bagha
SIGN OFF DATE 11/17/00

DESIGN	S. Abbas	M. Lamont	
DETAILS	A. Lishansky	M. Lamont	
QUANTITIES	K. Cormier	S. Shi	

PREPARED FOR THE STATE OF CALIFORNIA DEPARTMENT OF TRANSPORTATION

Sajid Abbas
PROJECT ENGINEER

CU 04
EA 04-012021

BRIDGE NO. 34-0001L/R
KILOMETER POST 13.9/14.3, 0.0/1.6

SAN FRANCISCO OAKLAND BAY BRIDGE
EAST SPAN SEISMIC SAFETY PROJECT

SKYWAY STRUCTURES

GIRDER LAYOUT E14W

SHEET 116 OF

DISREGARD PRINTS BEARING EARLIER REVISION DATES

ORIGINAL SCALE IN MILLIMETERS

USERNAME -> EALKTIS DATE PLOTTED -> 08 MAY 2002 TIME PLOTTED -> 11:14:38

100 % 98 B

2. For vent detail Is, see "Girder Layou E3W" sheet.

3. Key to segment nomenclature: 1 E or W

Segment No. — East Or West

6. Orientation of diaphragm and precast panel rib shall be normal to "W" Line.

PLANS APPROVAL DATE 12/31/04

The State of California or its officers or agents shall not be responsible for the accuracy or completeness of electronic copies of this plan sheet.

CIVIL STATE OF CALIFORNIA

T.Y. LIN / MOFFATT & NICHOL
825 BATTERY STREET
SAN FRANCISCO, CA 94111

Caltrans now has a web site! To get to the web site, go to: http://www.dot.ca.gov

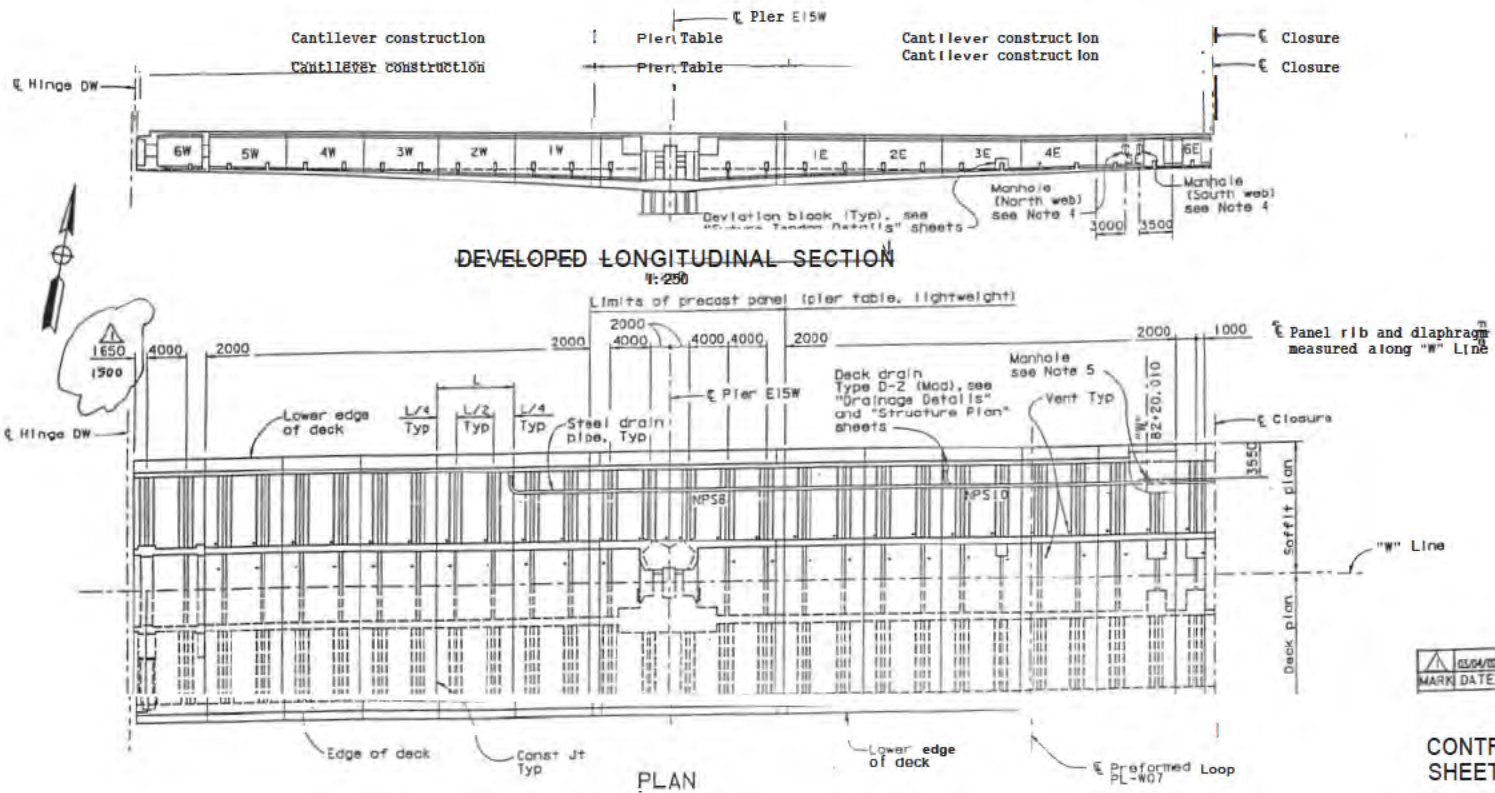

MARK	DATE	DESCRIPTIONS	BY	CH'D
1	01/04/05	REVISE DIMENSION	TM	SC

CONTRACT CHANGE ORDER NO. 9
SHEET 17 OF 42

ALL DIMENSIONS ARE IN MILLIMETERS UNLESS OTHERWISE SHOWN

SAN FRANCISCO OAKLAND BAY BRIDGE
EAST SPAN SEISMIC SAFETY PROJECT
SKYWAY STRUCTURES
GIRDER LAYOUT E15W

R.S. Bagha
DESIGN OVERSIGHT

DESIGN	S. Abbas	CHECKED	N. Larant
DETAILS	A. Lishansky	CHECKED	N. Larant
QUANTITIES	K. Corralar	CHECKED	S. Shi

PREPARED FOR THE STATE OF CALIFORNIA DEPARTMENT OF TRANSPORTATION

Solid Abbas
PROJECT ENGINEER

BRIDGE NO. 34-0006L/R
KILOMETER POST 13.5/14.3, 0.0/1.6

SHEET 117

NOTES:

1. For notes, see "Girder Layout E3W" sheet.
2. For vent details, see "Girder Layout E3W" sheet.
3. Key to segment nomenclature: E or W — East or West; Segment No.
4. For web manhole details, see "Miscellaneous Details" sheets.
5. For deck manhole details, see 37-11.
6. Orientation of diaphragm and precast panel rib shall be normal to "W" Line.

DIST.	COUNTY	ROUTE	TOTAL PROJECT	NO.	SHEETS
04	SF/Ala	80	13.9/14.3, 0.0/1.6	55081	978

Caltrans Metric

REGISTERED ENGINEER - CIVIL

6-4-01

PLANS APPROVAL DATE

The State of California or its officers or agents shall not be responsible for the accuracy or completeness of electronic copies of this plan sheet.

Sajid Abbas, No. C 055274, Exp. 12/31/04, CIVIL, STATE OF CALIFORNIA

T.Y. LIN / MOFFATT & NICHOL
825 BATTERY STREET
SAN FRANCISCO, CA 94111

Caltrans now has a web site! To get to the web site, go to http://www.dot.ca.gov

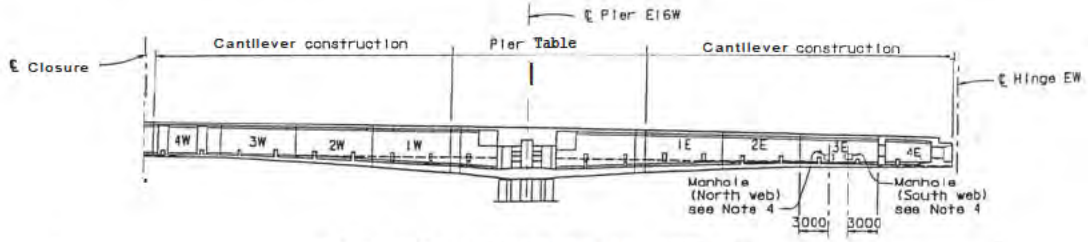

DEVELOPED LONGITUDINAL SECTION

1: 250

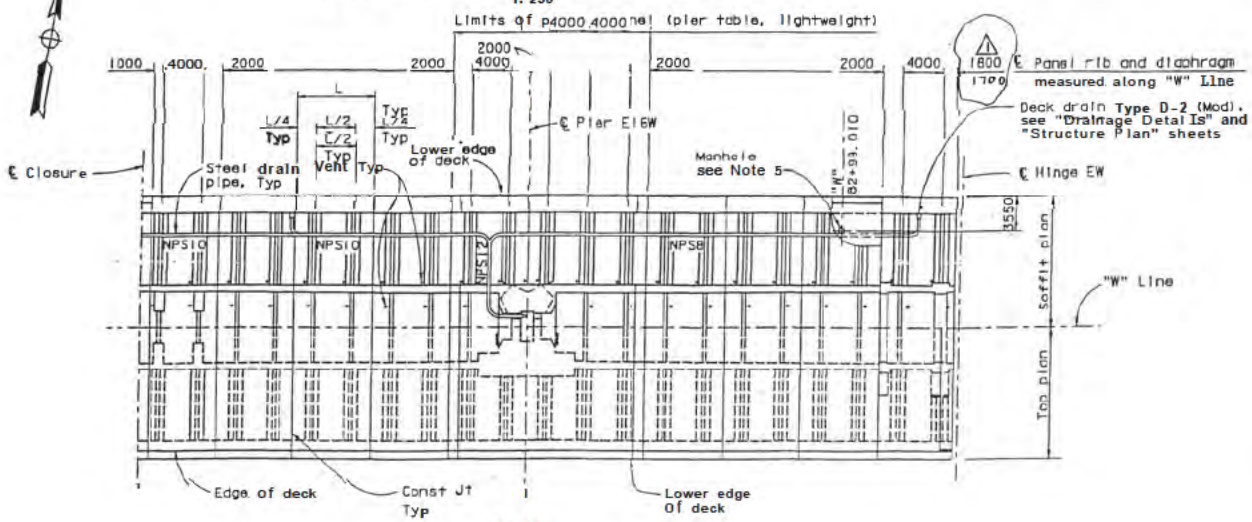

PLAN

1:250

MARK	DATE	DESCRIPTIONS	BY	CH'D
1	03/04/02	REVISE DIMENSION	TM	SC

REVISIONS

CONTRACT CHANGE ORDER NO. 9
SHEET 18 OF 42

ALL DIMENSIONS ARE IN MILLIMETERS UNLESS OTHERWISE SHOWN

R.S. Bagha
DESIGN OVERSIGHT

DESIGN	S. Abbas	M. Lamont	
DETAILS	A. Lisianesky	M. Lamont	
QUANTITIES	K. Carnier	S. Shi	

PREPARED FOR THE STATE OF CALIFORNIA DEPARTMENT OF TRANSPORTATION

Sajid Abbas
PROJECT ENGINEER

BRIDGE NO. 34-0006L/R
KILOMETER POST 13.9/14.3, 0.0/1.6

CU 04
EA 04-012021

SAN FRANCISCO OAKLAND BAY BRIDGE
EAST SPAN SEISMIC SAFETY PROJECT

SKYWAY STRUCTURES
GIRDER LAYOUT E16W

SHEET 118

INTERNAL SCALE IN MILLIMETERS

DISREGARD PRINTS BEARING EARLIER REVISION DATES

REVISION DATES (PRELIMINARY STAGE ONLY)

NOTES:

1. For notes, see "Girder Layout E3W" sheet.
2. For vent details, see "Girder Layout E3W" sheet.
3. For bikepath details, see "Bikepath Details" sheet
4. Key to segment nomenclature: 1 E or W
   Segment No. — East or West
5. For web manhole details, see "Miscellaneous Details" sheets.
6. For deck manhole details, see (87-11).

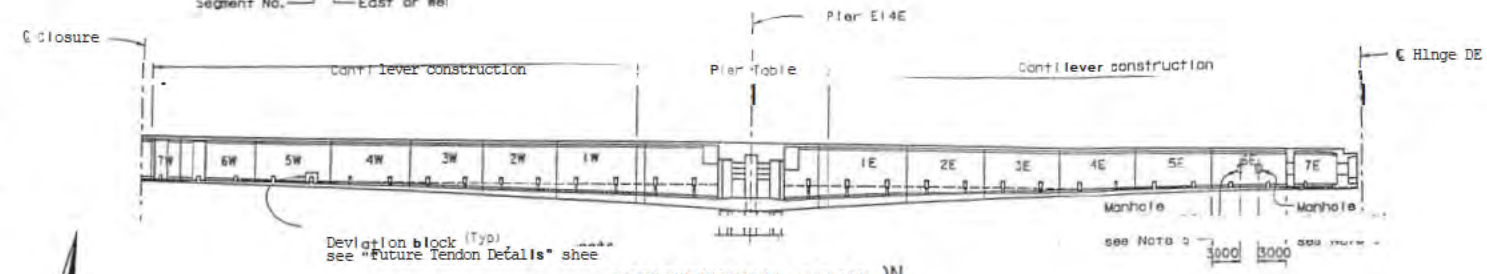

LONGITUDINAL SECTION

1:250

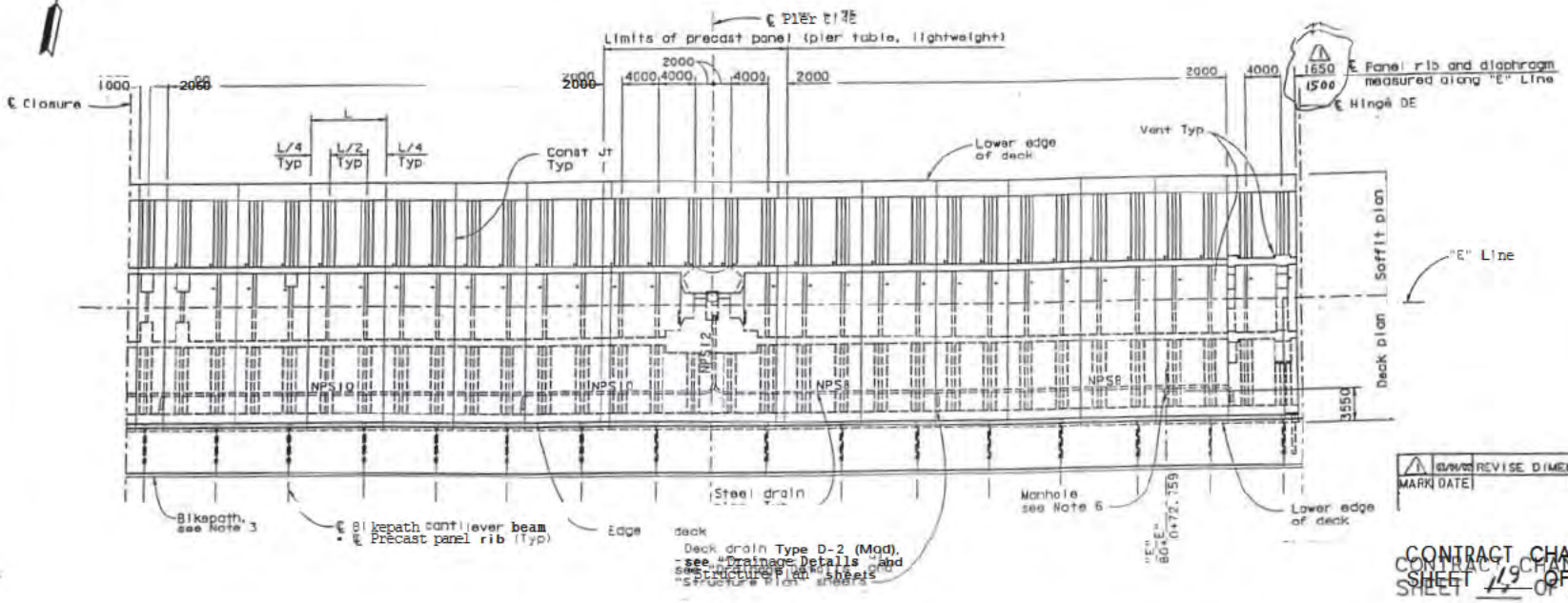

1:250

MARK	DATE	DESCRIPTIONS	BY	CH'D
1	6/04/02	REVISE DIMENSION	TW	SC

CONTRACT CHANGE ORDER NO. 9
SHEET 14 OF 42

ALL DIMENSIONS ARE IN MILLIMETERS UNLESS OTHERWISE SHOWN

SAN FRANCISCO OAKLAND BAY BRIDGE
EAST SPAN SEISMIC SAFETY PROJECT

SKYWAY STRUCTURES

GIRDER LAYOUT E14E

R.S. Bagha	DESIGN	S. Abbas	M. Lamont
DESIGN OVERSIGHT K.S. Bagha	DETAILS	L. Lihanisky	M. Lamont
SIGN OFF DATE 11/17/00	QUANTITIES	L. Cormier	S. Shi

STATE OF CALIFORNIA
DEPARTMENT OF TRANSPORTATION

Salid Abbas
PROJECT ENGINEER

BRIDGE NO. 34-0006L/R
MILEPOST 13.9/14.3, 0.0/1.6

04 | SF/Ala | 80 | 13.9/14.3, 0.0/1.6 | 562R1 | 978

REGISTERED ENGINEER - CIVIL
6-4-01
PLANS APPROVAL DATE
Salid Abbas, No. C 055274, Exp. 12/31/04, CIVIL, STATE OF CALIFORNIA

The State of California or its officers or agents shall not be responsible for the accuracy or completeness of electronic copies of this plan sheet.

T.Y. LIN / MOFFATT & NICHOL
825 BATTERY STREET
SAN FRANCISCO, CA 94111

Caltrans now has a web site! To get to the web site, go to http://www.dot.ca.gov

Caltrans Metric

NOTES:

1. For notes, see "Girder Layout E3W" sheet.
2. For vent details, see "Girder Layout E3W" sheet.
3. For bikepath details, see "Bikepath Details" sheets.
4. Key to segment nomenclature: | E or W
   Segment No. — East or West
5. For web manhole details, see "Miscella e u Details" sheets.
6. For deck manhole details, see (B7-11).
7. Orientation of diaphragm and precast p n l rib shall be normal to "E" Line.

04	SF/Ala	80	13.9/14.3, 0.0/1.6	563R1	978

REGISTERED ENGINEER - CIVIL
6-4-01
PLANS APPROVAL DATE
The State of California or its officers or agents shall not be responsible for the accuracy or completeness of electronic copies of this plan sheet.

Sajid Abbas, No. C 055274, Exp. 12/31/04, CIVIL, STATE OF CALIFORNIA

T.Y. LIN / MOFFATT & NICHOL
825 BATTERY STREET
SAN FRANCISCO, CA 94111

Caltrans now has a web site! To get to its web site, go to: http://www.dot.ca.gov

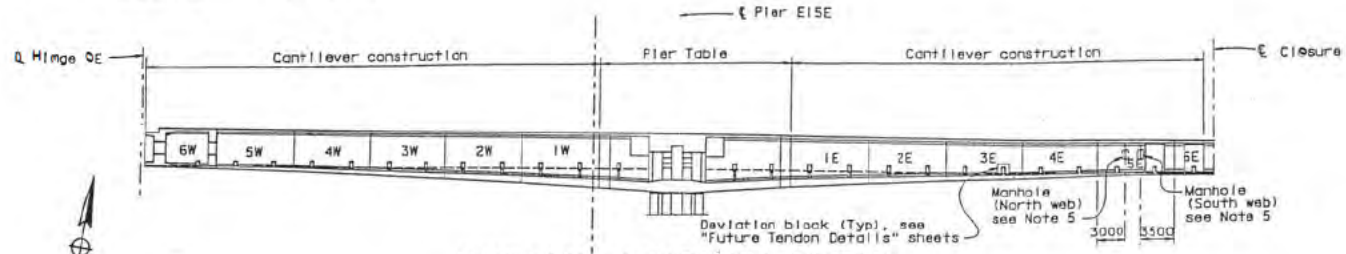

DEVELOPED LONGITUDINAL SECTION
1:250

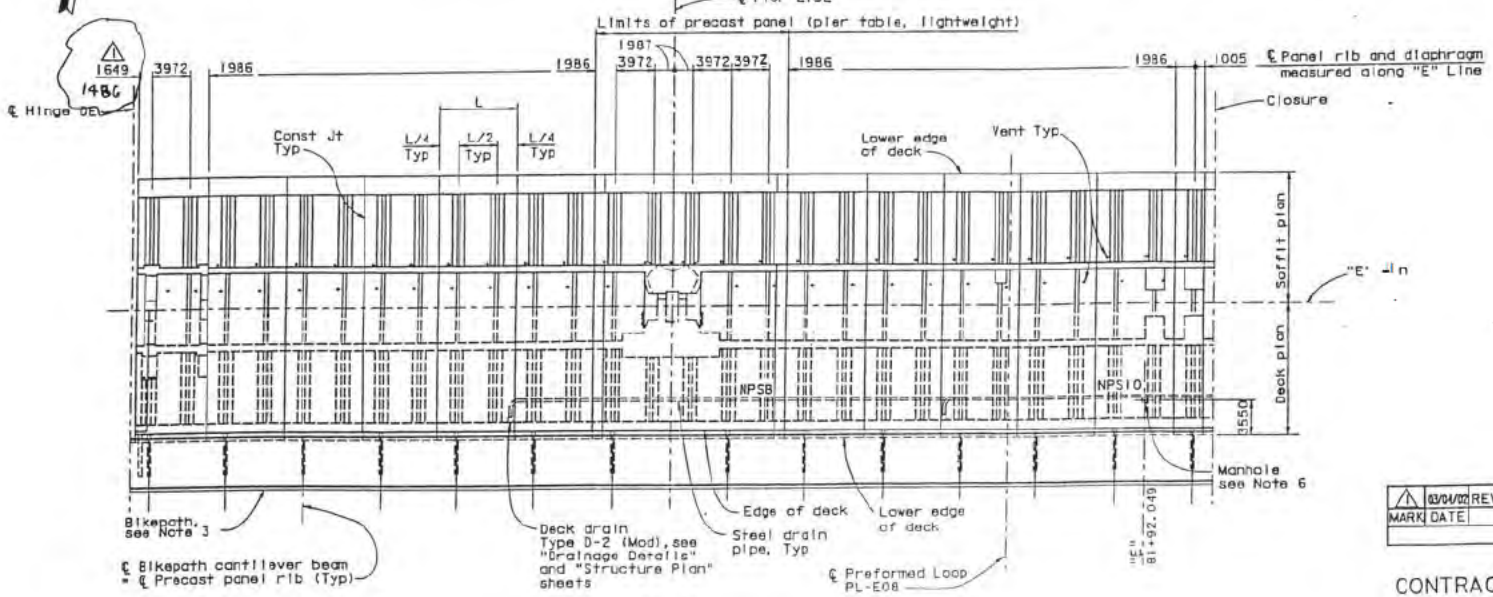

PLAN
1:250

MARK	DATE	DESCRIPTIONS	BY	CH'D
1	03/04/02	REVISE DIMENSION	TM	SC
		REVISIONS		

CONTRACT CHANGE ORDER NO. 9
SHEET 20 OF 42

100 % PS&E

ALL DIMENSIONS ARE IN MILLIMETERS UNLESS OTHERWISE SHOWN

SAN FRANCISCO OAKLAND BAY BRIDGE
EAST SPAN SEISMIC SAFETY PROJECT

SKYWAY STRUCTURES
GIRDER LAYOUT E15E

R.S. Bagha
DESIGN OVERSIGHT
R.S. Bagha
SIGN OFF DATE 11/17/00

DESIGN	S. Abbas	CHECKED	M. Lamont
DETAILS	A. Lishansky	CHECKED	M. Lamont
QUANTITIES	K. Cormier	CHECKED	S. Shi

PREPARED FOR THE STATE OF CALIFORNIA DEPARTMENT OF TRANSPORTATION

Sajid Abbas
PROJECT ENGINEER

CU 04
EA 04-012021

BRIDGE NO. 34-0006L/R
KILOMETER POST 13.9/14.3, 0.0/1.6

SHEET 131

ORIGINAL SCALE IN MM REFERENCED PLANS

NOTES:

1. For notes, see "Girder Layout E3W" sheet.
2. For vent details, see "Girder Layout E3W" sheet.
3. For bikepath details, see "Bikepath Details" sheets.
4. Key to segment nomenclature: 1 E or W
   Segment No. — East or West
5. For web manhole details, see "Miscellaneous Details" sheets.
6. For deck manhole details, see (87-11).
7. Orientation of diaphragm and precast panel rib shall be normal to "E" Line.

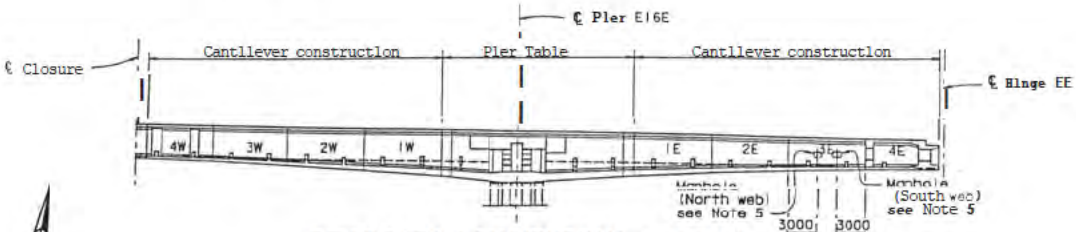

DEVELOPED LONGITUDINAL SECTION

1: 250

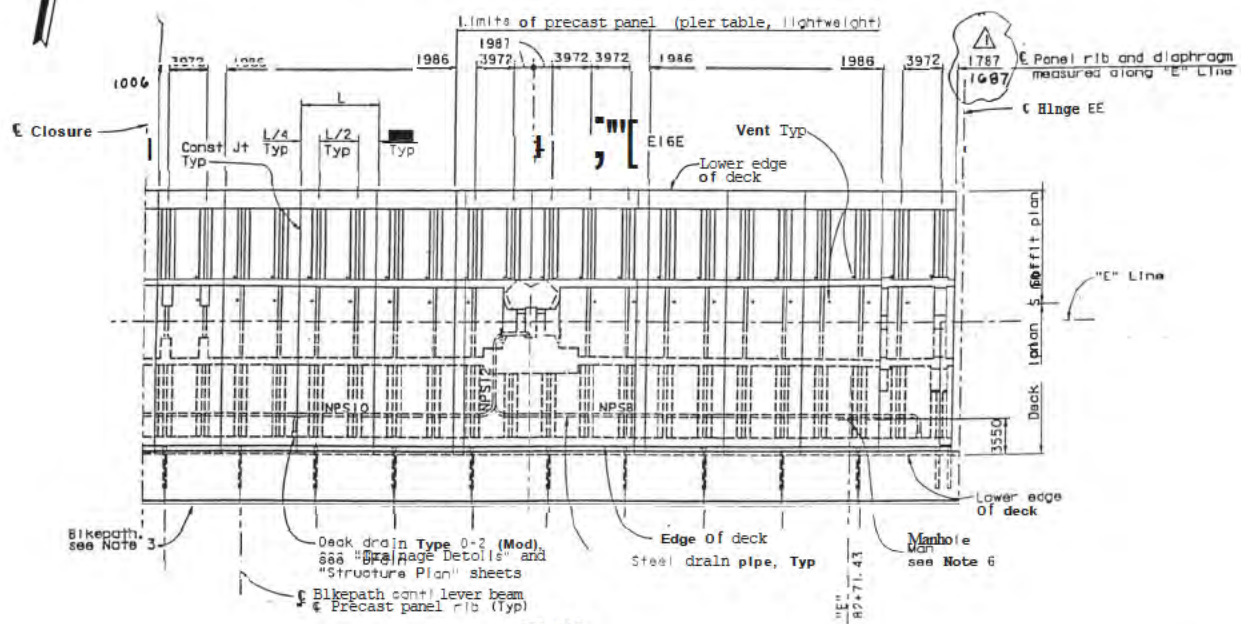

PLAN

1: 250

ALL DIMENSIONS ARE IN MILLIMETERS UNLESS OTHERWISE SHOWN

04	SF/Ala	80	13.9/14.3, 0.0/1.6	564R1	978

REGISTERED ENGINEER - CIVIL

Sajid Abbas C 055274 Exp. 12/31/04 CIVIL STATE OF CALIFORNIA

C 4 01
PLANS APPROVAL DATE

The State of California or its officers or agents shall not be responsible for the accuracy or completeness of electronic copies of this plan sheet.

T.Y. LIN / MOFFATT & NICHOL
BAR ENGINEERS CONSORTIUM

Caltrans now has a web site! To get to the web site, go to: http://www.dot.ca.gov

MARK	DATE	DESCRIPTIONS	BY	CH'D
1	03/04/02	REVISE DIMENSIONS	TM	SC

REVISIONS

CONTRACT CHANGE ORDER NO. 9
SHEET 21 OF 42

100 % PS&E

R.S. Bagha
DESIGN OVERSIGHT
R.S. Bagha
SIGN OFF DATE 11/17/00

DESIGN	S. Abbas	M. Lamont	
DETAILS	A. Lishansky	M. Lamont	
QUANTITIES	K. Cormier	S. Shi	

PREPARED FOR THE STATE OF CALIFORNIA DEPARTMENT OF TRANSPORTATION

Sajid Abbas
PROJECT ENGINEER

BRIDGE NO. 34-0006L/R
KILOMETER POST 13.9/14.3, 0.0/1.6
CU 04
EA 04-012021

SAN FRANCISCO OAKLAND BAY BRIDGE
EAST SPAN SEISMIC SAFETY PROJECT

SKYWAY STRUCTURES

GIRDER LAYOUT E16E

SHEET 132

ORIGINAL SCALE IN MILLIMETERS FOR REDUCED PLANS

USERNAME => SALKINS DATE PLOTTED => 08 MAR 102 TIME PLOTTED => 15:30:55

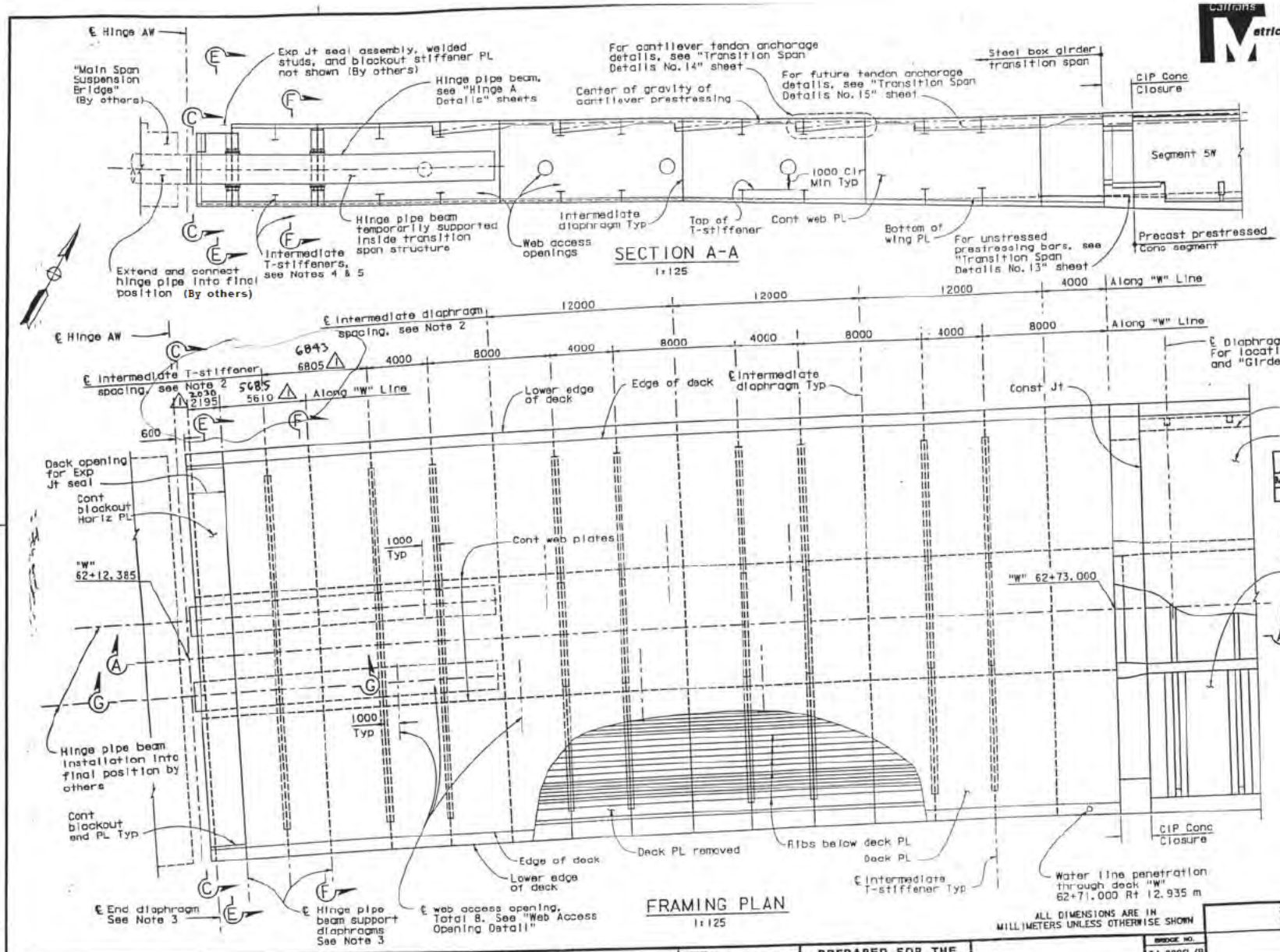

MARK	DATE	DESCRIPTIONS	BY	CH'D
1	03/04/03	RELOCATION OF DIAPHRAGMS AND T-STIFFENERS	TM	SC

REVISIONS

CONTRACT CHANGE ORDER NO. 9
SHEET 22 OF 42

NOTES:

1. For Sections C-C, E-E, F-F and G-G, see "Transition Span Details" sheets.
2. All transverse support panels shall be radial to "W" line except hinge pipe support diaphragms and end diaphragm.
3. For orientation of hinge pipe support diaphragms and end diaphragm, see "Transition Span Details No. 16" sheet.
4. Intermediate T-stiffeners on soffit plate may be used as part of the temporary support system for hinge pipes during construction.
5. The Contractor shall ensure that allowable stresses are not exceeded due to hinge pipe temporary support system.

ALL DIMENSIONS ARE IN MILLIMETERS UNLESS OTHERWISE SHOWN

04	SF/Ala	80	13.9/14.3, 0.0/1.6	712R1	978

REGISTERED ENGINEER - CIVIL
6-4-01
PLANS APPROVAL DATE
The State of California or its officers or agents shall not be responsible for the accuracy or completeness of electronic copies of this plan sheet.

REGISTERED PROFESSIONAL ENGINEER Siew W. Chee C 41906 Exp. 03/31/04 CIVIL STATE OF CALIFORNIA

T.Y. LIN / MOFFATT & NICHOL
825 BATTERY STREET
SAN FRANCISCO, CA 94111

Caltrans now has a web site! To get to the web site, go to: http://www.dot.ca.gov

SAN FRANCISCO OAKLAND BAY BRIDGE
EAST SPAN SEISMIC SAFETY PROJECT

SKYWAY STRUCTURES

TRANSITION SPAN LAYOUT "W" LINE

R.S. Bagha, DESIGN OVERSIGHT	DESIGN: S. Chee	CHECKED: A. Miller	PREPARED FOR THE STATE OF CALIFORNIA DEPARTMENT OF TRANSPORTATION
SIGN OFF DATE 11/17/00	DETAILS: T. Marasigan	CHECKED: A. Miller	Solid Abbas, PROJECT ENGINEER
	QUANTITIES: S. Chee	CHECKED: J. Leventini	

BRIDGE NO. 34-0006L/R
KILOMETER POST 13.9/14.3, 0.0/1.6
CU 04
EA 04-012021
DISREGARD PRINTS BEARING EARLIER REVISION DATES
SHEET 280

ORIGINAL SCALE IN MILLIMETERS FOR REDUCED PLANS

FILE => p:\26\04-012021\sky-1\ogtra01.dgn

Rev. Date 2-16-98

100 % PS&E

04	SF/Ala	80	13.9/14.3, 0.0/1.6	713R1	978

REGISTERED ENGINEER - CIVIL

6-4-01

PLANS APPROVAL DATE

The State of California or its officers or agents shall not be responsible for the accuracy or completeness of electronic copies of this plan sheet.

REGISTERED PROFESSIONAL ENGINEER Siew W. Chee No. C 41906 Exp. 03/31/04 CIVIL STATE OF CALIFORNIA

T.Y. LIN / MOFFATT & NICHOL
825 BATTERY STREET
SAN FRANCISCO, CA 94111

Caltrans now has a web site! To get to the web site, go to: http://www.dot.ca.gov

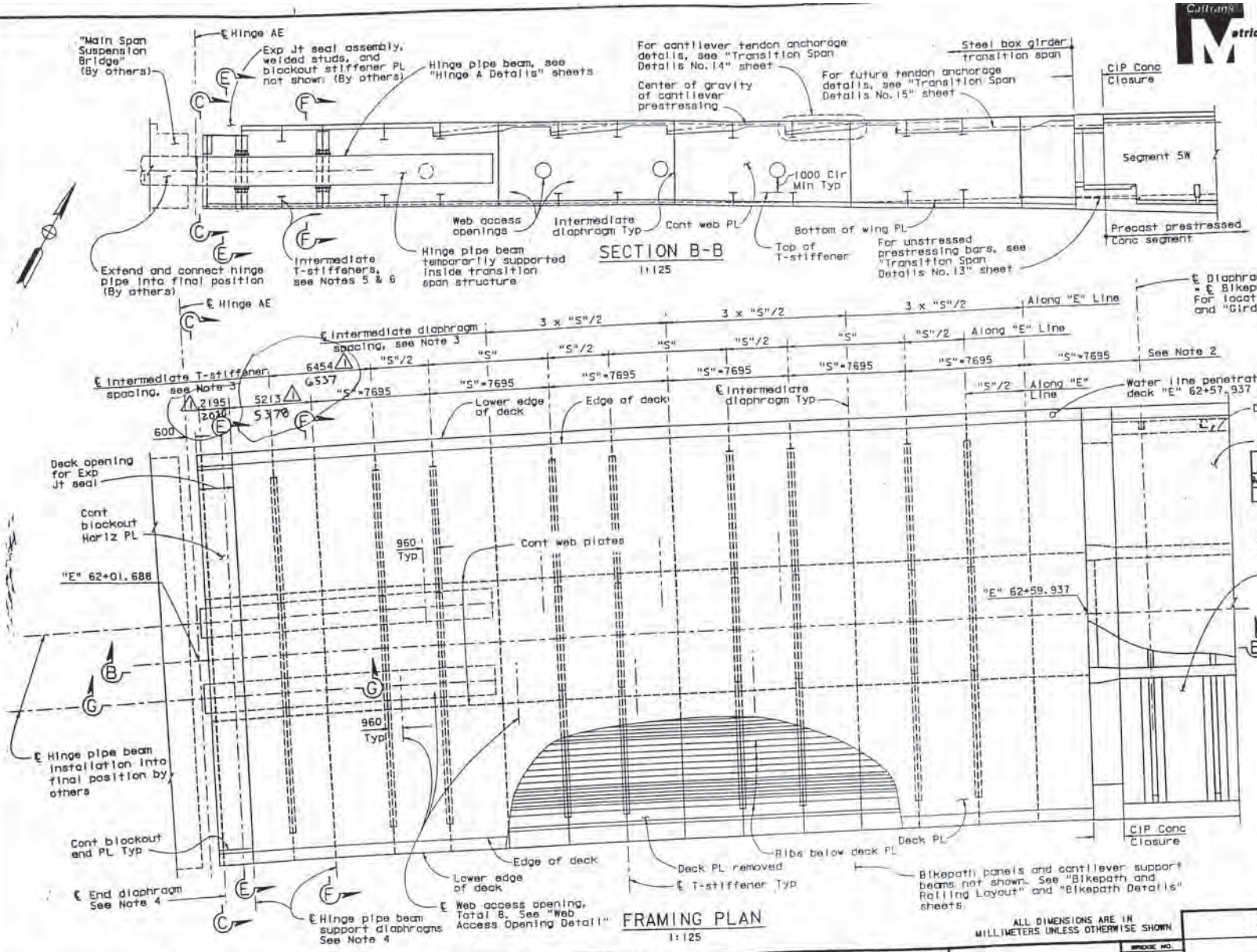

MARK	DATE	DESCRIPTIONS	BY	CH'D
1	01/04/02	RELOCATION OF DIAPHRAGMS AND T-STIFFENERS	TM	SC

REVISIONS

CONTRACT CHANGE ORDER NO. 9
SHEET 23 OF 42

NOTES:

1. For Sections C-C, E-E, F-F and G-G, see "Transition Span Details" sheets.
2. ℄ Spacing for bikepath cantilever support beams at right edge of deck measured along "E" line.
3. All transverse support panels shall be radial to "E" line except hinge pipe support diaphragms and end diaphragm.
4. For orientation of hinge pipe support diaphragms and end diaphragm, see "Transition Span Details No. 16" sheet.
5. Intermediate T-stiffeners on soffit plate may be used as part of the temporary support system for hinge pipes during construction.
6. The Contractor shall ensure that allowable stresses are not exceeded due to hinge pipe temporary support system.

ALL DIMENSIONS ARE IN MILLIMETERS UNLESS OTHERWISE SHOWN

SAN FRANCISCO OAKLAND BAY BRIDGE
EAST SPAN SEISMIC SAFETY PROJECT

SKYWAY STRUCTURES

TRANSITION SPAN LAYOUT "E" LINE

R.S. Bagha
DESIGN OVERSIGHT
R.S. Bagha
SIGN OFF DATE 11/17/00

DESIGN	S. Chee	A. Miller	
DETAILS	F. Hung	A. Miller	
QUANTITIES	S. Chee	J. Leventini	

PREPARED FOR THE STATE OF CALIFORNIA DEPARTMENT OF TRANSPORTATION

Sajid Abbas
PROJECT ENGINEER

BRIDGE NO. 34-0006L/R
KILOMETER POST 3.9/14.3, 0.0/1.6

CU 04
EA 04-012021

DISREGARD PRINTS BEARING EARLIER REVISION DATES

REVISION DATES (PRELIMINARY STAGE ONLY)

SHEET 281 OF

ORIGINAL SCALE IN MILLIMETERS FOR REDUCED PLANS

FILE +:\DI\DD\04-012001\sky-1\cgtra2.dgn

DATE PLOTTED => 08 MAR 102 TIME PLOTTED => 13:38:44

6-4-01
PLANS APPROVAL DATE
The State of California or its officers or agents shall not be responsible for the accuracy or completeness of electronic copies of this plan sheet.
C 41908 Exp. 03/31/04 CIVIL STATE OF CALIFORNIA
T.Y. LIN / MOFFATT & NICHOL

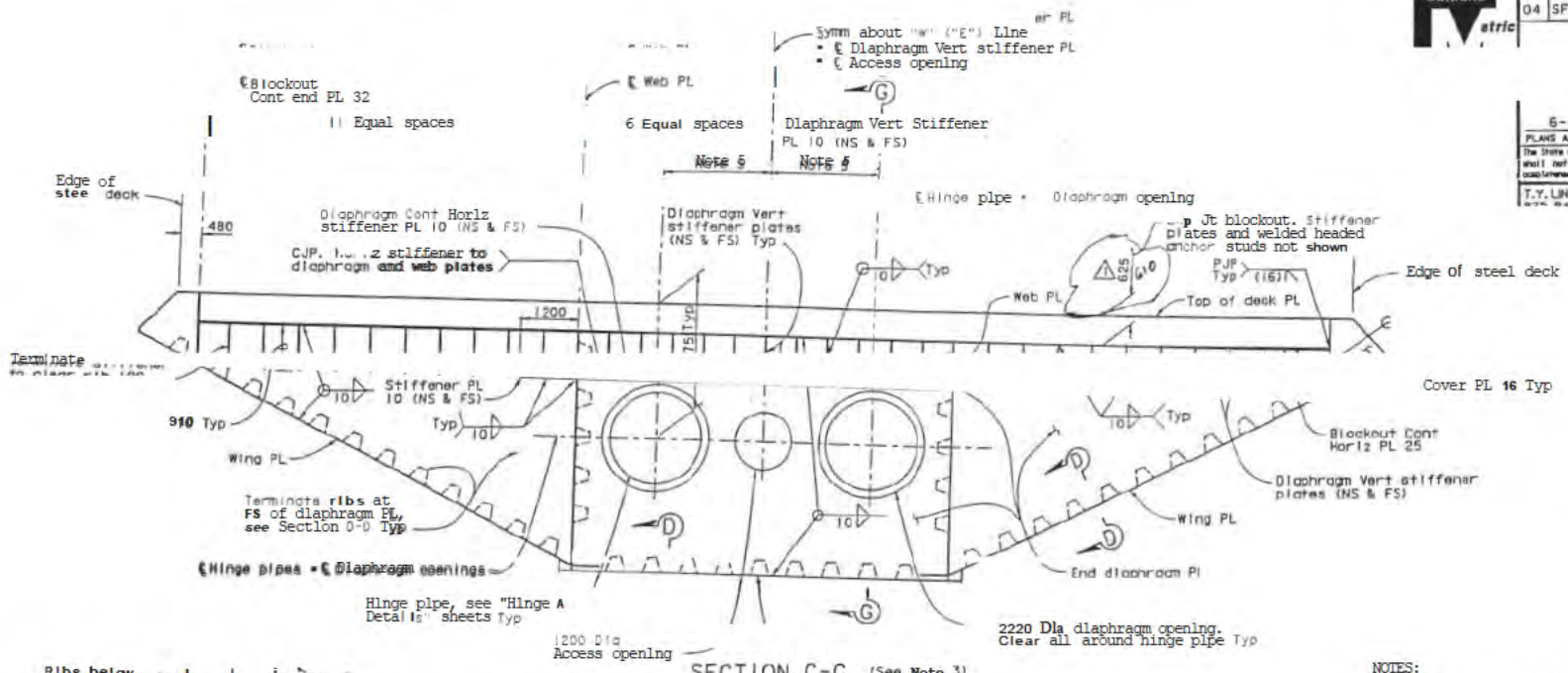

SECTION C-C (See Note 3)
1:60

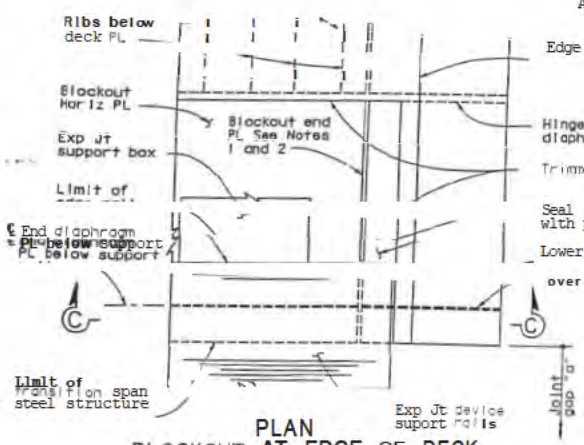

PLAN
BLOCKOUT AT EDGE OF DECK
1:20

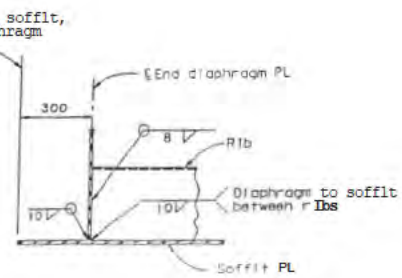

SECTION D-D (See Note 4)
1:10

NOTES:

1. Locate expansion joint device support box away from blockout end plate.
2. Trim blockout end plate, deck plate and cover plate flush around expansion joint support rails.
3. For details not shown, see "Transition Span Details No. 1" and "Typical Sections" sheets.
4. Details similar at web plates.
5. For location of pipes and end diaphragm, see "Transition Span Details No. 16" sheet.

WELDING NOTES:

1. All structural steel plate interface connections

MARK	DATE	DESCRIPTIONS	BY	CH'D
1	01/14/02	REVISE BLOCKOUT DEPTH	TM	SC
		REVISIONS		

CONTRACT CHANGE ORDER NO. 9
SHEET 24 OF 42

ALL DIMENSIONS ARE IN MILLIMETERS UNLESS OTHERWISE SHOWN

R.S. Bagha
DESIGN OVERSIGHT

DESIGN	S. Chee	CHECKED	A. Miller
DETAILS	F. Hung	CHECKED	A. Miller

PREPARED FOR THE STATE OF CALIFORNIA

Solid Abbas
PROJECT ENGINEER

BRIDGE NO. 34-0006L/R
KILOMETER POST

SAN FRANCISCO OAKLAND BAY BRIDGE
EAST SPAN SEISMIC SAFETY PROJECT

SKYWAY STRUCTURES

DIST.	COUNTY	ROUTE	KILOMETER POST TOTAL PROJECT	SHEET NO.	TOTAL SHEETS
04	SF/Alc	80	13.9/14.3, 0.0/1.6	720R1	978

REGISTERED ENGINEER - CIVIL

6-4-01

PLANS APPROVAL DATE

The State of California or its officers or agents shall not be responsible for the accuracy or completeness of electronic copies of this plan sheet.

REGISTERED PROFESSIONAL ENGINEER Jane W. Chen No. C 41906 Exp. 03/31/04 CIVIL STATE OF CALIFORNIA

T.Y. LIN / MOFFATT & NICHOL
825 BATTERY STREET
SAN FRANCISCO, CA 94111

REVISION DATE	DESCRIPTIONS	TIM	SIC
9/11/00	REVISE BLOCKOUT DETAILS	BW	CH LD

REVISIONS

CONTRACT CHANGE ORDER NO. 9

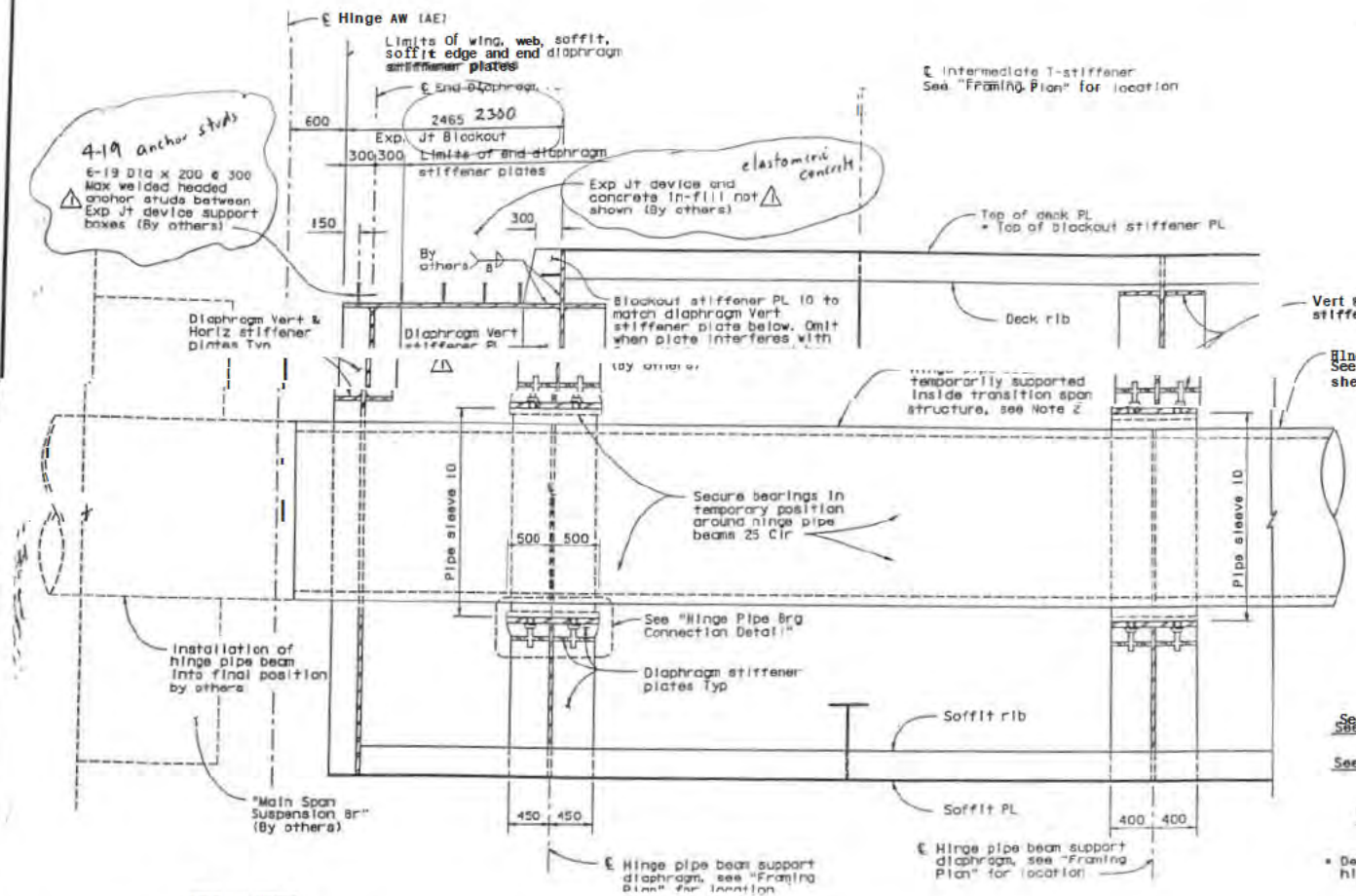

SECTION G-G

1:25

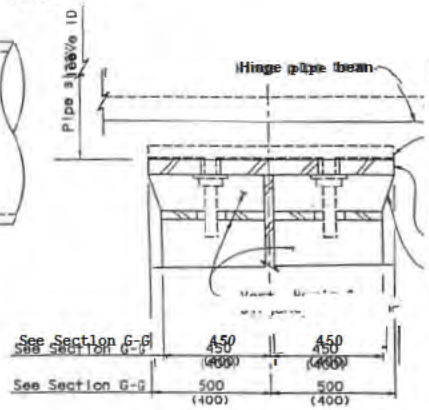

HINGE PIPE BRG CONNECTION DETAIL *

1:10

* Details shown for hinge pipe support diaphragm closest to ℄ hinge (Details similar at other hinge pipe support diaphragms)

WELDING NOTES:

1. All structural steel plate interface connections shall be made with continuous complete Joint penetration (CJP) welds, unless otherwise shown.

Deleted Note #2

NOTES:

1. See Sections C-C thru F-F on "Transition Span Details" sheets for details of structural steel plate interface connection welds.
2. Contractor's hinge pipe temporary support system not shown.

Temporary support system ...

ALL DIMENSIONS ARE IN MILLIMETERS UNLESS OTHERWISE SHOWN

L.S. Sogna
DESIGN OVERSIGHT
K.S. Bagha

DESIGN	S. Chen	CHECKED	A. Miller
DETAILS	F. Hung	CHECKED	A. Miller

PREPARED FOR THE STATE OF CALIFORNIA DEPARTMENT OF TRANSPORTATION

Salid Abdo
PROJECT ENGINEER

BRIDGE NO. 34-0006L/R
KILOMETER POST 13.9/14.3

SAN FRANCISCO OAKLAND BAY BRIDGE
EAST SPAN SEISMIC SAFETY PROJECT

SKYWAY STRUCTURES

TRANSITION SPAN DETAILS NO. 7

DIST.	COUNTY	ROUTE	KILOMETER POST TOTAL PROJECT	SHEET NO.	TOTAL SHEETS
04	SF, Ala	80	13.9 / 14.3 0.0 / 1.6	736R1	978

Scott Hunter
REGISTERED ENGINEER - CIVIL
6-4-01
PLANS APPROVAL DATE
The State of California or its officers or agents shall not be responsible for the accuracy or completeness of electronic copies of this plan sheet.

REGISTERED PROFESSIONAL ENGINEER Scott Hunter No. C-048066 Exp. 12/31/03 CIVIL STATE OF CALIFORNIA

T.Y. LIN / MOFFATT & NICHOL
825 BATTERY STREET
SAN FRANCISCO, CA 94111

Caltrans now has a web site! To get to the web site, go to: http://www.dot.ca.gov

Caltrans Metric

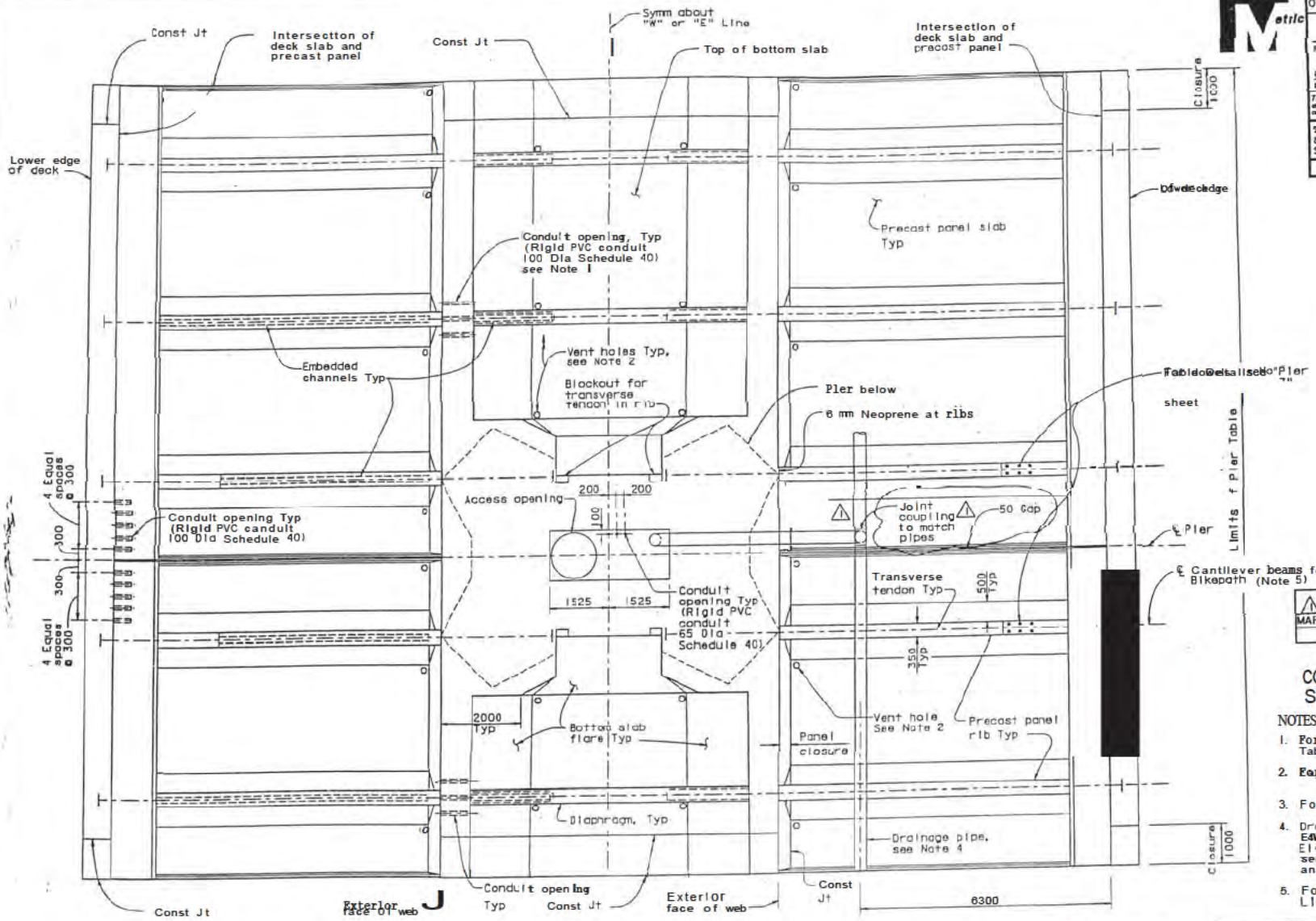

Oakland — San Francisco for Piers E3, E4, E5, E7, E8, E9, E11 & E13

San Francisco — Oakland for Piers E6, E10, E14

MARK	DATE	DESCRIPTIONS	BY	CH'D
1	03/04/02	REVISE DRAINAGE PIPE DETAILS	TM	SC

REVISIONS

CONTRACT CHANGE ORDER NO. 9
SHEET 26 OF 42

NOTES:

1. For conduit opening location, see "Pier Table Details No. 3" sheet.
2. For layout of vent holes, see "Girder Layout" sheets.
3. For conduit details, see "Road Plans".
4. Drain pipe location shown for piers E4W(E) to E8W(E), E6E, E8E to E12E and E14E. For drain locations at other piers, see "Structure Plan", "Girder Layout" and "Drainage Details" sheets.
5. For details of cantilever beams on "E" Line, see "Bikepath Details" sheets.

SOFFIT PLAN (Piers E3 through E14)
1:50

ALL DIMENSIONS ARE IN MILLIMETERS UNLESS OTHERWISE SHOWN

R.S. Bagha
DESIGN OVERSIGHT
R.S. Bagha
SIGN OFF DATE 11/17/00

DESIGN	S. Hunter	CHECKED	M. Lamont
DETAILS	S. Lee	CHECKED	M. Lamont
QUANTITIES	S. Hunter	CHECKED	T. Yost

PREPARED FOR THE STATE OF CALIFORNIA DEPARTMENT OF TRANSPORTATION

Sajid Abbas
PROJECT ENGINEER

ORIGINAL SCALE IN MILLIMETERS

CU 04
FA 04-01202

BRIDGE NO. 34-0006L/R
KILOMETER POST 13.9/14.3, 0.0/1.6

DISREGARD PRINTS BEARING EARLIER REVISION DATES

SAN FRANCISCO OAKLAND BAY BRIDGE
EAST SPAN SEISMIC SAFETY PROJECT

SKYWAY STRUCTURES

PIER TABLE DETAILS NO. 2

SHEET 304

100 % PS&E

USERNAME => CALKINS DATE PLOTTED => 05 MAR 102 TIME PLOTTED => 15:15:58

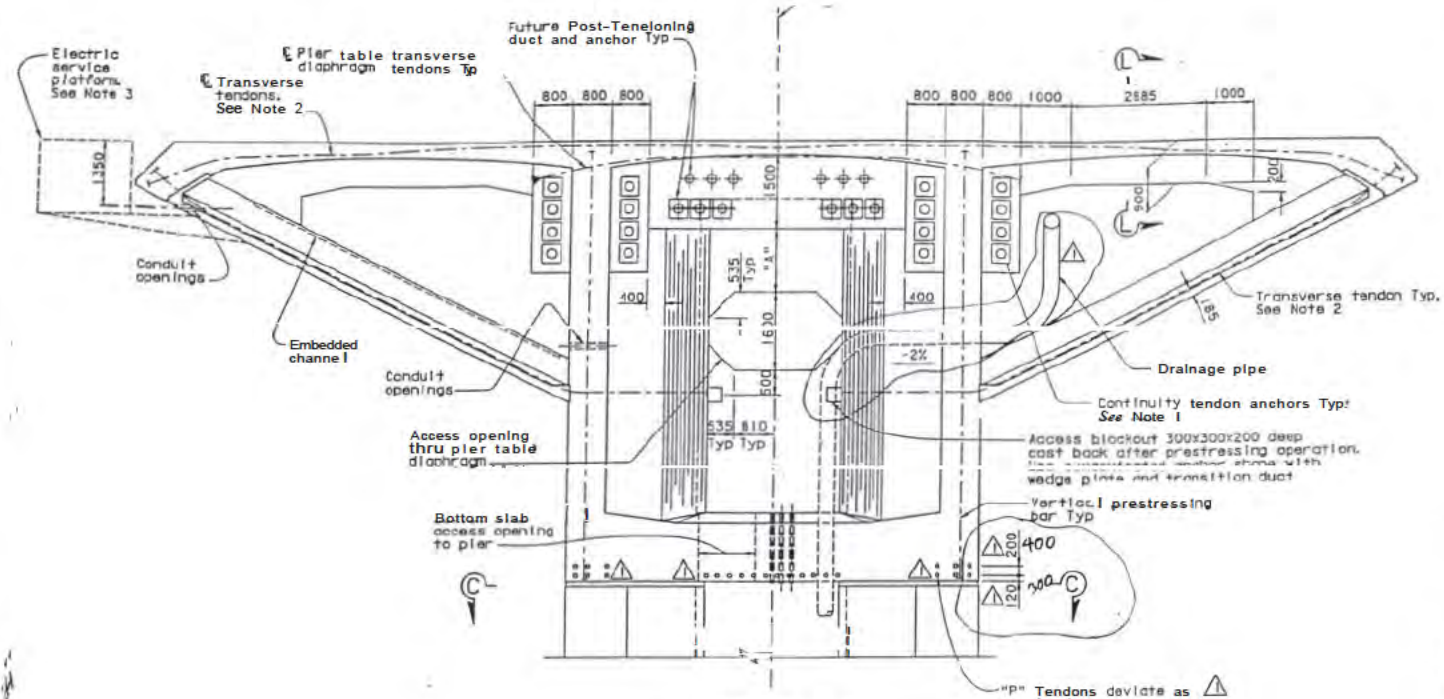

SECTION B-B
1:50

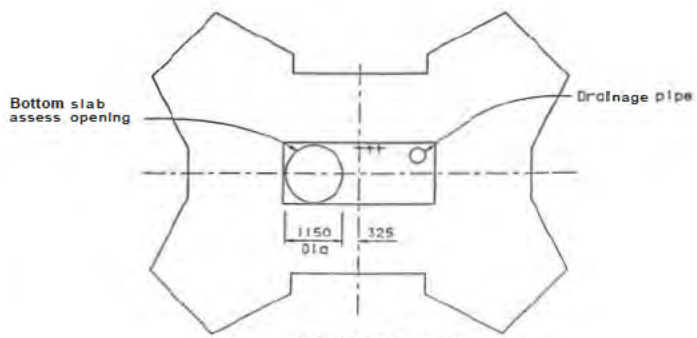

SECTION C-C
1:50

DIMENSION TABLE

	Pier E3 to E12	Pier E13	Pier E14
"A"	1300	913	181

* "A" varies, dimension given at ℄ Pier.

1	03/04/02	REVISE "P" TENDON DETAILS AND DRAINAGE PIPE DETAILS	TM / SC
		DESCRIPTIONS	BY / CHD
		REVISIONS	

CONTRACT CHANGE ORDER NO. 9
SHEET 27 OF 42

NOTES:

1. For anchorage and number of continuity tendons, see "Grout Hose Tendon Details" and "Continuity Tendon Details" sheets.
2. For transverse tendon profile, see "Transverse Tendon Details" sheets.
3. For electric service platform details, see "Road Plans".
4. For embedded channel details, see "Road Plans".
5. For Section L-L, see "Pier Table Details No. 12" sheet.
6. For details of deck drainage, see "Drainage Details" sheet.

ALL DIMENSIONS ARE IN MILLIMETERS UNLESS OTHERWISE SHOWN

R.S. Bagha
DESIGN OVERSIGHT
SIGN OFF DATE 11/17/00

DESIGN	S. Hunter	M. Lamont	
DETAILS	S. Lee	M. Lamont	
QUANTITIES	S. Hunter	T. Reed	

PREPARED FOR THE STATE OF CALIFORNIA DEPARTMENT OF TRANSPORTATION

Salid Abbas
PROJECT ENGINEER

BRIDGE NO. 34-0006L/R
KILOMETER POST 13.9/14.3, 0.0/1.6

CU 04
EA 04-012021

SAN FRANCISCO OAKLAND BAY BRIDGE
EAST SPAN SEISMIC SAFETY PROJECT

SKYWAY STRUCTURES

PIER TABLE DETAILS NO. 4

SHEET 306

Metric
Scott Hunter
REGISTERED ENGINEER - CIVIL
6-4-01
PLANS APPROVAL DATE
C-048066 Exp. 12/31/03 CIVIL STATE OF CALIFORNIA
TY. LIN / MOFFATT & NICHOL
025 BATTERY STREET
SAN FRANCISCO, CA 94111
California now has a web site! To get to the web site, go to: http://www.dot.ca.gov

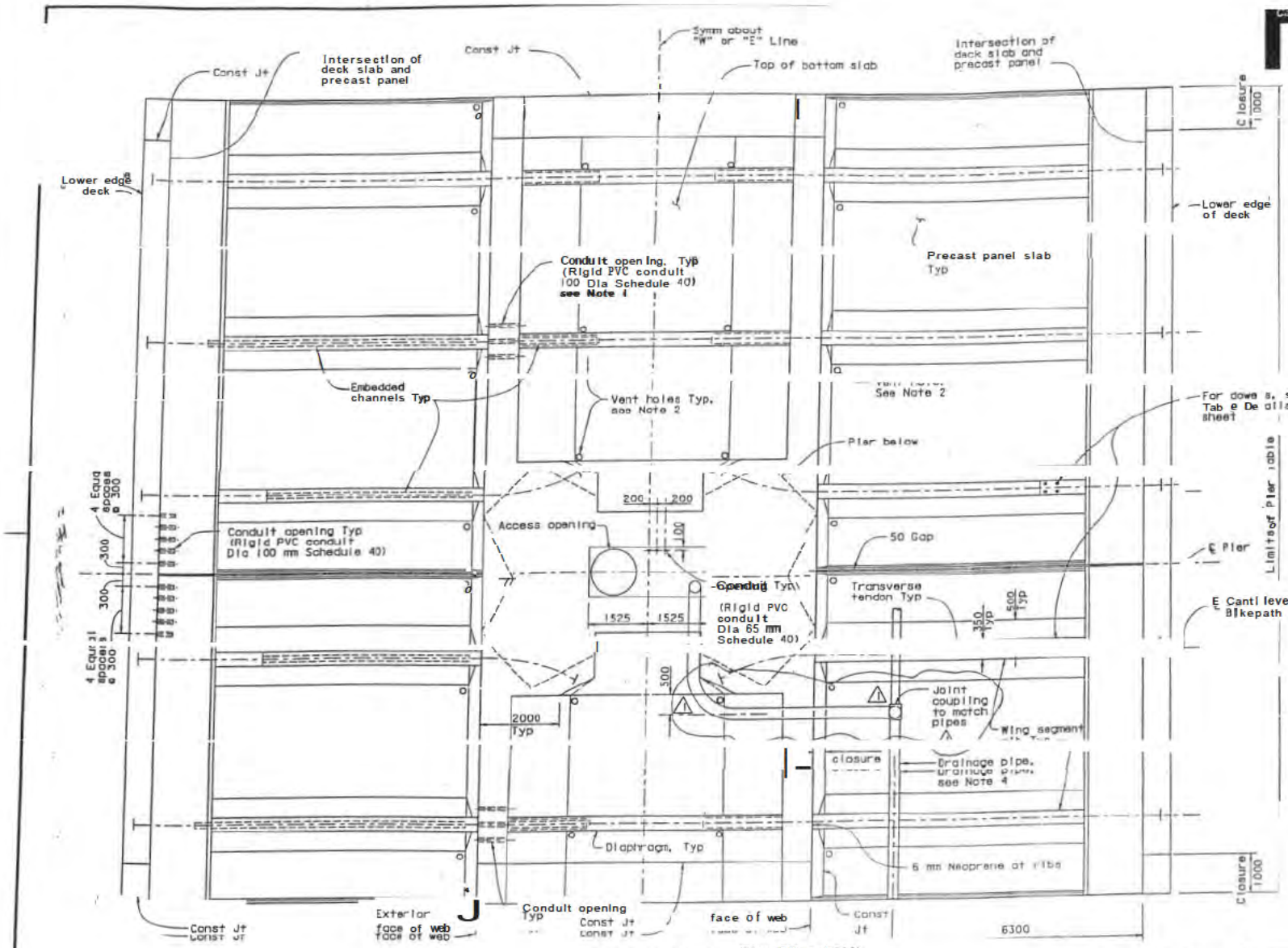

SOFFIT PLAN (Pier E15 and E16)

1:50

ALL DIMENSIONS ARE IN MILLIMETERS UNLESS OTHERWISE SHOWN

04	SF, Alq	80	13.3/14.3, 0.0/1.6	74BRI	978

REGISTERED ENGINEER - CIVIL

6-4-01

PLANS APPROVAL DATE

Scott Hunter, C-048066, Exp. 12/31/03, CIVIL, STATE OF CALIFORNIA

The State of California or its officers or agents shall not be responsible for the accuracy or completeness of electronic copies of this plan sheet.

T.Y. LIN / HOFFATT & NICHOL
825 BATTERY STREET
SAN FRANCISCO, CA 94111

Caltrans now has a web site! To get to the web site, go to http://www.dot.ca.gov

MARK	DATE	DESCRIPTIONS	BY	CH'D
1	03/04/02	REVISE DRAINAGE PIPE DETAILS	TM	SC

REVISIONS

CONTRACT CHANGE ORDER NO. 9
SHEET 28 OF 42

NOTES:

1. For Table Details Pier E16 see "Pier Table Details No. 16" sheet.
2. For location of vent holes, see "Girder Layout" sheets.
3. For conduit details, see "Road Plans".
4. Drain pipe location shown for pier E16E. For drain locations at other piers, see "Structure Details" "Girder Layout" and "Soffit Layout" sheets.
5. For details of cantilever beams on "E" Line, see "Bikepath Details" sheets.

R.S. Bugno
DESIGN OVERSIGHT
K.S. Bugno

DESIGN	S. Hunter	CHECKED	M. Lamont
DETAILS	F. Hung	CHECKED	M. Lamont
QUANTITIES	S. Hunter	CHECKED	T. West

PREPARED FOR THE STATE OF CALIFORNIA DEPARTMENT OF TRANSPORTATION

PROJECT ENGINEER

BRIDGE NO. 34-0006L/R
KILOMETER POST 13.3/14.3, 0.0/1.6

SAN FRANCISCO OAKLAND BAY BRIDGE
EAST SPAN SEISMIC SAFETY PROJECT

SKYWAY STRUCTURES

PIER TABLE DETAILS NO. 14

DATE PLOTTED

DIST.	COUNTY	ROUTE	KILOMETER POST TOTAL PROJECT	SHEET NO.	TOTAL SHEETS
04	SF, Ala	80	13.9/14.3, 0.0/1.6	750R1	978

REGISTERED ENGINEER - CIVIL

6-4-01

PLANS APPROVAL DATE

The State of California or its officers or agents shall not be responsible for the accuracy or completeness of electronic copies of this plan sheet.

Scott Hunter C-048066 Exp. 12/31/03 CIVIL STATE OF CALIFORNIA

T.Y. LIN / MOFFATT & NICHOL
825 BATTERY STREET
SAN FRANCISCO, CA 94111

Caltrans now has a web site! To get to the web site, go to: http://www.dot.ca.gov

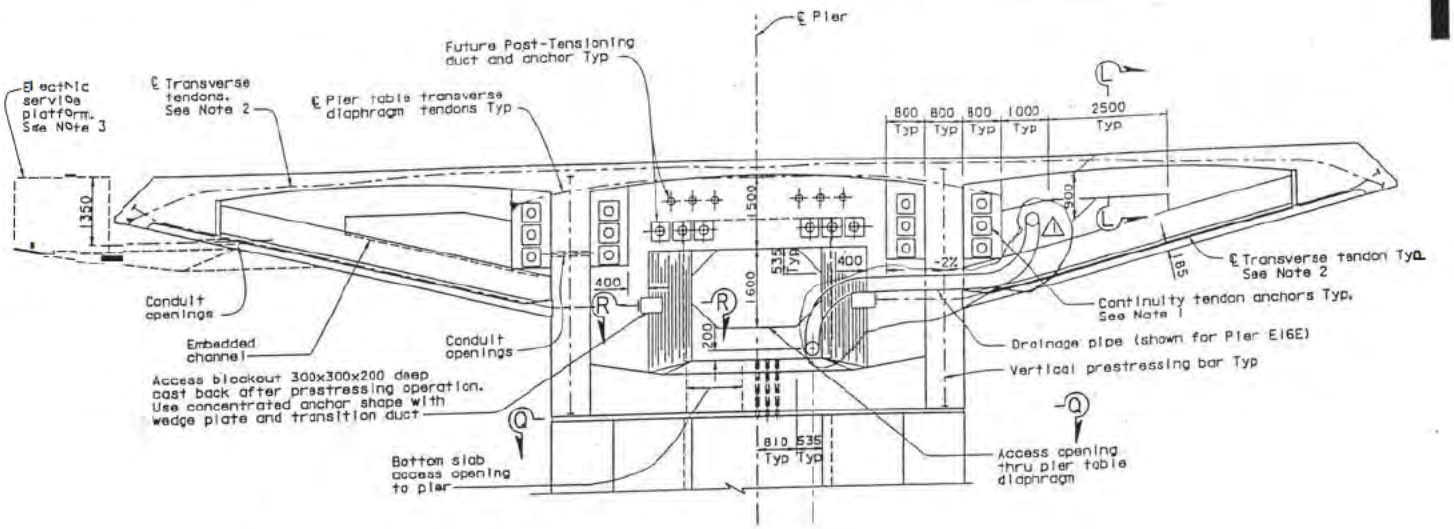

SECTION P-P
1:50

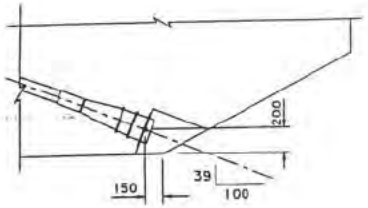

SECTION R-R
1:20

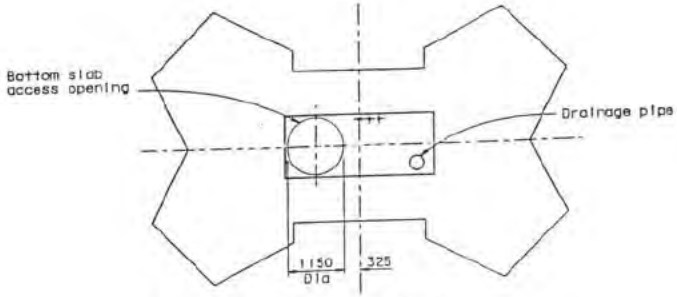

SECTION Q-Q
1:50

MARK	DATE	DESCRIPTIONS	BY	CH'D
1	03/04/02	REVISE DRAINAGE PIPE DETAILS	TM	SC

REVISIONS

CONTRACT CHANGE ORDER NO 9
SHEET 29 OF 42

NOTES:

1. For anchorage and number of continuity tendons, see "Continuity Tendon Details" and "Continuity Tendon Layout" sheets.
2. For transverse tendons, see "Transverse Tendon Details" sheets.
3. For electric service platform details, see "Road Plans".
4. For embedded channel details, see "Road Plans".
5. For Section L-L, see "Pier Table Details No. 12" sheet.
6. For details of deck drainage, see "Drainage Details" sheet.

ALL DIMENSIONS ARE IN MILLIMETERS UNLESS OTHERWISE SHOWN

SAN FRANCISCO OAKLAND BAY BRIDGE
EAST SPAN SEISMIC SAFETY PROJECT

SKYWAY STRUCTURES

PIER TABLE DETAILS NO. 16

R.S. Bagha
DESIGN OVERSIGHT
R.S. Bagha

DESIGN	S. Hunter	M. Lamont	
DETAILS	F. Hung	M. Lamont	
QUANTITIES	S. Hunter	T. West	

PREPARED FOR THE STATE OF CALIFORNIA DEPARTMENT OF TRANSPORTATION

Sajid Abbas
PROJECT ENGINEER

CU 04

BRIDGE NO. 34-0006L/R
KILOMETER POST 13.9/14.3, 0.0/1.6

DISREGARD PRINTS BEARING EARLIER REVISION DATES

SHEET 318

100 % PS&E

TIME PLOTTED => 15:49:22
DATE PLOTTED => 05 MAR 102

DIST	COUNTY	ROUTE	TOTAL PROJECT	NO.	SHEETS
04	SF/Ala	80	13.9/14.3, 0.0/1.6	173R1	978

REGISTERED ENGINEER - CIVIL

6-4-01

PLANS APPROVAL DATE

The State of California or its officers or agents shall not be responsible for the accuracy or completeness of electronic copies of this plan sheet.

T.Y. LIN / MOFFATT & NICHOL
825 BATTERY STREET
SAN FRANCISCO, CA 94111

Caltrans now has a web site! To get to the web site, go to: http://www.dot.ca.gov

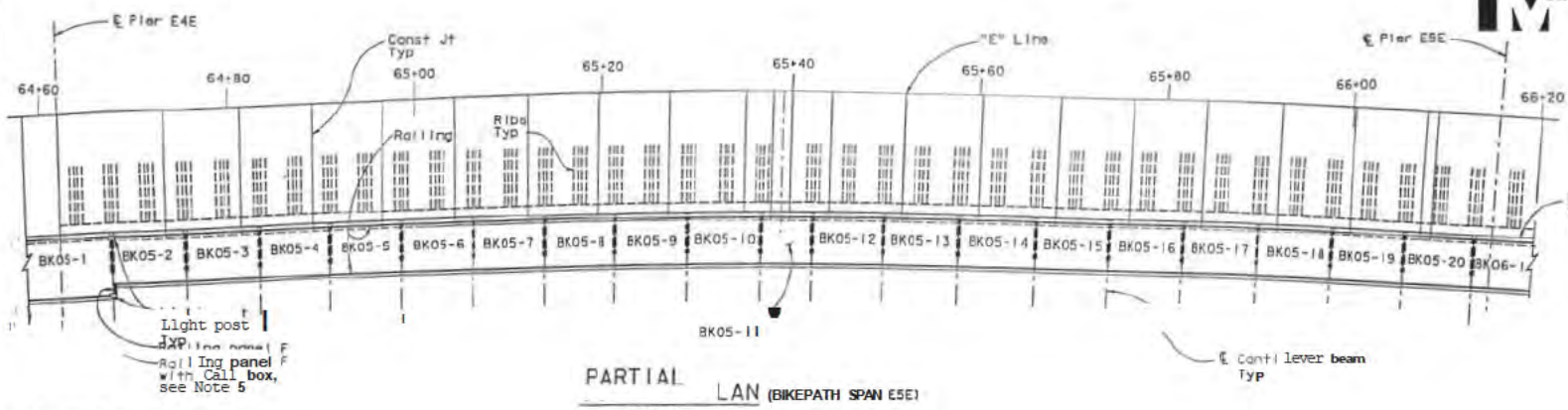

PARTIAL PLAN (BIKEPATH SPAN E5E)

1:250

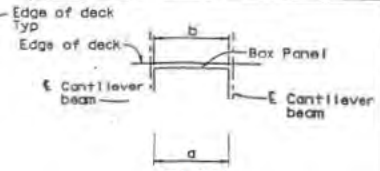

PLAN

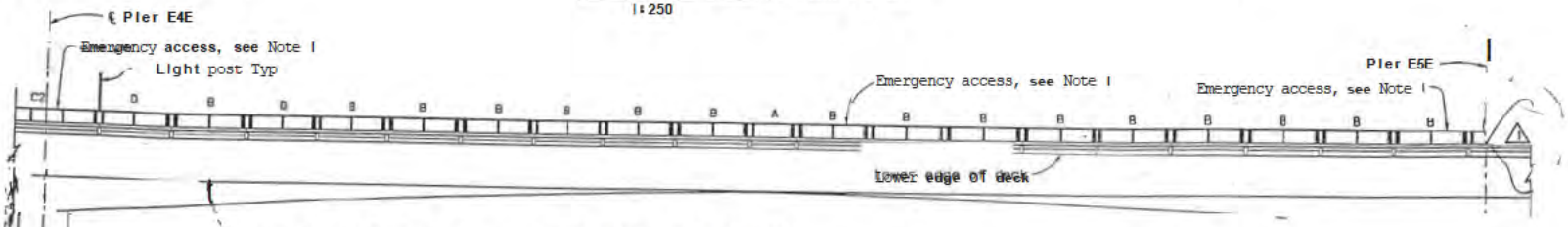

DEVELOPED ELEVATION (INSIDE RAILING)

1:250

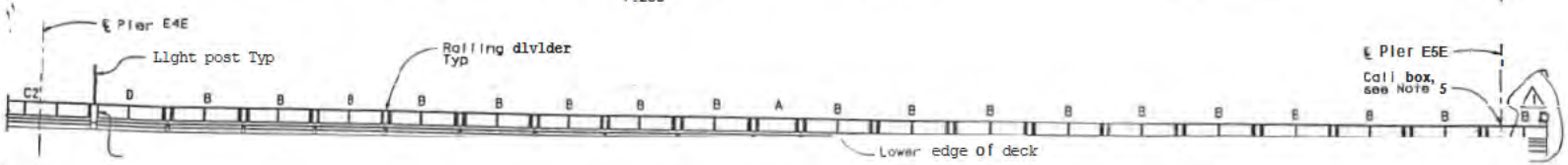

DEVELOPED ELEVATION (OUTSIDE RAILING)

BIKEPATH STEEL BOX DIMENSION TABLE

Box Panel Mark	Box Panel Type	a	b
BK05-1	4	11339	11391
BK05-2	1	7556	7591
BK05-3	1	7556	7591
BK05-4	1	7556	7591
BK05-5	1	7556	7591
BK05-6	1	7556	7591
BK05-7	1	7556	7591
BK05-8	1	7556	7591
BK05-9	1	7556	7591
BK05-10	1	7556	7591
BK05-11	2	4753	4827
BK05-12	1	7853	7892
BK05-13	1	7853	7892
BK05-15	1	7853	7892
BK05-15	1	7853	7892
BK05-16	1	7853	7892
BK05-17	1	7853	7892
BK05-18	1	7853	7892
BK05-19	1	7853	7892
BK05-20	1	7853	7892
[illegible]	[illegible]	[illegible]	[illegible]

NOTES:

1. For railing, railing divider and emergency access details, see "Railing Details" sheets.
2. Bikepath railing panel types indicated by letters A, E, C1, C2 and D. For details, see "Railing Details" sheets.
3. For box panel type and cantilever beam, see "Bikepath Details" sheets.
4. Box panel nomenclature: BK05-1 — Bikepath Span No. — Panel No.
5. For call box details, see "Road Plan" sheets.

MARK	DATE	DESCRIPTIONS	BY	CH'K
1	6/14/01	REVISE RAILING TYPE	TM	SC

REVISIONS

CONTRACT CHANGE ORDER NO. 9
SHEET 30 OF 42

ALL DIMENSIONS ARE IN MILLIMETERS UNLESS OTHERWISE SHOWN

R.S. Bagra
DESIGN OVERSIGHT

DESIGN	S. Abbas	CHECKED	C. Harris
DETAILS	A. Liakhovsky	CHECKED	C. Harris
QUANTITIES	L. Greer	CHECKED	J. Lavertini

PREPARED FOR THE STATE OF CALIFORNIA DEPARTMENT OF TRANSPORTATION

Salid Abbas
PROJECT ENGINEER

CU 04

BRIDGE NO. 34-0006L/R
KILOMETER POST 13.9/14.3, 0.0/1.6

SAN FRANCISCO OAKLAND BAY BRIDGE
EAST SPAN SEISMIC SAFETY PROJECT

SKYWAY STRUCTURES

BIKEPATH AND RAILING LAYOUT NO. 3

SHEET 341 OF

100% PS&E

04	SF/A10	80	13.9/14.3, 0.0/1.6	774R1	978

Caltrans Metric

REGISTERED ENGINEER - CIVIL

6-4-01

PLANS APPROVAL DATE

The State of California or the officers or agents shall not be responsible for the accuracy or completeness of electronic copies of this plan sheet.

REGISTERED PROFESSIONAL ENGINEER — Wayne Paul Chan — No. 54019 — Exp. 12/31/03 — CIVIL — STATE OF CALIFORNIA

T.Y. LIN / MOFFATT & NICHOL
825 BATTERY STREET
SAN FRANCISCO, CA 94111

Caltrans over has a web site! To get to the web site, go to http://www.dot.ca.gov

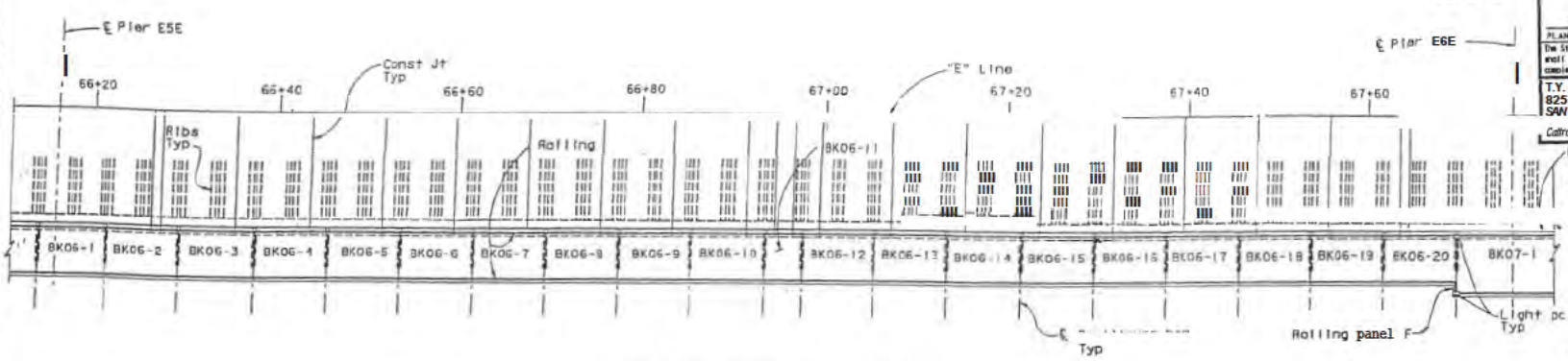

PARTIAL PLAN (BIKEPATH SPAN E6E)
1:250

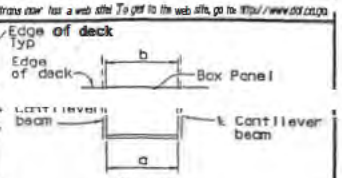

PLAN

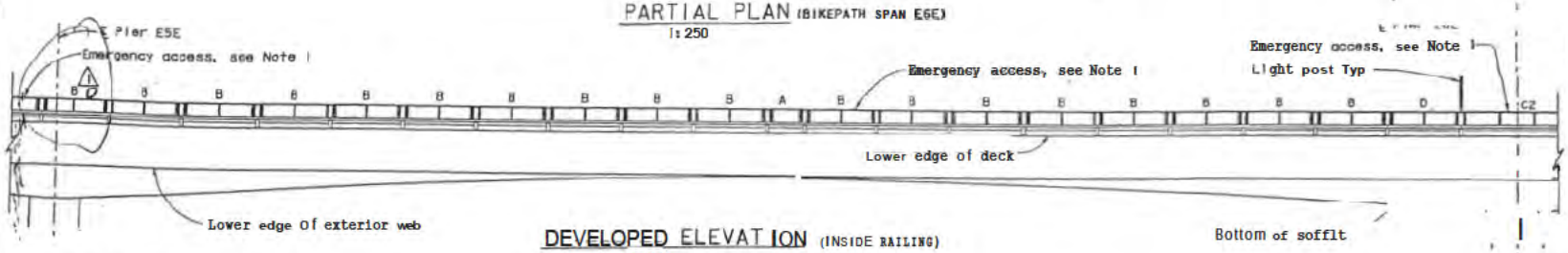

DEVELOPED ELEVATION (INSIDE RAILING)
1:250

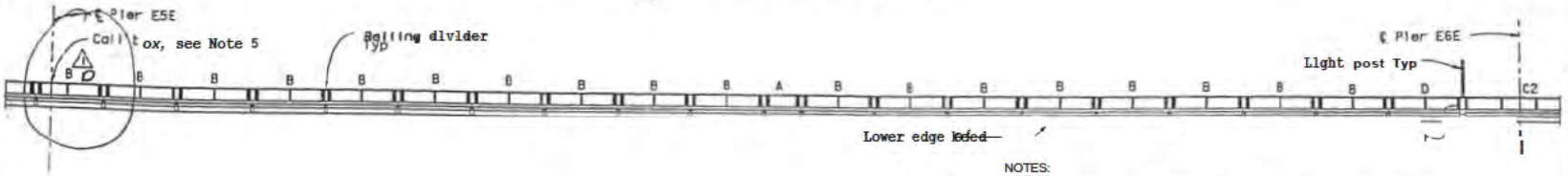

DEVELOPED ELEVATION (OUTSIDE RAILING)
1:250

BIKEPATH STEEL BOX DIMENSION TABLE

Box Mark	Box Type	a	b
BK06-1	1	7853	7892
BK06-2	1	7940	7945
BK06-3	1	7990	7990
BK06-4	1	7990	7990
BK06-5	1	7990	7990
BK06-6	1	7990	7990
BK06-7	1	7990	7990
BK06-8	1	7990	7990
BK06-9	1	7990	7990
BK06-10	[illegible]	[illegible]	[illegible]
BK06-11	2	3990	3990
BK06-12	1	7990	7990
BK06-13	1	7990	7990
BK06-14	1	7990	7990
BK06-15	1	7990	7990
BK06-16	1	7990	7990
BK06-17	1	7990	7990
BK06-18	1	7990	7990
BK06-19	1	7990	7990
BK06-20	1	7990	7990
BK07-1	4	11990	11990

NOTES:

1. For railing, railing divider and emergency access details, see "Railing Details" sheets.
2. Bikepath railing panel types indicated by letters A, E, C1, C2 and D. For details, see Railing Details" sheets.
3. For box panel type and cantilever beam, see Bikepath Details" sheets.
4. Box panel nomenclature: BK06-1 (Bikepath — Span No.; Panel No.)
5. For call box details, see "Road Plan" sheets.

MARK	DATE	DESCRIPTIONS	BY	CH'D
1	03/04/02	REVISE RAILING TYPE	TM	SC
		REVISIONS		

CONTRACT CHANGE ORDER NO. 9
SHEET 3i OF 42

ALL DIMENSIONS ARE IN MILLIMETERS UNLESS OTHERWISE SHOWN

SAN FRANCISCO OAKLAND BAY BRIDGE
EAST SPAN SEISMIC SAFETY PROJECT

SKYWAY STRUCTURES

BIKEPATH AND RAILING LAYOUT NO. 4

R.S. Bogna
DESIGN OVERSIGHT

DESIGN	S. Abbas	CHECKED	C. Marts
DETAILS	A. Listanesky	CHECKED	C. Marts
QUANTITIES	L. Greer	CHECKED	J. Levantini

PREPARED FOR THE STATE OF CALIFORNIA DEPARTMENT OF TRANSPORTATION

Solid Abbas
PROJECT ENGINEER

BRIDGE NO. 34-0006L/R
KILOMETER POST 13.9/14.3, 0.0/1.6

100 % PS&E

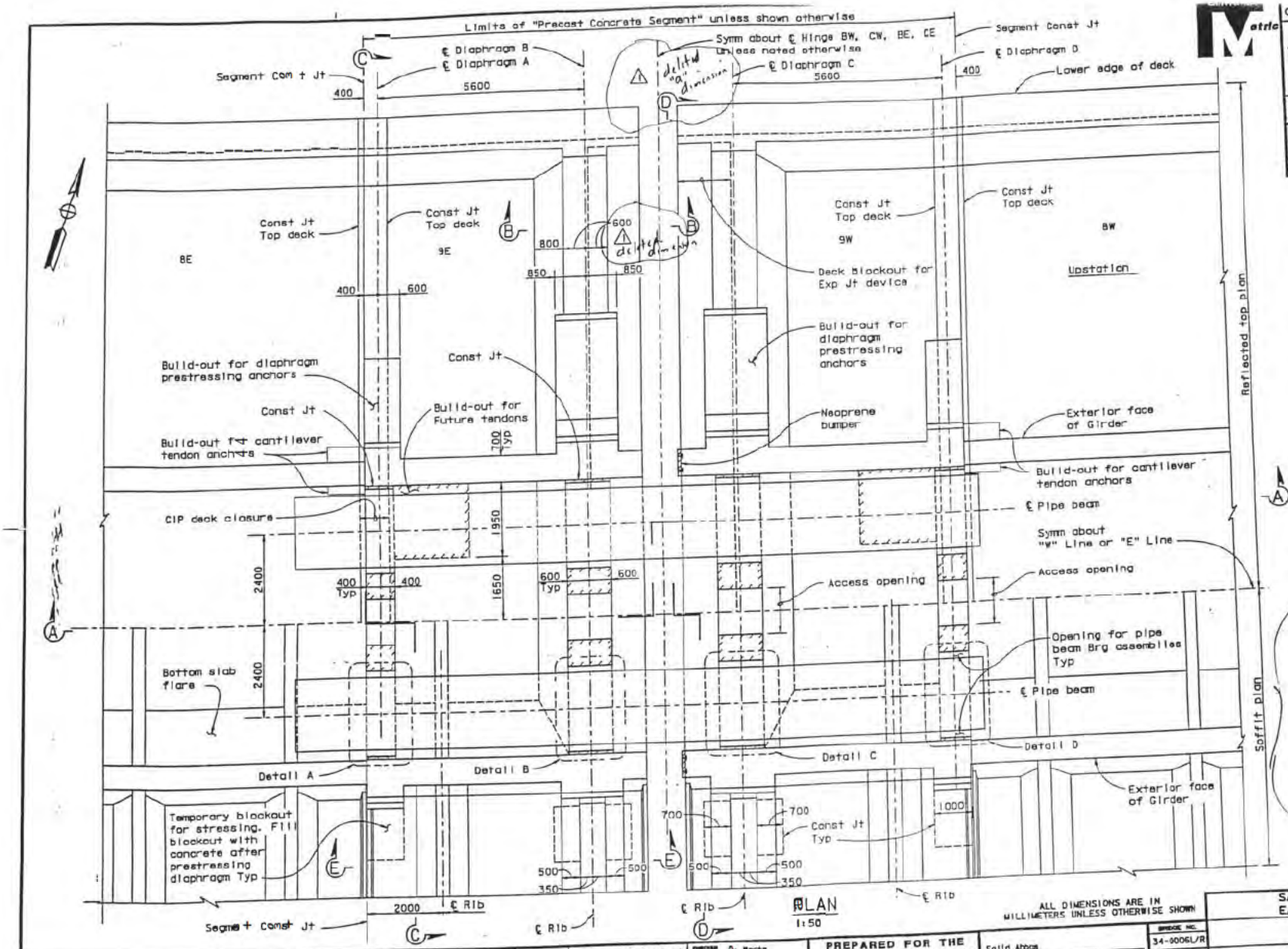

04 | SF/Ala | 80 | 0.0/1.6 | 78RI | 978

REGISTERED ENGINEER - CIVIL

6-4-01

PLANS APPROVAL DATE

The State of California or its officers or agents shall not be responsible for the accuracy or completeness of electronic copies of this plan sheet.

Sajid Abbas No. C 055274 Exp. 12/31/04 CIVIL STATE OF CALIFORNIA REGISTERED PROFESSIONAL ENGINEER

T.Y. LIN / MOFFATT & NICHOL
825 BATTERY STREET
SAN FRANCISCO, CA 94111

Caltrans now has a web site! To get to the web site, go to http://www.dot.ca.gov

CONCRETE STRENGTH AND TYPE LIMITS

(Hinge segments 9E and 9W)

Concrete pay item for hinge segments shall be "Precast Concrete Segment", (f'c=70 MPa @ 56 days, n=6) except in area marked ☐

☐ —Structural concrete, Bridge (f'c=70 MPa @ 56 days, n=6). CIP after erection

MARK	DATE	DESCRIPTIONS	BY	CH'D
1	03/24/02	REVISE NOTES AND BLOCKOUT DETAILS	TM	SC

REVISIONS

CONTRACT CHANGE ORDER NO. 9
SHEET 32 OF 42

NOTES: 1 Deleted original Note #1

1. For location of Hinges BW, BE, CW, CE, see "Structure Plan" sheets.
2. For Section A-A and Section C-C, see "Hinge B,C Details No.2" sheet. For Section B-B, Section D-D and Section E-E, see "Hinge B,C Details No.3" sheet. For Details A thru D, see "Hinge B,C Details No.4" sheet.
3. For electrical, mechanical and other embedments or inserts not shown, see "Road Plans".

100 % P&E

R.S. Bogha
DESIGN OVERSIGHT
L.S. Bogha

DESIGN	S. Abbas/C. Redfield	CHECKED	B. Norris
DETAILS	J. Lishansky	CHECKED	C. Norris
QUANTITIES	J. Chan	CHECKED	S. Shi

PREPARED FOR THE STATE OF CALIFORNIA DEPARTMENT OF TRANSPORTATION

Sajid Abbas
PROJECT ENGINEER

CU 04
EA 04-012021

BRIDGE NO. 34-0006L/R
KILOMETER POST 3.9/14.3, 0.0/1.6

SAN FRANCISCO OAKLAND BAY BRIDGE
EAST SPAN SEISMIC SAFETY PROJECT

SKYWAY STRUCTURES

HINGE B,C DETAILS NO. 1

SHEET 354

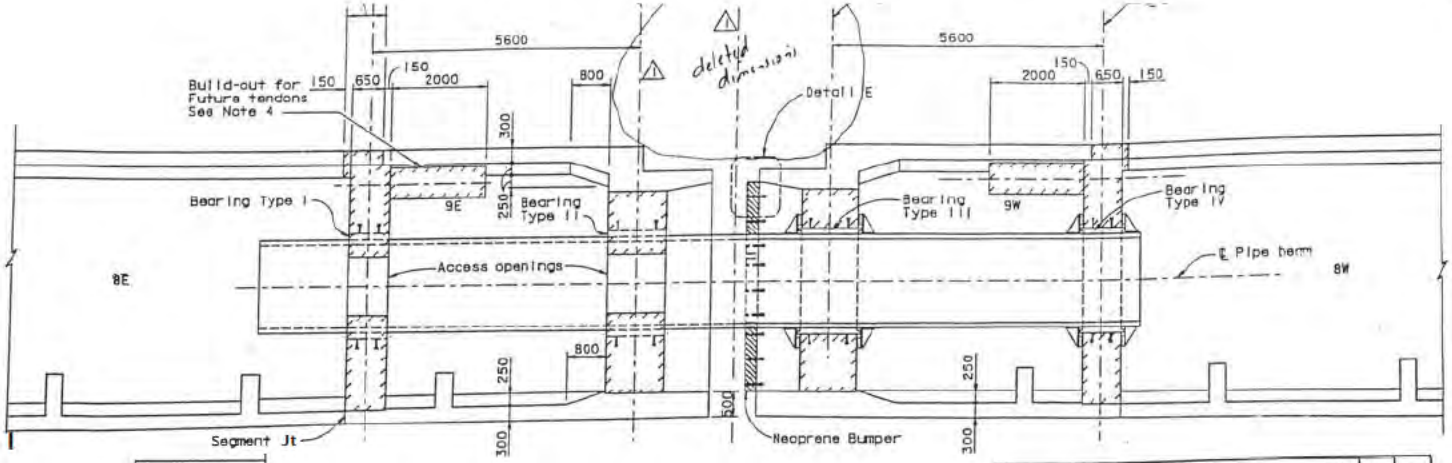

SECTION A-A
1:50

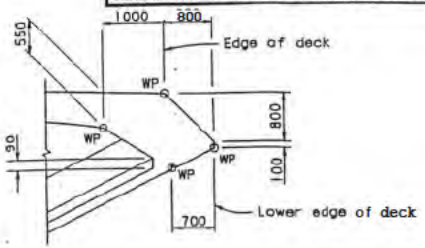

DETAIL G
1:40

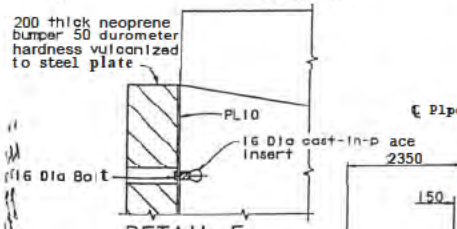

DETAIL E
1:10

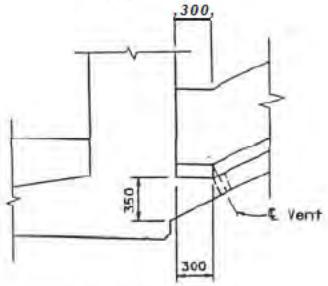

DETAIL F
1:20

MARK	DATE	DESCRIPTIONS	BY	CH'D
1	03/04/02	REVISE BLOCKOUT DETAILS	TM	SC

REVISIONS

CONTRACT CHANGE ORDER NO. 9
SHEET 33 OF 42

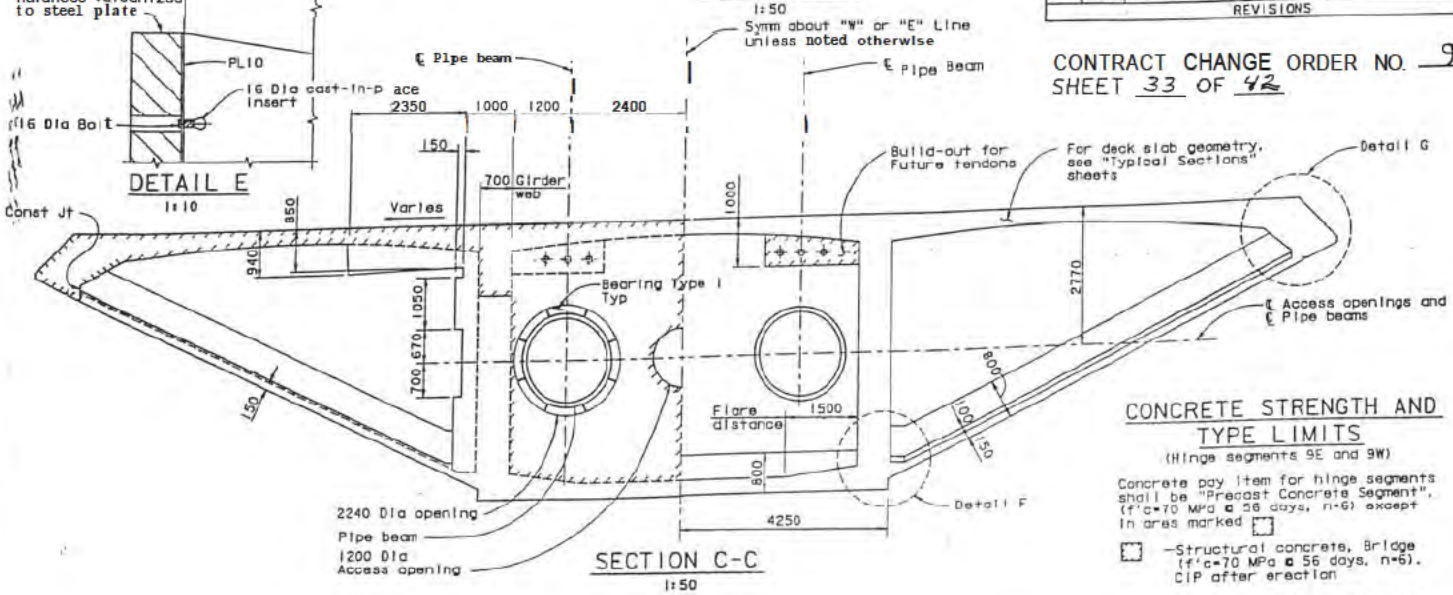

SECTION C-C
1:50

CONCRETE STRENGTH AND TYPE LIMITS

(Hinge segments 9E and 9W)

Concrete pay item for hinge segments shall be "Precast Concrete Segment", (f'c=70 MPa @ 56 days, n=6) except in area marked [ ]

[ ] —Structural concrete, Bridge (f'c=70 MPa @ 56 days, n=6). CIP after erection

ALL DIMENSIONS ARE IN MILLIMETERS UNLESS OTHERWISE SHOWN

NOTES:

1. Hinge BW shown. Hinges BE, CW and CE similar.
2. For construction of the hinge assembly, see "Construction Sequence No. 5" sheet.
3. For dimensions not shown, see "Hinge B,C Details No. 1", "Hinge B,C Details No. 3" and "Hings B,C Details No. 4 sheets.
4. For details not shown, see "Future Tendons Details" sheets.

deleted note referring to dim. "a"

REGISTERED ENGINEER - CIVIL
6-4-01
PLANS APPROVAL DATE
Sajid Abbas C 055274 Exp. 12/31/04 CIVIL STATE OF CALIFORNIA
The State of California or its officers or agents shall not be responsible for the accuracy or completeness of electronic copies of this plan sheet.
T.Y. LIN / MOFFATT & NICHOL
825 BATTERY STREET
SAN FRANCISCO, CA 94111
Caltrans now has a web site! To get to the web site, go to http://www.dot.ca.gov

SAN FRANCISCO OAKLAND BAY BRIDGE
EAST SPAN SEISMIC SAFETY PROJECT
SKYWAY STRUCTURES
HINGE B,C DETAILS NO. 2

DESIGN	S. Abbas/C. Redfield	CHECKED	C. Werts
DETAILS	A. Lishansky	CHECKED	C. Werts
QUANTITIES	J. Chan	CHECKED	S. Shi

PREPARED FOR THE STATE OF CALIFORNIA DEPARTMENT OF TRANSPORTATION

Sajid Abbas
PROJECT ENGINEER

BRIDGE NO. 34-0006L/R
KILOMETER POST 13.9/14.3, 0.0/1.8

R.S. Bacha
DESIGN OVERSIGHT

SHEET 355

100% PS&E

DIST	COUNTY	ROUTE	TOTAL PROJECT	NO.	TOTAL SHEETS
04	SF, Ala	80	13.9/14.3, 0.0/1.6	795R1	978

Caltrans Metric

Rahael Malik
REGISTERED ENGINEER - CIVIL

6-4-01
PLANS APPROVAL DATE

The State of California or its officers or agents shall not be responsible for the accuracy or completeness of electronic copies of this plan sheet.

REGISTERED PROFESSIONAL ENGINEER Rahael Malik No. C 051008 Exp. 9/30/01 CIVIL STATE OF CALIFORNIA

T.Y. LIN / MOFFATT & NICHOL
825 BATTERY STREET
SAN FRANCISCO, CA 94111

Caltrans now has a web site! To get to the web site, go to http://www.dot.ca.gov

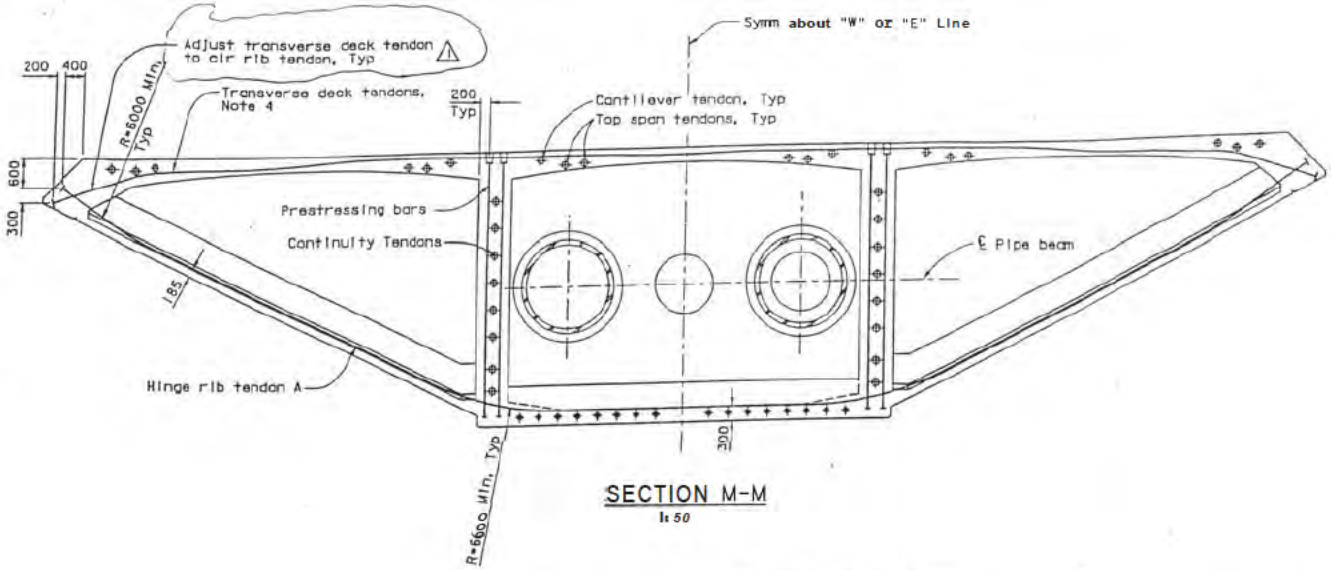

SECTION M-M
1:50

Hinge Rib tendon	No of tendons* x No. of strands 15 Dia	Jacking force per tendon (kN)
A	1 x 12	2346

* per Diaphragm

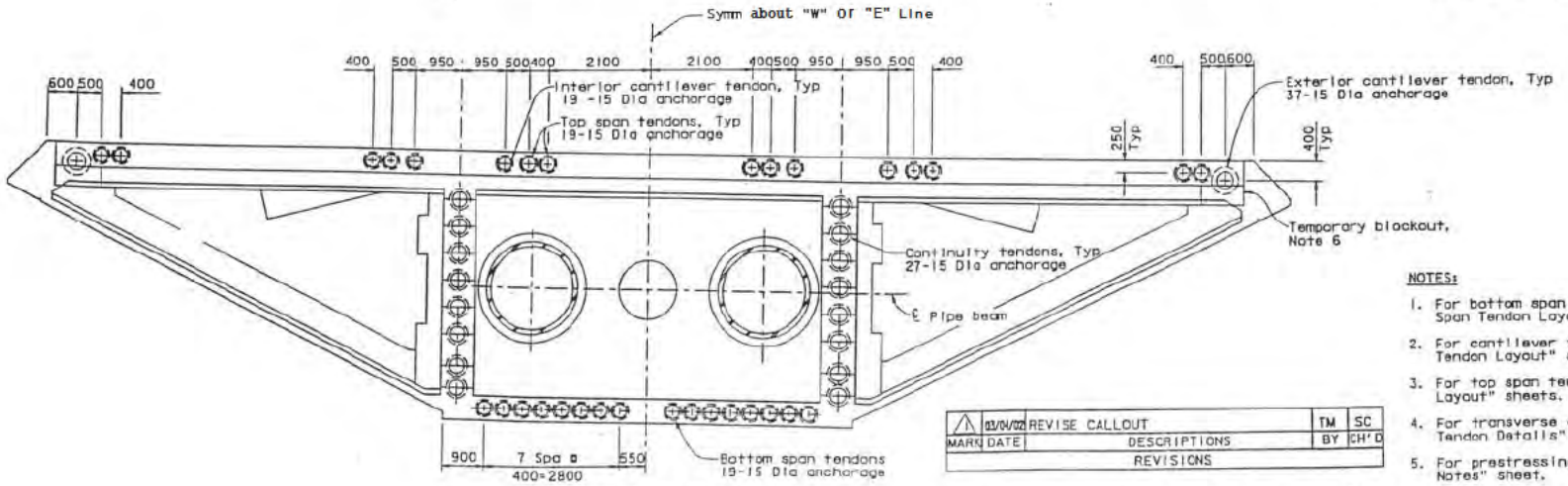

SECTION N-N
1:50

MARK	DATE	DESCRIPTIONS	BY	CH'D
1	03/04/02	REVISE CALLOUT	TM	SC
		REVISIONS		

CONTRACT CHANGE ORDER NO. 9
SHEET 34 OF 42

NOTES:

1. For bottom span tendon layout, see "Bottom Span Tendon Layout" sheets.
2. For cantilever tendon layout, see "Cantilever Tendon Layout" sheets.
3. For top span tendon, see "Top Span Tendon Layout" sheets.
4. For transverse deck tendon profile, see "Transverse Tendon Details" sheet.
5. For prestressing notes, see "Prestressing Notes" sheet.
6. For details of blockout see "Hinge B,C Details No. 15" sheet.

ALL DIMENSIONS ARE IN MILLIMETERS UNLESS OTHERWISE SHOWN

R.S. Bagha
DESIGN OVERSIGHT
K.S. Bagha
11/1/00

DESIGN	R. Malik	CHECKED	C. Werts
DETAILS	S. Lee	CHECKED	C. Werts
QUANTITIES	R. Malik	CHECKED	T. Nguyen

PREPARED FOR THE STATE OF CALIFORNIA DEPARTMENT OF TRANSPORTATION

Salid Abbas
PROJECT ENGINEER

DRAWING NO. 34-0006L/R
VOLUMETER POST 13.9/14.3, 0.0/1.6

SAN FRANCISCO OAKLAND BAY BRIDGE
EAST SPAN SEISMIC SAFETY PROJECT

SKYWAY STRUCTURES

HINGE B,C DETAILS NO. 10

DISREGARD PRINTS BEARING EARLIER REVISION DATES

CU 04
EA 04-012021

SHEET 363 OF

USERNAME => EALKINS DATE PLOTTED => 05 MAR 102 TIME PLOTTED => 16:22:01

100 % PSAIS

MARK	DATE	DESCRIPTIONS	BY	CH'D
1	03/19/02	REVISE TENDON LOCATION	TM	SC

REVISIONS

CONTRACT CHANGE ORDER NO. 9
SHEET 35 OF 42

DIST	COUNTY	ROUTE	TOTAL PROJECT	NO.	SHEETS
04	SF/Ala	80	13.9/14.3, 0.0/1.6	798R1	978

Caltrans Metric

REGISTERED ENGINEER - CIVIL
6-4-01
PLANS APPROVAL DATE

REGISTERED PROFESSIONAL ENGINEER Raheel Malik No. C 051008 Exp. 9/30/01 CIVIL STATE OF CALIFORNIA

The State of California or its officers or agents shall not be responsible for the accuracy or completeness of electronic copies of this plan sheet.

T.Y. LIN / MOFFATT & NICHOL
825 BATTERY STREET
SAN FRANCISCO, CA 94111

Caltrans now has a web site! To get to the web site, go to: http://www.dot.ca.gov

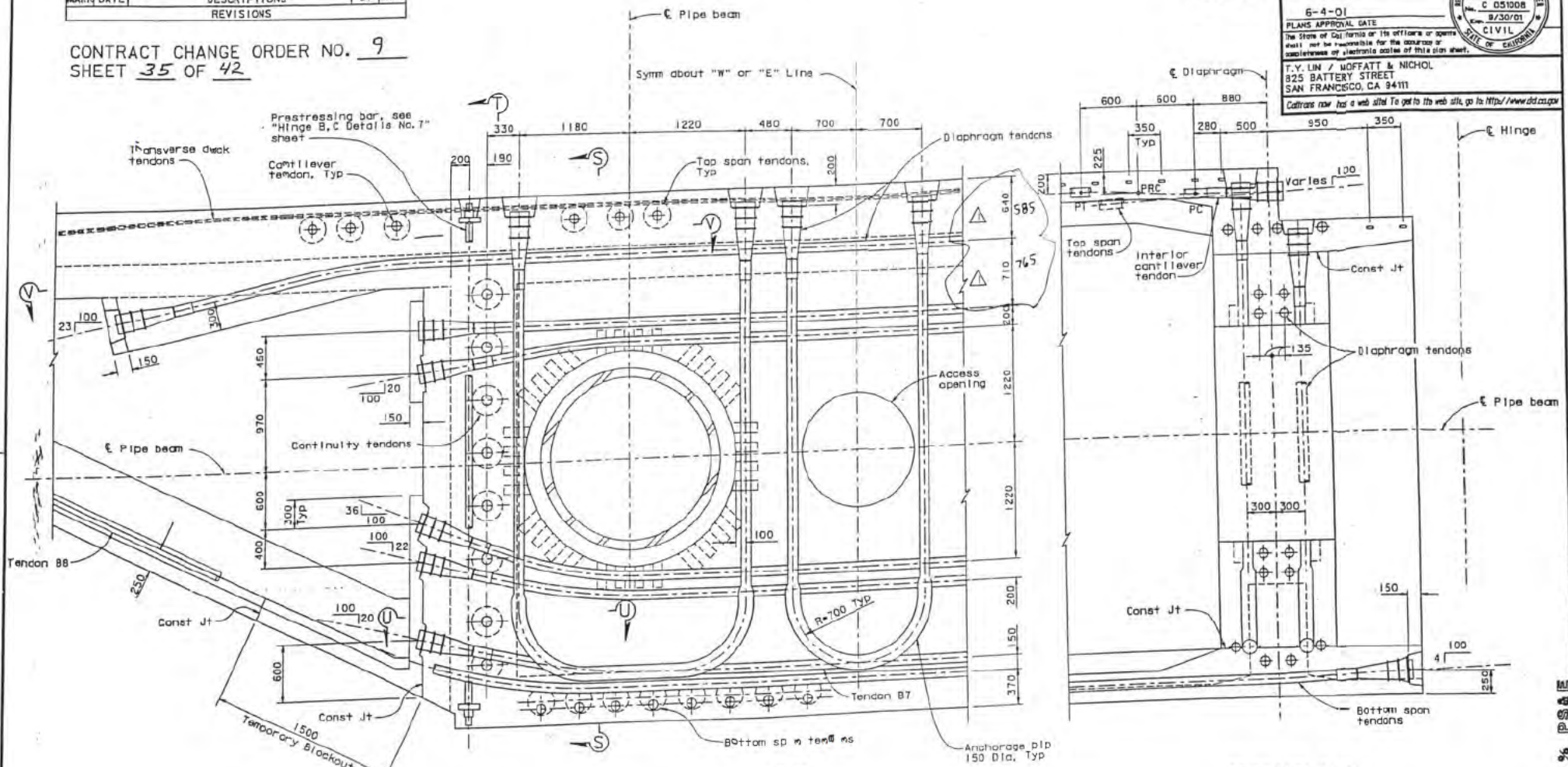

DET IL K
1 0

NOTES:

1. For Sections T-T, U-U and V-V, see "Hinge B,C Details No. 14" sheet.
2. Radii for all curved tendons are 6000 unless shown otherwise.

SECTION S-S
1:20

ALL DIMENSIONS ARE IN MILLIMETERS UNLESS OTHERWISE SHOWN

SAN FRANCISCO OAKLAND BAY BRIDGE
EAST SPAN SEISMIC SAFETY PROJECT

SKYWAY STRUCTURES

HINGE B, C DETAILS NO. 13

DESIGN	R. Malik	C. Marts	
DETAILS	S. Lee	C. Marts	
QUANTITIES	R. Malik	T. Nguyen	

PREPARED FOR THE STATE OF CALIFORNIA DEPARTMENT OF TRANSPORTATION

Sajid Abbas
PROJECT ENGINEER

R.S. Bagha
DESIGN OVERSIGHT

BRIDGE NO. 34-0006L/R
KILOMETER POST 3.9/14.3, 0.0/1.6

CU 04

DIMENSIONS PRINTS BEARING EARLIER REVISION DATES

SHEET 366

100 % PS&E

USERNAME => EALKINS DATE PLOTTED => 05 MAR 02 TIME PLOTTED => 14:01:43

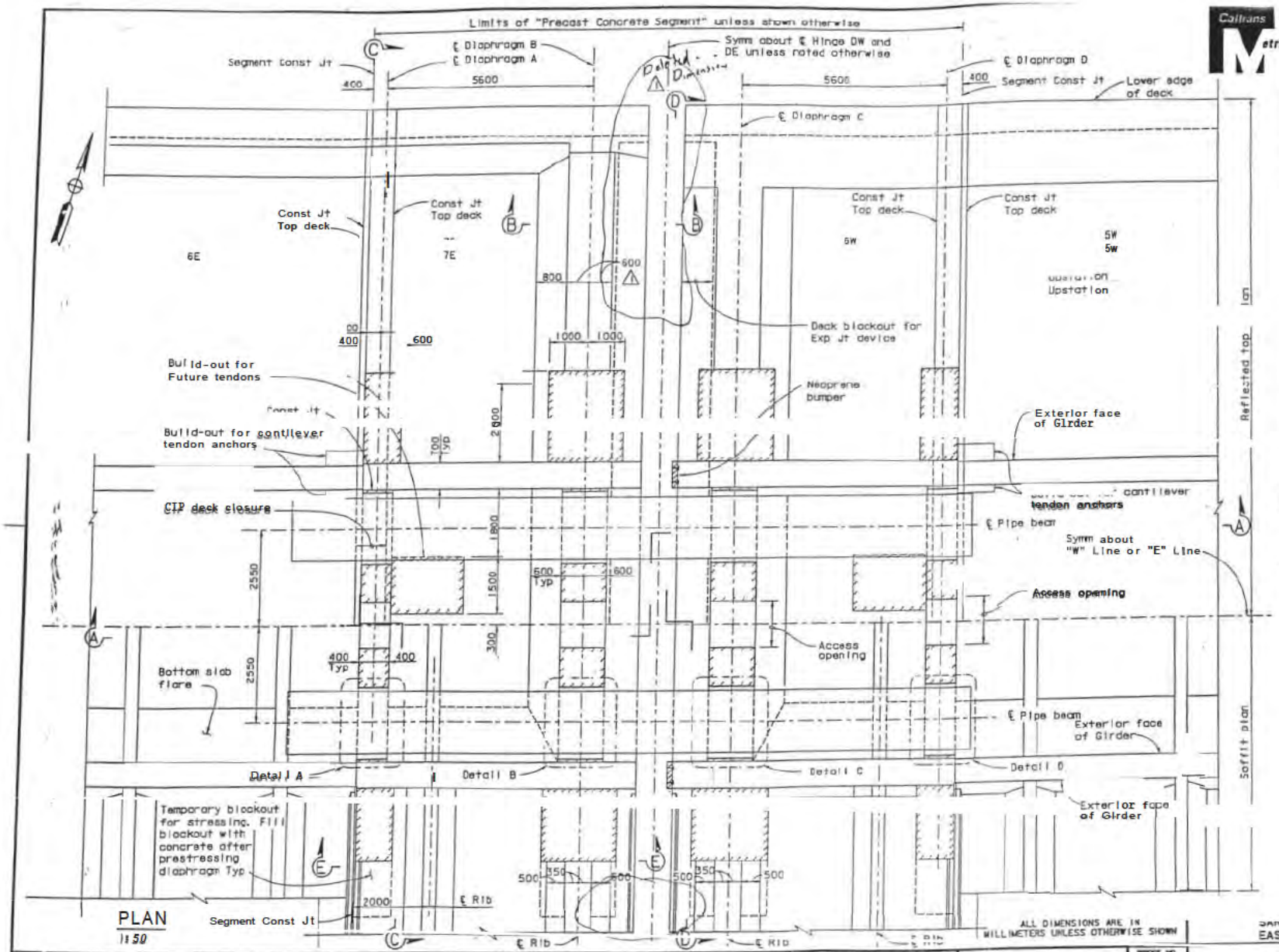

PLAN
1:50

ALL DIMENSIONS ARE IN MILLIMETERS UNLESS OTHERWISE SHOWN

DIST	COUNTY	ROUTE	TOTAL PROJECT	NO.	SHEETS
04	SF/Ala	80	13.9/14.3, 0.0/1.6	308R1	978

REGISTERED ENGINEER - CIVIL
6-4-01
PLANS APPROVAL DATE
The State of California or its officers or agents shall not be responsible for the accuracy or completeness of electronic copies of this plan sheet.

PROFESSIONAL ENGINEER Jon Krizek C 055760 Exp. 12/31/04 CIVIL STATE OF CALIFORNIA

T.Y. LIN / MOFFATT & NICHOL
825 BATTERY STREET
SAN FRANCISCO, CA 94111

Caltrans now has a web site! To get to the web site, go to http://www.dot.ca.gov

CONCRETE STRENGTH AND TYPE LIMITS

(Hinge segments 9E and 9W)

Concrete, pay item for hinge segments shall be "Precast Concrete Segment", (f'c=70 MPa @ 56 days, n=6) except in ares marked ☐

☐ —Structural concrete, Bridge (f'c=28 MPa @ 56 days, n=6).

	DATE	DESCRIPTIONS	BY	CH'D
1	03/04/02	REVISE NOTES AND BLOCKOUT DETAILS	TW	SC

CONTRACT CHANGE ORDER NO. 9
SHEET 36 OF 42

Deleted note re: dim. "A"

1. For location of Hinges DW and DE, see "Structure Plan" sheets.
2. For Section A-A and Section C-C, see "Hinge D Detail Is No. 2" sheet. For Section B-B, Section D-D Section E-E, see "Hinge D Details No. 3" sheet. For Detail Is A thru D, see "Hinge D Details No. 4" sheet.
3. For electrical, mechanical and other embedments or inserts not shown, see "Road Plans".

R.S. Bagha
DESIGN OVERSIGHT
R.S. Bagha
SIGN OFF DATE 11/17/00

DESIGN	J. Krizek/S. Redfield	C. Werts	
DETAILS	A. Lishansky	C. Werts	
QUANTITIES	J. Chan	S. Shi	

PREPARED FOR THE STATE OF CALIFORNIA DEPARTMENT OF TRANSPORTATION

Salid Abbas
PROJECT ENGINEER

CU 04
EA 04-012021

BRIDGE NO. 34-0006L/R
KILOMETER POST 13.9/14.3, 0.0/1.6

DISREGARD PRINTS BEARING EARLIER REVISION DATES

SAN FRANCISCO-OAKLAND BAY BRIDGE
EAST SPAN SEISMIC SAFETY PROJECT

SKYWAY STRUCTURES
HINGE D DETAILS NO. 1

SHEET 376

100%

DIST.	COUNTY	ROUTE	TOTAL PROJECT	NO.	SHEETS
04	SF/Ala	80	13.9/14.3, 0.0/1.6	809R1	978

REGISTERED ENGINEER - CIVIL
6-4-01
PLANS APPROVAL DATE
Jon Krizek No. C 055780 Exp. 12/31/94 CIVIL STATE OF CALIFORNIA
T.Y. LIN / MOFFATT & NICHOL
825 BATTERY STREET
SAN FRANCISCO, CA 94111

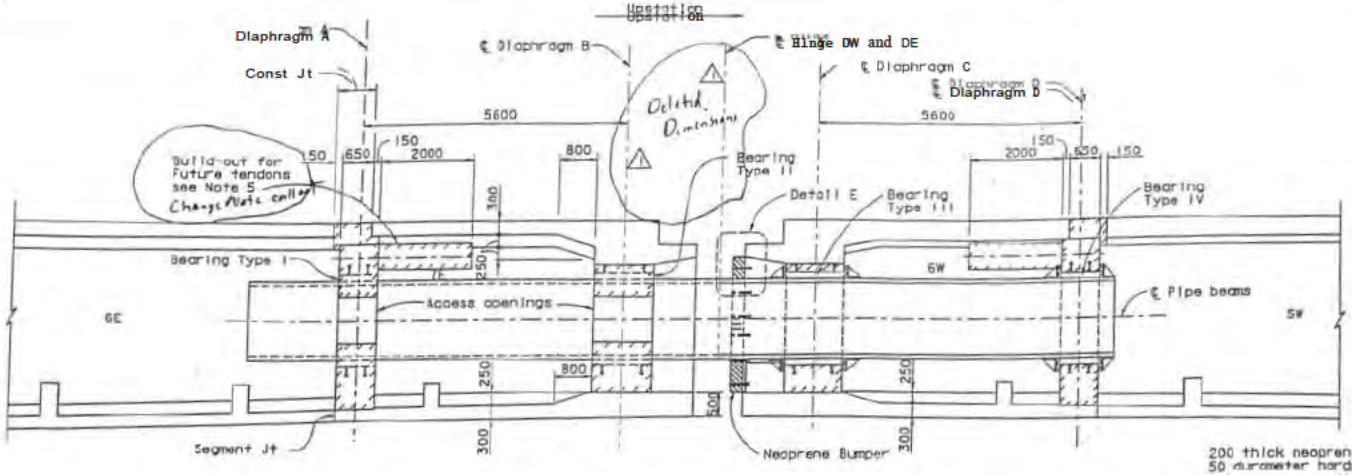

SECTION A-A
1:50

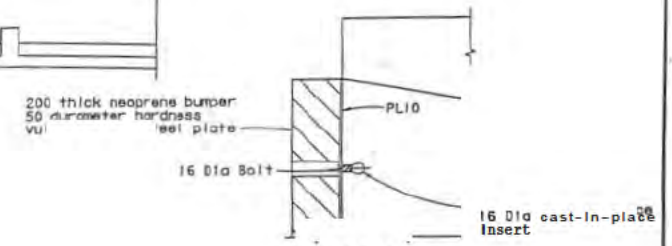

DETAIL E

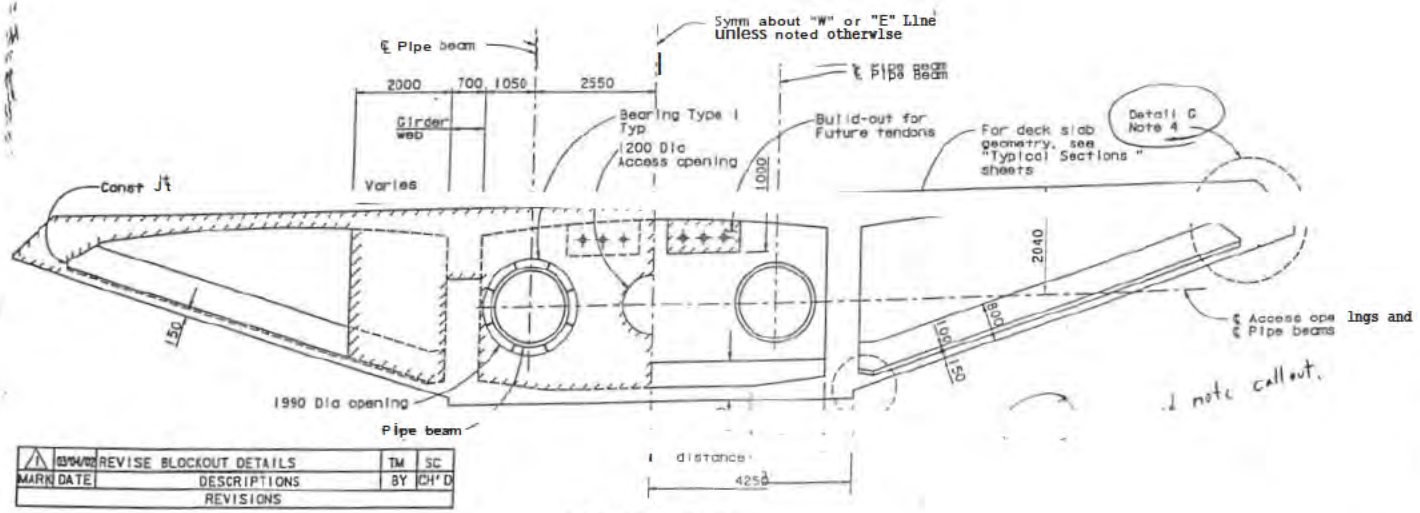

SECTION C-C
1:50

MARK	DATE	DESCRIPTIONS	BY	CH'D
1	03/04/02	REVISE BLOCKOUT DETAILS	TM	SC
		REVISIONS		

CONCRETE STRENGTH AND TYPE LIMITS

(Hinge segments 9E and 9W)

Concrete pay item for hinge segments shall be "Precast Concrete Segment", (f'c=70 MPa @ 56 days, n=6) except in ares marked €3

☐ —Structural concrete, Bridge (f'c=70 MPa @ 56 days, n=6). CIP after erection

NOTES:

1. Hinge DW shown. Hinge DE similar.
2. For construction of the hinge assembly, see "Construction Sequence No. 5" sheet.
3. For dimensions not shown, see "Hinge D Details No. 1", "Hinge D Detail No. 3" and "Hinge D Details No. 4" sheets.
4. For Detail F and Detail G, see "Hinge B,C Details No. 2" sheet.
5. Detail H is not shown, see "Future Tendons Details" sheet.

Deleted note re: dimension "2"

CONTRACT CHANGE ORDER NO. 7
SHEET 37 OF 42

ALL DIMENSIONS ARE IN

SAN FRANCISCO OAKLAND BAY BRIDGE

R.S. Bagha
DESIGN OVERSIGHT
R.S. Bagha

DESIGN	J. Krizek	CHECKED	C. Marts
DETAILS	J. Lihanskiy	CHECKED	C. Marts

PREPARED FOR THE STATE OF CALIFORNIA DEPARTMENT OF TRANSPORTATION

Salid Abdoh
PROJECT ENGINEER

34-0006L/R
PLANNED POST 3.9/14.3.

HINGE D DETAILS NO. 2

100 % PSAE

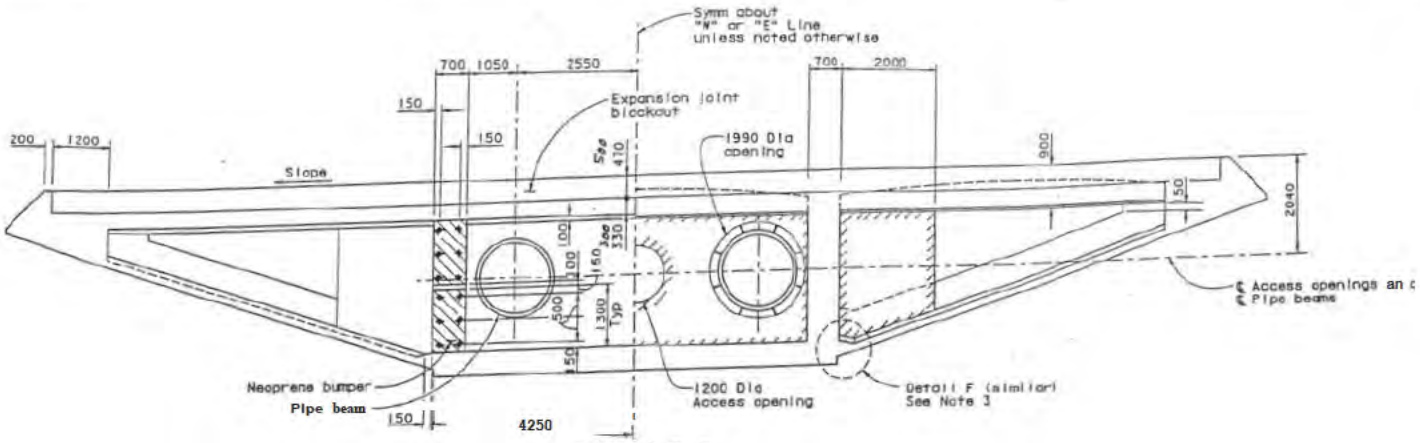

SECTION D-D
1:50

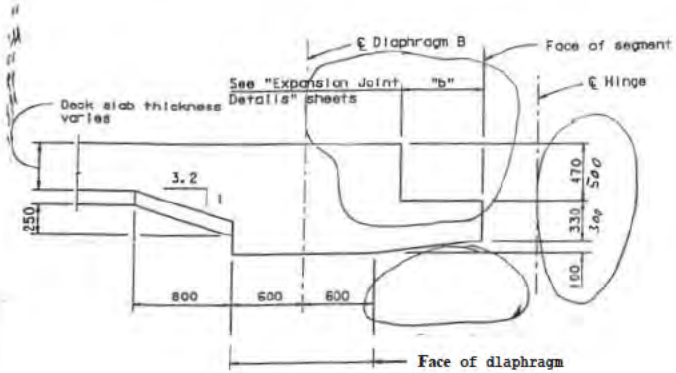

SECTION B-B ⚠
1:20

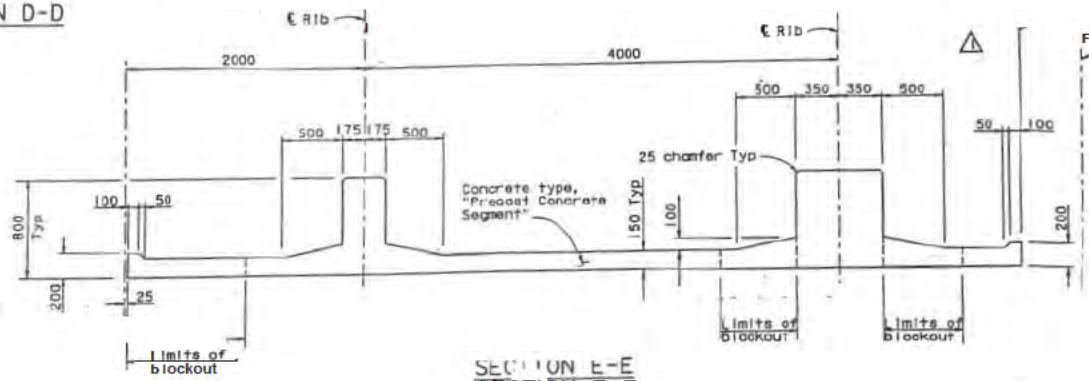

SECTION E-E
1:20

MARK	DATE	DESCRIPTIONS	BY	CH'D
⚠	03/04/02	REVISE BLOCKOUT DETAILS AT SECTION B-B	TM	SC

REVISIONS

CONTRACT CHANGE ORDER NO.
SHEET 38 OF 42 ORDER NO. 7
SHEET 38 OF 42

REGISTERED ENGINEER - CIVIL
6-4-01
PLANS APPROVAL DATE
The State of California or its officers or agents shall not be responsible for the accuracy or completeness of electronic copies of this plan sheet.
T.Y. LIN / MOFFATT & NICHOL
825 BATTERY STREET

Jon Krizek
C 055760
12/31/04
CIVIL
STATE OF CALIFORNIA

CONCRETE STRENGTH AND TYPE LIMITS
(Hinge segments 9E and 9W)

Concrete pay item for hinge segments shall be "Precast Concrete Segment", (f'c=70 MPa @ 56 days, n=6) except in ares marked

—Structural concrete, Bridge (f'c=70 MPa @ 56 days, n=6). CIP after erection

NOTES:

1. Hinge DW shown. Hinge DE similar.
2. For dimensions not shown, see "Hinge D Details No. 1" and "Hinge D Details No. 2" sheets.
3. For Detail F, see "Hinge B,C Details No. 2" sheet.

Deleted Note re: Neoprene Bumpers

ALL DIMENSIONS ARE IN MILLIMETERS UNLESS OTHERWISE SHOWN

B.S. Bogne
DESIGN OVERSIGHT

DESIGN: J. Krizek | CHECKED: C. Harts | PREPARED FOR THE STATE OF CALIFORNIA | Sajid Abbas | DRAWING NO. 34-0006L/R

SAN FRANCISCO OAKLAND BAY BRIDGE
EAST SPAN SEISMIC SAFETY PROJECT
SKYWAY STRUCTURES

10 0 % PSR

DIST.	COUNTY	ROUTE	TOTAL PROJECT	NO.	SHEETS
04	SF, Ala	80	13.9/14.3, 0.0/1.6	8178I	978

Caltrans Metric

REGISTERED ENGINEER - CIVIL

6-4-01

PLANS APPROVAL DATE

REGISTERED PROFESSIONAL ENGINEER — Robert Wolfe — No. C 051008 — Exp. 9/30/01 — CIVIL — STATE OF CALIFORNIA

The State of California or the officers or agents shall not be responsible for the accuracy or completeness of electronic copies of this plan sheet.

T.Y. LIN / MOFFATT & NICHOL
825 BATTERY STREET
SAN FRANCISCO, CA 94111

Caltrans now has a web site! To get to the web site, go to http://www.dot.ca.gov

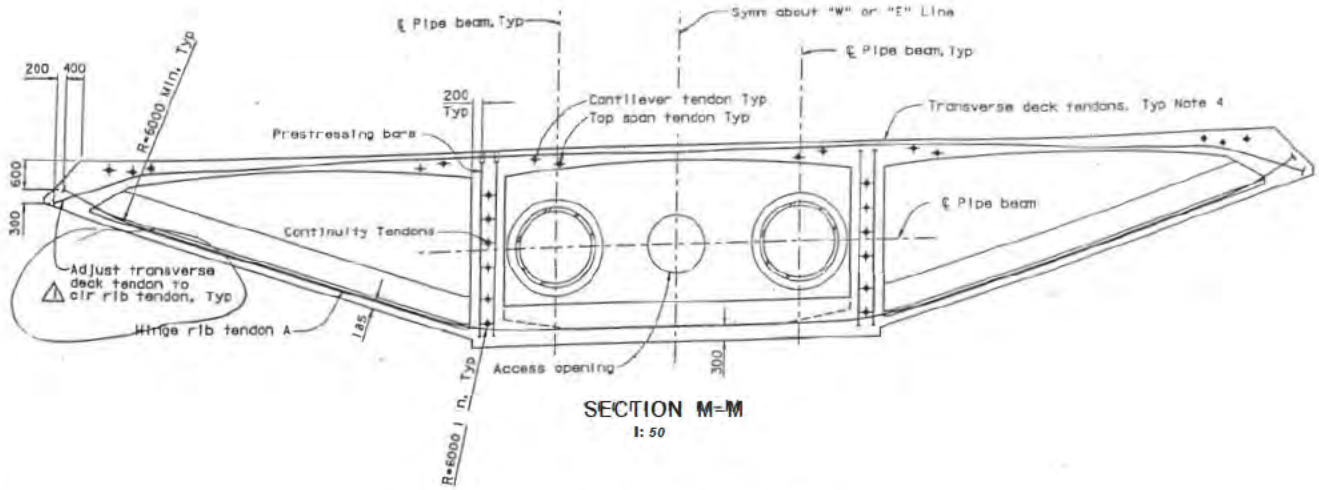

SECTION M-M
1:50

Hinge Rib tendon	No of tendons* x No of strands	Jacking force per tendon (kN)
A	1 x 12	2346

* per diaphragm

MARK	DATE	DESCRIPTIONS	BY	CH'D
1	03/04/02	REVISE CALLOUT	TM	SC
		REVISIONS		

CONTRACT CHANGE ORDER NO. 9
SHEET 39 OF 42

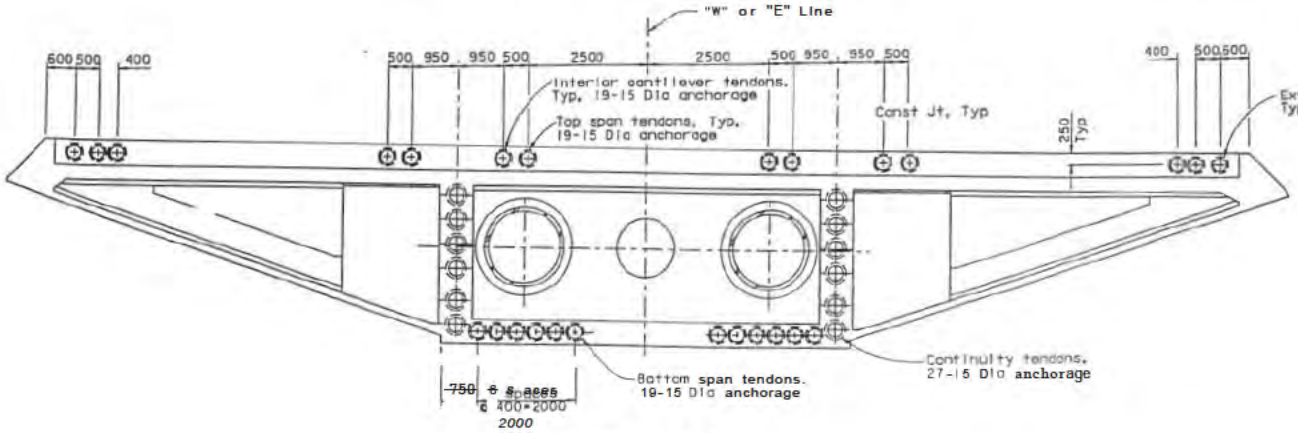

SECTION N-N
1:50

NOTES:

1. For bottom span tendon layout, see "Bottom Span Tendons Layout" sheets.
2. For cantilever tendon layout, see "Cantilever Tendons Layout" sheets.
3. For top span tendon, see "Top Span Tendons Layout" sheets.
4. For Transverse deck tendon trajectory see "Transverse Tendon Details" sheets.
5. For prestressing notes, see "Prestressing Notes" sheet.

ALL DIMENSIONS ARE IN MILLIMETERS UNLESS OTHERWISE SHOWN

SAN FRANCISCO OAKLAND BAY BRIDGE
EAST SPAN SEISMIC SAFETY PROJECT
SKYWAY STRUCTURES
HINGE B DETAILS NO. 18

R.S. Bagha
DESIGN OVERSIGHT
R.S. Bagha

DESIGN R. Wolfe — CHECKED C. Marts
DETAILS S. Lee — CHECKED C. Marts
QUANTITIES D. Wolfe — CHECKED T. Weisner

PREPARED FOR THE STATE OF CALIFORNIA DEPARTMENT OF TRANSPORTATION

Solid Abbot
PROJECT ENGINEER
PROJECT ENGINEER

BRIDGE NO. 34-0006L/R
KILOMETER POST 13.9/14.3, 0.0/1.6

DATE

TIME PLOTTED → 10 % PGA

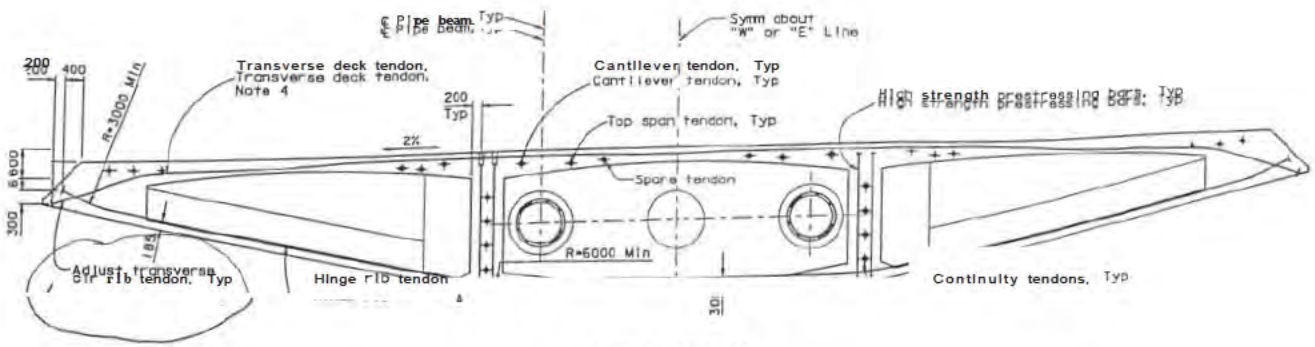

SECTION M-M

1:50

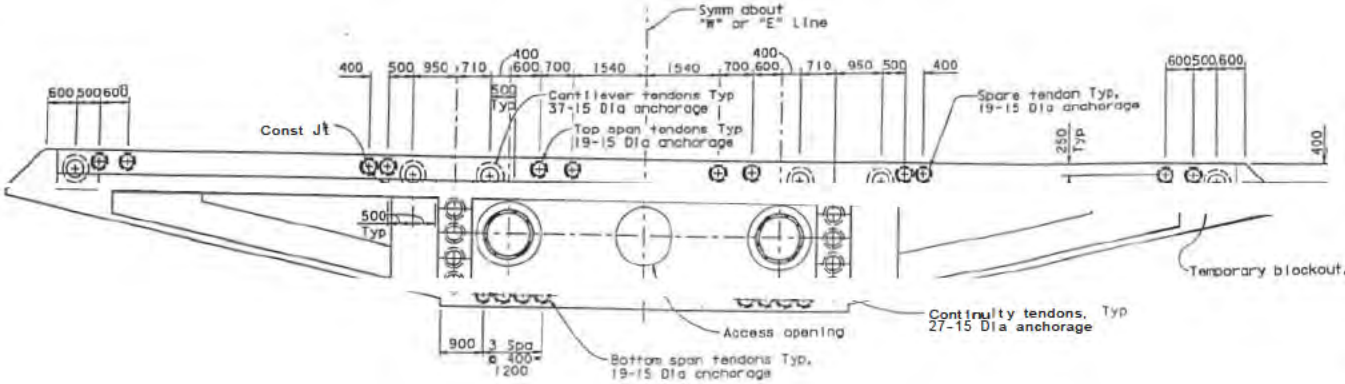

SECTION N-N

1:50

REGISTERED ENGINEER - CIVIL

6-4-01

PLANS APPROVAL DATE

The State of California or its officers or agents shall not be responsible for the accuracy or completeness of electronic copies of this plan sheet.

Raheel Malik C 051008 Exp. 9/30/01 CIVIL STATE OF CALIFORNIA

T.Y. LIN / MOFFATT & NICHOL
825 BATTERY STREET
SAN FRANCISCO, CA 94111

Caltrans now has a web site! To get to the web site, go to http://www.dot.ca.gov

Hinge Rib tendon	No of strands 15 Dia	Jacking force per tendon (kN)
A	1 x 12	2346
B	1 x 12	2346

MARK	DATE	DESCRIPTIONS	BY	CH'D
1	03/04/02	REVISE CALLOUT	TM	SC

CONTRACT CHANGE ORDER NO. 9
SHEET 40 OF 42

NOTES:

1. For bottom span tendon layout, see "Bottom Span Tendon Layout" sheets.
2. For cantilever tendon layout, see "Cantilever Tendon Layout" sheets.
3. For top span tendon, see "Top Span Tendon Layout" sheets.
4. For transverse deck tendons profile, see "Transverse Tendon Details" sheets.
5. **For prestressing notes, see "Prestressing Notes" sheet.**

ALL DIMENSIONS ARE IN MILLIMETERS UNLESS OTHERWISE SHOWN

R.S. Bogha
DESIGN OVERSIGHT
R.S. Bogha
11/17/00

DESIGN	R. Malik	C. Norts	
DETAILS	S. Lee	C. Norts	
QUANTITIES	R. Malik	T. Nguyen	

PREPARED FOR THE STATE OF CALIFORNIA DEPARTMENT OF TRANSPORTATION

Salid Abas
PROJECT ENGINEER

BRIDGE NO. 34-0006L/R
KILOMETER POST 3.9/14.3 & 0.0/1.8

SAN FRANCISCO OAKLAND BAY BRIDGE
EAST SPAN SEISMIC SAFETY PROJECT

SKYWAY STRUCTURES

HINGE E DETAILS NO. 10

DIMENSIONS PRINTS DEGRIN

100 % PAGE

04	SF/Ala	80	TOTAL PROJECT 13.9/14.3, 0.0/1.6	NO. 844R1	SHEETS 978

Caltrans Metric

Rahul Malik
REGISTERED ENGINEER - CIVIL
6-4-01
PLANS APPROVAL DATE

REGISTERED PROFESSIONAL ENGINEER Rahul Malik No. C 051008 Exp. 9/30/01 CIVIL STATE OF CALIFORNIA

The State of California or its officers or agents shall not be responsible for the accuracy or completeness of electronic copies of this plan sheet.

T.Y. LIN / MOFFATT & NICHOL
825 BATTERY STREET
SAN FRANCISCO, CA 94111

Caltrans now has a web site! To get to the web site, go to: http://www.dot.ca.gov

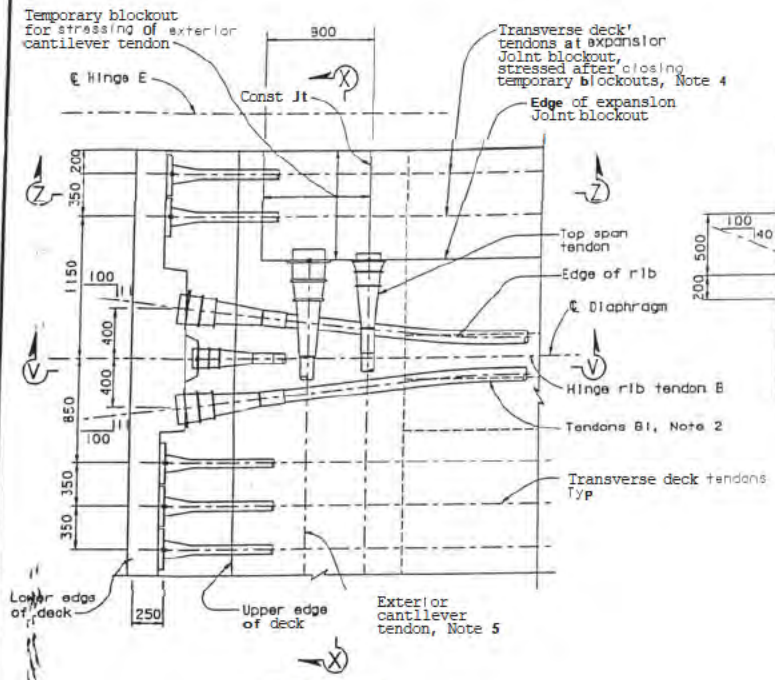

DETAIL J
1:20

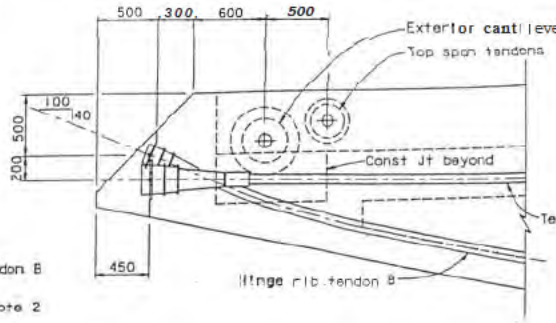

SECTION V-V
1:20

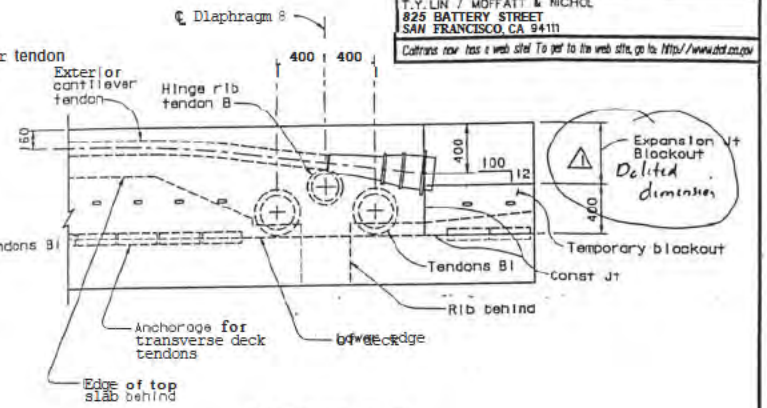

SECTION X-X
1:20

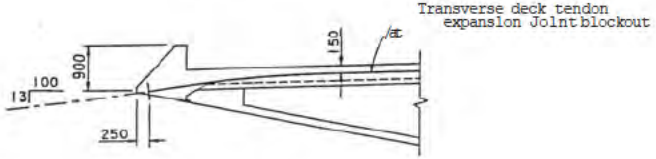

SECTION Z-Z
1:50

NOTES:

1. Radii for all curved tendons are 6000 Min unless shown otherwise.
2. For layout of diaphragm tendons, see "Hinge E Details No. 9" sheet.
3. For profile transverse deck tendons, see "Transverse Tendons Details" sheets.
4. The ducts for transverse deck tendons at expansion Joint blockout shall be discontinuous at the temporary blockouts. They will be spliced after stressing exterior cantilever tendons.
5. At the hinge segment, a monostrand Jack shall be used to stress exterior cantilever tendons.

Deleted note #6

MARK	DATE	DESCRIPTIONS	BY	CH'D
1	03/04/02	REVISE BLOCKOUT CALLOUT	TM	SC

REVISIONS

CONTRACT CHANGE ORDER NO. 9
SHEET 41 OF 42

ALL DIMENSIONS ARE IN MILLIMETERS UNLESS OTHERWISE SHOWN

R.S. Basha
DESIGN OVERSIGHT
R.S. Basha

DESIGN	R. Malik	C. Nerts	
DETAILS	S. Lee	C. Nerts	
QUANTITIES	R. Malik	T. Nguyen	

PREPARED FOR THE STATE OF CALIFORNIA DEPARTMENT OF TRANSPORTATION

Salid Abdat
PROJECT ENGINEER

CU 04

BRIDGE NO. 34-0006L/R
KILOMETER POST 13.9/14.3, 0.0/1.6

DISREGARD PRINTS BEARING EARLIER REVISION DATES

SAN FRANCISCO OAKLAND BAY BRIDGE
EAST SPAN SEISMIC SAFETY PROJECT

SKYWAY STRUCTURES

HINGE E DETAILS NO. 15

SHEET 412 OF

100% PS&E

USERNAME => EALKINS DATE PLOTTED => 08 MAR 02 TIME PLOTTED => 14:58:42

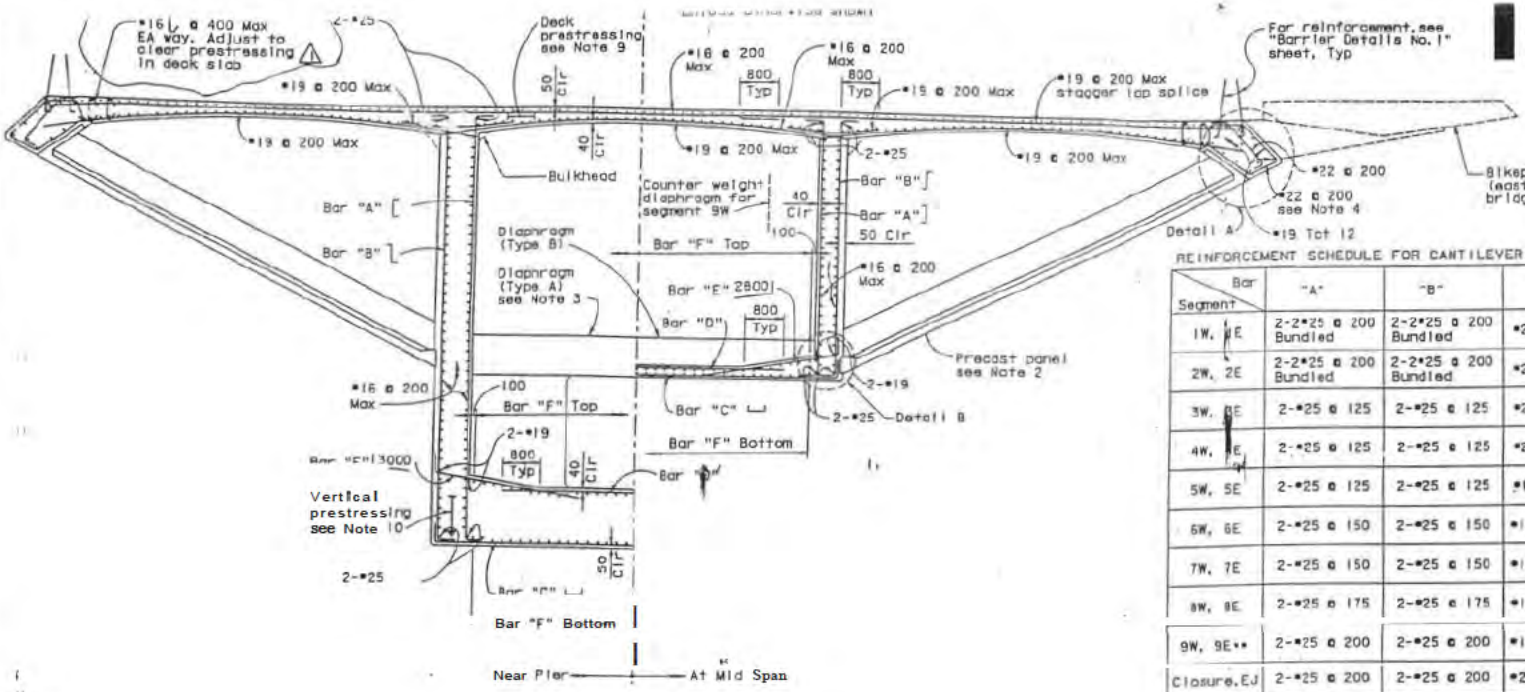

TYPICAL SECTION

1:60

(CANTILEVER SEGMENTS @ PIERS E6W, E6E, E10W, E10E)

REINFORCEMENT SCHEDULE FOR CANTILEVER SEGMENTS @ PIERS E6W, E6E, E10W, E10E

Segment \ Bar	"A"	"B"	"C"	"D"	"E"	"F"
1W, 1E	2-2#25 @ 200 Bundled	2-2#25 @ 200 Bundled	#25 @ 200	#25 @ 200	2-#25 @ 200	#25 @ 200
2W, 2E	2-2#25 @ 200 Bundled	2-2#25 @ 200 Bundled	#25 @ 200	#25 @ 200	2-#25 @ 200	#25 @ 200
3W, 3E	2-#25 @ 125	2-#25 @ 125	#22 @ 125	#22 @ 125	2-#22 @ 125	#22 @ 200
4W, 4E	2-#25 @ 125	2-#25 @ 125	#22 @ 125	#22 @ 125	2-#22 @ 125	#22 @ 200
5W, 5E	2-#25 @ 125	2-#25 @ 125	#19 @ 125	#19 @ 125	2-#19 @ 125	#19 @ 200
6W, 6E	2-#25 @ 150	2-#25 @ 150	#19 @ 150	#19 @ 150	2-#19 @ 150	#19 @ 200
7W, 7E	2-#25 @ 150	2-#25 @ 150	#16 @ 150	#16 @ 150	2-#16 @ 150	#16 @ 200
8W, 8E	2-#25 @ 175	2-#25 @ 175	#16 @ 175	#16 @ 175	2-#16 @ 175	#16 @ 200
9W, 9E**	2-#25 @ 200	2-#25 @ 200	#16 @ 200	#16 @ 200	2-#16 @ 200	#16 @ 200
Closure.EJ	2-#25 @ 200	2-#25 @ 200	#22 @ 200	#22 @ 200	2-#22 @ 200	#16 @ 200

** See Note 8

NOTES:

1. No. of bars shown in reinforcement schedule is total for one box girder.
2. For detail of precast panels, see "Precast Panel Details" sheets.
3. For diaphragm details, see "Diaphragm Details No. 1" through "Diaphragm Details No. 4" sheets.
4. Adjust reinforcement to clear prestressing tendons and prestressing bars, as approved by the Engineer.
5. For Detail A, see "Precast Panel Detail Is No. 5" sheet.
6. For Detail B, see "Precast Panel Detail Is No. 6" sheet.
7. Contractor shall propose locations of holes for temporary anchorages for Engineer's approval.
8. For reinforcement details, see "Hinge B, C Details" sheets for segments (**).
9. For deck prestressing, see "Transverse Tendon Details" sheets.
10. For vertical prestressing, see "Vertical PT Detail Is" sheets.
11. For top deck closure reinforcement splice details, see "Girder Detail Is No. 1" sheet.
12. For reinforcement in bulkheads, see "Girder Reinforcement No. 1" sheet.

MARK	DATE	DESCRIPTIONS	BY	CH'D
1	03/04/02	REVISE CALLOUT	TM	SC

REVISIONS

CONTRACT CHANGE ORDER NO. 9
SHEET 42 OF 42

ALL DIMENSIONS ARE IN MILLIMETERS UNLESS OTHERWISE SHOWN

REGISTERED ENGINEER - CIVIL
6-4-01
PLANS APPROVAL DATE
Edmond C. Chan No. C 39454 Exp. 12/31/01 CIVIL STATE OF CALIFORNIA

The State of California or its officers or agents shall not be responsible for the accuracy or completeness of electronic copies of this plan sheet.

T.Y. LIN / MOFFATT & NICHOL
825 BATTERY STREET
SAN FRANCISCO, CA 94111

Caltrans now has a web site! To get to the web site, go to: http://www.dot.ca.gov

R. S. Bogha
DESIGN OVERSIGHT
K. S. Bogha

DESIGN: E. Chan — CHECKED: M. Lamont
DETAILS: E. Lo — CHECKED: M. Lamont
QUANTITIES: A. Yoder — CHECKED: S. Anguelova

PREPARED FOR THE STATE OF CALIFORNIA DEPARTMENT OF TRANSPORTATION

Salid Abbas
PROJECT ENGINEER

CU 04
EA 04-012021

BRIDGE NO. 34-0006L/R
KILOMETER POST 3.9/14.3, 0.0/1.6

SAN FRANCISCO OAKLAND BAY BRIDGE
EAST SPAN SEISMIC SAFETY PROJECT

SKYWAY STRUCTURES

GIRDER REINFORCEMENT NO. 3

SHEET 422

100 % PS&E

TIME PLOTTED => 08:55:06
DATE PLOTTED => 06 MAR 102
USERNAME => EALEWIS

STATE OF CALIFORNIA - DEPARTMENT OF TRANSPORTATION

CONTRACT CHANGE ORDER

Change Requested by: Engineer

CCO: 9	Suppl. No. 0	Contract No. 04 - 012024	Road 04-SF,Ala-80-' 13.9/14.3,0.0/1.6	FED. AID LOC.: ACIM-080-1(085)8N

To: **KIEWIT / FCI / MANSON a JV**

You are directed to make the following changes from the plans and specifications or do the following described work not included in the plans and specifications for this contract. ***NOTE: This change order is not effective until approved by the Engineer.***

Description of work to be done, estimate of quantities and prices to be paid. (Segregate between additional work at contract price, agreed price and force account.) Unless otherwise stated, rates for rental of equipment cover only such time as equipment is actually used and no allowance will be made for idle time. This last percentage shown is the net accumulated increase or decrease from the original quantity in the Engineer's Estimate

Adjustment of Compensation at Lump Sum:

The Contractor and the Department of Transportation have agreed that the modifications shown in the revised 41 drawings in this change order are minor changes and will not affect the schedule of the project. These changes shall not slow down or stop progress on any other working drawing submittal. The Contractor agrees to accept a lump sum amount of $28,809.00 as payment for all direct and indirect costs and all associated project impacts including Time Related Overheac (TRO) expenses.

No additional compensation shall be provided for any impacts, delays, or overhead as a result of these changes or future potential changes.

Estimated cost of Adjustment of Compensation at Lump Sum $28,809.00

Estimated Cost: Increase ☑ Decrease ☐ **$28,809.00**

By reason of this order the time of completion will be adjusted as follows: 0 days

Submitted by

Signature	Resident Engineer: COE D.	Date 10-16-02

Approval Recommended by

Signature	Construction Engineer: COE D.	Date

Engineer Approval by

Signature	(Print name and title) for PETER SIEGENTHALER - Chief	Date 4/17/03

We the undersigned contractor, have given careful consideration to the change proposed and agree, if this proposal is approved, that we will provide all equipment, furnish the materials, except as may otherwise be noted above, and perform all services necessary for the work above specified, and will accept as full payment therefor the prices shown above.

NOTE: If you, the contractor, do not sign acceptance of this order, your attention is directed to the requirements of the specifications as to proceeding with the ordered work and filing a written protest within the time therein specified.

Contractor Acceptance by

Signature	(Print name and title) A.T. Skoro, Project Director	Date 10/30/02

STATE OF CALIFORNIA - DEPARTMENT OF TRANSPORTATION

CONTRACT CHANGE ORDER MEMORANDUM

DATE: 12/17/02

TO: PETER SIEGENTHALER / COE D.	FILE: E.A. 04 - 012024
FROM: COE D.	CO-RTE-PM 04-SF,Ala-80-13.9/14.3,0.0/1.6
	FED. NO. ACIM-080-1(085)8N
CCO# 9 SUPPLEMENT#: 0 Category Cod **CHPA**	CONTINGENCY BALANCE (Incl. this change **$52,927,820.27**
COST: **$28,809.00** INCREASE ☑ DECREASE ☐	HEADQUARTERS APPROVAL REQUIRED? ☐ YES ☑ NO
SUPPLEMENTAL FUNDS PROVIDED: **$0.00**	IS THIS REQUEST IN ACCORDANCE WITH ENVIRONMENTAL DOCUMENTS? ☑ YES ☐ NO
CCO DESCRIPTION: Minor Changes (41 shts)	**PROJECT DESCRIPTION:** REPLACE SFOBB EAST SPAN

LOCATION: IN SAN FRANCISCO AND ALAMEDA COUNTIES IN SAN FRANCISCO AND OAKLAND FROM 1.3 KM EAST OF THE YERBA BUENA ISL

THIS CHANGE ORDER PROVIDES FOR:

revising 41 sheets of the contract plans. The minor changes were discovered by the Design team prior to bid; however, it was decided that these changes would be processed through the contract change order process in lieu of an addendum.

On the 41 sheets, the minor changes deal primarily with bridge drainage, tendon locations, and bridge segments located at each hinge. The changes include the addition, deletion, and adjustment of plan sheet dimensions and notes regarding these areas of concern. Other changes include the deletion of a roadway sign and the adjustment and addition of reinforcing steel.

A direct unit cost analysis of the Contractor's proposal for these numerous minor changes is on file in the project records, and it has been found to be fair and reasonable by the Engineer.

As this work does not involve the controlling operations, there is no adjustment in the contract time.

Maintenance concurrence is not required as this work involves minor adjustments to the approved contract plans.

CONCURRED BY:		
Construction Engineer: Douglas Coe	Date	
Bridge Engineer:	Date	
FHWA Representative: Bill Wong	Date	8/7/02
Project Engineer:	Date	
Other (specify):	Date	
	Date	
	Date	
District Prior Approval By:	Date	
HQ (Issue Approve) By:	Date	
Resident Engineer's Signature:	Date	4-7-03

ESTIMATE OF COST

	THIS REQUEST	TOTAL TO DATE
ITEMS	$0.00	$0.00
FORCE ACCOUNT	$0.00	$0.00
AGREED PRICE	$0.00	$0.00
ADJUSTMENT	$28,809.00	$28,809.00
TOTAL	$28,809.00	$28,809.00

FEDERAL PARTICIPATION

☑ PARTICIPATING ☐ PARTICIPATING IN PART ☐ NONE
☐ NON-PARTICIPATING (MAINTENANCE) ☐ NON-PARTICIPATING

FEDERAL SEGREGATION (If more than one Funding Source or P.I.P. type)
☑ CCO FUNDED PER CONTRACT ☐ CCO FUNDED AS FOLLOWS

FEDERAL FUNDING SOURCE PERCENT

RECEIVED
007033 MAY-8 02

STATE OF CALIFORNIA - DEPARTMENT OF TRANSPORTATION

CONTRACT CHANGE ORDER

Change Requested by: Engineer

CCO: 10	Suppl. No. 0	Contract No. 04 - 012024	Road 04-SF,Ala-80-13.9/14.3,0.0/1.6	FED. AID LOC.: ACIM-080-1(085)8N

To: KIEWIT / FCI / MANSON a JV

You are directed to make the following changes from the plans and specifications or do the following described work not included in the plans and specifications for this contract. ***NOTE: This change order is not effective until approved by the Engineer.***

Description of work to be done, estimate of quantities and prices to be paid. (Segregate between additional work at contract price, agreed price and force account.) Unless otherwise stated, rates for rental of equipment cover only such time as equipment is actually used and no allowance will be made for idle time. This last percentage shown is the net accumulated increase or decrease from the original quantity in the Engineer's Estimate

Extra Work at Lump Sum:

Perform additional dredging of materials within the access channel, as shown on sheet 24 of 978 of the contract plans, that were naturally deposited over time since the original bathymetric survey was performed (May 2000). Disposal of materials shall be at the offshore deep ocean site (SF-DODS) location or upland at Winter Island, and payment for transport and disposal is included in this Change Order.

For this work the contractor will be paid the lump sum of $1,200,410.00. This sum constitutes full and complete compensation including all markups for this change.

Extra Work at Lump Sum $1,200,410.00

Estimated Cost: Increase ☑ Decrease ☐ $1,200,410.00

By reason of this order the time of completion will be adjusted as follows: 0 days

Submitted by

Signature	Resident Engineer: COE D.	Date 9-6-02

Approval Recommended by

Signature	Construction Engineer: COE D.	Date

Engineer Approval by

Signature	(Print name and title) PETER SIEGENTHALER - Chief	Date

We the undersigned contractor, have given careful consideration to the change proposed and agree, if this proposal is approved, that we will provide all equipment, furnish the materials, except as may otherwise be noted above, and perform all services necessary for the work above specified, and will accept as full payment therefor the prices shown above.

NOTE: If you, the contractor, do not sign acceptance of this order, your attention is directed to the requirements of the specifications as to proceeding with the ordered work and filing a written protest within the time therein specified.

Contractor Acceptance by

Signature	(Print name and title) A.T. Okoro, Project Director	Date 9/18/02

STATE OF CALIFORNIA - DEPARTMENT OF TRANSPORTATION

CONTRACT CHANGE ORDER MEMORANDUM

DATE: 9/6/02

TO: PETER SIEGENTHALER / COE D.

FROM: COE D.

FILE: E.A. 04 - 012024
CO-RTE-PM 04-SF,Ala-80-13.9/14.3,0.0/1.6
FED. NO. ACIM-080-1(085)8N

CCO#: 10 | SUPPLEMENT#: 0 | Category Code: 3G3

CONTINGENCY BALANCE (incl. this change) $53,656,832.53

COST: $1,200,410.00 INCREASE ☑ DECREASE ☐

HEADQUARTERS APPROVAL REQUIRED? ☑ YES ☐ NO

SUPPLEMENTAL FUNDS PROVIDED: $0.00

IS THIS REQUEST IN ACCORDANCE WITH ENVIRONMENTAL DOCUMENTS? ☑ YES ☐ NO

CCO DESCRIPTION:
Dredging Quantity Increase

PROJECT DESCRIPTION:
REPLACE SFOBB EAST SPAN

LOCATION: IN SAN FRANCISCO AND ALAMEDA COUNTIES IN SAN FRANCISCO AND OAKLAND FROM 1.3 KM EAST OF THE

THIS CHANGE ORDER PROVIDES FOR:

additional compensation to the Contractor for dredging and disposing additional quantities of material that have accummulated since the May 2000 bathymetry survey was completed.

This project consists of the construction of the East Span Skyway; the scope of work includes dredging to provide access for the contractor's marine fleet; installation of 28 new piers including 160 CISS piles and pier footings; installation of concrete pier tables; and a precast concrete segmented bridge structure.

During the design phase of this project, Caltrans had a bathymetric survey performed to determine the dredging required to allow access for the construction of the East Span Skyway. This survey was performed in May, 2000. The result of this survey showed removal of 85,000 cubic meters of Bay bottom material. The most current survey shows the Bay floor elevation has changed. The Bay floor has risen an average of 0.12 meters over the area designated for access dredging. In addition, at the West end of the access dredging area, the Bay floor surface is above the target dredge elevation and this area will now require dredging. The benchmark elevation used for the May, 2000 survey was found to be 0.04 meters higher than the current survey; this information was confirmed by the Caltrans Survey group. Additional investigation revealed an error in the datum used for the marine survey; this error also made the anticipated Bay bottom elevations higher than the current survey. The additional quantity of material to be dredged, hauled, and disposed is 37,900 cubic meters. This dredged material will be disposed at an offshore location (SF-DODS) or upland at Winter Island.

For this work, the contractor will be paid the lump sum of $1,200,410.00. This sum constitutes full and complete compensation including all markups for this change. Since the access dredging operation is included in the mobilization item, there is to be no adjustment in Contract Items at contract Unit Prices. A detailed estimate of the additional quantities is included in the contract.

This additional work will require additional time for the dredging operation, but proper sequencing of this work will allow this change not to affect the overall project schedule. No additional contract time will be granted for this change order.

Maintenance concurrence is not required as this work does not effect any permanent Caltrans structure.
This change order has concurrence from Bill Wong/FHWA.

CONCURRED BY:

Construction Engineer:	Douglas Coe	Date	9/6/02
Bridge Engineer:	N/A	Date	
FHWA Representative:	Bill Wong	Date	8/7/02
Project Engineer:		Date	
Other (specify):		Date	
		Date	
		Date	
District Prior Approval By:		Date	
HQ (Issue Approve) By:		Date	
Resident Engineer's Signature:		Date	9-18-02

ESTIMATE OF COST

	THIS REQUEST	TOTAL TO DATE
ITEMS	$0.00	$0.00
FORCE ACCOUNT	$0.00	$0.00
AGREED PRICE	$1,200,410.00	$1,200,410.00
ADJUSTMENT	$0.00	$0.00
TOTAL	$1,200,410.00	$1,200,410.00

FEDERAL PARTICIPATION

☑ PARTICIPATING ☐ PARTICIPATING IN PART ☐ NONE
☐ NON-PARTICIPATING (MAINTENANCE) ☐ NON-PARTICIPATING

FEDERAL SEGREGATION (if more than one Funding Source or P.I.P. type)
☑ CCO FUNDED PER CONTRACT ☐ CCO FUNDED AS FOLLOWS

FEDERAL FUNDING SOURCE PERCENT

STATE OF CALIFORNIA - DEPARTMENT OF TRANSPORTATION

CONTRACT CHANGE ORDER MEMORANDUM

DATE: 5/14/03 Page 1 of 1

TO: PETER SIEGENTHALER / COE D.	FILE: E.A. 04 - 012024
FROM: COE D.	CO-RTE-PM 04-SF,Ala-80-13.9/14.3,0.0/1.6
	FED. NO. ACIM-080-1(085)8N
CCO#: 11 SUPPLEMENT#: 0 Category Code: AWZZ	CONTINGENCY BALANCE (incl. this change) $53,664,485.80
COST: $100,000.00 INCREASE ☑ DECREASE ☐	HEADQUARTERS APPROVAL REQUIRED? ☐ YES ☑ NO
SUPPLEMENTAL FUNDS PROVIDED: $100,000.00	IS THIS REQUEST IN ACCORDANCE WITH ENVIRONMENTAL DOCUMENTS? ☑ YES ☐ NO
CCO DESCRIPTION: Security Measures	**PROJECT DESCRIPTION:** REPLACE SFOBB EAST SPAN

LOCATION: IN SAN FRANCISCO AND ALAMEDA COUNTIES IN SAN FRANCISCO AND OAKLAND FROM 1.3 KM EAST OF THE YERBA BUENA ISL

THIS CHANGE ORDER PROVIDES FOR:

providing security measures on the Caltrans Maintenance road in the vicinity of the eastern touchdown of the San Francisco Oakland Bay Bridge (SFOBB) as determined by the Engineer pursuant to Section 5-1.36, "Photo Identification System," of the Special Provisions. KFM will maintain 24-hour security including weekends and holidays at the southern gate on the Caltrans Maintenance road. The guard posted at this gate will only allow individuals with photo identifications to enter.

This change is necessary to provide security measures to control access on the Caltrans Maintenance road to protect the SFOBB eastern touchdown. KFM will coordinate with this contract and other upcoming contracts. The list of companies and agencies eligible for entry will be maintained at the KFM office in cooperation with Caltrans.

KFM will also provide night security service at the gate of Pier 7 during the week and 24-hour security on the weekends and holidays. This security is required for the administrative offices for Caltrans and KFM. This cost will be shared equally between Caltrans and KFM.

This work is not covered by any contract items; therefore, payment for this work will be at Extra Work at Force Account for an estimated cost of $100,000.00. The Extra Work can be financed from the contract supplemental funds, $100,000.00 which were allotted for this work.

No adjustment of contract time is warranted as this change does not affect the controlling operation.

Design and Maintenance concurrence is not necessary since this change is contemplated in the contract.

RECEIVED JUL 10 2003

CONCURRED BY:		
Construction Engineer: Douglas Coe		Date
Bridge Engineer:		Date
FHWA Representative:		Date
Project Engineer:		Date
Other (specify):		Date
		Date
		Date
District Prior Approval By:		Date
HQ (Issue Approve) By:		Date
Resident Engineer's Signature:		Date 5-28-03

ESTIMATE OF COST

	THIS REQUEST	TOTAL TO DATE
ITEMS	$0.00	$0.00
FORCE ACCOUNT	$100,000.00	$100,000.00
AGREED PRICE	$0.00	$0.00
ADJUSTMENT	$0.00	$0.00
TOTAL	$100,000.00	$100,000.00

FEDERAL PARTICIPATION

☑ PARTICIPATING ☐ PARTICIPATING IN PART ☐ NONE
☐ NON-PARTICIPATING (MAINTENANCE) ☐ NON-PARTICIPATING

FEDERAL SEGREGATION (if more than one Funding Source or P.I.P. type)
☑ CCO FUNDED PER CONTRACT ☐ CCO FUNDED AS FOLLOWS

FEDERAL FUNDING SOURCE PERCENT

STATE OF CALIFORNIA - DEPARTMENT OF TRANSPORTATION

CONTRACT CHANGE ORDER

Change Requested by: Engineer

CCO: 11	Suppl. No. 0	Contract No. 04 - 012024	Road 04-SF,Ala-80-13.9/14.3,0.0/1.6	FED. AID LOC.: ACIM-080-1(085)8N

To: KIEWIT / FCI / MANSON a JV

You are directed to make the following changes from the plans and specifications or do the following described work not included in the plans and specifications for this contract. ***NOTE: This change order is not effective until approved by the Engineer.***

Description of work to be done, estimate of quantities and prices to be paid. (Segregate between additional work at contract price, agreed force account.) Unless otherwise stated, rates for rental of equipment cover only such time as equipment is actually used and no allowance made for idle time. This last percentage shown is the net accumulated increase or decrease from the original quantity in the Engineer's Estimc

Extra Work at Force Account:

Provide access control measures as determined by the Engineer in accordance with Section 5-1.36, "Photo Identification System" of the Special Provisions, and as follows:

1. Maintain and coordinate 24-hour security at the southern gate on the Caltrans Maintenance road in the vicinity of the eastern touchdown of the San Francisco Oakland Bay Bridge.

2. Provide night security at the Pier 7 gate during the week and 24-hour security on weekends and holidays. This cost to be shared 50% State, 50% KFM.

Estimated cost of Extra Work at Force Account $100,000.00

Estimated Cost: Increase ☑ Decrease ☐ $100,000.00

By reason of this order the time of completion will be adjusted as follows: 0 days

Submitted by

Signature	Resident Engineer: COE D.	Date 5-29-03

Approval Recommended by

Signature	Construction Engineer: COE D.	Date 5-29-03

Engineer Approval by

Signature Peter Siegenthaler	(Print name and title) PETER SIEGENTHALER - Chief	Date

We the undersigned contractor, have given careful consideration to the change proposed and agree, if this proposal is approved, that we will pr equipment, furnish the materials, except as may otherwise be noted above, and perform all services necessary for the work above specified, and as full payment therefor the prices shown above.

NOTE: If you, the contractor, do not sign acceptance of this order, your attention is directed to the requirements of the specifications as to proceeding with the ordered work and filing a written protest within the time therein specified.

Contractor Acceptance by

Signature	(Print name and title) A.T. Kiewit, Project Director	Date 6/5/03

California Department of Transportation

SFOBB New East Span

Contract: 04-012024, Skyway

CCO 11(2)

Deleted

STATE OF CALIFORNIA - DEPARTMENT OF TRAN RTATION

CONTRACT CHANGE ORDER

Change Requested by: Engineer

CCO: 12	Suppl. No. 0	Contract No. 04 - 012024	Road 04-SF,Ala-80-13.9/14.3,0.0/1.6	FED. AID LOC.: ACIM-080-1(085)8N

To: **KIEWIT / FCI / MANSON a JV**

You are directed to make the following changes from the plans and specifications or do the following described work not included in the plans and specifications for this contract. ***NOTE: This change order is not effective until approved by the Engineer.***

Description of work to be done, estimate of quantities and prices to be paid. (Segregate between additional work at contract price, agreed price and force account.) Unless otherwise stated, rates for rental of equipment cover only such time as equipment is actually used and no allowance will be made for idle time. This last percentage shown is the net accumulated increase or decrease from the original quantity in the Engineer's Estimate

Extra Work at Force Account:

As directed by the Engineer and in accordance with Section 4-1.03D, "Extra Work", and Section 9-1.03, "Force Account Payment," of the Standard Specifications and Section 5-1.21, "Force Account Payment," of the Special Provisions, provide the labor, materials, and equipment as necessary to perform all work to construct a Mock-up of Pier Table E12 for Bridge Number 34-0006 L; except that markups for labor, materials, equipment rental, and subcontractor markups as specified in Section 9-1.03A of the Standard Specifications and Section 5-1.21 of the Special Provisions shall not apply. Work to be performed shall include:

1. Prepare and submit for the Engineer's review and approval composite placing drawings to scale and in sufficient detail to show the relative positions of all items that are to be embedded in the concrete and their embedment depth. Such embedded items include the prestressing ducts; anchorage reinforcement and hardware; reinforcing steel; anchor bolts; drainage systems; and utility conduits. These drawings shall incorporate all revisions to date.

2. Prepare and submit for the Engineer's review and approval a rebar guying plan in accordance with Section 52-1.07, "Placing," of the Standard Specifications

3. Construct Column stub outs.

4. Furnish and Construct Pier Table Formwork.

5. Furnish and Install Bar Reinforcing Steel.

6. Furnish and Install Prestress System duct work.

7. Furnish and Install High Strength Rods.

8. Furnish and Install all Utility conduits.

CONTRACT CHANGE ORDER

Change Requested by: Engineer

CCO: 12	Suppl. No. 0	Contract No. 04 - 012024	Road 04-SF,Ala-80-13.9/14.3,0.0/1.6	FED. AID LOC.: ACIM-080-1(085)8N

9. Furnish and Install all embeds cast into concrete.

10. Cast a section of the Pier Table for the mock-up of the pier table diaphragm as specified in Section 10-1.27, 0/1.6 "Concrete Structures" "Demonstration Pours"

11. Demolish, remove and dispose of Pier Table Mock-up once no longer needed in accordance with Section 7-1.13, "Disposal of Material Outside the Highway Right of Way," of the Standard Specifications.

12. Should the Pier Table Mock-up work identify conflicts between embedded items, the Engineer will issue another change order to compensate the Contractor for modifing the contract plans and the operations to mitigate the impacts of the identified conflicts.

Estimated Cost of Extra Work at Force Account $619,000.00

Adjustment of Compensation at Lump Sum:

The State will accept a Lump-Sum payment of $68,000 for including the work involved in casting a mock-up for the pier table diaphragm as is specified in Section 10-1.27, "Concrete Structures" "Demonstration Pour" of the Special Provisions as part of constructing a Mock-up of Pier Table E12 for Bridge Number 34-0006 L.

Adjustment of compensation at Agreed Lump Sum ..... (-$68,000.00)

Total Estimated Cost $551,000.00

No additional contract time will be granted for this change order, as it does not affect the controlling operations.

Estimated Cost: Increase ☑ Decrease ☐ $551,000.00

By reason of this order the time of completion will be adjusted as follows: 0 days

Submitted by		
Signature	Resident Engineer: COE D.	Date 1-15-03
Approval Recommended by		
Signature	Construction Engineer: COE D.	Date
Engineer Approval by		
Signature	(Print name and title) PETER SIEGENTHALER - Chief	Date 4/9/03

We the undersigned contractor, have given careful consideration to the change proposed and agree, if this proposal is approved, that we will provide all equipment, furnish the materials, except as may otherwise be noted above, and perform all services necessary for the work above specified, and will accept as full payment therefor the prices shown above.

NOTE: If you, the contractor, do not sign acceptance of this order, your attention is directed to the requirements of the specifications as to proceeding with the ordered work and filing a written protest within the time therein specified.

Contractor Acceptance by		
Signature	(Print name and title) A. T. SKORO, Project Director	Date 1/16/03

STATE OF CALIFORNIA - DEPARTMENT OF TRANSPORTATION

CONTRACT CHANGE ORDER MEMORANDUM

TO: PETER SIEGENTHALER / COE D.	FILE: E.A. 04 - 012024
	CO-RTE-PM 04-SF,Ala-80-13.9/14.3,0.0/1.6
FROM: COE D.	FED. NO. ACIM-080-1(085)8N
CCO# 12 SUPPLEMENT#: 0 Category Cod **AWZZ**	CONTINGENCY BALANCE (incl. this change **$52,927,820.27**
COST: **$551,000.00** INCREASE ☑ DECREASE ☐	HEADQUARTERS APPROVAL REQUIRED? ☑ YES ☐ NO
SUPPLEMENTAL FUNDS PROVIDED: **$0.00**	IS THIS REQUEST IN ACCORDANCE WITH ENVIRONMENTAL DOCUMENTS? ☑ YES ☐ NO
CCO DESCRIPTION: Erect Full-Scale Pier Table Mock-up	**PROJECT DESCRIPTION:** REPLACE SFOBB EAST SPAN

LOCATION: IN SAN FRANCISCO AND ALAMEDA COUNTIES IN SAN FRANCISCO AND OAKLAND FROM 1.3 KM EAST OF THE YERBA BUENA ISL

THIS CHANGE ORDER PROVIDES FOR:

constructing a full-scale mock-up of pier table E12E for Bridge Number 34-0006 L/R. The pier table mock-up will demonstrate the constructability of a typical Pier Table using composite placing drawings for guidance. These composite placing drawings will integrate all embedded items and incorporate all adjustments to the contract plans to date.

Due to the complexity of pier tables, it is expected that there will be reinforcing and post-tensioning steel conflicts. Cast-in-place pier tables for a precast segmental bridge are typically highly congested areas with prestressing ductwork and anchorages, reinforcing steel, utility conduits, deck drain piping, and other concrete embeds. The Engineer, the Contractor, and the Designer have identified interference, congestion, and constructability issues using 3-D CAD software, scale drawings, and models and have mitigated some conflicts prior to construction. This approach, however, cannot identify all of the conflicts and fully address the constructability issues as well as a demonstration mock-up can. Because of the Contractor's tight schedule, sequence of work, and daily marine fleet costs in addition to a Time Related Overhead cost of $208,000 per day, any delay in constructing any of the 28 pier tables due to constructability problems would have a huge financial impact to the Project. Therefore, in order to minimize the Project's exposure to a potential delay, and to improve the quality of the work, it is proposed to construct a full-scale mock-up of a typical Skyway pier table (Pier Table E12E).

This Change Order is in partnership with the contractor and costs will be shared. The state will pay only direct costs. Costs will be reimbursed as Extra Work at Force Account in accordance with Section 9-1.03 of the Standard Specifications and Section 5-1.21, "Force Account Payment," of the Special Provisions except that no markups for labor, materials, equipment rental, or subcontractor markups will be allowed. The Contractor will build the mock-up under the direction of the Engineer, with oversight by the Design team, T.Y. Lin/Moffatt & Nichol, JV. This mock-up will be constructed on land in the North West corner of Pier 7 on land being rented from the State by the Contractor. The designer, T.Y. Lin/Moffatt & Nichol, JV, will have personnel on site full-time to help resolve conflicts and constructability issues as they arise. At the completion of this process, changes to the contract that have been identified and incorporated into the mock-up will be made and revised contract plans will be issued to the contractor for construction.

This full-scale mock-up will consist of creating composite placing drawings integrating all embedded items (such as prestressing duct work and anchorages, bar reinforcing steel, utility conduits, deck drain piping, and all other embeds), designing and constructing formwork, placing all embedded items and casting a section of the pier table as required for the pier table demonstration pour per Section 10-1.27, "Concrete Structures," Subsection, "Demonstration Pours" of the Special Provisions, and on sheet 902/978 of the contract plans. Full compensation for performing work involved in the Demonstration Pour of the Pier Table is included in the various items of work involved. It has been agreed upon that casting a section of the pier table mockup can be of value to all parties involved -- in order to resolve casting and vibration prodecures necessary to ensure homogenous concrete. Therefore, in order to incorporate the casting of a section of the pier table with this mock up exercise the contractor has agreed to return to the state a lump sum credit of $68,000. A force account analysis of this credited amount is on file.

A force account analysis of the cost estimate of $619,000.00 is on file.

No additional contract time will be granted for this change order, as it does not affect the controlling operations.

Maintenance concurrence is not required, as this change order does not affect any permanent work.

FHA approval was received on November 18, 2002.

CONCURRED BY:		
Construction Engineer:	Douglas Coe	Date 12/5/02
Bridge Engineer:		Date
FHWA Representative:	Bill Wong	Date 11/19/02
Project Engineer:		Date
Other (specify):		Date
		Date
		Date
District Prior Approval By:		Date
HQ (Issue Approve) By:		Date
Resident Engineer's Signature:		Date 12-6-02

ESTIMATE OF COST

	THIS REQUEST	TOTAL TO DATE
ITEMS	$0.00	$0.00
FORCE ACCOUNT	$619,000.00	$619,000.00
AGREED PRICE	$0.00	$0.00
ADJUSTMENT	($68,000.00)	($68,000.00)
TOTAL	$551,000.00	$551,000.00

FEDERAL PARTICIPATION

☑ PARTICIPATING ☐ PARTICIPATING IN PART ☐ NONE
☐ NON-PARTICIPATING (MAINTENANCE) ☐ NON-PARTICIPATING

FEDERAL SEGREGATION (if more than one Funding Source or P.I.P. type)
☑ CCO FUNDED PER CONTRACT ☐ CCO FUNDED AS FOLLOWS

FEDERAL FUNDING SOURCE	PERCENT

STATE OF CALIFORNIA - DEPARTMENT OF TRANSPORTATION

CONTRACT CHANGE ORDER MEMORANDUM

DATE: 5/27/03 Page 1 of 1

TO: PETER SIEGENTHALER / COE D.	FILE: E.A. 04 - 012024
FROM: COE D.	CO-RTE-PM 04-SF,Ala-80-13.9/14.3,0.0/1.6
	FED. NO. ACIM-080-1(085)8N
CCO#: 12 SUPPLEMENT#: 1 Category Code: BZZZ	CONTINGENCY BALANCE (incl. this change) $63,881,109.32
COST: $300,000.00 INCREASE ☑ DECREASE ☐	HEADQUARTERS APPROVAL REQUIRED? ☑ YES ☐ NO
SUPPLEMENTAL FUNDS PROVIDED: $0.00	IS THIS REQUEST IN ACCORDANCE WITH ENVIRONMENTAL DOCUMENTS? ☑ YES ☐ NO
CCO DESCRIPTION: Pier Table Mock-up Constructability	**PROJECT DESCRIPTION:** REPLACE SFOBB EAST SPAN

LOCATION: IN SAN FRANCISCO AND ALAMEDA COUNTIES IN SAN FRANCISCO AND OAKLAND FROM 1.3 KM EAST OF THE YERBA BUENA ISL

THIS CHANGE ORDER PROVIDES FOR:

constructing a full-scale mock-up of pier table E12E for Bridge Number 34-0006 L/R. The pier table mock-up will demonstrate the constructability of a typical Pier Table using composite placing drawings for guidance. These composite placing drawings will integrate all embedded items and incorporate all adjustments to the contract plans to date.

The current Change Order force account amount is $551,000.00. The accrued cost through April 2003 is $628,784.99. There will be additional charges as the mock-up is revealing many conflict and constructability issues extending the engineering, construction, and material costs.

Estimated cost at Force Account for Supplement No. 1 is $300,000.00.

There will be no adjustment in Contract time as this change order does not affect the controlling operation.

Maintenance concurrence is not required, as this change order does not affect any permanent work.

FHWA approval was received on May 19, 2003.

RECEIVED 03 JUL 10 008839

CONCURRED BY:		
Construction Engineer:		Date
Bridge Engineer:		Date
FHWA Representative:	Nancy Bobb	Date
Project Engineer:		Date
Other (specify):		Date
		Date
		Date
District Prior Approval By:		Date
HQ (Issue Approve) By:		Date
Resident Engineer's Signature:		Date 5-28-03

ESTIMATE OF COST

	THIS REQUEST	TOTAL TO DATE
ITEMS	$0.00	$0.00
FORCE ACCOUNT	$300,000.00	$919,000.00
AGREED PRICE	$0.00	$0.00
ADJUSTMENT	$0.00	($68,000.00)
TOTAL	$300,000.00	$851,000.00

FEDERAL PARTICIPATION

☑ PARTICIPATING ☐ PARTICIPATING IN PART ☐ NONE
☐ NON-PARTICIPATING (MAINTENANCE) ☐ NON-PARTICIPATING

FEDERAL SEGREGATION (if more than one Funding Source or P.I.P. type)
☑ CCO FUNDED PER CONTRACT ☐ CCO FUNDED AS FOLLOWS

FEDERAL FUNDING SOURCE	PERCENT

STATE OF CALIFORNIA - DEPARTMENT OF TRANSPORTATION

CONTRACT CHANGE ORDER

Change Requested by: Engineer

CCO: 12	Suppl. No. 2	Contract No. 04 - 012024	Road 04-SF,Ala-80-13.9/14.3,0.0/1.6	FED. AID LOC.: ACIM-080-1(085)8N

To: KIEWIT / FCI / MANSON a JV

You are directed to make the following changes from the plans and specifications or do the following described work not included in the plans and specifications for this contract. ***NOTE: This change order is not effective until approved by the Engineer.***

Description of work to be done, estimate of quantities and prices to be paid. (Segregate between additional work at contract price, agreed price and force account.) Unless otherwise stated, rates for rental of equipment cover only such time as equipment is actually used and no allowance will be made for idle time. This last percentage shown is the net accumulated increase or decrease from the original quantity in the Engineer's Estimate.

Extra Work at Force Account:

Provide Additional Funds $700,000.00

Estimated Cost: Increase ☑ Decrease ☐ $700,000.00

By reason of this order the time of completion will be adjusted as follows: 0 days

Submitted by

Signature	Resident Engineer: COE D.	Date 2-18-03

Approval Recommended by

Signature	Construction Engineer: COE D.	Date 2-19-03

Engineer Approval by

Signature	(Print name and title) PETER SIEGENTHALER - Chief	Date 2/11/03

We the undersigned contractor, have given careful consideration to the change proposed and agree, if this proposal is approved, that we will provide all equipment, furnish the materials, except as may otherwise be noted above, and perform all services necessary for the work above specified, and will accept as full payment therefor the prices shown above.

NOTE: If you, the contractor, do not sign acceptance of this order, your attention is directed to the requirements of the specifications as to proceeding with the ordered work and filing a written protest within the time therein specified.

Contractor Acceptance by

Signature	(Print name and title) A.T. Sicilia, Project Director	Date [illegible]

STATE OF CALIFORNIA - DEPARTMENT OF TRANSPORTATION

CONTRACT CHANGE ORDER MEMORANDUM

DATE: 8/15/2003 Page 1 of 1

TO: PETER SIEGENTHALER / COE D.	FILE: E.A. 04 - 012024
	CO-RTE-PM 04-SF,Ala-80-13.9/14.3,0.0/1.6
FROM: COE D.	FED. NO. ACIM-080-1(085)8N
CCO#: 12 SUPPLEMENT#: 2 Category Code: BZZZ	CONTINGENCY BALANCE (incl. this change) $42,008,037.50
COST: $600,000.00 INCREASE ☑ DECREASE ☐	HEADQUARTERS APPROVAL REQUIRED? ☑ YES ☐ NO
SUPPLEMENTAL FUNDS PROVIDED: $0.00	IS THIS REQUEST IN ACCORDANCE WITH ENVIRONMENTAL DOCUMENTS? ☑ YES ☐ NO
CCO DESCRIPTION: Erect Full-Scale Pier Table Mock-up	PROJECT DESCRIPTION: REPLACE SFOBB EAST SPAN

LOCATION: IN SAN FRANCISCO AND ALAMEDA COUNTIES IN SAN FRANCISCO AND OAKLAND FROM 1.3 KM EAST OF THE YERBA BUENA ISL

THIS CHANGE ORDER PROVIDES FOR:

Increasing the Extra Work estimate for the Pier Table Mock-up by $600,000.00 (from $851,000.00 to $1,451,000.00).

The original mock-up estimate is $551,000.00 and was increased to $851,000 by Supplement 1 due to additional charges when the mock-up revealed many conflicts and constructibility issues extending construction and materials costs.

As work progressed more conflicts were identified. There is little to no tolerance to accommodate the embedded items. A partially completed mock-up revealed reinforcing steel and ducts stacked one on top of another with no room for error or standard fabrication tolerances. Prior to commencing the mock-up work, ninety-seven (97) issues related to constructibility problems and reinforcing steel conflicts were brought to the attention of the Engineer by the Contractor. During the course of the mock-up work, an additional sixty-six (66) issues surfaced. Each of these additional issues have taken one to seven days to resolve, the majority requiring the Designer, TYLin, to research design notes and perform calculations. None of the additional issues would have been apparent if it had not been for the mock-up.

The accrued cost through June 17, 2003 is $978,000.00, exceeding the estimation of $851,000.00. Now that the Mock-up project is coming to a close, the final charges are estimated at $1,451,000.00. No additional Supplements are anticipated.

Considering one week of possible delay for building a pier table (assuming Time Related Overhead and marine fleet delays equal to approximately $400,000 per day) would result in a cost of $2 million. Therefore approval of Supplement 2 is recommended by Construction.

Concurrence from FHWA was obtained on 7/15/03. Maintenance concurrence is not required because this work is not related to any permanent Caltrans facility.

Payment for this work under Supplement 2 will be at Extra Work Force Account for an estimate cost of $600,000.00 which will be financed from the contingency fund. No adjustment of contract time is warranted, as this change does not affect the controlling operation.

CONCURRED BY:		
Construction Engineer: Douglas Coe	Date 7/15/03	
Bridge Engineer:	Date	
FHWA Representative: Nancy Bobb	Date7/15/2003	
Project Engineer:	Date	
Other (specify):	Date	
	Date	
	Date	
District Prior Approval By:	Date	
HQ (Issue Approve)By: Patrick Bockari	Date7/31/2003	
Resident Engineer's Signature	Date	

ESTIMATE OF COST	THIS REQUEST	TOTAL TO DATE
ITEMS	$0.00	$0.00
FORCE ACCOUNT	$600,000.00	$1,519,000.00
AGREED PRICE	$0.00	$0.00
ADJUSTMENT	$0.00	($68,000.00)
TOTAL	$600,000.00	$1,451,000.00

FEDERAL PARTICIPATION

☑ PARTICIPATING ☐ PARTICIPATING IN PART ☐ NONE

☐ NON-PARTICIPATING (MAINTENANCE) ☐ NON-PARTICIPATING

FEDERAL SEGREGATION (if more than one Funding Source or P.I.P. type)

☑ CCO FUNDED PER CONTRACT ☐ CCO FUNDED AS FOLLOWS

FEDERAL FUNDING SOURCE	PERCENT

STATE OF CALIFORNIA - DEPARTMENT OF TRANSPORTATION

CONTRACT CHANGE ORDER

Change Requested by: Engineer

CCO: 13	Suppl. No. 0	Contract No. 04 - 012024	Road 04-SF,Ala-80-13.9/14.3,0.0/1.6	FED. AID LOC.: ACIM-080-1(085)8N

To: KIEWIT / FCI / MANSON a JV

You are directed to make the following changes from the plans and specifications or do the following described work not included in the plans and specifications for this contract. ***NOTE: This change order is not effective until approved by the Engineer.***

Description of work to be done, estimate of quantities and prices to be paid. (Segregate between additional work at contract price, agreed price and force account.) Unless otherwise stated, rates for rental of equipment cover only such time as equipment is actually used and no allowance will be made for idle time. This last percentage shown is the net accumulated increase or decrease from the original quantity in the Engineer's Estimate

Adjustment of Compensation at Lump Sum:

Additional compensation to the contractor, Kiewit-FCI-Manson, JV (KFM), for construction of a precast concrete test beam and shipment of the beam to the University of California, San Diego for testing.

For this work, the contractor will be paid the lump sum of $55,876.28. This sum constitutes full and complete compensation, including all markups for this change. There is no adjustment in Contract Items at contract Unit Prices.

There will be no time adjustment by reason of this change order since the work involved will not affect the controlling operation.

Estimated Cost: Increase ☑ Decrease ☐ $55,876.28

By reason of this order the time of completion will be adjusted as follows: 0 days

Submitted by

Signature	Resident Engineer: COE D.	Date 11-13-02

Approval Recommended by

Signature	Construction Engineer: COE D.	Date 11-13-02

Engineer Approval by

Signature	(Print name and title) PETER SIEGENTHALER - Chief	Date 11/13/02

We the undersigned contractor, have given careful consideration to the change proposed and agree, if this proposal is approved, that we will provide all equipment, furnish the materials, except as may otherwise be noted above, and perform all services necessary for the work above specified, and will accept as full payment therefor the prices shown above.

NOTE: If you, the contractor, do not sign acceptance of this order, your attention is directed to the requirements of the specifications as to proceeding with the ordered work and filing a written protest within the time therein specified.

Contractor Acceptance by

Signature	(Print name and title) A.T. SKORO	Date 12/11/02

STATE OF CALIFORNIA - DEPARTMENT OF TRANSPORTATION

CONTRACT CHANGE ORDER MEMORANDUM

DATE: 11/13/2002 Page 1 of 1

TO: PETER SIEGENTHALER / COE D.	FILE: E.A. 04 - 012024
	CO-RTE-PM 04-SF,Ala-80-13.9/14.3,0.0/1.6
FROM: COED.	FED. NO. ACIM-080-1(085)8N
CCO#: 13 SUPPLEMENT#: 0 Category Code: 6A3	CONTINGENCY BALANCE (incl. this change) $52,927,820.27
COST: $55,876.28 INCREASE ☑ DECREASE ☐	HEADQUARTERS APPROVAL REQUIRED? ☐ YES ☑ NO
SUPPLEMENTAL FUNDS PROVIDED: $0.00	IS THIS REQUEST IN ACCORDANCE WITH ENVIRONMENTAL DOCUMENTS? ☑ YES ☐ NO
CCO DESCRIPTION: Precast Beam Mock-up	**PROJECT DESCRIPTION:** REPLACE SFOBB EAST SPAN

LOCATION: IN SAN FRANCISCO AND ALAMEDA COUNTIES IN SAN FRANCISCO AND OAKLAND FROM 1.3 KM EAST OF THE YERBA BUENA ISL

THIS CHANGE ORDER PROVIDES FOR:

compensating the contractor (KFM, a JV) for additional costs incurred in the construction of a precast concrete test beam for the SFOBB Skyway Project and shipment of this beam to the University of California, San Diego. Due to the design change in Contract Change Order No. 7 for the SFOBB Skyway, the new top deck closure design required additional testing of components of this precast segmental bridge.

The adjustment in compensation at agreed lump sum is based on force account costs for building the test beam and transportation of the beam to San Diego. Records and calculations used to determine the adjustment in compensation are on file in the project records.

Total cost of this work is $55,876.28.

This change order has been discussed and concurred by Mr. Ade Akinsanya (CALTRANS.)

Maintenance concurrence for this change order is not required.

No time adjustment is warranted for this change, as it does not affect the controlling operation.

CONCURRED BY:		
Construction Engineer: Douglas Coe	Date 1/13/2002	
Bridge Engineer:	Date	
FHWA Representative:	Date	
Project Engineer:	Date	
Other (specify):	Date	
Ade Akinsanya	Date 1/19/2002	
	Date	
District Prior Approval By:	Date	
HQ (Issue Approve) By:	Date	
Resident Engineer's Signature: 12-5-02	Date	

ESTIMATE OF COST		
	THIS REQUEST	TOTAL TO DATE
ITEMS	$0.00	$0.00
FORCE ACCOUNT	$0.00	$0.00
AGREED PRICE	$0.00	$0.00
ADJUSTMENT	$55,876.28	$55,876.28
TOTAL	$55,876.28	$55,876.28

FEDERAL PARTICIPATION

☑ PARTICIPATING ☐ PARTICIPATING IN PART ☐ NONE

☐ NON-PARTICIPATING (MAINTENANCE) ☐ NON-PARTICIPATING

FEDERAL SEGREGATION (if more than one Funding Source or P.I.P. type)

☑ CCO FUNDED PER CONTRACT ☐ CCO FUNDED AS FOLLOWS

FEDERAL FUNDING SOURCE PERCENT

RECEIVED FEB 21 03

004830

49.013

STATE OF CALIFORNIA - DEPARTMENT OF TRANSPORTATION

CONTRACT CHANGE ORDER

Change Requested by: Engineer

CCO: 14	Suppl. No. 0	Contract No. 04 - 012024	Road 04-SF,Ala-80-13.9/14.3,0.0/1.6	FED. AID LOC.: ACIM-080-1(085)8N

Estimated Cost: Increase ☑ Decrease ☐ $475,200.00

By reason of this order the time of completion will be adjusted as follows: 0 days

Submitted by		
Signature	Resident Engineer: COE D.	Date 12-18-03
Approval Recommended by		
Signature	Construction Engineer: COE D.	Date 12-18-03
Engineer Approval by		
Signature	(Print name and title) PETER SIEGENTHALER - Chief	Date 7-4-04

We the undersigned contractor, have given careful consideration to the change proposed and agree, if this proposal is approved, that we will provide all equipment, furnish the materials, except as may otherwise be noted above, and perform all services necessary for the work above specified, and will accept as full payment therefor the prices shown above.

NOTE: If you, the contractor, do not sign acceptance of this order, your attention is directed to the requirements of the specifications as to proceeding with the ordered work and filing a written protest within the time therein specified.

Contractor Acceptance by		
Signature	(Print name and title) A. T. Skoro, Project Director	Date 7/16/04

STATE OF CALIFORNIA - DEPARTMENT OF TRANSPORTATION

CONTRACT CHANGE ORDER MEMORANDUM

TO: PETER SIEGENTHALER / COE D.	FILE: E.A. 04 - 012024 CO-RTE-PM 04-SF,Ala-80-13.9/14.3,0.0/1.6
FROM: COE D.	FED. NO. ACIM-080-1(085)8N
CCO#: 14 SUPPLEMENT#: 0 Category Code: CHSA	CONTINGENCY BALANCE (incl. this change) $52,927,820.27
COST: $475,200.00 INCREASE ☑ DECREASE ☐	HEADQUARTERS APPROVAL REQUIRED? ☑ YES ☐ NO
SUPPLEMENTAL FUNDS PROVIDED: $0.00	IS THIS REQUEST IN ACCORDANCE WITH ENVIRONMENTAL DOCUMENTS? ☑ YES ☐ NO
CCO DESCRIPTION: Bridge Pier Concrete Spec Change	**PROJECT DESCRIPTION:** REPLACE SFOBB EAST SPAN

LOCATION: IN SAN FRANCISCO AND ALAMEDA COUNTIES IN SAN FRANCISCO AND OAKLAND FROM 1.3 KM EAST OF THE YERBA BUENA ISL

THIS CHANGE ORDER PROVIDES FOR:
increasing the water/cement (w/c) ratio from 0.40 to 0.50 and adding 6% of entrained air to the pier column structural concrete for the SFOBB East Span Skyway, Bridge Nos. 34-0006L/R, and for compensating the Contractor's quality control personnel to monitor and ensure the proper air content of the pier column concrete. The entrained air shall be provided with an "Operating Range" of 4% to 9% and a "Contract Compliance" range of 3% to 10%.

The contract documents do not provide an upper limit for compressive strength or modulus of elasticity of the pier column concrete. An upper limit is necessary to avoid overstressing the pier column footing during a major seismic event. A high strength concrete mix would produce a very stiff column that may transfer a high percentage of the dynamic loads into the footing and, therefore, cause the footing to fail. The design intent is for the pier column to fail before causing damage to the pier footing. In an email dated January 22, 2003, the Designer (TY Lin International/Moffatt & Nichol Engineers (JV)) confirmed that the pier column concrete should have a compressive strength between 25 MPa and 41MPa, and a modulus of elasticity between 24,000 to 25,000 Mpa in order to satisfy the design intent. A copy of this email is attached for reference. The Contract Plans and Special Provisions require the pier column structural concrete only to have a minimum compressive strength of 30 MPa at 28-days and that the water to cementitious material ratio shall not exceed 0.40. Additional parameters are necessary to ensure that the design intent is satisfied.

The Contractor submitted a concrete mix in compliance with the 0.40 w/c ratio, but the compressive strength at 28-days was in excess of 55 MPa and the modulus of elasticity exceeded 32,000 MPa. This test result was confirmed by METS. The Designer has determined that if the pier column is too stiff, the column will attract additional loads that may exceed the design capacity of the bridge foundations. After more than sixty concrete trial mixes tested by METS, an acceptable concrete mix design has been established to lower the concrete strength and modulus of elasticity and maintain corrosion control to within acceptable limits. This is accomplished by raising the water to cement ratio from 0.40 to 0.50 and by adding 6% air entrainment to the mix.

This contract change order modifies Section 11-2, "Portland Cement Concrete," Section 90-4.06, "Required Use of air-Entraining Admixtures," and Section 8-2.02, "Corrosion control for Portland Cement Concrete," of the Special Provisions, and eliminates the "Concrete Strength and Type Limits" requirements as specified on Sheet 437R2 of 978 of the contract plans. The revised specification was developed with the cooperation and efforts of Mr. Rob Reis of METS corrosion and Concrete Specialist Mr. Tom Pyle in Mr. Pyle's memo dated January 16, 2003, which is attached.

This change provides for compensating the contractor an agreed lump sum amount for the cost to modify the concrete mix design by adding the air entrainment admixture, for costs associated with quality control to monitor and ensure proper air-content in the concrete mix, and all risks associated with the revised mix design.

This change order will result in a cost increase of $475,200.00, which can be financed from the contingency funds. A detailed cost analysis for this change is on file in the project records.

This change order has been discussed with and concurred by Mr. Jon Tapping and Mr. Pete Siegenthaler through electronic mail correspondence. FHWA concurrence was obtained from Ms. Nancy Bobb via email on January 30, 2003. A copy of these concurrences are attached for reference.

Maintenance concurrence for this change was obtained from Mr. Samad Hamoud of Structures Maintenance on February 24, 2003.

No time adjustment is warranted for this change, as it does not affect the controlling operation.

STATE OF CALIFORNIA - DEPARTMENT OF TRANSPORTATION

CONTRACT CHANGE ORDER MEMORANDUM

TO: PETER SIEGENTHALER / COE D.	FILE: E.A. 04 - 012024 CO-RTE-PM 04-SF,Ala-80-13.9/14.3,0.0/1.6
FROM: COE D.	FED. NO. ACIM-080-1(085)8N
CCO#: 14 SUPPLEMENT#: 0 Category Code: CHSA	CONTINGENCY BALANCE (incl. this change) $52,927,820.27
COST: $475,200.00 INCREASE ☑ DECREASE ☐	HEADQUARTERS APPROVAL REQUIRED? ☑ YES ☐ NO
SUPPLEMENTAL FUNDS PROVIDED: $0.00	IS THIS REQUEST IN ACCORDANCE WITH ENVIRONMENTAL DOCUMENTS? ☑ YES ☐ NO
CCO DESCRIPTION: Bridge Pier Concrete Spec Change	**PROJECT DESCRIPTION:** REPLACE SFOBB EAST SPAN

LOCATION: IN SAN FRANCISCO AND ALAMEDA COUNTIES IN SAN FRANCISCO AND OAKLAND FROM 1.3 KM EAST OF THE YERBA BUENA ISL

THIS CHANGE ORDER PROVIDES FOR:
increasing the water/cement (w/c) ratio from 0.40 to 0.50 and adding 6% of entrained air to the pier column structural concrete for the SFOBB East Span Skyway, Bridge Nos. 34-0006L/R, and for compensating the Contractor's quality control personnel to monitor and ensure the proper air content of the pier column concrete. The entrained air shall be provided with an "Operating Range" of 4% to 9% and a "Contract Compliance" range of 3% to 10%.

The contract documents do not provide an upper limit for compressive strength or modulus of elasticity of the pier column concrete. An upper limit is necessary to avoid overstressing the pier column footing during a major seismic event. A high strength concrete mix would produce a very stiff column that may transfer a high percentage of the dynamic loads into the footing and, therefore, cause the footing to fail. The design intent is for the pier column to fail before causing damage to the pier footing. In an email dated January 22, 2003, the Designer (TY Lin International/Moffatt & Nichol Engineers (JV)) confirmed that the pier column concrete should have a compressive strength between 25 MPa and 41MPa, and a modulus of elasticity between 24,000 to 25,000 Mpa in order to satisfy the design intent. A copy of this email is attached for reference. The Contract Plans and Special Provisions require the pier column structural concrete only to have a minimum compressive strength of 30 MPa at 28-days and that the water to cementitious material ratio shall not exceed 0.40. Additional parameters are necessary to ensure that the design intent is satisfied.

The Contractor submitted a concrete mix in compliance with the 0.40 w/c ratio, but the compressive strength at 28-days was in excess of 55 MPa and the modulus of elasticity exceeded 32,000 MPa. This test result was confirmed by METS. The Designer has determined that if the pier column is too stiff, the column will attract additional loads that may exceed the design capacity of the bridge foundations. After more than sixty concrete trial mixes tested by METS, an acceptable concrete mix design has been established to lower the concrete strength and modulus of elasticity and maintain corrosion control to within acceptable limits. This is accomplished by raising the water to cement ratio from 0.40 to 0.50 and by adding 6% air entrainment to the mix.

This contract change order modifies Section 11-2, "Portland Cement Concrete," Section 90-4.06, "Required Use of air-Entraining Admixtures," and Section 8-2.02, "Corrosion control for Portland Cement Concrete," of the Special Provisions, and eliminates the "Concrete Strength and Type Limits" requirements as specified on Sheet 437R2 of 978 of the contract plans. The revised specification was developed with the cooperation and efforts of Mr. Rob Reis of METS corrosion and Concrete Specialist Mr. Tom Pyle in Mr. Pyle's memo dated January 16, 2003, which is attached.

This change provides for compensating the contractor an agreed lump sum amount for the cost to modify the concrete mix design by adding the air entrainment admixture, for costs associated with quality control to monitor and ensure proper air-content in the concrete mix, and all risks associated with the revised mix design.

This change order will result in a cost increase of $475,200.00, which can be financed from the contingency funds. A detailed cost analysis for this change is on file in the project records.

This change order has been discussed with and concurred by Mr. Jon Tapping and Mr. Pete Siegenthaler through electronic mail correspondence. FHWA concurrence was obtained from Ms. Nancy Bobb via email on January 30, 2003. A copy of these concurrences are attached for reference.

Maintenance concurrence for this change was obtained from Mr. Samad Hamoud of Structures Maintenance on February 24, 2003.

No time adjustment is warranted for this change, as it does not affect the controlling operation.

CONCURRED BY:		
Construction Engineer:	Douglas Coe	Date
Bridge Engineer:		Date
FHWA Representative:	Nancy Bobb	Date7/31/2003
Project Engineer:		Date
Other (specify): Samad Hamoud		Date2/24/2003
Tom Pyle		Date1/16/2003
Jon Tapping		Date1/16/2003
District Prior Approval By:		Date
HQ (Issue Approve) By:	Douglas Saathoff (ATP)	Date4/14/2003
Resident Engineer's Signature:		Date 12-19-03

ESTIMATE OF COST

	THIS REQUEST	TOTAL TO DATE
ITEMS	$0.00	$0.00
FORCE ACCOUNT	$0.00	$0.00
AGREED PRICE	$475,200.00	$475,200.00
ADJUSTMENT	$0.00	$0.00
TOTAL	$475,200.00	$475,200.00

FEDERAL PARTICIPATION

☑ PARTICIPATING ☐ PARTICIPATING IN PART ☐ NONE
☐ NON-PARTICIPATING (MAINTENANCE) ☐ NON-PARTICIPATING

FEDERAL SEGREGATION (if more than one Funding Source or P.I.P. type)
☑ CCO FUNDED PER CONTRACT ☐ CCO FUNDED AS FOLLOWS

FEDERAL FUNDING SOURCE	PERCENT

California Department of Transportation

SFOBB New East Span

Contract: 04-012024, Skyway

CCO 14(1)

Deleted

STATE OF CALIFORNIA - DEPARTMENT OF TRANSPORTATION

CONTRACT CHANGE ORDER

Change Requested by: Engineer

CCO: 15	Suppl. No. 0	Contract No. 04 - 012024	Road 04-SF,Ala-80-13.9/14.3,0.0/1.6	FED. AID LOC.: ACIM-080-1(085)8N

To: **KIEWIT / FCI / MANSON a JV**

You are directed to make the following changes from the plans and specifications or do the following described work not included in the plans and specifications for this contract. ***NOTE: This change order is not effective until approved by the Engineer.***

Description of work to be done, estimate of quantities and prices to be paid. (Segregate between additional work at contract price, agreed price and force account.) Unless otherwise stated, rates for rental of equipment cover only such time as equipment is actually used and no allowance will be made for idle time. This last percentage shown is the net accumulated increase or decrease from the original quantity in the Engineer's Estimate.

As requested by the Engineer, perform additional concrete test mixes for the pier columns of the SFOBB Skyway, Bridge Nos. 34-0006L/R, with water-to-cementitious material ratios of 0.40, 0.45, and 0.50, using both Sechelt and Eliot aggregates and varying air entrainments of 3%, 6%, and 9%, and provide the compressive strength and modulus of elasticity test results to the Engineer.

Extra Work at Lump Sum:

For this work, the Contractor will be paid an agreed lump sum of $18,992.38. This sum constitutes full compensation, including markups, for all direct and indirect costs, all associated project impacts, any Time Related Overhead (TRO) expenses, and any and all risks associated with this change.

Total cost of Extra Work at agreed Lump Sum $18,992.38

Estimated Cost: Increase ☑ Decrease ☐ $18,992.38

By reason of this order the time of completion will be adjusted as follows: 0 days

Submitted by		
Signature	**Resident Engineer:** COE D.	Date 2-24-04
Approval Recommended by		
Signature	**Construction Engineer:** COE D.	Date 2-24-04
Engineer Approval by		
Signature	**(Print name and title)** PETER SIEGENTHALER - Chief	Date 3-25-04

We the undersigned contractor, have given careful consideration to the change proposed and agree, if this proposal is approved, that we will provide all equipment, furnish the materials, except as may otherwise be noted above, and perform all services necessary for the work above specified, and will accept as full payment therefor the prices shown above.

NOTE: If you, the contractor, do not sign acceptance of this order, your attention is directed to the requirements of the specifications as to proceeding with the ordered work and filing a written protest within the time therein specified.

Contractor Acceptance by		
Signature	**(Print name and title)** A.T. Gkoro, Project Director	Date 3/12/04

STATE OF CALIFORNIA - DEPARTMENT OF TRANSPORTATION

CONTRACT CHANGE ORDER MEMORANDUM

TO: PETER SIEGENTHALER / COE D.	FILE: **E.A.** 04 - 012024
	CO-RTE-PM 04-SF,Ala-80-13.9/14.3,0.0/1.6
FROM: COE D.	**FED. NO.** ACIM-080-1(085)8N
CCO#: **15** SUPPLEMENT#: **0** Category Code: **CHXX**	CONTINGENCY BALANCE (incl. this change) **$25,789,810.61**
COST: **$18,992.38** INCREASE ☑ DECREASE ☐	HEADQUARTERS APPROVAL REQUIRED? ☐ YES ☑ NO
SUPPLEMENTAL FUNDS PROVIDED: **$0.00**	IS THIS REQUEST IN ACCORDANCE WITH ENVIRONMENTAL DOCUMENTS? ☑ YES ☐ NO
CCO DESCRIPTION: Bridge Pier Concrete Additional Testing	**PROJECT DESCRIPTION:** REPLACE SFOBB EAST SPAN

LOCATION: IN SAN FRANCISCO AND ALAMEDA COUNTIES IN SAN FRANCISCO AND OAKLAND FROM 1.3 KM EAST OF THE YERBA BUENA ISL

THIS CHANGE ORDER PROVIDES FOR:

compensating the Contractor for developing additional concrete test mixes with varying water-to-cementitious material (w/c) ratios, air entrainments, and aggregates to determine an acceptable concrete mix design for the pier columns of the SFOBB Skyway, Bridge Nos. 34-0006L/R.

This change is needed because the contract does not provide an upper limit for the compressive strength or modulus of elasticity for the pier column concrete, and additional concrete mix designs were necessary to produce and test trial batch mixes to establish design limits. Sheet 437R2 of 978 of the contract plans specifies that the pier column structural concrete attain a minimum compressive strength of 30 Mpa at 28-days. Special Provisions Section 8-2.02, "Corriosion Control for Portland Cement Concrete," specifies that portland cement concrete for reinforced concrete at bridge piers be considered to be in a corrosive environment and that the w/c ratio not exceed 0.40. The Contractor submitted a concrete mix in compliance with these requirements, and the average compressive strength recorded from the tests for the submitted mix design was 56.1 MPa at 28 days. The Contractor advised the Engineer that pier column concrete with a strength of 55 MPa may significantly increase the pier moments due to increased pier stiffness. The Designer (TYLin International/Moffatt & Nichol Engineers (JV)) reviewed this issue and confirmed that it is desirable for the pier concrete to have a compressive strength between 25 MPa to 41 MPa with a modulus of elasticity in the range of 24,000 to 25,000 MPa.

In order to resolve this issue, through cooperation with and guidance from METS Lab, the Contractor was authorized to develop additional concrete mix designs and conduct 28-day compressive strength and modulus of elasticity tests on additional concrete trial batches. Concrete trial batches were performed on pier concrete mixes at w/c ratios of 0.40, 0.45, and 0.50 with air entrainments of 3%, 6%, and 9%, using both the imported Sechelt aggregate and local source Eliot aggregate. Through this testing, an acceptable concrete mix design was determined to be at a w/c ratio of 0.50 with 6% air entrainment using the Sechelt aggregate. METS Lab verified the acceptability of this mix. Contract Change Order No. 14, "Bridge Pier Concrete Spec Change," modified the contract specifications to permit the use of this concrete mix design.

This change provides for compensating the contractor an agreed lump sum amount for the cost to develop concrete mix designs and perform tests on trial batch mixes.

This contract change order will result in a cost increase of $18,992.38, which can be financed from the project contingency fund. Records and calculations used to determine the agreed price basis are on file in the project records.

This change was discussed with Mr. Rob Reis and Mr. Tom Pyle with METS Lab. They are in concurrence with this change for concrete test mixes and also with the modifications to the contract specifications to allow the use of the acceptable mix design per Contract Change Order No. 14, "Bridge Pier Concrete Spec Change."

District Prior Approval was obtained from Mr. Pete Sieganthaler on February 24, 2004. A copy of the prior approval signed by Mr. Sieganthaler is attached.

FHWA and Maintenance approval and concurrence is not required for this change for concrete test mixes, but was obtained to revise the contract specifications to allow the use of the acceptable mix design per Contract Change Order No. 14, "Bridge Pier Concrete Spec Change," executed on February 4, 2004.

No adjustment in contract time is warranted for this change, as it does not affect the controlling operation.

CONCURRED BY:		
Construction Engineer:	Douglas Coe	Date 2-24-04
Bridge Engineer:		Date
FHWA Representative:		Date
Project Engineer:		Date
Other (specify): Tom Pyle		Date 1/16/2003
		Date
		Date
District Prior Approval By:	Pete Siegenthaler	Date 2/24/2004
HQ (Issue Approve) By:		Date
Resident Engineer's Signature:		Date 2-24-04

ESTIMATE OF COST

	THIS REQUEST	TOTAL TO DATE
ITEMS	$0.00	$0.00
FORCE ACCOUNT	$0.00	$0.00
AGREED PRICE	$18,992.38	$18,992.38
ADJUSTMENT	$0.00	$0.00
TOTAL	$18,992.38	$18,992.38

FEDERAL PARTICIPATION

☑ PARTICIPATING ☐ PARTICIPATING IN PART ☐ NONE
☐ NON-PARTICIPATING (MAINTENANCE) ☐ NON-PARTICIPATING

FEDERAL SEGREGATION (if more than one Funding Source or P.I.P. type)
☑ CCO FUNDED PER CONTRACT ☐ CCO FUNDED AS FOLLOWS

FEDERAL FUNDING SOURCE	PERCENT

CONTRACT CHANGE ORDER

Change Requested by: Contractor

CCO: 16	Suppl. No. 0	Contract No. 04 - 012024	Road 04-SF,Ala-80-13.9/14.3,0.0/1.6	FED. AID LOC.: ACIM-080-1(085)8N

To: KIEWIT / FCI / MANSON a JV

You are directed to make the following changes from the plans and specifications or do the following described work not included in the plans and specifications for this contract. ***NOTE: This change order is not effective until approved by the Engineer.***

Description of work to be done, estimate of quantities and prices to be paid. (Segregate between additional work at contract price, agreed price and force account.) Unless otherwise stated, rates for rental of equipment cover only such time as equipment is actually used and no allowance will be made for idle time. This last percentage shown is the net accumulated increase or decrease from the original quantity in the Engineer's Estimate

Extra Work at Unit Price:

For the use of the property at Pier 7 for erecting and operating a concrete batch plant, Kiewit/FCI/Manson, a joint venture (KFM), shall compensate the State the agreed unit price of $0.18 per square foot per month from January 1, 2003 to January 1, 2005. A map delineating the batch plant area is shown on page 4 of this CCO.

If additional time is required beyond January 1, 2005, a price adjustment reflecting current market value will be negotiated.

Estimate of Extra Work at Agreed Unit Price:

1.8 acres x 43,560 square feet/acre x $0.18/ft2 = $14,113.44/month <credit>

The State shall be compensated the agreed unit price of $14,113.44 per month during the term of this agreement.

The batch plant is subject to the following stipulations, and all submittals are to be approved by the Engineer prior to any plant set up or operation:

1. KFM shall submit a Dust Control Plan detailing how dust will be controlled during batch plant operations, at aggregate piles, and during roadway cleaning and sweeping. The plan shall also contain information about how bag house and cement dust will be collected and disposed.

2. KFM shall submit a Traffic Control Plan. This plan shall contain the following:

   A. The clear traffic routing plan and signing showing the K-railed boundary for the plant;
   B. Indication of the division between plant traffic and non-plant traffic;
   C. Restrictions on aggregate hauling between the hours of 0600 and 1900 daily. Aggregate hauling conducted during this time period shall be approved in advance by the Engineer;
   D. Restrictions on plant-related truck traffic in the common area prohibiting their operation between the hours of 0600 to 1900 daily.

EXHIBIT "A"

KFM shall coordinate with tenants adjacent to Pier 7 and at Pier 7 with respect to traffic congestion.

3. The structures at Pier 7 shall not be altered in any way except with prior approval by the Engineer. Upon completion of batch plant operations, the pier and structures are to be returned to their original condition (less normal wear) as determined by the Engineer. The tracks west of the batch plant shall be rocked to facilitate crossing and to provide access to the east roll up door for the warehouse.

4. The acquisition of all applicable permits for the operation of the batch plant shall be the responsibility of KFM. Permitting entities shall include, but are not be limited to: The City of Oakland, The Port of Oakland, The Bay Area Air Quality Management District, and The San Francisco Bay Regional Water Resources Control Board. KFM shall submit verification that all applicable permits have been acquired before beginning batch plant operations.

5. KFM shall relocate Caltrans Public Information Office (PIO) to a location selected by the Engineer. All necessary modifications related to the relocation and the associated utility hook ups shall be the responsibility of KFM. KFM shall ensure that the PIO functions in the same way as it was intended to function in the original location. KFM shall be responsible for and repair any damage to the PIO due to the relocation to the satisfaction of the engineer.

6. Batch Plant utility hook-ups, maintenance, and all other costs associated with procuring and using these services, shall be the responsibility of KFM. For all batch plant utility hook-ups and maintenance costs for which KFM is responsible but does not pay to the satisfaction of the Engineer, the State may deduct the amount from any moneys due, or that may become due, to KFM while under the contract.

7. The concrete batch plant shall only produce Portland Cement Concrete for use in Contract 04-012024. The concrete batch shall not produce Portland Cement Concrete for any other contract or entity unless prior written approval is obtained from the Engineer.

8. By granting the land use and by operating the batch plant as set forth in this change order, it is the basic intent of both parties that no greater liability or exposure to claims will be created for either party due to the location of the batch plant at Pier 7 as compared with other locations. For delays and impacts that do occur to the batch plant operations, the following conditions apply:

   A. The Contractor shall be responsible for delays due to batch plant equipment breakdowns, utility disruptions, or violations by the Contractor of permit conditions.
   B. The Contractor shall be responsible for delays due to material shortages, labor disputes, or access that are exclusively the result of the location of the batch plant.
   C. Except as specifically limited within this change order, the Contractor shall be entitled to an equitable adjustment as provided for in the Contract for impacts to the batch plant operations.

CONTRACT CHANGE ORDER

Change Requested by: Contractor

CCO: 16	Suppl. No. 0	Contract No. 04 - 012024	Road 04-SF,Ala-80-13.9/14.3,0.0/1.6	FED. AID LOC.: ACIM-080-1(085)8N

Estimated cost of Extra Work at Agreed Unit Price .....($14,113.44)

Estimated Cost: Increase ☐ Decrease ☑ ($400,000.00)

By reason of this order the time of completion will be adjusted as follows: 0 days

Submitted by		
Signature	Resident Engineer: COE D.	Date 1-24-03
Approval Recommended by		
Signature	Construction Engineer: COE D.	Date
Engineer Approval by		
Signature	(Print name and title) PETER SIEGENTHALER - Chief	Date

We the undersigned contractor, have given careful consideration to the change proposed and agree, if this proposal is approved, that we will provide all equipment, furnish the materials, except as may otherwise be noted above, and perform all services necessary for the work above specified, and will accept as full payment therefor the prices shown above.

NOTE: If you, the contractor, do not sign acceptance of this order, your attention is directed to the requirements of the specifications as to proceeding with the ordered work and filing a written protest within the time therein specified.

Contractor Acceptance by		
Signature	(Print name and title) A.T. SKORO, PROJECT DIRECTOR	Date 01/30/03

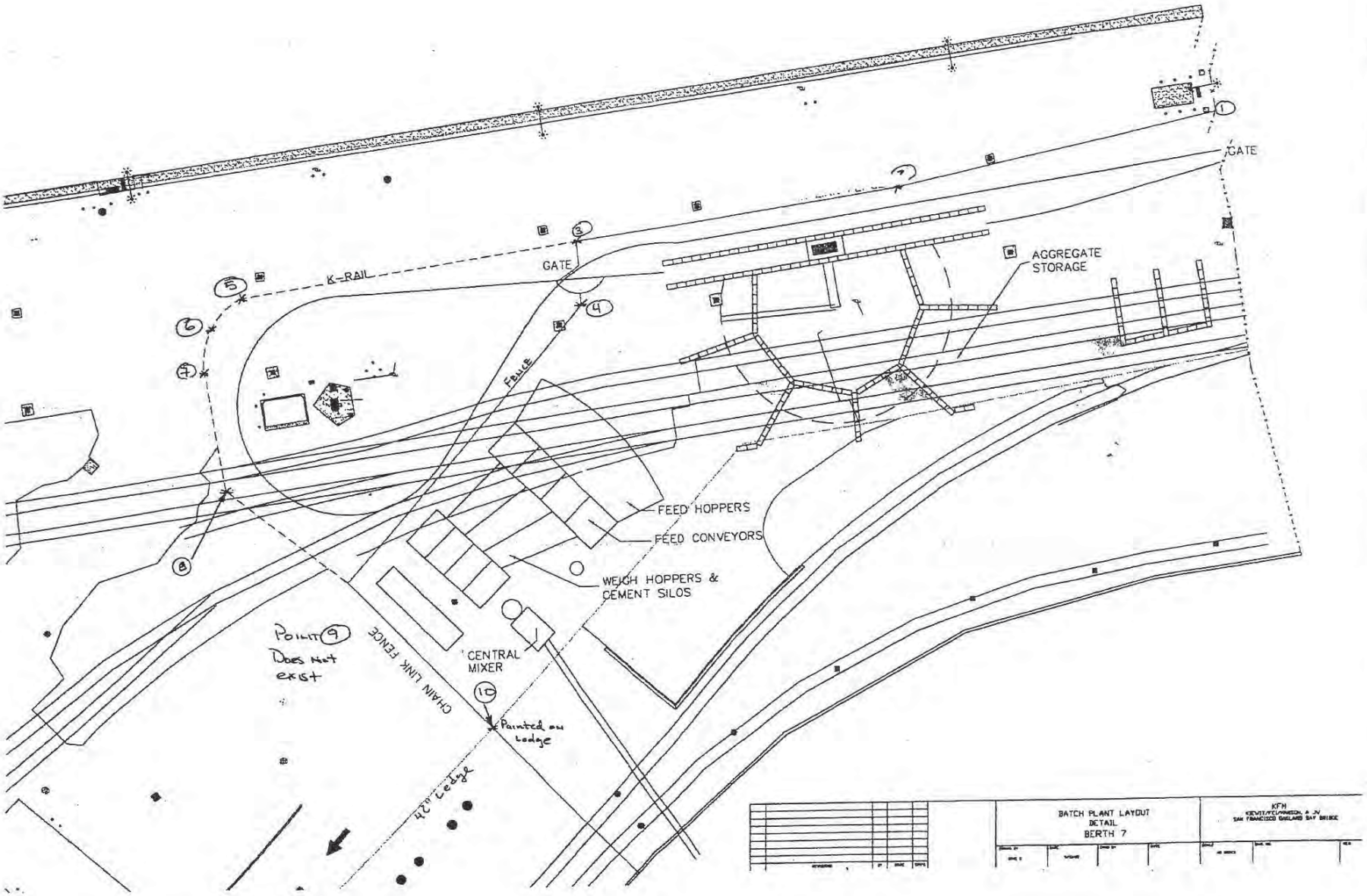

CONTRACT 04- 012021
CCO 1/2 SHEET 4 OF 4

STATE OF CALIFORNIA - DEPARTMENT OF TRANSPORTATION

CONTRACT CHANGE ORDER 16 R1

DATE: 11/17/2003 Page

TO: ROGER SIEGENTHALER / CO/E D.

FROM: CO/E D

FED. ID. NO. 08-012024

CO PROJECT: 04-SF-Ala-80-1 9/14.3,9.0/1.3

PROJ. NO. [illegible]

CCO#: 16	SUPPLEMENT #: 1	Category Code: [illegible]	CONTINGENCY BALANCE (incl. this change): $38,794,[illegible]
COS: $1,6[illegible]9)	INCREASE ☐ DECREASE ☑		HEADQUARTERS APPROVAL REQUIRED? ☐ YES ☑ NO
SUPPLEMENTAL FUNDS PROVIDED: $0.00			IS THIS REQUEST IN ACCORDANCE WITH ENVIRONMENTAL DOCUMENTS? ☑ YES ☐ NO

CCO DESCRIPTION:
Pier 7 Lease for Flyash Storage

PROJECT DESCRIPTION:
REPLACE SFOBB EAST SPAN

LOCATION: IN SAN FRANCISCO AND ALAMEDA COUNTIES IN SAN FRANCISCO AND OAKLAND FROM 1.3 KM EAST OF THE YERBA BUENA [illegible]

THIS CHANGE ORDER PROVIDES FOR:
Leasing of a 11 ft x [illegible] ft area located at the north corner of the batchplant at Pier 7 for storage of flyash from November 1, 2003, to January 1, 2005, as shown on sheet 2 of Contract Change Order.

This area is being requested by the Contractor due to the need to have a larger area for flyash storage to expedite larger volume of concrete pour. The lease will be carried out pursuant to the lease agreement executed in Contract Change Order #15. All conditions and stipulations agreed upon in CCO # 16 signed on August 28, 2003, shall apply. It is agreed that this space will be vacated within 72 hours of written notice.

KFM will compensate the State at a rate of $0.18 per square foot for 660 sq.ft. per month for 13.5 months, totaling $1[illegible].

Maintenance concurrence is not required, as this work is not related to any permanent Caltrans facility. This CCO does not include any of the agreed-upon FHWA concurrence criteria and; therefore, FHWA concurrence is not required. In addition design concurrence is not required.

No adjustment in contract time is warranted as this change does not affect the contract time.

The Resident Engineer field approved this change order on 11/05/03.

CONCURRED BY:		
Construction Engineer: Douglas Coo	Date 11-14-03	
Bridge Engineer:	Date	
FHWA Representative:	Date	
Project Engineer:	Date	
Other (specify):	Date	
	Date	
	Date	
District Prior Approval By:	Date	
HQ (Issue Approval) By:	Date	
Resident Engineer's Signature:	Date 11-14-03	

ESTIMATE OF COST

	THIS REQUEST	TOTAL TO DATE
ITEMS	$0.00	$0.00
FORCE ACCOUNT	$0.00	$0.00
AGREED PRICE	$0.00	$0.00
ADJUSTMENT	($1,604.00)	($340,328.36)
TOTAL	($1,604.00)	($340,328.36)

FEDERAL PARTICIPATION

☑ PARTICIPATING ☐ PARTICIPATING IN PART ☐ NONE
☐ NON-PARTICIPATING (MAINTENANCE) ☐ NON-PARTICIPATING

FEDERAL SEGREGATION (If more than one Funding Source or P.E.P. [illegible])
☑ CCO FUNDED PER CONTRACT ☐ CCO FUNDED AS FOLLOWS

FEDERAL FUNDING SOURCE	PERCENT

STATE OF CALIFORNIA - DEPARTMENT OF TRANSPORTATION

CONTRACT CHANGE ORDER

Change Request No. [illegible]

CCO: 15 | Appl. No. 1 | Contract No. 04 - 012024 | Dist. 04-[illegible] 13.9/13.3.0.0/1.6 | FED. AID LOC.: ACIM 080-1(0[illegible])

Firm: [illegible] / FRANTIZ/ERICSON a JV

You are hereby directed to make the following changes from the plans and specifications or to the following described work not included in the plans and specifications in this contract. NOTE: This change order is not effective until approved by the Engineer.

Description of work to be done, estimate of quantities and prices to be paid. (Segregate between additional work at contract price, agreed price and force account.) Unless otherwise stated, rates for rental of equipment cover only such time as equipment is actually used and no allowance will be made for idle time. This last percentage shown is the net accumulated increase or decrease from the original quantity in the Engineers Estimate

Adjustment of Compensation at Unit Price:

Leasing of 11 ft x 60 ft area located at the north corner of the batch plant at Pier 7 for storage of flyash from November [illegible] 2003, to January 1, 2005, as shown on sheet 2 of this change order. The lease shall be carried out pursuant to the lease agreement executed in Contract Change Order #16. All conditions and stipulations agreed upon in CCO # 16 dated August 28, 2003, shall apply. It is agreed that this space shall be vacated within 72 hours of written notice.

KFM will compensate the State at a rate of $0.18 per square foot per month for the use of the property
660 sq. ft. x $ 0.18/sq. ft. = $ 118.80 per month for 13.5 months = (1,604.00) Credit

Cost of Adjustment of Compensation at Agreed Unit Price .....($1,604.00) Credit

Estimated Cost: Increase [ ] Decrease [X] ($1,604.00)

By reason of this order the time of completion will be adjusted as follows: 0 days

Prepared by:

Signature: [signature] | Resident Engineer: COLE D. | Date: 11-14-03

Signature: [signature] | Construction Engineer: COLE D. | Date: 11-14-03

By: [illegible] for

Signature: [signature] | (Print name and title) PETER SIEGENTHALER - Chief | Date: 11/14/03

We the undersigned contractor, have given careful consideration to the change proposed and agree, if this proposal is approved, that we will provide all equipment, furnish the materials except as may otherwise be noted above, and perform all services necessary for the work above specified, and will accept as full payment therefor the prices shown above.

NOTE: If you, the contractor, do not sign acceptance of this order, your attention is directed to the requirements of the specifications as to proceeding with the ordered work and filing a written protest within the time therein specified.

Contractor Acceptance:

Signature: [signature] | (Print name and title) [illegible] | Date: [illegible]

CONTRACT NO. 04-021024
CCO NO. 16-32
PAGE 3 OF 3

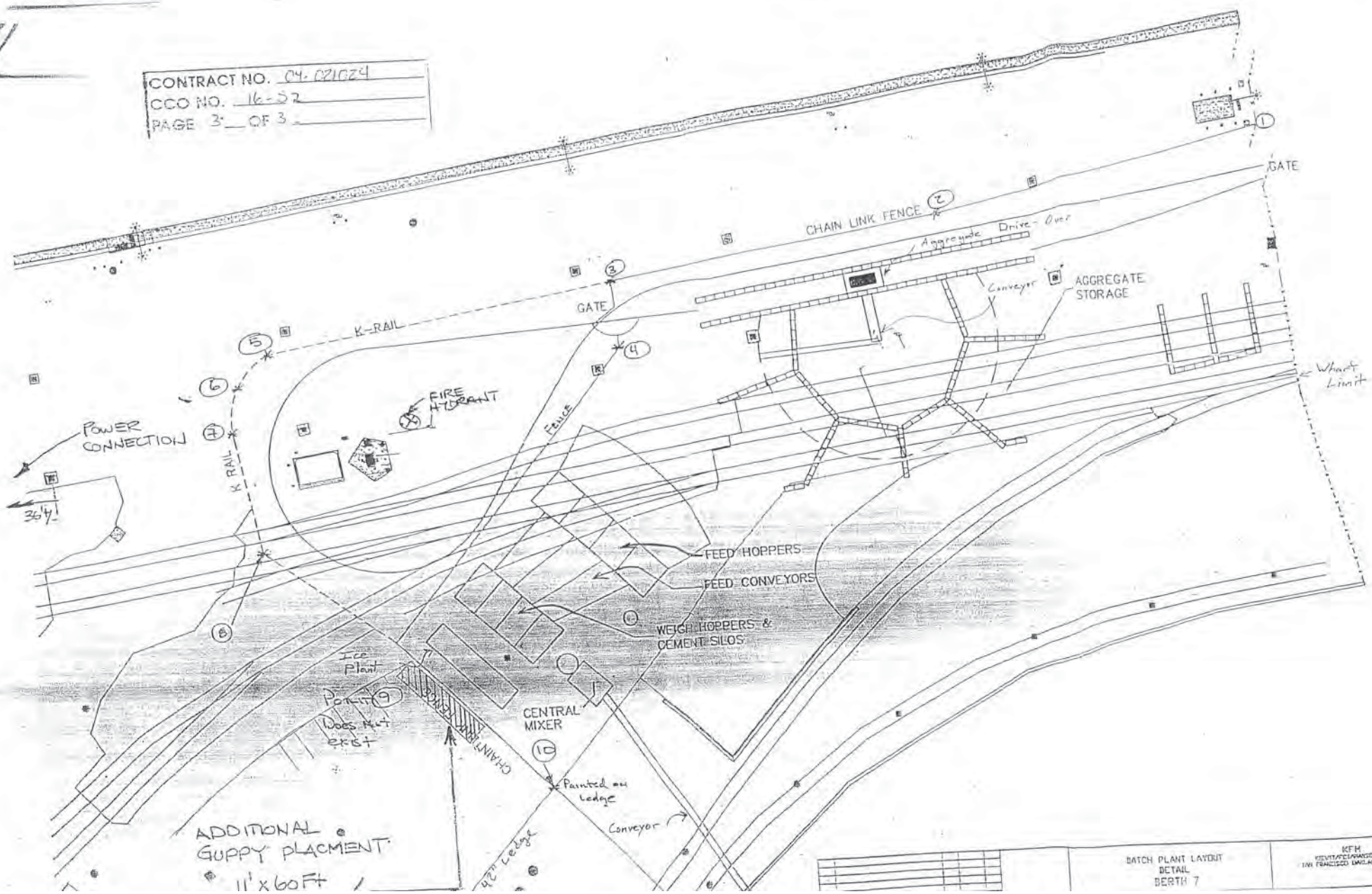

BATCH PLANT LAYOUT
DETAIL
BERTH 7

KFH
KEVITT/FLEMMINGER & ASSOC
SAN FRANCISCO OAKLAND BAY BRIDGE

Department of Transportation
EAST SPAN SEISMIC SAFETY PROJECT
CONCURRENCE FOR CHANGE ORDERS (08/04)

CCO#: 16 **S#:** 2
Title: Pier 7 Lease Extension
Date: 12/14/05

Contract No. 04-012024
Co. & Rte Ala-80-13.9/14.3, 0.0/1.6

To: DOUGLAS COE, Resident Engineer

Requested By: Kannu Balan, Senior Engineer (initials KB)

Description of Work:
The Contractor is requesting an extension of the lease agreements previously signed and agreed to under CCO # 16 and CCO # 16 S 1 for the concrete batch plant and flyash storage areas.
The extension of the lease represents a credit to the State of $14,232.24 per month.

Reason for Change:
The current lease agreement expired on January 1, 2005. Since concrete is still being placed on this project the Contractor is requesting an extension of the lease agreement until March 31, 2007. All of the conditions and stipulations agreed to in CCO # 16 and CCO # 16 S 1 shall remain into effect for the duration of this lease extension.

Approvals Required By:
- [x] Division of Construction, HQ
- [x] FHWA
- [ ] District

Concurrence Required By:
- [ ] Design
- [ ] Maintenance
- [x] Project Manager

Discussed with persons noted below:

FHWA:	Date	Br. Design:	Date
District:	Date	Br. Geology:	Date
Other:	Date	Br. Maintenance:	Date

Estimated Cost: Credit to the State of $384,270.48

Recommended Method of Payment:
- [ ] Contract Items
- [x] Agreed Price (LS or UP)
- [ ] Extra Work at Force Account
- [ ] Other:

Recommended Time Adjustment: 0 Working Days

Prior Approvals:
- [ ] This represents Prior Approval to proceed with the work.
- [x] This represents an acknowledgement that the individuals below are in concurrence with this change order, which requires Division of Construction approval before proceeding with the work.

Comments:

Douglas Coe, Resident Engineer	12-14-05 Date	Pete Siegenthaler, Principal Construction Engineer	12-15-05 Date
David Salladay, District Representative	12-15-05 Date	Patrick Treacy, Division of Construction (for Jim Dossing)	12/15/05 Date

U.S. DEPARTMENT OF TRANSPORTATION FEDERAL HIGHWAY ADMINISTRATION CALIFORNIA DIVISION OFFICE

RECORD OF PRIOR APPROVAL FOR MAJOR CONTRACT CHANGE ORDERS

PROJECT NO.	CCO NO.	CONTRACT NO.	DIST-CO-RTE-PM
ACIM -080-1(085)8N	16 S2	04-012024	04-SF,Ala-80-13.9/14.3,0.0/1.6

REQUESTED BY:	CALTRANS HQ	DATE
Jake VanEnckevort	X RE/DISTRICT	12/8/05

PROPOSED CHANGE:

This change order provides for extending the lease for a 1.8 acre portion of Pier 7 used to locate a Portland Cement Concrete Batch Plant and extending the lease for a 11 ft x 60 ft area located at the north corner of the batch plant at Pier 7 for storage of flyash from January I, 2005, to March 31, 2007.

REASON FOR CHANGE:

This change order is needed to extend the dates for the Contractor's lease of property on Pier 7 because the previous lease period has expired. Compensation to the State for the land lease will be based on an agreed unit price of $0.18 per square foot per month. This change order provides for crediting the State $14,232.24 per month for extending the Pier 7 lease for the Contractor, and will result in an estimated decrease in cost to the project of $384,270.48.

AS DISCUSSED IN FIELD (REPORT NO. ____)

TIME EXTENSIONS	ACTIVITY ON CRITICAL PATH AFFECTED BY CCO (IF TIME EXTENSION INVOLVED)
* NONE __ DAYS __ DEFERRED	

ESTIMATE OF COST:	CCO:	METHOD OF PAYMENT
$____ INCREASE $ 384,270.48 DECREASE	CONTRACT ITEM AGREED PRICE	X ADJUSTMENT OF COMPENSATION EXTRA WORK AT FORCE ACCOUNT

THE WORK COVERED BY THE PROPOSED REVISION AS DESCRIBED ABOVE IS APPROVED SUBJECT TO SUBMISSION OF SUPPORTING DOCUMENTATION INCLUDING COST EVALUATION AND JUSTIFICATION OF TIME EXTENSIONS.

OTHER CONDITIONS:

PRIOR APPROVAL TO PROCEED GRANTED BY:	DATE OF AUTHORIZATION:
Nancy E. Bobb	12/13/05

Kannu Balan
12/13/2005 10:01 AM

To: Jake VanEnckevort/D04/Caltrans/CAGov@DOT
cc:
Subject: Re: CCO 16S2 Report and Memo

for your file

Kannu Balan
Senior Transportation Engineer
CCO/Claims/Schedule Coordination
SFOBB - Skyway
(510) 622-5151
Cell# (510) 867-6774
----- Forwarded by Kannu Balan/D03/Caltrans/CAGov on 12/13/2005 09:59 AM -----

Robert Kobal
12/13/2005 09:58 AM

To: Kannu Balan/D03/Caltrans/CAGov@DOT
cc: Jon Tapping/HQ/Caltrans/CAGov@DOT, Peter Siegenthaler/HQ/Caltrans/CAGov@DOT, Doug Coe/D04/Caltrans/CAGov@DOT, David Salladay/D04/Caltrans/CAGov@DOT
Subject: Re: CCO 16S2 Report and Memo

For Jon Tapping as interim project manager, concur.
----- Forwarded by Robert Kobal/HQ/Caltrans/CAGov on 12/13/2005 09:55 AM -----

----- Forwarded by Jon Tapping/HQ/Caltrans/CAGov on 12/12/2005 08:44 AM -----

Kannu Balan
12/12/2005 08:27 AM

To: Jon Tapping/HQ/Caltrans/CAGov@DOT
cc: Peter Siegenthaler/D04/Caltrans/CAGov@DOT, Doug Coe/D04/Caltrans/CAGov@DOT, David Salladay/D04/Caltrans/CAGov@DOT
Subject: CCO 16S2 Report and Memo

Jon,

Need your concurrence for CCO 16 S 2(Pier 7 Lease). This CCO extends the Pier 7 lease to KFM until March 2007 which expired beginning of this year.

Call me if you have any questions.

Thanks

CCO 16S2 Memo.pc CCO 16S2 Report.pc

Kannu Balan
Senior Transportation Engineer
CCO/Claims/Schedule Coordination
SFOBB - Skyway
(510) 622-5151
Cell# (510) 867-6774

"Bobb, Nancy"
<Nancy.Bobb@fhwa.dot.gov>

12/13/2005 01:34 PM

To: "Jake VanEnckevort" <Jake_VanEnckevort@dot.ca.gov>
cc: "Kannu Balan" <kannu_balan@dot.ca.gov>, "Bobb, Nancy" <Nancy.Bobb@fhwa.dot.gov>
Subject: RE: REQUEST FOR FHWA PRIOR APPROVAL FOR CCO NO. 16S2

Attached is prior approval for CCO #16 S2.

Nancy E. Bobb
Bay Bridge Project Oversight Manager
FHWA
650 Capitol Mall, Suite 4-100
Sacramento, CA 95814
Phone: (916) 498-5033 FAX: (916) 498-5008

-----Original Message-----
From: Jake VanEnckevort [mailto:Jake_VanEnckevort@dot.ca.gov]
Sent: Thursday, December 08, 2005 1:20 PM
To: Bobb, Nancy
Cc: Doug Coe; David Salladay; Bill Howe; Dave Wu; Kannu Balan
Subject: REQUEST FOR FHWA PRIOR APPROVAL FOR CCO NO. 16S2

Ms. Bobb,

I am requesting your review of the attached documents for Contract Change Order No. 16S2, "Pier 7 lease for Batch Plant and Flyash Storage extension," for FHWA Prior Approval, for the SFOBB East Span Skyway Bridge Replacement Project, Federal Aid Project No. ACIM-080-1(085)8N.

Please telephone me at (510) 622-5121 if you have questions or require additional information.

Thank you,

Jake

(See attached file: CCO_16S2_FHWA_Memo.pdf)(See attached file: CCO_16S2_FHWA_Report.pdf)

CCO #16 S2 prior approval.d

RESIDENT ENGINEER [illegible]

PHONE NUMBER 818-682-5101

CONTRACT CHANGE ORDER 019-023

CONTRACT NO 04-012024

FILING DATE 03/14/06

DESCRIPTION PIVR 1 (PAVE EXTENSION

CCO CATEGORY CGAX

APPROVAL DATE 03/14/06

TIME EXTENSION DAY NONE

ITEM NO	DESCRIPTION OF CHANGE	APPROVED CHANGE QUANTITY	APPROVED CHANGE AMOUNT	CHANGES TO DATE CCO	CHANGES TO DATE GB	AUTHORIZED QUANTITY	QUANTITY PAID TO DATE	EST NO.
	ADJUSTING OF COMPENSATION - UNIT PRICE (-)		$293,611.11CR					
	NET CHANGE THIS C C O		$293,611.11CR					
	AMOUNT OF BRIDGEWORK		$0.00					

*** C.C.O. ACCEPTED AND FILED ***

FEDERAL PARTICIPATION			FEDERAL SEGREGATION			
DRIP TYPE	COST TYPE	CHET	TYPE FUNDING SOURCE	PCT	FUNDING SOURCE	PCT
NEW P	293,611.11	.00				

CONTRACT CHANGE ORDER

Change Requested by: Contractor

CCO: 16	Suppl. No. 2	Contract No. 04 - 012024	Road 04-SF,Ala-80-13.9/14.3,0.0/1.6	FED. AID LOC.: ACIM-080-1(085)8N

To: KIEWIT / FCI / MANSON a JV

You are directed to make the following changes from the plans and specifications or do the following described work not included in the plans and specifications for this contract. ***NOTE: This change order is not effective until approved by the Engineer.***

Description of work to be done, estimate of quantities and prices to be paid. (Segregate between additional work at contract price, agreed price and force account.) Unless otherwise stated, rates for rental of equipment cover only such time as equipment is actually used and no allowance will be made for idle time. This last percentage shown is the net accumulated increase or decrease from the original quantity in the Engineer's Estimate.

Adjustment of Compensation at Unit Price:

For the use of the 1.8 acre property at Pier 7 for operating a concrete batch plant and an 11 ft X 60 ft area located at the north corner of the batchplant at Pier 7 for the storage of flyash, Kiewit/FCI/Manson, a joint venture (KFM), shall compensate the State the agreed unit price of $0.18 per square foot per month from January 1, 2005, to March 31, 2007. A map delineating the batch plant and the flyash storage area is shown on page 3 of this CCO.

The lease shall be carried out pursuant to the lease agreement executed in Contract Change Order No.16. All conditions and stipulations agreed upon in CCO No. 16 signed on August 28, 2003, shall apply.
The agreement, to vacate the 11 ft x 60 ft Flyash storage area within 72 hours of written notice as agreed upon in CCO No. 16 S1 signed on November 14, 2003 shall also apply.

The agreed delay days associated with CCO Nos. 107, 127, and 154 (132 Work Days) are credited to this lease extension in accordance with Item 8, sub-item C, of the lease agreement executed in Contract Change Order No.16. The result is a net lease extension of 20.63 months.

If additional time is required beyond March 31, 2007, a price adjustment reflecting current market value will be negotiated.

Estimate of Adjustment at Agreed Unit Price:

1) Concrete Batch Plant Area, 1.8 acres x 43,560 square feet/acre x $0.18/ft2	=	$14,113.44/month	<credit>
2) Flyash Storage Area	11 ft x 60 ft x $0.18/ft2 =	$ 118.80/month	<credit>

The State shall be compensated $14,232.24 per month during the extension of this agreement less 6.37 months credit for the agreed delay days, for a total net credit of $293,611.11 ((27 - 6.37) x $14,232.24)

Estimated cost of Adjustment of Compensation at Agreed Unit Price .....($293,611.11) (Credit)

CONTRACT CHANGE ORDER

Change Requested by: Contractor

CCO: 16	Suppl. No. 2	Contract No. 04 - 012024	Road 04-SF,Ala-80-13.9/14.3,0.0/1.6	FED. AID LOC.: ACIM-080-1(085)8N

Estimated Cost: Increase ☐ Decrease ☑ ($293,611.11)

By reason of this order the time of completion will be adjusted as follows: 0 days

Submitted by

Signature	Resident Engineer: DOUG COE, Supervising Br. Eng.	Date 2-7-06

Approval Recommended by

Signature	Construction Engineer: DOUG COE, Supervising Br. Eng.	Date 2-7-06

Engineer Approval by

Signature David Salladay	(Print name and title) for PETER SIEGENTHALER - Chief	Date 3-14-06

We the undersigned contractor, have given careful consideration to the change proposed and agree, if this proposal is approved, that we will provide all equipment, furnish the materials, except as may otherwise be noted above, and perform all services necessary for the work above specified, and will accept as full payment therefor the prices shown above.

NOTE: If you, the contractor, do not sign acceptance of this order, your attention is directed to the requirements of the specifications as to proceeding with the ordered work and filing a written protest within the time therein specified.

Contractor Acceptance by

Signature	(Print name and title) Project Director	Date 2/07/06

STATE OF CALIFORNIA - DEPARTMENT OF TRANSPORTATION

CONTRACT CHANGE ORDER MEMORANDUM

DATE: 2/6/2006

TO: PETER SIEGENTHALER / DOUG COE, Supervising Br. Eng.

FROM: DOUG COE, Supervising Br. Eng.

FILE: E.A. 04 - 012024
CO-RTE-PM 04-SF,Ala-80-13.9/14.3,0.0/1.6
FED. NO. ACIM-080-1(085)8N

CCO#: 16 | SUPPLEMENT#: 2 | Category Code: CGAX

CONTINGENCY BALANCE (incl. this change) $53,777,063.27

COST: ($293,611.11) INCREASE ☐ DECREASE ☑

HEADQUARTERS APPROVAL REQUIRED? ☐ YES ☑ NO

SUPPLEMENTAL FUNDS PROVIDED: $0.00

IS THIS REQUEST IN ACCORDANCE WITH ENVIRONMENTAL DOCUMENTS? ☑ YES ☐ NO

CCO DESCRIPTION:
Pier 7 Lease Extension

PROJECT DESCRIPTION:
REPLACE SFOBB EAST SPAN

LOCATION: IN SAN FRANCISCO AND ALAMEDA COUNTIES IN SAN FRANCISCO AND OAKLAND FROM 1.3 KM EAST OF THE YERBA BUENA ISL

THIS CHANGE ORDER PROVIDES FOR:

Extending the lease for a 1.8 acre portion of Pier 7 (parcel) used to locate a Portland Cement Concrete Batch Plant (batch plant) for the production of Portland Cement Concrete, and extending the lease for an 11 ft x 60 ft area located at the north corner of the batchplant at Pier 7 for storage of flyash from January 1, 2005, to March 31, 2007.

This change order is needed to extend the dates for the Contractor's lease of property on Pier 7 because the previous lease period has expired.

Compensation to the State for the land lease will be based on an agreed unit price of $0.18 per square foot per month.

This change order extends the lease contract as agreed in CCO No. 16 Supplement 0 which states under item 8, sub-item C; "Except as specifically limited within this change order, the Contractor shall be entitled to an equitable adjustment as provided for in the Contract for impacts to the batch plant operations."
Therefore, the granted TRO days for CCO No. 107, 127, and 154 are credited to this lease extension. These CCO's extended the contract completion by 132 working days (49, 72, 11) which results in 6.37 months of delay (132 WD / 20.73 WD per month). The 27 month lease extension is credited by 6.37 months, resulting in a net lease extension of 20.63 months.

This change order provides for crediting the State $14,232.24 per month for extending the Pier 7 lease for the Contractor, and will result in an estimated decrease in cost to the project of $293,611.11 (20.63 x $14,232.24). A cost analysis supporting the agreed unit price is on file in the project records.

Mr. Pete Siegenthaler, SFOBB Construction Manager, concurs with this change. A copy of the concurrence signed by Mr. Siegenthaler on December 15, 2005, is attached.

Prior Approval was obtained from Ms. Nancy Bobb, FHWA Bay Bridge Project Manager, via electronic message on December 12, 2005. A printed copy of the prior approval provided by Ms. Bobb is attached.

Prior Approval was obtained from Mr. Jon Tapping, Interim SFOBB Project Manager, via electronic message on December 13, 2005. A printed copy of the prior approval provided by Mr. Tapping is attached.

Concurrence from Maintenance is not required as this change order does not use maintenance funds or affect maintenance facilities or operations.

No time adjustment is warranted for this change as it does not affect the controlling operation.

RECEIVED
050634 MAR 27 90

CONCURRED BY:		
Construction Engineer:	Douglas Coe	Date2/13/2005
Bridge Engineer:	Douglas Coe	Date2/13/2005
FHWA Representative:	Nancy Bobb	Date2/13/2005
Project Engineer:		Date
Other (specify): Jon Tapping		Date2/13/2005
		Date
		Date
District Prior Approval By:		Date
HQ (Issue Approve) By:		Date
Resident Engineer's Signature:		Date 2-7-06

ESTIMATE OF COST

	THIS REQUEST	TOTAL TO DATE
ITEMS	$0.00	$0.00
FORCE ACCOUNT	$0.00	$0.00
AGREED PRICE	$0.00	$0.00
ADJUSTMENT	($293,611.11)	($633,937.67)
TOTAL	($293,611.11)	($633,937.67)

FEDERAL PARTICIPATION

☑ PARTICIPATING ☐ PARTICIPATING IN PART ☐ NONE
☐ NON-PARTICIPATING (MAINTENANCE) ☐ NON-PARTICIPATING

FEDERAL SEGREGATION (if more than one Funding Source or P.I.P type)
☑ CCO FUNDED PER CONTRACT ☐ CCO FUNDED AS FOLLOWS

FEDERAL FUNDING SOURCE	PERCENT

Change Requested by: Contractor

ONTRACT CHANGE ORDER

CO: 17 Suppl. No. 0 Contract No. 04 - 012024 | Road 04-SF,Ala-80-13.9/14.3,0.0/1.6 | FED. AID LOC.: ACIM-080-1(085)8N

o: KIEWIT / FCI / MANSON a JV

ou are directed to make the following changes from the plans and specifications or do the following described work not included in the plans and pecifications for this contract. ***NOTE: This change order is not effective until approved by the Engineer.***

escription of work to be done, estimate of quantities and prices to be paid. (Segregate between additional work at contract price, agreed price and rce account.) Unless otherwise stated, rates for rental of equipment cover only such time as equipment is actually used and no allowance will be ade for idle time. This last percentage shown is the net accumulated increase or decrease from the original quantity in the Engineer's Estimate

xtra Work at Force Account:

The State and the Contractor shall equally divide the cost of maintaining the temporary water pollution control practices as specified in accordance with Section 10-1.02 "Water Pollution Control (Storm Water Pollution Prevention Plan)" of the contract special provisions providing temporary water pollution control measures during the lifetime of the project. One-half of the maintenance cost is estimated to be $50,000.

There will be no time adjustment by reason of this change.

Estimated cost of Extra Work at Force Account $50,000.00

HISTORY COPY

Estimated Cost: Increase ✓ Decrease — $50,000.00

y reason of this order the time of completion will be adjusted as follows: 0 days

Submitted by Signature	Resident Engineer: COE D	Date 10-22-02
Approval Recommended by Signature	Construction Engineer: COE D.	Date
Engineer Approval by Signature	(Print name and title) PETER SIEGENTHALER - Chief	Date 11/1/02

e the undersigned contractor, have given careful consideration to the change proposed and agree, if this proposal is approved, that we will provide all uipment, furnish the materials, except as may otherwise be noted above, and perform all services necessary for the work above specified, and will accept s full payment therefor the prices shown above.

OTE: If you, the contractor, do not sign acceptance of this order, your attention is directed to the requirements of the specifications as to roceeding with the ordered work and filing a written protest within the time therein specified.

Contractor Acceptance by Signature	(Print name and title) M.T. Shoro, Project Director	Date 10/30/02

STATE OF CALIFORNIA - DEPARTMENT OF TRANSPORTATION

DATE: 10/18/2002

CONTRACT CHANGE ORDER MEMORANDUM

TO: PETER SIEGENTHALER / COE D.	FILE: E.A. 04 - 012024 CO-RTE-PM 04-SF,Ala-80-13.9/14.3,0.0/1.6 FED. NO. ACIM-080-1(085)8N
FROM: COE D.	
CCO#: 17 SUPPLEMENT#: 0 Category Code: 1C3	CONTINGENCY BALANCE (incl. this change) **$53,602,696.53**
COST: **$50,000.00** INCREASE ☑ DECREASE ☐	HEADQUARTERS APPROVAL REQUIRED? ☐ YES ☑ NO
SUPPLEMENTAL FUNDS PROVIDED: **$0.00**	IS THIS REQUEST IN ACCORDANCE WITH ENVIRONMENTAL DOCUMENTS? ☑ YES ☐ NO
CCO DESCRIPTION: Division of Cost for SWPPP Practices	**PROJECT DESCRIPTION:** REPLACE SFOBB EAST SPAN

LOCATION: IN SAN FRANCISCO AND ALAMEDA COUNTIES IN SAN FRANCISCO AND OAKLAND FROM 1.3 KM EAST OF THE YERBA BUENA ISL

THIS CHANGE ORDER PROVIDES FOR:

the State and the Contractor to equally divide the cost of maintaining the temporary water pollution control practices as specified in accordance with Section 10-1.02, "Water Pollution Control (Storm Water Pollution Prevention Plan)", of the contract special provisions. The cost of maintenance will be determined as specified in Section 9-1.03 "Force Account Payment" of the Standard Specifications. This contract change order provides paying the Contractor one-half of the cost for maintenance.

Maintenance will ensure proper implementation and functioning of temporary water pollution control practices implemented at the project site. Maintenance includes but is not limited to clean-up, repair, removal, disposal, and replacement of temporary water pollution control practices. The provisions for sharing maintenance costs shall not relieve the Contractor from the responsibility for providing appropriate maintenance on items with no shared maintenance costs. Clean-up, repair, removal, disposal, improper installation, and replacement of temporary water pollution control practices damaged by the Contractor's negligence will not be considered as included in the cost for performing maintenance.

This contract change order will not affect contract time.

Maintenance concurrence is not required as these water pollution control practices are temporary and will only be used during the lifetime of the project.

CONCURRED BY:		
Construction Engineer:	Douglas Coe	Date
Bridge Engineer:		Date
FHWA Representative:	Bill Wong	Date
Project Engineer:		Date
Other (specify):		Date
		Date
		Date
District Prior Approval By:		Date
HQ (Issue/ Approve) By:		Date
Resident Engineer's Signature:		Date 10-22-02

ESTIMATE OF COST

	THIS REQUEST	TOTAL TO DATE
ITEMS	$0.00	$0.00
FORCE ACCOUNT	$50,000.00	$50,000.00
AGREED PRICE	$0.00	$0.00
ADJUSTMENT	$0.00	$0.00
TOTAL	$50,000.00	$50,000.00

FEDERAL PARTICIPATION

☑ PARTICIPATING ☐ PARTICIPATING IN PART ☐ NONE
☐ NON-PARTICIPATING (MAINTENANCE) ☐ NON-PARTICIPATING

FEDERAL SEGREGATION (if more than one Funding Source or P.I.P. type)
☑ CCO FUNDED PER CONTRACT ☐ CCO FUNDED AS FOLLOWS

FEDERAL FUNDING SOURCE	PERCENT

49.017

STATE OF CALIFORNIA - DEPARTMENT OF TRA. .PORTATION

CONTRACT CHANGE ORDER

Change Requested by: Engineer

CCO: 17	Suppl. No. 1	Contract No. 04 - 012024	Road 04-SF,Ala-80-13.9/14.3,0.0/1.6	FED. AID LOC.: ACIM-080-1(085)8N

To: KIEWIT / FCI / MANSON a JV

You are directed to make the following changes from the plans and specifications or do the following described work not included in the plans and specifications for this contract. ***NOTE: This change order is not effective until approved by the Engineer.***

Description of work to be done, estimate of quantities and prices to be paid. (Segregate between additional work at contract price, agreed price and force account.) Unless otherwise stated, rates for rental of equipment cover only such time as equipment is actually used and no allowance will be made for idle time. This last percentage shown is the net accumulated increase or decrease from the original quantity in the Engineer's Estimate.

Extra Work at Force Account:

As determined by the Engineer, the Contractor shall provide labor, equipment, and materials to install and maintain temporary water pollution control practices (soil stabilization, sediment, tracking, wind erosion, non-storm water, and waste management and material) for areas on Pier 7 shown on the attached layout (Sheet 2 of 2 of this change order) not leased by KFM.

The costs for the temporary water pollution control practices will be determined as specified in Section 5-1.21 "Force Account Payment" of the contract special provisions. Full compensation shall be given to the Contractor for providing temporary water pollution control practices.

There will be no time adjustment by reason of this change.

Estimated Cost: Increase ☐ Decrease ☐ $0.00

By reason of this order the time of completion will be adjusted as follows: 0 days

Submitted by		
Signature	Resident Engineer: COE D.	Date 6-3-03
Approval Recommended by		
Signature	Construction Engineer: COE D.	Date 6-3-03
Engineer Approval by		
Signature	(Print name and title) PETER SIEGENTHALER - Chief	Date

We the undersigned contractor, have given careful consideration to the change proposed and agree, if this proposal is approved, that we will provide all equipment, furnish the materials, except as may otherwise be noted above, and perform all services necessary for the work above specified, and will accept as full payment therefor the prices shown above.

NOTE: If you, the contractor, do not sign acceptance of this order, your attention is directed to the requirements of the specifications as to proceeding with the ordered work and filing a written protest within the time therein specified.

Contractor Acceptance by		
Signature	(Print name and title) A.T. Skaggs, Project Director	Date 10/17/03

STATE OF CALIFORNIA - DEPARTMENT OF TRANSPORTATION

CONTRACT CHANGE ORDER

Change Requested by: Engineer

CCO: 17	Suppl. No. 2	Contract No. 04 - 012024	Road 04-SF,Ala-80-13.9/14.3,0.0/1.6	FED. AID LOC.: ACIM-080-1(085)8N

To: **KIEWIT / FCI / MANSON a JV**

You are directed to make the following changes from the plans and specifications or do the following described work not included in the plans and specifications for this contract. ***NOTE: This change order is not effective until approved by the Engineer.***

Description of work to be done, estimate of quantities and prices to be paid. (Segregate between additional work at contract price, agreed price and force account.) Unless otherwise stated, rates for rental of equipment cover only such time as equipment is actually used and no allowance will be made for idle time. This last percentage shown is the net accumulated increase or decrease from the original quantity in the Engineer's Estimate.

Extra Work at Force Account:

As authorized by the Engineer and in accordance with Section 4-1.03D "Extra Work" and Section 9-1.03 "Force Account Payment " of the Standard Specifications and Section 5-1.21 "Force Account Payment" of the Special Provisions, Compensate the Contractor as specified in the Special Provisions Section 10-1.02 Water Pollution Control (Storm Water Pollution Prevention Plan), for providing storm water sampling and analysis as per approved Storm Water Pollution Prevention Plan, Section 600.5 Sampling and Analysis Plan for Non-Visible Pollutants.

There will be no time adjustment by reason of this change.

Estimated cost of Extra Work at Force Account $25,000.00

Estimated Cost: Increase ☑ Decrease ☐ $25,000.00

By reason of this order the time of completion will be adjusted as follows: 0 days

Submitted by

Signature	Resident Engineer: COE D.	Date 4-15-04

Approval Recommended by

Signature	Construction Engineer: COE D.	Date 4-15-04

Engineer Approval by

Signature	(Print name and title) PETER SIEGENTHALER - Chief	Date

We the undersigned contractor, have given careful consideration to the change proposed and agree, if this proposal is approved, that we will provide all equipment, furnish the materials, except as may otherwise be noted above, and perform all services necessary for the work above specified, and will accept as full payment therefor the prices shown above.

NOTE: If you, the contractor, do not sign acceptance of this order, your attention is directed to the requirements of the specifications as to proceeding with the ordered work and filing a written protest within the time therein specified.

Contractor Acceptance by

Signature	(Print name and title) A.T. Skoro, Project Director	Date 4/21/04

TE OF CALIFORNIA - DEPARTMENT OF TRANSPORTATION

CONTRACT CHANGE ORDER MEMORANDUM

DATE: 6/3/03 Page 1 of 1

TO: PETER SIEGENTHALER / COE D.	FILE: E.A. 04 - 012024
	CO-RTE-PM 04-SF,Ala-80-13.9/14.3,0.0/1.6
FROM: COE D.	FED. NO. ACIM-080-1(085)8N
CCO#: 17 SUPPLEMENT#: 1 Category Code: AWZZ	CONTINGENCY BALANCE (incl. this change) $63,802,889.32
COST: $0.00 INCREASE ☐ DECREASE ☐	HEADQUARTERS APPROVAL REQUIRED? ☐ YES ☑ NO
SUPPLEMENTAL FUNDS PROVIDED: $0.00	IS THIS REQUEST IN ACCORDANCE WITH ENVIRONMENTAL DOCUMENTS? ☑ YES ☐ NO
CCO DESCRIPTION: Caltrans SWPPP 100% Cost	**PROJECT DESCRIPTION:** REPLACE SFOBB EAST SPAN

LOCATION: IN SAN FRANCISCO AND ALAMEDA COUNTIES IN SAN FRANCISCO AND OAKLAND FROM 1.3 KM EAST OF THE YERBA BUENA ISL

THIS CHANGE ORDER PROVIDES FOR:

adjusting the funding splits from 50% to 100% in areas outside the KFM rented space on Pier 7. This contract change order will provide 100% payment to the Contractor for installation and maintenance of temporary water pollution control practices (soil stabilization, sediment, tracking, wind erosion, non-storm water, waste management and material) within Caltrans administration area. These temporary control practices are necessary to maintain Caltrans administration area free of waste including garbage that causes pollution or nuisance. Refer to the attached drawing of Pier 7. The temporary control practices will be implemented and maintained in areas that are not impacted by the Contractor's operations.

The costs for the temporary water pollution control practices will be determined as specified in Section 5-1.21 "Force Account Payment" of the contract special provisions.

Contractor performed maintenance will ensure proper implementation and function of temporary water control practices. Maintenance includes but is not limited to clean-up, repair, removal, disposal, and replacement of temporary water pollution control practices. Clean-up, repair, removal, disposal, and replacement of temporary water pollution control practices damaged by the Contractor's negligence or improper implementation will not be considered as included in the cost for performing maintenance. As shown in the Pier 7 layout attachment, when "Future Contract Use" area starts being used by the designated contractor, no further payments will be made for maintenance. Only the "Caltrans Administration Area" will continue to be maintained on this supplement.

This contract change order will not affect contract time.

Maintenance concurrence is not required as these water pollution control practices are temporary and will only be used during the lifetime of the project.

CONCURRED BY:	
Construction Engineer:	Date
Bridge Engineer:	Date
FHWA Representative:	Date
Project Engineer:	Date
Other (specify):	Date
	Date
	Date
District Prior Approval By:	Date
HQ (Issue Approve) By:	Date
Resident Engineer's Signature:	Date 6-3-03

ESTIMATE OF COST

	THIS REQUEST	TOTAL TO DATE
ITEMS	$0.00	$0.00
FORCE ACCOUNT	$0.00	$50,000.00
AGREED PRICE	$0.00	$0.00
ADJUSTMENT	$0.00	$0.00
TOTAL	$0.00	$50,000.00

FEDERAL PARTICIPATION

☑ PARTICIPATING ☐ PARTICIPATING IN PART ☐ NONE
☐ NON-PARTICIPATING (MAINTENANCE) ☐ NON-PARTICIPATING

FEDERAL SEGREGATION (if more than one Funding Source or P.I.P. type)
☑ CCO FUNDED PER CONTRACT ☐ CCO FUNDED AS FOLLOWS

FEDERAL FUNDING SOURCE	PERCENT

STATE OF CALIFORNIA - DEPARTMENT OF TRANSPORTATION

CONTRACT CHANGE ORDER

Change Requested by: Engineer

CCO: 17	Suppl. No. 2	Contract No. 04 - 012024	Road 04-SF,Ala-80-13.9/14.3,0.0/1.6	FED. AID LOC.: ACIM-080-1(085)8N

To: **KIEWIT / FCI / MANSON a JV**

You are directed to make the following changes from the plans and specifications or do the following described work not included in the plans and specifications for this contract. ***NOTE: This change order is not effective until approved by the Engineer.***

Description of work to be done, estimate of quantities and prices to be paid. (Segregate between additional work at contract price, agreed price and force account.) Unless otherwise stated, rates for rental of equipment cover only such time as equipment is actually used and no allowance will be made for idle time. This last percentage shown is the net accumulated increase or decrease from the original quantity in the Engineer's Estimate.

Extra Work at Force Account:

As authorized by the Engineer and in accordance with Section 4-1.03D "Extra Work" and Section 9-1.03 "Force Account Payment " of the Standard Specifications and Section 5-1.21 "Force Account Payment" of the Special Provisions, Compensate the Contractor as specified in the Special Provisions Section 10-1.02 Water Pollution Control (Storm Water Pollution Prevention Plan), for providing storm water sampling and analysis as per approved Storm Water Pollution Prevention Plan, Section 600.5 Sampling and Analysis Plan for Non-Visible Pollutants.

There will be no time adjustment by reason of this change.

Estimated cost of Extra Work at Force Account $25,000.00

Estimated Cost: Increase ☑ Decrease ☐ $25,000.00

By reason of this order the time of completion will be adjusted as follows: 0 days

Submitted by

Signature	Resident Engineer: COE D.	Date 4-15-04

Approval Recommended by

Signature	Construction Engineer: COE D.	Date 4-15-04

Engineer Approval by

Signature	(Print name and title) PETER SIEGENTHALER - Chief	Date

We the undersigned contractor, have given careful consideration to the change proposed and agree, if this proposal is approved, that we will provide all equipment, furnish the materials, except as may otherwise be noted above, and perform all services necessary for the work above specified, and will accept as full payment therefor the prices shown above.

NOTE: If you, the contractor, do not sign acceptance of this order, your attention is directed to the requirements of the specifications as to proceeding with the ordered work and filing a written protest within the time therein specified.

Contractor Acceptance by

Signature	(Print name and title) A.T. Skoro, Project Director	Date 4/21/04

STATE OF CALIFORNIA - DEPARTMENT OF TRANSPORTATION

CONTRACT CHANGE ORDER MEMORANDUM

DATE: 4/13/2004 Page 1 of 1

TO: PETER SIEGENTHALER / COE D.	FILE: E.A. 04 - 012024
FROM: COE D.	CO-RTE-PM 04-SF,Ala-80-13.9/14.3,0.0/1.6
	FED. NO. ACIM-080-1(085)8N
CCO#: 17 SUPPLEMENT#: 2 Category Code: AWZZ	CONTINGENCY BALANCE (incl. this change) $22,143,660.94
COST: $25,000.00 INCREASE ☑ DECREASE ☐	HEADQUARTERS APPROVAL REQUIRED? ☐ YES ☑ NO
SUPPLEMENTAL FUNDS PROVIDED: $0.00	IS THIS REQUEST IN ACCORDANCE WITH ENVIRONMENTAL DOCUMENTS? ☑ YES ☐ NO
CCO DESCRIPTION: Storm Water Sampling and Analysis	**PROJECT DESCRIPTION:** REPLACE SFOBB EAST SPAN

LOCATION: IN SAN FRANCISCO AND ALAMEDA COUNTIES IN SAN FRANCISCO AND OAKLAND FROM 1.3 KM EAST OF THE YERBA BUENA ISL

THIS CHANGE ORDER PROVIDES FOR:

Sampling and analysis of the storm water discharges from the construction site and the contractor's yard as per approved Storm Water Pollution Prevention Plan (SWPPP).

SWPPP Section 600.5 Sampling and Analysis Plan for Non-Visible Pollutants describes the sampling and analysis strategy and schedule for monitoring non-visible pollutants in storm water discharges in accordance with the requirements of Section B of the General Permit and applicable requirements of the Caltrans Guidance Manual: Stormwater Monitoring Protocols.

Special Provisions Section 10-1.02 Water Pollution Control (Storm Water Pollution Prevention Plan) provides that storm water sampling and analysis will be paid for as extra work. The work provided in this change order conforms to the requirement of the Special Provisions Section 10-1.02.

No adjustment in contract time is warranted. This change does not affect contract time.

Maintenance concurrence is not required because this work will not effect any permanent Caltrans facility. FHWA concurrence is not required.

RECEIVED 053020 MAY 18 80

CONCURRED BY:		
Construction Engineer: Douglas Coe	DBC	Date 4-30-04
Bridge Engineer:		Date
FHWA Representative:		Date
Project Engineer:		Date
Other (specify): David Salladay, District Rep		Date 4/8/2004
		Date
		Date
District Prior Approval By:		Date
HQ (Issue Approve) By:		Date
Resident Engineer's Signature:		Date 4-30-04

ESTIMATE OF COST

	THIS REQUEST	TOTAL TO DATE
ITEMS	$0.00	$0.00
FORCE ACCOUNT	$25,000.00	$75,000.00
AGREED PRICE	$0.00	$0.00
ADJUSTMENT	$0.00	$0.00
TOTAL	$25,000.00	$75,000.00

FEDERAL PARTICIPATION

☑ PARTICIPATING ☐ PARTICIPATING IN PART ☐ NONE
☐ NON-PARTICIPATING (MAINTENANCE) ☐ NON-PARTICIPATING

FEDERAL SEGREGATION (if more than one Funding Source or P.I.P. type)
☑ CCO FUNDED PER CONTRACT ☐ CCO FUNDED AS FOLLOWS

FEDERAL FUNDING SOURCE	PERCENT

California Department of Transportation

SFOBB New East Span

Contract: 04-012024, Skyway

CCO 18(0)

Deleted

1. For superelevation diagram, see "Deck Contours No. 1" and "Deck Contours No. 15" sheets.
2. For dimensions "D", see "Typical Sections" sheets.
3. Configuration for highway lanes only (without LRT) shown on deck. For highway lanes plus LRT, see "Cross Sections No. 3" sheet.
4. For utilities within cross sections, see "Road Plans".

04	SF, A10	80	13.9/14.3, 0.0/1.6	440R1	978

REGISTERED ENGINEER - CIVIL

6-4-01
PLANS APPROVAL DATE

The State of California or its officers or agents shall not be responsible for the accuracy or completeness of electronic copies of this plan sheet.

REGISTERED PROFESSIONAL ENGINEER Sajid Abbas No. C 055274 Exp. 12/31/04 CIVIL STATE OF CALIFORNIA

T.Y. LIN / MOFFATT & NICHOL
825 BATTERY STREET
SAN FRANCISCO, CA 94111

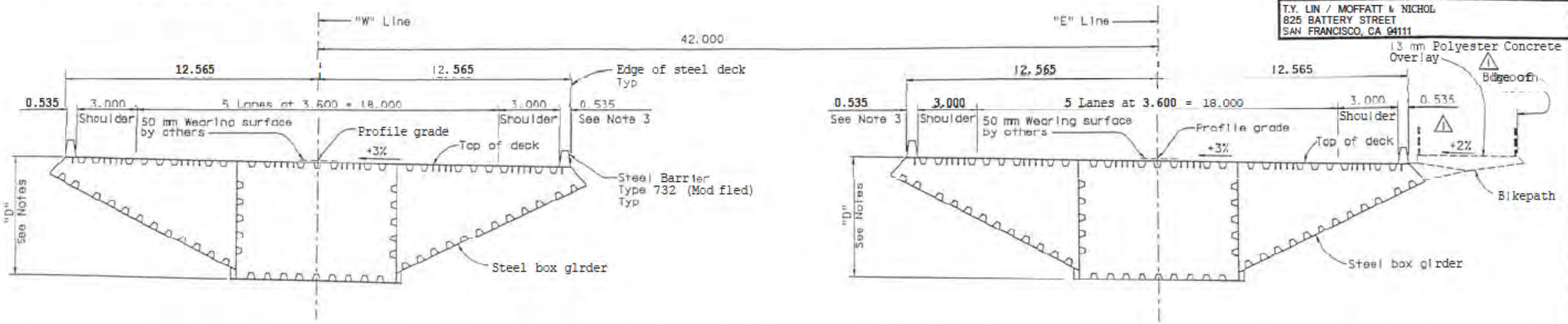

TYPICAL SECTION ("W" 62+12.385 to "W" 62+73.000)
("E" 62+01.688 to "E" 62+59.937)
1:100

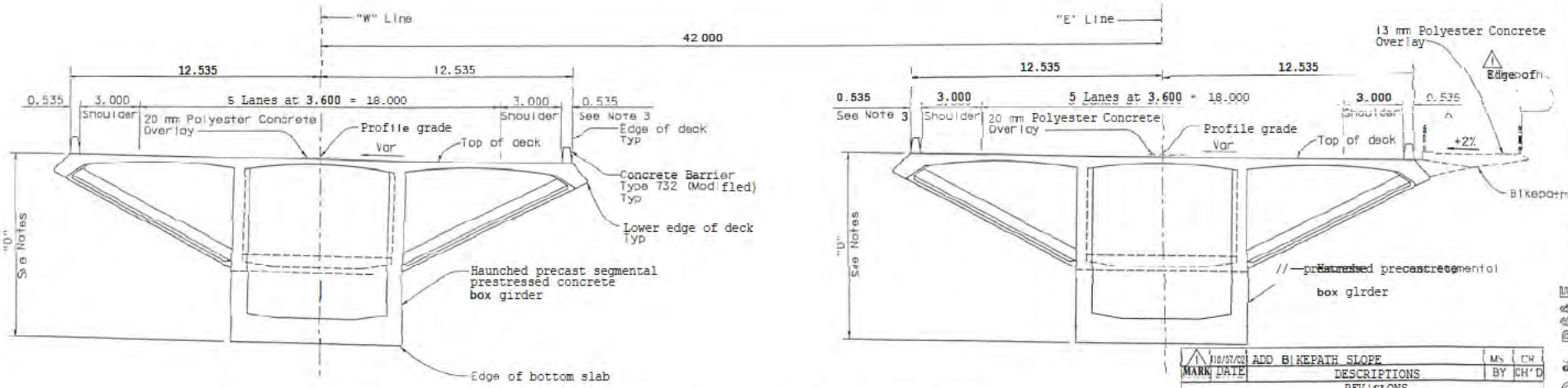

TYPICAL SECTION ("W" 62+73.000 to "W" 81+15.000)
("E" 62+59.937 to "E" 80+87.649)
1:100

MARK	DATE	DESCRIPTIONS	BY	CH'D
1	10/07/02	ADD BIKEPATH SLOPE	MS	CK

REVISIONS

CONTRACT CHANGE ORDER NO. 19
SHEET 2 OF 33 04-012024

ALL DIMENSIONS ARE IN METERS UNLESS OTHERWISE SHOWN

SAN FRANCISCO OAKLAND BAY BRIDGE
EAST SPAN SEISMIC SAFETY PROJECT

SKYWAY STRUCTURES
CROSS SECTIONS NO. 1

H. El-Natur
DESIGN OVERSIGHT
SIGN OFF DATE 10/07/02

DESIGN	S. Abbas	CHECKED	C. Warts
DETAILS	E. Zharkov	CHECKED	C. Warts
QUANTITIES	K. Corsiler	CHECKED	S. Sol

PREPARED FOR THE STATE OF CALIFORNIA DEPARTMENT OF TRANSPORTATION

Sajid Abbas
PROJECT ENGINEER

BRIDGE NO. 34-0006L/R
KILOMETER POST 13.9/14.3, 0.0/1.6

CU 04
EA 012021

DISREGARD PRINTS BEARING EARLIER REVISION DATES

SHEET 008

ORIGINAL SCALE IN MILLIMETERS FOR REDUCED PLANS

FILE => pr\00\04-012001\skyway\may2002\000rsd01.dgn

USER NAME => pbrown

TIME PLOTTED => 20:56:20 DATE PLOTTED => 05 OCT 02

100% PAGE

REGISTERED ENGINEER - CIVIL

6-4-01

PLANS APPROVAL DATE

Saïd Abbas No. C 055274 Exp. 12/31/04 CIVIL STATE OF CALIFORNIA

The State of California or its officers or agents shall not be responsible for the accuracy or completeness of electronic copies of this plan sheet.

T.Y. LIN / MOFFATT & NICHOL
825 BATTERY STREET
SAN FRANCISCO, CA 94111

Caltrans now has a web site! To get to the web site, go to: http://www.dot.ca.gov

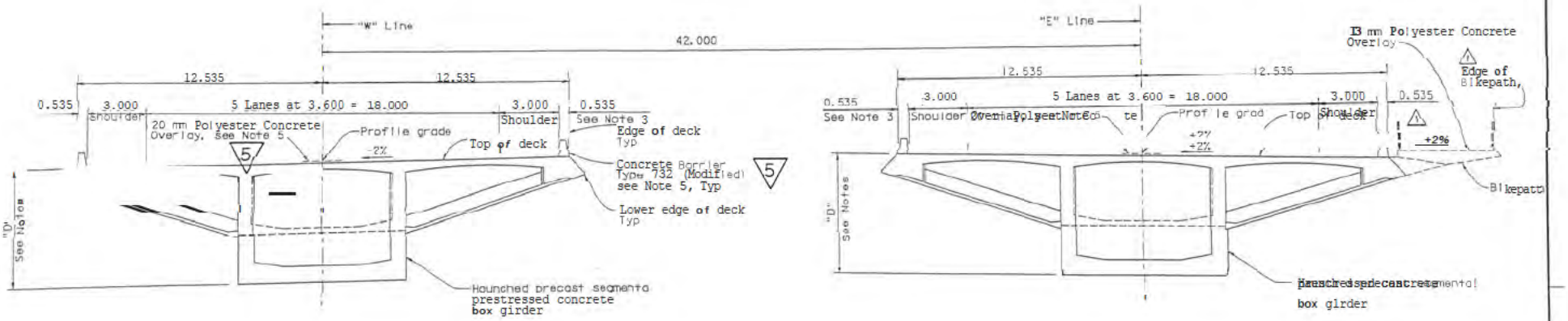

TYPICAL SECTION ("W" 81+15.000 to "W" 83+11.000) ("E" 80+87.649 to "E" 82+82.311)
1:100

NOTES:

1. For superelevation diagram, see "Deck Contours No. 1" and "Deck Contours No. 15" sheets.
2. For dimensions "D", see "Typical Sections" sheets.
3. Configuration for highway lanes only (without LRT) shown on deck. For highway lanes plus LRT, see "Cross Sections No. 3" sheet.
4. For utilities within cross sections, see "Road Plans".
5. For limits of polyester concrete overlay and barrier concrete at Hinges EE and EW, see "Structure Plan Frame E4" and "Structure Plan Frame W4" sheets.

MARK	DATE	DESCRIPTIONS	BY	CHD
1	10/17/02	ADD BIKEPATH SLOPE	MS	CR

REVISIONS

CONTRACT CHANGE ORDER NO. 19
SHEET 3 OF 33 04-012024

5 REVISED PER ADDENDUM NO. 5 DATED OCTOBER 24, 2001

ALL DIMENSIONS ARE IN METERS UNLESS OTHERWISE SHOWN

SAN FRANCISCO OAKLAND BAY BRIDGE
EAST SPAN SEISMIC SAFETY PROJECT

SKYWAY STRUCTURES

CROSS SECTIONS NO. 2

H. El-Natur
DESIGN OVERSIGHT
SIGN OFF DATE 10/07/02

DESIGN	S. Abbas	CHECKED	C. Werts
DETAILS	E. Zharkov	CHECKED	C. Werts
QUANTITIES	K. Cormier	CHECKED	S. Shi

PREPARED FOR THE STATE OF CALIFORNIA DEPARTMENT OF TRANSPORTATION

Saïd Abbas
PROJECT ENGINEER

BRIDGE NO. 34-0006L/R
KILOMETER POST 3.9/14.3, 0.0/1.6

CU 04
EA 012021

DISREGARD PRINTS BEARING EARLIER REVISION DATES

SHEET 010

ORIGINAL SCALE IN MILLIMETERS FOR REDUCED PLANS

FILE → P:\00\04-012001\skyway\way2002\cross02.dgn

USERNAME → vigrator
TIME PLOTTED → 21:20:52
DATE PLOTTED → 08 OCT 02
100% PS&E

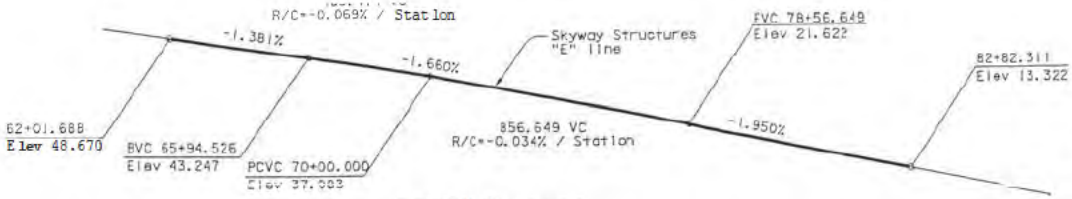

PROFILE GRADE

NO SCALE

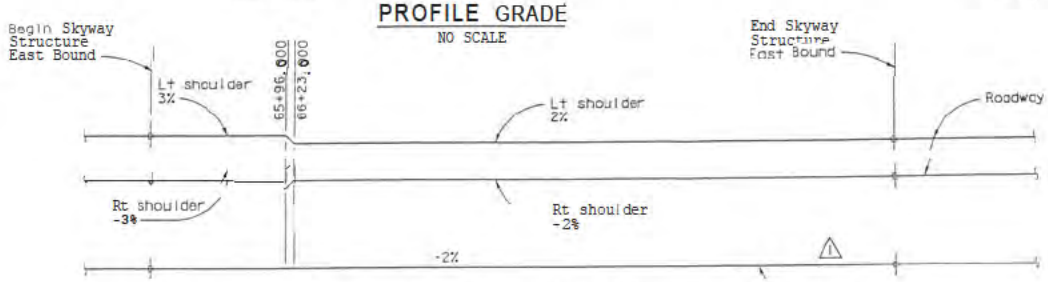

SUPERELEVATION DIAGRAM

NO SCALE

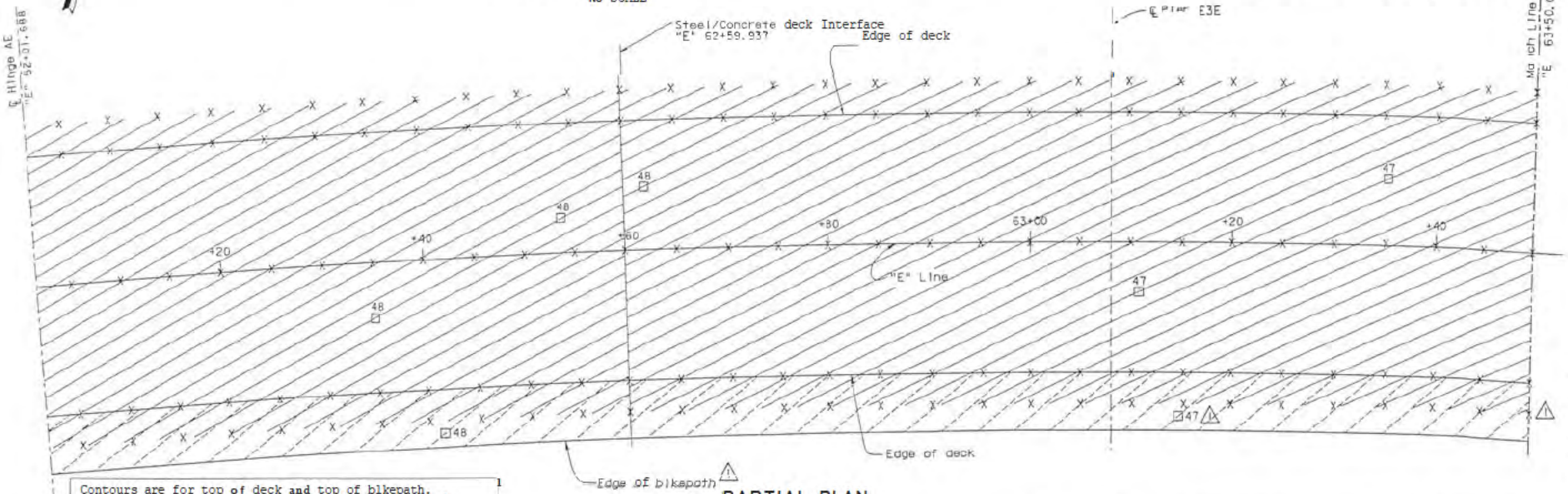

Contours are for top of deck and top of bikepath. Contours have been adjusted by lowering from profile grade the thickness of wearing surface (20 mm on concrete deck, 50 mm on steel deck, and 13 mm on bikepath).

PARTIAL PLAN

1:200

LEGEND:

——— Deck contour

- - - - - Bikepath contour

NOTES:

1. Contour Interval at 0.050 meter.
2. Contours do not include camber.
3. X- Indicates 5.000 meter interval along station line.
4. □ - Indicates even meter contour.

MARK	DATE	DESCRIPTIONS	BY	CH'D
1	10/07/02	REVISE BIKEPATH CONTOURS, SUPERELEVATION, AND LOCATION OF BIKEPATH CONTOUR ELEV. 47	MS	CR

REVISIONS

CONTRACT CHANGE ORDER NO. 19
SHEET 4 OF 33 04-012024

04 | SF, Alo | 80 | 0.0/1.6 | 465R | 978

REGISTERED ENGINEER - CIVIL

6-4-01
PLANS APPROVAL DATE

The State of California or its officers or agents shall not be responsible for the accuracy or completeness of electronic copies of this plan sheet.

REGISTERED PROFESSIONAL ENGINEER Wenpei Paul Chou No. 34019 Exp. 12/31/03 CIVIL STATE OF CALIFORNIA

T.Y. LIN / MOFFATT & NICHOL
825 BATTERY STREET
SAN FRANCISCO, CA 94111

Caltrans now has a web site! To get to the web site, go to: http://www.dot.ca.gov

H. El-Natur
DESIGN OVERSIGHT
SIGN OFF DATE 10/07/02

DESIGN	P. Chou	CHECKED	
DETAILS	S. Lee	CHECKED	C. Morris
QUANTITIES	K. Cormier	CHECKED	B. Nguyen-Tan

PREPARED FOR THE STATE OF CALIFORNIA DEPARTMENT OF TRANSPORTATION

Sajid Abdos
PROJECT ENGINEER

ALL DIMENSIONS ARE IN METERS UNLESS OTHERWISE SHOWN

BRIDGE NO. 34-0006L/R
KILOMETER POST 3.9/14.3, 0.0/1.6

SAN FRANCISCO OAKLAND BAY BRIDGE
EAST SPAN SEISMIC SAFETY PROJECT

SKYWAY STRUCTURES
DECK CONTOURS NO. 15

CU 04
EA 012021

DISREGARD PRINTS BEARING EARLIER REVISION DATES

SHEET 034 OF

FILE => pi:\bb\04-012001\skyway\may2002\dbdk014.dgn

ORIGINAL SCALE IN MILLIMETERS FOR REDUCED PLANS 0 10 20 30 40 50 60 70 80 90 100

100% PSAE

04	SF, A10	80	0.0/1.6	46BR	973

REGISTERED ENGINEER - CIVIL

6-4-01

PLANS APPROVAL DATE

The State of California or its officers or agents shall not be responsible for the accuracy or completeness of electronic copies of this plan sheet.

REGISTERED PROFESSIONAL ENGINEER — Wenpei Paul Chou — No. 54019 — Exp. 12/31/03 — CIVIL — STATE OF CALIFORNIA

T.Y. LIN / MOFFATT & NICHOL
825 BATTERY STREET
SAN FRANCISCO, CA 94111

Caltrans now has a web site! To get to the web site, go to: http://www.dot.ca.gov

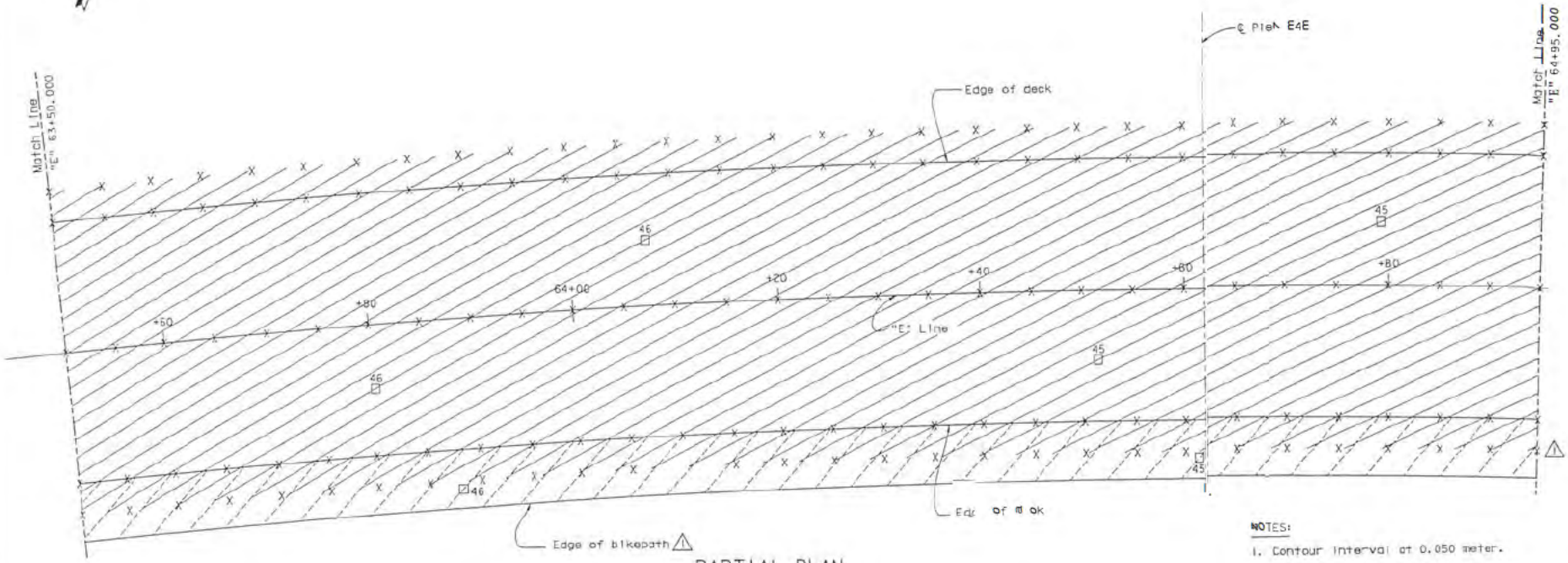

PARTIAL PLAN
1:200

Contours are for top of deck and top of bikepath. Contours have been adjusted for wearing surface by lowering from profile grades 20 mm for top of deck and 13 mm for top of bikepath.

MARK	DATE	DESCRIPTIONS	BY	CH'D
1	10/07/02	REVISE BIKEPATH CONTOURS	MS	CR

REVISIONS

NOTES:

1. Contour interval at 0.050 meter.
2. Contours do not include camber.
3. X-indicates 5.000 meter interval along station line.
4. □-indicates 5 meter interval on station line.

LEGEND:

——D Deck contour

------ B Bikepath contour

CONTRACT CHANGE ORDER NO. 19
SHEET 5 OF 33

04-012024

ALL DIMENSIONS ARE IN METERS UNLESS OTHERWISE SHOWN

SAN FRANCISCO OAKLAND BAY BRIDGE
EAST SPAN SEISMIC SAFETY PROJECT

SKYWAY STRUCTURES

DECK CONTOURS NO. 16

DESIGN	P. Chou	C. Werts	
DETAILS	S. Lee	C. Werts	
QUANTITIES	K. Cormier	D. Nguyen-Tan	

PREPARED FOR THE STATE OF CALIFORNIA DEPARTMENT OF TRANSPORTATION

Sajid Abbas
PROJECT ENGINEER

BRIDGE NO. 34-0066L/R
HOLOMETER POS. 13.9/14.3 0.0/1.6

CU 04
EA 012021

FILE → D:\bb\04-012001\skyway\may2002\sbdko15.dgn

H. El-Nctur
DESIGN OVERSIGHT
SIGN OFF DATE 10/07/02

SHEET 035

USERNAME → Vignatova@ATE PLOTTED → 25 OCT 02 TIME PLOTTED → 25 12:30

100 % PS&E

04	SF, A10	80	13.9/0.0/	14.3/.6	467R1	978

REGISTERED ENGINEER - CIVIL

6-4-01

PLANS APPROVAL DATE

The State of California or its officers or agents shall not be responsible for the accuracy or completeness of electronic copies of this plan sheet.

REGISTERED PROFESSIONAL ENGINEER Wenpei Paul Chou No. 54019 Exp. 12/31/03 CIVIL STATE OF CALIFORNIA

T.Y. LIN / MOFFATT & NICHOL
825 BATTERY STREET
SAN FRANCISCO, CA 94111

Caltrans now has a web site! To get to the web site, go to http://www.dot.ca.gov

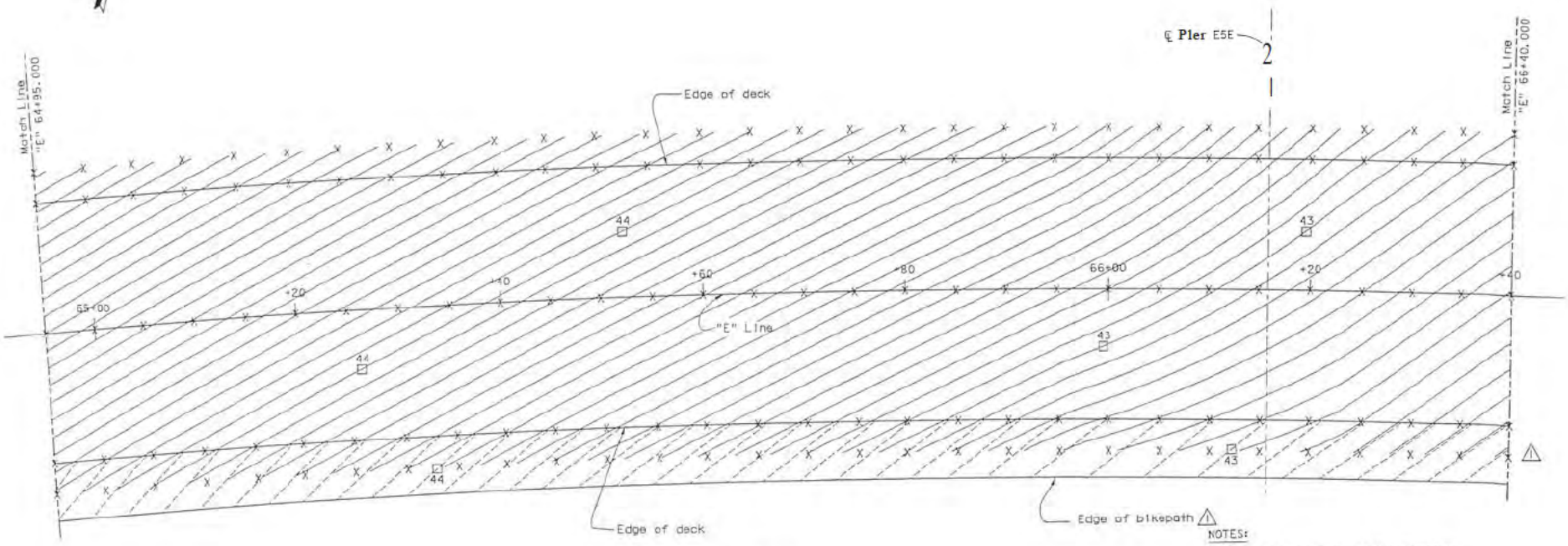

PARTIAL PLAN
1: 200

NOTES:

1. Contour interval at 0.050 meter.
2. Contours do not include camber.
3. X- indicates 5.000 meter Interval along station line.
4. □ - indicates even meter contour

LEGEND:

——— Deck contour

- - - - - Bikepath contour

Coni-ours are for top of deck and top of bikepath Contours have been adjusted for wearing surface by lowering from profile grades 20 mm for top of deck and 13 mm for top of bikepath

MARK	DATE	DESCRIPTIONS	BY	CH'D
1	10/07/02	REVISE BIKEPATH CONTOURS	MS	CR

REVISIONS

CONTRACT CHANGE ORDER NO. 19
SHEET 6 OF 33 04-012024

ALL DIMENSIONS ARE IN METERS UNLESS OTHERWISE SHOWN

SAN FRANCISCO OAKLAND BAY BRIDGE
EAST SPAN SEISMIC SAFETY PROJECT

SKYWAY STRUCTURES

DECK CONTOURS NO. 17

H. EI-NOTLE
DESIGN OVERSIGHT
SIGN OFF DATE 10/07/02

DESIGN P. Chou — CHECKED C. Nerts
DETAILS S. Lee — CHECKED C. Nerts
QUANTITIES K. Cormier — CHECKED D. Nguyen-Tan

PREPARED FOR THE STATE OF CALIFORNIA DEPARTMENT OF TRANSPORTATION

Sajid Abbas
PROJECT ENGINEER

BRIDGE NO. 34-0006L/R
KILOMETER POST 13.9/14.3/0.0/.6

CU 04
EA 012021

DISREGARD PRINTS BEARING EARLIER REVISION DATES

REVISION DATES (PRELIMINARY STAGE ONLY)

SHEET 036

Rev. Date 5-14-98

ORIGINAL SCALE IN MILLIMETERS FOR REQUIRED PLANS

FILE \\3-9\bd\04-012001\skyway\may2002\cdck016.dgn

USERNAME \\3\YLONG\DGNS PLOTTED \\3 08 OCT 02 TIME PLOTTED \\3 21:11:49

1 - 2 % PGSE

04	SF, Ala	30	13.9/14.3, 0.0/1.6	468R	978

REGISTERED ENGINEER - CIVIL

5-4-01
PLANS APPROVAL DATE

The State of California or its officers or agents shall not be responsible for the accuracy or completeness of electronic copies of this plan sheet.

Wenpei Paul Chou
No. 54019
Exp. 12/31/03
CIVIL
STATE OF CALIFORNIA

T.Y. LIN / MOFFATT & NICHOL
825 BATTERY STREET
SAN FRANCISCO, CA 94111

Caltrans now has a web site! To get to the web site, go to: http://www.dot.ca.gov

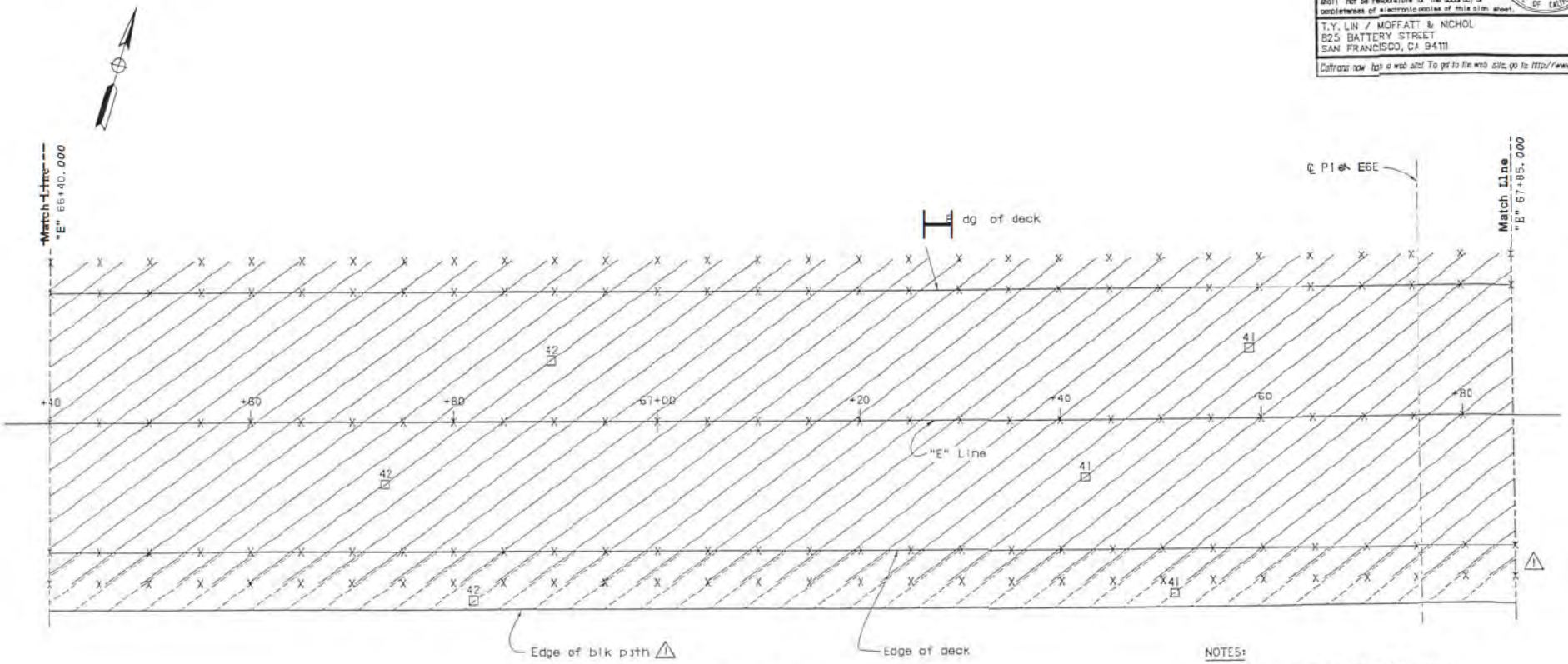

PARTIAL PLAN
1:200

Contours are for top of deck and top of bikepath. Contours have been adjusted for wearing surface by lowering from profile grades 20 mm for top of deck and 13 mm for top of bikepath.

MARK	DATE	DESCRIPTIONS	BY	CH'D
1	10/07/02	REVISE BIKEPATH CONTOURS	MS	CR

REVISIONS

NOTES:
1. Contour interval at 0.050 meter
2. Contours do not include camber.
3. X-indicates 5.000 meter interval along station line
4. □-indicates every meter contour.

LEGEND
——— Deck contour
------ Bik path contour

CONTRACT CHANGE ORDER NO. 19
SHEET 7 OF 33 04-012024

ALL DIMENSIONS ARE IN METERS UNLESS OTHERWISE SHOWN

SAN FRANCISCO OAKLAND BAY BRIDGE
EAST SPAN SEISMIC SAFETY PROJECT

SKYWAY STRUCTURES
DECK CONTOURS NO. 18

H. El-Natur
DESIGN OVERSIGHT
SIGN OFF DATE: 10/07/02

DESIGN	P. Chou	C. Wertz	
DETAILS	S. Lee	C. Wertz	
QUANTITIES	K. Cormier	D. Nguyen-Tan	

PREPARED FOR THE STATE OF CALIFORNIA DEPARTMENT OF TRANSPORTATION

Sajid Abbas
PROJECT ENGINEER

BRIDGE NO. 34-0006L/R
KILOMETER POST 13.9/14.3, 0.0/1.6

CU 04
EA 012021

DISREGARD PRINTS BEARING EARLIER REVISION DATES

REVISION DATES (PRELIMINARY STAGE ONLY)

SHEET 037 OF

Rev. Date: 5-18-95

ORIGINAL SCALE IN MILLIMETERS FOR REDUCED PLANS 0 10 20 30 40 50 60 70 80 90 100

FILE => p:\bb\04-012001\skyway\nby2002\bbdk017.dgn

USERNAME => vignaroa
DATE PLOTTED => 08 OCT 102
TIME PLOTTED => 21:15:51

100% PAGE

04	SF, Alc	80	13.9/14.3 0.0/1.6	469R	978

REGISTERED ENGINEER - CIVIL
REGISTERE ENGINEER - CIVIL

6-4-01
PLANS APPROVAL DATE

No. 54019 Exp. 12/31/03 CIVIL STATE OF CALIFORNIA

The State of California or its officers or agents shall not be responsible for the accuracy or completeness of electronic copies of this plan sheet.

T.Y. LIN / MOFFATT & NICHOL
825 BATTERY STREET
SAN FRANCISCO, CA 94111

Caltrans now has a web site! To get to the web site, go to: http://www.dot.ca.gov

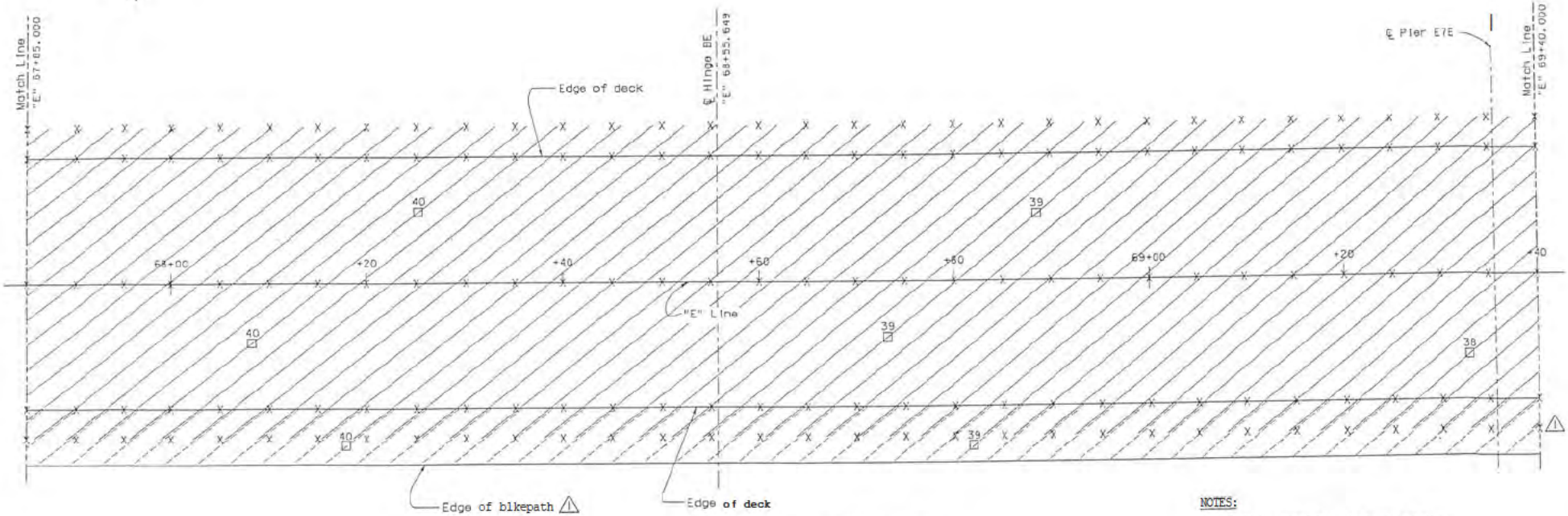

PARTIAL PLAN

1:200

Contours are for top of deck and top of bikepath. Contours have been adjusted for wearing surface by lowering from profile grades 20 mm for top of deck and 13 mm for top of bikepath.

MARK	DATE	DESCRIPTIONS	BY	CH'D
1	10/07/02	REVISE BIKEPATH CONTOURS	MS	CR

REVISIONS

NOTES:

1. Contour Interval at 0.050 meter.
2. Contours do not Include camber.
3. X-Indicates 5.000 meter Interval along station line.
4. □-Indicates even meter contour.

LEGEND:

——— Deck contour

- - - - - Bikepath contour

CONTRACT CHANGE ORDER NO 19
SHEET 8 OF 33 04-012024

ALL DIMENSIONS ARE IN METERS UNLESS OTHERWISE SHOWN

SAN FRANCISCO OAKLAND BAY BRIDGE
EAST SPAN SEISMIC SAFETY PROJECT

SKYWAY STRUCTURES

DECK CONTOURS NO. 19

DESIGN	P. Chou	CHECKED	E. Nerts
DETAILS	S. Lee	CHECKED	C. Nerts
QUANTITIES	K. Cormier	CHECKED	D. Nguyen-Tan

PREPARED FOR THE STATE OF CALIFORNIA DEPARTMENT OF TRANSPORTATION

Salid Abbas
PROJECT ENGINEER

BRIDGE NO. 34-0006L/R
KILOMETER POST 13.9/14.3 0.0/1.6

CU 04
EA 012021

DISREGARD PRINTS BEARING EARLIER REVISION DATES

SHEET 038

H. El-Nemr
DESIGN OVERSIGHT
SIGN DEC DATE 10/07/02

Rev. Date 5-10-99

ORIGINAL SCALE IN MILLIMETERS FOR REDUCED PLANS

FILE => s:\bb\04-012001\skyway\may2002\sbdkc18.dgn

USERNAME => VIGIONOVSKYE PLOTTED => 8 9 9 TIME 10:07:0 => 12 9 9 9

100% PS&E

04	SF, Alo	80	13.9/14.3. 0.0/1.6	470RI	978

REGISTERED ENGINEER - CIVIL

6-4-01

PLANS APPROVAL DATE

The State of California or its officers or agents shall not be responsible for the accuracy or completeness of electronic copies of this plan sheet.

Wenpei Paul Chou No. 54019 Exp. 12/31/03 CIVIL STATE OF CALIFORNIA

T.Y. LIN / NOFFATT & NICHOL
825 BATTERY STREET
SAN FRANCISCO, CA 94111

Caltrans now has a web site! To get to the web site, go to: http://www.dot.ca.gov

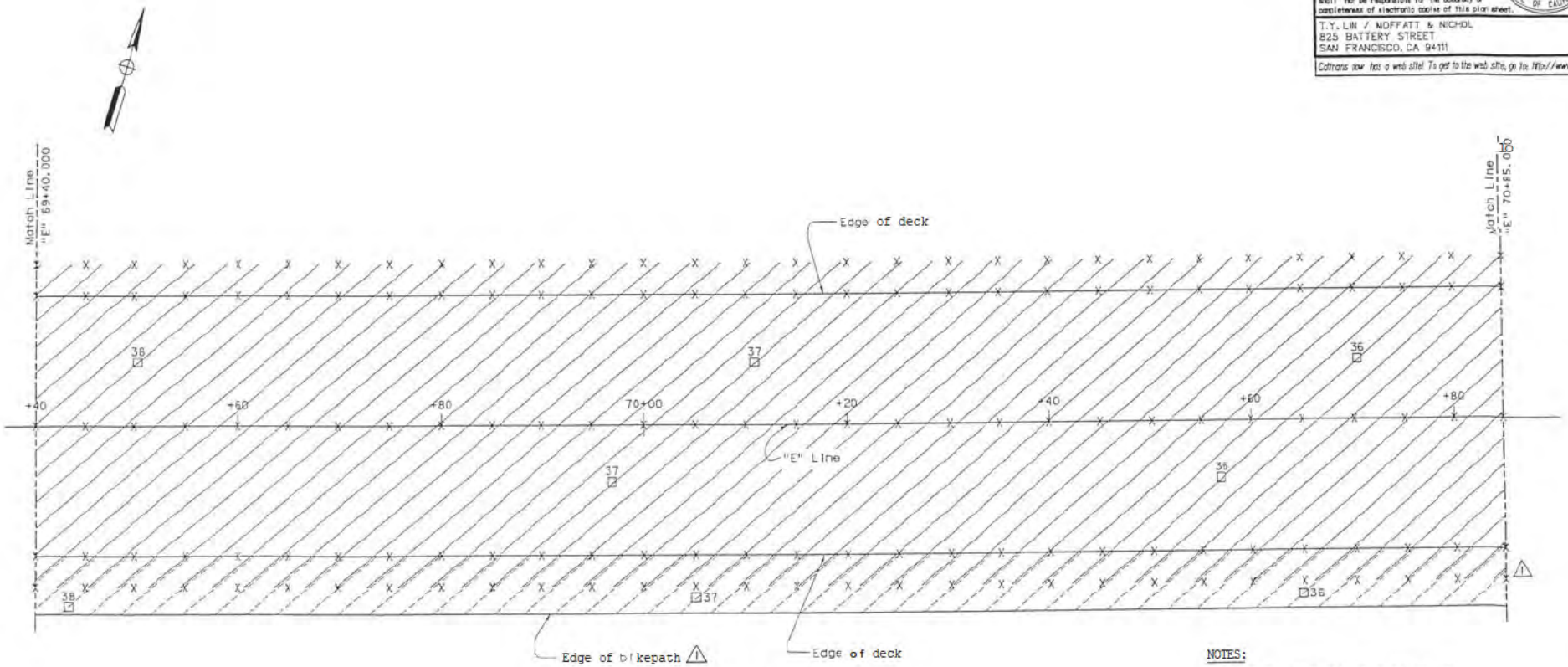

PARTIAL PLAN

1:200

MARK	DATE	DESCRIPTIONS	BY	CH'D
1	10/07/02	REVISE BIKEPATH CONTOURS	MS	CR

REVISIONS

Contours are for top of deck and top of bikepath. Contours have been adjusted for wearing surface by lowering from profile grades 20 mm for top of deck and 13 mm for top of bikepath.

CONTRACT CHANGE ORDER NO. 19
SHEET 9 OF 33 04-012021H

NOTES:

1. Contour interval at 0.050 meter.
2. Contours do not include camber.
3. X-indicates 5.000 meter interval along station line.
4. □-indicates even meter contour.

LEGEND:

Deck contour

Bikepath contour

100 PS&E

ALL DIMENSIONS ARE IN METERS UNLESS OTHERWISE SHOWN

SAN FRANCISCO OAKLAND BAY BRIDGE
EAST SPAN SEISMIC SAFETY PROJECT

SKYWAY STRUCTURES

DECK CONTOURS NO. 20

H. Ti-Nguyen
DESIGN OVERSIGHT
SIGN OFF DATE 10/07/02

DESIGN	P. Chou	CHECKED	C. Warts
DETAILS	S. Lee	CHECKED	C. Warts
QUANTITIES	K. Cormier	CHECKED	D. Nguyen-Tan

PREPARED FOR THE STATE OF CALIFORNIA DEPARTMENT OF TRANSPORTATION

Sajid Abbas
PROJECT ENGINEER

BRIDGE NO. 34-0006L/R
KILOMETER POST 13.9/14.3. 0.0/1.6

CU 04
EA 012021

DISREGARD PRINTS BEARING EARLIER REVISION DATES

REVISION DATES (PRELIMINARY STAGE ONLY)

SHEET 039 OF

Rev. Sched 5-15-98

ORIGINAL SCALE IN MILLIMETERS FOR REDUCED PLANS 0 10 20 30 40 50 60 70 80 90 100

FILE =J:\pl\bb\04-012001\skyway\may2002\bbdks19.dgn

USERNAME = J:\pl\bb\BBSITE PLOTTED = 10 OCT 02 TIME = 10:21

100% PS&E

04	SF, AIO	80	13.9/14.3, 0.0/1.6	47IR	978

REGISTERED ENGINEER - CIVIL

6-4-01
PLANS APPROVAL DATE

The State of California or its officers or agents shall not be responsible for the accuracy or completeness of electronic copies of this plan sheet.

REGISTERED PROFESSIONAL ENGINEER Wengel Paul Chou No. 54019 Exp. 12/31/03 CIVIL STATE OF CALIFORNIA

T.Y. LIN / MOFFATT & NICHOL
825 BATTERY STREET
SAN FRANCISCO, CA 94111

Caltrans now has a web site! To get to the web site, go to http://www.dot.ca.gov

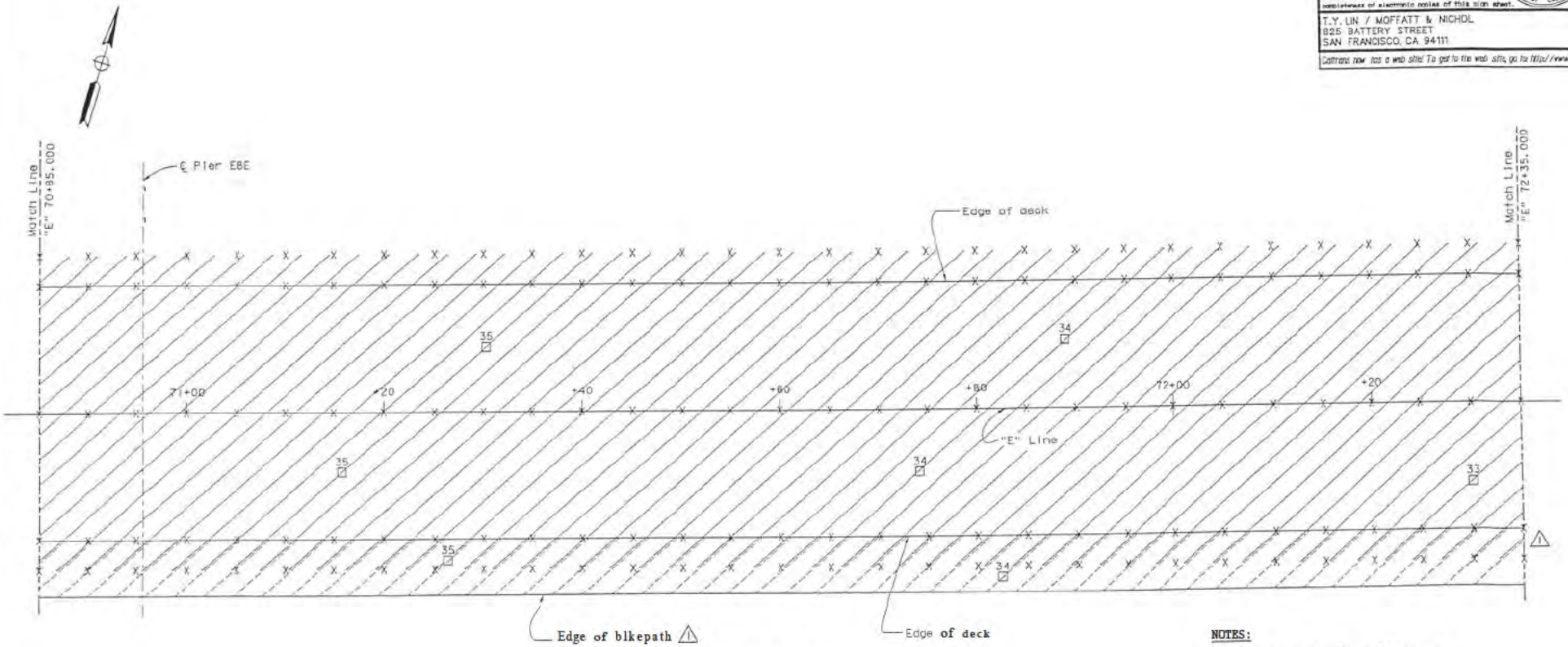

PARTIAL PLAN

1: 200

MARK	DATE	DESCRIPTIONS	BY	CH'D
1	10/01/02	REVISE BIKEPATH CONTOURS	MS	CR

REVISIONS

Contours are for top of deck and top of blkepath
Contours have been adjusted for wearing surface by lowering from profile grades 20 mm for top of deck and 15 mm for top of blkepath

NOTES:

1. Contour interval at 0.050 meter
2. Contours do not include camber
3. X-indicates 5.000 meter interval along station line.
4. □-indicates even meter contour

LEGEND:

——— Deck contour

– – – – Bikepath contour

CONTRACT CHANGE ORDER NO. 19
SHEET 10 OF 33 04-012024

ALL DIMENSIONS ARE IN METERS UNLESS OTHERWISE SHOWN

SAN FRANCISCO OAKLAND BAY BRIDGE
EAST SPAN SEISMIC SAFETY PROJECT

SKYWAY STRUCTURES

DECK CONTOURS NO. 21

H. El-Natur
DES ICE OVERSIGHT
SIGN OFF DATE 10/01/02

DESIGN P. Chou | CHECKED C. Werts
DETAILS S. Lee | CHECKED C. Werts
QUANTITIES K. Cormier | CHECKED D. Nguyen-Tan

PREPARED FOR THE STATE OF CALIFORNIA DEPARTMENT OF TRANSPORTATION

Sajid Abbas
PROJECT ENGINEER

BRIDGE NO. 34-0006L/R
KILOMETER POST 13.9/14.3, 0.0/1.6

CU 04
EA 012021

DISREGARD PRINTS BEARING EARLIER REVISION DATES

REVISION DATES (PRELIMINARY STAGE ONLY)

SHEET 040

Rev. June 3-18-98

ORIGINAL SCALE IN MILLIMETERS FOR REDUCED PLANS

FILE => p:\dd\04-012001\skyway\ndy2002\ddck020.dgn

100% PS&E

TIME PLOTTED => 21:37:28
DATE PLOTTED => 09 OCT 102
FILE => p:\grotove\

DIST	COUNTY	ROUTE	POST MILEAGE	PROJECT NO.	SHEETS
04	SF, Alo	80	13.9/14.3, 0.0/1.6	472R	978

REGISTERED ENGINEER - CIVIL

6-4-01
PLANS APPROVAL DATE

The State of California or the officers or agents shall not be responsible for the accuracy or completeness of electronic copies of this plan sheet.

REGISTERED PROFESSIONAL ENGINEER Wenpei Paul Chou No. 54010 Exp. 12/31/03 CIVIL STATE OF CALIFORNIA

T.Y. LIN / NOFFATT & NICHOL
825 BATTERY STREET
SAN FRANCISCO, CA 94111

Caltrans now has a web site! To get to the web site, go to: http://www.dot.ca.gov

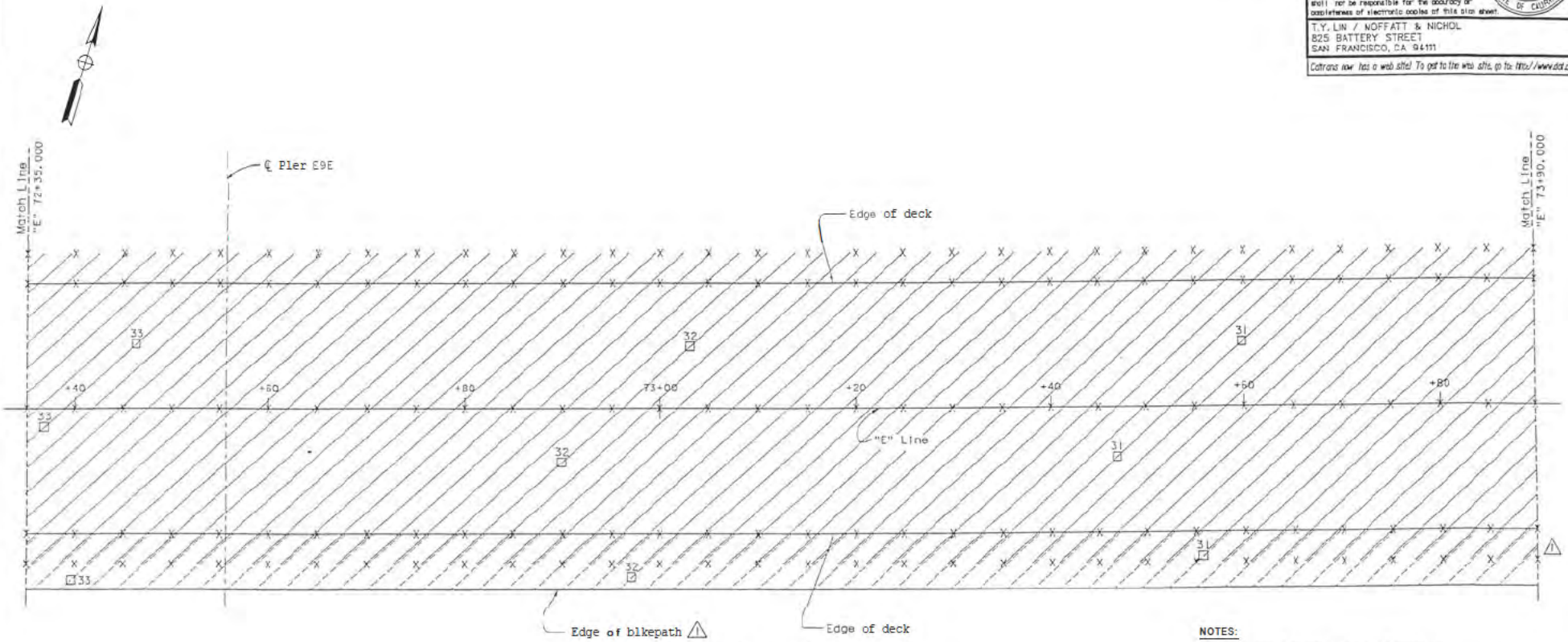

PARTIAL PLAN

1: 200

MARK	DATE	DESCRIPTIONS	BY	CH'D
1	10/07/02	REVISE BIKEPATH CONTOURS	US	CR

REVISIONS

Contours are for top of deck and top of blkepath. Contours have been adjusted for wearing surface by lowering from profile grades 20 mm for top of deck and 13 mm for top of blkepath.

NOTES:

1. Contour Interval at 0.050 meter.
2. Contours do not Include camber.
3. X- Indicates 5.000 meter Interval along station line.
4. □ - Indicates even meter contour.

LEGEND:

——— Deck contour

– – – – Blkepath contour

CONTRACT CHANGE ORDER NO. 19
SHEET 11 OF 33 04-012024

ALL DIMENSIONS ARE IN METERS UNLESS OTHERWISE SHOWN

SAN FRANCISCO OAKLAND BAY BRIDGE
EAST SPAN SEISMIC SAFETY PROJECT

SKYWAY STRUCTURES

DECK CONTOURS NO. 22

H. El-Nouty
DESIGN OVERSIGHT
SIGN OFF DATE 10/07/02

DESIGN: P. Chou — CHECKED: C. Werts
DETAILS: S. Lee — CHECKED: C. Werts
QUANTITIES: K. Cormier — CHECKED: D. Nguyen-Tan

PREPARED FOR THE STATE OF CALIFORNIA DEPARTMENT OF TRANSPORTATION

Sajid Abbas
PROJECT ENGINEER

BRIDGE NO. 34-0006L/R
KILOMETER POST 13.9/14.3, 0.0/1.6

CU 04
EA 012021

DISCARD PRINTS BEARING EARLIER REVISION DATES

REVISION DATES (PRELIMINARY STAGE ONLY)

SHEET 041 OF

FILE => p:\bb\04-012021\skyway\may2002\abdko21.dgn

USERNAME => Vignaroli, Rick

04 | SF.A10 | 80 | 0.0/1.6 | 473R | 978

REGISTERED ENGINEER - CIVIL

6-4-01

PLANS APPROVAL DATE

The State of California or its officers or agents shall not be responsible for the accuracy or completeness of electronic copies of this plan sheet.

Wenpei Paul Chou
No. 54019
Exp. 12/31/03
CIVIL
REGISTERED PROFESSIONAL ENGINEER
STATE OF CALIFORNIA

T.Y. LIN / MOFFATT & NICHOL
825 BATTERY STREET
SAN FRANCISCO, CA 94111

Caltrans now has a web site! To get to the web site, go to http://www.dot.ca.gov

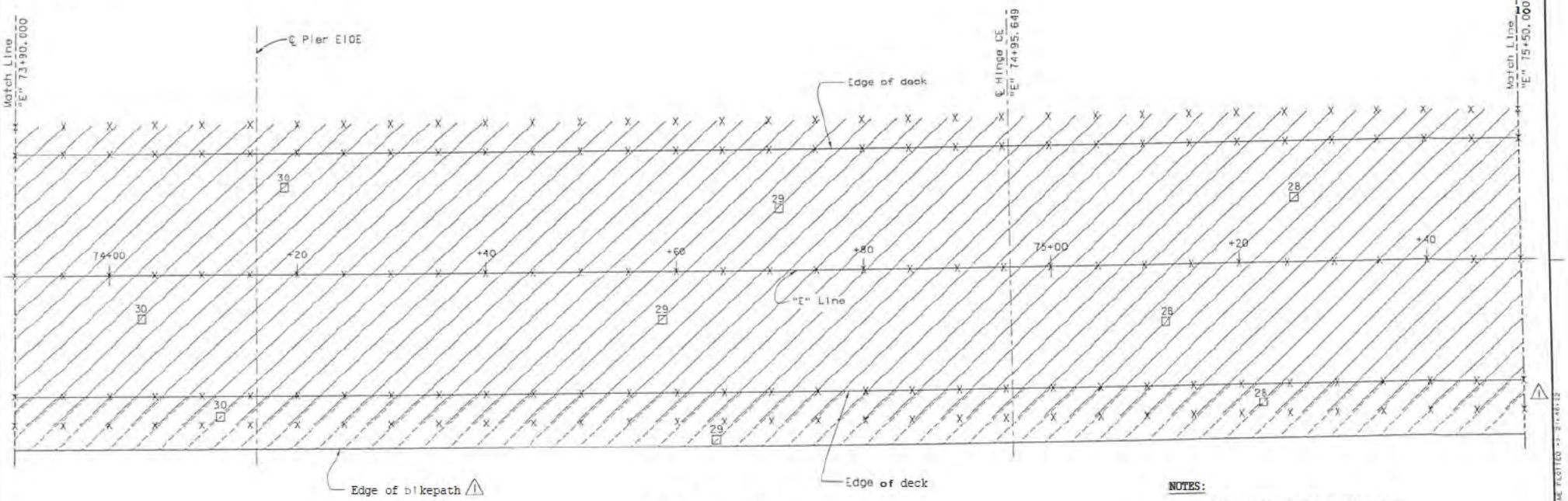

PARTIAL PLAN

1:200

MARK	DATE	DESCRIPTIONS	BY	CH'D
1	10/07/02	REVISE BIKEPATH CONTOURS	MS	CR

REVISIONS

Contours are for top of deck and top of bikepath. Contours have been adjusted for wearing surface by lowering from profile grades 20 mm for top of deck and 13 mm for top of bikepath.

CONTRACT CHANGE ORDER NO. 19
SHEET 12 OF 33 04-012021

NOTES:

1. Contour Interval at 0.050 meter.
2. Contours do not include camber.
3. X - Indicates 5.000 meter Interval along station line.
4. □ - Indicates even meter contour.

LEGEND:

——— Deck contour

—·— Bikepath contour

ALL DIMENSIONS ARE IN METERS UNLESS OTHERWISE SHOWN

SAN FRANCISCO OAKLAND BAY BRIDGE
EAST SPAN SEISMIC SAFETY PROJECT

SKYWAY STRUCTURES

DECK CONTOURS NO. 23

H. El-Natur
DESIGN OVERSIGHT
SIGN REF DATE 10/07/02

DESIGN	P. Chou	CHECKED	C. Norris
DETAILS	S. Lee	CHECKED	C. Norris
QUANTITIES	K. Cormier	CHECKED	D. Nguyen-Tan

PREPARED FOR THE STATE OF CALIFORNIA DEPARTMENT OF TRANSPORTATION

Sajid Abbas
PROJECT ENGINEER

BRIDGE NO. 34-0006L/R
KILOMETER POST 3.9/14.3, 0.0/1.6

CU 04
EA 012021

DISREGARD PRINTS BEARING EARLIER REVISION DATES

SHEET 042 OF

ORIGINAL SCALE IN MILLIMETERS FOR REDUCED PLANS 0 10 20 30 40 50 60 70 80 90 100

FILE => pw:\bb\04-012001\skyway\sky2002\bbdk022.dgn

USERNAME => VignovaDATE PLOTTED => 16 OCT 1002 TIME PLOTTED => 21:46:22

100 % PSSE

			TOTAL PROJECT	NO.	SHEETS
04	SF, Alo	80	13.9/ 4.3, 0.0/ .6	474R1	978

REGISTERED ENGINEER - CIVIL

6-4-01

PLANS APPROVAL DATE

The State of California or its officers or agents shall not be responsible for the accuracy or completeness of electronic copies of this sign sheet.

Wenpei Paul Chou No. 54019 Exp. 12/31/03 CIVIL STATE OF CALIFORNIA

B25 BATTERY STREET NICHOL

SAN FRANCISCO, CA 94111

Caltrans now has a web site! To get to the web site, go to http://www.dot.ca.gov

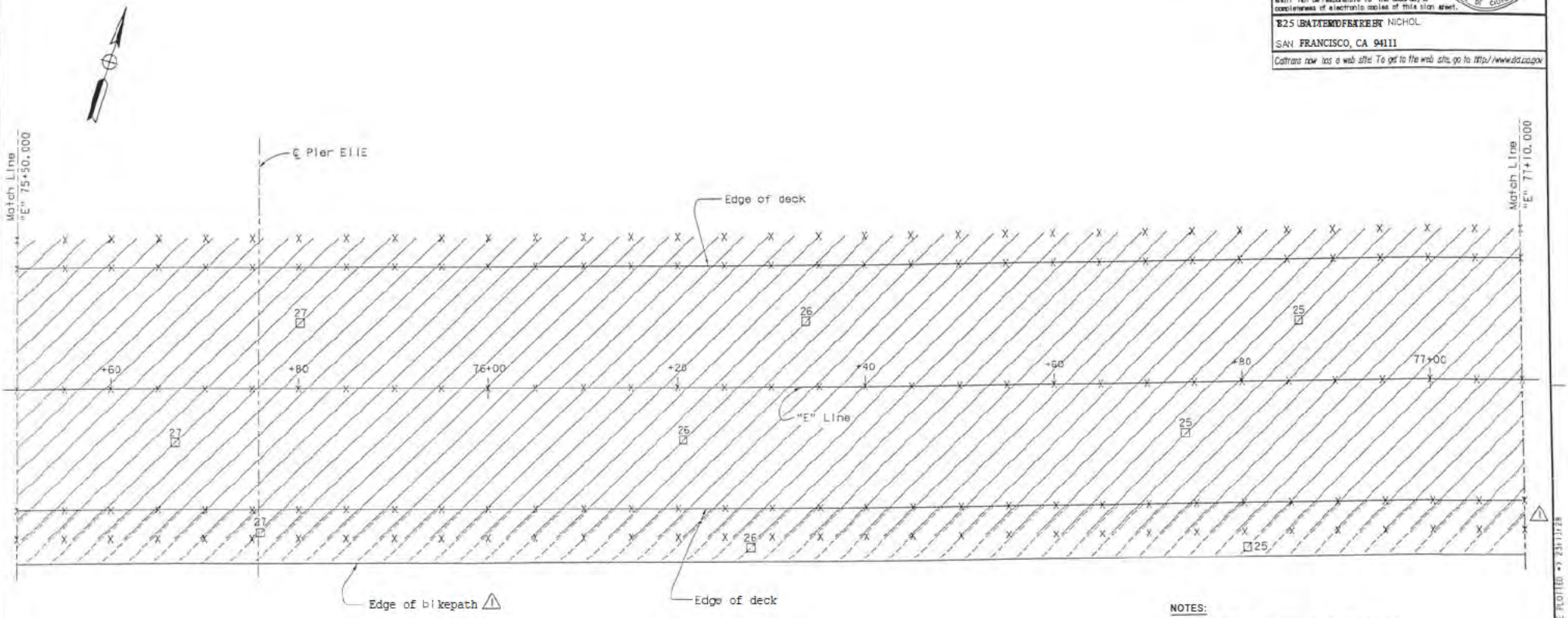

PARTIAL PLAN

1:200

MARK	DATE	DESCRIPTIONS	BY	CH'D
1	10/07/02	REVISE BIKEPATH CONTOURS	MS	CR

REVISIONS

Contours are for top of deck and top of bikepath. Contours have been adjusted for wearing surface by lowering from profile grades 20 mm for top of deck and 13 mm for top of bikepath.

NOTES:

1. Contour interval at 0.050 meter.
2. Contours do not include camber.
3. X- indicates 5.000 meter interval along station line.
4. □- Indicates even meter contour.

LEGEND:

——— Deck contour

_- - - - Bikepath contour

CONTRACT CHANGE ORDER NO. 19

SHEET 13 OF 33 04-012024

ALL DIMENSIONS ARE IN METERS UNLESS OTHERWISE SHOWN

SAN FRANCISCO OAKLAND BAY BRIDGE
EAST SPAN SEISMIC SAFETY PROJECT

SKYWAY STRUCTURES

DECK CONTOURS NO. 24

DESIGN	P. Chou	CHECKED	C. Varela
DETAILS	S. Lee	CHECKED	C. Varela
QUANTITIES	K. Corpier	CHECKED	D. Nguyen-Tan

PREPARED FOR THE STATE OF CALIFORNIA DEPARTMENT OF TRANSPORTATION

Sajid Abbas
PROJECT ENGINEER

BRIDGE NO. 34-0006L/R

KILOMETER POST 13.9/14.3, 0.0/1.6

DESIGN OVERSIGHT

SIGN OFF DATE 10/07/02

Rev. Sept 5-15-98

ORIGINAL SCALE IN MILLIMETERS FOR REDUCED PLANS

CU 04
EA 012021

DISREGARD PRINTS BEARING EARLIER REVISION DATES

REVISION DATES (PRELIMINARY STAGE ONLY)

SHEET 043 OF

FILE => pi:\bda\04-012001\skyway\dsgy2002\ddkc23.dgn

USERNAME => Virgotovia DATE PLOTTED => 06 OCT 1992 TIME PLOTTED => 23:11:28

100% PS&E

DIST.	COUNTY	ROUTE	TOTAL PROJECT	SHEET NO.	TOTAL SHEETS
04	SF, Alo	80	13.9/14.3, 0.0/1.6	475R	97B

Caltrans Metric

REGISTERED ENGINEER - CIVIL

6-4-01
PLANS APPROVAL DATE

The State of California or its officers or agents shall not be responsible for the accuracy or completeness of electronic copies of this plan sheet.

Wensei Paul Chou No. 54019 Exp. 12/31/03 CIVIL STATE OF CALIFORNIA REGISTERED PROFESSIONAL ENGINEER

T.Y. LIN / MOFFATT & NICHOL
825 BATTERY STREET
SAN FRANCISCO, CA 94111

Caltrans now has a web site! To get to its web site, go to http://www.dot.ca.gov

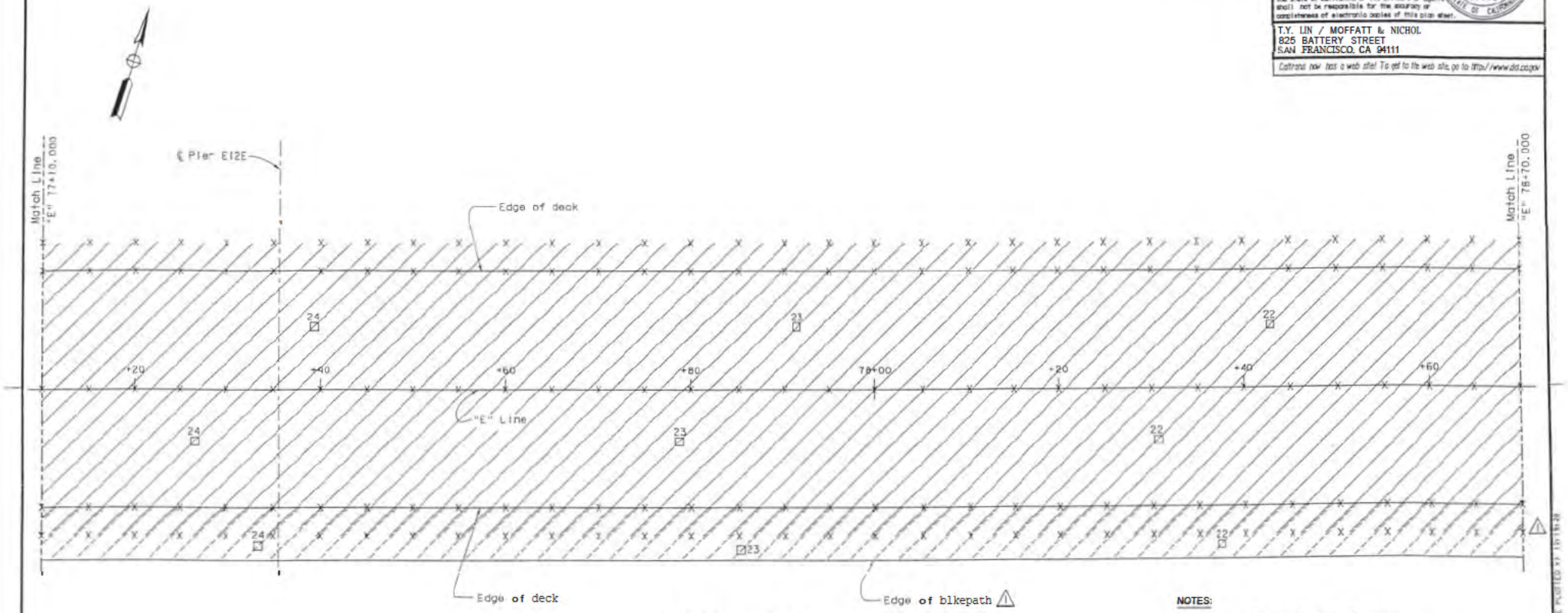

PARTIAL PLAN

1:200

MARK	DATE	DESCRIPTIONS	BY	CH'D
1	10/01/02	REVISE BIKEPATH CONTOURS	MS	CR

REVISIONS

Contours are for top of deck and top of blkepath. Contours have been adjusted for wearing surface by lowering from profile grades 20 mm for top of deck and 13 mm for top of blkepath.

CONTRACT CHANGE ORDER NO. 19
SHEET 14 OF 33 04-012024

NOTES:

1. Contour interval at 0.050 meter.
2. Contours do not include camber.
3. X-indicates 5.000 meter interval along station line.
4. □-indicates even meter contour.

LEGEND:

Deck contour

Blkepath contour

ALL DIMENSIONS ARE IN METERS UNLESS OTHERWISE SHOWN

SAN FRANCISCO OAKLAND BAY BRIDGE
EAST SPAN SEISMIC SAFETY PROJECT

SKYWAY STRUCTURES

DECK CONTOURS NO. 25

H. El-Natur
DESIGN OVERSIGHT
SIGN OFF DATE 10/01/02

DESIGN	P. Chou	C. Nerto
DETAILS	S. Lee	C. Nerto
QUANTITIES	E. Cornier	D. Nguyen-Tan

PREPARED FOR THE STATE OF CALIFORNIA DEPARTMENT OF TRANSPORTATION

Sajid Abbas
PROJECT ENGINEER

BRIDGE NO. 34-0006L/R
KILOMETER POST 13.9/14.3, 0.0/1.6

CU 04
EA 012021

DISREGARD PRINTS BEARING EARLIER REVISION DATES

REVISION DATES (PRELIMINARY STAGE ONLY)

044

FILE => D:\bo\04-012001\skyway\blkepath\dbdko24.dgn

100 % PS&E

34	SF, Alo	80	0.9/19.3	476R1 978

REGISTERED ENGINEER - CIVIL
REGISTERED ENGINEER - CIVIL

6/4/01
PLANS APPROVAL DATE

No. 54019 Exp. 12/31/03 CIVIL STATE OF CALIFORNIA

The State of California or its officers or agents shall not be responsible for the accuracy or completeness of electronic copies of this plan sheet.

T.Y. LIN / MOFFATT & NICHOL
325 BRANNER ST SF CA 94111

Caltrans now has a web site! To get to the web site, go to: http://www.dot.ca.gov

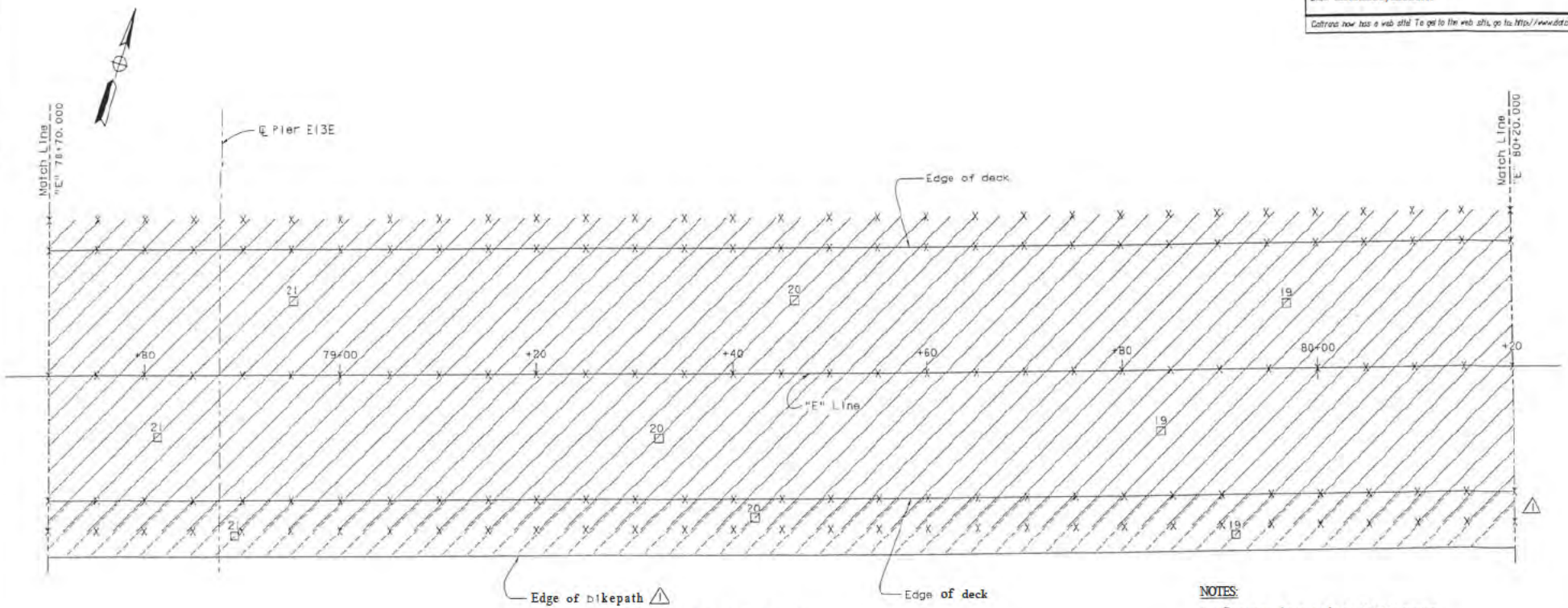

PARTIAL PLAN

1: 200

MARK	DATE	DESCRIPTIONS	BY	CHD
	10/07/02	REVISE BIKEPATH CONTOURS	MS	CR

REVISIONS

Contours are for top of deck and top of bikepath
Contours have been adjusted for wearing surface by lowering from profile grades 20 mm for top of deck and 13 mm for top of bikepath

CONTRACT CHANGE ORDER NO. 19
SHEET 15 OF 33 04-012024

NOTES:

1. Contour interval at 0.050 meter
2. Contours do not Include camber
3. X-Indicates 5.000 meter interval along station line.
4. □-Indicates even meter contour

LEGEND:

——— Deck contour
— — — Bikepath contour

ALL DIMENSIONS ARE IN METERS UNLESS OTHERWISE SHOWN

SAN FRANCISCO OAKLAND BAY BRIDGE
EAST SPAN SEISMIC SAFETY PROJECT

SKYWAY STRUCTURES

DECK CONTOURS NO. 26

H. El-Notur	DESIGN	P. Chou	C. Marts
DESIGN OVERSIGHT	DETAILS	S. Lee	C. Marts
SIGN OFF DATE 10/07/02	QUANTITIES	K. Cormier	D. Nguyen-Tan

PREPARED FOR THE STATE OF CALIFORNIA DEPARTMENT OF TRANSPORTATION

Sajid Abbas
PROJECT ENGINEER

BRIDGE NO. 34-0006L/R
KILOMETER POST 13.9/19.3, 0.0/1.6

CU 04
EA 012021

DISREGARD PRINTS BEARING EARLIER REVISION DATES

REVISION DATES (FOR CALTRANS STAFF ONLY)

SHEET 045

ORIGINAL SCALE IN MILLIMETERS FOR REDUCED PLANS

FILE = J:\bb\04-012001\skyway\may2002\cdok025.dgn

100% PSSE

TIME PLOTTED = 21:51:31
DATE PLOTTED = 08 OCT 1912

04	SF, Ala	80	13.9/14.3, 0.0/1.6	477R	978

REGISTERED ENGINEER - CIVIL

6-4-01

PLANS APPROVAL DATE

The State of California or its officers or agents shall not be responsible for the accuracy or completeness of electronic copies of this plan sheet.

Wensel Paul Chou No. 54019 Exp. 12/31/03 CIVIL STATE OF CALIFORNIA

T.Y. LIN / MOFFATT & NICHOL
825 BATTERY STREET
SAN FRANCISCO, CA 94111

Caltrans now has a web site! To get to the web site, go to http://www.dot.ca.gov

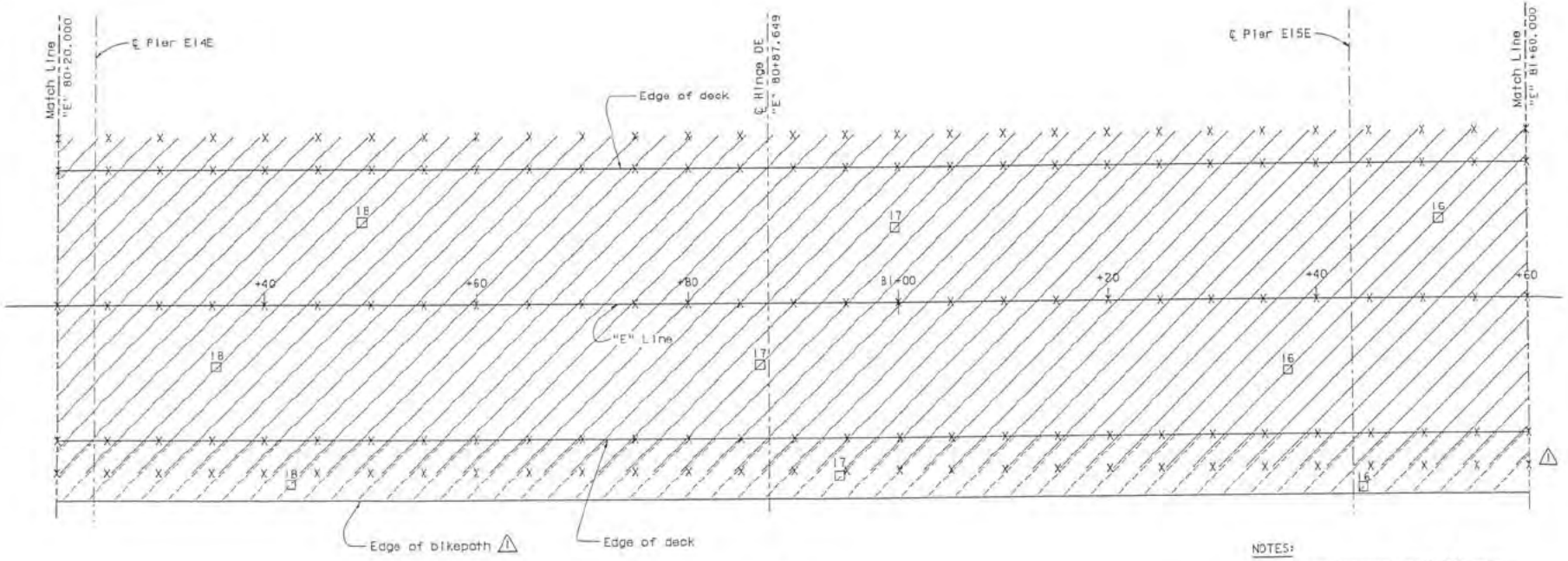

PARTIAL PLAN

1:200

NOTES:

1. Contour interval at 0.050 meter.
2. Contours do not include camber.
3. X-indicates 5.000 meter interval along station line.
4. □-indicates 5.000 meter contour.

100 — bikepath contour

——— deck contour

----- bikepath contour

Contours are for top of deck and top of bikepath. Contours have been adjusted for wearing surface by lowering from profile grades 20 mm for top of deck and 13 mm for top of bikepath.

MARK	DATE	DESCRIPTIONS	BY	CH'D
1	10/07/02	REVISE BIKEPATH CONTOURS	MS	CR

REVISIONS

CONTRACT CHANGE ORDER NO. 19
SHEET 16 OF 33 04-012024

ALL DIMENSIONS ARE IN METERS UNLESS OTHERWISE SHOWN

SAN FRANCISCO OAKLAND BAY BRIDGE
EAST SPAN SEISMIC SAFETY PROJECT

SKYWAY STRUCTURES

DECK CONTOURS NO. 27

H. El-Natur
DESIGN OVERSIGHT
SIGN OFF DATE 10/07/02

DESIGN: P. Chou — CHECKED: C. Werts
DETAILS: S. Lee — CHECKED: C. Werts
QUANTITIES: I. Cormier — CHECKED: D. Nguyen-Tan

PREPARED FOR THE STATE OF CALIFORNIA DEPARTMENT OF TRANSPORTATION

Salid Abbas
PROJECT ENGINEER

BRIDGE NO. 34-0006L/R
KILOMETER POST 13.9/14.3, 0.0/1.6

CU 04
EA 012021

DISREGARD PRINTS BEARING EARLIER REVISION DATES

REVISION DATES (PRELIMINARY STAGE ONLY)

SHEET 046

Rev. Date: 3-15-98

ORIGINAL SCALE IN MILLIMETERS FOR REDUCED PLANS 0 10 20 30 40 50 60 70 80 90 100

TITLE => D:\bb\04-012001\skyway\ndy2002\ddda026.dgn

100 % PSAE

TIME PLOTTED => 21:55:16
DATE PLOTTED => 08 OCT 102
USERNAME => v1gnaiov

DIST	COUNTY	ROUTE	TOTAL PROJECT	NO.	SHEETS
04	SF, ALA	80	13.9/14.3, 0.0/1.5	47881	978

REGISTERED ENGINEER - CIVIL

6-4-01

PLANS APPROVAL DATE

REGISTERED PROFESSIONAL ENGINEER Wenpei Paul Chou No. 54019 Exp. 12/31/03 CIVIL STATE OF CALIFORNIA

The State of California or its officers or agents shall not be responsible for the accuracy or completeness of electronic copies of this plan sheet.

T.Y. LIN / MOFFATT & NICHOL
825 BATTERY STREET
SAN FRANCISCO, CA 94111

Caltrans now has a web site! To get to the web site, go to: http://www.dot.ca.gov

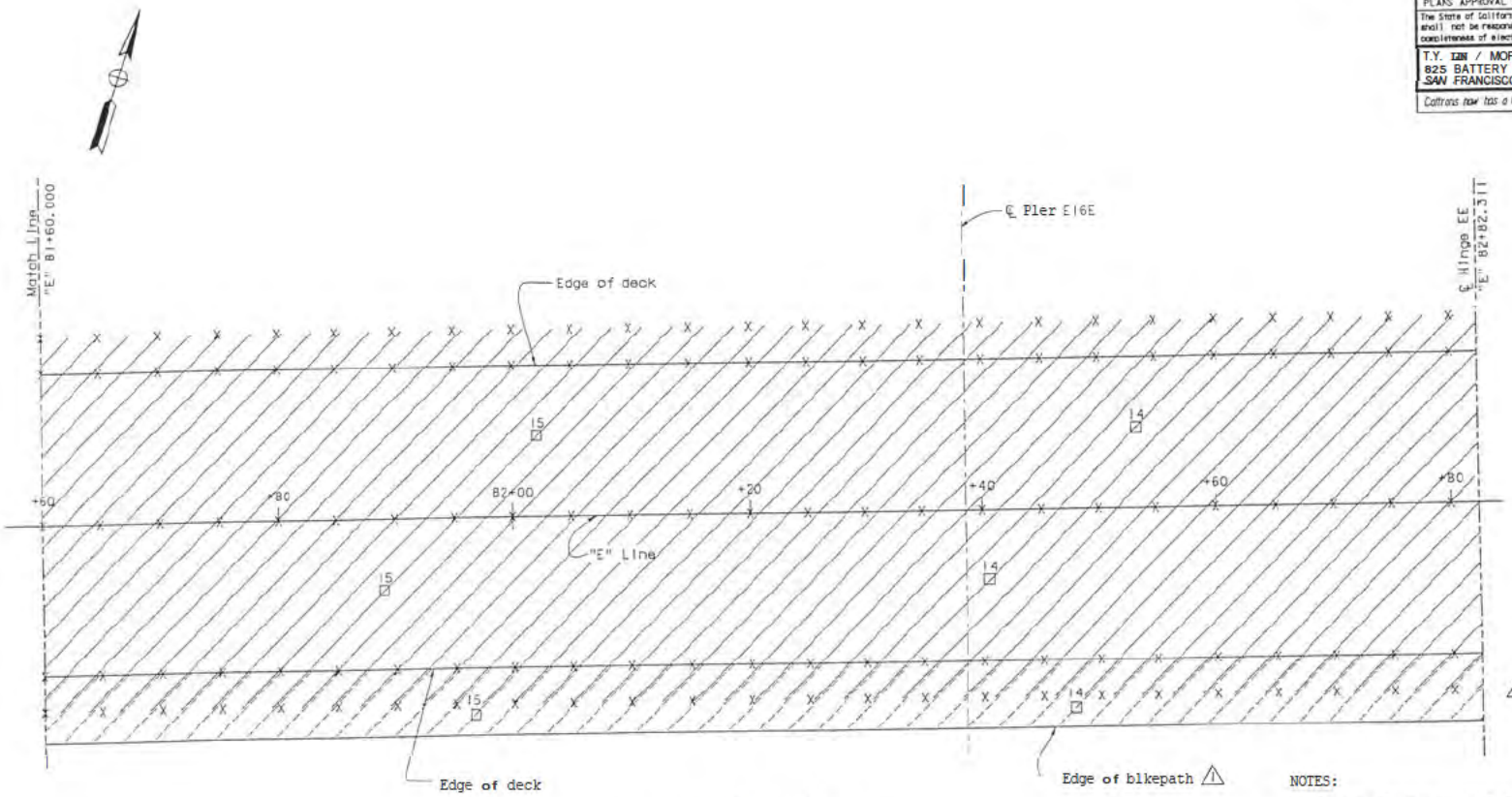

PARTIAL PLAN

1:200

NOTES:

1. Contour interva at 0.050 meter.
2. Contours do not include camber.
3. X-indicates 5.000 meter interval along station line.
4. □-indicates even meter contour.

LEGEND:

——— Deck contour

_---- Bikepath contour

MARK	DATE	DESCRIPTIONS	BY	CH'D
1	10/07/02	REVISE BIKEPATH CONTOURS	MS	CR

REVISIONS

Contours are for top of deck and top of bikepath. Contours have been adjusted for wearing surface by lowering from profile grades 20 mm for top of deck and 13 mm for top of bikepath.

CONTRACT CHANGE ORDER NO. 19
SHEET 17. OF 33 04-012034

ALL DIMENSIONS ARE IN METERS UNLESS OTHERWISE SHOWN

SAN FRANCISCO OAKLAND BAY BRIDGE
EAST SPAN SEISMIC SAFETY PROJECT

SKYWAY STRUCTURES

DECK CONTOURS NO. 28

H. El-Natur
DES ICW OVERS ICWE
SIGN EFF DATE 10/07/02

DESIGN	P. Chou	CHECKED	C. Werts
DETAILS	S. Lee	CHECKED	C. Werts
QUANTITIES	K. Cormier	CHECKED	D. Nguyen-Tan

PREPARED FOR THE STATE OF CALIFORNIA DEPARTMENT OF TRANSPORTATION

Sajid Abbas
PROJECT ENGINEER

BRIDGE NO. 34-0006L/R
KILOMETER POST 13.9/14.3, 0.0/1.5

ORIGINAL SCALE IN MILLIMETERS FOR REDUCED PLANS 0 10 20 30 40 50 60 70 80 90 100

CU 04
EA 012021

DISREGARD PRINTS BEARING EARLIER REVISION DATES

REVISION DATES (PRELIMINARY STAGE ONLY)

SHEET 047

FILE = D:\bp\04-012001\skyway\ncy2002\ebdkc28.dgn

100% USABLE

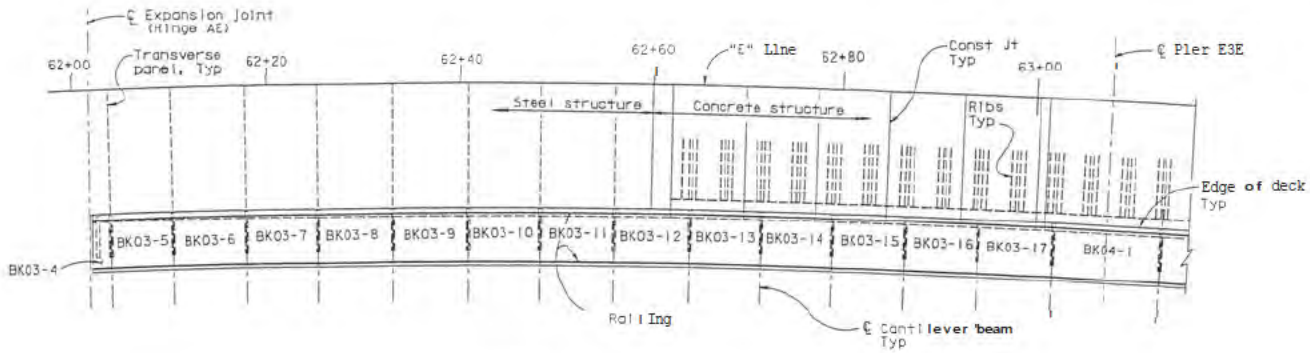

PARTIAL PLAN (BIKEPATH SPAN E3E)
1:250

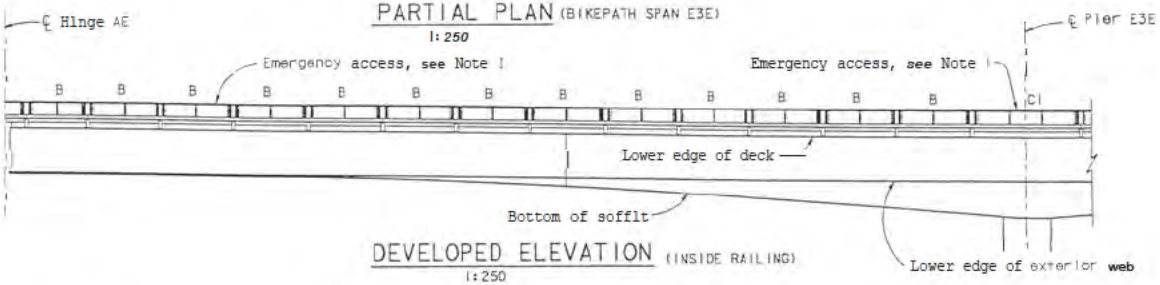

DEVELOPED ELEVATION (INSIDE RAILING)
1:250

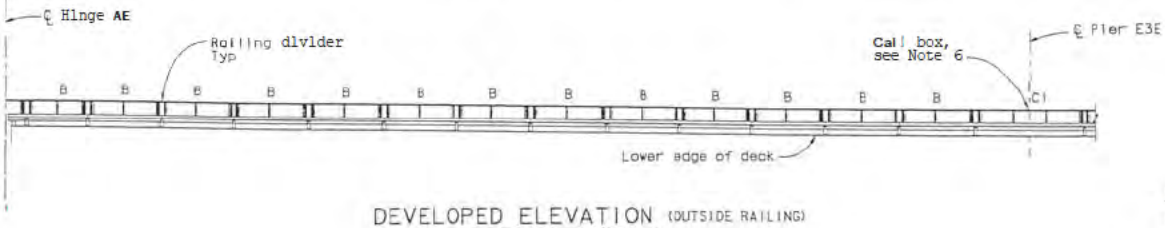

DEVELOPED ELEVATION (OUTSIDE RAILING)
1:250

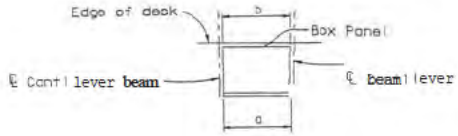

PLAN

BIKEPATH STEEL BOX DIMENSION TABLE

Box Panel Mark	Box Panel Type	a	b
BK03-4	6	Note 5	Note 5
BK03-5	1	5116/1	5139/1
BK03-6	1	7556	7591
BK03-7	1	7556	7591
BK03-8	1	7556	7591
BK03-9	1	7556	7591
BK03-10	1	7556	7591
BK03-11	1	7556	7591
BK03-12	1	7556	7591
BK03-13	1	7556	7591
BK03-14	1	7556	7591
BK03-15	1	7556	7591
BK03-16	1	7556	7591
BK03-17	1	7556	7591
BK04-1	3	11339	11391

NOTES:

1. For railing, railing divider and emergency access details, see "Railing Details" sheets.
2. Bikepath railing panel types indicated by letters A, B, C1, C2 and D. For details, see "Railing Details" sheets.
3. For box panel type and cantilever beam, see "Bikepath Details" sheets.
4. Box panel nomenclature: BK03-5
   Bikepath — Span No. — Panel No.
5. See "Bikepath Details" sheets.
6. For call box details, see "Road Plan" sheets.

MARK	DATE	DESCRIPTIONS	BY	CH'D
1	10/07/03	REVISE VALUES IN TABLE DUE TO REVISED BLOCKOUT DIMENSION AT HINGE A	MS	CR

REVISIONS

CONTRACT CHANGE ORDER NO. 19
SHEET 18 OF 33 04-012024

ALL DIMENSIONS ARE IN MILLIMETERS UNLESS OTHERWISE SHOWN

Caltrans Metric

04	SF, Alo	80	13.9/14.3, 0.0/1.6	77/R1	978

REGISTERED ENGINEER - CIVIL
6-4-01
PLANS APPROVAL DATE
Manoel Paul Chou No. 54019 Exp. 12/31/03 CIVIL STATE OF CALIFORNIA
The State of California or its officers or agents shall not be responsible for the accuracy or completeness of electronic copies of this plan sheet.

T.Y. LIN / MOFFATT & NICHOL
825 BATTERY STREET
SAN FRANCISCO, CA 94111

Caltrans now has a web site! To get to the web site, go to: http://www.dot.ca.gov

SAN FRANCISCO OAKLAND BAY BRIDGE
EAST SPAN SEISMIC SAFETY PROJECT

SKYWAY STRUCTURES

BIKEPATH AND RAILING LAYOUT NO. 1

DESIGN	P. Chou	CHECKED	C. Werts
DETAILS	A. Lishansky	CHECKED	C. Werts
QUANTITIES	L. Greer	CHECKED	J. Laventini

PREPARED FOR THE STATE OF CALIFORNIA DEPARTMENT OF TRANSPORTATION

Sajid Addos
PROJECT ENGINEER

BRIDGE NO. 34-0006L/R
KILOMETER POST 13.9/14.3, 0.0/1.6
CU 04
EA 012021

DISREGARD PRINTS BEARING EARLIER REVISION DATES

SHEET 339

DESIGN OVERSIGHT
SIGN OFF DATE 10/07/03

Rev. Date: 5-15-98

ORIGINAL SCALE IN MILLIMETERS FOR REDUCED PLANS 0 10 20 30 40 50 60 70 80 90 100

FILE = P:\06\04-012001\Skyway\May2002\dgpw101.dgn

100 % PSAE

TIME PLOTTED = 22:19:22
DATE PLOTTED = 06 OCT 102
USER NAME = P:\Pgnet\Pw\

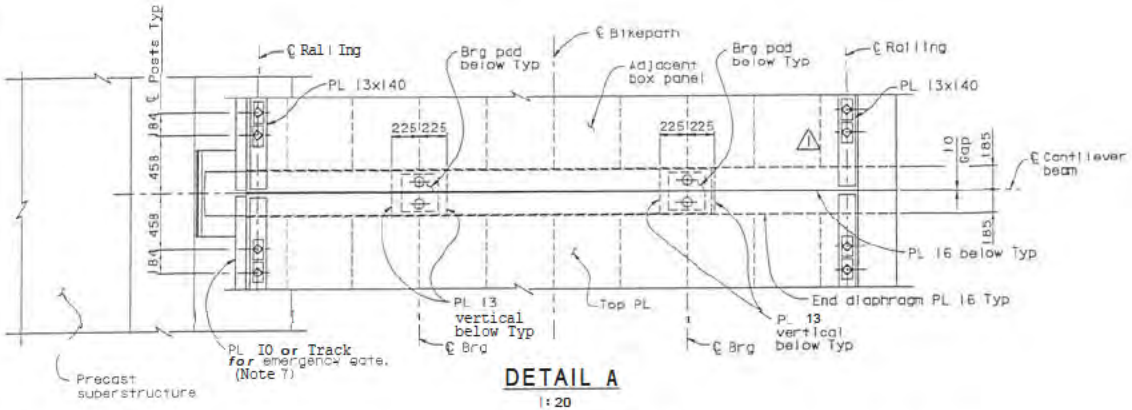

DETAIL A

1:20

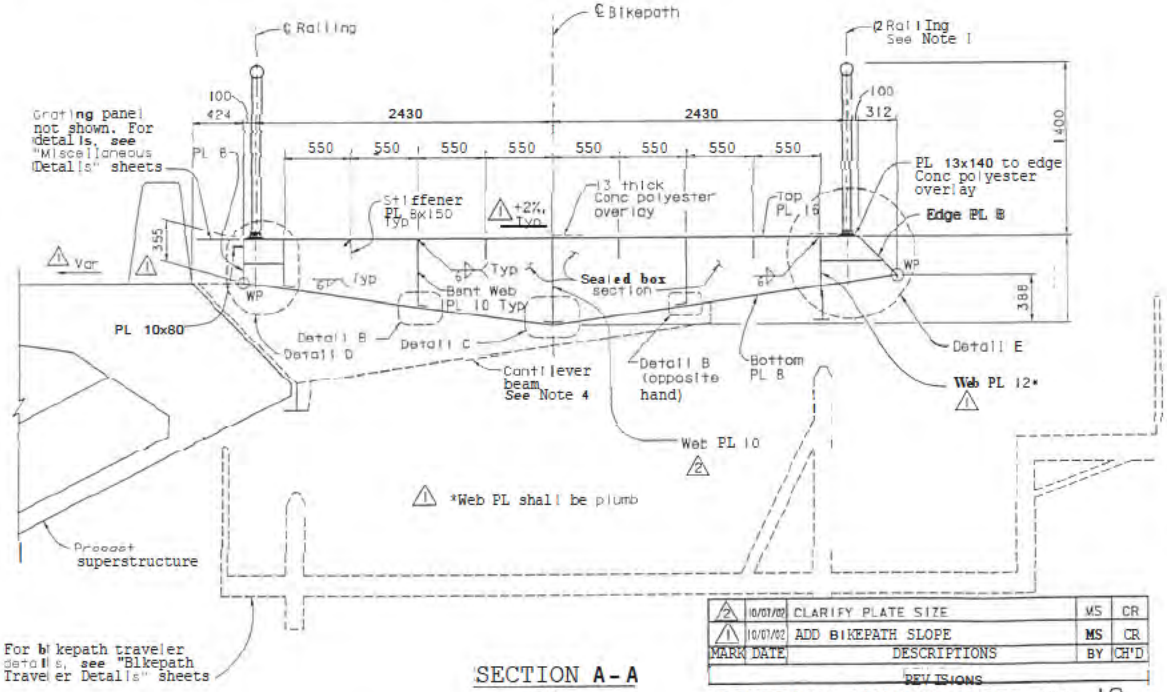

SECTION A-A

1:20

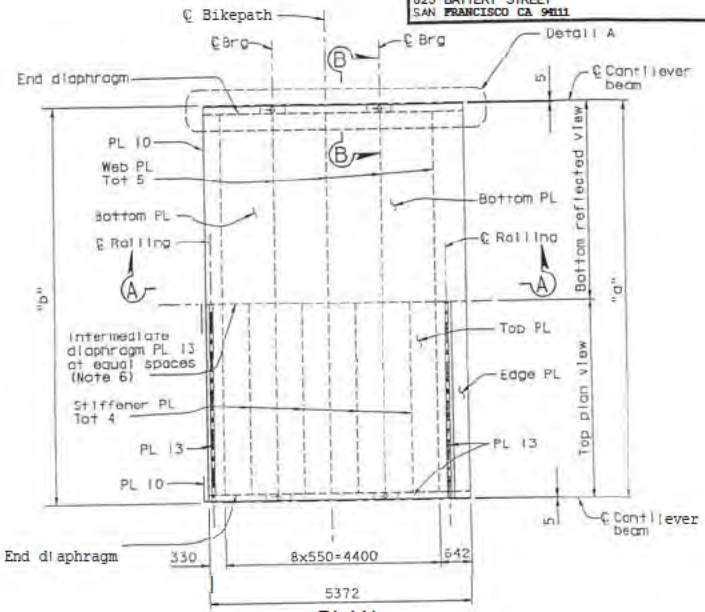

PLAN (BOX panel)

1:50

Box panel Type 1 shown.
Box panel Type 2,3 similar.

NOTES:

1. For railing details, see "Railing Details" sheets.
2. For Detail B, Detail C, Detail D, Detail E, and Section B-B, see "Bikepath Details No. 3" sheet.
3. For dimension "a" and "b", see "Bikepath and Railing Layout" sheets.
4. For cantilever beam details at Box panel Types 1 & 2, see "Bikepath Detail Is No. 4" and "Bikepath Detail Is No. 6" sheets. For cantilever beam details at Box panel Type 3, see "Bikepath Details No. 5" sheet.
5. All structural steel plate interface connections shall be made with continuous CJP welds, unless otherwise shown.
6. Intermediate diaphragm spaces: 2 spaces for 8 m nominal panel 3 spaces for 12 m nominal panel.
7. For emergency gate details, see "Railing Detail Is No. 6" sheet. For location, see "Railing Layout" sheets.
8. Bikepath structure shown horizontal for convenience. Railings and railing posts on bikepath shall be plumb.
9. Rails for bikepath traveler shall be plumb.

ALL DIMENSIONS ARE IN MILLIMETERS UNLESS OTHERWISE SHOWN

MARK	DATE	DESCRIPTIONS	BY	CH'D
2	10/01/02	CLARIFY PLATE SIZE	MS	CR
1	10/01/02	ADD BIKEPATH SLOPE	MS	CR

REVISIONS

CONTRACT CHANGE ORDER NO. 19
SHEET 19 OF 33 EA-012024

3 REVISED PER ADDENDUM NO.3 DATED OCTOBER 2, 2001

34 | SF/Ala | 80 | 3.9/14.3 0.0/1.6 | 867R | 978

Madan K. Sah
REGISTERED ENGINEER - CIVIL
6-4-01
PLANS APPROVAL DATE
The State of California or its officers or agents shall not be responsible for the accuracy or completeness of electronic copies of this plan sheet.
Madan Kumar Sah No. 59201 Exp. 06/30/03 CIVIL STATE OF CALIFORNIA

T.Y. LIN / MOFFATT & NICHOL
825 BATTERY STREET
SAN FRANCISCO CA 94111

SAN FRANCISCO OAKLAND BAY BRIDGE
EAST SPAN SEISMIC SAFETY PROJECT

SKYWAY STRUCTURES

BIKEPATH DETAILS NO. 1

H. El-Natur	DESIGN	U. Sah	C. Werts
DESIGN OVERSIGHT	DETAILS	E. Zharkov	C. Werts
SIGN OFF DATE 10/07/02	QUANTITIES	L. Greer	J. Laventini

PREPARED FOR THE STATE OF CALIFORNIA DEPARTMENT OF TRANSPORTATION

Sajid Abbas
PROJECT ENGINEER

BRIDGE NO. 34-0006L/R
KILOMETER POST 3.9/14.3, 0.0/1.6

CU 04
EA 012021

DISREGARD PRINTS BEARING EARLIER REVISION DATES

SHEET 435

ORIGINAL SCALE IN MILLIMETERS FOR REDUCED PLANS

FILE => D:\DD\D4-012021\skyway\may2002\ckdwd01.dgn

USERNAME => V:\grafiqueE PLOTTED => 05 OCT 102 TIME PLOTTED => 23:16:48

100 % PSAE

04	SF/A10	80	13.9/14.3, 0.0/1.6	868R1	978

REGISTERED ENGINEER - CIVIL

08/24/01

PLANS APPROVAL DATE

The State of California or its officers or agents shall not be responsible for the accuracy or completeness of electronic copies of this plan sheet.

Madan Kumar Sah No. 59203 Exp. 06/30/03 CIVIL STATE OF CALIFORNIA PROFESSIONAL ENGINEER

T.Y. LIN / MOFFATT & NICHOL
825 BATTERY STREET
SAN FRANCISCO, CA 94111

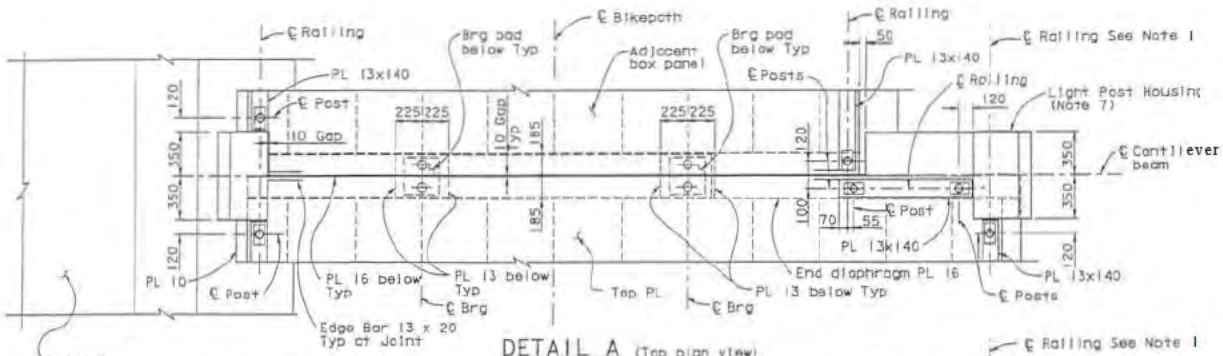

DETAIL A (Top plan view)
1:20

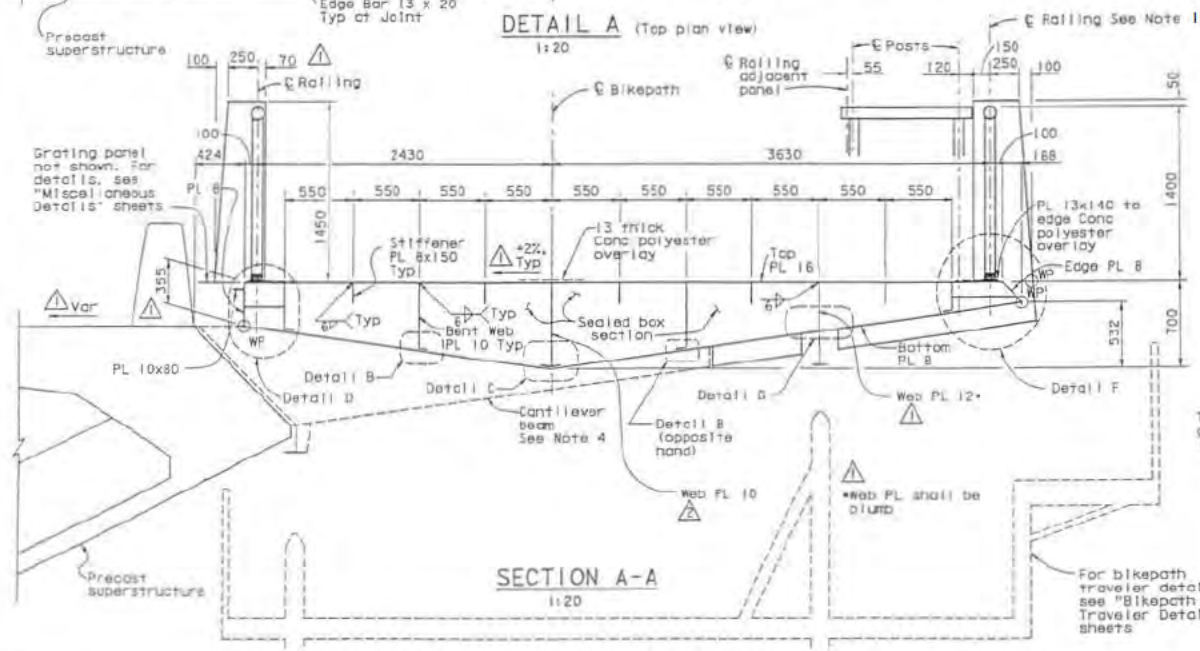

SECTION A-A
1:20

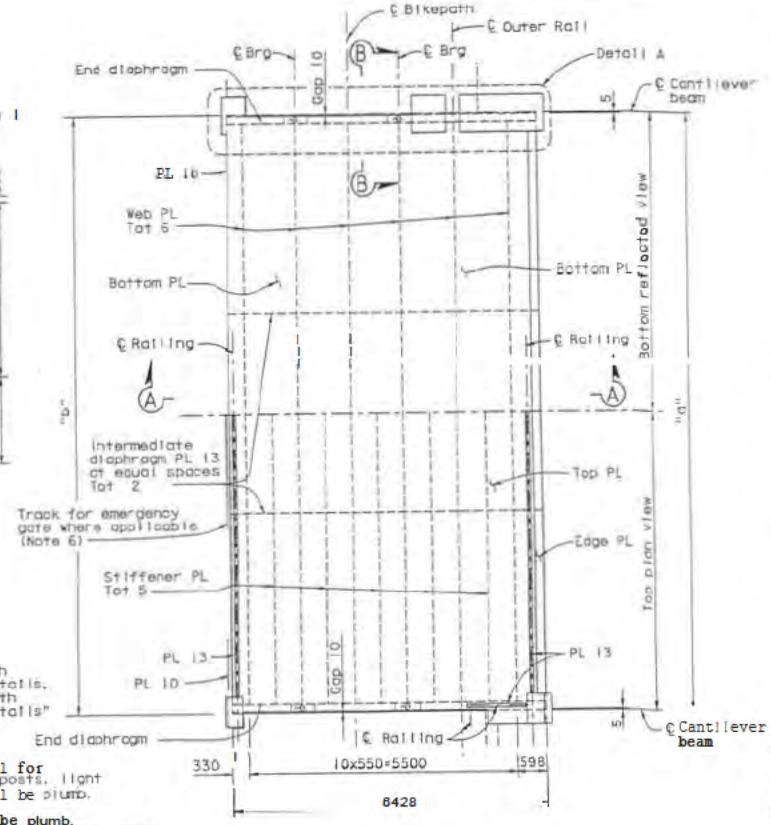

PLAN (Box panel type 4)
1:50

NOTES:

1. For railing details, see "Railing Details" sheets.
2. For Detail B, Detail C, Detail D, Detail F, Detail G, and Section B-B, see "Bikepath Details No. 3" sheet.
3. For dimensions "a" and "b", see "Bikepath and Railing Layout" sheets.
4. For cantilever beam details, see "Bikepath Details No. 5" sheet.
5. All structural steel plate interface connections shall be made with continuous CJP welds, unless otherwise shown.
6. For emergency gate detail Is, see "Railing Details No. 6" sheet. For location, see "Railing Layout" sheets.
7. For Light Post Housing details, see "Railing Detail Is No. 5" sheet.
8. Bikepath structure shown horizontal for convenience. Railings and railing posts, light posts and light post housings shall be plumb.
9. Rail Is for bikepath traveler shall be plumb.

MARK	DATE	DESCRIPTIONS	BY	CH'D
2	10/07/02	CLARIFY PLATE SIZE	US	CR
1	10/07/02	ADD BIKEPATH SLOPE	MS	CR

REVISIONS

CONTRACT CHANGE ORDER NO. 19 04-012024
SHEET 20 OF 33

ALL DIMENSIONS ARE IN MILLIMETERS UNLESS OTHERWISE SHOWN

3 REVISED PER ADDENDUM NO. 3 DATED OCTOBER 2, 2001

SAN FRANCISCO OAKLAND BAY BRIDGE
EAST SPAN SEISMIC SAFETY PROJECT

SKYWAY STRUCTURES

BIKEPATH DETAILS NO. 2

DESIGN	N. Sah	CHECKED	C. Werts
DETAILS	F. Hung	CHECKED	C. Werts
QUANTITIES	L. Greer	CHECKED	J. Leventini

PREPARED FOR THE STATE OF CALIFORNIA DEPARTMENT OF TRANSPORTATION

Sajid Abdos
PROJECT ENGINEER

B. El-Natur
DESIGN OVERSEER
SIGN OFF DATE 10/07/01

BRIDGE NO. 34-0006L/R
KILOMETER POST 13.9/14.3, 0.0/1.6

CU 04
EA 012021

SHEET 436

DIST.	COUNTY	ROUTE	TOTAL PROJ. PREF.	NO.	SHEETS
04	SF, Ala	80	3.9/14.3, 0.0/1.6	B70R1	978

REGISTERED ENGINEER - CIVIL

6-4-01

PLANS APPROVAL DATE

The State of California or its officers or agents shall not be responsible for the accuracy or ... of these plans, specifications, or data compared to other media ... 2 plan sheet.

T.Y. LIN / MOFFATT & NICHOL
825 BATTERY STREET
SAN FRANCISCO, CA 94111

Caltrans now has a web site! To get to the web site, go to: http://www.dot.ca.gov

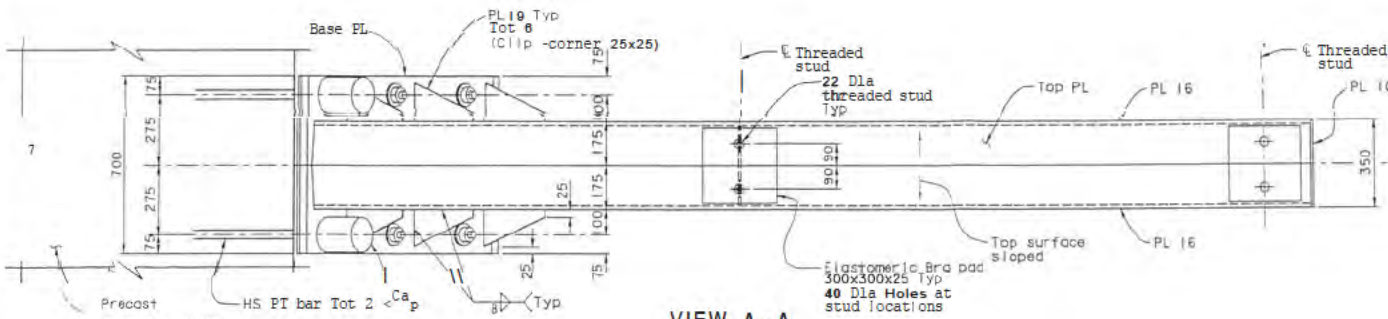

VIEW A-A
1:10

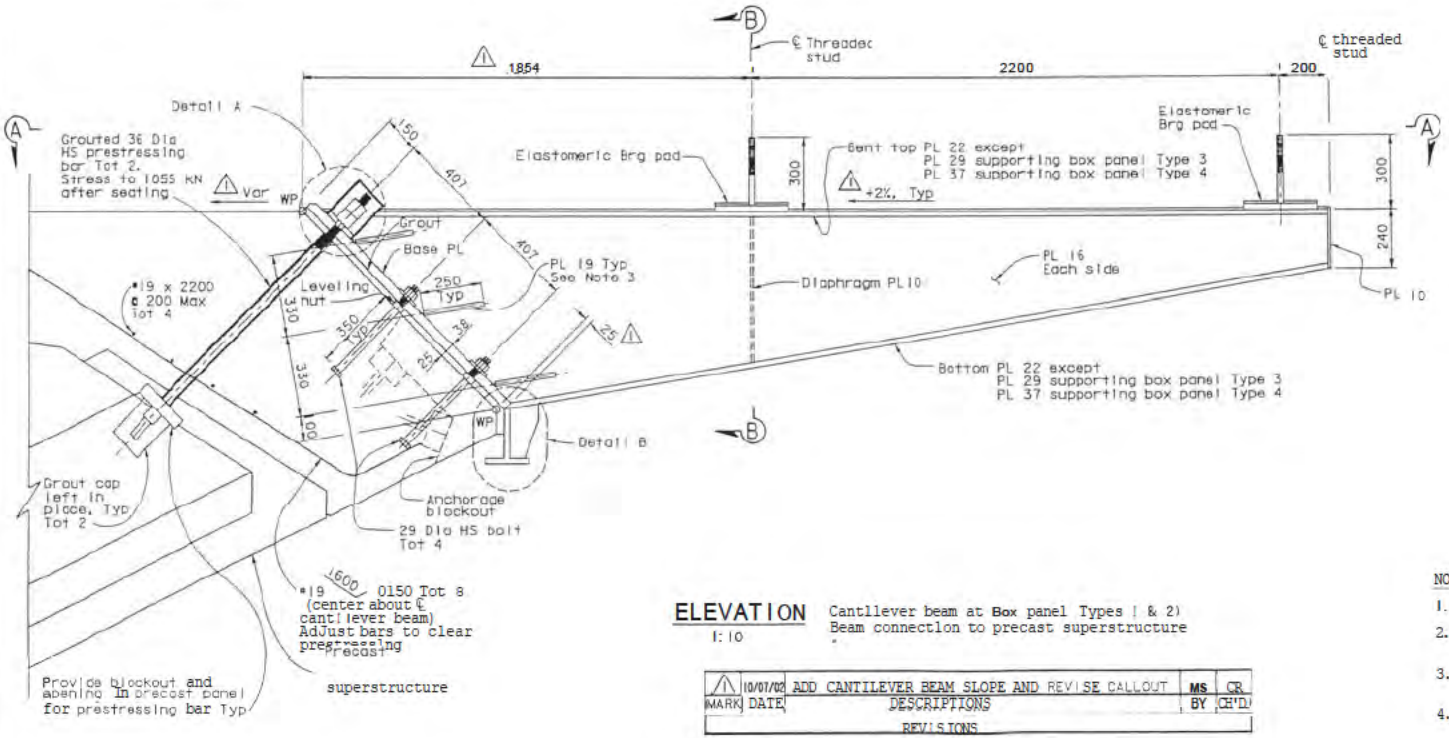

ELEVATION
1:10

Cantilever beam at Box panel Types 1 & 2)
Beam connection to precast superstructure

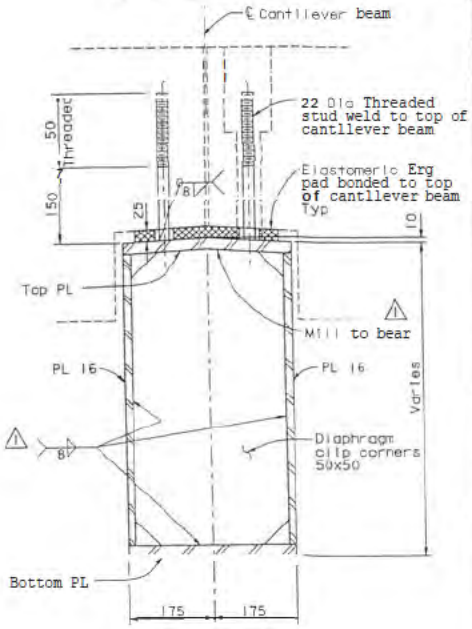

SECTION B-B
1:5

NOTES:

1. For Detail A and B, see "Bikepath Details No. 5" sheet.
2. For additional reinforcement, see "Girder Reinforcement" sheets.
3. Stiffeners are oriented parallel to the bottom PL of the cantilever beam.
4. All structural steel plate interface connections shall be made with continuous CJP welds, unless otherwise shown.

MARK	DATE	DESCRIPTIONS	BY	CH'D
1	10/07/02	ADD CANTILEVER BEAM SLOPE AND REVISE CALLOUT	MS	CR

REVISIONS

CONTRACT CHANGE ORDER NO. 19
SHEET 21 OF 33 04-012024

ALL DIMENSIONS ARE IN MILLIMETERS UNLESS OTHERWISE SHOWN

SAN FRANCISCO OAKLAND BAY BRIDGE
EAST SPAN SEISMIC SAFETY PROJECT

SKYWAY STRUCTURES

BIKEPATH DETAILS NO. 4

DESIGN	M. Sah	CHECKED	C. Werts
DETAILS	E. Zharkov	CHECKED	C. Werts
QUANTITIES	L. Greer	CHECKED	J. Leventini

PREPARED FOR THE STATE OF CALIFORNIA DEPARTMENT OF TRANSPORTATION

Sajid Abbas
PROJECT ENGINEER

BRIDGE NO. 34-0006L/R
KILOMETER POST 3.9/14.3, 0.0/1.6

CU 04
EA 012021

DESIGN OVERSIGHT
SIGN OFF DATE 10/07/02

Rev. Date 5-8-00

ORIGINAL SCALE IN MILLIMETERS FOR REDUCED PLANS

DISREGARD PRINTS BEARING EARLIER REVISION DATES

REVISION DATES (PRELIMINARY STAGE ONLY)

SHEET 430 OF

FILE => p:\co\04-012001\skyway\b\bkpath\ckbw003.dgn

PLOT SCALE 100:1 PLOT DATE 10/8/02

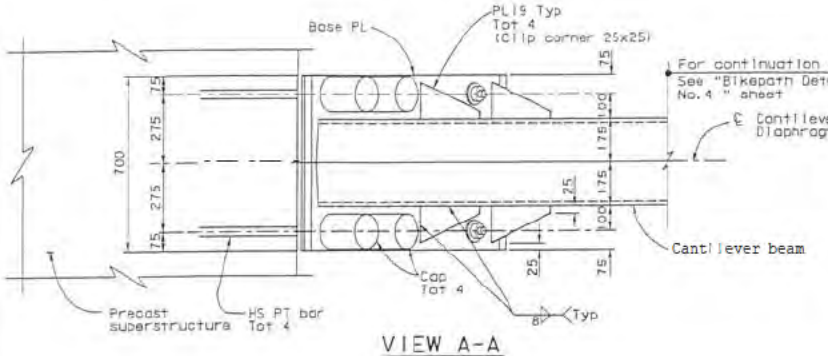

VIEW A-A
1:10

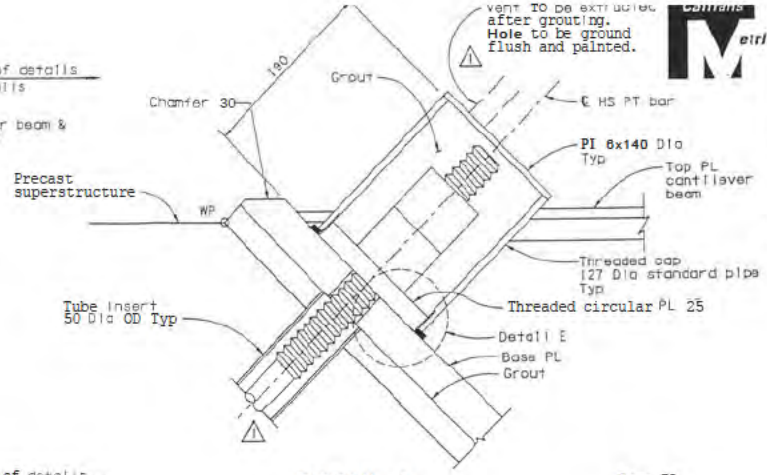

DETAIL A
1:2.5

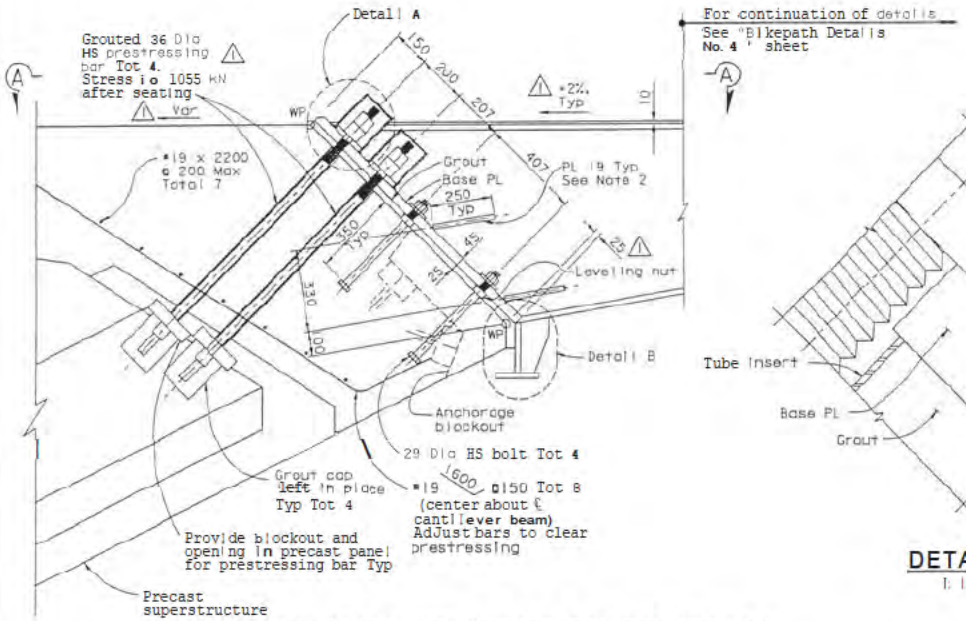

ELEVATION
1:10

(Cantilever beam at Box panel Types 3 & 4)
Beam connection to precast superstructure
at pier table

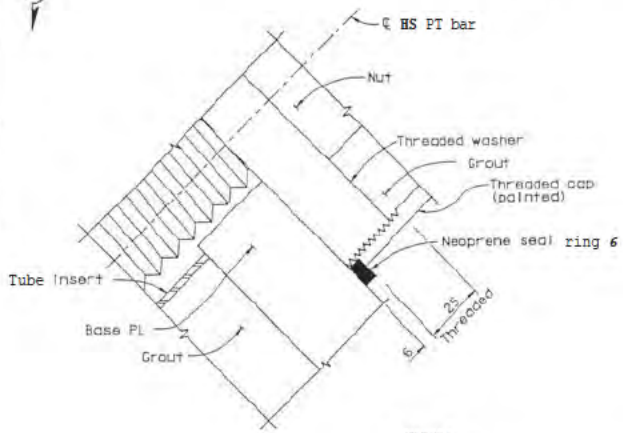

DETAIL E
1:1

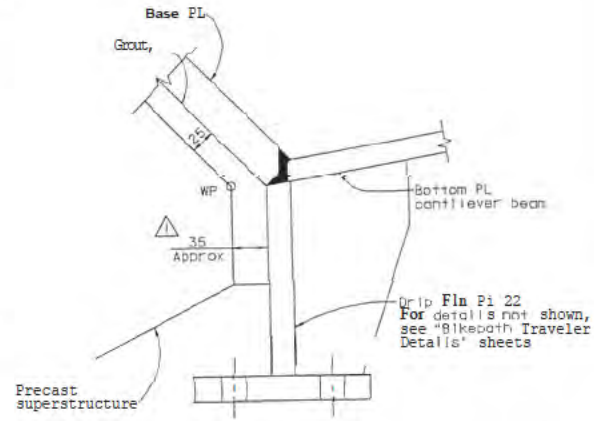

DETAIL B
1:2.5

NOTES:

1. For additional reinforcement, see "Girder Reinforcement" sheets.
2. Stiffeners are oriented parallel to the bottom PL of the cantilever beam.
3. All structural steel plate interface connections shall be made with continuous CIP welds, unless otherwise shown.

MARK	DATE	DESCRIPTIONS	BY	CH'D
1	10/07/02	ADD CANTILEVER BEAM SLOPE	MS	CR
		REVISIONS		

CONTRACT CHANGE ORDER NO. 19
SHEET 22 OF 33 04-012024

ALL DIMENSIONS ARE IN MILLIMETERS UNLESS OTHERWISE SHOWN

SAN FRANCISCO OAKLAND BAY BRIDGE
EAST SPAN SEISMIC SAFETY PROJECT

SKYWAY STRUCTURES

BIKEPATH DETAILS NO. 5

PREPARED FOR THE STATE OF CALIFORNIA DEPARTMENT OF TRANSPORTATION

Sajid Abbas, PROJECT ENGINEER

BRIDGE NO. 34-0006L/R
KILOMETER POST 13.9/14.3, 0.0/1.6

CU 04
EA 012021

DISREGARD PRINTS BEARING EARLIER REVISION DATES

SHEET 439

H. El-Nemr, DESIGN OVERSIGHT
SIGN OFF DATE 10/07/02

DESIGN M. San, CHECKED C. Werts
DETAILS E. Zharkov, CHECKED C. Werts
QUANTITIES K. Cormier, CHECKED J. Leventini

ORIGINAL SCALE IN MILLIMETERS FOR REDUCED PLANS

FILE → J:\DB\04-012001\skyway\may2002\cxdwd04.dgn

04 | SF, Ala | 80 | 13.9/14.3, 0.0/1.6 | 57(R) | 978

Madan K. Sah
REGISTERED ENGINEER - CIVIL
6-04-01
PLANS APPROVAL DATE
The State of California or its officers or agents shall not be responsible for the accuracy or completeness of electronic copies of this plan sheet.

REGISTERED PROFESSIONAL ENGINEER Madan Kumar Sah No. C 59293 Exp. 6/30/03 CIVIL STATE OF CALIFORNIA

T.Y. LIN / MOFFATT & NICHOL
825 BATTERY STREET
SAN FRANCISCO, CA 94111

Caltrans now has a web site! To get to the web site, go to http://www.dot.ca.gov

100% PS&E

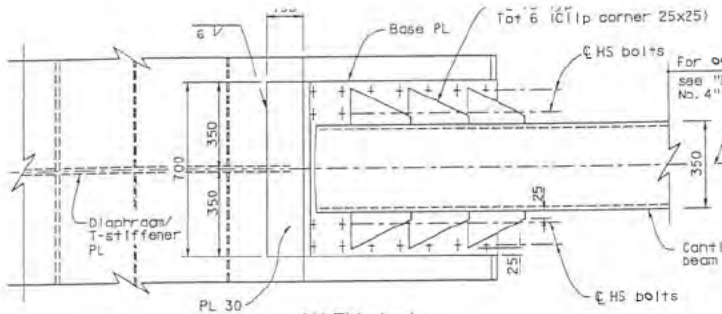

VIEW A-A
1:10

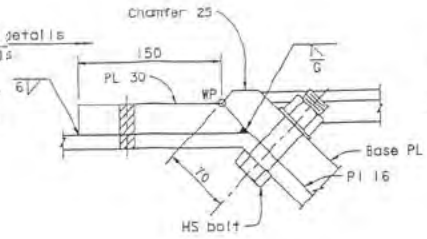

DETAIL A
1:2.5

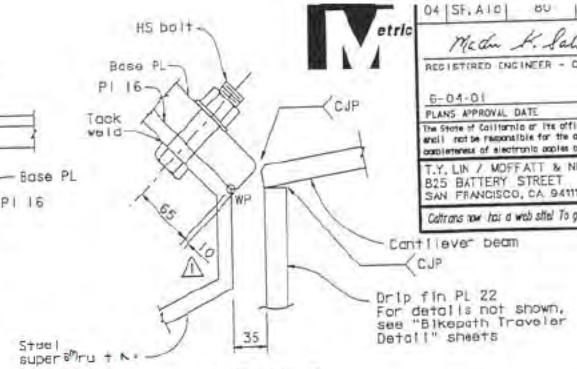

DETAIL B
1:2.5

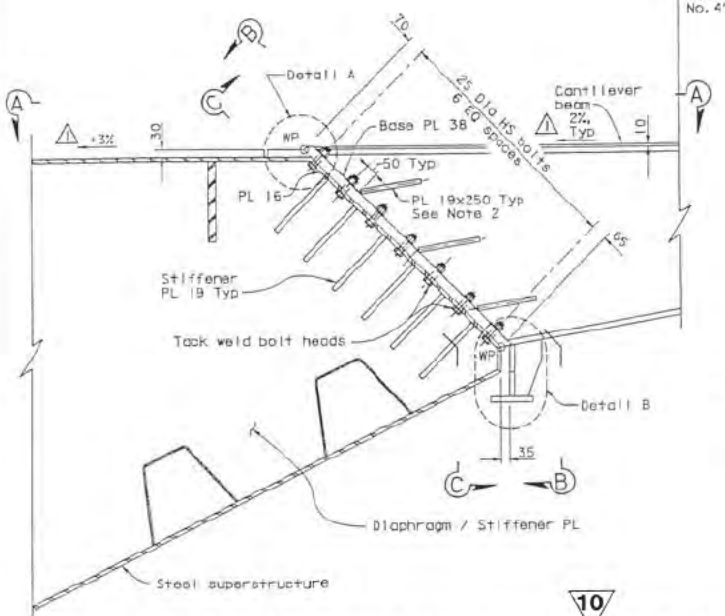

ELEVATION
1:10

(Typical bikepath cantilever beam connection to steel superstructure at bikepath box panel types 1 & 6)

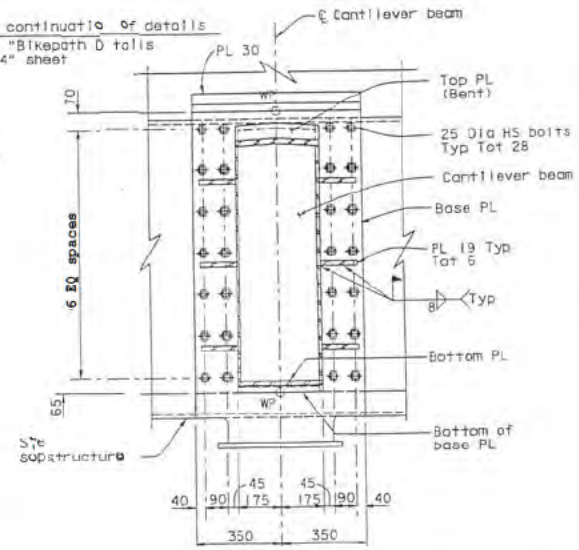

SECTION B-B
1:10

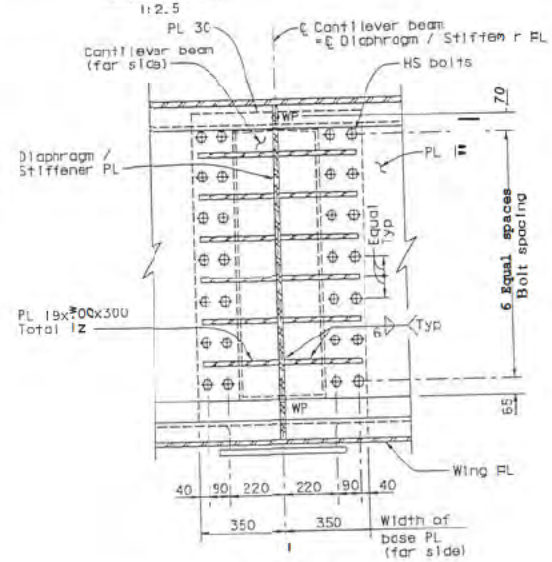

SECTION C-C
1:10

NOTES:

1. For Steel superstructure, see "Transition Span Details" sheets.
2. Stiffeners are oriented parallel to the bottom PL of the cantilever beam.
3. All structural steel plate interface connections shall be made with continuous CJP welds, unless otherwise shown.

MARK	DATE	DESCRIPTIONS	BY	CH'D
1	10/07/02	ADD BIKEPATH SLOPE	MS	CR

REVISIONS

CONTRACT CHANGE ORDER NO. 19
SHEET 23 OF 33 04-012024

10 REVISED PER ADDENDUM NO. 10 DATED DECEMBER 5, 2001

ALL DIMENSIONS ARE IN MILLIMETERS UNLESS OTHERWISE SHOWN

H. El-Natur
DESIGN OVERSIGHT
SIGN OFF DATE 10/07/02

DESIGN	M. Soh	CHECKED	C. Werts
DETAILS	F. Hung	CHECKED	C. Werts
QUANTITIES	K. Cormier	CHECKED	J. Lavertini

PREPARED FOR THE STATE OF CALIFORNIA DEPARTMENT OF TRANSPORTATION

Rajid Abbas
PROJECT ENGINEER

CU 04
EA 012021

BRIDGE NO. 34-0006L/R
POLICY PROJECT POST 3.97/4.3, 0.0/1.6

DISREGARD PRINTS BEARING EARLIER REVISION DATES

SAN FRANCISCO OAKLAND BAY BRIDGE
EAST SPAN SEISMIC SAFETY PROJECT

SKYWAY STRUCTURES

BIKEPATH DETAILS NO. 6

SHEET 440

ORIGINAL SCALE IN MILLIMETERS FOR REDUCED PLANS

FILE => p:\bb\04-012001\skyway\may2001\skaw005.dgn

USERNAME => SYlgnatowskie PLOTTED => 08 OCT 102 TIME PLOTTED => 23:16:52

100 % PS&E

MARK	DATE	DESCRIPTIONS	BY	CH'D
1		ADD BIKEPATH SLOPE AND		

REVISIONS

CONTRACT CHANGE ORDER NO. 19
SHEET 24 OF 33
04-012024

04 | SF/Alo | 80 | 13.9/14.2, 0.0/1.6 | 873R1 | 978

REGISTERED ENGINEER - CIVIL
6-4-01
PLANS APPROVAL DATE
The State of California or its officers or agents shall not be responsible for the accuracy or completeness of electronic copies of this plan sheet.
T.Y. LIN / MOFFATT & NICHOL

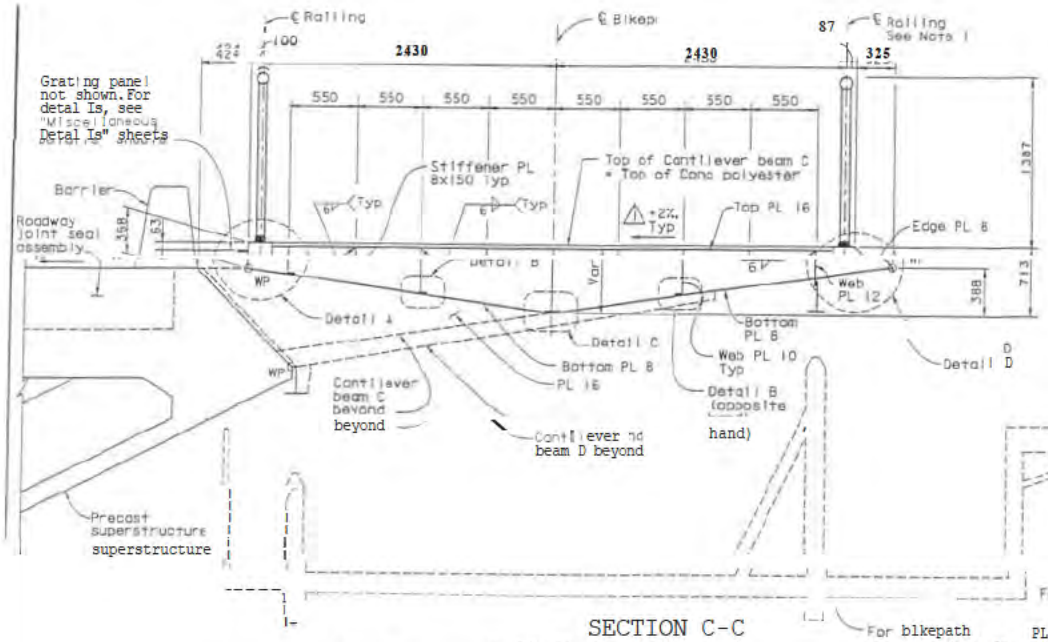

SECTION C-C
1:20

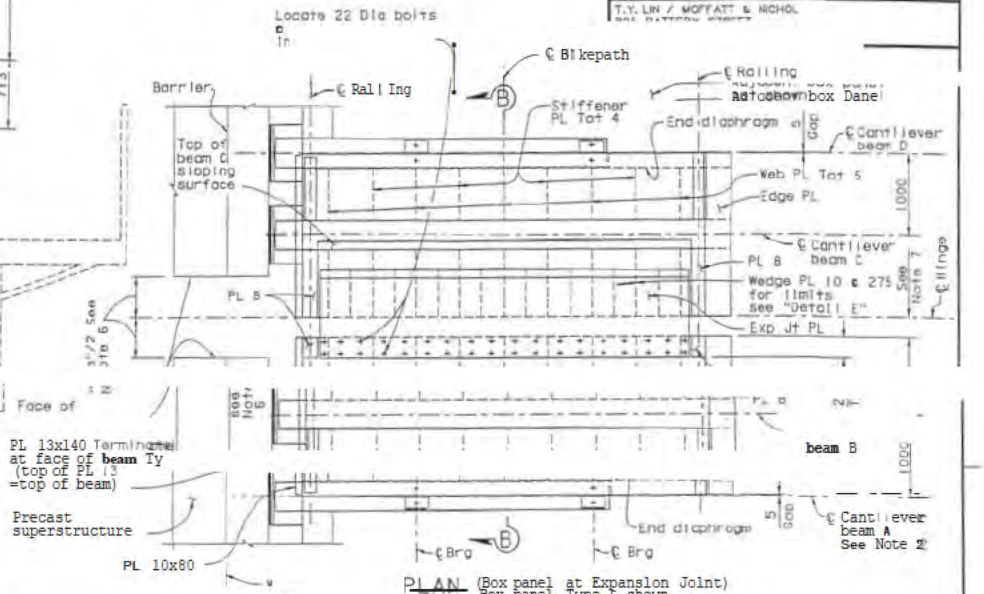

PLAN (Box panel at Expansion Joint)
1:30
Box panel Type 5 shown.
Box panel Type 6 similar.

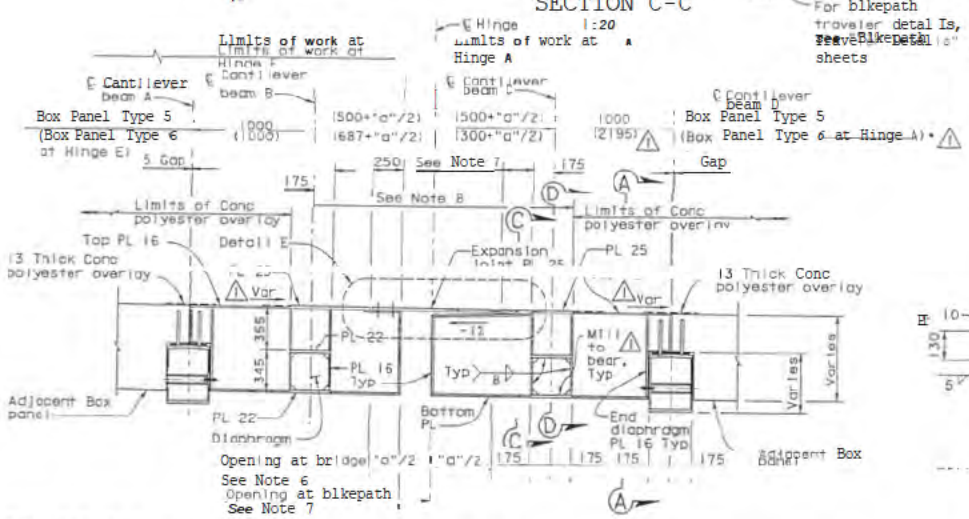

SECTION B-B
1:20

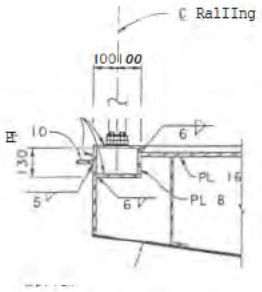

DETAIL A
1:10

NOTES:

1. For railing details, see "Railing Details" sheets.
2. For cantilever beam details, see "Bikepath Detail Is No 9" sheet.
3. For Section A-A, see "Bikepath Detail Is No. 1" sheet.
4. For Detail D, Detail E and Section D-D, see "Bikepath Detail Is No. 8" sheet.
5. For Detail B and Detail C, see "Bikepath Detail Is No. 3" sheet.
6. Dimension "a" is expansion joint gap between faces of hinge segments. Joint Details No. 1" sheet.
7. 200 at Hinge D and E, "a"/4 at other hinges.
8. Top surface of exposed plates shall have non-skid coating.
9. All structural steel plate interface connections shall be made with continuous CJP welds, unless otherwise shown.
10. Bikepath structure shown horizontal for convenience. Railings and railing posts on bikepath shall be plumb.
11. Rails for bikepath traveler shall be plumb.

△ - Dimensions measured area "E" line

3 REVISED PER ADDENDUM NO. 3 DATED OCTOBER 2, 2001

MILLIMETERS UNLESS OTHERWISE SHOWN

DESIGN	M. Soh	CHECKED	C. Werts
DETAILS	F. Hung	CHECKED	C. Werts
QUANTITIES	K. Dambier	CHECKED	J. Leventini

PREPARED FOR THE STATE OF CALIFORNIA DEPARTMENT OF TRANSPORTATION

PROJECT ENGINEER Sajid Abdo
PROJECT ENGINEER

BRIDGE NO. 34-0066L/R
PROJECT POST 13.9/14.2, 0.0/1.6

CU 04
EA 012021

DISREGARD PRINTS BEARING EARLIER REVISION DATES

EAST SPAN SEISMIC SAFETY PROJECT

SKYWAY STRUCTURES

BIKEPATH DETAILS NO. 7

SHEET 44

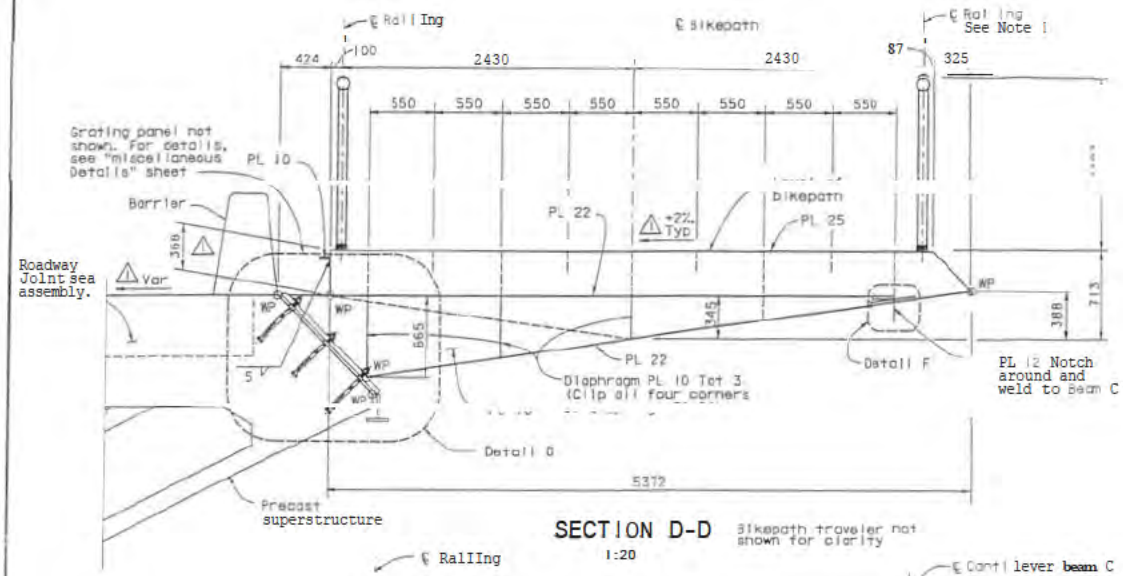

SECTION D-D
1:20

Bikepath traveler not shown for clarity

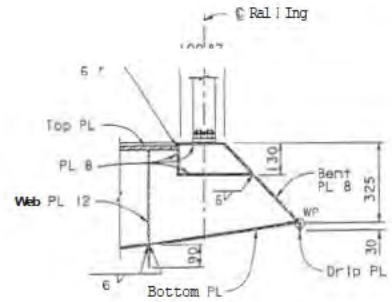

DETAIL D
1:10

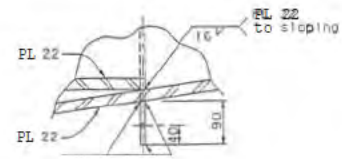

DETAIL F
1:5

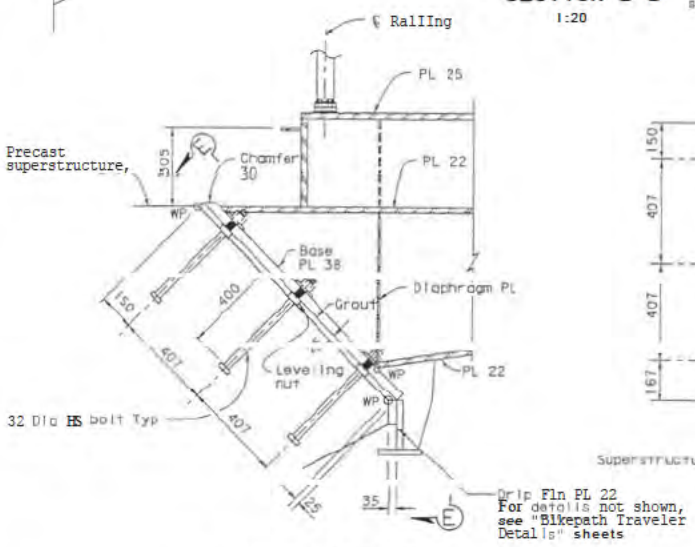

DETAIL G CANTILEVER BEAM C CONNECTION TO PRECAST SUPERSTRUCTURE (CANTILEVER BEAM & CONECTION SIMILAR)
1:10

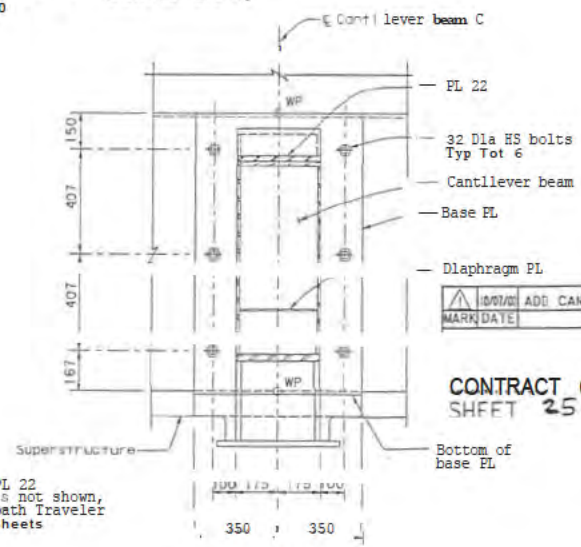

SECTION E-E
1:10

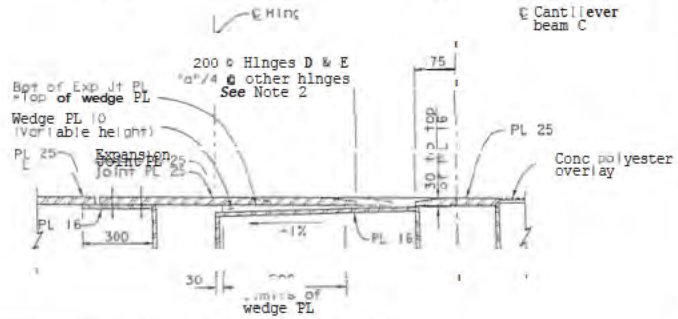

DETAIL E
1:10

MARK	DATE	DESCRIPTIONS	BY	CH'K
1	10/01/01	ADD CANTILEVER BEAM SLOPE	MS	CR

CONTRACT CHANGE ORDER NO. 19
SHEET 25 OF 33 AW-012024

NOTES:

1. For railing details, see "Railing Details" sheets.
2. Dimension "a" is gap between faces of hinge segments at time of installation of bikepath panels. See "Expansion Joint Details No.1" sheet.
3. All structural steel plate interface connections shall be made with continuous CJP welds, unless otherwise shown.
4. Bikepath structure shown horizontal for convenience. Railing and railing posts on bikepath shall be plumb

3 REVISED PER ADDENDUM NO. 3 DATED OCTOBER 2, 2001

ALL DIMENSIONS ARE IN MILLIMETERS UNLESS OTHERWISE SHOWN

SAN FRANCISCO OAK
EAST SPAN SEISMIC SAFETY PROJECT

SKYWAY STRUCTURES
BIKEPATH DETAILS NO. 8

PREPARED FOR THE STATE OF CALIFORNIA DEPARTMENT OF TRANSPORTATION

Sajid Abbas
PROJECT ENGINEER

BRIDGE NO. 34-0006L/R
PROJECT POST 3.9/14.3, 0.9/1.5

CU 04
EA 012021

M. Schl — C. Werts
F. Hung — C. Werts
C. Corsler — J. Lavantini

REGISTERED ENGINEER - CIVIL
6-4-01
PLANS APPROVAL DATE
The State of California or its officers or agents shall not be responsible for the accuracy or completeness of electronic copies of this plan sheet.

T.Y. LIN / MOFFATT & NICHOL
825 BATTERY STREET
SAN FRANCISCO, CA 94111

SHEET 442

DIST	COUNTY	ROUTE	TOTAL PROJECT	NO.	SHEETS
04	SF, Alc	80	13.9/14.3, 0.0/1.6	875R1	978

Caltrans Metric

REGISTERED ENGINEER - CIVIL

6-04-01
PLANS APPROVAL DATE

The State of California or its officers or agents shall not be responsible for the accuracy or completeness of electronic copies of this plan sheet.

Madan Kumar Sah No. C 59203 Exp. 6/30/03 CIVIL STATE OF CALIFORNIA

T.Y. LIN / MOFFATT & NICHOL
825 BATTERY STREET
SAN FRANCISCO, CA 94111

Caltrans new has a web site! To get to the web site, go to: http://www.dot.ca.gov

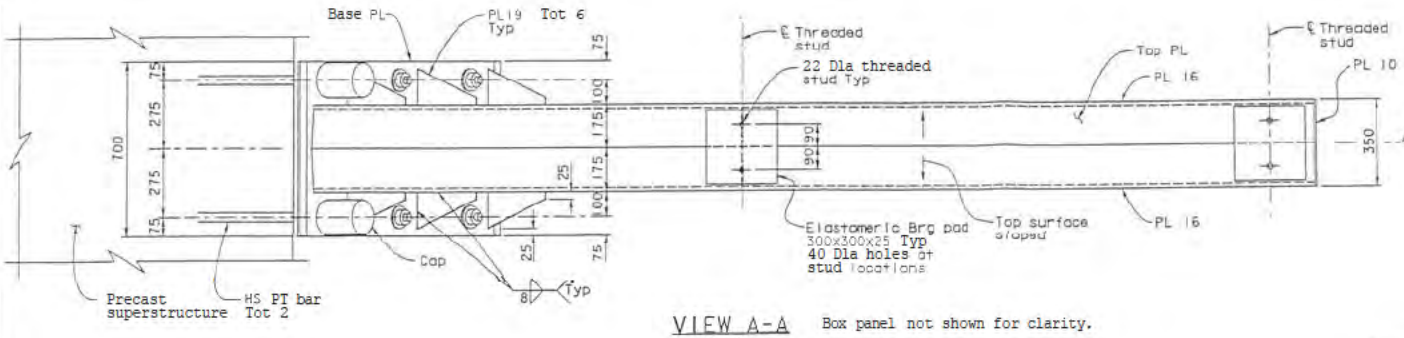

VIEW A-A
1:10

Box panel not shown for clarity.

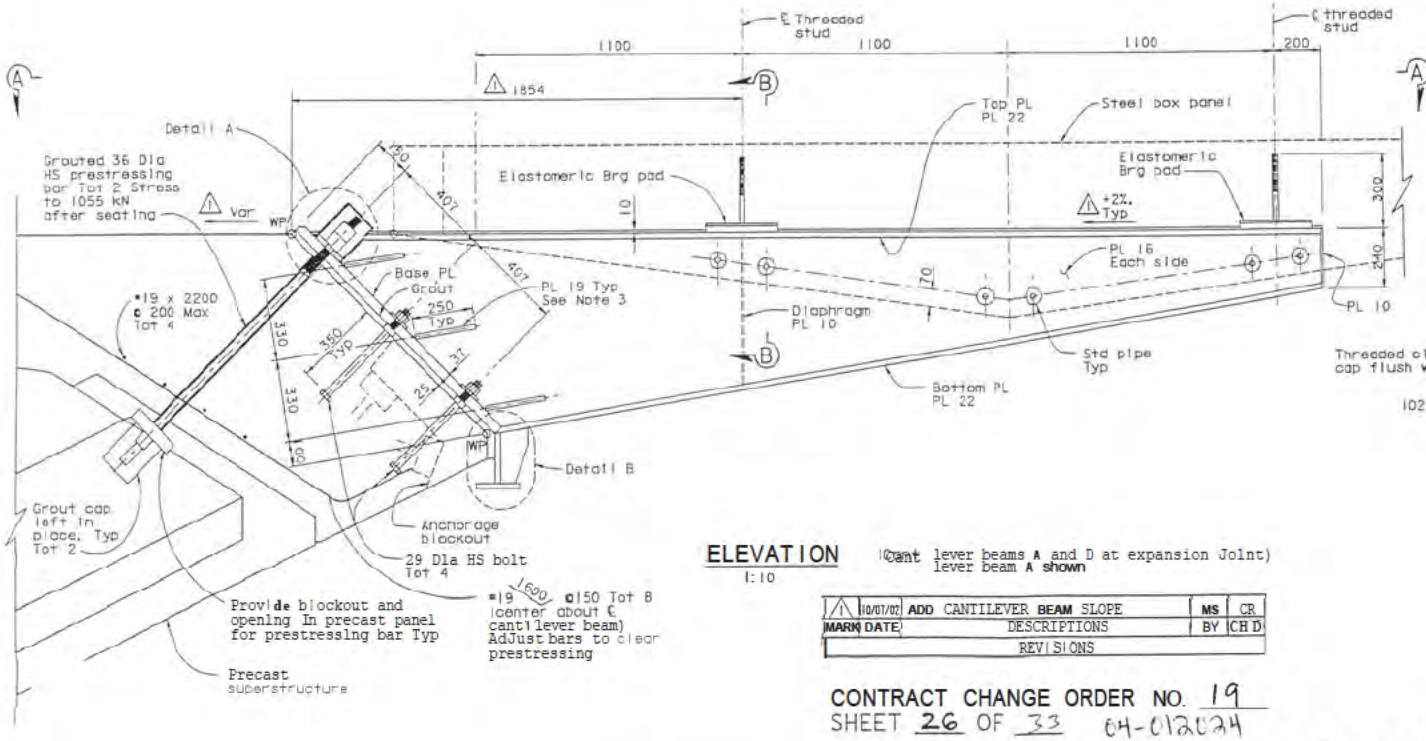

ELEVATION
1:10

(Cantilever beams A and D at expansion Joint) lever beam A shown

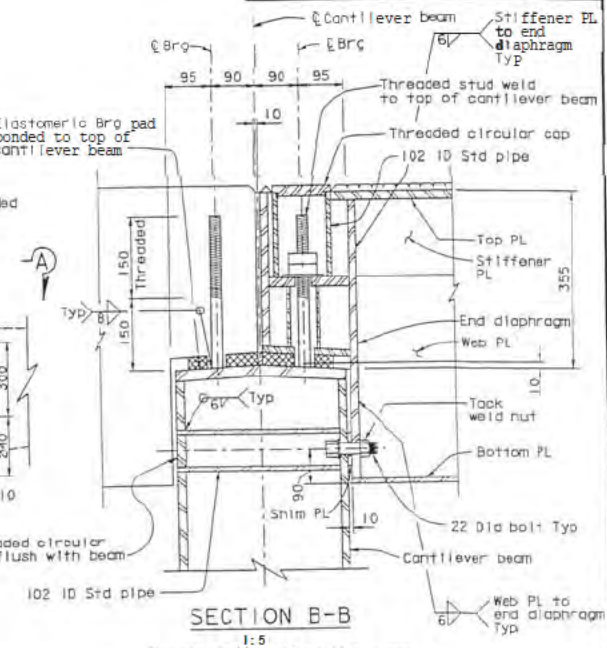

SECTION B-B
1:5

For completion of section, see "Bikepath Details No. 3" sheet

NOTES:

1. For Detail A and B, see "Bikepath Details No. 5" sheet.
2. For additional reinforcement, see "Girder Reinforcement" sheets.
3. Stiffeners are oriented parallel to the bottom PL of the cantilever beam.
4. All structural steel plate interface connections shall be made with continuous CJP welds, unless otherwise shown.

MARK	DATE	DESCRIPTIONS	BY	CHD
1	10/01/02	ADD CANTILEVER BEAM SLOPE	MS	CR

REVISIONS

CONTRACT CHANGE ORDER NO. 19
SHEET 26 OF 33 04-012024

ALL DIMENSIONS ARE IN MILLIMETERS UNLESS OTHERWISE SHOWN

SAN FRANCISCO OAKLAND BAY BRIDGE
EAST SPAN SEISMIC SAFETY PROJECT

SKYWAY STRUCTURES

BIKEPATH DETAILS NO. 9

DESIGN	M. Sah	CHECKED	C. Norris
DETAILS	F. Nung	CHECKED	C. Norris
QUANTITIES	K. Cornier	CHECKED	J. Leventini

PREPARED FOR THE STATE OF CALIFORNIA DEPARTMENT OF TRANSPORTATION

Salid Abbas
PROJECT ENGINEER

BRIDGE NO. 34-0006L/R
KILOMETER POST 13.9/14.3, 0.0/1.6

CU 04
EA 012021

DESIGN OVERSIGHT
SIGN OFF DATE 10/01/02

ORIGINAL SCALE IN MILLIMETERS FOR REDUCED PLANS

DISREGARD PRINTS BEARING EARLIER REVISION DATES

REVISION DATES (PRELIMINARY STAGE ONLY)

SHEET 443

FILE => p:\00104-01(2001)\skyway\sdy2002\bkdwd09.dgn

USERNAME => BKwok

LINE PLOTTED => 21:58:11

100% PAGE

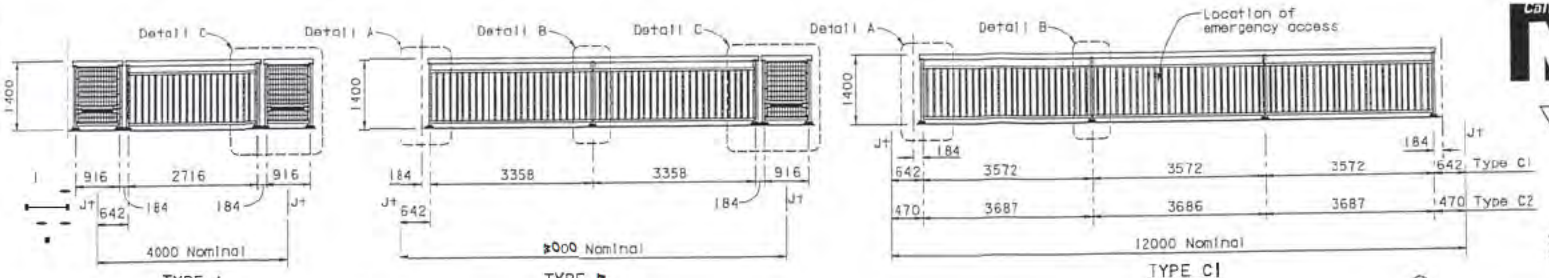

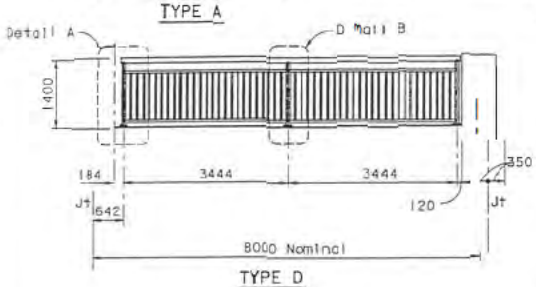

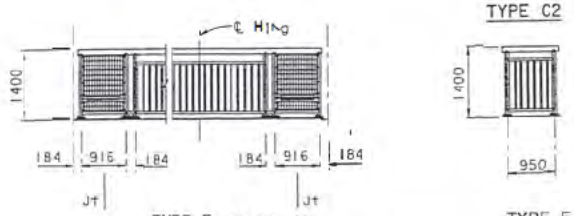

Note: For details, see "Railing Details No.4" sheet.

BICYCLE RAIL ELEVATIONS
1:50

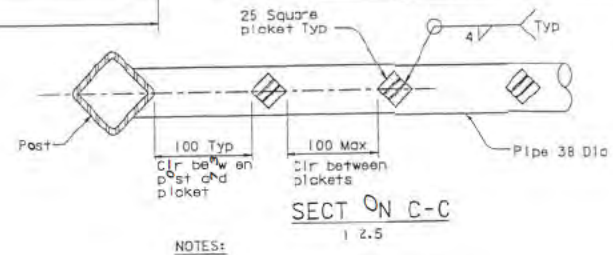

SECTION C-C
1:2.5

NOTES:

1. For Detail D, see "Railing Details No.2" sheet.
2. For Details E, F, see "Railing Details No.3" sheet.
3. All posts shall be plumb.

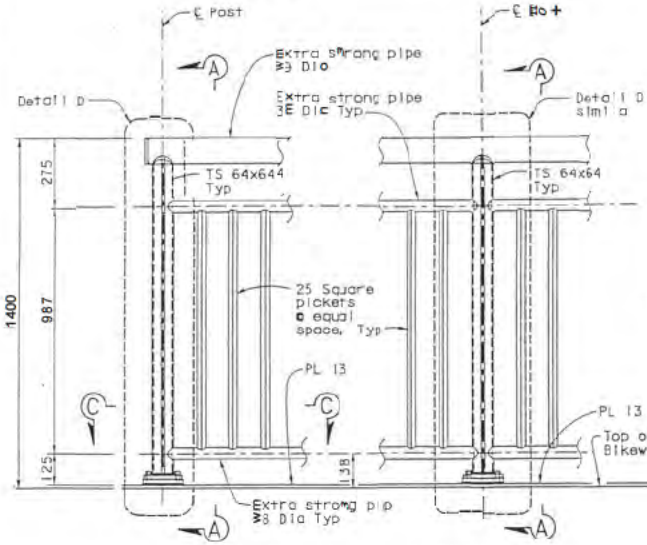

DETAIL A
1:10

DETAIL B
1:10

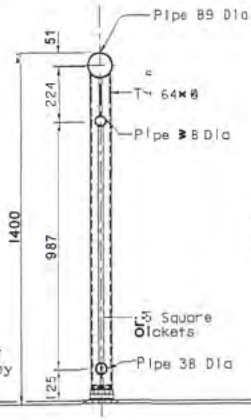

SECTION A-A
1:10

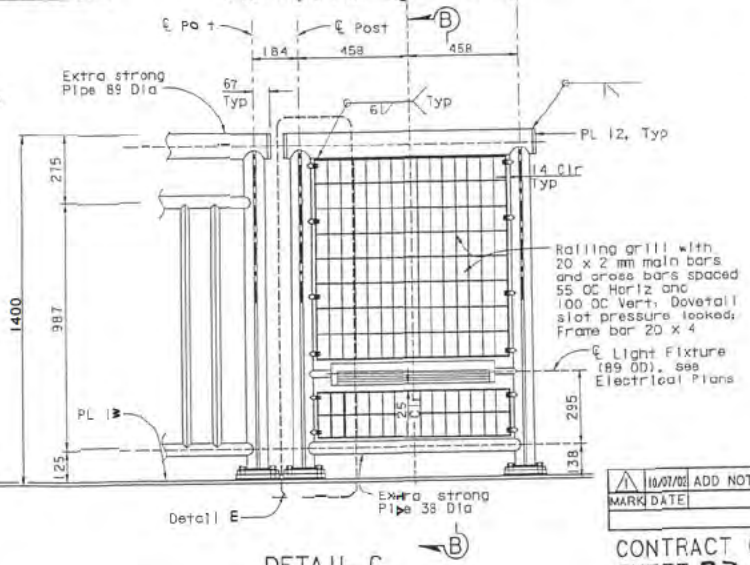

DETAIL C
1:10

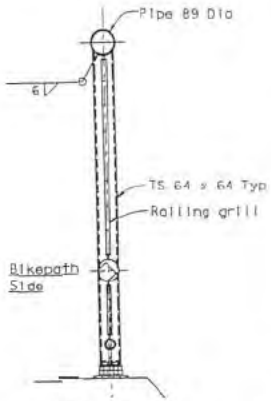

SECTION B-B
1:10

MARK	DATE	DESCRIPTIONS	BY	CH'D
1	10/07/02	ADD NOTE	MS	CR

REVISIONS

CONTRACT CHANGE ORDER NO. 19
SHEET 27 OF 33 04-012024

3 REVISED PER ADDENDUM NO. 3 DATED OCTOBER 2, 2001

ALL DIMENSIONS ARE IN MILLIMETERS UNLESS OTHERWISE SHOWN

SAN FRANCISCO OAKLAND BAY BRIDGE
EAST SPAN SEISMIC SAFETY PROJECT

SKYWAY STRUCTURES

RAILING DETAILS NO. 1

DESIGN	T. Ho	CHECKED	C. Warts
DETAILS	S. Lee	CHECKED	C. Warts
QUANTITIES	A. Yoder	CHECKED	J. Laventini

PREPARED FOR THE STATE OF CALIFORNIA DEPARTMENT OF TRANSPORTATION

Salid Abbas
PROJECT ENGINEER

BRIDGE NO. 34-0006L/R
KILOMETER POST 13.9/14.3, 0.0/1.6

CU 04
EA 012021

DISPEGARD PRINTS BEARING EARLIER REVISION DATES

REVISION DATES (PRELIMINARY STAGE ONLY)

SHEET 459

H. El-Hotie
DESIGN OVERSIGHT
SIGN OFF DATE 10/07/02

ORIGINAL SCALE IN MILLIMETERS FOR REDUCED PLANS 0 10 20 30 40 50 60 70 80 90 100

FILE => p:\bb\04-012001\skyway\may2002\skr1d01.dgn

04 | SF, Alameda | 80 | 13.9/14.3, 0.0/1.6 | 89R1 | 978

REGISTERED ENGINEER - CIVIL
6-4-01
PLANS APPROVAL DATE
The State of California or its officers or agents shall not be responsible for the accuracy or completeness of electronic copies of this plan sheet.

REGISTERED PROFESSIONAL ENGINEER Tien Hung Ho No. C 43990 Exp. 06/03/05 CIVIL STATE OF CALIFORNIA

T.Y. LIN / MOFFATT & NICHOL
825 BATTERY STREET
SAN FRANCISCO, CA 94111

LOGINNAME => Bkwch DATE PLOTTED => 06 OCT 102 TIME PLOTTED => 22:12:39

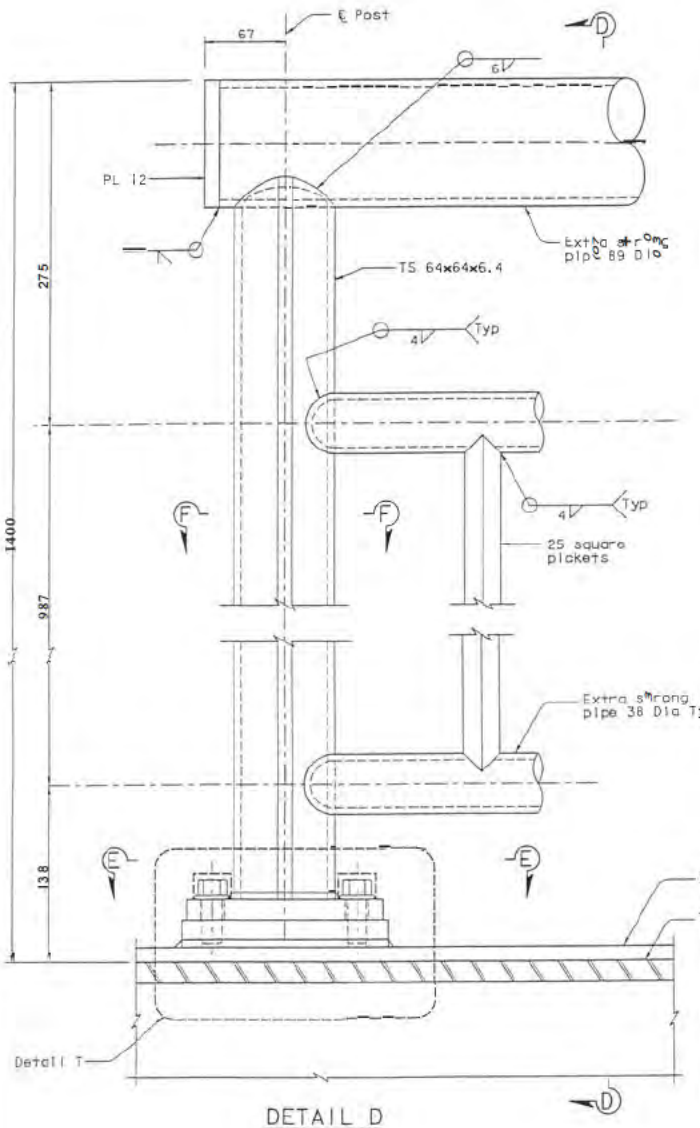

DETAIL D
1:2

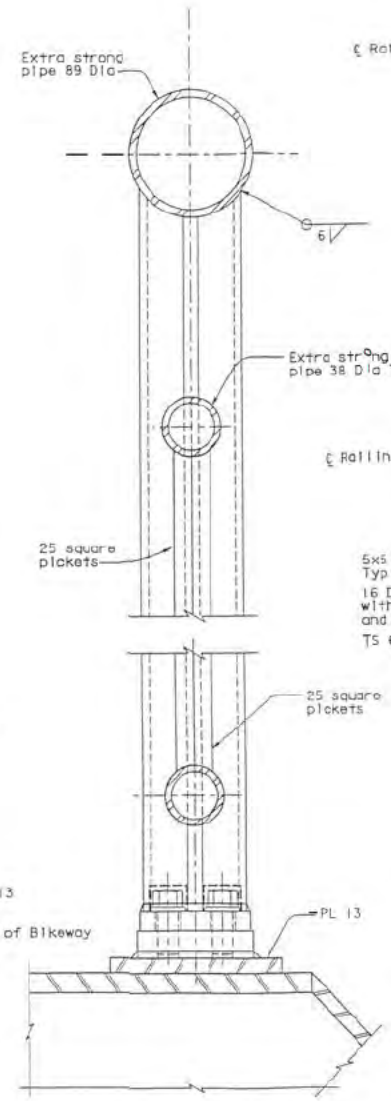

SECTION D-D
1:2

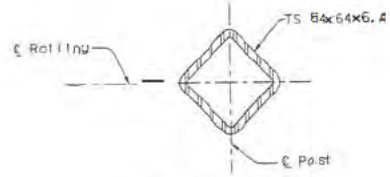

SECTION F-F
1:2

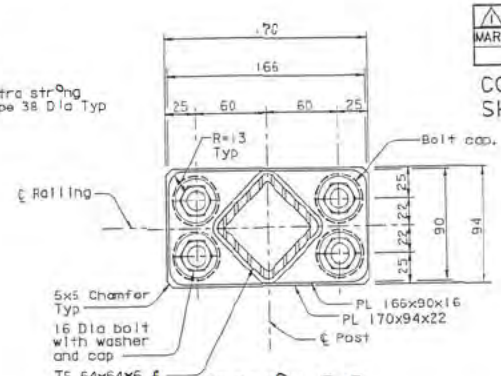

SECTION E-E
1:2

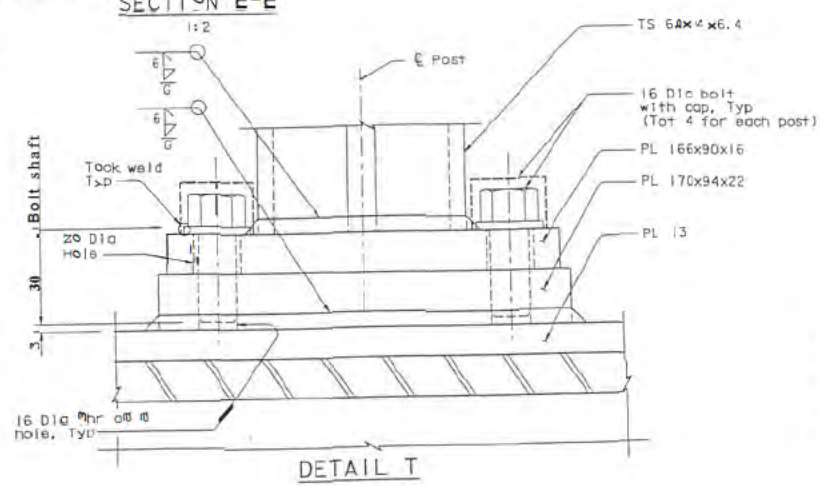

DETAIL T
1:1

NOTES:

1. All posts shall be plumb.

CONTRACT CHANGE ORDER NO. 19
SHEET 28 OF 33 04-012024

MARK	DATE	DESCRIPTIONS	BY	CH'D
1	10/07/02	ADD NOTE	MS	CR

REVISIONS

Caltrans Metric

04	SF, Alo	80	13.9/14.3, 0.0/1.6	892R1	978

REGISTERED ENGINEER - CIVIL
6-1-01
PLANS APPROVAL DATE

Tien Hung Ho, No. C 43990, Exp. 06/03/05, CIVIL, STATE OF CALIFORNIA

The State of California or its officers or agents shall not be responsible for the accuracy or completeness of electronic copies of this plan sheet.

T.Y. LIN / MOFFATT & NICHOL
825 BATTERY STREET
SAN FRANCISCO, CA 94111

Caltrans now has a web site! To get to the web site, go to http://www.dot.ca.gov

3 REVISED PER ADDENDUM NO. 3 DATED OCTOBER 2, 2001

ALL DIMENSIONS ARE IN MILLIMETERS UNLESS OTHERWISE SHOWN

SAN FRANCISCO OAKLAND BAY BRIDGE
EAST SPAN SEISMIC SAFETY PROJECT

SKYWAY STRUCTURES

RAILING DETAILS NO.2

DESIGN	BY T. Ho	CHECKED C. Werts	
DETAILS	BY S. Lee	CHECKED C. Werts	
QUANTITIES	BY A. Yoder	CHECKED J. Leventini	

PREPARED FOR THE STATE OF CALIFORNIA DEPARTMENT OF TRANSPORTATION

Sajid Abbas
PROJECT ENGINEER

BRIDGE NO. 34-0006L/R
KILOMETER POST 13.9/14.3, 0.0/1.6

CU 04
EA 012021

DISREGARD PRINTS BEARING EARLIER REVISION DATES

SHEET 460

DESIGN OVERSIGHT
SIGN OFF DATE 10/07/02

ORIGINAL SCALE IN MILLIMETERS FOR REDUCED PLANS

FILE = J:\DT\SB\04-012001\skyway\day2002\skr1602.dgn

DATE PLOTTED = 3 OCT 1002 TIME PLOTTED = 3 22:19:05

100% PS&E

USERNAME = S.Beard

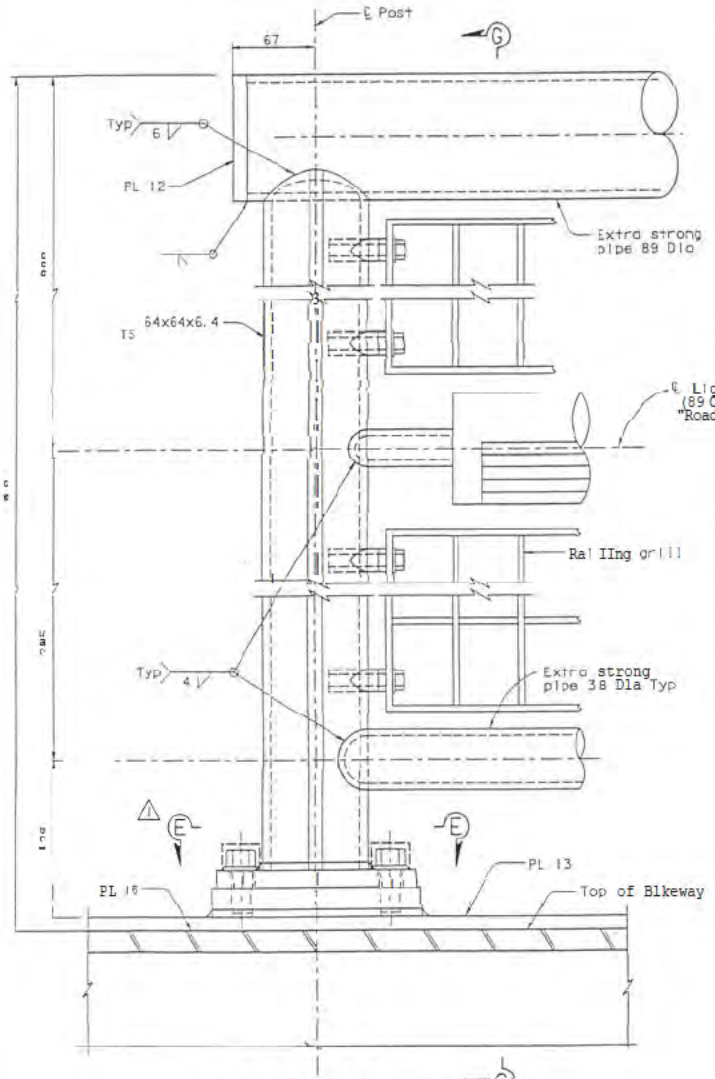

DETAIL E

1:2

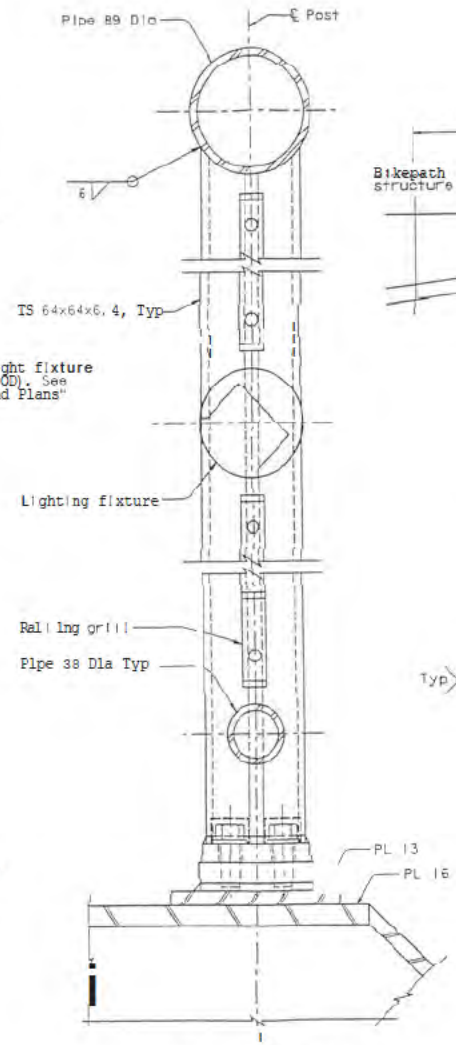

SECTION G-G

1:2

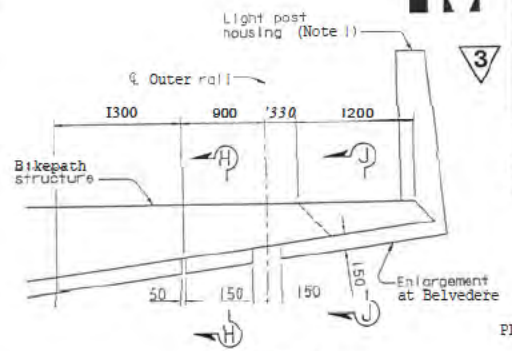

DETAIL G

NTS

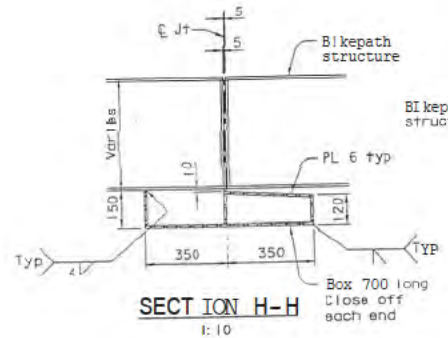

SECTION H-H

1:10

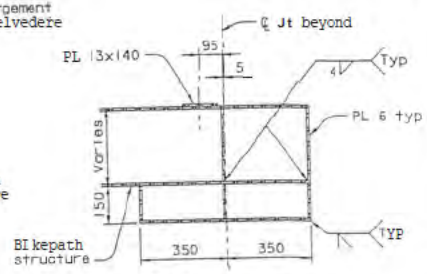

SECTION J-J

1:10

NOTES:

1. For Light post housing, see "Bikepath Details No.2" sheet.
2. Post connection without fixity. For location see "Railing Detail Is No. 1" sheet.
3. For Section E-E, see "Railing Detail Is No.2" sheet.
4. All posts shall be plumb.

MARK	DATE	DESCRIPTIONS	BY	CH'D
1	10/01/02	ADD NOTE AND SECTION MARK	MS	CR

REVISIONS

CONTRACT CHANGE ORDER NO. 19

SHEET 29 OF 33 04-012024

3 REVISED PER ADDENDUM NO. 3 DATED OCTOBER 2, 2001

ALL DIMENSIONS ARE IN MILLIMETERS UNLESS OTHERWISE SHOWN

04	SF, Ala	80	13.9/14.3, 0.0/1.6	893R	978

REGISTERED ENGINEER - CIVIL

6-4-01

PLANS APPROVAL DATE

REGISTERED PROFESSIONAL ENGINEER Tien Hung Ho No. C 43990 Exp. 06/03/05 CIVIL STATE OF CALIFORNIA

The State of California or its officers or agents shall not be responsible for the accuracy or completeness of electronic copies of this plan sheet.

TY LIN / MOFFATT & NICHOL
825 BATTERY STREET
SAN FRANCISCO, CA 94111

Caltrans now has a web site! To get to the web site, go to: http://www.dot.ca.gov

H. El-Natur
DESIGN OVERSIGHT

SIGN OFF DATE 10/01/02

Rev. Date: 8-30-98

DESIGN	BY T. Ho	CHECKED C. Warts	
DETAILS	BY S. Lee	CHECKED C. Warts	
QUANTITIES	BY A. Yoder	CHECKED J. Leventini	

ORIGINAL SCALE IN MILLIMETERS FOR REDUCED PLANS 0 10 20 30 40 50 60 70 80 90 100

PREPARED FOR THE STATE OF CALIFORNIA DEPARTMENT OF TRANSPORTATION

Solid Abbas
PROJECT ENGINEER

BRIDGE NO. 34-0006L/R
KILOMETER POST 13.9/14.3, 0.0/1.6

CU 04
EA 012021

DISREGARD PRINTS BEARING EARLIER REVISION DATES

SAN FRANCISCO OAKLAND BAY BRIDGE
EAST SPAN SEISMIC SAFETY PROJECT

SKYWAY STRUCTURES

RAILING DETAILS NO.3

REVISION DATES (PRELIMINARY STAGE ONLY)

SHEET 461

FILE => D:\bb\04-012021\skyway\may2002\ok11d3.dgn

USERNAME => BLOOK DATE PLOTTED => 08 OCT 02 TIME PLOTTED => 12:42

10% PS&E

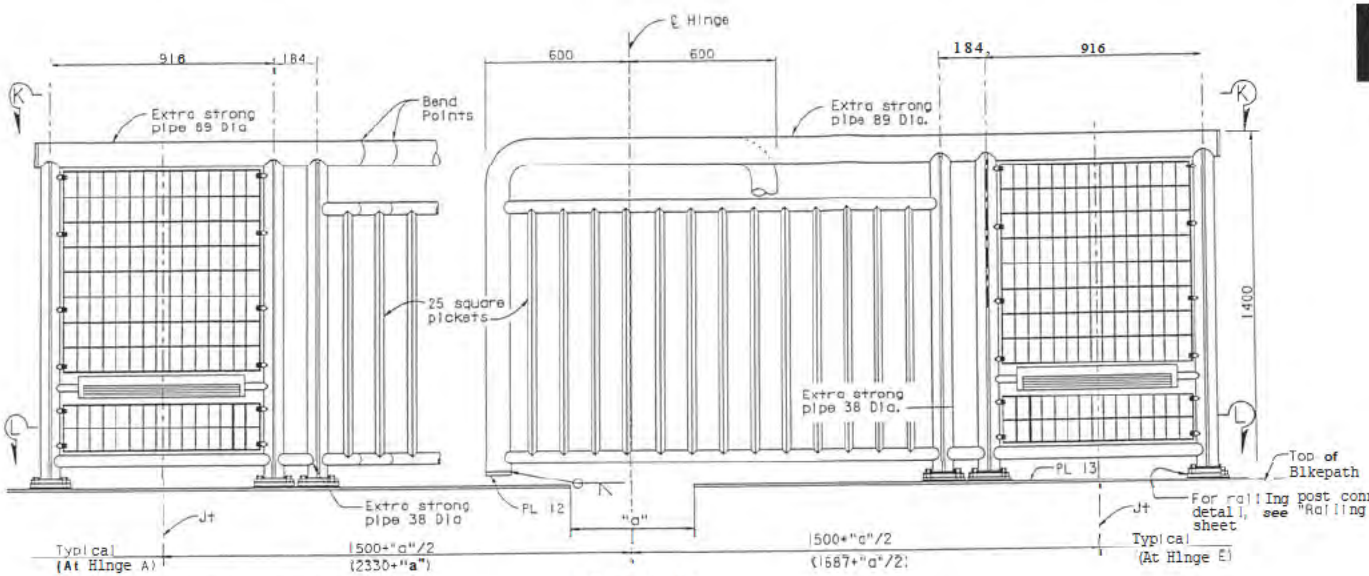

For details see "Railing Detail Is No. 3" sheet

DETAIL H

1:10

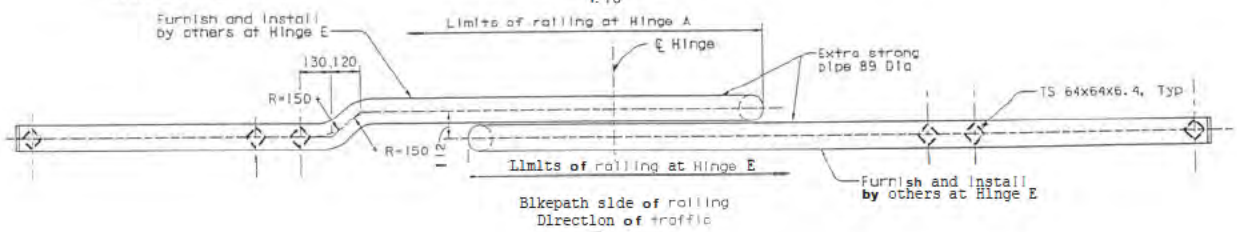

SECTION K-K

1:10

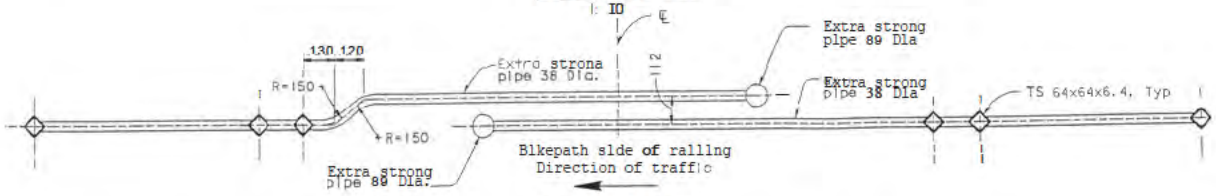

SECTION L-L

1:10

RAILING EXPANSION JOINT DETAILS (TYPE E)

3 REVISED PER ADDENDUM NO. 3 DATED OCTOBER 2, 2001

NOTES:

1. For detail Is **not** shown, see "Railing Detail Is No. 2" and "Railing Detail Is No. 3 sheets.
2. For dimension "a", **see** "Expansion Joint Details" sheet.
3. All posts shall **be** plumb.

MARK	DATE	DESCRIPTIONS	BY	CH'D
1	10/01/02	ADD NOTE	MS	CR

REVISIONS

CONTRACT CHANGE ORDER NO. 19
SHEET 30 OF 33 04-012024

100 % PSSE

ALL DIMENSIONS ARE IN MILLIMETERS UNLESS OTHERWISE SHOWN

PREPARED FOR THE STATE OF CALIFORNIA DEPARTMENT OF TRANSPORTATION

SAN FRANCISCO OAKLAND BAY BRIDGE
EAST SPAN SEISMIC SAFETY PROJECT

SKYWAY STRUCTURES

RAILING DETAILS NO. 4

Caltrans Metric

04 | SF.A1a | 30 | 13.9/14.3, 0.0/1.6 | 894R1 | 978

REGISTERED ENGINEER - CIVIL

6-4-01
PLANS APPROVAL DATE

Tien Hung Ho, No. C 43990, Exp. 06/03/05, CIVIL, STATE OF CALIFORNIA

The State of California or its officers or agents shall not be responsible for the accuracy or completeness of electronic copies of this plan sheet.

T.Y. LIN / MOFFATT & NICHOL
825 BATTERY STREET
SAN FRANCISCO, CA 94111

Caltrans now has a web site! To get to the web site, go to http://www.dot.ca.gov

H. Il-Natur
DESIGN OVERSIGHT
SIGN OFF DATE 10/01/02

DESIGN: T. Ho | CHECKED: C. Wertz
DETAILS: F. Hung | CHECKED: C. Wertz
QUANTITIES: A. Tooer | CHECKED: J. Leventini

Solid Abous
PROJECT ENGINEER

BRIDGE NO. 34-0006L/R
KILOMETER POST 13.9/14.3, 0.0/1.6

CU 04
EA 012021

SHEET 462

DATE PLOTTED => 26-Jul-15 TIME PLOTTED => 06 OCT 102

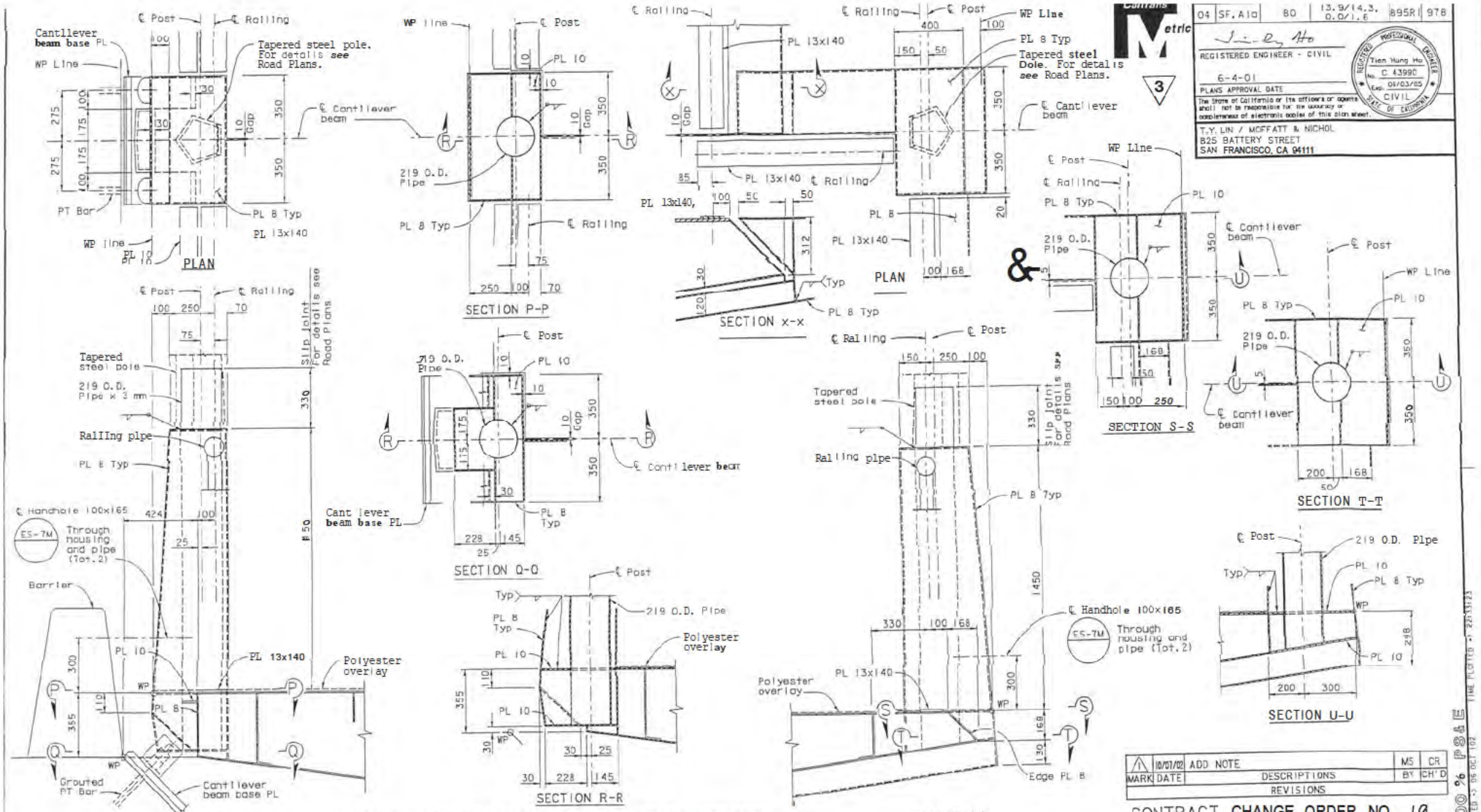

LIGHT POST HOUSING DETAILS AT BELVEDERES

1:10

All posts shall be plumb.

REVISED PER ADDENDUM NO. 3 DATED OCTOBER 2, 2001

ALL DIMENSIONS ARE IN MILLIMETERS UNLESS OTHERWISE SHOWN

04	SF. A1a	80	13.9/14.3. 0.0/1.6	895R1	978

REGISTERED ENGINEER - CIVIL

6-4-01

PLANS APPROVAL DATE

The State of California or its officers or agents shall not be responsible for the accuracy or completeness of electronic copies of this plan sheet.

T.Y. LIN / MOFFATT & NICHOL
825 BATTERY STREET
SAN FRANCISCO, CA 94111

MARK	DATE	DESCRIPTIONS	BY	CH'D
1	10/01/02	ADD NOTE	MS	CR

REVISIONS

CONTRACT CHANGE ORDER NO. 19
SHEET 31 OF 33 04-012024

SAN FRANCISCO OAKLAND BAY BRIDGE
EAST SPAN SEISMIC SAFETY PROJECT

SKYWAY STRUCTURES

RAILING DETAILS NO. 5

DESIGN	T. Ho	CHECKED	C. Nerts
DETAILS	A. Lishansky	CHECKED	C. Nerts
QUANTITIES	L. Greer	CHECKED	J. Leventini

PREPARED FOR THE STATE OF CALIFORNIA DEPARTMENT OF TRANSPORTATION

Sajid Abbas
PROJECT ENGINEER

BRIDGE NO. 34-0006L/R
KILOMETER POST 13.9/14.3. 0.0/1.6

CU 04
EA 012021

DISREGARD PRINTS BEARING EARLIER REVISION DATES

SHEET 463

IL El-Natur
DESIGN OVERSIGHT
SIGN OFF DATE 10/01/02

ORIGINAL SCALE IN MILLIMETERS FOR REDUCED PLANS

FILE ...\DB\04-012001\Skyway\Hoy2002\skr1d05.dgn

DATE PLOTTED = 26 OCT 102 TIME PLOTTED = 22:13:23

USERNAME = BKARK

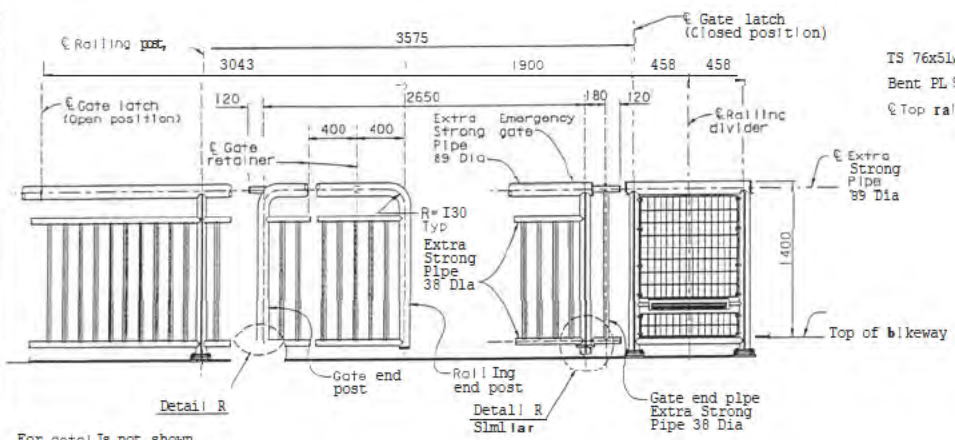

For detail is not shown, see "Railing Details No. 2 and No. 3" sheets

ELEVATION - EMERGENCY GATE

1:20

⚠ All posts shall be plumb.

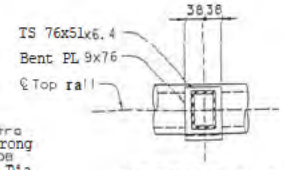

SECTION b-b

1:5

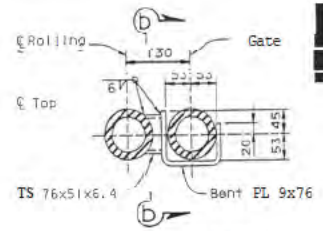

GATE RETAINER SECTION a-a

1:5

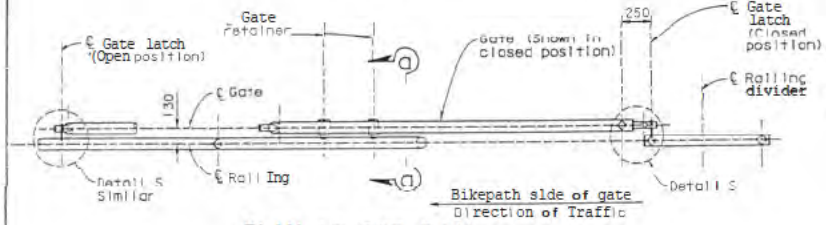

PLAN AT TOP RAIL

1:20

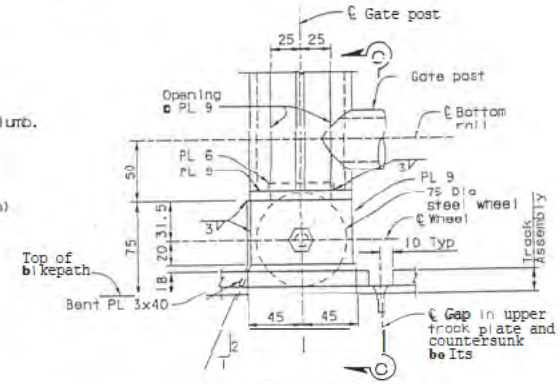

DETAIL R

1:2

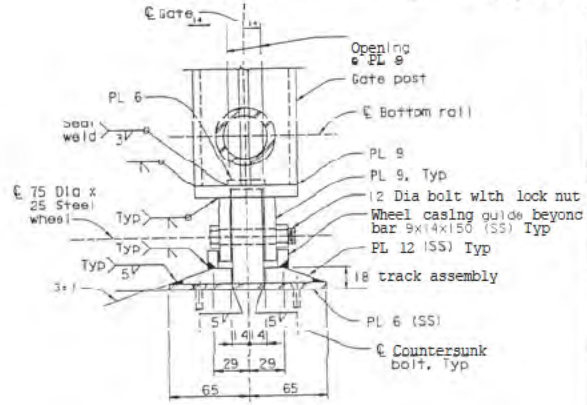

SECTION c-c

1:2

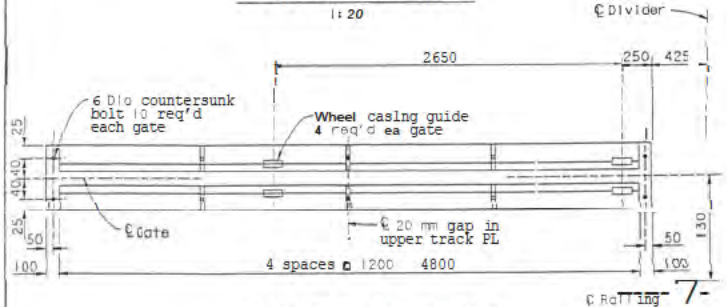

PLAN AT GATE TRACK

No Scale

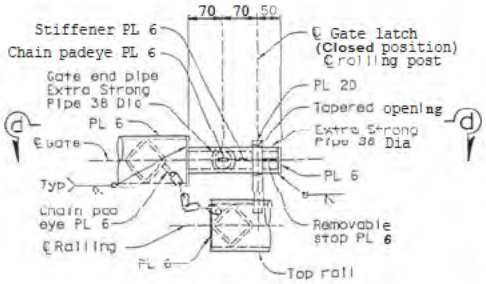

DETAIL S

1:5

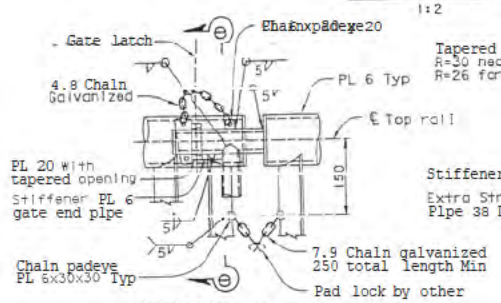

SECTION d-d

1:5

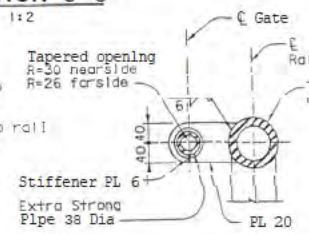

SECTION e-e

1:5

ALL DIMENSIONS ARE IN MILLIMETERS UNLESS OTHERWISE SHOWN

Caltrans District 4

04 SF, Ala | 80 | 13.9/14.3, 0.0/1.6 | 896R1 | 978

REGISTERED ENGINEER - CIVIL

6-4-01

PLANS APPROVAL DATE

The State of California or its officers or agents shall not be responsible for the accuracy or completeness of electronic copies of this plan sheet.

Tien Hung Ho, No. C 43960, Exp. 06/03/01, CIVIL, STATE OF CALIFORNIA

T.Y. LIN / MOFFATT & NICHOL
825 BATTERY STREET
SAN FRANCISCO, CA 94111

Caltrans now has a web site! To get to the web site, go to http://www.dot.ca.gov

MARK	DATE	DESCRIPTIONS	BY	CH'D
1	10/07/03	ADD NOTE	MS	CR

REVISIONS

CONTRACT CHANGE ORDER NO. 19
SHEET 32 OF 33 04-012024

SAN FRANCISCO OAKLAND BAY BRIDGE
EAST SPAN SEISMIC SAFETY PROJECT

SKYWAY STRUCTURES

RAILING DETAILS NO. 6

DESIGN	T. Ho	CHECKED	C. Werts
DETAILS	F. Hung	CHECKED	C. Werts
QUANTITIES	A. Yoder	CHECKED	J. Leventini

PREPARED FOR THE STATE OF CALIFORNIA DEPARTMENT OF TRANSPORTATION

Sajid Abaas, PROJECT ENGINEER

BRIDGE NO. 34-0006L/R
KILOMETER POST 3.9/14.3, 0.0/1.6

CU 04
EA 012021

DISCARD PRINTS BEARING EARLIER REVISION DATES

SHEET 464 OF

H. El-Natur, DESIGN OVERSIGHT
SIGN OFF DATE 10/07/03

Rev. Date: 5-16-98

ORIGINAL SCALE IN MILLIMETERS FOR REDUCED PLANS

TILE = D:\BD\04-012021\skyway\day2002\dkr1006.dgn

DATE PLOTTED => 06 OCT 2003 TIME PLOTTED => 10:06

USERNAME = tbowen

100% PAGE

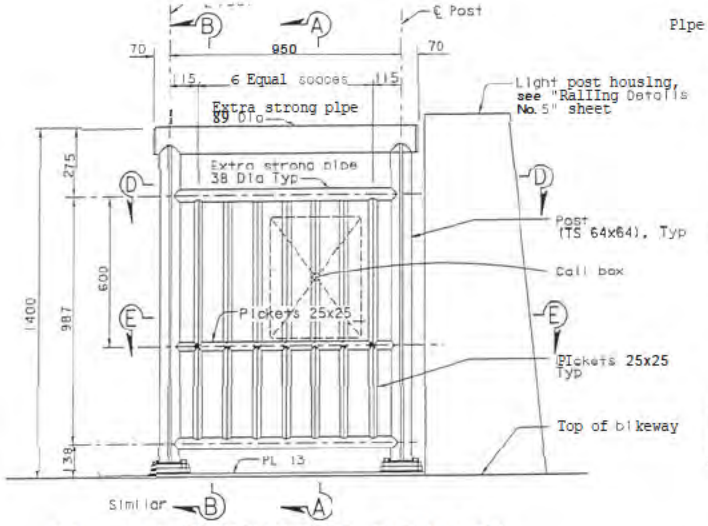

CALL BOX AT BELVEDERE ELEVATION
1:10
(Type F modified)

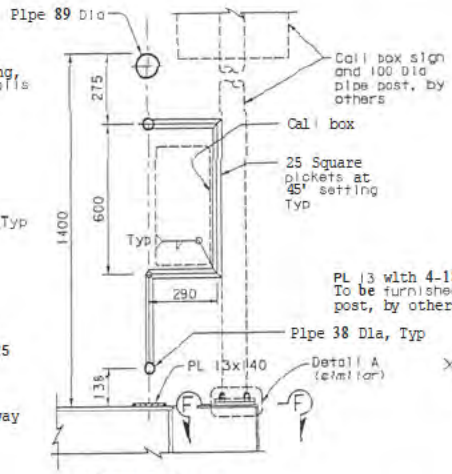

SECTION A-A
1:10

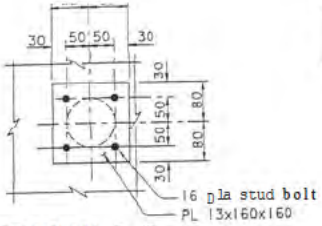

SECTION F-F
1:5

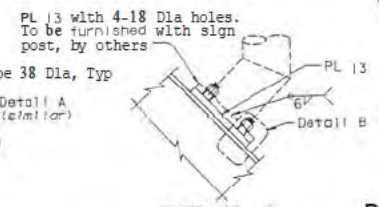

DETAIL A
1:5

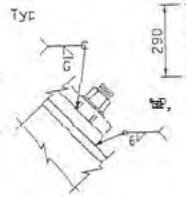

DETAIL B
1:2.5

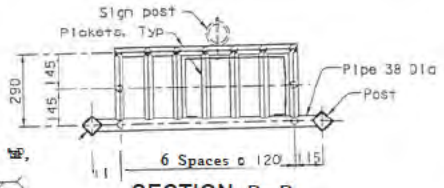

SECTION D-D
1:10

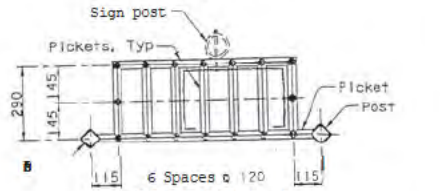

SECTION E-E
1:10

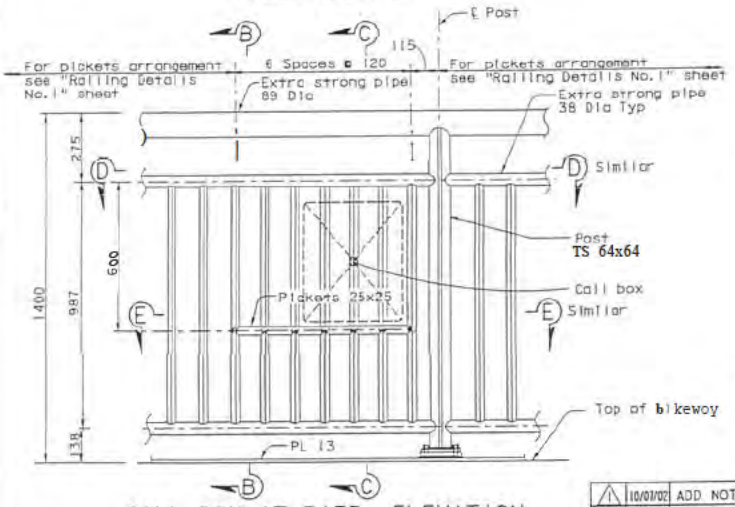

CALL BOX AT PIER ELEVATION
1:10
(Type B and Type CI modified)

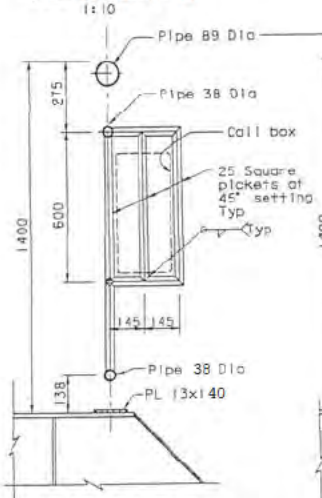

SECTION B-B
1:10

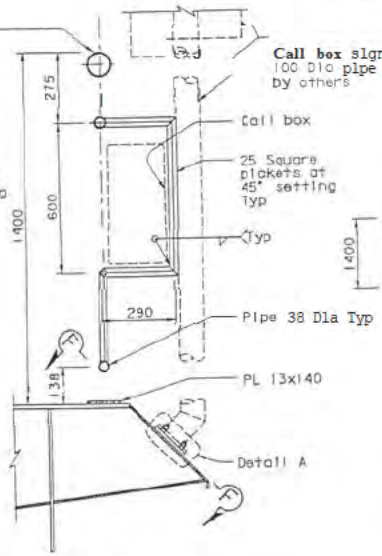

SECTION C-C
1:10

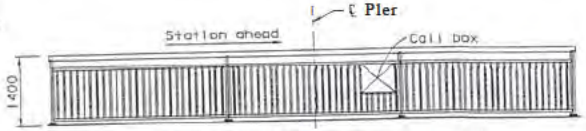

TYPE CI ELEVATION WITH CALL BOX

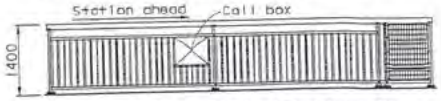

TYPE B ELEVATION WITH CALL BOX

KEY ELEVATION
1:200

NOTES:

1. Work this sheet with "Bikepath and Railing Layout No. 1" through "Bikepath and Railing Layout No. 14" sheets.
2. For details not shown, see "Railing Details No. 1" through "Railing Details No. 3" sheets.
3. All posts shall be plumb.

MARK	DATE	DESCRIPTIONS	BY	CH'D
3	10/01/02	ADD NOTE	MS	CR

REVISIONS

CONTRACT CHANGE ORDER NO. 19

3 ADDED PER ADDENDUM NO. 3 DATED OCTOBER 2, 2001

Page 33 of 33 04-012024

ALL DIMENSIONS ARE IN MILLIMETERS UNLESS OTHERWISE SHOWN

REGISTERED ENGINEER - CIVIL
6-4-01
PLANS APPROVAL DATE
Tien Hung Ho, No. C 43990, Exp. 06/30/05, CIVIL, STATE OF CALIFORNIA
The State of California or its officers or agents shall not be responsible for the accuracy or completeness of electronic copies of this plan sheet.

T.Y. LIN / MOFFATT & NICHOL
825 BATTERY STREET
SAN FRANCISCO, CA 94111

SAN FRANCISCO OAKLAND BAY BRIDGE
EAST SPAN SEISMIC SAFETY PROJECT

SKYWAY STRUCTURES

RAILING DETAILS NO. 7

PREPARED FOR THE STATE OF CALIFORNIA DEPARTMENT OF TRANSPORTATION

DESIGN: T. Ho — CHECKED: C. Werts
DETAILS: S. Lee — CHECKED: C. Werts
QUANTITIES: A. Yoder — CHECKED: J. Laventini

Sajid Abdos, PROJECT ENGINEER

BRIDGE NO. 34-0006L/R
KILOMETER POST 3.9/14.3, 0.0/1.6

CU 04
EA 012021

DISREGARD PRINTS BEARING EARLIER REVISION DATES

464A

DESIGN OVERSIGHT
SIGN OFF DATE 10/01/02

FILE -> D:\DB\04-012001\skyway\sky2002\skr1897.dgn

100% PS&E

STATE OF CALIFORNIA - DEPARTMENT OF TRANSPORTATION

CONTRACT CHANGE ORDER

Change Requested by: Engineer

CCO: 19	Suppl. No. 0	Contract No. 04 - 012024	Road 04-SF,Ala-80-13.9/14.3,0.0/1.6	FED. AID LOC.: ACIM-080-1(085)8N

To: **KIEWIT / FCI / MANSON a JV**

You are directed to make the following changes from the plans and specifications or do the following described work not included in the plans and specifications for this contract. ***NOTE: This change order is not effective until approved by the Engineer.***

Description of work to be done, estimate of quantities and prices to be paid. (Segregate between additional work at contract price, agreed price and force account.) Unless otherwise stated, rates for rental of equipment cover only such time as equipment is actually used and no allowance will be made for idle time. This last percentage shown is the net accumulated increase or decrease from the original

Extra Work at Lump Sum:

Implement the changes to the Bikepath on the SFOBB East Span Skyway, Bridge Nos. 34-006L/R as shown on sheets 2-33 of this change order.

For this work the Contractor will be paid the agreed lump sum of $115,202.00.00. This sum constitutes full compensation, including markups, for all direct and indirect costs, all associated project impacts, and Time Related Overhead (TRO) expenses.

The drawings issued in this change order are: 440R1, 441R1, 465R1, 466R1, 467R1, 468R1, 469R1, 470R1, 471R1, 472R1, 473R1, 474R1, 475R1, 476R1, 477R1, 478R1, 771R1, 867R1, 868R1, 870R1, 871R1, 872R1, 873R1, 874R1, 875R1, 891R1, 892R1, 893R1, 894R1, 895R1, 896R1 and 896AR1.

There will be no adjustment of Contract Items #52, Place Polyester Concrete Overlay; #72, Furnish Structural Steel Bikepath; #73, Erect Structural Steel Bikepath; or #92, Bike Path Railing.

This additional work will not affect the overall project schedule; therefore, no additional contract time will be granted for this change order.

Estimated cost of Extra Work at Lump Sum $115,202.00

Estimated Cost: Increase ☑ Decrease ☐ $115,202.00

By reason of this order the time of completion will be adjusted as follows: 0 days

Submitted by

Signature	Resident Engineer: COE D.	Date 3-26-03

Approval Recommended by

Signature	Construction Engineer: COE D.	Date 3-26-03

Engineer Approval by

Signature	(Print name and title) for PETER SIEGENTHALER - Chief	Date 7/7/03

We the undersigned contractor, have given careful consideration to the change proposed and agree, if this proposal is approved, that we will provide all equipment, furnish the materials, except as may otherwise be noted above, and perform all services necessary for the work above specified, and will accept as full payment therefor the prices shown above.

NOTE: If you, the contractor, do not sign acceptance of this order, your attention is directed to the requirements of the specifications as to proceeding with the ordered work and filing a written protest within the time therein specified.

Contractor Acceptance by

Signature	(Print name and title) A.T. Skoro, Project Director	Date 4/9/03

STATE OF CALIFORNIA - DEPARTMENT OF TRANSPORTATION

CONTRACT CHANGE ORDER MEMORANDUM

DATE: 3/11/03

TO: PETER SIEGENTHALER / COE D.	FILE: **E.A.** 04 - 012024
FROM: COE D.	**CO-RTE-PM** 04-SF,Ala-80-13.9/14.3,0.0/1.6 **FED. NO.** ACIM-080-1(085)8N
CCO# **19** SUPPLEMENT#: **0** Category Cod **CHPR**	CONTINGENCY BALANCE (incl. this change **$52,927,820.27**
COST: **$115,202.00** INCREASE ☑ DECREASE ☐	HEADQUARTERS APPROVAL REQUIRED? ☐ YES ☑ NO
SUPPLEMENTAL FUNDS PROVIDED: **$0.00**	IS THIS REQUEST IN ACCORDANCE WITH ENVIRONMENTAL DOCUMENTS? ☑ YES ☐ NO
CCO DESCRIPTION: Bike Path (2% Cross Slope)	**PROJECT DESCRIPTION:** REPLACE SFOBB EAST SPAN

LOCATION: IN SAN FRANCISCO AND ALAMEDA COUNTIES IN SAN FRANCISCO AND OAKLAND FROM 1.3 KM EAST OF THE YERBA BUENA ISL

THIS CHANGE ORDER PROVIDES FOR:

implement the changes from a 0% cross-slope a 2% cross-slope to the Bikepath on the SFOBB East Span Skyway, Bridge Nos. 34-006L/R. These changes include: changing the slope of the cantilever beam that supports the bikepath, modifying handrails and other deck mounted structures, modifying the deck, and placing the polyester overlay at a 2% cross slope.

Attached is a copy of the memo from Mr. Hasan El-Natur of the Division of Structures to Mr. Doug Coe dated 10/08/02 specifying the changes. This Change Order is required to insure drainage of the bikepath deck.

EXTRA WORK AT AGREED LUMP SUM

For this work, the contractor will be paid the agreed lump sum of $115,202.00. This sum constitutes full and complete compensation including all markups for this change. This Change Order will be paid as Extra Work at Agreed Lump Sum for this amount.

An analysis of the Contractor's proposal is on file; it has been found to be fair and reasonable based on a force account analysis prepared by the engineer. This analysis is on file in the project records.

The drawings revised by this change order are: 440, 441, 465, 466, 467, 468, 469, 470, 471, 472, 473, 474, 475, 476, 477, 478, 771, 867, 868, 870, 871, 872, 873, 874, 875, 891, 892, 893, 894, 895, and 896. An additional sheet, 896AR1 was added.

There will be no adjustment of Contract Items #52, Place Polyester Concrete Overlay; #72, Furnish Structural Steel Bikepath; #73, Erect Structural Steel Bikepath; and #92, Bike Path Railing.

This additional work will not affect the overall project schedule; therefore, no additional contract time will be granted for this change order.

Maintenance concurrence was obtained from Mr. Samad Hamoud of Structures Maintenance on February 24, 2003.

FHWA concurrence was obtained from Ms. Nancy Bobb on March 19, 2003.

RECEIVED
007064 MAY -8 02

CONCURRED BY:		
Construction Engineer: Douglas Coe	Date	2/24/03
Bridge Engineer:	Date	
FHWA Representative: Nancy Bobb	Date	3/19/03
Project Engineer:	Date	
Other (specify): Samad Hamoud	Date	2/24/03
	Date	
	Date	
District Prior Approval By:	Date	
HQ (Issue Approve) By: Ronald Bacani	Date	3/11/03
Resident Engineer's Signature:	Date	3-26-03

ESTIMATE OF COST

	THIS REQUEST	TOTAL TO DATE
ITEMS	$0.00	$0.00
FORCE ACCOUNT	$0.00	$0.00
AGREED PRICE	$115,202.00	$115,202.00
ADJUSTMENT	$0.00	$0.00
TOTAL	$115,202.00	$115,202.00

FEDERAL PARTICIPATION

☑ PARTICIPATING ☐ PARTICIPATING IN PART ☐ NONE
☐ NON-PARTICIPATING (MAINTENANCE) ☐ NON-PARTICIPATING

FEDERAL SEGREGATION (if more than one Funding Source or P.I.P. type)
☑ CCO FUNDED PER CONTRACT ☐ CCO FUNDED AS FOLLOWS

FEDERAL FUNDING SOURCE	PERCENT

STATE OF CALIFORNIA - DEPARTMENT OF TRANSPORTATION

TRANSMITTAL MEMORANDUM

DIVISION OF STRUCTURES
Structure Contract Management Branch
1801 30th Street – MS12
Sacramento, CA 95816

TO: Doug Coe

DATE: 10/08/2002

NAME OF PROJECT:

ATTENTION:

DIST	CO	RTE	PM
04	SFO/ALA	80	

☐ OVERNIGHT MAIL ☐ OTHER

FOR:

☐ APPROVAL
X YOUR USE
☐ AS REQUESTED
☐ REVIEW AND COMMENT
☐ INFORMATION ONLY
☐ APPROVED AS SUBMITTED
☐ APPROVED AS NOTED
☐ RETURNED FOR CORRECTIONS
☐ REVIEWED-NO ADDITIONAL COMMENTS
☐ REVIEWED-SEE ADDITIONAL COMMENTS
☐ RETURN _____ CORRECTED PLANS
☐ SIGN AND RETURN _____ COPIES

ENCLOSURES:

Attached please find the 100% PS&E submittal for the Bikepath Traveler CCO. This is for your use & processing. If you have any questions please call me at 322-6490 or Jason at 322-9261.

No.	Drawing List	Sheet No.	No.	Drawing List	Sheet No.
1	Bikepath Traveler Details No. 1	471	11	Bikepath Traveler Details No 12	482
2	Bikepath Traveler Details No. 3	473	12	Bikepath Traveler Details No 13	483
3	Bikepath Traveler Details No 4	474	13	Bikepath Traveler Details No 14	484
4	Bikepath Traveler Details No 5	475	14		
5	Bikepath Traveler Details No 6	476	15		
6	Bikepath Traveler Details No 7	477	16		
7	Bikepath Traveler Details No 8	478	17		
8	Bikepath Traveler Details No 9	479	18		
9	Bikepath Traveler Details No 10	480	19		

CCO: 20	Suppl. No. 0	Contract No. 04 - 012024	Road 04-SF,Ala-80-13.9/14.3,0.0/1.6	FED. AID LOC.: ACIM-080-1(085)8N

To: **KIEWIT / FCI / MANSON a JV**

You are directed to make the following changes from the plans and specifications or do the following described work not included in the plans and specifications for this contract. ***NOTE: This change order is not effective until approved by the Engineer.***

Description of work to be done, estimate of quantities and prices to be paid. (Segregate between additional work at contract price, agreed price and force account.) Unless otherwise stated, rates for rental of equipment cover only such time as equipment is actually used and no allowance will be made for idle time. This last percentage shown is the net accumulated increase or decrease from the original quantity in the Engineer's Estimate

Extra Work at Lump Sum:

Implement the changes to Bikepath Traveler on the SFOBB East Span Skyway, Bridge Nos. 34-006L/R as shown on sheets 2-14 of this change order. The new contract plan sheets are 903R1, 905R1, 906R1, 907R1, 908R1, 909R1, 910R1 911R1, 912R1, 913R1, 914R1, 915R1 and 916R1.

For this work the Contractor will be paid the agreed lump sum of $36,355.00. This sum constitutes full compensation, including markups, for all direct and indirect costs, all associated project impacts, and Time Related Overhead (TRO) expenses.

Estimated cost of Extra Work at Lump Sum $36,355.00

Estimated Cost: **Increase** ☑ **Decrease** ☐ **$36,355.00**

By reason of this order the time of completion will be adjusted as follows: 0 days

Submitted by

Signature	Resident Engineer: COE D.	
Approval Recommended by		
Signature	Construction Engineer: COE D.	Date 2-10-03
Engineer Approval by		
Signature	(Print name and title) PETER SIEGENTHALER - Chief	Date 5/6/03

We the undersigned contractor, have given careful consideration to the change proposed and agree, if this proposal is approved, that we will provide all equipment, furnish the materials, except as may otherwise be noted above, and perform all services necessary for the work above specified, and will accept as full payment therefor the prices shown above.

NOTE: If you, the contractor, do not sign acceptance of this order, your attention is directed to the requirements of the specifications as to proceeding with the ordered work and filing a written protest within the time therein specified.

Contractor Acceptance by

Signature	(Print name and title) A.T. Sakuo, Project Director	Date 2/13/03

DIST.	COUNTY	ROUTE	KILOMETER POST TOTAL PROJECT	SHEET NO.	TOTAL SHEETS
04	SF, Ala	80	13.9/14.3, 0.0/1.6	903R1	978

Caltrans Metric

REGISTERED ENGINEER - CIVIL

6-4-01

PLANS APPROVAL DATE

REGISTERED PROFESSIONAL ENGINEER Rafael Manzanarez No. C 36842 Exp. 3/30/04 CIVIL STATE OF CALIFORNIA

The State of California or its officers or agents shall not be responsible for the accuracy or completeness of electronic copies of this plan sheet.

SAN FRANCISCO, CA 94102

Caltrans now has a web site! To get to the web site, go to http://www.dot.ca.gov

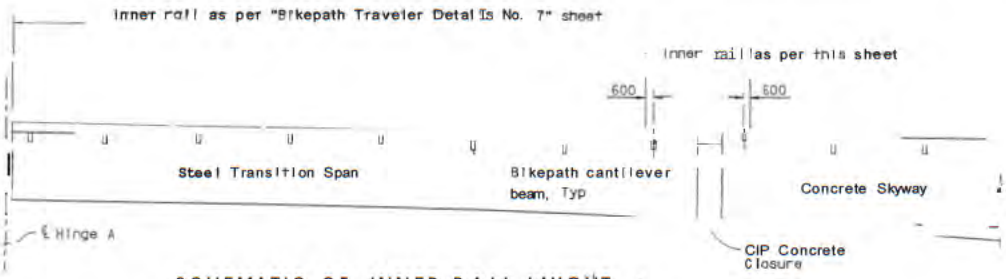

SCHEMATIC OF INNER RAIL LAYOUT △2

NTS

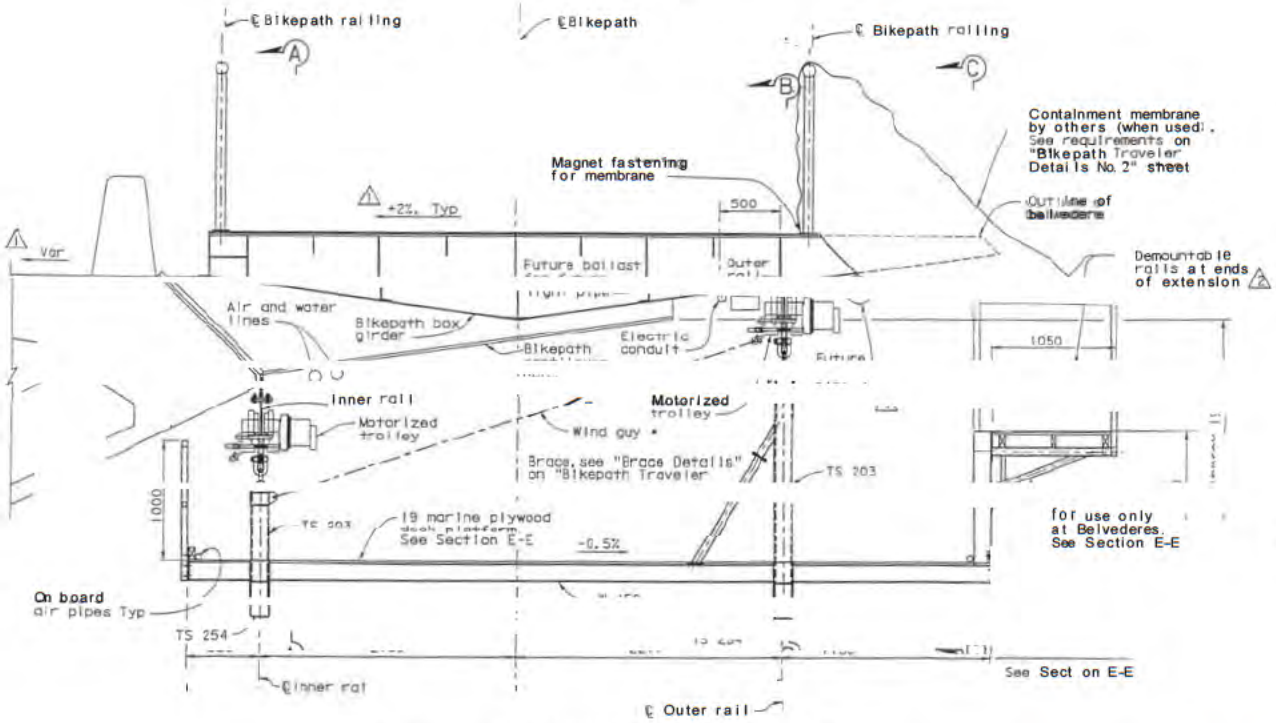

BIKEPATH TRAVELER TYPICAL SECTION

1: 20

For section and rail details on steel transition span, See "Bikepath Traveler Details No. 7" sheet.

This section applies from east end of skyway to east end of steel transition span.

* Wind guy required when containment membrane is installed. Use Tirfor winches or equivalent at each motorized trolley with Safe Working Load of 10 kN (1000 kg) Min/Tirfor.

DESIGN LOADINGS:

1. Platform is designed in accordance with Caltran's "Design and Inspection Requirement for Traveling Scaffold".
2. Design live load: 0.72 KPa (15 psf) on whole or part area plus 1.1 kN located anywhere on 300 mm x 300 mm, of 4.4 kN moving concentrated load.
3. Total allowable live load on the platform 48 kN (4900 kg).
4. Platform designed for 0.72 KPa wind load on the projected surface of the containment membrane.
5. Whenever platform is used with full containment membrane, the membrane is to be fastened such that it will break away from its attachments at a wind pressure not to exceed 0.72 KPa (15 psf).
6. No allowance has been made for accumulation of sandblasting sand on the platform.
7. Provide a stainless steel plaque at each operator's station bearing the wording of Notes 1 to 3 above.

NOTES:

1. Fabrication of bikepath cantilever beam and box girder, see [illegible]
2. The platform shall be parked under any belvedere, when not in use.
3. For Section A-A, see "Bikepath Traveler Details No. 2" sheet.
4. For Sections B-B & C-C, see "Bikepath Traveler Details No. 3" sheet.
5. For Section E-E, see "Bikepath Traveler Details No. 5" sheet.
6. △2 All flare bevel welds to be filled flush to tube surface. Effective throat thickness to be 5/8 x tube wall thickness.
7. △2 Rails shall be plumb.

MARK	DATE	DESCRIPTION	BY

CONTRACT CHANGE ORDER NO. 20

ALL DIMENSIONS ARE IN MILLIMETERS UNLESS OTHERWISE SHOWN

H. El-Natur
DESIGN OVERSIGHT
SIGN OFF DATE 10/07/00

DESIGN	R. Manzanarez/J. Otter	CHECKED	T. Ho
DETAILS	C. Wong	CHECKED	T. Ho
QUANTITIES	L. Greer	CHECKED	J. Leventini

PREPARED FOR THE STATE OF CALIFORNIA DEPARTMENT OF TRANSPORTATION

Salih Abbas
PROJECT ENGINEER

BRIDGE NO. 34-0006L/R
KILOMETER POST 13.9/14.3, 0.0/1.6

SAN FRANCISCO OAKLAND BAY BRIDGE
EAST SPAN SEISMIC SAFETY PROJECT

SKYWAY STRUCTURES

BIKEPATH TRAVELER DETAILS NO. 1

Rev. Date 5-18-00

REVISION DATE PRELIMINARY PLANS ONLY

DIST.	COUNTY	ROUTE	KILOMETER POST TOTAL PROJECT	SHEET NO.	TOTAL SHEETS
04	SF, Ala	80	13.9/14.3, 0.0/1.6	905R1	978

REGISTERED ENGINEER - CIVIL

6-4-01

PLANS APPROVAL DATE

The State of California or its officers or agents shall not be responsible for the accuracy or completeness of electronic copies of this plan sheet.

REGISTERED PROFESSIONAL ENGINEER Rafael Manjarrez No. C 36842 Exp. 6/30/04 CIVIL STATE OF CALIFORNIA

T.Y. LIN // MOFFATT & NICHOL
825 BATTERY STREET
SAN FRANCISCO, CA 94111

Caltrans now has a web site! To get to the web site, go to http://www.dot.ca.gov

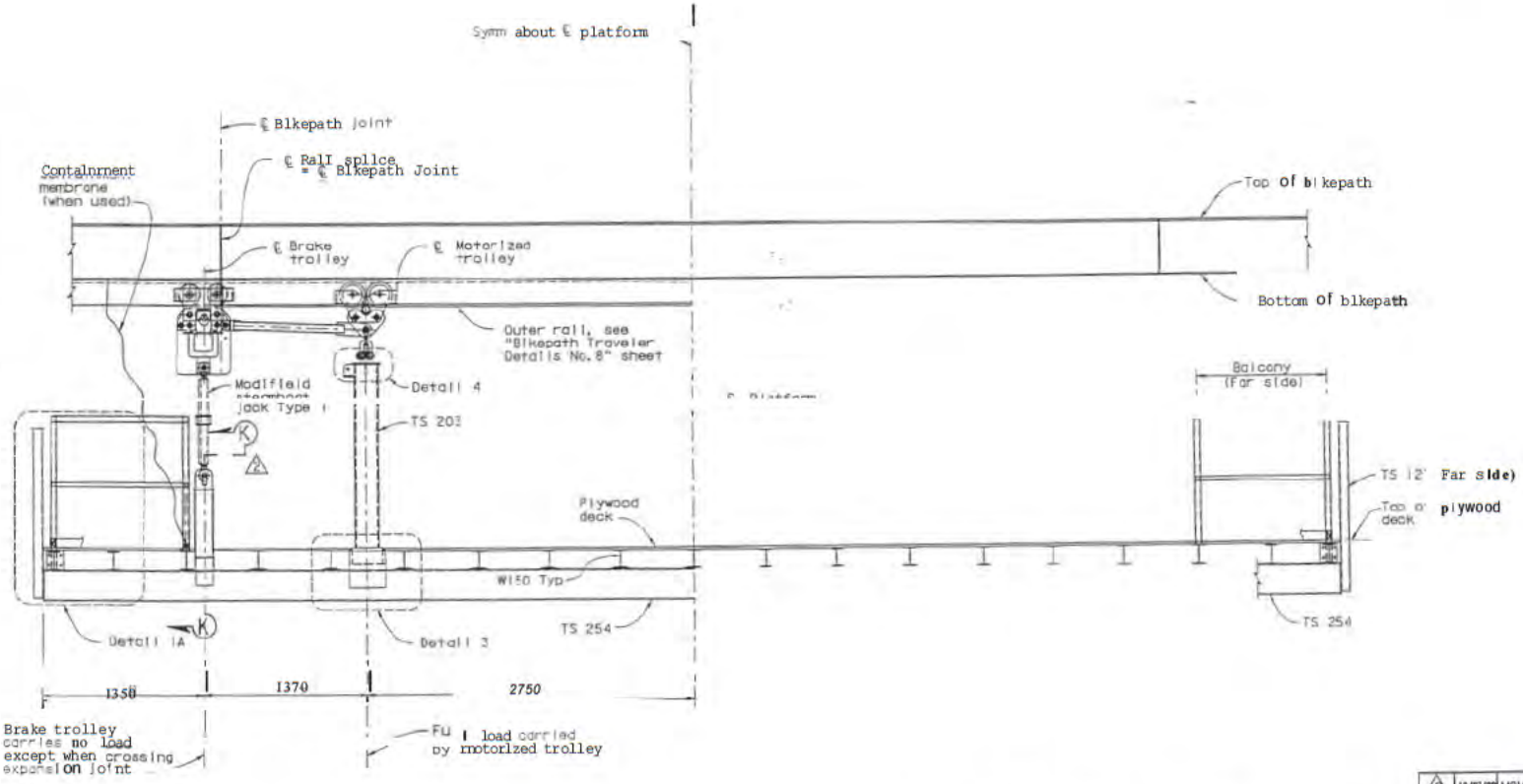

SECTION B-B (See Notes)

1:20

Notes:

1. For details not shown, see Plan and Section B-B on "Bikepath Traveler Details No. 4" sheet.
2. For Detail 1A, see "Bikepath Details No. 4" sheet.
3. For Detail 3, Detail 4 and Section K-K, see "Bikepath Details No. 5" sheet.

SECTION C-C (See Notes) △1

1:20

Notes:

1. For details not shown, see Plan on "Bikepath Traveler Details No. 4" sheet.

△1

MARK	DATE	DESCRIPTIONS	BY	CH'D
△2	10/01/02	MOVE SECTION MARK	JO	MS
△1	10/01/02	REMOVE LADDER DETAILS AND NOTES	TM	SC

REVISIONS

CONTRACT CHANGE ORDER NO. 20
SHEET 3 OF 14

01-0120U1
07-0120U1

ALL DIMENSIONS ARE IN MILLIMETERS UNLESS OTHERWISE SHOWN

SAN FRANCISCO OAKLAND BAY BRIDGE
EAST SPAN SEISMIC SAFETY PROJECT

SKYWAY STRUCTURES

BIKEPATH TRAVELER DETAILS NO. 3

DESIGN OVERSIGHT
SIGN OFF DATE 10/31/02

DESIGN	R. Manzanarez/J. Otter	CHECKED	T. Ho
DETAILS	F. Hung	CHECKED	T. Ho
QUANTITIES	L. Greer	CHECKED	J. Leventini

PREPARED FOR THE STATE OF CALIFORNIA DEPARTMENT OF TRANSPORTATION

Salid Abdos
PROJECT ENGINEER

BRIDGE NO. 34-0006L/R
KILOMETER POST 13.9/14.3, 0.0/1.6

CU 04

DISREGARD PRINTS BEARING EARLIER REVISION DATES

SHEET 473

Rev. Date: 5-16-00

ORIGINAL SCALE IN MILLIMETERS

PSAE

TIME PLOTTED → 10:38:38

DATE PLOTTED → 10/31/02

FILENAME → Bikepath

DIST.	COUNTY	ROUTE	TOTAL PROJECT	SHEET NO.	TOTAL SHEETS
04	SF, Ala	80	13, 9/14, 3, 0, 0/1, 6	006R1	978

REGISTERED ENGINEER - CIVIL

6-4-01

PLANS APPROVAL DATE

The State of California or its officers or agents shall not be responsible for the accuracy or completeness of electronic copies of this plan sheet.

T.Y. LIN / MOFFATT & NICHOL
825 BATTERY STREET
SAN FRANCISCO, CA 94111

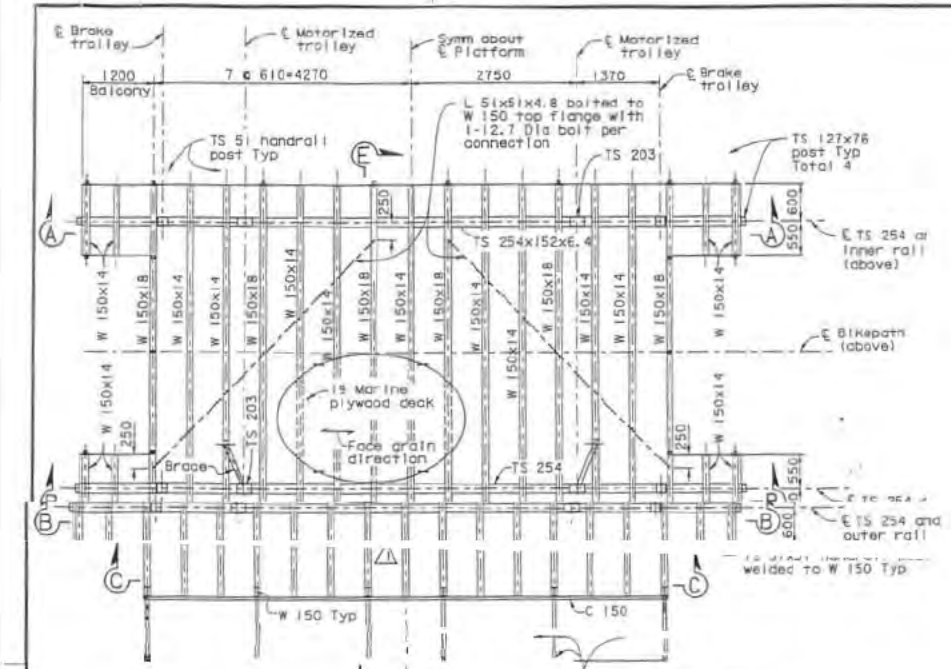

PLAN △1
1:40

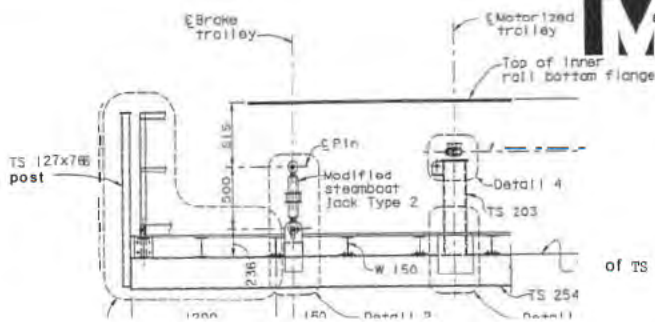

SECTION A-A
1:20

Notes: For details not shown, see Section A-A on "Bikepath Traveler Details No. 2" sheet.

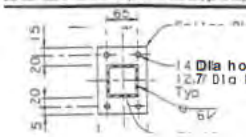

SECTION D-D △2
1:5
1:2

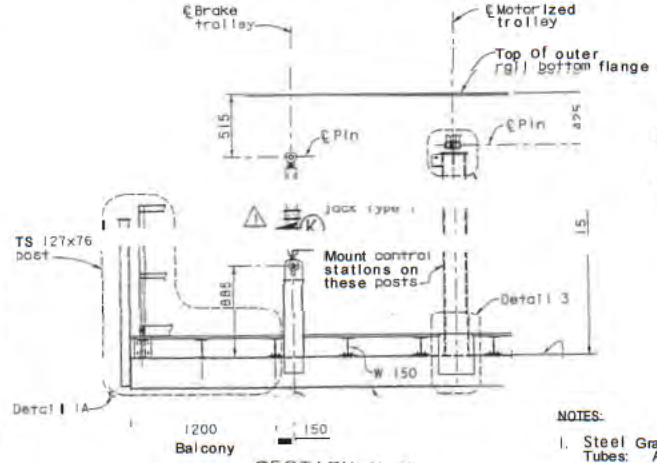

SECTION B-B
1:20

Notes: For details not shown, see Section B-B on "Bikepath Traveler Details No. 3" sheet.

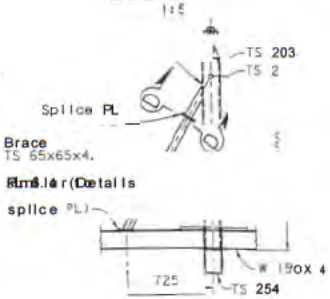

BRACE DETAILS
1:20

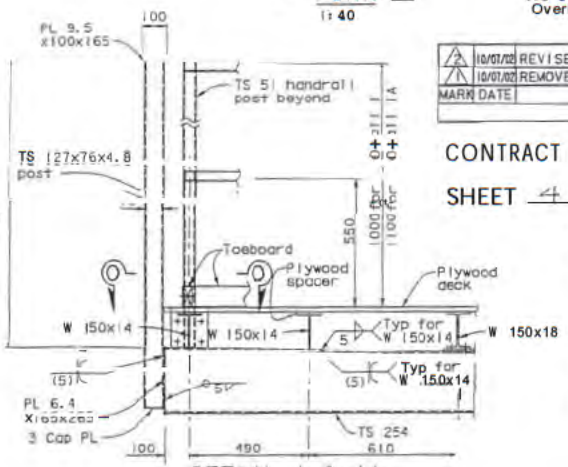

DETAIL 1 @ 1A
1:10

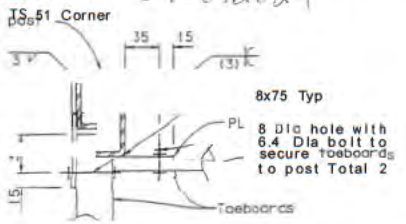

SECTION O-O
1:2.5

2	10/01/02	REVISE PL SIZE ON SECTION D-D	TM SC
1	10/01/02	REMOVE LADDER & MOVE SECTION MARKS	TM SC
MARK	DATE	DESCRIPTIONS	BY CH'D

REVISIONS

CONTRACT CHANGE ORDER NO. 30

SHEET 4 OF 14 04-012024

NOTES:

1. Steel Grade 285 minimum yield.
   Tubes: A500 Grade B
   Shapes and Plates: A572 Grade 42.
2. Blind rivets (6 Dia) shall be used to connect plywood deck to stringers. Spacing shall be 254 mm maximum along edge of plywood and intermediate supports.
3. All bolts ASTM A325 .
4. For Detail 2, Detail 3, Detail 4 and Section K-K, see "Bikepath Traveler Details No. 6" sheet.
5. For Section C-C, see "Bikepath Traveler Details No. 3" sheet.
6. For Section E-E, see "Bikepath Traveler Details No. 5" sheet.

ALL DIMENSIONS ARE IN MILLIMETERS UNLESS OTHERWISE SHOWN

H. El-Natur
DESIGN OVERSIGHT
SIGN OFF DATE 10/07/02

DESIGN	R. Manzanares/J. Otter	CHECKED	T. Ho
DETAILS	F. Hung	CHECKED	T. Ho
QUANTITIES	L. Greer	CHECKED	J. Leventini

PREPARED FOR THE STATE OF CALIFORNIA DEPARTMENT OF TRANSPORTATION

Sajid Abbas
PROJECT ENGINEER

BRIDGE NO. 34-0006L/R
PARAMETER POST 13, 9/14, 3, 0, 0/1, 6

SKYWAY STRUCTURES
BIKEPATH TRAVELER DETAILS NO. 4

CU 04
EA 04-012021

DISREGARD PRINTS BEARING EARLIER REVISION DATES

SHEET 474

Rev. Date 5-16-96

DIST.	COUNTY	ROUTE	KILOMETER POST TOTAL PROJECT	SHEET NO.	TOTAL SHEETS
04	SF, Ala	80	13.3/14.3, 0.0/1.6	907R1	978

REGISTERED ENGINEER - CIVIL
6-4-01
PLANS APPROVAL DATE

The State of California or the officers or agents shall not be responsible for the accuracy or completeness of electronic copies of this plan sheet.

T.Y. LIN / MOFFATT & NICHOL
825 BATTERY STREET
SAN FRANCISCO, CA 94111

Caltrans new form is web site! To get to the web site, go to http://www.dot.ca.gov

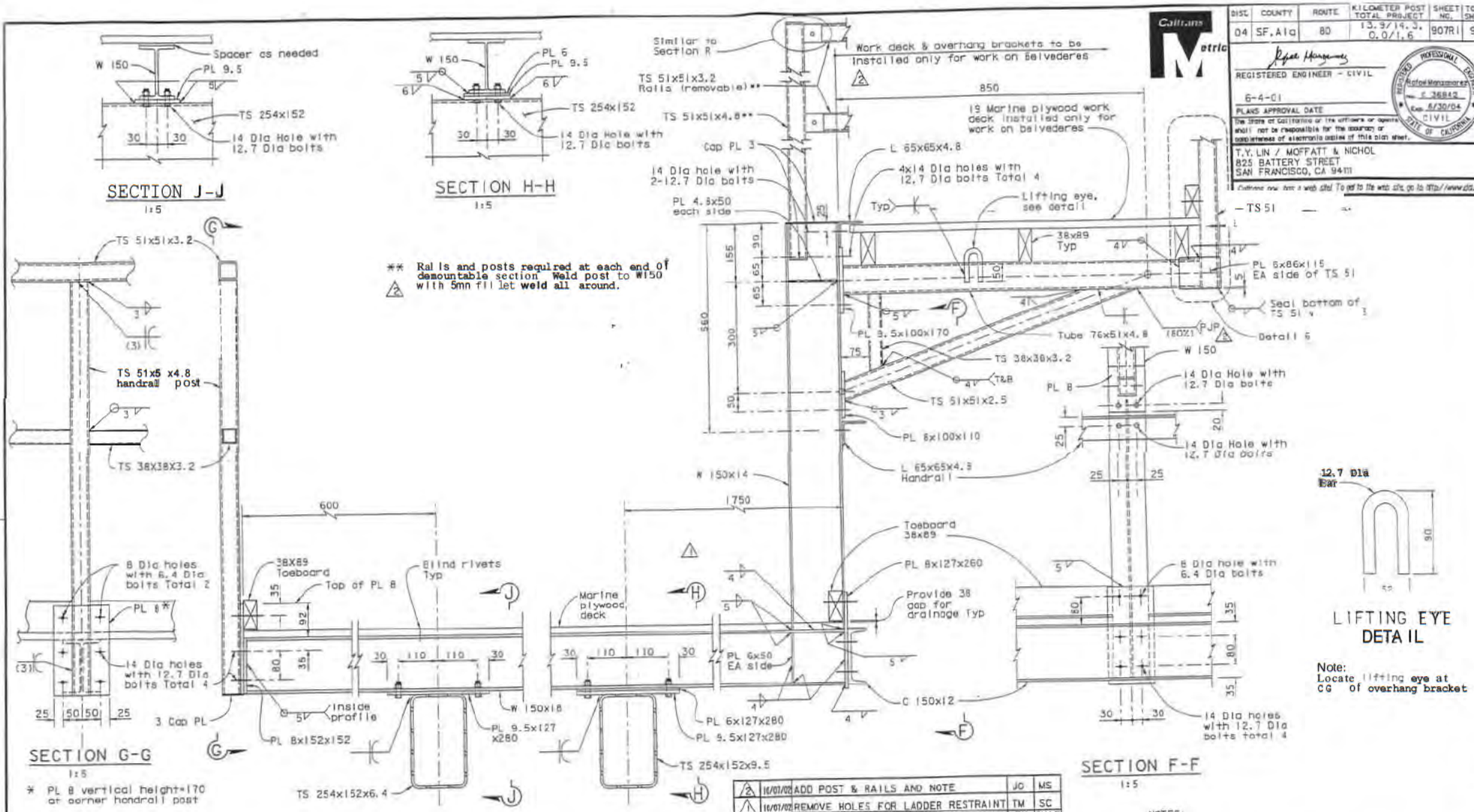

MARK	DATE	DESCRIPTIONS	BY	CH'D
2	10/01/02	ADD POST & RAILS AND NOTE	JO	MS
1	10/01/02	REMOVE HOLES FOR LADDER RESTRAINT	TM	SC

NOTES:

2. For Detail 6 & Section R, see "Bikepath Traveler Details No. 7" sheet.

CONTRACT CHANGE ORDER NO. 20
SHEET 5 OF 14
04-012024

ALL DIMENSIONS ARE IN MILLIMETERS UNLESS OTHERWISE SHOWN

SAN FRANCISCO OAKLAND BAY BRIDGE
EAST SPAN SEISMIC SAFETY PROJECT

SKYWAY STRUCTURES

BIKEPATH TRAVELER DETAILS NO. 5

H. El-Natur
DESIGN OVERSIGHT
SIGN OFF DATE 10/07/02

DESIGN R. Manzanares/J. Otter
DETAILS F. Hung
QUANTITIES L. Greer
CHECKED T. Ao
CHECKED T. Ao
CHECKED J. Leventini

PREPARED FOR THE STATE OF CALIFORNIA DEPARTMENT OF TRANSPORTATION

Salid Abbas
PROJECT ENGINEER

BRIDGE NO. 34-0006L/R
KILOMETER POST 13.9/14.3, 0.0/1.6
CU 04
EA 04-012021

ORIGINAL SCALE IN MILLIMETERS FOR REDUCED PLANS

REVISED DATES (PRELIMINARY STAGE ONLY)
LICENSED PRINTS BEARING EARLIER REVISION DATES

SHEET 475

USERNAME: *2 Sheets
DATE PLOTTED
TIME PLOTTED

DIST	COUNTY	ROUTE	TOTAL PROJECT	NO.	SHEETS
04	SF/Ala	80	13.9/14.3, 0.0/1.6	908R1	978

Caltrans Metric

REGISTERED ENGINEER - CIVIL
6-4-01
PLANS APPROVAL DATE
The State of California or its officers or agents shall not be responsible for the accuracy or completeness of electronic copies of this plan sheet.

T.Y. LIN / MOFFATT & NICHOL
825 BATTERY STREET
SAN FRANCISCO, CA 94111

Caltrans now has a web site! To get to the web site, go to http://www.dot.ca.gov

MARK	DATE	DESCRIPTIONS	BY	CH'D
2	10/03/02	ADD HATCHING, REVISE WELD, REVISE BRACKET	JO	MS
1	10/03/02	ADD WELDS, PL & REVISE PL CALLOUT	TM	SC

REVISIONS

CONTRACT CHANGE ORDER NO. 20
SHEET 6 OF 14
04-012024

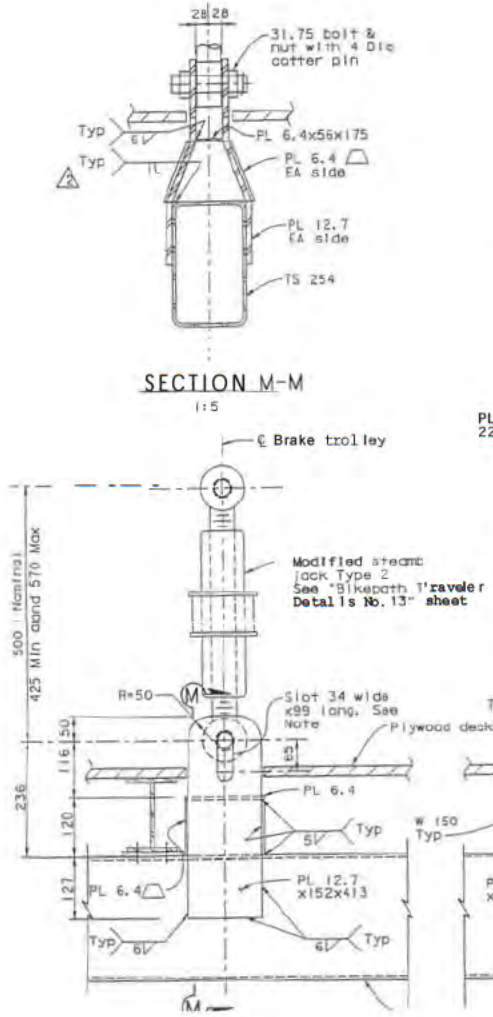

SECTION M-M
1:5

DETAIL 2
1:5

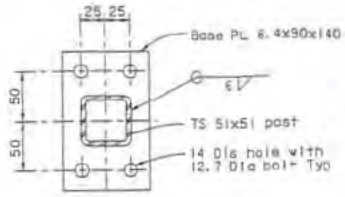

HANDRAIL POST BASE PL DETAILS
1:2.5

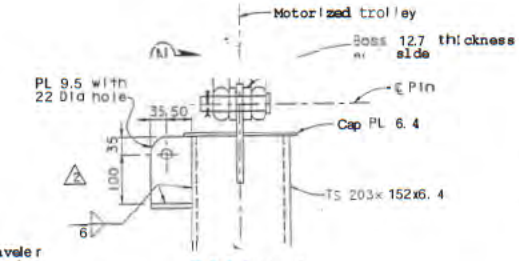

DETAIL 4
1:5

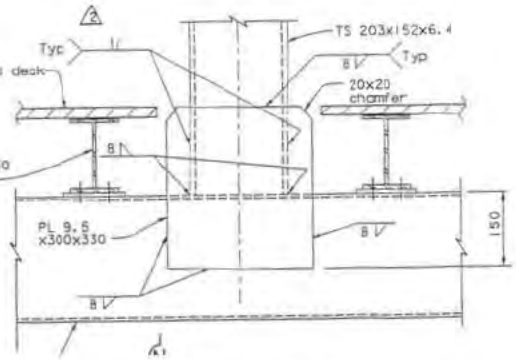

DETAIL 3
1:5

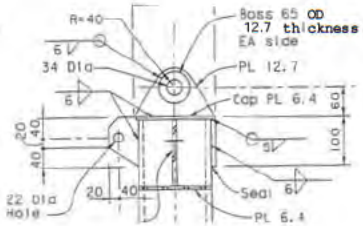

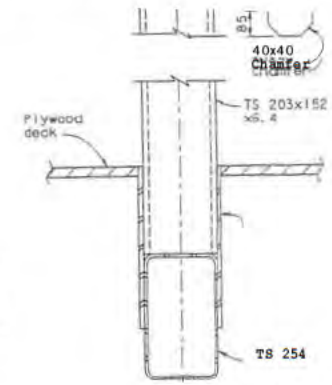

SECTION N-N
1:5

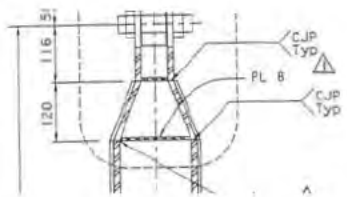

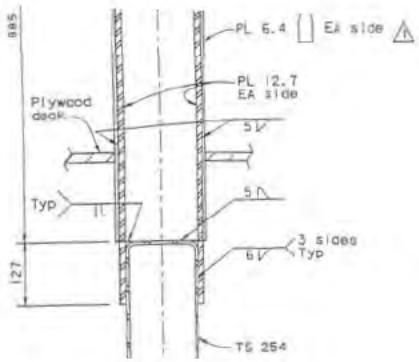

SECTION K-K

Note: See Detail 2 (similar) for side elevation

ALL DIMENSIONS ARE IN MILLIMETERS UNLESS OTHERWISE SHOWN

DESIGN	R. Manzanarez/J. Otter	CHECKED	T. Ho
DETAILS	F. Hung	CHECKED	T. Ho
QUANTITIES	L. Graer	CHECKED	J. Lewitin

PREPARED FOR THE STATE OF CALIFORNIA DEPARTMENT OF TRANSPORTATION

Salid Abbas
PROJECT ENGINEER

BRIDGE NO. 34-0006L/R
KILOMETER POST 3.9/14.3, 0.0/1.6

SAN FRANCISCO OAKLAND BAY BRIDGE
EAST SPAN SEISMIC SAFETY PROJECT

SKYWAY STRUCTURES

BIKEPATH TRAVELER DETAILS NO. 6

N. El-Natur
DESIGN OVERSIGHT

10006 PGE

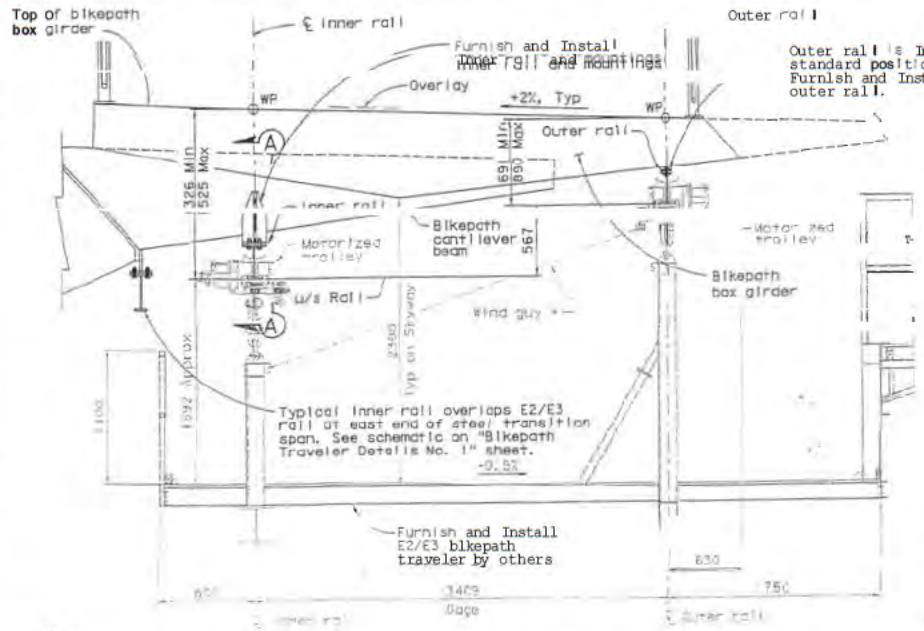

Note:
Rails shall be plumb.

E2/E3 BIKEPATH TRAVELER RAIL LAYOUT

1:20

This layout details applies through the steel transition span

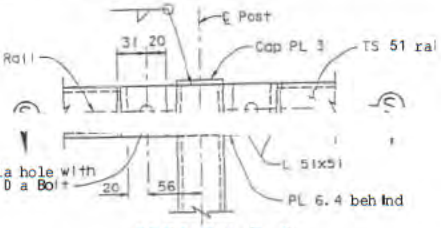

SECTION R-R

1:2.5

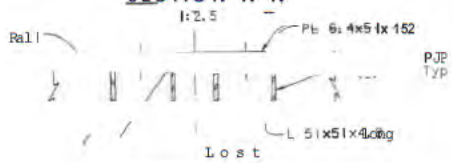

SECTION S-S

1:2.5

Note: Use similar details for rail joints at corners of platform railing

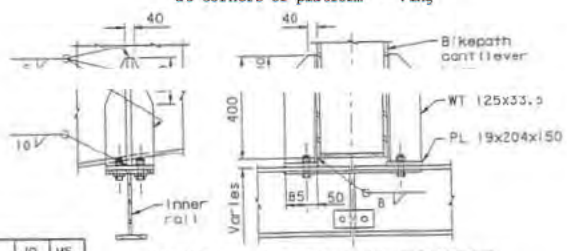

Details not shown are as per section B-B on "Bikepath Traveler Detail No. 9" sheet

SECTION A-A

1:10

Typical inner rail support bracket-E2/E3 traveler

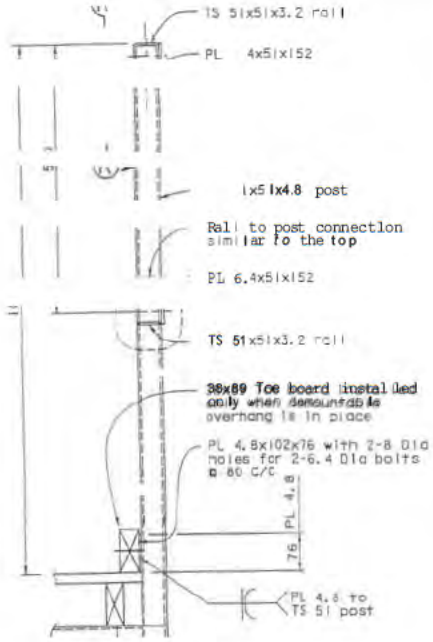

DETAIL 6

1:5

Note: For details not shown, see Section E-E on "Bikepath Traveler Details No. 5" sheet.

MARK	DATE	DESCRIPTIONS	BY	CH'D
2	10/07/02	ADD E2/E3 TRAVELER RAILS	JO	MS
1	10/07/02	REMOVE DETAILS, ELEVATION AND SECTIONS FOR LADDER	TM	SC

REVISIONS

CONTRACT CHANGE ORDER NO. 20
SHEET 7 OF 14
CH-012024

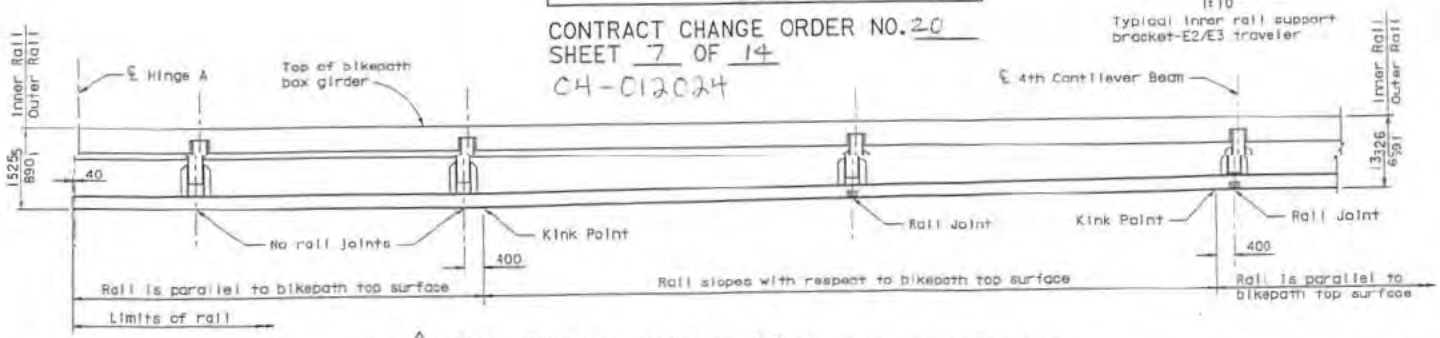

Note: At kink points transition the bottom flange only using radius = 500 mm.

RAIL PROFILE NEAR HINGE A

1:5

Inner rail profile shown. outer rail is parallel to inner rail

ALL DIMENSIONS ARE IN MILLIMETERS UNLESS OTHERWISE SHOWN

DIST.	COUNTY	ROUTE	TOTAL PROJECT	NO.	SHEETS
04	SF, Ala	80	13.9/14.3, 0.0/1.6	509R1	978

REGISTERED ENGINEER - CIVIL
6-4-01
PLANS APPROVAL DATE
The State of California or its officers or agents shall not be responsible for the accuracy or completeness of electronic copies of this plan sheet.
PROFESSIONAL ENGINEER Rafael Manjarrez No. C 38842 Exp. 6/30/04 CIVIL STATE OF CALIFORNIA

T.Y. LIN / MOFFATT & NICHOL
825 BATTERY STREET
SAN FRANCISCO, CA 94111

Caltrans now has a web site! To get to the web site go to http://www.dot.ca.gov

SAN FRANCISCO OAKLAND BAY BRIDGE
EAST SPAN SEISMIC SAFETY PROJECT

SKYWAY STRUCTURES

BIKEPATH TRAVELER DETAILS NO. 7

DESIGN	R. Manjarrez/J. Otter	CHECKED	T. Ho
DETAILS	F. Rung	CHECKED	T. Ho
QUANTITIES	L. Greer	CHECKED	J. Leventini

PREPARED FOR THE STATE OF CALIFORNIA DEPARTMENT OF TRANSPORTATION

Salid Abdoh
PROJECT ENGINEER

BRIDGE NO. 34-0006L/R
KILOMETER POST 13.9/14.3, 0.0/1.6

H. El-Natur
DESIGN OVERSIGHT
SIGN OFF DATE 10/07/02

ORIGINAL SCALE IN MILLIMETERS FOR REDUCED PLANS

CU 04
EA 04-012021

DISREGARD PRINTS BEARING EARLIER REVISION DATES

SHEET 477

Rev. Date 5-16-00

DATE PLOTTED => 01 OCT 102 TIME PLOTTED => 0110646

100% PSAE

DIST	COUNTY	ROUTE	TOTAL PROJECT	NO.	TOTAL SHEETS
04	SF/ALA	80	13.9/14.3, 0.0/1.6		978

Caltrans Metric

REGISTERED ENGINEER - CIVIL

6-4-01
PLANS APPROVAL DATE

The State of California or its officers or agents shall not be responsible for the accuracy or completeness of electronic copies of this plan sheet.

T.Y. LIN / MOFFATT & NICHOL
825 BATTERY STREET
SAN FRANCISCO, CA 94111

Caltrans now has a web site! To get to the web site go to http://www.dot.ca.gov

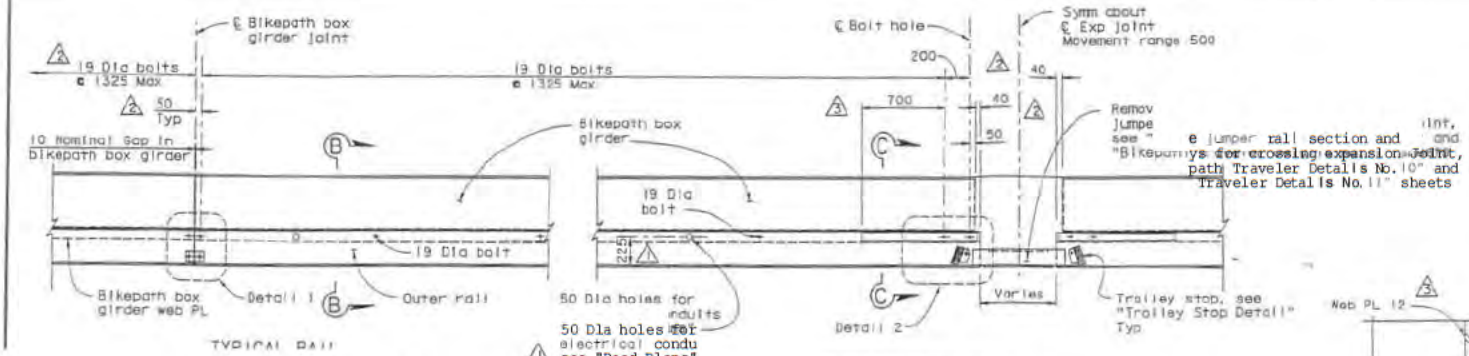

TYPICAL RAIL JOINT

AT EXPANSION JOINT

OUTER RAIL ELEVATION △1△2

1:20

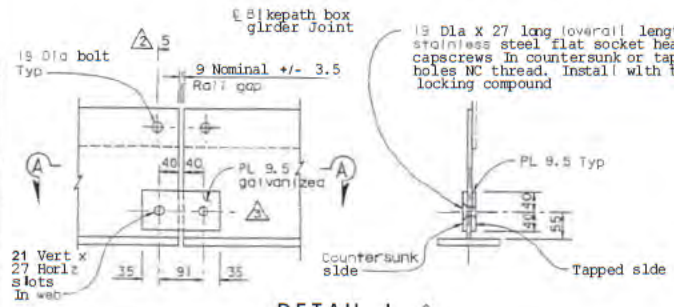

DETAIL 1 △2

1:5

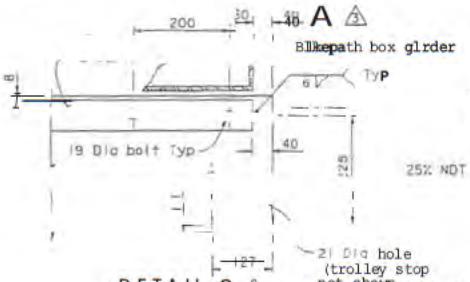

DETAIL 2 △2

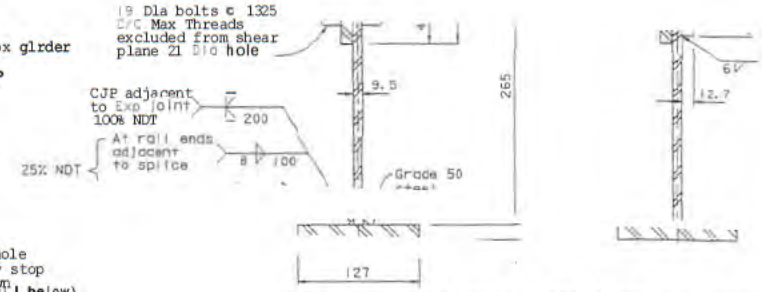

* This dimension varies near west end of steel transition span, see "Bikepath Traveler Details No. 7" sheet.

SECTION B-B

SECTION C-C

OUTER RAIL DETAILS

1:2.5

Notes:

1. Rail to be hot dipped galvanized.
2. Materials - Bottom flange ASTM A572 Grade 50. All other plates and shapes - ASTM A572 Grade 40.

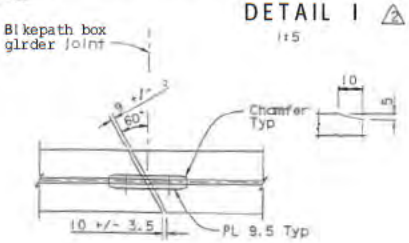

SECTION A-A

1:5

Note: Joint size shown at time of installation. Gap will vary +/- 3 mm per 8 m span due to creep and shrinkage of concrete superstructure.

RAIL SPLICE DETAIL

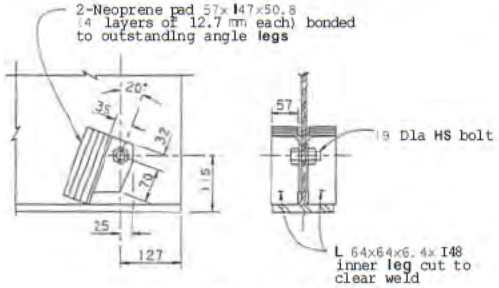

TROLLEY STOP DETAIL

1:5

Note: Install trolley stops at both sides of each expansion joint and at rail terminations

MARK	DATE	DESCRIPTIONS	BY	CH'D
3	10/01/02	REVISE DIMENSIONS, GALVANIZE PLATE		
2	10/01/02	REVISE RAIL DETAILS AT EXP JT	TM	SC
1	10/09/02	RELOCATE HOLES FOR ELEC CONDUITS	TM	SC

REVISIONS

CONTRACT CHANGE ORDER NO. 20
SHEET 5 OF 14

ALL DIMENSIONS ARE IN MILLIMETERS UNLESS OTHERWISE SHOWN

R. El-Nafar
DESIGN OVERSIGHT
SIGN OFF DATE 10/07/02

DESIGN	R. Manzanarez/L. Otter	CHECKED	T. Ho
DETAILS	F. Hung	CHECKED	T. Ho
QUANTITIES	L. Greer	CHECKED	J. Lavantini

PREPARED FOR THE STATE OF CALIFORNIA DEPARTMENT OF TRANSPORTATION

Sajid Abbas
PROJECT ENGINEER

BRIDGE NO. 34-0006L/R
KILOMETER POST 13.9/14.3, 0.0/1.6

SAN FRANCISCO OAKLAND BAY BRIDGE
EAST SPAN SEISMIC SAFETY PROJECT

SKYWAY STRUCTURES

BIKEPATH TRAVELER DETAILS NO. 8

DIST.	COUNTY	ROUTE	KILOMETER POST TOTAL PROJECT	SHEET NO.	TOTAL SHEETS
04	SF/Alc	80	13.9/14.3, 6.0/1.6	91181	978

REGISTERED ENGINEER - CIVIL

6-4-01

PLANS APPROVAL DATE

The State of California or its officers or agents shall not be responsible for the accuracy or completeness of electronic copies of this plan sheet.

T.Y.LIN / MOFFATT & NICHOL
825 BATTERY STREET
SAN FRANCISCO, CA 94111

Caltrans now has a web site! To get to the web site, go to http://www.dot.ca.gov

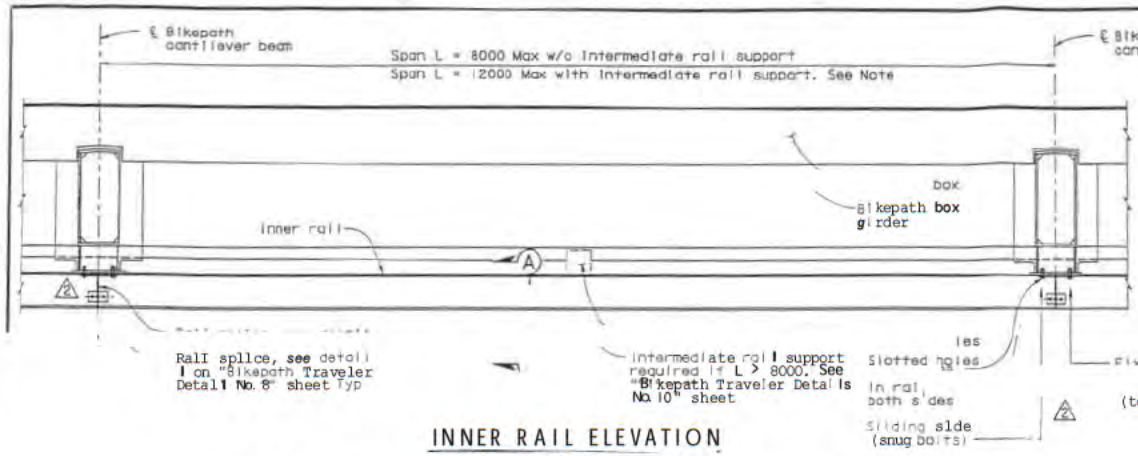

INNER RAIL ELEVATION

1:20

Note: Rails with intermediate support shall have only slotted holes at each end connection and only round holes at intermediate support connection.

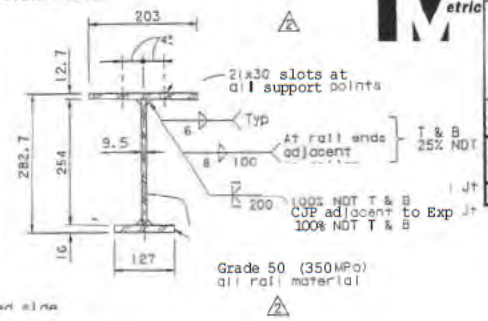

INNER RAIL DETAIL

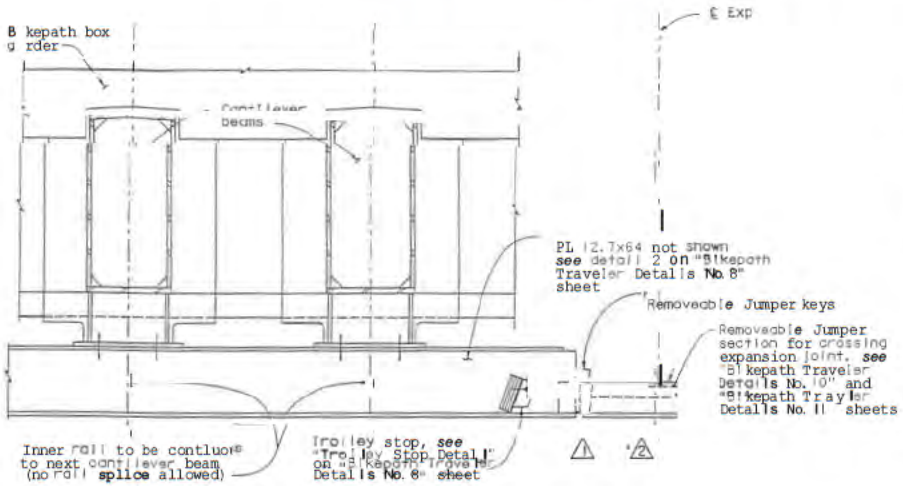

GENERAL ARRANGEMENT AT EXPANSION JOINT

1:10

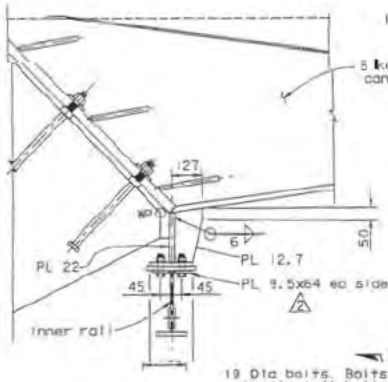

SECTION A-A

1:10

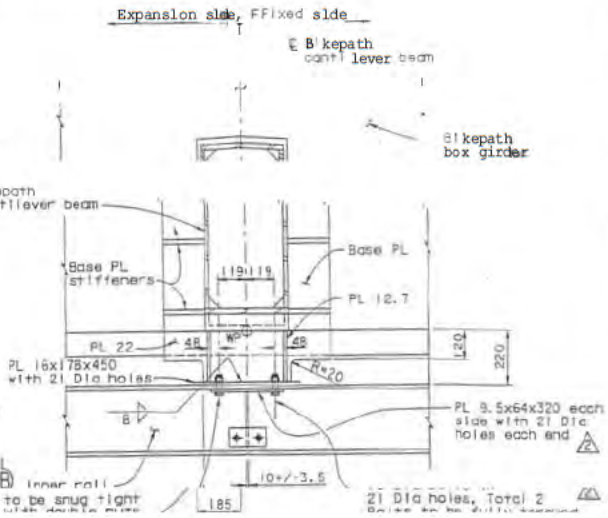

SECTION B-B

1:10

SLIDING SIDE

FIXED SIDE

TYPICAL CONNECTION AT CANTILEVER BEAMS

Note: Joint size shown at time of installation. Gap will vary +/- 3 mm per 8 m span due to creep and shrinkage of concrete superstructure. Slotted holes will enable this movement to occur thru slippage.

MARK	DATE	DESCRIPTIONS	BY	CH'D
2	10/07/02	REVISE CONNECTION & STEEL GRADE AS NOTED	JO	MS
1	10/07/02	REVISE RAIL DETAILS AT EXP JT	TM	SC

REVISIONS

CONTRACT CHANGE ORDER NO. 20

SHEET 9 OF 14

04-012024

ALL DIMENSIONS ARE IN MILLIMETERS UNLESS OTHERWISE SHOWN

SAN FRANCISCO OAKLAND BAY BRIDGE
EAST SPAN SEISMIC SAFETY PROJECT

SKYWAY STRUCTURES

BIKEPATH TRAVELER DETAIL NO. 9

H. El-Noty
DESIGN OVERSIGHT

DESIGN: K. Montesinos/J. Otter — CHECKED: T. Ho
DETAILS: F. Hung — CHECKED: T. Ho
QUANTITIES: L. Greer — CHECKED: J. Leventini

PREPARED FOR THE STATE OF CALIFORNIA DEPARTMENT OF TRANSPORTATION

Sajid Abbas
PROJECT ENGINEER

BRIDGE NO. 34-0006L/R
KILOMETER POST 13.9/14.3, 6.0/1.6

ORIGINAL SCALE IN MILLIMETERS

DISREGARD PRINTS BEARING EARLIER REVISION DATES

REVISION DATES (PRELIMINARY STAGE ONLY)

SHEET

CU 04

DIST	COUNTY	ROUTE	KILOMETER POST TOTAL PROJECT	SHEET NO.	TOTAL SHEETS
			13.9/14.3. 0.0/1.6	912R1	978

REGISTERED ENGINEER - CIVIL
6-4-01
PLANS APPROVAL DATE
Motor Mazzanares No. C 38842 Exp. 6/30/04 CIVIL STATE OF CALIFORNIA
... or its officers or agents shall not be responsible for the accuracy or completeness of electronic copies of this plan sheet.

T.Y. LIN / MOFFATT & NICHOL
425 BATTERY STREET
SAN FRAN
Caltrans ...

MARK	DATE	DESCRIPTIONS	BY	CH'D
3	10/07/03	REVISE JUMPER RAILS	JO	MS
2	10/07/02	REVISE NOTE	TM	SC
1	10/07/02	REVISE RAIL DETAIL AT EXP JT	TM	SC

REVISIONS

CONTRACT CHANGE ORDER NO. 20
SHEET 16 OF 14 04-012024

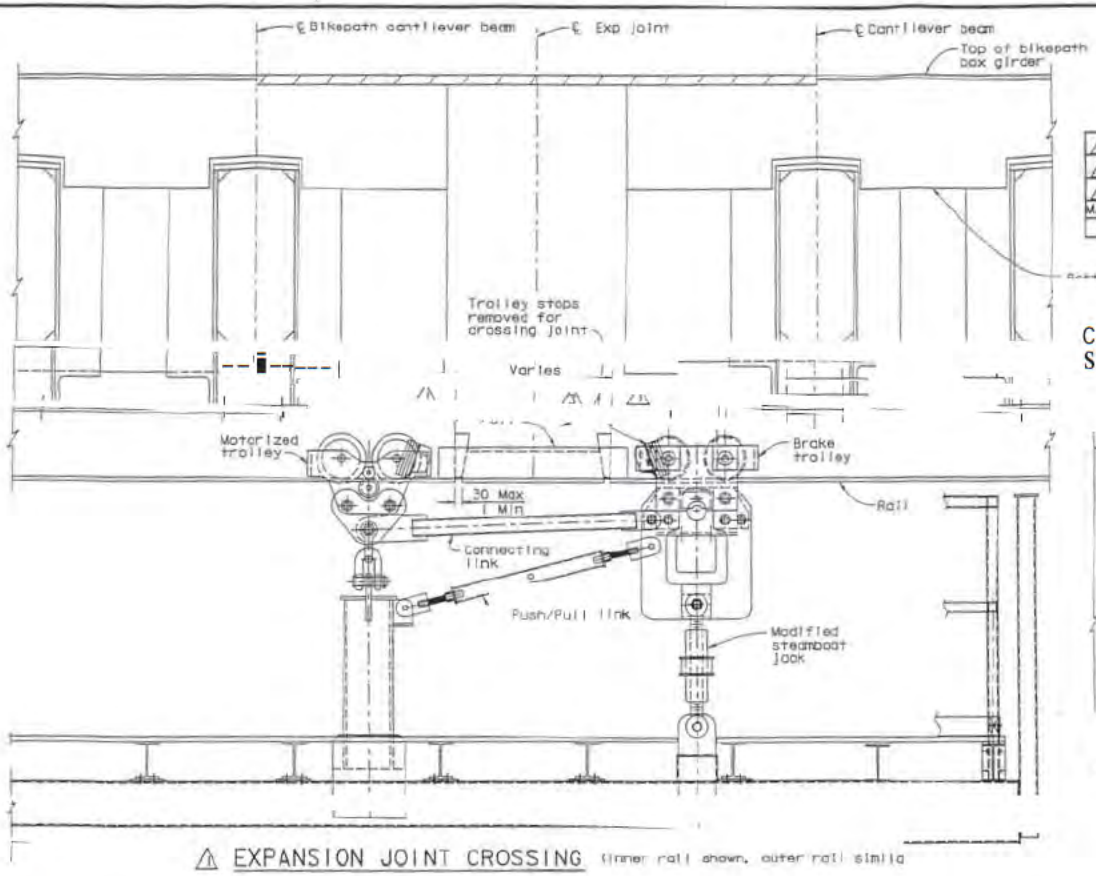

⚠ EXPANSION JOINT CROSSING (inner rail shown, outer rail simila

1:10

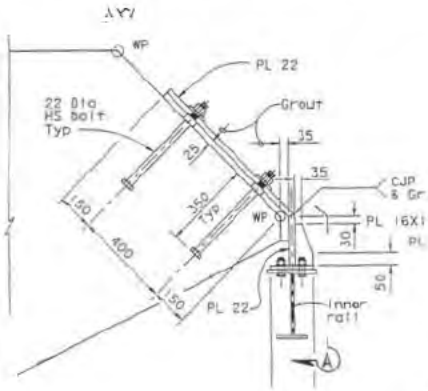

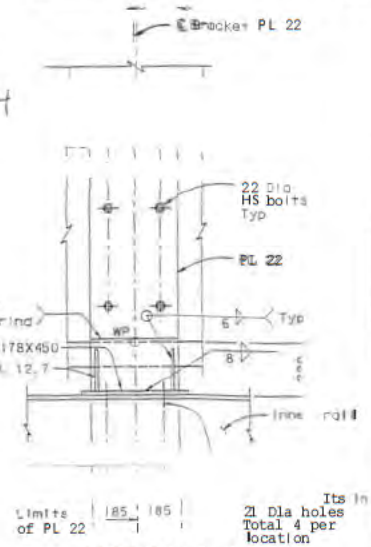

SECTION A-A
1:10

EXPANSION JOINT CROSSING SEQUENCE

1. Stop traffic prior to crossing expansion Joint.
2. Install jumper rails of the appropriate length.
3. Install Jumperkeys at each end of rail.
4. Install Push/Pull prop.
5. Use steamboat jack to ensure no weight is on brake trolley.
6. Remove trolley stops.
7. Cross expansion Joint with brake trolley.
8. Valve off motorized trolley prior to crossing expansion Joint. (Crossing of expansion Joint be powered by one trolley per rail).
9. Use steamboat jack to transfer weight from motorized trolley to brake trolley.
10. Cross expansion Joint with motorized trolley.
11. Release steamboat Jack to shift weight back to motorized trolley.
12. Remove Push/Pull prop.
13. Re-install trolley stops.
14. Remove jumper rails.
15. Open valve to motorized trolley.

INTERMEDIATE INNER RAIL SUPPORT AT PIER TABLE
1:10
(BIKEPATH BOX PANEL TYPES 3 & 4)

Notes:

ing sequence is described with brake trolley
uence similar with motorized trolley leading

⚠ 2. Jumper rails with jumper keys instal movements in the rail joint. Therefo n to place over a period

ALL DIMENSIONS ARE IN MILLIMETERS UNLESS OTHERWISE SHOWN

DESIGN	R. Mazzanares/J. Otter	CHECKED	T. Ho
DETAILS	F. Hung	CHECKED	T. Ho

PREPARED FOR THE STATE OF CALIFORNIA

Salid Abdo
PROJECT ENGINEER

BRIDGE NO. 34-0006L/R
KILOMETER POST

SAN FRANCISCO OAKLAND BAY BRIDGE
EAST SPAN SEISMIC SAFETY PROJECT

SKYWAY STRUCTURES

BIKEPATH TRAVELER DETAILS NO. 10

H. El-Natur
DESIGN OVERSIGHT
M. El-Natur
DESIGN OVERSIGHT

100% PS&E

6-4-01
PLANS APPROVAL DATE
The State of California or its officers or agents shall not be responsible for the accuracy or completeness of electronic copies of this plan sheet.
No. C 36842 Exp. 6/30/04 CIVIL STATE OF CALIFORNIA
T.Y. LIN / MOFFATT & NICHOL

THIS SHEET REPLACES SHEET NO. 913 OF 978 OF PLAN APPROVED JUNE 04, 2001

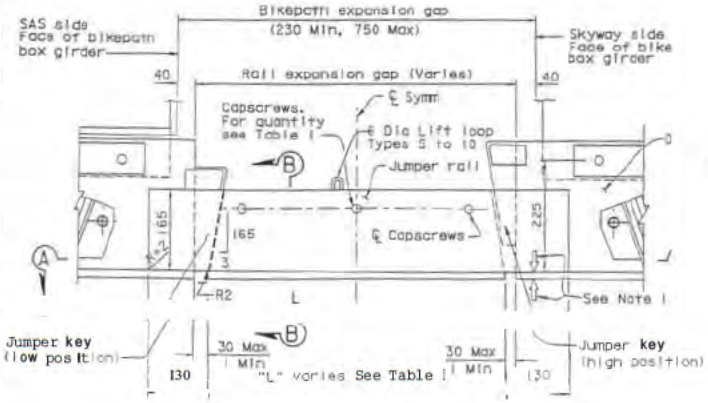

JUMPER RAIL DETAIL
1:5
Shown at outer rail - Inner rail Sim

TABLE 1

JUMPER RAIL TYPES AND QUANTITIES

Type	Bikepath Exp Gap	Rail Exp Gap	Dim "L"	Quantity Req'd	No. of Capscrews
1	200-260	120-180	118	3	1
2	200-320	180-240	178	3	2
3	320-380	240-300	238	3	2
4	380-440	300-360	298	3	3
5	440-500	360-420	358	3	3
6	500-560	420-480	418	3	3
7	500-620	480-540	478	3	3
8	620-680	540-600	538	3	3
9	680-740	600-660	598	3	4
10	740-800	660-720	658	3	4

Note: All Jumper steel A572 GR50 (350 MPa).

Prov de 6 Dia lift loops with each Jumper Type 5 to Type 10

Material to be galvanized.

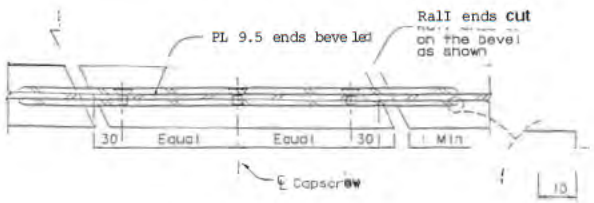

SECTION A-A
1:5

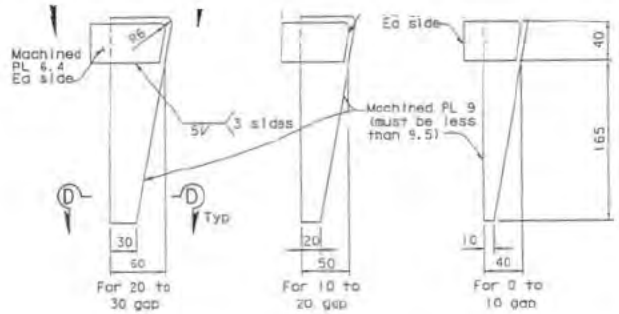

JUMPER KEY DETAILS (NO. required = 20 each type)
1:2.5

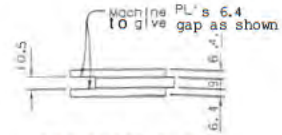

SECTION C-C
1:2

SECTION D-D
1:1

NOTES:

1. Use vicegrips or other clamps to hold first side of jumper rail in place while second side is attached.

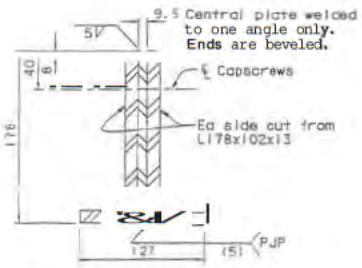

SECTION B-B
1:2.5

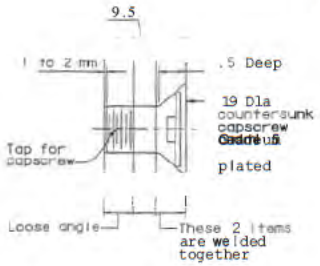

CAPSCREW DETAIL
1:1

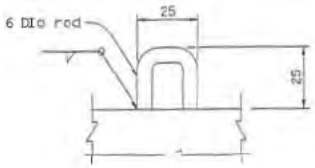

LIFT LOOP DETAIL

CONTRACT CHANGE ORDER NO. 26
SHEET 11 OF 14 04-012024

ALL DIMENSIONS ARE IN MILLIMETERS UNLESS OTHERWISE SHOWN

SAN FRANCISCO OAKLAND BAY BRIDGE
EAST SPAN SEISMIC SAFETY PROJECT

SKYWAY STRUCTURES

BIKEPATH TRAVELER DETAILS NO. 11

H. El-Nahr
DESIGN OVERSIGHT
SIGN OFF DATE

DESIGN	R. Manzanarez/J. Otter	CHECKED	T. Ho
DETAILS	F. Hung	CHECKED	T. Ho
QUANTITIES	L. Greer	CHECKED	J. Leventini

PREPARED FOR THE STATE OF CALIFORNIA DEPARTMENT OF TRANSPORTATION

Salid Abdel
PROJECT ENGINEER

BRIDGE NO. 34-0006L/R
KILOMETER POST 3.9/14.3, 0.0/1.6

DIST	COUNTY	ROUTE	TOTAL PROJECT	NO.	SHEET
04	SF, Ala	80	13.9/14.3, 0.0/1.6	914	97[illegible]

9-13-01
PLANS APPROVAL DATE

The State of California or its officers or agents shall not be responsible for the accuracy or completeness of electronic copies of this plan sheet.

No. C 36842 Exp. 6/30/04 CIVIL STATE OF CALIFORNIA

T.Y. LIN / MOFFATT & NICHOL
825 BATTERY STREET
SAN FRANCISCO, CA 94111

Caltrans now has a web site! To get to the web site, go to: http://www.dot.ca.gov

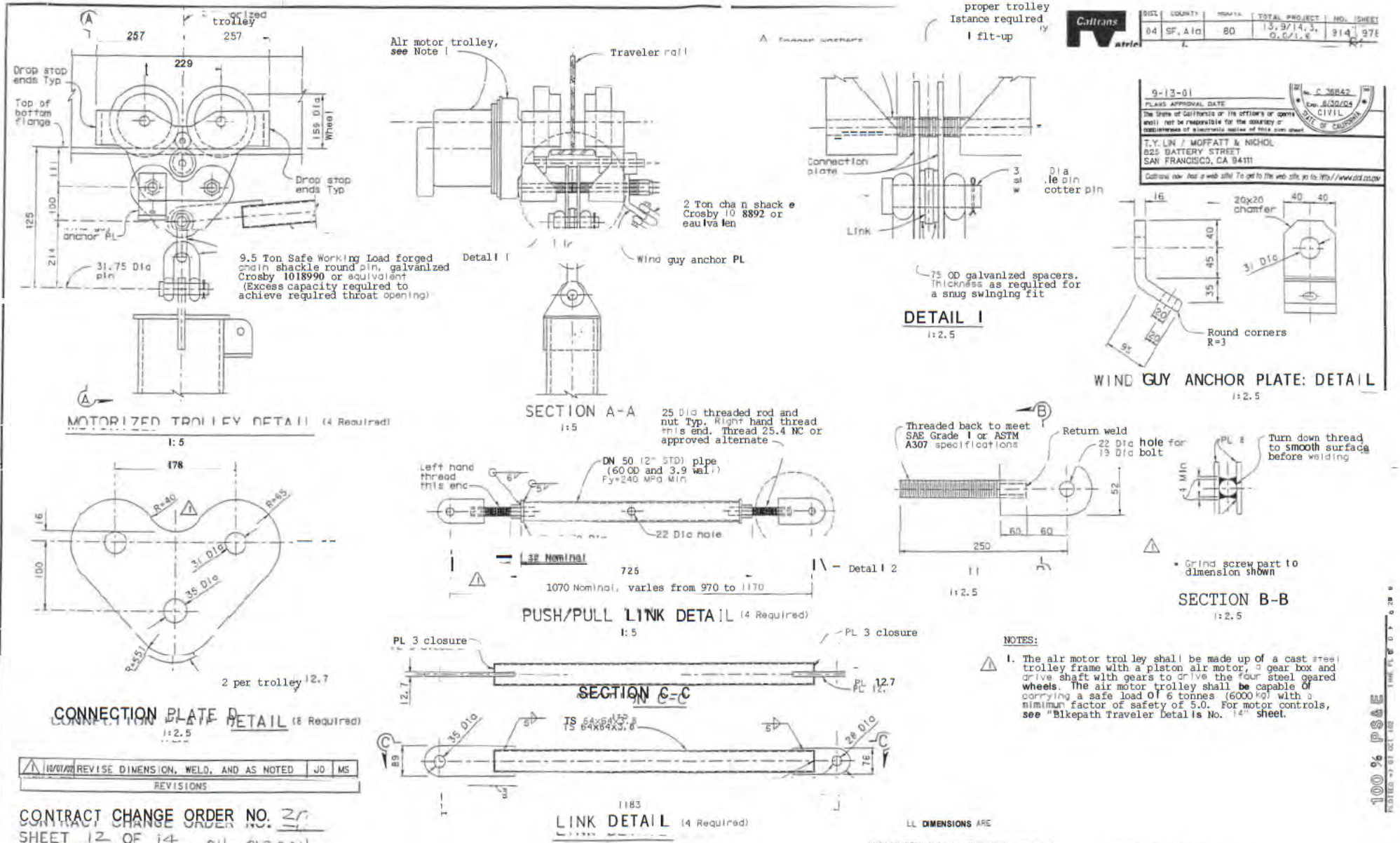

NOTES:

1. The air motor trolley shall be made up of a cast steel trolley frame with a piston air motor, a gear box and drive shaft with gears to drive the four steel geared wheels. The air motor trolley shall be capable of carrying a safe load of 6 tonnes (6000 kg) with a minimum factor of safety of 5.0. For motor controls, see "Bikepath Traveler Details No. 14" sheet.

1	10/01/02	REVISE DIMENSION, WELD, AND AS NOTED	JO	MS

REVISIONS

CONTRACT CHANGE ORDER NO. 20
SHEET 12 OF 14 04-012034

ALL DIMENSIONS ARE MILLIMETERS UNLESS OTHERWISE SHOWN

EAST SPAN SEISMIC RETROFIT PROJECT

H. El-Nahr
DESIGN OVERSIGHT
SIGN OFF DATE 10/01/02

DESIGN	R. Manzanarez/J. Otter	CHECKED	T. Ro
DETAILS	F. Hung	CHECKED	T. Ro
QUANTITIES	L. Greer	CHECKED	J. Lavenini

PRINCIPAL ENGINEER
STATE OF CALIFORNIA
DEPARTMENT OF TRANSPORTATION

Salid Abbas
PROJECT ENGINEER

BRIDGE NO. 34-0006L/R
REGISTERED PROFESSIONAL ENGINEER

SKYWAY STRUCTURES
BIKEPATH TRAVELER DETAILS NO. 12

Rev. Sept 5-18-98

100% PS&E

DIST.	COUNTY	ROUTE	TOTAL PROJECT	NO.	SHEETS
04	SF/Alc	80	13.9/14.3, 0.0/1.6	015R1	978

REGISTERED ENGINEER - CIVIL

6-4-01

PLANS APPROVAL DATE

The State of California or its officers or agents shall not be responsible for the accuracy or completeness of electronic copies of this plan sheet.

...T & NICHOL
625 BATTERY STREET
SAN FRANCISCO, CA 94111
~~625 BATTERY STREET~~
Caltrans now has a web site. To get to the web site, go to: http://www.dot.ca.gov

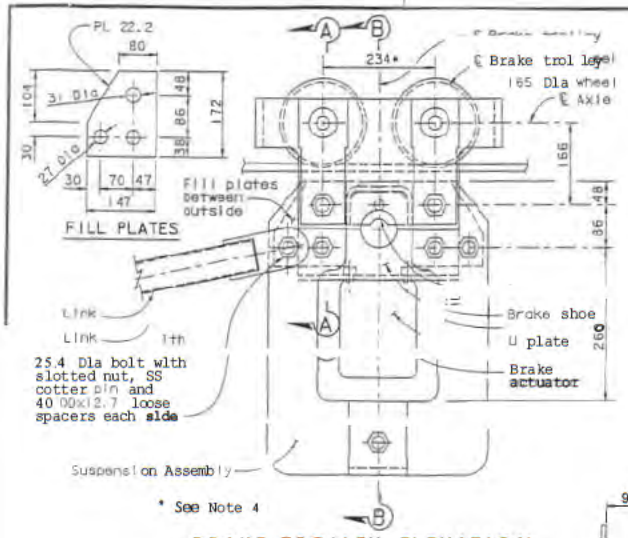

BRAKE TROLLEY ELEVATION
1:5

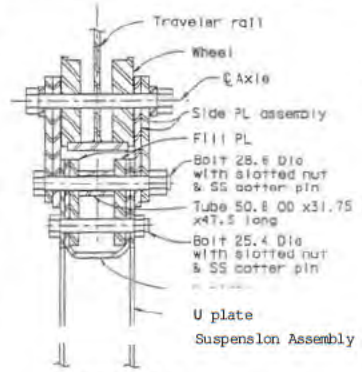

SECTION A-A
1:5

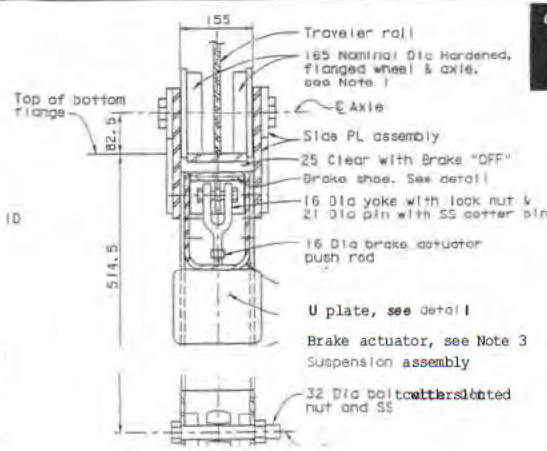

SECTION B-B
1:5

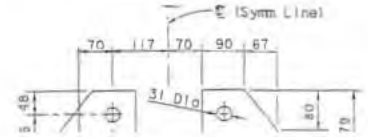

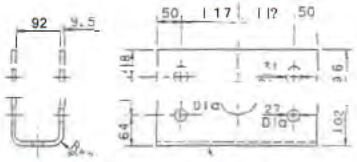

END VIEW ELEVATION

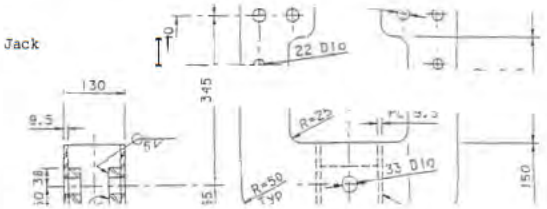

SECTION C-C
1:5

SUSPENSION ASSEMBLY
1:5
See Note 4

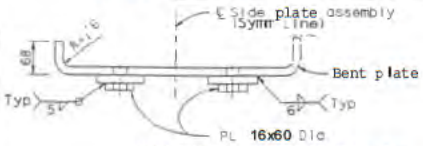

TOP VIEW

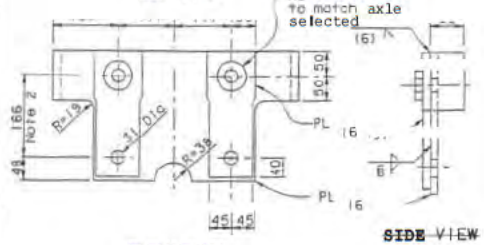

ELEVATION

SIDE VIEW

SIDE PLATE ASSEMBLY
1:5 (2 PER BRAKE TROLLEY)
See Note 4

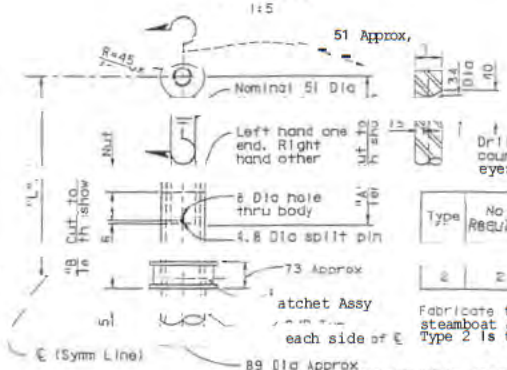

U PLATE
1:5

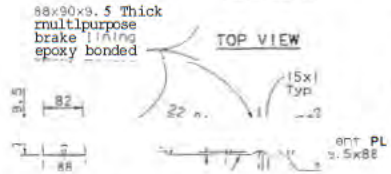

END VIEW ELEVATION

BRAKE SHOE DETAILS
1:5

Type	No Required	"A"	"B"	Length "L" Extended	Retracted	Stroke
2	2	200	150	510	[illegible]	[illegible]

Fabricate these Jacks from Simplex ER 20 Ton capacity steamboat Jacks. Type does not require shortening. Type 2 is to be reduced in length.

MODIFIED STEAMBOAT JACKS

NOTES:

1. The Nominal 165 mm diameter hardened wheel and axle assembly shall Include shielded ball or roller bearings with a grease fitting, a nut and a lock washer with a Min working load capacity of 1470 kg per wheel.
2. Actual wheel tread diameter to be 155 mm Min to 165 mm Max. Adjust dimensions noted If diameter is not 165.
3. The brake actuator shall be an air-actuated brake release with a 15.9 mm Dia push rod and with springs capable of applying approximate 500 kg of force after 25 mm of upward movement (when brake is set). See Specifications.
4. Dimensions shown for trolley hardware are approximate. Dimensions shall be adjusted by the manufacturer to ensure fit-up and function of the trolley system and Its attached Links, etc.

ALL DIMENSIONS ARE IN MILLIMETERS UNLESS OTHERWISE SHOWN

SAN FRANCISCO OAKLAND BAY BRIDGE
EAST SPAN SEISMIC SAFETY PROJECT

SKYWAY STRUCTURES

BIKEPATH TRAVELER DETAILS NO. 13

H. El-Natur
DESIGN OVERSIGHT

DESIGN: R. Manzanarez/J. Otte — CHECKED: T. Ho
DETAILS: F. Hung — CHECKED: T. Ho
QUANTITIES: L. Greer — CHECKED: J. Leventini

PREPARED FOR THE STATE OF CALIFORNIA DEPARTMENT OF TRANSPORTATION

Sojia Abdos
PROJECT ENGINEER

BRIDGE NO. 34-0006L/R
KILOMETER POST 13.9/14.3, 0.0/1.6

CU 04

DISREGARD PRINTS BEARING EARLIER REVISION DATES

SHEET 283

DATE PLOTTED: 03-29-15

DIST.	COUNTY	ROUTE	TOTAL PROJECT	NO.	SHEETS
04	SF/Ala	80	13.9/14.3, 0.0/1.6	916R1	978

REGISTERED ENGINEER-MECHANICAL

6-4-01

PLANS APPROVAL DATE

The State of California or its officers or agents shall not be responsible for the accuracy or completeness of electronic copies of this plan sheet.

REGISTERED PROFESSIONAL ENGINEER — Duke E. Hornby — No. M 025433 — Exp. 9/30/04 — MECHANICAL — STATE OF CALIFORNIA

T.Y. LIN / MOFFATT & NICHOL
825 BATTERY STREET
SAN FRANCISCO, CA 94111

Caltrans now has a web site! To get to the web site, go to http://www.dot.ca.gov

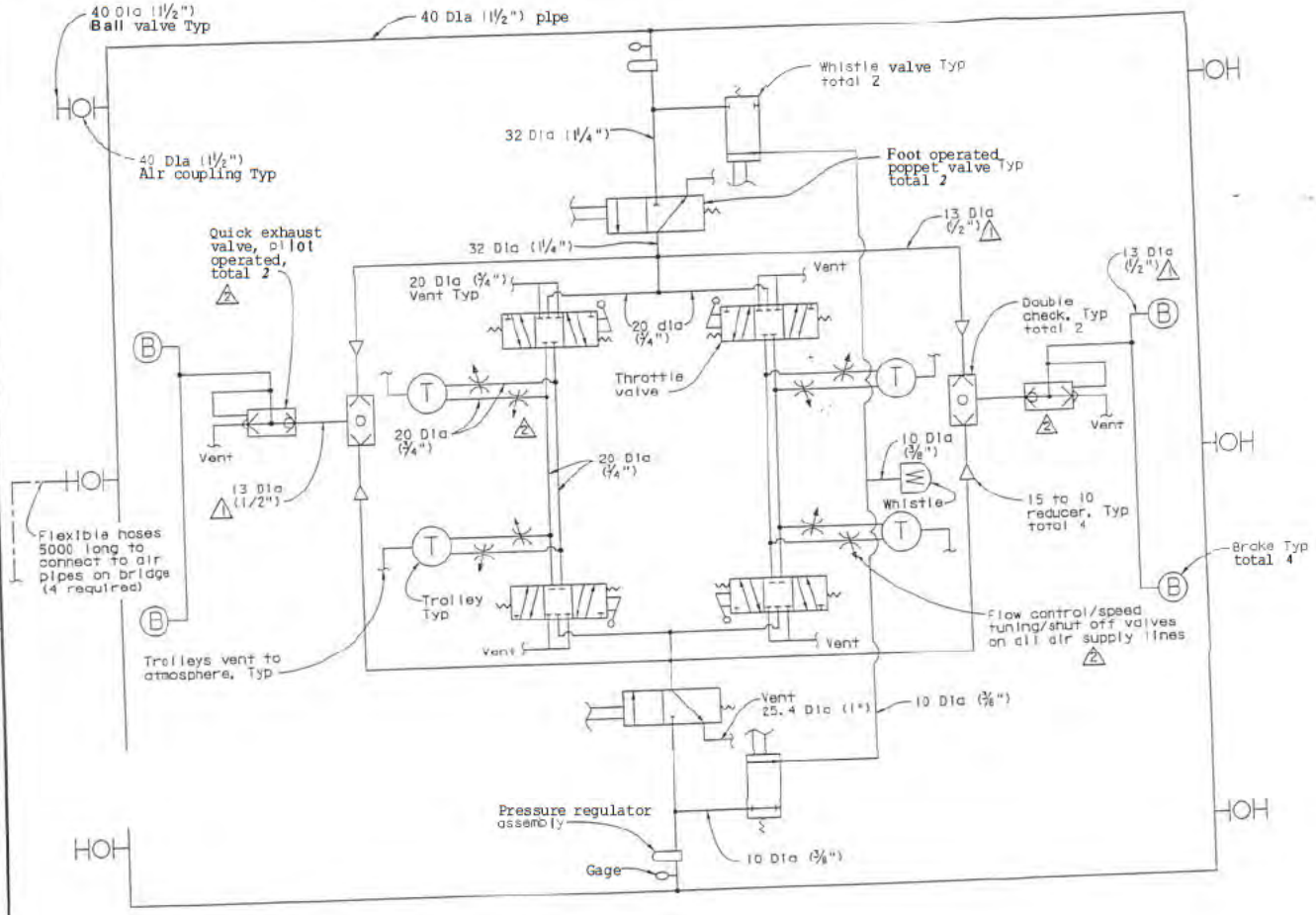

PNEUMATIC SCHEMATIC
No scale

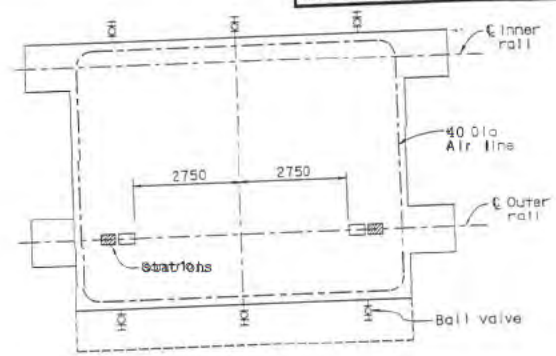

PNEUMATIC LAYOUT PLAN
No scale

NOTES:

1. All double check valves shall be Installed horizontally.
2. All vents shall have a minimum of 300 mm of pipe and terminate with a screened downturned elbow.
3. Flexible hose not to exceed 750 mm in length may be used for final connections to equipment.
4. All pipe sizes are typical for similar locations.
5. On board rigid pipe to be SCHED 40 galvanized.
6. Provide support within 150 mm of each pipe hose connection and at 1800 Intervals maximum.
7. Provide downturned elbow and reducer as required at each equipment connection.
8. Provide sufficient flexible connection hose to accommodate traveler movement (5000 lengths)
9. Mount throttle and whistle valves so as to be accessible by hand.
10. Mount foot operated valve (Dead Man Switch) so as to be accessible with foot or knee.
11. Mount control stations to outer motor trolley posts - provide weather cover for controls.
12. Double check valve function - to release all air pressure in the brakes when both poppet valves are vented to atmosphere.
13. System manufacturer to review and verify schematic.

MARK	DATE	DESCRIPTIONS	BY	CH'D
2	10/01/02	ADD QUICK EXHAUST & SHUT OFF VALVES	JO	MS
1	10/01/02	CORRECT METRIC CONVERSION FOR ½" PIPE	TM	SC

REVISIONS

CONTRACT CHANGE ORDER NO. -20-
SHEET 14 OF 14 CH-012024

ALL DIMENSIONS ARE IN MILLIMETERS UNLESS OTHERWISE SHOWN

SAN FRANCISCO OAKLAND BAY BRIDGE
EAST SPAN SEISMIC SAFETY PROJECT

SKYWAY STRUCTURES

BIKEPATH TRAVELER DETAILS NO. 14

H. El-Natur
DESIGN OVERSIGHT
SIGN OFF DATE 10/07/02

	BY	CHECKED
DESIGN	J. Hornby	J. Otter
DETAILS	F. Rung	J. Otter
QUANTITIES	L. Greer	J. Laventini

PREPARED FOR THE STATE OF CALIFORNIA DEPARTMENT OF TRANSPORTATION

Salim Abbas
PROJECT ENGINEER

SPONSOR NO. 34-0006L/R
KILOMETER POST 3.9/14.3, 0.0/1.6

CU 04
EA 012021

DISREGARD PRINTS BEARING EARLIER REVISION DATES

REVISION DATES (PRELIMINARY STAGE ONLY)

SHEET 484

ORIGINAL SCALE IN MILLIMETERS FOR REDUCED PLANS

FILE: J:\DS\04-012001\SKYWAY\SKY-2\SKTD014-2.DGN

USERNAME: J.SKOR DATE PLOTTED: 01 OCT 02 TIME PLOTTED: 09:30:14

100% PAGE

CCO STATUS FOR @ - 0120Z4 - 0Z0
STATUS IS ACTIVE 05-06-03

NET MONEY CHANGE: 36,355.00
ANTICIPATED CHANGES: 0.00
EST. FINAL COST: 36,355.00

BIKE PATH TRAVELER

WORK TYPE	AMOUNT AUTHORIZED	** AMOUNTS EXPENDED ** TO-DATE	LAST EST.	SINCE LAST EST.
EW @ LS(+)	36,355.00	0.00	0.00	0.00

CONTRACT ITEM TOTAL: 0.00 NO ITEM RECORDS FOR THIS CCO

CCO SUPPLEMENTS - PRESS PF5

NEW NUMBER => USE TOP LINE + ENTER EXIT PRESS PF3

CCO: 20	Suppl. No. 0	Contract No. 04 - 012024	Road 04-SF,Ala-80-13.9/14.3,0.0/1.6	FED. AID LOC.: ACIM-080-1(085)8N

To: **KIEWIT / FCI / MANSON a JV**

You are directed to make the following changes from the plans and specifications or do the following described work not included in the plans and specifications for this contract. ***NOTE: This change order is not effective until approved by the Engineer.***

Description of work to be done, estimate of quantities and prices to be paid. (Segregate between additional work at contract price, agreed price and force account.) Unless otherwise stated, rates for rental of equipment cover only such time as equipment is actually used and no allowance will be made for idle time. This last percentage shown is the net accumulated increase or decrease from the original quantity in the Engineer's Estimate

Extra Work at Lump Sum:

Implement the changes to Bikepath Traveler on the SFOBB East Span Skyway, Bridge Nos. 34-006L/R as shown on sheets 2-14 of this change order. The new contract plan sheets are 903R1, 905R1, 906R1, 907R1, 908R1, 909R1, 910R1 911R1, 912R1, 913R1, 914R1, 915R1 and 916R1.

For this work the Contractor will be paid the agreed lump sum of $36,355.00. This sum constitutes full compensation, including markups, for all direct and indirect costs, all associated project impacts, and Time Related Overhead (TRO) expenses.

Estimated cost of Extra Work at Lump Sum $36,355.00

Estimated Cost: **Increase** ☑ **Decrease** ☐ **$36,355.00**

By reason of this order the time of completion will be adjusted as follows: 0 days

Submitted by

Signature	Resident Engineer: COE D.	
Approval Recommended by		
Signature	Construction Engineer: COE D.	Date 2-10-03
Engineer Approval by		
Signature	(Print name and title) PETER SIEGENTHALER - Chief	Date 5/6/03

We the undersigned contractor, have given careful consideration to the change proposed and agree, if this proposal is approved, that we will provide all equipment, furnish the materials, except as may otherwise be noted above, and perform all services necessary for the work above specified, and will accept as full payment therefor the prices shown above.

NOTE: If you, the contractor, do not sign acceptance of this order, your attention is directed to the requirements of the specifications as to proceeding with the ordered work and filing a written protest within the time therein specified.

Contractor Acceptance by

Signature	(Print name and title) A.T. Sakuo, Project Director	Date 2/13/03

STATE OF CALIFORNIA - DEPARTMENT OF TRANSPORTATION

CONTRACT CHANGE ORDER MEMORANDUM

DATE: **3/25/03** Page 1 of 1

TO: PETERSIEGENTHALER / COE D.	FILE: **E.A.** **04 - 012024**
FROM: COED.	**CO-RTE-PM** 04-SF,Ala-80-13.9/14.3,0.0/1.6
	FED. NO. ACIM-080-1(085)8N
CCO# **20** | SUPPLEMENT#: **0** | Category Cod **CAPA**	CONTINGENCY BALANCE (incl. this change **$52,927,820.27**
COST: **$36,355.00** INCREASE ☑ DECREASE ☐	HEADQUARTERS APPROVAL REQUIRED? ☐ YES ☑ **NO**
SUPPLEMENTAL FUNDS PROVIDED: $0.00	IS THIS REQUEST IN ACCORDANCE WITH ENVIRONMENTAL DOCUMENTS? ☑ YES ☐ *NO*
CCO DESCRIPTION: Bike Path Traveler	**PROJECT DESCRIPTION:** REPLACE SFOBB EASJ SPAN

LOCATION: IN SAN FRANCISCO AND ALAMEDA COUNTIES IN SAN FRANCISCO AND OAKLAND FROM **1.3**KM EAST OF THE YERBA BUENA ISL

THIS CHANGE ORDER PROVIDES FOR:

implementing minor changes to Bikepath Traveler on the SFOBB East Span Skyway, Bridge Nos. 34-006L/R. These changes include: adding demountable handrails at the ends of the travelers, revising the plate size on the brace connections, clarifying welding requirements, modifying E2/E3 bikepath traveler rail layout, changing the jumper rail details, and adding a quick exhaust valve and flow control valves to the pneumatic system.

Attached is a copy of the memo from Mr. Hasan El-Natur of the Division of Structures to Mr. Doug Coe dated 10/08/02 specifying the changes. This Change Order is required as the traveler scaffold design and related final details were not completed when the Skyway contract was advertised and awarded.

For this work the contractor will be paid the agreed lump sum of $36,355.00. This sum constitutes full and complete compensation including all markups for this change. An analysis of the Contractor's proposal is on file; it has been found to be fair and reasonable based on a force account analysis prepared by the engineer. This analysis is on file in the project records.

The revised contract plan sheets affected by this change order are sheet Nos. 903, 905, 906, 907, 908, 909, 910, 911, 912, 913,914,915 and 916 of 978. The replacement sheets are 903R1, 905R1, 906R1, 907R1, 908R1, 909R1, 910R1, 911R1, 912R1, 913R1, 914R1, 915R1, and 916R1.

This additional work will not affect the overall project schedule; therefore, no additional contract time will be granted for this change order.

Concurrence was obtained from Ms. Nancy Bobb, of FHWA on March 14, 2003.

Maintenance concurrence was obtained from Mr. Allan Chow of Structures Maintenance.

CONCURRED BY:		
Construction Engineer: Douglas Coe	Date	
Bridge Engineer:	Date	
FHWA Representative: Nancy Bobb	Date	3/14/03
Project Engineer:	Date	
Other (specify): Allan Chow	Date	4/17/03
	Date	
District Prior Approval By:	Date	
HQ (Issue Approve) By:	Date	
Resident Engineer's Signature:	Date	4-21-03

ESTIMATE OF COST

	THIS REQUEST	TOTAL TO DATE
ITEMS	$0.00	$0.00
FORCE ACCOUNT	$0.00	$0.00
AGREED PRICE	**$36,355.00**	**$36,355.00**
ADJUSTMENT	$0.00	$0.00
TOTAL	**$36,355.00**	**$36,355.00**

FEDERAL PARTICIPATION

☑ PARTICIPATING ☐ PARTICIPATING IN PART ☐ NONE

☑ CCO FUNDED PER CONTRACT ☐ CCO FUNDED AS FOLLOWS

FEDERAL FUNDING SOURCE	PERCENT

RECEIVED 007063 MAY -8 03

CCO: 21	Suppl. No. 0	Contract No, 04 - 012024	Road 04-SF,Ala-80-13.9/14.3.0.0/1.6	FED. AID LOC.: ACIM-080-1(085)8N

To: **KIEWIT / FCI / MANSON a JV**

You are directed to make the following changes from the plans and specifications or do the following described work not included in the plans and specifications for this contract. ***NOTE: This change order is not effective until approved by the Engineer.***

Description of work to be done, estimate of quantities and prices to be paid. (Segregate between additional work at contract price, agreed price and force account.) Unless otherwise stated, rates for rental of equipment cover only such time as equipment is actually used and no allowance will be made for idle time. This last percentage shown is the net accumulated increase or decrease from the original quantity in the Engineer's Estimate.

Extra Work at Lump Sum:

Construct the upper transition span traveler rail for the eastbound and westbound transition spans of the SFOBB East Spar Skyway, Bridge Nos. 34-006L/R, as shown on sheets 2 through 12 of this change order. The brackets, bolts, and rail for the CIP transition closure will be supplied under this change order and installed in a future contract.

Contract plan sheets revised by this change order are 712R2 and 713R2. New plan sheets are 729A, 729B, 729C, 7290, 729E, 729F, 729G, 729H and 7291.

For this work the Contractor will be paid the agreed lump sum of $368,090.00. This sum constitutes full compensation including markups, for all direct and indirect costs, all associated project impacts, and Time Related Overhead (TRO) expenses for this change.

Extra Work at Agreed Lump Sum $368,090.00

Estimated Cost: Increase ☑ Decrease ☐ $368,090.00

By reason of this order the time of completion will be adjusted as follows: 0 days

Submitted by		
Signature	Resident Engineer: for COE D.	Date 7-28-03
Approval Recommended by		
Signature	Construction Engineer: for COE D.	Date 7-28-03
Engineer Approval by		
Signature	(Print name and title) PETER SIEGENTHALER - Chief	Date 9/11/03

We the undersigned contractor have given careful consideration to the change proposed and agree, if this proposal is approved, that we will provide all equipment, furnish the materials, except as may otherwise be noted above, and perform all services necessary for the work above specified, and will accept as full payment therefor the prices shown above.

NOTE: If you, the contractor, do not sign acceptance of this order, your attention is directed to the requirements of the specifications as to proceeding with the ordered work and filing a written protest within the time therein specified.

Contractor Acceptance by		
Signature	(Print name and title) A.T. Skoro, Project Director	Date 8/12/03

U.S. DEPARTMENT OF TRANSPORTATION FEDERAL HIGHWAY ADMINISTRATION CALIFORNIA DIVISION OFFICE

RECORD OF PRIOR APPROVAL FOR MAJOR CONTRACT CHANGE ORDERS

PROJECT NO.	CCO NO.	CONTRACT NO.	DIST-CO-RTE-PM
ACIM -080-1(085)8N	21	04-012024	04-SF,Ala-80-13.9/14.3,0.0/1.6

REQUESTED BY:	CALTRANS HQ	DATE
Greg Mah-Hing	X RE/DISTRICT	3/14/03

PROPOSED CHANGE

. changes include construction of the upper traveler rails for the eastbound and westbound transition spans.

REASON FOR CHANGE:

This Change Order is required as the traveler rail design and related final details were not completed when the Skyway contract was advertised and awarded.

AS DISCUSSED IN FIELD (REPORT NO. _____)

TIME EXTENSIONS
* NONE ___DAYS ___

ACTIVITY ON CRITICAL PATH AFFECTED BY CCO (IF TIME EXTENSION INVOLVED)

ESTIMATE OF COST:

$____356,533.00 INCREASE $ DECREASE

CCO:
CONTRACT ITEM
X AGREED PRICE

METHOD OF PAYMENT
ADJUSTMENT OF COMPENSATION
EXTRA WORK AT FORCE ACCOUNT

THE WORK COVERED BY THE PROPOSED REVISION AS DESCRIBED ABOVE IS APPROVED SUBJECT TO SUBMISSION OF SUPPORTING DOCUMENTATION INCLUDING COST EVALUATION AND JUSTIFICATION OF TIME EXTENSIONS.

OTHER CONDITIONS:

PRIOR APPROVAL TO PROCEED GRANTED BY:	DATE OF AUTHORIZATION:
Nancy E. Bobb	3/19/03

TELECOPY

California Department of Transportation

CONSTRUCTION DIVISION

TO: District 4 CCO Desk

Date: 9/4/2003

Contract No.: 4 - 012024

Road: SF,ALA-80-13.9/14.3,0.0/1.6

FED, No.: ACIM-080-1(085)8N

To: SARTIPI - 04

Attention: 04 - MOLERA

HQ Direction: **TO ISSUE AND APPROVE**

CCO No. 021 **Sup. No.** 0 **Rev. No.** 1 **Old CCO Code:** -

Per Your Submittal Dated 9/3/2003 **New CCO Code:** C - H - P - R

CONSTRUCT THE UPPER TRANSITION SPAN TRAVELER RAIL FOR THE EAST & WESTBOUND TRANSITION SPANS OF THE SFOBB EAST SPAN SKYWAY, BRIDGE NO. 34-006L/R; FURNISH THE BRACKETS, BOLTS, AND RAIL FOR THE CIP TRANSITION CLOSURE THAT IS TO BE INSTALLED ON A FUTURE CONTRACT.

NOTES.

TOTAL COST OF THIS CCO: $368,090.00

Items:	$0.00
Force Account:	$0.00
Agreed Price:	$368,090.00
Adj. of Comp.	$0.00
Total:	**$368,090.00**
Time:	**(NONE)**

ROBERT PIEPLOW, by:
Division Chief

Patrick S. Bockari

Division of Construction
1120 "N" Street, MS-44, Sacramento, CA 95814
Fax Number: (916) 654-5735
To Confirm Transmission, Call (916) 654-5196

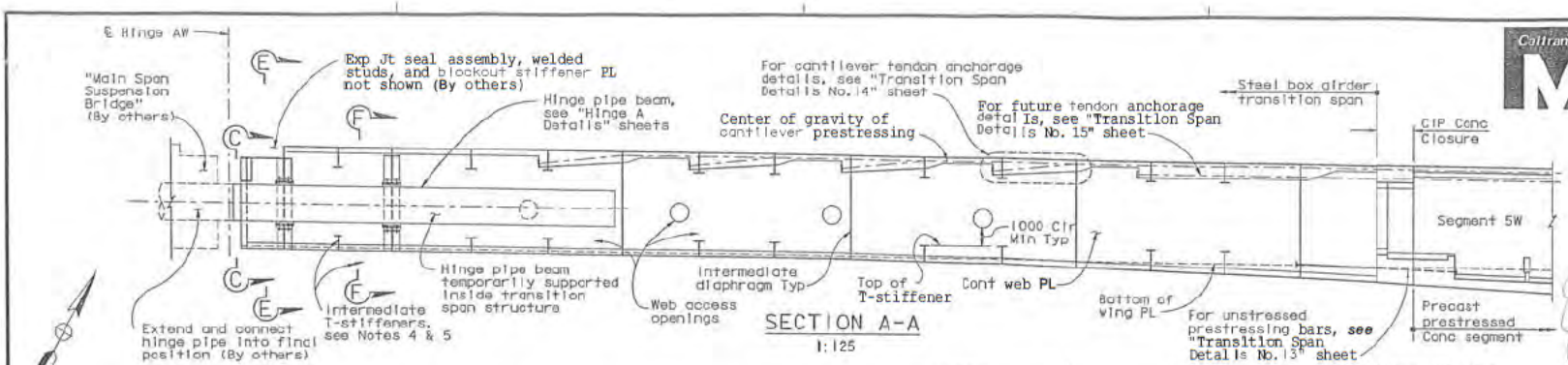

SECTION A-A

1:125

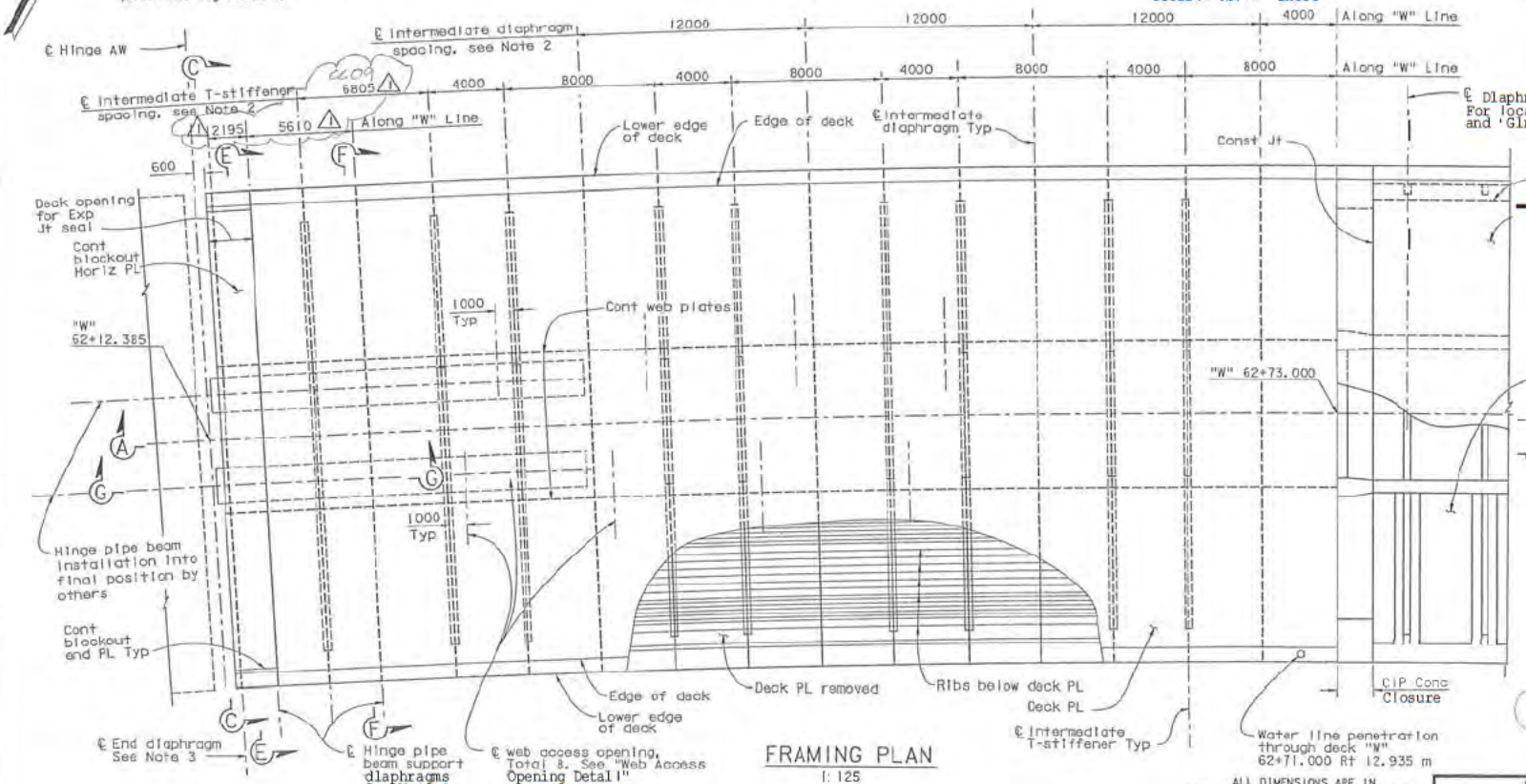

FRAMING PLAN

1:125

ALL DIMENSIONS ARE IN MILLIMETERS UNLESS OTHERWISE SHOWN

NOTES:

1. For Sections C-C, E-E, F-F and G-G, see "Transition Span Detail Is" sheets.
2. All transverse support panels shall be radial to "W" line except hinge pipe support diaphragms and end diaphragm.
3. For orientation of hinge pipe support diaphragms and end diaphragm, see "Transition Span Details No. 15" sheet.
4. Intermediate T-stiffeners on soffit plate may be used as part of the temporary support system for hinge pipes during construction.
5. The Contractor shall ensure that allowable stresses are not exceeded due to hinge pipe temporary support system.
6. Transition span traveler rail not shown. See "Transition Span Traveler Rail Details" sheets.

DIST.	COUNTY	ROUTE	KILOMETER POST TOTAL PROJECT	SHEET NO.	TOTAL SHEETS
04	SF/Ala	80	13.9/14.3, 0.0/1.6	71282	978

REGISTERED ENGINEER - CIVIL
6-4-01
PLANS APPROVAL DATE
Glew W. Chee No. C 41906 Exp. 03/31/04 CIVIL STATE OF CALIFORNIA
The State of California or its officers or agents shall not be responsible for the accuracy or completeness of electronic copies of this plan sheet.

325 BATTERY STREET NICHOL
SAN FRANCISCO, CA 94111

Caltrans now has a web site! To get to the web site, go to: http://www.dot.ca.gov

MARK	DATE	DESCRIPTIONS	BY	CH'D
2	10/07/02	ADD NOTE (CCO #7) CC021	MS	SA
1	03/04/02	RELOCATION OF DIAPHRAGMS AND T-STIFFENERS (CCO #1)	TM	SC

REVISIONS

CONTRACT CHANGE ORDER NO. 21
SHEET 2 OF 4

100 %

H. El-Natur
DESIGN OVERSIGHT
SIGN OFF DATE 10/03/02

DESIGN	BY S. Chee	CHECKED A. Miller
DETAILS	BY T. Marasigan	CHECKED A. Miller
QUANTITIES	BY S. Chee	CHECKED J. Laventini

PREPARED FOR THE STATE OF CALIFORNIA DEPARTMENT OF TRANSPORTATION

Sajid Abbas
PROJECT ENGINEER

BRIDGE NO. 34-0006L/R
KILOMETER POST 13.9/14.3, 0.0/1.6

SAN FRANCISCO OAKLAND BAY BRIDGE
EAST SPAN SEISMIC SAFETY PROJECT

SKYWAY STRUCTURES

TRANSITION SPAN LAYOUT "W" LINE

Rev. Date: 5-16-00

ORIGINAL SCALE IN MILLIMETERS FOR REDUCED PLANS

CU 04
EA 04-012021

DISREGARD PRIOR REVISION DATES

REVISION DATES (PRELIMINARY STAGE ONLY)

SHEET 280 OF

FILE =? pt\b6\24-012001\skyway\may2002\sgtrall.dgn

DIST.	COUNTY	ROUTE	KILOMETER POST TOTAL PROJECT	SHEET NO.	TOTAL SHEETS
04	SF/Ala	80	13.3/14.3, 0.0/1.6	713R1	978

REGISTERED ENGINEER - CIVIL

6-4-01

PLANS APPROVAL DATE

The State of California or its officers or agents shall not be responsible for the accuracy or completeness of electronic copies of this plan sheet.

Steven W. Chen No. C 41906 Exp. 03/31/04 CIVIL STATE OF CALIFORNIA PROFESSIONAL ENGINEER

T.Y. LIN / MOFFATT & NICHOL
825 BATTERY STREET
SAN FRANCISCO, CA 94111

Caltrans now has a web site! To get to the web site, go to: http://www.dot.ca.gov

MARK	DATE	DESCRIPTIONS	BY	CH'D
2	10/07/02	ADD NOTE (CCO-#7) 460.21	MS	SA
1	03/04/02	RELOCATION OF DIAPHRAGMS AND T-STIFFENERS (CCO-#1)	TM	SC

REVISIONS

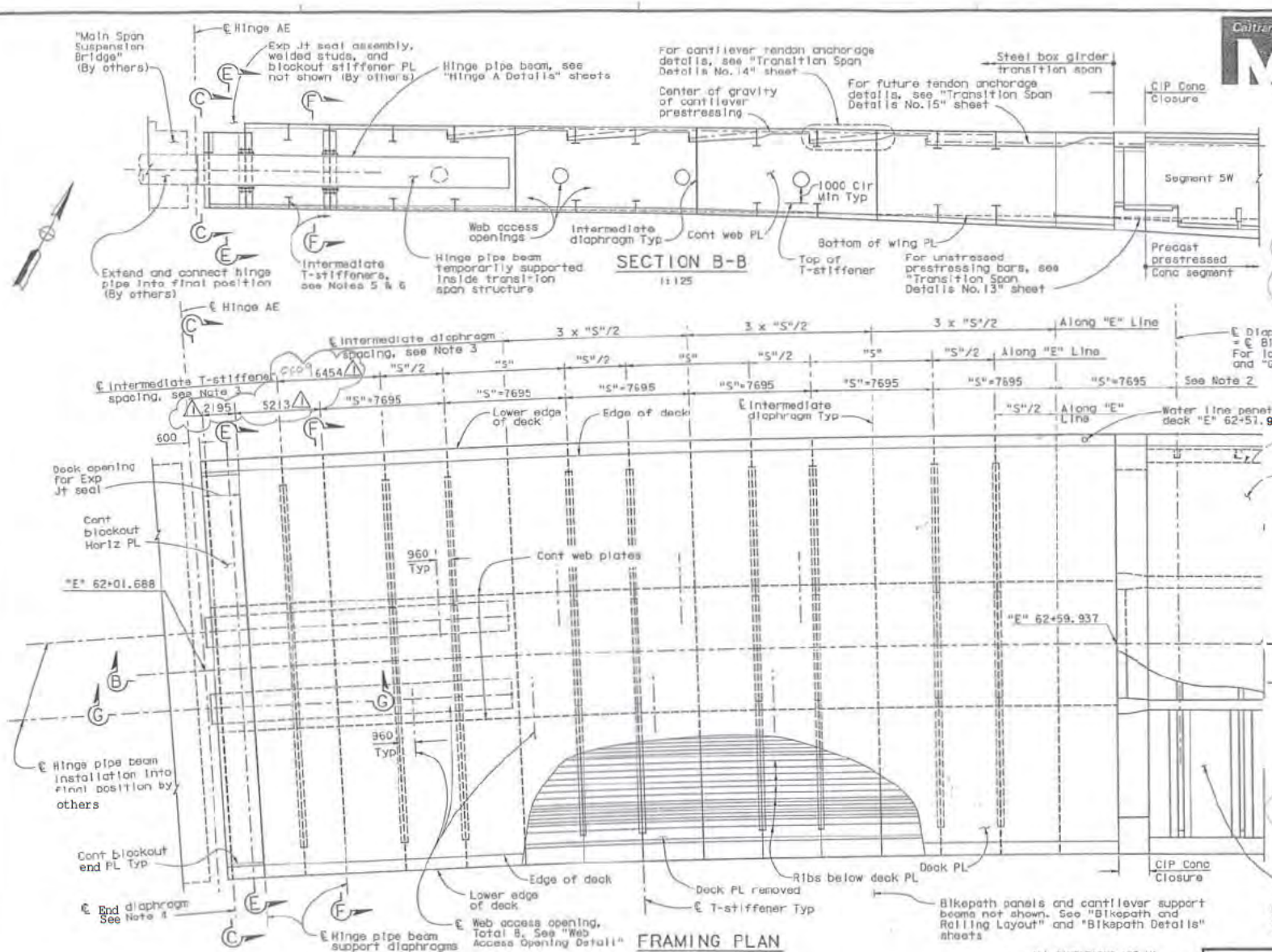

NOTES:

1. For Sections C-C, E-E, F-F and G-G, see "Transition Span Details" sheets.
2. ℄ Spacing for bikepath cantilever support beams at right edge of deck measured along "E" line.
3. All transverse support panels shall be radial to "E" line except hinge pipe support diaphragms and end diaphragm.
4. For orientation of hinge pipe support diaphragms and end diaphragm, see "Transition Span Details No.16" sheet.
5. Intermediate T-stiffeners on soffit plate may be used as part of the temporary support system for hinge pipes during construction.
6. The Contractor shall ensure that allowable stresses are not exceeded due to hinge pipe temporary support system.
7. Transition span traveler rail not shown. See "Transition Span Traveler Rail Details" sheets. 460.21

CONTRACT CHANGE ORDER NO. 21
SHEET 3 OF 12

ALL DIMENSIONS ARE IN MILLIMETERS UNLESS OTHERWISE SHOWN

SAN FRANCISCO OAKLAND BAY BRIDGE
EAST SPAN SEISMIC SAFETY PROJECT

SKYWAY STRUCTURES

TRANSITION SPAN LAYOUT "E" LINE

H. El-Natur
DESIGN OVERSIGHT
SIGN OFF DATE 10/01/02

DESIGN	S. Chen	CHECKED	A. Miller
DETAILS	F. Ring	CHECKED	A. Miller
QUANTITIES	S. Chen	CHECKED	J. Levantini

PREPARED FOR THE STATE OF CALIFORNIA DEPARTMENT OF TRANSPORTATION

Sajid Abbas
PROJECT ENGINEER

BRIDGE NO. 34-0006L/R
KILOMETER POST 13.3/14.3, 0.0/1.6

Rev Date: 5-30-98

ORIGINAL SCALE IN MILLIMETERS FOR MODIFIED PLANS

CU 04
EA 04-012021

STANDARD PLANS DATE
EARLIER REVISION DATES

REVISION DATES (PRELIMINARY STAGE ONLY)

SHEET 281

FILE => p:\bb\04-012021\skyway\ndy2002\ogtr002.dgn

TIME PLOTTED => 12:44:15
DATE PLOTTED => 01 OCT 02

DIST.	COUNTY	ROUTE	KILOMETER POST TOTAL PROJECT	SHEET NO.	TOTAL SHEETS
04	SF/Ala	80	13.9/14.3, 0.0/1.6	729A	978

REGISTERED ENGINEER - CIVIL

6-4-01

PLANS APPROVAL DATE

The State of California or its officers or agents shall not be responsible for the accuracy or completeness of electronic copies of this plan sheet.

REGISTERED PROFESSIONAL ENGINEER Rafael Manzanarez No. C 36842 Exp. 6/30/04 CIVIL STATE OF CALIFORNIA

T.Y. LIN / MOFFATT & NICHOL
825 BATTERY STREET
SAN FRANCISCO, CA 94111

Caltrans now has a web site! To get to the web site, go to http://www.dot.ca.gov

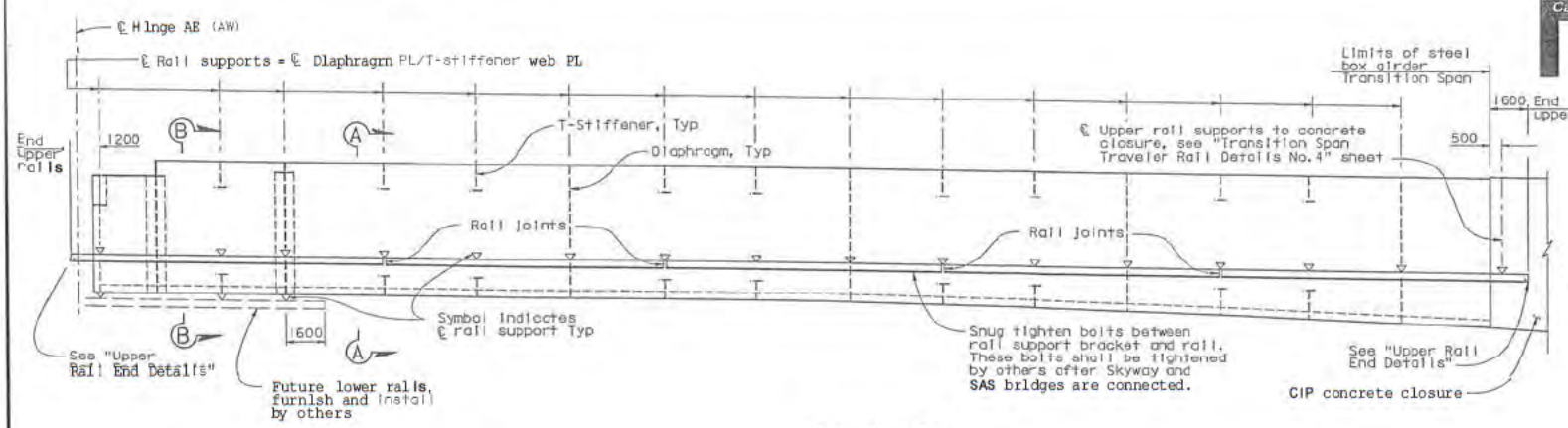

ELEVATION

1: 125

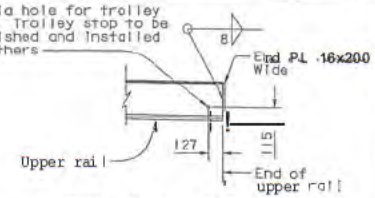

UPPER RAIL END DETAILS

1: 20

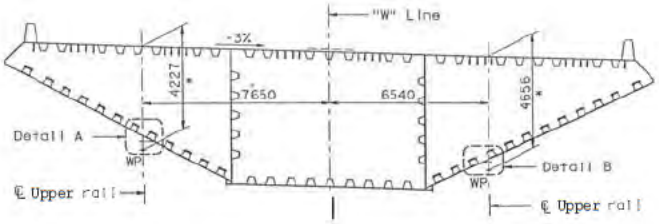

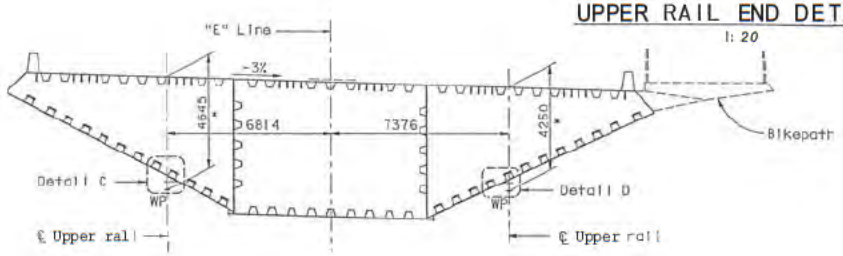

SECTION A-A

1: 100

Note: Location of upper rails within limits of concrete closure similar.

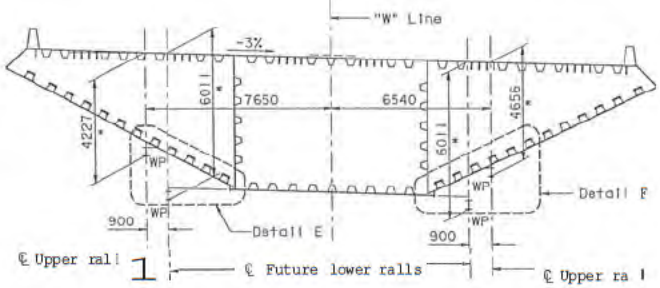

WESTBOUND

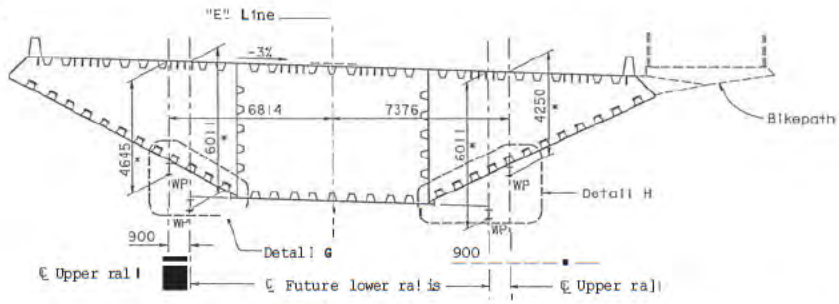

EASTBOUND

SECTION B-B

1: 100

* Denoted vertical dimension from top of girder to underside rail.

NOTES:

1. Adjust the height of built-up mounting bracket sections if required to maintain workpoint (WP) locations shown.
2. For Details A & B, see "Transition Span Traveler Rail Details No. 2" sheet.
3. For Details C & D, see "Transition Span Traveler Rail Details No. 3" sheet.
4. For Detail E, see "Transition Span Traveler Rail Details No. 6" sheet.
5. For Detail F, see "Transition Span Traveler Rail Details No. 7" sheet.
6. For Detail G, see "Transition Span Traveler Rail Details No. 8" sheet.
7. For Detail H, see "Transition Span Traveler Rail Details No. 9" sheet.

ALL DIMENSIONS ARE IN MILLIMETERS UNLESS OTHERWISE SHOWN

ADDITIONAL SHEET

CONTRACT CHANGE ORDER NO. 21
SHEET 4 OF 12

SAN FRANCISCO OAKLAND BAY BRIDGE
EAST SPAN SEISMIC SAFETY PROJECT

SKYWAY STRUCTURES

TRANSITION SPAN TRAVELER RAIL DETAILS NO. 1

H. El-Ratur
DESIGN OVERSIGHT
SIGN OFF DATE 10/07/02

Rev. Date: 5-18-98

DESIGN	BY J. Otter	CHECKED S. Shi/J. Leventini
DETAILS	BY H. Li	CHECKED J. Otter
QUANTITIES	BY J. Leventini	REVIEWED S. Shi

PREPARED FOR THE STATE OF CALIFORNIA DEPARTMENT OF TRANSPORTATION

Sajid Abbas
PROJECT ENGINEER

BRIDGE NO. 34-0006L/R
KILOMETER POST 13.9/14.3, 0.0/1.6

CU 04
EA 04-012021

STANDARD PRINTS BEARING EARLIER REVISION DATES

REVISION DATES (PRELIMINARY STAGE ONLY)

SHEET 297A OF

FILE => pr:\bb\04-012001\skyway\may2002\gnrl001a.dgn

USERNAME => V\gnrl001a PLOTTED => 07 OCT 102 TIME PLOTTED => 14:30:27

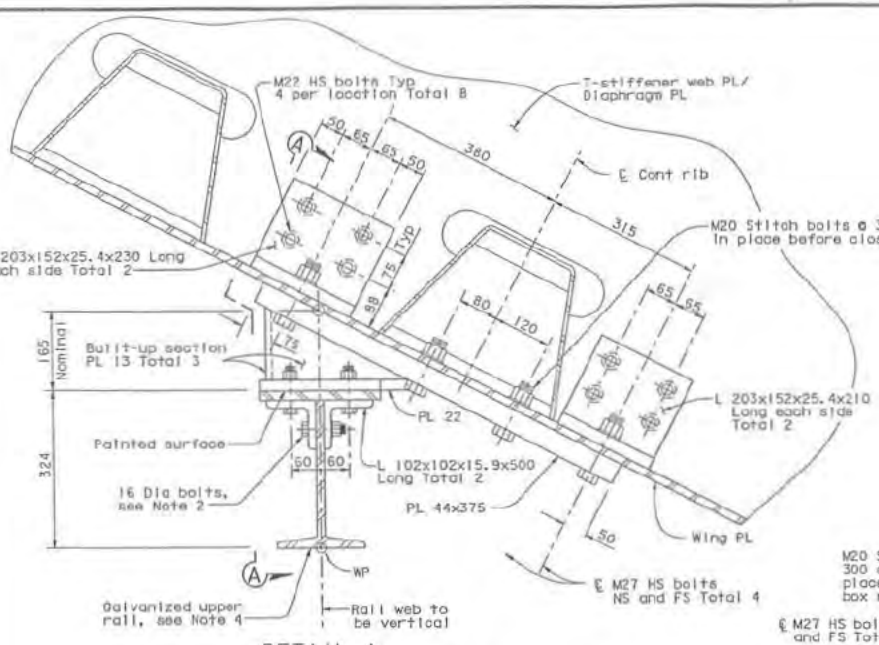

DETAIL A
1:5

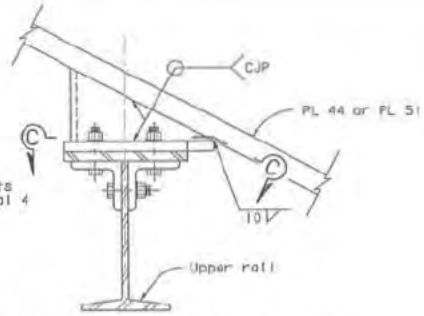

BUILT UP SECTION WELDING DETAILS
1:5

Note: Welds shown are typical for all upper rails.

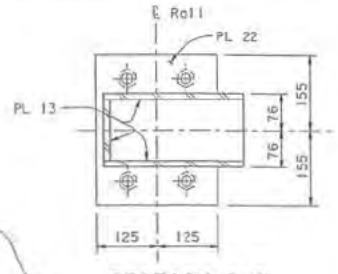

SECTION C-C
1:5

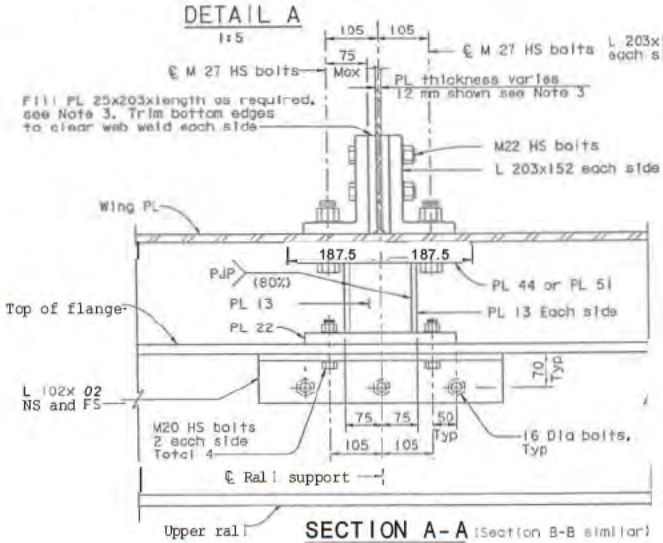

SECTION A-A (Section B-B similar)
1:5

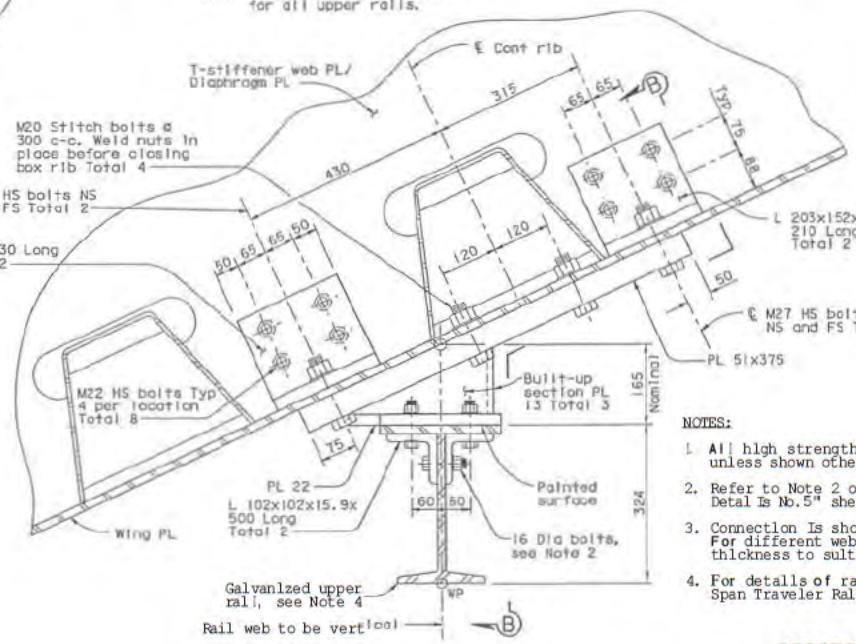

DETAIL B
1:5

NOTES:

1. All high strength (HS) bolts shall be A325 unless shown otherwise.
2. Refer to Note 2 on Transition Span Traveler Rail Detail No.5" sheet.
3. Connection is shown for web thickness of 12 mm. For different web thickness, adjust fill plate thickness to suit.
4. For details of rails and bolting, see "Transition Span Traveler Rail Details No.5" sheet.

ADDITIONAL SHEET

CONTRACT CHANGE ORDER NO. _____
SHEET 5 OF 12

ALL DIMENSIONS ARE IN MILLIMETERS UNLESS OTHERWISE SHOWN

DIST.	COUNTY	ROUTE	KILOMETER POST TOTAL PROJECT	SHEET NO.	TOTAL SHEETS
04	SF/Ala	80	13.9/14.3, 0.0/1.6	729B	978

Caltrans Metric

REGISTERED ENGINEER - CIVIL
6-4-01
PLANS APPROVAL DATE
The State of California or its officers or agents shall not be responsible for the accuracy or completeness of electronic copies of this plan sheet.

RICHARD MANZANARES PROFESSIONAL ENGINEER C 36842 Exp. 6/30/04 CIVIL STATE OF CALIFORNIA

T.Y. LIN / MOFFATT & NICHOL
825 BATTERY STREET
SAN FRANCISCO, CA 94111

Caltrans now has a web site! To get to the web site go to: http://www.dot.ca.gov/

H. El-Natur
DESIGN OVERSIGHT
SIGN OFF DATE 10/01/02

DESIGN	J. Otter	S. Shi/J. Leventini	
DETAILS	H. Li	J. Otter	
QUANTITIES	J. Leventini	S. Shi	

PREPARED FOR THE STATE OF CALIFORNIA DEPARTMENT OF TRANSPORTATION

Sajid Abbas
PROJECT ENGINEER

BRIDGE NO. 34-0006L/R
KILOMETER POST 13.9/14.3, 0.0/1.6

CU 04
EA 04-012021

SAN FRANCISCO OAKLAND BAY BRIDGE
EAST SPAN SEISMIC SAFETY PROJECT

SKYWAY STRUCTURES

TRANSITION SPAN TRAVELER RAIL DETAILS NO.2

DISREGARD PRINTS BEARING EARLIER REVISION DATES

SHEET 297B OF

Rev. Date: 5-18-99

ORIGINAL SCALE IN MILLIMETERS FOR REDUCED PLANS

FILE => p:\DD\04-012021\skyway\sky2302\str100201.dgn

LAST REVISION 07 OCT 02 TIME PLOTTED => 12:31:49

DIST.	COUNTY	ROUTE	KILOMETER POST TOTAL PROJECT	SHEET NO.	TOTAL SHEETS
04	SF/Alo	80	13.9/14.3, 0.0/1.6	729C	978

REGISTERED ENGINEER - CIVIL

6-4-01

PLANS APPROVAL DATE

The State of California or its officers or agents shall not be responsible for the accuracy or completeness of electronic copies of this plan sheet.

REGISTERED PROFESSIONAL ENGINEER Rafael Manzanares No. C 36842 Exp. 6/30/04 CIVIL STATE OF CALIFORNIA

T.Y. LIN / MOFFATT & NICHOL
825 BATTERY STREET
SAN FRANCISCO, CA 94111

Caltrans now has a web site! To get to the web site, go to: http://www.dot.ca.gov

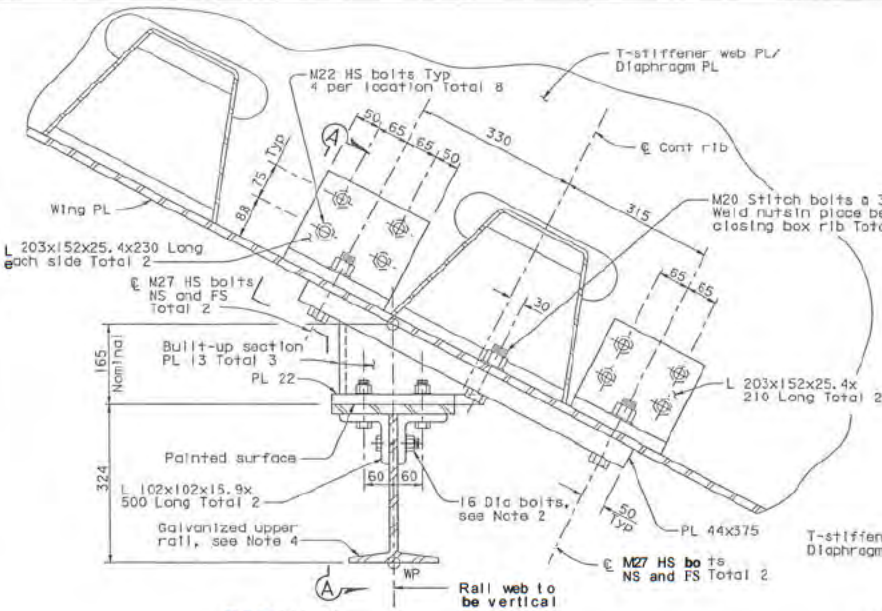

DETAIL C

1:5

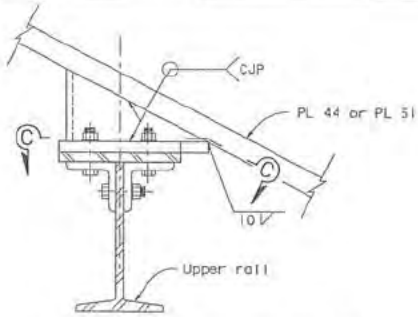

BUILT UP SECTION WELDING DETAILS

1:5

Note: Welds shown are typical for all upper rails.

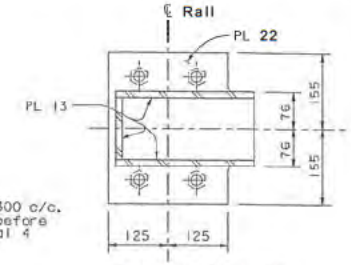

SECTION C-C

1:5

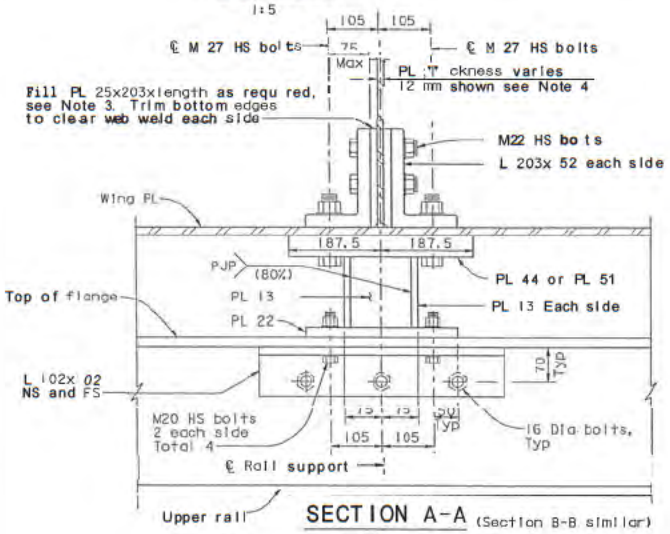

SECTION A-A (Section B-B similar)

1:5

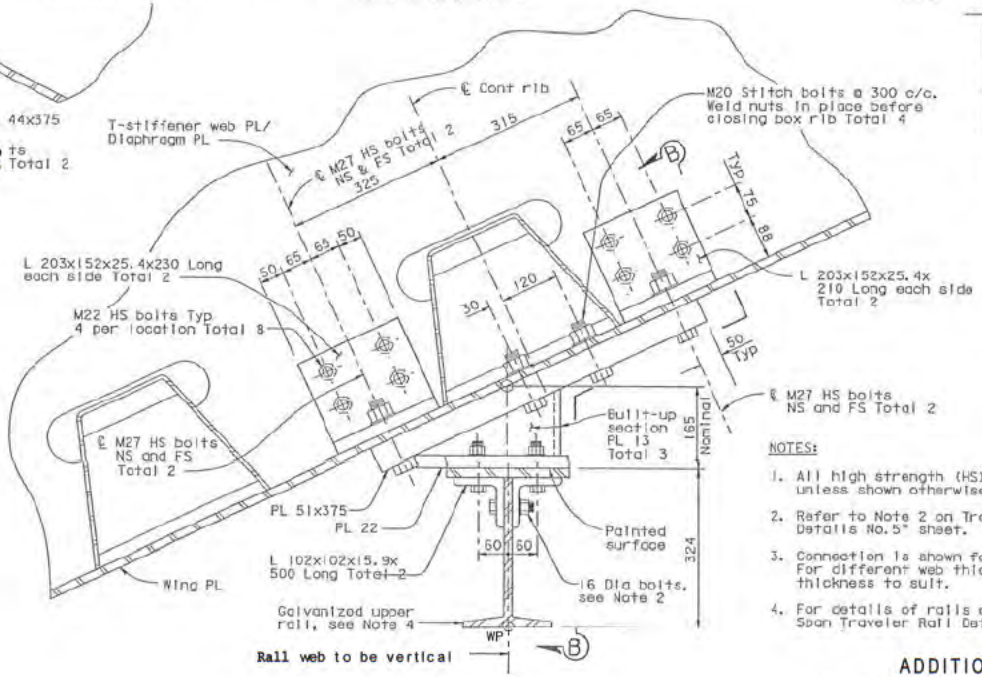

DETAIL D

1:5

NOTES:

1. All high strength (HS) bolts shall be A325 unless shown otherwise.
2. Refer to Note 2 on Transition Span Traveler Rail Details No.5" sheet.
3. Connection is shown for web thickness of 12 mm. For different web thickness, adjust fill plate thickness to suit.
4. For details of rails and bolting, see "Transition Span Traveler Rail Details No.5" sheet.

ADDITIONAL SHEET

CONTRACT CHANGE ORDER NO. 21
SHEET 6 OF 12

ALL DIMENSIONS ARE IN MILLIMETERS UNLESS OTHERWISE SHOWN

H. El-Netar
DESIGN OVERSIGHT
SIGN OFF DATE 10/01/02

	BY	CHECKED
DESIGN	J. Otter	S. Shi/J. Leventini
DETAILS	H. Li	J. Otter
QUANTITIES	J. Leventini	S. Shi

PREPARED FOR THE STATE OF CALIFORNIA DEPARTMENT OF TRANSPORTATION

Sajid Abbas
PROJECT ENGINEER

BRIDGE NO. 34-0006L/R
KILOMETER POST 13.9/14.3, 0.0/1.6

SAN FRANCISCO OAKLAND BAY BRIDGE
EAST SPAN SEISMIC SAFETY PROJECT

SKYWAY STRUCTURES

TRANSITION SPAN TRAVELER RAIL DETAILS NO.3

SHEET 297C

CU 04
EA 04-012021

ORIGINAL SCALE IN MILLIMETERS FOR REDUCED PLANS 0 10 20 30 40 50 60 70 80 90 100

DISREGARD PRINTS BEARING EARLIER REVISION DATES

REVISION DATES (PRELIMINARY STAGE ONLY)

FILE => p:\bb\04-012001\skyway\may2002\akr1d03a.dgn

USERNAME => VIgnacioVasquez PLOTTED => 07 Oct 02 TIME PLOTTED => 12:33:09

DIST.	COUNTY	ROUTE	KILOMETER POST TOTAL PROJECT	SHEET NO.	TOTAL SHEETS
04	SF/Alc	80	13.9/14.3, 0.0/1.6	729D	976

REGISTERED ENGINEER - CIVIL

6-4-01

PLANS APPROVAL DATE

The State of California or its officers or agents shall not be responsible for the accuracy or completeness of electronic copies of this plan sheet.

REGISTERED PROFESSIONAL ENGINEER Rafael Manzanares No. C 36842 Exp. 6/30/04 CIVIL STATE OF CALIFORNIA

T.Y. LIN / MOFFATT & NICHOL
825 BATTERY STREET
SAN FRANCISCO, CA 94111

Caltrans now has a web site! To get to the web site, go to: http://www.dot.ca.gov

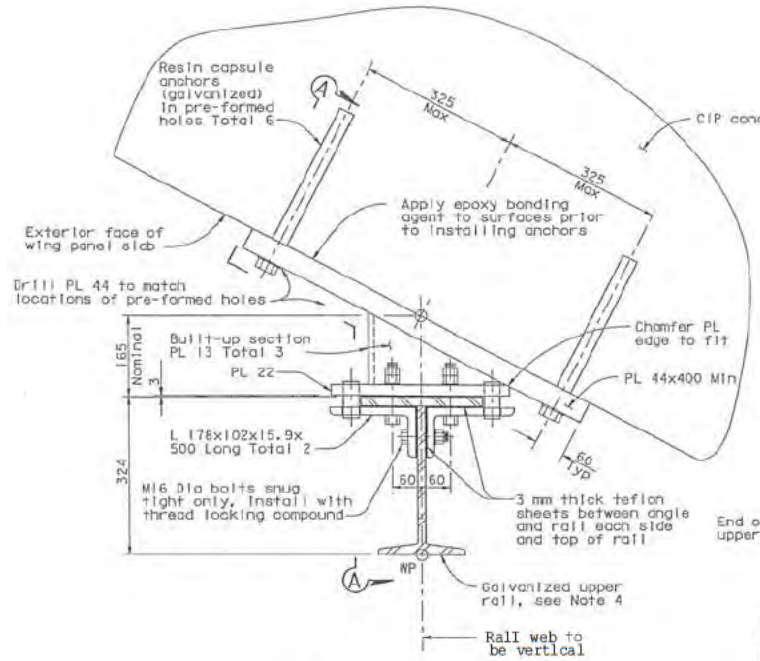

UPPER RAIL SUPPORT DETAILS AT CIP CONCRETE CLOSURE

1:5

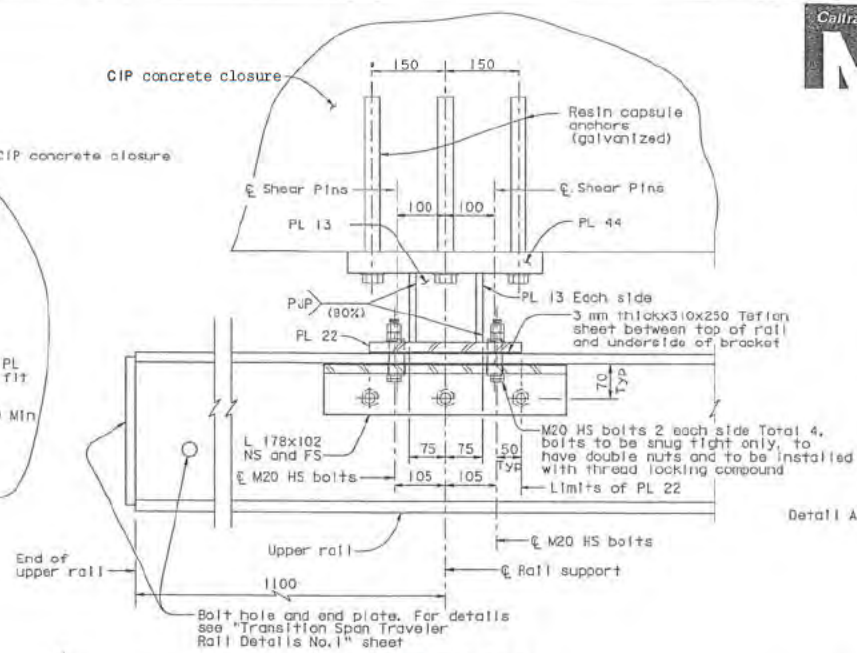

SECTION A-A

1:5

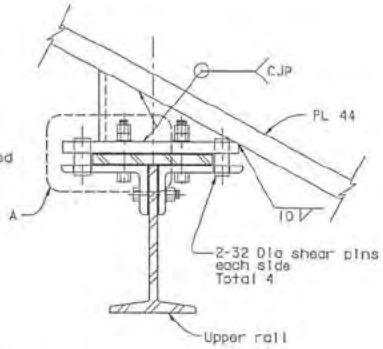

BUILT UP SECTION WELDING DETAILS

1:5

Built-up section to be galvanized

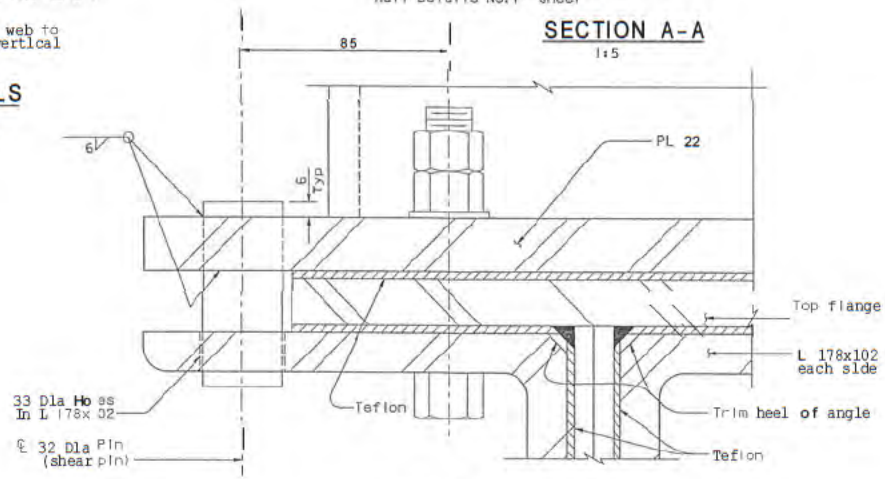

DETAIL A

1:1

ANCHOR NOTES:

1. Minimum working loads per resin capsule anchor (galvanized) shall be as follows:

   100 kN in tension
   60 kN in shear
   Shear and tension applied non-concurrently

2. Safety factor against listed working loads shall be 3.0 minimum.

3. Anchors shall be installed in accordance with the manufacturer's recommendations.

NOTES:

1. All high strength (HS) bolts shall be A325 unless shown otherwise.
2. Details similar at all rail support locations within concrete closure.
3. For locations of upper rail work points (WP), see "Transition Span Traveler Details No. 1" sheet.
4. For details of rail ties and bolting, see "Transition Span Traveler Rail Details No.5" sheet.

ADDITIONAL SHEET

CONTRACT CHANGE ORDER NO. 21
SHEET 7 OF 12

ALL DIMENSIONS ARE IN MILLIMETERS UNLESS OTHERWISE SHOWN

SAN FRANCISCO OAKLAND BAY BRIDGE
EAST SPAN SEISMIC SAFETY PROJECT

SKYWAY STRUCTURES

TRANSITION SPAN TRAVELER RAIL DETAILS NO. 4

DESIGN	J. Otter	S. Shi/J. Leventini	
DETAILS	H. Li	J. Otter	
QUANTITIES	J. Leventini	S. Shi	

H. El-Natur, DESIGN OVERSIGHT

SIGN OFF DATE 10/01/02

Rev. Date: 5-16-96

PREPARED FOR THE STATE OF CALIFORNIA DEPARTMENT OF TRANSPORTATION

Sajid Abbas, PROJECT ENGINEER

BRIDGE NO. 34-0006L/R

KILOMETER POST 13.9/14.3, 0.0/1.6

CU 04
EA 04-012021

DISCARD PRIOR REVISIONS EARLIER REVISION DATES

REVISION DATES (PRELIMINARY STAGE ONLY)

SHEET 2970 OF

ORIGINAL SCALE IN MILLIMETERS FOR REDUCED PLANS

FILE => pr\bb\04-012001\skyway\may2002\skrl0d1a.dgn

USERNAME => Y\pnatron DATE PLOTTED => 07 OCT 102 TIME PLOTTED => 12:34:26

DIST.	COUNTY	ROUTE	KILOMETER POST TOTAL PROJECT	SHEET NO.	TOTAL SHEETS
04	SF/Ala	80	13.9/14.3. 0.0/1.6	729E	978

REGISTERED ENGINEER - CIVIL

6-4-01

PLANS APPROVAL DATE

The State of California or its officers or agents shall not be responsible for the accuracy or completeness of electronic copies of this plan sheet.

REGISTERED PROFESSIONAL ENGINEER Rafael Manzanares No. C 36842 Exp. 6/30/04 CIVIL STATE OF CALIFORNIA

T.Y. LIN / MOFFATT & NICHOL
825 BATTERY STREET
SAN FRANCISCO, CA 94111

Caltrans now has a web site! To get to the web site, go to: http://www.dot.ca.gov

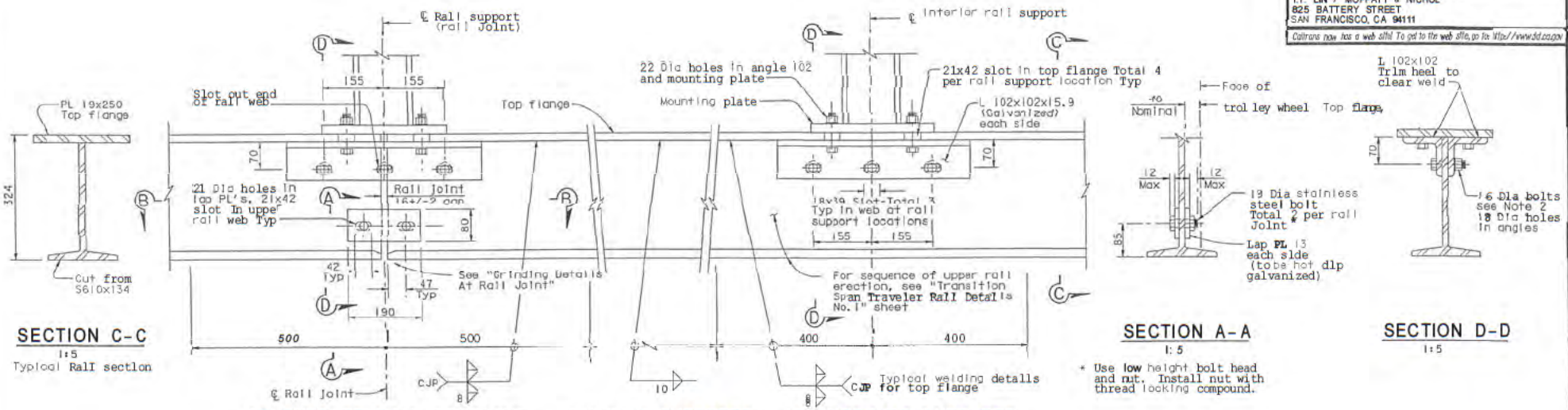

SECTION C-C
1:5
Typical Rail section

AT ENDS OF RAIL SECTIONS
Slot and hole sizes as for interior supports UNO

BETWEEN SUPPORTS
ELEVATION
1:5

AT INTERIOR SUPPORTS

SECTION A-A
1:5

* Use low height bolt head and nut. Install nut with thread locking compound.

SECTION D-D
1:5

(RAIL FABRICATION AND ATTACHMENT DETAILS)

Note: Details shown for slotted holes, rail joint and welding are typical for all upper rails.

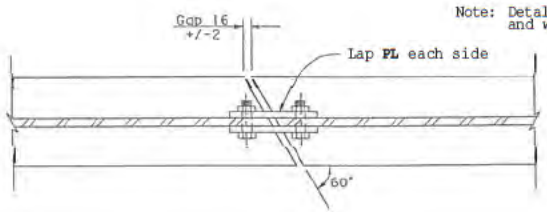

SECTION B-B
1:5
Note: Details of rail joint typical.

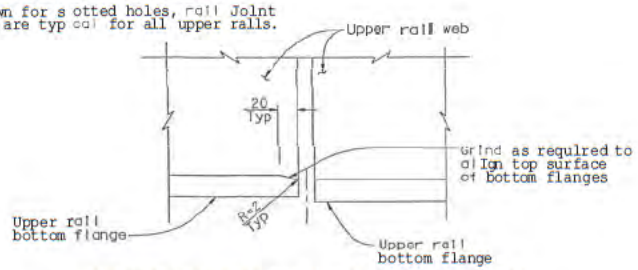

GRINDING DETAILS AT RAIL JOINT
1: 2.5

NOTES:

1. Rail and angles 102x102x15.9 are to be hot dip galvanized.
2. 16 diameter bolts are to be
   - Fully torqued at interior supports.
   - Done up snug tight only with thread locking compound at rail joint supports.
3. Rail material (S610 and top flange plate) to be ASTM A572 Grade 50 (Fy=345 MPa).

ADDITIONAL SHEET

CONTRACT CHANGE ORDER NO. 21
SHEET 8 OF 12

ALL DIMENSIONS ARE IN MILLIMETERS UNLESS OTHERWISE SHOWN

SAN FRANCISCO OAKLAND BAY BRIDGE
EAST SPAN SEISMIC SAFETY PROJECT

SKYWAY STRUCTURES

TRANSITION SPAN TRAVELER RAIL DETAILS NO. 5

H. El-Natur, DESIGN OVERSIGHT, SIGN OFF DATE 10/27/02	DESIGN: J. Otter	CHECKED: S. Shi/J. Leventini	PREPARED FOR THE STATE OF CALIFORNIA DEPARTMENT OF TRANSPORTATION
	DETAILS: H. Li	CHECKED: J. Otter	
	QUANTITIES: J. Leventini	CHECKED: S. Shi	

Sajid Abbas, PROJECT ENGINEER

BRIDGE NO. 34-0006L/R
KILOMETER POST 13.9/14.3. 0.0/1.6

CU 04
EA 04-012021

SHEET 297E

Rev. Date: 2-18-98

ORIGINAL SCALE IN MILLIMETERS FOR REDUCED PLANS

(FILE => pr\bb\04-012021\skyway\may2002\atr1d05b.dgn)

USERNAME => tlignatova&NATE PLOTTED => 07 OCT 102 TIME PLOTTED => 12:35:27

DIST.	COUNTY	ROUTE	KILOMETER POST TOTAL PROJECT	SHEET NO.	TOTAL SHEETS
04	SF/Ala	80	13.9/14.3, 0.0/1.6	729F	978

REGISTERED ENGINEER - CIVIL

6-4-01

PLANS APPROVAL DATE

The State of California or the officers or agents shall not be responsible for the accuracy or completeness of electronic copies of this plan sheet.

Rafael Manzanarez No. C 36842 Exp. 6/30/04 CIVIL STATE OF CALIFORNIA

T.Y. LIN / MOFFATT & NICHOL
825 BATTERY STREET
SAN FRANCISCO, CA 94111

Caltrans now has a web site! To get to the web site, go to: http://www.dot.ca.gov

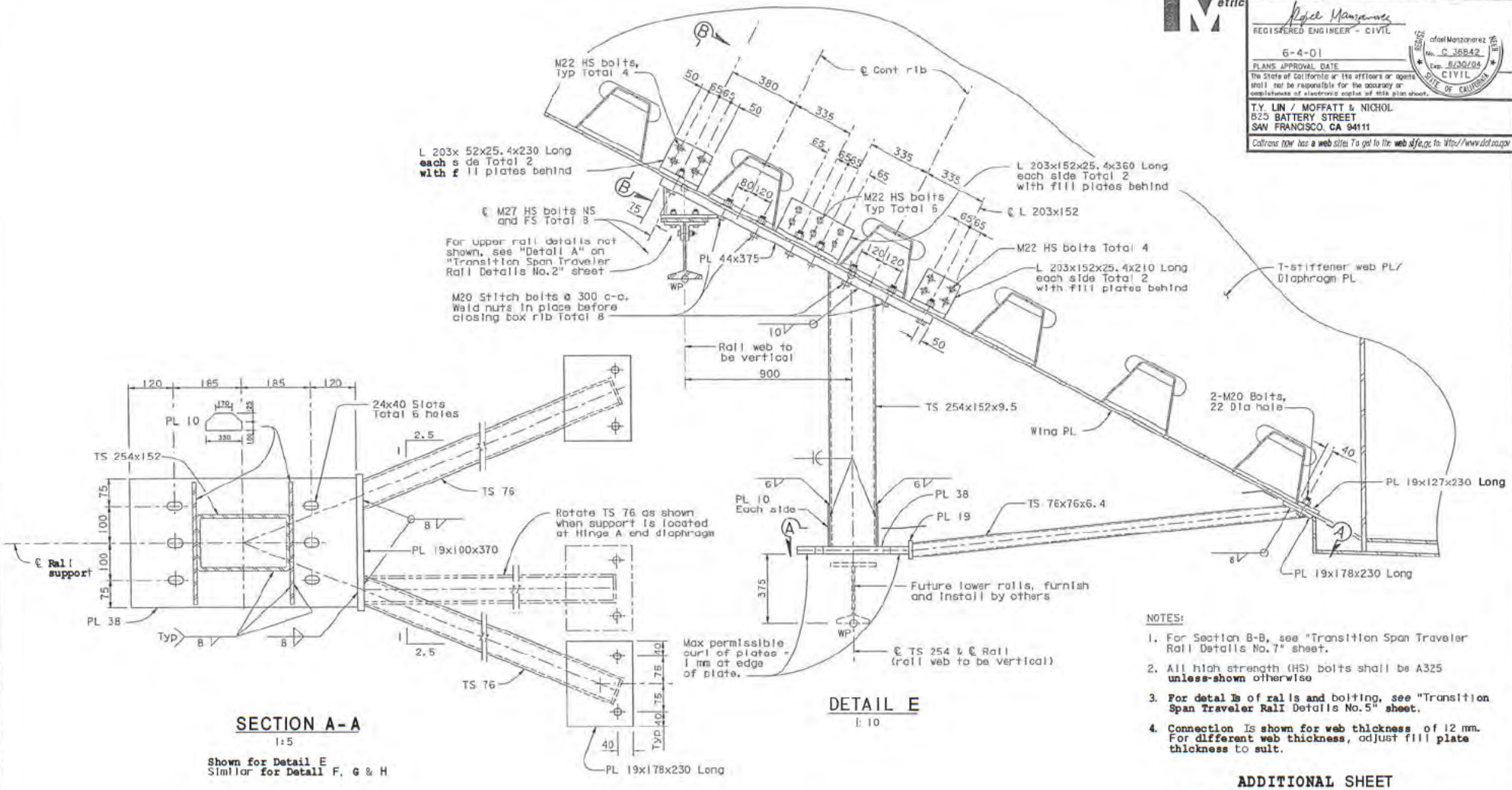

NOTES:

1. For Section B-B, see "Transition Span Traveler Rail Details No.7" sheet.
2. All high strength (HS) bolts shall be A325 unless shown otherwise
3. For details of rails and bolting, see "Transition Span Traveler Rail Details No.5" sheet.
4. Connection is shown for web thickness of 12 mm. For different web thickness, adjust fill plate thickness to suit.

ADDITIONAL SHEET

CONTRACT CHANGE ORDER NO. 21
SHEET 9 OF 12

ALL DIMENSIONS ARE IN MILLIMETERS UNLESS OTHERWISE SHOWN

DESIGN	BY J. Otter	CHECKED S. Shi/J. Leventini	PREPARED FOR THE STATE OF CALIFORNIA DEPARTMENT OF TRANSPORTATION
DETAILS	BY R. Li	CHECKED J. Otter	
QUANTITIES	BY J. Leventini	CHECKED S. Shi	

DESIGN OVERSIGHT
SIGN OFF DATE 10/01/02

Rev. Date: 5-10-95

ORIGINAL SCALE IN MILLIMETERS FOR REDUCED PLANS 0 10 20 30 40 50 60 70 80 90 100

Sajid Abbas
PROJECT ENGINEER

BRIDGE NO. 34-0006L/R
KILOMETER POST 13.9/14.3, 0.0/1.6

CU 04
EA 04-012021

DISREGARD PRINTS BEARING EARLIER REVISION DATES

REVISION DATES (PRELIMINARY STAGE ONLY)

SHEET 297F OF

FILE => p:\bb\04-012001\skyway\may2002\ckrtd06a.dgn

SAN FRANCISCO OAKLAND BAY BRIDGE
EAST SPAN SEISMIC SAFETY PROJECT

SKYWAY STRUCTURES

TRANSITION SPAN TRAVELER RAIL DETAILS NO. 6

DIST.	COUNTY	ROUTE	KILOMETER POST TOTAL PROJECT	SHEET NO.	TOTAL SHEETS
04	SF/Ala	80	13.9/14.3, 0.0/1.6	729G	978

REGISTERED ENGINEER - CIVIL

6-4-01

PLANS APPROVAL DATE

The State of California or its officers or agents shall not be responsible for the accuracy or completeness of electronic copies of this plan sheet.

REGISTERED PROFESSIONAL ENGINEER Rafael Manzanares No. C 36842 Exp. 6/30/04 CIVIL STATE OF CALIFORNIA

T.Y. LIN / MOFFATT & NICHOL
825 BATTERY STREET
SAN FRANCISCO, CA 94111

Caltrans now has a web site! To get to its web site, go to: http://www.dot.ca.gov

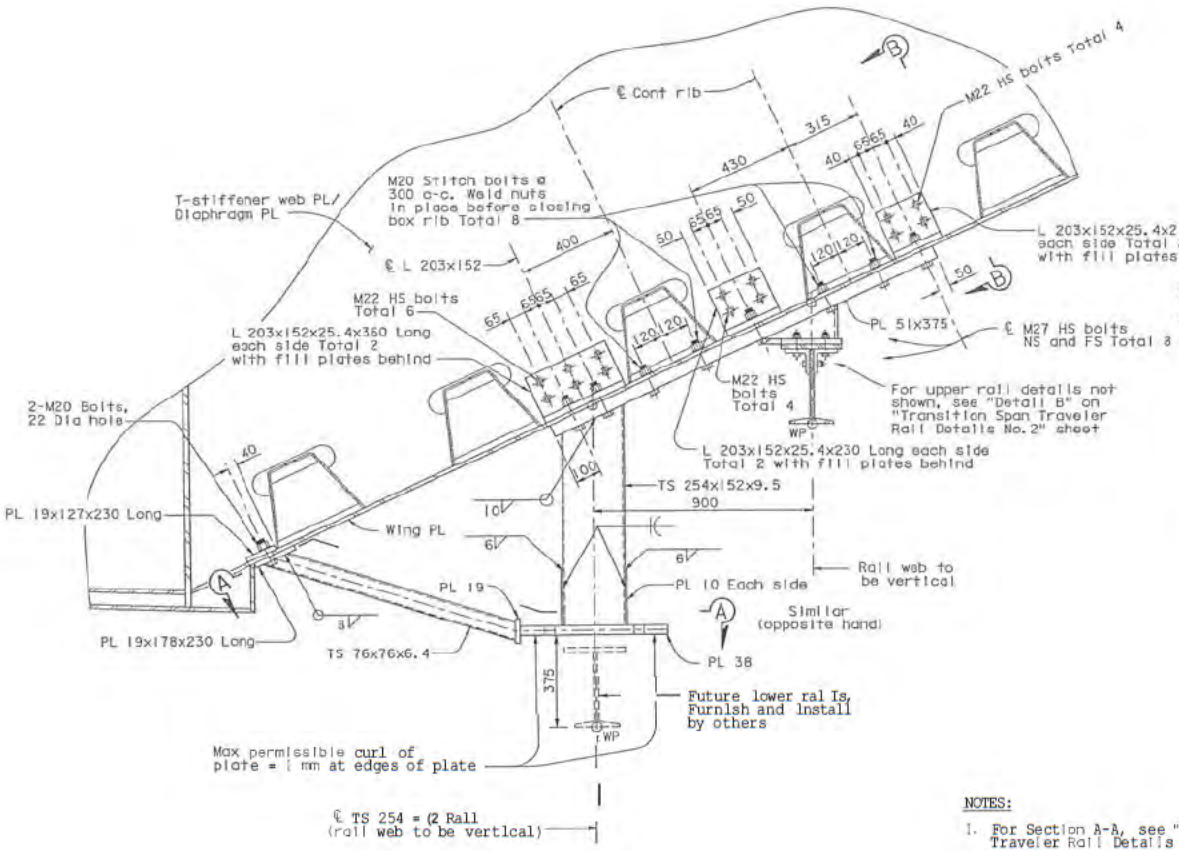

DETAIL F

1:10

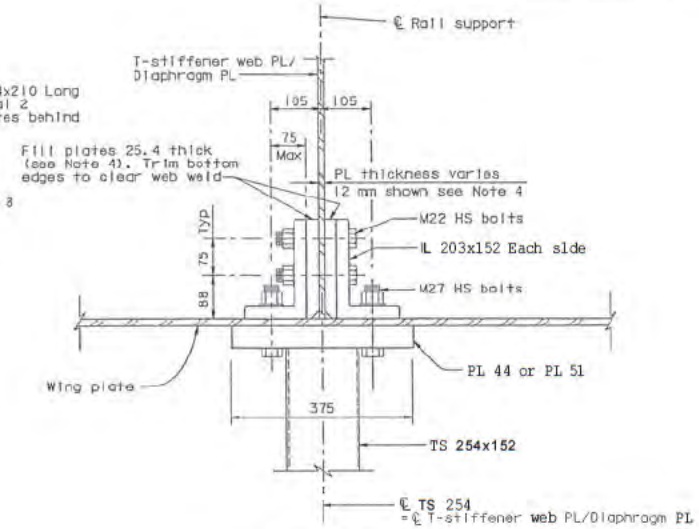

SECTION B-B

1:5

Note: Details shown are typical at all L 203 support locations. Built-up section not shown for clarity.

NOTES:

1. For Section A-A, see "Transition Span Traveler Rail Details No. 6" sheet.
2. All high strength (HS) bolts shall be A325 unless shown otherwise.
3. For detail of rail Is and bolting, see "Transition Span Traveler Rail Detail Is No. 5" sheet.
4. Connection is shown for web thickness of 12 mm. For different web thickness, adjust fill plate thickness to suit.

ADDITIONAL SHEET

CONTRACT CHANGE ORDER NO. 21
SHEET 10 OF 12

ALL DIMENSIONS ARE IN MILLIMETERS UNLESS OTHERWISE SHOWN

SAN FRANCISCO OAKLAND BAY BRIDGE
EAST SPAN SEISMIC SAFETY PROJECT

SKYWAY STRUCTURES

TRANSITION SPAN TRAVELER RAIL DETAILS NO. 7

H El-Natur
DESIGN OVERSIGHT
SIGN OFF DATE 10/27/02

	BY	CHECKED
DESIGN	J. Otter	S. Shi/J. Leventini
DETAILS	R. Li	J. Otter
QUANTITIES	J. Leventini	S. Shi

PREPARED FOR THE STATE OF CALIFORNIA DEPARTMENT OF TRANSPORTATION

Salid Abbas
PROJECT ENGINEER

BRIDGE NO. 34-0006L/R
KILOMETER POST 13.9/14.3, 0.0/1.6

CU 04
EA 04-012021

SHEET 297G

Rev. Date: 5-18-98

ORIGINAL SCALE IN MILLIMETERS FOR RECORD PLANS

FILE => pr\bb\04-012001\skyway\may2002\ckr1d07a.dgn

USERNAME => yingstove DATE PLOTTED => 07 OCT 102 TIME PLOTTED => 12:34:45

DIST.	COUNTY	ROUTE	KILOMETER POST TOTAL PROJECT	SHEET NO.	TOTAL SHEETS
04	SF/Ala	80	13.9/14.3, 0.0/1.6	729H	978

Caltrans Metric

REGISTERED ENGINEER - CIVIL

6-4-01

PLANS APPROVAL DATE

The State of California or its officers or agents shall not be responsible for the accuracy or completeness of electronic copies of this plan sheet.

REGISTERED PROFESSIONAL ENGINEER Rafael Manzanares No. C 36842 Exp. 6/30/04 CIVIL STATE OF CALIFORNIA

T.Y. LIN / MOFFATT & NICHOL
825 BATTERY STREET
SAN FRANCISCO, CA 94111

Caltrans now has a web site! To get to the web site, go to: http://www.dot.ca.gov

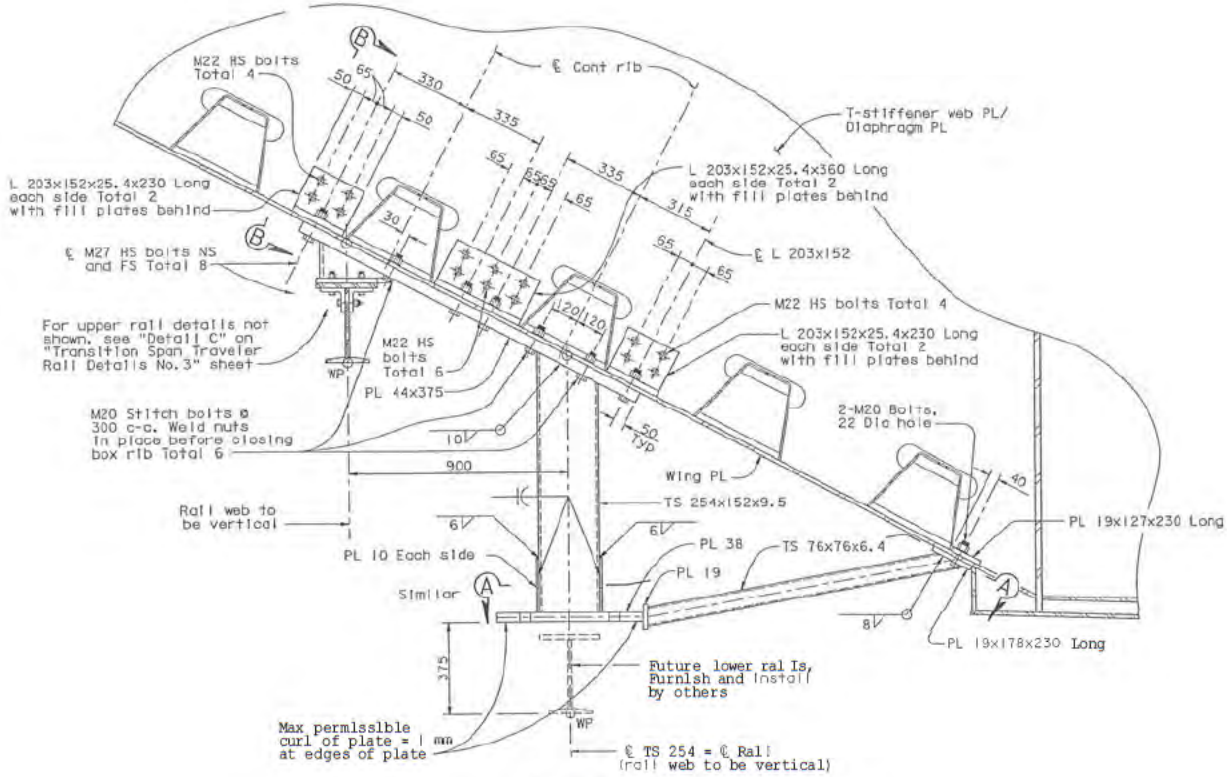

DETAIL G

1: 10

NOTES:

1. For Section A-A, see "Transition Span Traveler Rail Details No. 6" sheet.
2. For Section B-B, see "Transition Span Traveler Rail Details No. 7" sheet.
3. For details of rails and bolting, see "Transition Span Traveler Rail Details No.5" sheet.
4. Connection Is shown for web thickness of 12 mm. For different web thickness, adjust fill plate thickness to suit.
5. All high strength (HS) bolts shall be A325 unless shown otherwise.

ADDITIONAL SHEET

CONTRACT CHANGE ORDER NO. 21
SHEET 11 OF 12

ALL DIMENSIONS ARE IN MILLIMETERS UNLESS OTHERWISE SHOWN

SAN FRANCISCO OAKLAND BAY BRIDGE
EAST SPAN SEISMIC SAFETY PROJECT

SKYWAY STRUCTURES

TRANSITION SPAN TRAVELER RAIL DETAILS NO.8

H. El-Natur
DESIGN OVERSIGHT
SIGN OFF DATE 10/01/02

DESIGN	J. Otter	CHECKED	S. Shi/J. Leventini
DETAILS	H. Li	PLOTTED	J. Otter
QUANTITIES	J. Leventini	CHECKED	S. Shi

PREPARED FOR THE STATE OF CALIFORNIA DEPARTMENT OF TRANSPORTATION

Sajid Abbas
PROJECT ENGINEER

BRIDGE NO. 34-0006L/R
KILOMETER POST 13.9/14.3, 0.0/1.6

CU 04
EA 04-012021

SIDEBAND PRINTS BEARING EARLIER REVISION DATES

REVISION DATES (PRELIMINARY STAGE ONLY)

SHEET 297H OF

Rev. Date 3-12-98

ORIGINAL SCALE IN MILLIMETERS FOR REDUCED PLANS 0 10 20 30 40 50 60 70 80 90 100

FILE => p:\bb\04-012021\skyway\way2002\ah\1608a.dgn

GEOMAC => P:\PGM\MAGE PLOTTED => 01 OCT 102 TIME PLOTTED => 12:39:56

DIST.	COUNTY	ROUTE	KILOMETER POST TOTAL PROJECT	SHEET NO.	TOTAL SHEETS
04	SF/Ala	80	13.9/14.3. 0.0/1.6	729I	978

REGISTERED ENGINEER - CIVIL

6-4-01

PLANS APPROVAL DATE

The State of California or its officers or agents shall not be responsible for the accuracy or completeness of electronic copies of this plan sheet.

Rafael Manzanares No. C 36842 Exp. 6/30/04 CIVIL STATE OF CALIFORNIA

T.Y. LIN / MOFFATT & NICHOL
825 BATTERY STREET
SAN FRANCISCO, CA 94111

Caltrans now has a web site! To get to the web site, go to: http://www.dot.ca.gov

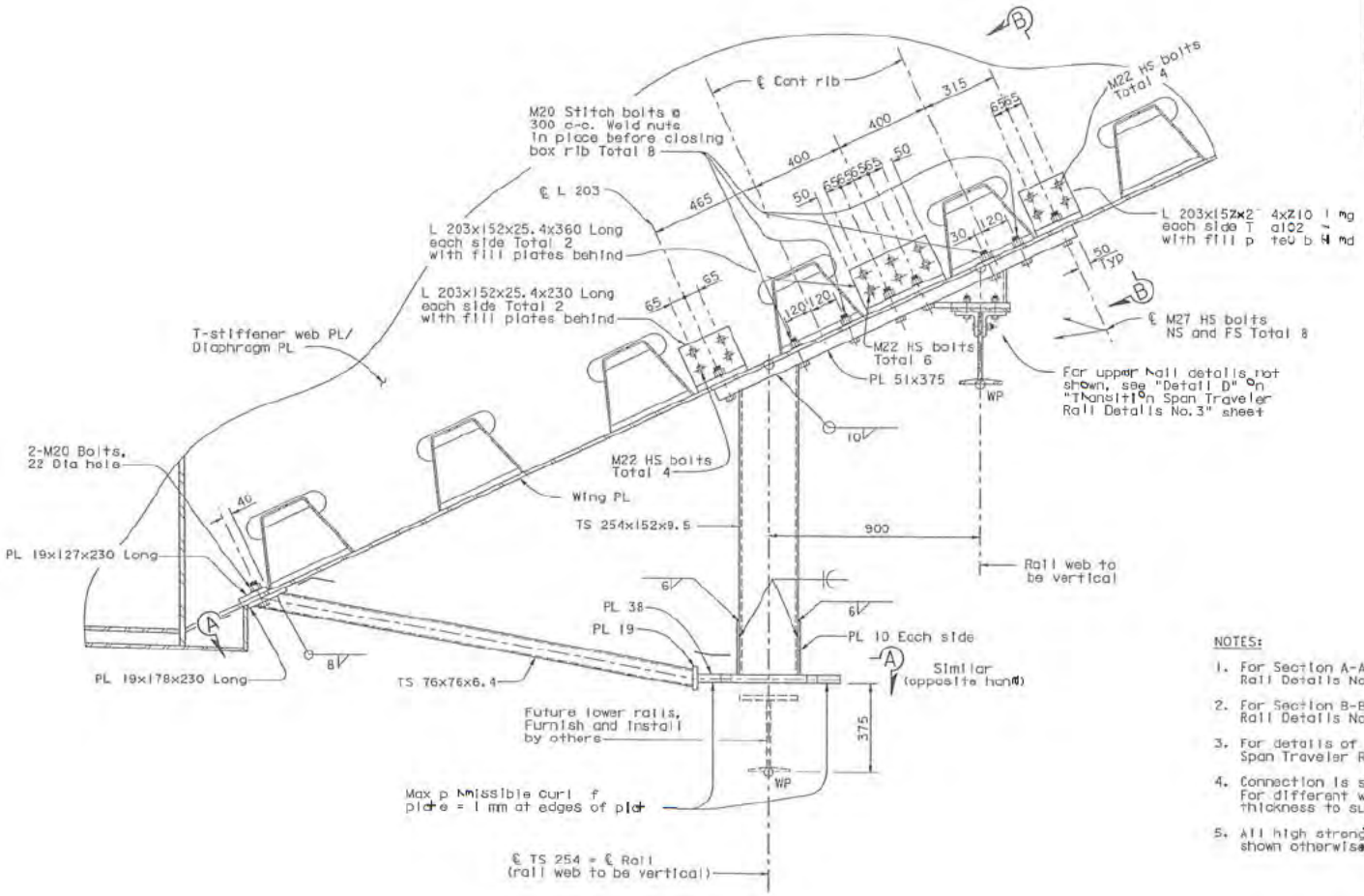

DETAIL H

1:10

NOTES:

1. For Section A-A, see "Transition Span Traveler Rail Details No. 6" sheet.
2. For Section B-B, see "Transition Span Traveler Rail Details No. 7" sheet.
3. For details of rails and bolting, see "Transition Span Traveler Rail Details No. 5" sheet.
4. Connection is shown for web thickness of 12 mm. For different web thickness, adjust fill plate thickness to suit.
5. All high strength (HS) bolts shall be A325 unless shown otherwise.

ADDITIONAL SHEET

CONTRACT CHANGE ORDER NO 21
SHEET 12 OF 12

ALL DIMENSIONS ARE IN MILLIMETERS UNLESS OTHERWISE SHOWN

H. El-Natur
DESIGN OVERSIGHT
SIGN OFF DATE 10/07/02
Rev. Date 8-16-06

	BY	CHECKED
DESIGN	J. Otter	S. Shi/J. Leventini
DETAILS	H. Li	J. Otter
QUANTITIES	J. Leventini	S. Shi

PREPARED FOR THE STATE OF CALIFORNIA DEPARTMENT OF TRANSPORTATION

Sajid Abbas
PROJECT ENGINEER

BRIDGE NO. 34-0006L/R
KILOMETER POST 13.9/14.3. 0.0/1.6

SAN FRANCISCO OAKLAND BAY BRIDGE
EAST SPAN SEISMIC SAFETY PROJECT

SKYWAY STRUCTURES

TRANSITION SPAN TRAVELER RAIL DETAILS NO. 9

ORIGINAL SCALE IN MILLIMETERS FOR REDUCED PLANS 0 10 20 30 40 50 60 70 80 90 100

CU 04
EA 04-012021

DISCARD PRINTS BEARING EARLIER REVISION DATES 10/10/02

REVISION DATES (PRELIMINARY STAGE ONLY)

SHEET 297I OF

FILE => p:\bp\04-012001\skyway\sby2002\ckrl1099c.dgn

USERNAME => V1gnanaraj@DATE PLOTTED => 07 Oct 102 TIME PLOTTED => 12:42:19

CCO STATUS FOR 04 - 012024 - 021
STATUS IS ACTIVE 09-11-03

NET MONEY CHANGE: 368,090.00
ANTICIPATED CHANGES: 0.00
EST. FINAL COST: 368,090.00

TRANSITION SPAN TRAVELER RAIL

WORK TYPE	AMOUNT AUTHORIZED	** AMOUNTS EXPENDED ** TO-DATE	LAST EST.	SINCE LAST EST.
EW @ LS(+)	368,090.00	0.00	0.00	0.00

CONTRACT ITEM TOTAL: 0.00 NO ITEM RECORDS FOR THIS CCO

CCO SUPPLEMENTS - PRESS PF5

NEW NUMBER => USE TOP LINE + ENTER EXIT ==> PRESS PF3

CCO STATUS FOR 04 - 012024 - 021 * * SUPPLEMENT SCREEN * *

SUPPLEMENT	DESCRIPTION			APPROVAL DATE
00	TRANSITION SPAN TRAVELER RAIL			09-11-03
	NET SUPPL:	$368,090.00	NET ITEM:	$0.00
	TIME EXTENSION DAYS:	+000	CATEGORY:	CHPR

END OF SUPPLEMENT RECORDS
CCO MAIN SCREEN - PRESS PF1

EXIT ==> PRESS PF3

STATE OF CALIFORNIA - DEPARTMENT OF TRANSPORTATION

CONTRACT CHANGE ORDER MEMORANDUM

DATE: 7/25/2003 Page 1 of 1

TO: PETER SIEGENTHALER / COE D.	FILE: E.A. 04 - 012024
FROM: COED.	CO-RTE-PM 04-SF,Ala-80-13.9/14.3,0.0/1.6
	FED. NO. ACIM-080-1(085)8N
CCO#: 21 SUPPLEMENT#: 0 Category Code: CHPR	CONTINGENCY BALANCE (incl. this change) $55,032,812.20
COST: $368,090.00 INCREASE ☑ DECREASE ☐	HEADQUARTERS APPROVAL REQUIRED? ☐ YES ☐ NO
SUPPLEMENTAL FUNDS PROVIDED: $0.00	IS THIS REQUEST IN ACCORDANCE WITH ENVIRONMENTAL DOCUMENTS? ☐ YES ☐ NO
CCO DESCRIPTION: Transition Span Traveler Rail	**PROJECT DESCRIPTION:** REPLACE SFOBB EAST SPAN

LOCATION: IN SAN FRANCISCO AND ALAMEDA COUNTIES IN SAN FRANCISCO AND OAKLAND FROM 1.3 KM EAST OF THE YERBA BUENA ISL

THIS CHANGE ORDER PROVIDES FOR:

Construct the upper transition span traveler rail for the eastbound and westbound transition spans of the SFOBB East Span Skyway, Bridge Nos. 34-006L/R and furnish the brackets, bolts, and rail for the CIP transition closure that is to be installed in a future contract. The lower traveler rail will also be furnished and installed in a future contract.

Contract plan sheets revised by this change order are 712R1 and 713R1. New plan sheets are 712R2, 713R2, 729A, 729B, 729C, 729D, 729E, 729F, 729G, 729H and 7291.

Attached is a copy of a October 08, 2002 memo from Mr. Hasan El-Natur of the Division of Structures to Mr. Doug Coe specifying the changes. This change order is required to construct the transition span traveler rail as the contract plans were not complete when the project was advertised.

For this extra work, the contractor will be paid the agreed lump sum of $368,090.00. This sum constitutes full and complete compensation including all markups for this change. An analysis of the Contractor's proposal was determined to be fair and reasonable based on a force account analysis prepared by the Engineer. The Contractor's proposal is on file in the project records.

No adjustment of contract time is warranted, as this change does not affect the controlling operation.

Maintenance concurrence was obtained from Mr. Allan Chow of Maintenance on March 24, 2003.
FHWA concurrence was obtained from Ms. Nancy Bobb on March 19,2003.

CONCURRED BY:		
Construction Engineer:	Douglas Coe	Date 8-15-03
Bridge Engineer:		Date
FHWA Representative:	Nancy Bobb	Date3/19/2003
Project Engineer:		Date
Other (specify): Allan Chow- CT Maint		Date3/24/2003
Hasan El-Natur- CT Design		Date10/8/2002
		Date
District Prior Approval By:	Patrick Packard	Date 7/4/03
HQ (Issue Approve) By:	Perry Mayer	Date ~~3/5/2003~~
Resident Engineer's Signature		Date 8-15-03

ESTIMATE OF COST

ITEMS	THIS REQUEST	TOTAL TO DATE
AGREED PRICE	$368,090.00	$368,090.00
ADJUSTMENT	$0.00	$0.00
TOTAL	$368,090.00	$368,090.00

FEDERAL PARTICIPATION

☑ PARTICIPATING ☐ PARTICIPATING IN PART ☐ NONE
☐ NON-PARTICIPATING (MAINTENANCE) ☐ NON-PARTICIPATING

FEDERAL SEGREGATION (if more than one Funding Source or P.I.P. type)
☑ CCO FUNDED PER CONTRACT ☐ CCO FUNDED AS FOLLOWS

FEDERAL FUNDING SOURCE	PERCENT

STATE OF CALIFORNIA - DEPARTMENT OF TRANSPORTATION

CONTRACT CHANGE ORDER

Change Requested by: Engineer

CCO: 22	Suppl. No. 0	Contract No. 04 - 012024	Road 04-SF,Ala-80-13.9/14.3,0.0/1.6	FED. AID LOC.: ACIM-080-1(085)8N

To: KIEWIT / FCI / MANSON a JV

You are directed to make the following changes from the plans and specifications or do the following described work not included in the plans and specifications for this contract. ***NOTE: This change order is not effective until approved by the Engineer.***

Description of work to be done, estimate of quantities and prices to be paid. (Segregate between additional work at contract price, agreed price and force account.) Unless otherwise stated, rates for rental of equipment cover only such time as equipment is actually used and no allowance will be made for idle time. This last percentage shown is the net accumulated increase or decrease from the original quantity in the Engineer's Estimate.

Extra Work at Lump Sum:

Furnish 257.5 meters of 102-mm schedule 40 galvanized steel casing, threaded on both ends, and couplings for the Seismic Monitoring System on the SFOBB - East Span Skyway, Bridge Nos. 34-0006 L/R as shown on revised contract plan sheets 404R1, 410R1, 411R1, 412R1, 413R1, and 500R1 of 978 (pages 2 through 7 of this change order).

The Contractor shall construct the seismic monitoring system with the requirements and placement procedures in the Special Provisions and Standard Specifications and in accordance with the changes below.

Special Provisions Section 10-3.16 Strong Motion Detection System is amended as follows:
1. Item 1.c. Steel downhole casings under "Material" on page 378 shall be deleted.
2. The second paragraph under "Testing" on page 381 shall be deleted.

The Contractor agrees to accept the agreed lump sum amount $7,631.00 for this change. This sum constitutes full compensation, including markups, for all direct and indirect costs, all associated project impacts, and Time Related Overhead (TRO) expenses.

Cost of Extra Work at Agreed Lump Sum $7,631.00

Estimated Cost: Increase ☑ Decrease ☐ $7,631.00

By reason of this order the time of completion will be adjusted as follows: 0 days

Submitted by		
Signature	Resident Engineer: COE D.	Date 12-4-03
Approval Recommended by		
Signature	Construction Engineer: COE D.	Date 12-4-03
Engineer Approval by		
Signature	(Print name and title) PETER SIEGENTHALER - Chief	Date 2-24-04

We the undersigned contractor, have given careful consideration to the change proposed and agree, if this proposal is approved, that we will provide all equipment, furnish the materials, except as may otherwise be noted above, and perform all services necessary for the work above specified, and will accept as full payment therefor the prices shown above.

NOTE: If you, the contractor, do not sign acceptance of this order, your attention is directed to the requirements of the specifications as to proceeding with the ordered work and filing a written protest within the time therein specified.

Contractor Acceptance by		
Signature	(Print name and title) A.T. Sakoro, Project Director	Date 1/16/04

DIST	COUNTY	ROUTE	PM	SHEET NO.	TOTAL SHEETS
04	SF, Ala	80	13.2/13.5	404R	978

Caltrans Metric

REGISTERED ELECTRICAL ENGINEER — DATE 05/18/01

6/4/01
PLANS APPROVAL DATE

REGISTERED PROFESSIONAL ENGINEER — ERIC ERLINGSSON — 8245 — EXP. 9/30/02 — ELECTRICAL — STATE OF CALIFORNIA

PB POWER, Inc.
A Parsons Brinckerhoff Company
303 Second St., Suite 700N
San Francisco, CA 94107-1317

The State of California or its officers or agents shall not be responsible for the accuracy or completeness of electronic copies of this plan sheet.

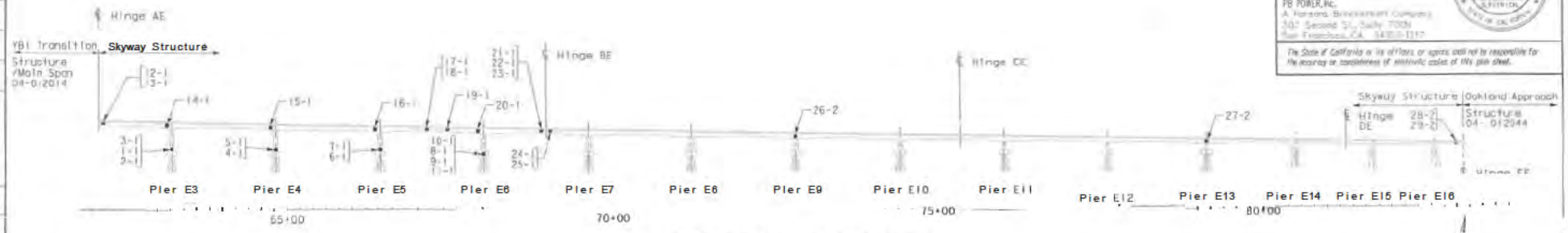

ELEVATION - EASTBOUND

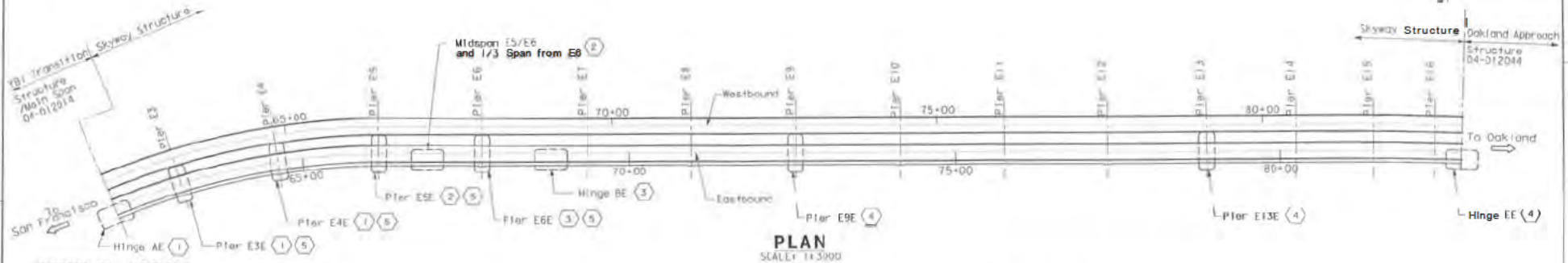

PLAN

SCALE: 1"=3000

GENERAL NOTES:

1- Strong motion detection system is located and installed only on the Eastbound structures.

2- Install strong motion sensor cables continuous without splices from strong motion sensor enclosure to the strong motion recorder boxes. No splices or taps are permitted.

3- Provide 600 mm slack in each strong motion sensor cable inside each strong motion sensor enclosure box, Junction box and pull box.

4- Provide 7000 mm slack in each strong motion sensor cable inside each strong motion recorder box enclosure.

5- Unless otherwise shown or specified, all strong motion junction boxes shall be stainless steel NEMA Type 4X with hinged door and door clamps

6- Install a stainless steel NEMA Type 4X pull box every 180 meters along horizontal conduit runs and every 45 meters along vertical conduit runs. Each of these pull boxes shall be 406 x 355 x 40 with a hinged door and door clamps. Pull boxes are not shown on the plans for clarity.

7- Install stress relief cable support straps in all boxes along vertical runs.

8- Install Strong Motion Recorders #1 and #2 enclosures on Service Platforms #12E (shown on sheet EE-284) and #19E (shown on sheet EE-291), respectively.

9- For other work related not shown on this drawing, see electrical special provisions.

10- References:
- For cable block diagrams, see Sheets EE-410 and EE-411.
- For strong motion sensor enclosures, see Sheets EE-413 and EE-406.

11- Conduits and cable slack to accomodate the movement of the bridge hinges have been detailed in EE-300 through EE-306. Conduits and cables which cross any other expansion joints or isolators, must also allow for the [illegible]

12- The sensor locations described herein are generally diagrammatic and the exact locations will be determined by the Engineer.

THIS PLAN ACCURATE FOR ELECTRICAL WORK ONLY.

SHEET NOTES:

(1) For locations of sensors at Hinge AE, Pier table E3E and E4E, see Plans on Sheet EE-397.

(2) For locations of sensors at Pier table E5E, Midspan E5/E6 and 1/3 Span from E8 at the girder level, see Plans on Sheet EE-398.

(3) For locations of sensors at Pier table E6E and Hinge BE at the girder level, see Plans on Sheet EE-399.

(4) For locations of sensors at Hinge EE, Pier table E9E and E13E at the girder level, see Plans on Sheet EE-400.

(5) For locations of sensors at Piers E3E, E4E, E5E and E6E at the pier footings, see Plans on Sheet EE-401.

MARK	DATE	DESCRIPTIONS REVISIONS	REV. BY	CK.
1	6/20/03	Added general notes 11 and 12.	EJL	JE

CONTRACT CHANGE ORDER NO. CCO_22
7

STRONG MOTION DETECTION SYSTEM

SCALE: 1"=3000

EE-396

CALCULATED/DESIGNED BY	EJL	DATE REVISED BY	WJL
CHECKED BY	CYF	DATE REVISED	6/20/03

DESIGN OVERSIGHT — BEHZAD GOLEMOHAMADI

STATE OF CALIFORNIA - DEPARTMENT OF TRANSPORTATION — Caltrans

DIST	COUNTY	ROUTE	KILOMETER POST TOTAL PROJECT	SHEET No.	TOTAL SHEETS
04	SF, Ala	80	13.9 / 14.3, 0.0 / 1.6	41081	978

Caltrans Metric

REGISTERED ELECTRICAL ENGINEER — DATE 05/16/01

6/4/01
PLANS APPROVAL DATE

FB POWER, Inc.
A Parsons Brinckerhoff Company
303 Second St., Suite 700N
San Francisco, CA 94107-1317

REGISTERED PROFESSIONAL ENGINEER — GENS. ERLINGSSON — No. 8249 — Exp. 9/30/02 — ELECTRICAL — STATE OF CALIFORNIA

The State of California or its officers or agents shall not be responsible for the accuracy or completeness of electronic copies of this plan sheet.

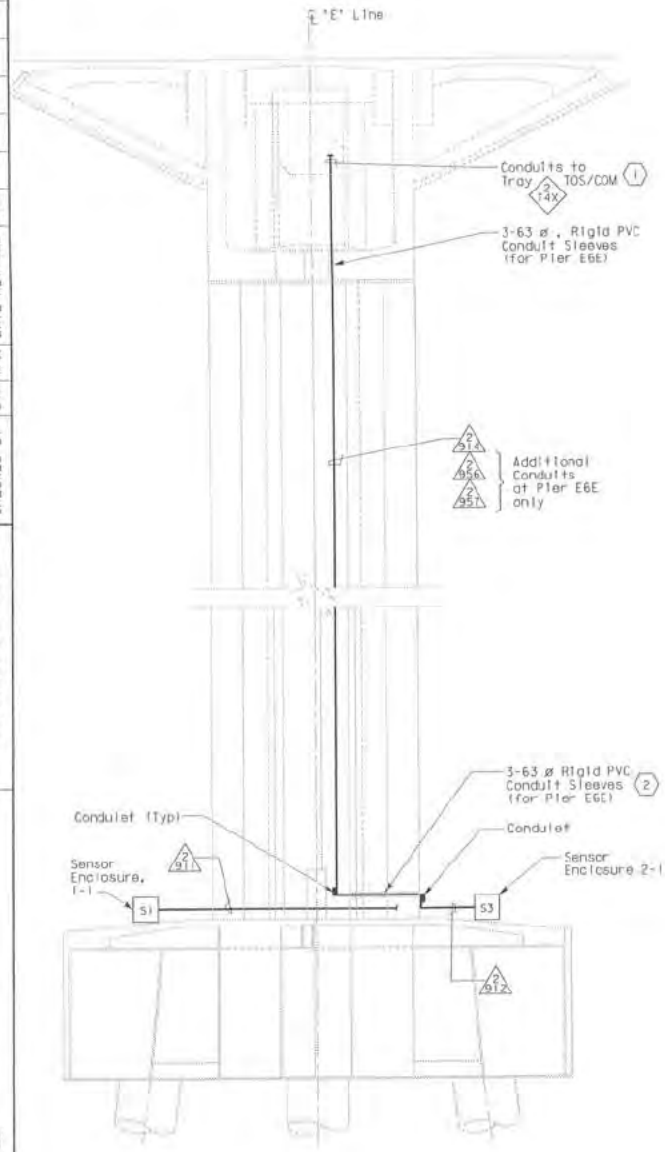

TYPICAL ELEVATION

SHOWN FOR PIER E3
(SIMILAR FOR PIER E4E, E5 AND E6E)
SCALE: 1:100

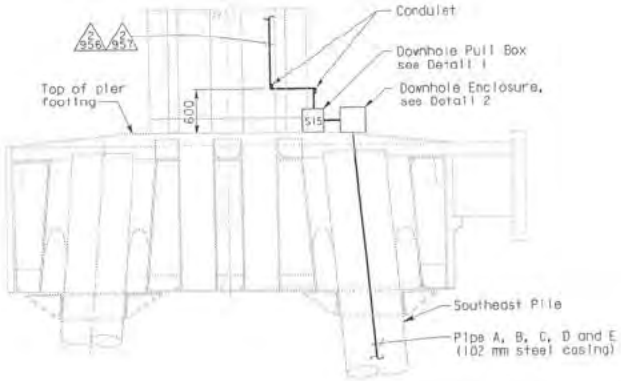

SECTION - PIER E6E

SCALE: 1:100

SHEET NOTES:

1. For continuation, see Girder Level Plans, see Sheets EE-397, EE-398 and EE-399.
2. Pipe sleeves shall be provided with watertight seals after conduits are installed. Spare sleeves shall be capped and plugged.
3. Downhole sensor cables will be furnished and installed by CDMG.
4. Downhole protective box with bolt down type lid shall be of fibrelyte material with flanged bottom rim for bolting. Nominal dimensions: 762 Long x 432 High x 457 Deep.
5. CDMG will provide five (5) specially formed sealed cap assemblies for the bottom of the casings. For location, see Skyway Structures, Pile Details No. 1.
6. For nameplate engraving, see nameplate Schedule, sheet EE-413.

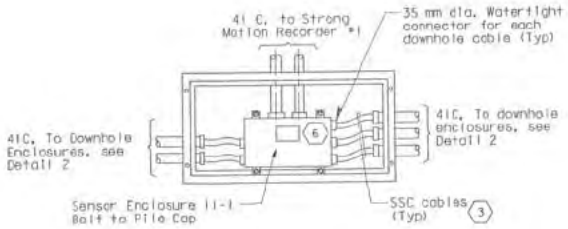

PLAN

DETAIL 1

DOWNHOLE PULL BOX
(SCALE: 1:10)

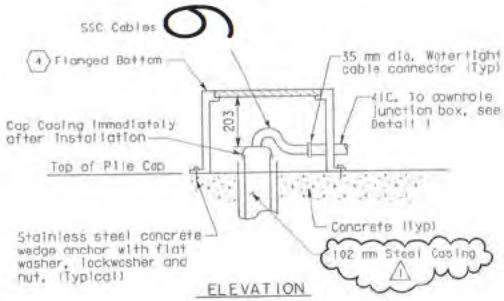

ELEVATION

DETAIL 2

DOWNHOLE ENCLOSURE-TYPICAL OF 5
(SCALE: 1:10)

MARK	DATE	DESCRIPTIONS	REV.	CH.
1	6/20/03	Revise Sheet Notes 5.	EJL	JE

REVISIONS

CONTRACT CHANGE ORDER NO. CO_22
SHEET 3 OF 7

DETAILS
STRONG MOTION DETECTION SYSTEM
TYPICAL PIER INSTALLATION

SCALE: AS NOTED

EE-406

CALCULATED/DESIGNED BY	EJL	DATE 10/00	REVISED BY EJL
CHECKED BY	CYF	11/00	DATE REVISED 6/20/03

DESIGN OVERSIGHT: BEHZAD GOLEWOHAMMADI

STATE OF CALIFORNIA - DEPARTMENT OF TRANSPORTATION

Caltrans

FILE: 41013183\ms\dgn\eeset\ee\CO-22\13183ee1706.dgn
DATE: 23-OCT-02 11:37

DATE PLOTTED: 06/19/2003

FOR REDUCED PLANS ORIGINAL 0 20 40 60 80 DGN FILE: \\tr\13183\MS\pse\con2\rfi-response\CO-22\13183ee1706.dgn

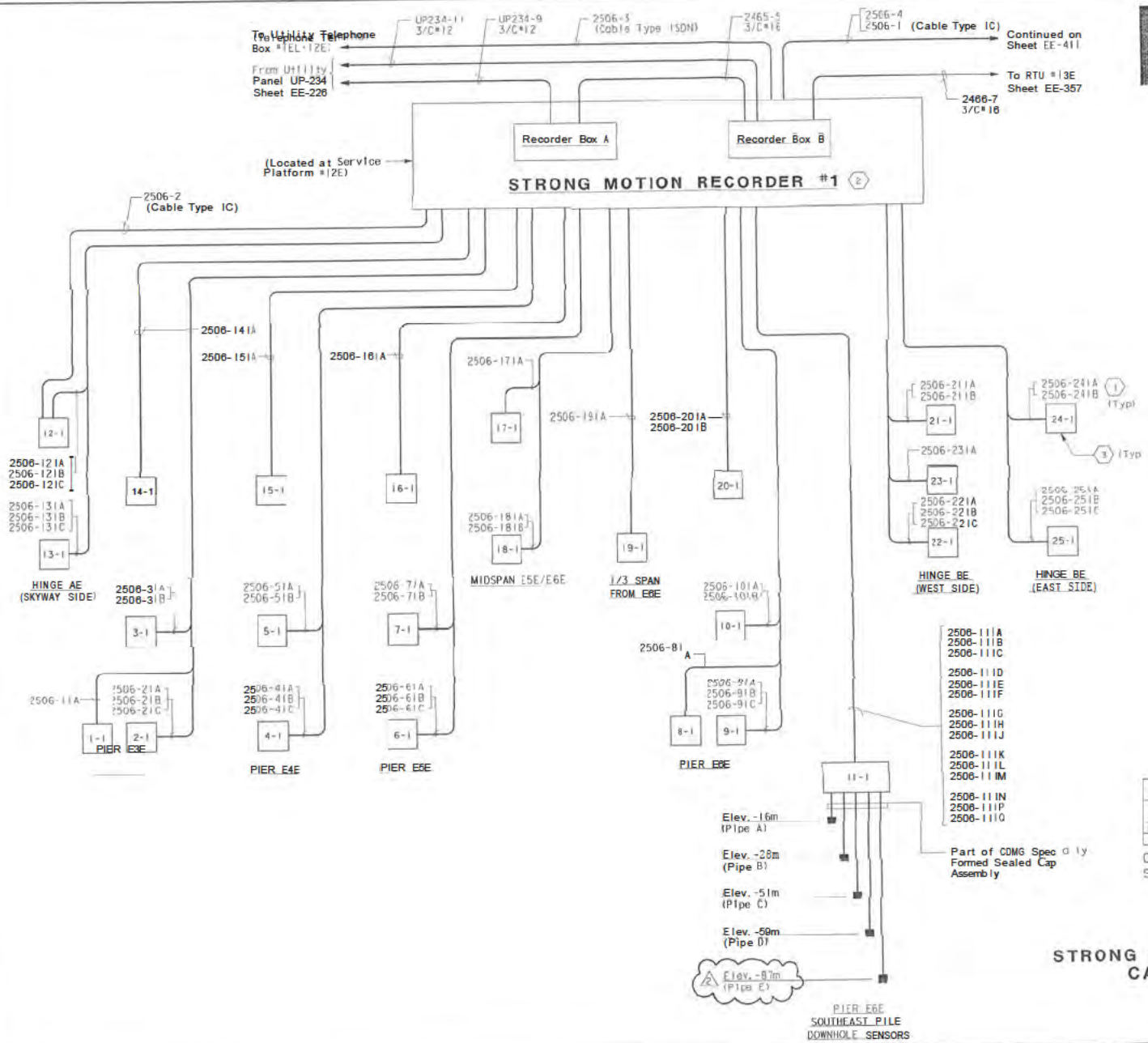

DIST	COUNTY	ROUTE	P.M. ONESIDE POST TOTAL PROJECT	SHEET NO.	TOTAL SHEETS
04	SF, Alo	80	13.9 / 14.3, 0.0 / 1.8	41(8)	978

Caltrans Metric

REGISTERED ELECTRICAL ENGINEER — DATE 05/16/01

6/4/01
PLANS APPROVAL DATE

PB POWER, Inc.
A Parsons Brinckerhoff Company
303 Second St., Suite 700N
San Francisco, CA 94107-1317

REGISTERED PROFESSIONAL ENGINEER — ELECTRICAL — STATE OF CALIFORNIA

The State of California or its officers or agents shall not be responsible for the accuracy or completeness of electronic copies of this plan sheet.

SHEET NOTES:

(1) Strong motion sensor cable type SSC, unless otherwise indicated.

(2) Strong Motion Recorder #1 consists of (2) two enclosure recorders with 62 sensors and a GPS timing antenna. Enclosure Recorder Box A consists of two (2) 18-channel recorders and Enclosure Recorder Box B consists of one (1) 18-channel and one (1) 12-channel recorder.

(3) Sensor enclosure with identification number as shown.

NOTES:

1. References:
   - For Circuit and Conduit/Cable Schedules, see sheets EE-327 and EE-328 respectively.
   - For Sensor and Recorder Schedule, see Sheet EE-412.
   - For general notes of the Strong Motion Detection System, see Sheet EE-396.

MARK	DATE	DESCRIPTIONS	REV	CK
2	6/20/03	Change Pipe E elevation.	EJL	JE
1	6/20/03	Revise Sheet Notes 2.	EJL	JE

REVISIONS

CONTRACT CHANGE ORDER NO. CCO_22
SHEET 4 OF 7

DETAILS
STRONG MOTION DETECTION SYSTEM
CABLE BLOCK DIAGRAM
NO SCALE

EE-410

STATE OF CALIFORNIA - DEPARTMENT OF TRANSPORTATION

Caltrans

DESIGN OVERSIGHT: BEHZAD GOLENOHAMMADI

CALCULATED/DESIGNED BY: EJL 10/00 — REVISED BY: EJL 6/20/03
CHECKED BY: CYF 11/00 — DATE REVISED

DATE PLOTTED => 06/19/2003

DIST	COUNTY	ROUTE	KILOMETER POST TOTAL PROJECT	SHEET NO.	TOTAL SHEETS
04	SF, Ala	80	13.9 / 14.3 • 0.0 / 1.6	412R1	978

REGISTERED ELECTRICAL ENGINEER — DATE 05/16/01

PLANS APPROVAL DATE 6/4/01

TB POWER, Inc.
& Parsons Brinckerhoff Company
303 Second St., Suite 700N
San Francisco, CA 94107-1317

REGISTERED PROFESSIONAL ENGINEER — JENS ERLINGSSON — No. 8249 — EXP. 9/30/02 — ELECTRICAL — STATE OF CALIFORNIA

The State of California or its officers or agents shall not be responsible for the accuracy or completeness of electronic copies of this plan sheet.

Caltrans Metric

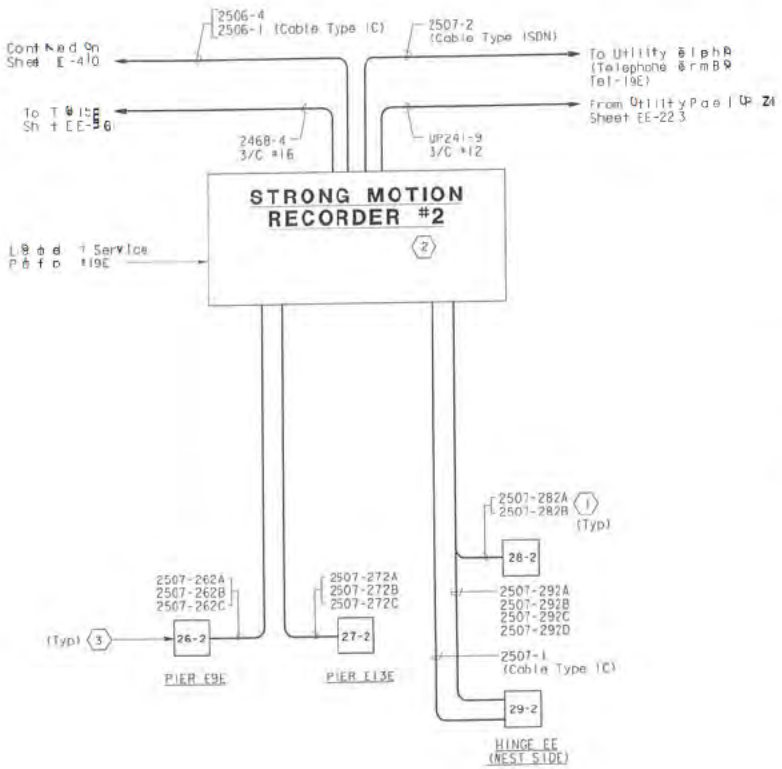

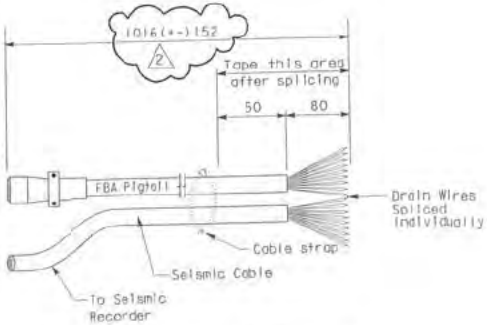

PIGTAIL SPLICING DETAIL

(THIS DETAIL IS APPLICABLE TO CABLE TYPES ICC AND SSC IN ALL STRONG MOTION SENSOR ENCLOSURES)

SPLICING INSTRUCTIONS:

1. Strip outer jacket cables back 80mm.
2. Separate individual conductors and drain wires and splice matching colored wires and drain wires. Use Amp AWP crimping tool Model no. 24427-1and Pico Bond Jelly filled splice connectors (yellow) catalog no. 61292-2 or equal. (1)
3. Secure cables with cable straps approximately 50mm from end of outer jacket.
4. Tape from cable strap to splice with vinyl electrical tape (3M Scotch Super 88 or equal). Tape should cover all splices. Coat with sealing compound or equal, then tape with self- fusing tape and an outer layer of vinyl electrical tape.

Note: Insure crimps are secure before taping.

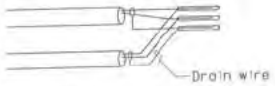

SPLICING DETAIL

1 Pair spliced (Typ. of 4)

SHEET NOTES:

(1) Strong Motion sensor cable Type SSC, unless otherwise indicated.

(2) Strong Motion Recorder #2 consists of one (1) 12-channel recorder with 11 sensors and a GPS timing antenna.

(3) Seal enclosure with identification number as shown.

NOTES:

1. References:
   - For Circuit and Conduit/Cable Tray Schedules, see sheets EE-327 and EE-328 respectively.
   - For Sensor and Recorder Schedule, see Sheet EE-412.
   - For general notes of the Strong Motion Detection System, see Sheet EE-396.

MARK	DATE	DESCRIPTIONS	REV	CK
2	6/20/03	Add dimension	EJL	CYF
1	6/20/03	Revise splicing instructions note 2	EJL	CYF

REVISIONS

CONTRACT CHANGE ORDER NO. CCO_22
SHEET 5 OF 7

DETAILS
STRONG MOTION DETECTION SYSTEM CABLE BLOCK DIAGRAM

NO SCALE

EE-411

CALCULATED/DESIGNED BY	EJL	DATE 10/00	REVISED BY EJL 6/20/03
CHECKED BY	CYF	1/00	DATE REVISED

DESIGN OVERSIGHT: BEHZAD GOLEMOHAMMADI

STATE OF CALIFORNIA - DEPARTMENT OF TRANSPORTATION — Caltrans

FILED: H:\1310\cmd\bmp\ee\ee411.dgn
DATE: 17-Oct-00 16:18

DATE PLOTTED ~: 06/19/2003

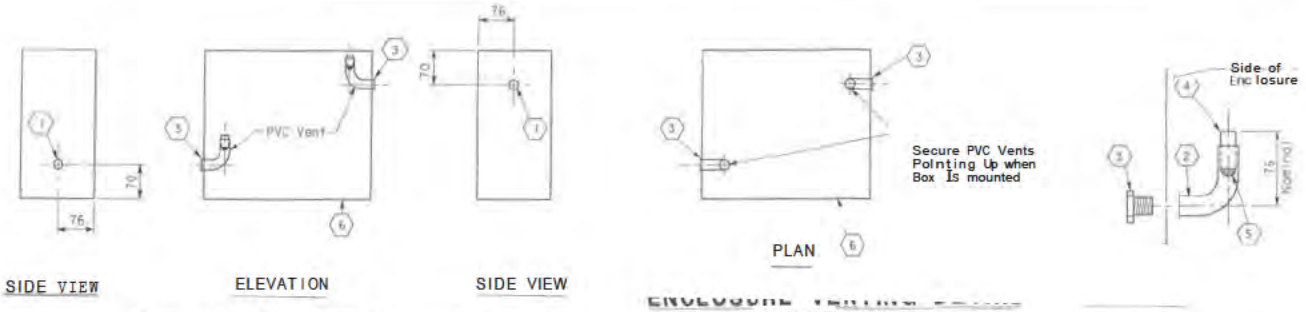

ENCLOSURE VENTING DETAIL

VERTICAL MOUNT

HORIZONTAL MOUNT

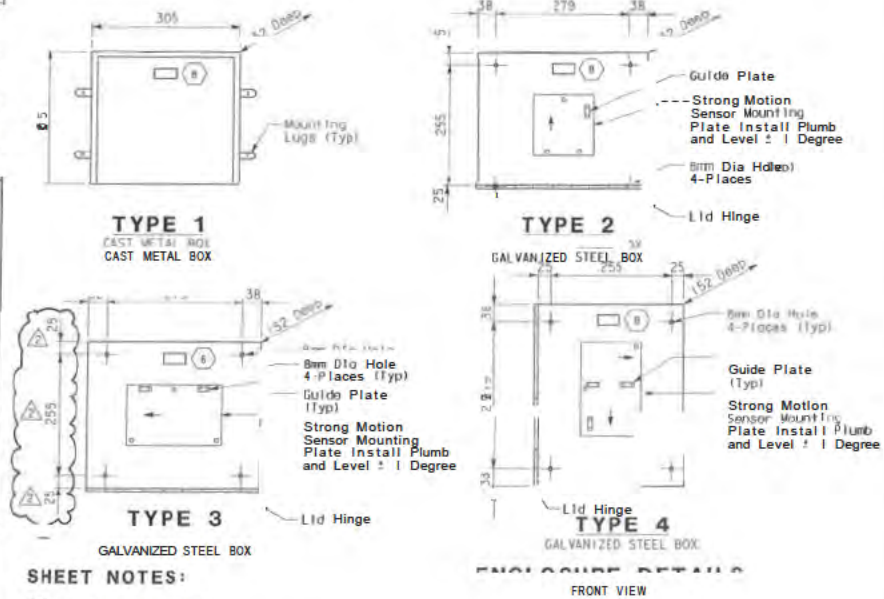

SHEET NOTES:

1. Punch hole for 27 C.
2. 27 C. schedule 40 PVC, 90° elbow (female threaded-female slip).
3. 27 chase nipple, zinc.
4. 27 C. schedule 40 PVC. Secure item in place with PVC cement (length as required, cut after installation).
5. Hose screen, Stainless steel screen material (used in washing machine)
6. 3.2 mm diameter drain hole. Drill at the lowest point of the box to drain any moisture.
7. Enclosures for Strong Motion Recorders #1 and #2 shall be Caltrans Type 5, corrosion resistant without shelves or police panels.
8. See nameplate schedule for engravings and materials.

NOTES:

1. The high and low vent sides shall be selected as required to facilitate conduit entrances and mounting location.
2. Strong motion sensor enclosures and mounting plates shall be installed level, plumb, parallel and perpendicular to the structure unless otherwise noted.
3. Strong motion enclosures shall be mounted to concrete wall with concrete fasteners, 6.35 dia, 40 mm depth embedment and allowable working load of tension at 1.223 kN and shear 2.91 kN. Enclosures mounted on structural steel shall be drill and tap. The strong motion sensor mounting plate shall be bolted through the enclosure to the structural steel. All hardware shall be stainless steel.
4. For Downhole Enclosures details, see Sheet EE-406.

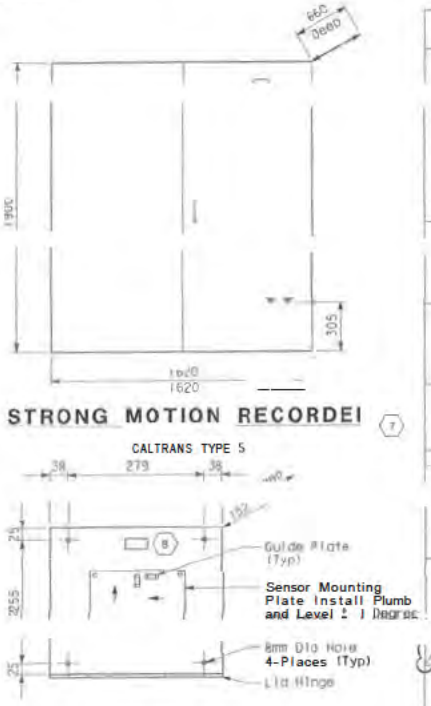

NAMEPLATE SCHEDULE			
ENCLOSURE TYPE	ENGRAVINGS LINE NO. 1	ENGRAVINGS LINE NO. 1	QUANTITY
1	STRONG MOTION SENSOR	ENCLOSURE NO. 3-1	1
	STRONG MOTION SENSOR	ENCLOSURE NO. 4-1	1
	STRONG MOTION SENSOR	ENCLOSURE NO. 5-1	1
	STRONG MOTION SENSOR	ENCLOSURE NO. 6-1	1
	STRONG MOTION SENSOR	ENCLOSURE NO. 7-1	1
	STRONG MOTION SENSOR	ENCLOSURE NO. 8-1	1
	STRONG MOTION SENSOR	ENCLOSURE NO. 9-1	1
	STRONG MOTION SENSOR	ENCLOSURE NO. 10-1	1
	STRONG MOTION SENSOR	ENCLOSURE NO. 14-1	1
	STRONG MOTION SENSOR	ENCLOSURE NO. 15-1	1
2	STRONG MOTION SENSOR	ENCLOSURE NO. 17-1	1
	STRONG MOTION SENSOR	ENCLOSURE NO. 19-1	1
	STRONG MOTION SENSOR	ENCLOSURE NO. 23-1	1
4	STRONG MOTION SENSOR	ENCLOSURE NO. 13-1	1
	STRONG MOTION SENSOR	ENCLOSURE NO. 22-1	1
	STRONG MOTION SENSOR	ENCLOSURE NO. 25-1	1
	STRONG MOTION SENSOR	ENCLOSURE NO. 26-2	1
	STRONG MOTION SENSOR	ENCLOSURE NO. 27-2	1
	STRONG MOTION SENSOR	ENCLOSURE NO. 29-2	1
5	STRONG MOTION SENSOR	ENCLOSURE NO. 12-1	1
	STRONG MOTION SENSOR	ENCLOSURE NO. 20-1	1
	STRONG MOTION SENSOR	ENCLOSURE NO. 21-1	1
	STRONG MOTION SENSOR	ENCLOSURE NO. 24-1	1
	STRONG MOTION SENSOR	ENCLOSURE NO. 28-2	1
Downhole Enclosure	STRONG MOTION SENSOR	ENCLOSURE NO. 11-1	1
	Line No. 1:	STRONG MOTION RECORDER NO. 1	1
Caltrans Type 5	Line No. 1:	STRONG MOTION RECORDER NO. 1	1
	Line No. 2:	BOX B	
	Line No. 1:	STRONG MOTION RECORDER NO. 2	1

NOTE:
1. Nameplates shall be mounted to the enclosure front panel with 4-40 stainless steel machine screws.
2. Nameplates for Type 1 enclosures mounted to front panel with epoxy only.
3. Nameplates shall be laminated phenolic plastic with white core and black front and back. Engravings shall be in capital letters etched through the outer layer of the nameplate material.

MARK	DATE	DESCRIPTIONS	REV	CK
2	6/20/03	Re ded nameplate sched	EJL	JE
1	6/20/03	Added nameplate schedule note 3.	EJL	JE

REVISIONS

CONTRACT CHANGE ORDER NO. CCO_22

SHEET 6 OF 7

DETAILS
STRONG MOTION DETECTION SYSTEM SENSOR AND RECORDER ENCLOSURES

NO SCALE

EE-413

STATE OF CALIFORNIA - DEPARTMENT OF TRANSPORTATION

Caltrans

DESIGN/INSPECT BY: ZAD GIEMOHAMMADI

CHECKED BY: CYF

CALCULATED/DESIGNED BY: W.L.

DATE: 10/01

REVISED BY: W.L.

DATE REVISED: 10/01

Caltrans Metric

DIST	COUNTY	ROUTE	POST MILE	SHEET NO.	TOTAL SHEETS
04	SF, Alb	80	13.9 / 0.0 / 4.3 / 1.6	41(40)	978

6/4/01

PLANS APPROVAL DATE

PB POWER, Inc.

The State of California or its officers or agents shall not be responsible for the accuracy or completeness of electronic copies of this plan sheet.

DIST.	COUNTY	ROUTE	KILOMETER POST TOTAL PROJECT	SHEET NO.	TOTAL SHEETS
04	SF, Ala	80	13.9/14.3, 0.0/1.6	500R1	978

REGISTERED ENGINEER - CIVIL

6-4-01

PLANS APPROVAL DATE

The State of California or its officers or agents shall not be responsible for the accuracy or completeness of electronic copies of this plan sheet.

Caltrans Metric

3

T.Y. LIN / MOFFATT & NICHOL
825 BATTERY STREET
SAN FRANCISCO, CA 94111

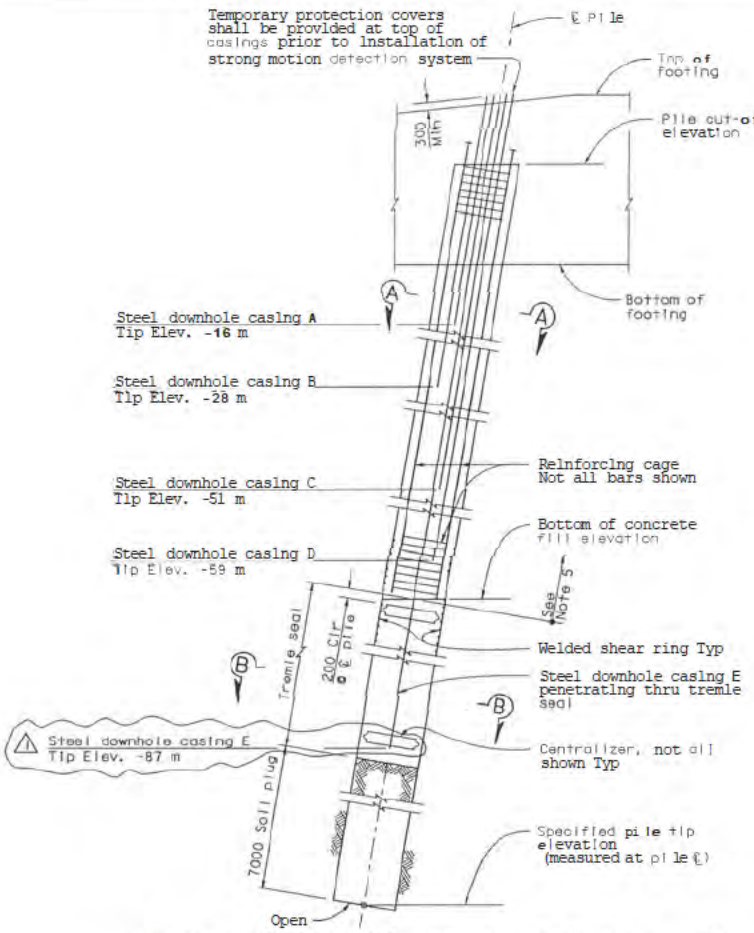

SEISMIC MONITORING CASINGS (Southeast corner pile of pier footing E6E only)

Notes: No Scale

1. For detail is not shown, see "Pile Details" sheets and Road Plans.
2. Steel downhole casings A thru E shall be 102 Dia (4" NPS, Schedule 40).
3. Steel downhole casings A thru E are used for the installation of "Strong Motion Detection System" as shown on the Road Plans.
4. Bottom of steel pile casings shall be capped with the CDMG provided specially formed seal cap assembly to prevent ingress of tremie seal or concrete.
5. Steel downhole casing E shall be temporarily supported prior to installation of reinf cage and pipe ties.
6. Equivalent centralizing system to be approved by Engineer.

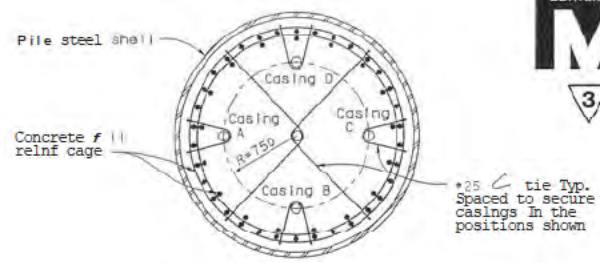

SECTION A-A

1:25

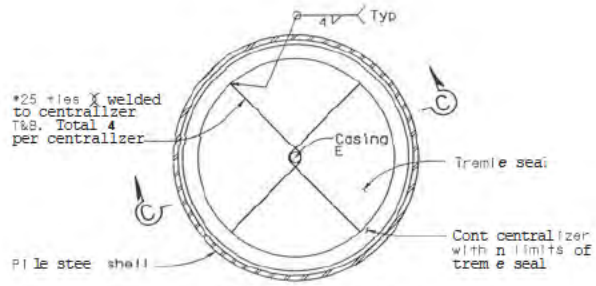

SECTION B-B

1:25

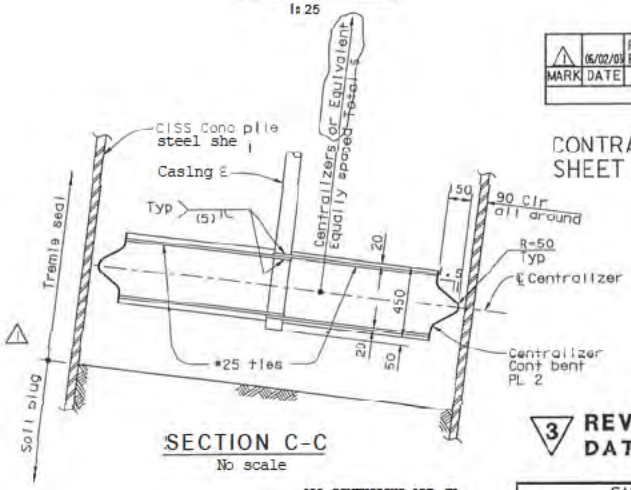

SECTION C-C

No scale

MARK	DATE	DESCRIPTIONS	BY	CH'D
1	06/02/01	REVISE STEEL DOWNHOLE CASING E ELEVATION AND NOTES	MS	MR

REVISIONS

CONTRACT CHANGE ORDER NO. 22
SHEET 7 OF 7

3 REVISED PER ADDENDUM NO. 3 DATED OCTOBER 2, 2001

ALL DIMENSIONS ARE IN MILLIMETERS UNLESS OTHERWISE SHOWN

SAN FRANCISCO OAKLAND BAY BRIDGE
EAST SPAN SEISMIC SAFETY PROJECT

SKYWAY STRUCTURES

SEISMIC MONITORING CASINGS

	BY	CHECKED
DESIGN	S. Chee	S. Abbas
DETAILS	H. Li	S. Abbas
QUANTITIES	S. Chee	S. Abbas

DESIGN OVERSIGHT

SIGN OFF DATE

PREPARED FOR THE STATE OF CALIFORNIA DEPARTMENT OF TRANSPORTATION

Salid Abbas
PROJECT ENGINEER

BRIDGE NO. 34-0006L/R
KILOMETER POST 13.9/14.3, 0.0/1.6

CU 04
EA 012021

DISREGARD PRINTS BEARING EARLIER REVISION DATES

REVISION DATES (PRELIMINARY STAGE ONLY) 05/08/01 06/20/01 06/01/01

SHEET 068A OF

ORIGINAL SCALE IN MILLIMETERS FOR REDUCED PLANS 0 10 20 30 40 50 60 70 80 90 100

Rev. Date: 3-12-99

USERNAME => RTOM

DATE PLOTTED => 10/27/2003 TIME PLOTTED => 10:41:22 AM

FILE => X:\ConstructionSupport\Drawings\Current Drawings\Issued CCOs\26 - 192703 Seismic Monitoring Casings (CCO #22)\cap11010.

Department of Transportation
EAST SPAN SEISMIC SAFETY PROJECT
CONCURRENCE FOR CHANGE ORDERS

Contract No. 04-012024
Co. & Rte Ala-80-13.9/14.3, 0.0/1.6

CCO#: 22 **S#:** 0
Title: Furnish Strong Motion Detection Casing
Date: 8/19/03

TO : DOUGLAS GOE, Resident Engineer

Requested By: Bill Howe, Senior Engineer WBH

Description of Work:
Contractor to furnish the Strong.Motion Detection System casinp;

Reason for Change:
The Special Provisions and Contract plans incorrectly specify that the casing for the Strong Motion Detection System shall be state furnished.

Discuss with persons noted below:

FHWA	Date	Br. Const	Date
District	Date	Br. Design Tony Shakal, CDMG	Date 12/5/02
Other Pat Hipley, Earthquake Eng	Date 12/30/02	Br. Geology	Date
		Br. Maintenance	Date

Estimated Cost: $7000.00

Recommended Method of Payment

- ☐ Contract Item
- ☐ Extra Work at Force Account
- ☑ Agreed Price (LS or UP)
- ☐ Other

Recommended Time Adjustment: 0 Working Days

Prior Approvals:

This represents an acknowledgement that the individuals below are in concurrence with the change order.

Comments:

Douglas Coe, Resident Engineer — Date 8-19-03

Robert Kobal, HQ CCO Coordinator — Date 8/21/03

Pete Siegenthaler, Principal Construction Engineer — Date 8/19/03

RECEIVED 03 SEP 20 11:16

TELECOPY

California Department of Transportation
CONSTRUCTION DIVISION

TO District 4 CCO Desk

Date: 2/3/2004
Contract No.: 4 - 012024
Road: SF,ALA-80-13.9/14.3,0.0/1.6
FED. No.: ACIM-080-1(085)8N

To: SARTIPI - 04

Attention: 04 - MOLERA

HQ Direction: TO ISSUE AND APPROVE

CCO No. 022 Sup. No. 0 Rev. No. 1 Old CCO Code: - -

Per Your Submittal Dated 2/3/2004 New CCO Code: C - X - P - G

REVISE SECTION 10-3.16 "STRONG MOTION DETECTION SYSTEM" OF THE SPECIAL PROVISIONS TO DELETE PORTIONS, AND REQUIRE MATERIAL TO BE FURNISH BY CONTRACTOR TO TO BE APPROX. 257.5 METERS OF 102-MM NPS STEEL CASING (SCHEDULE 40) TOGETHER WITH THE NECESSARY THREADED COUPLINGS; AND ALSO REVISE THE BOTTOM ELEVATION OF THE DOWNHOLE CASING..

NOTES:

REVISE THE CCO AND MEMO TO REFLECT THE CORRECT AGREED LUMP SUM AMOUNT OF $7631.00.

TOTAL COST OF THIS CHANGE IS AN AGREED LUMP SUM OF: $7,631.00

Items:	$0.00
Force Account:	$0.00
Agreed Price:	$7,631.00
Adj. of Comp.	$0.00
Total	$7,631.00
Time:	(NONE)

ROBERT PIEPLOW, by:
Division Chief

Patrick S. Bockari
Division of Construction
1120 "N" Street, MS-44, Sacramento, CA 95814
Fax Number: (916) 654-5735
To Confirm Transmission, Call (916) 654-5196

CCO STATUS FOR 04 - 012024 - 022
STATUS IS ACTIVE 02-24-04

NET MONEY CHANGE: 7,631.00
ANTICIPATED CHANGES: 0.00
EST. FINAL COST: 7,631.00

FURNISH STRONG MOTION DETECTION CASING

WORK TYPE	AMOUNT AUTHORIZED	** AMOUNTS EXPENDED ** TO-DATE	LAST EST.	SINCE LAST EST.
EW @ LS(+)	7,631.00	0.00	0.00	0.00

CONTRACT ITEM TOTAL: 0.00 NO ITEM RECORDS FOR THIS CCO

CCO SUPPLEMENTS - PRESS PF5

NEW NUMBER => USE TOP LINE + ENTER EXIT ==> PRESS PF3

STATE OF CALIFORNIA - DEPARTMENT OF TRANSPORTATION

CONTRACT CHANGE ORDER MEMORANDUM

DATE: 11/13/2002 Page 1 of 1

TO: PETER SIEGENTHALER / COE D.	FILE: E.A. 04 - 012024
FROM: COE D.	CO-RTE-PM 04-SF,Ala-80-13.9/14.3,0.0/1.6
	FED. NO. ACIM-080-1(085)8N
CCO#: 22 SUPPLEMENT#: 0 Category Code: CXPG	CONTINGENCY BALANCE (incl. this change) $30,204,764.34
COST: $7,631.00 INCREASE ☑ DECREASE ☐	HEADQUARTERS APPROVAL REQUIRED? ☑ YES ☐ NO
SUPPLEMENTAL FUNDS PROVIDED: $0.00	IS THIS REQUEST IN ACCORDANCE WITH ENVIRONMENTAL DOCUMENTS? ☑ YES ☐ NO
CCO DESCRIPTION: Furnish Strong Motion Detection Casing	**PROJECT DESCRIPTION:** REPLACE SFOBB EAST SPAN

LOCATION: IN SAN FRANCISCO AND ALAMEDA COUNTIES IN SAN FRANCISCO AND OAKLAND FROM 1.3 KM EAST OF THE YERBA BUENA ISL

THIS CHANGE ORDER PROVIDES FOR:

revising the Strong Motion Detection System as shown on revised contract plan sheets 404R1, 410R1, 411R1, 412R1, 413R1, and 500R1.

During the project PS&E review process, comments by California Geological Survey (CGS), formerly California Division of Mines and Geology (CDMG), regarding the Strong Motion Detection System were not incorporated. An email from Pat Hipley (Caltrans Earthquake Engineering) summarizing the necessary revisions is attached. Due to the revisions, the Contractor will need to supply 257.5 meters of 102-mm NPS steel casing (schedule 40) and the necessary threaded couplings for the steel downhole casings for the strong motion detection system.

Payment will be made as an extra work at an agreed lump sum of $7,631.00. This price constitutes full and complete compensation including all markups. Records and calculations used to determine the adjustment of compensation are on file in the project records.

No adjustment of contract time is warranted, as this change does not affect the controlling operation.

FHWA concurrence is not required. Concurrence from Maintenance is not required because this work does not affect the maintenance of the structures.

CONCURRED BY:

Construction Engineer: Douglas Coe	Date 12/4/03
Bridge Engineer:	Date
FHWA Representative:	Date
Project Engineer:	Date
Other (specify): Pat Hipley	Date12/6/2002
	Date
	Date
District Prior Approval By:	Date
HQ (Issue Approve) By:	Date
Resident Engineer's Signature:	Date 12-4-03

ESTIMATE OF COST

	THIS REQUEST	TOTAL TO DATE
ITEMS	$0.00	$0.00
FORCE ACCOUNT	$0.00	$0.00
AGREED PRICE	$7,631.00	$7,631.00
ADJUSTMENT	$0.00	$0.00
TOTAL	$7,631.00	$7,631.00

FEDERAL PARTICIPATION

☑ PARTICIPATING ☐ PARTICIPATING IN PART ☐ NONE
☐ NON-PARTICIPATING (MAINTENANCE) ☐ NON-PARTICIPATING

FEDERAL SEGREGATION (if more than one Funding Source or P.I.P. type)
☑ CCO FUNDED PER CONTRACT ☐ CCO FUNDED AS FOLLOWS

FEDERAL FUNDING SOURCE	PERCENT

STATE OF CALIFORNIA - DEPARTMENT OF TRANSPORTATION

CONTRACT CHANGE ORDER

Change Requested by: Contractor

CCO: 23	Suppl. No. 0	Contract No. 04 - 012024	Road 04-SF,Ala-80-13.9/14.3,0.0/1.6	FED. AID LOC.: ACIM-080-1(085)8N

To: **KIEWIT / FCI / MANSON a JV**

You are directed to make the following changes from the plans and specifications or do the following described work not included in the plans and specifications for this contract. ***NOTE: This change order is not effective until approved by the Engineer.***

Description of work to be done, estimate of quantities and prices to be paid. (Segregate between additional work at contract price, agreed price and force account.) Unless otherwise stated, rates for rental of equipment cover only such time as equipment is actually used and no allowance will be made for idle time. This last percentage shown is the net accumulated increase or decrease from the original quantity in the Engineer's Estimate

Extra Work at Unit Price:

Install equipment to access power for lighting along the temporary trestle located on the south side of the existing San Francisco Oakland Bay Bridge (SFOBB), west of the Oakland touchdown area. The Contractor will maintain electrical power to the lighting system until the temporary trestle system is removed.

The Contractor, Kiewit/FCI/Manson, A JV (KFM), will install a 55-amp transformer and digital kilowatt meter near the existing Caltrans maintenance building to provide electrical power for the temporary trestle. The contractor will use this power source to eliminate the use of a diesel generator. The estimated credit to the State is $285.00 per month, based on usage of 2375 kwh per month. Total credit estimated to the end of the project (February 2006) is $11,115.00.

The amount of electricity consumed will be monitored monthly and the credit to the State will be adjusted if necessary. Electricity usage will be recorded and reported to Caltrans Construction office at 345 Burma Road at the end of each pay period.

When the Contractor decides to discontinue the use of the facility, the Contractor will remove all of their equipment and improvements and return the maintenance building to its original condition.

Extra Work at Unit Price ..... ($285.00) per month

This sum constitutes full and complete compensation for furnishing all labor, material, equipment, tools, and incidentals including all markups by reason of this change.

Total estimated credit to the State at Extra Work at Agreed Unit Price (39 mo X $285.00 per mo).....($11,115.00) <credit>

Estimated Cost: **Increase** ☐ **Decrease** ☑ **($11,115.00)**

By reason of this order the time of completion will be adjusted as follows: 0 days

Submitted by

Signature	Resident Engineer: COE D.	Date 12-5-02

Approval Recommended by

Signature	Construction Engineer: COE D.	Date 12-5-02

Engineer Approval by

Signature	(Print name and title) PETER SIEGENTHALER - Chief	Date

We the undersigned contractor, have given careful consideration to the change proposed and agree, if this proposal is approved, that we will provide all equipment, furnish the materials, except as may otherwise be noted above, and perform all services necessary for the work above specified, and will accept as full payment therefor the prices shown above.

NOTE: If you, the contractor, do not sign acceptance of this order, your attention is directed to the requirements of the specifications as to proceeding with the ordered work and filing a written protest within the time therein specified.

Contractor Acceptance by

Signature	(Print name and title) A.T. SKORO	Date 12/11/02

STATE OF CALIFORNIA - DEPARTMENT OF TRANSPORTATION

CONTRACT CHANGE ORDER MEMORANDUM

DATE: 12/5/2002

TO: PETER SIEGENTHALER / COE D.	FILE: **E.A.** 04 - 012024
FROM: COE D.	**CO-RTE-PM** 04-SF,Ala-80-13.9/14.3,0.0/1.6
	FED. NO. ACIM-080-1(085)8N
CCO#: **23** SUPPLEMENT#: **0** Category Code: **2X3**	CONTINGENCY BALANCE (incl. this change) **$52,927,820.27**
COST: **($11,115.00)** INCREASE ☐ DECREASE ☑	HEADQUARTERS APPROVAL REQUIRED? ☐ YES ☑ NO
SUPPLEMENTAL FUNDS PROVIDED: **$0.00**	IS THIS REQUEST IN ACCORDANCE WITH ENVIRONMENTAL DOCUMENTS? ☑ YES ☐ NO
CCO DESCRIPTION: Providing Power to Truss	**PROJECT DESCRIPTION:** REPLACE SFOBB EAST SPAN

LOCATION: IN SAN FRANCISCO AND ALAMEDA COUNTIES IN SAN FRANCISCO AND OAKLAND FROM 1.3 KM EAST OF THE YERBA BUENA ISL

THIS CHANGE ORDER PROVIDES FOR:

providing electrical power for safety lighting along the temporary access trestle located on the south east of the existing San Francisco Oakland Bay Bridge (SFOBB) bridge number 33-0025L/R at the west end of the maintenance road on the Oakland Mole.

Electric power is accessible at this location from a Caltrans maintenance building located about 50 meters from the temporary trestle. This change order also allows the contractor to discontinue use of a diesel generator. The contractor will use the power (approximately 55 amps) for pole mounted lights located along the trestle. The Contractor will install a transformer and a digital kilowatt meter such that Caltrans personnel can access and record the electricity usage.

The state will receive a credit for the electricity usage based on Extra Work at Unit Price. The contractor shall credit the State a flat rate of $285.00/month for the total of $11,115.00 for the period of 39 months. KFM assumes all the costs regarding this change order including purchase and installation of the transformer; digital kilowatt meter; other equipment; materials; and labor. Maintenance shall be the responsibility of the Contractor.

No FHWA concurrence is required for this Change Order.

No adjustment in contract time is warranted, as this does not affect the controlling operation.

CONCURRED BY:

Construction Engineer:	Douglas Coe	Date12/5/2002
Bridge Engineer:		Date
FHWA Representative:		Date
Project Engineer:		Date
Other (specify):		Date
		Date
		Date
District Prior Approval By:		Date
HQ (Issue Approve) By:		Date
Resident Engineer's Signature:		Date 12-5-02

ESTIMATE OF COST

	THIS REQUEST	TOTAL TO DATE
ITEMS	$0.00	$0.00
FORCE ACCOUNT	$0.00	$0.00
AGREED PRICE	($11,115.00)	($11,115.00)
ADJUSTMENT	$0.00	$0.00
TOTAL	($11,115.00)	($11,115.00)

FEDERAL PARTICIPATION

☑ PARTICIPATING ☐ PARTICIPATING IN PART ☐ NONE
☐ NON-PARTICIPATING (MAINTENANCE) ☐ NON-PARTICIPATING

FEDERAL SEGREGATION (if more than one Funding Source or P.I.P. type)
☑ CCO FUNDED PER CONTRACT ☐ CCO FUNDED AS FOLLOWS

FEDERAL FUNDING SOURCE	PERCENT

STATE OF CALIFORNIA - DEPARTMENT OF TRANSPORTATION

CONTRACT CHANGE ORDER

Change Requested by: Engineer

CCO: 23	Suppl. No. 1	Contract No. 04 - 012024	Road 04-SF,Ala-80-13.9/14.3,0.0/1.6	FED. AID LOC.: ACIM-080-1(085)8N

To: KIEWIT / FCI / MANSON a JV

You are directed to make the following changes from the plans and specifications or do the following described work not included in the plans and specifications for this contract. ***NOTE: This change order is not effective until approved by the Engineer.***

Description of work to be done, estimate of quantities and prices to be paid. (Segregate between additional work at contract price, agreed price and force account.) Unless otherwise stated, rates for rental of equipment cover only such time as equipment is actually used and no allowance will be made for idle time. This last percentage shown is the net accumulated increase or decrease from the original quantity in the Engineer's Estimate.

Adjustment of Compensation at Unit Price:

Provide additional electrical power service for safety lighting along the temporary access trestle located on the south east of the existing San Francisco Oakland Bay Bridge (SFOBB) bridge number 33-0025L/R at the west end of the maintenance road on the Oakland Mole.

The additional service will be in effect for the duration of 22 months after the original anticipated contract completion date of February 14, 2006 which will reflect the revised anticipated contract completion date of December 14, 2007.

All of the conditions and stipulations agreed to in CCO No. 23 Supplement 0, shall remain into effect for the duration of this extension.

The State will be compensated the agreed unit price of $285.00 per month during the terms of this agreement. The total estimated credit to the State at Adjustment of Compensation at Agreed Unit Price will be (22 mo X $285.00 per mo) .....($6,270.00) <credit>

Estimated cost of Adjustment of Compensation at Agreed Unit Price .....($6,270.00) <credit>

Estimated Cost: Increase ☐ Decrease ☑ **($6,270.00)**

By reason of this order the time of completion will be adjusted as follows: 0 days

Submitted by

Signature	Resident Engineer: DOUG COE, Supervising Br. Eng.	Date 6-30-06

Approval Recommended by

Signature	Construction Engineer: DOUG COE, Supervising Br. Eng.	Date 6-30-06

Engineer Approval by

Signature	(Print name and title) DOUG COE, Supervising Br. Eng. - Construction Engin	Date 7-13-06

We the undersigned contractor, have given careful consideration to the change proposed and agree, if this proposal is approved, that we will provide all equipment, furnish the materials, except as may otherwise be noted above, and perform all services necessary for the work above specified, and will accept as full payment therefor the prices shown above.

NOTE: If you, the contractor, do not sign acceptance of this order, your attention is directed to the requirements of the specifications as to proceeding with the ordered work and filing a written protest within the time therein specified.

Contractor Acceptance by

Signature	(Print name and title) Lee Zink Project Director	Date 6/7/06

STATE OF CALIFORNIA - DEPARTMENT OF TRANSPORTATION

CONTRACT CHANGE ORDER MEMORANDUM

DATE: 6/29/2006 Page 1 of 1

TO: PETER SIEGENTHALER / DOUG COE, Supervising Br. Eng.	FILE: E.A. 04 - 012024
FROM: DOUG COE, Supervising Br. Eng.	CO-RTE-PM 04-SF,Ala-80-13.9/14.3,0.0/1.6
	FED. NO. ACIM-080-1(085)8N
CCO#: 23 SUPPLEMENT#: 1 Category Code: AHZZ	CONTINGENCY BALANCE (incl. this change) $28,427,539.58
COST: ($6,270.00) INCREASE ☐ DECREASE ☑	HEADQUARTERS APPROVAL REQUIRED? ☐ YES ☑ NO
SUPPLEMENTAL FUNDS PROVIDED: $0.00	IS THIS REQUEST IN ACCORDANCE WITH ENVIRONMENTAL DOCUMENTS? ☑ YES ☐ NO
CCO DESCRIPTION: Providing Power to Truss	**PROJECT DESCRIPTION:** REPLACE SFOBB EAST SPAN

LOCATION: IN SAN FRANCISCO AND ALAMEDA COUNTIES IN SAN FRANCISCO AND OAKLAND FROM 1.3 KM EAST OF THE YERBA BUENA ISL

THIS CHANGE ORDER PROVIDES FOR:

extending the duration of providing electrical power for safety lighting along the temporary access trestle located on the south east of the existing San Francisco Oakland Bay Bridge (SFOBB) bridge number 33-0025L/R at the west end of the maintenance road on the Oakland Mole.

Contract change order no. 23 Supplement 0 providing electric power from a Caltrans maintenance building located about 50 meters from the temporary trestle expired on February 14, 2006. This supplement change order will allow the contractor continued use of electrical power for safety lighting along the temporary access trestle.

The state will continue to receive a credit for the electricity usage based on Adjustment of Compensation at Agreed Unit Price. The contractor shall credit the State a flat rate of $285.00/month for a total of 22 months. This change order will expire on December 14, 2007 or until the temporary trestle system is removed and the Contractor has fulfilled all obligations.

Estimated total credit of this change order equels $6,270.00 (22 x $285.00)

The Contractor shall remain responsible for all the conditions and stipulations set forth in Contract Change Order No. 23 Supplement 0.

FHWA Prior Approval is not required as this is a minor change order.

Design concurrence is not required for this change order as it does not modify the design.

Maintenance concurrence is not required because this work is not related to any permanent Maintenance facility.

No adjustment in contract time is warranted, as this does not affect the controlling operation.

RECEIVED 06 JUL -2 90

CONCURRED BY:		
Construction Engineer:	Douglas Coe	Date 6-30-06
Bridge Engineer:	Douglas Coe	Date 6-30-06
FHWA Representative:		Date
Project Engineer:		Date
Other (specify):		Date
		Date
		Date
District Prior Approval By:		Date
HQ (Issue Approve) By:		Date
Resident Engineer's Signature:		Date 6-30-06

ESTIMATE OF COST	THIS REQUEST	TOTAL TO DATE
ITEMS	$0.00	$0.00
FORCE ACCOUNT	$0.00	$0.00
AGREED PRICE	$0.00	$0.00
ADJUSTMENT	($6,270.00)	($17,385.00)
TOTAL	($6,270.00)	($17,385.00)

FEDERAL PARTICIPATION

☑ PARTICIPATING ☐ PARTICIPATING IN PART ☐ NONE
☐ NON-PARTICIPATING (MAINTENANCE) ☐ NON-PARTICIPATING

FEDERAL SEGREGATION (if more than one Funding Source or P.I.P. type)
☑ CCO FUNDED PER CONTRACT ☐ CCO FUNDED AS FOLLOWS

FEDERAL FUNDING SOURCE	PERCENT

STATE OF CALIFORNIA - DEPARTMENT OF TRANSPORTATION

CONTRACT CHANGE ORDER

Change Requested by: Engineer

CCO: 24	Suppl. No. 0	Contract No. 04 - 012024	Road 04-SF,Ala-80-13.9/14.3,0.0/1.6	FED. AID LOC.: ACIM-080-1(085)8N

To: KIEWIT / FCI / MANSON a JV

You are directed to make the following changes from the plans and specifications or do the following described work not included in the plans and specifications for this contract. ***NOTE: This change order is not effective until approved by the Engineer.***

Description of work to be done, estimate of quantities and prices to be paid. (Segregate between additional work at contract price, agreed price and force account.) Unless otherwise stated, rates for rental of equipment cover only such time as equipment is actually used and no allowance will be made for idle time. This last percentage shown is the net accumulated increase or decrease from the original quantity in the Engineer's Estimate.

Adjustment of Compensation at Lump Sum:

Compensate the Contractor's subcontractor for cost incurred through August 31, 2003, to revise working drawings associated with revising the walkway shop drawings to reflect design changes that occurred after the working drawings were completed.

This change order resolves Mountain States Steel Change Order Request Numbers 7.1, 7.2, 7.3, 12, 12.1, and 15 for shop drawing detailing costs associated with contract plan sheet numbers 92, 93, 93A, 93B, 93C, 93D, 94, 95, 96, 97, 97A, 97B, 97C, 97D, 98, 99, 100, 101, 102, 102A, 108, 109, 109A, 109B, and 109C.

For this change, the Contractor will receive an agreed Lump Sum of $114,830. This agreed lump sum constitutes full compensation, including all markups, for all direct and indirect costs, all associated project impacts, and all Time Related Overhead (TRO) expenses.

Cost of Adjustment of Compensation at Agreed Lump Sum $114,830.00

Estimated Cost: Increase ☑ Decrease ☐ $114,830.00

By reason of this order the time of completion will be adjusted as follows: 0 days

Submitted by

Signature	Resident Engineer: COE D.	Date 10-16-03

Approval Recommended by

Signature	Construction Engineer: COE D.	Date 10-16-03

Engineer Approval by

Signature	(Print name and title) PETER SIEGENTHALER - Chief	Date 10/16/03

We the undersigned contractor, have given careful consideration to the change proposed and agree, if this proposal is approved, that we will provide all equipment, furnish the materials, except as may otherwise be noted above, and perform all services necessary for the work above specified, and will accept as full payment therefor the prices shown above.

NOTE: If you, the contractor, do not sign acceptance of this order, your attention is directed to the requirements of the specifications as to proceeding with the ordered work and filing a written protest within the time therein specified.

Contractor Acceptance by

Signature	(Print name and title) A.T. Skoro, Project Director	Date 10/16/03

STATE OF CALIFORNIA - DEPARTMENT OF TRANSPORTATION

CONTRACT CHANGE ORDER MEMORANDUM

DATE: 10/15/2003 Page 1 of 1

TO: PETER SIEGENTHALER / COE D.	FILE: E.A. 04 - 012024
FROM: COE D.	CO-RTE-PM 04-SF,Ala-80-13.9/14.3,0.0/1.6
	FED. NO. ACIM-080-1(085)8N
CCO#: 24 SUPPLEMENT#: 0 Category Code: CHPT	CONTINGENCY BALANCE (incl. this change) $25,885,354.44
COST: $114,830.00 INCREASE ☑ DECREASE ☐	HEADQUARTERS APPROVAL REQUIRED? ☐ YES ☑ NO
SUPPLEMENTAL FUNDS PROVIDED: $0.00	IS THIS REQUEST IN ACCORDANCE WITH ENVIRONMENTAL DOCUMENTS? ☑ YES ☐ NO
CCO DESCRIPTION: Web Manhole Access- Shop drawings	PROJECT DESCRIPTION: REPLACE SFOBB EAST SPAN

LOCATION: IN SAN FRANCISCO AND ALAMEDA COUNTIES IN SAN FRANCISCO AND OAKLAND FROM 1.3 KM EAST OF THE YERBA BUENA ISL

HISTORY COPY

THIS CHANGE ORDER PROVIDES FOR:

compensating Mountain States Steel, the Contractor's subcontractor, for work performed through August 31, 2003, to revise working drawings to reflect design changes associated with the relocation of the walkways and ladders in the supersturcture segments that were incorporated after the working drawings were completed.

During the development of the Contractor's composite segment working drawings for the superstructure precast segments, multiple conflicts between walkways, ladders, prestressing tendons, rebar, and segment joints were found. Relocation of the walkways and ladders was necessary to relieve the congestion and interference problems within the segments. Consequently, the contractor had to revise his shop drawings to reflect the new revisions in the design drawings.

This change order resolves Mountain States Steel Change Order Request Numbers 7.1, 7.2, 7.3, 12, 12.1, and 15, for shop drawing detailing costs associated with contract plan revisions for sheet numbers 92, 93, 93A, 93B, 93C, 93D, 94, 95, 96, 97, 97A, 97B, 97C, 97D, 98, 99, 100, 101, 102, 102A, 108, 109, 109A, 109B, and 109C.

For this change, the Contractor will receive an agreed lump sum of $114,830.00. This agreed lump sum constitutes full compensation including all markups, for all direct costs, all associated project impacts, and all Time Related Overhead (TRO) expenses. Records and calculations used to determine the adjustment of compensation are on file in the project records.

No adjustment of contract time is warranted, as this change order does not affect the controlling operation.

FHWA concurrence is not required. Design concurrence is not required to compensate the Contractor for the detailing of the shop drawings. Maintenance concurrence is not required, as this change order does not affect any permanent work.

CONCURRED BY:		
Construction Engineer: Douglas Coe		Date 10-16-03
Bridge Engineer:		Date
FHWA Representative:		Date
Project Engineer:		Date
Other (specify):		Date
		Date
		Date
District Prior Approval By:		Date
HQ (Issue Approve) By:		Date
Resident Engineer's Signature		Date 10-16-03

ESTIMATE OF COST	THIS REQUEST	TOTAL TO DATE
ITEMS	$0.00	$0.00
FORCE ACCOUNT	$0.00	$0.00
AGREED PRICE	$0.00	$0.00
ADJUSTMENT	$114,830.00	$614,830.00
TOTAL	$114,830.00	$614,830.00

FEDERAL PARTICIPATION

☑ PARTICIPATING ☐ PARTICIPATING IN PART ☐ NONE
☐ NON-PARTICIPATING (MAINTENANCE) ☐ NON-PARTICIPATING

FEDERAL SEGREGATION (if more than one Funding Source or P.I.P. type)
☑ CCO FUNDED PER CONTRACT ☐ CCO FUNDED AS FOLLOWS

FEDERAL FUNDING SOURCE	PERCENT

STATE OF CALIFORNIA - DEPARTMENT OF TRANSPORTATION

CONTRACT CHANGE ORDER

Change Requested by: Engineer

CCO: 24	Suppl. No. 1	Contract No. 04 - 012024	Road 04-SF,Ala-80-13.9/14.3,0.0/1.6	FED. AID LOC.: ACIM-080-1(085)8N

To: **KIEWIT / FCI / MANSON a JV**

You are directed to make the following changes from the plans and specifications or do the following described work not included in the plans and specifications for this contract. ***NOTE: This change order is not effective until approved by the Engineer.***

Description of work to be done, estimate of quantities and prices to be paid. (Segregate between additional work at contract price, agreed price and force account.) Unless otherwise stated, rates for rental of equipment cover only such time as equipment is actually used and no allowance will be made for idle time. This last percentage shown is the net accumulated increase or decrease from the original quantity in the Engineer's Estimate.

Adjustment of Compensation at Lump Sum:

Relocate web manholes and continuity tendons in the superstructure segments for the SFOBB - East Span Skyway, Bridge Nos. 34-0006L/R as shown on revised contract plan sheet numbers 537R3, 540R2, 544R2, 548R3, 550R3, 551R3, 554R2, 558R2, 562R3, 564R3, 653R1, 654R1, 655R1, 656R1, 657R1, 658R1, 659R1, 660R1, 661R1, 662R1, 663R1, 664R1, 665R1, 666R1, 667R1, 668R1, 669R1, 670R1, 671R1, 672R1, 673R1, 674R1, 675R1, 676R1, 677R1, 678R1, 679R1, 680R1, 681R1, 682R1, 695R1, 696R1, 697R1, 698R1, 853R2, and 899R1 of 978 (sheets 2 through 47 of this change order), and modify the segment casting machine bulkheads as needed to accommodate the revised continuity tendon profiles.

There shall be no cost or credit to the State by reason of this change.

Cost of Adjustment of Compensation at Agreed Lump Sum $0.00

Estimated Cost: **Increase** ☐ **Decrease** ☐ **$0.00**

By reason of this order the time of completion will be adjusted as follows: 0 days

Submitted by

Signature	Resident Engineer: DOUG COE, Supervising Br. Eng.	Date 1-23-2006

Approval Recommended by

Signature	Construction Engineer: DOUG COE, Supervising Br. Eng.	Date 1-23-2006

Engineer Approval by

Signature David Salladay	(Print name and title) for PETER SIEGENTHALER - Chief	Date 3/14/06

We the undersigned contractor, have given careful consideration to the change proposed and agree, if this proposal is approved, that we will provide all equipment, furnish the materials, except as may otherwise be noted above, and perform all services necessary for the work above specified, and will accept as full payment therefor the prices shown above.

NOTE: If you, the contractor, do not sign acceptance of this order, your attention is directed to the requirements of the specifications as to proceeding with the ordered work and filing a written protest within the time therein specified.

Contractor Acceptance by

Signature	(Print name and title) Deputy Project Director	Date 2/28/06

DIST.	COUNTY	ROUTE	KILOMETER POST TOTAL PROJECT	SHEET NO.	TOTAL SHEETS
04	SF, Ala	80	13.9/14.3, 0.0/1.6	537R3	978

Scott Hunter
REGISTERED ENGINEER - CIVIL
6-4-01
PLANS APPROVAL DATE

REGISTERED PROFESSIONAL ENGINEER Scott Hunter No. C 048066 Exp. 12/31/03 CIVIL STATE OF CALIFORNIA

The State of California or its officers or agents shall not be responsible for the accuracy or completeness of electronic copies of this plan sheet.

T.Y. LIN / MOFFATT & NICHOL
825 BATTERY STREET
SAN FRANCISCO, CA 94111

Caltrans now has a web site! To get to the web site, go to: http://www.dot.ca.gov

Caltrans Metric

MARK	DATE	DESCRIPTIONS	BY	CH'D	CCO#
5	04/16/04	REVISE DECK MANHOLE LOCATION	MS	SA	
4	07/25/03	REVISE WEB MANHOLE LOCATIONS	MR	JC	
3	07/25/03	REVISE PIER TABLE BOTTOM SLAB ACCESS OPENING	MR	JC	

REVISIONS

CONTRACT CHANGE ORDER NO. 2451
SHEET 2 OF 47

NOTES:

1. For prestressing notes, see "Prestressing Notes" sheet.
2. For cantilever tendon layout, see "Cantilever Tendon Layout" sheets.
3. For top span tendon layout, see "Top Span Tendon Layout" sheets.
4. For bottom span tendon layout, see "Bottom Span Tendon Layout" sheets.
5. For continuity tendon layout, see "Continuity Tendon Layout" sheets.
6. For transverse tendons layout, see "Transverse Tendon Details" sheets.
7. For vertical PT layout, see "Vertical PT Details" sheets.
8. For girder reinforcement, see "Girder Reinforcement" sheets.
9. Key to segment nomenclature: | E or W
   Segment No. — East or West
10. For web manhole details, see "Miscellaneous Details" sheets.
11. For deck manhole details, see (87-11).
12. For girder interior walkway layout, see "Road Plans".
13. For Preformed Loop Detector details, see "Road Plans".
14. Orientation of diaphragm and precast panel rib shall be normal to "W" Line.
15. For dimensions not shown, see "Typical Sections" sheets.

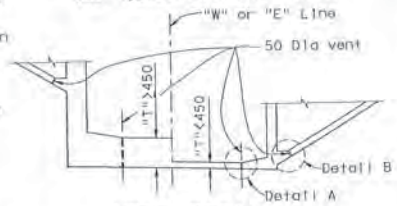

VENT DETAIL
1:100

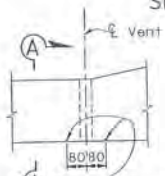

DETAIL A
1:10

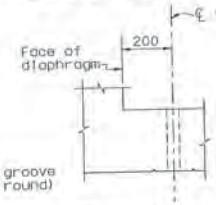

SECTION A-A
1:10

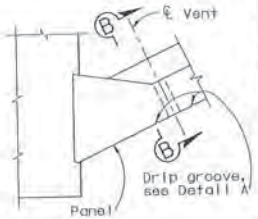

DETAIL B
1:10

SECTION B-B
1:10

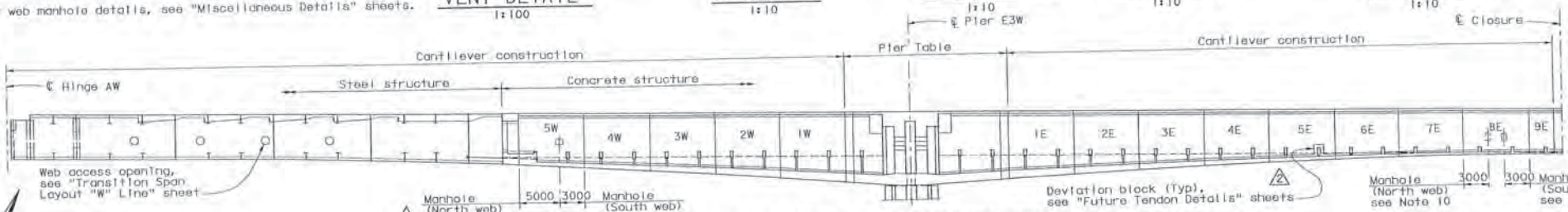

DEVELOPED LONGITUDINAL SECTION
1:250

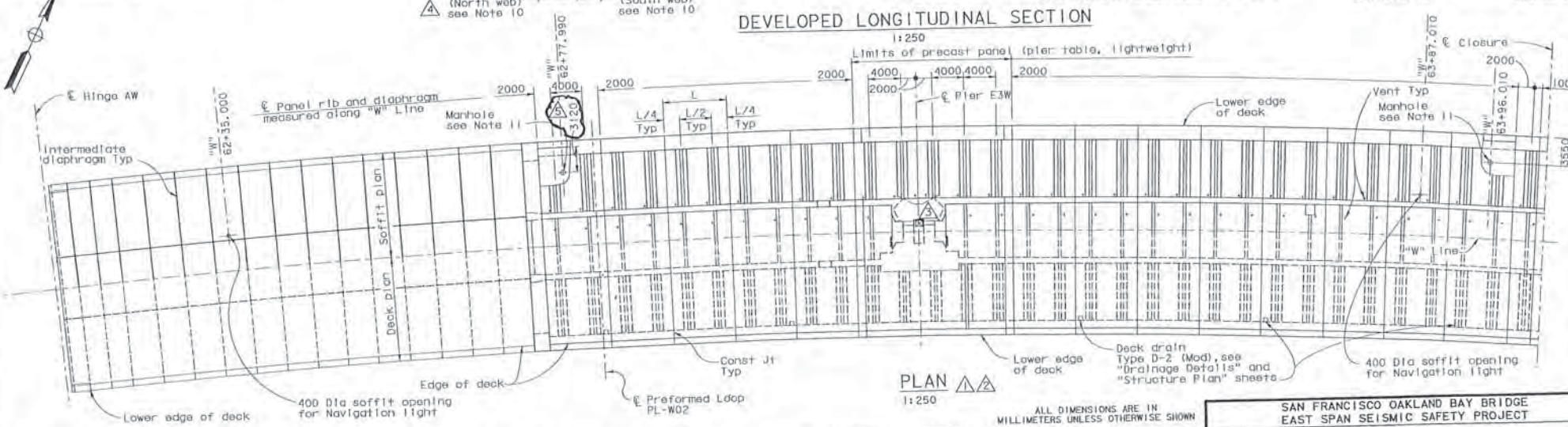

PLAN 1 2
1:250

ALL DIMENSIONS ARE IN MILLIMETERS UNLESS OTHERWISE SHOWN

100% PS&E

SAN FRANCISCO OAKLAND BAY BRIDGE
EAST SPAN SEISMIC SAFETY PROJECT

SKYWAY STRUCTURES

GIRDER LAYOUT E3W

MARK	DATE	DESCRIPTIONS	BY	CH'D	CCO#
2	01/20/03	REVISE FUTURE TENDON DEV BLOCK LOCATION	MR	JC	
1	01/20/03	REVISE DRAIN LOCATIONS	MR	SS	

DESIGN OVERSIGHT 4/16/04
SIGN OFF DATE

DESIGN BY S. Hunter
DETAILS BY A. Lishansky
QUANTITIES BY K. Cornsler
CHECKED M. Lamont
CHECKED M. Lamont
CHECKED S. Shi

PREPARED FOR THE STATE OF CALIFORNIA DEPARTMENT OF TRANSPORTATION

Sajid Abbas
PROJECT ENGINEER

BRIDGE NO. 34-0006L/R
KILOMETER POST 3.9/14.3, 0.0/1.6

CU 04
EA 012021

DISREGARD PRINTS BEARING EARLIER REVISION DATES

REVISION DATES (PRO) (HIGHWAY STATE ONLY)

SHEET 105

Rev. Date: 8-18-98

ORIGINAL SCALE IN MILLIMETERS FOR REDUCED PLANS

NOTES:

1. For notes, see "Girder Layout E3W" sheet.
2. For vent details, see "Girder Layout E3W" sheet.
3. Key to segment nomenclature: 1 E or W
   Segment No. — East or West
4. For web manhole details, see "Miscellaneous Details" sheets.
5. For deck manhole details, see B7-11.
6. Orientation of diaphragm and precast panel rib shall be normal to "W" Line.

MARK	DATE	DESCRIPTIONS	BY	CH'D	CCO
4	01/25/03	REVISE WEB MANHOLE LOCATIONS	MR	JC	2451
3	01/25/03	REVISE PIER TABLE BOTTOM SLAB ACCESS OPENING	MR	JC	74
2	01/20/03	REVISE FUTURE TENDON DEV BLOCK LOCATION	MR	JC	52
1	01/20/03	REVISE DRAIN LOCATIONS	MR	SS	28

REVISIONS

CONTRACT CHANGE ORDER NO. 24 S1
SHEET ___ OF ___

DIST.	COUNTY	ROUTE	KILOMETER POST TOTAL PROJECT	SHEET NO.	TOTAL SHEETS
04	SF, Ala	80	13.9/14.3, 0.0/1.6	540R2	978

Scott Hunter
REGISTERED ENGINEER - CIVIL
6-4-01
PLANS APPROVAL DATE
The State of California or its officers or agents shall not be responsible for the accuracy or completeness of electronic copies of this plan sheet.

REGISTERED PROFESSIONAL ENGINEER Scott Hunter No. C 048066 Exp. 12/31/03 CIVIL STATE OF CALIFORNIA

T.Y. LIN / MOFFATT & NICHOL
825 BATTERY STREET
SAN FRANCISCO, CA 94111

Caltrans now has a web site! To get to the web site, go to: http://www.dot.ca.gov

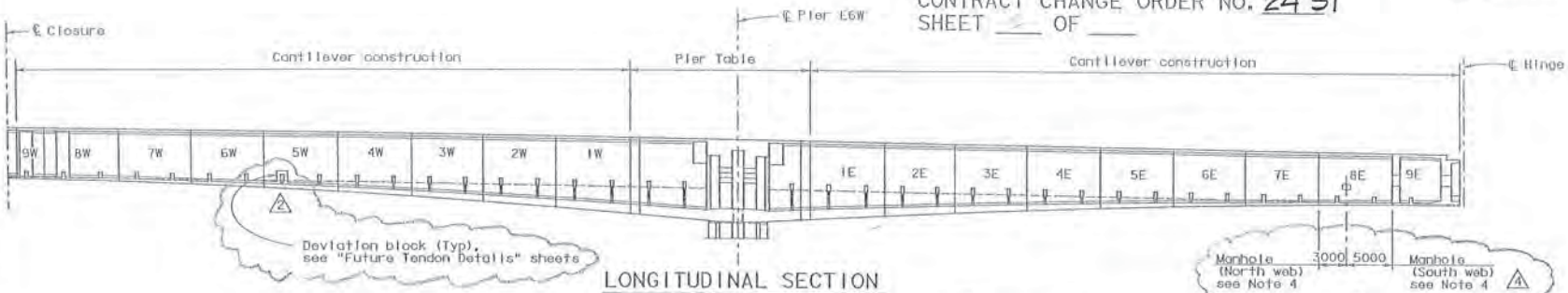

LONGITUDINAL SECTION
1:250

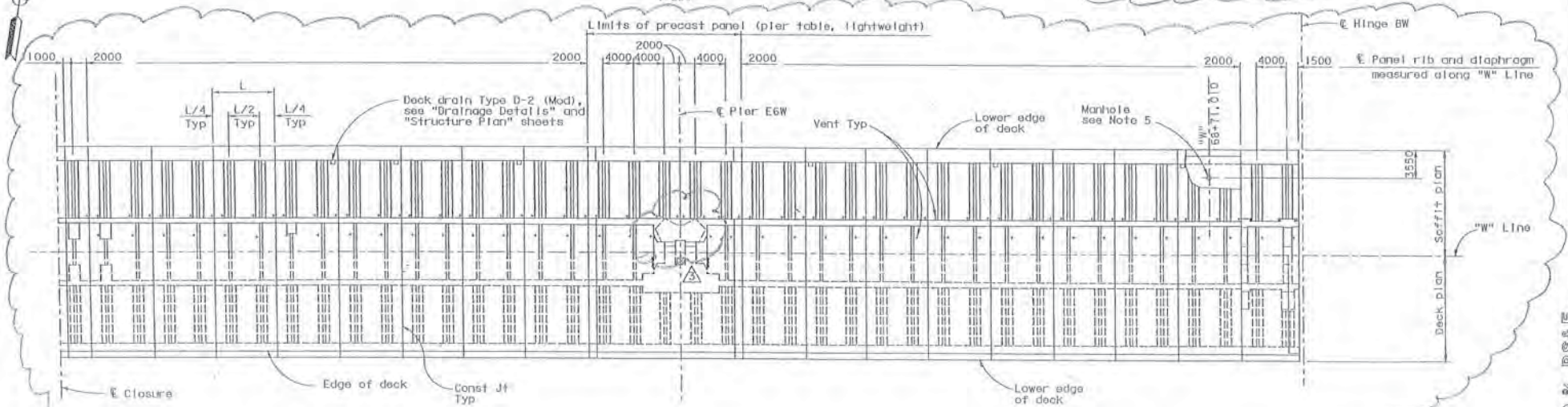

PLAN 1 2
1:250

ALL DIMENSIONS ARE IN MILLIMETERS UNLESS OTHERWISE SHOWN

SAN FRANCISCO OAKLAND BAY BRIDGE
EAST SPAN SEISMIC SAFETY PROJECT

SKYWAY STRUCTURES

GIRDER LAYOUT E6W

DESIGN DIVISION 8/6/2003
SIGN OFF DATE

DESIGN	S. Hunter	M. Lamont	
DETAILS	A. Lishansky	M. Lamont	
QUANTITIES	K. Cormier	S. Shi	

PREPARED FOR THE STATE OF CALIFORNIA DEPARTMENT OF TRANSPORTATION

Sajid Abbas
PROJECT ENGINEER

BRIDGE NO. 34-0006L/R
KILOMETER POST 13.9/14.3, 0.0/1.6

CU 04

DISREGARD PRINTS BEARING EARLIER REVISION DATE

REVISION DATES SPECIFIC TO THIS SHEET ONLY

SHEET ___ OF ___

100 % PS&E

NOTES:

1. For notes, see "Girder Layout E3W" sheet.
2. For vent details, see "Girder Layout E3W" sheet.
3. Key to segment nomenclature: 1 E or W
   Segment No. — East or West
4. For web manhole details, see "Miscellaneous Details" sheets.
5. For deck manhole details, see B7-11.
6. Orientation of diaphragm and precast panel rib shall be normal to "W" Line.

	MARK	DATE	DESCRIPTIONS	BY	CH'D
24S1	4	01/25/03	REVISE WEB MANHOLE LOCATIONS	MR	JC
74	3	01/25/03	REVISE PIER TABLE BOTTOM SLAB ACCESS OPENING	MR	JC
52	2	01/20/03	REVISE FUTURE TENDON DEV BLOCK LOCATION	MR	JC
23	1	01/20/03	REVISE DRAIN LOCATIONS	MR	SS
CCO			REVISIONS		

CONTRACT CHANGE ORDER NO. 24 S1
SHEET 3 OF ___

DIST.	COUNTY	ROUTE	KILOMETER POST TOTAL PROJECT	SHEET NO.	TOTAL SHEETS
04	SF, Ala	80	13.9 / 14.3, 0.0 / .6	544R2	978

Scott Hunter
REGISTERED ENGINEER - CIVIL
6-4-01
PLANS APPROVAL DATE
REGISTERED PROFESSIONAL ENGINEER Scott Hunter No. C 048066 Exp. 12/31/03 CIVIL STATE OF CALIFORNIA
The State of California or its officers or agents shall not be responsible for the accuracy or completeness of electronic copies of this plan sheet.

T.Y. LIN / MOFFATT & NICHOL
825 BATTERY STREET
SAN FRANCISCO, CA. 94111

Caltrans now has a web site! To get to the web site, go to: http://www.dot.ca.gov

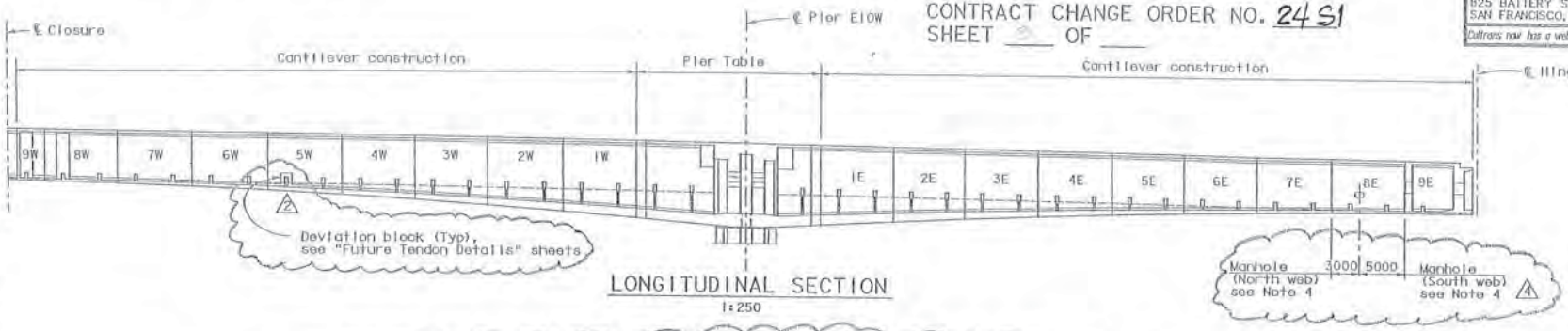

LONGITUDINAL SECTION
1:250

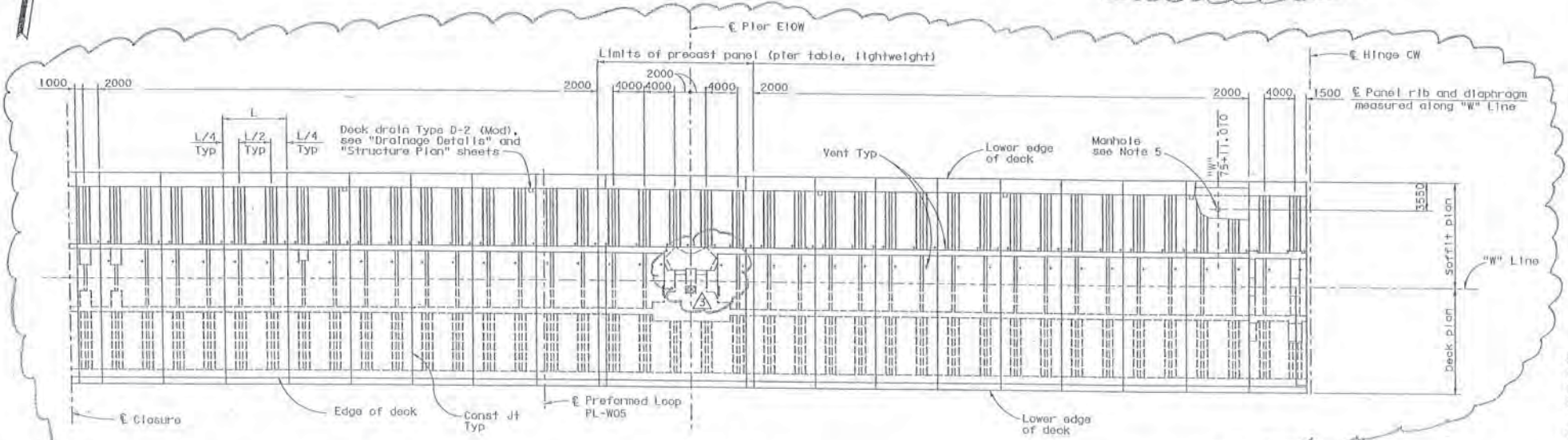

PLAN
1:250

ALL DIMENSIONS ARE IN MILLIMETERS UNLESS OTHERWISE SHOWN

100% PS&E

Hasan Shahzad
DESIGN OVERSIGHT 8/6/2003
SIGN OFF DATE

DESIGN	BY S. Hunter	CHECKED M. Lamont	
DETAILS	BY A. Lishansky	CHECKED M. Lamont	
QUANTITIES	BY K. Corsiler	CHECKED S. Shi	

PREPARED FOR THE STATE OF CALIFORNIA DEPARTMENT OF TRANSPORTATION

Sajid Abbas
PROJECT ENGINEER

BRIDGE NO. 34-0006L/R
KILOMETER POST 13.9/14.3, 0.0/1.6

SAN FRANCISCO OAKLAND BAY BRIDGE
EAST SPAN SEISMIC SAFETY PROJECT

SKYWAY STRUCTURES

GIRDER LAYOUT E1OW

Rev. Date: 5-10-00

ORIGINAL SCALE IN MILLIMETERS FOR REDUCED PLANS 0 10 20 30 40 50 60 70 80 90 100

CU 04
EA 012021

DISREGARD PRINTS BEARING EARLIER REVISION DATES

REVISION DATES (PRELIMINARY STAGE ONLY)

SHEET 69

NOTES:

1. For notes, see "Girder Layout E3W" sheet.
2. For vent details, see "Girder Layout E3W" sheet.
3. Key to segment nomenclature: E or W — East or West; Segment No.
4. For web manhole details, see "Miscellaneous Details" sheets.
5. For deck manhole details, see (B7-11).
6. Orientation of diaphragm and precast panel rib shall be normal to "W" Line.

DIST.	COUNTY	ROUTE	KILOMETER POST TOTAL PROJECT	SHEET NO.	TOTAL SHEETS
04	SF/Ala	80	13.9/14.3, 0.0/1.6	548R3	978

Sajid Abbas
REGISTERED ENGINEER - CIVIL
6-4-01
PLANS APPROVAL DATE

The State of California or its officers or agents shall not be responsible for the accuracy or completeness of electronic copies of this plan sheet.

T.Y. LIN / MOFFATT & NICHOL
825 BATTERY STREET
SAN FRANCISCO, CA 94111

Caltrans now has a web site! To get to the web site, go to: http://www.dot.ca.gov

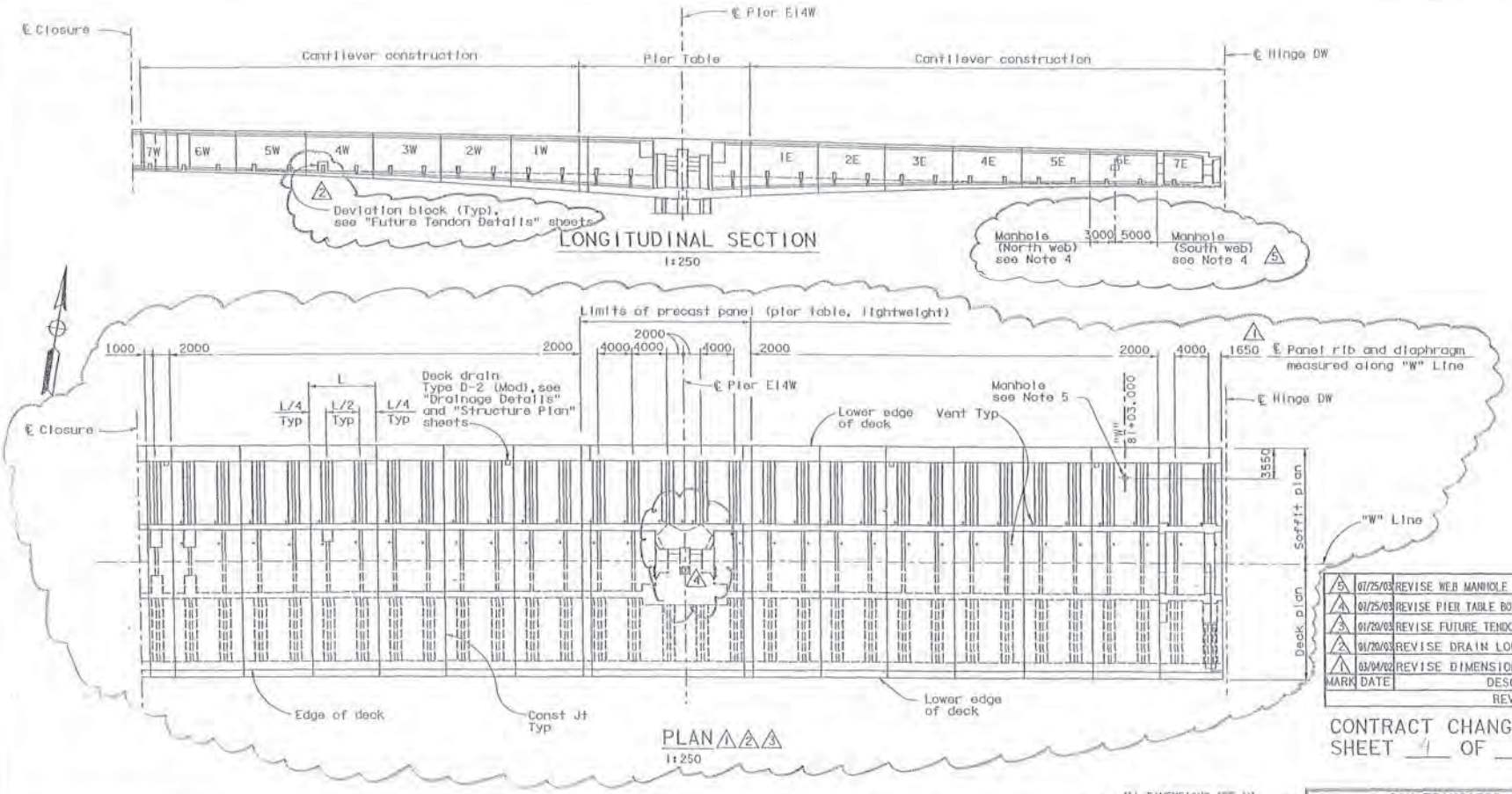

MARK	DATE	DESCRIPTIONS	BY	CH'D
5	07/25/03	REVISE WEB MANHOLE LOCATIONS 2451	MR	JC
4	01/25/03	REVISE PIER TABLE BOTTOM SLAB ACCESS OPENING	MR	JC
3	01/20/03	REVISE FUTURE TENDON DEV BLOCK LOCATION	MR	JC
2	01/20/03	REVISE DRAIN LOCATIONS 28	MR	SS
1	03/04/02	REVISE DIMENSION 9	TM	SC

REVISIONS

CONTRACT CHANGE ORDER NO. 24 S1
SHEET 1 OF ___

ALL DIMENSIONS ARE IN MILLIMETERS UNLESS OTHERWISE SHOWN

DESIGN OVERSIGHT 8/6/2007
SIGN OFF DATE

DESIGN	BY S. Abbas	ENCODED M. Lamont	
DETAILS	BY A. Lishansky	CHECKED M. Lamont	
QUANTITIES	BY K. Cornior	ENCODED S. Shi	

PREPARED FOR THE STATE OF CALIFORNIA DEPARTMENT OF TRANSPORTATION

Sajid Abbas
PROJECT ENGINEER

BRIDGE NO. 34-0006L/R
KILOMETER POST 13.9/14.3, 0.0/1.6
CU 04
EA 04-019721

SAN FRANCISCO OAKLAND BAY BRIDGE
EAST SPAN SEISMIC SAFETY PROJECT

SKYWAY STRUCTURES

GIRDER LAYOUT E14W

Rev. Date: 5-18-99

ORIGINAL SCALE IN MILLIMETERS FOR REDUCED PLANS 0 10 20 30 40 50 60 70 80 90 100

DISREGARD PRINTS BEARING EARLIER REVISION DATES

REVISION DATES (PRELIMINARY STAGE ONLY)

SHEET ___ OF ___

100% PS&E

NOTES:

1. For notes, see "Girder Layout E3W" sheet.
2. For vent details, see "Girder Layout E3W" sheet.
3. Key to segment nomenclature: | E or W
   Segment No. — East or West
4. For web manhole details, see "Miscellaneous Details" sheets.
5. For deck manhole details, see (B7-11).
6. Orientation of diaphragm and precast panel rib shall be normal to "W" Line.

DIST.	COUNTY	ROUTE	KILOMETER POST TOTAL PROJECT	SHEET NO.	TOTAL SHEETS
04	SF/Ala	80	13.9/14.3, 0.0/1.6	550R3	978

Caltrans Metric

Sajid Abbas
REGISTERED ENGINEER - CIVIL

6-4-01
PLANS APPROVAL DATE

REGISTERED PROFESSIONAL ENGINEER Sajid Abbas No. C 055274 Exp. 12/31/04 CIVIL STATE OF CALIFORNIA

The State of California or its officers or agents shall not be responsible for the accuracy or completeness of electronic copies of this plan sheet.

T.Y. LIN / MOFFATT & NICHOL
825 BATTERY STREET
SAN FRANCISCO, CA 94111

Caltrans now has a web site! To get to the web site, go to: http://www.dot.ca.gov

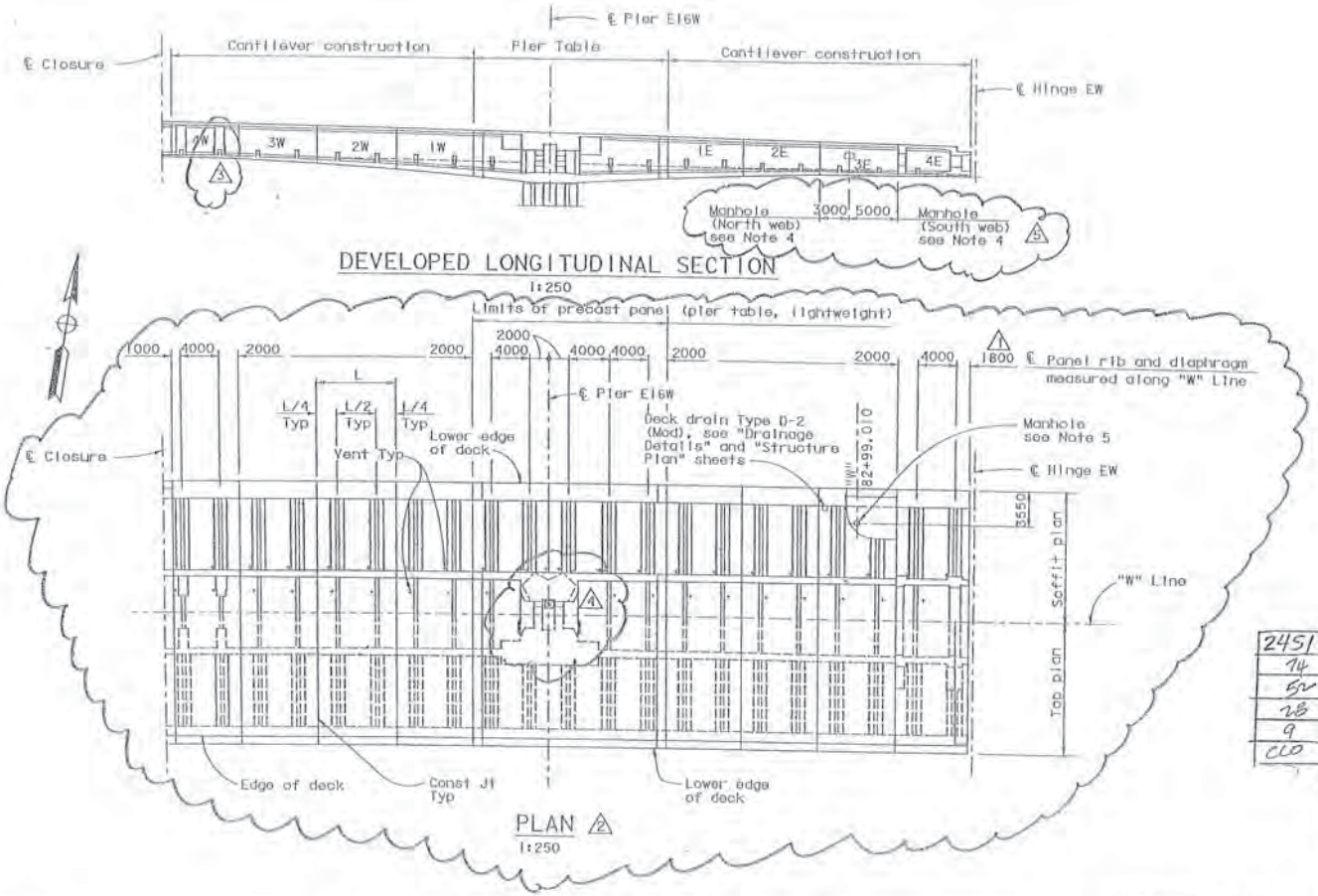

MARK	DATE	DESCRIPTIONS	BY	CH'D
2451	07/25/03	REVISE WEB MANHOLE LOCATIONS	MR	JC
74	07/25/03	REVISE PIER TABLE BOTTOM SLAB ACCESS OPENING	MR	SS
52	01/20/03	REVISE FUTURE TENDON DEV BLOCK LOCATION	MR	SS
28	01/20/03	REVISE DRAINAGE LOCATIONS	MR	SS
9	03/04/02	REVISE DIMENSION	TM	SC
CCO		REVISIONS		

CONTRACT CHANGE ORDER NO. 2451
SHEET 5 OF ___

ALL DIMENSIONS ARE IN MILLIMETERS UNLESS OTHERWISE SHOWN

DESIGN OVERSIGHT 8/6/2003
SIGN OFF DATE

DESIGN	BY S. Abbas	CHECKED M. Lamont	
DETAILS	BY A. Lishansky	CHECKED M. Lamont	
QUANTITIES	BY K. Corsiter	CHECKED S. Shi	

PREPARED FOR THE STATE OF CALIFORNIA DEPARTMENT OF TRANSPORTATION

Sajid Abbas
PROJECT ENGINEER

BRIDGE NO. 34-0006L/R
KILOMETER POST 13.9/14.3, 0.0/1.6

SAN FRANCISCO OAKLAND BAY BRIDGE
EAST SPAN SEISMIC SAFETY PROJECT

SKYWAY STRUCTURES

GIRDER LAYOUT E16W

Rev. Date: 5-8-96

ORIGINAL SCALE IN MILLIMETERS

100% PS&E

Caltrans now has a web site! To get to the web site, go to http://www.dot.ca.gov

DIST.	COUNTY	ROUTE	KILOMETER POST TOTAL PROJECT	SHEET NO.	TOTAL SHEETS
04	SF, Ala	80	13.9 / 14.3 0.0 / 1.6	551R3	978

Scott Hunter
REGISTERED ENGINEER - CIVIL
6-4-01
PLANS APPROVAL DATE

REGISTERED PROFESSIONAL ENGINEER Scott Hunter No. C 048066 Exp. 12/31/03 CIVIL STATE OF CALIFORNIA

The State of California or its officers or agents shall not be responsible for the accuracy or completeness of electronic copies of this plan sheet.

T.Y. LIN / MOFFATT & NICHOL
825 BATTERY STREET
SAN FRANCISCO, CA 94111

Caltrans Metric

MARK	DATE	DESCRIPTIONS	BY	CH'D	CCO#
5	04/16/04	REVISE DECK MANHOLE LOCATION	MS	SA	
4	01/25/03	REVISE WEB MANHOLE LOCATIONS	MR	JC	
3	01/25/03	REVISE PIER TABLE BOTTOM SLAB ACCESS OPENING	MR	JC	

REVISIONS

CONTRACT CHANGE ORDER NO. 2451
SHEET 6 OF ___

NOTES:

1. For notes, see "Girder Layout E3W" sheet.
2. For vent details, see "Girder Layout E3W" sheet.
3. For bikepath details, see "Bikepath Details" sheets.
4. Key to segment nomenclature: | E or W
   Segment No. — East or West
5. For web manhole details, see "Miscellaneous Details" sheets.
6. For deck manhole details, see (B7-11).
7. Orientation of diaphragm and precast panel rib shall be normal to "E" Line.

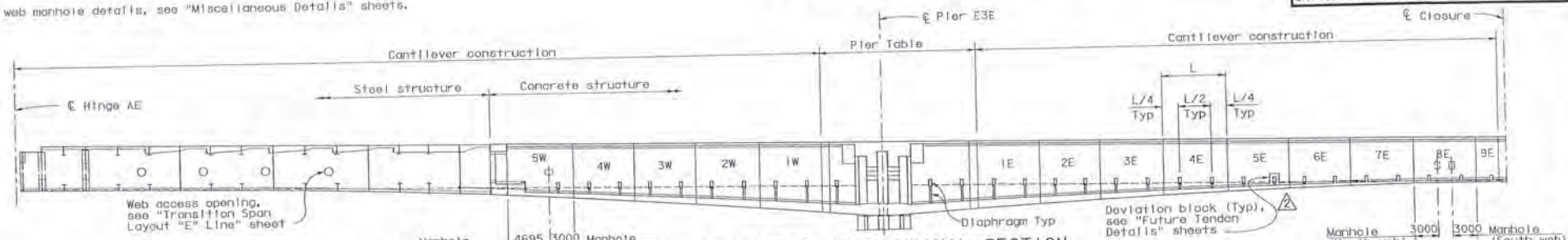

DEVELOPED LONGITUDINAL SECTION
1:250

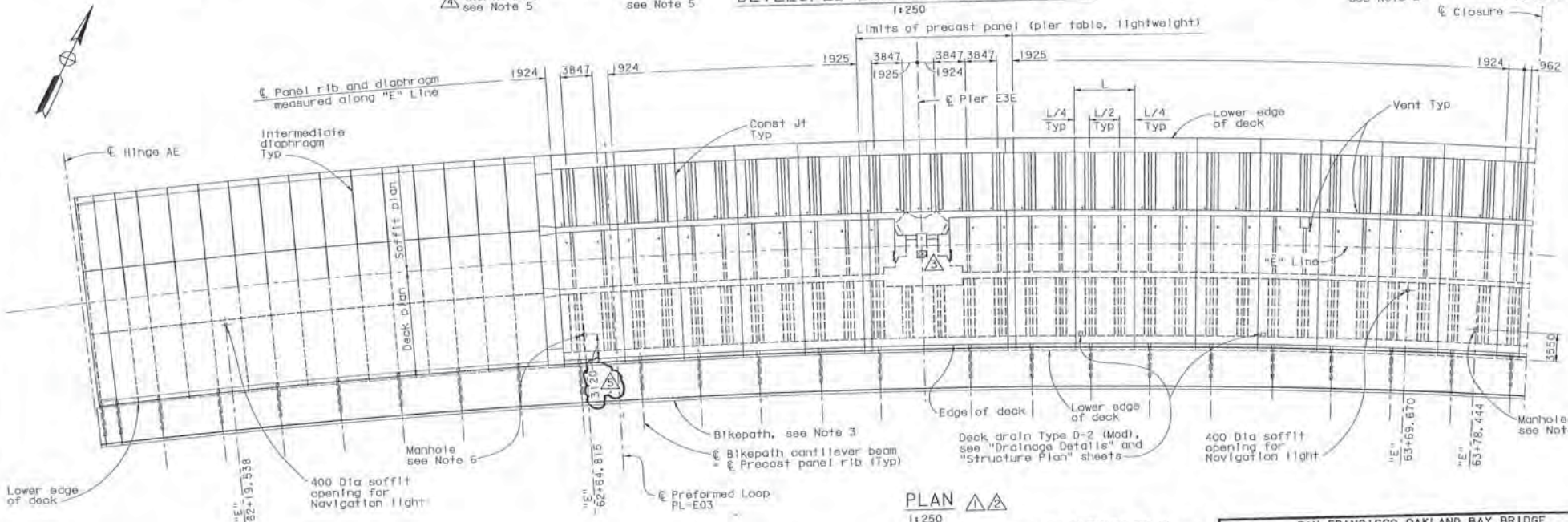

PLAN
1:250

ALL DIMENSIONS ARE IN MILLIMETERS UNLESS OTHERWISE SHOWN

SAN FRANCISCO OAKLAND BAY BRIDGE
EAST SPAN SEISMIC SAFETY PROJECT

SKYWAY STRUCTURES

GIRDER LAYOUT E3E

MARK	DATE	DESCRIPTIONS	BY	CH'D	CCO#
2	01/20/03	REVISE FUTURE TENDON DEV BLOCK LOCATION	MR	JC	
1	01/20/03	REVISE DRAIN LOCATIONS	MR	SS	

DESIGN OVERSIGHT: Dwight Lopez 4/16/04
SIGN OFF DATE

DESIGN: S. Hunter — CHECKED: M. Lamont
DETAILS: A. Lishansky — CHECKED: M. Lamont
QUANTITIES: K. Cormier — CHECKED: S. Shi

PREPARED FOR THE STATE OF CALIFORNIA DEPARTMENT OF TRANSPORTATION

Sajid Abbas
PROJECT ENGINEER

BRIDGE NO. 34-0006L/R
KILOMETER POST 13.9/14.3, 0.0/1.6

CU 04
EA 012021

DISREGARD PRINTS BEARING EARLIER REVISION DATES

REVISION DATES (PRELIMINARY STAGE ONLY)

SHEET 119 OF

ORIGINAL SCALE IN MILLIMETERS FOR REDUCED PLANS 0 10 20 30 40 50 60 70 80 90 100

100 % PS&E

NOTES:

1. For notes, see "Girder Layout E3W" sheet.
2. For vent details, see "Girder Layout E3W" sheet.
3. For bikepath details, see "Bikepath Details" sheets.
4. Key to segment nomenclature: 1 E or W
   Segment No. — East or West
5. For web manhole details, see "Miscellaneous Details" sheets.
6. For deck manhole details, see B7-11.
7. Orientation of diaphragm and precast panel rib shall be normal to "E" Line.

MARK	DATE	DESCRIPTIONS	BY	CH'D	
4	07/25/03	REVISE WEB MANHOLE LOCATIONS	MR	JC	245I
3	07/25/03	REVISE PIER TABLE BOTTOM SLAB ACCESS OPENING	MR	JC	74
2	01/20/03	REVISE FUTURE TENDON DEV BLOCK LOCATION	MR	JC	52
1	01/20/03	REVISE DRAIN LOCATIONS	MR	SS	28
		REVISIONS			220

CONTRACT CHANGE ORDER NO. 245I
SHEET 7 OF ___

Caltrans Metric

DIST.	COUNTY	ROUTE	KILOMETER POST TOTAL PROJECT	SHEET NO.	TOTAL SHEETS
04	SF, Ala	80	13.9 / 4.3 / 0.0 / .6	554R2	978

REGISTERED ENGINEER - CIVIL
6-4-01
PLANS APPROVAL DATE
Scott Hunter C 048066 Exp. 12/31/03 CIVIL STATE OF CALIFORNIA
The State of California or its officers or agents shall not be responsible for the accuracy or completeness of electronic copies of this plan sheet.

T.Y. LIN / MOFFATT & NICHOL
825 BATTERY STREET
SAN FRANCISCO, CA 94111
Caltrans now has a web site! To get to the web site, go to: http://www.dot.ca.gov

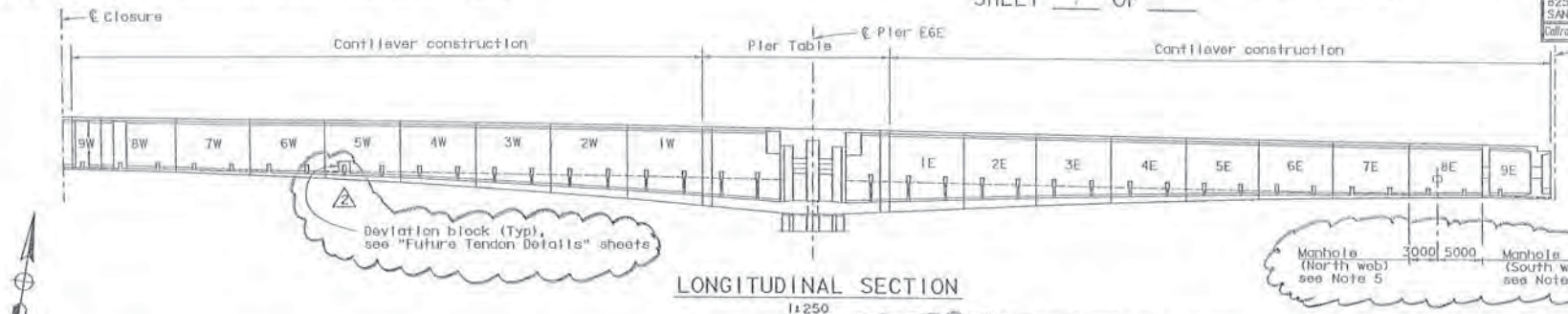

LONGITUDINAL SECTION
1:250

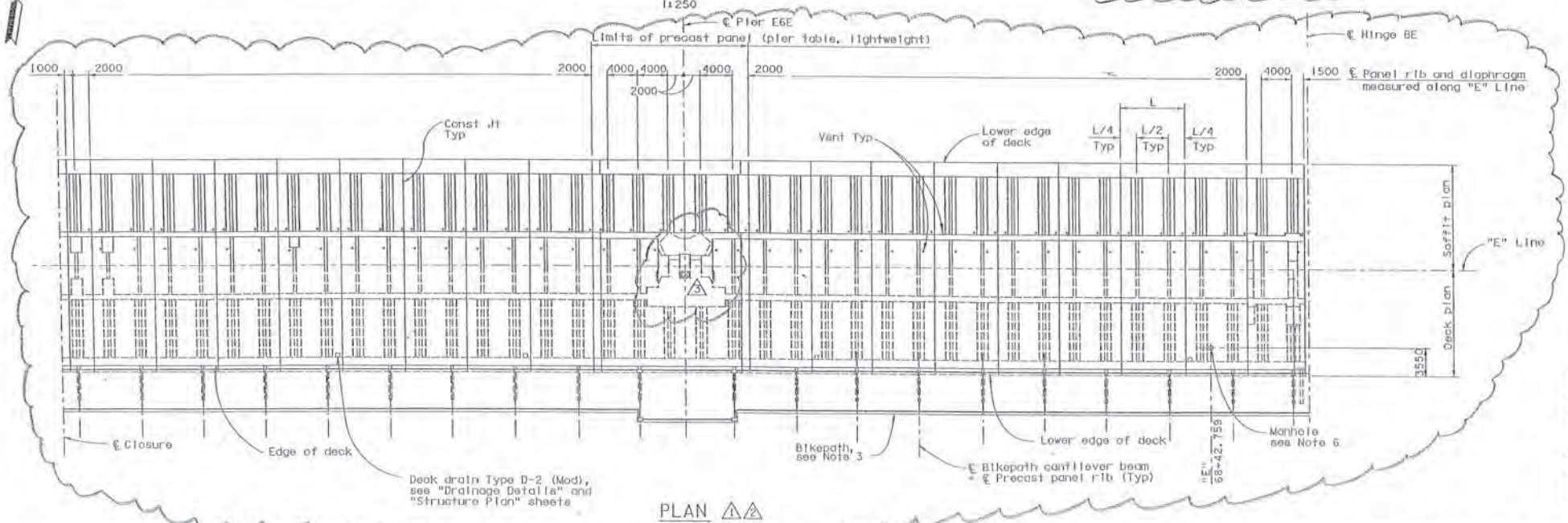

PLAN
1:250

ALL DIMENSIONS ARE IN MILLIMETERS UNLESS OTHERWISE SHOWN

SAN FRANCISCO OAKLAND BAY BRIDGE
EAST SPAN SEISMIC SAFETY PROJECT

SKYWAY STRUCTURES

GIRDER LAYOUT E6E

DESIGN REVISION 8/6/2003
SIGN OFF DATE

DESIGN	BY S. Hunter	CHECKED	M. Lamont
DETAILS	BY A. Lishansky	CHECKED	M. Lamont
QUANTITIES	BY K. Corrales	CHECKED	S. Shi

PREPARED FOR THE STATE OF CALIFORNIA DEPARTMENT OF TRANSPORTATION

Sajid Abbas
PROJECT ENGINEER

BRIDGE NO. 34-0006L/R
KILOMETER POST 13.9/14.3, 0.0/1.6

CU 04

DISREGARD PRINTS BEARING EARLIER REVISION DATES

REVISION DATES (PRELIMINARY STAGE ONLY)

SHEET ___ OF ___

Rev. Date: 5-10-98

ORIGINAL SCALE IN MILLIMETERS FOR REDUCED PLANS

100% PS&E

NOTES:

1. For notes, see "Girder Layout E3W" sheet.
2. For vent details, see "Girder Layout E3W" sheet.
3. For bikepath details, see "Bikepath Details" sheets.
4. Key to segment nomenclature: 1 E or W
   Segment No. — East or West
5. For web manhole details, see "Miscellaneous Details" sheets.
6. For deck manhole details, see B7-11.
7. Orientation of diaphragm and precast panel rib shall be normal to "E" Line.

Caltrans now has a web site! To get to the web site, go to http://www.dot.ca.gov

MARK	DATE	DESCRIPTIONS	BY	CH'D
4	07/25/03	REVISE WEB MANHOLE LOCATIONS	MR	JC
3	07/25/03	REVISE PIER TABLE BOTTOM SLAB ACCESS OPENING	MR	JC
2	01/28/03	REVISE FUTURE TENDON DEV BLOCK LOCATION	MR	JC
1	01/20/03	REVISE DRAIN LOCATIONS	MR	SS

REVISIONS

CONTRACT CHANGE ORDER NO. 2451
SHEET 8 OF ___

DIST.	COUNTY	ROUTE	KILOMETER POST TOTAL PROJECT	SHEET NO.	TOTAL SHEETS
04	SF, Ala	80	13.9 / 14.3, 0.0 / 1.6	558R2	978

Scott Hunter
REGISTERED ENGINEER - CIVIL
6-4-01
PLANS APPROVAL DATE
The State of California or its officers or agents shall not be responsible for the accuracy or completeness of electronic copies of this plan sheet.

REGISTERED PROFESSIONAL ENGINEER Scott Hunter No. C 048066 Exp. 12/31/03 CIVIL STATE OF CALIFORNIA

T.Y. LIN / MOFFATT & NICHOL
825 BATTERY STREET
SAN FRANCISCO, CA 94111

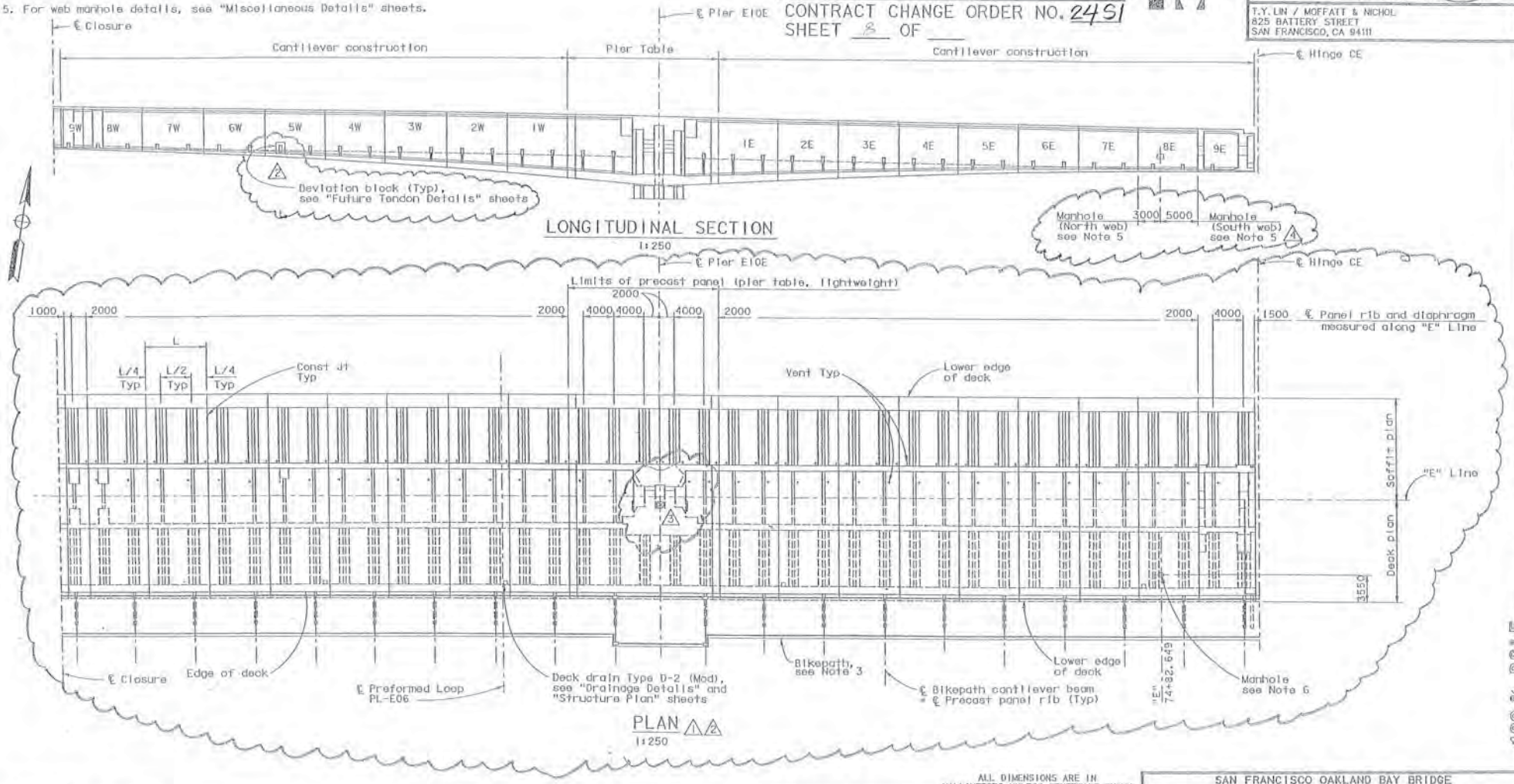

ALL DIMENSIONS ARE IN MILLIMETERS UNLESS OTHERWISE SHOWN

Hamid Hunter 8/6/2003
DESIGN OVERSIGHT
SIGN OFF DATE

DESIGN	BY S. Hunter	CHECKED M. Lamont	
DETAILS	BY A. Lishansky	CHECKED M. Lamont	
QUANTITIES	BY K. Carrier	CHECKED S. Shi	

PREPARED FOR THE STATE OF CALIFORNIA DEPARTMENT OF TRANSPORTATION

Sajid Abbas
PROJECT ENGINEER

BRIDGE NO. 34-0006L/R
KILOMETER POST 13.9/14.3, 0.0/1.6

SAN FRANCISCO OAKLAND BAY BRIDGE
EAST SPAN SEISMIC SAFETY PROJECT

SKYWAY STRUCTURES

GIRDER LAYOUT E10E

100 % PS&E

Rev. Date 5-10-02

ORIGINAL SCALE IN MILLIMETERS FOR REDUCED PLANS

CU 04

DISREGARD PRINTS BEARING EARLIER REVISION DATES

REVISION DATES (PRELIMINARY STAGE ONLY)

SHEET ___ OF ___

NOTES:

1. For notes, see "Girder Layout E3W" sheet.
2. For vent details, see "Girder Layout E3W" sheet.
3. For bikepath details, see "Bikepath Details" sheets.
4. Key to segment nomenclature: 1 E or W
   Segment No. — East or West
5. For web manhole details, see "Miscellaneous Details" sheets.
6. For deck manhole details, see (B7-11).
7. Orientation of diaphragm and precast panel rib shall be normal to "E" Line.

DIST.	COUNTY	ROUTE	KILOMETER POST TOTAL PROJECT	SHEET NO.	TOTAL SHEETS
04	SF/Ala	80	13.9/14.3, 0.0/1.6	562R3	978

REGISTERED ENGINEER - CIVIL

6-4-01
PLANS APPROVAL DATE

Registered Professional Engineer — Sajid Abbas, No. C 055274, Exp. 12/31/04, CIVIL, State of California

The State of California or its officers or agents shall not be responsible for the accuracy or completeness of electronic copies of this plan sheet.

T.Y. LIN / MOFFATT & NICHOL
825 BATTERY STREET
SAN FRANCISCO, CA 94111

Caltrans now has a web site! To get to the web site, go to http://www.dot.ca.gov

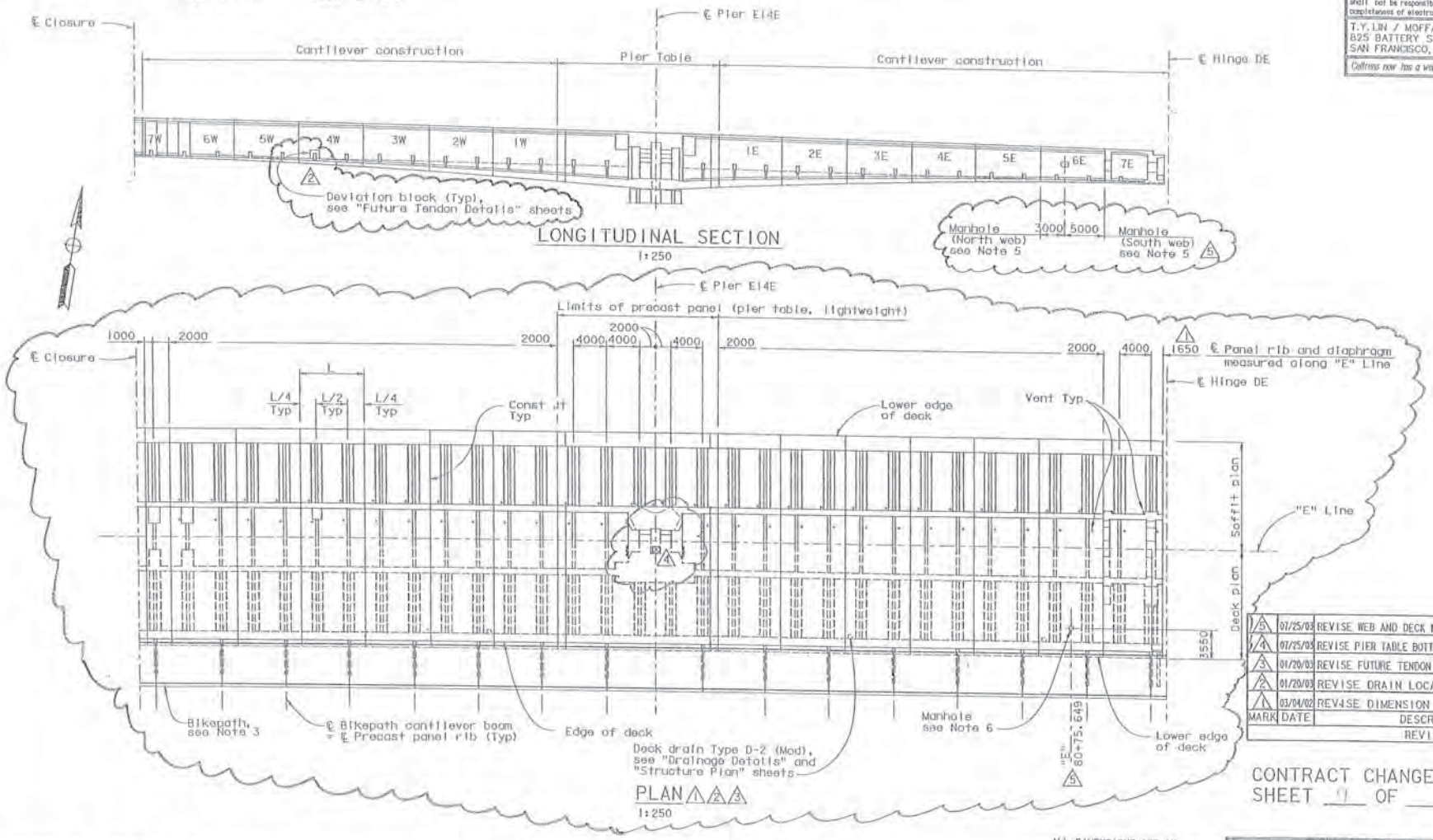

MARK	DATE	DESCRIPTIONS	BY	CH'D
5	07/25/03	REVISE WEB AND DECK MANHOLE LOCATIONS	MR	JC
4	07/25/03	REVISE PIER TABLE BOTTOM SLAB ACCESS OPENING	MR	JC
3	01/20/03	REVISE FUTURE TENDON DEV BLOCK LOCATION	MR	JC
2	01/20/03	REVISE DRAIN LOCATIONS	MR	SS
1	03/04/02	REVISE DIMENSION	TM	SC

REVISIONS

CONTRACT CHANGE ORDER NO. 24S1
SHEET 1 OF ___

ALL DIMENSIONS ARE IN MILLIMETERS UNLESS OTHERWISE SHOWN

DESIGN OVERSIGHT 8/6/2003
SIGN OFF DATE

DESIGN	S. Abbas	M. Lamont	
DETAILS	A. Lishansky	M. Lamont	
QUANTITIES	K. Cormier	S. Shi	

PREPARED FOR THE STATE OF CALIFORNIA DEPARTMENT OF TRANSPORTATION

Sajid Abbas
PROJECT ENGINEER

BRIDGE NO. 34-0006L/R
KILOMETER POST 13.9/14.3, 0.0/1.6

SAN FRANCISCO OAKLAND BAY BRIDGE
EAST SPAN SEISMIC SAFETY PROJECT

SKYWAY STRUCTURES

GIRDER LAYOUT E14E

Rev. Date: 3-18-98

NOTES:

1. For notes, see "Girder Layout E3W" sheet.
2. For vent details, see "Girder Layout E3W" sheet.
3. For bikepath details, see "Bikepath Details" sheets.
4. Key to segment nomenclature: 1 E or W (Segment No. — East or West)
5. For web manhole details, see "Miscellaneous Details" sheets.
6. For deck manhole details, see (B7-11).
7. Orientation of diaphragm and precast panel rib shall be normal to "E" Line.

DIST.	COUNTY	ROUTE	KILOMETER POST TOTAL PROJECT	SHEET NO.	TOTAL SHEETS
04	SF/Ala	80	13.9/14.3, 0.0/1.6	564R3	978

REGISTERED ENGINEER - CIVIL
6-4-01
PLANS APPROVAL DATE
The State of California or its officers or agents shall not be responsible for the accuracy or completeness of electronic copies of this plan sheet.

REGISTERED PROFESSIONAL ENGINEER Sajid Abbas No. C 055274 Exp. 12/31/04 CIVIL STATE OF CALIFORNIA

T.Y. LIN / MOFFATT & NICHOL
825 BATTERY STREET
SAN FRANCISCO, CA 94111

Caltrans now has a web site! To get to the web site, go to http://www.dot.ca.gov

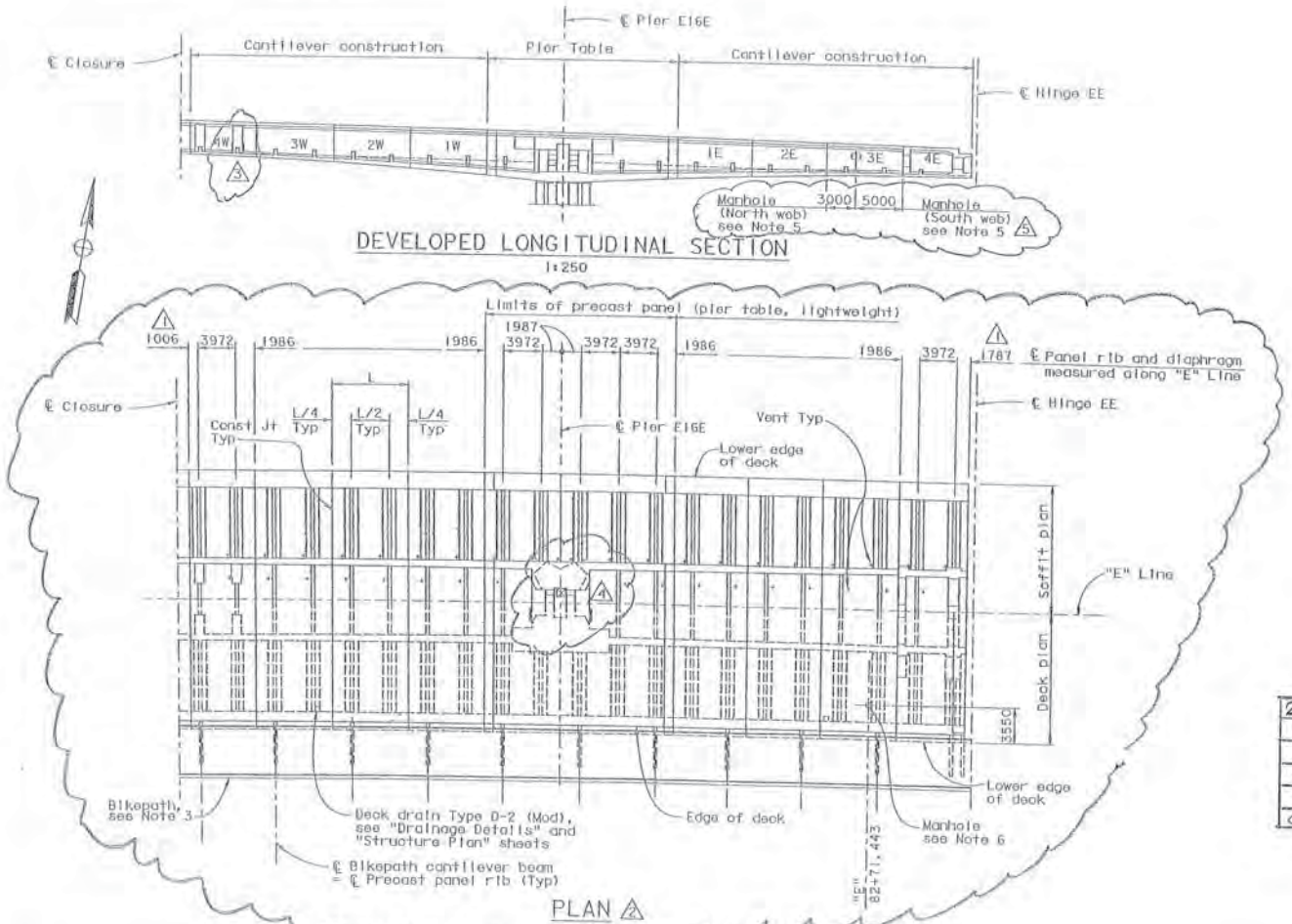

MARK	DATE	DESCRIPTIONS	BY	CH'D
2451	07/25/03	REVISE WEB MANHOLE LOCATIONS	MR	JC
74	07/25/03	REVISE PIER TABLE BOTTOM SLAB ACCESS OPENING	MR	SS
52	01/20/03	REVISE FUTURE TENDON DEV BLOCK LOCATION	MR	SS
28	01/20/03	REVISE DRAIN LOCATION	MR	SS
9	03/04/02	REVISE DIMENSIONS	TM	SC
CCO		REVISIONS		

CONTRACT CHANGE ORDER NO. 2451
SHEET 10 OF ___

100 % PS&E

ALL DIMENSIONS ARE IN MILLIMETERS UNLESS OTHERWISE SHOWN

DESIGN OVERSIGHT 8/6/2003
SIGN OFF DATE
Rev. Date 3-18-98

DESIGN	S. Abbas	CHECKED	M. Lamont
DETAILS	A. Lishansky	CHECKED	M. Lamont
QUANTITIES	K. Cornelier	CHECKED	S. Shi

PREPARED FOR THE STATE OF CALIFORNIA DEPARTMENT OF TRANSPORTATION

Sajid Abbas
PROJECT ENGINEER

BRIDGE NO. 34-0006L/R
KILOMETER POST 13.9/14.3

SAN FRANCISCO OAKLAND BAY BRIDGE
EAST SPAN SEISMIC SAFETY PROJECT
SKYWAY STRUCTURES
GIRDER LAYOUT E16E

DIST.	COUNTY	ROUTE	KILOMETER POST TOTAL PROJECT	SHEET NO.	TOTAL SHEETS
04	SF, Ala	80	13.9/14.3, 0.0/1.6	653R	978

REGISTERED ENGINEER - CIVIL

6-4-01
PLANS APPROVAL DATE

The State of California or its officers or agents shall not be responsible for the accuracy or completeness of electronic copies of this plan sheet.

REGISTERED PROFESSIONAL ENGINEER Shu Fu John Chan No. E 39457 Exp. 12/31/05 CIVIL STATE OF CALIFORNIA

T.Y. LIN / MOFFATT & NICHOL
825 BATTERY STREET
SAN FRANCISCO, CA 94111

Caltrans now has a web site! To get to the web site, go to http://www.dot.ca.gov

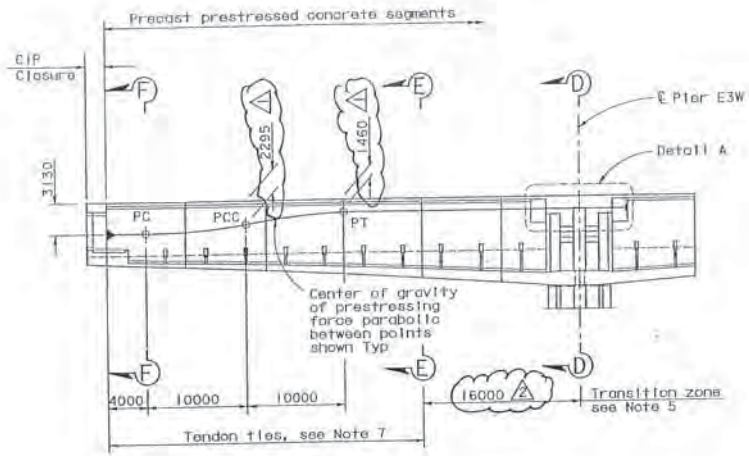

DEVELOPED LONGITUDINAL SECTION

1:250

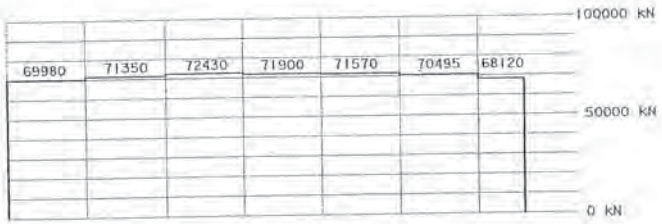

FORCE DIAGRAM (Total per box girder)

CONTINUITY TENDONS (*per box girder)

Tendon	No. of tendons* x No. of strands (15 Dia)	Jacking Force per Tendon KN
E3W CO 1	2x25	4875
E3W CO 2	2x25	4875
E3W CO 3	2x25	4875
E3W CO 4	2x25	4875
E3W CO 5	2x25	4875
E3W CO 6	2x25	4875
E3W CO 7	2x25	4875
E3W CO 8	2x25	4875

NOTES:

1. Anchorage symbols are as follows:
   - |—— Jacking end
   - ▶—— Dead end
2. The force diagram shows forces which only account for losses due to friction, anchor set and elastic shortening.
3. Key to tendon nomenclature:
   - E3W — Span No.
   - CO — Tendon type
   - 1 — Tendon mark
4. For Detail A, see "Continuity Tendon Details" sheets.
5. Continuity tendons change from double to single rows in the transition zone.
6. For Section D-D, Section E-E and Section F-F, see "Continuity Tendon Layout E7W" sheet.
7. For continuity tendon ties detail, see "Girder Reinforcement" sheets.
8. Longitudinal dimensions given are measured along "W" Line.

MARK	DATE	DESCRIPTIONS	BY	CH'D	CCO#
2	09/19/03	REVISE TRANSITION ZONE DIMENSION TO BE CONSISTENT WITH CONTUNUITY TENDON DETAILS	MR	JC	24S1
1	09/19/03	REVISE PT AND PCC POINT	MR	JC	24S1

REVISIONS

CONTRACT CHANGE ORDER NO. 24S1
SHEET ___ OF ___

DESIGN OVERSIGHT
9/30/03
SIGN OFF DATE

DESIGN	BY J. Chan	CHECKED H. Lund	
DETAILS	BY A. Lishansky	CHECKED H. Lund	
QUANTITIES	BY K. Corsiler	CHECKED J. Chan	

PREPARED FOR THE STATE OF CALIFORNIA DEPARTMENT OF TRANSPORTATION

Sajid Abbas
PROJECT ENGINEER

ALL DIMENSIONS ARE IN MILLIMETERS UNLESS OTHERWISE SHOWN

BRIDGE NO. 34-0006L/R
KILOMETER POST 13.9/14.3, 0.0/1.6

SAN FRANCISCO OAKLAND BAY BRIDGE
EAST SPAN SEISMIC SAFETY PROJECT

SKYWAY STRUCTURES

CONTINUITY TENDON LAYOUT E3W

REVISION DATES (PRELIMINARY STAGE ONLY)

SHEET ___ OF ___

100 % PS&E

MARK	DATE	DESCRIPTIONS	BY	CH'D	CCO#
4	09/19/03	DELETE DIMENSION	MR	JC	24-51
3	09/19/03	SHOW TENDON TIES	MR	JC	24-51
2	09/19/03	REVISE TRANSITION ZONE DIMENSION TO BE CONSISTENT WITH CONTINUITY TENDON DETAILS	MR	JC	24-51
1	09/19/03	STANDARDIZE LOCATION OF INTERIOR LINE OF TENDONS	MR	JC	24-51

REVISIONS

CONTRACT CHANGE ORDER NO. 24-51
SHEET 12 OF ___

Caltrans has a web site! To get to the web site, go to http://www.dot.ca.gov

Caltrans Metric

DIST.	COUNTY	ROUTE	KILOMETER POST TOTAL PROJECT	SHEET NO.	TOTAL SHEETS
04	SF, Ala	80	13.9/14.3, 0.0/1.6	654R	978

REGISTERED ENGINEER - CIVIL
6-4-01
PLANS APPROVAL DATE
Sin Fu John Chan, No. C 39457, Exp. 12/31/05, CIVIL, STATE OF CALIFORNIA, REGISTERED PROFESSIONAL ENGINEER
The State of California or its officers or agents shall not be responsible for the accuracy or completeness of electronic copies of this plan sheet.

T.Y. LIN / MOFFATT & NICHOL
825 BATTERY STREET
SAN FRANCISCO, CA 94111

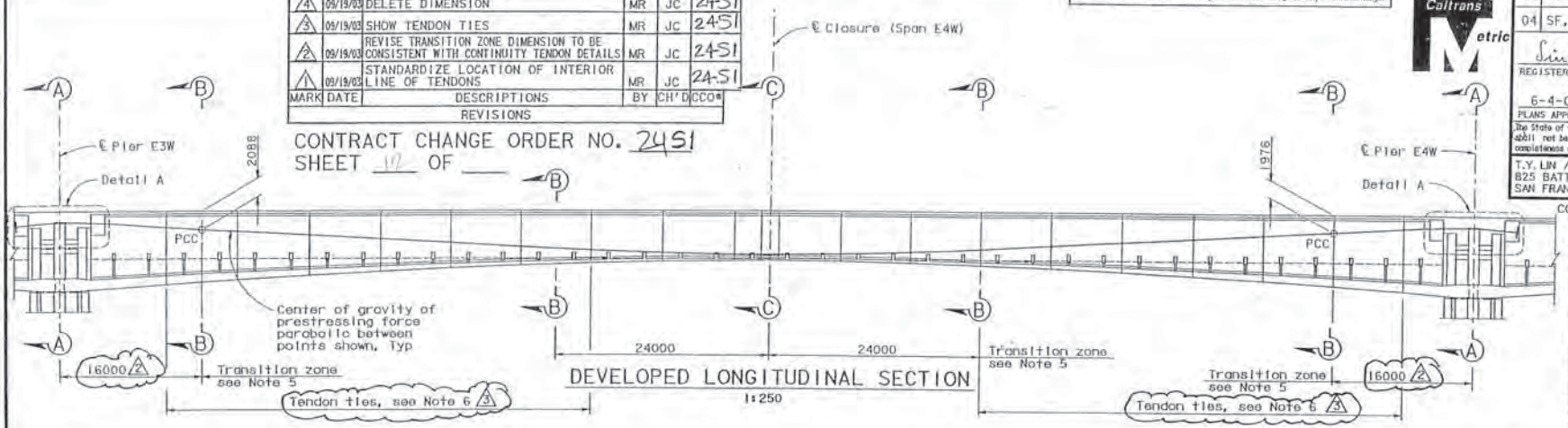

DEVELOPED LONGITUDINAL SECTION
1:250

CONTINUITY TENDONS (*per box girder)

Tendon	No. of tendons* X No. of strands (15 Dia)	Jacking Force per Tendon kN
E4W CO 1	2x25	4875
E4W CO 2	2x25	4875
E4W CO 3	2x25	4875
E4W CO 4	2x25	4875
E4W CO 5	2x25	4875
E4W CO 6	2x25	4875
E4W CO 7	2x25	4875
E4W CO 8	2x25	4875

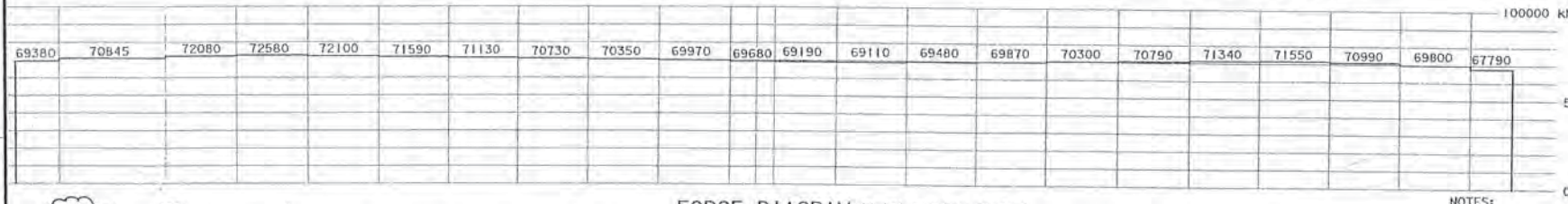

FORCE DIAGRAM (Total per box girder)

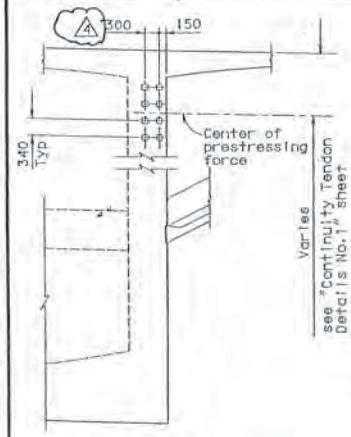

SECTION A-A
1:50

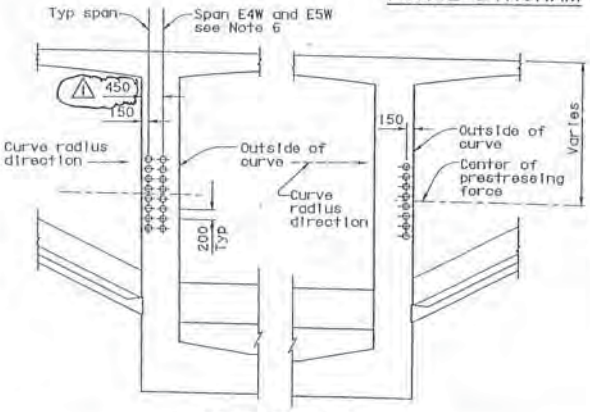

SECTION B-B
1:50

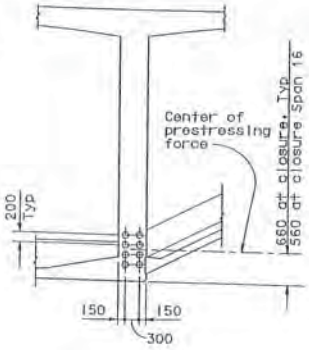

SECTION C-C
1:50

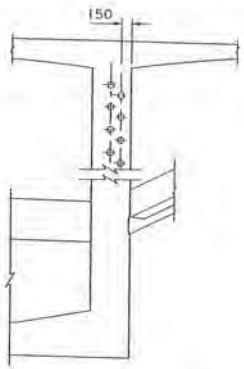

SECTION (Transition zone)
1:50

NOTES:

1. Anchorage symbols are as follows:
   - ⊢— Jacking end
   - ▶— Dead end
2. The force diagram shows forces which only account for losses due to friction, anchor set and elastic shortening.
3. Key to tendon nomenclature:
   - Span No. — E4W
   - Tendon type — CO
   - Tendon mark — 1
4. For Detail A, see "Continuity Tendon Details" sheets.
5. Continuity tendons change from double to single rows in the transition zone.
6. For Continuity tendons ties details, see "Girder Reinforcement" sheets.
7. Longitudinal dimensions given are measured along "W" Line.

ALL DIMENSIONS ARE IN MILLIMETERS UNLESS OTHERWISE SHOWN

DESIGN DIVERSION 7/30/03
SIGN OFF DATE
Rev. Date 5-19-98

DESIGN	BY J. Chan	CHECKED H. Lund	
DETAILS	BY A. Lishansky	CHECKED H. Lund	
QUANTITIES	BY K. Cormier	CHECKED J. Chan	

PREPARED FOR THE STATE OF CALIFORNIA DEPARTMENT OF TRANSPORTATION

Sajid Abbas
PROJECT ENGINEER

BRIDGE NO. 34-0006L/R
KILOMETER POST 13.9/14.3, 0.0/1.6

SAN FRANCISCO OAKLAND BAY BRIDGE
EAST SPAN SEISMIC SAFETY PROJECT

SKYWAY STRUCTURES

CONTINUITY TENDON LAYOUT E4W

100% PS&E

Caltrans now has a web site! To get to the web site, go to: http://www.dot.ca.gov

Caltrans Metric

DIST.	COUNTY	ROUTE	KILOMETER POST TOTAL PROJECT	SHEET NO.	TOTAL SHEETS
04	SF, Ala	80	13.9/14.3, 0.0/1.6	655R	978

REGISTERED ENGINEER - CIVIL

6-4-01
PLANS APPROVAL DATE

REGISTERED PROFESSIONAL ENGINEER Shu Fu John Chan No. E 39457 Exp. 12/31/05 CIVIL STATE OF CALIFORNIA

The State of California or its officers or agents shall not be responsible for the accuracy or completeness of electronic copies of this plan sheet.

T.Y. LIN / MOFFATT & NICHOL
825 BATTERY STREET
SAN FRANCISCO, CA 94111

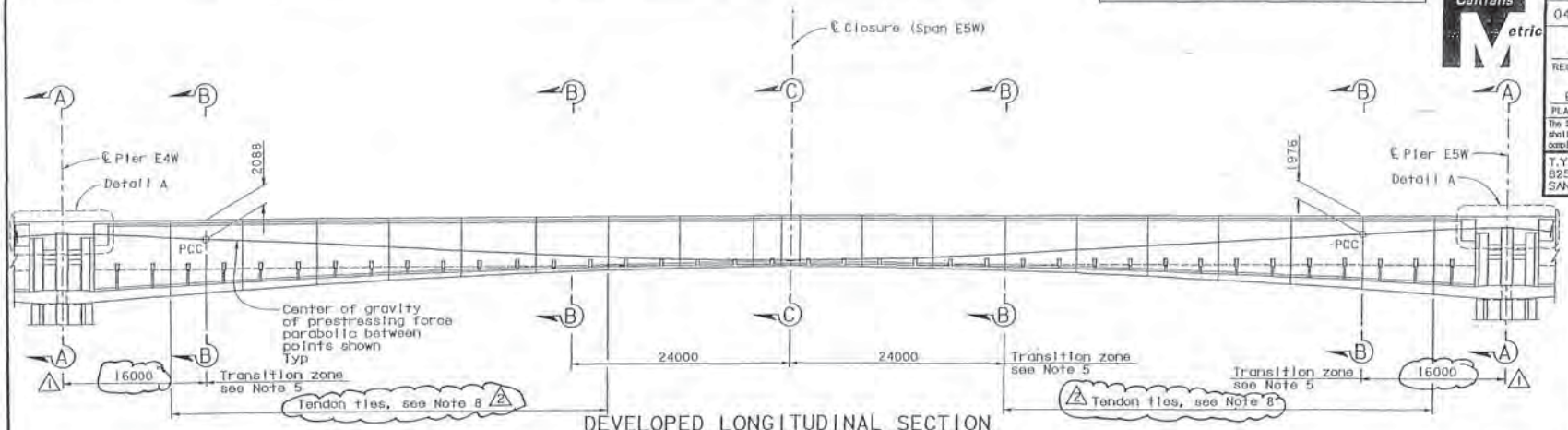

DEVELOPED LONGITUDINAL SECTION
1:250

CONTINUITY TENDONS (*per box girder)

Tendon	No. of tendons* x No. of strands (15 Dia)	Jacking Force per Tendon kN
E5W CO 1	2x25	4875
E5W CO 2	2x25	4875
E5W CO 3	2x25	4875
E5W CO 4	2x25	4875
E5W CO 5	2x25	4875
E5W CO 6	2x25	4875
E5W CO 7	2x25	4875
E5W CO 8	2x25	4875

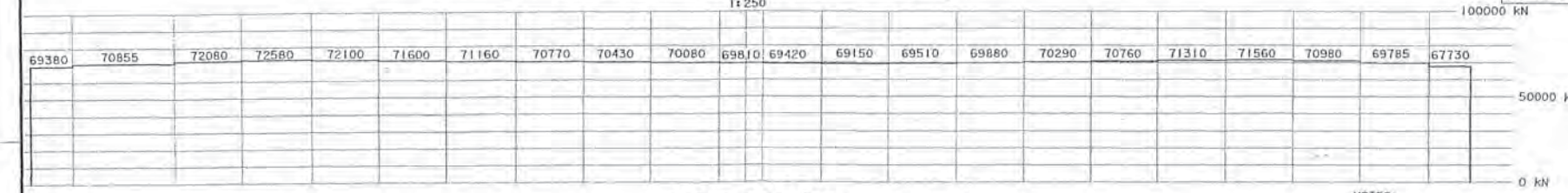

FORCE DIAGRAM (Total per box girder)

8. For continuity tendon ties details, see "Girder Reinforcement" sheets.

NOTES:

1. Anchorage symbols are as follows:
   - Jacking end
   - Dead end
2. The force diagram shows forces which only account for losses due to friction, anchor set and elastic shortening.
3. Key to tendon nomenclature:
   - E5W — Span No.
   - CO — Tendon type
   - 1 — Tendon mark
4. For Detail A, see "Continuity Tendon Details" sheets.
5. Continuity tendons change from double to single rows in the transition zone.
6. For Section A-A, Section B-B, Section C-C, see "Continuity Tendon Layout E4W" sheet.
7. Longitudinal dimensions given are measured along "W" Line.

MARK	DATE	DESCRIPTIONS	BY	CH'D	CCO#
2	09/19/03	SHOW TENDON TIES	MR	JC	2451
1	09/19/03	REVISE TRANSITION ZONE DIMENSION TO BE CONSISTENT WITH CONTINUITY TENDON DETAILS	MR	JC	2451

REVISIONS

CONTRACT CHANGE ORDER NO. 2451
SHEET 13 OF ___

ALL DIMENSIONS ARE IN MILLIMETERS UNLESS OTHERWISE SHOWN

DESIGN OVERSIGHT 9/30/03
SIGN OFF DATE

DESIGN	BY J. Chan	CHECKED H. Lund	
DETAILS	BY A. Lishansky	CHECKED H. Lund	
QUANTITIES	BY K. Cormier	CHECKED J. Chan	

PREPARED FOR THE STATE OF CALIFORNIA DEPARTMENT OF TRANSPORTATION

Sajid Abbas
PROJECT ENGINEER

BRIDGE NO. 34-0006L/R
KILOMETER POST 13.9/14.3, 0.0/1.6

SAN FRANCISCO OAKLAND BAY BRIDGE
EAST SPAN SEISMIC SAFETY PROJECT

SKYWAY STRUCTURES

CONTINUITY TENDON LAYOUT E5W

100% PLANS

DIST.	COUNTY	ROUTE	KILOMETER POST TOTAL PROJECT	SHEET NO.	TOTAL SHEETS
04	SF, Ala	80	13.9/14.3, 0.0/1.6	656R1	978

REGISTERED ENGINEER - CIVIL

6-4-01

PLANS APPROVAL DATE

The State of California or its officers or agents shall not be responsible for the accuracy or completeness of electronic copies of this plan sheet.

T.Y. LIN / MOFFATT & NICHOL
825 BATTERY STREET SAN FRANCISCO, CA 94111

Caltrans now has a web site! To get to the web site, go to http://www.dot.ca.gov

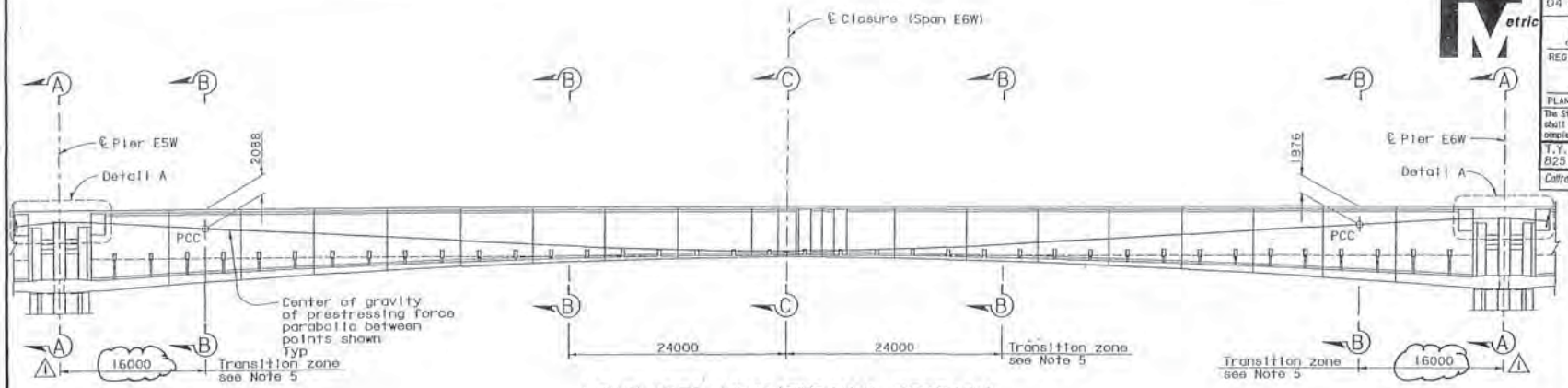

DEVELOPED LONGITUDINAL SECTION
1:250

CONTINUITY TENDONS (*per box girder)

Tendon	No. of tendons* X No. of strands (15 Dia)	Jacking Force per Tendon kN
E6W CO 1	2x25	4875
E6W CO 2	2x25	4875
E6W CO 3	2x25	4875
E6W CO 4	2x25	4875
E6W CO 5	2x25	4875
E6W CO 6	2x25	4875
E6W CO 7	2x25	4875
E6W CO 8	2x25	4875

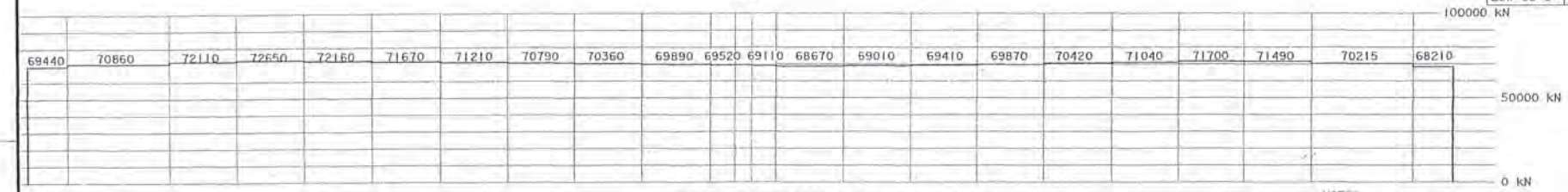

FORCE DIAGRAM (Total per box girder)

NOTES:

1. Anchorage symbols are as follows:
   - |—— Jacking end
   - ▶—— Dead end
2. The force diagram shows forces which only account for losses due to friction, anchor set and elastic shortening.
3. Key to tendon nomenclature:
   - E6W — Span No.
   - CO — Tendon type
   - 1 — Tendon mark
4. For Detail A, see "Continuity Tendon Details" sheets.
5. Continuity tendons change from double to single rows in the transition zone.
6. For Section A-A, Section B-B, Section C-C, see "Continuity Tendon Layout E4W" sheet.
7. Longitudinal dimensions given are measured along "W" Line.

MARK	DATE	DESCRIPTIONS	BY	CH'D	CCO#
1	05/19/03	REVISE TRANSITION ZONE DIMENSION TO BE CONSISTENT WITH CONTINUITY TENDON DETAILS	MR	JC	24SI

REVISIONS

CONTRACT CHANGE ORDER NO. 24SI
SHEET 14 OF ___

ALL DIMENSIONS ARE IN MILLIMETERS UNLESS OTHERWISE SHOWN

SAN FRANCISCO OAKLAND BAY BRIDGE
EAST SPAN SEISMIC SAFETY PROJECT

SKYWAY STRUCTURES

CONTINUITY TENDON LAYOUT E6W

DESIGN OVERSIGHT 9/30/03
SIGN OFF DATE

DESIGN	BY J. Chan	CHECKED H. Lund	
DETAILS	BY A. Lishansky	CHECKED H. Lund	
QUANTITIES	BY K. Cormier	CHECKED J. Chan	

PREPARED FOR THE STATE OF CALIFORNIA DEPARTMENT OF TRANSPORTATION

Sajid Abbas
PROJECT ENGINEER

BRIDGE NO. 34-0006L/R
KILOMETER POST 13.9/14.3, 0.0/1.6

100% PS&E

DIST.	COUNTY	ROUTE	KILOMETER POST TOTAL PROJECT	SHEET NO.	TOTAL SHEETS
04	SF, Ala	80	13.9/14.3, 0.0/1.6	657R	978

REGISTERED ENGINEER - CIVIL

6-4-01

PLANS APPROVAL DATE

The State of California or its officers or agents shall not be responsible for the accuracy or completeness of electronic copies of this plan sheet.

Stu Fu John Chan No. C 39457 Exp. 12/31/05 CIVIL STATE OF CALIFORNIA

T.Y. LIN / MOFFATT & NICHOL
825 BATTERY STREET SAN FRANCISCO, CA 94111

Caltrans now has a web site! To get to the web site, go to: http://www.dot.ca.gov

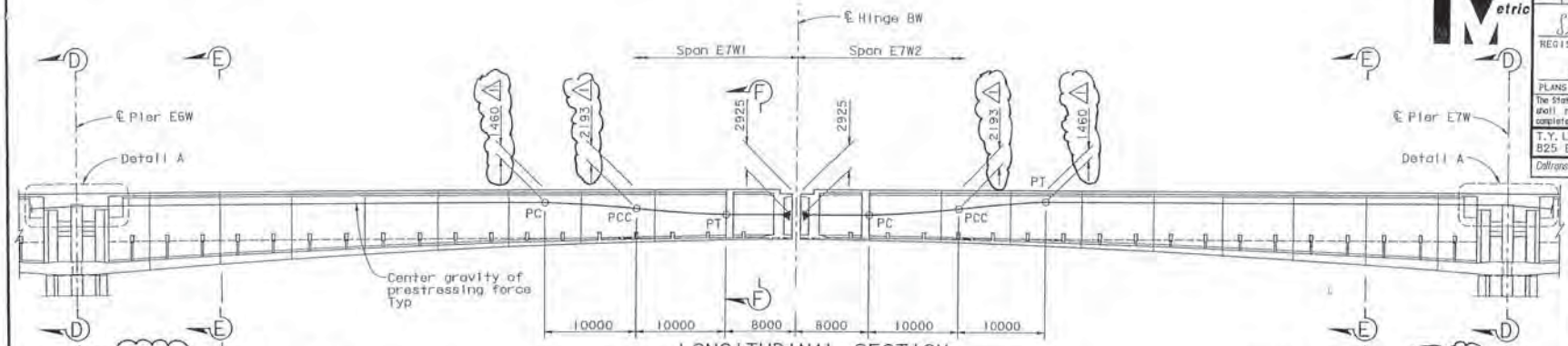

LONGITUDINAL SECTION
1:250

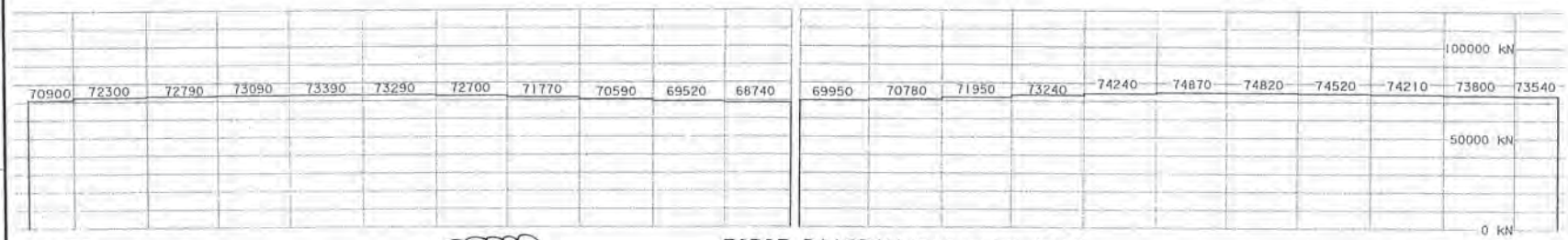

FORCE DIAGRAM (Total per box girder)

CONTINUITY TENDONS (*per box girder)

Tendon	No. of tendons* x No. of strands (15 Dia)	Jacking Force per Tendon kN
E7W1 CO 1	2x25	4875
E7W1 CO 2	2x25	4875
E7W1 CO 3	2x25	4875
E7W1 CO 4	2x25	4875
E7W1 CO 5	2x25	4875
E7W1 CO 6	2x25	4875
E7W1 CO 7	2x25	4875
E7W1 CO 8	2x25	4875
E7W2 CO 1	2x25	4875
E7W2 CO 2	2x25	4875
E7W2 CO 3	2x25	4875
E7W2 CO 4	2x25	4875
E7W2 CO 5	2x25	4875
E7W2 CO 6	2x25	4875
E7W2 CO 7	2x25	4875
E7W2 CO 8	2x25	4875

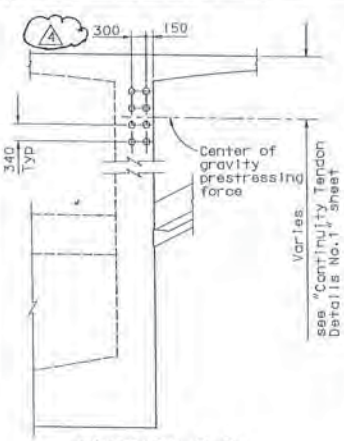

SECTION D-D
1:50

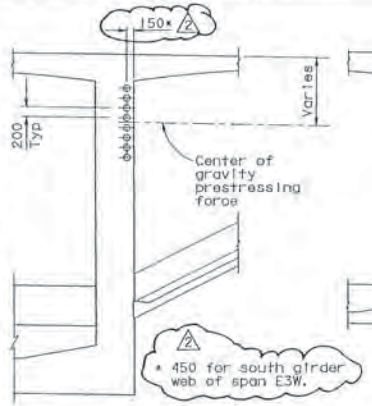

SECTION E-E
1:50

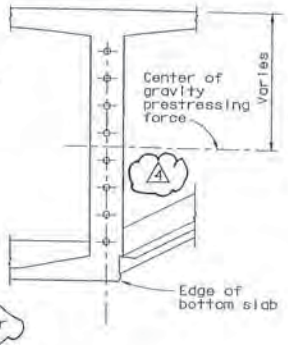

SECTION F-F
1:50

MARK	DATE	DESCRIPTIONS	BY	CH'D	DCCO#
4	09/19/03	DELETE DIMENSION	MR	JC	2451
3	09/19/03	REVISE TRANSITION ZONE DIMENSION TO BE CONSISTENT WITH CONTINUITY TENDON DETAILS	MR	JC	2451
2	09/19/03	STANDARDIZE TENDON LOCATION	MR	JC	2451
1	09/19/03	REVISE PT AND PCC POINT	MR	JC	2451

REVISIONS

CONTRACT CHANGE ORDER NO. 2451
SHEET 15 OF ___

NOTES:

1. Anchorage symbols are as follows:
   - ⊢ Jacking end
   - ▶ Dead end
2. The force diagram shows forces which only account for losses due to friction, anchor set and elastic shortening.
3. Key to tendon nomenclature:
   - E7W — Span No.
   - CO — Tendon type
   - 1 — Tendon mark
4. For Detail A, see "Continuity Tendon Details" sheets.
5. Continuity tendons change from double to single rows in the transition zone.
6. For anchorage details at hinge, see "Hinge B, C Details" sheets.

ALL DIMENSIONS ARE IN MILLIMETERS UNLESS OTHERWISE SHOWN

100 % PS&E

DESIGN OVERSIGHT — SIGN OFF DATE 10/2/03

DESIGN	BY J. Chan	CHECKED H. Lund	
DETAILS	BY A. Lishansky	CHECKED H. Lund	
QUANTITIES	BY K. Cormier	CHECKED J. Chan	

PREPARED FOR THE STATE OF CALIFORNIA DEPARTMENT OF TRANSPORTATION

Sajid Abbas
PROJECT ENGINEER

BRIDGE NO. 34-0006L/R
KILOMETER POST 13.9/14.3, 0.0/1.6

SAN FRANCISCO OAKLAND BAY BRIDGE
EAST SPAN SEISMIC SAFETY PROJECT

SKYWAY STRUCTURES

CONTINUITY TENDON LAYOUT E7W

DIST.	COUNTY	ROUTE	KILOMETER POST TOTAL PROJECT	SHEET NO.	TOTAL SHEETS
04	SF, Ala	80	13.9/14.3, 0.0/1.6	65BR1	978

REGISTERED ENGINEER - CIVIL

6-4-01

PLANS APPROVAL DATE

The State of California or its officers or agents shall not be responsible for the accuracy or completeness of electronic copies of this plan sheet.

T.Y. LIN / MOFFATT & NICHOL
825 BATTERY STREET SAN FRANCISCO, CA 94111

Caltrans now has a web site! To get to the web site, go to: http://www.dot.ca.gov

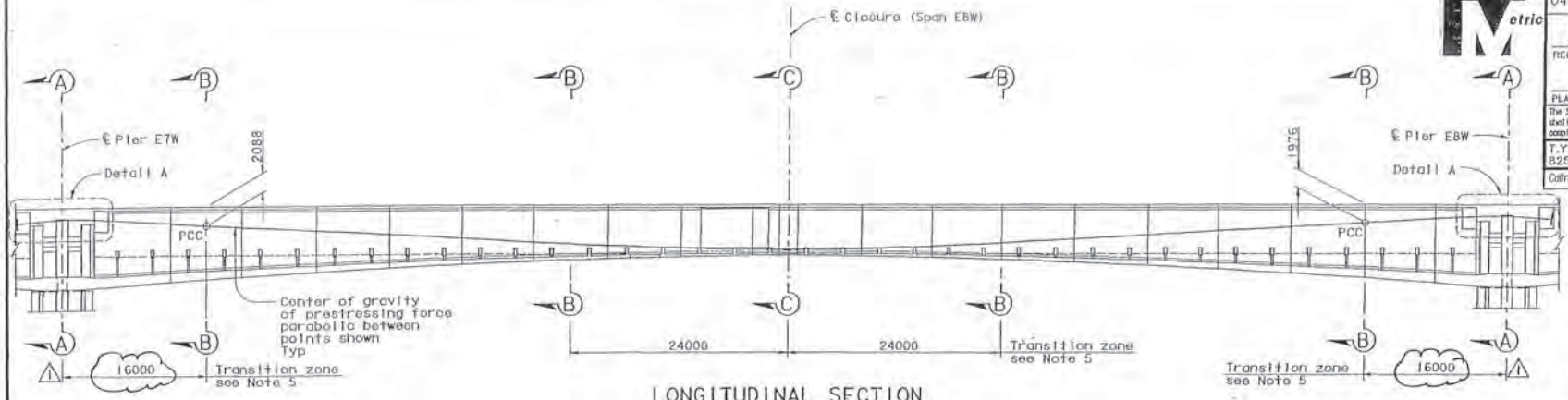

LONGITUDINAL SECTION
1:250

CONTINUITY TENDONS (*per box girder)

Tendon	No. of tendons* x No. of strands (15 Dia)	Jacking Force per Tendon kN
E8W CO 1	2x25	4875
E8W CO 2	2x25	4875
E8W CO 3	2x25	4875
E8W CO 4	2x25	4875
E8W CO 5	2x25	4875
E8W CO 6	2x25	4875
E8W CO 7	2x25	4875
E8W CO 8	2x25	4875

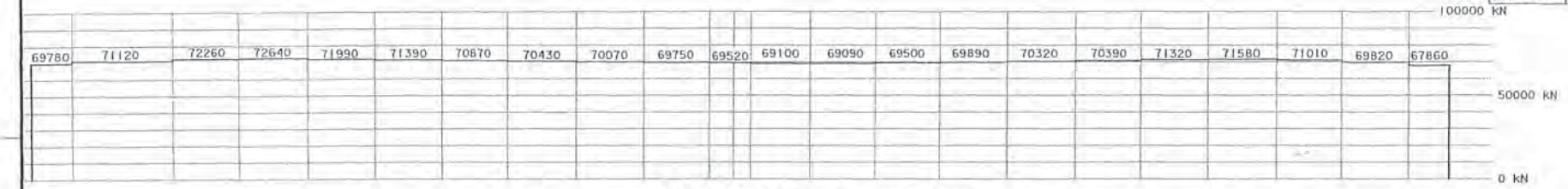

FORCE DIAGRAM (Total per box girder)

NOTES:

1. Anchorage symbols are as follows:
   - Jacking end
   - Dead end
2. The force diagram shows forces which only account for losses due to friction, anchor set and elastic shortening.
3. Key to tendon nomenclature:
   - E8E — Span No.
   - CO — Tendon type
   - 1 — Tendon mark
4. For Detail A, see "Continuity Tendon Details" sheets.
5. Continuity tendons change from double to single rows in the transition zone.
6. For Section A-A, Section B-B, Section C-C, see "Continuity Tendon Layout E4E" sheet.

MARK	DATE	DESCRIPTIONS	BY	CH'D	CCO#
1	09/19/03	REVISE TRANSITION ZONE DIMENSION TO BE CONSISTENT WITH CONTINUITY TENDON DETAILS	MR	JC	24S1

REVISIONS

CONTRACT CHANGE ORDER NO. 24S1
SHEET 16 OF ___

ALL DIMENSIONS ARE IN MILLIMETERS UNLESS OTHERWISE SHOWN

DESIGN OVERSIGHT 9/30/03
SIGN OFF DATE

DESIGN	BY J. Chan	CHECKED H. Lund	
DETAILS	BY A. Lishansky	CHECKED H. Lund	
QUANTITIES	BY K. Compler	CHECKED J. Chan	

PREPARED FOR THE STATE OF CALIFORNIA DEPARTMENT OF TRANSPORTATION

Sajid Abbas
PROJECT ENGINEER

BRIDGE NO. 34-0006
KILOMETER POST 13.9/14.3, 0.0/1.6

SAN FRANCISCO OAKLAND BAY BRIDGE
EAST SPAN SEISMIC SAFETY PROJECT

SKYWAY STRUCTURES

CONTINUITY TENDON LAYOUT E8W

100% PS&E

DIST.	COUNTY	ROUTE	KILOMETER POST TOTAL PROJECT	SHEET NO.	TOTAL SHEETS
04	SF, Ala	80	13.9/14.3, 0.0/1.6	659R1	978

REGISTERED ENGINEER - CIVIL

6-4-01

PLANS APPROVAL DATE

Sifu Fu John Chan No. C 39457 Exp. 12/31/05 CIVIL STATE OF CALIFORNIA REGISTERED PROFESSIONAL ENGINEER

The State of California or its officers or agents shall not be responsible for the accuracy or completeness of electronic copies of this plan sheet.

T.Y. LIN / MOFFATT & NICHOL
825 BATTERY STREET SAN FRANCISCO, CA 94111

Caltrans now has a web site! To get to the web site, go to: http://www.dot.ca.gov

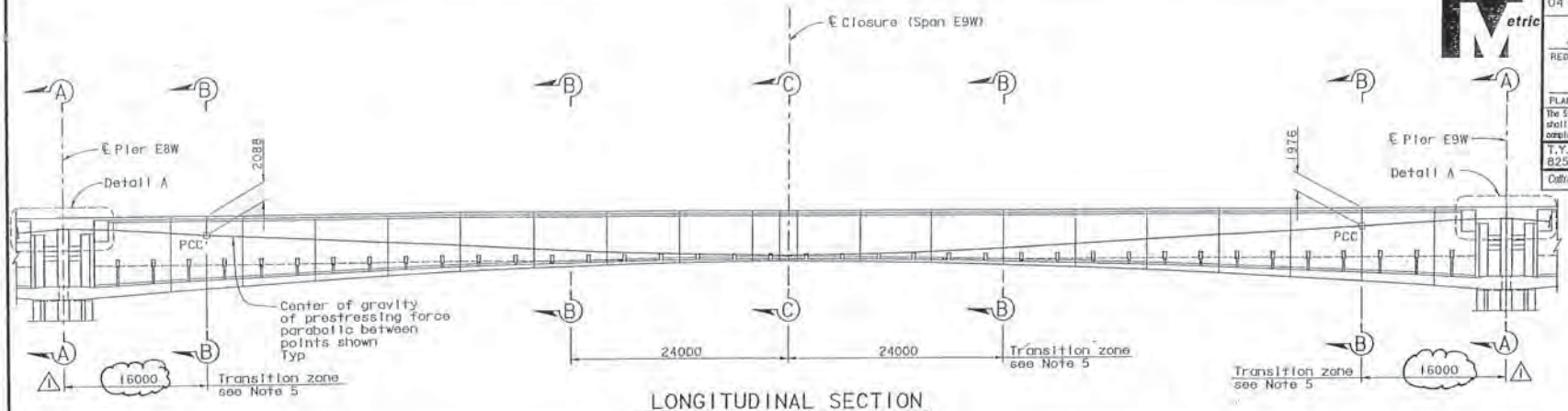

LONGITUDINAL SECTION
1:250

CONTINUITY TENDONS (*per box girder)

Tendon	No. of tendons* x No. of strands (15 Dia)	Jacking Force per Tendon kN
E9W CO 1	2x25	4875
E9W CO 2	2x25	4875
E9W CO 3	2x25	4875
E9W CO 4	2x25	4875
E9W CO 5	2x25	4875
E9W CO 6	2x25	4875
E9W CO 7	2x25	4875
E9W CO 8	2x25	4875

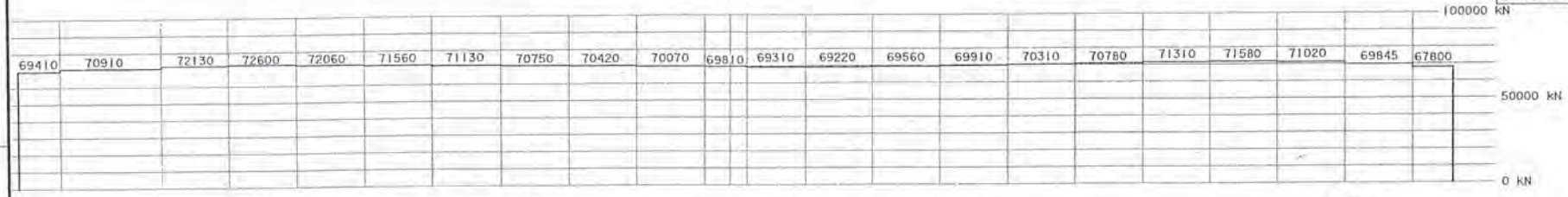

FORCE DIAGRAM (Total per box girder)

NOTES:

1. Anchorage symbols are as follows:
   - |—— Jacking end
   - ▶—— Dead end
2. The force diagram shows forces which only account for losses due to friction, anchor set and elastic shortening.
3. Key to tendon nomenclature:
   - E9W — Span No.
   - CO — Tendon type
   - 1 — Tendon mark
4. For Detail A, see "Continuity Tendon Details" sheets.
5. Continuity tendons change from double to single rows in the transition zone.
6. For Section A-A, Section B-B, Section C-C, see "Continuity Tendon Layout E4W" sheet.

MARK	DATE	DESCRIPTIONS	BY	CH'D	CCO#
1	09/19/03	REVISE TRANSITION ZONE DIMENSION TO BE CONSISTENT WITH CONTINUITY TENDON DETAILS	MR	JC	2451

REVISIONS

CONTRACT CHANGE ORDER NO. 2451
SHEET 17 OF ___

ALL DIMENSIONS ARE IN MILLIMETERS UNLESS OTHERWISE SHOWN

SAN FRANCISCO OAKLAND BAY BRIDGE
EAST SPAN SEISMIC SAFETY PROJECT

SKYWAY STRUCTURES

CONTINUITY TENDON LAYOUT E9W

DESIGN OVERSIGHT 9/30/03
SIGN OFF DATE

DESIGN	J. Chan	CHECKED	H. Lund
DETAILS	A. Lishansky	CHECKED	N. Lund
QUANTITIES	K. Corsiter	CHECKED	J. Chan

PREPARED FOR THE STATE OF CALIFORNIA DEPARTMENT OF TRANSPORTATION

Sajid Abbas
PROJECT ENGINEER

BRIDGE NO. 34-0006
KILOMETER POST 13.9/14.3, 0.0/1.6

100 % PLANS

DIST.	COUNTY	ROUTE	KILOMETER POST TOTAL PROJECT	SHEET NO.	TOTAL SHEETS
04	SF, Ala	80	13.9/14.3, 0.0/1.6	660R1	978

REGISTERED ENGINEER - CIVIL

6-4-01

PLANS APPROVAL DATE

The State of California or its officers or agents shall not be responsible for the accuracy or completeness of electronic copies of this plan sheet.

T.Y. LIN / MOFFATT & NICHOL
825 BATTERY STREET SAN FRANCISCO, CA 94111

Caltrans now has a web site! To get to the web site, go to: http://www.dot.ca.gov

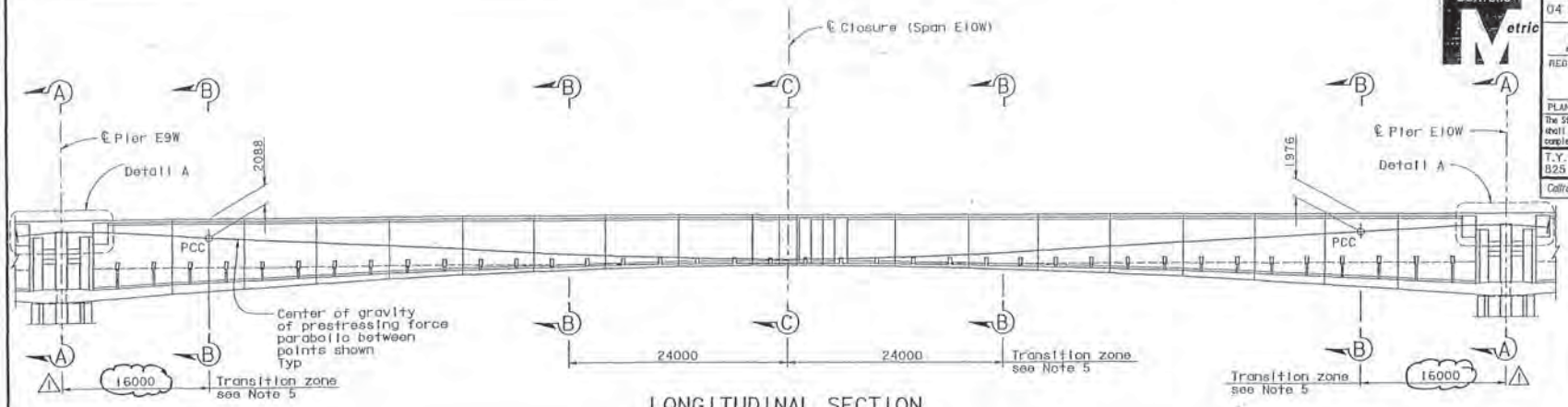

LONGITUDINAL SECTION
1:250

CONTINUITY TENDONS (*per box girder)

Tendon	No. of tendons* x No. of strands (15 Dia)	Jacking Force per Tendon kN
E10W CO 1	2x25	4875
E10W CO 2	2x25	4875
E10W CO 3	2x25	4875
E10W CO 4	2x25	4875
E10W CO 5	2x25	4875
E10W CO 6	2x25	4875
E10W CO 7	2x25	4875
E10W CO 8	2x25	4875

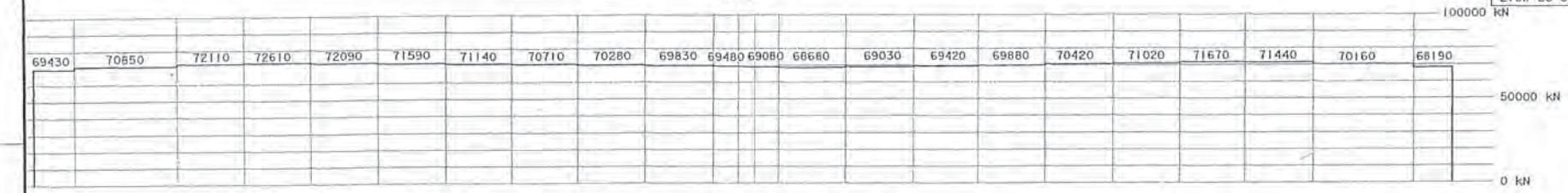

FORCE DIAGRAM (Total per box girder)

NOTES:

1. Anchorage symbols are as follows:
   - Jacking end
   - Dead end
2. The force diagram shows forces which only account for losses due to friction, anchor set and elastic shortening.
3. Key to tendon nomenclature:
   - E10W — Span No.
   - CO — Tendon type
   - 1 — Tendon mark
4. For Detail A, see "Continuity Tendon Details" sheets.
5. Continuity tendons change from double to single rows in the transition zone.
6. For Section A-A, Section B-B, Section C-C, see "Continuity Tendon Layout E4W" sheet.

MARK	DATE	DESCRIPTIONS	BY	CH'D	CCO#
1	09/19/03	REVISE TRANSITION ZONE DIMENSION TO BE CONSISTENT WITH CONTINUITY TENDON DETAILS	MR	JC	2451

REVISIONS

CONTRACT CHANGE ORDER NO. 2451
SHEET 18 OF ___

ALL DIMENSIONS ARE IN MILLIMETERS UNLESS OTHERWISE SHOWN

DESIGN OVERSIGHT 9/30/03
SIGN OFF DATE

DESIGN	BY J. Chan	CHECKED H. Lund	
DETAILS	BY A. Lishansky	CHECKED H. Lund	
QUANTITIES	BY K. Cormier	CHECKED J. Chan	

PREPARED FOR THE STATE OF CALIFORNIA DEPARTMENT OF TRANSPORTATION

Sajid Abbas
PROJECT ENGINEER

BRIDGE NO. 34-0006L/R
KILOMETER POST 13.9/14.3, 0.0/1.6

SAN FRANCISCO OAKLAND BAY BRIDGE
EAST SPAN SEISMIC SAFETY PROJECT

SKYWAY STRUCTURES

CONTINUITY TENDON LAYOUT E10W

REVISION DATES (PROJ. INITIATION STAGE ONLY) SHEET OF

100 % PS&E

DIST.	COUNTY	ROUTE	KILOMETER POST TOTAL PROJECT	SHEET NO.	TOTAL SHEETS
04	SF, Ala	80	13.9/14.3, 0.0/1.6	661R1	978

REGISTERED ENGINEER - CIVIL

6-4-01

PLANS APPROVAL DATE

The State of California or its officers or agents shall not be responsible for the accuracy or completeness of electronic copies of this plan sheet.

REGISTERED PROFESSIONAL ENGINEER Siu Fai John Chan No. C 39457 Exp. 12/31/05 CIVIL STATE OF CALIFORNIA

T.Y. LIN / MOFFATT & NICHOL
825 BATTERY STREET SAN FRANCISCO, CA 94111

Caltrans now has a web site! To get to the web site, go to: http://www.dot.ca.gov

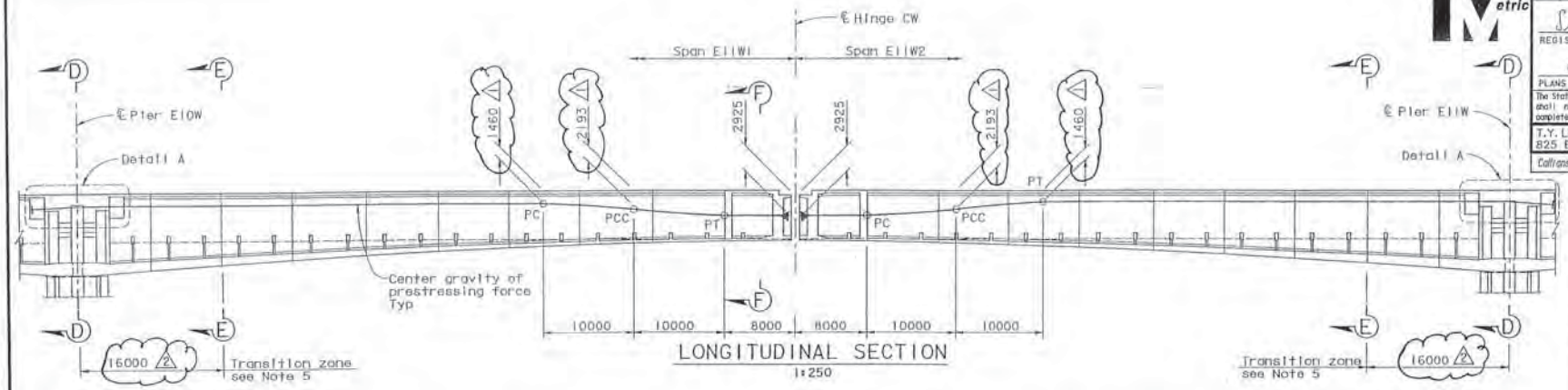

LONGITUDINAL SECTION
1:250

CONTINUITY TENDONS (*per box girder)

Tendon	No. of tendons* x No. of strands (15 Dia)	Jacking Force per Tendon kN
E11W1 CO 1	2x25	4875
E11W1 CO 2	2x25	4875
E11W1 CO 3	2x25	4875
E11W1 CO 4	2x25	4875
E11W1 CO 5	2x25	4875
E11W1 CO 6	2x25	4875
E11W1 CO 7	2x25	4875
E11W1 CO 8	2x25	4875
E11W2 CO 1	2x25	4875
E11W2 CO 2	2x25	4875
E11W2 CO 3	2x25	4875
E11W2 CO 4	2x25	4875
E11W2 CO 5	2x25	4875
E11W2 CO 6	2x25	4875
E11W2 CO 7	2x25	4875
E11W2 CO 8	2x25	4875

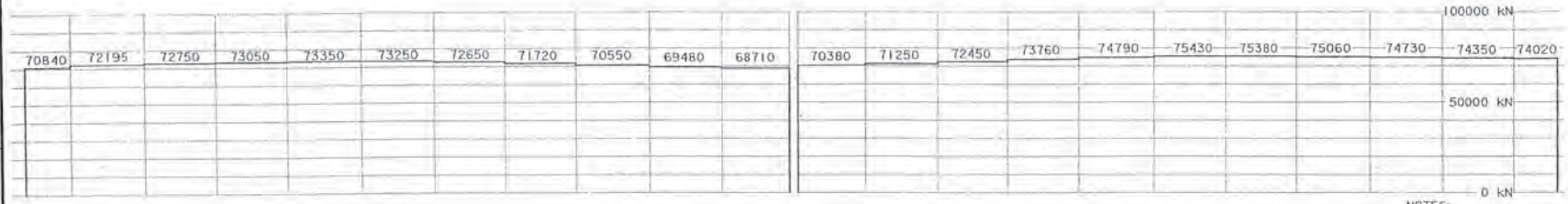

FORCE DIAGRAM (Total per box girder)

NOTES:

1. Anchorage symbols are as follows:
   - |—— Jacking end
   - ▶—— Dead end
2. The force diagram shows forces which only account for losses due to friction, anchor set and elastic shortening.
3. Key to tendon nomenclature:
   - E11W1 — Span No.
   - CO — Tendon type
   - 1 — Tendon mark
4. For Detail A, see "Continuity Tendon Details" sheets.
5. Continuity tendons change from double to single rows in the transition zone.
6. For Section D-D, Section E-E and Section F-F, see "Continuity Tendon Layout E7W" sheet.
7. For anchorage details at hinge, see "Hinge B,C Details" sheets.

MARK	DATE	DESCRIPTIONS	BY	CH'D	CCO#
2	09/19/03	REVISE TRANSITION ZONE DIMENSION TO BE CONSISTENT WITH CONTUNUITY TENDON DETAILS	MR	JC	2451
1	09/19/03	REVISE PT AND PCC POINT	MR	JC	2451

REVISIONS

CONTRACT CHANGE ORDER NO. 2451
SHEET 19 OF ___

ALL DIMENSIONS ARE IN MILLIMETERS UNLESS OTHERWISE SHOWN

DESIGN OVERSIGHT 10/2/03
SIGN OFF DATE

DESIGN	BY J. Chan	CHECKED H. Lund	
DETAILS	BY A. Lishansky	CHECKED H. Lund	
QUANTITIES	BY K. Cormier	CHECKED J. Chan	

PREPARED FOR THE STATE OF CALIFORNIA DEPARTMENT OF TRANSPORTATION

Sajid Abbas
PROJECT ENGINEER

BRIDGE NO. 34-0006L/R
KILOMETER POST 13.9/14.3, 0.0/1.6

SAN FRANCISCO OAKLAND BAY BRIDGE
EAST SPAN SEISMIC SAFETY PROJECT

SKYWAY STRUCTURES

CONTINUITY TENDON LAYOUT E11W

100% PLANS

DIST.	COUNTY	ROUTE	KILOMETER POST TOTAL PROJECT	SHEET NO.	TOTAL SHEETS
04	SF, Ala	80	13.9/14.3, 0.0/1.6	662R1	978

REGISTERED ENGINEER - CIVIL

6-4-01

PLANS APPROVAL DATE

The State of California or its officers or agents shall not be responsible for the accuracy or completeness of electronic copies of this plan sheet.

REGISTERED PROFESSIONAL ENGINEER Siu Fu John Chan No. C 39457 Exp. 12/31/05 CIVIL STATE OF CALIFORNIA

T.Y. LIN / MOFFATT & NICHOL
825 BATTERY STREET SAN FRANCISCO, CA 94111

Caltrans now has a web site! To get to the web site, go to: http://www.dot.ca.gov

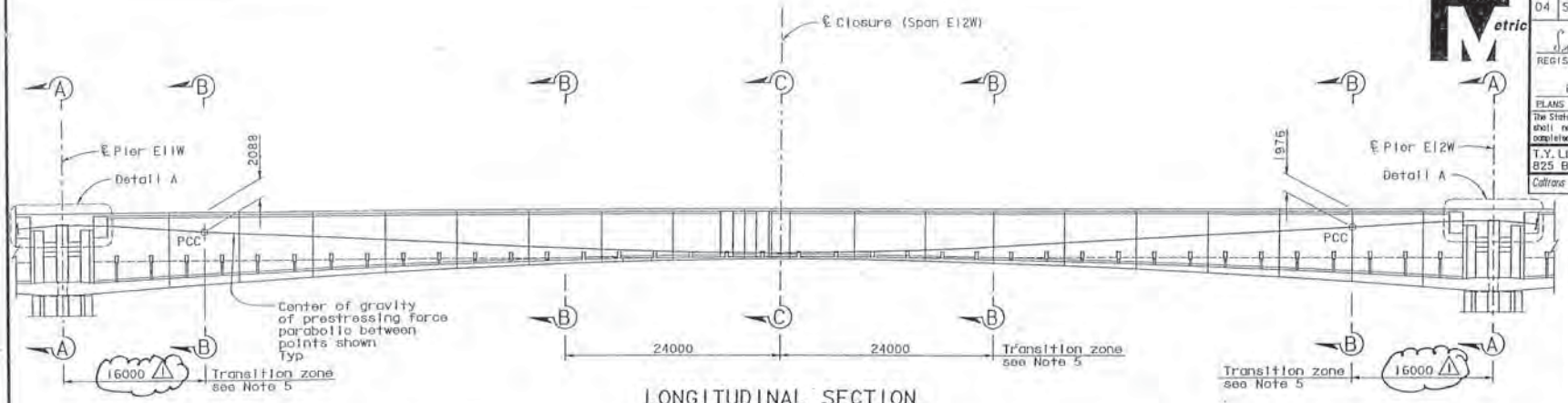

LONGITUDINAL SECTION
1:250

CONTINUITY TENDONS (*per box girder)

Tendon	No. of tendons* x No. of strands (15 Dia)	Jacking Force per Tendon kN
E12W CO 1	2x25	4875
E12W CO 2	2x25	4875
E12W CO 3	2x25	4875
E12W CO 4	2x25	4875
E12W CO 5	2x25	4875
E12W CO 6	2x25	4875
E12W CO 7	2x25	4875
E12W CO 8	2x25	4875

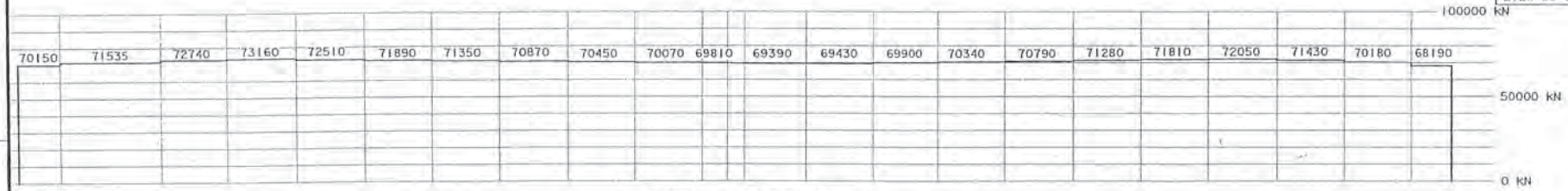

FORCE DIAGRAM (Total per box girder)

NOTES:

1. Anchorage symbols are as follows:
   - |—— Jacking end
   - ▶—— Dead end
2. The force diagram shows forces which only account for losses due to friction, anchor set and elastic shortening.
3. Key to tendon nomenclature:
   - E12W — Span No.
   - CO — Tendon type
   - 1 — Tendon mark
4. For Detail A, see "Continuity Tendon Details" sheets.
5. Continuity tendons change from double to single rows in the transition zone.
6. For Section A-A, Section B-B, Section C-C, see "Continuity Tendon Layout E4W" sheet.

MARK	DATE	DESCRIPTIONS	BY	CH'D	CCO#
1	09/19/03	REVISE TRANSITION ZONE DIMENSION TO BE CONSISTENT WITH CONTUNUITY TENDON DETAILS	MR	JC	24-S1

REVISIONS

CONTRACT CHANGE ORDER NO. 24-S1
SHEET 20 OF ___

ALL DIMENSIONS ARE IN MILLIMETERS UNLESS OTHERWISE SHOWN

DESIGN	BY J. Chan	CHECKED H. Lund	
DETAILS	BY A. Lishansky	CHECKED H. Lund	
QUANTITIES	BY K. Cornier	CHECKED J. Chan	

DESIGN OVERSIGHT 9/30/03
SIGN OFF DATE

PREPARED FOR THE STATE OF CALIFORNIA DEPARTMENT OF TRANSPORTATION

Sajid Abbas
PROJECT ENGINEER

BRIDGE NO. 34-0006L/R
KILOMETER POST 13.9/14.3, 0.0/1.6

SAN FRANCISCO OAKLAND BAY BRIDGE
EAST SPAN SEISMIC SAFETY PROJECT

SKYWAY STRUCTURES

CONTINUITY TENDON LAYOUT E12W

100 % Plot

DIST.	COUNTY	ROUTE	KILOMETER POST TOTAL PROJECT	SHEET NO.	TOTAL SHEETS
04	SF, Ala	80	13.9/14.3, 0.0/1.6	663R1	978

REGISTERED ENGINEER - CIVIL

6-4-01

PLANS APPROVAL DATE

The State of California or its officers or agents shall not be responsible for the accuracy or completeness of electronic copies of this plan sheet.

REGISTERED PROFESSIONAL ENGINEER Shu Fu John Chen No. C 39457 Exp. 12/31/05 CIVIL STATE OF CALIFORNIA

T.Y. LIN / MOFFATT & NICHOL
825 BATTERY STREET SAN FRANCISCO, CA 94111

Caltrans now has a web site! To get to the web site, go to: http://www.dot.ca.gov

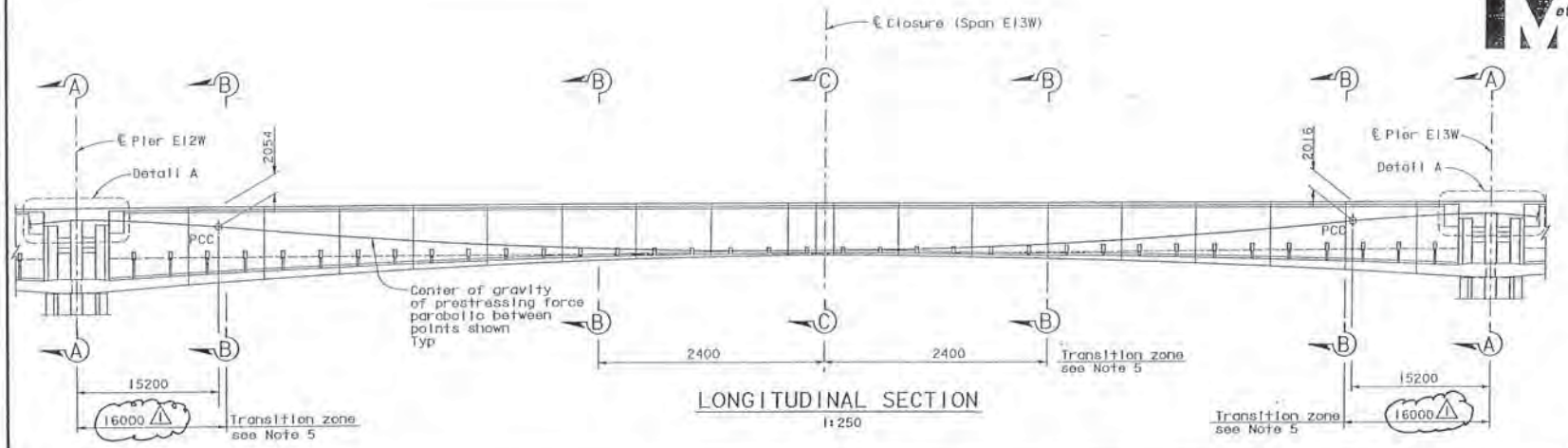

LONGITUDINAL SECTION
1:250

CONTINUITY TENDONS (*per box girder)

Tendon	No. of tendons* X No. of strands (15 Dia)	Jacking Force per Tendon kN
E13W CO 1	2x25	4875
E13W CO 2	2x25	4875
E13W CO 3	2x25	4875
E13W CO 4	2x25	4875
E13W CO 5	2x25	4875
E13W CO 6	2x25	4875
E13W CO 7	2x25	4875
E13W CO 8	2x25	4875

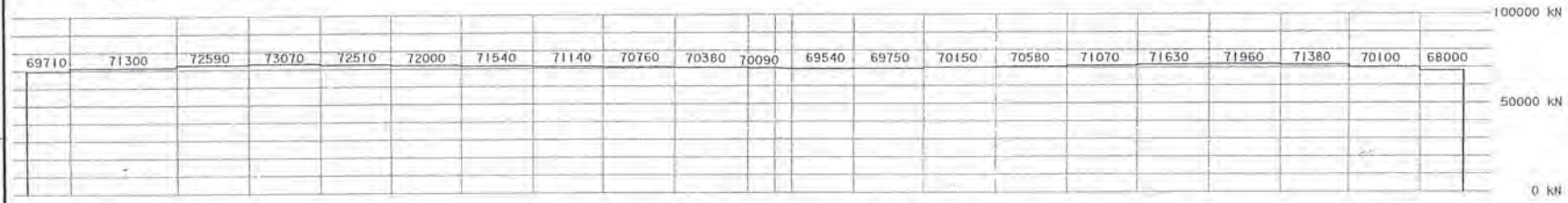

FORCE DIAGRAM (Total per box girder)

NOTES:

1. Anchorage symbols are as follows:
   - |—— Jacking end
   - ▶—— Dead end
2. The force diagram shows forces which only account for losses due to friction, anchor set and elastic shortening.
3. Key to tendon nomenclature:
   - E13W — Span No.
   - CO — Tendon type
   - 1 — Tendon mark
4. For Detail A, see "Continuity Tendon Details" sheets.
5. Continuity tendons change from double to single rows in the transition zone.
6. For Section A-A, Section B-B, Section C-C, see "Continuity Tendon Layout E4W" sheet.

MARK	DATE	DESCRIPTIONS	BY	CH'D	CCO#
1	09/19/03	REVISE TRANSITION ZONE DIMENSION TO BE CONSISTENT WITH CONTUNUITY TENDON DETAILS	MR	JC	2451

REVISIONS

CONTRACT CHANGE ORDER NO. 2451
SHEET 21 OF ___

ALL DIMENSIONS ARE IN MILLIMETERS UNLESS OTHERWISE SHOWN

DESIGN OVERSIGHT 9/30/03
SIGN OFF DATE

DESIGN	BY J. Chan	CHECKED H. Lund	
DETAILS	BY A. Lishansky	CHECKED H. Lund	
QUANTITIES	BY K. Cormier	CHECKED J. Chan	

PREPARED FOR THE STATE OF CALIFORNIA DEPARTMENT OF TRANSPORTATION

Sajid Abbas
PROJECT ENGINEER

BRIDGE NO. 34-0006L/R
KILOMETER POST 13.9/14.3, 0.0/1.6

SAN FRANCISCO OAKLAND BAY BRIDGE
EAST SPAN SEISMIC SAFETY PROJECT

SKYWAY STRUCTURES

CONTINUITY TENDON LAYOUT E13W

REVISION DATES (PRELIMINARY STAGE ONLY) SHEET OF

100 % P&E

DIST.	COUNTY	ROUTE	KILOMETER POST TOTAL PROJECT	SHEET NO.	TOTAL SHEETS
04	SF, Ala	80	13.9/14.3, 0.0/1.6	664R1	978

REGISTERED ENGINEER - CIVIL

6-4-01

PLANS APPROVAL DATE

The State of California or its officers or agents shall not be responsible for the accuracy or completeness of electronic copies of this plan sheet.

T.Y. LIN / MOFFATT & NICHOL
825 BATTERY STREET
SAN FRANCISCO, CA 94111

Caltrans now has a web site! To get to the web site, go to http://www.dot.ca.gov

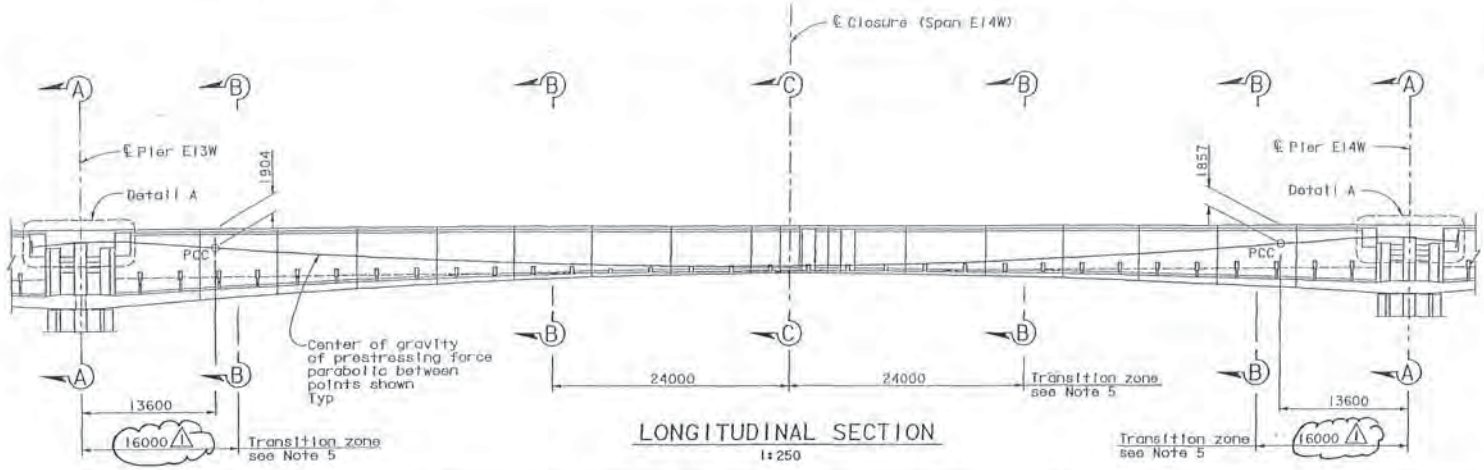

LONGITUDINAL SECTION
1:250

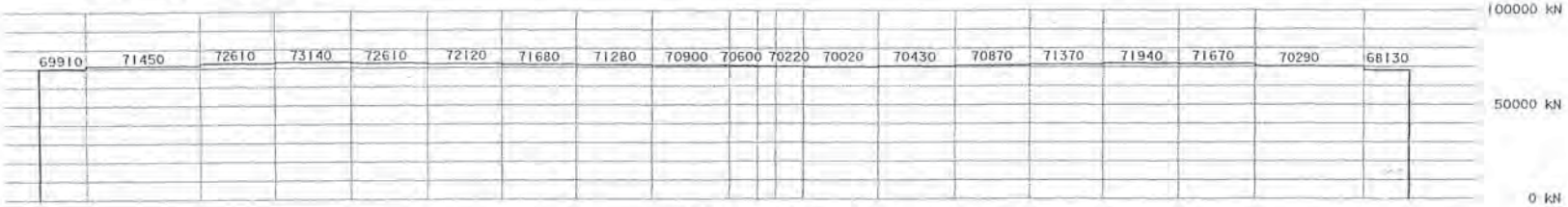

FORCE DIAGRAM (Total per box girder)

CONTINUITY TENDONS (*per box girder)

Tendon	No. of tendons* x No. of strands (15 Dia)	Jacking Force per Tendon kN
E14W CO 1	2x25	4875
E14W CO 2	2x25	4875
E14W CO 3	2x25	4875
E14W CO 4	2x25	4875
E14W CO 5	2x25	4875
E14W CO 6	2x25	4875
E14W CO 7	2x25	4875
E14W CO 8	2x25	4875

NOTES:

1. Anchorage symbols are as follows:
   - ├── Jacking end
   - ►── Dead end
2. The force diagram shows forces which only account for losses due to friction, anchor set and elastic shortening.
3. Key to tendon nomenclature:
   - E14W — Span No.
   - CO — Tendon type
   - 1 — Tendon mark
4. For Detail A, see "Continuity Tendon Details" sheets.
5. Continuity tendons change from double to single rows in the transition zone.
6. For Section A-A, Section B-B, Section C-C, see "Continuity Tendon Layout E4W" sheet.

MARK	DATE	DESCRIPTIONS	BY	CH'D	CCO#
1	09/19/03	REVISE TRANSITION ZONE DIMENSION TO BE CONSISTENT WITH CONTUNUITY TENDON DETAILS	MR	JC	2451

REVISIONS

CONTRACT CHANGE ORDER NO. 2451
SHEET 32 OF ___

DESIGN OVERSIGHT 9/30/03
SIGN OFF DATE

ALL DIMENSIONS ARE IN MILLIMETERS UNLESS OTHERWISE SHOWN

DESIGN	BY J. Chan	CHECKED H. Lund	
DETAILS	BY A. Lishansky	CHECKED H. Lund	
QUANTITIES	BY K. Cormier	CHECKED J. Chan	

PREPARED FOR THE STATE OF CALIFORNIA DEPARTMENT OF TRANSPORTATION

Sajid Abbas
PROJECT ENGINEER

BRIDGE NO. 34-0006
KILOMETER POST 13.9/14.3, 0.0/1.6

SAN FRANCISCO OAKLAND BAY BRIDGE
EAST SPAN SEISMIC SAFETY PROJECT

SKYWAY STRUCTURES

CONTINUITY TENDON LAYOUT E14W

100 % PS&E

DIST.	COUNTY	ROUTE	KILOMETER POST TOTAL PROJECT	SHEET NO.	TOTAL SHEETS
04	SF, Ala	80	13.9/14.3, 0.0/1.6	665R1	978

REGISTERED ENGINEER - CIVIL

6-4-01

PLANS APPROVAL DATE

The State of California or its officers or agents shall not be responsible for the accuracy or completeness of electronic copies of this plan sheet.

REGISTERED PROFESSIONAL ENGINEER Shu Fu John Chen No. C 39451 Exp. 12/31/05 CIVIL STATE OF CALIFORNIA

T.Y. LIN / MOFFATT & NICHOL
825 BATTERY STREET
SAN FRANCISCO, CA 94111

Caltrans new has a web site! To get to the web site, go to: http://www.dot.ca.gov

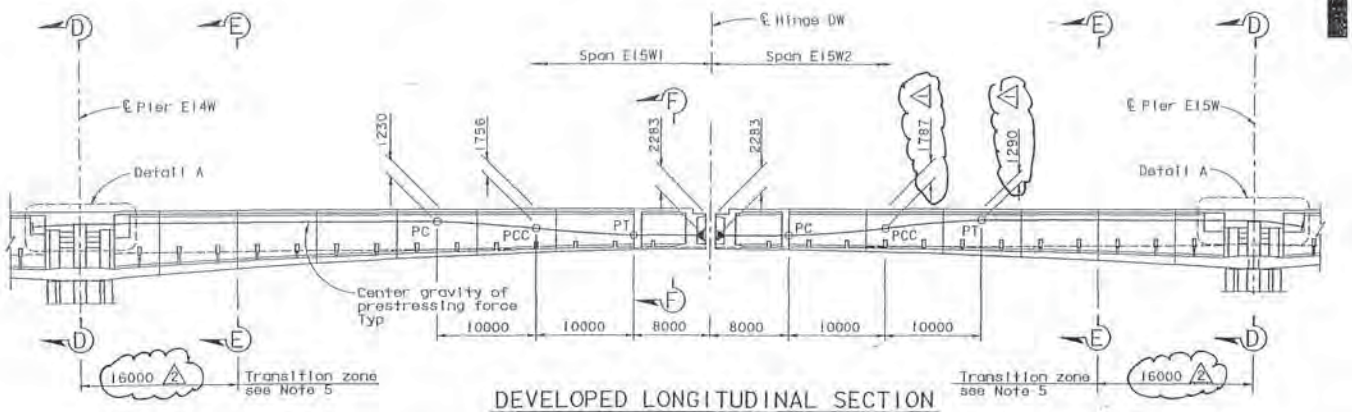

DEVELOPED LONGITUDINAL SECTION

1:250

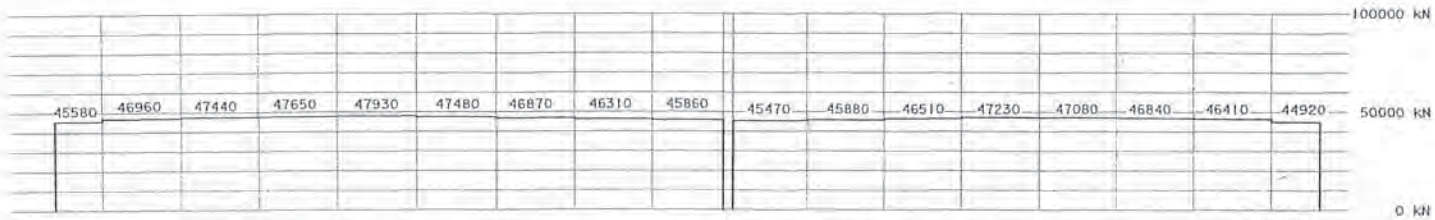

FORCE DIAGRAM (Total per box girder)

CONTINUITY TENDONS (*per box girder)

Tendon	No. of tendons* x No. of strands (15 Dia)	Jacking Force per Tendon kN
E15W1 CO 1	2x22	4290
E15W1 CO 2	2x22	4290
E15W1 CO 3	2x22	4290
E15W1 CO 4	2x22	4290
E15W1 CO 5	2x22	4290
E15W1 CO 6	2x22	4290
E15W2 CO 1	2x22	4290
E15W2 CO 2	2x22	4290
E15W2 CO 3	2x22	4290
E15W2 CO 4	2x22	4290
E15W2 CO 5	2x22	4290
E15W2 CO 6	2x22	4290

NOTES:

1. Anchorage symbols are as follows:
   - ├── Jacking end
   - ►── Dead end
2. The force diagram shows forces which only account for losses due to friction, anchor set and elastic shortening.
3. Key to tendon nomenclature:

   E15W1 CO 1

   Span No. ____
   Tendon type ____
   Tendon mark ____
4. For Detail A, see "Continuity Tendon Details" sheets.
5. Continuity tendons change from double to single rows in the transition zone.
6. For Section D-D, Section E-E and Section F-F, see "Continuity Tendon Layout E7W" sheet.
7. For anchorage details at hinge, see "Hinge D Details" sheets.
8. Longitudinal dimensions given are measured along "W" Line.

MARK	DATE	DESCRIPTIONS	BY	CH'D	CCO#
2	09/19/03	REVISE TRANSITION ZONE DIMENSION TO BE CONSISTENT WITH CONTUNUITY TENDON DETAILS	MR	JC	2451
1	09/19/03	REVISE PT AND PCC POINT	MR	JC	2451

REVISIONS

CONTRACT CHANGE ORDER NO. 2451
SHEET 23 OF ____

ALL DIMENSIONS ARE IN MILLIMETERS UNLESS OTHERWISE SHOWN

DESIGN OVERSIGHT 9/30/03
SIGN OFF DATE

DESIGN	BY J. Chan	CHECKED H. Lund	
DETAILS	BY A. Liehansky	CHECKED H. Lund	
QUANTITIES	BY K. Conzler	CHECKED J. Chan	

PREPARED FOR THE STATE OF CALIFORNIA DEPARTMENT OF TRANSPORTATION

Sajid Abbas
PROJECT ENGINEER

BRIDGE NO. 34-0006L/R
KILOMETER POST 13.9/14.3, 0.0/1.6

SAN FRANCISCO OAKLAND BAY BRIDGE
EAST SPAN SEISMIC SAFETY PROJECT

SKYWAY STRUCTURES

CONTINUITY TENDON LAYOUT E15W

100 % PS&E

DIST.	COUNTY	ROUTE	KILOMETER POST TOTAL PROJECT	SHEET NO.	TOTAL SHEETS
04	SF, Ala	80	13.9/14.3, 0.0/1.6	666R1	978

REGISTERED ENGINEER - CIVIL

6-4-01
PLANS APPROVAL DATE

The State of California or its officers or agents shall not be responsible for the accuracy or completeness of electronic copies of this plan sheet.

REGISTERED PROFESSIONAL ENGINEER Shu Fu John Chan No. C 39457 Exp. 12/31/05 CIVIL STATE OF CALIFORNIA

T.Y. LIN / MOFFATT & NICHOL
825 BATTERY STREET
SAN FRANCISCO, CA 94111

Caltrans now has a web site! To get to the web site, go to: http://www.dot.ca.gov

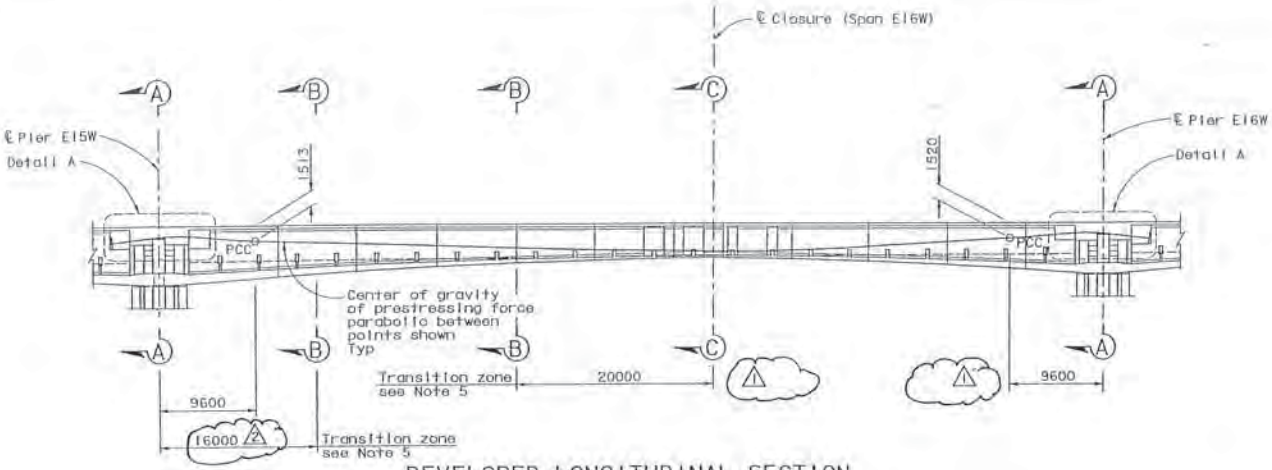

DEVELOPED LONGITUDINAL SECTION
1:250

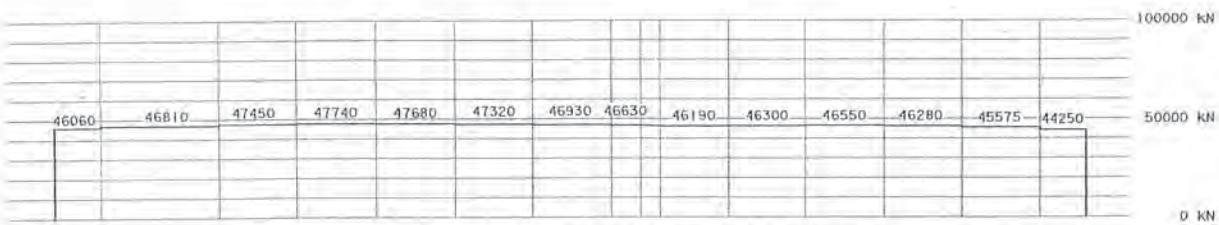

FORCE DIAGRAM (Total per box girder)

CONTINUITY TENDONS (*per box girder)

Tendon	No. of tendons* x No. of strands (15 Dia)	Jacking Force per Tendon kN
E16W CO 1	2x22	4290
E16W CO 2	2x22	4290
E16W CO 3	2x22	4290
E16W CO 4	2x22	4290
E16W CO 5	2x22	4290
E16W CO 6	2x22	4290

MARK	DATE	DESCRIPTIONS	BY	CH'D	CCO#
2	09/19/03	REVISE TRANSITION ZONE DIMENSION AT PIER E15W TO BE CONSISTENT WITH CONTINUITY TENDON DETAILS	MR	JC	24-S1
1	09/19/03	DELETE TRANSITION ZONE AT PIER E16E	MR	JC	24-S1

REVISIONS

CONTRACT CHANGE ORDER NO. 24 S1
SHEET 24 OF ___

NOTES:

1. Anchorage symbols are as follows:
   - |—— Jacking end
   - ▶—— Dead end
2. The force diagram shows forces which only account for losses due to friction, anchor set and elastic shortening.
3. Key to tendon nomenclature:
   - E16W — Span No.
   - CO — Tendon type
   - 1 — Tendon mark
4. For Detail A, see "Continuity Tendon Details" sheets.
5. Continuity tendons change from double to single rows in the transition zone.
6. For Section A-A, Section B-B and Section C-C, see "Continuity Tendon Layout E4W" sheet.
7. Longitudinal dimensions given are measured along "W" Line.

ALL DIMENSIONS ARE IN MILLIMETERS UNLESS OTHERWISE SHOWN

DESIGN OVERSIGHT 9/30/03
SIGN OFF DATE

DESIGN	BY J. Chan	CHECKED K. Lund	
DETAILS	BY A. Lishansky	CHECKED K. Lund	
QUANTITIES	BY K. Corraler	CHECKED J. Chan	

PREPARED FOR THE STATE OF CALIFORNIA DEPARTMENT OF TRANSPORTATION

Sajid Abbas
PROJECT ENGINEER

BRIDGE NO. 34-0006L/R
KILOMETER POST 13.9/14.3, 0.0/1.6

SAN FRANCISCO OAKLAND BAY BRIDGE
EAST SPAN SEISMIC SAFETY PROJECT

SKYWAY STRUCTURES

CONTINUITY TENDON LAYOUT E16W

100% PS&E

DIST.	COUNTY	ROUTE	KILOMETER POST TOTAL PROJECT	SHEET NO.	TOTAL SHEETS
04	SF, Ala	80	13.9/14.3. 0.0/1.6	667R1	978

Caltrans Metric

REGISTERED ENGINEER - CIVIL

6-4-01

PLANS APPROVAL DATE

REGISTERED PROFESSIONAL ENGINEER — Sila Fu John Chan — No. C 39451 — Exp. 12/31/05 — CIVIL — STATE OF CALIFORNIA

The State of California or its officers or agents shall not be responsible for the accuracy or completeness of electronic copies of this plan sheet.

T.Y. LIN / MOFFATT & NICHOL
825 BATTERY STREET
SAN FRANCISCO, CA 94111

Caltrans now has a web site! To get to the web site, go to: http://www.dot.ca.gov

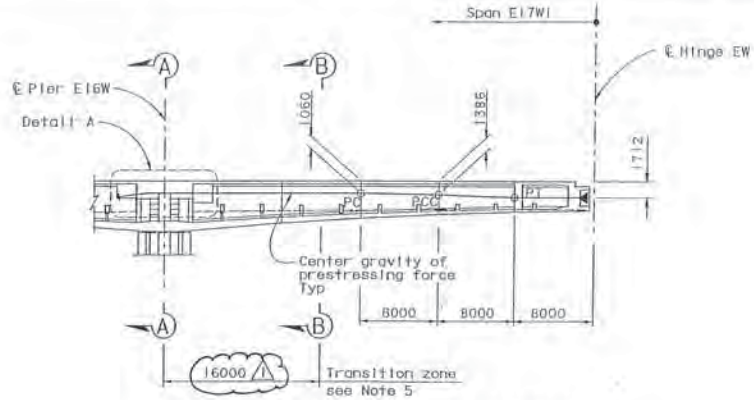

DEVELOPED LONGITUDINAL SECTION
1:250

CONTINUITY TENDONS (*per box girder)

Tendon	No. of tendons* x No. of strands (15 Dia)	Jacking Force per Tendon kN
E17W1 CO 1	2x22	4290
E17W1 CO 2	2x22	4290
E17W1 CO 3	2x22	4290
E17W1 CO 4	2x22	4290

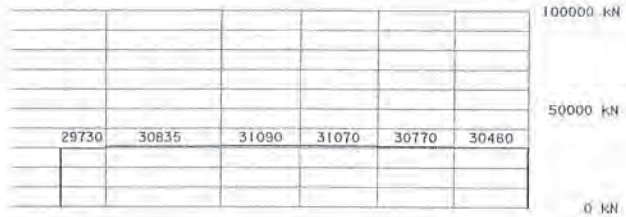

FORCE DIAGRAM (Total per box girder)

MARK	DATE	DESCRIPTIONS	BY	CH'D	CCO#
2	09/19/03	DELETE DIMENSION	MR	JC	24S1
1	09/19/03	REVISE TRANSITION ZONE DIMENSION TO BE CONSISTENT WITH CONTINUITY TENDON DETAILS	MR	JC	24S1

REVISIONS

CONTRACT CHANGE ORDER NO. 24S1
SHEET 25 OF ___

NOTES:

1. Anchorage symbols are as follows:
   - |—— Jacking end
   - ▶—— Dead end
2. The force diagram shows forces which only account for losses due to friction, anchor set and elastic shortening.
3. Key to tendon nomenclature:
   - E17W1 — Span No.
   - CO — Tendon type
   - 1 — Tendon mark
4. For Detail A, see "Continuity Tendon Details" sheets.
5. Continuity tendons change from double to single rows in the transition zone.
6. For anchorage details at hinge, see "Hinge E Details" sheets.
7. Longitudinal dimensions given are measured along "W" Line.

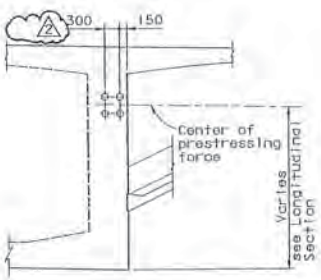

SECTION A-A
1:50

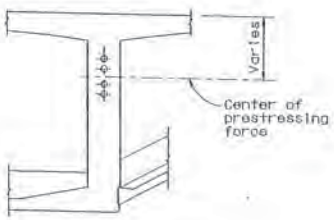

SECTION B-B
1:50

ALL DIMENSIONS ARE IN MILLIMETERS UNLESS OTHERWISE SHOWN

DESIGN	BY J. Chan	CHECKED H. Lund	
DETAILS	BY D. Leung	CHECKED H. Lund	
QUANTITIES	BY K. Cornier	CHECKED J. Chan	

DESIGN OVERSEER — SIGN OFF DATE 9/30/03

PREPARED FOR THE STATE OF CALIFORNIA DEPARTMENT OF TRANSPORTATION

Sajid Abbas
PROJECT ENGINEER

BRIDGE NO. 34-0006L/R
KILOMETER POST 13.9/14.3, 0.0/1.6

SAN FRANCISCO OAKLAND BAY BRIDGE
EAST SPAN SEISMIC SAFETY PROJECT

SKYWAY STRUCTURES

CONTINUITY TENDON LAYOUT E17W

100% PS&E

DIST.	COUNTY	ROUTE	KILOMETER POST TOTAL PROJECT	SHEET NO.	TOTAL SHEETS
04	SF. Ala	80	13.9/14.3. 0.0/1.6	568R	978

Caltrans Metric

REGISTERED ENGINEER - CIVIL

6-4-01

PLANS APPROVAL DATE

The State of California or its officers or agents shall not be responsible for the accuracy or completeness of electronic copies of this plan sheet.

REGISTERED PROFESSIONAL ENGINEER Siu Fai John Chan No. C 39457 Exp. 12/31/05 CIVIL STATE OF CALIFORNIA

T.Y. LIN / MOFFATT & NICHOL
825 BATTERY STREET
SAN FRANCISCO, CA 94111

Caltrans now has a web site! To get to the web site, go to http://www.dot.ca.gov

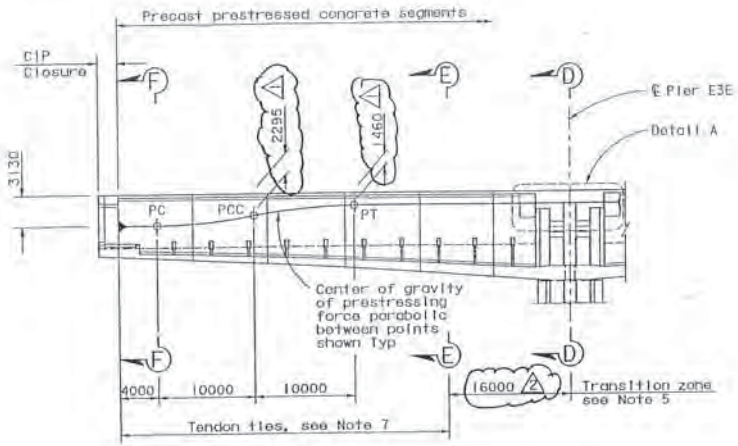

DEVELOPED LONGITUDINAL SECTION
1:250

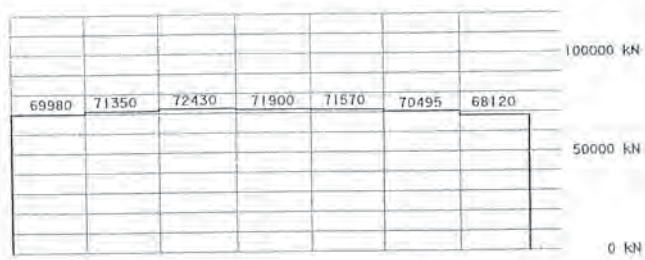

FORCE DIAGRAM (Total per box girder)

CONTINUITY TENDONS (*per box girder)

Tendon	No. of tendons* X No. of strands (15 Dia)	Jacking Force per Tendon kN
E3E CO 1	2x25	4875
E3E CO 2	2x25	4875
E3E CO 3	2x25	4875
E3E CO 4	2x25	4875
E3E CO 5	2x25	4875
E3E CO 6	2x25	4875
E3E CO 7	2x25	4875
E3E CO 8	2x25	4875

NOTES:

1. Anchorage symbols are as follows:
   - ⊢—— Jacking end
   - ▶—— Dead end
2. The force diagram shows forces which only account for losses due to friction, anchor set and elastic shortening.
3. Key to tendon nomenclature:
   - E3E — Span No.
   - CO — Tendon type
   - 1 — Tendon mark
4. For Detail A, see "Continuity Tendon Details" sheets.
5. Continuity tendons change from double to single rows in the transition zone.
6. For Section D-D, Section E-E and Section F-F, see "Continuity Tendon Layout E7E" sheet.
7. For continuity tendin ties detail, see "Girder Rrinforcement" sheets.
8. Longitudinal dimensions given are measured along "E" Line.

MARK	DATE	DESCRIPTIONS	BY	CH'D	CCO#
2	09/19/03	REVISE TRANSITION ZONE DIMENSION TO BE CONSISTENT WITH CONTUNUITY TENDON DETAILS	MR	JC	2451
1	09/19/03	REVISE PT AND PCC POINT	MR	JC	2451

REVISIONS

CONTRACT CHANGE ORDER NO. 2451
SHEET 20 OF ___

ALL DIMENSIONS ARE IN MILLIMETERS UNLESS OTHERWISE SHOWN

DESIGN OVERSIGHT 9/30/03

DESIGN	J. Chan	CHECKED	R. Lund
DETAILS	A. Lichansky	CHECKED	R. Lund
QUANTITIES	K. Consiler	CHECKED	J. Chan

PREPARED FOR THE STATE OF CALIFORNIA DEPARTMENT OF TRANSPORTATION

Sajid Abbas
PROJECT ENGINEER

BRIDGE NO. 34-0006L/R
KILOMETER POST 13.9/14.3. 0.0/1.6

SAN FRANCISCO OAKLAND BAY BRIDGE
EAST SPAN SEISMIC SAFETY PROJECT

SKYWAY STRUCTURES

CONTINUITY TENDON LAYOUT E3E

REVISION DATES (PRELIMINARY STAGE ONLY) SHEET OF

100 % PS&E

MARK	DATE	DESCRIPTIONS	BY	CH'D	CCO#
4	09/19/03	DELETE DIMENSION	MR	JC	2451
3	09/19/03	SHOW TENDON TIES	MR	JC	2451
2	09/19/03	REVISE TRANSITION ZONE DIMENSION TO BE CONSISTENT WITH CONTINUITY TENDON DETAILS	MR	JC	2451
1	09/19/03	STANDARDIZE LOCATION OF INTERIOR LINE OF TENDONS	MR	JC	2451

REVISIONS

CONTRACT CHANGE ORDER NO. 2451
SHEET 29 OF

DIST.	COUNTY	ROUTE	KILOMETER POST TOTAL PROJECT	SHEET NO.	TOTAL SHEETS
04	SF, Ala	80	13.9/14.3, 0.0/1.6	669R1	978

REGISTERED ENGINEER - CIVIL
6-4-01
PLANS APPROVAL DATE
The State of California or its officers or agents shall not be responsible for the accuracy or completeness of electronic copies of this plan sheet.

T.Y. LIN / MOFFATT & NICHOL
825 BATTERY STREET
SAN FRANCISCO, CA 94111

Caltrans now has a web site! To get to the web site, go to: http://www.dot.ca.gov

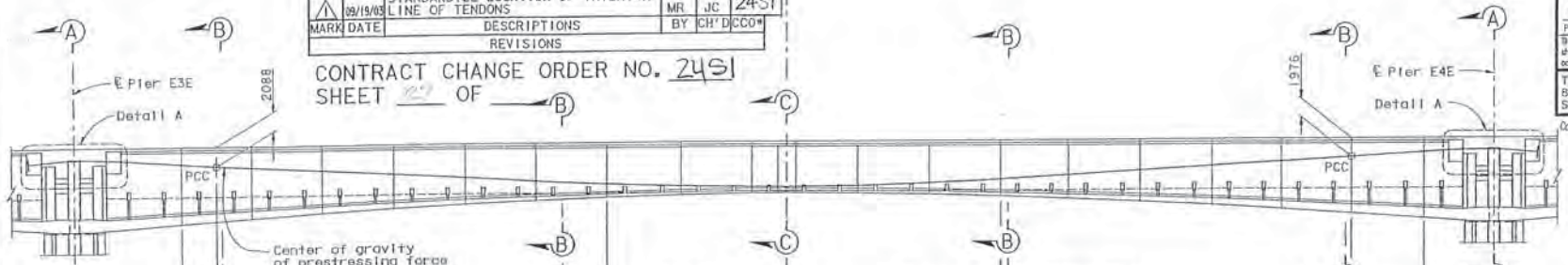

DEVELOPED LONGITUDINAL SECTION
1:250

CONTINUITY TENDONS (*per box girder)

Tendon	No. of tendons* × No. of strands (15 Dia)	Jacking Force per Tendon kN
E4E CO 1	2x25	4875
E4E CO 2	2x25	4875
E4E CO 3	2x25	4875
E4E CO 4	2x25	4875
E4E CO 5	2x25	4875
E4E CO 6	2x25	4875
E4E CO 7	2x25	4875
E4E CO 8	2x25	4875

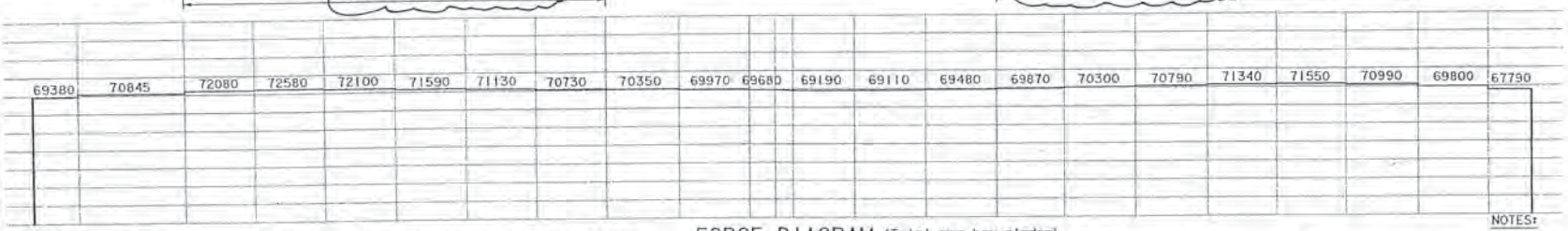

FORCE DIAGRAM (Total per box girder)

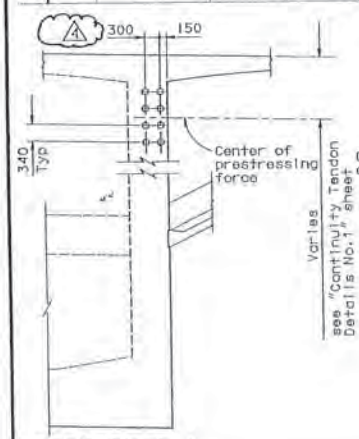

SECTION A-A
1:50

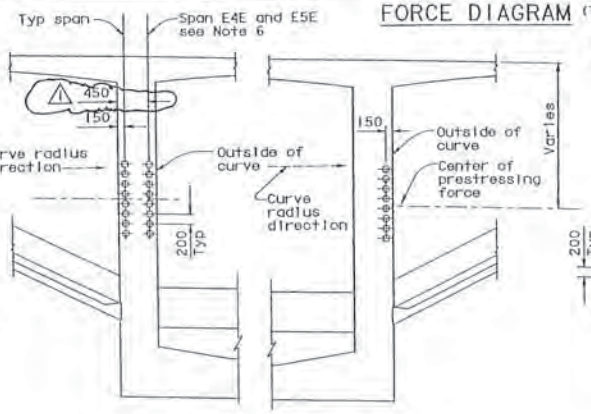

SECTION B-B
1:50

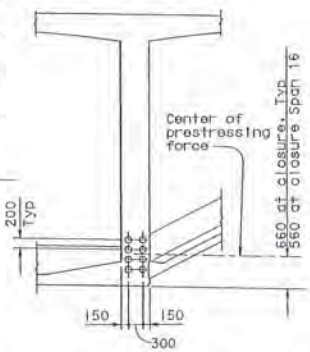

SECTION C-C
1:50

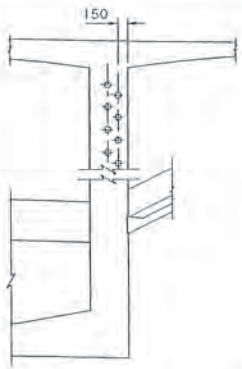

SECTION (Transition zone)
1:50

NOTES:

1. Anchorage symbols are as follows:
   - Jacking end
   - Dead end
2. The force diagram shows forces which only account for losses due to friction, anchor set and elastic shortening.
3. Key to tendon nomenclature:
   - E4E — Span No.
   - CO — Tendon type
   - 1 — Tendon mark
4. For Detail A, see "Continuity Tendon Details" sheets.
5. Continuity tendons change from double to single rows in the transition zone.
6. For continuity tendon ties details, see "Girder Reinforcement" sheets.
7. Longitudinal dimensions given are measured along "E" Line.

ALL DIMENSIONS ARE IN MILLIMETERS UNLESS OTHERWISE SHOWN

SAN FRANCISCO OAKLAND BAY BRIDGE
EAST SPAN SEISMIC SAFETY PROJECT

SKYWAY STRUCTURES

CONTINUITY TENDON LAYOUT E4E

DESIGN OVERSIGHT 9/30/03
SIGN OFF DATE

DESIGN	J. Chan	CHECKED	R. Lund
DETAILS	A. Lishansky	CHECKED	R. Lund
QUANTITIES	K. Cormier	CHECKED	J. Chan

PREPARED FOR THE STATE OF CALIFORNIA DEPARTMENT OF TRANSPORTATION

Sajid Abbas
PROJECT ENGINEER

BRIDGE NO. 34-0006L/R
KILOMETER POST 13.9/14.3, 0.0/1.6

100 % PS&E

Caltrans now has a web site! To get to the web site, go to: http://www.dot.ca.gov

Caltrans Metric

DIST.	COUNTY	ROUTE	KILOMETER POST TOTAL PROJECT	SHEET NO.	TOTAL SHEETS
04	SF, Ala	80	13.9/14.3, 0.0/1.6	670R1	978

REGISTERED ENGINEER - CIVIL

6-4-01

PLANS APPROVAL DATE

The State of California or its officers or agents shall not be responsible for the accuracy or completeness of electronic copies of this plan sheet.

REGISTERED PROFESSIONAL ENGINEER — Sid Fu Chan — No. C 39457 — Exp. 12/31/05 — CIVIL — STATE OF CALIFORNIA

T.Y. LIN / MOFFATT & NICHOL
825 BATTERY STREET
SAN FRANCISCO, CA 94111

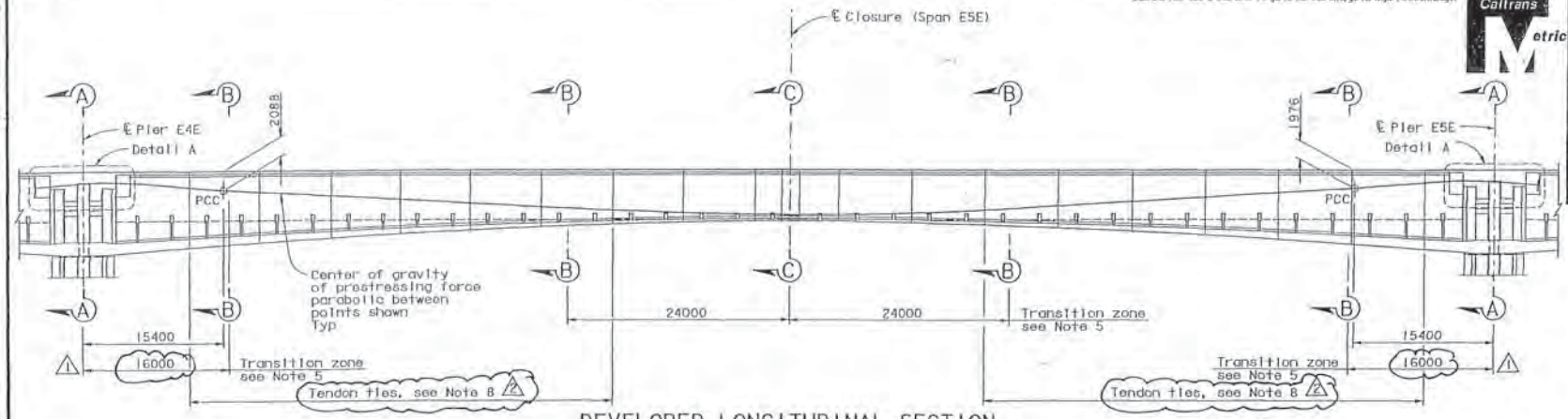

DEVELOPED LONGITUDINAL SECTION

1:250

CONTINUITY TENDONS (*per box girder)

Tendon	No. of tendons* x No. of strands (15 Dia)	Jacking Force per Tendon kN
E5E CO 1	2x25	4875
E5E CO 2	2x25	4875
E5E CO 3	2x25	4875
E5E CO 4	2x25	4875
E5E CO 5	2x25	4875
E5E CO 6	2x25	4875
E5E CO 7	2x25	4875
E5E CO 8	2x25	4875

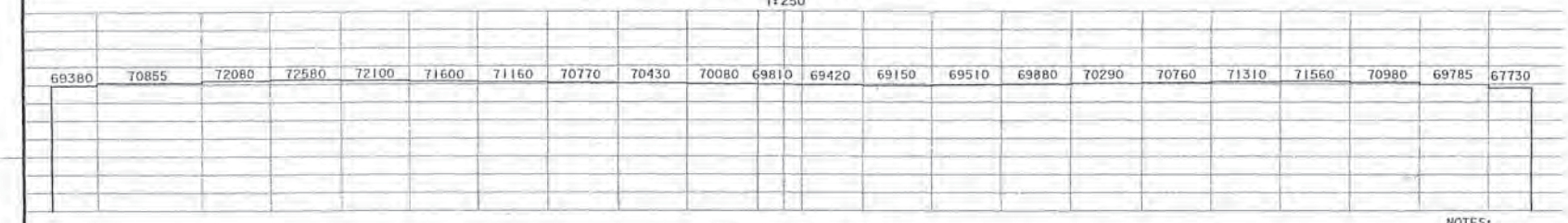

FORCE DIAGRAM (Total per box girder)

8. For continuity tendon ties details, see "Girder Reinforcement" sheets.

NOTES:

1. Anchorage symbols are as follows:
   - ⊢—— Jacking end
   - ▶—— Dead end
2. The force diagram shows forces which only account for losses due to friction, anchor set and elastic shortening.
3. Key to tendon nomenclature:
   - E5E — Span No.
   - CO — Tendon type
   - 1 — Tendon mark
4. For Detail A, see "Continuity Tendon Details" sheets.
5. Continuity tendons change from double to single rows in the transition zone.
6. For Section A-A, Section B-B, Section C-C, see "Continuity Tendon Layout E4E" sheet.
7. Longitudinal dimensions given are measured along "E" Line.

MARK	DATE	DESCRIPTIONS	BY	CH'D	CCO#
2	09/19/03	SHOW TENDON TIES	MR	JC	2451
1	09/19/03	REVISE TRANSITION ZONE DIMENSION TO BE CONSISTENT WITH CONTINUITY TENDON DETAILS	MR	JC	2451

REVISIONS

CONTRACT CHANGE ORDER NO. 2451
SHEET 28 OF ___

ALL DIMENSIONS ARE IN MILLIMETERS UNLESS OTHERWISE SHOWN

DESIGN OVERSIGHT 9/30/03
SIGN OFF DATE 11/17/00

DESIGN	BY J. Chan	CHECKED H. Lund	
DETAILS	BY A. Libhansky	CHECKED H. Lund	
QUANTITIES	BY K. Corsier	CHECKED J. Chan	

PREPARED FOR THE STATE OF CALIFORNIA DEPARTMENT OF TRANSPORTATION

Salid Abbas
PROJECT ENGINEER

BRIDGE NO. 34-0006L/R
KILOMETER POST 13.9/14.3, 0.0/1.6

SAN FRANCISCO OAKLAND BAY BRIDGE
EAST SPAN SEISMIC SAFETY PROJECT

SKYWAY STRUCTURES

CONTINUITY TENDON LAYOUT E5E

REVISION DATES (PRELIMINARY STAGE ONLY) SHEET OF

100 % PS&E

Caltrans now has a web site! To get to the web site, go to: http://www.dot.ca.gov

Caltrans Metric

DIST.	COUNTY	ROUTE	KILOMETER POST TOTAL PROJECT	SHEET NO.	TOTAL SHEETS
04	SF, Ala	80	13.9/14.3, 0.0/1.6	671R1	978

REGISTERED ENGINEER - CIVIL

6-4-01

PLANS APPROVAL DATE

The State of California or its officers or agents shall not be responsible for the accuracy or completeness of electronic copies of this plan sheet.

REGISTERED PROFESSIONAL ENGINEER Sila Fu John Chen No. C 39457 Exp. 12/31/05 CIVIL STATE OF CALIFORNIA

T.Y. LIN / MOFFATT & NICHOL
825 BATTERY STREET
SAN FRANCISCO, CA 94111

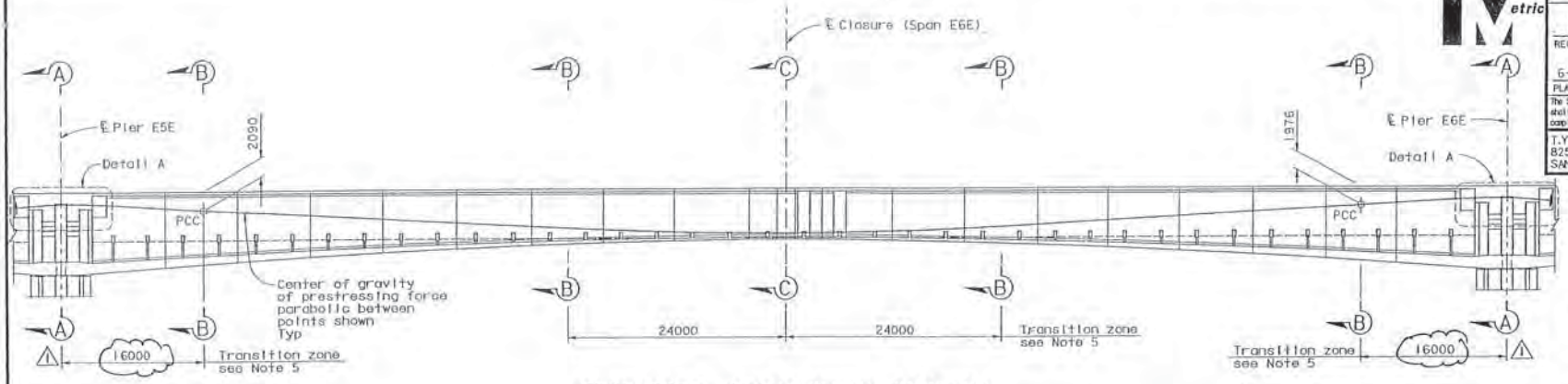

DEVELOPED LONGITUDINAL SECTION
1:250

CONTINUITY TENDONS (*per box girder)

Tendon	No. of tendons* x No. of strands (15 Dia)	Jacking Force per Tendon kN
E6E CO 1	2x25	4875
E6E CO 2	2x25	4875
E6E CO 3	2x25	4875
E6E CO 4	2x25	4875
E6E CO 5	2x25	4875
E6E CO 6	2x25	4875
E6E CO 7	2x25	4875
E6E CO 8	2x25	4875

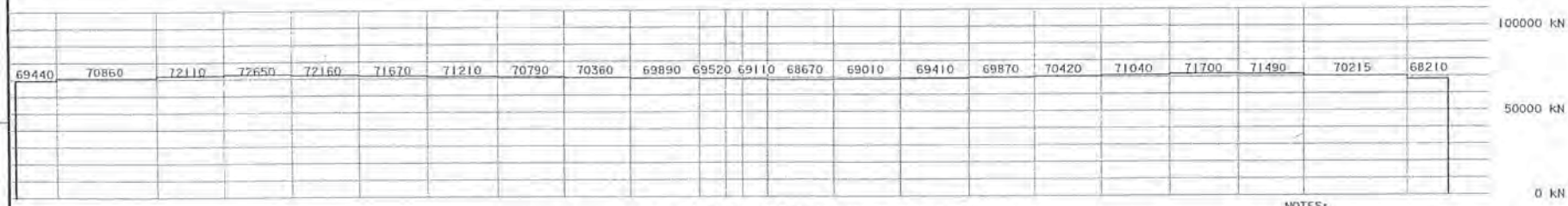

FORCE DIAGRAM (Total per box girder)

NOTES:

1. Anchorage symbols are as follows:
   - Jacking end
   - Dead end
2. The force diagram shows forces which only account for losses due to friction, anchor set and elastic shortening.
3. Key to tendon nomenclature:
   - E6E — Span No.
   - CO — Tendon type
   - 1 — Tendon mark
4. For Detail A, see "Continuity Tendon Details" sheets.
5. Continuity tendons change from double to single rows in the transition zone.
6. For Section A-A, Section B-B, Section C-C, see "Continuity Tendon Layout E4E" sheet.
7. Longitudinal dimensions given are measured along "E" Line.

MARK	DATE	DESCRIPTIONS	BY	CH'D	CCO#
1	09/19/03	REVISE TRANSITION ZONE DIMENSION TO BE CONSISTENT WITH CONTINUITY TENDON DETAILS	MR	JC	2451

REVISIONS

CONTRACT CHANGE ORDER NO. 2451
SHEET 22 OF ___

ALL DIMENSIONS ARE IN MILLIMETERS UNLESS OTHERWISE SHOWN

SAN FRANCISCO OAKLAND BAY BRIDGE
EAST SPAN SEISMIC SAFETY PROJECT

SKYWAY STRUCTURES

CONTINUITY TENDON LAYOUT E6E

DESIGN OVERSIGHT 9/30/03
SIGN OFF DATE

DESIGN	BY J. Chan	CHECKED	K. Lund
DETAILS	BY A. Lishansky	CHECKED	K. Lund
QUANTITIES	BY K. Cornier	CHECKED	J. Chan

PREPARED FOR THE STATE OF CALIFORNIA DEPARTMENT OF TRANSPORTATION

Sajid Abbas
PROJECT ENGINEER

BRIDGE NO. 34-0006L/R
KILOMETER POST 13.9/14.3, 0.0/1.6

CU 04

DISREGARD PRINTS BEARING

REVISION DATES (PRELIMINARY STAGE ONLY)

SHEET ___ OF ___

Rev. Date: 5-15-96

100% PS&E

Caltrans now has a web site! To get to the web site, go to: http://www.dot.ca.gov

Caltrans Metric

DIST.	COUNTY	ROUTE	KILOMETER POST TOTAL PROJECT	SHEET NO.	TOTAL SHEETS
04	SF, Ala	80	13.9/14.3, 0.0/1.6	672R1	978

REGISTERED ENGINEER - CIVIL

6-4-01

PLANS APPROVAL DATE

The State of California or its officers or agents shall not be responsible for the accuracy or completeness of electronic copies of this plan sheet.

REGISTERED PROFESSIONAL ENGINEER Chu Fu John Chen No. C 39457 Exp. 12/31/05 CIVIL STATE OF CALIFORNIA

T.Y. LIN / MOFFATT & NICHOL
825 BATTERY STREET
SAN FRANCISCO, CA 94111

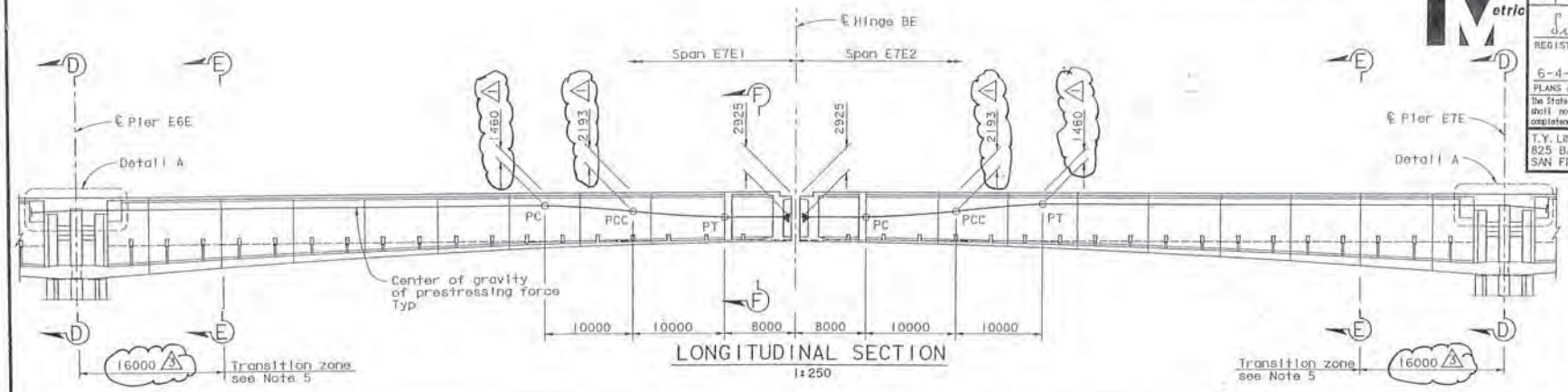

LONGITUDINAL SECTION
1:250

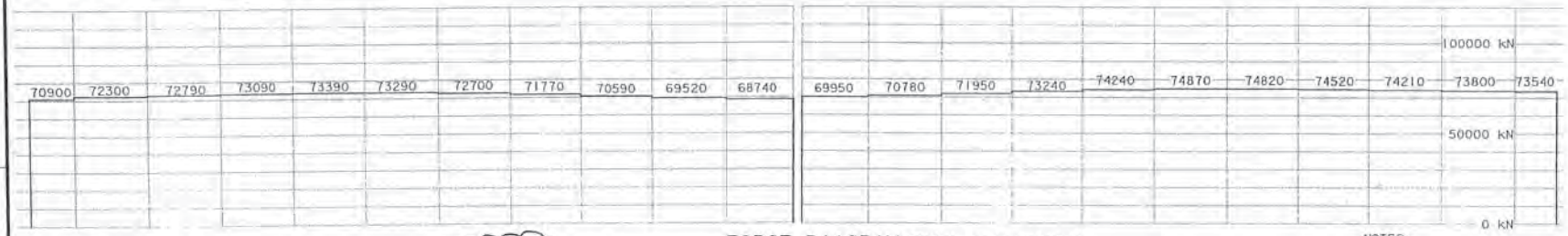

FORCE DIAGRAM (Total per box girder)

CONTINUITY TENDONS (*per box girder)

Tendon	No. of tendons* x No. of strands (15 Dia)	Jacking Force per Tendon kN
E7E1 CO 1	2x25	4875
E7E1 CO 2	2x25	4875
E7E1 CO 3	2x25	4875
E7E1 CO 4	2x25	4875
E7E1 CO 5	2x25	4875
E7E1 CO 6	2x25	4875
E7E1 CO 7	2x25	4875
E7E1 CO 8	2x25	4875
E7E2 CO 1	2x25	4875
E7E2 CO 2	2x25	4875
E7E2 CO 3	2x25	4875
E7E2 CO 4	2x25	4875
E7E2 CO 5	2x25	4875
E7E2 CO 6	2x25	4875
E7E2 CO 7	2x25	4875
E7E2 CO 8	2x25	4875

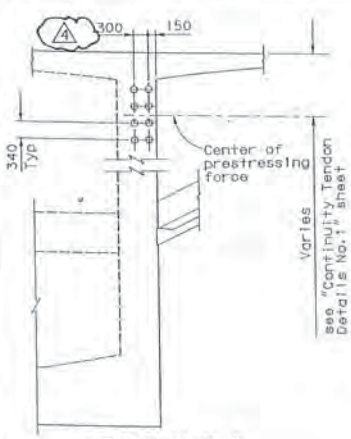

SECTION D-D
1:50

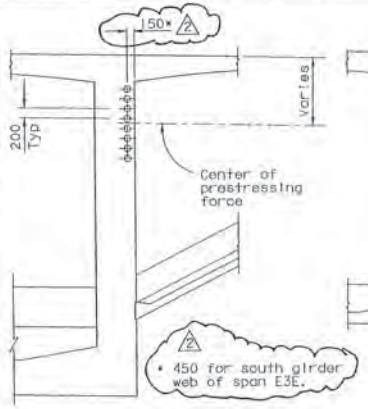

SECTION E-E
1:50

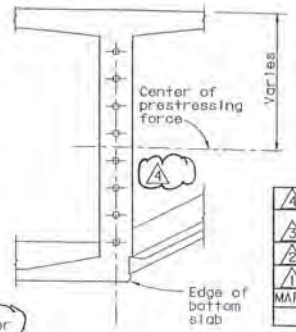

SECTION F-F
1:50

MARK	DATE	DESCRIPTIONS	BY	CH'D	CCO#
4	09/19/03	DELETE DIMENSION	MR	JC	2451
3	09/19/03	REVISE TRANSITION ZONE DIMENSION TO BE CONSISTENT WITH CONTINUITY TENDON DETAILS	MR	JC	2451
2	09/19/03	STANDARDIZE TENDON LOCATION	MR	JC	2451
1	09/19/03	REVISE PT AND PCC POINT	MR	JC	2451

REVISIONS

CONTRACT CHANGE ORDER NO. 2451
SHEET 30 OF ___

NOTES:

1. Anchorage symbols are as follows:
   - |—— Jacking end
   - ▶—— Dead end
2. The force diagram shows forces which only account for losses due to friction, anchor set and elastic shortening.
3. Key to tendon nomenclature:
   - E7E — Span No.
   - CO — Tendon type
   - Tendon mark
4. For Detail A, see "Continuity Tendon Details" sheets.
5. Continuity tendons change from double to single rows in the transition zone.
6. For anchorage details at hinge, see "Hinge B,C Details" sheets.

100% PS&E

ALL DIMENSIONS ARE IN MILLIMETERS UNLESS OTHERWISE SHOWN

DESIGN OVERSIGHT: 6/2/03
SIGN OFF DATE

DESIGN	J. Chan	CHECKED	H. Lund
DETAILS	A. Lishansky	CHECKED	H. Lund
QUANTITIES	K. Cornier	CHECKED	J. Chan

PREPARED FOR THE STATE OF CALIFORNIA DEPARTMENT OF TRANSPORTATION

Sajid Abbas
PROJECT ENGINEER

BRIDGE NO. 34-0006L/R
KILOMETER POST 13.9/14.3, 0.0/1.6

SAN FRANCISCO OAKLAND BAY BRIDGE
EAST SPAN SEISMIC SAFETY PROJECT

SKYWAY STRUCTURES

CONTINUITY TENDON LAYOUT E7E

Caltrans now has a web site! To get to the web site, go to: http://www.dot.ca.gov

Caltrans Metric

DIST.	COUNTY	ROUTE	KILOMETER POST TOTAL PROJECT	SHEET NO.	TOTAL SHEETS
04	SF, Ala	80	13.9/14.3, 0.0/1.6	673R1	978

REGISTERED ENGINEER - CIVIL

6-4-01

PLANS APPROVAL DATE

Liu Fu John Chan, No. C 39457, Exp. 12/31/05, CIVIL, STATE OF CALIFORNIA, REGISTERED PROFESSIONAL ENGINEER

The State of California or its officers or agents shall not be responsible for the accuracy or completeness of electronic copies of this plan sheet.

T.Y. LIN / MOFFATT & NICHOL
825 BATTERY STREET
SAN FRANCISCO, CA 94111

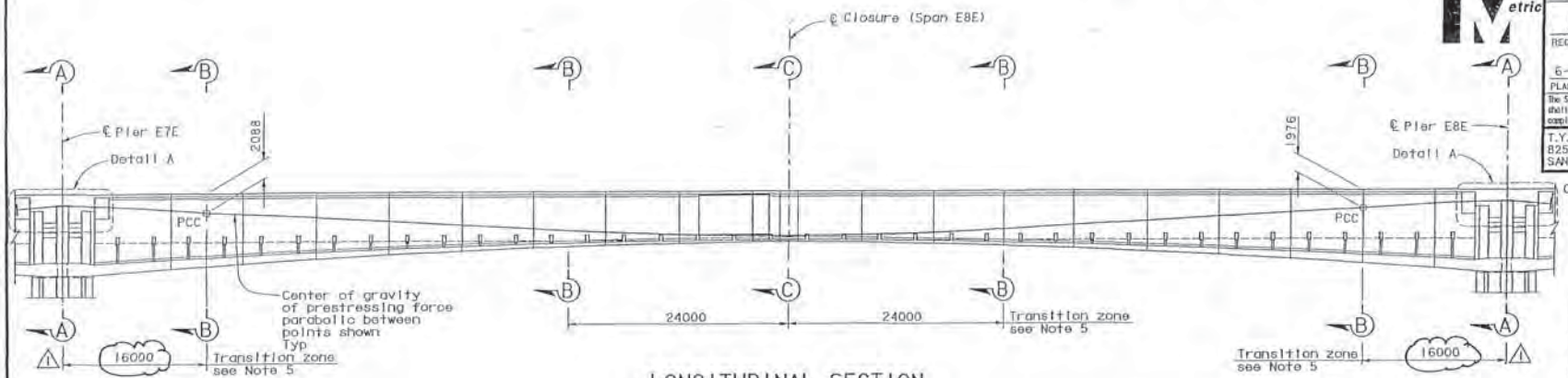

LONGITUDINAL SECTION
1:250

CONTINUITY TENDONS (*per box girder)

Tendon	No. of tendons* x No. of strands (15 Dia)	Jacking Force per Tendon kN
E8E CO 1	2x25	4875
E8E CO 2	2x25	4875
E8E CO 3	2x25	4875
E8E CO 4	2x25	4875
E8E CO 5	2x25	4875
E8E CO 6	2x25	4875
E8E CO 7	2x25	4875
E8E CO 8	2x25	4875

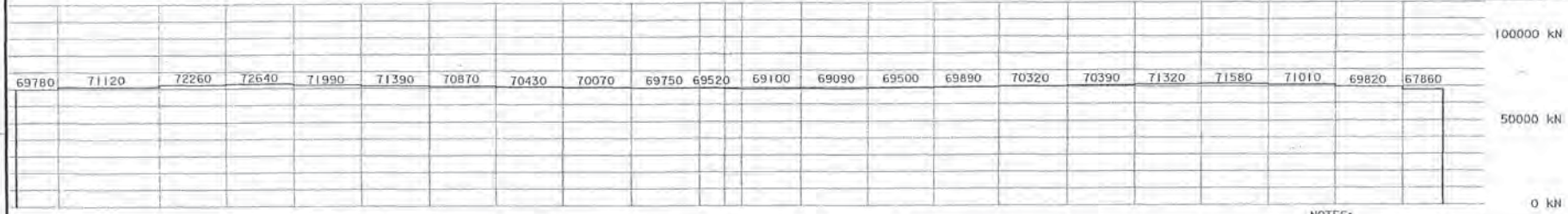

FORCE DIAGRAM (Total per box girder)

NOTES:

1. Anchorage symbols are as follows:
   - Jacking end
   - Dead end
2. The force diagram shows forces which only account for losses due to friction, anchor set and elastic shortening.
3. Key to tendon nomenclature:
   - E8E — Span No.
   - CO — Tendon type
   - 1 — Tendon mark
4. For Detail A, see "Continuity Tendon Details" sheets.
5. Continuity tendons change from double to single rows in the transition zone.
6. For Section A-A, Section B-B, Section C-C, see "Continuity Tendon Layout E4E" sheet.

MARK	DATE	DESCRIPTIONS	BY	CH'D	CCO#
1	09/19/03	REVISE TRANSITION ZONE DIMENSION TO BE CONSISTENT WITH CONTINUITY TENDON DETAILS	MR	JC	2451

REVISIONS

CONTRACT CHANGE ORDER NO. 2451
SHEET 31 OF ___

ALL DIMENSIONS ARE IN MILLIMETERS UNLESS OTHERWISE SHOWN

DESIGN OVERSIGHT 9/30/03
SIGN OFF DATE

DESIGN	BY J. Chan	CHECKED H. Lund	
DETAILS	BY A. Lishansky	CHECKED H. Lund	
QUANTITIES	BY K. Cormier	CHECKED J. Chan	

PREPARED FOR THE STATE OF CALIFORNIA DEPARTMENT OF TRANSPORTATION

Sajid Abbas
PROJECT ENGINEER

BRIDGE NO. 34-0006
KILOMETER POST 13.9/14.3, 0.0/1.6

SAN FRANCISCO OAKLAND BAY BRIDGE
EAST SPAN SEISMIC SAFETY PROJECT

SKYWAY STRUCTURES

CONTINUITY TENDON LAYOUT E8E

REVISION DATES (PRELIMINARY STAGE ONLY) SHEET OF

100 % PS&E

DIST.	COUNTY	ROUTE	KILOMETER POST TOTAL PROJECT	SHEET NO.	TOTAL SHEETS
04	SF, Ala	80	13.9/14.3. 0.0/1.6	674R1	978

REGISTERED ENGINEER - CIVIL

6-4-01

PLANS APPROVAL DATE

The State of California or its officers or agents shall not be responsible for the accuracy or completeness of electronic copies of this plan sheet.

T.Y. LIN / MOFFATT & NICHOL
825 BATTERY STREET
SAN FRANCISCO, CA 94111

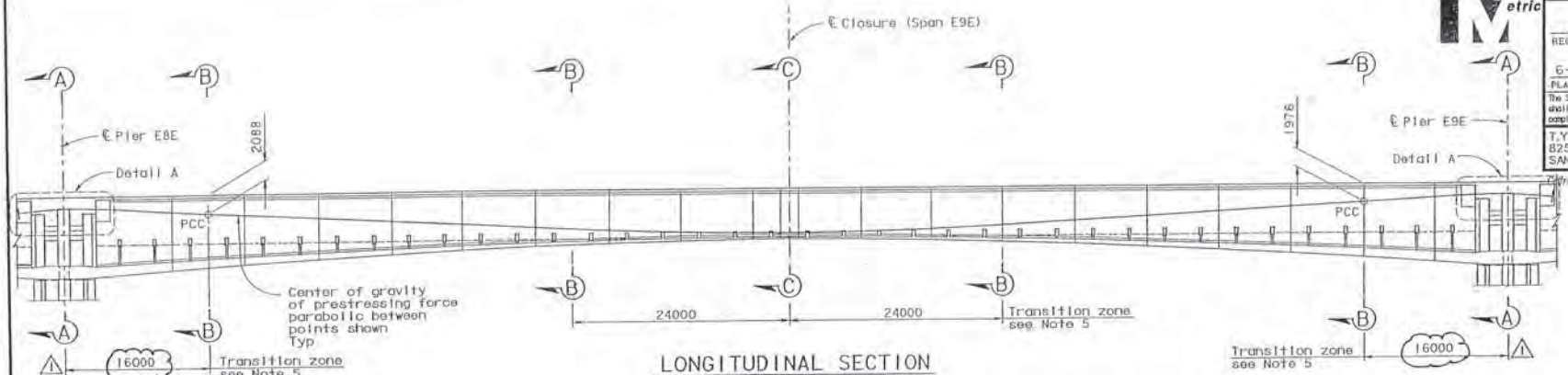

LONGITUDINAL SECTION
1:250

Tendon	No. of tendons* x No. of strands (15 Dia)	Jacking Force per Tendon kN
E9E CO 1	2x25	4875
E9E CO 2	2x25	4875
E9E CO 3	2x25	4875
E9E CO 4	2x25	4875
E9E CO 5	2x25	4875
E9E CO 6	2x25	4875
E9E CO 7	2x25	4875
E9E CO 8	2x25	4875

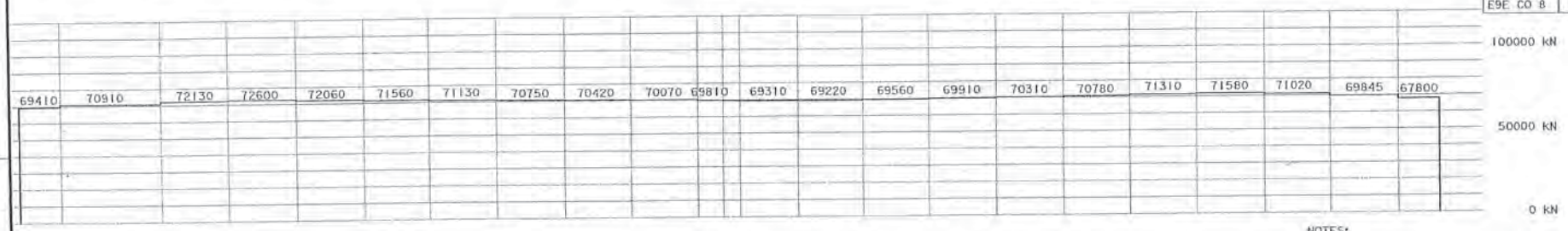

FORCE DIAGRAM (Total per box girder)

NOTES:

1. Anchorage symbols are as follows:
   - Jacking end
   - Dead end
2. The force diagram shows forces which only account for losses due to friction, anchor set and elastic shortening.
3. Key to tendon nomenclature:
   - E9E — Span No.
   - CO — Tendon type
   - 1 — Tendon mark
4. For Detail A, see "Continuity Tendon Details" sheets.
5. Continuity tendons change from double to single rows in the transition zone.
6. For Section A-A, Section B-B, Section C-C, see "Continuity Tendon Layout E4E" sheet.

MARK	DATE	DESCRIPTIONS	BY	CH'D	CCO#
1	09/19/03	REVISE TRANSITION ZONE DIMENSION TO BE CONSISTENT WITH CONTINUITY TENDON DETAILS	MR	JC	2451

REVISIONS

CONTRACT CHANGE ORDER NO. 2451
SHEET 32 OF ___

ALL DIMENSIONS ARE IN MILLIMETERS UNLESS OTHERWISE SHOWN

SAN FRANCISCO OAKLAND BAY BRIDGE
EAST SPAN SEISMIC SAFETY PROJECT

SKYWAY STRUCTURES

CONTINUITY TENDON LAYOUT E9E

DESIGN OVERSIGHT 9/30/03
SIGN OFF DATE

DESIGN	J. Chan	H. Lund	
DETAILS	A. Lishansky	H. Lund	
QUANTITIES	K. Cormier	J. Chan	

PREPARED FOR THE STATE OF CALIFORNIA DEPARTMENT OF TRANSPORTATION

Sajid Abbas
PROJECT ENGINEER

BRIDGE NO. 34-0006
KILOMETER POST 13.9/14.3. 0.0/1.6

100 % PS&E

Caltrans now has a web site! To get to the web site, go to: http://www.dot.ca.gov

Caltrans Metric

DIST.	COUNTY	ROUTE	KILOMETER POST TOTAL PROJECT	SHEET NO.	TOTAL SHEETS
04	SF, Ala	80	13.9/14.3, 0.0/1.6	675R1	978

REGISTERED ENGINEER - CIVIL

6-4-01

PLANS APPROVAL DATE

The State of California or its officers or agents shall not be responsible for the accuracy or completeness of electronic copies of this plan sheet.

REGISTERED PROFESSIONAL ENGINEER Siu Fu John Chan No. C 39457 Exp. 12/31/05 CIVIL STATE OF CALIFORNIA

T.Y. LIN / MOFFATT & NICHOL
825 BATTERY STREET
SAN FRANCISCO, CA 94111

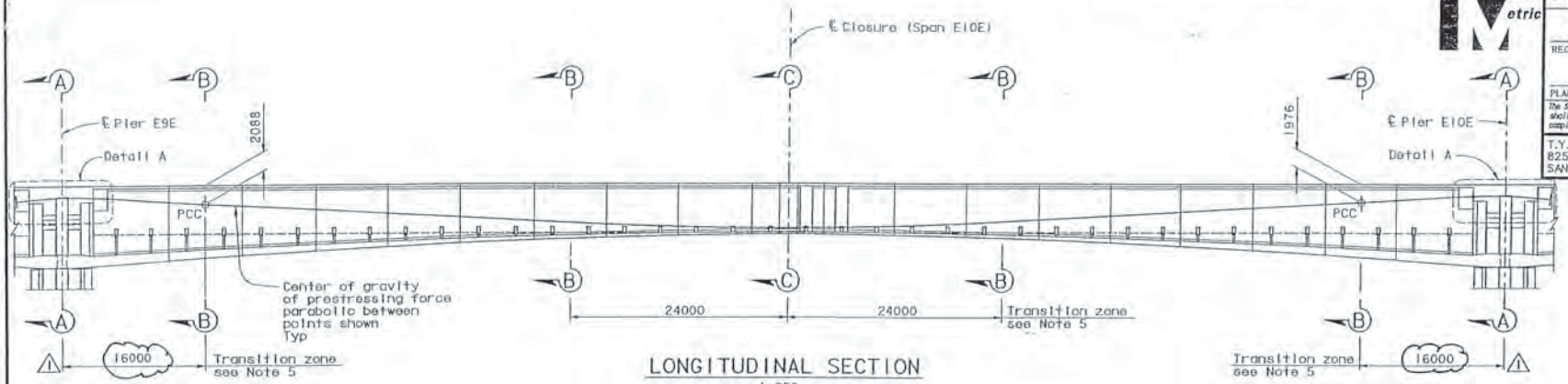

LONGITUDINAL SECTION
1:250

CONTINUITY TENDONS (*per box girder)

Tendon	No. of tendons* X No. of strands (15 Dia)	Jacking Force per Tendon kN
E10E CO 1	2x25	4875
E10E CO 2	2x25	4875
E10E CO 3	2x25	4875
E10E CO 4	2x25	4875
E10E CO 5	2x25	4875
E10E CO 6	2x25	4875
E10E CO 7	2x25	4875
E10E CO 8	2x25	4875

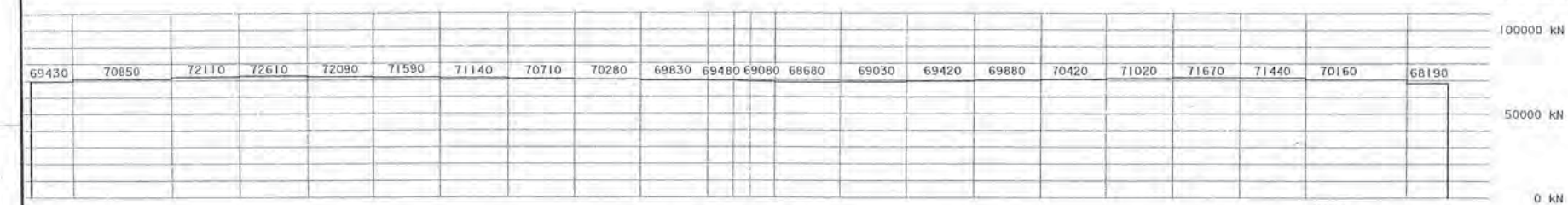

FORCE DIAGRAM (Total per box girder)

NOTES:

1. Anchorage symbols are as follows:
   - Jacking end
   - Dead end
2. The force diagram shows forces which only account for losses due to friction, anchor set and elastic shortening.
3. Key to tendon nomenclature:
   - E10E — Span No.
   - CO — Tendon type
   - 1 — Tendon mark
4. For Detail A, see "Continuity Tendon Details" sheets.
5. Continuity tendons change from double to single rows in the transition zone.
6. For Section A-A, Section B-B, Section C-C, see "Continuity Tendon Layout E4E" sheet.

MARK	DATE	DESCRIPTIONS	BY	CH' D	CCO#
1	09/19/03	REVISE TRANSITION ZONE DIMENSION TO BE CONSISTENT WITH CONTINUITY TENDON DETAILS	MR	JC	24-S1

REVISIONS

CONTRACT CHANGE ORDER NO. 24S1
SHEET ___ OF ___

ALL DIMENSIONS ARE IN MILLIMETERS UNLESS OTHERWISE SHOWN

DESIGN OVERSIGHT 9/30/03
SIGN OFF DATE

DESIGN	BY J. Chan	CHECKED	H. Lund
DETAILS	BY A. Lishansky	CHECKED	H. Lund
QUANTITIES	BY K. Corsler	CHECKED	J. Chan

PREPARED FOR THE STATE OF CALIFORNIA DEPARTMENT OF TRANSPORTATION

Sajid Abbas
PROJECT ENGINEER

BRIDGE NO. 34-0006
KILOMETER POST 13.9/14.3, 0.0/1.6

SAN FRANCISCO OAKLAND BAY BRIDGE
EAST SPAN SEISMIC SAFETY PROJECT

SKYWAY STRUCTURES

CONTINUITY TENDON LAYOUT E10E

100% PS&E

Caltrans now has a web site! To get to the web site, go to: http://www.dot.ca.gov

Caltrans Metric

DIST.	COUNTY	ROUTE	KILOMETER POST TOTAL PROJECT	SHEET NO.	TOTAL SHEETS
04	SF, Ala	80	13.9/14.3, 0.0/1.6	676R1	978

REGISTERED ENGINEER - CIVIL

6-4-01

PLANS APPROVAL DATE

The State of California or its officers or agents shall not be responsible for the accuracy or completeness of electronic copies of this plan sheet.

REGISTERED PROFESSIONAL ENGINEER Siu Eu John Chan No. C 39457 Exp. 12/31/05 CIVIL STATE OF CALIFORNIA

T.Y. LIN / MOFFATT & NICHOL
825 BATTERY STREET
SAN FRANCISCO, CA 94111

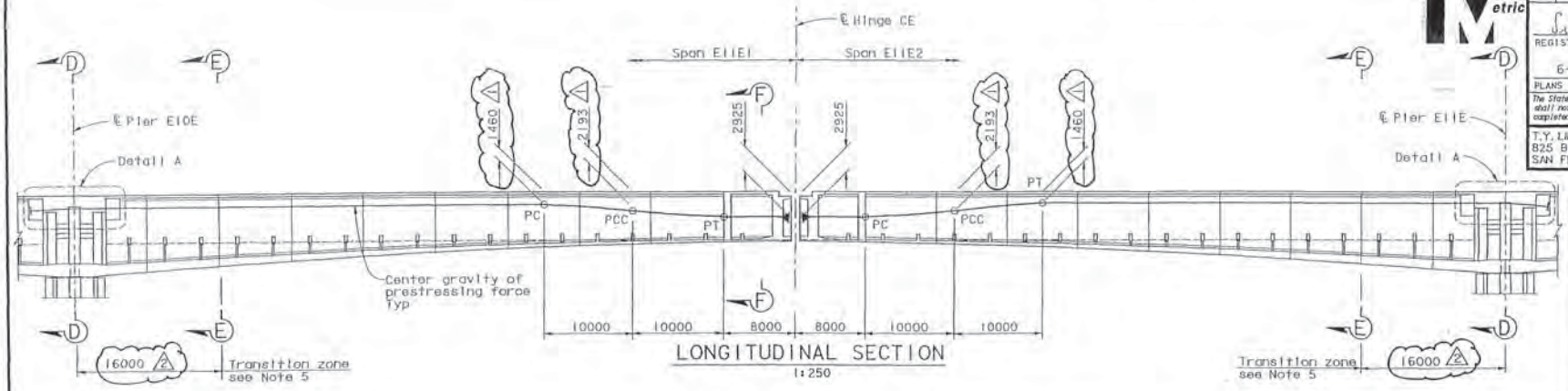

LONGITUDINAL SECTION
1:250

CONTINUITY TENDONS (*per box girder)

Tendon	No. of tendons × No. of strands (15 Dia)	Jacking Force per Tendon kN
E11E1 CO 1	2x25	4875
E11E1 CO 2	2x25	4875
E11E1 CO 3	2x25	4875
E11E1 CO 4	2x25	4875
E11E1 CO 5	2x25	4875
E11E1 CO 6	2x25	4875
E11E1 CO 7	2x25	4875
E11E1 CO 8	2x25	4875
E11E2 CO 1	2x25	4875
E11E2 CO 2	2x25	4875
E11E2 CO 3	2x25	4875
E11E2 CO 4	2x25	4875
E11E2 CO 5	2x25	4875
E11E2 CO 6	2x25	4875
E11E2 CO 7	2x25	4875
E11E2 CO 8	2x25	4875

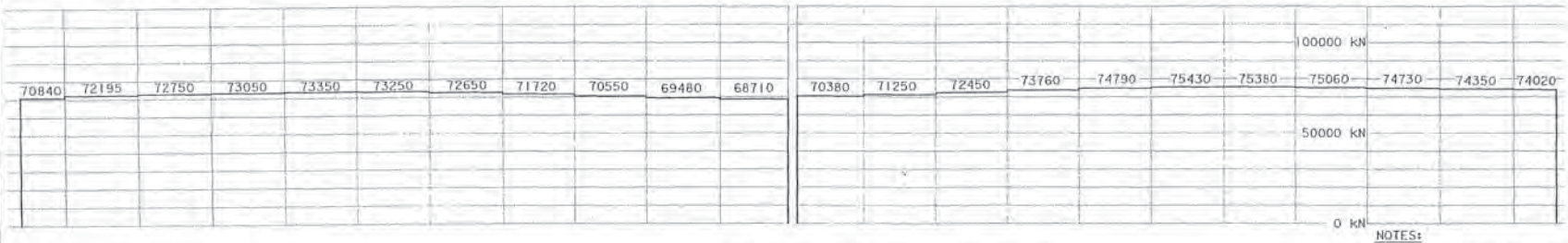

FORCE DIAGRAM (Total per box girder)

NOTES:

1. Anchorage symbols are as follows:
   - ⊢—— Jacking end
   - ▶—— Dead end
2. The force diagram shows forces which only account for losses due to friction, anchor set and elastic shortening.
3. Key to tendon nomenclature:
   - E11E — Span No.
   - CO — Tendon type
   - 1 — Tendon mark
4. For Detail A, see "Continuity Tendon Details" sheets.
5. Continuity tendons change from double to single rows in the transition zone.
6. For Section D-D, Section E-E and Section F-F, see "Continuity Tendon Layout E7E" sheet.
7. For anchorage details at hinge, see "Hinge B,C Details" sheet.

MARK	DATE	DESCRIPTIONS	BY	CH'D	CCO#
2	09/19/03	REVISE TRANSITION ZONE DIMENSION TO BE CONSISTENT WITH CONTUNUITY TENDON DETAILS	MR	JC	2451
1	09/19/03	REVISE PT AND PCC POINT	MR	JC	2451

REVISIONS

CONTRACT CHANGE ORDER NO. 2451
SHEET 341 OF ___

ALL DIMENSIONS ARE IN MILLIMETERS UNLESS OTHERWISE SHOWN

DESIGN OVERSIGHT — SIGN OFF DATE 10/2/03

DESIGN	BY J. Chan	CHECKED H. Lund	
DETAILS	BY A. Lishansky	CHECKED H. Lund	
QUANTITIES	BY K. Cormier	CHECKED J. Chan	

PREPARED FOR THE STATE OF CALIFORNIA DEPARTMENT OF TRANSPORTATION

Sajid Abbas
PROJECT ENGINEER

BRIDGE NO. 34-0006L/R
KILOMETER POST 13.9/14.3, 0.0/1.6

SAN FRANCISCO OAKLAND BAY BRIDGE
EAST SPAN SEISMIC SAFETY PROJECT

SKYWAY STRUCTURES

CONTINUITY TENDON LAYOUT E11E

100 % EB 3S

DIST.	COUNTY	ROUTE	KILOMETER POST TOTAL PROJECT	SHEET NO.	TOTAL SHEETS
04	SF, Ala	80	13.9/14.3, 0.0/1.6	677R1	978

REGISTERED ENGINEER - CIVIL

6-4-01

PLANS APPROVAL DATE

The State of California or its officers or agents shall not be responsible for the accuracy or completeness of electronic copies of this plan sheet.

REGISTERED PROFESSIONAL ENGINEER — Stu Fu John Chan — No. C 39457 — Exp. 12/31/05 — CIVIL — STATE OF CALIFORNIA

T.Y. LIN / MOFFATT & NICHOL
825 BATTERY STREET
SAN FRANCISCO, CA 94111

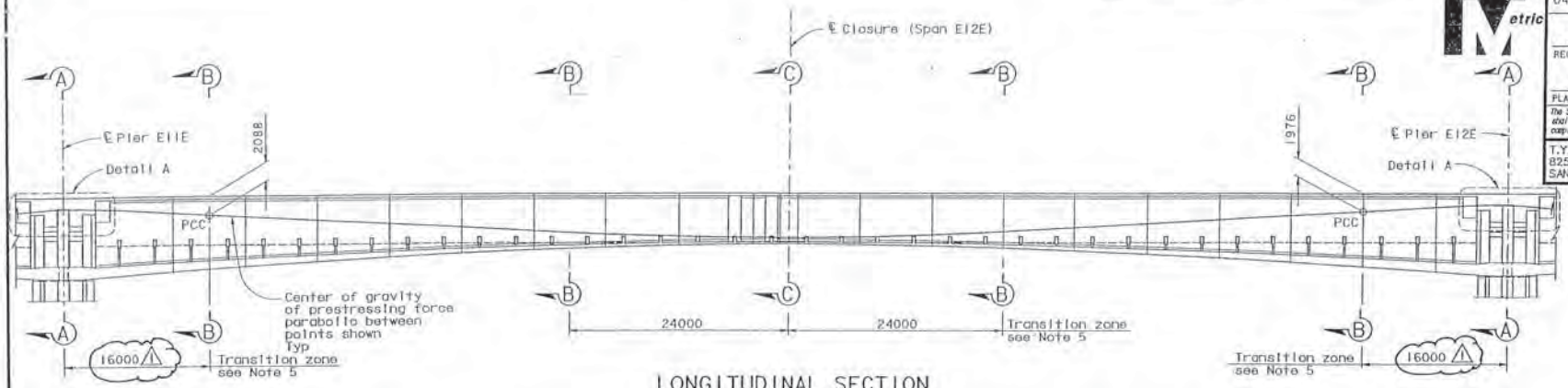

LONGITUDINAL SECTION
1:250

CONTINUITY TENDONS (*per box girder)

Tendon	No. of tendons* x No. of strands (15 Dia)	Jacking Force per Tendon kN
E12E CO 1	2x25	4875
E12E CO 2	2x25	4875
E12E CO 3	2x25	4875
E12E CO 4	2x25	4875
E12E CO 5	2x25	4875
E12E CO 6	2x25	4875
E12E CO 7	2x25	4875
E12E CO 8	2x25	4875

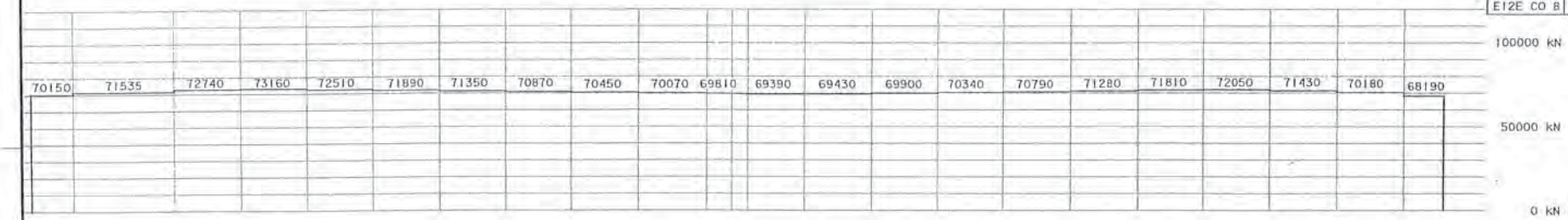

FORCE DIAGRAM (Total per box girder)

NOTES:

1. Anchorage symbols are as follows:
   - ⊢—— Jacking end
   - ▶—— Dead end
2. The force diagram shows forces which only account for losses due to friction, anchor set and elastic shortening.
3. Key to tendon nomenclature:
   - E12E — Span No.
   - CO — Tendon type
   - 1 — Tendon mark
4. For Detail A, see "Continuity Tendon Details" sheets.
5. Continuity tendons change from double to single rows in the transition zone.
6. For Section A-A, Section B-B, Section C-C, see "Continuity Tendon Layout E4E" sheet.

MARK	DATE	DESCRIPTIONS	BY	CH'D	CCO#
1	09/19/03	REVISE TRANSITION ZONE DIMENSION TO BE CONSISTENT WITH CONTUNUITY TENDON DETAILS	MR	JC	2451

REVISIONS

CONTRACT CHANGE ORDER NO. 2451
SHEET 36 OF ___

ALL DIMENSIONS ARE IN MILLIMETERS UNLESS OTHERWISE SHOWN

DESIGN OVERSIGHT 9/30/03
SIGN OFF DATE

DESIGN	BY J. Chan	CHECKED H. Lund	
DETAILS	BY A. Lishansky	CHECKED H. Lund	
QUANTITIES	BY K. Cormier	CHECKED J. Chan	

PREPARED FOR THE STATE OF CALIFORNIA DEPARTMENT OF TRANSPORTATION

Sajid Abbas
PROJECT ENGINEER

BRIDGE NO. 34-0006
KILOMETER POST 13.9/14.3, 0.0/1.6

SAN FRANCISCO OAKLAND BAY BRIDGE
EAST SPAN SEISMIC SAFETY PROJECT

SKYWAY STRUCTURES

CONTINUITY TENDON LAYOUT E12E

100 % PS&E

Caltrans now has a web site! To get to the web site, go to: http://www.dot.ca.gov

Caltrans Metric

DIST.	COUNTY	ROUTE	KILOMETER POST TOTAL PROJECT	SHEET NO.	TOTAL SHEETS
04	SF, Ala	80	13.9/14.3, 0.0/1.6	678R1	978

REGISTERED ENGINEER - CIVIL

6-4-01

PLANS APPROVAL DATE

REGISTERED PROFESSIONAL ENGINEER Shu Fu John Chan No. C 39457 Exp. 12/31/05 CIVIL STATE OF CALIFORNIA

The State of California or its officers or agents shall not be responsible for the accuracy or completeness of electronic copies of this plan sheet.

T.Y. LIN / MOFFATT & NICHOL
B25 BATTERY STREET
SAN FRANCISCO, CA 94111

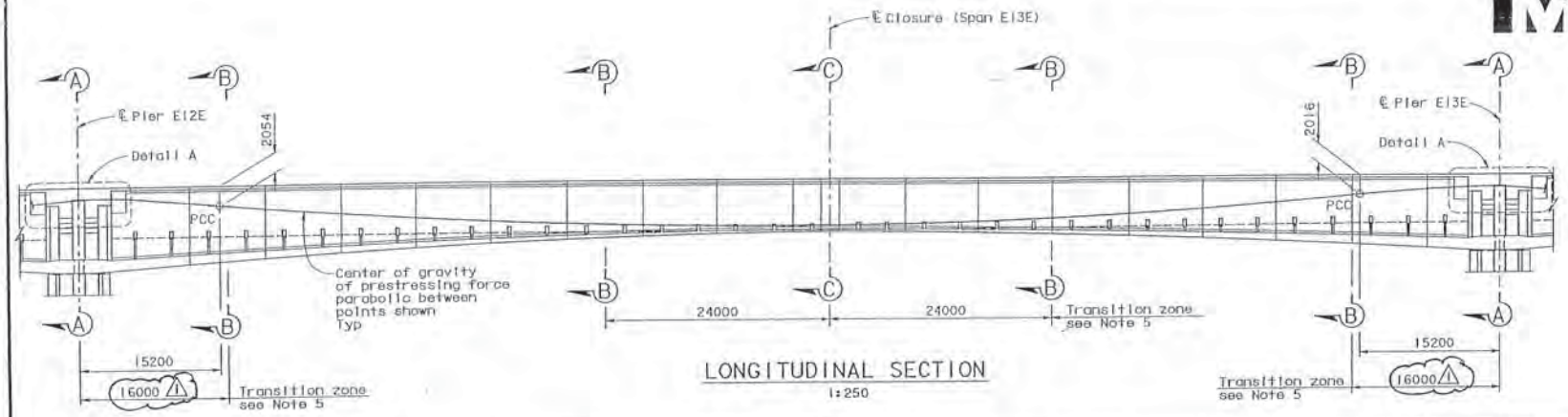

LONGITUDINAL SECTION
1:250

CONTINUITY TENDONS (*per box girder)

Tendon	No. of tendons* × No. of strands (15 Dia)	Jacking Force per Tendon kN
E13E CO 1	2x25	4875
E13E CO 2	2x25	4875
E13E CO 3	2x25	4875
E13E CO 4	2x25	4875
E13E CO 5	2x25	4875
E13E CO 6	2x25	4875
E13E CO 7	2x25	4875
E13E CO 8	2x25	4875

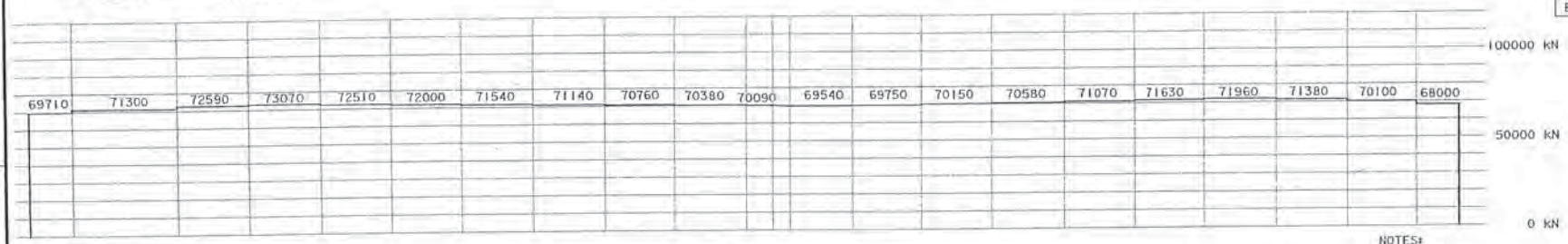

FORCE DIAGRAM (Total per box girder)

NOTES:

1. Anchorage symbols are as follows:
   - Jacking end
   - Dead end
2. The force diagram shows forces which only account for losses due to friction, anchor set and elastic shortening.
3. Key to tendon nomenclature:
   - E13E — Span No.
   - CO — Tendon type
   - 1 — Tendon mark
4. For Detail A, see "Continuity Tendon Details" sheets.
5. Continuity tendons change from double to single rows in the transition zone.
6. For Section A-A, Section B-B, Section C-C, see "Continuity Tendon Layout E4E" sheet.

MARK	DATE	DESCRIPTIONS	BY	CH'D	CCO#
1	09/15/03	REVISE TRANSITION ZONE DIMENSION TO BE CONSISTENT WITH CONTUNUITY TENDON DETAILS	MR	JC	2451

REVISIONS

CONTRACT CHANGE ORDER NO. 2451
SHEET 36 OF ___

ALL DIMENSIONS ARE IN MILLIMETERS UNLESS OTHERWISE SHOWN

DESIGN OVERSIGHT 9/30/03
SIGN OFF DATE

DESIGN	BY J. Chan	CHECKED H. Lund	
DETAILS	BY A. Liehansky	CHECKED H. Lund	
QUANTITIES	BY K. Cormier	CHECKED J. Chan	

PREPARED FOR THE STATE OF CALIFORNIA DEPARTMENT OF TRANSPORTATION

Sajid Abbas
PROJECT ENGINEER

BRIDGE NO. 34-0006
KILOMETER POST 13.9/14.3, 0.0/1.6

SAN FRANCISCO OAKLAND BAY BRIDGE
EAST SPAN SEISMIC SAFETY PROJECT

SKYWAY STRUCTURES

CONTINUITY TENDON LAYOUT E13E

REVISION DATES (PRELIMINARY STAGE ONLY) SHEET

100% PS&E

Caltrans now has a web site! To visit the web site go to: http://www.dot.ca.gov

Caltrans Metric

DIST	COUNTY	ROUTE	KILOMETER POST TOTAL PROJECT	SHEET NO.	TOTAL SHEETS
04	SF, Ala	80	13.9/14.3, 0.0/1.6	679R1	978

REGISTERED ENGINEER - CIVIL

6-4-01

PLANS APPROVAL DATE

REGISTERED PROFESSIONAL ENGINEER Sijo Fu John Chan No. C 39457 Exp. 12/31/05 CIVIL STATE OF CALIFORNIA

The State of California or its officers or agents shall not be responsible for the accuracy or completeness of electronic copies of this plan sheet.

T.Y. LIN / MOFFATT & NICHOL
825 BATTERY STREET
SAN FRANCISCO, CA 94111

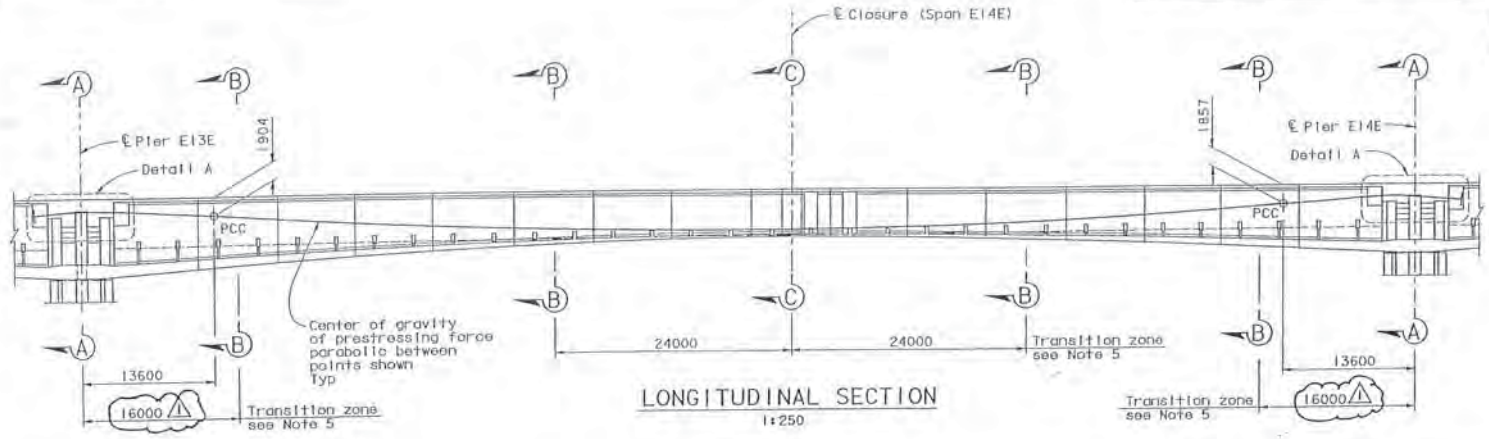

LONGITUDINAL SECTION
1:250

CONTINUITY TENDONS (*per box girder)

Tendon	No. of tendons* X No. of strands (15 Dia)	Jacking Force per Tendon kN
E14E CO 1	2x25	4875
E14E CO 2	2x25	4875
E14E CO 3	2x25	4875
E14E CO 4	2x25	4875
E14E CO 5	2x25	4875
E14E CO 6	2x25	4875
E14E CO 7	2x25	4875
E14E CO 8	2x25	4875

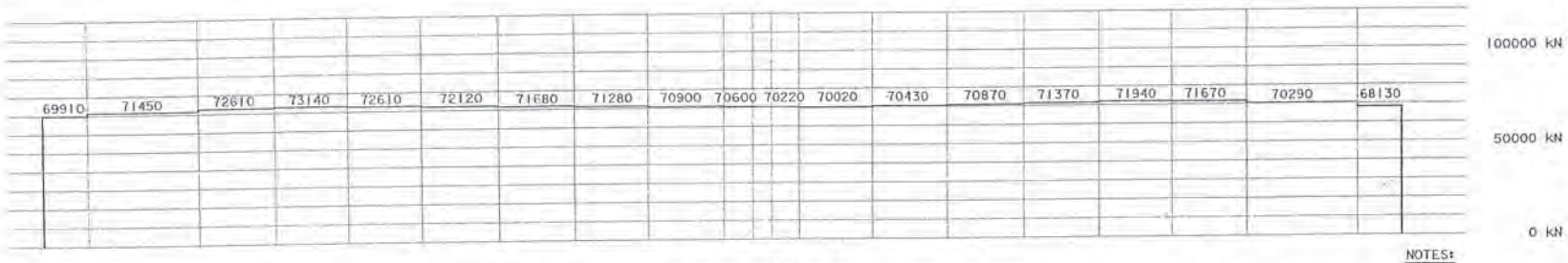

FORCE DIAGRAM (Total per box girder)

NOTES:

1. Anchorage symbols are as follows:
   - |—— Jacking end
   - ▶—— Dead end
2. The force diagram shows forces which only account for losses due to friction, anchor set and elastic shortening.
3. Key to tendon nomenclature:
   - E14E — Span No.
   - CO — Tendon type
   - 1 — Tendon mark
4. For Detail A, see "Continuity Tendon Details" sheets.
5. Continuity tendons change from double to single rows in the transition zone.
6. For Section A-A, Section B-B, Section C-C, see "Continuity Tendon Layout E4E" sheet.

MARK	DATE	DESCRIPTIONS	BY	CH'D	CCO#
1	03/19/03	REVISE TRANSITION ZONE DIMENSION TO BE CONSISTENT WITH CONTUNUITY TENDON DETAILS	MR	JC	2451

REVISIONS

CONTRACT CHANGE ORDER NO. 2451
SHEET 32 OF ___

ALL DIMENSIONS ARE IN MILLIMETERS UNLESS OTHERWISE SHOWN

DESIGN CONSULTANT 9/30/03
SIGN OFF DATE

DESIGN	BY J. Chan	CHECKED H. Lund	
DETAILS	BY A. Lishansky	CHECKED H. Lund	
QUANTITIES	BY K. Cornier	CHECKED J. Chan	

PREPARED FOR THE STATE OF CALIFORNIA DEPARTMENT OF TRANSPORTATION

Sajid Abbas
PROJECT ENGINEER

BRIDGE NO. 34-0006
KILOMETER POST 13.9/14.3, 0.0/1.6

SAN FRANCISCO OAKLAND BAY BRIDGE
EAST SPAN SEISMIC SAFETY PROJECT

SKYWAY STRUCTURES

CONTINUITY TENDON LAYOUT E14E

100 % PS&E

Caltrans now has a web site! To get to the web site, go to: http://www.dot.ca.gov

Caltrans Metric

DIST.	COUNTY	ROUTE	KILOMETER POST TOTAL PROJECT	SHEET NO.	TOTAL SHEETS
04	SF, Ala	80	13.9/14.3, 0.0/1.6	680R1	978

REGISTERED ENGINEER - CIVIL

6-4-01

PLANS APPROVAL DATE

The State of California or its officers or agents shall not be responsible for the accuracy or completeness of electronic copies of this plan sheet.

REGISTERED PROFESSIONAL ENGINEER — Sifu Fu John Chan — No. E 39457 — Exp. 12/31/05 — CIVIL — STATE OF CALIFORNIA

T.Y. LIN / MOFFATT & NICHOL
825 BATTERY STREET
SAN FRANCISCO, CA 94111

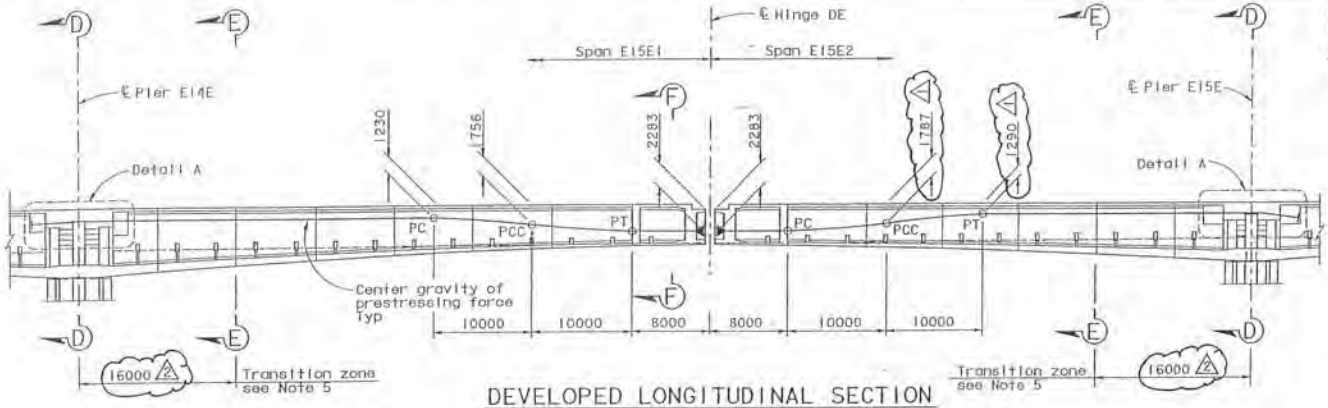

DEVELOPED LONGITUDINAL SECTION

1:250

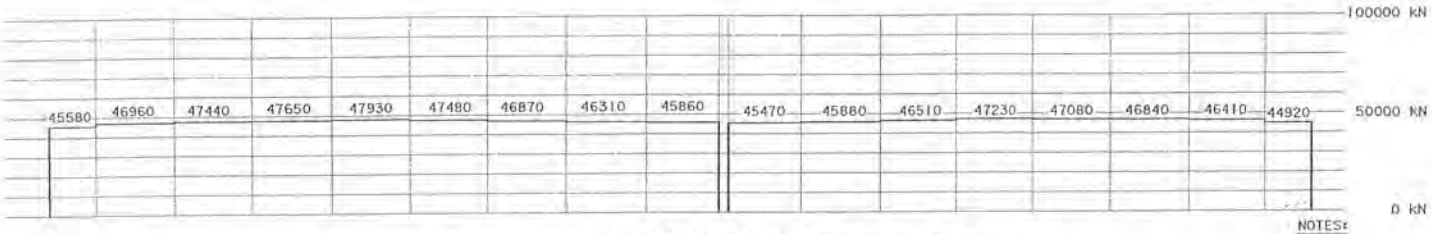

FORCE DIAGRAM (Total per box girder)

CONTINUITY TENDONS (*per box girder)

Tendon	No. of tendons* x No. of strands (15 Dia)	Jacking Force per Tendon kN
E15E1 CO 1	2x22	4290
E15E1 CO 2	2x22	4290
E15E1 CO 3	2x22	4290
E15E1 CO 4	2x22	4290
E15E1 CO 5	2x22	4290
E15E1 CO 6	2x22	4290
E15E2 CO 1	2x22	4290
E15E2 CO 2	2x22	4290
E15E2 CO 3	2x22	4290
E15E2 CO 4	2x22	4290
E15E2 CO 5	2x22	4290
E15E2 CO 6	2x22	4290

NOTES:

1. Anchorage symbols are as follows:
   - ├── Jacking end
   - ►── Dead end
2. The force diagram shows forces which only account for losses due to friction, anchor set and elastic shortening.
3. Key to tendon nomenclature:
   - E15E1 — Span No.
   - CO — Tendon type
   - 1 — Tendon mark
4. For Detail A, see "Continuity Tendon Details" sheets.
5. Continuity tendons change from double to single rows in the transition zone.
6. For Section D-D, Section E-E and Section F-F, see "Continuity Tendon Layout E7E" sheet.
7. For anchorage details at hinge, see "Hinge D Details" sheets.
8. Longitudinal dimensions given are measured along "E" Line.

MARK	DATE	DESCRIPTIONS	BY	CH'D	CCO#
2	09/19/03	REVISE TRANSITION ZONE DIMENSION TO BE CONSISTENT WITH CONTUNUITY TENDON DETAILS	MR	JC	2451
1	09/19/03	REVISE PT AND PCC POINT	MR	JC	2451

REVISIONS

CONTRACT CHANGE ORDER NO. 2451
SHEET ___ OF ___

ALL DIMENSIONS ARE IN MILLIMETERS UNLESS OTHERWISE SHOWN

DESIGN VERSION 9/30/03
SIGN OFF DATE

DESIGN	BY J. Chan	CHECKED N. Lund	
DETAILS	BY A. Lishansky	CHECKED N. Lund	
QUANTITIES	BY K. Cornier	CHECKED J. Chan	

PREPARED FOR THE STATE OF CALIFORNIA DEPARTMENT OF TRANSPORTATION

Sajid Abbas
PROJECT ENGINEER

BRIDGE NO. 34-0006L/R
KILOMETER POST 13.9/14.3, 0.0/1.6

SAN FRANCISCO OAKLAND BAY BRIDGE
EAST SPAN SEISMIC SAFETY PROJECT

SKYWAY STRUCTURES

CONTINUITY TENDON LAYOUT E15E

REVISION DATES (PRELIMINARY STAGE ONLY) SHEET OF

100% PLANS

DIST.	COUNTY	ROUTE	KILOMETER POST TOTAL PROJECT	SHEET NO.	TOTAL SHEETS
04	SF, Ala	80	13.9/14.3, 0.0/1.6	681R1	978

REGISTERED ENGINEER - CIVIL

6-4-01

PLANS APPROVAL DATE

The State of California or its officers or agents shall not be responsible for the accuracy or completeness of electronic copies of this plan sheet.

REGISTERED PROFESSIONAL ENGINEER Siu Eu John Chan No. C 39457 Exp. 12/31/05 CIVIL STATE OF CALIFORNIA

T.Y. LIN / MOFFATT & NICHOL
825 BATTERY STREET
SAN FRANCISCO, CA 94111

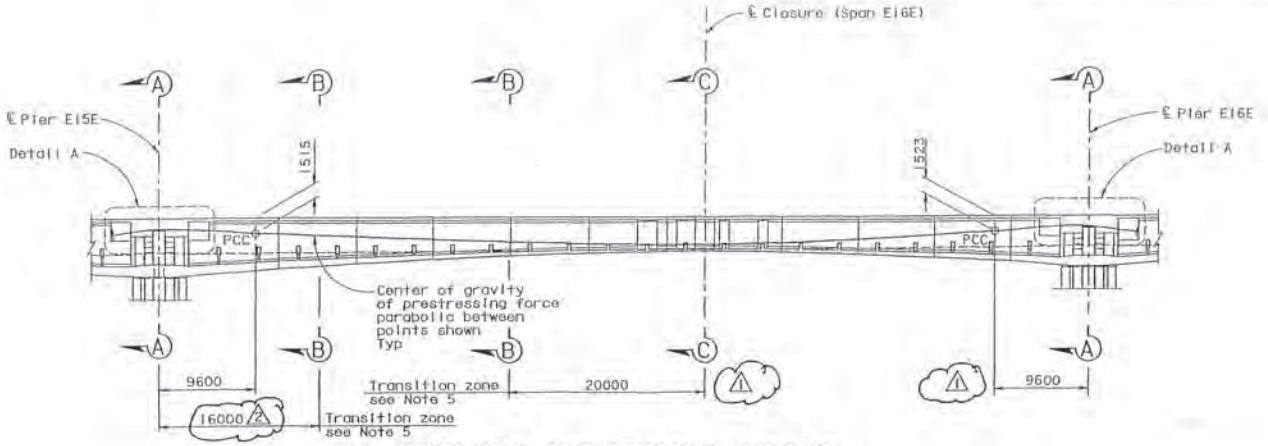

DEVELOPED LONGITUDINAL SECTION
1:250

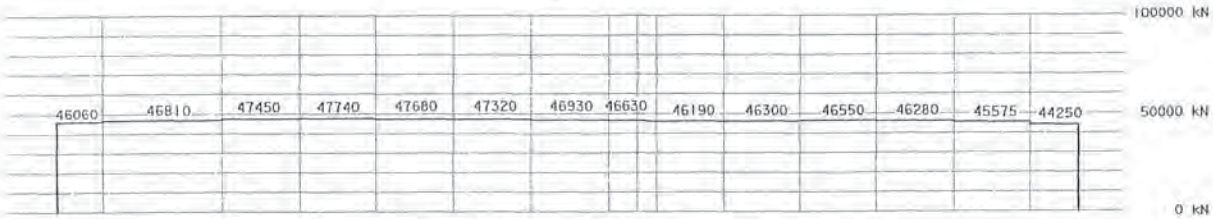

FORCE DIAGRAM (Total per box girder)

CONTINUITY TENDONS (*per box girder)

Tendon	No. of tendons* x No. of strands (15 Dia)	Jacking Force per Tendon kN
E16E CO 1	2x22	4290
E16E CO 2	2x22	4290
E16E CO 3	2x22	4290
E16E CO 4	2x22	4290
E16E CO 5	2x22	4290
E16E CO 6	2x22	4290

MARK	DATE	DESCRIPTIONS	BY	CH'D	CCO#
2	09/19/03	REVISE TRANSITION ZONE DIMENSION AT PIER E15E TO BE CONSISTENT WITH CONTINUITY TENDON DETAILS	MR	JC	2451
1	09/19/03	DELETE TRANSITION ZONE AT PIER E16E	MR	JC	2451

REVISIONS

CONTRACT CHANGE ORDER NO. 2451
SHEET 37 OF ___

NOTES:

1. Anchorage symbols are as follows:
   - ├── Jacking end
   - ►── Dead end
2. The force diagram shows forces which only account for losses due to friction, anchor set and elastic shortening.
3. Key to tendon nomenclature:
   - E16E — Span No.
   - CO — Tendon type
   - 1 — Tendon mark
4. For Detail A, see "Continuity Tendon Details" sheets.
5. Continuity tendons change from double to single rows in the transition zone.
6. For Section A-A, Section B-B and Section C-C, see "Continuity Tendon Layout E4E" sheet.
7. Longitudinal dimensions given are measured along "E" Line.

ALL DIMENSIONS ARE IN MILLIMETERS UNLESS OTHERWISE SHOWN

SAN FRANCISCO OAKLAND BAY BRIDGE
EAST SPAN SEISMIC SAFETY PROJECT

SKYWAY STRUCTURES

CONTINUITY TENDON LAYOUT E16E

DESIGN OVERSIGHT 9/30/03
SIGN OFF DATE

DESIGN	BY J. Chan	CHECKED K. Lund
DETAILS	BY A. Liskansky	CHECKED H. Lund
QUANTITIES	BY K. Corster	CHECKED J. Chan

PREPARED FOR THE STATE OF CALIFORNIA DEPARTMENT OF TRANSPORTATION

Sajid Abbas
PROJECT ENGINEER

BRIDGE NO. 34-0006L/R
KILOMETER POST 13.9/14.3, 0.0/1.6

CU 04

DISREGARD PRINTS BEARING EARLIER REVISION DATES

REVISION DATES (PRELIMINARY STAGE ONLY)

SHEET 249 OF

100% PSAE

DIST.	COUNTY	ROUTE	KILOMETER POST TOTAL PROJECT	SHEET NO.	TOTAL SHEETS
04	SF, Ala	80	13.9/14.3, 0.0/1.6	682R1	978

Caltrans Metric

REGISTERED ENGINEER - CIVIL

6-4-01

PLANS APPROVAL DATE

The State of California or its officers or agents shall not be responsible for the accuracy or completeness of electronic copies of this plan sheet.

REGISTERED PROFESSIONAL ENGINEER Siu Fu John Chan No. C 39457 Exp. 12/31/05 CIVIL STATE OF CALIFORNIA

T.Y. LIN / MOFFATT & NICHOL
825 BATTERY STREET
SAN FRANCISCO, CA 94111

Caltrans now has a web site! To get to the web site, go to: http://www.dot.ca.gov

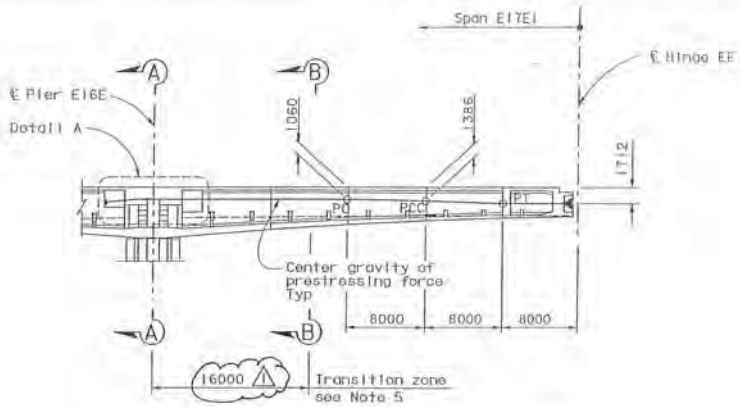

DEVELOPED LONGITUDINAL SECTION
1:250

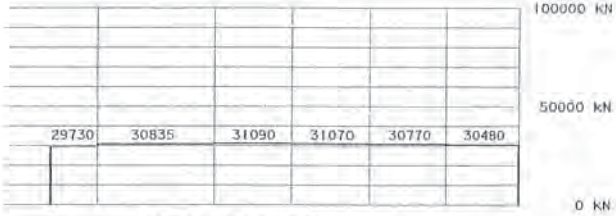

FORCE DIAGRAM (Total per box girder)

CONTINUITY TENDONS (*per box girder)

Tendon	No. of tendons* x No. of strands (15 Dia)	Jacking Force per Tendon kN
E17E1 CO 1	2x22	4290
E17E1 CO 2	2x22	4290
E17E1 CO 3	2x22	4290
E17E1 CO 4	2x22	4290

MARK	DATE	DESCRIPTIONS	BY	CH'D	CCO#
2	09/15/03	DELETE DIMENSION	MR	JC	2451
1	09/19/03	REVISE TRANSITION ZONE DIMENSION TO BE CONSISTENT WITH CONTINUITY TENDON DETAILS	MR	JC	2451

REVISIONS

CONTRACT CHANGE ORDER NO. 2451
SHEET 40 OF ____

NOTES:

1. Anchorage symbols are as follows:
   - |—— Jacking end
   - ▶—— Dead end
2. The force diagram shows forces which only account for losses due to friction, anchor set and elastic shortening.
3. Key to tendon nomenclature:
   - E17E1 — Span No.
   - CO — Tendon type
   - 1 — Tendon mark
4. For Detail A, see "Continuity Tendon Details" sheets.
5. Continuity tendons change from double to single rows in the transition zone.
6. For anchorage details at hinge, see "Hinge E Details" sheets.
7. Longitudinal dimensions given are measured along "E" Line.

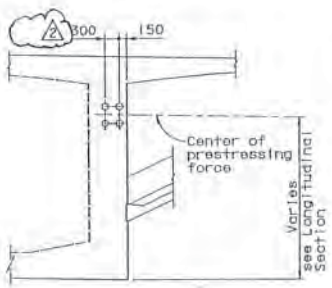

SECTION A-A
1:50

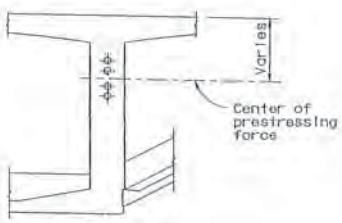

SECTION B-B
1:50

ALL DIMENSIONS ARE IN MILLIMETERS UNLESS OTHERWISE SHOWN

DESIGN OVERSIGHT	DESIGN	BY J. Chan	CHECKED H. Lund	PREPARED FOR THE STATE OF CALIFORNIA DEPARTMENT OF TRANSPORTATION	Sajid Abbas PROJECT ENGINEER	BRIDGE NO. 34-0006L/R
9/30/03 SIGN OFF DATE	DETAILS	BY D. Leung	CHECKED H. Lund			KILOMETER POST 13.9/14.3, 0.0/1.6
	QUANTITIES	BY K. Cornier	CHECKED J. Chan			

SAN FRANCISCO OAKLAND BAY BRIDGE
EAST SPAN SEISMIC SAFETY PROJECT

SKYWAY STRUCTURES

CONTINUITY TENDON LAYOUT E17E

100 % PS&E

DIST.	COUNTY	ROUTE	KILOMETER POST TOTAL PROJECT	SHEET NO.	TOTAL SHEETS
04	SF, Ala	80	13.9/14.3, 0.0/1.6	695R1	978

REGISTERED ENGINEER - CIVIL

6-4-01

PLANS APPROVAL DATE

REGISTERED PROFESSIONAL ENGINEER Charles Redfield No. C 27605 Exp. 12/31/05 CIVIL STATE OF CALIFORNIA

The State of California or its officers or agents shall not be responsible for the accuracy or completeness of electronic copies of this plan sheet.

T.Y. LIN / MOFFATT & NICHOL
825 BATTERY STREET
SAN FRANCISCO, CA 94111

Caltrans now has a web site! To get to the web site, go to: http://www.dot.ca.gov

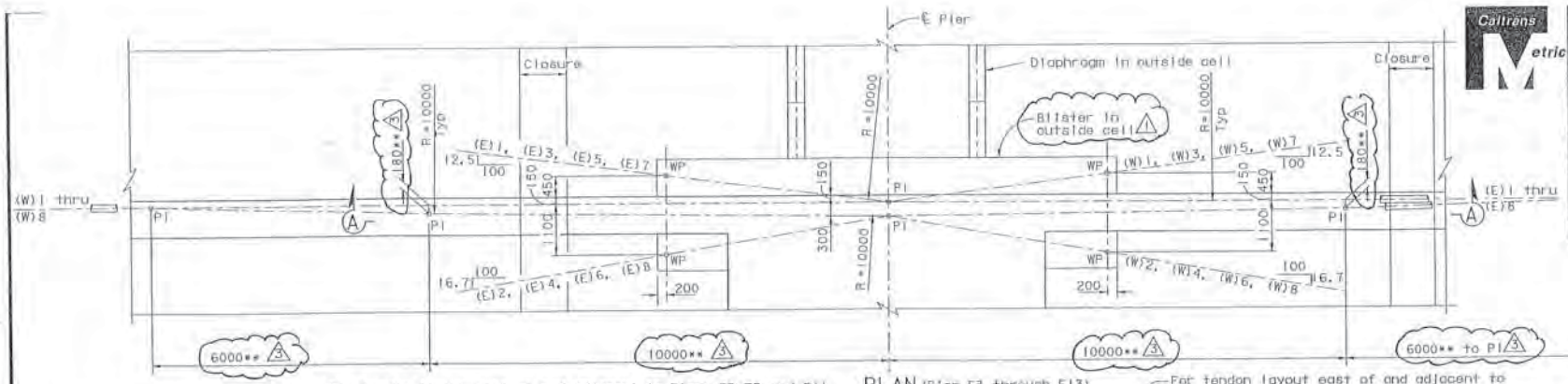

PLAN (Pier E3 through E13)
1:50

For tendon layout west of and adjacent to Piers E3, E7 and E11 see "Continuity Tendon Layout No. E3W, E7W, E11W, E3E, E7E and E11E" sheets

For tendon layout east of and adjacent to Piers E6 and E10, see "Continuity Tendon Layout No. E7W, E11W, E7E and E11E" sheets

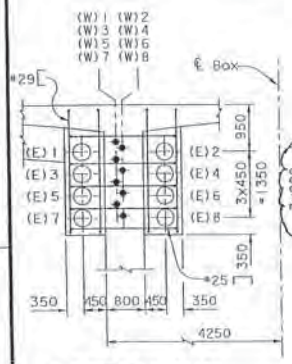

SECTION B-B
1:50

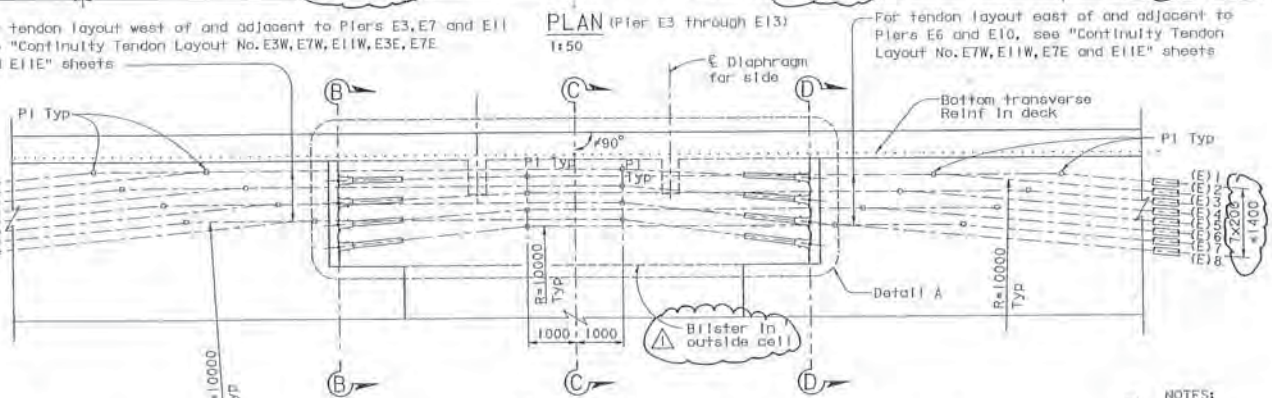

SECTION A-A
1:50

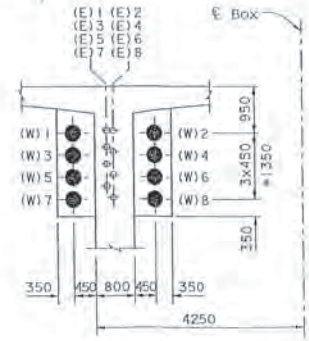

SECTION D-D
1:50

NOTES:

1. Designations E and W are given here for direction clarification at tendon junction. For proper tendon designation see "Continuity Tendon Layout" sheets.
2. Continuity tendons coming from the span East of the pier are designated by (E) and shown by the symbol ✚.
3. Continuity tendons coming from the span West of the pier are designated by (W) and shown by the symbol ✚.

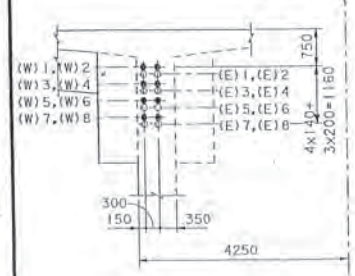

SECTION C-C
1:50

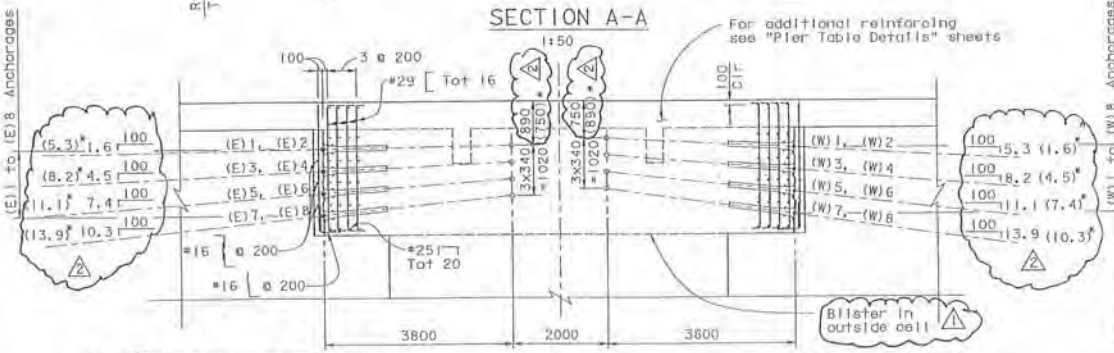

DETAIL A
1:50

* Use dimensions in brackets for Piers E3E, E3W, E7E, E7W, E11E, and E11W.

ALL DIMENSIONS ARE IN MILLIMETERS UNLESS OTHERWISE SHOWN

MARK	DATE	DESCRIPTIONS	BY	CH'D	CCO#
3	09/19/03	ADD NOTE	MR	JC	2451
2	09/19/03	SWITCH TENDON PROFILE IN SPANS WITH HINGES	MR	JC	2451
1	09/19/03	SHOW BLISTER OUTLINE IN OUTSIDE CELL	MR	JC	34

REVISIONS

CONTRACT CHANGE ORDER NO. 2451
SHEET 41 OF

SAN FRANCISCO OAKLAND BAY BRIDGE
EAST SPAN SEISMIC SAFETY PROJECT

SKYWAY STRUCTURES

CONTINUITY TENDON DETAILS NO. 1

DESIGN OVERSIGHT 10/2/03

SIGN OFF DATE

DESIGN	C. Redfield	CHECKED	N. Lamont
DETAILS	D. Leung	CHECKED	N. Lamont
QUANTITIES	K. Cossler	CHECKED	J. Chan

PREPARED FOR THE STATE OF CALIFORNIA DEPARTMENT OF TRANSPORTATION

Sajid Abbas
PROJECT ENGINEER

CU 04
EA 012021

BRIDGE NO. 34-0006L/R
KILOMETER POST 13.9/14.3, 0.0/1.6

DISREGARD PRINTS BEARING EARLIER REVISION DATES

REVISION DATES (PRELIMINARY STAGE ONLY)

SHEET 263 OF

ORIGINAL SCALE IN MILLIMETERS FOR REDUCED PLANS

Rev. Date: 11-15-88

100 % PS&E

DIST.	COUNTY	ROUTE	KILOMETER POST TOTAL PROJECT	SHEET NO.	TOTAL SHEETS
04	SF, Ala	80	13.9/14.3, 0.0/1.6	696R1	978

REGISTERED ENGINEER - CIVIL

6-4-01

PLANS APPROVAL DATE

The State of California or its officers or agents shall not be responsible for the accuracy or completeness of electronic copies of this plan sheet.

REGISTERED PROFESSIONAL ENGINEER Charles Redfield No. C 27605 Exp. 12/31/05 CIVIL STATE OF CALIFORNIA

T.Y. LIN / MOFFATT & NICHOL
825 BATTERY STREET
SAN FRANCISCO, CA 94111

Caltrans now has a web site! To get to the web site, go to http://www.dot.ca.gov

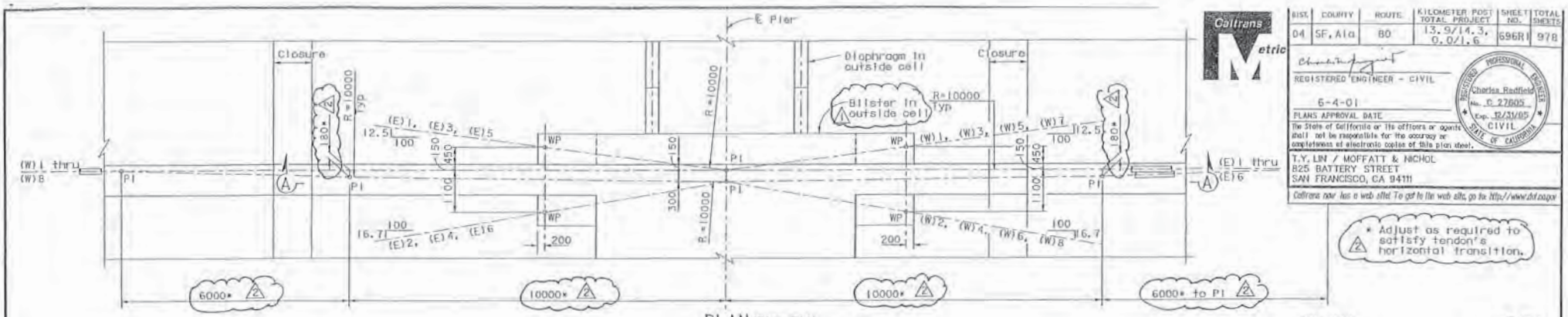

PLAN (Pier E14)
1:50

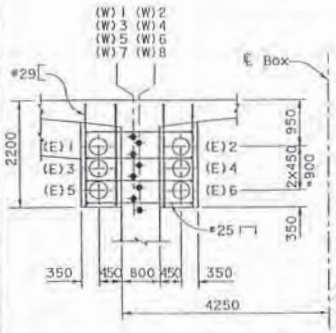

SECTION B-B
1:50

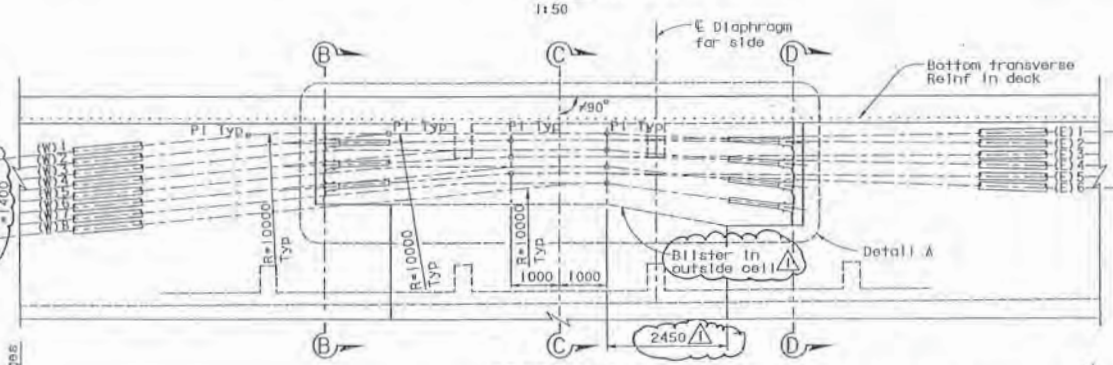

SECTION A-A
1:50

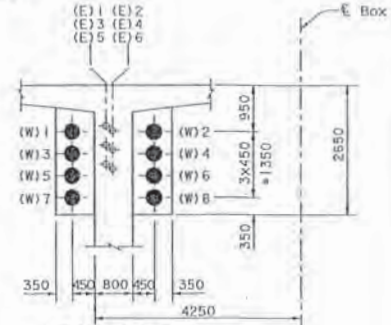

SECTION D-D
1:50

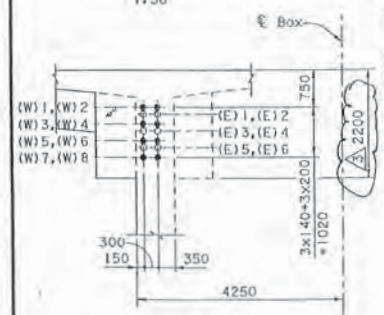

SECTION C-C
1:50

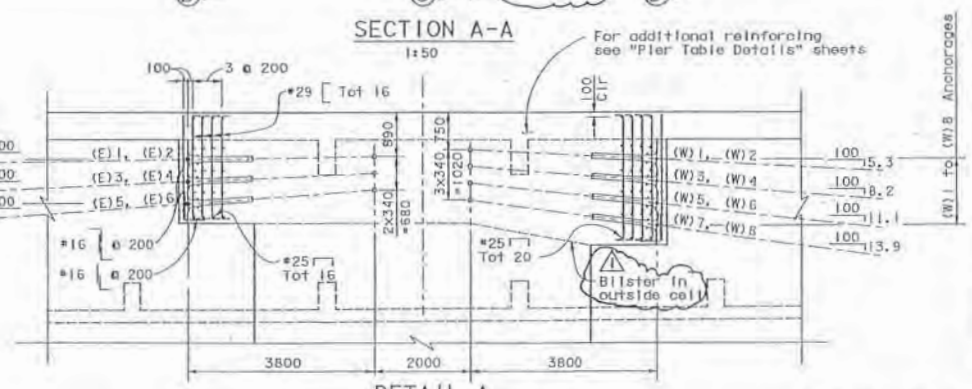

DETAIL A
1:50

NOTES:

1. Designations E and W are given here for direction clarification at tendon junction. For proper tendon designation see "Continuity Tendon Layout" sheets.
2. Continuity tendons coming from the span East of the pier are designated by (E) and shown by the symbol ✦.
3. Continuity tendons coming from the span West of the pier are designated by (W) and shown by the symbol ✦.

MARK	DATE	DESCRIPTIONS	BY	CH'D	DCCO#
3	05/19/03	REVISE DIMENSION	MR	JC	24S1
2	05/19/03	ADD NOTE	MR	JC	24S1
1	05/19/03	SHOW BLISTER OUTLINE IN OUTSIDE CELL	MR	JC	34

REVISIONS

CONTRACT CHANGE ORDER NO. 24S1
SHEET 42 OF ___

100 % PS&E

ALL DIMENSIONS ARE IN MILLIMETERS UNLESS OTHERWISE SHOWN

DESIGN OVERSIGHT 9/30/03
SIGN OFF DATE

DESIGN	BY C. Redfield	CHECKED	M. Lamont
DETAILS	BY D. Leung	CHECKED	M. Lamont
QUANTITIES	BY K. Cormier	CHECKED	J. Chan

PREPARED FOR THE STATE OF CALIFORNIA DEPARTMENT OF TRANSPORTATION

Salid Abbas
PROJECT ENGINEER

BRIDGE NO. 34-0006L/R
KILOMETER POST 13.9/14.3, 0.0/1.6

SAN FRANCISCO OAKLAND BAY BRIDGE
EAST SPAN SEISMIC SAFETY PROJECT

SKYWAY STRUCTURES

CONTINUITY TENDON DETAILS NO. 2

CU 04
EA 012021

DISREGARD PRINTS BEARING EARLIER REVISION DATES

REVISION DATES (PRELIMINARY STAGE ONLY)

SHEET 264

ORIGINAL SCALE IN MILLIMETERS FOR REDUCED PLANS

Rev. Date: 5-15-00

DIST.	COUNTY	ROUTE	KILOMETER POST TOTAL PROJECT	SHEET NO.	TOTAL SHEETS
04	SF, Ala	80	13.9/14.3, 0.0/1.6	697R1	978

REGISTERED ENGINEER - CIVIL

6-4-01

PLANS APPROVAL DATE

REGISTERED PROFESSIONAL ENGINEER Charles Redfield No. C 27805 Exp. 12/31/05 CIVIL STATE OF CALIFORNIA

The State of California or its officers or agents shall not be responsible for the accuracy or completeness of electronic copies of this plan sheet.

T.Y. LIN / MOFFATT & NICHOL
825 BATTERY STREET
SAN FRANCISCO, CA 94111

Caltrans now has a web site! To get to the web site, go to http://www.dot.ca.gov

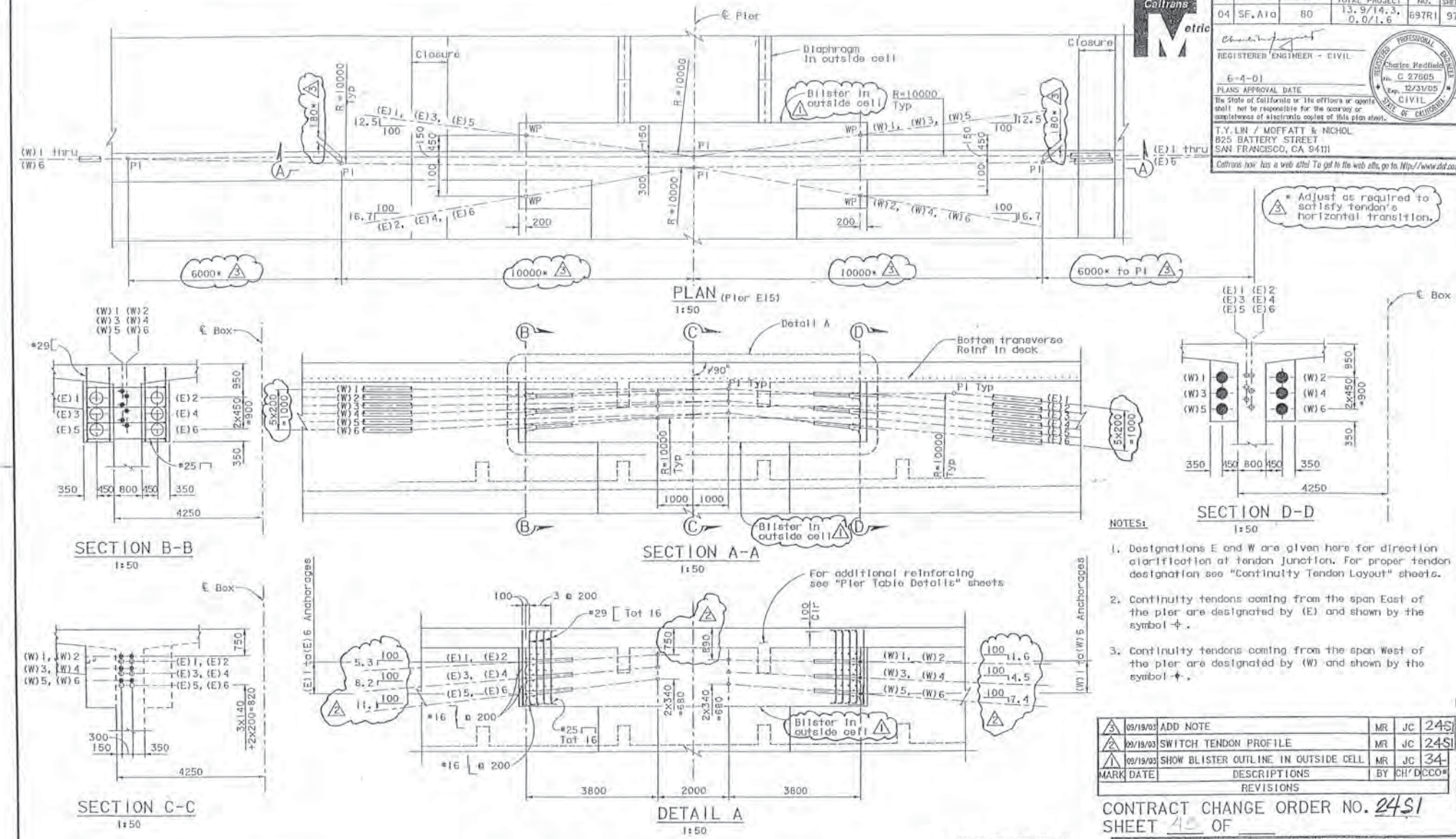

NOTES:

1. Designations E and W are given here for direction clarification at tendon junction. For proper tendon designation see "Continuity Tendon Layout" sheets.
2. Continuity tendons coming from the span East of the pier are designated by (E) and shown by the symbol ⊕.
3. Continuity tendons coming from the span West of the pier are designated by (W) and shown by the symbol ⊕.

MARK	DATE	DESCRIPTIONS	BY	CH'D	CCO#
		REVISIONS			
3	09/19/03	ADD NOTE	MR	JC	24S
2	09/19/03	SWITCH TENDON PROFILE	MR	JC	24S1
1	09/19/03	SHOW BLISTER OUTLINE IN OUTSIDE CELL	MR	JC	34

CONTRACT CHANGE ORDER NO. 24S1
SHEET 48 OF

ALL DIMENSIONS ARE IN MILLIMETERS UNLESS OTHERWISE SHOWN

DESIGN DIVISION 9/30/03
SIGN OFF DATE

DESIGN	C. Radfield	M. Lamont	
DETAILS	E. Zharkov	M. Lamont	
QUANTITIES	K. Cormier	J. Chan	

PREPARED FOR THE STATE OF CALIFORNIA DEPARTMENT OF TRANSPORTATION

Sajid Abbas
PROJECT ENGINEER

BRIDGE NO. 34-0006L/R
KILOMETER POST 13.9/14.3, 0.0/1.6

SAN FRANCISCO OAKLAND BAY BRIDGE
EAST SPAN SEISMIC SAFETY PROJECT

SKYWAY STRUCTURES

CONTINUITY TENDON DETAILS NO. 3

CU 04
EA 012021

ORIGINAL SCALE IN MILLIMETERS FOR REDUCED PLANS

DISREGARD PRINTS BEARING EARLIER REVISION DATES

REVISION DATES (PRELIMINARY STAGE ONLY)

SHEET 265

Rev. Date: 5-10-00

DIST.	COUNTY	ROUTE	KILOMETER POST TOTAL PROJECT	SHEET NO.	TOTAL SHEETS
04	SF, Ala	80	13.9/14.3, 0.0/1.6	698R1	978

REGISTERED ENGINEER - CIVIL

6-4-01

PLANS APPROVAL DATE

Charles Redfield No. C 27605 Exp. 12/31/05 CIVIL STATE OF CALIFORNIA

The State of California or its officers or agents shall not be responsible for the accuracy or completeness of electronic copies of this plan sheet.

T.Y. LIN / MOFFATT & NICHOL
825 BATTERY STREET
SAN FRANCISCO, CA 94111

Caltrans now has a web site! To get to the web site, go to: http://www.dot.ca.gov

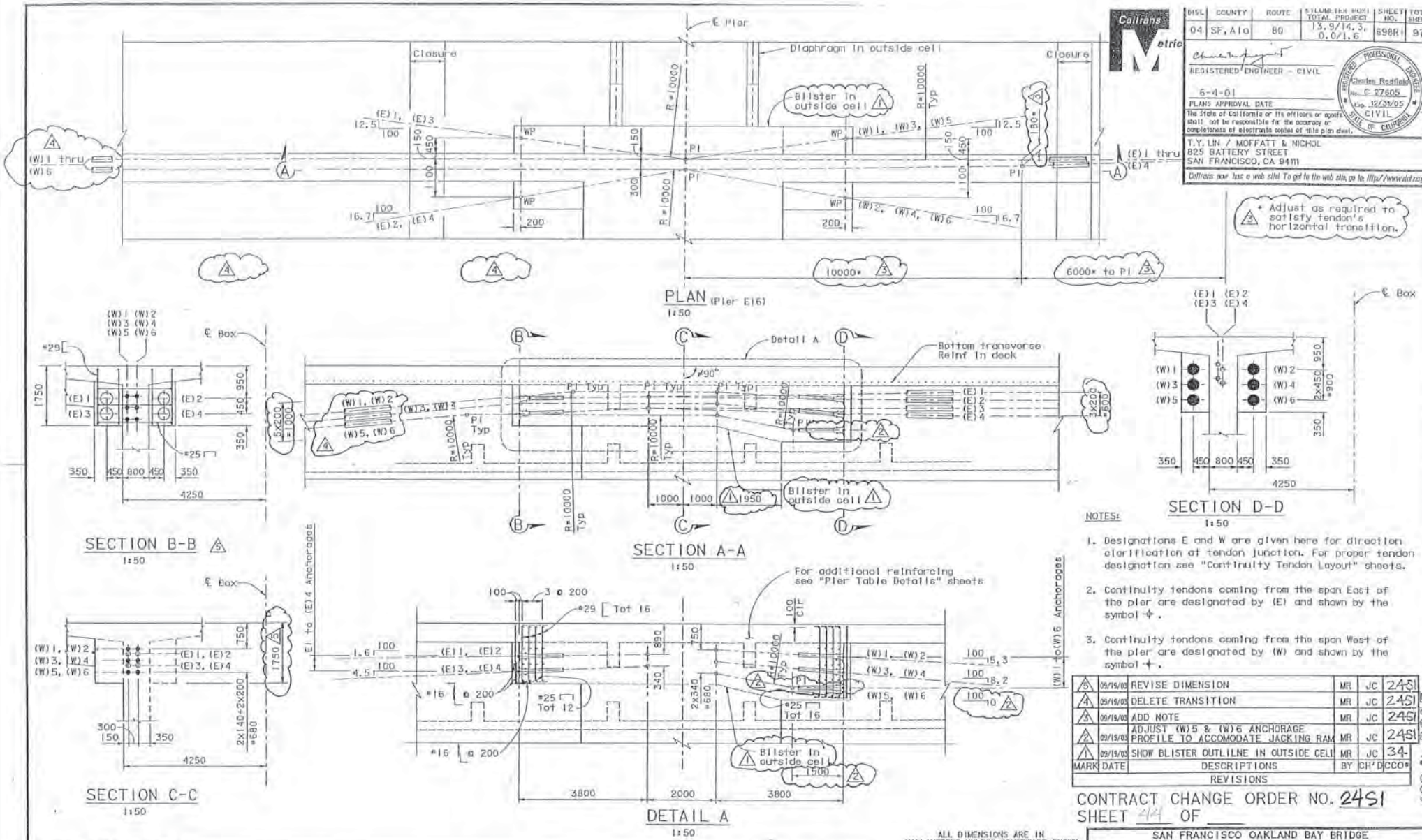

NOTES:

1. Designations E and W are given here for direction clarification at tendon junction. For proper tendon designation see "Continuity Tendon Layout" sheets.
2. Continuity tendons coming from the span East of the pier are designated by (E) and shown by the symbol ✚.
3. Continuity tendons coming from the span West of the pier are designated by (W) and shown by the symbol ✚.

MARK	DATE	DESCRIPTIONS	BY	CH'D	CCO#
5	09/19/03	REVISE DIMENSION	MR	JC	2451
4	09/19/03	DELETE TRANSITION	MR	JC	2451
3	09/19/03	ADD NOTE	MR	JC	2451
2	09/19/03	ADJUST (W)5 & (W)6 ANCHORAGE PROFILE TO ACCOMODATE JACKING RAM	MR	JC	2451
1	09/19/03	SHOW BLISTER OUTLILNE IN OUTSIDE CELL	MR	JC	34

REVISIONS

CONTRACT CHANGE ORDER NO. 2451
SHEET 44 OF ___

ALL DIMENSIONS ARE IN MILLIMETERS UNLESS OTHERWISE SHOWN

DESIGN OVERSIGHT 9/30/03
SIGN OFF DATE

DESIGN	C. Redfield	CHECKED	M. Lamont
DETAILS	E. Zlarkov	CHECKED	M. Lamont
QUANTITIES	K. Corsiler	CHECKED	J. Chan

PREPARED FOR THE STATE OF CALIFORNIA DEPARTMENT OF TRANSPORTATION

Sajid Abbas
PROJECT ENGINEER

BRIDGE NO. 34-0006L/R
KILOMETER POST 13.9/14.3, 0.0/1.6

CU 04
EA 012021

SAN FRANCISCO OAKLAND BAY BRIDGE
EAST SPAN SEISMIC SAFETY PROJECT

SKYWAY STRUCTURES

CONTINUITY TENDON DETAILS NO. 4

Rev. Date 5-18-00

ORIGINAL SCALE IN MILLIMETERS FOR REDUCED PLANS

DISREGARD PRINTS BEARING EARLIER REVISION DATES

REVISION DATES (PRELIMINARY STAGE ONLY)

SHEET 266 OF

100 % 09/19/03

DIST.	COUNTY	ROUTE	KILOMETER POST TOTAL PROJECT	SHEET NO.	TOTAL SHEETS
04	SF, Ala	80	13.9/14.3, 0.0/1.6	853R2	978

REGISTERED ENGINEER – CIVIL
6-4-01
PLANS APPROVAL DATE
The State of California or its officers or agents shall not be responsible for the accuracy or completeness of electronic copies of this plan sheet.

REGISTERED PROFESSIONAL ENGINEER Esmond G. Chai No. C 39454 Exp. 12/31/01 CIVIL STATE OF CALIFORNIA

T.Y. LIN / MOFFATT & NICHOL
825 BATTERY STREET
SAN FRANCISCO, CA 94111

Caltrans now has a web site! To get to the web site, go to: http://www.dot.ca.gov

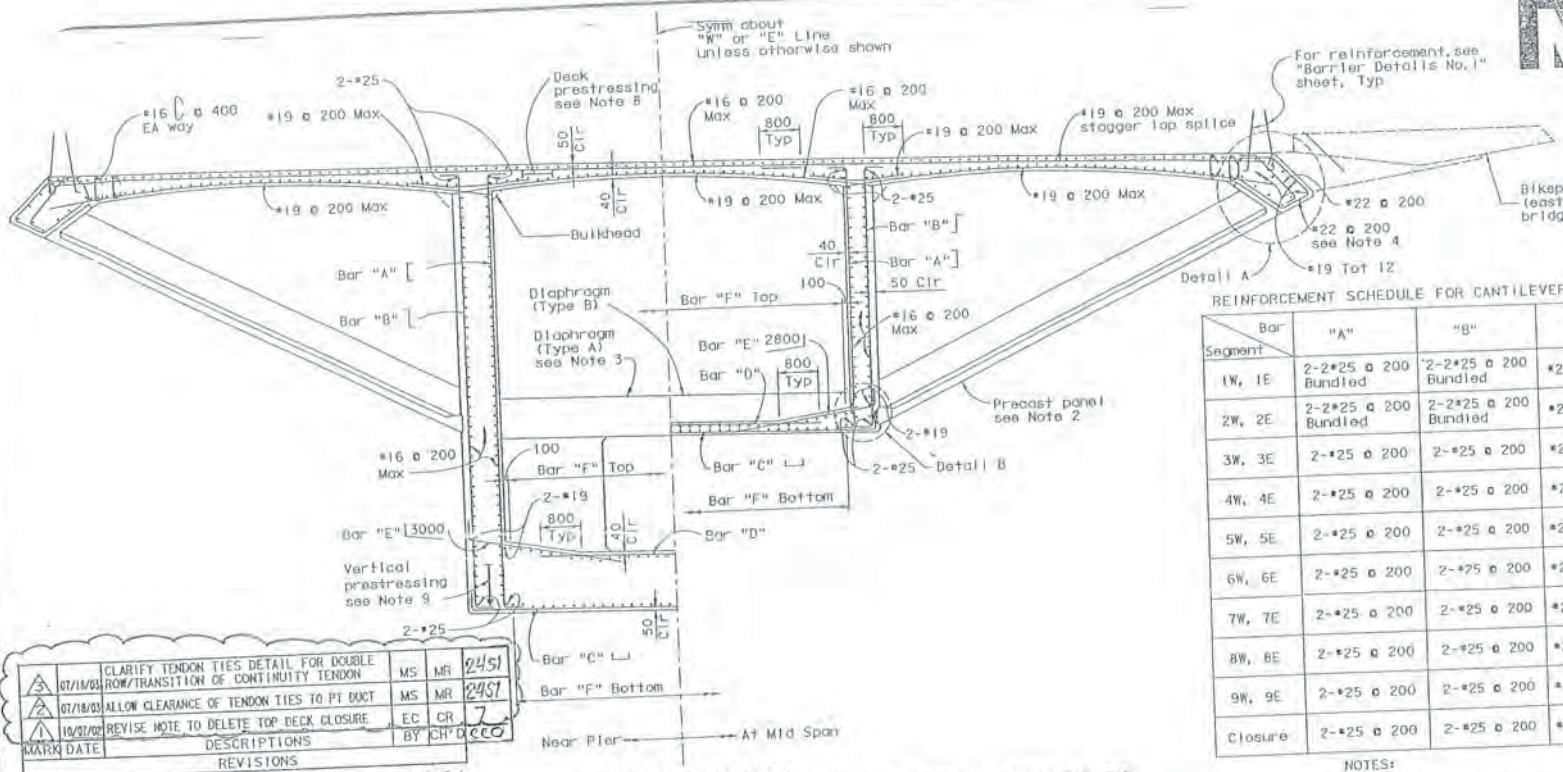

TYPICAL SECTION (CANTILEVER SEGMENTS @ PIERS E4W, E4E, E5W, E5E)
1:50

REINFORCEMENT SCHEDULE FOR CANTILEVER SEGMENTS @ PIERS E4W, E4E, E5W, E5E

Segment \ Bar	"A"	"B"	"C"	"D"	"E"	"F"
1W, 1E	2-2#25 @ 200 Bundled	2-2#25 @ 200 Bundled	#25 @ 200	#25 @ 200	2-#25 @ 200	#25 @ 200
2W, 2E	2-2#25 @ 200 Bundled	2-2#25 @ 200 Bundled	#25 @ 200	#25 @ 200	2-#25 @ 200	#25 @ 200
3W, 3E	2-#25 @ 200	2-#25 @ 200	#22 @ 200	#22 @ 200	2-#22 @ 200	#22 @ 200
4W, 4E	2-#25 @ 200	2-#25 @ 200	#22 @ 200	#22 @ 200	2-#22 @ 200	#22 @ 200
5W, 5E	2-#25 @ 200	2-#25 @ 200	#22 @ 200	#22 @ 200	2-#22 @ 200	#19 @ 200
6W, 6E	2-#25 @ 200	2-#25 @ 200	#22 @ 200	#22 @ 200	2-#22 @ 200	#19 @ 200
7W, 7E	2-#25 @ 200	2-#25 @ 200	#22 @ 200	#22 @ 200	2-#22 @ 200	#16 @ 200
8W, 8E	2-#25 @ 200	2-#25 @ 200	#22 @ 200	#22 @ 200	2-#22 @ 200	#16 @ 200
9W, 9E	2-#25 @ 200	2-#25 @ 200	#22 @ 200	#22 @ 200	2-#22 @ 200	#16 @ 200
Closure	2-#25 @ 200	2-#25 @ 200	#22 @ 200	#22 @ 200	2-#22 @ 200	#16 @ 200

NOTES:

1. No. of bars shown in reinforcement schedule is total for one box girder.
2. For detail of precast panels, see "Precast Panel Details" sheets.
3. For diaphragm details, see "Diaphragm Details No.1" through "Diaphragm Details No.3" sheets.
4. Adjust reinforcement to clear prestressing tendons and prestressing bars, as approved by the Engineer.
5. For Detail A, see "Precast Panel Details No.5" sheet.
6. For Detail B, see "Precast Panel Details No.6" sheet.
7. Contractor shall propose locations of holes for temporary anchorages for Engineer's approval.
8. For deck prestressing, see "Transverse Tendon Details" sheets.
9. For vertical prestressing, see "Vertical PT Details" sheets.
10. For closure reinforcement splice details, see "Girder Details No.2" sheet. (CCO 7)
11. For reinforcement in bulkheads, see "Girder Reinforcement No.1" sheet.

MARK	DATE	DESCRIPTIONS	BY	CH'D	CCO
3	07/18/03	CLARIFY TENDON TIES DETAIL FOR DOUBLE ROW/TRANSITION OF CONTINUITY TENDON	MS	MR	24S1
2	07/18/03	ALLOW CLEARANCE OF TENDON TIES TO PT DUCT	MS	MR	24S1
1	10/27/02	REVISE NOTE TO DELETE TOP DECK CLOSURE	EC	CR	7

REVISIONS

CONTRACT CHANGE ORDER NO. 24S1
SHEET 45 OF ___

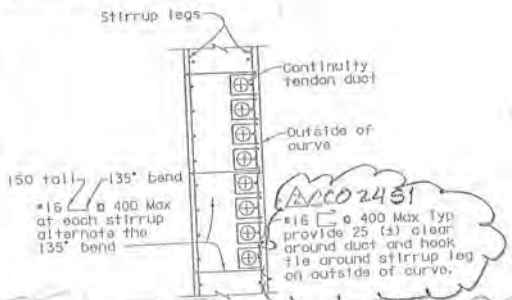

CONTINUITY TENDON TIES DETAIL NO. 1 (2)
CCO 24S1
1:20 (SINGLE ROW)

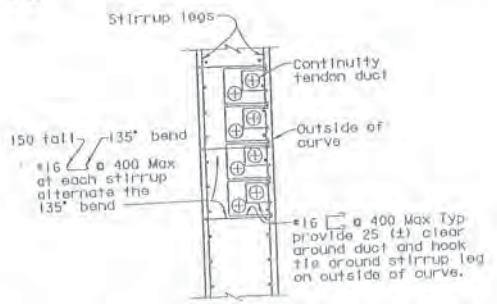

CONTINUITY TENDON TIES DETAIL NO. 2 (3)
1:20 (DOUBLE ROW /TRANSITION)

ALL DIMENSIONS ARE IN MILLIMETERS UNLESS OTHERWISE SHOWN

SAN FRANCISCO OAKLAND BAY BRIDGE
EAST SPAN SEISMIC SAFETY PROJECT
SKYWAY STRUCTURES
GIRDER REINFORCEMENT NO. 2

DESIGN	E. Chai	CHECKED	M. Lamont
DETAILS	R. Lo	CHECKED	M. Lamont
QUANTITIES	A. Yoder	CHECKED	S. Angulalova

PREPARED FOR THE STATE OF CALIFORNIA DEPARTMENT OF TRANSPORTATION

Sajid Abbas
PROJECT ENGINEER

BRIDGE NO. 34-0006L/R
KILOMETER POST 13.9/14.3, 0.0/1.6
DISREGARD PRINTS BEARING EARLIER REVISION DATES

CU 04

REVISION DATES (PRELIMINARY STAGE ONLY)
01/16/03 02/20/03 03/20/03 10/20/03 02/20/03 03/20/03 03/20/03 07/18/03

SHEET 421

DESIGN OVERSIGHT 6/15/2003

100 % PS&E

DIST.	COUNTY	ROUTE	KILOMETER POST TOTAL PROJECT	SHEET NO.	TOTAL SHEETS
04	SF, Ala	80	13.9/14.3, 0.0/1.6	899R	978

Caltrans Metric

REGISTERED ENGINEER - CIVIL

6-4-01

PLANS APPROVAL DATE

Scott Hunter No. C 048066 Exp. 12/31/03 CIVIL STATE OF CALIFORNIA

The State of California or its officers or agents shall not be responsible for the accuracy or completeness of electronic copies of this plan sheet.

T.Y. LIN / MOFFATT & NICHOL
825 BATTERY STREET
SAN FRANCISCO, CA 94111

Caltrans now has a web site! To get to its web site, go to: http://www.dot.ca.gov

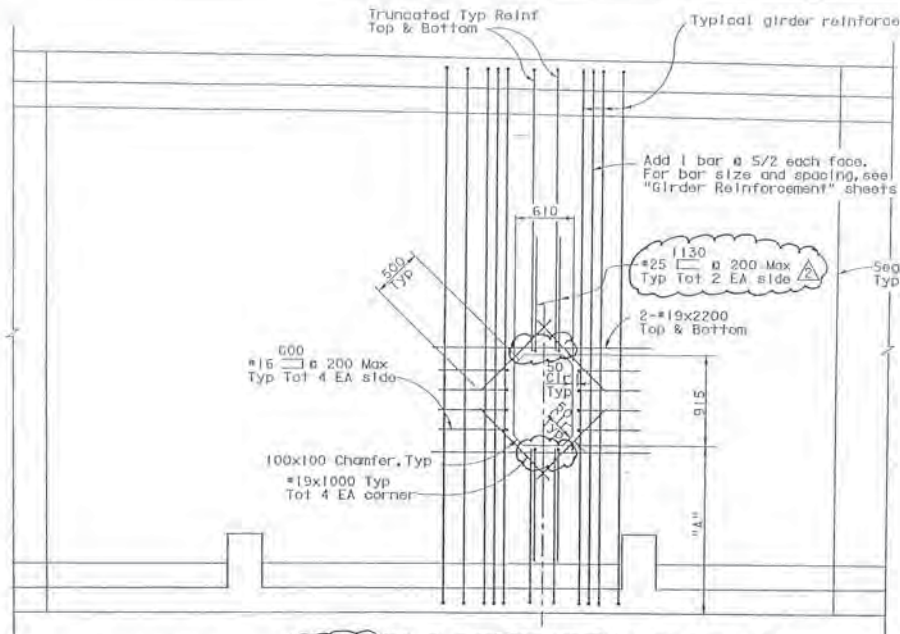

VERTICALLY ORIENTATED WEB MANHOLE

1:25

Span ("E" and "W" Lines)	"A" North	"A" South	Orientation
E3	2715	2715	Horizontal
E4, E5, E6, E9, E10, E12, E13, E14	1656	1627	Vertical
E7, E11, E17	1685	1685	Horizontal
E15	1875	1875	Horizontal
E16	1671	1645	Vertical

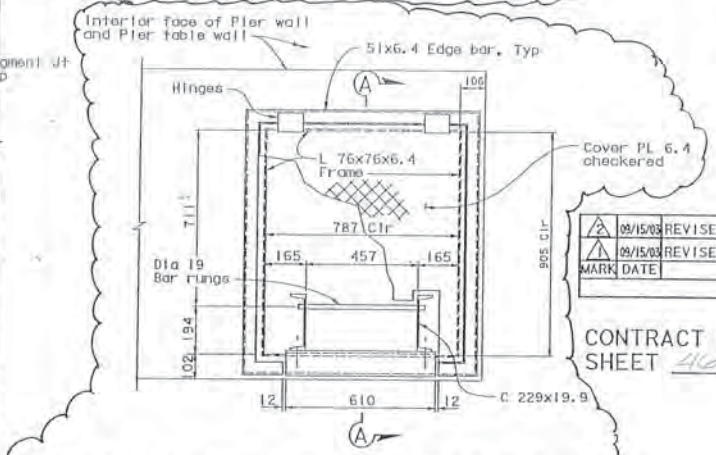

PIER TABLE ACCESS OPENING FRAME DETAILS

1:10

MARK	DATE	DESCRIPTIONS	BY	CH'D	CCO#
2	09/15/03	REVISE WEB MANHOLE DETAILS	JC	MR	24S1
1	09/15/03	REVISE ACCESS OPENING DETAILS	MS	MR	35

REVISIONS

CONTRACT CHANGE ORDER NO. 24S1
SHEET 46 OF ___

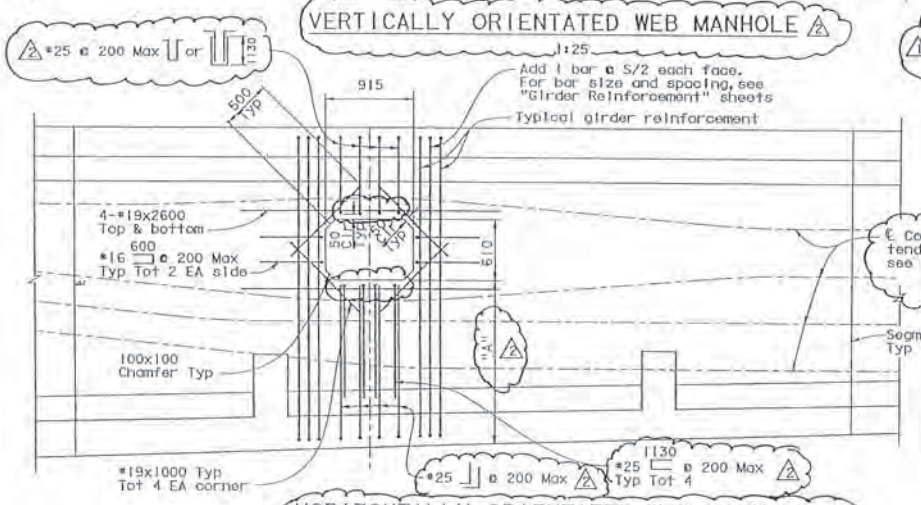

HORIZONTALLY ORIENTATED WEB MANHOLE

1:25

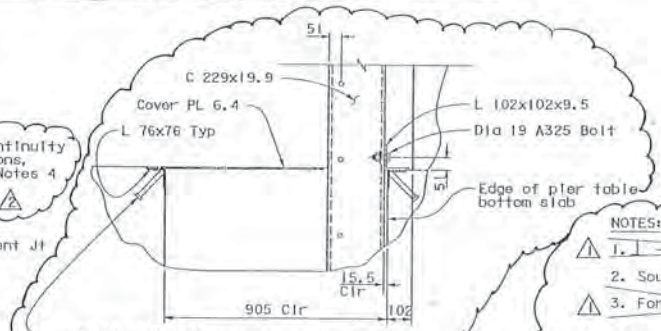

SECTION A-A

1:10

NOTES:

1. ⊥ -Indicates welded headed bar reinforcement.
2. South web shown, north web similar.
3. For ladder detail, see B7-11 / U44.
4. Deviation of continuity tendons around manhole: ensure minimum tendon radii of 8.0m and a minimum of 150 clear between edge of opening and edge of tendon duct.

ALL DIMENSIONS ARE IN MILLIMETERS UNLESS OTHERWISE SHOWN

DESIGN OVERSIGHT 9/30/03
SIGN OFF DATE

DESIGN	S. Hunter	CHECKED	M. Lamont
DETAILS	A. Lisianskiy	CHECKED	M. Lamont
QUANTITIES	K. Cormier	CHECKED	S. Anguelova

PREPARED FOR THE STATE OF CALIFORNIA DEPARTMENT OF TRANSPORTATION

Sajid Abbas
PROJECT ENGINEER

BRIDGE NO. 34-0006L/R
KILOMETER POST 13.9/14.3, 0.0/1.6

SAN FRANCISCO OAKLAND BAY BRIDGE
EAST SPAN SEISMIC SAFETY PROJECT

SKYWAY STRUCTURES

MISCELLANEOUS DETAILS NO. 3

Rev. Date 5-18-00

ORIGINAL SCALE IN MILLIMETERS

CU 04

REVISION DATES (PRELIMINARY STAGE ONLY)

SHEET 1 OF

Department of Transportation
EAST SPAN SEISMIC SAFETY PROJECT
CONCURRENCE FOR CHANGE ORDERS
Contract No. 04-012024
Co. & Rte Ala-80-13.9/14.3, 0.0/1.6

CCO#: 24 **S#:** ~~0~~ 1
Title: Web Manhole Access/Cont. Tendon layouts
Date: 8/18/03

TO: DOUGLAS COE, Resident Engineer

Requested By: DAVID WU (Initial Here) D.W.W.
Senior Engineer

Description of Work:
Relocating web manholes and continuity tendons in the superstructure segments. This requires new holes to be cut in the segment casting machine bulkheads for the new continuity tendon profiles. The associated walkways and ladders also require relocation.

Reason for Change:
During the development of the Contractor's composite working drawings for the superstructure precast segments, multiple conflicts between the web manholes and continuity tendons were found. The web manholes will be relocated and continuity tendons adjusted to avoid the conflicts and provide a smooth tendon profile. The associated walkways and ladders will also be relocated to suit the new web manhole locations.

Discuss with persons noted below:

FHWA		Date	Br. Const		Date
District		Date	Br. Design	see revised contract plans	Date
Other		Date	Br. Geology	N/A	Date
			Br. Maintenance	N/A	Date

Estimated Cost: $500,000.00

Recommended Method of Payment:
- ☐ Contract Items
- ☐ Extra Work at Force Account
- X Agreed Price (UP or LS)
- ☐ Other: _____

Recommended Time Adjustment: 0 Working Days

Prior Approvals:

This represents an acknowledgement that the individuals below are in concurrence with the change order.

Comments: Proceed w/ understanding that the necessary concurrences will be acquired before work is started.

Douglas Coe, Resident Engineer — 8-25-03 Date

Robert Kobal, HQ CCO Coordinator — 9/2/03 Date

Pete Siegenthaler, Principal Construction Engineer — 9/5/03 Date

RECEIVED 01 16 F 20 CO

Rafael A Montes
01/13/2006 09:25 AM

To: Jake VanEnckevort/D04/Caltrans/CAGov@DOT
cc: Kenneth Brown/D04/Caltrans/CAGov@DOT
Subject: Re: Request for Maintenance Concurrence for CCO No. 24S1

I am concurring with CCO No. 24S1 on behalf of this unit. Give me a call if you have any further questions at 510-286-5392..
Jake VanEnckevort

Jake VanEnckevort
Sent by: Jake VanEnckevort
12/22/2005 09:32 AM

To: Rafael A Montes@dot.ca.gov
cc: Kannu Balan/D03/Caltrans/CAGov@DOT, Kenneth Brown/D04/Caltrans/CAGov@DOT
Subject: Request for Maintenance Concurrence for CCO No. 24S1

Mr. Rafael Montes

In Ken Brown's absense please review and provide your concurrence with CCO No. 24S1

Thank you,

Jake van Enckevort
SFOBB East Span Skyway
345 Burma Road
Oakland, CA 94607
Office: (510) 622-5121
Cellular: (209) 743-0871
----- Forwarded by Jake VanEnckevort/D04/Caltrans/CAGov on 12/22/2005 09:20 AM -----

Jake VanEnckevort
Sent by: Jake VanEnckevort
12/14/2005 03:35 PM

To: Kenneth Brown/D04/Caltrans/CAGov@DOT
cc: Doug Coe/D04/Caltrans/CAGov@DOT, David Salladay/D04/Caltrans/CAGov@DOT, Dave Wu/D04/Caltrans/CAGov@DOT, Kannu Balan/D03/Caltrans/CAGov@DOT
Subject: Request for Maintenance Concurrence for CCO No. 24S1

Mr. Ken Brown

Please review the attached documents for **Contract Change Order No. 24S1 - "Web Manhole Access/Continuity Tendon Layouts,"** for the East Span Skyway Bridge Replacement Project, EA No. 04-012024, and provide your concurrence.

CCO 24S1 Memo.pc CCO 24S1 Report.pc CCO 24S1 RevisedPlanSheets.
Please telephone me at (510) 622-5121 if you have questions or require additional information.

Thank you,

Jake van Enckevort
SFOBB East Span Skyway
345 Burma Road
Oakland, CA 94607
Office: (510) 622-5121
Cellular: (209) 743-0871

STATE OF CALIFORNIA - DEPARTMENT OF TRANSPORTATION

CONTRACT CHANGE ORDER MEMORANDUM

TO: PETER SIEGENTHALER / COE D.	FILE: E.A. 04 - 012024 CO-RTE-PM 04-SF,Ala-80-13.9/14.3,0.0/1.3 FED. NO. ACIM-080-1(085)8N
FROM: COE D.	
CCO#: 24 SUPPLEMENT#: 0 Category Code: CHPT	CONTINGENCY BALANCE (incl. this change) $25,885,354.44
COST: $114,830.00 INCREASE ☑ DECREASE ☐	HEADQUARTERS APPROVAL REQUIRED? ☐ YES ☑ NO
SUPPLEMENTAL FUNDS PROVIDED: $0.00	IS THIS REQUEST IN ACCORDANCE WITH ENVIRONMENTAL DOCUMENTS? ☑ YES ☐ NO
CCO DESCRIPTION: Web Manhole Access- Shop drawings	**PROJECT DESCRIPTION:** REPLACE SFOBB EAST SPAN

LOCATION: IN SAN FRANCISCO AND ALAMEDA COUNTIES IN SAN FRANCISCO AND OAKLAND FROM 1.3 KM EAST OF THE YERBA BUENA ISL

HISTORY COPY

THIS CHANGE ORDER PROVIDES FOR:

compensating Mountain States Steel, the Contractor's subcontractor, for work performed through August 31, 2003, to revise working drawings to reflect design changes associated with the relocation of the walkways and ladders in the supersturcture segments that were incorporated after the working drawings were completed.

During the development of the Contractor's composite segment working drawings for the superstructure precast segments, multiple conflicts between walkways, ladders, prestressing tendons, rebar, and segment joints were found. Relocation of the walkways and ladders was necessary to relieve the congestion and interference problems within the segments. Consequently, the contractor had to revise his shop drawings to reflect the new revisions in the design drawings.

This change order resolves Mountain States Steel Change Order Request Numbers 7.1, 7.2, 7.3, 12, 12.1, and 15, for shop drawing detailing costs associated with contract plan revisions for sheet numbers 92, 93, 93A, 93B, 93C, 93D, 94, 95, 96, 97, 97A, 97B, 97C, 97D, 98, 99, 100, 101, 102, 102A, 108, 109, 109A, 109B, and 109C.

For this change, the Contractor will receive an agreed lump sum of $114,830.00. This agreed lump sum constitutes full compensation including all markups, for all direct costs, all associated project impacts, and all Time Related Overhead (TRO) expenses. Records and calculations used to determine the adjustment of compensation are on file in the project records.

No adjustment of contract time is warranted, as this change order does not affect the controlling operation.

FHWA concurrence is not required. Design concurrence is not required to compensate the Contractor for the detailing of the shop drawings. Maintenance concurrence is not required, as this change order does not affect any permanent work.

CONCURRED BY:	
Construction Engineer: Douglas Coe	Date 10-16-03
Bridge Engineer:	Date
FHWA Representative:	Date
Project Engineer:	Date
Other (specify):	Date
	Date
	Date
District Prior Approval By:	Date
HQ (Issue Approve) By:	Date
Resident Engineer's Signature	Date 10-16-03

ESTIMATE OF COST

	THIS REQUEST	TOTAL TO DATE
ITEMS	$0.00	$0.00
FORCE ACCOUNT	$0.00	$0.00
AGREED PRICE	$0.00	$0.00
ADJUSTMENT	$114,830.00	$614,830.00
TOTAL	$114,830.00	$614,830.00

FEDERAL PARTICIPATION

☑ PARTICIPATING ☐ PARTICIPATING IN PART ☐ NONE
☐ NON-PARTICIPATING (MAINTENANCE) ☐ NON-PARTICIPATING

FEDERAL SEGREGATION (if more than one Funding Source or P.I.P. type)
☑ CCO FUNDED PER CONTRACT ☐ CCO FUNDED AS FOLLOWS

FEDERAL FUNDING SOURCE	PERCENT

STATE OF CALIFORNIA - DEPARTMENT OF TRANSPORTATION

CONTRACT CHANGE ORDER MEMORANDUM

TO: PETER SIEGENTHALER / DOUG COE, Supervising Br. Eng.	FILE: E.A. 04 - 012024
FROM: DOUG COE, Supervising Br. Eng.	CO-RTE-PM 04-SF,Ala-80-13.9/14.3,0.0/1.6
	FED. NO. ACIM-080-1(085)8N
CCO#: 24 SUPPLEMENT#: 1 Category Code: CHPT	CONTINGENCY BALANCE (incl. this change) $51,165,927.21
COST: $0.00 INCREASE ☐ DECREASE ☐	HEADQUARTERS APPROVAL REQUIRED? ☐ YES ☑ NO
SUPPLEMENTAL FUNDS PROVIDED: $0.00	IS THIS REQUEST IN ACCORDANCE WITH ENVIRONMENTAL DOCUMENTS? ☑ YES ☐ NO
CCO DESCRIPTION: Web MH Access/Continuity Tendon Layouts	**PROJECT DESCRIPTION:** REPLACE SFOBB EAST SPAN

LOCATION: IN SAN FRANCISCO AND ALAMEDA COUNTIES IN SAN FRANCISCO AND OAKLAND FROM 1.3 KM EAST OF THE YERBA BUENA ISL

THIS CHANGE ORDER PROVIDES FOR:

Relocating web manholes and continuity tendons in the superstructure segments for the SFOBB - East Span Skyway, Bridge Nos. 34-0006L/R as shown on revised contract plan sheet numbers 537R3, 540R2, 544R2, 548R3, 550R3, 551R3, 554R2, 558R2, 562R3, 564R3, 653R1, 654R1, 655R1, 656R1, 657R1, 658R1, 659R1, 660R1, 661R1, 662R1, 663R1, 664R1, 665R1, 666R1, 667R1, 668R1, 669R1, 670R1, 671R1, 672R1, 673R1, 674R1, 675R1, 676R1, 677R1, 678R1, 679R1, 680R1, 681R1, 682R1, 695R1, 696R1, 697R1, 698R1, 853R2, and 899R1 of 978, and modify the segment casting machine bulkheads as needed to accommodate the revised continuity tendon profiles.

Contract Change Order No. 24, Supplement No. 1, resolves the conflicts in the superstructure segments between the web manholes and continuity tendons. The web manholes will be relocated and the continuity tendons will be adjusted to mitigate the conflicts and provide a smooth tendon profile.

During the development of the Contractors composite segment working drawings for the superstructure precast segments, multiple conflicts between web manholes and continuity tendons were found. Relocation of the web manholes, and continuity tendons was necessary to relieve the congestion and interference problems within the segments. The contract and shop drawings were modified to reflect the new design revisions.

The Engineer has performed an analysis and has determined that this change results in a zero cost adjustment. This analysis is on file in the project records.

Mr. Pete Siegenthaler, SFOBB Construction Manager, Toll Bridge Construction, concurs with this change. A copy of the concurrence signed by Mr. Siegenthaler on September 5, 2003, is attached.

Design concurrence was provided by Hasan El-Natur on August 6, 2003, as indicated by his signature on the revised contract plan sheets.

Maintenance concurrence was obtained from Mr. Rafael A. Montes, of Structures Maintenance, on January 13, 2006. A copy of the concurrence received from Maintenance is attached.

No adjustment of contract time is warranted, as this change does not affect the controlling operation.

RECEIVED
050283 MAR 17 90

CONCURRED BY:		
Construction Engineer:	Douglas Coe	Date 1-23-06
Bridge Engineer:	Douglas Coe	Date 1-23-06
FHWA Representative:		Date
Project Engineer:	Hasan El-Natur	Date 8/6/2003
Other (specify):		Date
		Date
		Date
District Prior Approval By:	Pete Siegenthaler	Date 9/5/2003
HQ (Issue Approve) By:		Date
Resident Engineer's Signature:		Date 1-23-06

ESTIMATE OF COST

	THIS REQUEST	TOTAL TO DATE
ITEMS	$0.00	$0.00
FORCE ACCOUNT	$0.00	$0.00
AGREED PRICE	$0.00	$0.00
ADJUSTMENT	$0.00	~~$400,590.00~~ 14,830
TOTAL	$0.00	~~$400,590.00~~ 14,830

FEDERAL PARTICIPATION

☑ PARTICIPATING ☐ PARTICIPATING IN PART ☐ NONE
☐ NON-PARTICIPATING (MAINTENANCE) ☐ NON-PARTICIPATING

FEDERAL SEGREGATION (if more than one Funding Source or P.I.P. type)
☑ CCO FUNDED PER CONTRACT ☐ CCO FUNDED AS FOLLOWS

FEDERAL FUNDING SOURCE	PERCENT

CONTRACT CHANGE ORDER

Change Requested by: Engineer

CCO: 24	Suppl. No. 2	Contract No. 04 - 012024	Road 04-SF,Ala-80-13.9/14.3,0.0/1.6	FED. AID LOC.: ACIM-080-1(085)8N

To: KIEWIT / FCI / MANSON a JV

You are directed to make the following changes from the plans and specifications or do the following described work not included in the plans and specifications for this contract. ***NOTE: This change order is not effective until approved by the Engineer.***

Description of work to be done, estimate of quantities and prices to be paid. (Segregate between additional work at contract price, agreed price and force account.) Unless otherwise stated, rates for rental of equipment cover only such time as equipment is actually used and no allowance will be made for idle time. This last percentage shown is the net accumulated increase or decrease from the original quantity in the Engineer's Estimate.

Adjustment of Compensation at Lump Sum:

Fabricate walkways and ladders at the hinges for the precast segments as shown on revised contract plan sheet numbers 92R2, 93R6, 93AR1, 93BR3, 93CR5, 93DR4, 93ER2, 93FR2, 93GR2, 94R4, 95R2, 96R3, 97R6, 97AR3, 97BR4, 97CR5, 97DR4, 97ER1, 98R6, 99R2, 101R2, 101A, 102AR3, 108R2, and 109AR1 of 978 (sheets 2 through 26 of this change order) for the SFOBB East Span Skyway, Bridge Nos. 34-0006L/R.

The following increased fabrication costs are included herein:

1. The increased material costs for the material that was not ordered due to the delayed completion of the shop drawings;
2. The increased costs for work to be done producing shop drawings beyond the scope established in Contract Change Order No. 24, "Web Manhole Access-Shop Drawings," executed on October 16, 2003;
3. The increased freight costs to expedite delivery of fabricated components;
4. The increased fabrication costs for the work associated with the revised contract plan sheets.

For this change, the Contractor will receive an agreed Lump Sum amount of $285,760.00. This agreed lump sum constitutes full compensation, including markups, for all direct and indirect costs, all associated project impacts, and all overhead costs.

Estimated cost of Adjustment of Compensation at Lump Sum $285,760.00

Estimated Cost: **Increase** ☑ **Decrease** ☐ **$285,760.00**

By reason of this order the time of completion will be adjusted as follows: 0 days

Submitted by

Signature	Resident Engineer: DOUG COE, Supervising Br. Eng.	Date 2-14-06

Approval Recommended by

Signature	Construction Engineer: DOUG COE, Supervising Br. Eng.	Date 2-14-06

Engineer Approval by

Signature	(Print name and title) PETER SIEGENTHALER - Chief	Date 2-14-06

We the undersigned contractor, have given careful consideration to the change proposed and agree, if this proposal is approved, that we will provide all equipment, furnish the materials, except as may otherwise be noted above, and perform all services necessary for the work above specified, and will accept as full payment therefor the prices shown above.

NOTE: If you, the contractor, do not sign acceptance of this order, your attention is directed to the requirements of the specifications as to proceeding with the ordered work and filing a written protest within the time therein specified.

Contractor Acceptance by

Signature	(Print name and title) Deputy Project Director	Date 2/27/06

U.S. DEPARTMENT OF TRANSPORTATION FEDERAL HIGHWAY ADMINISTRATION CALIFORNIA DIVISION OFFICE

RECORD OF PRIOR APPROVAL FOR MAJOR CONTRACT CHANGE ORDERS

PROJECT NO.	CCO NO.	CONTRACT NO.	DIST-CO-RTE-PM
ACIM -080-1(085)8N	24 S2	04-012024	04-SF,Ala-80-13.9/14.3,0.0/1.6

REQUESTED BY:	CALTRANS HQ	DATE
Jake VanEnckevort	X RE/DISTRICT	12/14/05

PROPOSED CHANGE:

This change order provides for implementing revisions to walkways and ladders at the precast hinge segments and for increased costs resulting from the Engineer's delayed delivery of the revised contract plan sheets.

REASON FOR CHANGE:

This change order is needed to resolve multiple conflicts between the walkways, ladders, prestressing tendons, bar reinforcing steel, and segment joints. This change order will compensate the Contractor for the increased costs of fabrication associated with the Engineer's late delivery of the contract plan sheets that were revised to resolve the conflicts. These conflicts were identified during the development of the Contractor's composite working drawings for the superstructure precast segments.

AS DISCUSSED IN FIELD (REPORT NO. ____)

TIME EXTENSIONS	ACTIVITY ON CRITICAL PATH AFFECTED BY CCO (IF TIME EXTENSION INVOLVED)
* NONE ___ DAYS ___	

ESTIMATE OF COST:	CCO:	METHOD OF PAYMENT
$ 285,760.00 INCREASE $ _____ DECREASE	CONTRACT ITEM AGREED PRICE	X ADJUSTMENT OF COMPENSATION EXTRA WORK AT FORCE ACCOUNT

THE WORK COVERED BY THE PROPOSED REVISION AS DESCRIBED ABOVE IS APPROVED SUBJECT TO SUBMISSION OF SUPPORTING DOCUMENTATION INCLUDING COST EVALUATION AND JUSTIFICATION OF TIME EXTENSIONS.

OTHER CONDITIONS:

PRIOR APPROVAL TO PROCEED GRANTED BY:	DATE OF AUTHORIZATION:
Nancy E. Bobb	12/20/05

Kenneth Brown
01/05/2006 07:59 AM

To: Jake VanEnckevort/D04/Caltrans/CAGov@DOT
cc:
Subject: Re: Request for Maintenance Concurrence for CCO No. 24S2

Contract Change Order 24S2, Walkway Modifications at Hinges, has been reviewed and found acceptable.

Ken Brown
SMI - Toll Bridges
510-286-0932

Jake VanEnckevort

Jake VanEnckevort
01/03/2006 10:10 AM

Sent by: Jake VanEnckevort

To: Kenneth Brown/D04/Caltrans/CAGov@DOT
cc: Doug Coe/D04/Caltrans/CAGov@DOT, David Salladay/D04/Caltrans/CAGov@DOT, Dave Wu/D04/Caltrans/CAGov@DOT, Kannu Balan/D03/Caltrans/CAGov@DOT
Subject: Request for Maintenance Concurrence for CCO No. 24S2

Mr. Ken Brown

Please review the attached documents for **Contract Change Order No. 24S2 - "Walkways at Hinges,"** for the East Span Skyway Bridge Replacement Project, EA No. 04-012024, and provide your concurrence. I, am also still waiting for your concurrence with CCO No. 24S1- "Web Manhole Access/Continuity Tendon Layouts," which was send on 12/14/05. If there is a problem please let me know.

CCO 24S2 Maint Memo.p CCO 24S2 Maint Report.p CCO 24S2 RevisedPlanSheets.

Please telephone me at (510) 622-5121 if you have questions or require additional information.

Thank you,

Jake van Enckevort
SFOBB East Span Skyway
345 Burma Road
Oakland, CA 94607
Office: (510) 622-5121
Cellular: (209) 743-0871

Department of Transportation
EAST SPAN SEISMIC SAFETY PROJECT
CONCURRENCE FOR CHANGE ORDERS

Contract No. 04-012024
Co. & Rte Ala-80-13.9/14.3, 0.0/1.6

CCO#: 24 **S#:** 2
Title: Web Manhole/Continuity Tendon Layout
Date: 12/03/03

To: DOUGLAS COE, Resident Engineer

Requested By: Bill Howe, Senior Engineer (initials WBH)

Description of Work:
Relocating the walkways and ladders in the superstructure segments due to conflicts with continuity tendons.

Reason for Change:
This change was originally issued as CCO No. 24, which was subsequently used to pay the cost of detailing additional walkway changes by the subcontractor, Mountain States Steel. This supplement will be to cover the work mentioned below:
During the development of the Contractor's composite segment working drawings for superstructure precast segments, multiple conflicts between the walkways, ladders, prestressing tendons, rebar and segment joints were found. The walkways and ladders will be relocated to relieve the congestion and interference problems with the tendons, rebar, and segment joints.

Discussed with persons noted below:

FHWA:	Date	Br. Const:	Date
District:	Date	Br. Design:	Date
Other:	Date	Br. Geology:	Date
		Br. Maintenance:	Date

Estimated Cost: $200,000.00

Recommended Method of Payment:
- ☐ Contract Items
- ☐ Extra Work at Force Account
- ☒ Agreed Price (LS or UP)
- ☐ Other:

Recommended Time Adjustment: 0 Working Days

Prior Approvals:

1. This represents an acknowledgement that the individuals below are in concurrence with the change order.
2. This represents an acknowledgement that I am in concurrence with this change order which must be approved before any work is done.

Comments:
Doug: The $200K above is based on discussion. Drawings are forthcoming and then we can refine costs w/ KFM. Bill.

Douglas Coe, Resident Engineer — 12-16-03 Date — 1. ___ 2. X

Pete Siegenthaler, Principal Construction Engineer — 12-18-03 Date — 1. ___ 2. ___

Robert Kobal, HQ CCO Coordinator — Date — 1. ___ 2. X

TELECOPY

California Department of Transportation

CONSTRUCTION DIVISION

TO: District 4 CCO Desk

Date: 2/15/2006

Contract No.: 4 - 012024

Road: SF-ALA-80-13.9/14.3, 0.0/1.6

FED. No.: ACIM-080-1(085)8N

To: SARTIPI - 04

Attention: 04 - BELTRAN

HQ Direction: TO ISSUE AND APPROVE

CCO No. 024 **Sup. No.** 2 **Rev. No.** 1

Per Your Submittal Dated: 2/14/2006 **CCO Category Code:** C - X - P - A

PROVIDES ADDITIONAL COMPENSATION FOR INCREASED FABRICATION COSTS ASSOCIATED WITH THE WALKWAYS AND LADDERS AT THE HINGES OF THE PRECAST SEGMENTS SHOWN ON THE REVISED CONTRACT PLAN SHEETS (SHEETS 2 THROUGH 26 OF THIS CCO). ADDITIONAL FABRICATION COSTS INCLUDE THE FOLLOWING:

1. INCREASED MATERIAL COSTS FOR MATERIAL THAT WAS NOT ORDERED DUE TO THE STATE-CAUSED DELAYED COMPLETION OF THE SHOP DRAWINGS.
2. INCREASED COSTS FOR WORK TO BE DONE PRODUCING SHOP DRAWINGS BEYOND THE SCOPE ESTABLISHED IN CCO 024.
3. INCREASED FREIGHT COSTS TO EXPEDITE DELIVERY OF FABRICATED COMPONENTS.
4. INCREASED FABRICATION COSTS FOR THE WORK ASSOCIATED WITH THE REVISED CONTRACT PLAN SHEETS.

ISSUE AND APPROVE IS CONDITIONAL ON THE FOLLOWING:

1. OBTAINING THE CONTRACTOR'S SIGNATURE ON THE AGREED PRICE CCO. NOTE THAT FAILURE TO OBTAIN THE CONTRACTOR'S SIGNATURE WILL REQUIRE A REVISED CCO AND NEW I&A REQUEST.

THE TOTAL COST OF THIS CHANGE, INCLUDING THIS SUPPLEMENTAL, IS SHOWN AS $400,590.00 WITH NO TIME ADJUSTMENT.

Items:	$0.00
Force Account:	$0.00
Agreed Price:	$0.00
Adj. of Comp.	$285,760.00
Total:	**$285,760.00**
Time:	**(NONE)**

Contract No.: 4 - 012024

Road: SF-ALA-80-13.9/14.3, 0

FED. NO.: ACIM-080-1(085)8N

CCO No. 024 Sup. No. 2 Rev. No. 1 CCO Category Code: C - X - P - A

Continued:

EUGENE MALLETTE,
by: Assistant Division Chief

Ken Darby

Ken Darby

Division of Construction
1120 "N" Street, MS-44, Sacramento, CA 95814
Fax Number: (916) 654-5735
To Confirm Transmission, Call (916) 654-5259

SEND FOR ATP
12/20/05

CONTRACT CHANGE ORDER

Change Requested by: Engineer

CCO: 24	Suppl. No. 2	Contract No. 04 - 012024	Road 04-SF,Ala-80-13.9/14.3,0.0/1.6	FED. AID LOC.: ACIM-080-1(085)8N

To: **KIEWIT / FCI / MANSON a JV**

You are directed to make the following changes from the plans and specifications or do the following described work not included in the plans and specifications for this contract. ***NOTE: This change order is not effective until approved by the Engineer.***

Description of work to be done, estimate of quantities and prices to be paid. (Segregate between additional work at contract price, agreed price and force account.) Unless otherwise stated, rates for rental of equipment cover only such time as equipment is actually used and no allowance will be made for idle time. This last percentage shown is the net accumulated increase or decrease from the original quantity in the Engineer's Estimate.

Extra Work at Force Account:

Fabricate walkways and ladders at the hinges for the precast segments as shown on revised contract plan sheet numbers 92R2, 93R6, 93AR1, 93BR3, 93CR5, 93DR4, 93ER2, 93FR2, 93GR2, 94R4, 95R2, 96R3, 97R6, 97AR3, 97BR4, 97CR5, 97DR4, 97ER1, 98R6, 99R2, 101R2, 101A, 102AR3, 108R2, and 109AR1 of 978 (sheets 2 through 26 of this change order) for the SFOBB East Span Skyway, Bridge Nos. 34-0006L/R.

The following increased fabrication costs are included herein:

1. The increased material costs for the material that was not ordered due to the delayed completion of the shop drawings;
2. The increased costs for work to be done producing shop drawings beyond the scope established in Contract Change Order No. 24, "Web Manhole Access-Shop Drawings," executed on October 16, 2003;
3. The increased freight costs to expedite delivery of fabricated components;
4. The increased fabrication costs for the work associated with the revised contract plan sheets.

The increased fabrication costs will be determined as specified in Section 5-1.21 "Force Account Payment" of the contract special provisions.

Estimated cost of Extra Work at Force Account $300,000.00

DRAFT

CONCUR IN CONCEPT JBT 12-23-05

Estimated Cost: **Increase** ☑ **Decrease** ☐ **$300,000.00**

By reason of this order the time of completion will be adjusted as follows: 0 days

Submitted by

Signature	Resident Engineer: DOUG COE, Supervising Br. Eng.	Date

Approval Recommended by

Signature	Construction Engineer: DOUG COE, Supervising Br. Eng.	Date

Engineer Approval by

Signature	(Print name and title) PETER SIEGENTHALER - Chief	Date

We the undersigned contractor, have given careful consideration to the change proposed and agree, if this proposal is approved, that we will provide all equipment, furnish the materials, except as may otherwise be noted above, and perform all services necessary for the work above specified, and will accept as full payment therefor the prices shown above.

NOTE: If you, the contractor, do not sign acceptance of this order, your attention is directed to the requirements of the specifications as to proceeding with the ordered work and filing a written protest within the time therein specified.

Contractor Acceptance by

Signature	(Print name and title)	Date

RESIDENT ENGINEER COE, DOUG

PHONE NUMBER 510 622-5101

C O N T R A C T C H A N G E O R D E R 0 2 4 - 0 2 S

CONTRACT NO. 04-012024

FILING DATE 03/14/06

DESCRIPTION WALKWAY AT HINGES

CCO CATEGORY CXPA

APPROVAL DATE 03/14/06

TIME EXTENSION DAY NONE

ITEM NO.	DESCRIPTION OF CHANGE	APPROVED CHANGE QUANTITY	APPROVED CHANGE AMOUNT	CHANGES TO DATE CCO	CHANGES TO DATE QB	AUTHORIZED QUANTITY	QUANTITY PAID TO DATE	EST NO.
	ADJUSTMENT OF COMPENSATION -- LUMP SUM (+)		$285,760.00					
	NET CHANGE THIS C.C.O.		$285,760.00					
	AMOUNT OF 'BRIDGEWORK'		$285,760.00					

*** C.C.O. ACCEPTED AND FILED. ***

FEDERAL PARTICIPATION DISP TYPE	COST	TYPE	COST	FEDERAL SEGREGATION TYPE	FUNDING SOURCE	PCT	FUNDING SOURCE	PCT
NEW P	285,760.00		00					

DIST	COUNTY	ROUTE	TOTAL PROJECT	NO	SHEETS
04	SF, Ala	80	13.9 / 14.3, 0.0 / 1.6	92R2	978

REGISTERED CIVIL ENGINEER — DATE 03/19/01

6-4-01
PLANS APPROVAL DATE

PARSONS BRINCKERHOFF QUADE & DOUGLAS, INC.
303 SECOND STREET, SUITE 700 N
SAN FRANCISCO, CA 94103

REGISTERED PROFESSIONAL ENGINEER — WEE SHING ONTANG — NO. 24960 — EXP. 12/31/01 — CIVIL — STATE OF CALIFORNIA

The State of California or its officers or agents shall not be responsible for the accuracy or completeness of electronic copies of this plan sheet.

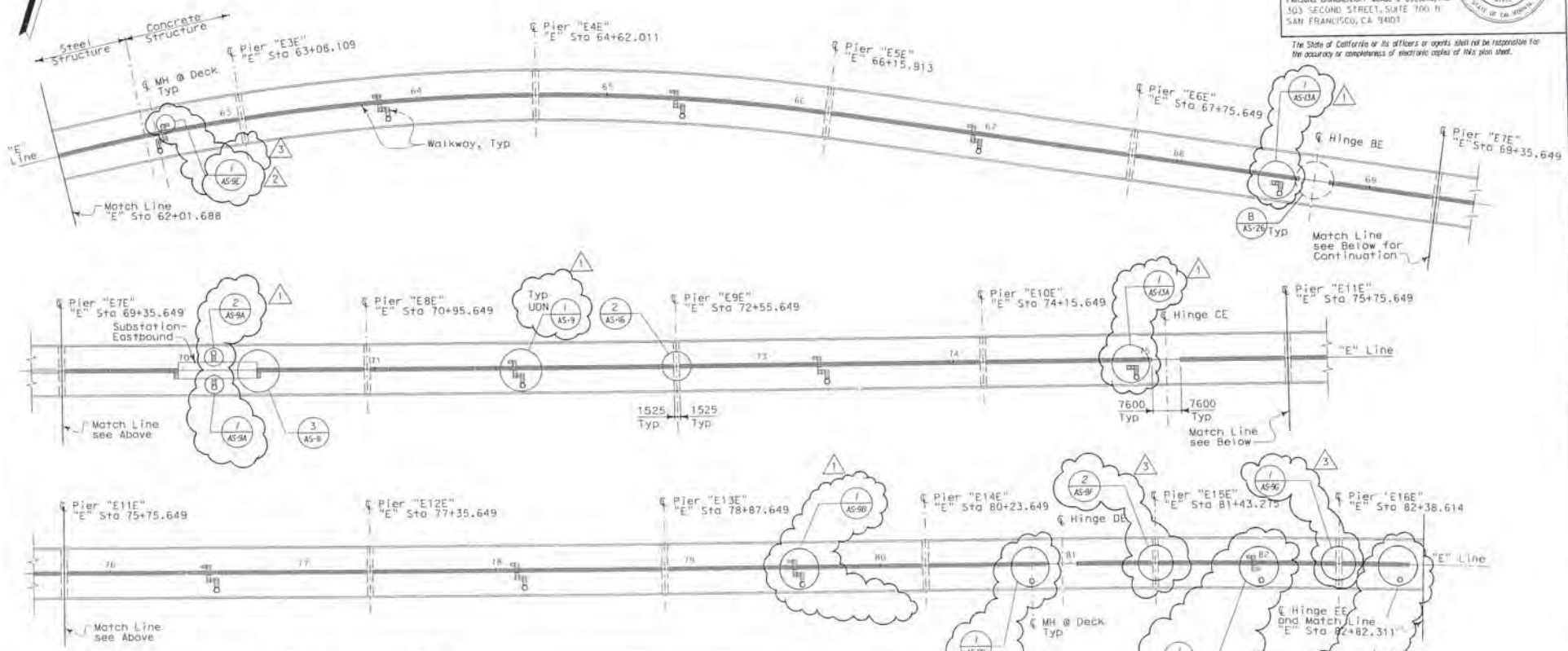

REGISTERED CIVIL ENGINEER — DATE 6/3/04 — WILLIAM HARCOURT STONE — NO. 53521 — EXP. 6/30/04 — CIVIL — STATE OF CALIFORNIA

MARK	DATE	DESCRIPTIONS	REV.	CK
3	6/25/04	Revised to reflect new detail sheet AS-9E.	IB	SH
2	4/23/03	Revised due to reconfiguration of web MH.	KW	MSO
1	12/11/02	Revised to coordinate with Structures Plans.	KW	MSO

REVISIONS

CCO NO. 24
CCO NO. 24
CCO NO. 24

CONTRACT CHANGE ORDER NO. 24 Sc
SHEET 2 OF 2 Co

NO SCALE — ALL DIMENSIONS ARE IN MILLIMETERS UNLESS OTHERWISE SHOWN

DESIGN	BY W.S. Dwyong	CHECKED K. Liu	
LAYOUT	BY B. Vuong	CHECKED K. Liu	
QUANTITIES	BY G. Benkovich	CHECKED W. S. Dwyong	

ORIGINAL SCALE IN MILLIMETERS FOR PRODUCED PLANS 0 10 20 30 40 50 60 70 80 90 100

STATE OF CALIFORNIA
DEPARTMENT OF TRANSPORTATION

DIVISION OF STRUCTURES
STRUCTURAL DESIGN

CU 04251
EA 012021

DGN FILE = 104-012024_0007BE.dgn
USERNAME = LANNSSOTO

DIVISION NO. 34-0006
KILOMETER POST 13.0/14.3, 0.0/1.6

DISREGARD PRINTS BEARING EARLIER REVISION DATES

STRUCTURE - EASTBOUND
WALKWAY LAYOUT

AS-8

SHEET 17 OF 47

DATE PLOTTED = 28-SEP-2005 TIME PLOTTED = 15:15

DIST	COUNTY	ROUTE	KILOMETER POST TOTAL / PROJECT	SHEET NO	TOTAL SHEETS
04	SF, Ala	80	13.9 / 14.3, 0.0 / 1.8	93R6	978

Caltrans Metro

REGISTERED CIVIL ENGINEER — DATE 12/26/00

6-4-01
PLANS APPROVAL DATE

PARSONS BRINCKERHOFF QUADE & DOUGLAS, INC.
303 SECOND STREET, SUITE 700 N
SAN FRANCISCO, CA 94107

REGISTERED PROFESSIONAL ENGINEER — NICE SHING CHANG — No. 24960 — Exp. 12/31/05 — CIVIL — STATE OF CALIFORNIA

The State of California or its officers or agents shall not be responsible for the accuracy or completeness of electronic copies of this plan sheet.

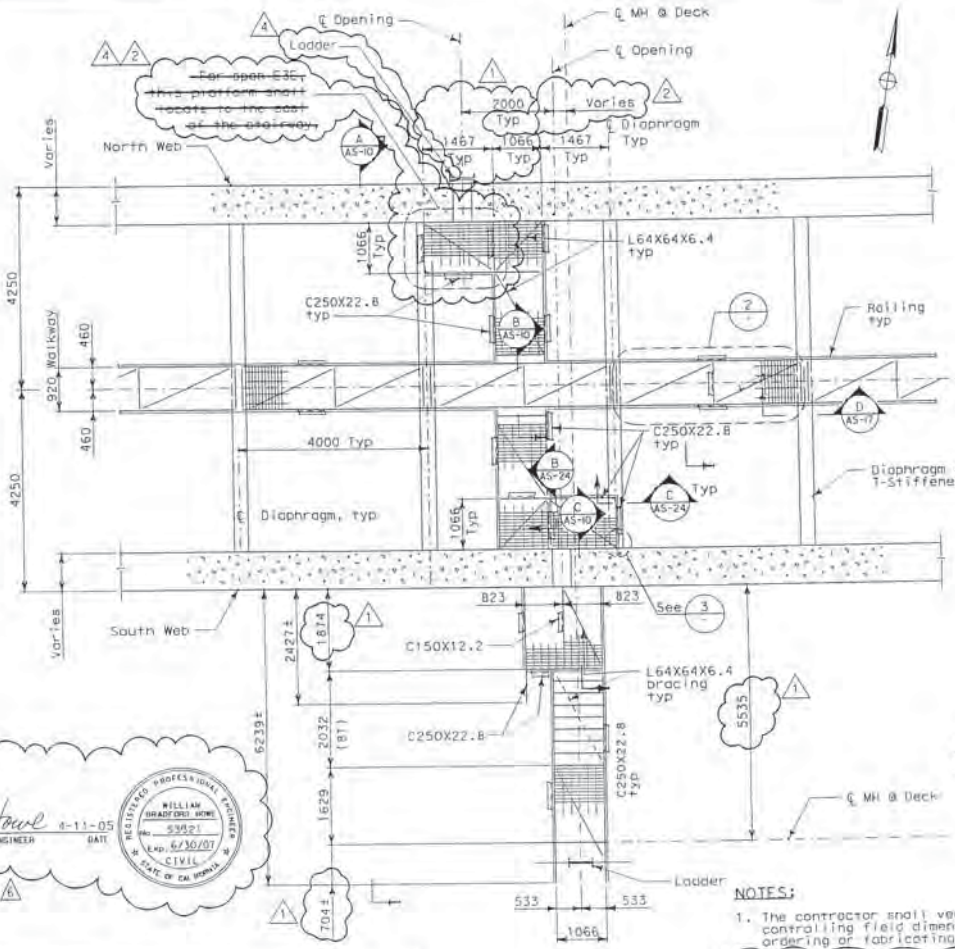

PLAN

1 / AS-8 **DETAIL**
SCALE:1:50

ORIGINAL SIGNED — REGISTERED CIVIL ENGINEER — 8/24/04 DATE

REGISTERED PROFESSIONAL ENGINEER — Ruben Gutierrez — No. 54514 — Exp. 12/31/05 — CIVIL — STATE OF CALIFORNIA

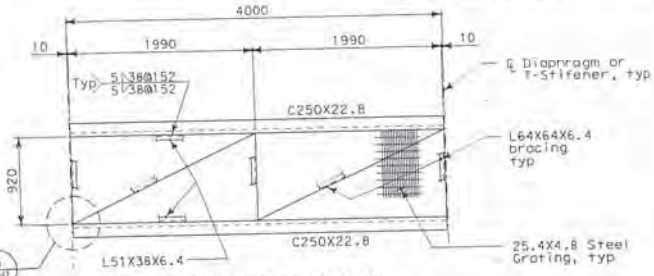

TYPICAL WALKWAY SECTION

2 / - **DETAIL**
SCALE:1:25

TYPICAL BEAM TO WEB CONNECTION

3 / - **DETAIL**
SCALE:1:10

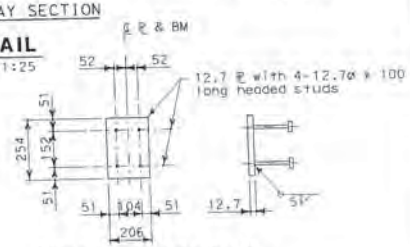

TYPICAL EMBEDDED PLATE

4 / - **DETAIL**
SCALE:1:10

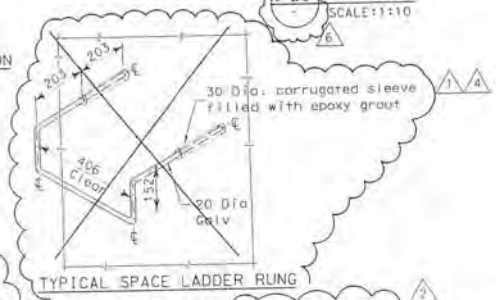

TYPICAL SPACE LADDER RUNG

5 / - **DETAIL**
SCALE:1:50

* See also Note 4

NOTES:

1. The contractor shall verify all controlling field dimensions before ordering or fabricating any material.
2. For ladder detail, see "Ladder Details" sheet AS-18 and AS-18C and "Walkway Sections" sheet AS-18A
3. For typical railing detail, see "Typical Railing and Misc Details" sheet AS-17.
4. ~~Per State letter 5-03-1-001735, the Contractor may use ladder detail on sheet AS-18 with drop in anchors in lieu of space ladder rungs (Detail 5 this sheet) as long as the conditions set forth in the said letter are satisfied. The anchors shall be proportioned as to comply with the load requirements of OSHA Construction Regulations for fixed ladders.~~

ALL DIMENSIONS ARE IN MILLIMETERS UNLESS OTHERWISE SHOWN

William Howe 4-11-05
REGISTERED CIVIL ENGINEER — DATE

REGISTERED PROFESSIONAL ENGINEER — WILLIAM BRADFORD HOWE — No. 53921 — Exp. 6/30/07 — CIVIL — STATE OF CALIFORNIA

MARK	DATE	DESCRIPTIONS	REV	CK
6	4/11/05	Removed sheet references in details. Revised note.	BRF	WBH
5	8/23/04	Replace weld with bolts.	RG	SH
4	6/25/04	Replace space rung with ladder.	LR	SH
3	3/22/04	Revised note	MG	MSO
2	4/23/03	Revised due to reconfiguration of web manholes.	KW	MSO
1	12/11/02	Coordinate deck MH location with Structures Plans. Added detail 5.	KW	MSO

REVISIONS

CONTRACT CHANGE ORDER NO. 24

SHEET - OF -

DESIGN	N.S. Dwyong	CHECKED	K. Liu
LAYOUT	G. Kurnovskaya	CHECKED	K. Liu
QUANTITIES	G. Benkovich	CHECKED	N. S. Dwyong

ORIGINAL SCALE IN MILLIMETERS FOR REDUCED PLANS 0 10 20 30 40 50 60 70 80 90 100

STATE OF CALIFORNIA
DEPARTMENT OF TRANSPORTATION

DIVISION OF STRUCTURES
STRUCTURAL DESIGN

CU 04251
EA 012021

BRIDGE NO. 34-0006
KILOMETER POST 13.0/14.3, 0.0/1.6

DISREGARD PRINTS BEARING EARLIER REVISION DATES:

STRUCTURE - EASTBOUND
TYPICAL WALKWAY DETAILS

AS-9

SHEET 18 OF 47

DATE PLOTTED = 20-APR-2005 TIME PLOTTED = 08:33

DIST	COUNTY	ROUTE	KILOMETER POST TOTAL PROJECT	SHEET NO	TOTAL SHEETS
04	SF, Ala	80	13.9 / 14.3, 0.0 / 1.6	93AR1	978

REGISTERED CIVIL ENGINEER — DATE 12/16/02

PLANS APPROVAL DATE

PARSONS BRINCKERHOFF QUADE & DOUGLAS, INC.
303 SECOND STREET, SUITE 700 N
SAN FRANCISCO, CA 94107

REGISTERED PROFESSIONAL ENGINEER — MEE SHING ONTARIO — No. 24960 — Exp. 12/31/05 — CIVIL — STATE OF CALIFORNIA

The State of California or its officers or agents shall not be responsible for the accuracy or completeness of electronic copies of this plan sheet.

Caltrans Metro

William Howe — REGISTERED CIVIL ENGINEER — 4/12/05 DATE

REGISTERED PROFESSIONAL ENGINEER — WILLIAM BRADFORD HOWE — No. 53921 — Exp. 6/30/07 — CIVIL — STATE OF CALIFORNIA

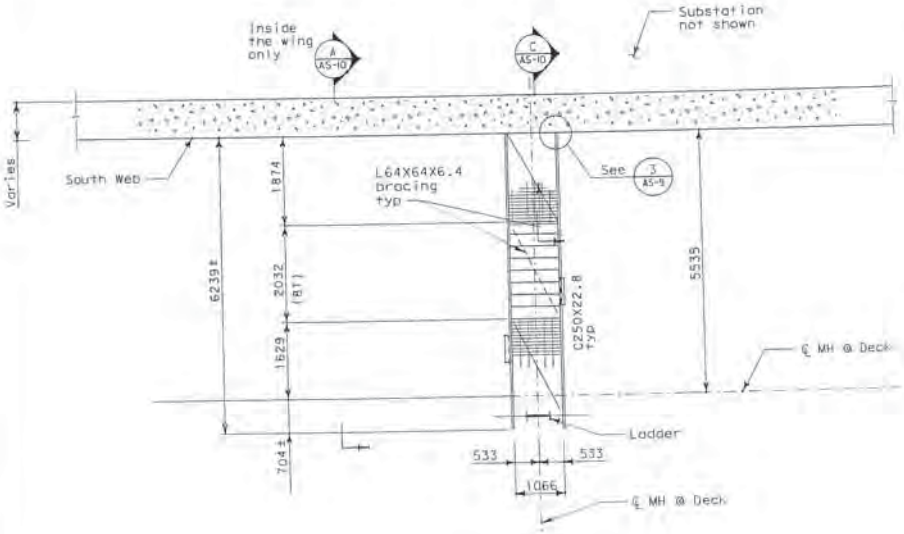

PLAN

1 AS-8 AS-10 **DETAIL**
SCALE:1:50

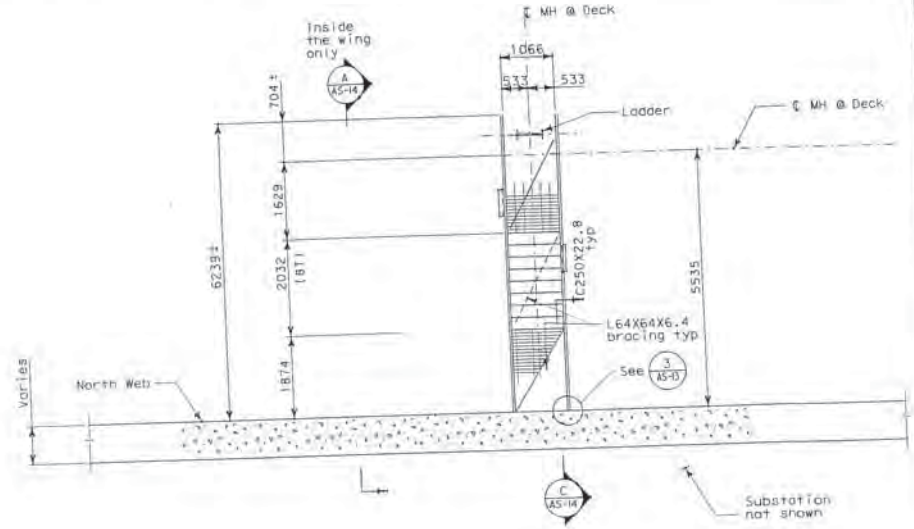

PLAN

2 AS-8 AS-10 **DETAIL**
SCALE:1:50

MARK	DATE	DESCRIPTIONS	REV	CK	
2	4/12/05	Revised note	MH		CCO NO.24
1	12/16/02	New sheet	KW	MSO	CCO NO.24

REVISIONS

CONTRACT CHANGE ORDER NO. 24 SE
SHEET 2 OF 26

NOTES:

1. The contractor shall verify all controlling field dimensions before ordering or fabricating any material.
2. For ladder detail, see "Ladder Details" sheet AS-1B and AS-1BC and "Walkway Sections" sheet AS-1BA
3. For typical railing detail, see "Typical Railing and Misc Details" sheet AS-17.

ALL DIMENSIONS ARE IN MILLIMETERS UNLESS OTHERWISE SHOWN

DESIGN	BY K. Rondkdew	CHECKED W.S. Owyang	
LAYOUT	BY O. Kurnovskaya	CHECKED W.S. Owyang	
QUANTITIES	BY K. Rondkdew	CHECKED W. S. Owyang	

ORIGINAL SCALE IN MILLIMETERS FOR REDUCED PLANS

STATE OF CALIFORNIA
DEPARTMENT OF TRANSPORTATION

DIVISION OF STRUCTURES
STRUCTURAL DESIGN

CU 04251
EA 012021

BRIDGE NO. 34-0006
KILOMETER POST 13.0/14.3, 0.0/1.6
DISREGARD PRINTS BEARING EARLIER REVISION DATES

STRUCTURE - E & W BOUND
TYPICAL WALKWAY DETAILS

AS-9A

SHEET 184 OF 47

FILE = 04-012024_93AR1.dgn
USERNAME = RMOSA01

DATE PLOTTED = 25-APR-2005 TIME PLOTTED = 08:41

DIST	COUNTY	ROUTE	KILOMETER POST TOTAL PROJECT	SHEET NO.	TOTAL SHEETS
04	SF, Ala	80	13.9 / 14.3, 0.0 / 1.6	93BR3	978

REGISTERED CIVIL ENGINEER — DATE 12/16/01

PLANS APPROVAL DATE

PARSONS BRINCKERHOFF QUADE & DOUGLAS, INC.
303 SECOND STREET, SUITE 700 N
SAN FRANCISCO, CA 94107

The State of California or its officers or agents shall not be responsible for the accuracy or completeness of electronic copies of this plan sheet.

NOTES:

1. The contractor shall verify all controlling field dimensions before ordering or fabricating any material.
2. For ladder detail, see "Ladder Details" sheet AS-18 and AS-18C and "Walkway Sections" sheet AS-18A.
3. For typical railing detail, see "Typical Railing and Misc Details" sheet AS-17.
4. For Call Box locations, see electrical plans.

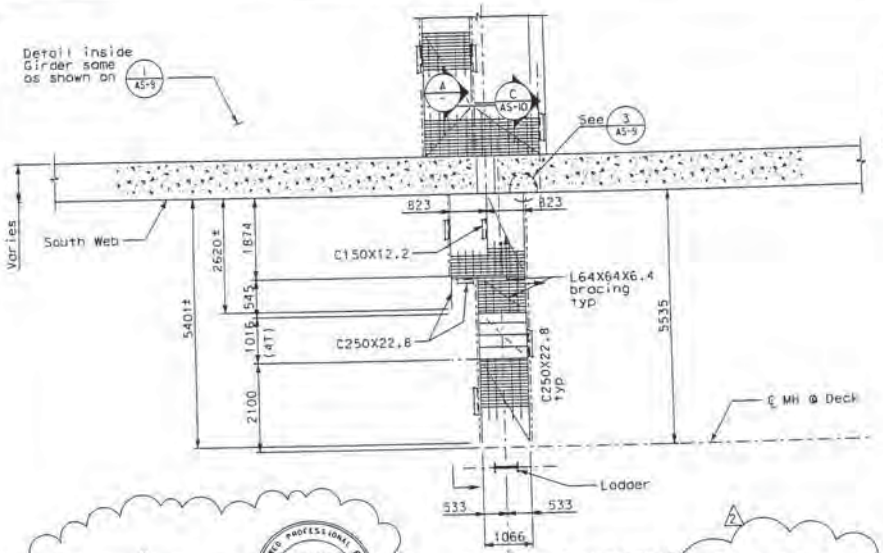

PLAN

1/AS-8 **DETAIL**
SCALE: NO SCALE

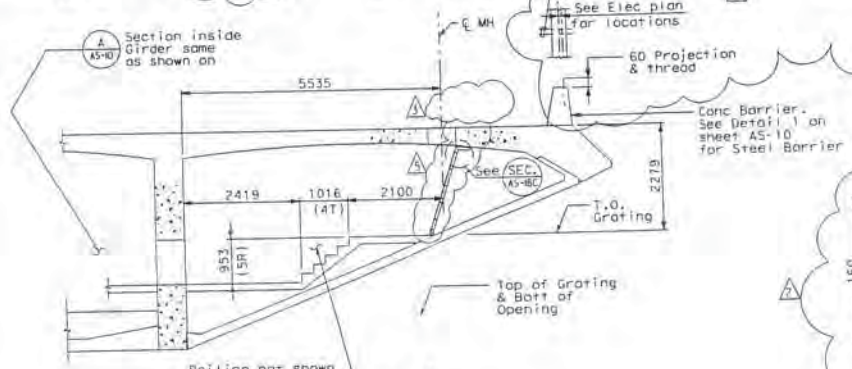

LAYOUT

A/- **SECTION**
SCALE: NO SCALE

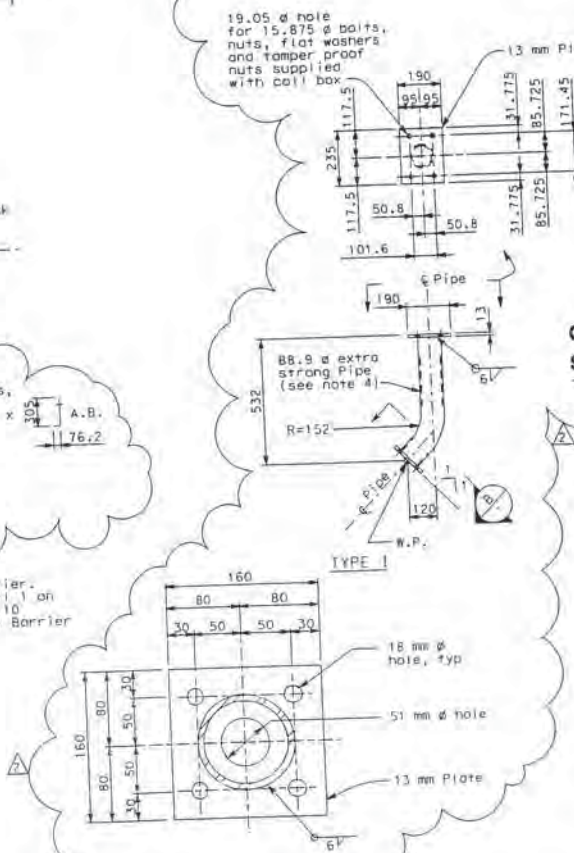

B/- **SECTION**
SCALE: NO SCALE

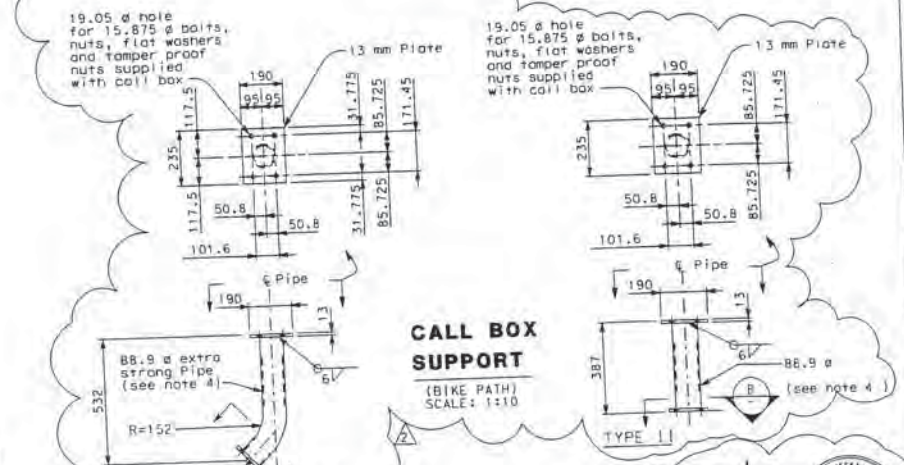

CALL BOX SUPPORT
(BIKE PATH)
SCALE: 1:10

MARK	DATE	DESCRIPTIONS	REV	CK	
6	4/12/05	Revised note and section heading	MH	WBH	CCO NO.24
5	11/15/04	Modified access ladder to an inclined ladder deleted ladder ℄ and deleted 3	MO	GJ	CCO NO.59
4	3/22/04	Clarify note	MG		CCO NO.24
3	9/17/03	Revised ladder detail at deck MH.	KW	MSO	CCO NO.59
2	8/12/03	Add bike path call box support revised call box mounting	MSO	EJL	CCO NO.60
1	12/16/02	New sheet	KW	MSO	CCO NO.24

REVISIONS

CONTRACT CHANGE ORDER NO. 24 SE
SHEET E OF EG

ALL DIMENSIONS ARE IN MILLIMETERS UNLESS OTHERWISE SHOWN

DESIGN	K. Wongkaew	CHECKED	W. S. Dwyong
LAYOUT	D. Kurnovskaya	CHECKED	W. S. Dwyong
QUANTITIES	K. Wongkaew	CHECKED	W. S. Dwyong

ORIGINAL SCALE IN MILLIMETERS FOR REDUCED PLANS

STATE OF CALIFORNIA
DEPARTMENT OF TRANSPORTATION

DIVISION OF STRUCTURES
STRUCTURAL DESIGN

BRIDGE NO. 34-0006
KILOMETER POST 13.0/14.3, 0.0/1.6

CU 04251
EA 012021

DGN FILE => ...\04-012024_93BR3.dgn
USERNAME => MOnron

DISREGARD PRINTS BEARING EARLIER REVISION DATES

STRUCTURE - EASTBOUND
TYPICAL WALKWAY DETAILS

AS-9B

SHEET 188 OF 47

REVISION DATES (PRELIMINARY STAGE ONLY)

DATE PLOTTED => 05/04/05 TIME PLOTTED => 09:01:57 AM

DIST	COUNTY	ROUTE	KILOMETER POST TOTAL PROJECT	SHEET NO.	TOTAL SHEETS
04	SF, Ala	80	13.6 / 14.3 0.0 / 1.6	93CR5	978

REGISTERED CIVIL ENGINEER — DATE 12/16/02

PLANS APPROVAL DATE

PARSONS BRINCKERHOFF QUADE & DOUGLAS, INC.
303 SECOND STREET, SUITE 700 N
SAN FRANCISCO, CA 94107

REGISTERED PROFESSIONAL ENGINEER — WEE SHING OWYANG — No. 24560 — Exp. 12/31/05 — CIVIL — STATE OF CALIFORNIA

The State of California or its officers or agents shall not be responsible for the accuracy or completeness of electronic copies of this plan sheet.

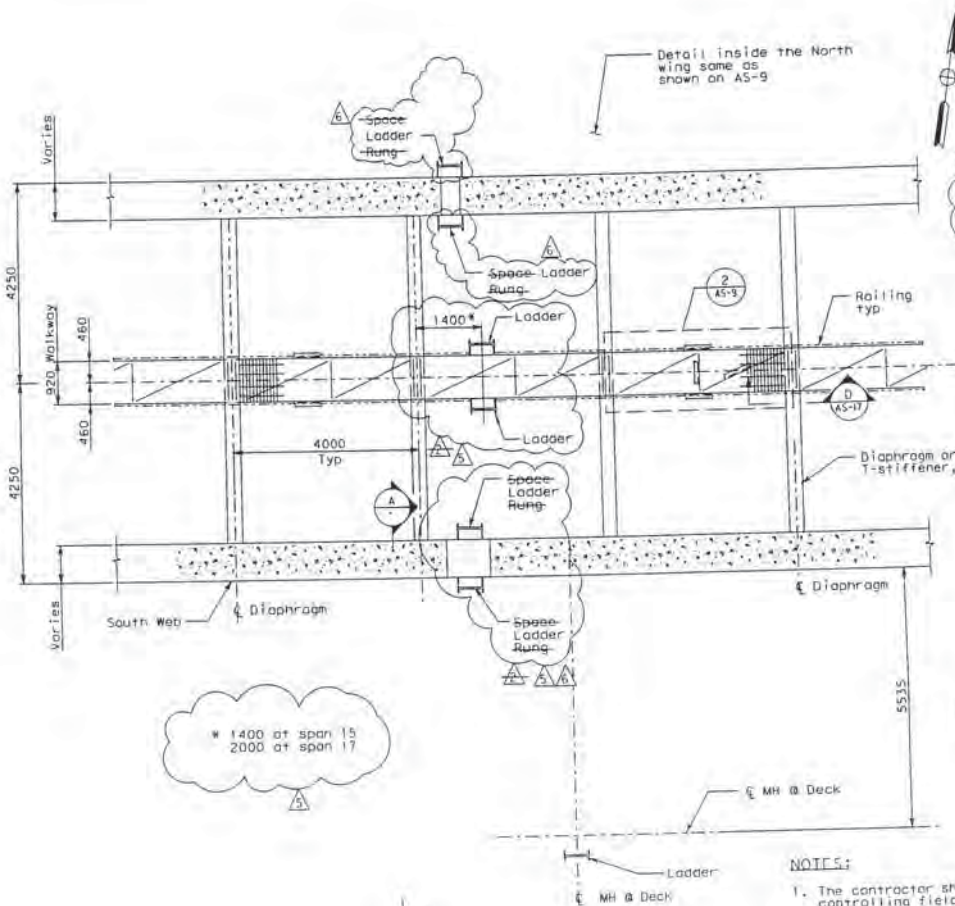

PLAN

1 AS-8 **DETAIL**
SCALE: 1:50

William Howe — REGISTERED CIVIL ENGINEER — 4-12-05 DATE

REGISTERED PROFESSIONAL ENGINEER — WILLIAM BRADFORD HOWE — No. 53321 — Exp. 6/30/07 — CIVIL — STATE OF CALIFORNIA

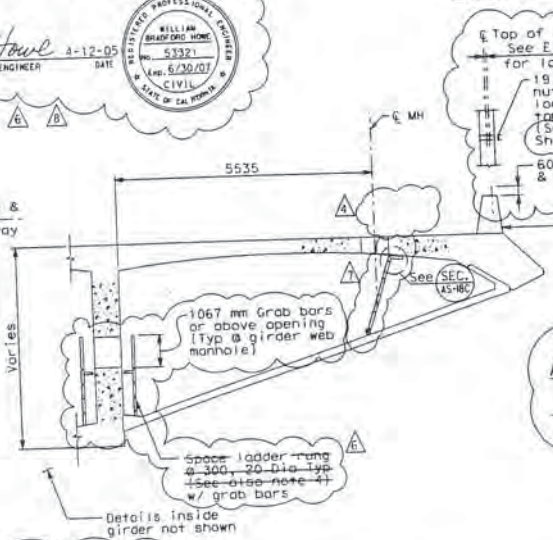

LAYOUT INSIDE SOUTH WING

A — **SECTION**
SCALE: NO SCALE

Muthuvan S. Oyan — REGISTERED CIVIL ENGINEER — DATE — FOR CHANGE 7 ONLY

REGISTERED PROFESSIONAL ENGINEER — Muthuvan S. Oyan — No. 61631 — Exp. 06/30/05 — CIVIL — STATE OF CALIFORNIA

NOTES:

1. The contractor shall verify all controlling field dimensions before ordering or fabricating any material.
2. For ladder detail, see "Ladder Details" sheet AS-18 and AS-18C and "Walkway Sections" sheet AS-18A
3. For typical railing detail, see "Typical Railing and Misc Details" sheet AS-17.
4. ~~For space ladder rung detail, see Detail 5 and Note 4 of Sheet AS-9.~~
5. ~~Space~~ ladder ~~rungs~~ shall align with web manholes. ~~whose configurations are specified in State Letter 5.03.1-001467.~~

MARK	DATE	DESCRIPTIONS	REV	CK
10	4/12/05	Revised note and section heading	MH	WBH CCO NO.24
7	1/15/04	Modified access ladder to an inclined ladder and deleted ladder CL	MO	GJ CCO NO.59
6	6/25/03	Place deck manhole in correct location. Replace space ladder rung w/ ladder.	LR	SH CCO NO.24
5	3/22/03	Delete remark 2. Relocate space ladder rungs. Add note.	MG	CCO NO.24
4	9/17/03	Revised ladder detail at deck MH.	KW	MSO CCO NO.59
3	9/12/03	Revised call box mounting	KW	CJL CCO NO.60
2	~~4/21/03~~	~~Relocate space ladder rungs due to state Ltr. 5.03.1-001467. Add note due to state Ltr. 5.03.1-001335~~	~~MSO~~	~~MSO CCO NO.24~~
1	12/16/02	New sheet	KW	MSO CCO NO.24

REVISIONS

CONTRACT CHANGE ORDER NO. 24 S2
SHEET 6 OF 26

ALL DIMENSIONS ARE IN MILLIMETERS UNLESS OTHERWISE SHOWN

DESIGN	K. Wongkaew	M. S. Owyang
LAYOUT	G. Kurnovskaya	M. S. Owyang
QUANTITIES	K. Wongkaew	M. S. Owyang

ORIGINAL SCALE IN MILLIMETERS FOR REDUCED PLANS 0 10 20 30 40 50 60 70 80 90 100

STATE OF CALIFORNIA
DEPARTMENT OF TRANSPORTATION

DIVISION OF STRUCTURES

CU 04251
EA 012021

DGN FILE => ...\04-012024_93CR5.dgn
USERNAME => MDmron

BRIDGE NO. 34-0006
KILOMETER POST 13.0/14.3, 0.0/1.6
DISREGARD POINTS BEARING EARLIER REVISION DATES

STRUCTURE - EASTBOUND
TYPICAL WALKWAY DETAILS

AS-8C

SHEET 18C OF 47

REVISION DATES (WHEN APPROVED, STATE USE ONLY)

TIME PLOTTED => 08:56:14 AM
DATE PLOTTED => 05/04/05

DIST	COUNTY	ROUTE	KILOMETER POST TOTAL PROJECT	SHEET No.	TOTAL SHEETS
04	SF, Alo	80	13.9 / 14.3, 0.0 / 1.6	930 R4	978

REGISTERED CIVIL ENGINEER — DATE 12/16/02

PLANS APPROVAL DATE

REGISTERED PROFESSIONAL ENGINEER — WEE SHING ONYANG — No. 24560 — EXP. 12/31/05 — CIVIL — STATE OF CALIFORNIA

PARSONS BRINCKERHOFF QUADE & DOUGLAS, INC.
303 SECOND STREET, SUITE 700 N
SAN FRANCISCO, CA 94107

The State of California or its officers or agents shall not be responsible for the accuracy or completeness of electronic copies of this plan sheet.

Caltrans Metro

MARK	DATE	DESCRIPTIONS	REV	CK	
5	4/12/05	Revised note	BRF		CCO NO.24
4	5/25/04	Replace space rung w/ ladder, Revised lader quantity.	LR	SH	CCO NO.24
3	3/22/04	Delete remark 2. Revise web MH location and add note	MG		CCO NO.24
2	4/23/03	~~Revise web MH location per State letter 5.03.1-001467 and add note~~	KW	MSO	~~CCO NO.24~~
1	12/16/02	New sheet	KW	MSO	CCO NO.24

REVISIONS

CONTRACT CHANGE ORDER NO. 24 S2
SHEET 7 OF 26

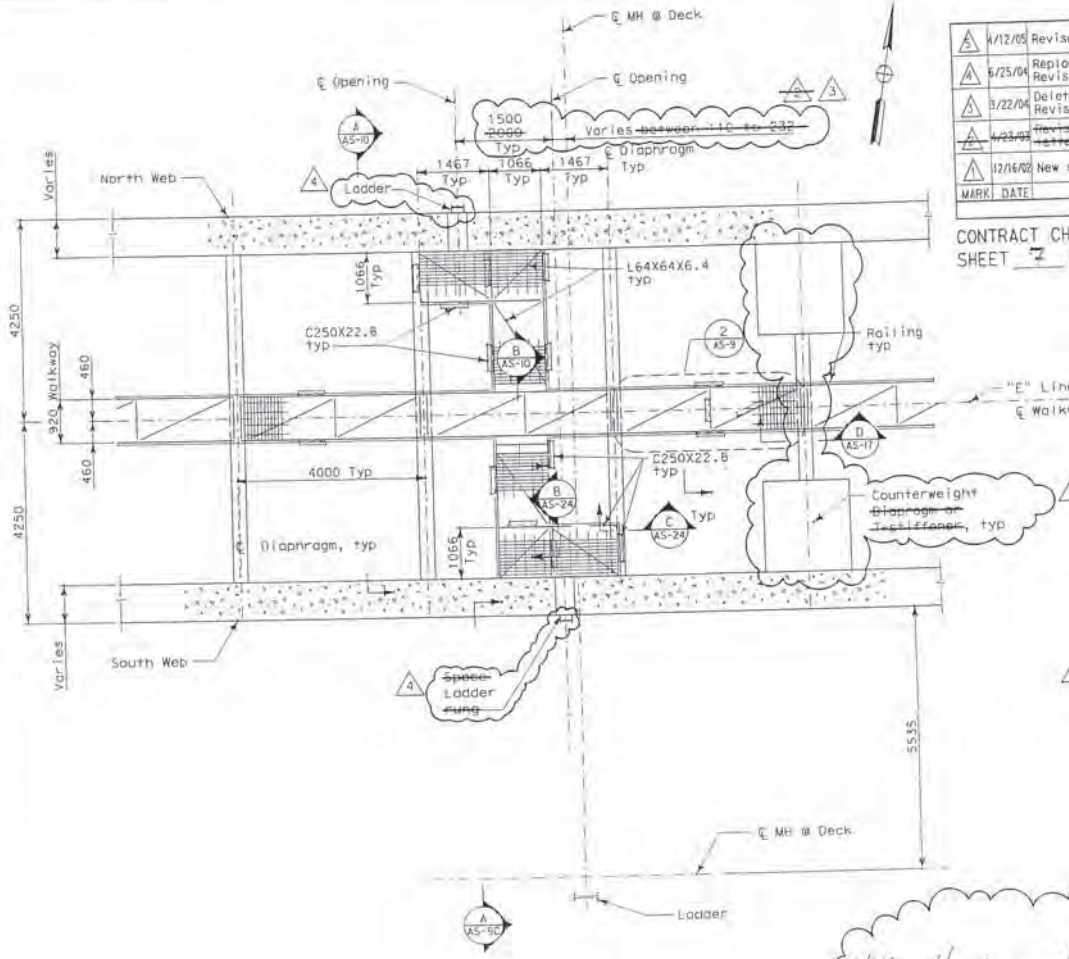

PLAN

1 / AS-8 **DETAIL**
SCALE: 1:50

Ladder Quantities

SPAN	LADDER		
	SOUTH WING	INSIDE GIRDER	NORTH WING
Pier E3E-SW	2.28 m		1.25 m
Pier E3E TO E4E	2.28 m		1.25 m
Pier E4E TO E5E	2.28 m		1.25 m
Pier E5E TO E6E	2.28 m		1.25 m
Pier E6E TO E7E	2.28 m	4 * 1.25 m	1.25 m
Pier E7E TO E8E	2.28 m		1.25 m
Pier E8E TO E9E	2.28 m		1.25 m
Pier E9E TO E10E	2.28 m		1.25 m
Pier E10E TO E11E	2.28 m	4 * 1.25 m	1.25 m
Pier E11E TO E12E	2.28 m		1.25 m
Pier E12E TO E13E	2.28 m		0.96 m
Pier E13E TO E14E	2.18 m		0.96 m
Pier E14E TO E15E	1.93 m + 0.96 m	4 * 0.96 m	0.96 m
Pier E15E TO E16E	1.69 m + 0.96 m		0.96 m
Pier E16E TO E17E	1.53 m + 0.96 m	4 * 0.96 m	0.96 m

NOTES:

1. The contractor shall verify all controlling field dimensions before ordering or fabricating any material.
2. For ladder detail, see "Ladder Details" sheet AS-18 and AS-18C and "Walkway Sections" sheet AS-18A
3. For typical railing detail, see "Typical Railing and Misc Details" sheet AS-17.
4. Ladders lengths are approximated. The contractor shall verify the controlling field dimensions before ordering or fabricating any material.
5. ~~For space ladder rung detail, see Detail 2 and Note 4 of Sheet AS-9.~~
6. ~~Space~~ ladder ~~rungs~~ shall align with web manholes. ~~Whose configurations are specified in State Letter 5.03.1-001467.~~

William Howe — REGISTERED CIVIL ENGINEER — 4/12/05 DATE

REGISTERED PROFESSIONAL ENGINEER — WILLIAM BRADFORD HOWE — No. 53521 — EXP. 6/30/07 — CIVIL — STATE OF CALIFORNIA

ALL DIMENSIONS ARE IN MILLIMETERS UNLESS OTHERWISE SHOWN

DESIGN	K. Wongkaew	CHECKED	M. S. Ouyang
LAYOUT	D. Kurnovskaya	CHECKED	M. S. Ouyang
QUANTITIES	K. Wongkaew	CHECKED	M. S. Ouyang

ORIGINAL SCALE IN MILLIMETERS FOR REDUCED PLANS

STATE OF CALIFORNIA
DEPARTMENT OF TRANSPORTATION

DIVISION OF STRUCTURES
STRUCTURAL DESIGN

BRIDGE NO. 34-0006
KILOMETER POST 13.0/14.3, 0.0/1.6
CU 04251
EA 012021
DGN FILE = s04-012024_9.dgn
USERNAME = swong01

DISREGARD PRINTS BEARING EARLIER REVISION DATES:

STRUCTURE - EASTBOUND
TYPICAL WALKWAY DETAILS

AS-9D

SHEET 180 OF 47

DATE PLOTTED = 20-APR-2005 TIME PLOTTED = 08:58

DIST	COUNTY	ROUTE	KILOMETER POST TOTAL PROJECT	SHEET NO.	TOTAL SHEETS
04	SF, ALA	80	13.9/14.3 0.0/1.6	93ER2	978

Caltrans Metric

William Howe 9/9/04
REGISTERED CIVIL ENGINEER

PLANS APPROVAL DATE

REGISTERED PROFESSIONAL ENGINEER WILLIAM BRADFORD HOWE NO. 53321 EXP. 6/30/07 CIVIL STATE OF CALIFORNIA

The State of California or its officers or agents shall not be responsible for the accuracy or completeness of electronic copies of this plan sheet.

Caltrans now has a web site! To get to the web site, go to: http://www.dot.ca.gov

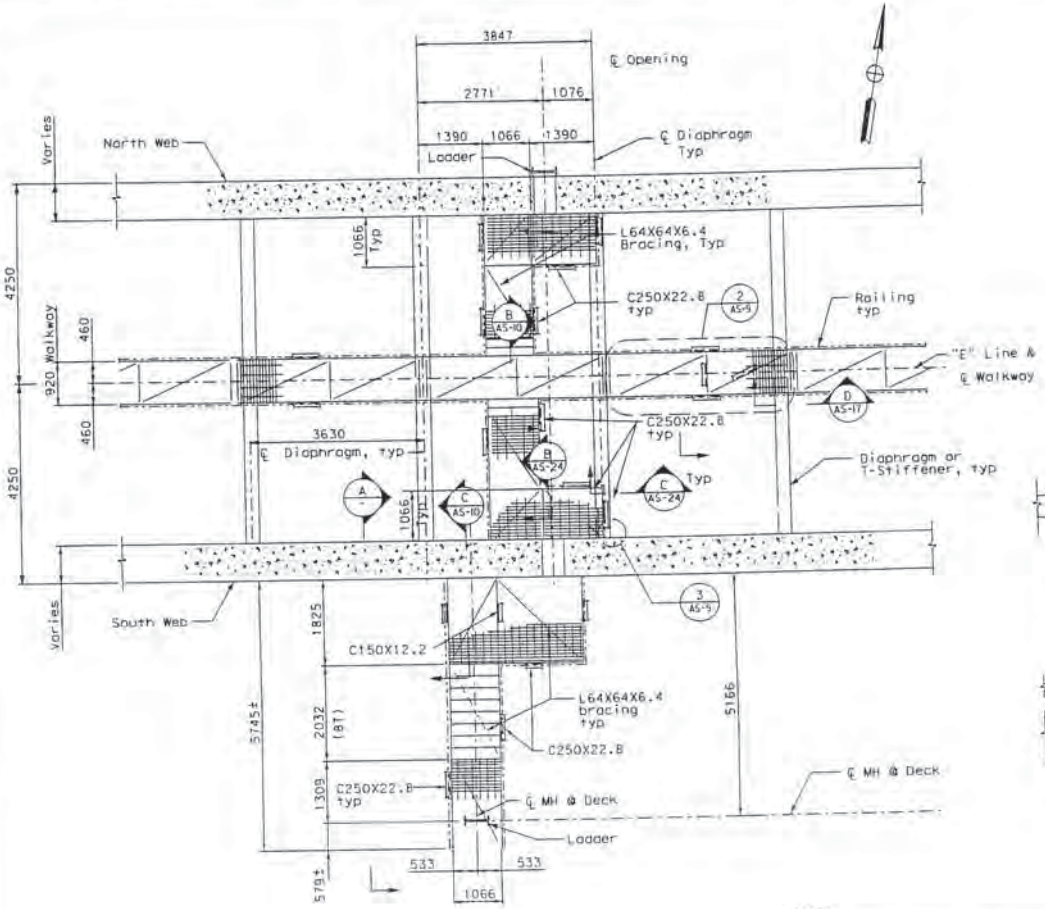

PLAN

1 AS-8 **DETAIL**
SCALE: 1:50

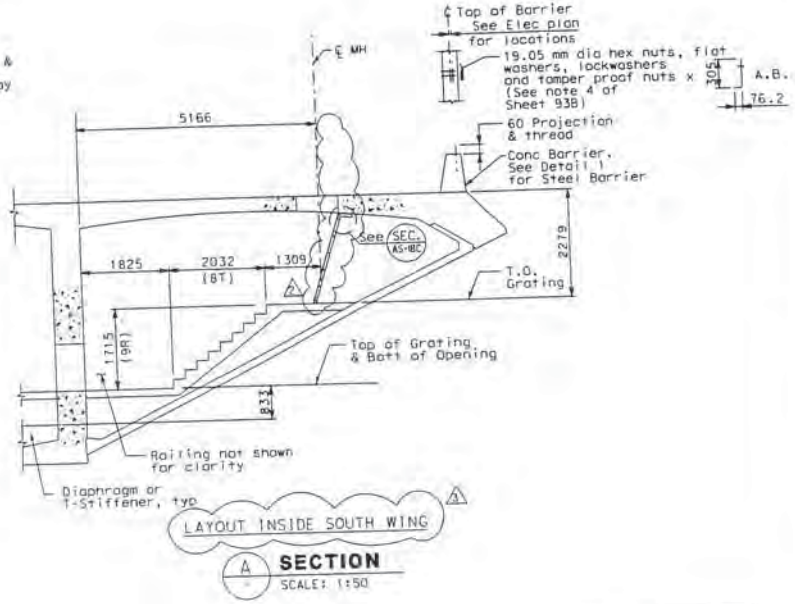

A **SECTION**
SCALE: 1:50

NOTES:

1. The contractor shall verify all controlling field dimensions before ordering or fabricating any material.
2. For ladder detail, see "Ladder Details" sheet AS-18 and AS-18C and "Walkway Sections" sheet AS-18A.
3. For typical railing detail, see "Typical Railing and Misc Details" sheet AS-17.

MARK	DATE	DESCRIPTIONS	REV.	CK.	
4	4/12/05	Revised note and section heading	MH	WBH	CCO 24
3	1/15/04	Modified access ladder to an inclined ladder and deleted ladder 1	MO	GJ	CCO 59
1	06/31/04	NEW DRAWING			CCO 24

REVISIONS

CONTRACT CHANGE ORDER NO. 2 2 5 2
SHEET 5 OF 2 5

Mathanna S. Omran
REGISTERED CIVIL ENGINEER
DATE
REGISTERED PROFESSIONAL ENGINEER MATHANNA S. OMRAN NO. 61837 EXP. 06/30/05 CIVIL STATE OF CALIFORNIA
CCO CHANGE 2 ONLY

STRUCTURES - EASTBOUND TYPICAL WALKWAY DETAILS

AS-9E

ALL DIMENSIONS ARE IN MILLIMETERS UNLESS OTHERWISE SHOWN

RELATIVE BORDER SCALE IS IN MILLIMETERS 0 20 40 60 80

USERNAME = MOMRAN
DGN FILE = ...\04-012024_93ER2.dgn

CU 04251 EA 012024

LAST REVISION 00-00-00
DATE PLOTTED = 05-04-05
TIME PLOTTED = 08:15:11 AM

STATE OF CALIFORNIA - DEPARTMENT OF TRANSPORTATION
Caltrans

PROJECT ENGINEER
CALCULATED/DESIGNED BY
CHECKED BY
DATE REVISED BY
DATE REVISED

DIST	COUNTY	ROUTE	KILOMETER POST TOTAL PROJECT	SHEET No.	TOTAL SHEETS
04	SF, Ala	80	13.8/14.3 0.0/1.6	93F R2	978

Caltrans Metric

William Howe 9/10/04
REGISTERED CIVIL ENGINEER

9/10/04
PLANS APPROVAL DATE

REGISTERED PROFESSIONAL ENGINEER WILLIAM BRADFORD HOWE NO. 53321 EXP. 6/30/07 CIVIL STATE OF CALIFORNIA

The State of California or its officers or agents shall not be responsible for the accuracy or completeness of electronic copies of this plan sheet.

Caltrans now has a web site! To get to the web site, go to: http://www.dot.ca.gov

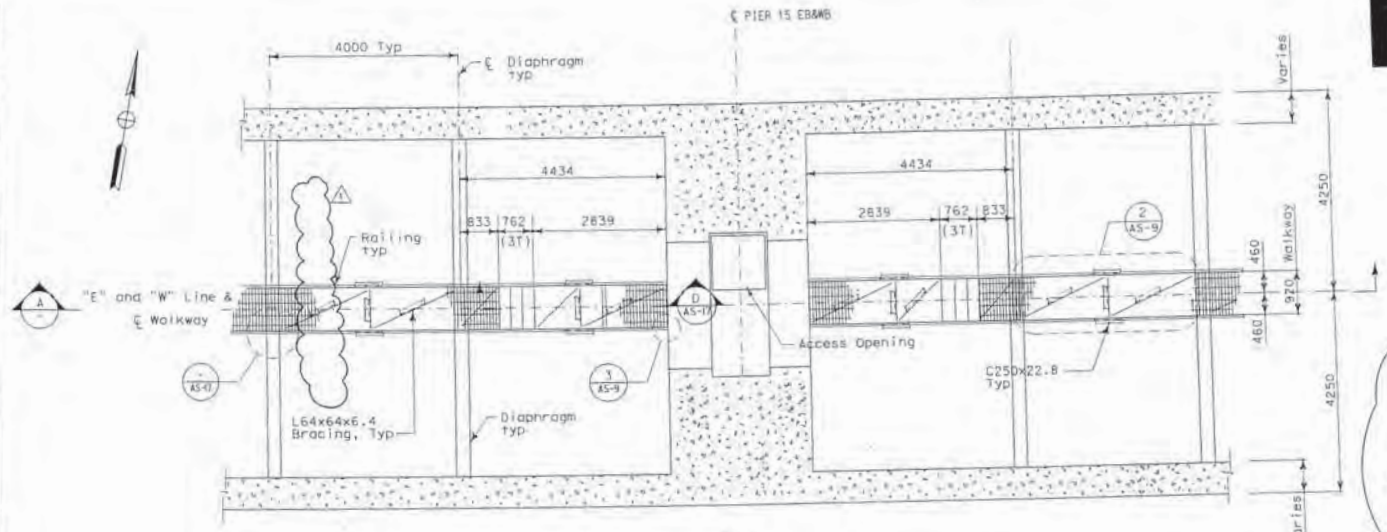

PLAN

2 AS-12 2 AS-8 **DETAIL** SCALE: 1:50

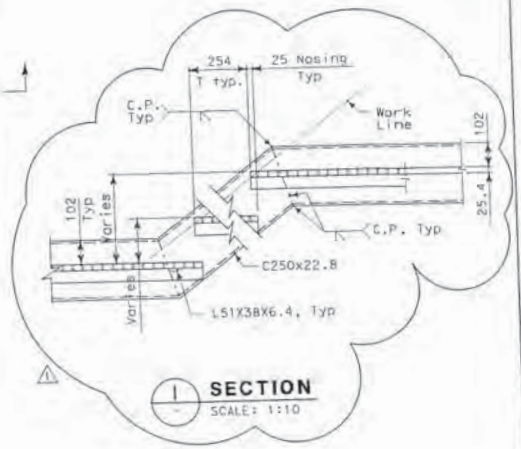

1 **SECTION** SCALE: 1:10

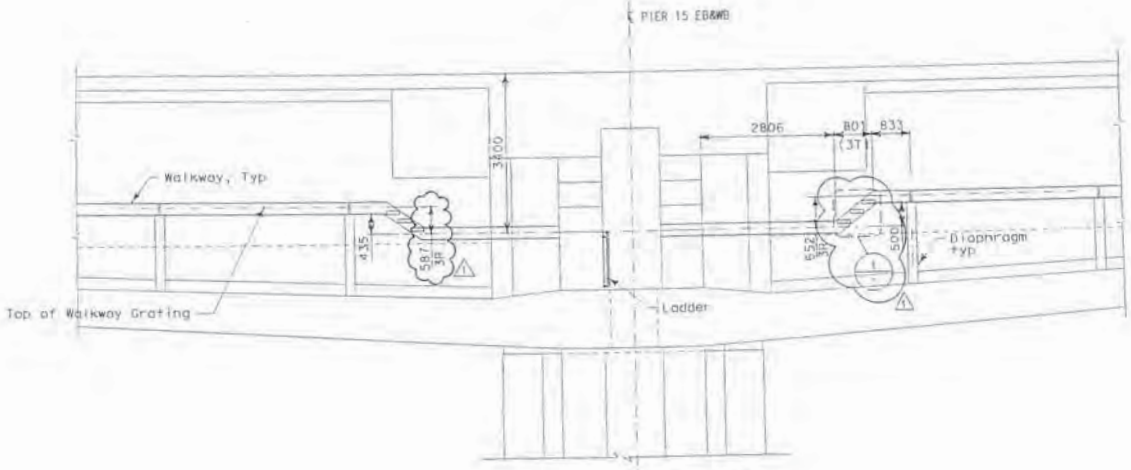

A **SECTION** SCALE: 1:50

ALL DIMENSIONS ARE IN MILLIMETERS UNLESS OTHERWISE SHOWN

NOTES

1. The contractor shall verify all controlling field dimensions before ordering or fabricating any material.
2. For typical walkway section see "Typical Walkway Details" sheet AS-9.
3. For typical railing details, see sheet AS-17.
4. For typical westbound, identical
5. Plan accurate for walkways only.

MARK	DATE	DESCRIPTIONS	REV	CK
1	9/10/04	ADDED SECTION 1, CLARIFIED STAIRWAY DIMENSIONS, REMOVED SECTION B	BRF	CCO 24
	6/31/04	NEW DRAWING		CCO 24

REVISIONS

CONTRACT CHANGE ORDER NO. 24 S2
SHEET 9 OF 26

STRUCTURAL - EB/WB WALKWAY AT PIER 15

AS-9F

STATE OF CALIFORNIA - DEPARTMENT OF TRANSPORTATION
Caltrans

PROJECT ENGINEER | CALCULATED/DESIGNED BY | CHECKED BY | DATE REVISED BY | DATE REVISED

RELATIVE BORDER SCALE IS IN MILLIMETERS

USERNAME | DGN FILE

CU 0425J | EA 012024

DATE PLOTTED 29-APR-2005
TIME PLOTTED 13:24
LAST REVISION 00-00-00

DIST	COUNTY	ROUTE	KILOMETER POST TOTAL PROJECT	SHEET NO	TOTAL SHEETS
04	SF, Ala	80	13.9/14.3 0.0/1.6	93G R2	978

William Howe 9/10/04
REGISTERED CIVIL ENGINEER

9/10/04
PLANS APPROVAL DATE

REGISTERED PROFESSIONAL ENGINEER WILLIAM BRADFORD HOWE No. 53321 Exp. 6/30/07 CIVIL STATE OF CALIFORNIA

The State of California or its officers or agents shall not be responsible for the accuracy or completeness of electronic copies of this plan sheet.

Caltrans now has a web site! To get to the web site, go to: http://www.dot.ca.gov

Caltrans Metric

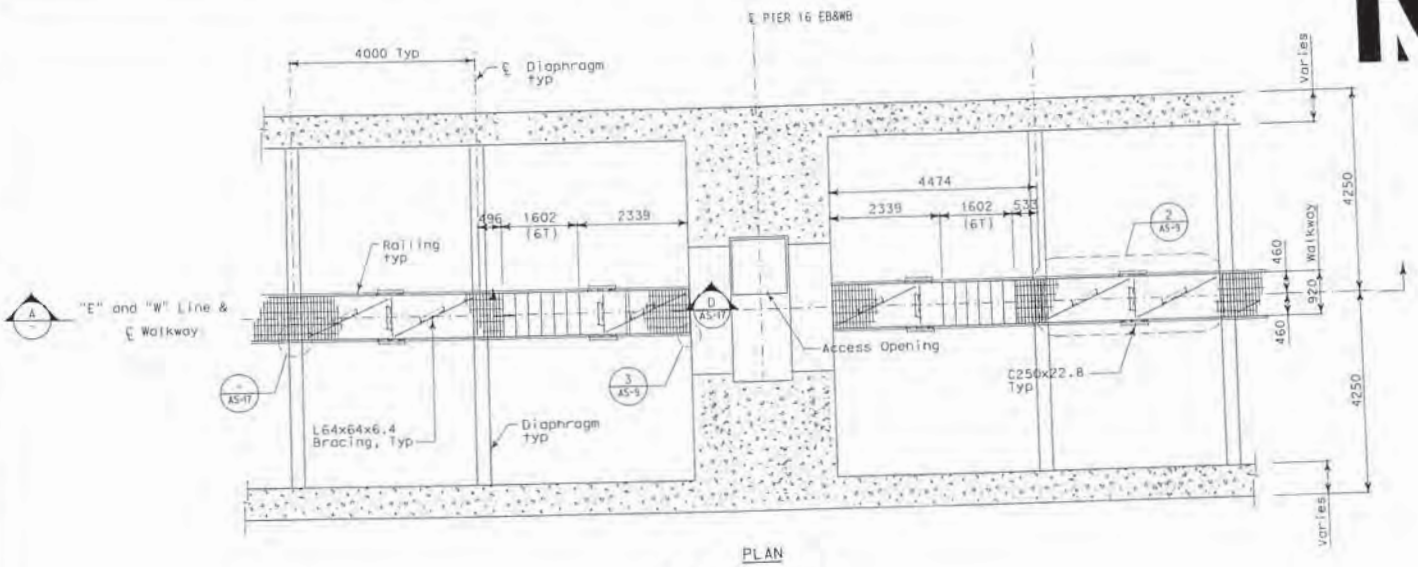

PLAN

DETAIL
1/AS-12 1/AS-8 SCALE: 1:50

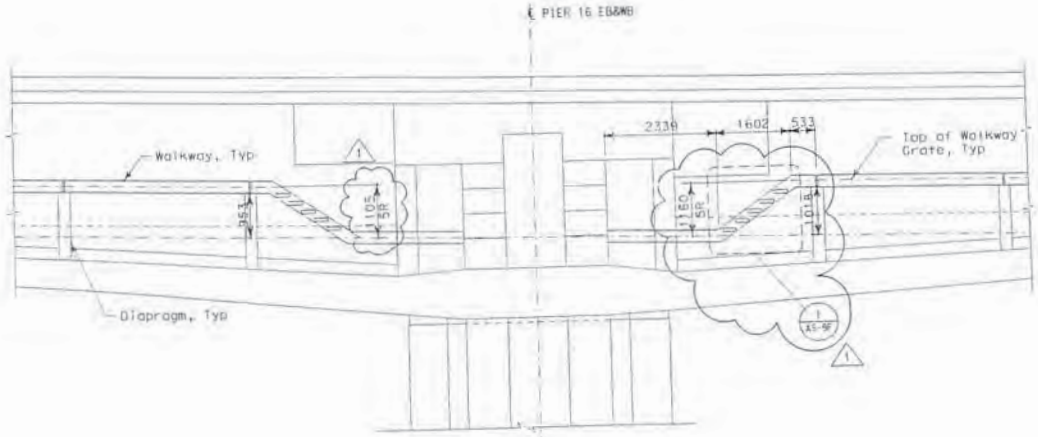

SECTION
SCALE: 1:50

ALL DIMENSIONS ARE IN MILLIMETERS UNLESS OTHERWISE SHOWN

NOTES

1. The contractor shall verify all controlling field dimensions before ordering or fabricating any material.
2. For typical walkway section see "Typical Walkway Details" sheet AS-9.
3. For typical railing details, see sheet AS-17.
4. For typical westbound, identical
5. Plan accurate for walkways only.

MARK	DATE	DESCRIPTIONS	REV.	CK.
1	9/10/04	CLARIFIED STAIRWAY DIMENSIONS	BRF	CCO 24
	06/31/04	NEW DRAWING		CCO 24

REVISIONS

CONTRACT CHANGE ORDER NO. 2452
SHEET 10 OF 36

STRUCTURAL EB/WB WALKWAY AT PIER 16

AS-9G

STATE OF CALIFORNIA - DEPARTMENT OF TRANSPORTATION
Caltrans

PROJECT ENGINEER
CALCULATED/DESIGNED BY
CHECKED BY
DATE REVISED BY
DATE REVISED

LAST REVISION 00-00-00 DATE PLOTTED 03-09-2005 TIME PLOTTED 03:32:49

RELATIVE BORDER SCALE IN MILLIMETERS 0 20 40 60 80

USER NAME = bhowe
DGN FILE = 4394-012024_S-SGC.dgn

CU 04251

EA 012024

DIST	COUNTY	ROUTE	KILOMETER POST TOTAL PROJECT	SHEET NO	TOTAL SHEETS
04	SF, ALA	80	13.9 / 14.3, 0.0 / 1.6	94R4	97B

REGISTERED CIVIL ENGINEER 05/18/01 DATE

6-4-01
PLANS APPROVAL DATE

PARSONS BRINCKERHOFF QUADE & DOUGLAS, INC.
303 SECOND STREET, SUITE 700 N
SAN FRANCISCO, CA 94107

The State of California or its officers or agents shall not be responsible for the accuracy or completeness of electronic copies of this plan sheet.

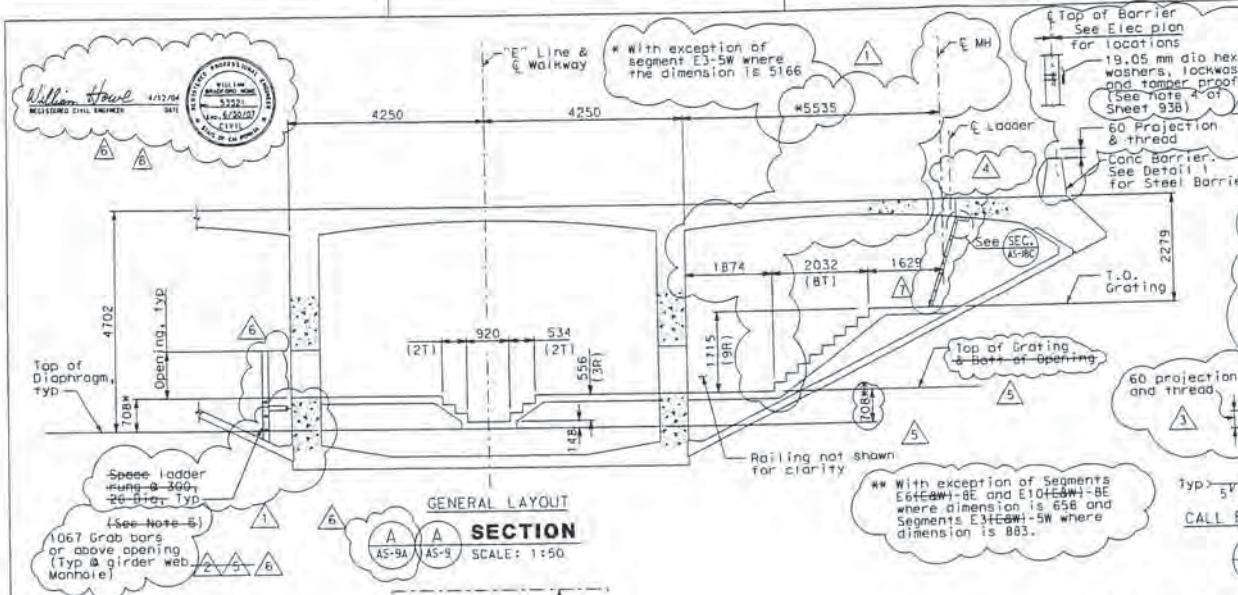

GENERAL LAYOUT

A/AS-9A A/AS-9 **SECTION**
SCALE: 1:50

** With exception of Segments E6~~(EBW)~~-8E and E10~~(EBW)~~-8E where dimension is 658 and Segments E3~~(EBW)~~-5W where dimension is 883.

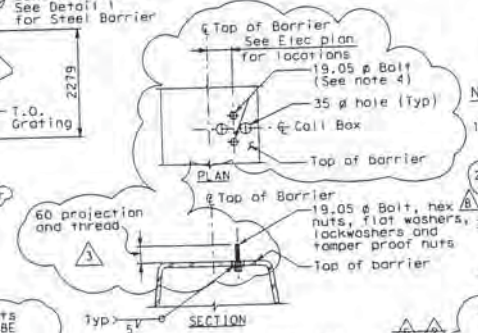

CALL BOX ON METAL BARRIER

1/- **DETAIL**
NO SCALE

NOTES:

1. The contractor shall verify all controlling field dimensions before ordering or fabricating any material.
2. For ladder detail, see "Ladder Details" sheet AS-18 and AS-18C and "Walkway Sections" sheet AS-18A.
3. For typical railing detail, see "Typical Railing and Miscellaneous Details" sheet AS-17.
4. For callbox anchor bolt locations, see electrical callbox schedule EE-337.
5. ~~For space ladder rung or alternate details, see Detail 5 and Note 4 of Sheet AS-9.~~

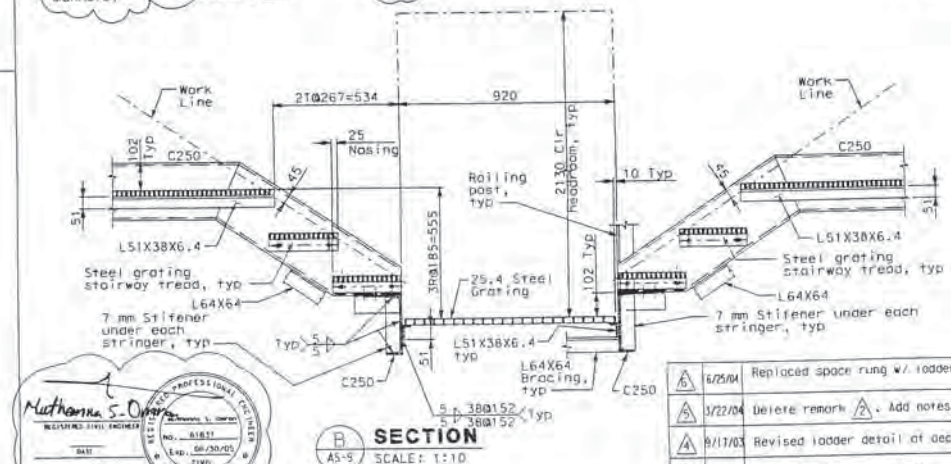

B/AS-9 **SECTION**
SCALE: 1:10

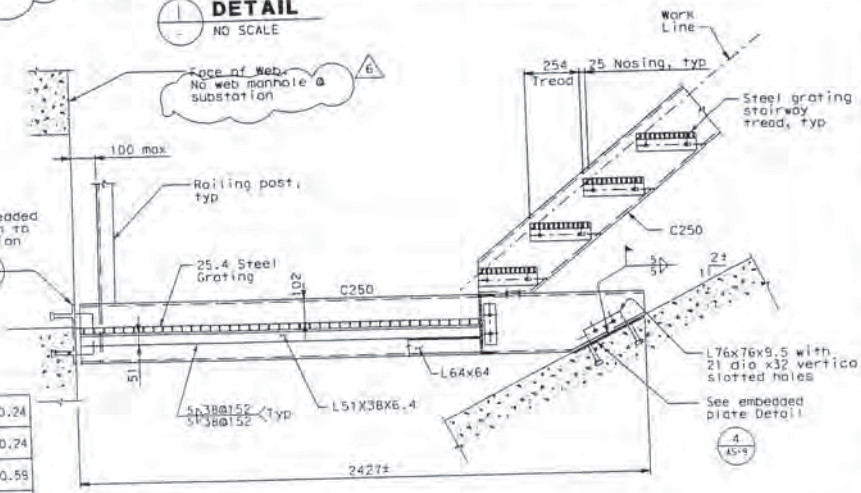

C/AS-9A C/AS-9 **SECTION**
SCALE: 1:10

ALL DIMENSIONS ARE IN MILLIMETERS UNLESS OTHERWISE SHOWN.

MARK	DATE	DESCRIPTIONS	REV	CK	
8	4/12/05	Revised note	BRF		CCO NO.24
7	11/15/04	Modified access ladder to an inclined ladder 4 and deleted ladder 2 and deleted	MO	GJ	CCO NO.59

MARK	DATE	DESCRIPTIONS	REV	CK	
6	6/25/04	Replaced space rung w/ ladder.	LR	SH	CCO NO.24
5	3/22/04	Delete remark 2. Add notes.	KW	MSO	CCO NO.24
4	9/17/03	Revised ladder detail at deck MH	KW	MSO	CCO NO.59
3	9/17/03	Revised call box mounting	KW	EJL	CCO NO.60
2	~~4/23/03~~	~~Add note to static Letter 5.03.1-001335~~	~~MSO~~	~~MSO~~	~~CCO NO.24~~
1	12/11/02	Add space ladder. Relocate ℄ of MH at deck.	KW	MSO	CCO NO.24

REVISIONS

CONTRACT CHANGE ORDER NO. 24 S 2
SHEET 11 OF 26

DESIGN: W.S. Dwyong — CHECKED: E. Liu
LAYOUT: O. Kurnovskoye — CHECKED: E. Liu
QUANTITIES: D. Benkovich — CHECKED: W. S. Dwyong

ORIGINAL SCALE IN MILLIMETERS FOR REDUCED PLANS 0 10 20 30 40 50 60 70 80 90 100

STATE OF CALIFORNIA
DEPARTMENT OF TRANSPORTATION

DIVISION OF STRUCTURES
STRUCTURAL DESIGN

BRIDGE NO.: 34-0006
KILOMETER POST: 13.0/14.3, 0.0/1.6
DISREGARD PRINTS BEARING EARLIER REVISION DATES

CU 04251
EA 012021

DGN FILE => ...\04-012024_94R4.dgn
USERNAME => MOmran

STRUCTURE - EASTBOUND
WALKWAY SECTIONS
SHEET 1 OF 2

AS-10

SHEET 19 OF 47

TIME PLOTTED => 08:58:04 AM
DATE PLOTTED => 05/04/05

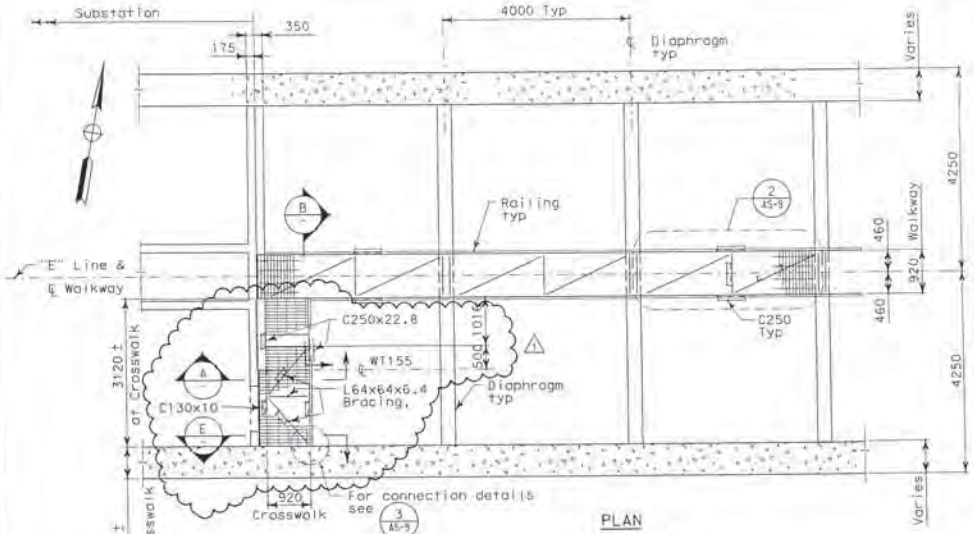

PLAN

3/AS-8 DETAIL
SCALE: 1:50

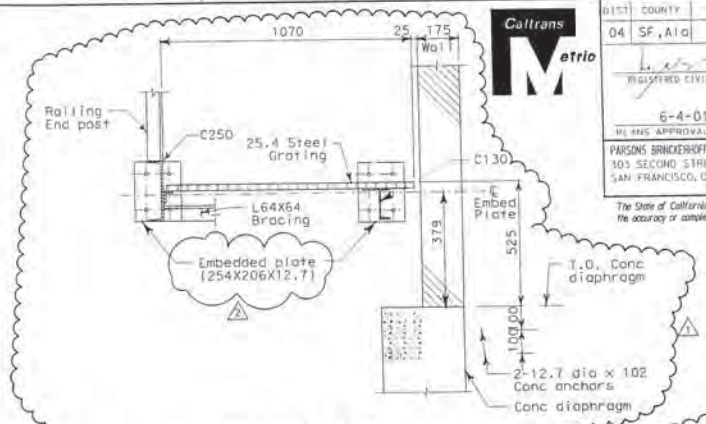

E SECTION
SCALE: 1:10

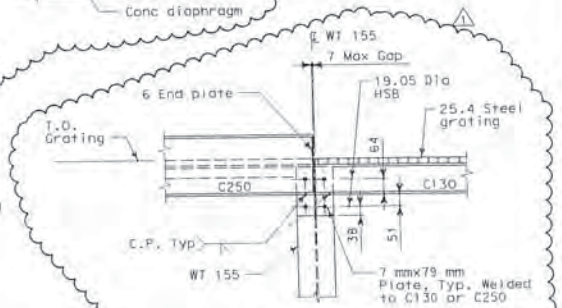

D SECTION
SCALE: 1:10

NOTES:

1. The contractor shall verify all controlling field dimensions before ordering or fabricating any material.
2. For typical walkway section see "Typical Walkway Details" sheet AS-9.
3. For typical railing details, see sheet AS-17.

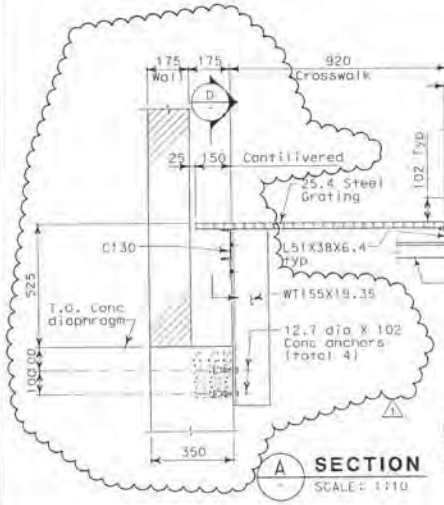

A SECTION
SCALE: 1:10

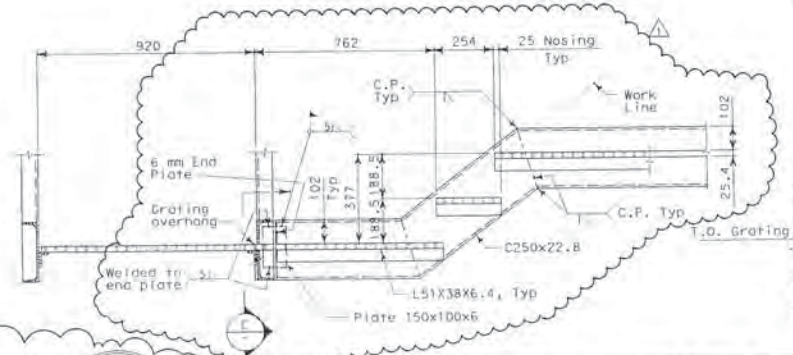

B SECTION
SCALE: 1:10

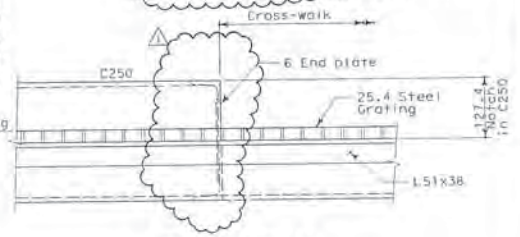

C SECTION
SCALE: 1:5

William Howe 9/29/04
REGISTERED CIVIL ENGINEER DATE

REGISTERED PROFESSIONAL ENGINEER WILLIAM BRADFORD HOWE No. 53921 Exp. 6/30/07 CIVIL STATE OF CALIFORNIA

MARK	DATE	DESCRIPTIONS	REV	CK	CCO
		REVISIONS			
2	9/29/04	Raised embed plate, eliminated crosswalk riser support	BRF	WBH	CCO NO.24
1	8/27/03	Revised crosswalk to match raised substation floor	LW	MSO	CCO NO.24

CONTRACT CHANGE ORDER NO. 24 S2
SHEET 12 OF 26

ALL DIMENSIONS ARE IN MILLIMETERS UNLESS OTHERWISE SHOWN

DESIGN	BY M.S. Dwyong	CHECKED K. Liu	
LAYOUT	BY J. Davis	CHECKED K. Liu	
QUANTITIES	BY G. Berkovich	CHECKED M. S. Dwyong	

STATE OF CALIFORNIA
DEPARTMENT OF TRANSPORTATION

DIVISION OF STRUCTURES
STRUCTURAL DESIGN

BRIDGE NO. 34-0006
KILOMETER POST 13.0/14.3, 0.0/1.6

CU 04251
EA 012021

DISPLAYING PRINTS BEARING EARLIER REVISION DATES

STRUCTURE - EASTBOUND
WALKWAY SECTIONS
SHEET 2 OF 2

AS-11

SHEET 20 OF 47

ORIGINAL SCALE IN MILLIMETERS FOR REDUCED PLANS 0 10 20 30 40 50 60 70 80 90 100

DGN FILE
USERNAME

DATE PLOTTED WITH SETTINGS: TIME PLOTTED AT 15:35

Caltrans District 4

DIST	COUNTY	ROUTE	KILOMETER POST TOTAL PROJECT	SHEET No.	TOTAL SHEETS
04	SF, Ala	80	13.9 / 14.3, 0.0 / 1.6	95R2	978

REGISTERED CIVIL ENGINEER 12/26/00 DATE

6-4-01
PLANS APPROVAL DATE

REGISTERED PROFESSIONAL ENGINEER MEE SHENG ONYANG No. 24560 Exp. 12/31/01 CIVIL STATE OF CALIFORNIA

PARSONS BRINCKERHOFF QUADE & DOUGLAS, INC.
303 SECOND STREET, SUITE 700 N
SAN FRANCISCO, CA 94107

The State of California or its officers or agents shall not be responsible for the accuracy or completeness of electronic copies of this plan sheet.

DIST	COUNTY	ROUTE	KILOMETER POST TOTAL PROJECT	SHEET NO	TOTAL SHEETS
04	SF, Ala	80	13.9 / 14.3 0.0 / 1.6	96R3	978

REGISTERED CIVIL ENGINEER 03/19/01 DATE

6-6-01 PLANS APPROVAL DATE

PARSONS BRINCKERHOFF QUADE & DOUGLAS, INC.
303 SECOND STREET, SUITE 700 N
SAN FRANCISCO, CA 94107

REGISTERED PROFESSIONAL ENGINEER — WEE SHING OWYANG — No. 24960 — EXP. 12/31/01 — CIVIL — STATE OF CALIFORNIA

The State of California or its officers or agents shall not be responsible for the accuracy or completeness of electronic copies of this plan sheet.

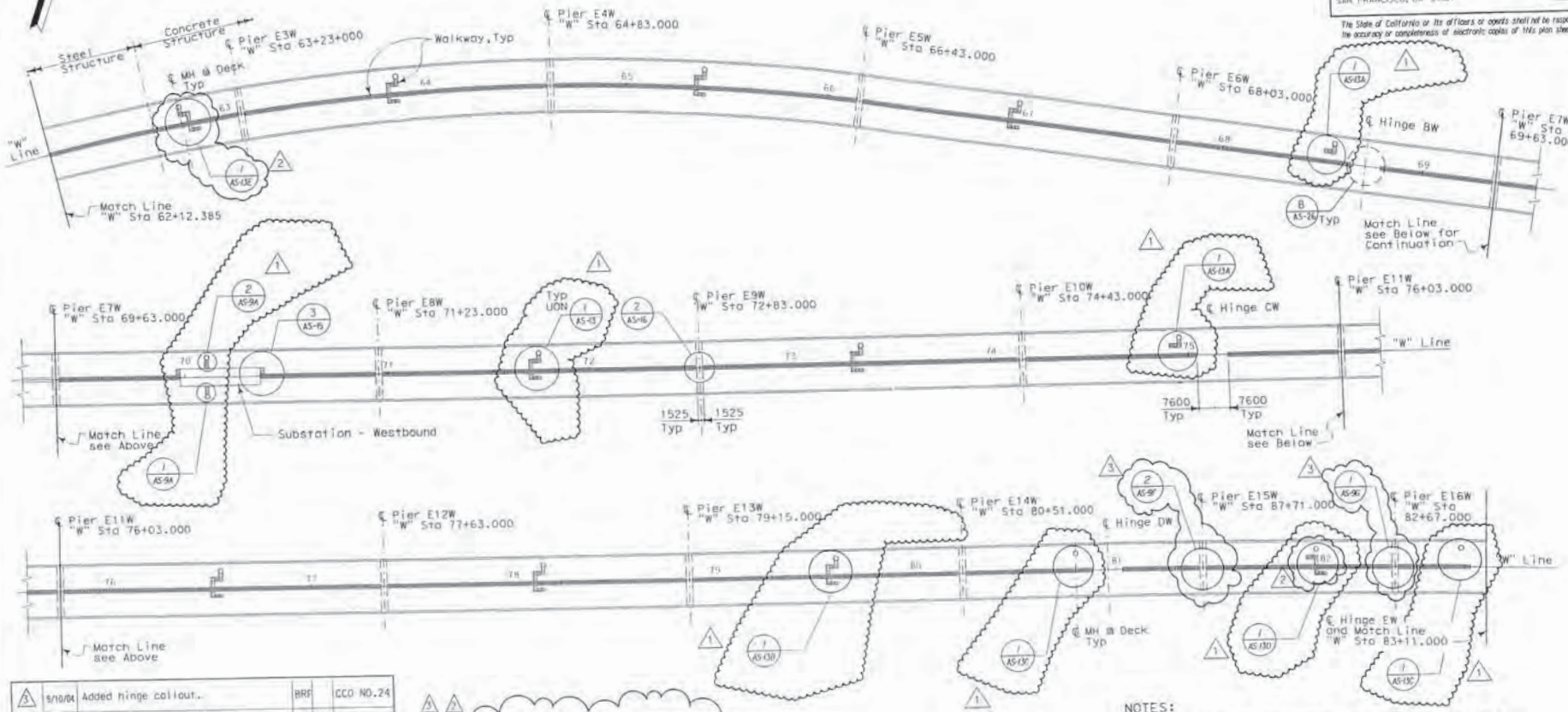

MARK	DATE	DESCRIPTIONS	REV	CK	
3	9/10/04	Added hinge callout.	BRF		CCO NO.24
2	6/28/04	Changed walkway details.	LR	SH	CCO NO.24
1	12/11/02	Added detail callouts. Changed walkway details.	KW	MSO	CCO NO.24

REVISIONS

William Howe — REGISTERED CIVIL ENGINEER — 9/10/04 DATE

REGISTERED PROFESSIONAL ENGINEER — WILLIAM BRADFORD HOWE — No. 53971 — EXP. 6/30/07 — CIVIL — STATE OF CALIFORNIA

NOTES:

1. The contractor shall verify all controlling field dimensions before ordering or fabricating any material.
2. For structural notes, see "General Plan, Stairway" sheet AS-1.

CONTRACT CHANGE ORDER NO. 24 S2
SHEET 13 OF 26

NO SCALE

ALL DIMENSIONS ARE IN MILLIMETERS UNLESS OTHERWISE SHOWN

DESIGN	BY M.S. Owyang	CHECKED K. Liu	
LAYOUT	BY B. Vuong	CHECKED K. Liu	
QUANTITIES	BY G. Benkovich	CHECKED M. S. Owyang	

ORIGINAL SCALE IN MILLIMETERS FOR REDUCED PLANS 0 10 20 30 40 50 60 70 80 90 100

STATE OF CALIFORNIA
DEPARTMENT OF TRANSPORTATION

DIVISION OF STRUCTURES
STRUCTURAL DESIGN

CU 04251
EA 012021

DGN FILE =>04-012024_009R3.dgn
USERNAME =>BENOSGJ

BRIDGE NO. 34-0006
KILOMETER POST 13.0/14.3 0.0/1.6

DIMENSIONS PRINTS BEARING EARLIER REVISION DATES

REVISION DATES (PRELIMINARY USE ONLY)
REV

STRUCTURE - WESTBOUND
WALKWAY LAYOUT

AS-12

SHEET 21 OF 47

DATE PLOTTED =>12-DEC-2005 TIME PLOTTED =>11:11

DIST	COUNTY	ROUTE	KILOMETER POST TOTAL PROJECT	SHEET NO.	TOTAL SHEETS
04	SF, Ala	80	13.8 / 14.3, 0.0 / 1.6	97R6	97B

Caltrans Metro

REGISTERED CIVIL ENGINEER — DATE 12/26/00

6-4-01 PLANS APPROVAL DATE

PARSONS BRINCKERHOFF QUADE & DOUGLAS, INC.
303 SECOND STREET, SUITE 700 N
SAN FRANCISCO, CA 94107

ORIGINAL SIGNED — REGISTERED CIVIL ENGINEER — 8/24/04 DATE

Ruben Quitoriano, No. 54514, Exp. 12/31/05, CIVIL, STATE OF CALIFORNIA

MEE SHING ONYANG, No. 24960, Exp. 12/31/05, CIVIL, STATE OF CALIFORNIA

The State of California or its officers or agents shall not be responsible for the accuracy or completeness of electronic copies of this plan sheet.

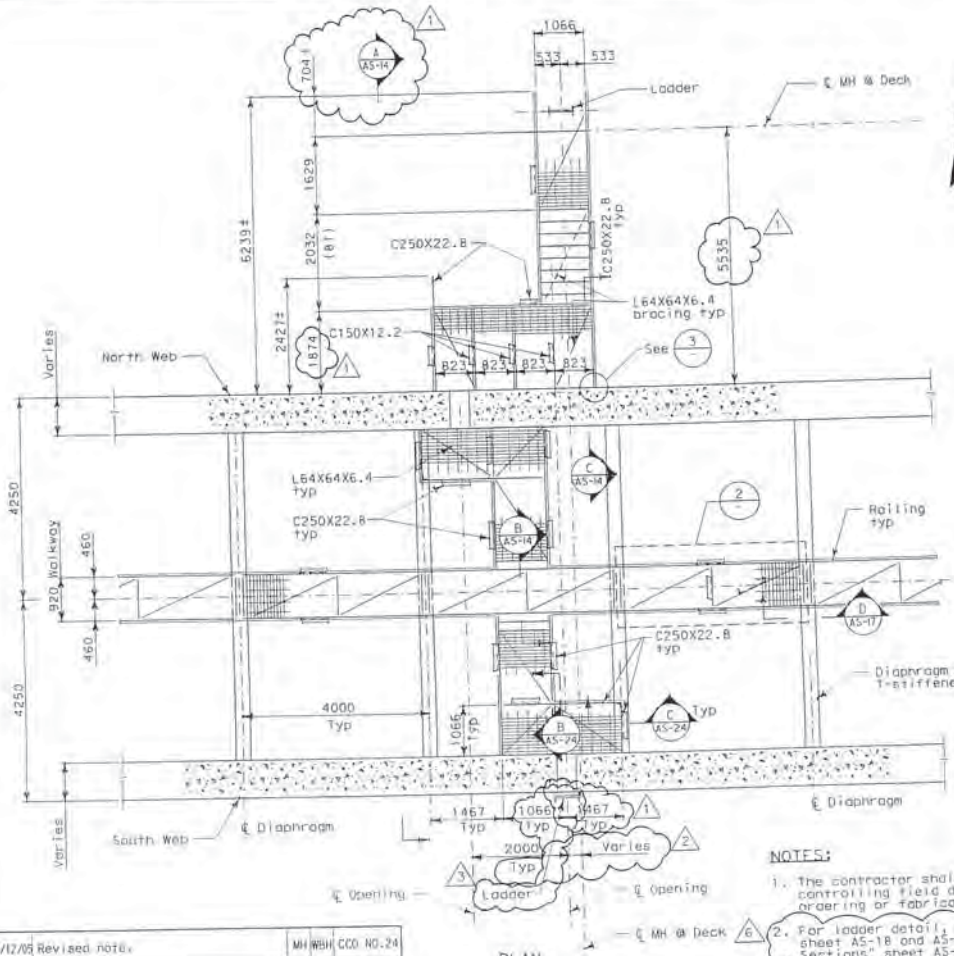

PLAN

1 DETAIL (AS-12) SCALE: 1:50

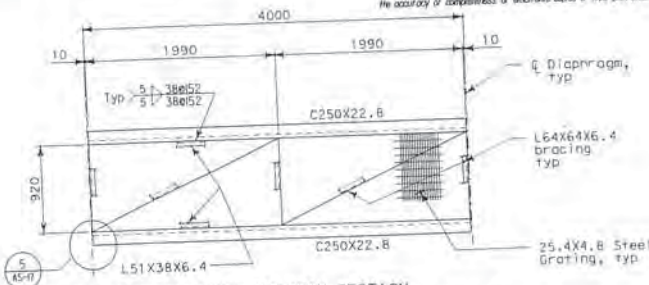

TYPICAL WALKWAY SECTION

2 DETAIL (AS-15) SCALE:1:25

TYPICAL BEAM TO WEB CONNECTION

3 DETAIL SCALE:1:10

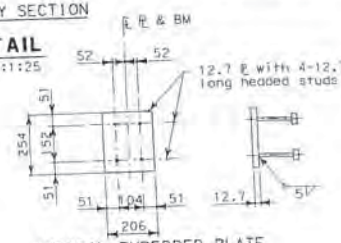

TYPICAL EMBEDDED PLATE

4 DETAIL SCALE:1:10

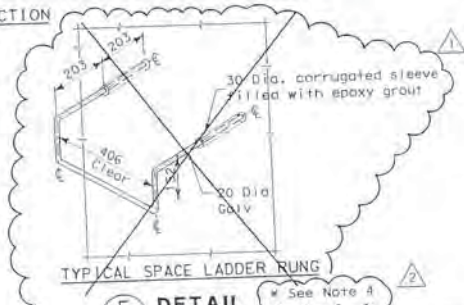

TYPICAL SPACE LADDER RUNG

5 DETAIL SCALE:1:50

* See Note 4

NOTES:

1. The contractor shall verify all controlling field dimensions before ordering or fabricating any material.
2. For ladder detail, see "Ladder Details" sheet AS-18 and AS-18C and "Walkway Sections" sheet AS-18A.
3. For typical railing detail, see "Typical Railing and Misc Details" sheet AS-17.
4. ~~Per State Letter 5/03/01 001225, the contractor may use ladder detail on sheet AS-16 with deep in anchors in lieu of space ladder rungs (Detail 5 this sheet) or long-de-ladder rungs (Detail 6 this sheet) as long as the conditions set forth in the said letter are satisfied. The anchors shall be proofed load tested to comply with the 1000 cycle criteria of OSHA Construction Regulations for Fixed Ladders.~~

ALL DIMENSIONS ARE IN MILLIMETERS UNLESS OTHERWISE SHOWN

MARK	DATE	DESCRIPTIONS	REVW	CK	
6	4/12/05	Revised note.	MH	WBH	CCO NO.24
5	8/23/04	Replace weld with bolts.	RO	SH	CCO NO.24
4	6/28/04	Replace space rung with ladder	LR	SH	CCO NO.24
3	3/22/04	Revise note	MG		CCO NO.24
2	4/23/03	Revised due to reconfiguration of web manholes.	KW	MSO	CCO NO.24
1	12/11/02	Revised to coordinate with Structures Plans. Added detail 5.	KW	MSO	CCO NO.24

REVISIONS

CONTRACT CHANGE ORDER NO. 24
SHEET — OF —

DESIGN	BY M.S. Owyang	CHECKED K. Liu
LAYOUT	BY G. Karnovskaya	CHECKED K. Liu
QUANTITIES	BY G. Berkovich	CHECKED M. S. Owyang

ORIGINAL SCALE IN MILLIMETERS FOR REDUCED PLANS 0 10 20 30 40 50 60 70 80 90 100

STATE OF CALIFORNIA
DEPARTMENT OF TRANSPORTATION

DIVISION OF STRUCTURES
STRUCTURAL DESIGN

CU 04251
EA 012021

DGN FILE = s:\04-012021_97B6.dgn
USERNAME = s:\mmoson

BRIDGE NO. 34-0006
KILOMETER POST 13.0/14.3, 0.0/1.6

DISREGARD PRINTS BEARING EARLIER REVISION DATES

STRUCTURE - WESTBOUND
TYPICAL WALKWAY DETAILS

AS-13

SHEET 22 OF 47

DATE PLOTTED = 20-APR-2005 TIME PLOTTED = 11:06

DIST	COUNTY	ROUTE	KILOMETER POST TOTAL PROJECT	SHEET No.	TOTAL SHEETS
04	SF, Ala	80	13.9 / 14.3 E 0.0 / 1.6	97AR3	978

Caltrans Metrio

REGISTERED CIVIL ENGINEER — DATE 12/16/02

PLANS APPROVAL DATE

REGISTERED PROFESSIONAL ENGINEER — MEE SHING ONYANG — No. 24960 — Exp. 12/31/05 — CIVIL — STATE OF CALIFORNIA

PARSONS BRINCKERHOFF QUADE & DOUGLAS, INC.
303 SECOND STREET, SUITE 700 N
SAN FRANCISCO, CA 94107

The State of California or its officers or agents shall not be responsible for the accuracy or completeness of electronic copies of this plan sheet.

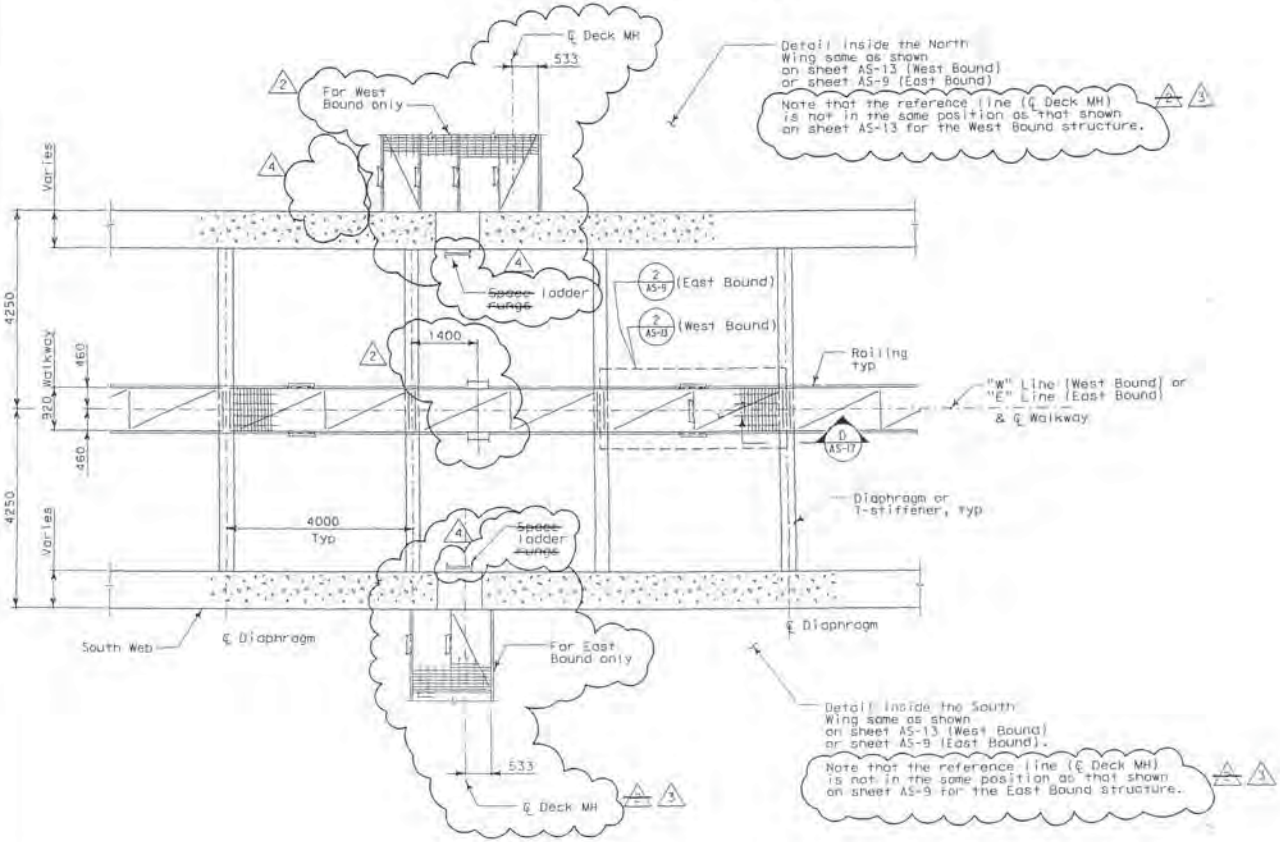

1 AS-8 AS-12 **DETAIL**
SCALE: 1:50

REGISTERED CIVIL ENGINEER — William Howard — DATE 9/13/04

REGISTERED PROFESSIONAL ENGINEER — WILLIAM BRADFORD HOWE — No. 53921 — Exp. 6/30/07 — CIVIL — STATE OF CALIFORNIA

MARK	DATE	DESCRIPTIONS	REV	CK	
5	8/12/05	Revised note	MH	WBH	CCO NO.24
4	6/28/04	Replace space rung with ladder.	LR	SH	CCO NO.24
3	3/22/04	Delete remark 2. Revise due to web MH reconfiguration and add note	MG		CCO NO.24
2	4/23/03	~~Revised due to web MH reconfiguration per state letter 5.03.1-001467. Added note.~~	KW	MSO	CCO NO.24
1	12/16/02	New sheet	KW	MSO	CCO NO.24

REVISIONS

CONTRACT CHANGE ORDER NO. 24 S2
SHEET 15 OF 26

NOTES:

1. The contractor shall verify all controlling field dimensions before ordering or fabricating any material.
2. For typical railing detail, see "Typical Railing and Misc Details" sheet AS-17.
3. ~~There is no web opening or space ladder rung at spans E17W and E17E.~~
4. ~~For space ladder rung details, see Detail 5 and Note 4 of Sheet AS-13.~~
5. ~~Space~~ ladder ~~rungs~~ shall align with web manholes. ~~where configurations are specified in State Letter 5.03.1-001467.~~
6. For ladder details, see "Ladder Details" sheets AS-18 and AS-18C and "Walkway Sections" sheet AS-18A.

ALL DIMENSIONS ARE IN MILLIMETERS UNLESS OTHERWISE SHOWN

DESIGN	BY E. Rongkaew	CHECKED M.S. Dwyana	
LAYOUT	BY D. Karmovskaya	CHECKED M.S. Dwyana	
QUANTITIES	BY E. Rongkaew	CHECKED M. S. Dwyana	

ORIGINAL SCALE IN MILLIMETERS FOR REDUCED PLANS 0 10 20 30 40 50 60 70 80 90 100

STATE OF CALIFORNIA
DEPARTMENT OF TRANSPORTATION

DIVISION OF STRUCTURES
STRUCTURAL DESIGN

BRIDGE NO. 34-0006
KILOMETER POST 13.0/14.3 0.0/1.6

CU 04251
EA 012021

DGN FILE => 04-012024_97AR3.dgn
USERNAME => mmosqueda

DISTINGUISH PRINTS BEARING EARLIER REVISION DATES

REVISION DATES (PRELIMINARY STAGE ONLY)

STRUCTURE - E AND W BOUND
TYPICAL WALKWAY DETAILS

AS-13A

SHEET 22 OF 47

DATE PLOTTED => 20-APR-2005 TIME PLOTTED => 13:28

DIST	COUNTY	ROUTE	KILOMETER POST TOTAL PROJECT	SHEET NO	TOTAL SHEETS
04	SF, Ala	80	13.8 / 14.3 0.0 / 1.6	97BR4	97B

REGISTERED CIVIL ENGINEER — DATE 12/16/02

PLANS APPROVAL DATE

PARSONS BRINCKERHOFF QUADE & DOUGLAS, INC.
303 SECOND STREET, SUITE 700 N
SAN FRANCISCO, CA 94107

REGISTERED PROFESSIONAL ENGINEER — MT SHING OWYANG — No. 24960 — Exp. 12/31/05 — CIVIL — STATE OF CALIFORNIA

The State of California or its officers or agents shall not be responsible for the accuracy or completeness of electronic copies of this plan sheet.

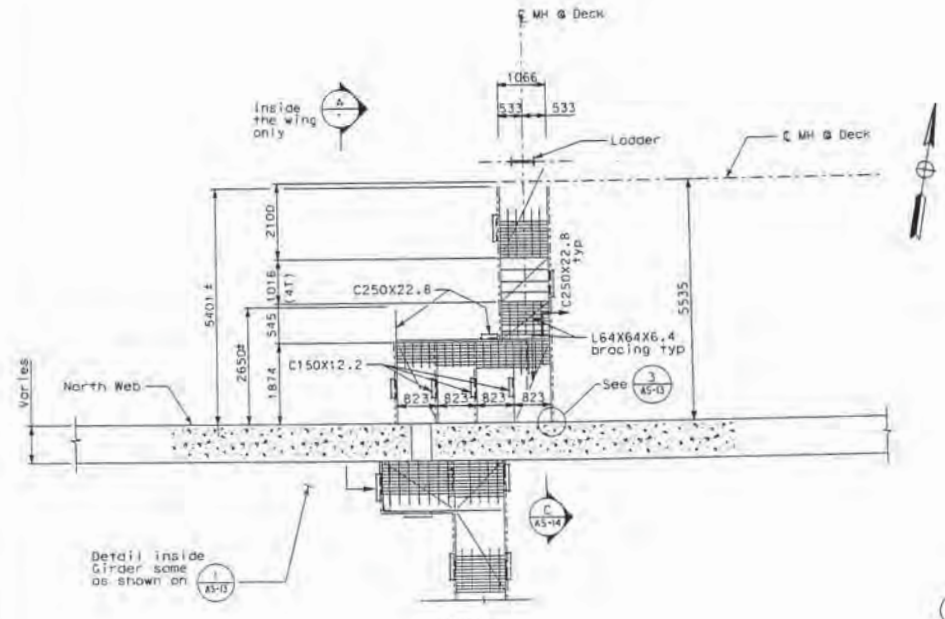

PLAN

1/AS-12 **DETAIL**
SCALE: NO SCALE

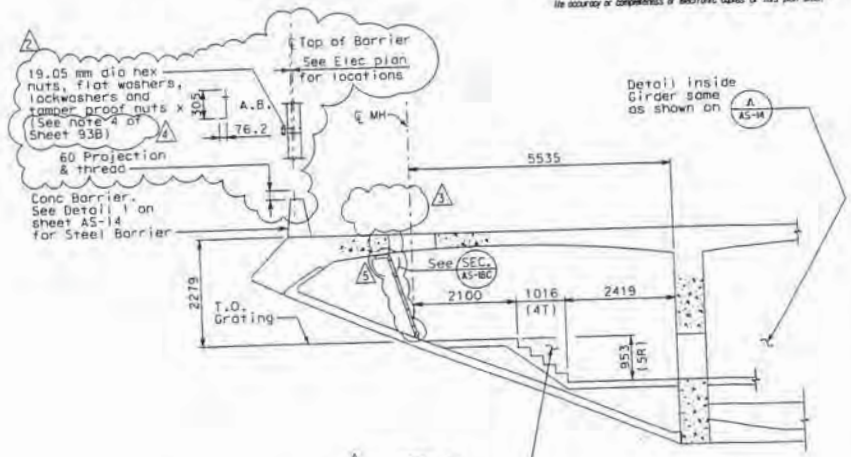

6 LAYOUT

A/— **SECTION**
SCALE: NO SCALE

William Howe — REGISTERED CIVIL ENGINEER — 4/12/05 DATE
REGISTERED PROFESSIONAL ENGINEER — WILLIAM BRADFORD HOWE — No. 53321 — Exp. 6/30/07 — CIVIL — STATE OF CALIFORNIA
6

Muthanna S. Omran — REGISTERED CIVIL ENGINEER — DATE
REGISTERED PROFESSIONAL ENGINEER — No. 61637 — Exp. 06/30/05 — CIVIL — STATE OF CALIFORNIA
FOR CHANGE 5 ONLY

NOTES:

1. The contractor shall verify all controlling field dimensions before ordering or fabricating any material.
2. 4 For ladder detail, see "Ladder Details" sheet AS-18 and AS-18C and "Walkway Sections" sheet AS-18A.
3. For typical railing detail, see "Typical Railing and Misc Details" sheet AS-17.

MARK	DATE	DESCRIPTIONS	REV	CK	
6	4/12/05	Revised note and section heading	MH	WBH	CCO NO.24
5	1/15/04	Modified access ladder to an inclined ladder & deleted ladder ℄ and deleted 4	MG	GJ	CCO NO.59
4	1/23/04	Clarify note	MG		CCO NO.24
3	8/17/03	Revised ladder detail at deck MH.	KW	MSO	CCO NO.59
2	8/12/03	Revised call box mounting	MSO	EJL	CCO NO.60
1	12/16/02	New sheet	KW	MSO	CCO NO.24

REVISIONS

CONTRACT CHANGE ORDER NO. 24 S2
SHEET 16 OF 26

ALL DIMENSIONS ARE IN MILLIMETERS UNLESS OTHERWISE SHOWN

DESIGN	BY K. Wongkoew	CHECKED M. S. Owyang	
LAYOUT	BY D. Kurnovskaya	CHECKED M. S. Owyang	
QUANTITIES	BY K. Wongkoew	CHECKED M. S. Owyang	

ORIGINAL SCALE IN MILLIMETERS FOR REDUCED PLANS 0 10 20 30 40 50 60 70 80 90 100

STATE OF CALIFORNIA
DEPARTMENT OF TRANSPORTATION

DIVISION OF STRUCTURES
STRUCTURAL DESIGN

CU 04251
EA 012021
DGN FILE => ...\04-012024_97BR4.dgn
USERNAME => MOmran

BRIDGE NO. 34-0006
KILOMETER POST 13.0714.3 0.0/1.6
DISREGARD PRINTS BEARING EARLIER REVISION DATES

STRUCTURE - WESTBOUND
TYPICAL WALKWAY DETAILS

AS-13B

SHEET 22B OF 47

REVISION DATES (WHEN APPROVED STATE ONLY)

DATE PLOTTED => 05/04/05 TIME PLOTTED => 08:59:15 AM

DIST	COUNTY	ROUTE	KILOMETER POST TOTAL PROJECT	SHEET NO.	TOTAL SHEETS
04	SF, Ala	80	13.5 / 14.3, 0.0 / 1.6	976 R5	978

REGISTERED CIVIL ENGINEER — DATE 12/16/02

PLANS APPROVAL DATE

PARSONS BRINCKERHOFF QUADE & DOUGLAS, INC.
303 SECOND STREET, SUITE 700 N
SAN FRANCISCO, CA 94107

REGISTERED PROFESSIONAL ENGINEER — WEE SHING ONTANG — No. 24960 — Exp. 12/31/05 — CIVIL — STATE OF CALIFORNIA

The State of California or its officers or agents shall not be responsible for the accuracy or completeness of electronic copies of this plan sheet.

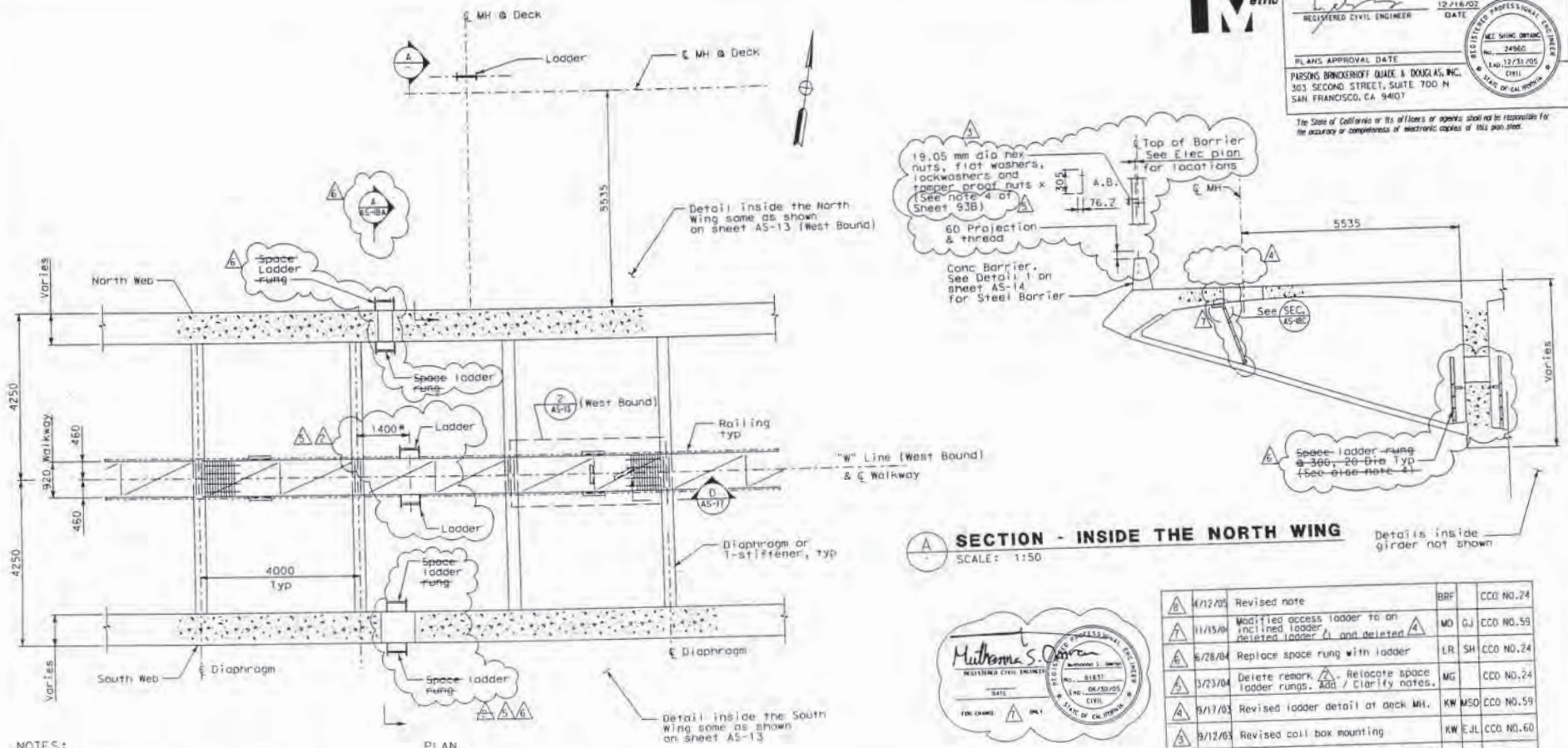

A SECTION - INSIDE THE NORTH WING
SCALE: 1:50

PLAN
1 AS-C DETAIL
SCALE: 1:50

NOTES:

1. The contractor shall verify all controlling field dimensions before ordering or fabricating any material.
2. For ladder detail, see "Ladder Details" sheet AS-18 and AS-18C and "Walkway Sections" sheet AS-18A.
3. For typical railing detail, see "Typical Railing and Misc Details" sheet AS-17.
4. ~~For space ladder rung detail, see Detail 5 and Note 4 of Sheet AS-13.~~
5. ~~Space~~ ladder ~~rungs~~ shall align with web manholes. ~~whose configurations are defined in State Letter 5.03.1-001457.~~

* 1400 at span 15
2000 at span 17

MARK	DATE	DESCRIPTIONS	REV	CK	
		REVISIONS			
8	4/12/05	Revised note	BRF		CCO NO.24
7	11/15/04	Modified access ladder to an inclined ladder 4 deleted ladder ℄ and deleted	MO	GJ	CCO NO.59
6	6/28/04	Replace space rung with ladder	LR	SH	CCO NO.24
5	3/23/04	Delete remark 4. Relocate space ladder rungs. Add / Clarify notes.	MG		CCO NO.24
4	9/17/03	Revised ladder detail at deck MH.	KW	MSO	CCO NO.59
3	9/12/03	Revised call box mounting	KW	EJL	CCO NO.60
2	4/23/03	~~Relocate space ladder rungs due to state Ltr. 5.03.1-001457. Add note due to state Ltr. 5.03.1-001335~~	MSO	MSO	~~CCO NO.24~~
1	12/16/02	New sheet	KW	MSO	CCO NO.24

REGISTERED CIVIL ENGINEER — DATE 4/12/05 — FOR CHANGE 7 ONLY — REGISTERED PROFESSIONAL ENGINEER — MUTHANNA S. OMRAN — No. 61837 — Exp. 06/30/05 — CIVIL — STATE OF CALIFORNIA

REGISTERED CIVIL ENGINEER — DATE 4/12/05 — REGISTERED PROFESSIONAL ENGINEER — WILLIAM BRADFORD HOWE — No. 53321 — Exp. 6/30/07 — CIVIL — STATE OF CALIFORNIA

CONTRACT CHANGE ORDER NO. 24 S2
SHEET 17 OF 36

ALL DIMENSIONS ARE IN MILLIMETERS UNLESS OTHERWISE SHOWN

DESIGN	BY K. Mongkolew	CHECKED M. S. Owyang	
LAYOUT	BY G. Kurnavskaya	CHECKED M. S. Owyang	
QUANTITIES	BY K. Mongkolew	CHECKED M. S. Owyang	

ORIGINAL SCALE IN MILLIMETERS FOR REDUCED PLANS 0 10 20 30 40 50 60 70 80 90 100

STATE OF CALIFORNIA
DEPARTMENT OF TRANSPORTATION

DIVISION OF STRUCTURES
STRUCTURAL DESIGN

CU 04251
EA 012021

DGN FILE = ...\04-012024_97CR5.dgn
USERNAME = MOmran

BRIDGE NO. 34-0006
KILOMETER POST 13.0/14.3, 0.0/1.6
DISREGARD PRINTS BEARING EARLIER REVISION DATES

REVISION DATES (PRELIMINARY STAGE ONLY)

STRUCTURE - WESTBOUND
TYPICAL WALKWAY DETAILS

AS-13C
SHEET 220 OF 47

DATE PLOTTED = 05/04/05 TIME PLOTTED = 09:00:24 AM

DIST	COUNTY	ROUTE	KILOMETER POST TOTAL PROJECT	SHEET NO.	TOTAL SHEETS
04	SF, Ala	80	13.9 / 14.3, 0.0 / .6	970 R4	978

Caltrans Metro

REGISTERED CIVIL ENGINEER — DATE 12/16/02

PLANS APPROVAL DATE

REGISTERED PROFESSIONAL ENGINEER — MEE SHING ONYANG — NO. 24960 — EXP. 12/31/05 — CIVIL — STATE OF CALIFORNIA

PARSONS BRINCKERHOFF QUADE & DOUGLAS, INC.
303 SECOND STREET, SUITE 700 N.
SAN FRANCISCO, CA 94107

The State of California or its officers or agents shall not be responsible for the accuracy or completeness of electronic copies of this plan sheet.

MARK	DATE	DESCRIPTIONS	REV	CK	
5	4/12/05	Revised note.	MH	WBH	CCO NO.24
4	6/28/04	Replace space rung with ladder. Update ladder quantity.	LR	SH	CCO NO.24
3	3/23/04	Delete remark 2. Revise web MH location. Add / Clarify notes.	MG		CCO NO.24
2	~~4/23/03~~	~~Revised web MH location per state letter 5.03.1 001467. Added notes.~~	~~KW~~	~~MSO~~	~~CCO NO.24~~
1	12/16/02	New sheet	KW	MSO	CCO NO.24

REVISIONS

CONTRACT CHANGE ORDER NO. 24 S2
SHEET 18 OF 20

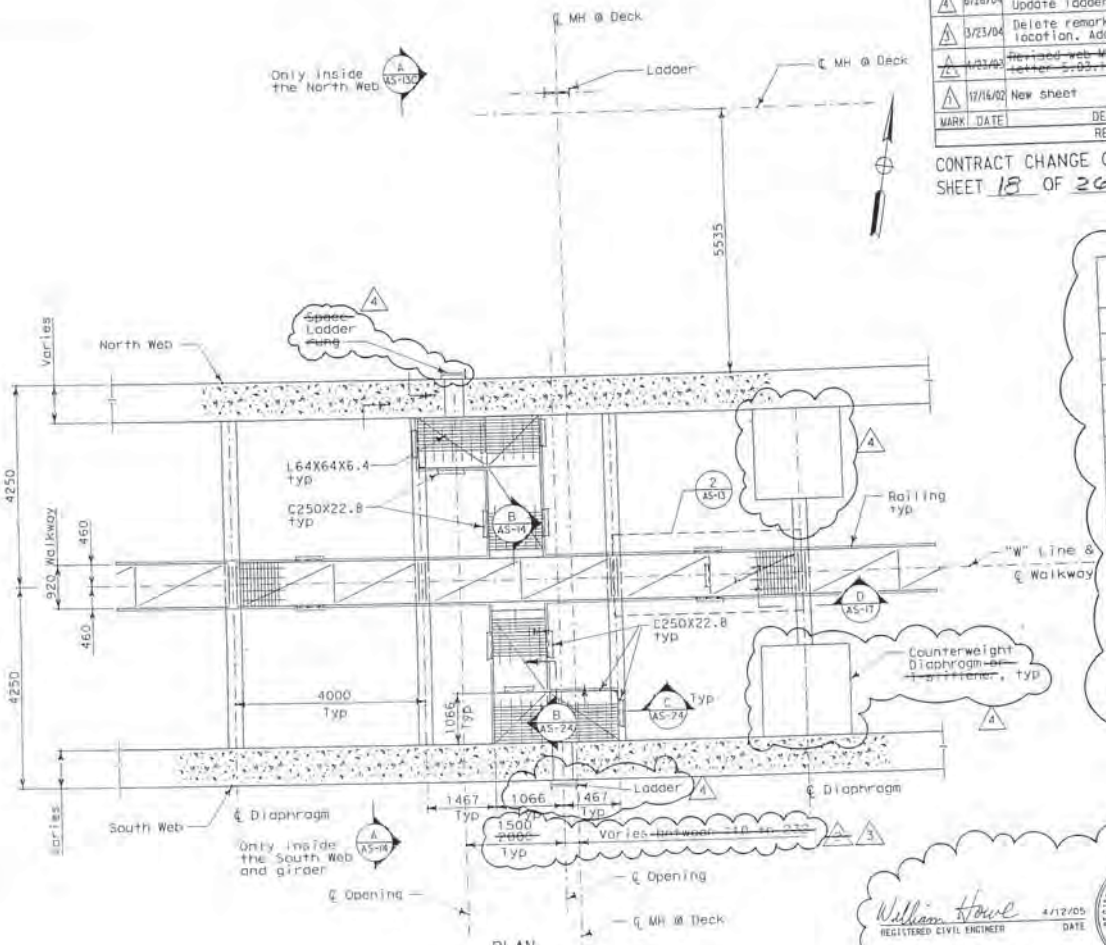

PLAN

1 AS-02 **DETAIL**
SCALE: 1:50

Ladder Quantities

SPAN	LADDER		
	SOUTH WING	INSIDE GIRDER	NORTH WING
Pier E3W-5W	1.25 m		2.28 m
Pier E3W TO E4W	1.25 m		2.28 m
Pier E4W TO E5W	1.25 m		2.28 m
Pier E5W TO E6W	1.25 m		2.28 m
Pier E6W TO E7W	1.25 m	4 x 1.25 m	2.28 m
Pier E7W TO E8W	2.28 m		2.28 m
Pier E8W TO E9W	1.25 m		2.28 m
Pier E9W TO E10W	1.25 m		2.28 m
Pier E10W TO E11W	1.25 m	4 x 1.25 m	2.28 m
Pier E11W TO E12W	1.25 m		2.28 m
Pier E12W TO E13W	0.96 m		2.28 m
Pier E13W TO E14W	0.96 m		2.18 m
Pier E14W TO E15W	0.96 m	4 x 0.96 m	1.93 m + 0.96 m
Pier E15W TO E16W	0.96 m		1.69 m + 0.96 m
Pier E16W TO E17W	0.96 m	4 x 0.96 m	1.53 m + 0.96 m

NOTES:

1. The contractor shall verify all controlling field dimensions before ordering or fabricating any material.
2. For ladder detail, see "Ladder Details" sheets AS-18 and AS-18C and "Walkway Sections" sheet AS-18A
3. For typical railing detail, see "Typical Railing and Misc Details" sheet AS-17.
4. Ladder lengths are approximated. The contractor shall verify all controlling field conditions before ordering or fabricating any material.
5. ~~For space ladder rung detail, see Details 5 and Note 4 of sheet AS-13.~~
6. ~~Space~~ ladder ~~rungs~~ shall align with web manholes. ~~Whose configurations are specified in State Letter 5.03.1 001467.~~

William Howe — REGISTERED CIVIL ENGINEER — DATE 4/12/05

REGISTERED PROFESSIONAL ENGINEER — WILLIAM BRADFORD HOWE — NO. 53921 — EXP. 6/30/07 — CIVIL — STATE OF CALIFORNIA

ALL DIMENSIONS ARE IN MILLIMETERS UNLESS OTHERWISE SHOWN

DESIGN	BY K. Bondokov	CHECKED M.S. Dwyong	
LAYOUT	BY O. Kurnovskaya	CHECKED M.S. Dwyong	
QUANTITIES	BY K. Bondokov	CHECKED M.S. Dwyong	

ORIGINAL SCALE IN MILLIMETERS FOR REDUCED PLANS 0 10 20 30 40 50 60 70 80 90 100

STATE OF CALIFORNIA
DEPARTMENT OF TRANSPORTATION

DIVISION OF STRUCTURES
STRUCTURAL DESIGN

BRIDGE NO. 34-0006
KILOMETER POST 13.0/14.3, 0.0/1.6

CU 04251
EA 012021

DGN FILE => 04-012021_STD04.dgn
USERNAME => dmoss01

DISREGARD PRINTS BEARING EARLIER REVISION DATES

REVISION DATES (PRELIMINARY STAGE ONLY)

STRUCTURE - WESTBOUND
TYPICAL WALKWAY DETAILS

AS-13D

SHEET 220 OF 47

DATE PLOTTED => 20-APR-2005 TIME PLOTTED => 13:53

DIST	COUNTY	ROUTE	KILOMETER POST TOTAL PROJECT	SHEET NO.	TOTAL SHEETS
04	SF, Ala	80	13.9/14.3, 0.0/1.6	97E R1	978

William Howe 9/13/04
REGISTERED CIVIL ENGINEER

9/13/04
PLANS APPROVAL DATE

REGISTERED PROFESSIONAL ENGINEER WILLIAM BRADFORD HOWE NO. 53321 EXP. 6/30/07 CIVIL STATE OF CALIFORNIA

The State of California or its officers or agents shall not be responsible for the accuracy or completeness of electronic copies of this plan sheet.

Caltrans now has a web site! To get to the web site, go to http://www.dot.ca.gov

Caltrans Metric

Matthew S. Ortman
REGISTERED CIVIL ENGINEER
DATE
FOR CHANGE 2 ONLY

REGISTERED PROFESSIONAL ENGINEER Matthew S. Ortman NO. 61837 EXP. 06/30/05 CIVIL STATE OF CALIFORNIA

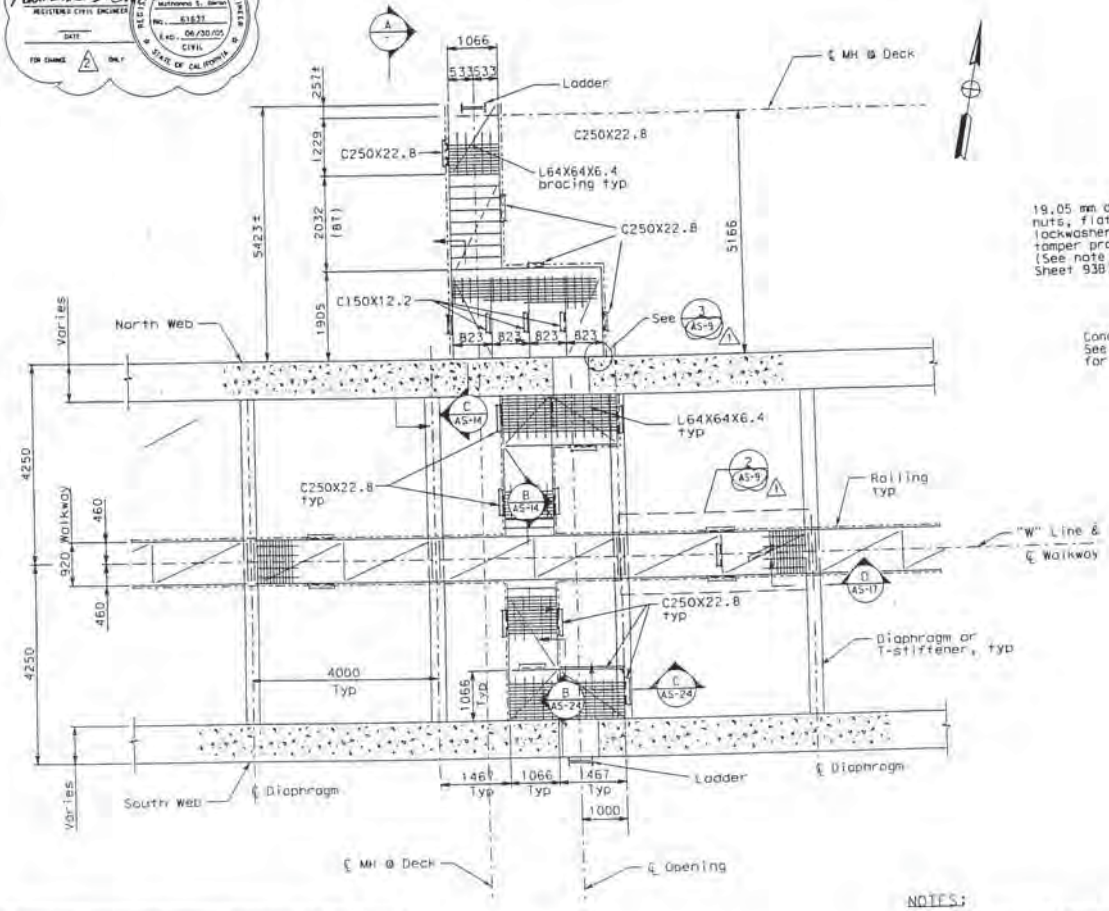

PLAN

1 AS-12 **DETAIL**
SCALE: 1:50

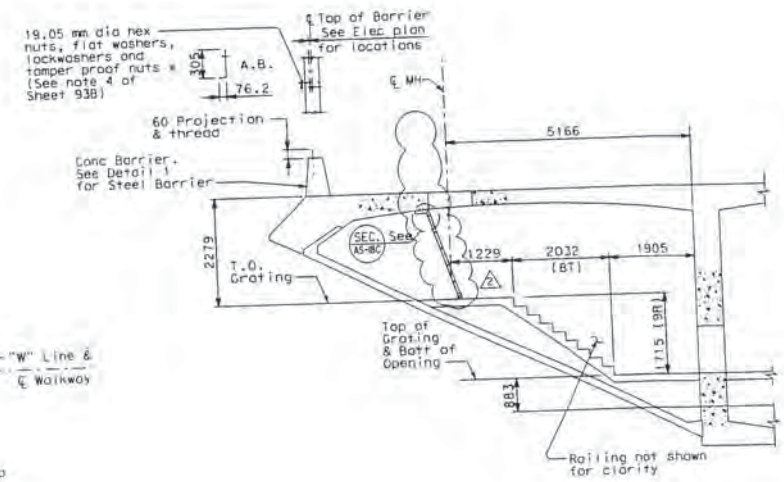

3 LAYOUT INSIDE NORTH WING

A **SECTION**
SCALE: 1:50

NOTES:

1. The contractor shall verify all controlling field dimensions before ordering or fabricating any material.
2. For ladder detail, see "Ladder Details" sheets AS-1B and AS-1BC and "Walkway Sections" sheet AS-1BA.
3. For typical railing detail, see "Typical Railing and Misc Details" sheet AS-17.

MARK	DATE	DESCRIPTIONS	REV	CK	
3	4/12/05	REVISED NOTE AND SECTION HEADING	MH	WBH	CCO 24
2	1/15/04	MODIFIED ACCESS LADDER TO AN INCLINED LADDER AND DELETED LADDER CL	MO	GJ	CCO 59
1	01/24/05	DEFINED CALLOUTS #2 AND #3			CCO 24
	06/31/04	NEW DRAWING			CCO 24

REVISIONS

CONTRACT CHANGE ORDER NO. 24 ±
SHEET 10 OF 26

STRUCTURE - WESTBOUND TYPICAL WALKWAY DETAILS

AS-13E

ALL DIMENSIONS ARE IN MILLIMETERS UNLESS OTHERWISE SHOWN

RELATIVE BORDER SCALE IS IN MILLIMETERS 0 20 40 60 80

USERNAME = jmoorson
DGN FILE = ...\04-012024_97E01.dgn

CU 04251

EA 012024

LAST REVISION 00-00-00

DATE PLOTTED => 05/04/05
TIME PLOTTED => 09:01:53 AM

STATE OF CALIFORNIA - DEPARTMENT OF TRANSPORTATION

PROJECT ENGINEER

CALCULATED/DESIGNED BY

CHECKED BY

REVISED BY

DATE REVISED

DATE

Caltrans

DIST	COUNTY	ROUTE	KILOMETER POST TOTAL PROJECT	SHEET NO	TOTAL SHEETS
04	SF, ALA	80	13.9 / 14.3 0.0 / 1.6	98R6	978

REGISTERED CIVIL ENGINEER 05/16/01 DATE

6-4-01
PLANS APPROVAL DATE

PARSONS BRINCKERHOFF QUADE & DOUGLAS, INC.
303 SECOND STREET, SUITE 700 N
SAN FRANCISCO, CA 94107

REGISTERED PROFESSIONAL ENGINEER — WEE SHING ONTANG — No. 24960 — Exp. 12/31/05 — CIVIL — STATE OF CALIFORNIA

William Howe 4/12/05
REGISTERED CIVIL ENGINEER DATE

REGISTERED PROFESSIONAL ENGINEER — WILLIAM BRADFORD HOWE — No. 53321 — Exp. 6/30/07 — CIVIL — STATE OF CALIFORNIA

Caltrans Metric

NOTES:

The State of California or its officers or agents shall not be responsible for the accuracy or completeness of electronic copies of this plan sheet.

1. The contractor shall verify all controlling field dimensions before ordering or fabricating any material.
2. For ladder detail, see "Ladder Details" sheet AS-18 and AS-18C and "Walkway Sections" sheet AS-18A.
3. For typical railing detail, see "Typical Railing and Miscellaneous Details" sheet AS-17.
4. For callbox anchor bolt locations and requirements, see electrical callbox schedule EE-332.
5. ~~For space ladder rung or alternate details, see Detail 5 and Note 4 of Sheet AS-13.~~

MARK	DATE	DESCRIPTIONS	REV	CK	
8	4/12/05	Revised note	BRF		CCO NO.24
7	11/15/04	Modified access ladder to an inclined ladder, deleted ladder CL and deleted 4	MG	GJ	CCO NO.59
6	6/28/04	Replace space rung with ladder.	LR	SH	CCO NO.24
5	3/23/04	Delete remark 4; Add / Clarify note.	MG		CCO NO.24
4	9/17/03	Revised ladder detail at deck MH	KW	MSO	CCO NO.59
3	8/12/03	Revised call box mounting	KW	EJL	CCO NO.60
2	4/23/03	~~Add note due to State Letter 5.01.1-001335~~	~~MSO~~	~~MSO~~	~~CCO NO.24~~
1	12/11/02	Add space ladder. Relocated ℄ of MH at deck	KW	MSO	CCO NO.24

REVISIONS

CONTRACT CHANGE ORDER NO. 24 S2
SHEET 20 OF 26

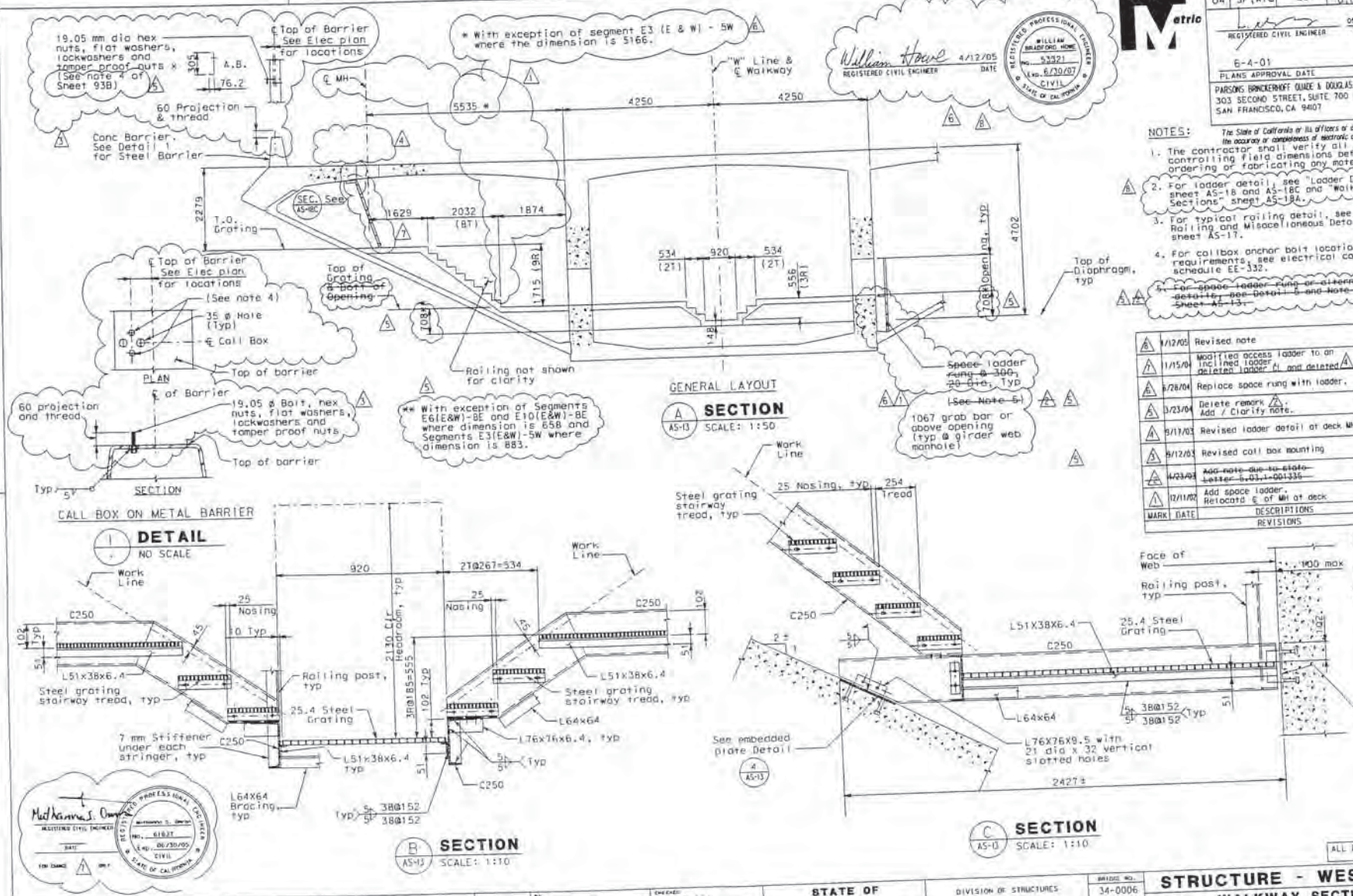

ALL DIMENSIONS ARE IN MILLIMETERS UNLESS OTHERWISE SHOWN

DESIGN	BY M.S. Owyang	CHECKED K. Liu	
LAYOUT	BY G. Kurnovsadyo	CHECKED K. Liu	
QUANTITIES	BY G. Renkovich	CHECKED M. S. Owyang	

STATE OF CALIFORNIA
DEPARTMENT OF TRANSPORTATION

DIVISION OF STRUCTURES

BRIDGE NO. 34-0006
KILOMETER POST 13.0/14.3 0.0/1.6

CU 04251
EA 012021

DGN FILE => ...\42040016.dgn
USERNAME => MDarron

DISCREPANCY PRINTS BEARING EARLIER REVISION DATES

STRUCTURE - WESTBOUND
WALKWAY SECTIONS SHEET 1 OF 2

AS-14

SHEET 23 OF 47

ORIGINAL SCALE IN MILLIMETERS FOR REDUCED PLANS 0 10 20 30 40 50 60 70 80 90 100

DATE PLOTTED => 05/04/05 TIME PLOTTED => 08:55:15 AM

DIST	COUNTY	ROUTE	KILOMETER POST TOTAL PROJECT	SHEET No.	TOTAL SHEETS
04	SF, Alo	80	13.9 / 14.3, 0.0 / 1.6	99R2	978

REGISTERED CIVIL ENGINEER — DATE 12/26/00

6-4-01
PLANS APPROVAL DATE

REGISTERED PROFESSIONAL ENGINEER — WEE SHING OHYANG — No. 24960 — Exp. 12/31/01 — CIVIL — STATE OF CALIFORNIA

PARSONS BRINCKERHOFF QUADE & DOUGLAS, INC.
303 SECOND STREET, SUITE 700 N
SAN FRANCISCO, CA 94107

The State of California or its officers or agents shall not be responsible for the accuracy or completeness of electronic copies of this plan sheet.

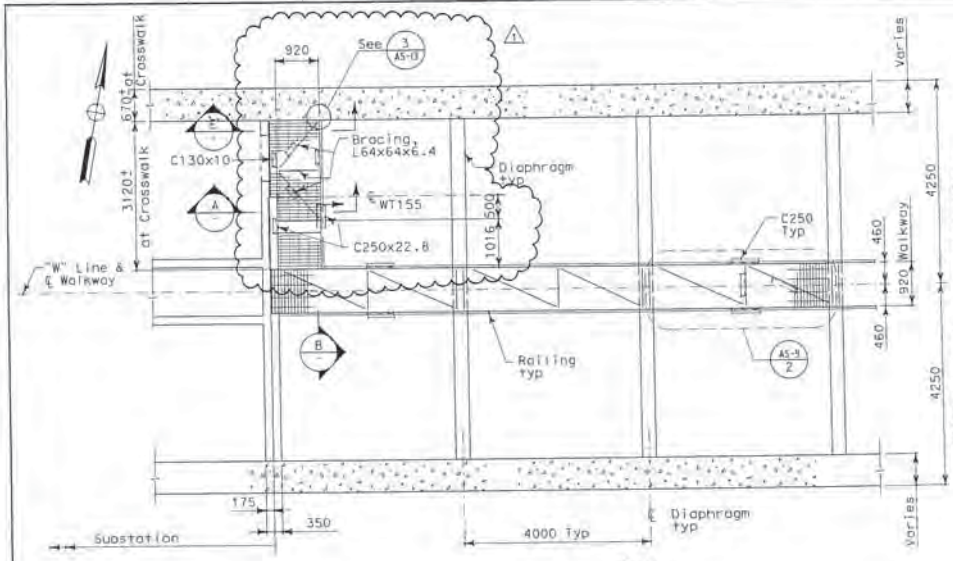

PLAN
3 DETAIL (AS-13) SCALE: 1:50

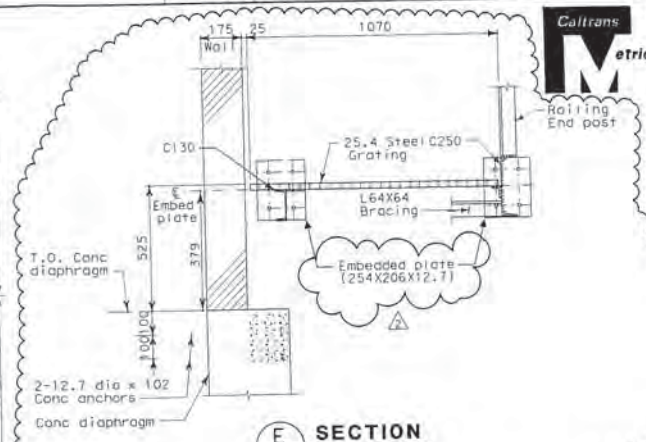

E SECTION SCALE: 1:10

NOTES:

1. The contractor shall verify all controlling field dimensions before ordering or fabricating any material.
2. For typical walkway section see "Typical Walkway Details" sheet AS-9.
3. For typical railing details, see sheet AS-17.

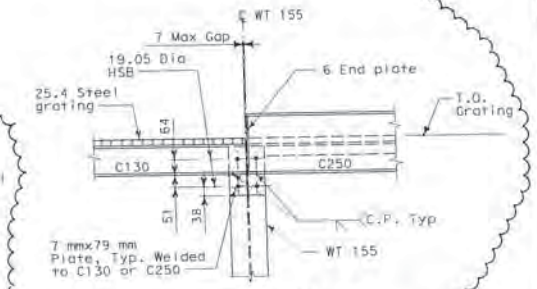

D SECTION SCALE: 1:10

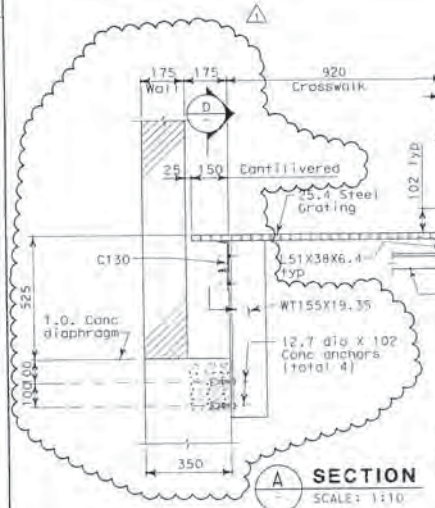

A SECTION SCALE: 1:10

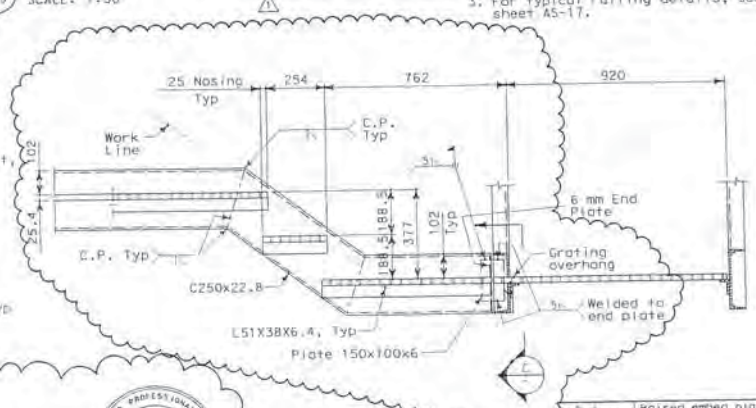

B SECTION SCALE: 1:10

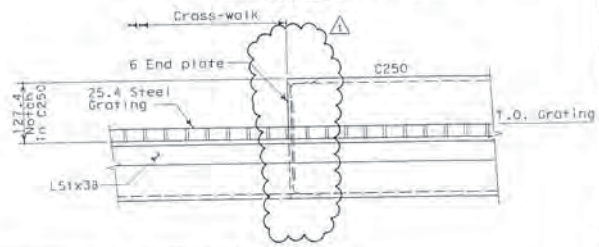

C SECTION SCALE: 1:5

William Howe — REGISTERED CIVIL ENGINEER — 9/23/04 DATE

REGISTERED PROFESSIONAL ENGINEER — WILLIAM BRADFORD HOWE — No. 53921 — Exp. 6/30/07 — CIVIL — STATE OF CALIFORNIA

MARK	DATE	DESCRIPTIONS	REV	CK	
2	9/23/04	Raised embed plate, eliminated crosswalk riser support	LW		CCO NO.24
1	6/27/03	Revised crosswalk to match raised substation floor	LW	MSO	CCO NO.24

REVISIONS

CONTRACT CHANGE ORDER NO. 24 S2
SHEET 21 OF 26

ALL DIMENSIONS ARE IN MILLIMETERS UNLESS OTHERWISE SHOWN

DESIGN	BY M.S. Owyang	CHECKED E. Liu	
LAYOUT	BY J. Davis	CHECKED E. Liu	
QUANTITIES	BY G. Berkovich	CHECKED M. S. Owyang	

STATE OF CALIFORNIA
DEPARTMENT OF TRANSPORTATION

DIVISION OF STRUCTURES
STRUCTURAL DESIGN

CU 04251
EA 012021

DGN FILE => 04-012024.009982.dgn
USERNAME => mmosson

DISTRICT NO. 34-0006
KILOMETER POST 13.0/14.3, 0.0/1.6

DISREGARD PRINTS BEARING EARLIER REVISION DATES

STRUCTURE - WESTBOUND
WALKWAY SECTIONS
SHEET 2 OF 2

AS-15

SHEET 24 OF 47

ORIGINAL SCALE IN MILLIMETERS FOR MODIFIED PLANS 0 10 20 30 40 50 60 70 80 90 100

Rev. Date: 12-27-99

DATE PLOTTED 9-23-2004 TIME PLOTTED 11:11:14

DIST	COUNTY	ROUTE	KILOMETER POST TOTAL PROJECT	SHEET NO	TOTAL SHEETS
04	SF, Ala	80	13.9 / 14.3, 0.0 / 1.6	T01 R2	978

Caltrans Metro

REGISTERED CIVIL ENGINEER — DATE 12/26/00

6-4-01
PLANS APPROVAL DATE

REGISTERED PROFESSIONAL ENGINEER — MEE SHING ONYANG — No. 24960 — Exp. 12/31/01 — CIVIL — STATE OF CALIFORNIA

PARSONS BRINCKERHOFF QUADE & DOUGLAS, INC.
303 SECOND STREET, SUITE 700 N
SAN FRANCISCO, CA 94107

The State of California or its officers or agents shall not be responsible for the accuracy or completeness of electronic copies of this plan sheet.

MARK	DATE	DESCRIPTIONS	REV	CK	
2	4/6/04	Revised weld detail	MG	MSO	CCO NO.24
1	2/12/04	Added detail for walkway beam to concrete pier table diaphragm at piers E15 and E16. Ref. RFI #714.	KW	MSO	CCO NO.24

REVISIONS

CONTRACT CHANGE ORDER NO. 24 S2
SHEET 22 OF 26

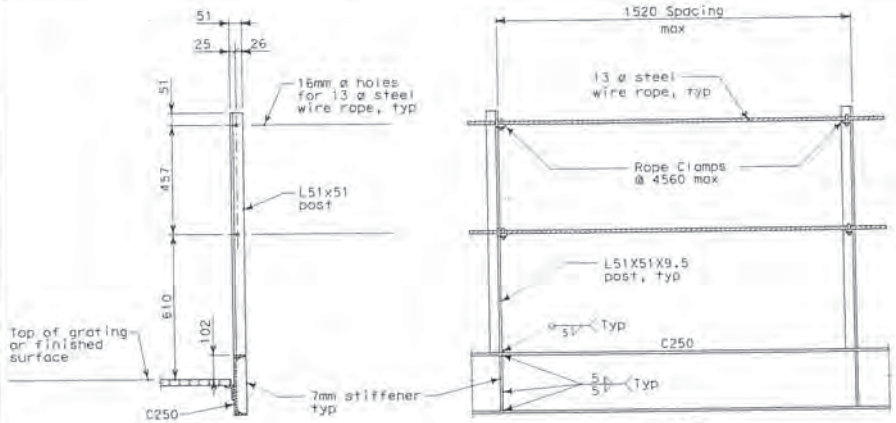

SECTION

ELEVATION

TYPICAL RAILING DETAIL

SCALE: 1:10

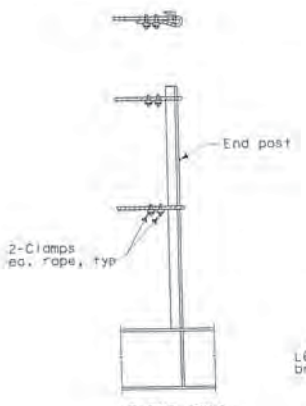

AT END POST

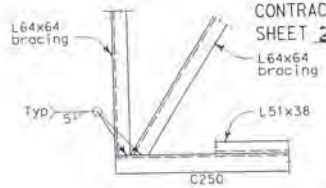

TYPICAL BRACING TO BEAM CONNECTION

5 / AS-9 DETAIL

SCALE: 1:10

NOTES:

1. The contractor shall verify all controlling field dimensions before ordering or fabricating any material.
2. For structure - westbound, identical.

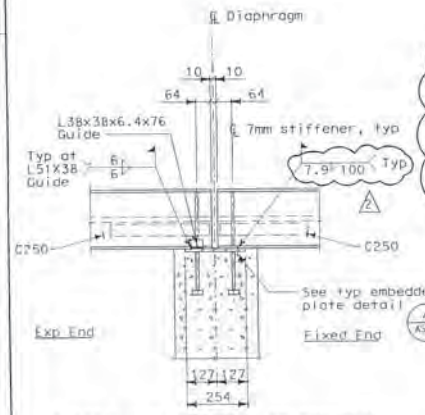

TYPICAL WALKWAY BEAM TO CONCRETE DIAPHRAGM CONNECTION

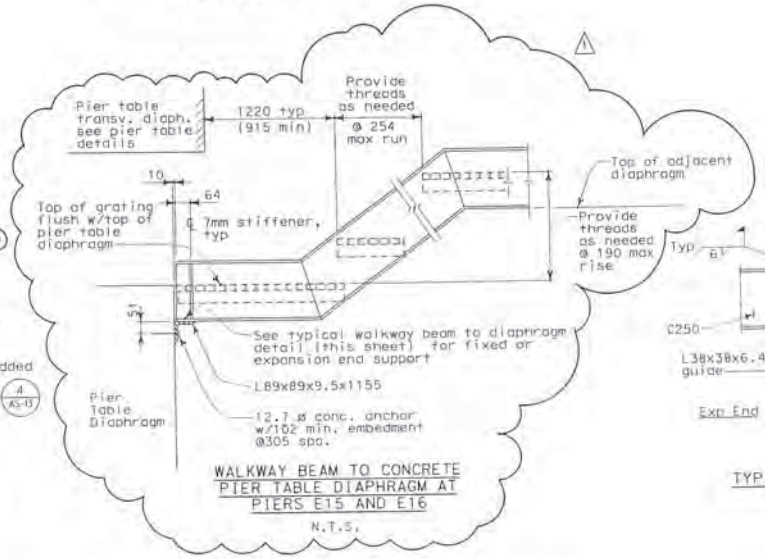

WALKWAY BEAM TO CONCRETE PIER TABLE DIAPHRAGM AT PIERS E15 AND E16

N.T.S.

D / AS-9 SECTION

SCALE: 1:10 UON

AS-15

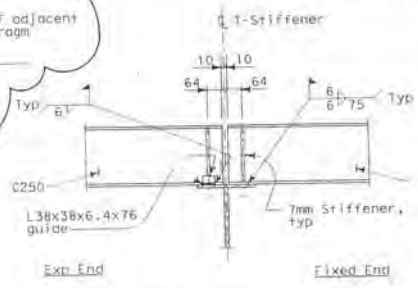

TYPICAL WALKWAY BEAM TO STEEL T-STIFFENER CONNECTION

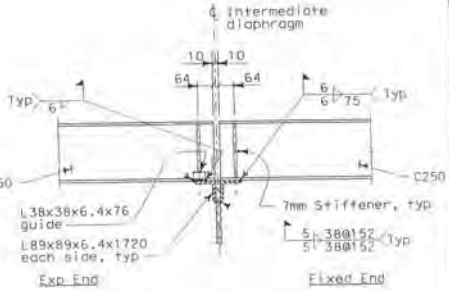

TYPICAL WALKWAY BEAM TO STEEL INTERMEDIATE DIAPHRAGM CONNECTION

ALL DIMENSIONS ARE IN MILLIMETERS UNLESS OTHERWISE SHOWN.

DESIGN	BY M.S. Owyong	CHECKED K. Liu	
LAYOUT	BY D. Kurnovskaya	CHECKED K. Liu	
QUANTITIES	BY G. Benkovich	CHECKED M. S. Owyong	

STATE OF CALIFORNIA
DEPARTMENT OF TRANSPORTATION

DIVISION OF STRUCTURES
STRUCTURAL DESIGN

BRIDGE NO. 34-0006
KILOMETER POST 13.0/14.3, 0.0/1.6

CU 04251
EA 012021

DGN FILE = T:\04\012021\010102.dgn
USERNAME = MNGS001

DISREGARD PRINTS BEARING EARLIER REVISION DATES

STRUCTURE - EASTBOUND
TYPICAL WALKWAY RAILING AND MISCELLANEOUS DETAILS

AS-17

SHEET 26 OF 47

ORIGINAL SCALE IN MILLIMETERS FOR REDUCED PLANS

DATE PLOTTED = 13-DEC-2005 TIME PLOTTED = 11:11:15

DIST	COUNTY	ROUTE	KILOMETER POST TOTAL PROJECT	SHEET NO.	TOTAL SHEETS
04	SF, Ala	80	13.8 / 14.3, 0.0 / 1.6	101A	978

Caltrans Metro

REGISTERED CIVIL ENGINEER — 4/12/05 DATE

PLANS APPROVAL DATE

REGISTERED PROFESSIONAL ENGINEER — WILLIAM BRADFORD HOME — No. 53321 — Exp. 6/30/07 — CIVIL — STATE OF CALIFORNIA

The State of California or its officers or agents shall not be responsible for the accuracy or completeness of electronic copies of this plan sheet.

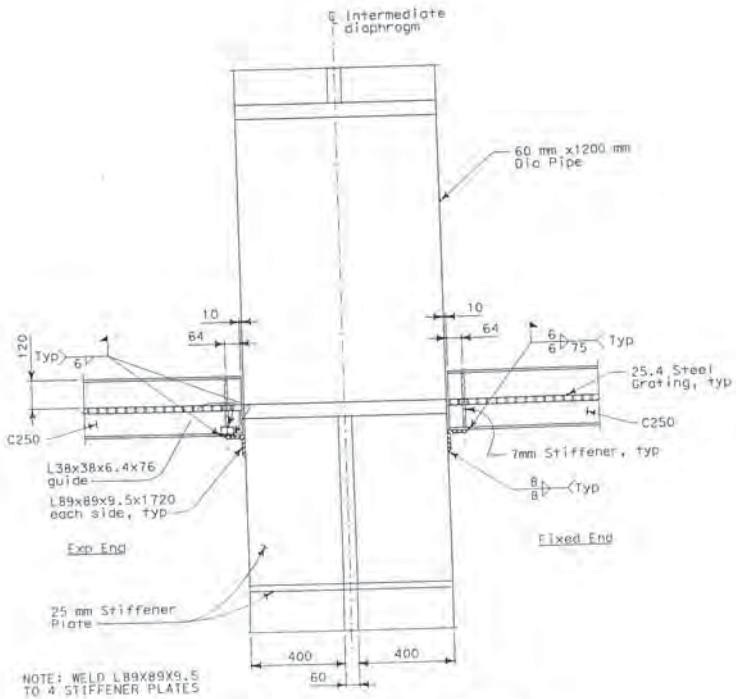

NOTE: WELD L89X89X9.5 TO 4 STIFFENER PLATES

WALKWAY BEAM TO STEEL CONNECTION AT INTERMEDIATE DIAPHRAGM

MARK	DATE	DESCRIPTIONS	REV	CK
	4/12/05	New sheet. Added detail.	MH	WBH

REVISIONS — CCO NO. 24

CONTRACT CHANGE ORDER NO. 24

SHEET 25 OF 26

ALL DIMENSIONS ARE IN MILLIMETERS UNLESS OTHERWISE SHOWN

	BY	CHECKED
DESIGN	M.S. Dwyang	K. Liu
LAYOUT	O. Kurnovskaya	K. Liu
QUANTITIES	G. Benkovich	M. S. Dwyang

ORIGINAL SCALE IN MILLIMETERS FOR REDUCED PLANS

STATE OF CALIFORNIA
DEPARTMENT OF TRANSPORTATION

DIVISION OF STRUCTURES
STRUCTURAL DESIGN

CU 04251
EA 012021

DGN FILE = s:\04-012021_1018.dgn
USERNAME = s\bnoss6jm

BRIDGE NO. 34-0006
KILOMETER POST 13.0/14.3, 0.0/1.6

DISREGARD PRINTS BEARING EARLIER REVISION DATES

STRUCTURE - EASTBOUND
TYPICAL WALKWAY RAILING AND MISCELLANEOUS DETAILS

AS-17A

REVISION DATES (PRELIMINARY STAGE ONLY)

SHEET 26 OF 47

DATE PLOTTED = 13-JUL-2005 TIME PLOTTED = 11:24

Mary, Darrel 12-27-99

DIST	COUNTY	ROUTE	KILOMETER POST TOTAL PROJECT	SHEET NO.	TOTAL SHEETS
04	SF, ALA	80	13.9 / 14.3, 0.0 / 1.6	102A 83	978

REGISTERED CIVIL ENGINEER — DATE 12/16/02

PLANS APPROVAL DATE

REGISTERED PROFESSIONAL ENGINEER — WEE SHING ONYANG — NO. 24960 — EXP. 12/31/05 — CIVIL — STATE OF CALIFORNIA

PARSONS BRINCKERHOFF QUADE & DOUGLAS, INC.
303 SECOND STREET, SUITE 700 N
SAN FRANCISCO, CA 94107

The State of California or its officers or agents shall not be responsible for the accuracy or completeness of electronic copies of this plan sheet.

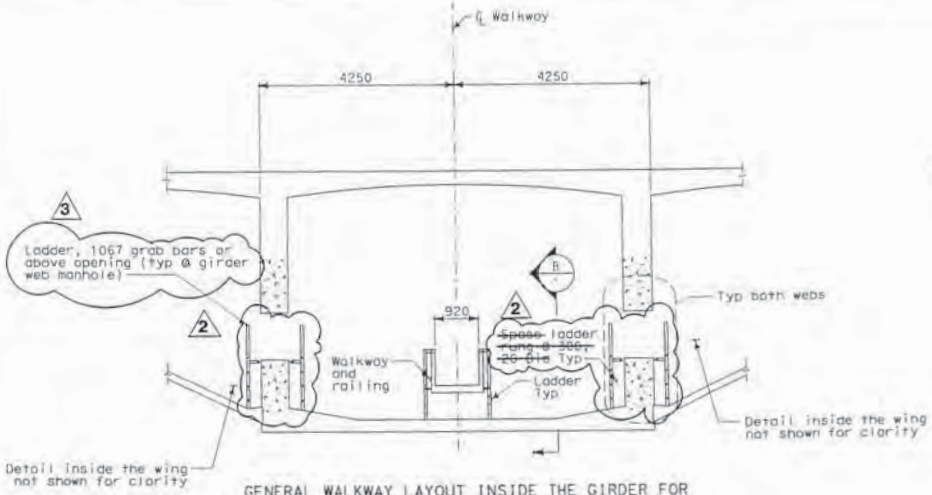

GENERAL WALKWAY LAYOUT INSIDE THE GIRDER FOR A SPAN WITH A HINGE

A SECTION (AS-13C) SCALE: 1:50

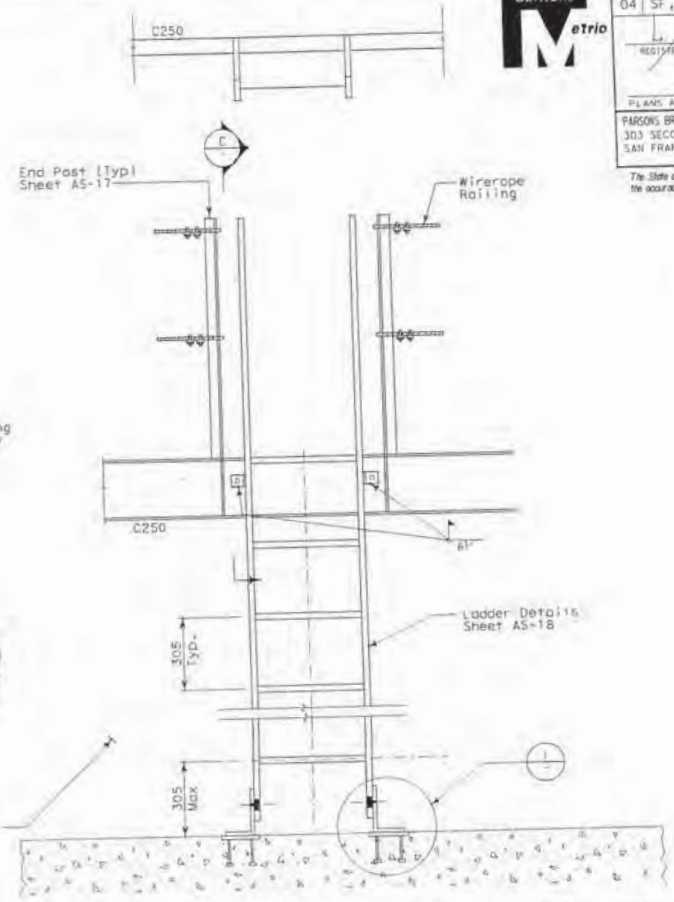

TYPICAL REMOVABLE RAILING AND LADDER DETAIL FOR A SPAN WITH HINGE

B SECTION NO SCALE

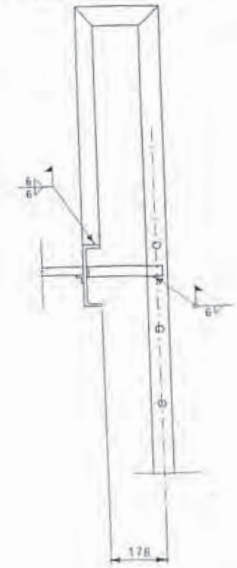

C SECTION NO SCALE

William Howe 9/13/04 — REGISTERED CIVIL ENGINEER — DATE

REGISTERED PROFESSIONAL ENGINEER — WILLIAM BRADFORD HOWE — NO. 53921 — EXP. 6/30/07 — CIVIL — STATE OF CALIFORNIA

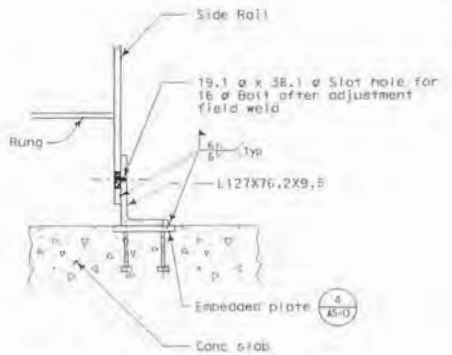

1 BASE CONNECTION NO SCALE

MARK	DATE	DESCRIPTIONS	REV	CK
3	4/12/05	Added callout	MH	CCO NO.24
2	6/28/04	Replace space rung with ladder.	LR SH	CCO NO.24
1	4/23/03	Deleted items.	KW	MSO

REVISIONS

CONTRACT CHANGE ORDER NO. 24 5.2
SHEET 2.4 OF 2.6

NOTES:

1. The contractor shall verify all controlling field dimensions before ordering or fabricating any material.
2. For typical railing detail, see "Typical Railing and Miscellaneous Details" sheet AS-17.
3. ~~For space ladder rung or alternate details, see Detail 5 and Note 4 of sheet AS-13.~~

ALL DIMENSIONS ARE IN MILLIMETERS UNLESS OTHERWISE SHOWN

DESIGN	BY K. Wongkaew	CHECKED W.S. Onyang	
LAYOUT	BY O. Kurnovskaya	CHECKED W.S. Onyang	
QUANTITIES	BY E. Wongkaew	CHECKED W.S. Onyang	

ORIGINAL SCALE IN MILLIMETERS FOR REDUCED PLANS 0 10 20 30 40 50 60 70 80 90 100

STATE OF CALIFORNIA
DEPARTMENT OF TRANSPORTATION

DIVISION OF STRUCTURES
STRUCTURAL DESIGN

CU 04251
EA 012021

DGN FILE: s:\06-01202_102AR1.dgn
USERNAME: s\mnoskolin

BRIDGE NO. 34-0006
KILOMETER POST 13.0/14.3, 0.0/1.6

DISPLAYING PRINTS BEARING EARLIER REVISION DATES

REVISION DATE (PRELIMINARY STAGE ONLY)

STRUCTURE - EASTBOUND
WALKWAY SECTIONS

AS-18A

SHEET 27A OF 47

DATE PLOTTED => 21-APR-2005 TIME PLOTTED => 08:50

MARK	DATE	DESCRIPTIONS	REV	CK	
3	4/12/05	Remove detail note	LR	SH	CCO NO.24
2	7/9/04	Added section D per RFI 861 for supporting branch walkway on Blister	KW	MSO	CCO NO.24
1	10/15/03	Revised dimension and added note 4.	LW	MSO	CCO NO.24

REVISIONS

William Howe 4/12/05
REGISTERED CIVIL ENGINEER DATE

REGISTERED PROFESSIONAL ENGINEER WILLIAM BRADFORD HOWE No. 53921 Exp. 6/30/07 CIVIL STATE OF CALIFORNIA

CONTRACT CHANGE ORDER NO. 24 S2
SHEET 25 OF 26

Caltrans Metric

DIST	COUNTY	ROUTE	KILOMETER POST TOTAL PROJECT	SHEET NO.	TOTAL SHEETS
04	SF, Ala	80	13.9 / 14.3 / 0.0 / 1.6	108R2	978

12/16/00
REGISTERED CIVIL ENGINEER DATE

6-4-01
PLANS APPROVAL DATE

REGISTERED PROFESSIONAL ENGINEER WEI SHING OWYANG No. 24968 Exp. 12/31/01 CIVIL STATE OF CALIFORNIA

PARSONS BRINCKERHOFF QUADE & DOUGLAS, INC.
303 SECOND STREET, SUITE 700 N
SAN FRANCISCO, CA 94107

The State of California or its officers or agents shall not be responsible for the accuracy or completeness of electronic copies of this plan sheet.

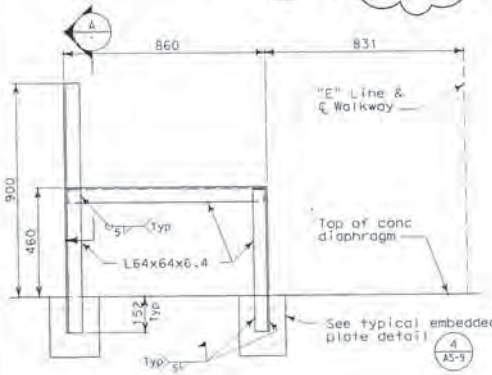

TYPE I AT PIER TABLE

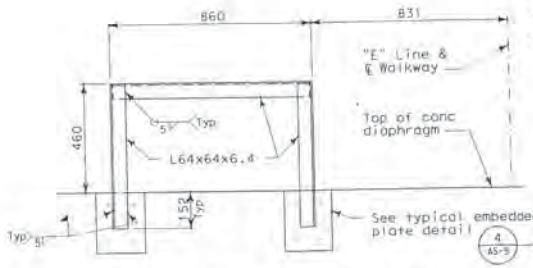

TYPE II AT DIAPHRAGM WITHOUT COUNTERWEIGHT

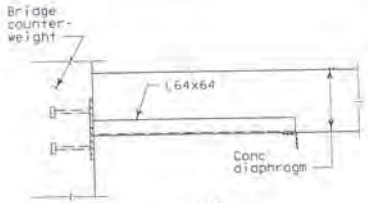

PLAN

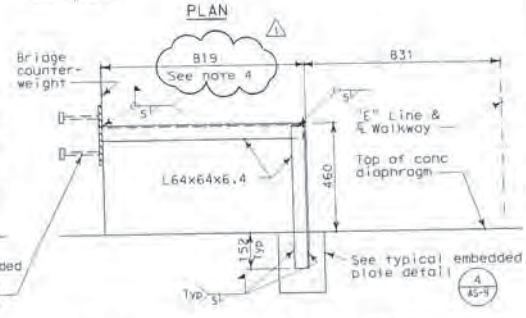

TYPE III AT DIAPHRAGM WITH COUNTERWEIGHT

NOTES:

1. The contractor shall verify all controlling field dimensions before ordering or fabricating any material.
2. For locations, orientations and types of electrical cable support, see electrical sheets.
3. For structure - westbound, identical.
4. For piers E16E and E16W - segment 4W, change 819 to 1419.

ELECTRICAL CABLE TRAY SUPPORTS

SCALE: 1:10

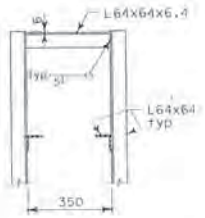

A SECTION
SCALE: 1:10

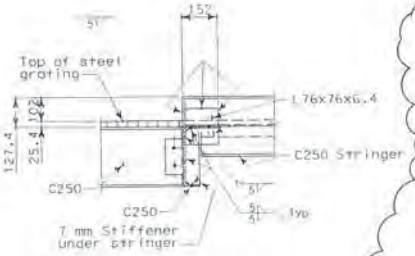

TYPICAL BEAM CONNECTION

B AS-9 SECTION
SCALE: 1:10
AS-13 AS-9E

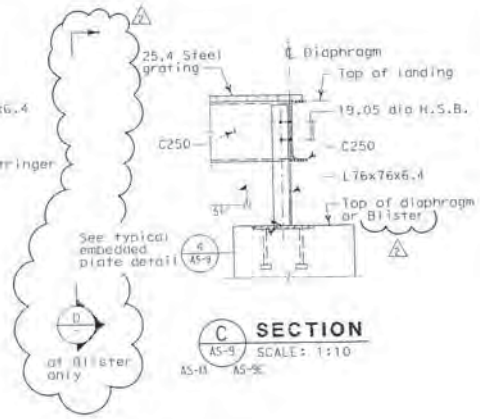

C AS-9 SECTION
SCALE: 1:10
AS-13 AS-9E

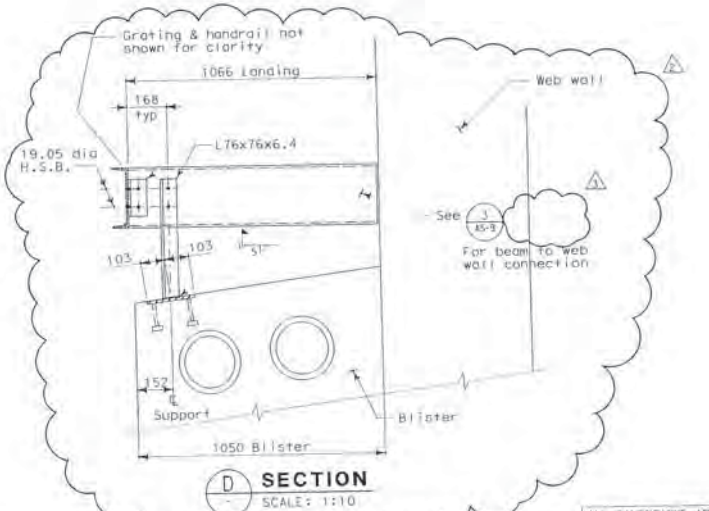

D SECTION
SCALE: 1:10

ALL DIMENSIONS ARE IN MILLIMETERS UNLESS OTHERWISE SHOWN

	BY	CHECKED
DESIGN	M.S. Dwyong	K. Liu
LAYOUT	R. Hernandez	K. Liu
QUANTITIES	G. Benkovich	M. S. Dwyong

ORIGINAL SCALE IN MILLIMETERS (FOR REDUCED PLANS) 0 10 20 30 40 50 60 70 80 90 100

STATE OF CALIFORNIA
DEPARTMENT OF TRANSPORTATION

DIVISION OF STRUCTURES
STRUCTURAL DESIGN

CU 04251
EA 012021

BRIDGE NO. 34-0006
KILOMETER POST 13.0/14.3 0.0/1.6

DISREGARD PRINTS BEARING EARLIER REVISION DATES

STRUCTURE - EASTBOUND
ELECTRICAL CABLE TRAY SUPPORTS

AS-24

SHEET 33 OF 47

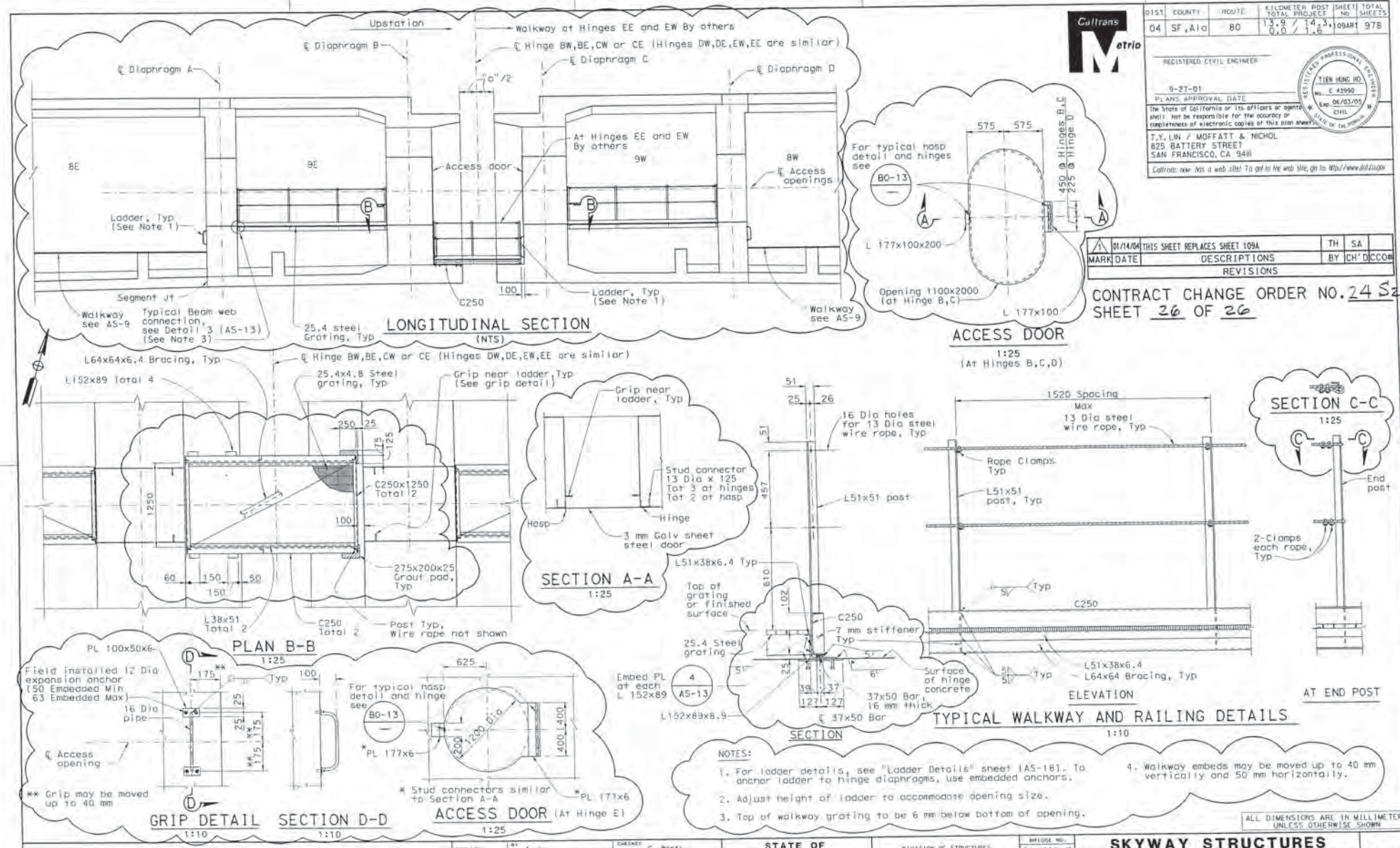

NOTES:

1. For ladder details, see "Ladder Details" sheet (AS-18). To anchor ladder to hinge diaphragms, use embedded anchors.
2. Adjust height of ladder to accommodate opening size.
3. Top of walkway grating to be 6 mm below bottom of opening.
4. Walkway embeds may be moved up to 40 mm vertically and 50 mm horizontally.

ALL DIMENSIONS ARE IN MILLIMETERS UNLESS OTHERWISE SHOWN

DIST	COUNTY	ROUTE	KILOMETER POST TOTAL PROJECT	SHEET NO.	TOTAL SHEETS
04	SF, Ala	80	13.9 / 14.3, 0.0 / 1.6	109AR1	978

Caltrans Metro

REGISTERED CIVIL ENGINEER

9-27-01
PLANS APPROVAL DATE

REGISTERED PROFESSIONAL ENGINEER TIEN HUNG HO No. C 43990 Exp. 06/03/05 CIVIL STATE OF CALIFORNIA

The State of California or its officers or agents shall not be responsible for the accuracy or completeness of electronic copies of this plan sheet.

T.Y. LIN / MOFFATT & NICHOL
825 BATTERY STREET
SAN FRANCISCO, CA 94111

Caltrans now has a web site! To get to the web site, go to http://www.dot.ca.gov

MARK	DATE	DESCRIPTIONS	BY	CH' D	CCO#
1	01/14/04	THIS SHEET REPLACES SHEET 109A	TH	SA	

REVISIONS

CONTRACT CHANGE ORDER NO. 24 S2
SHEET 26 OF 26

DESIGN	BY T. Ho	CHECKED C. Werts	
LAYOUT	BY A. Lisnansky	CHECKED C. Werts	
QUANTITIES	BY J. Chan	CHECKED S. Shi	

ORIGINAL SCALE IN MILLIMETERS FOR REDUCED PLANS 0 10 20 30 40 50 60 70 80 90 100

STATE OF CALIFORNIA
DEPARTMENT OF TRANSPORTATION

DIVISION OF STRUCTURES
STRUCTURAL DESIGN

CU 04251
EA 012021

DISREGARD PRINTS BEARING EARLIER REVISION DATES

BRIDGE NO. 34-0006L/R
KILOMETER POST 13.07/14.3, 0.0/1.6

SKYWAY STRUCTURES
WALKWAY AND ACCESS DOOR DETAILS

AS-26

DGN FILE = 04-012024_01DHAR1.dgn
USERNAME = 000180111

DATE PLOTTED = 13-DEC-2005 TIME PLOTTED = 11:53

STATE OF CALIFORNIA - DEPARTMENT OF TRANSPORTATION

CONTRACT CHANGE ORDER MEMORANDUM

TO: PETER SIEGENTHALER / DOUG COE, Supervising Br. Eng.	FILE: E.A. 04 - 012024
FROM: DOUG COE, Supervising Br. Eng.	CO-RTE-PM 04-SF,Ala-80-13.9/14.3,0.0/1.6
	FED. NO. ACIM-080-1(085)8N
CCO#: 24 SUPPLEMENT#: 2 Category Code: CXPA	CONTINGENCY BALANCE (incl. this change) $53,907,845.24
COST: $285,760.00 INCREASE ☑ DECREASE ☐	HEADQUARTERS APPROVAL REQUIRED? ☑ YES ☐ NO
SUPPLEMENTAL FUNDS PROVIDED: $0.00	IS THIS REQUEST IN ACCORDANCE WITH ENVIRONMENTAL DOCUMENTS? ☑ YES ☐ NO
CCO DESCRIPTION: Walkways at Hinges	**PROJECT DESCRIPTION:** REPLACE SFOBB EAST SPAN

LOCATION: IN SAN FRANCISCO AND ALAMEDA COUNTIES IN SAN FRANCISCO AND OAKLAND FROM 1.3 KM EAST OF THE YERBA BUENA ISL

THIS CHANGE ORDER PROVIDES FOR:

implementing revisions to walkways and ladders at the precast hinge segments as shown on revised contract plan sheet numbers 92R2, 93R6, 93AR1, 93BR3, 93CR5, 93DR4, 93ER2, 93FR2, 93GR2, 94R4, 95R2, 96R3, 97R6, 97AR3, 97BR4, 97CR5, 97DR4, 97ER1, 98R6, 99R2, 101R2, 101A, 102AR3, 108R2, and 109AR1 of 978 (sheets 2 through 26 of the change order), and for the following increased costs resulting from the Engineer's delayed delivery of the revised contract plan sheets:

1. The increase in material costs that occured during the time the contractor was prevented from ordering the material due to the delayed completion of the shop drawings;
2. The increased costs for work to be done producing shop drawings beyond the scope established in Contract Change Order No. 24, "Web Manhole Access-Shop Drawings," executed on October 16, 2003;
3. The increased freight costs for delivery of fabricated components;
4. The increased fabrication costs for the work associated with the revised contract plan sheets.

This change order is needed to resolve multiple conflicts between the walkways, ladders, prestressing tendons, bar reinforcing steel, and segment joints. This change order will compensate the Contractor for the increased costs of fabrication associated with the Engineer's late delivery of the contract plan sheets that were revised to resolve the conflicts. These conflicts were identified during the development of the Contractor's composite working drawings for the superstructure precast segments. The Engineer established Contract Change Order No. 24, Supplement No. 0, to pay for additional shop drawing work performed. Contract Change Order Number 24, Supplement No. 1, was established to resolve issues associated with relocating web manholes and continuity tendons in the superstructure segments, and to provide for cutting holes in the segment casting machine bulkhead as necessary to accommodate the new continuity tendon profiles. Contract Change Order No. 24, Supplement No. 2, compensates the Contractor for the increased fabrication costs resulting as a consequence of the Engineer's delayed delivery of the revised contract plan sheets.

For the increased costs of fabrication, the Contractor will be paid an agreed lump sum amount of $285,760.00. The method of payment will be Adjustment of Compensation at Agreed Lump Sum. This cost increase to the project can be financed from the contingency fund. A detailed cost analysis for this change order is on file in the project records.

Any increase in installation cost will be covered in a supplemental CCO.

Mr. Pete Siegenthaler, SFOBB Construction Manager, Toll Bridge Construction, concurs with this change. A copy of the concurrence signed by Mr. Siegenthaler on December 18, 2003 is attached.

Mr. Jon Tapping, SFOBB Toll Bridge Project Manager, provided concurrence on December 23, 2005. A copy of the concurrence provided by Mr. Tapping is attached.

Prior Approval was obtained from Ms. Nancy Bobb, FHWA Bay Bridge Project Manager, via electronic message on December 20, 2005. A printed copy of the prior approval provided by Ms. Bobb is attached.

Design concurrence was provided by the designer of record, Parsons Brinckerhoff, Quade and Douglas, (PB) as shown by the signatures on the revised plan sheets.

Concurrence from Maintenance was obtained from Mr. Kenneth Brown, Structure Maintenance and Investigations, on

January 5, 2006. A copy of the concurrence received from Maintenance is attached.

No adjustment of contract time is warranted, as this change does not affect the controlling operation.

RECEIVED
050335 MAR 20 06

CONCURRED BY:		
Construction Engineer:	Douglas Coe	Date2/18/2003
Bridge Engineer:	Douglas Coe	Date2/18/2003
FHWA Representative:	Nancy Bobb	Date2/14/2005
Project Engineer:	Peter Siegenthaler	Date2/18/2003
Other (specify): Jon Tapping		Date2/23/2005
Ken Brown (Maintenance)		Date 1/5/2006
		Date
District Prior Approval By:		Date
HQ (Issue Approve) By:		Date
Resident Engineer's Signature:		Date 2-14-06

ESTIMATE OF COST		
	THIS REQUEST	TOTAL TO DATE
ITEMS	$0.00	$0.00
FORCE ACCOUNT	$0.00	$0.00
AGREED PRICE	$0.00	$0.00
ADJUSTMENT	$285,760.00	$400,590.00
TOTAL	$285,760.00	$400,590.00

FEDERAL PARTICIPATION

☑ PARTICIPATING ☐ PARTICIPATING IN PART ☐ NONE
☐ NON-PARTICIPATING (MAINTENANCE) ☐ NON-PARTICIPATING

FEDERAL SEGREGATION (if more than one Funding Source or P.I.P. type)
☑ CCO FUNDED PER CONTRACT ☐ CCO FUNDED AS FOLLOWS

FEDERAL FUNDING SOURCE	PERCENT

CONTRACT CHANGE ORDER

Change Requested by: Engineer

CCO 24	Suppl. No. 3	Contract No. 04 - 012024	Road 04-SF,Ala-80-13.9/14.3,0.0/1.6	FED. AID LOC.: ACIM-080-1(085)8N

To: **KIEWIT / FCI / MANSON a JV**

You are directed to make the following changes from the plans and specifications or do the following described work not included in the plans and specifications for this contract. ***NOTE: This change order is not effective until approved by the Engineer.***

Description of work to be done, estimate of quantities and prices to be paid. (Segregate between additional work at contract price, agreed price and force account.) Unless otherwise stated, rates for rental of equipment cover only such time as equipment is actually used and no allowance will be made for idle time. This last percentage shown is the net accumulated increase or decrease from the original quantity in the Engineer's Estimate.

Adjustment of Compensation at Lump Sum:

Furnish additional labor, equipment, and material, to install the revised walkways (Bid Item No. 87) in the precast segments in accordance with the revised plan sheets submitted with Contract Change Order No. 24 S0, 24 S1, and 24S2 for the SFOBB East Span Skyway, Bridge Nos. 34-0006L/R.

This Contract Change Order resolves all known issues related to Bid Item No. 87 "Walkways", as of August 1, 2006.

Full compensation, including all markups, for all direct and indirect costs, all associated impact costs, and all overhead costs are included in the lump sum payment of CCO No. 200 and no further payment will be made as a result of this CCO.

Estimated Cost: Increase ☐ Decrease ☐

By reason of this order the time of completion will be adjusted as follows: 0 days

Submitted by

Signature	Resident Engineer: DOUG COE, Supervising Br. Eng.	Date 8-24-06

Approval Recommended by

Signature	Construction Engineer: DOUG COE, Supervising Br. Eng.	Date 8-24-06

Engineer Approval by

Signature	(Print name and title) PETER SIEGENTHALER - Chief	Date

We the undersigned contractor, have given careful consideration to the change proposed and agree, if this proposal is approved, that we will provide all equipment, furnish the materials, except as may otherwise be noted above, and perform all services necessary for the work above specified, and will accept as full payment therefor the prices shown above.

NOTE: If you, the contractor, do not sign acceptance of this order, your attention is directed to the requirements of the specifications as to proceeding with the ordered work and filing a written protest within the time therein specified.

Contractor Acceptance by

Signature	(Print name and title) LEE ZINK, Project Director	Date 9/5/06

STATE OF CALIFORNIA - DEPARTMENT OF TRANSPORTATION

CONTRACT CHANGE ORDER MEMORANDUM

TO: PETER SIEGENTHALER / DOUG COE, Supervising Br. Eng.	FILE: E.A. 04 - 012024
FROM: DOUG COE, Supervising Br. Eng.	CO-RTE-PM 04-SF,Ala-80-13.9/14.3,0.0/1.6
	FED. NO. ACIM-080-1(085)8N
CCO# 24 SUPPLEMENT#: 3 Category Cod AXZZ	CONTINGENCY BALANCE (incl. this change
COST: INCREASE ☑ DECREASE ☐	HEADQUARTERS APPROVAL REQUIRED? ☑ YES ☐ NO
SUPPLEMENTAL FUNDS PROVIDED: $0.00	IS THIS REQUEST IN ACCORDANCE WITH ENVIRONMENTAL DOCUMENTS? ☑ YES ☐ NO
CCO DESCRIPTION: Walkway Installation Issues	**PROJECT DESCRIPTION:** REPLACE SFOBB EAST SPAN

LOCATION: IN SAN FRANCISCO AND ALAMEDA COUNTIES IN SAN FRANCISCO AND OAKLAND FROM 1.3 KM EAST OF THE YERBA BUENA ISL

THIS CHANGE ORDER PROVIDES FOR:

furnishing additional labor, equipment, and materials, to install the revised walkways and ladders in the precast segments per revised contract plan sheets issued with Contract Change Order No. 24 S2, for the SFOBB East Span Skyway, Bridge Nos. 34-0006L/R.

Multiple conflicts between the walkways, ladders, prestressing tendons, bar reinforcing steel, and segment joints were identified during the development of the Contractor's composite working drawings for the superstructure precast segments. This resulted in a delayed delivery of the revised contract plan sheets. Contract Change Order No. 24, Supplement No. 2, compensated the Contractor for the increased fabrication costs resulting from the delayed delivery of the revised contract plan sheets. The delay in fabrication also affected the Contractors planned installation sequence. Instead of installing the branch walkways and ladders during the segment curing period in the Stockton Pre-cast Yard, the installation is now performed after erection of the segments.

The Contractor's increase in labor, material, and equipment will:

1. Establish a delivery and staging area at the Oakland job site for the branch walkways,
2. Setup and remove temporary access locations for the installation of the branch walkways,
3. Install the branch walkways at the job site instead of the Stockton precast yard,
4. Field fit the branch walkways in the revised locations,
5. Install additional branch walkway support beams at the web manholes due to blisters that were not shown on the original contract plans, and
6. Install additional ladders at Pier 16 web manhole.

The agreed compensation for this contract change order is included in the lump sum compensation portion of resolution CCO No. 200. For this change, the contractor will receive an agreed lump sum of $390,000.00.

A detailed force account analysis prepared by the Engineer for the cost of this change order is on file in the project records.

Mr. Pete Siegenthaler, SFOBB Construction Manager, Toll Bridge Construction, concurs with this change. A copy of the concurrence signed by Mr. Siegenthaler on December 18, 2003 is attached.

Prior Approval was obtained from Ms. Nancy Bobb, FHWA Bay Bridge Project Manager, via electronic message on July 13, 2006. A printed copy of the prior approval provided by Ms. Bobb is attached.

Mr. Ken Terpstra, SFOBB Toll Bridge Project Manager, concurred with this change order on July 7, 2006.
A copy of the concurrence provided by Mr. Terpstra is attached.

Design concurrence for this contract change order is not required since this supplement only deals with the installation portion of this change.

Maintenance concurrence is not required because this supplement only deals with the installation portion of this change.

CONCURRED BY:		
Construction Engineer:	Douglas Coe	Date 8-24-06
Bridge Engineer:	Douglas Coe	Date 8-24-06
FHWA Representative:	Nancy Bobb	Date7/13/2006
Project Engineer:		Date
Other (specify): Ken Terpstra, SFOBB Project Manager		Date 7/7/2006
		Date
		Date
District Prior Approval By:		Date
HQ (Issue Approve) By:	Ken Darby	Date
Resident Engineer's Signature:		Date 8-24-06

ESTIMATE OF COST

	THIS REQUEST	TOTAL TO DATE
ITEMS	$0.00	$0.00
FORCE ACCOUNT	$0.00	$0.00
AGREED PRICE	$0.00	$0.00
ADJUSTMENT		
TOTAL		

FEDERAL PARTICIPATION

☑ PARTICIPATING ☐ PARTICIPATING IN PART ☐ NONE
☐ NON-PARTICIPATING (MAINTENANCE) ☐ NON-PARTICIPATING

FEDERAL SEGREGATION (if more than one Funding Source or P.I.P. type)
☑ CCO FUNDED PER CONTRACT ☐ CCO FUNDED AS FOLLOWS

FEDERAL FUNDING SOURCE	PERCENT

STATE OF CALIFORNIA - DEPARTMENT OF TR...SPORTATION

CONTRACT CHANGE ORDER

Change Requested by: Engineer

CCO: 25	Suppl. No. 0	Contract No. 04 - 012024	Road 04-SF,Ala-80-13.9/14.3,0.0/1.6	FED. AID LOC.: ACIM-080-1(085)8N

To: **KIEWIT / FCI / MANSON a JV**

You are directed to make the following changes from the plans and specifications or do the following described work not included in the plans and specifications for this contract. ***NOTE: This change order is not effective until approved by the Engineer.***

Description of work to be done, estimate of quantities and prices to be paid. (Segregate between additional work at contract price, agreed price and force account.) Unless otherwise stated, rates for rental of equipment cover only such time as equipment is actually used and no allowance will be made for idle time. This last percentage shown is the net accumulated increase or decrease from the original quantity in the Engineer's Estimate.

Extra Work at Lump Sum:

Furnish the additional alternate mechanical embed plates shown on sheet 2 of 2 of this change order for precast segment panels only. The number of additional plates furnished shall be in sufficient quantity to complete the required installation of the mechanical embed plates shown on the revised contract plan sheet for the SFOBB East Span Skyway, Bridge Nos. 340006L/R.

The revised contract plan sheet reflecting this change is 48R1 of 978.

For furnishing additional alternate mechanical embed plates, the Contractor will be paid an agreed lump sum of $65,850.11. This agreed lump sum constitutes full compensation, including all markups, for all direct and indirect costs, all associated project impacts, and all Time Related Overhead (TRO) expenses for furnishing additional alternate mechanical embed plates. The Contractor will store the plates on site and will use the plate that is necessary to complete the performance of the work. This change does not include past or future labor costs or other project impacts associated with installing these plates.

Cost of Extra Work at Lump Sum $65,850.11

Estimated Cost: **Increase** ☑ **Decrease** ☐ **$65,850.11**

By reason of this order the time of completion will be adjusted as follows: 0 days

Submitted by

Signature	Resident Engineer: COE D.	Date 6-1-04

Approval Recommended by

Signature	Construction Engineer: COE D.	Date 6-1-04

Engineer Approval by

Signature	(Print name and title) For PETER SIEGENTHALER - Chief	Date 6/10/04

We the undersigned contractor, have given careful consideration to the change proposed and agree, if this proposal is approved, that we will provide all equipment, furnish the materials, except as may otherwise be noted above, and perform all services necessary for the work above specified, and will accept as full payment therefor the prices shown above.

NOTE: If you, the contractor, do not sign acceptance of this order, your attention is directed to the requirements of the specifications as to proceeding with the ordered work and filing a written protest within the time therein specified.

Contractor Acceptance by

Signature	(Print name and title) A.T. Sharo, Project Director	Date 6-7-04

STATE OF CALIFORNIA - DEPARTMENT OF TRANSPORTATION

CONTRACT CHANGE ORDER

Change Requested by: Engineer

CCO: 26	Suppl. No. 0	Contract No. 04 - 012024	Road 04-SF,Ala-80-13.9/14.3,0.0/1.6	FED. AID LOC.: ACIM-080-1(085)8N

To: KIEWIT / FCI / MANSON a JV

You are directed to make the following changes from the plans and specifications or do the following described work not included in the plans and specifications for this contract. ***NOTE: This change order is not effective until approved by the Engineer.***

Description of work to be done, estimate of quantities and prices to be paid. (Segregate between additional work at contract price, agreed price and force account.) Unless otherwise stated, rates for rental of equipment cover only such time as equipment is actually used and no allowance will be made for idle time. This last percentage shown is the net accumulated increase or decrease from the original

Extra Work at Force Account:

As approved by the Engineer, setup the "Mission Control" trailer facilities and install utilities at the Caltrans Pier 7 construction office located at Pier 7 in Oakland, CA. The facilities will be for the exclusive use of delegated members of the bridge design team, the Contractor's construction engineer, and the Department.

The costs will be reimbursed as Extra Work at Force Account as specified in Section 5-1.21, "Force Account Payment" of the Special Provisions.

There will be no adjustment in Contract time as this change order does not affect the controlling operations.

Estimated cost of Extra Work at Force Account $125,000.00

Estimated Cost: Increase ☑ Decrease ☐ $125,000.00

By reason of this order the time of completion will be adjusted as follows: 0 days

Submitted by

Signature	Resident Engineer: COE D.	Date 3-27-03

Approval Recommended by

Signature	Construction Engineer: COE D.	Date 3-27-03

Engineer Approval by

Signature for	(Print name and title) PETER SIEGENTHALER - Chief	Date 4/17/03

We the undersigned contractor, have given careful consideration to the change proposed and agree, if this proposal is approved, that we will provide all equipment, furnish the materials, except as may otherwise be noted above, and perform all services necessary for the work above specified, and will accept as full payment therefor the prices shown above.

NOTE: If you, the contractor, do not sign acceptance of this order, your attention is directed to the requirements of the specifications as to proceeding with the ordered work and filing a written protest within the time therein specified.

Contractor Acceptance by

Signature	(Print name and title) A.T. Skorio, Project Director	Date 4/9/03

STATE OF CALIFORNIA - DEPARTMENT OF TRANSPORTATION

CONTRACT CHANGE ORDER MEMORANDUM

DATE: 3/23/03

TO: PETER SIEGENTHALER / COE D.	FILE: E.A. 04 - 012024
FROM: COE D.	CO-RTE-PM 04-SF,Ala-80-13.9/14.3,0.0/1.6
	FED. NO. ACIM-080-1(085)8N
CCO# 26 SUPPLEMENT#: 0 Category Cod EXAX	CONTINGENCY BALANCE (incl. this change $52,927,820.27
COST: $125,000.00 INCREASE ☑ DECREASE ☐	HEADQUARTERS APPROVAL REQUIRED? ☐ YES ☑ NO
SUPPLEMENTAL FUNDS PROVIDED: $0.00	IS THIS REQUEST IN ACCORDANCE WITH ENVIRONMENTAL DOCUMENTS? ☑ YES ☐ NO
CCO DESCRIPTION: TY Lin/Parsons Design Trailer Buildout	**PROJECT DESCRIPTION:** REPLACE SFOBB EAST SPAN

LOCATION: IN SAN FRANCISCO AND ALAMEDA COUNTIES IN SAN FRANCISCO AND OAKLAND FROM 1.3 KM EAST OF THE YERBA BUENA ISL

THIS CHANGE ORDER PROVIDES FOR:

setup of the office facilities (located between the Department's and the Contractor's construction offices) on Pier 7 in Oakland for the joint resolution of design interference and congestion issues on the Contract Plans, utility connections, and for monthly lodging for the Contractor's construction engineers relocated to Oakland for this work.

The Contractor filed a Notice of Potential Claim on September 19, 2002, for additional cost and time required to complete the integrated composite segment shop drawings due to conflicts on the Contract Plans. There are many issues regarding conflicts and congestion in the Contract Plans that cannot be mitigated with the tolerances specified in the Special Provisions. These conflicts are negatively impacting production of the segment Composite Working Drawings by the Contractor's construction engineers (Parsons Transportation Group), which if not resolved will delay the project. The segment Composite Working Drawings are required by the Special Provisions. After many discussions with the Contractor, the Engineer determined it would be more efficient to co-locate the Designer, the Contractor's Construction Engineer, and the Department's engineers on Pier 7 to expeditiously resolve the conflicts in order to mitigate contract delay. The setup of the new office trailers (known as the Mission Control) began December 8, 2002, and was in operation the following week.

EXTRA WORK AT FORCE ACCOUNT

These costs will be reimbursed as Extra Work at Force Account as specified in Section 5-1.21, "Force Account Payment" of the Special Provisions.

Estimated cost at Force Account is $125,000.00.

Maintenance concurrence is not required for this extra work.

FHWA concurrence was not required for this extra work.

Mr. Andy Fremier, Director of Construction; Mr. Pete Siegenthaler, Principal Transportation Engineer; and Mr. Doug Coe, Area Construction Manager; recommended this change order.

RECEIVED
007062 MAY -8 02

CONCURRED BY:	
Construction Engineer:	Date
Bridge Engineer:	Date
FHWA Representative:	Date
Project Engineer:	Date
Other (specify):	Date
	Date
	Date
District Prior Approval By:	Date
HQ (Issue Approve) By:	Date
Resident Engineer's Signature:	Date 3-27-03

ESTIMATE OF COST

	THIS REQUEST	TOTAL TO DATE
ITEMS	$0.00	$0.00
FORCE ACCOUNT	$125,000.00	$125,000.00
AGREED PRICE	$0.00	$0.00
ADJUSTMENT	$0.00	$0.00
TOTAL	$125,000.00	$125,000.00

FEDERAL PARTICIPATION

☑ PARTICIPATING ☐ PARTICIPATING IN PART ☐ NONE
☐ NON-PARTICIPATING (MAINTENANCE) ☐ NON-PARTICIPATING

FEDERAL SEGREGATION (if more than one Funding Source or P.I.P. type)
☑ CCO FUNDED PER CONTRACT ☐ CCO FUNDED AS FOLLOWS

FEDERAL FUNDING SOURCE	PERCENT

STATE OF CALIFORNIA - DEPARTMENT OF TRANSPORTATION

CONTRACT CHANGE ORDER

Change Requested by: Engineer

CCO: 26	Suppl. No. 1	Contract No. 04 - 012024	Road 04-SF,Ala-80-13.9/14.3,0.0/1.6	FED. AID LOC.: ACIM-080-1(085)8N

To: KIEWIT / FCI / MANSON a JV

You are directed to make the following changes from the plans and specifications or do the following described work not included in the plans and specifications for this contract. ***NOTE: This change order is not effective until approved by the Engineer.***

Description of work to be done, estimate of quantities and prices to be paid. (Segregate between additional work at contract price, agreed price and force account.) Unless otherwise stated, rates for rental of equipment cover only such time as equipment is actually used and no allowance will be made for idle time. This last percentage shown is the net accumulated increase or decrease from the original quantity in the Engineer's Estimate.

Extra Work at Force Account:

SUPPLEMENT NO. 1

Increase allotment of Contract Change Order 26 by $102,000.00. Total allotment will now be ($125,000.00 + $102,000.00= $227,000.00. The current Change Order amount is $125,000.00.

Estimated cost at Force Account for Supplement No. 1 is $102,000.00.

There will be no adjustment in Contract time as this change order does not affect the controlling operations.

Total estimated cost including this Supplement 1 is..... $ 227,000.00

Estimated Cost: Increase ☑ Decrease ☐ **$102,000.00**

By reason of this order the time of completion will be adjusted as follows: 0 days

Submitted by

Signature	Resident Engineer: COE D.	Date 3-28-03

Approval Recommended by

Signature	Construction Engineer: COE D.	Date 3-28-03

Engineer Approval by

Signature	(Print name and title) PETER SIEGENTHALER - Chief	Date

We the undersigned contractor, have given careful consideration to the change proposed and agree, if this proposal is approved, that we will provide all equipment, furnish the materials, except as may otherwise be noted above, and perform all services necessary for the work above specified, and will accept as full payment therefor the prices shown above.

NOTE: If you, the contractor, do not sign acceptance of this order, your attention is directed to the requirements of the specifications as to proceeding with the ordered work and filing a written protest within the time therein specified.

Contractor Acceptance by

Signature	(Print name and title) A.T. Skeen, Project Director	Date 6/5/03

STATE OF CALIFORNIA - DEPARTMENT OF TRANSPORTATION

CONTRACT CHANGE ORDER MEMORANDUM

DATE: 5/28/03

TO: PETER SIEGENTHALER / COE D.	FILE: **E.A.** 04 - 012024
FROM: COE D.	**CO-RTE-PM** 04-SF,Ala-80-13.9/14.3,0.0/1.6
	FED. NO. ACIM-080-1(085)8N
CCO#: **26** SUPPLEMENT#: **1** Category Code: **EXBA**	CONTINGENCY BALANCE (incl. this change) **$63,704,109.32**
COST: **$102,000.00** INCREASE ☑ DECREASE ☐	HEADQUARTERS APPROVAL REQUIRED? ☐ YES ☑ NO
SUPPLEMENTAL FUNDS PROVIDED: **$0.00**	IS THIS REQUEST IN ACCORDANCE WITH ENVIRONMENTAL DOCUMENTS? ☑ YES ☐ NO
CCO DESCRIPTION: Addt'l Trailers & staff for Parsons Bldg	**PROJECT DESCRIPTION:** REPLACE SFOBB EAST SPAN

LOCATION: IN SAN FRANCISCO AND ALAMEDA COUNTIES IN SAN FRANCISCO AND OAKLAND FROM 1.3 KM EAST OF THE YERBA BUENA ISL

THIS CHANGE ORDER PROVIDES FOR:
increasing the allotment of CCO 26 by $102,000.00.

Office facilities were expanded in Misasion Control trailers to provide working areas for added design staff necessary to partially resolve NOPC 3, received 9/19/02. The current Change Order amount is $125,000.00; although the accrued cost through March 2003 is $130,000.00.

Estimated cost at Force Account for Supplement No. 1 is $102,000.00. Estimated total cost of this change order, including Supplement 1, is $227,000.00.

Maintenance concurrence is not required for this extra work.

FHWA concurrence was not required for this extra work.

Mr. Andy Fremier, Director of Construction, Mr. Pete Siegenthaler, Principal Transportation Engineer, and Mr. Doug Coe, Area Construction Manager, recommended this change order.

RECEIVED 03 JUL 10 08:03

CONCURRED BY:	
Construction Engineer:	Date
Bridge Engineer:	Date
FHWA Representative:	Date
Project Engineer:	Date
Other (specify):	Date
	Date
	Date
District Prior Approval By:	Date
HQ (Issue Approve) By:	Date
Resident Engineer's Signature:	Date 5-28-03

ESTIMATE OF COST		
	THIS REQUEST	TOTAL TO DATE
ITEMS	$0.00	$0.00
FORCE ACCOUNT	$102,000.00	$227,000.00
AGREED PRICE	$0.00	$0.00
ADJUSTMENT	$0.00	$0.00
TOTAL	$102,000.00	$227,000.00

FEDERAL PARTICIPATION

☑ PARTICIPATING ☐ PARTICIPATING IN PART ☐ NONE
☐ NON-PARTICIPATING (MAINTENANCE) ☐ NON-PARTICIPATING

FEDERAL SEGREGATION (if more than one Funding Source or P.I.P. type)
☑ CCO FUNDED PER CONTRACT ☐ CCO FUNDED AS FOLLOWS

FEDERAL FUNDING SOURCE PERCENT

STATE OF CALIFORNIA - DEPARTMENT OF TRANSPORTATION

CONTRACT CHANGE ORDER

Change Requested by: Engineer

CCO: 26	Suppl. No. 2	Contract No. 04 - 012024	Road 04-SF,Ala-80-13.9/14.3,0.0/1.6	FED. AID LOC.: ACIM-080-1(085)8N

To: KIEWIT / FCI / MANSON a JV

You are directed to make the following changes from the plans and specifications or do the following described work not included in the plans and specifications for this contract. ***NOTE: This change order is not effective until approved by the Engineer.***

Description of work to be done, estimate of quantities and prices to be paid. (Segregate between additional work at contract price, agreed price and force account.) Unless otherwise stated, rates for rental of equipment cover only such time as equipment is actually used and no allowance will be made for idle time. This last percentage shown is the net accumulated increase or decrease from the original quantity in the Engineer's Estimate.

Extra Work at Force Account:

This contract change order partially resolves Notice of Potential Claim #3, dated September 20, 2002, by compensating the per diem and lodging expenses of the Contractor's construction engineer.

Provide additional funds $120,000.00

Estimated Cost: Increase ☑ Decrease ☐ $120,000.00

By reason of this order the time of completion will be adjusted as follows: 0 days

Submitted by		
Signature	Resident Engineer: COE D.	Date 10-3-03
Approval Recommended by		
Signature	Construction Engineer: COE D.	Date 10-3-03
Engineer Approval by		
Signature	(Print name and title) PETER SIEGENTHALER - Chief	Date 10/14/03

We the undersigned contractor, have given careful consideration to the change proposed and agree, if this proposal is approved, that we will provide all equipment, furnish the materials, except as may otherwise be noted above, and perform all services necessary for the work above specified, and will accept as full payment therefor the prices shown above.

NOTE: If you, the contractor, do not sign acceptance of this order, your attention is directed to the requirements of the specifications as to proceeding with the ordered work and filing a written protest within the time therein specified.

Contractor Acceptance by		
Signature	(Print name and title) A.T. Skolo, Project Director	Date 10/6/03

STATE OF CALIFORNIA - DEPARTMENT OF TRANSPORTATION

CONTRACT CHANGE ORDER

Change Requested by: Engineer

CCO: 26	Suppl. No. 3	Contract No. 04 - 012024	Road 04-SF,Ala-80-13.9/14.3,0.0/1.6	FED. AID LOC.: ACIM-080-1(085)8N

To: KIEWIT / FCI / MANSON a JV

You are directed to make the following changes from the plans and specifications or do the following described work not included in the plans and specifications for this contract. ***NOTE: This change order is not effective until approved by the Engineer.***

Description of work to be done, estimate of quantities and prices to be paid. (Segregate between additional work at contract price, agreed price and force account.) Unless otherwise stated, rates for rental of equipment cover only such time as equipment is actually used and no allowance will be made for idle time. This last percentage shown is the net accumulated increase or decrease from the original quantity in the Engineer's Estimate.

Extra Work at Force Account:

This contract change order compensates the Contractor's construction engineer for per diem, lodging, and travel expenses, and the operation of the Mission Control facility through August 2004.

Provide additional funds $530,000.00

Estimated Cost: Increase ☑ Decrease ☐ **$530,000.00**

By reason of this order the time of completion will be adjusted as follows: 0 days

Submitted by

Signature	Resident Engineer: COE D.	Date 2-4-04

Approval Recommended by

Signature	Construction Engineer: COE D.	Date 2-4-04

Engineer Approval by

Signature	(Print name and title) PETER SIEGENTHALER - Chief	Date 2-11-04

We the undersigned contractor, have given careful consideration to the change proposed and agree, if this proposal is approved, that we will provide all equipment, furnish the materials, except as may otherwise be noted above, and perform all services necessary for the work above specified, and will accept as full payment therefor the prices shown above.

NOTE: If you, the contractor, do not sign acceptance of this order, your attention is directed to the requirements of the specifications as to proceeding with the ordered work and filing a written protest within the time therein specified.

Contractor Acceptance by

Signature	(Print name and title) A. T. Skoro, Project Director	Date 2-5-04

STATE OF CALIFORNIA - DEPARTMENT OF TRANSPORTATION

CONTRACT CHANGE ORDER MEMORANDUM

DATE: 2/11/2004 Page 1 of 1

TO: PETER SIEGENTHALER / COE D.	FILE: E.A. 04 - 012024
FROM: COE D.	CO-RTE-PM 04-SF,Ala-80-13.9/14.3,0.0/1.6 FED. NO. ACIM-080-1(085)8N
CCO#: 26 SUPPLEMENT#: 3 Category Code: EXBA	CONTINGENCY BALANCE (incl. this change) $26,905,832.96
COST: $530,000.00 INCREASE ☑ DECREASE ☐	HEADQUARTERS APPROVAL REQUIRED? ☑ YES ☐ NO
SUPPLEMENTAL FUNDS PROVIDED: $0.00	IS THIS REQUEST IN ACCORDANCE WITH ENVIRONMENTAL DOCUMENTS? ☑ YES ☐ NO
CCO DESCRIPTION: Parsons-Trailers and Staffing	**PROJECT DESCRIPTION:** REPLACE SFOBB EAST SPAN

LOCATION: IN SAN FRANCISCO AND ALAMEDA COUNTIES IN SAN FRANCISCO AND OAKLAND FROM 1.3 KM EAST OF THE YERBA BUENA ISL

THIS CHANGE ORDER PROVIDES FOR:

Increased extra work estimate for the Contractor's construction engineer, Parsons Transportation Group (PTG) by $530,000.00 (from $347,000.00 to $877,000.00) to pay for PTG's lodging, per diem, and travel expenses and Mission Control's operating expenses and facilities.

PTG's staff are being provided per diem and temporary lodging to expeditiously and efficiently resolve congestion and conflict issues in the Contract Plans for the pier table and segment drawings. This work is being performed in trailers, located on-site at Pier 7, in Oakland known as the "Mission Control" office.

NOPC #3, filed September 20, 2002, is for additional work and time required to revise the integrated shop drawings. This contract change order will partially resolve NOPC #3, by compensating the expenses of the Contractor's construction engineer from March 2004 to August 2004 at an estimated cost of $35,000/ month.

CCO 26-S2 was written to cover expenses through February 2004. It is estimated that it will be $70,000.00 short. An additional $70,000.00 will be added to pay for bills during the month of January and February. In addition, expenses totaling approximately $250,000.00, were incorrectly billed and paid under CCO 32 will be reversed out and repaid under CCO 26.

Payment for this work under Supplement 3 will be made at Extra Work Force Account for an estimate cost of $530,000.00 which will be financed from the contingency fund. No adjustment of contract time is warranted, as this change does not affect the controlling operation.

Maintenance concurrence is not required because this extra work is not related to any permanent Caltrans facility. FHWA prior approval was received via email on February 5, 2004. Janet Adams concurred with this change order on February 11, 2004.

The Resident Engineer recommends this change order be approved.

CONCURRED BY:		
Construction Engineer: Douglas Coe		Date 2-11-04
Bridge Engineer:		Date
FHWA Representative: Nancy Bobb		Date 2/5/2004
Project Engineer:		Date
Other (specify): Janet Adams		Date 2/11/2004
		Date
		Date
District Prior Approval By:		Date
HQ (Issue Approve) By:		Date
Resident Engineer's Signature:		Date 2-11-04

ESTIMATE OF COST	THIS REQUEST	TOTAL TO DATE
ITEMS	$0.00	$0.00
FORCE ACCOUNT	$530,000.00	$877,000.00
AGREED PRICE	$0.00	$0.00
ADJUSTMENT	$0.00	$0.00
TOTAL	$530,000.00	$877,000.00

FEDERAL PARTICIPATION

☑ PARTICIPATING ☐ PARTICIPATING IN PART ☐ NONE
☐ NON-PARTICIPATING (MAINTENANCE) ☐ NON-PARTICIPATING

FEDERAL SEGREGATION (if more than one Funding Source or P.I.P. type)
☑ CCO FUNDED PER CONTRACT ☐ CCO FUNDED AS FOLLOWS

FEDERAL FUNDING SOURCE	PERCENT

STATE OF CALIFORNIA - DEPARTMENT OF TRANSPORTATION

CONTRACT CHANGE ORDER

Change Requested by: Engineer

CCO: 26	Suppl. No. 4	Contract No. 04 - 012024	Road 04-SF,Ala-80-13.9/14.3,0.0/1.6	FED. AID LOC.: ACIM-080-1(085)8N

To: KIEWIT / FCI / MANSON a JV

You are directed to make the following changes from the plans and specifications or do the following described work not included in the plans and specifications for this contract. ***NOTE: This change order is not effective until approved by the Engineer.***

Description of work to be done, estimate of quantities and prices to be paid. (Segregate between additional work at contract price, agreed price and force account.) Unless otherwise stated, rates for rental of equipment cover only such time as equipment is actually used and no allowance will be made for idle time. This last percentage shown is the net accumulated increase or decrease from the original quantity in the Engineer's Estimate.

Extra Work at Force Account:

This contract change order compensates the Contractor's construction engineer for per diem, lodging, and travel expenses and the operation of the Mission Control facility from August through December 2004.

Provide additional funds $250,000.00

Estimated Cost: Increase ☑ Decrease ☐ $250,000.00

By reason of this order the time of completion will be adjusted as follows: 0 days

Submitted by		
Signature	Resident Engineer: COE D.	Date 8-12-04
Approval Recommended by		
Signature	Construction Engineer: COE D.	Date 8-12-04
Engineer Approval by		
Signature	(Print name and title) PETER SIEGENTHALER - Chief	Date 8/26/04

We the undersigned contractor, have given careful consideration to the change proposed and agree, if this proposal is approved, that we will provide all equipment, furnish the materials, except as may otherwise be noted above, and perform all services necessary for the work above specified, and will accept as full payment therefor the prices shown above.

NOTE: If you, the contractor, do not sign acceptance of this order, your attention is directed to the requirements of the specifications as to proceeding with the ordered work and filing a written protest within the time therein specified.

Contractor Acceptance by		
Signature	(Print name and title) A.T. Skoro, Project Director	Date 8-19-04

STATE OF CALIFORNIA - DEPARTMENT OF TRANSPORTATION

CONTRACT CHANGE ORDER MEMORANDUM

DATE: 8/10/2004 Page 1 of 1

TO: PETER SIEGENTHALER / COE D.	FILE: E.A. 04 - 012024
FROM: COE D.	CO-RTE-PM 04-SF,Ala-80-13.9/14.3,0.0/1.6
	FED. NO. ACIM-080-1(085)8N
CCO#: 26 SUPPLEMENT#: 4 Category Code: EXBA	CONTINGENCY BALANCE (incl. this change) $2,164,894.31
COST: $250,000.00 INCREASE ☑ DECREASE ☐	HEADQUARTERS APPROVAL REQUIRED? ☑ YES ☐ NO
SUPPLEMENTAL FUNDS PROVIDED: $0.00	IS THIS REQUEST IN ACCORDANCE WITH ENVIRONMENTAL DOCUMENTS? ☑ YES ☐ NO
CCO DESCRIPTION: Parsons-Trailers and Staffing	**PROJECT DESCRIPTION:** REPLACE SFOBB EAST SPAN

LOCATION: IN SAN FRANCISCO AND ALAMEDA COUNTIES IN SAN FRANCISCO AND OAKLAND FROM 1.3 KM EAST OF THE YERBA BUENA ISL

THIS CHANGE ORDER PROVIDES FOR:

increasing the extra work estimate for the Contractor's construction engineer, Parsons Transportation Group (PTG) by $250,000.00 (from $877,000.00 to $1,127,000.00) to pay for PTG's lodging, per diem, and travel expenses and Mission Control's operating expenses and facilities.

PTG's staff are being provided per diem and temporary lodging to expeditiously and efficiently resolve congestion and conflict issues in the Contract Plans for the pier table and segment drawings. This work is being performed in trailers, located on-site at Pier 7, in Oakland known as the "Mission Control" office.

NOPC #3, filed September 20, 2002, is for additional work and time required to revise the integrated shop drawings. This contract change order will partially resolve NOPC #3, by compensating the expenses of the Contractor's construction engineer from August 2004 to December 2004 at an estimated cost of $50,000/ month.

Payment for this work under Supplement 4 will be made at Extra Work Force Account for an estimated cost of $250,000.00 which will be financed from the contingency fund. No adjustment of contract time is warranted, as this change does not affect the controlling operation.

Maintenance concurrence is not required because this extra work is not related to any permanent Caltrans facility. Concurrence from Nancy Bobb, FHWA was received by email on 8/3/04. Pochana Chongchaikit concurred with this change order on 8/6/04 via email. Ade Akinsanya concurred with this change order on 8/9/04 via email.

CONCURRED BY:

Construction Engineer:	Douglas Coe	Date 8-12-04
Bridge Engineer:		Date
FHWA Representative:	Nancy Bobb	Date 8/3/2004
Project Engineer:		Date
Other (specify):	Ade Akinsanya	Date 8/9/2004
	Pochana Chongchaikit	Date 8/6/2004
		Date
District Prior Approval By:	David Salladay	Date7/20/2004
HQ (Issue Approve) By:		Date
Resident Engineer's Signature:		Date 8-12-04

ESTIMATE OF COST

	THIS REQUEST	TOTAL TO DATE
ITEMS	$0.00	$0.00
FORCE ACCOUNT	$250,000.00	$1,127,000.00
AGREED PRICE	$0.00	$0.00
ADJUSTMENT	$0.00	$0.00
TOTAL	$250,000.00	$1,127,000.00

FEDERAL PARTICIPATION

☑ PARTICIPATING ☐ PARTICIPATING IN PART ☐ NONE
☐ NON-PARTICIPATING (MAINTENANCE) ☐ NON-PARTICIPATING

FEDERAL SEGREGATION (if more than one Funding Source or P.I.P. type)
☑ CCO FUNDED PER CONTRACT ☐ CCO FUNDED AS FOLLOWS

FEDERAL FUNDING SOURCE	PERCENT

STATE OF CALIFORNIA - DEPARTMENT OF T. .NSPORTATION

CONTRACT CHANGE ORDER

Change Requested by: Engineer

CCO: 26	Suppl. No. 5	Contract No. 04 - 012024	Road 04-SF,Ala-80-13.9/14.3,0.0/1.6	FED. AID LOC.: ACIM-080-1(085)8N

To: KIEWIT / FCI / MANSON a JV

You are directed to make the following changes from the plans and specifications or do the following described work not included in the plans and specifications for this contract. ***NOTE: This change order is not effective until approved by the Engineer.***

Description of work to be done, estimate of quantities and prices to be paid. (Segregate between additional work at contract price, agreed price and force account.) Unless otherwise stated, rates for rental of equipment cover only such time as equipment is actually used and no allowance will be made for idle time. This last percentage shown is the net accumulated increase or decrease from the original quantity in the Engineer's Estimate.

Provide additional funds for facilities operating costs, per diem, lodging, and travel expenses to extend the Mission Control operations from January 2005 through July 2005 for the SFOBB East Span Skyway, Bridge Nos. 340006L/R.

The Engineer anticipates that the Mission Control operations will no longer be required after July 2005. Therefore, the Contractor shall provide all labor and equipment necessary to de-mobilize the Mission Control trailers. The Contractor shall provide a de-mobilization sequencing plan to the Engineer for review a minimum of thirty (30) calendar days prior to commencing the demobilization activities, and shall coordinate all activities with the Engineer's designated representative.

Extra Work at Force Account:

Estimated cost of Extra Work at Force Account $125,000.00

Estimated Cost: Increase ☑ Decrease ☐ **$125,000.00**

By reason of this order the time of completion will be adjusted as follows: 0 days

Submitted by

Signature	Resident Engineer: DOUG COE, Supervising Br. Eng.	Date 4-11-05

Approval Recommended by

Signature	Construction Engineer: PETER SIEGENTHALER - Chief	Date 4-12-05

Engineer Approval by

Signature	(Print name and title) PETER SIEGENTHALER - Chief	Date 4-12-05

We the undersigned contractor, have given careful consideration to the change proposed and agree, if this proposal is approved, that we will provide all equipment, furnish the materials, except as may otherwise be noted above, and perform all services necessary for the work above specified, and will accept as full payment therefor the prices shown above.

NOTE: If you, the contractor, do not sign acceptance of this order, your attention is directed to the requirements of the specifications as to proceeding with the ordered work and filing a written protest within the time therein specified.

Contractor Acceptance by

Signature	(Print name and title) Chris Villa, Deputy Project Director	Date 4-14-05

STATE OF CALIFORNIA - DEPARTMENT OF TRANSPORTATION

CONTRACT CHANGE ORDER MEMORANDUM

DATE: 4/5/2005

TO: PETER SIEGENTHALER / DOUG COE, Supervising Br. Eng.	FILE: E.A. 04 - 012024
FROM: DOUG COE, Supervising Br. Eng.	CO-RTE-PM 04-SF,Ala-80-13.9/14.3,0.0/1.6 FED. NO. ACIM-080-1(085)8N
CCO#: 26 SUPPLEMENT#: 5 Category Code: EXBA	CONTINGENCY BALANCE (incl. this change) $57,008,645.72
COST: $125,000.00 INCREASE ☑ DECREASE ☐	HEADQUARTERS APPROVAL REQUIRED? ☑ YES ☐ NO
SUPPLEMENTAL FUNDS PROVIDED: $0.00	IS THIS REQUEST IN ACCORDANCE WITH ENVIRONMENTAL DOCUMENTS? ☑ YES ☐ NO
CCO DESCRIPTION: Addt'l Trailers & Staff for Parsons Bldg	**PROJECT DESCRIPTION:** REPLACE SFOBB EAST SPAN

LOCATION: IN SAN FRANCISCO AND ALAMEDA COUNTIES IN SAN FRANCISCO AND OAKLAND FROM 1.3 KM EAST OF THE YERBA BUENA ISL

THIS CHANGE ORDER PROVIDES FOR:

extending the Mission Control operations from January 2005 through July 2005, and for demobilizing the Mission Control project trailer.

This change order is necessary to provide additional funds for the Mission Control office facilities operating expenses, lodging, per diem, and travel expenses. This change order is also needed to provide for costs associated with demobilizing the Mission Control project trailer.

Staff for Parsons Transportation Group (PTG), the Contractor's design engineer, are being provided per diem and temporary lodging to expeditiously and efficiently resolve congestion and conflict issues in the Contract Plans for the pier table and segment drawings. This work is being performed in trailers, located on-site at Pier 7, in Oakland, known as the "Mission Control" office.

The Contractor filed Notice Of Potential Claim No. 3 (NOPC No. 3), dated September 20, 2002, for the additional work and time required to revise the integrated shop drawings. This change order provides for an additional $100,000.00 to cover the anticipated Mission Control operating costs and the lodging, per diem, and travel expenses incurred by the Contractor's staff. By compensating the expenses of the Contractor's construction engineer from January 2005, through July 2005, at an estimated average cost of $20,000/month, this contract change order will partially resolve NOPC No. 3. The estimated monthly cost is reduced from the $50,000 monthly cost stated in Contract Change Order No. 26, Supplement No. 4, due to the anticipated decrease of work and staff levels in Mission Control. The Engineer anticipates that the Mission Control operations will conclude in July 2005, and the facilites and staff assigned to the Mission Control trailers will be de-mobilized. An additional $25,000.00 is included in the estimated cost of this change order to de-mobilize the Mission Control trailers.

As of March 20, 2005, the remaining balance for Contract Change Order No. 26 is approximately $9,487.78. The average monthly payment to the Contractor is $28,938.00, which is greater than the remaining balance amount. An additional $100,000.00 is provided in this change order to cover the work through July 2005. This represents an average payment of $20,000.00 per month for approximately five (5) months (March through July, inclusive). $25,000.00 is included to cover the cost to demobilize the Mission Control project trailer. The estimated additional cost for this change order is $125,000.00, which will bring the total funds allocated for this change order from $1,127,000.00 to $1,252,000.00.

Payment for this work under Supplement 5 will be made at Extra Work Force Account for an estimated amount of $125,000.00, which will be financed from the contingency fund. No adjustment of contract time is warranted, as this change does not affect the controlling operation.

Concurrence from Maintenance is not required as this change does not use maintenance funds or affect maintenance facilities or operations.

Prior Approval was received from Nancy Bobb, FHWA Bay Bridge Project Oversight Manager, via electronic message on March 17, 2005. A copy of the prior approval provided by Ms. Bobb is attached.

Janet Adams, Toll Bridge Project Manager, concurred with this change order on April 4, 2005, via electronic message. A copy of the concurrence provided by Ms. Adams is attached.

Ade Akinsanya, Supervising Bridge Engineer, SFOBB Structure Design, concurred with this change order on March 10, 2005. A copy of the concurrence provided by Mr. Akinsanya is attached.

RECEIVED
037197 APR 27 05

CONCURRED BY:		
Construction Engineer:	Douglas Coe	Date 4-5-05
Bridge Engineer:	Douglas Coe	Date 4-5-05
FHWA Representative:	Nancy Bobb	Date 3/17/2005
Project Engineer:	Ade Akinsanya	Date 3/10/2005
Other (specify): Janet Adams		Date 4/4/2005
		Date
		Date
District Prior Approval By:		Date
HQ (Issue Approve) By:		Date
Resident Engineer's Signature:		Date 4-5-05

ESTIMATE OF COST

	THIS REQUEST	TOTAL TO DATE
ITEMS	$0.00	$0.00
FORCE ACCOUNT	$125,000.00	$1,252,000.00
AGREED PRICE	$0.00	$0.00
ADJUSTMENT	$0.00	$0.00
TOTAL	$125,000.00	$1,252,000.00

FEDERAL PARTICIPATION

☑ PARTICIPATING ☐ PARTICIPATING IN PART ☐ NONE
☐ NON-PARTICIPATING (MAINTENANCE) ☐ NON-PARTICIPATING

FEDERAL SEGREGATION (if more than one Funding Source or P.I.P. type)
☑ CCO FUNDED PER CONTRACT ☐ CCO FUNDED AS FOLLOWS

FEDERAL FUNDING SOURCE	PERCENT

STATE OF CALIFORNIA - DEPARTMENT OF TRANSPORTATION

CONTRACT CHANGE ORDER

Change Requested by: Engineer

CCO: 27	Suppl. No. 0	Contract No. 04 - 012024	Road 04-SF,Ala-80-13.9/14.3,0.0/1.6	FED. AID LOC.: ACIM-080-1(085)8N

To: **KIEWIT / FCI / MANSON a JV**

You are directed to make the following changes from the plans and specifications or do the following described work not included in the plans and specifications for this contract. ***NOTE: This change order is not effective until approved by the Engineer.***

Description of work to be done, estimate of quantities and prices to be paid. (Segregate between additional work at contract price, agreed price and force account.) Unless otherwise stated, rates for rental of equipment cover only such time as equipment is actually used and no allowance will be made for idle time. This last percentage shown is the net accumulated increase or decrease from the original quantity in the Engineer's Estimate.

Adjustment of Compensation at Lump Sum:

Due to the delay in setting-up casting bed #1 located in the Stockton, California precast yard, as a consequence of the PMA/Longshoreman lock-out, an extension of Contract Time of 28 working days is granted in accordance with Section 10-1.10 of the Special Provisions and Section 8-1.07 of the Standard Specifications.

The 28 day, non-compensable time adjustment is for the working days beginning October 7, 2002, and ending November 15, 2002.

The 28 day, non-compensable time extension constitutes full compensation, including all direct and indirect costs, all associated project impacts, and Time Related Overhead expenses for the PMA/Longshoreman lock-out.

Estimated Cost: Increase ☐ Decrease ☐ $0.00

By reason of this order the time of completion will be adjusted as follows: 28 days

Submitted by

Signature	Resident Engineer: COE D.	Date 9-26-03

Approval Recommended by

Signature	Construction Engineer: COE D.	Date 9-26-03

Engineer Approval by

Signature	(Print name and title) PETER SIEGENTHALER - Chief	Date 9/26/03

We the undersigned contractor, have given careful consideration to the change proposed and agree, if this proposal is approved, that we will provide all equipment, furnish the materials, except as may otherwise be noted above, and perform all services necessary for the work above specified, and will accept as full payment therefor the prices shown above.

NOTE: If you, the contractor, do not sign acceptance of this order, your attention is directed to the requirements of the specifications as to proceeding with the ordered work and filing a written protest within the time therein specified.

Contractor Acceptance by

Signature	(Print name and title)	Date

STATE OF CALIFORNIA - DEPARTMENT OF TRANSPORTATION

CONTRACT CHANGE ORDER MEMORANDUM

DATE: 9/26/2003 Page 1 of 1

TO: PETER SIEGENTHALER / COE D.	FILE: **E.A.** 04 - 012024
FROM: COE D.	**CO-RTE-PM** 04-SF,Ala-80-13.9/14.3,0.0/1.6
	FED. NO. ACIM-080-1(085)8N
CCO#: **27** SUPPLEMENT#: **0** Category Code: **CFSA**	CONTINGENCY BALANCE (incl. this change) **$42,008,037.50**
COST: **$0.00** INCREASE ☐ DECREASE ☐	HEADQUARTERS APPROVAL REQUIRED? ☑ YES ☐ NO
SUPPLEMENTAL FUNDS PROVIDED: **$0.00**	IS THIS REQUEST IN ACCORDANCE WITH ENVIRONMENTAL DOCUMENTS? ☑ YES ☐ NO
CCO DESCRIPTION: PMA/Longshoreman Labor Dispute	**PROJECT DESCRIPTION:** REPLACE SFOBB EAST SPAN

LOCATION: IN SAN FRANCISCO AND ALAMEDA COUNTIES IN SAN FRANCISCO AND OAKLAND FROM 1.3 KM EAST OF THE YERBA BUENA ISL

THIS CHANGE ORDER PROVIDES FOR:

an extension of time due to the labor dispute between the Pacific Maritime Association (PMA) and the Longshoreman's Union which delayed the delivery of precast form materials to the Stockton Yard. The set-up of casting bed #1 in the precast yard was the controlling operation during this time period.

A labor dispute between the PMA and the Longshoreman's Union started on October 4, 2002. On October 7, 2002, the resulting lock-out stopped all ship loading and unloading on the West Coast. The contractor had precast segment formwork from their overseas manufacturer on container ships headed to the Port of Oakland; some of these ships unloaded their containers at various locations such as Mexico and the East Coast. The set-up of casting bay #1 in the Stockton precast yard was on the project's critical path, so the delay in obtaining the formwork affected the controlling operation.

The delay concluded on November 15, 2002, when the critical containers reached the precast yard. The Contractor performed a time impact analysis per Section 10-1.10 of the Special Provisions and Section 8-1.07 of the Standard Specification detailing the delay. This analysis was reviewed by the Engineer and resulted in a 28 working day, non-compensable contract time extension. The time impact analysis and the revised project schedule are in the project files. A list of affected containers and their delivery dates are attached.

FHWA concurrence was obtained on 8/11/03. Maintenance concurrence is not required, as this change order does not affect any permanent work.

The Contractor refuses to sign this Change Order because it does not address the effects of NOPC #1 (see attached transmittal returning unsigned CCO). Under current construction laws and rulings, delays caused by labor disputes entitles the Contractor to time extensions; however, delay costs or costs of maintaining the work is non-compensable, in particular, strikes not caused by the Owner. The Resident Engineer has determined that this Change Order needs to be executed unilaterally so that 28 working days can be incorporated into the schedule to provide a more realistic view of the project's progress.

CONCURRED BY:

Construction Engineer:	Douglas Coe	Date 9-26-03
Bridge Engineer:		Date
FHWA Representative:	Nancy Bobb	Date 8/11/2003
Project Engineer:	Ade Akinsanya	Date 9/10/2003
Other (specify): Pete Siegenthaler		Date 8/20/2003
		Date
		Date
District Prior Approval By:	Robert Kobal	Date 8/20/2003
HQ (Issue Approve) By:	Patrick Bockari	Date 9/4/2003
Resident Engineer's Signature:		Date 9-26-03

ESTIMATE OF COST

	THIS REQUEST	TOTAL TO DATE
ITEMS	$0.00	$0.00
FORCE ACCOUNT	$0.00	$0.00
AGREED PRICE	$0.00	$0.00
ADJUSTMENT	$0.00	$0.00
TOTAL	$0.00	$0.00

FEDERAL PARTICIPATION

☑ PARTICIPATING ☐ PARTICIPATING IN PART ☐ NONE
☐ NON-PARTICIPATING (MAINTENANCE) ☐ NON-PARTICIPATING

FEDERAL SEGREGATION (if more than one Funding Source or P.I.P. type)
☑ CCO FUNDED PER CONTRACT ☐ CCO FUNDED AS FOLLOWS

FEDERAL FUNDING SOURCE	PERCENT

CONTRACT CHANGE ORDER

Change Requested by: Engineer

CCO: 28	Suppl. No. 0	Contract No. 04 - 012024	Road 04-SF,Ala-80-13.9/14.3,0.0/1.6	FED. AID LOC.: ACIM-080-1(085)8N

To: KIEWIT / FCI / MANSON a JV

You are directed to make the following changes from the plans and specifications or do the following described work not included in the plans and specifications for this contract. ***NOTE: This change order is not effective until approved by the Engineer.***

Description of work to be done, estimate of quantities and prices to be paid. (Segregate between additional work at contract price, agreed force account.) Unless otherwise stated, rates for rental of equipment cover only such time as equipment is actually used and no allowance made for idle time. This last percentage shown is the net accumulated increase or decrease from the original quantity in the Engineer's Estimc

Adjustment of Compensation at Lump Sum:

restation and delete portions of the original bridge deck drainage system, furnish and install a revised drainage system, and install revised outlets for mechanical piping low point drains on the SFOBB - East Span Skyway, Bridge Nos. 34-0006 L/R, as shown on revised contract plan sheets 69R1, 70R1, 71R1, 443R1, 444R1, 445R1, 446R1, 447R2, 448R1, 449R1, 450R1, 502R2, 503R2, 506R1, 537R2, 538R2, 539R2, 540R2, 541R3, 542R2, 543R2, 544R2, 545R2, 546R2, 547R2, 548R3, 549R3, 550R3, 551R2, 552R2, 553R2, 554R2, 555R2, 556R2, 557R2, 558R2, 559R2, 560R2, 561R2, 562R3, 563R3, 564R3, 736R2, 738R2, 748R2, 750R2, and 886R2 (pages 2 through 48 of this change order).

For this work, the contractor will credit the State an agreed lump sum of $164,120.00.

Adjustment of Compensation at Agreed Lump Sum .....($164,120.00) Decrease

Estimated Cost: Increase ☐ Decrease ☑ ($164,120.00)

By reason of this order the time of completion will be adjusted as follows: 0 days

Submitted by

Signature	Resident Engineer: COE D.	Date 1-26-04

Approval Recommended by

Signature	Construction Engineer: COE D.	Date 1-26-04

Engineer Approval by

Signature	(Print name and title) PETER SIEGENTHALER - Chief	Date 3-22-04

We the undersigned contractor, have given careful consideration to the change proposed and agree, if this proposal is approved, that we will pr equipment, furnish the materials, except as may otherwise be noted above, and perform all services necessary for the work above specified, and as full payment therefor the prices shown above.

NOTE: If you, the contractor, do not sign acceptance of this order, your attention is directed to the requirements of the specifications as to proceeding with the ordered work and filing a written protest within the time therein specified.

Contractor Acceptance by

Signature	(Print name and title) A.T. Skoro, Project Director	Date 2/11/04

U.S. DEPARTMENT OF TRANSPORTATION FEDERAL HIGHWAY ADMINISTRATION CALIFORNIA DIVISION OFFICE

RECORD OF PRIOR APPROVAL FOR MAJOR CONTRACT CHANGE ORDERS

PROJECT NO.	CCO NO.	CONTRACT NO.	DIST-CO-RTE-PM
ACIM -080-1 (085)8N	28	04-012024	04-SF,Ala-80-13.9/14.3,0.0/1.6

REQUESTED BY:	CALTRANS MQ	DATE
Greg Mah-Hing	X RE/DISTRICT	2/27/03

PROPOSED CHANGE:

This change provides for restationing and deleting portions of the bridge deck drainage system, furnishing and installing an alternate bridge deck drainage system, and relocating future tendon deviation blocks.

REASON FOR CHANGE:

The revisions incorporated into the contract with this change order provide for a drainage system that drains directly from the deck, out the bottom of the segment and into the bay. This relieves congestion and interference problems within the segments and provides the required space around the walkways for maintenance personnel on pier stair towers. Additionally, to avoid conflicts with continuity tendons, deck drains originally located near midspan in segment 7 have been relocated to segment 5 to alleviate conflicts with top span tendons. The deck drains located in hinge segments and flat portions of Frame 1 have also been relocated to better facilitate drainage of runoff.

AS DISCUSSED IN FIELD (REPORT NO. ____)

TIME EXTENSIONS	ACTIVITY ON CRITICAL PATH AFFECTED BY CCO (IF TIME EXTENSION INVOLVED)
* NONE ___ DAYS ___ DEFERRED	

ESTIMATE OF COST:	CCO:	METHOD OF PAYMENT
$__ to be determined__ INCREASE $ _____ DECREASE	CONTRACT ITEM AGREED PRICE	ADJUSTMENT OF COMPENSATION X EXTRA WORK AT FORCE ACCOUNT

THE WORK COVERED BY THE PROPOSED REVISION AS DESCRIBED ABOVE IS APPROVED SUBJECT TO SUBMISSION OF SUPPORTING DOCUMENTATION INCLUDING COST EVALUATION AND JUSTIFICATION OF TIME EXTENSIONS.

OTHER CONDITIONS:

PRIOR APPROVAL TO PROCEED GRANTED BY;	DATE OF AUTHORIZATION:
Nancy E. Bobb	3/19/03

Department of Transportation
OFFICE OF STRUCTURES CONSTRUCTION CONCURRENCE
FOR CHANGE ORDERS INVOLVING STRUCTURE WORK
DS-OS C93 (Rev. 1-86)

CCO#	40:Additional Steel
Contract No.	04-012024
Co. & Rte	Ala-80-13.9/14.3, 0.0/ 1.6
Date	June 17,2003

ORIGINAL

TO: David Wu, Structure Representative

This authorizes you to give Office of Structure Construction Concurrence to proceed with the work prior to an approved change order.

X This represents an acknowledgement that I am in concurrence with the change order which must be approved before any work is clone.

Requested By: David Wu

Description of Work:

Furnishing and installing additional Mild Steel for 452 of the 904 lightweight segment precast panels and furnishing and installing additional steel reinforcing for 25 segment precast panels with approved shop drawings (formerly CCO 43).

Why Change?

The senior bridge engineer representative has determined additional steel reinforcing is required to control the excessive cracking.

Discuss with persons noted below:

FHWA	Nancy Bobb	Br. Const	
District	Kappy Madra	Br. Design	Sajid Abbas- TYLin
Other		Br. Geology	N/A
		Br. Maintenance	N/A

Estimated Cost: $ 125,200.00

The unit price is $275.00 per precast panel for the 452 lightweight segment precast panels and $36.00per precast panel for the 25 segment precast panels with approved shop drawings.

Recommended Method of Payment:

Contract Items

Extra Work at Force Account

X **Agreed Price (unit price)**

Other:

Recommended Time Adjustment: 0 Working Days

Br. Const Engineer
Douglas B. Coe

RECEIVED
JUN 20 2003
008403
DEPARTMENT OF TRANSPORTATION
TOLL BRIDGE PROGRAM

49.049

DIST	COUNTY	ROUTE	KILOMETER POST TOTAL PROJECT	SHEET No	TOTAL SHEETS
04	SF, Ala	80	13.9 / 14.3, 0.0 / 1.6	69R1	978

Bobby J. Melvin 4/9/01
REGISTERED MECHANICAL ENGINEER DATE

6-4-01
PLANS APPROVAL DATE

REGISTERED PROFESSIONAL ENGINEER Bobby J. Melvin No. 28685 Exp. 6-30-01 MECHANICAL STATE OF CALIFORNIA

PARSONS BRINCKERHOFF QUADE & DOUGLAS, INC.
303 Second St., Suite 700N
San Francisco, CA 94107-1317

The State of California or its officers or agents shall not be responsible for the accuracy or completeness of electronic copies of this plan sheet.

Caltrans Metric

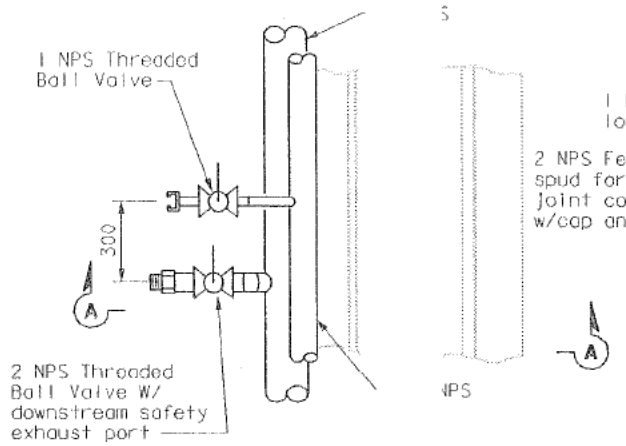

UTILITY STATIONS, NORTH SIDE WB SPAN

DETAIL 1 / M-5

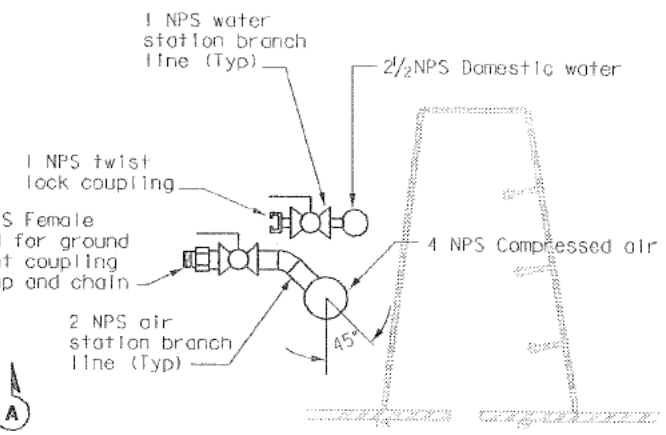

SECTION A-A

* Locate where indicated in the plans and at all low points in the system.

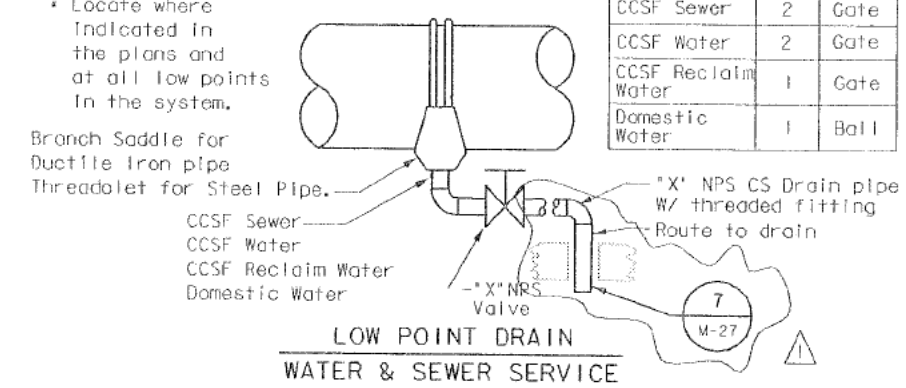

Pipe	Size "X" (NPS)	Valve Type
CCSF Sewer	2	Gate
CCSF Water	2	Gate
CCSF Reclaim Water	1	Gate
Domestic Water	1	Ball

LOW POINT DRAIN
WATER & SEWER SERVICE

DETAIL 4 / M-5

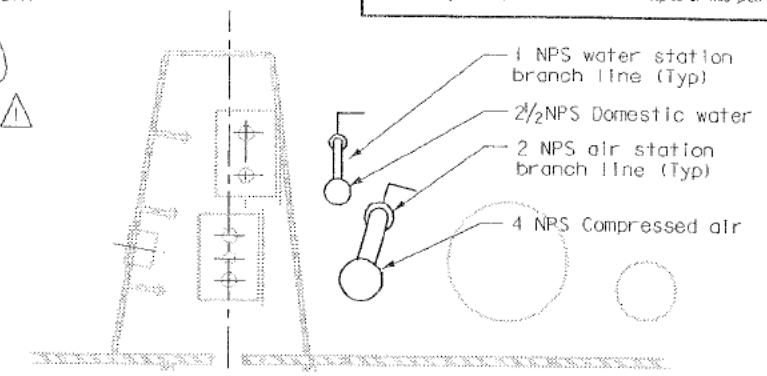

SECTION C-C

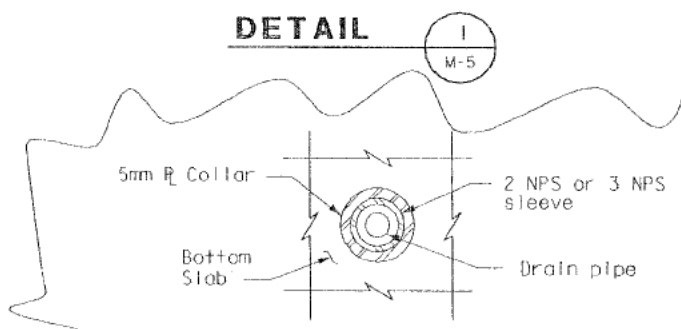

SECTION D-D

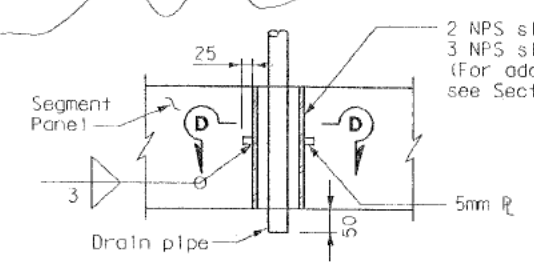

SECTION THROUGH DRAIN OUTLET

DETAIL 7 / M-27

Casing Drain Locations	Number of Drains
Sta "W" 62+69.00	2
Sta "E" 68+55.65	1
Sta "E" 74+95.65	1
Sta "E" 80+87.70	1
Sta "E" 82+81.00	1

The stations are approximate locations. The contractor shall locate in field to clear all obstructions.

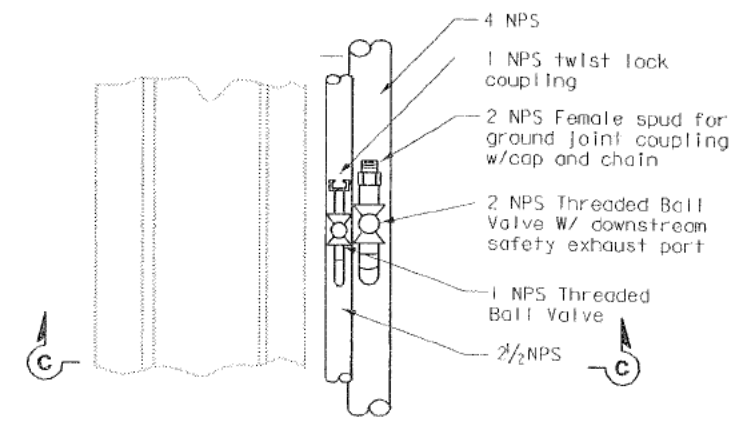

UTILITY STATION, SOUTH SIDE WB SPAN

DETAIL 6 / M-5
Mirror for North Side EB Span

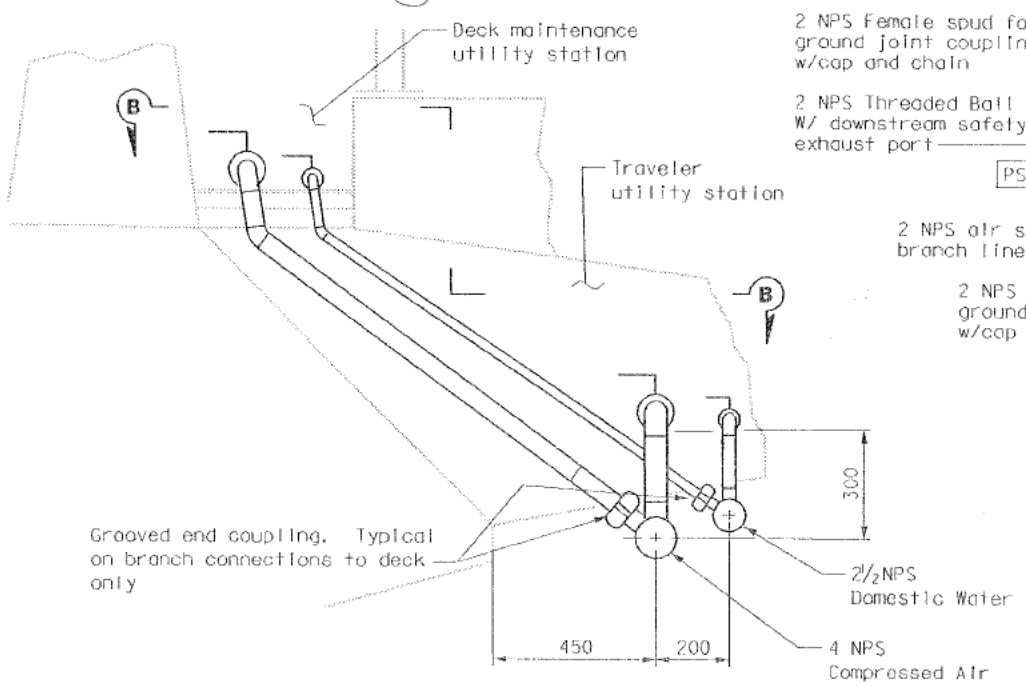

UTILITY STATIONS, SOUTH SIDE EB SPAN

DETAIL 2 / M-5 THRU M-21

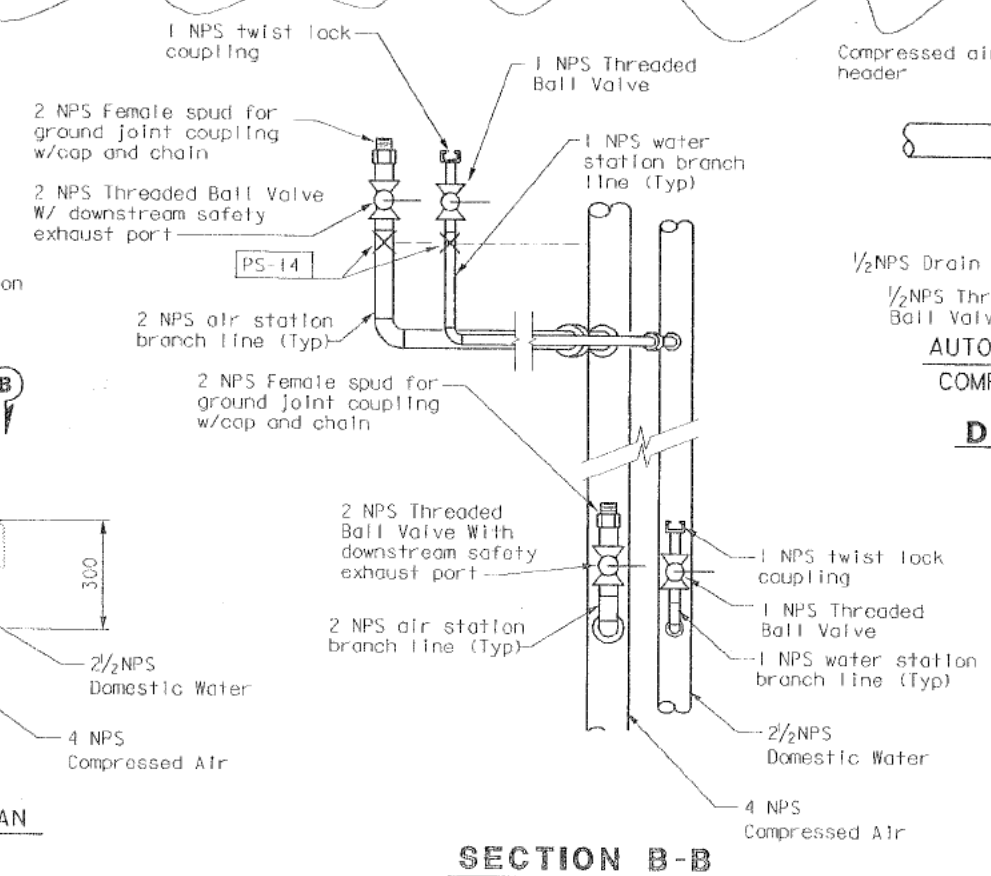

SECTION B-B
Bridge not shown for clairity

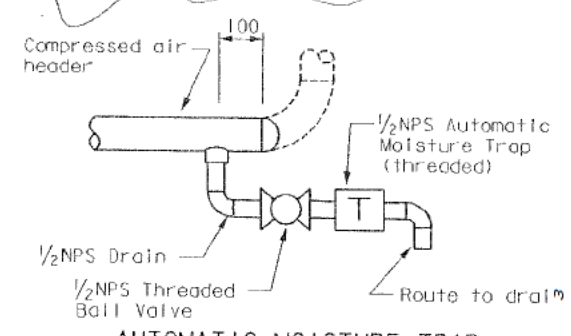

AUTOMATIC MOISTURE TRAP
COMPRESSED AIR SERVICE

DETAIL 5 / M-5

MARK	DATE	DESCRIPTIONS	REV	CK	CCO#
1	11/9/03	Add Detail 7, callout for Detail 7	BM	KH	28
		REVISIONS			

CONTRACT CHANGE ORDER NO. 28
SHEET 2 OF 48

MECHANICAL PIPING SECTIONS AND DETAILS NO. 4

NO SCALE

M-25

ALL DIMENSIONS IN MILLIMETERS UNLESS OTHERWISE SHOWN

DATE	BY	REVISED BY	DATE REVISED
8/30/00	BM	KH	8/30/00

CALCULATED/DESIGNED BY: BM
CHECKED BY: KH

DESIGN OVERSIGHT: Rich Newell

STATE OF CALIFORNIA - DEPARTMENT OF TRANSPORTATION
Caltrans

FOR REDUCED PLANS ORIGINAL SCALE IS IN MILLIMETERS 0 20 40 60 80

USERNAME => gradzki
DGN FILE => T:\13103\MS\pse\con2\RFI-response\CCO-28\4012C-M-04251

EA 012021

LST REVISION DATE PLOTTED => 01/05/2004 TIME PLOTTED => 05:17:56 PM

SFOBB – Skyway Project
303 Second Street (Folsom)
Suite 700 North Tower
San Francisco, CA 94107
(415) 243-4600

REVISION MARKS ON CONTRACT PLAN CHANGES

SFOBB Skyway Project # 04-012024

Revisions to **the** following plans were prepared under the supervision of the undersigned engineer,

69R2	M-25	Revision Mark 2
70R1	M-26	Revision **Mark** 1
71R1	M-27	Revision **Mark** 1

For the project in SF/ALA county

Route 80

Km Post Description 04-SF, Ala-80-13.9/14.3, 0.0/1.6

District/EA 012021

(Signature) 3/9/04 (Date)

Bobby J. Melvin
(Name)

Mechanical Engineer
(Title)

28685
(Registration No.)

6/30/04
(Date of Expiration)

REGISTERED PROFESSIONAL ENGINEER No. M28685 Exp. 6-30-04 MECHANICAL STATE OF CALIFORNIA

DIST	COUNTY	ROUTE	KILOMETER POST TOTAL PROJECT	SHEET No	TOTAL SHEETS
04	SF, Ala	80	13.9 / 14.3, 0.0 / 1.6	70R1	978

Bobby J. Melvin 4/9/01
REGISTERED MECHANICAL ENGINEER DATE

REGISTERED PROFESSIONAL ENGINEER — Bobby J. Melvin — No. 22685 — Exp. 6-30-01 — MECHANICAL — STATE OF CALIFORNIA

PLANS APPROVAL DATE

PARSONS BRINCKERHOFF QUADE & DOUGLAS, INC.
303 Second St., Suite 700N
San Francisco, CA 94107-1317

The State of California or its officers or agents shall not be responsible for the accuracy or completeness of electronic copies of this plan sheet.

Caltrans Metric

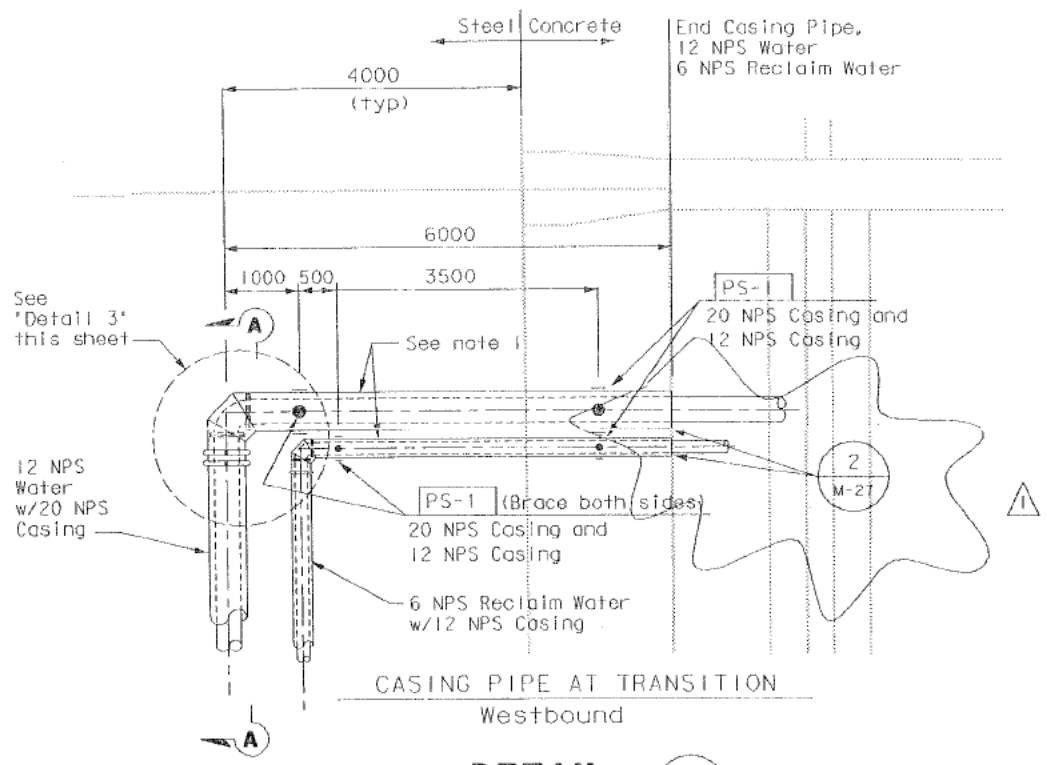

CASING PIPE AT TRANSITION
Westbound

DETAIL 1 / M-5

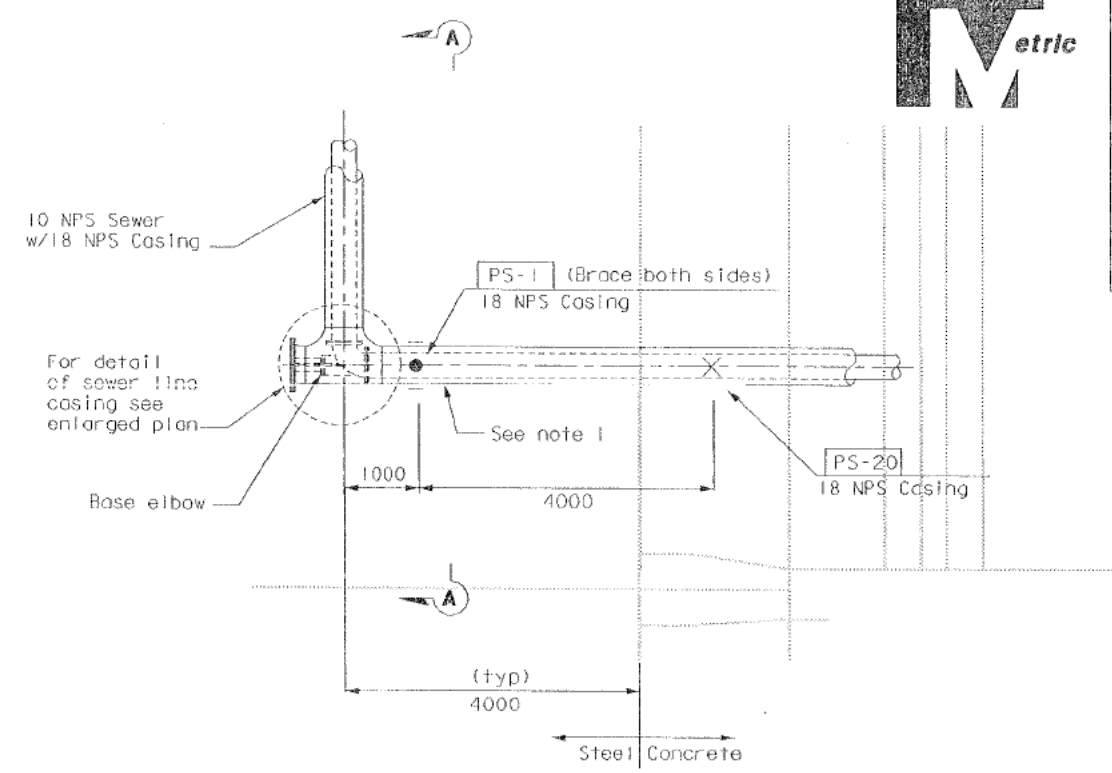

CASING PIPE AT TRANSITION
Eastbound

DETAIL 2 / M-5

NOTE:

1. For pipe support within casing see Detail 1 / M-27
2. Provide casing insulators per drawing M-27 & Standard Specifications.

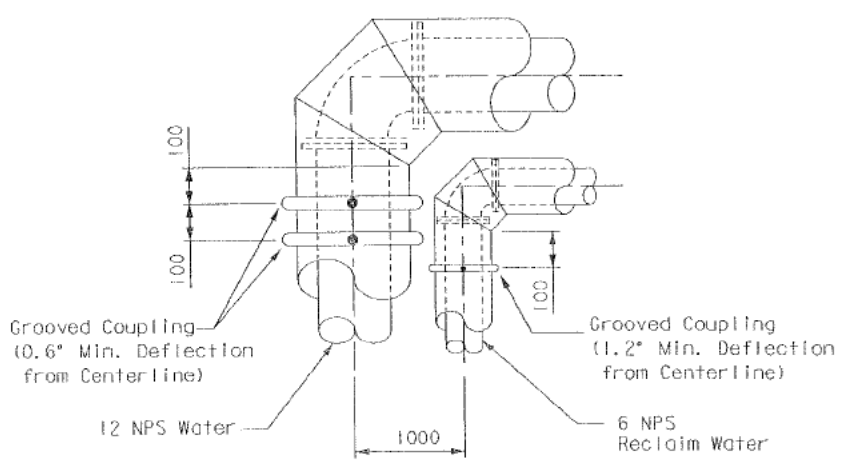

CASING PIPE AT TRANSITION

DETAIL 3 / -

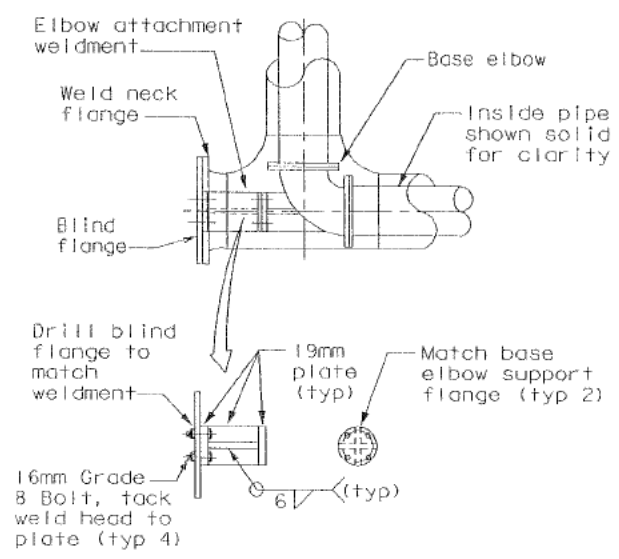

ENLARGED PLAN

For sewer line only

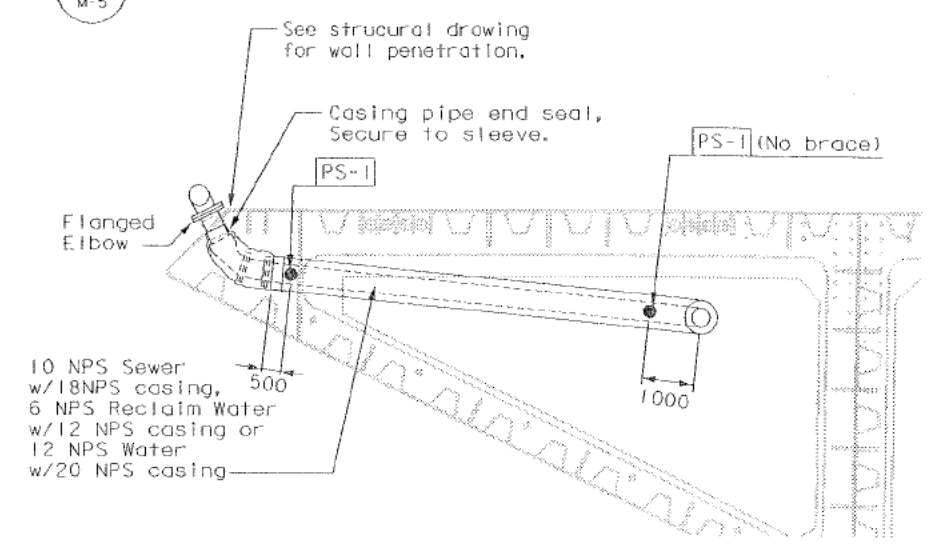

TRANSITION FROM DECK TO INTERIOR

SECTION A / -

MARK	DATE	DESCRIPTIONS	REV	CK
1	11/9/03	Add ref to Detail 2	BM	KH

REVISIONS

CONTRACT CHANGE ORDER NO. 28
SHEET 3 OF 48

MECHANICAL PIPING SECTIONS AND DETAILS NO. 5

NO SCALE

M-26

ALL DIMENSIONS IN MILLIMETERS UNLESS OTHERWISE SHOWN

FOR REDUCED PLANS ORIGINAL 0 20 40 60 80 USERNAME => grodzki

CALCULATED/ DESIGNED BY	BM	DATE 8/30/00	REVISED BY
CHECKED BY	KH	8/30/00	DATE REVISED

DESIGN OVERSIGHT: Rich Newell

STATE OF CALIFORNIA - DEPARTMENT OF TRANSPORTATION — Caltrans

LAST REVISION 00-00-00 — DATE PLOTTED => 01/05/2004 TIME PLOTTED => 05:15:43 PM

SFOBB – Skyway Project
303 Second Street (Folsom)
Suite 700 North Tower
San Francisco, CA 94107
(415) 243-4600

REVISION MARKS ON CONTRACT PLAN CHANGES

SFOBB Skyway Project # 04-012024

Revisions to the following plans were prepared under the supervision of the undersigned engineer.

69R2	M-25	Revision Mark 2
70R1	M-26	Revision Mark 1
71R1	M-27	Revision Mark 1

For the project in SF/ALA County

Route 80

Km Post Description 04-SF, Ala-80-13.9/14.3, 0.0/1.6

District/EA 012021

(Signature) 3/9/04 (Date)

Bobby J. Melvin
(Name)

Mechanical Engineer
(Title)

28685
(Registration No.)

6/30/04
(Date of Expiration)

REGISTERED PROFESSIONAL ENGINEER No. M28685 Exp. 6-30-04 MECHANICAL STATE OF CALIFORNIA

Over a Century of Engineering Excellence

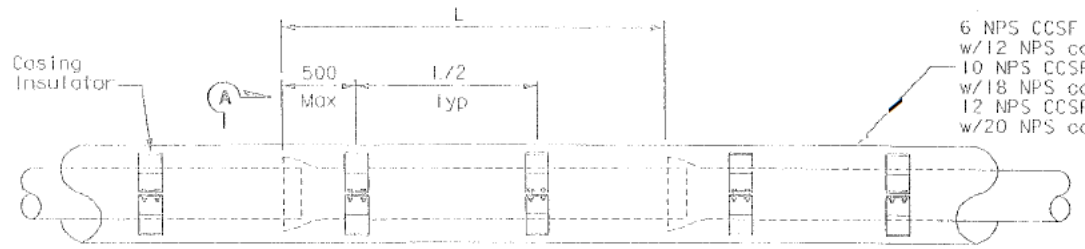

SECONDARY CONTAINMENT ARRANGEMENT

DETAIL 1 / M-26

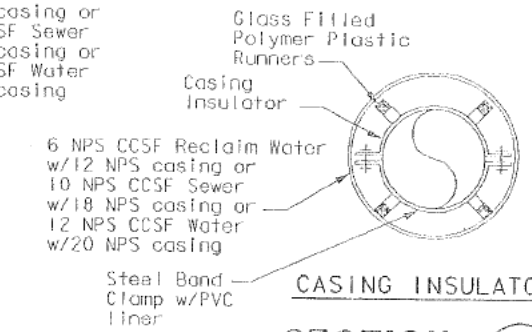

CASING INSULATOR

SECTION A / -

NOTES FOR SECONDARY CONTAINMENT PIPING

1. Provide minimum one casing insulator at each bell and one intermediate casing insulator as shown. Casing insulator manufacturer may require more than two units per pipe length. If so, space evenly.
2. Contractor to determine specific locations of joints in primary and casing piping.
3. Contractor to provide closures in casing pipe as needed to construct primary pipe.
4. Provide minimum of one casing insulator at each pipe fitting, component or device unless noted otherwise.

DIST	COUNTY	ROUTE	KILOMETER POST TOTAL	PROJECT	SHEET No	TOTAL SHEETS
04	SF, Ala	80	13.9 / 14.3	0.0 / 1.6	71R1	978

Bobby J. Melvin 4/9/01
REGISTERED MECHANICAL ENGINEER DATE

6-4-01
PLANS APPROVAL DATE

REGISTERED PROFESSIONAL ENGINEER Bobby J. Melvin No. 28685 Exp. 6-30-01 MECHANICAL STATE OF CALIFORNIA

PARSONS BRINCKERHOFF QUADE & DOUGLAS, INC.
303 Second St., Suite 700N
San Francisco, CA 94107-1317

The State of California or its officers or agents shall not be responsible for the accuracy or completeness of electronic copies of this plan sheet.

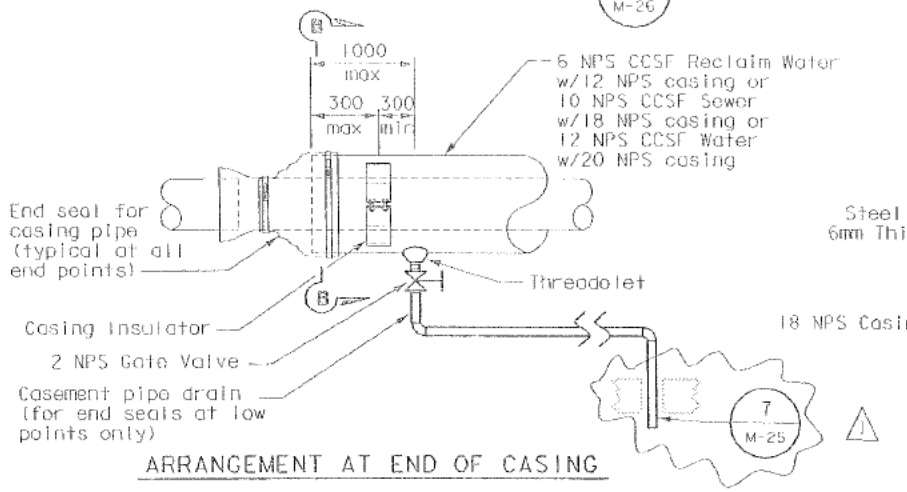

ARRANGEMENT AT END OF CASING

DETAIL 2 / M-23, M-24, M-26

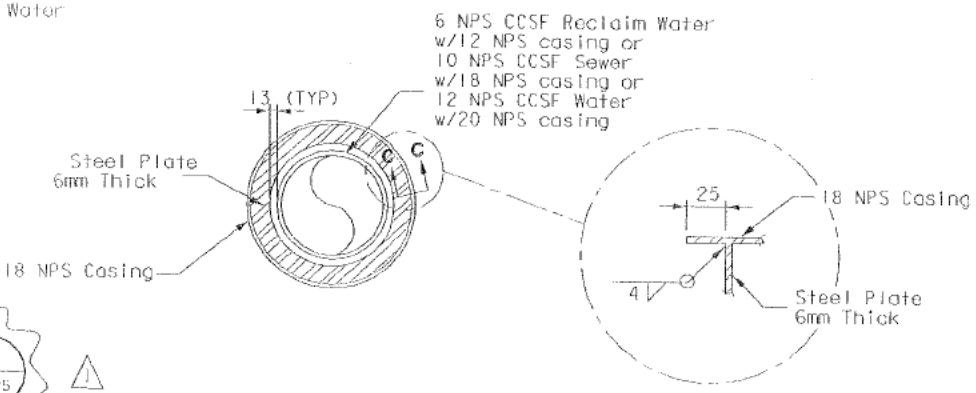

CASING STIFFENER

SECTION B / -

PLATE OFFSET

SECTION C / -

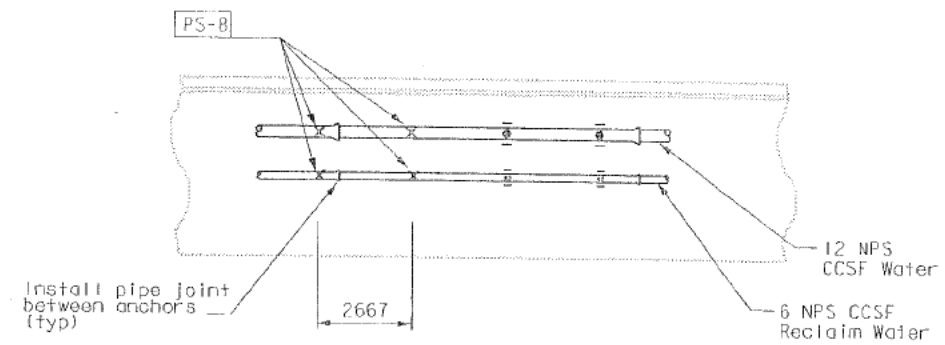

PIPE SUPPORT LAYOUT

DETAIL 4 / M-8 — M-12, M-17, M-20

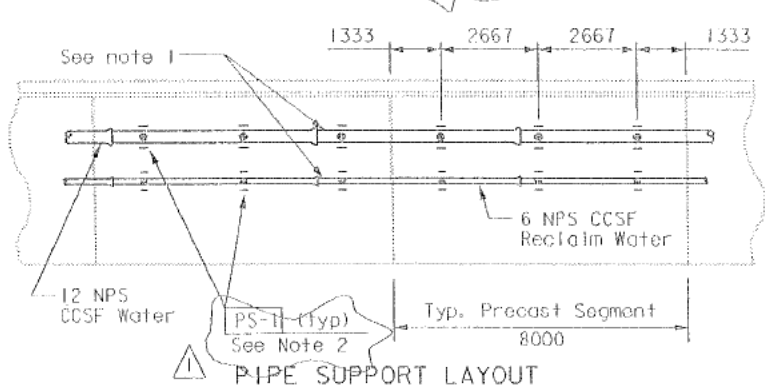

PIPE SUPPORT LAYOUT

DETAIL 1 / M-5 THRU M-21

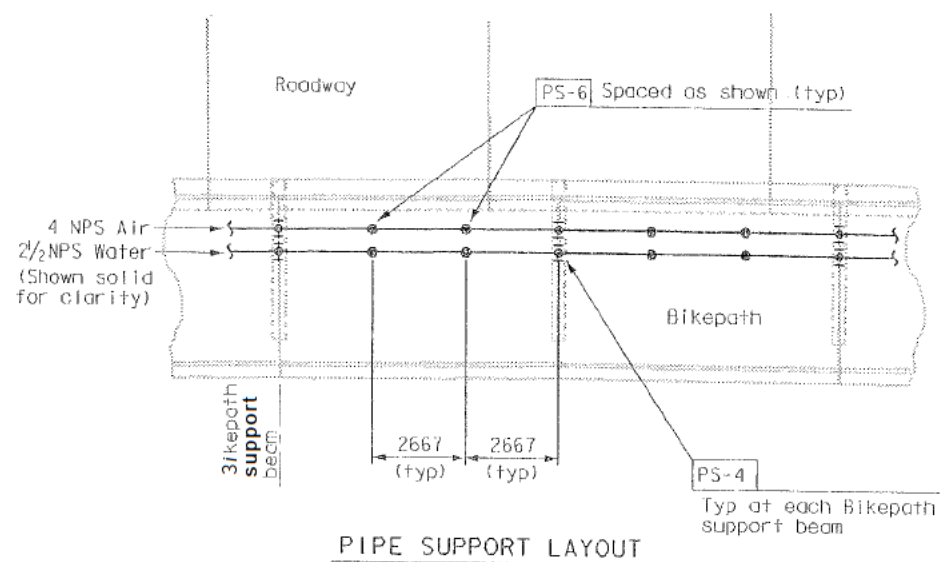

PIPE SUPPORT LAYOUT

DETAIL 3 / M-5 THRU M-21

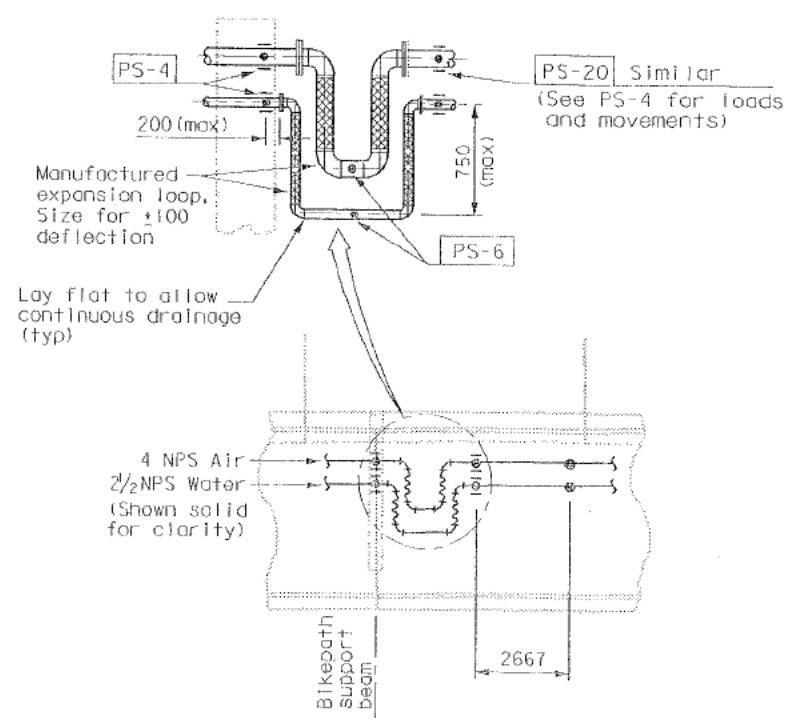

EXPANSION LOOP LAYOUT

DETAIL 5 / M-7, M-12, M-17

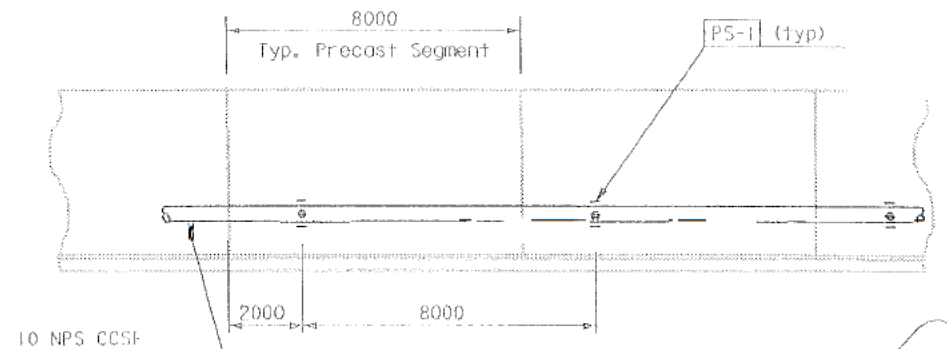

PIPE SUPPORT LAYOUT

DETAIL 2 / M-5 THRU M-21

NOTES

1. Adjust pipe length such that minimum 2 supports fall on each pipe length and that pipe bell does not load on supports.
2. If braces on PS-1 are oriented in the same direction, support locations may be staggered 300mm longitudinally to clear braces.

MARK	DATE	DESCRIPTIONS	REV	CK	CCO#
1	11/10/03	Add Detail 7, stagger pipe supports	BM	KH	28

REVISIONS

CONTRACT CHANGE ORDER NO. 28
SHEET 4 OF 48

ALL DIMENSIONS IN MILLIMETERS UNLESS OTHERWISE SHOWN

MECHANICAL PIPING SECTIONS AND DETAILS NO. 6

NO SCALE

M-27

STATE OF CALIFORNIA - DEPARTMENT OF TRANSPORTATION

DESIGN OVERSIGHT: Rich Newell

CALCULATED/DESIGNED BY: BM — DATE: 8/30/00 — REVISED BY

CHECKED BY: KH — DATE: 8/30/00 — DATE REVISED

Caltrans Metric

LAST REVISION 00-00-00 — DATE PLOTTED => 12/18/2003 — TIME PLOTTED => 07:00:55 AM

SFOBB – Skyway Project
303 Second Street (Folsom)
Suite 780 North Tower
San Francisco, CA 94107
(415) 243-4600

REVISION MARKS ON CONTRACT PLAN CHANGES

SFOBB Skyway Project # 04-012024

Revisions to the following plans were prepared under the supervision of the undersigned engineer.

69R2	M-25	Revision Mark 2
70R1	M-26	Revision Mark 1
71R1	M-27	Revision Mark 1

For the project in SF/ALA County

Route 80

Km Post Description 04-SF, Ala-80-13.9/14.3, 0.0/1.6

District/EA 012021

(Signature) 3/9/04 (Date)

Bobby J. Melvin
(Name)

Mechanical Engineer
(Title)

28685
(Registration No.)

6/30/04
(Date of Expiration)

REGISTERED PROFESSIONAL ENGINEER No. M28983 Exp. 6-30-04 MECHANICAL STATE OF CALIFORNIA

Over a Century of Engineering Excellence

Caltrans now has a web site! To get to the web site, go to: http://www.dot.ca.gov

DIST.	COUNTY	ROUTE	KILOMETER POST TOTAL PROJECT	SHEET NO.	TOTAL SHEETS
04	SF, Ala	80	13.9/14.3, 0.0/1.6	443R1	978

REGISTERED ENGINEER - CIVIL

6-4-01
PLANS APPROVAL DATE

REGISTERED PROFESSIONAL ENGINEER Sajid Abbas No. C 055274 Exp. 12/31/04 CIVIL STATE OF CALIFORNIA

The State of California or its officers or agents shall not be responsible for the accuracy or completeness of electronic copies of this plan sheet.

T.Y. LIN / MOFFATT & NICHOL
825 BATTERY STREET
SAN FRANCISCO, CA 94111

NOTES:

1. ⟹ Indicates direction of travel.
2. For luminaire, see "Road Plans".
3. For Pier and Navigation Channel Marker Light details, see "Road Plans"; "Precast Panel Details", "Transition Span Details" and "Footing Layout Piers E3 thru E6" sheets.
4. For fender details, see "Fender Details" sheets.
5. For deck drain locations, see "Structure Plan Frame W4" and "Girder Layout" sheets. Drain locations may be adjusted to miss prestressing tendons as approved by the Engineer. For prestressing tendons, see "Cantilever Tendon Layout" sheets.
6. For service platform details, see "Road Plans".
7. For deck access openings and preformed loop detector, see "Girder Layout" sheets.
8. For luminaire supports, see "Luminaire Support Details" sheets; for sign supports, see "Sign Support Details" sheet.
9. For Strong Motion Detection System, see "Road Plans".

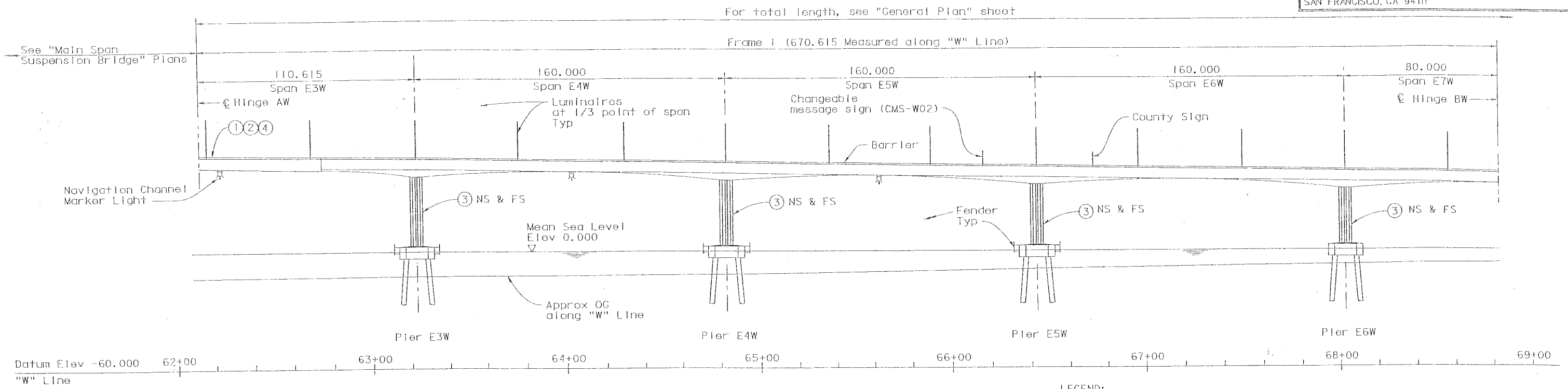

DEVELOPED ELEVATION
1:1000

MARK	DATE	DESCRIPTIONS	BY	CH'D
1	01/20/03	REVISED DECK DRAIN LOCATIONS	MR	SS

REVISIONS

CONTRACT CHANGE ORDER NO. 23
SHEET 5 OF 98

LEGEND:

1. Paint "Bridge No. 34-0006 L".
2. Paint "San Francisco Oakland Bay Bridge East Span Seismic Safety Project" and year constructed.
3. Paint pier number.
4. Paint Hinge name "Hinge AW", "Hinge BW" or "Hinge CW" as applicable.

Luminaires
Deck drain, Type D-2 (Mod)

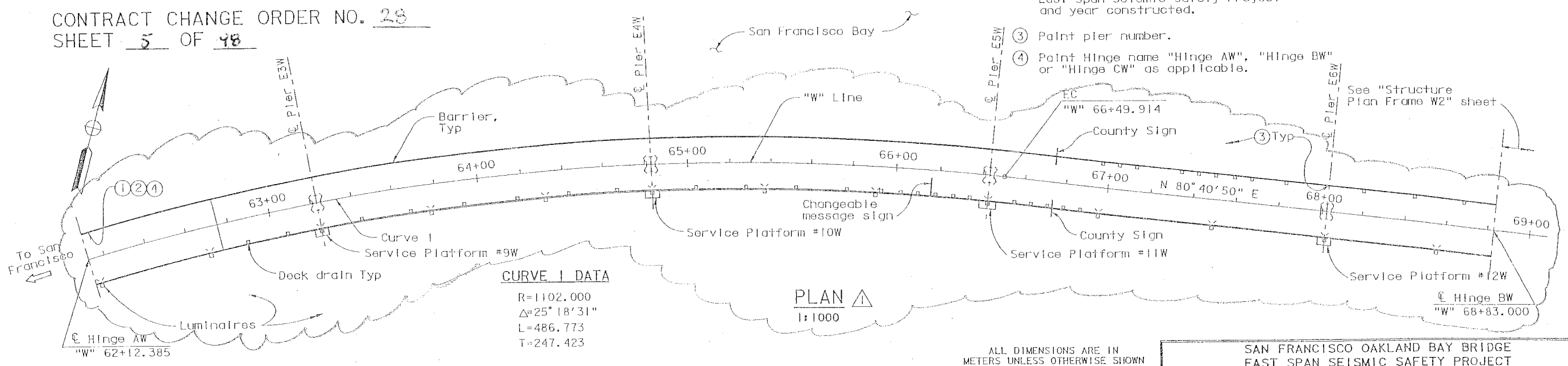

CURVE 1 DATA

R=1102.000
Δ=25° 18' 31"
L=486.773
T=247.423

PLAN 1
1:1000

ALL DIMENSIONS ARE IN METERS UNLESS OTHERWISE SHOWN

DESIGN OVERSIGHT 2/5/03
SIGN OFF DATE 11/17/00

	BY	CHECKED
DESIGN	S. Abbas	M. Lamont
DETAILS	E. Zharkov	M. Lamont
QUANTITIES	K. Cormier	D. Nguyen-Tan

PREPARED FOR THE STATE OF CALIFORNIA DEPARTMENT OF TRANSPORTATION

Sajid Abbas
PROJECT ENGINEER

BRIDGE NO. 34-0006L/R
KILOMETER POST 13.9/14.3, 0.0/1.6

SAN FRANCISCO OAKLAND BAY BRIDGE
EAST SPAN SEISMIC SAFETY PROJECT

SKYWAY STRUCTURES

STRUCTURE PLAN FRAME W1

Rev. Date: 5-18-98
ORIGINAL SCALE IN MILLIMETERS
CU 04
DISREGARD PRINTS BEARING EARLIER REVISION DATES
REVISION DATES (PRELIMINARY STAGE ONLY)
SHEET OF
012

100% PS&E
TIME PLOTTED => 11:17:49 AM
DATE PLOTTED => 02/04/2003
FILENAME => tmarcosig

T·Y·LIN INTERNATIONAL
MOFFATT & NICHOL
a joint venture

SFOBB – Skyway Project
345 Burma Road, Oakland **CA** 94607
Telephone (510)622-1071 **Facsimile** (510) 622-1069

REVISION MARKS ON CONTRACT PLAN CHANGES

SFOBB Skyway Project # 04-012024

Revisions to the following plans were prepared under the supervision of the undersigned engineer.

443R1 thru 445R1	Revision Mark 1	Dated	01/20/03
446R1	Revision Mark 1	Dated	01/10/03
447R2	Revision Mark 1	Dated	03/04/02
447R2	Revision Mark 2	Dated	01/20/03
448R1, 449R1	Revision Mark 1	Dated	01/20/03
450R1	Revision Mark 1	Dated	01/10/03
502R2, 503R2	Revision Mark 1	Dated	03/04/02
502R2, 503R2	Revision Mark 2	Dated	01/20/03
506R1	Revision Mark 1	Dated	01/20/03
736R2, 738R2	Revision Mark 1	Dated	03/04/02
736R2, 738R2	Revision Mark 2	Dated	01/20/03
748R2, 750R2	Revision Mark 1	Dated	03/04/02
748R2, 750R2	Revision Mark 2	Dated	01/20/03
886R2	Revision Mark 1	Dated	01/10/03
886R2	Revision Mark 2	Dated	05/20/03

For the project in SF/ALA County

Route 80

Km Port Description– 04-SF, Ala-80-13.9/14.3,0.0/1.6

District/EA 012021

(Signature) 02/27/04 (Date)

Sajid Abbas
(Name)

(Title)

C 055274
(Registration No)

12131/04
(Date of Expiration)

PROFESSIONAL ENGINEER
REGISTERED
Sajid Abbas
No. C 055274
Exp. 12/31/04
CIVIL
STATE OF CALIFORNIA

DIST.	COUNTY	ROUTE	KILOMETER POST TOTAL PROJECT	SHEET NO.	TOTAL SHEETS
04	SF, Ala	80	13.9/14.3, 0.0/1.6	444R1	978

Caltrans Metric

Sajid Abbas
REGISTERED ENGINEER - CIVIL

6-4-01
PLANS APPROVAL DATE

REGISTERED PROFESSIONAL ENGINEER Sajid Abbas No. C 055274 Exp. 12/31/04 CIVIL STATE OF CALIFORNIA

The State of California or its officers or agents shall not be responsible for the accuracy or completeness of electronic copies of this plan sheet.

T.Y. LIN / MOFFATT & NICHOL
825 BATTERY STREET
SAN FRANCISCO, CA 94111

Caltrans now has a web site! To get to the web site, go to: http://www.dot.ca.gov

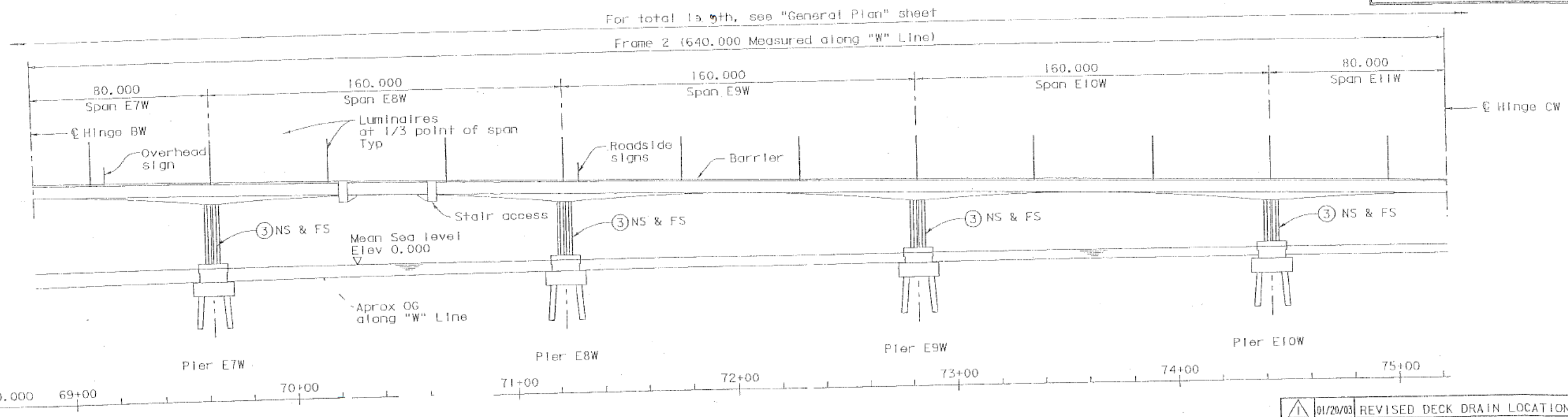

ELEVATION
1:1000

MARK	DATE	DESCRIPTIONS	BY	CH'D
1	01/20/03	REVISED DECK DRAIN LOCATIONS	MR	SS

REVISIONS

CONTRACT CHANGE ORDER NO. 28
SHEET 6 OF 48

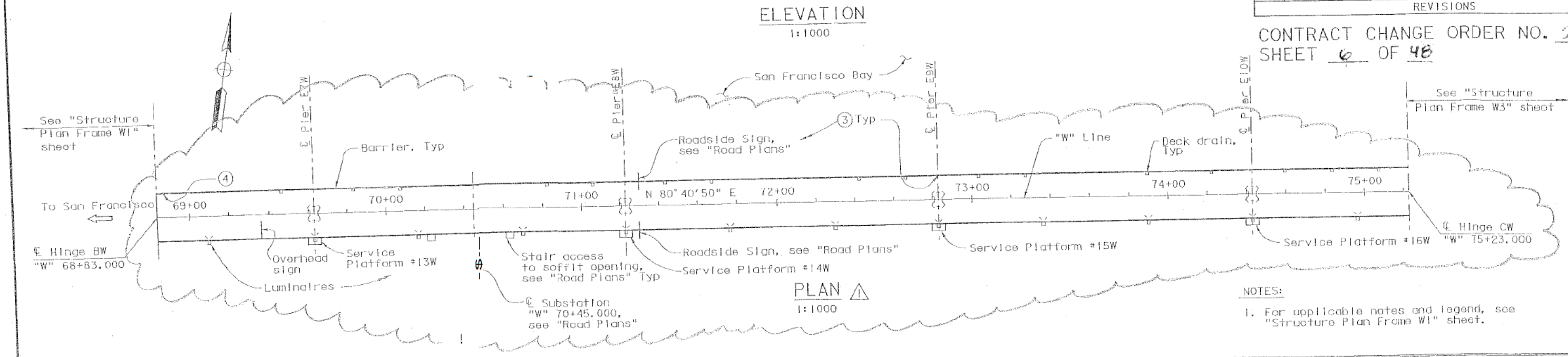

PLAN ⚠
1:1000

NOTES:

1. For applicable notes and legend, see "Structure Plan Frame W1" sheet.

ALL DIMENSIONS ARE IN METERS UNLESS OTHERWISE SHOWN

SAN FRANCISCO OAKLAND BAY BRIDGE
EAST SPAN SEISMIC SAFETY PROJECT

SKYWAY STRUCTURES

STRUCTURE PLAN FRAME W2

DESIGN	BY S. Abbas	CHECKED M. Lamont	
DETAILS	BY E. Zharkov	CHECKED M. Lamont	
QUANTITIES	BY K. Cormier	CHECKED D. Nguyen-Ton	

DESIGN OVERSIGHT 2/5/03

PREPARED FOR THE STATE OF CALIFORNIA DEPARTMENT OF TRANSPORTATION

Sajid Abbas
PROJECT ENGINEER

BRIDGE NO. 34-0006L/R
KILOMETER POST 13.9/14.3, 0.0/1.6

REVISION DATES (PRELIMINARY STAGE ONLY) SHEET OF

FRAME => STRUCTBASIC DATE PLOTTED => 02/04/2003 TIME PLOTTED => 11:18:31 AM

100% PS&E

T.Y.LIN INTERNATIONAL
MOFFATT & NICHOL
a joint venture

SFOBB – Skyway Project
345 Burma Road, Oakland CA 94607
Telephone (510)622-1071 Facsimile (510) 622-1069

REVISION MARKS ON CONTRACT PLAN CHANGES

SFOBB Skyway Project # 04-012024

Revisions to the following plans were prepared under the supervision of the undersigned engineer.

443R1 thru 445R1	Revision Mark 1	Dated	01/20/03
446R1	Revision Mark 1	Dated	01/10/03
447R2	Revision Mark 1	Dated	03/04/02
447R2	Revision Mark 2	Dated	01/20/03
448R1, 449R1	Revision Mark 1	Dated	01/20/03
450R1	Revision Mark 1	Dated	01/10/03
502R2, 503R2	Revision Mark 1	Dated	03/04/02
502R2, 503R2	Revision Mark 2	Dated	01/20/03
506R1	Revision Mark 1	Dated	01/20/03
736R2, 738R2	Revision Mark 1	Dated	03/04/02
736R2, 738R2	Revision Mark 2	Dated	01/20/03
748R2, 750R2	Revision Mark 1	Dated	03/04/02
748R2, 750R2	Revision Mark 2	Dated	01/20/03
886R2	Revision Mark 1	Dated	01/10/03
886R2	Revision Mark 2	Dated	05/20/03

For the project in SF/ALA County

Route 80

Km Post Description 04-SF, Ala-80-13.9/14.3,0.0/1.6

District/EA 012021

(Signature)

02/27/04
(Date)

Sajid Abbas
(Name)

(Title)

C 055274
(liegistration No.)

12/31/04
(Date of Expiration)

REGISTERED PROFESSIONAL ENGINEER
Sajid Abbas
No. C 055274
Exp. 12/31/04
CIVIL
STATE OF CALIFORNIA

DIST.	COUNTY	ROUTE	KILOMETER POST TOTAL PROJECT	SHEET NO.	TOTAL SHEETS
04	SF, Ala	80	13.9/14.3, 0.0/1.6	145R1	978

Caltrans Metric

Sajid Abbas
REGISTERED ENGINEER - CIVIL

6-4-01
PLANS APPROVAL DATE

REGISTERED PROFESSIONAL ENGINEER Sajid Abbas No. C 055274 Exp. 12/31/04 CIVIL STATE OF CALIFORNIA

The State of California or its officers or agents shall not be responsible for the accuracy or completeness of electronic copies of this plan sheet.

T.Y. LIN / MOFFATT & NICHOL
825 BATTERY STREET
SAN FRANCISCO, CA 94111

Caltrans now has a web site! To get to the web site, go to: http://www.dot.ca.gov

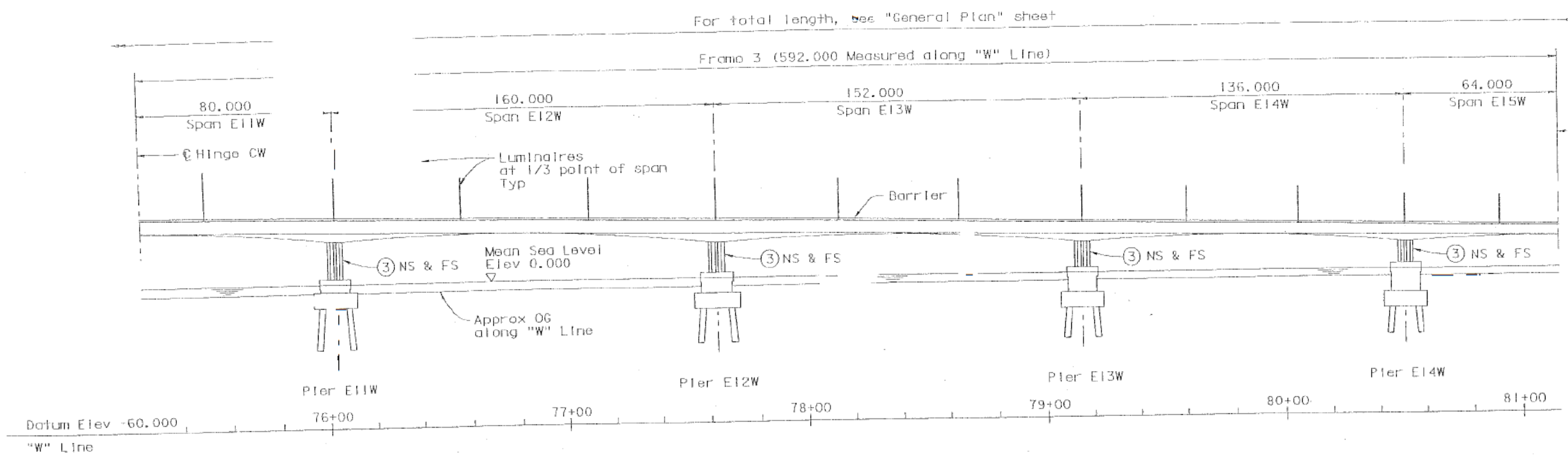

ELEVATION
1:1000

MARK	DATE	DESCRIPTIONS	BY	CH'D
1	01/20/03	REVISED DECK DRAIN LOCATIONS	MR	SS

REVISIONS

CONTRACT CHANGE ORDER NO. 28
SHEET 7 OF 48

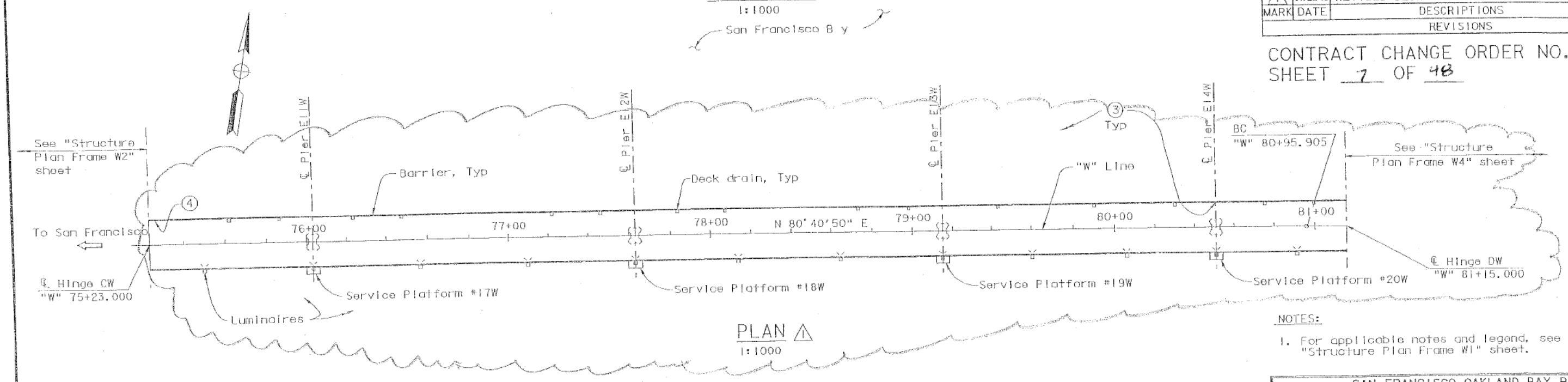

PLAN 1
1:1000

NOTES:

1. For applicable notes and legend, see "Structure Plan Frame W1" sheet.

ALL DIMENSIONS ARE IN METERS UNLESS OTHERWISE SHOWN

SAN FRANCISCO OAKLAND BAY BRIDGE
EAST SPAN SEISMIC SAFETY PROJECT

SKYWAY STRUCTURES

STRUCTURE PLAN FRAME W3

DESIGN OVERSIGHT 2/5/03

	BY	CHECKED
DESIGN	S. Abbas	M. Lamont
DETAILS	E. Zhorkov	M. Lamont
QUANTITIES	K. Cormier	D. Nguyen-Tan

PREPARED FOR THE STATE OF CALIFORNIA DEPARTMENT OF TRANSPORTATION

Sajid Abbas
PROJECT ENGINEER

BRIDGE NO. 34-0006L/R
KILOMETER POST 13.9/14.3, 0.0/1.6

REVISION DATES (PRELIMINARY STAGE ONLY) SHEET OF

100% PS&E

FILE NAME = S:\HNO\Proposal\ DATE PLOTTED => 02/04/2003 TIME PLOTTED => 11:20:03 AM

T.Y.LIN INTERNATIONAL
MOFFATT & NICHOL
a joint venture

SFOBB – Skyway Project
345 Burma Road, Oakland CA 94607
Telephone (510)622-1071 Facsimile (510)622-1069

REVISION MARKS ON CONTRACT PLAN CHANGES

SFOBB Skyway Project # 04-012024

Revisions to the following plans were prepared under the supervision of the undersigned engineer.

443R1 thru 445R1	Revision Mark 1	Dated	01/20/03
446R1	Revision Mark 1	Dated	01/10/03
447R2	Revision Mark 1	Dated	03/04/02
447R2	Revision Mark 2	Dated	01/20/03
448R1, 449R1	Revision Mark 1	Dated	01/20/03
450R1	Revision Mark 1	Dated	01/10/03
502R2, 503R2	Revision Mark 1	Dated	03/04/02
502R2, 503R2	Revision Mark 2	Dated	01/20/03
506R1	Revision Mark 1	Dated	01/20/03
736R2, 738R2	Revision Mark 1	Dated	03/04/02
736R2, 738R2	Revision Mark 2	Dated	01/20/03
748R2, 750R2	Revision Mark 1	Dated	03/04/02
748R2, 750R2	Revision Mark 2	Dated	01/20/03
886R2	Revision Mark 1	Dated	01/10/03
886R2	Revision Mark 2	Dated	05/20/03

For the project in SF/ALA County

Route 80

Km Post Description 04-SF, Ala-80-13.9/14.3,0.0/1.6

District/EA 012021

(Signature)

02/27/04
(Date)

Sajid Abbas
(Name)

(Title)

C 055274
(Rcgistration No.)

12131/04
(Date of Expiration)

REGISTERED PROFESSIONAL ENGINEER
Sajid Abbas
No. C 055274
Exp. 12/31/04
CIVIL
STATE OF CALIFORNIA

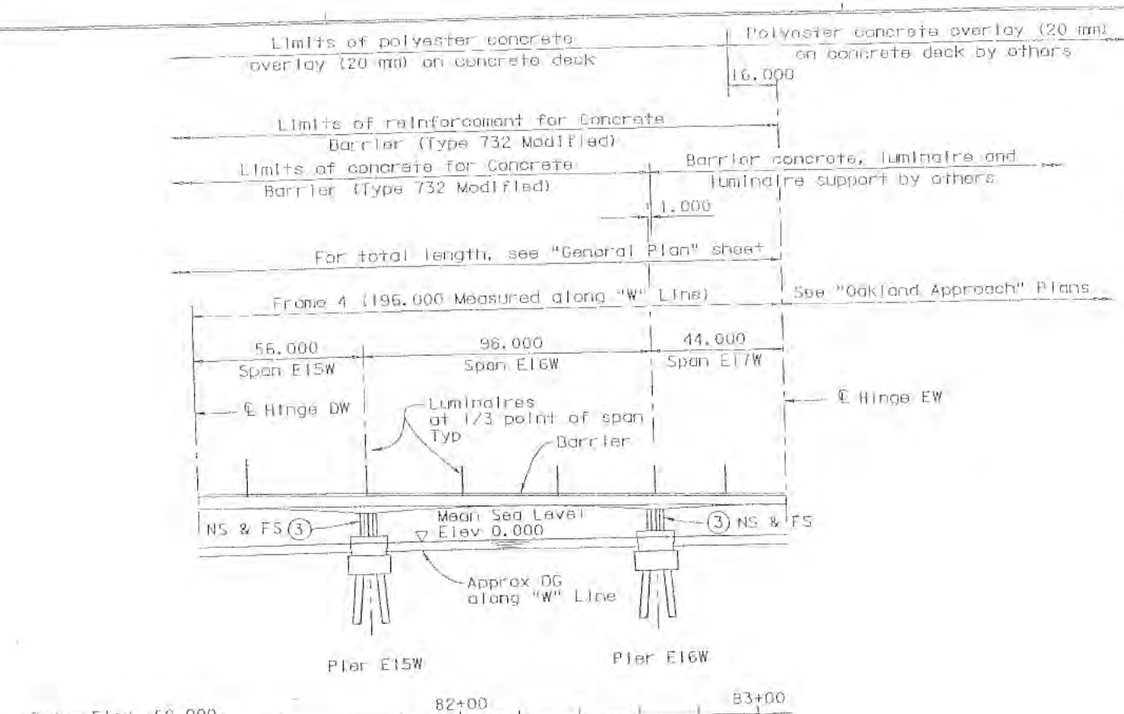

DEVELOPED ELEVATION

1:1000

5

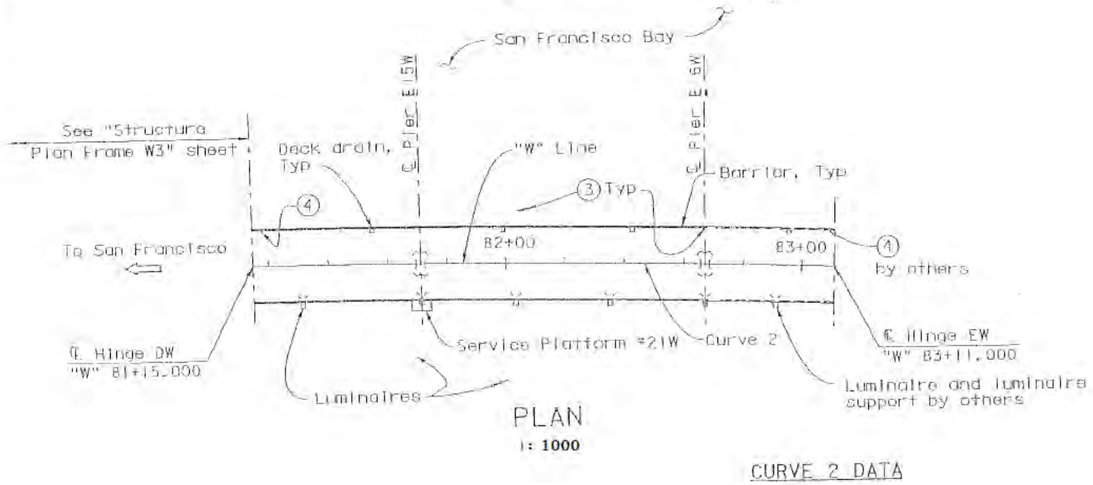

PLAN

1: 1000

CURVE 2 DATA

R=6001.000
Δ=04°59'10"
L=522.245
T=261.287

DECK DRAIN LOCATIONS A

WB Bridge	
Station	Side
62+82.365	R
63+06.365	R
63+43.635	R
63+67.635	R
63+92.550	R
64+17.450	R
64+42.365	R
64+66.365	R
65+03.635	R
65+27.635	R
65+52.550	R
65+77.450	R
65+93.450	R
66+02.365	R
66+10.365	R
66+18.365	R
66+26.365	R
66+34.365	R
66+55.635	R
66+63.635	R
66+71.635	R
66+79.635	R
66+87.635	R
66+96.550	L
67+04.550	L
67+12.550	L
67+33.450	L
67+41.450	L
67+49.450	L
67+58.365	L
67+66.365	L
67+82.365	L
68+19.635	L
68+43.635	L
68+67.635	L
69+46.365	L
69+83.635	L
70+07.635	L
70+82.365	L
71+06.365	L
71+43.635	L
71+67.635	L
72+42.365	L
72+66.365	L
73+03.635	L
73+27.635	L
73+89.450	L
74+22.365	L
74+59.635	L
74+83.635	L
75+07.635	L
75+62.365	L
75+86.365	L
76+23.635	L
76+47.635	L
77+22.365	L
77+46.365	L
77+83.635	L
78+07.635	L
78+73.450	L
78+98.365	L
79+43.635	L
79+90.365	L
80+30.365	L
80+75.635	L
80+99.635	L
81+54.365	L
82+00.550	L
82+41.450	L
82+95.635	L

Caltrans Metric

DIST	COUNTY	ROUTE	KILOMETER POST TOTAL PROJECT	SHEET NO.	TOTAL SHEETS
04	SF, Ala	80	13.9/14.3, 0.0/1.6	146R1	978

REGISTERED ENGINEER - CIVIL

6-04-01
PLANS APPROVAL DATE

Sajid Abbas No. C 055274 Exp. 12/31/04 CIVIL STATE OF CALIFORNIA REGISTERED PROFESSIONAL ENGINEER

The State of California or its officers or agents shall not be responsible for the accuracy or completeness of electronic copies of this plan sheet.

T.Y. LIN / MOFFATT & NICHOL
825 BATTERY STREET
SAN FRANCISCO, CA 94111

Caltrans now has a web site! To get to the web site, go to: http://www.dot.ca.gov

MARK	DATE	DESCRIPTIONS	BY	CH'D
1	01/10/03	REVISE VALUES IN TABLE	MS	MR

REVISIONS

CONTRACT CHANGE ORDER NO. 28
SHEET 8 OF 48

NOTES:

1. For applicable notes and legend, see "Structure Plan Frame W1" sheet.

5 REVISED PER ADDENDUM NO. 5 DATED OCTOBER 24, 2001

100% PS&E TIME PLOTTED: 11:09:52 AM DATE PLOTTED: 02/04/2003

ALL DIMENSIONS ARE IN METERS UNLESS OTHERWISE SHOWN

SAN FRANCISCO OAKLAND BAY BRIDGE
EAST SPAN SEISMIC SAFETY PROJECT

SKYWAY STRUCTURES

STRUCTURE PLAN FRAME W4

DESIGN OVERSIGHT 2/6/03

	BY	CHECKED
DESIGN	S. Abbas	M. Lamont
DETAILS	E. Zhorkov	M. Lamont
QUANTITIES	K. Comlor	D. Nguyen-Ton

PREPARED FOR THE STATE OF CALIFORNIA DEPARTMENT OF TRANSPORTATION

Sajid Abbas
PROJECT ENGINEER

BRIDGE NO. 34-0006L/R
KILOMETER POST 13.9/14.3, 0.0/1.6

SHEET 1 OF

T·Y·LIN INTERNATIONAL
MOFFATT & NICHOL
a joint venture

SFOBB – Skyway Project
345 Burma Road, Oakland CA 94607
Telephone (510)622-1071 Facsimile (510) 622-1069

REVISION MARKS ON CONTRACT PLAN CHANGES

SFOBB Skyway Project # 04-012024

Revisions to the following plans were prepared under the supervision of the undersigned engineer.

443R1 thru 445R1	Revision Mark 1	Dated	01/20/03
446R1	Revision Mark 1	Dated	01/10/03
447R2	Revision Mark 1	Dated	03/04/02
447R2	Revision Mark 2	Dated	01/20/03
448R1, 449R1	Revision Mark 1	Dated	01/20/03
450R1	Revision Mark 1	Dated	01/10/03
502R2, 503R2	Revision Mark 1	Dated	03/04/02
502R2, 503R2	Revision Mark 2	Dated	01/20/03
506R1	Revision Mark 1	Dated	01/20/03
736R2, 738R2	Revision Mark 1	Dated	03/04/02
736R2, 738R2	Revision Mark 2	Dated	01/20/03
748R2, 750R2	Revision Mark 1	Dated	03/04/02
748R2, 750R2	Revision Mark 2	Dated	01/20/03
886R2	Revision Mark 1	Dated	01/10/03
886R2	Revision Mark 2	Dated	05/20/03

For the project in SF/ALA County

Route 80

Km Post Description 04-SF-Ala-80-13.9/14.3,0.0/1.6

District/EA 012021

(Signature) 02/27/04 (Date)

Sajid Abbas
(Name)

(Title)

C 055274
(Registration No.)

12131104
(Date of Expiration)

REGISTERED PROFESSIONAL ENGINEER
Sajid Abbas
No C 055274
Exp. 12/31/04
CIVIL
STATE OF CALIFORNIA

DIST.	COUNTY	ROUTE	KILOMETER POST TOTAL PROJECT	SHEET NO.	TOTAL SHEETS
04	SF, Ala	80	13.9/14.3, 0.0/1.6	447R2	978

Sajid Abbas
REGISTERED ENGINEER - CIVIL
6-4-01
PLANS APPROVAL DATE

REGISTERED PROFESSIONAL ENGINEER Sajid Abbas No. C 055274 Exp. 12/31/04 CIVIL STATE OF CALIFORNIA

The State of California or its officers or agents shall not be responsible for the accuracy or completeness of electronic copies of this plan sheet.

T.Y. LIN / MOFFATT & NICHOL
825 BATTERY STREET SAN FRANCISCO, CA 94111

Caltrans now has a web site! To get to the web site, go to: http://www.dot.ca.gov

NOTES:

1. ⇨ Indicates direction of travel.
2. For luminaire, see "Road Plans".
3. For Pier and Navigation Channel Marker Light details, see "Road Plans"; "Precast Panel Details", "Transition Span Details" and "Footing Layout Piers E3 thru E6" sheets.
4. For fender details, see "Fender Details" sheets.
5. For deck drain locations, see "Structure Plan Frame E4" and "Girder Layout" sheets. Drain locations may be adjusted to miss prestressing tendons as approved by the Engineer. For prestressing tendons, see "Cantilever Tendon Layout" sheets.
6. For service platform details, see "Road Plans".
7. For deck access openings and preformed loop detector, see "Girder Layout" sheets.
8. For luminaire supports, see "Luminaire Support Details" sheets; for sign supports, see "Sign Support Details" sheet.
9. For Strong Motion Detection System, see "Road Plans".

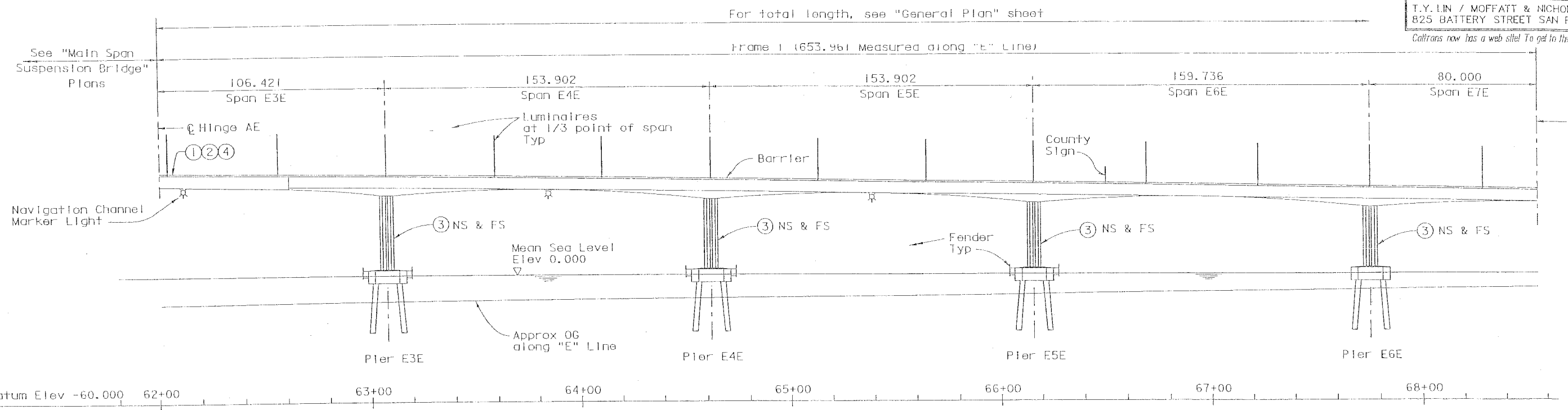

MARK	DATE	DESCRIPTIONS	BY	CH'D
2	01/20/03	REVISED DECK DRAIN LOCATIONS	MR	SS
1	03/04/02	REMOVE COUNTY SIGN	TM	SC

REVISIONS

CONTRACT CHANGE ORDER NO. 28
SHEET 9 OF 48

DEVELOPED ELEVATION
1:1000

LEGEND:

① Paint "Bridge No.34-0006 R".
② Paint "San Francisco Oakland Bay Bridge East Span Seismic Safety Project" and year constructed.
③ Paint pier number.
④ Paint Hinge name "Hinge AE", "Hinge BE" or "Hinge CE" as applicable.

Luminaires
Deck drain, Type D-2 (Mod)

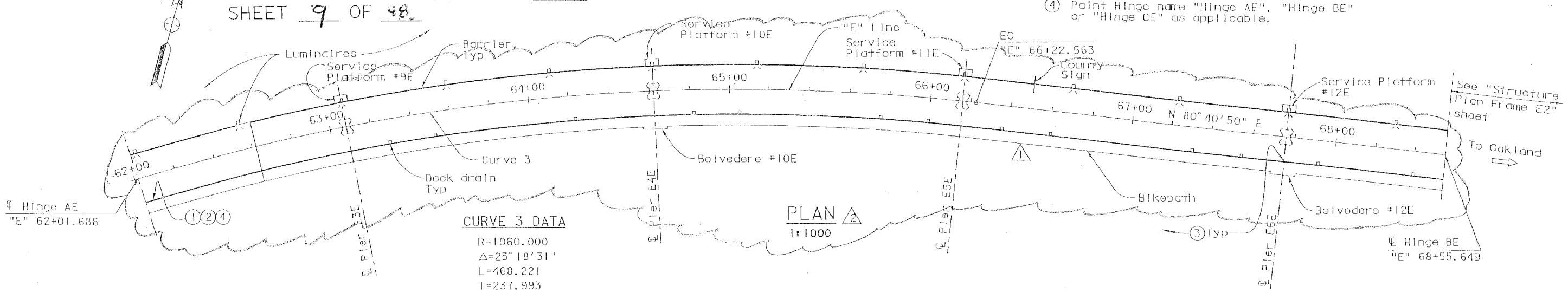

CURVE 3 DATA
R=1060.000
Δ=25°18'31"
L=468.221
T=237.993

PLAN 2
1:1000

ALL DIMENSIONS ARE IN METERS UNLESS OTHERWISE SHOWN

SAN FRANCISCO OAKLAND BAY BRIDGE
EAST SPAN SEISMIC SAFETY PROJECT

SKYWAY STRUCTURES

STRUCTURE PLAN FRAME E1

DESIGN OVERSIGHT 2/5/03

	BY	CHECKED
DESIGN	S. Abbas	M. Lamont
DETAILS	E. Zharkov	M. Lamont
QUANTITIES	K. Cornelor	D. Nguyen-Tan

PREPARED FOR THE STATE OF CALIFORNIA DEPARTMENT OF TRANSPORTATION

Sajid Abbas
PROJECT ENGINEER

BRIDGE NO. 34-0006L/R
KILOMETER POST 13.9/14.3, 0.0/1.6

100% PS&E

NAME => tmarcelo DATE PLOTTED => 02/04/2003 TIME PLOTTED => 11:22:01 AM

T.Y.LIN INTERNATIONAL
MOFFATT & NICHOL
a joint venture

SFOBB – Skyway Project
345 Burma Road, Oakland CA 94607
Telephone (510) 622-1071 Facsimile (510) 622-1069

REVISION MARKS ON CONTRACT PLAN CHANGES

SFOBB Skyway Project # 04-012024

Revisions to the following plans were prepared under the supervision of the undersigned engineer.

443R1 thru 445R1	Revision Mark 1	Dated	01/20/03
446R1	Revision Mark 1	Dated	01/10/03
447R2	Revision Mark 1	Dated	03/04/02
447R2	Revision Mark 2	Dated	01/20/03
448R1, 449R1	Revision Mark 1	Dated	01/20/03
450R1	Revision Mark 1	Dated	01/10/03
502R2, 503R2	Revision Mark 1	Dated	03/04/02
502R2, 503R2	Revision Mark 2	Dated	01/20/03
506R1	Revision Mark 1	Dated	01/20/03
736R2, 738R2	Revision Mark 1	Dated	03/04/02
736R2, 738R2	Revision Mark 2	Dated	01/20/03
748R2, 750R2	Revision Mark 1	Dated	03/04/02
748R2, 750R2	Revision Mark 2	Dated	01/20/03
886R2	Revision Mark 1	Dated	01/10/03
886R2	Revision Mark 2	Dated	05/20/03

For the project in SF/ALA County

Routc 80

Km Post Description 04-SF. Ala-80-13.9/14.3,0.0/1.6

District/EA 0 12021

(Signature)

02/27/04
(Date)

Sajid Ahbas
(Name)

(Titlc)

C 055274
(Registration No)

12131/04
(Date of Expiration)

REGISTERED PROFESSIONAL ENGINEER
Sajid Abbas
No. C 055274
Exp. 12/31/04
CIVIL
STATE OF CALIFORNIA

DIST.	COUNTY	ROUTE	KILOMETER POST TOTAL PROJECT	SHEET NO.	TOTAL SHEETS
04	SF, Ala	80	13.9/14.3, 0.0/1.6	448R1	978

Caltrans Metric

Sajid Abbas
REGISTERED ENGINEER - CIVIL

6-4-01
PLANS APPROVAL DATE

REGISTERED PROFESSIONAL ENGINEER Sajid Abbas No. C 055274 Exp. 12/31/04 CIVIL STATE OF CALIFORNIA

The State of California or its officers or agents shall not be responsible for the accuracy or completeness of electronic copies of this plan sheet.

T.Y. LIN / MOFFATT & NICHOL
825 BATTERY STREET SAN FRANCISCO, CA 94111

Caltrans now has a web site! To get to the web site, go to: http://www.dot.ca.gov

For total length, see "General Plan" sheet

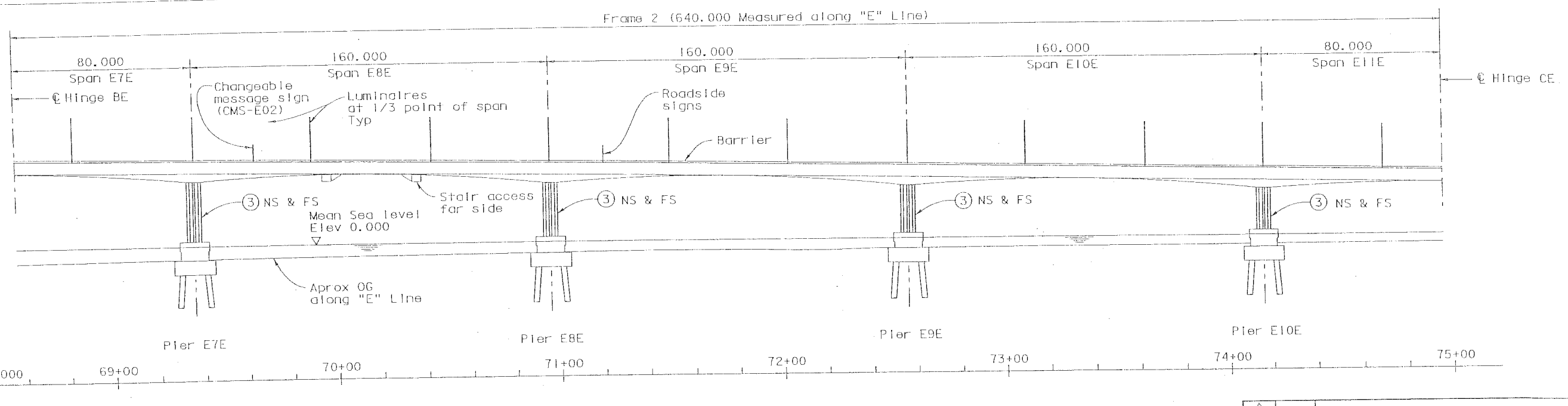

ELEVATION
1:1000

MARK	DATE	DESCRIPTIONS	BY	CH'D
1	01/20/03	REVISED DECK DRAIN LOCATIONS	MR	SS

REVISIONS

CONTRACT CHANGE ORDER NO. 28
SHEET 10 OF 48

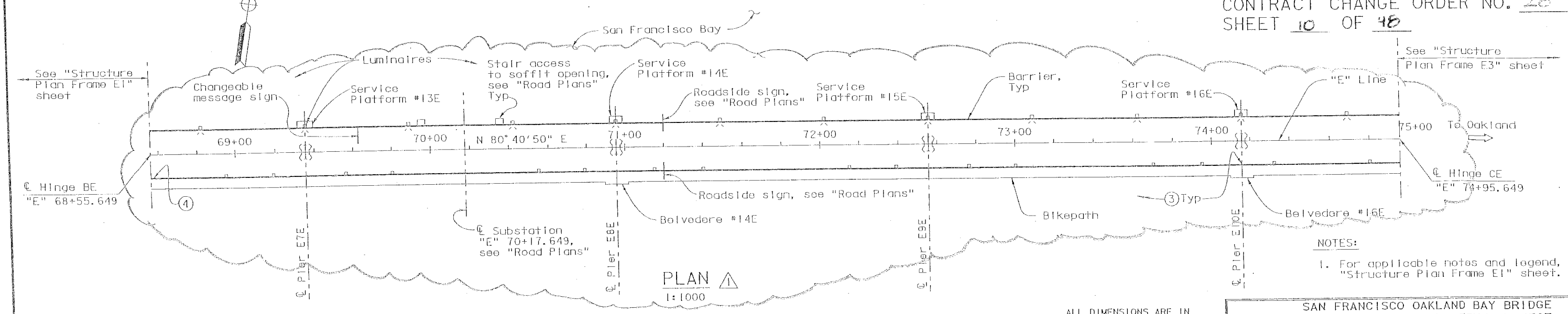

PLAN 1
1:1000

NOTES:

1. For applicable notes and legend, see "Structure Plan Frame E1" sheet.

ALL DIMENSIONS ARE IN METERS UNLESS OTHERWISE SHOWN

SAN FRANCISCO OAKLAND BAY BRIDGE
EAST SPAN SEISMIC SAFETY PROJECT

SKYWAY STRUCTURES

STRUCTURE PLAN FRAME E2

Hadi Shakal
DESIGN OVERSIGHT
2/5/03

	BY	CHECKED	
DESIGN	S. Abbas	M. Lamont	
DETAILS	E. Zharkov	M. Lamont	
QUANTITIES	K. Cormier	D. Nguyen-Tan	

PREPARED FOR THE STATE OF CALIFORNIA DEPARTMENT OF TRANSPORTATION

Sajid Abbas
PROJECT ENGINEER

BRIDGE NO. 34-0006L/R
KILOMETER POST 13.9/14.3, 0.0/1.6

REVISION DATES (PRELIMINARY STAGE ONLY)

SHEET OF

100% PS&E

RNAME => tmarcelo DATE PLOTTED => 02/04/2003 TIME PLOTTED => 11:22:48 AM

T.Y.LIN INTERNATIONAL
MOFFATT & NICHOL
a joint venture

SFOBB – Skyway Project
345 Burma Road, Oakland CA 94607
Telephone (510) 622-1071 Facsimile (510) 622-1069

REVISION MARKS ON CONTRACT PLAN CHANGES

SFOBB Skyway Project # 04-012024

Revisions to the following plans were prepared under the supervision of the undersigned engineer.

443R1 thru 445R1	Revision Mark 1	Dated	01/20/03
446R1	Revision Mark 1	Dated	01/10/03
447R2	Revision Mark 1	Dated	03/04/02
447R2	Revision Mark 2	Dated	01/20/03
448R1, 449R1	Revision Mark 1	Dated	01/20/03
450R1	Revision Mark 1	Dated	01/10/03
502R2, 503R2	Revision Mark 1	Dated	03/04/02
502R2, 503R2	Revision Mark 2	Dated	01/20/03
506R1	Revision Mark 1	Dated	01/20/03
736R2, 738R2	Revision Mark 1	Dated	03/04/02
736R2, 738R2	Revision Mark 2	Dated	01/20/03
748R2, 750R2	Revision Mark 1	Dated	03/04/02
748R2, 750R2	Revision Mark 2	Dated	01/20/03
886R2	Revision Mark 1	Dated	01/10/03
886R2	Revision Mark 2	Dated	05/20/03

For the project in SF/ALA County

Route 80

Km Post Description 04-SF, Ala-80-13.9/14.3,0.0/1.6

District/EA 012021

(Signature)

02/27/04
(Date)

Sajid Abbas
(Name)

(Title)

C 055274
(Registration No)

12131/04
(Date of Expiration)

REGISTERED PROFESSIONAL ENGINEER
Sajid Abbas
No. C 055274
Exp. 12/31/04
CIVIL
STATE OF CALIFORNIA

DIST.	COUNTY	ROUTE	KILOMETER POST TOTAL PROJECT	SHEET NO.	TOTAL SHEETS
04	SF, Ala	80	13.9/14.3, 0.0/1.6	449R1	978

Sajid Abbas
REGISTERED ENGINEER - CIVIL

6-4-01
PLANS APPROVAL DATE

REGISTERED PROFESSIONAL ENGINEER Sajid Abbas No. C 055274 Exp. 12/31/04 CIVIL STATE OF CALIFORNIA

The State of California or its officers or agents shall not be responsible for the accuracy or completeness of electronic copies of this plan sheet.

T.Y. LIN / MOFFATT & NICHOL
825 BATTERY STREET
SAN FRANCISCO, CA 94111

Caltrans now has a web site! To get to its web site, go to: http://www.dot.ca.gov

For total length, see "General Plan" sheet

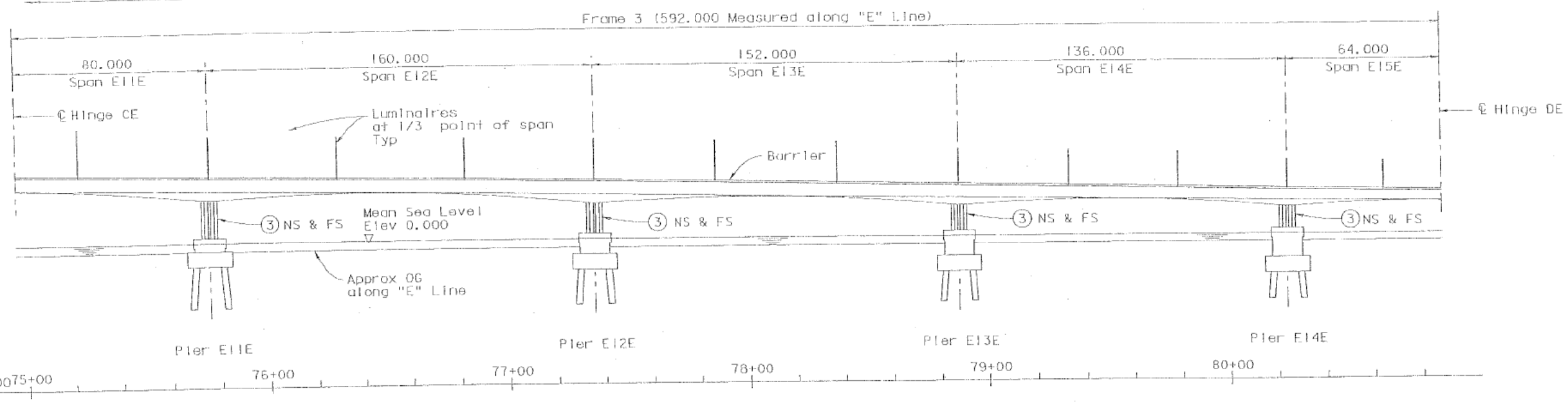

ELEVATION
1:1000

MARK	DATE	DESCRIPTIONS	BY	CH'D
1	01/20/03	REVISED DECK DRAIN LOCATIONS	MR	SS

REVISIONS

CONTRACT CHANGE ORDER NO. 23
SHEET 11 OF 48

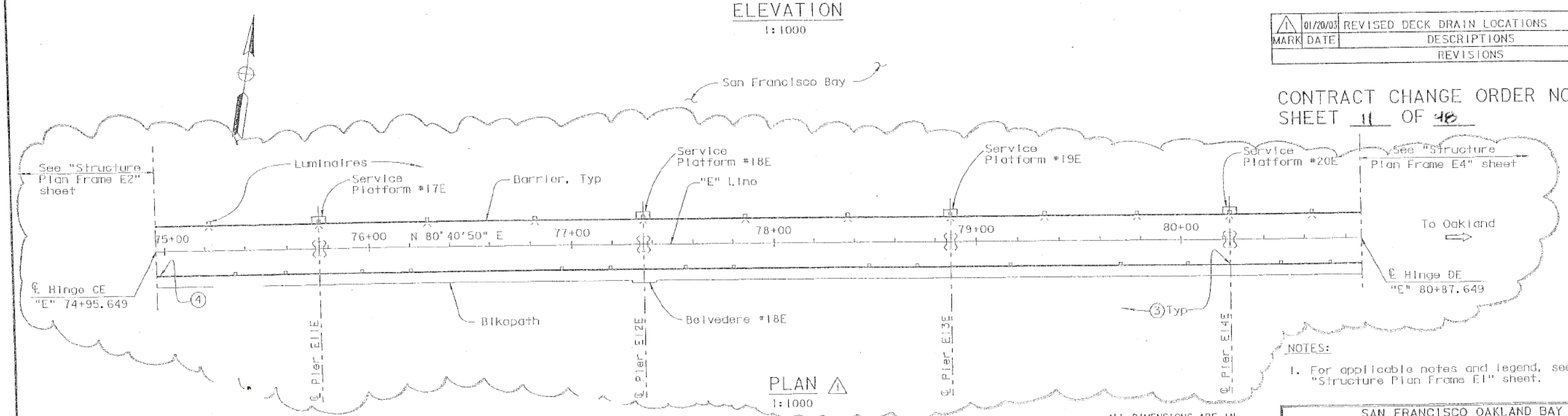

PLAN ⚠
1:1000

NOTES:

1. For applicable notes and legend, see "Structure Plan Frame E1" sheet.

ALL DIMENSIONS ARE IN METERS UNLESS OTHERWISE SHOWN

	BY	CHECKED	
DESIGN	S. Abbas	M. Lamont	
DETAILS	E. Zharkov	M. Lamont	
QUANTITIES	K. Cormier	D. Nguyen-Tan	

PREPARED FOR THE STATE OF CALIFORNIA DEPARTMENT OF TRANSPORTATION

Sajid Abbas
PROJECT ENGINEER

BRIDGE NO. 34-0006L/R
KILOMETER POST 13.9/14.3, 0.0/1.6

SAN FRANCISCO OAKLAND BAY BRIDGE
EAST SPAN SEISMIC SAFETY PROJECT

SKYWAY STRUCTURES

STRUCTURE PLAN FRAME E3

REVISION DATES (PRELIMINARY STAGE ONLY) SHEET OF

100% PS&E

FRAME => fmorgsic DATE PLOTTED => 02/04/2003 TIME PLOTTED => 11:23:51 AM

T.Y.LIN INTERNATIONAL
MOFFATT & NICHOL
a joint venture

SFOBB – Skyway Project
345 Burma Road, Oakland CA 94607
Telephone (510) 622-1071 Facsimile (510) 622-1069

REVISION MARKS ON CONTRACT PLAN CHANGES

SFOBB Skyway Project # 04-012024

Revisions *to* the following plans were prepared under the supervision of the undersigned engineer.

443R1 thru 445R1	Revision Mark 1	Dated	01/20/03
446R1	Revision Mark 1	Dated	01/10/03
447R2	Revision Mark 1	Dated	03/04/02
447R2	Revision Mark 2	Dated	01/20/03
448R1, 449R1	Revision Mark 1	Dated	01/20/03
450R1	Revision Mark 1	Dated	01/10/03
502R2, 503R2	Revision Mark 1	Dated	03/04/02
502R2, 503R2	Revision Mark 2	Dated	01/20/03
506R1	Revision Mark 1	Dated	01/20/03
736R2, 738R2	Revision Mark 1	Dated	03/04/02
736R2, 738R2	Revision Mark 2	Dated	01/20/03
748R2, 750R2	Revision Mark 1	Dated	03/04/02
748R2, 750R2	Revision Mark 2	Dated	01/20/03
886R2	Revision Mark 1	Dated	01/10/03
886R2	Revision Mark 2	Dated	05/20/03

For the project in SF/ALA County

Route 80

Km Post Description 04-SF, Ala-80-13.9/14.3,0.0/1.6

District/EA 012021

(Signature)

02/27/04
(Date)

Sajid Abbas
(Name)

(Title)

C 055274
(Registration No.)

1213 1104
(Date of Expiration)

REGISTERED PROFESSIONAL ENGINEER
Sajid Abbas
No. C 055274
Exp. 12/31/04
CIVIL
STATE OF CALIFORNIA

DIST.	COUNTY	ROUTE	KILOMETER POST TOTAL PROJECT	SHEET NO.	TOTAL SHEETS
04	SF, ALA	80	13.9/14.3, 0.0/1.6	450R1	978

REGISTERED ENGINEER - CIVIL

6-04-01

PLANS APPROVAL DATE

REGISTERED PROFESSIONAL ENGINEER Sajid Abbas No. C 045274 Exp. 12/31/04 CIVIL STATE OF CALIFORNIA

The State of California or its officers or agents shall not be responsible for the accuracy or completeness of electronic copies of this plan sheet.

T.Y. LIN / MOFFATT & NICHOL
825 BATTERY STREET
SAN FRANCISCO, CA 94111

Caltrans now has a web site! To get to the web site, go to: http://www.dot.ca.gov

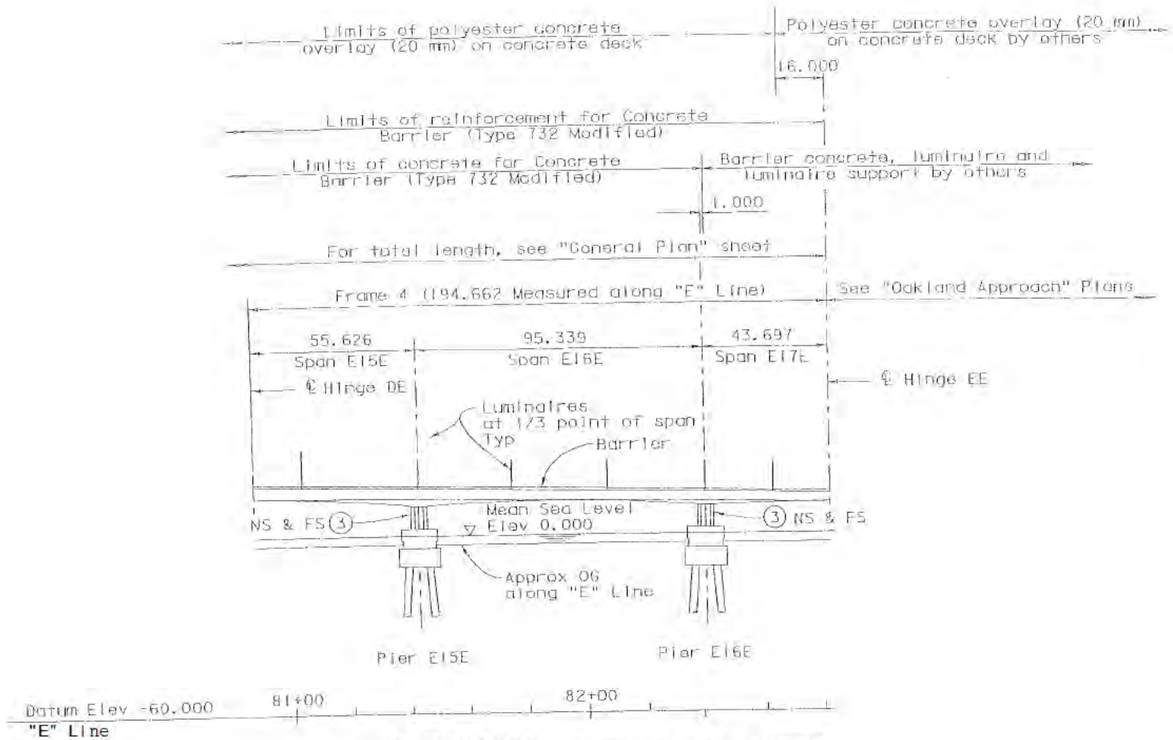

DEVELOPED ELEVATION

1:1000

5

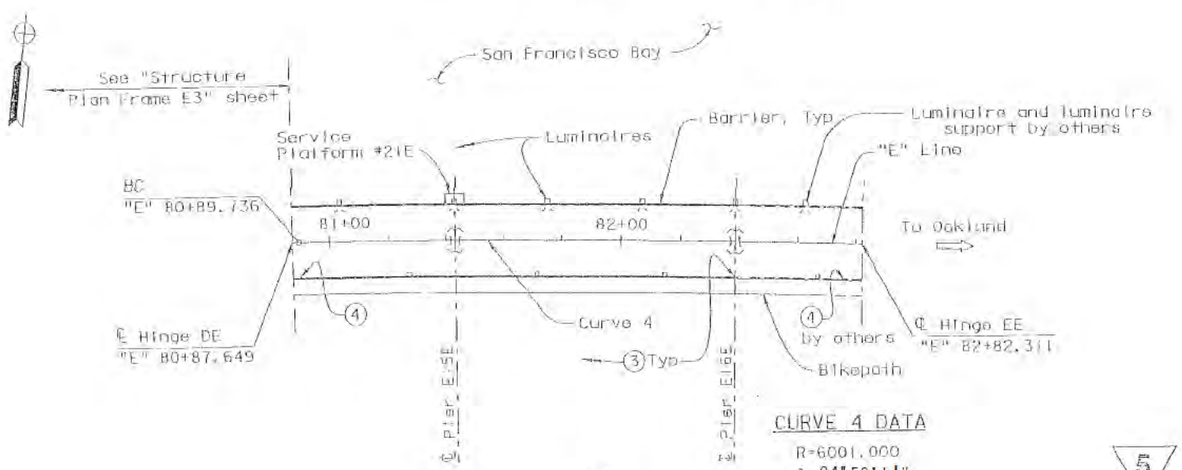

PLAN

1:1000

5

CURVE 4 DATA

R=6001.000
Δ=04°59'11"
L=522.245
T=261.287

DECK DRAIN LOCATIONS

EB Bridge	
Station	Side
63+27.982	R
63+51.067	R
64+22.901	R
64+45.986	R
64+81.884	R
65+04.969	R
65+75.583	R
65+99.583	R
66+36.284	R
66+60.284	R
67+31.014	R
67+55.014	R
67+92.284	R
68+40.284	R
68+95.014	R
69+19.014	R
69+56.284	R
69+80.284	R
70+55.014	R
70+79.014	R
71+16.284	R
71+40.284	R
72+15.014	R
72+39.014	R
72+76.284	R
73+00.284	R
73+71.014	R
73+95.014	R
74+32.284	R
74+80.284	R
75+35.014	R
75+59.014	R
75+96.284	R
76+20.284	R
76+95.014	R
77+19.014	R
77+56.284	R
77+80.284	R
78+47.014	R
78+71.014	R
79+16.284	R
79+70.099	R
80+03.014	R
80+48.284	R
80+72.284	R
81+26.751	R
81+72.632	R
82+13.229	R
82+67.056	R

MARK	DATE	REVISIONS	BY	CH'D
1	01/10/03	REVISE VALUES IN TABLE	MS	MR

CONTRACT CHANGE ORDER NO. 13
SHEET 12 OF 48

NOTES:

1. For applicable notes and legend, see "Structure Plan Frame E1" sheet.

5 REVISED PER ADDENDUM NO. 5 DATED OCTOBER 24, 2001

100 % PS&E

ALL DIMENSIONS ARE IN METERS UNLESS OTHERWISE SHOWN

DESIGN	BY S. Abbas	CHECKED M. Lamont	
DETAILS	BY E. Zharkov	CHECKED M. Lamont	
QUANTITIES	BY K. Cooler	CHECKED D. Nguyen-Tan	

DESIGN OVERSIGHT 2/5/03

PREPARED FOR THE STATE OF CALIFORNIA DEPARTMENT OF TRANSPORTATION

Sajid Abbas
PROJECT ENGINEER

BRIDGE NO. 34-0006L/R
KILOMETER POST 13.9/14.3, 0.0/1.6

SAN FRANCISCO OAKLAND BAY BRIDGE
EAST SPAN SEISMIC SAFETY PROJECT

SKYWAY STRUCTURES

STRUCTURE PLAN FRAME E4

T.Y.LIN INTERNATIONAL
MOFFATT & NICHOL
a joint venture

SFOBB – Skyway Project
345 Burma Road, Oakland CA 94607
Telephone (510) 622-1071 Facsimile (510) 622-1069

REVISION MARKS ON CONTRACT PLAN CHANGES

SFOBB Skyway Project # 04-012024

Revisions to the following plans were prepared under the supervision of the undersigned engineer.

443R1 thru 445R1	Revision Mark 1	Dated	01/20/03
446R1	Revision Mark 1	Dated	01/10/03
447R2	Revision Mark 1	Dated	03/04/02
447R2	Revision Mark 2	Dated	01/20/03
448R1, 449R1	Revision Mark 1	Dated	01/20/03
450R1	Revision Mark 1	Dated	01/10/03
502R2, 503R2	Revision Mark 1	Dated	03/04/02
502R2, 503R2	Revision Mark 2	Dated	01/20/03
506R1	Revision Mark 1	Dated	01/20/03
736R2, 738R2	Revision Mark 1	Dated	03/04/02
736R2, 738R2	Revision Mark 2	Dated	01/20/03
748R2, 750R2	Revision Mark 1	Dated	03/04/02
748R2, 750R2	Revision Mark 2	Dated	01/20/03
886R2	Revision Mark 1	Dated	01/10/03
886R2	Revision Mark 2	Dated	05/20/03

For the project in SF/ALA County

Route 80

Km Post Description 04-SF, Ala-80-13.9/14.3,0.0/1.6

District/EA 01 2021

(Signature)

02/27/04
(Date)

Sajid Abbas
(Name)

(Title)

C 055274
(Registration No)

12/31/04
(Date of Expiration)

REGISTERED PROFESSIONAL ENGINEER
Sajid Abbas
No. C 055274
Exp. 12/31/04
CIVIL
STATE OF CALIFORNIA

DIST.	COUNTY	ROUTE	KILOMETER POST TOTAL PROJECT	SHEET NO.	TOTAL SHEETS
04	SF, Ala	80	13.9/14.3, 0.0/1.6	502R2	978

REGISTERED ENGINEER - CIVIL

6-4-01

PLANS APPROVAL DATE

Rezo Jonab No. C 50936 Exp. 09/30/01 CIVIL STATE OF CALIFORNIA

The State of California or its officers or agents shall not be responsible for the accuracy or completeness of electronic copies of this plan sheet.

T.Y. LIN / MOFFATT & NICHOL
825 BATTERY STREET
SAN FRANCISCO, CA 94111

Caltrans now has a web site! To get to the web site, go to: http://www.dot.ca.gov

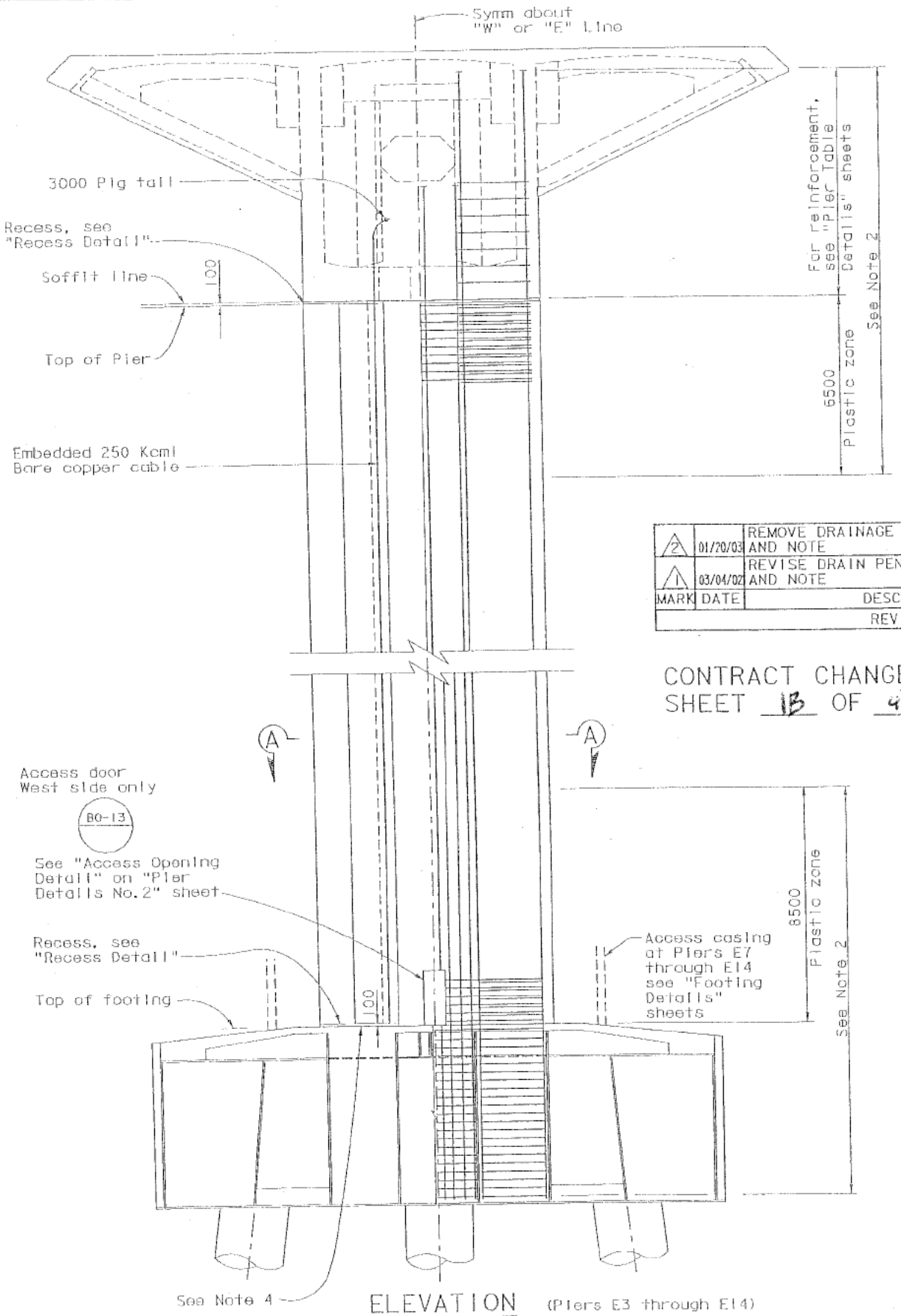

ELEVATION (Piers E3 through E14)
1:100

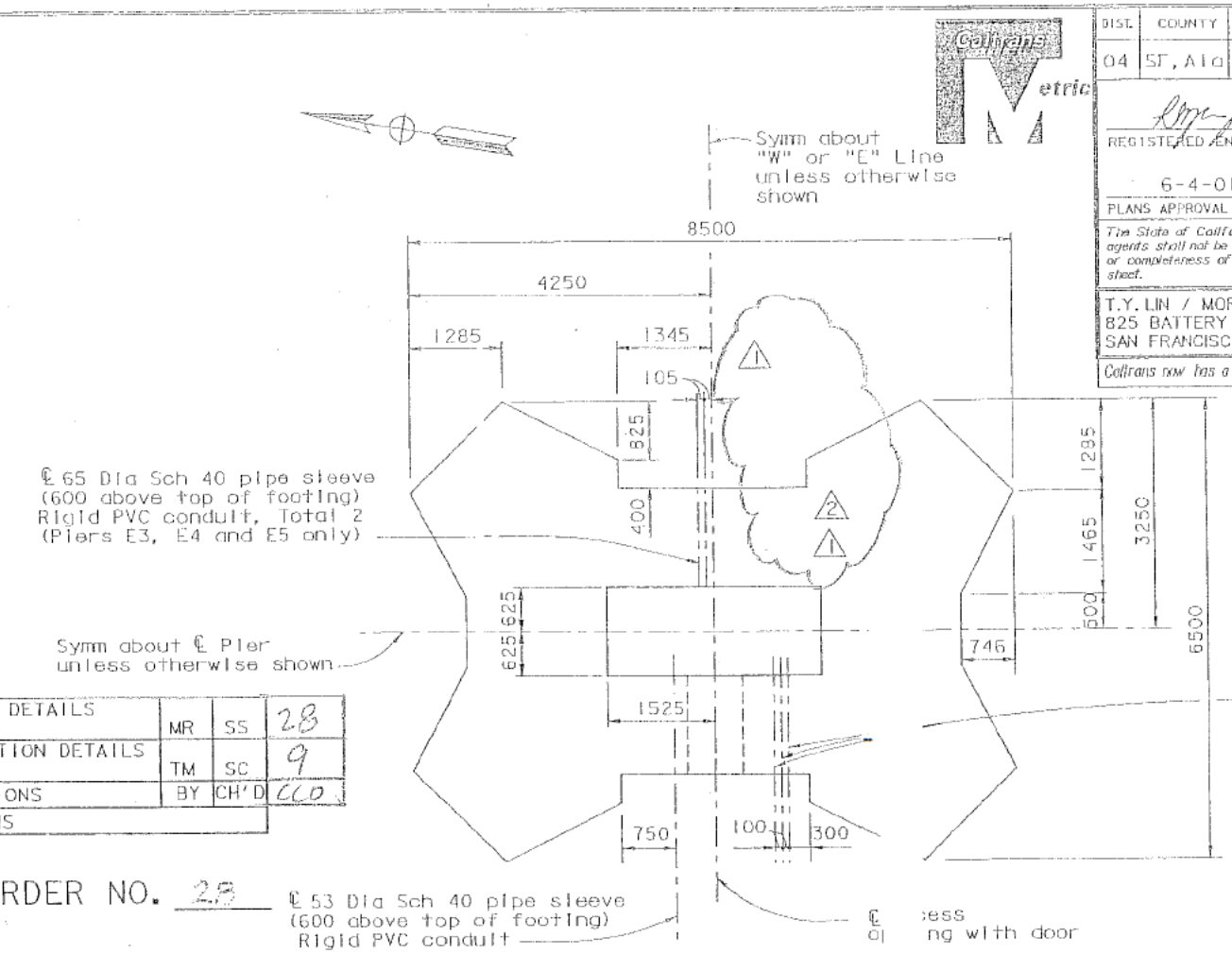

SECTION A-A
1:50

MARK	DATE	DESCRIPTIONS	BY	CH'D
2	01/20/03	REMOVE DRAINAGE PIPE DETAILS AND NOTE	MR	SS
1	03/04/02	REVISE DRAIN PENETRATION DETAILS AND NOTE	TM	SC

REVISIONS

CONTRACT CHANGE ORDER NO. 28 (2) (9) (CCO)
SHEET 13 OF 48

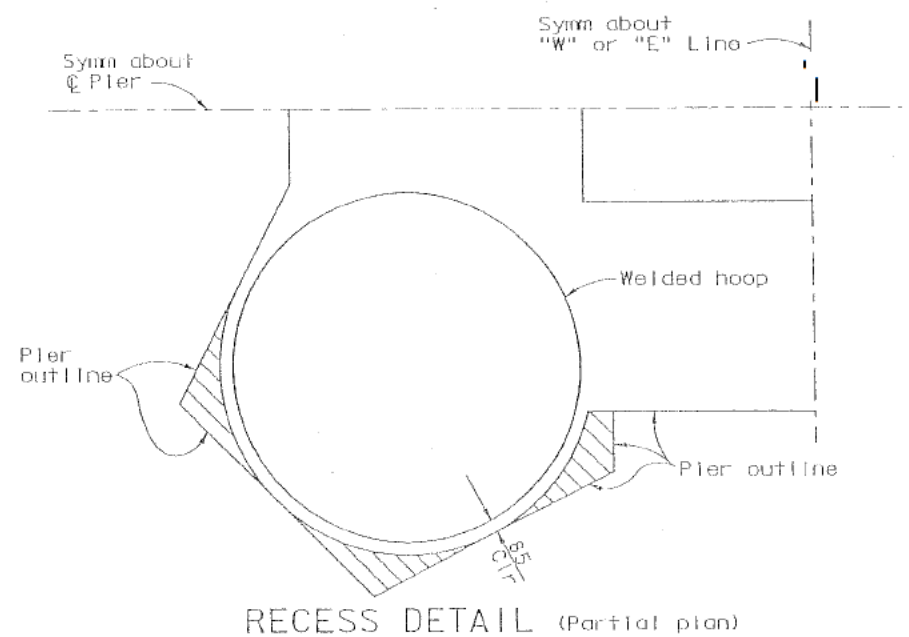

RECESS DETAIL (Partial plan)
1:25

100 Polystyrene blockout. Polystyrene to be removed at top of pier.

NOTES:

1. For Section A-A reinforcement, see "Pier Details" sheets.
2. No splices allowed in main vert reinforcement. All other splices shall meet "Ultimate Splice" requirements. (2) (1)
3. For ground cable connection to the footing, see "Footing Layout" sheets.

ALL DIMENSIONS ARE IN MILLIMETERS UNLESS OTHERWISE SHOWN

SAN FRANCISCO OAKLAND BAY BRIDGE
EAST SPAN SEISMIC SAFETY PROJECT

SKYWAY STRUCTURES

PIER LAYOUT NO. 1

	BY	CHECKED
DESIGN	R. Jonab	G. Scroggins
DETAILS	E. Zharkov	G. Scroggins
QUANTITIES	K. Cornier	A. Yoder

PREPARED FOR THE STATE OF CALIFORNIA DEPARTMENT OF TRANSPORTATION

Sajid Abbas
PROJECT ENGINEER

BRIDGE NO. 34-0006L/R
KILOMETER POST 13.9/14.3, 0.0/1.6

DESIGN OVERSIGHT 2/5/03
SIGN OFF DATE 11/17/00

REVISION DATES (PRELIMINARY STAGE ONLY) SHEET OF

100 % PS&E

TIME PLOTTED => 11:24:34 AM
DATE PLOTTED => 02/04/2003
RNAME => tmorales

T·Y·LIN INTERNATIONAL
MOFFATT & NICHOL
a joint venture

SFOBB – Skyway Project
345 Burma Road, Oakland CA 94607
Telephone (510)622-1071 Facsimile (510)622-7069

REVISION MARKS ON CONTRACT PLAN CHANGES

SFOBB Skyway Project # 04-012024

Revisions to the following plans were prepared under the supervision of the undersigned engineer.

443R1 thru 445R1	Revision Mark 1	Dated	01/20/03
446R1	Revision Mark 1	Dated	01/10/03
447R2	Revision Mark 1	Dated	03/04/02
447R2	Revision Mark 2	Dated	01/20/03
448R1, 449R1	Revision Mark 1	Dated	01/20/03
450R1	Revision Mark 1	Dated	01/10/03
502R2, 503R2	Revision Mark 1	Dated	03/04/02
502R2, 503R2	Revision Mark 2	Dated	01/20/03
506R1	Revision Mark 1	Dated	01/20/03
736R2, 738R2	Revision Mark 1	Dated	03/04/02
736R2, 738R2	Revision Mark 2	Dated	01/20/03
748R2, 750R2	Revision Mark 1	Dated	03/04/02
748R2, 750R2	Revision Mark 2	Dated	01/20/03
886R2	Revision Mark 1	Dated	01/10/03
886R2	Revision Mark 2	Dated	05/20/03

For the project in SF/ALA County

Route 80

Km Post Description 04-SF, Ala-80-13.9/14.3,0.0/1.6

District/EA 012021

(Signature) 02/27/04 (Date)

Sajid Abbas
(Name)

(Title)

C 055274
(Registration No)

1213 1104
(Date of Expiration)

REGISTERED PROFESSIONAL ENGINEER
Sajid Abbas
No. C 055274
Exp. 12/31/04
CIVIL
STATE OF CALIFORNIA

DIST.	COUNTY	ROUTE	KILOMETER POST TOTAL PROJECT	SHEET NO.	TOTAL SHEETS
04	SF, Ala	80	13.9/14.3, 0.0/1.6	503R2	978

REGISTERED ENGINEER - CIVIL

6-4-01
PLANS APPROVAL DATE

Rozo Janob
No. C 50936
Exp. 09/30/01
CIVIL
STATE OF CALIFORNIA
REGISTERED PROFESSIONAL ENGINEER

The State of California or its officers or agents shall not be responsible for the accuracy or completeness of electronic copies of this plan sheet.

T.Y. LIN / MOFFATT & NICHOL
825 BATTERY STREET
SAN FRANCISCO, CA 94111

Caltrans now has a web site! To get to the web site, go to: http://www.dot.ca.gov

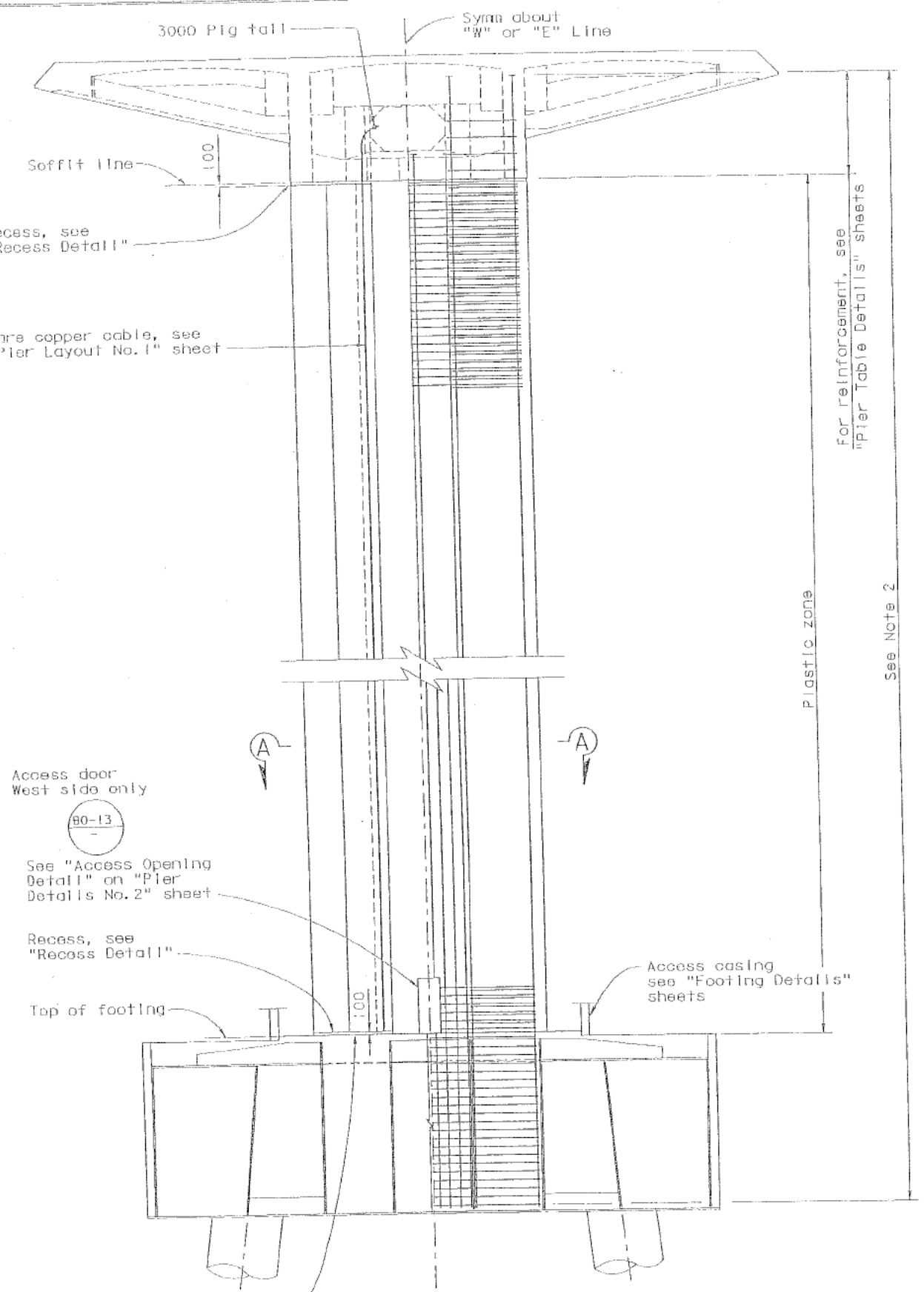

ELEVATION (Pier E15, and E16)
1:100

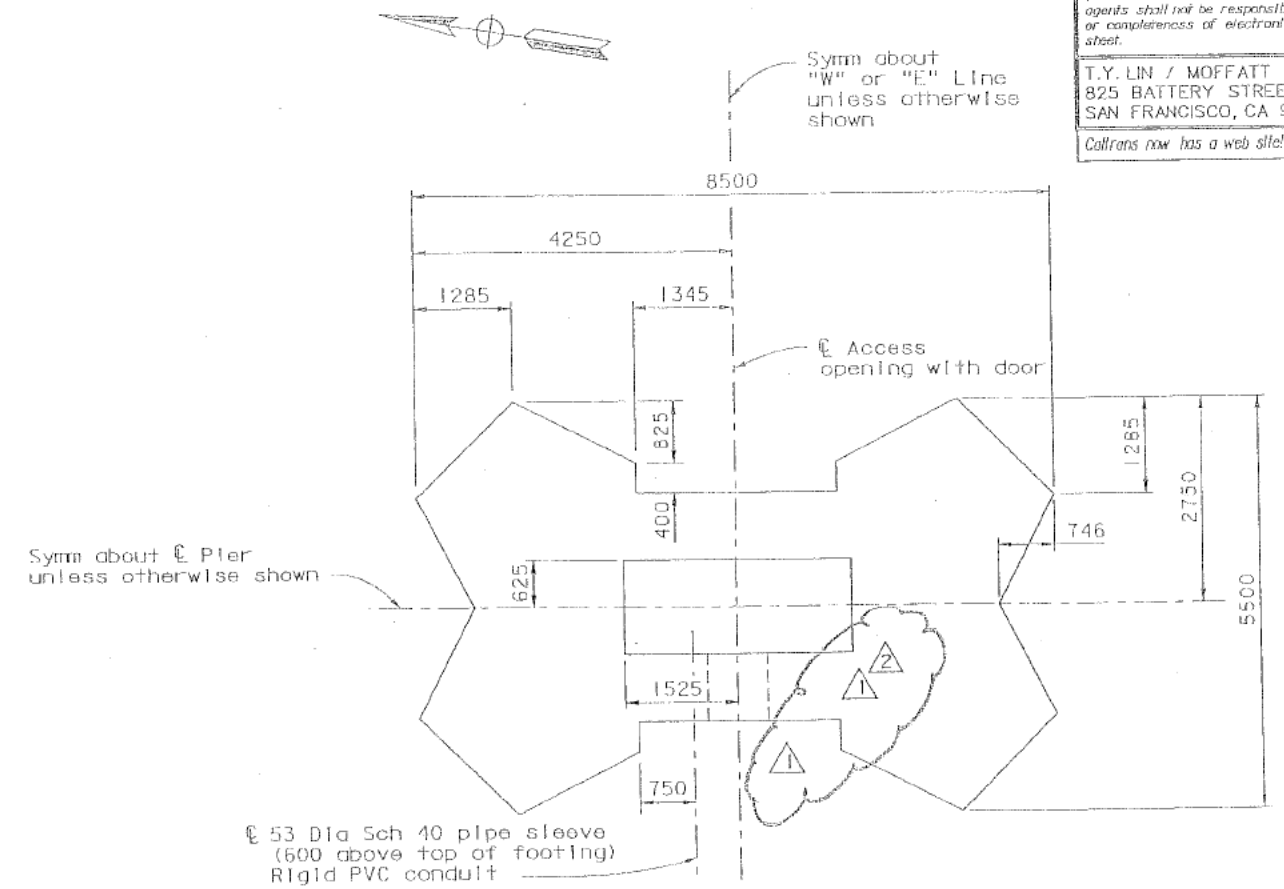

SECTION A-A
1:50

NOTES:

1. For Section A-A reinforcement, see "Pier Details" sheets.
2. No splices allowed in main vert reinforcement. All other splices shall meet "Ultimate Splice" requirements.
3. For "Recess Detail", see "Pier Layout No. 1" sheet.
4. For ground cable connection to the footing, see "Footing Layout" sheets.

MARK	DATE	DESCRIPTIONS	BY	CH'D	
2	01/20/03	REMOVE DRAINAGEPIPE DETAILS AND NOTE	MR	SS	28
1	03/04/02	REVISE DRAIN PENETRATION DETAILS AND NOTE	TM	SC	9
		REVISIONS			

CONTRACT CHANGE ORDER NO. 23
SHEET 14 OF 48

ALL DIMENSIONS ARE IN MILLIMETERS UNLESS OTHERWISE SHOWN

SAN FRANCISCO OAKLAND BAY BRIDGE
EAST SPAN SEISMIC SAFETY PROJECT

SKYWAY STRUCTURES

PIER LAYOUT NO. 2

DESIGN OVERSIGHT 2/5/03

	BY	CHECKED
DESIGN	R. Janob	G. Scroggins
DETAILS	E. Zhurkov	G. Scroggins
QUANTITIES	K. Cormier	A. Yoder

PREPARED FOR THE STATE OF CALIFORNIA DEPARTMENT OF TRANSPORTATION

Sajid Abbas
PROJECT ENGINEER

BRIDGE NO. 34-0006L/R
KILOMETER POST 13.9/14.3, 0.0/1.6

SIGN OFF DATE 11/11/99

DISREGARD PRINTS BEARING REVISION DATES (PRELIMINARY STAGE ONLY) SHEET OF

100% PS&E

ENGINE => TYNOFCBID DATE PLOTTED => 02/04/2003 TIME PLOTTED => 11:24:58 AM

T.Y.LIN INTERNATIONAL
MOFFATT & NICHOL
a joint venture

SFOBU – Skyway Project
345 Burma Road, Oakland CA 94607
Telephone (510) 622-1071 Facsimile (510) 622-1069

REVISION MARKS ON CONTRACT PLAN CHANGES

SFOBB Skyway Project # 04-012024

Revisions to the following plans were prepared under the supervision of the undersigned engineer.

443R1 thru 445R1	Revision Mark 1	Dated	01/20/03
446R1	Revision Mark 1	Dated	01/10/03
447R2	Revision Mark 1	Dated	03/04/02
447R2	Revision Mark 2	Dated	01/20/03
448R1, 449R1	Revision Mark 1	Dated	01/20/03
450R1	Revision Mark 1	Dated	01/10/03
502R2, 503R2	Revision Mark 1	Dated	03/04/02
502R2, 503R2	Revision Mark 2	Dated	01/20/03
506R1	Revision Mark 1	Dated	01/20/03
736R2, 738R2	Revision Mark 1	Dated	03/04/02
736R2, 738R2	Revision Mark 2	Dated	01/20/03
748R2, 750R2	Revision Mark 1	Dated	03/04/02
748R2, 750R2	Revision Mark 2	Dated	01/20/03
886R2	Revision Mark 1	Dated	01/10/03
886R2	Revision Mark 2	Dated	05/20/03

For the project in SF/ALA County

Route X0

Km Post Description 04-SF, Ala-80-13.9/ 14 3,0 0/1.6

District/EA 012021

(Signature)

02/27/04
(Date)

Sajid Abbas
(Name)

(Title)

C 055274
(Registration No)

12/31/04
(Date of Expiration)

REGISTERED PROFESSIONAL ENGINEER
Sajid Abbas
No. C 055274
Exp. 12/31/04
CIVIL
STATE OF CALIFORNIA

DIST.	COUNTY	ROUTE	KILOMETER POST TOTAL PROJECT	SHEET NO.	TOTAL SHEETS
04	SF, Ala	80	13.9/14.3, 0.0/1.6	506R1	978

REGISTERED ENGINEER - CIVIL

6-4-01

PLANS APPROVAL DATE

Steve W. Chee, No. C 41906, Exp. 03/31/04, CIVIL, STATE OF CALIFORNIA, REGISTERED PROFESSIONAL ENGINEER

The State of California or its officers or agents shall not be responsible for the accuracy or completeness of electronic copies of this plan sheet.

T.Y. LIN / MOFFATT & NICHOL
825 BATTERY STREET
SAN FRANCISCO, CA 94111

Caltrans now has a web site! To get to the web site, go to: http://www.dot.ca.gov

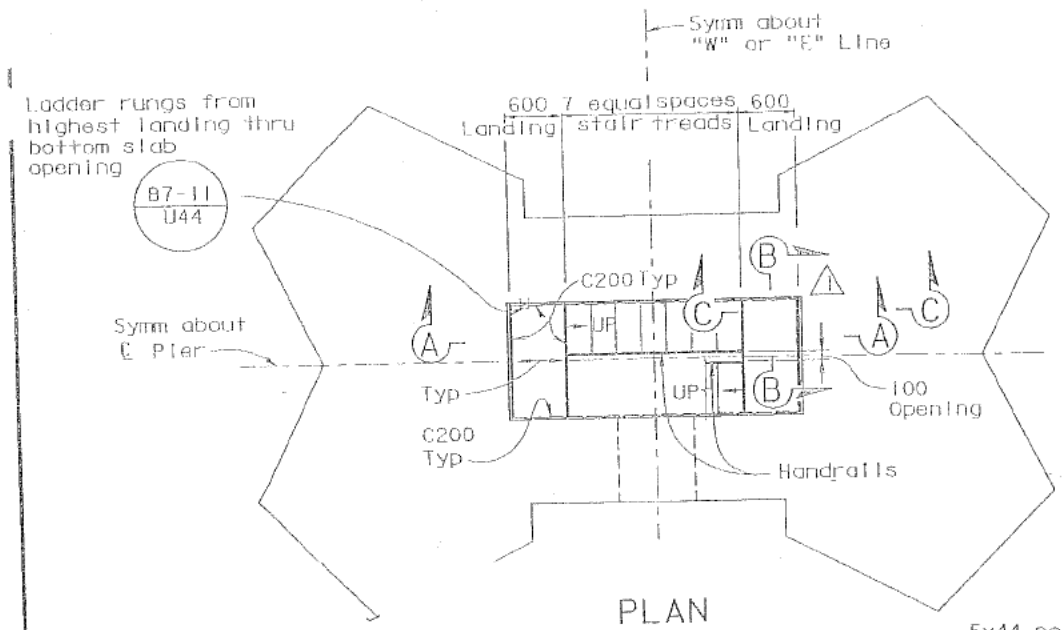

PLAN
1:40

NOTE: Plan shown for 5.50 m wide pier, 6.50 m wide pier similar.
→→ indicates direction of grating.

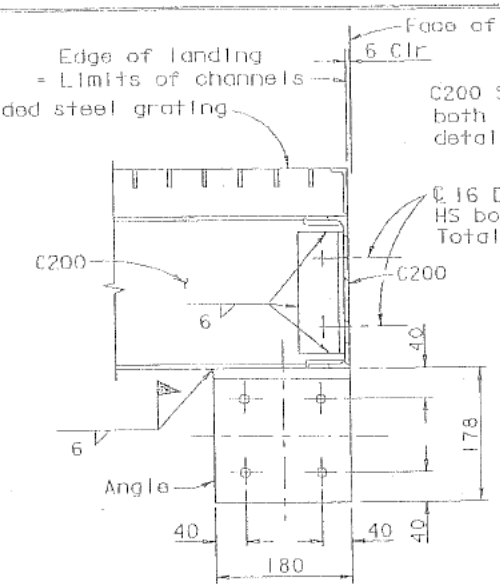

SECTION C-C

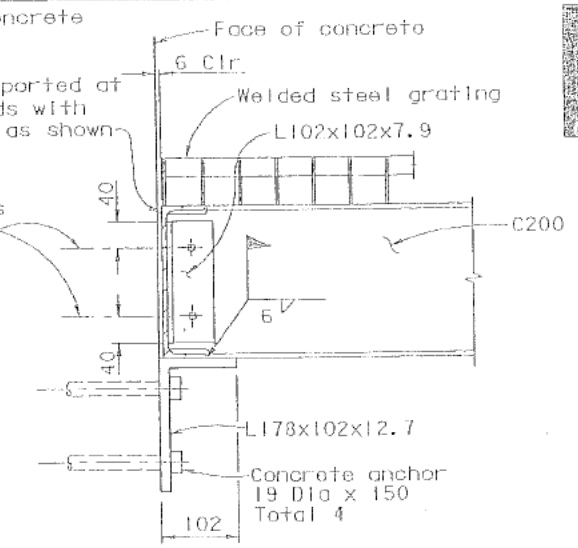

SECTION B-B

LANDING SUPPORT DETAILS
1:5
Note: Drain penetration not shown for clarity.

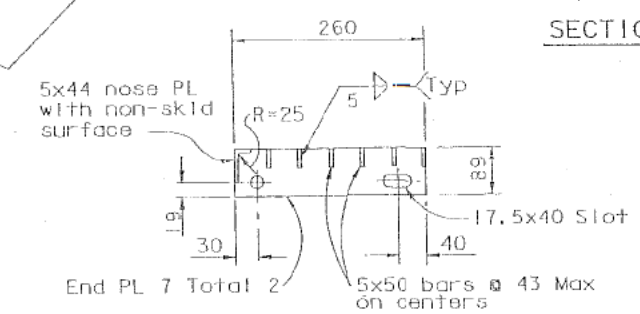

STAIR TREAD DETAILS
1:5

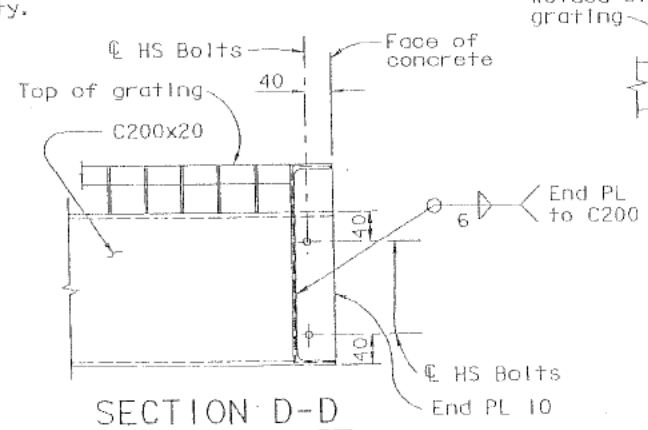

SECTION D-D
1:5

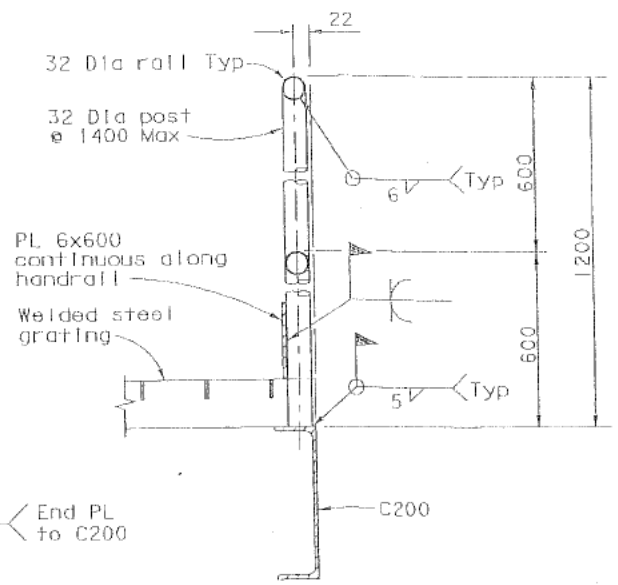

HANDRAIL DETAILS
1:5

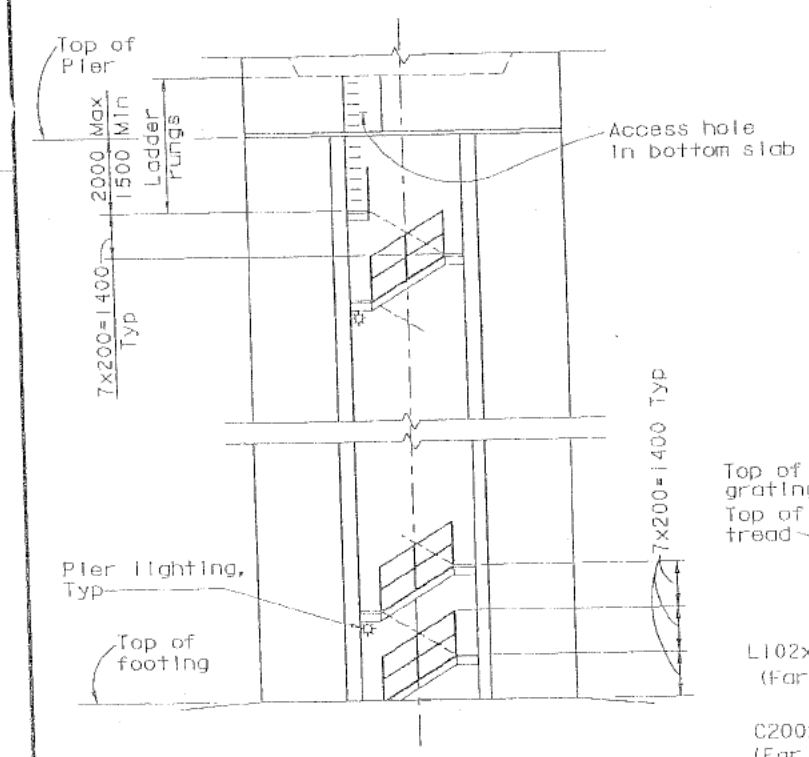

ELEVATION
1:100

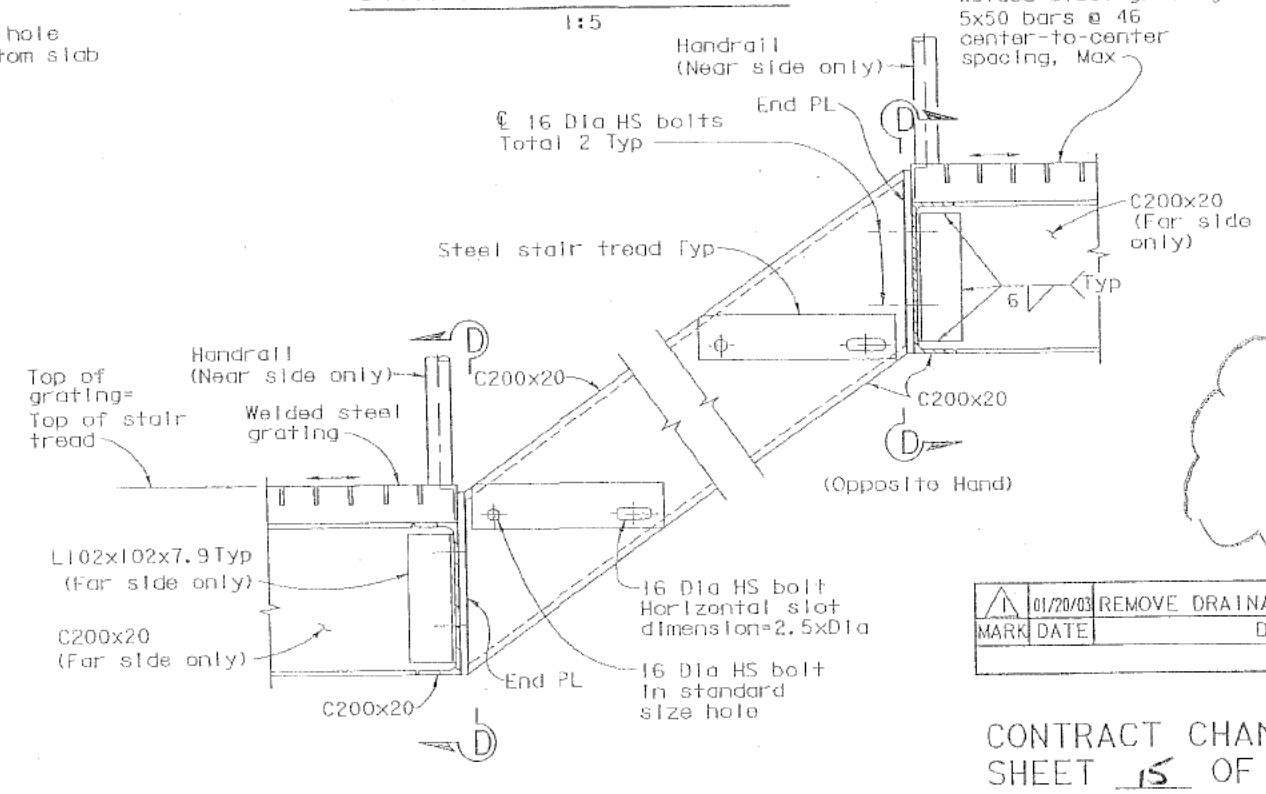

SECTION A-A
1:5

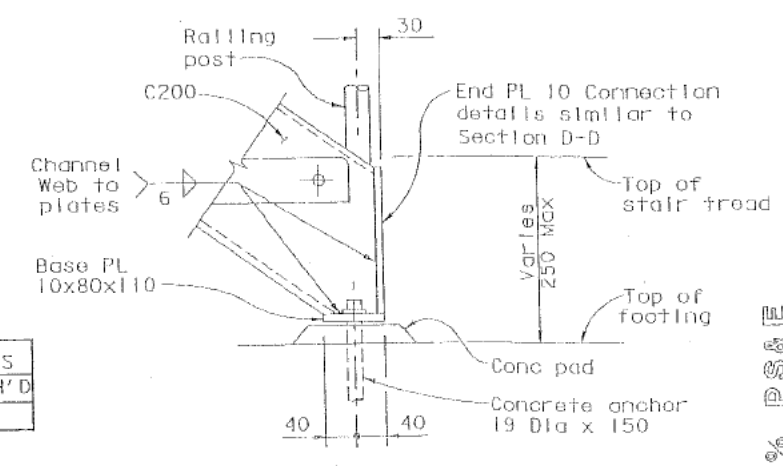

STAIR SUPPORT AT TOP OF FOOTING
1:5

MARK	DATE	DESCRIPTIONS	BY	CH'D
1	01/20/03	REMOVE DRAINAGE DETAILS	MR	SS

REVISIONS

CONTRACT CHANGE ORDER NO. 28
SHEET 15 OF 48

Notes:

1. For pier lighting location and details, see "Lighting and Electrical Systems Details" sheet.

ALL DIMENSIONS ARE IN MILLIMETERS UNLESS OTHERWISE SHOWN

SAN FRANCISCO OAKLAND BAY BRIDGE
EAST SPAN SEISMIC SAFETY PROJECT

SKYWAY STRUCTURES

PIER DETAILS NO. 3

DESIGN OVERSIGHT 2/5/03

	BY	CHECKED
DESIGN	S. Chee	G. Scroggins
DETAILS	A. Lishansky	G. Scroggins
QUANTITIES	K. Cormier	A. Yoder

PREPARED FOR THE STATE OF CALIFORNIA DEPARTMENT OF TRANSPORTATION

Sajid Abbas
PROJECT ENGINEER

BRIDGE NO. 34-0006L/R
KILOMETER POST 3.9/14.3, 0.0/1.6

REVISION DATES (PRELIMINARY STAGE ONLY)

SHEET ___ OF ___

100% PS&E

FILENAME => TRANSFER@ DATE PLOTTED => 02/04/2003 TIME PLOTTED => 11:26:36 AM

T·Y·LIN INTERNATIONAL
MOFFATT & NICHOL
a joint venture

SFOBB – Skyway Project
345 Burma Road, Oakland CA 94607
Telephone (510)622-1071 Facsimile (510)622-1069

REVISION MARKS ON CONTRACT PLAN CHANGES

SFOBB Skyway Project # 04-012024

Revisions to the following plans were prepared under the supervision of the undersigned engineer.

443R1 thru 445R1	Revision Mark 1	Dated	01/20/03
446R1	Revision Mark 1	Dated	01/10/03
447R2	Revision Mark 1	Dated	03/04/02
447R2	Revision Mark 2	Dated	01/20/03
448R1, 449R1	Revision Mark 1	Dated	01/20/03
450R1	Revision Mark 1	Dated	01/10/03
502R2, 503R2	Revision Mark 1	Dated	03/04/02
502R2, 503R2	Revision Mark 2	Dated	01/20/03
506R1	Revision Mark 1	Dated	01/20/03
736R2, 738R2	Revision Mark 1	Dated	03/04/02
736R2, 738R2	Revision Mark 2	Dated	01/20/03
748R2, 750R2	Revision Mark 1	Dated	03/04/02
748R2, 750R2	Revision Mark 2	Dated	01/20/03
886R2	Revision Mark 1	Dated	01/10/03
886R2	Revision Mark 2	Dated	05/20/03

For the project in SF/ALA – County

Route 80

Km Post Description 04-SF, Ala-80-13.9/14 3.0.0/1.6

District/EA 012021

(Signature) 02/27/04 (Date)

Sajid Abbas
(Name)

(Title)

C 055274
(Registration No.)

12/31/04
(Date of Expiration)

REGISTERED PROFESSIONAL ENGINEER
Sajid Abbas
No. C 055274
Exp. 12/31/04
CIVIL
STATE OF CALIFORNIA

NOTES:

1. For prestressing notes, see "Prestressing Notes" sheet.
2. For cantilever tendon layout, see "Cantilever Tendon Layout" sheets.
3. For top span tendon layout, see "Top Span Tendon Layout" sheets.
4. For bottom span tendon layout, see "Bottom Span Tendon Layout" sheets.
5. For continuity tendon layout, see "Continuity Tendon Layout" sheets.
6. For transverse tendons layout, see "Transverse Tendon Details" sheets.
7. For vertical PT layout, see "Vertical PT Details" sheets.
8. For girder reinforcement, see "Girder Reinforcement" sheets.
9. Key to segment nomenclature: 1 E or W
   Segment No. — East or West
10. For web manhole details, see "Miscellaneous Details" sheets.
11. For deck manhole details, see B7-11.
12. For girder interior walkway layout, see "Road Plans".
13. For Preformed Loop Detector details, see "Road Plans".
14. Orientation of diaphragm and precast panel rib shall be normal to "W" Line.
15. For dimensions not shown, see "Typical Sections" sheets.

MARK	DATE	DESCRIPTIONS	BY	CH'D
24S1 4	07/25/03	REVISE WEB MANHOLE LOCATIONS	MR	JC
7½ 3	07/25/03	REVISE PIER TABLE BOTTOM SLAB ACCESS OPENING	MR	JC
5½ 2	01/20/03	REVISE FUTURE TENDON DEV BLOCK LOCATION	MR	JC
2½ 1	01/20/03	REVISE DRAIN LOCATIONS	MR	SS

REVISIONS

CONTRACT CHANGE ORDER NO. 28
SHEET 10 OF 16

DIST.	COUNTY	ROUTE	KILOMETER POST TOTAL PROJECT	SHEET NO.	TOTAL SHEETS
04	SF, Ala	80	13.9/14.3, 0.0/1.6	537R2	978

REGISTERED ENGINEER - CIVIL
6-4-01
PLANS APPROVAL DATE
Scott Hunter No. C 048066 Exp. 12/31/03 CIVIL STATE OF CALIFORNIA REGISTERED PROFESSIONAL ENGINEER
The State of California or its officers or agents shall not be responsible for the accuracy or completeness of electronic copies of this plan sheet.

T.Y. LIN / MOFFATT & NICHOL
825 BATTERY STREET
SAN FRANCISCO, CA 94111

Caltrans now has a web site! To get to the web site, go to: http://www.dot.ca.gov

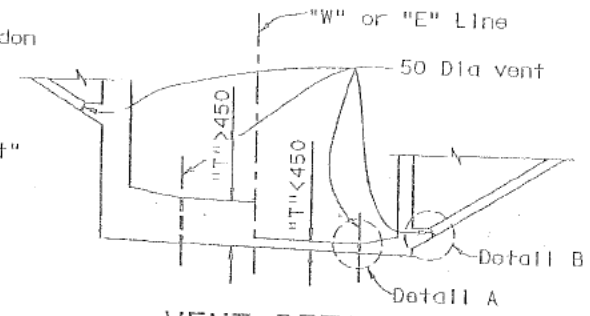

VENT DETAIL
1:100

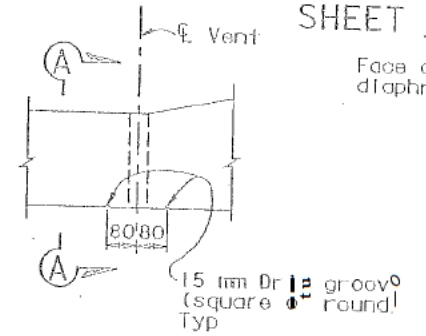

DETAIL A
1:10

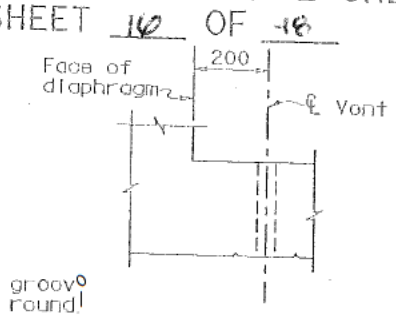

SECTION A-A
1:10

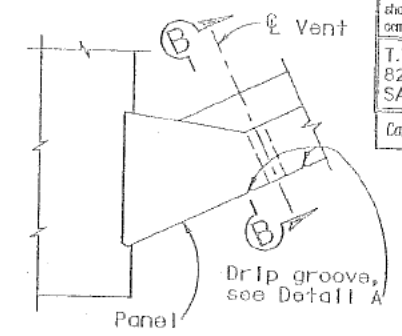

DETAIL B
1:10

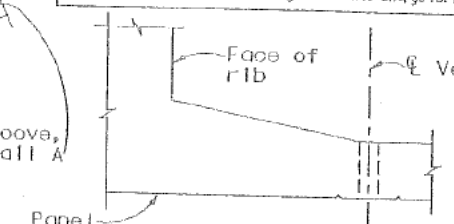

SECTION B-B
1:10

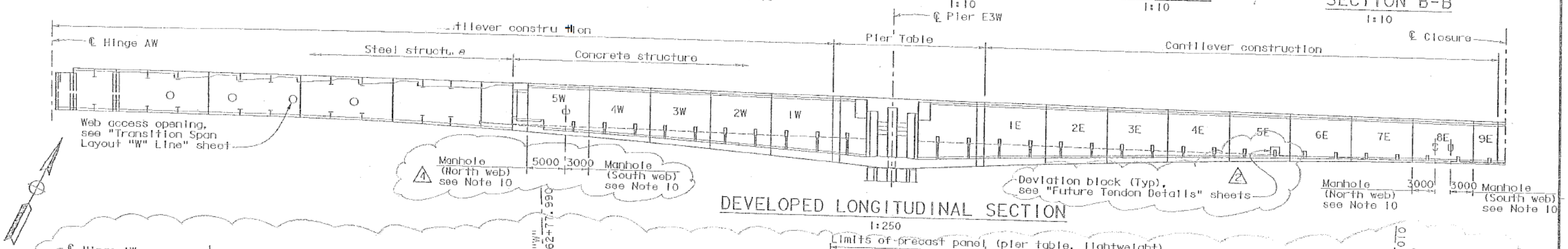

DEVELOPED LONGITUDINAL SECTION
1:250

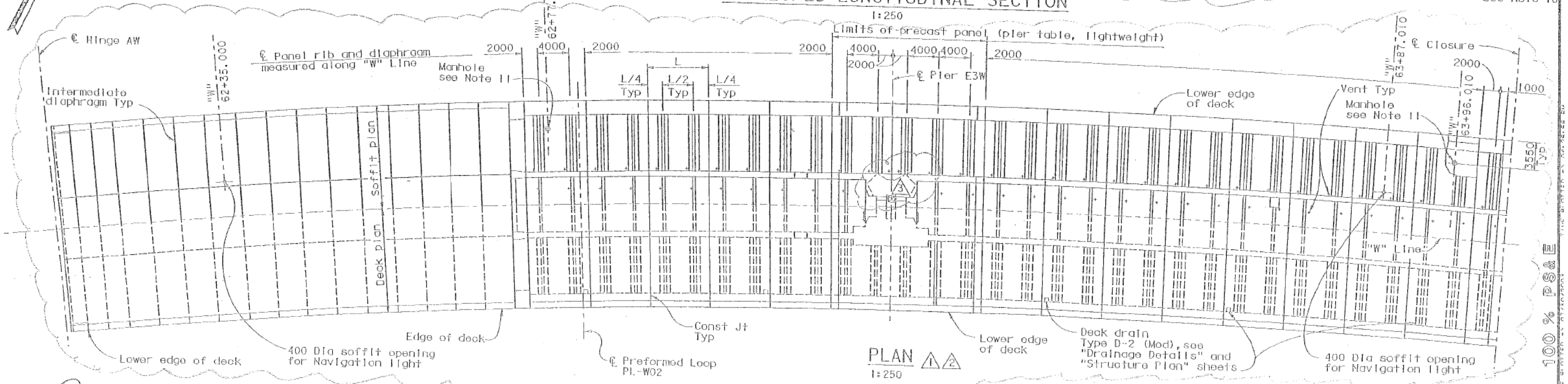

PLAN
1:250

100% PS&E

DESIGN OVERSIGHT
SIGN OFF DATE 8/6/2003
Rev. Date 5-16-99

DESIGN	BY S. Hunter	CHECKED M. Lamont	
DETAILS	BY A. Lishansky	CHECKED M. Lamont	
QUANTITIES	BY K. Cormier	CHECKED S. Shi	

ORIGINAL SCALE IN MILLIMETERS FOR REDUCED PLANS 0 10 20 30 40 50 60 70 80 90 100

PREPARED FOR THE STATE OF CALIFORNIA DEPARTMENT OF TRANSPORTATION

Sajid Abbas
PROJECT ENGINEER

CU 04
EA 012021

ALL DIMENSIONS ARE IN MILLIMETERS UNLESS OTHERWISE SHOWN

BRIDGE NO. 34-0006L/R
KILOMETER POST 13.9/14.3, 0.0/1.6

SAN FRANCISCO OAKLAND BAY BRIDGE
EAST SPAN SEISMIC SAFETY PROJECT

SKYWAY STRUCTURES

GIRDER LAYOUT E3W

DISREGARD PRINTS BEARING EARLIER REVISION DATES

REVISION DATES (PRELIMINARY STAGE ONLY)

SHEET 105 OF

T.Y.LIN INTERNATIONAL
MOFFATT & NICHOL
a joint venture

SFOBB – Skyway Project
345 Burma Road, Oakland CA 94607
Telephone (510) 622-1071 Facsimile (510) 622-1069

REVISION MARKS ON CONTRACT PLAN CHANGES

SFOBB Skyway Project # 04-012024

Revisions to the following plans were prepared under the supervision of the undersigned engineer.

537R2, 540R2, 544R2, 551R2, 554R2, 558R2	Revision Marks 1 & 2	Dated	1/20/03
537R2, 540R2, 544R2, 551R2, 554R2, 558R2	Revision Marks 3 & 4	Dated	7/25/03
538R2, 539R2, 542R2, 543R2, 545R2, 546R2, 547R2, 552R2, 553R2, 555R2, 556R2, 557R2, 559R2, 560R2,561R2	Revision Marks 1 & 2	Dated	1/20/03
538R2, 539R2, 542R2, 543R2, 545R2, 546R2, 547R2, 552R2, 553R2, 555R2, 556R2, 557R2, 559R2, 560R2,561R2	Revision Marks 3	Dated	7/25/03
541R3	Revision Mark 1	Dated	3/04/02
541R3	Revision Marks 2 & 3	Dated	1/20/03
541R3	Revision Mark 4	Dated	7/25/03
548R3, 550R3, 562R3, 564R3	Revision Mark 1	Dated	3/04/02
548R3, 550R3, 562R3, 564R3	Revision Marks 2 & 3	Dated	1/20/03
548R3, 550R3, 562R3, 564R3	Revision Marks 4 & 5	Dated	7/25/03
549R3, 563R3	Revision Mark 1	Dated	3/04/02
549R3, 563R3	Revision Mark 2	Dated	1/20/03
549R3, 563R3	Revision Mark 3	Dated	7/25/03

For the project in SF/ALA County

Route 80

Km Post Description 04-SF, Ala-80-13.9/14.3,0.0/1.6

District/EA 012021

(Signature) 02/27/04 (Date)

Sajid Abbas
(Name)

(Title)

C 05.5274
(Registration No.)

12/31/04
(Date of Expiration)

REGISTERED PROFESSIONAL ENGINEER
Sajid Abbas
No. C 055274
Exp. 12/31/04
CIVIL
STATE OF CALIFORNIA

SA - CCO#28_2

NOTES:

1. For notes, see "Girder Layout E3W" sheet.
2. For vent details, see "Girder Layout E3W" sheet.
3. Key to segment nomenclature: 1 E or W
   Segment No. — East or West
4. For web manhole details, see "Miscellaneous Details" sheets.
5. For deck manhole details, see B7-11.
6. Orientation of diaphragm and precast panel rib shall be normal to "W" Line.

MARK	DATE	DESCRIPTIONS	BY	CH'D	CC#
3	07/25/03	REVISE PIER TABLE BOTTOM SLAB ACCESS OPENING	MR	JC	74
2	01/20/03	REVISE FUTURE TENDON DEV BLOCK LOCATION	MR	JC	52
1	01/20/03	REVISE DRAIN LOCATIONS.	MR	SS	28

REVISIONS

CONTRACT CHANGE ORDER NO. 28
SHEET 17 OF 46

DIST.	COUNTY	ROUTE	KILOMETER POST TOTAL PROJECT	SHEET NO.	TOTAL SHEETS
04	SF, Ala	80	13.9/14.3, 0.0/1.6	538R2	978

REGISTERED ENGINEER - CIVIL
6-4-01
PLANS APPROVAL DATE
Scott Hunter No. C 048066 Exp. 12/31/03 CIVIL STATE OF CALIFORNIA

The State of California or its officers or agents shall not be responsible for the accuracy or completeness of electronic copies of this plan sheet.

T.Y. LIN / MOFFATT & NICHOL
825 BATTERY STREET
SAN FRANCISCO, CA 94111

Caltrans now has a web site! To get to the web site, go to: http://www.dot.ca.gov

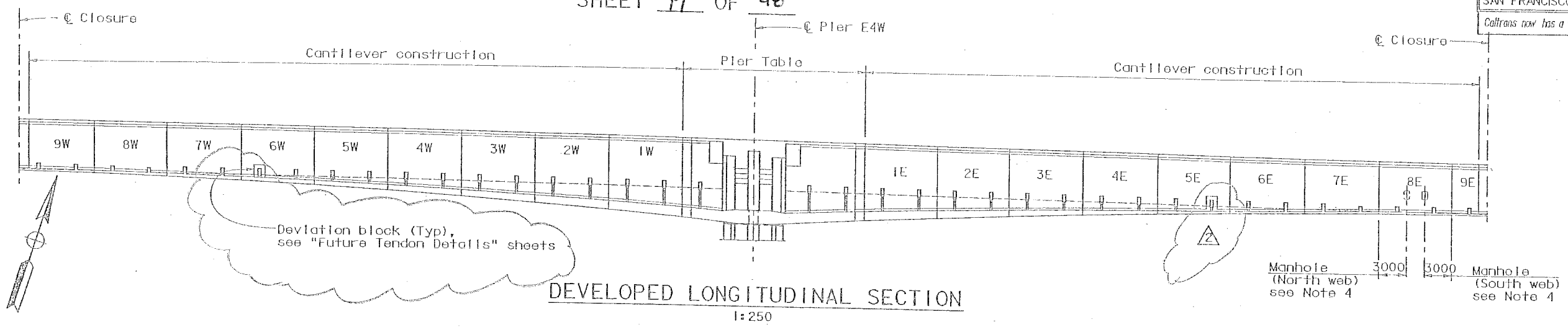

DEVELOPED LONGITUDINAL SECTION
1:250

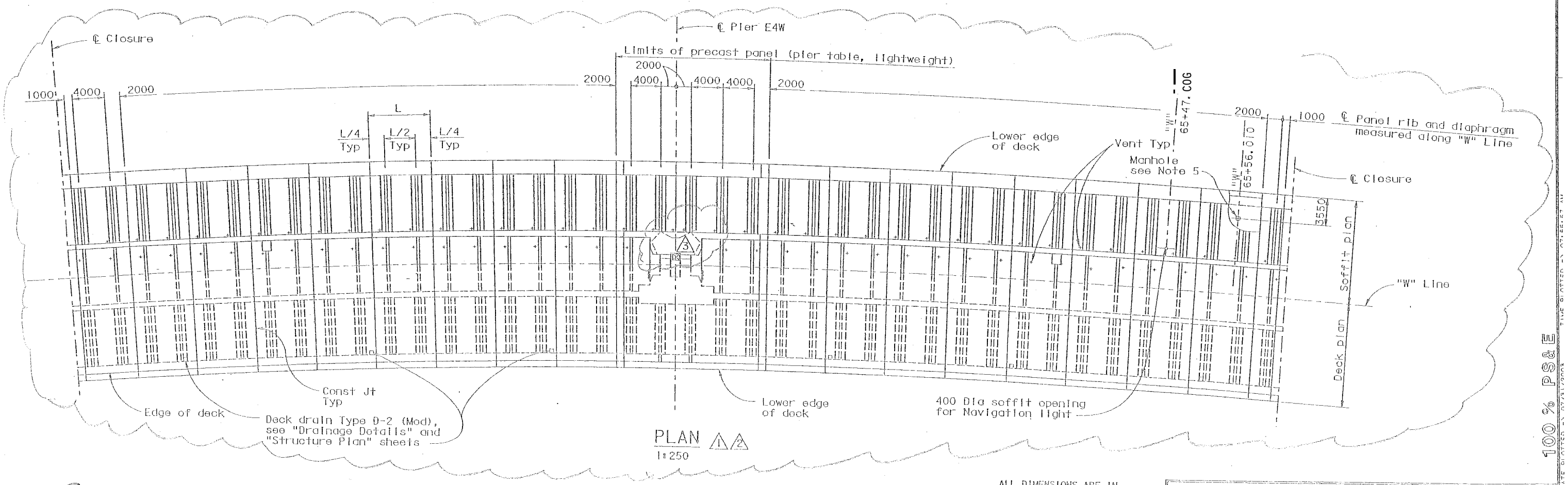

PLAN
1:250

100 % PS&E

ALL DIMENSIONS ARE IN MILLIMETERS UNLESS OTHERWISE SHOWN

DESIGNER OVERSIGHT — SIGN-OFF DATE 8/6/2003
Rev. Date: 5-16-98

DESIGN	BY S. Hunter	CHECKED M. Lamont	
DETAILS	BY A. Lishansky	CHECKED M. Lamont	
QUANTITIES	BY K. Cormier	CHECKED S. Shi	

PREPARED FOR THE STATE OF CALIFORNIA DEPARTMENT OF TRANSPORTATION

Sajid Abbas
PROJECT ENGINEER

BRIDGE NO. 34-0006L/R
KILOMETER POST 3.9/14.3, 0.0/1.6
DISREGARD PRINTS DEARLING

ORIGINAL SCALE IN MILLIMETERS FOR ROLLED PLANS 0 10 20 30 40 50 60 70 80 90 100

CU 04

SAN FRANCISCO OAKLAND BAY BRIDGE
EAST SPAN SEISMIC SAFETY PROJECT

SKYWAY STRUCTURES

GIRDER LAYOUT E4W

REVISION DATES (PRELIMINARY STAGE ONLY) SHEET OF

T·Y·LIN INTERNATIONAL
MOFFATT & NICHOL
a joint venture

SFOBB – Skyway Project
345 Burma Road, Oakland CA 94607
Telephone (510)622-1071 Facsimile (510) 622-1069

REVISION MARKS ON CONTRACT PLAN CHANGES

SFOBB Skyway Project # 04-012024

Revisions to the following plans were prepared under the supervision of the undersigned engineer.

443R1 thru 445R1	Revision Mark 1	Dated	01/20/03
446R1	Revision Mark 1	Dated	01/10/03
447R2	Revision Mark 1	Dated	03/04/02
447R2	Revision Mark 2	Dated	01/20/03
448R1, 449R1	Revision Mark 1	Dated	01/20/03
450R1	Revision Mark 1	Dated	01/10/03
502R2, 503R2	Revision Mark 1	Dated	03/04/02
502R2, 503R2	Revision Mark 2	Dated	01/20/03
506R1	Revision Mark 1	Dated	01/20/03
736R2, 738R2	Revision Mark 1	Dated	03/04/02
736R2, 738R2	Revision Mark 2	Dated	01/20/03
748R2, 750R2	Revision Mark 1	Dated	03/04/02
748R2, 750R2	Revision Mark 2	Dated	01/20/03
886R2	Revision Mark 1	Dated	01/10/03
886R2	Revision Mark 2	Dated	05/20/03

For the project in SF/ALA County

Route 80

Km Post Description 04-SF, Ala-80-13.9/14.3,0.0/1.6

District/EA 012021

(Signature)

02/27/04
(Date)

Sajid Abbas
(Name)

(Title)

C 055274
(Registration No.)

12/31/04
(Date of Expiration)

REGISTERED PROFESSIONAL ENGINEER
Sajid Abbas
No. C 055274
Exp. 12/31/04
CIVIL
STATE OF CALIFORNIA

NOTES:

1. For notes, see "Girder Layout E3W" sheet.
2. For vent details, see "Girder Layout E3W" sheet.
3. Key to segment nomenclature: 1 E or W
   Segment No. — East or West
4. For web manhole details, see "Miscellaneous Details" sheets.
5. For deck manhole details, see (B7-11).
6. Orientation of diaphragm and precast panel rib shall be normal to "W" Line.

MARK	DATE	DESCRIPTIONS	BY	CH'D	CCO
3	07/25/03	REVISE PIER TABLE BOTTOM SLAB ACCESS OPENING	MR	JC	74
2	01/20/03	REVISE FUTURE TENDON DEV BLOCK LOCATION	MR	JC	52
1	01/20/03	REVISE DRAIN LOCATIONS	MR	SS	28

REVISIONS

CONTRACT CHANGE ORDER NO. 28
SHEET 18 OF 48

DIST.	COUNTY	ROUTE	KILOMETER POST TOTAL PROJECT	SHEET NO.	TOTAL SHEETS
04	SF, Ala	80	13.9/14.3, 0.0/1.6	S39R2	978

REGISTERED ENGINEER - CIVIL

6-4-01
PLANS APPROVAL DATE

The State of California or its officers or agents shall not be responsible for the accuracy or completeness of electronic copies of this plan sheet.

REGISTERED PROFESSIONAL ENGINEER Scott Hunter No. C 048066 Exp. 12/31/03 CIVIL STATE OF CALIFORNIA

T.Y. LIN / MOFFATT & NICHOL
825 BATTERY STREET
SAN FRANCISCO, CA 94111

Caltrans now has a web site! To get to the web site, go to: http://www.dot.ca.gov

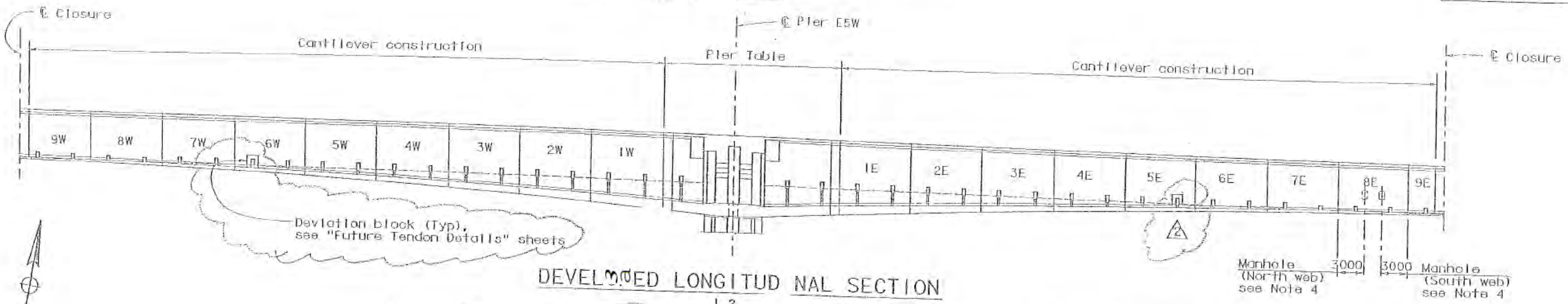

DEVELOPED LONGITUDINAL SECTION
1:2

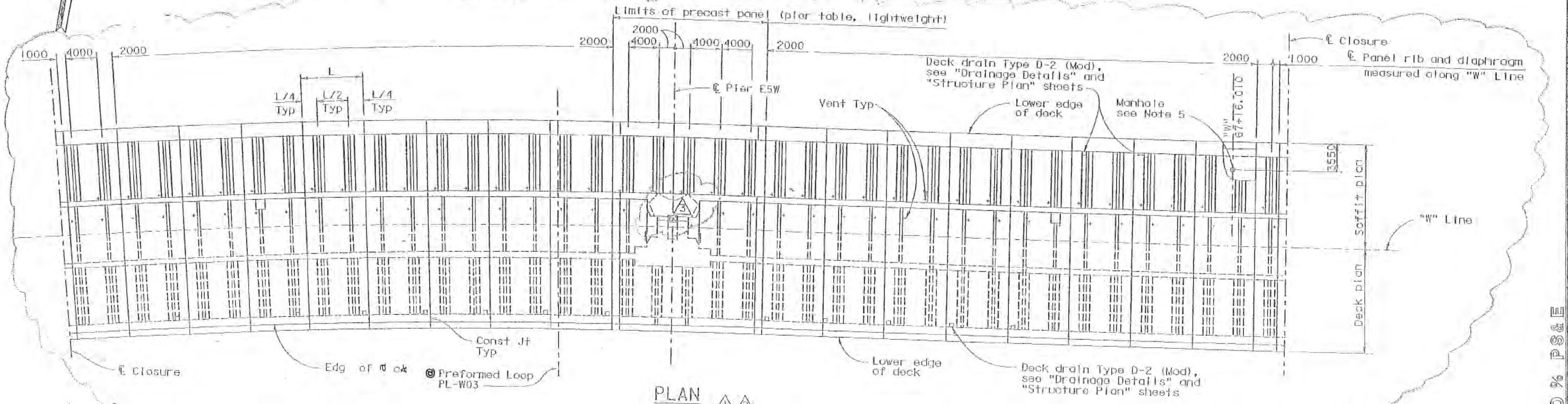

PLAN
1:250

100% PS&E

DESIGN OVERSIGHT
8/6/2003
SIGN OFF DATE
Rev. Date: 5-18-98

DESIGN	BY S. Hunter	CHECKED M. Lamont	
DETAILS	BY A. Lishansky	CHECKED M. Lamont	
QUANTITIES	BY K. Cornilor	CHECKED S. Shi	

ORIGINAL SCALE IN MILLIMETERS FOR REDUCED PLANS

PREPARED FOR THE STATE OF CALIFORNIA DEPARTMENT OF TRANSPORTATION

ALL DIMENSIONS ARE IN MILLIMETERS UNLESS OTHERWISE SHOWN

Sajid Abbas
PROJECT ENGINEER

BRIDGE NO. 34-0006L/R
KILOMETER POST 13.9/14.3, 0.0/1.6

SAN FRANCISCO OAKLAND BAY BRIDGE
EAST SPAN SEISMIC SAFETY PROJECT

SKYWAY STRUCTURES

GIRDER LAYOUT E5W

T.Y.LIN INTERNATIONAL
MOFFATT & NICHOL
a joint venture

SFOBB – Skyway Project
345 Burma Road, Oakland CA 94607
Telephone (510) 622-1071 Facsimile (510) 622-1069

REVISION MARKS ON CONTRACT PLAN CHANGES

SFOBB Skyway Project # 04-012024

Revisions to the following plans were prepared under the supervision of the undersigned engineer.

537R2, 540R2, 544R2, 551R2, 554R2, 558R2	Revision Marks 1 & 2	Dated	1/20/03
537R2, 540R2, 544R2, 551R2, 554R2, 558R2	Revision Marks 3 & 4	Dated	7/25/03
538R2, 539R2, 542R2, 543R2, 545R2, 546R2, 547R2, 552R2, 553R2, 555R2, 556R2, 557R2, 559R2, 560R2,561R2	Revision Marks 1 & 2	Dated	1/20/03
538R2, 539R2, 542R2, 543R2, 545R2, 546R2, 547R2, 552R2, 553R2, 555R2, 556R2, 557R2, 559R2, 560R2,561R2	Revision Marks 3	Dated	7/25/03
541R3	Revision Mark 1	Dated	3/04/02
541R3	Revision Marks 2 & 3	Dated	1/20/03
541R3	Revision Mark 4	Dated	7/25/03
548R3, 550R3, 562R3, 564R3	Revision Mark 1	Dated	3/04/02
548R3, 550R3, 562R3, 564R3	Revision Marks 2 & 3	Dated	1/20/03
548R3, 550R3, 562R3, 564R3	Revision Marks 4 & 5	Dated	7/25/03
549R3, 563R3	Revision Mark 1	Dated	3/04/02
549R3, 563R3	Revision Mark 2	Dated	1/20/03
549R3, 563R3	Revision Mark 3	Dated	7/25/03

For the project in **SFIALA** County

Route 80

Km Post Description 04-SF. Ala-80-13.9/14.3,0 0/1.6

District/EA 012021

(Signature)

02/27/04
(Date)

Saiid Abbas
(Name)

(Title)

C 055274
(Registration No)

12131104
(Date of Expiration)

REGISTERED PROFESSIONAL ENGINEER
Sajid Abbas
No. C 055274
Exp. 12/31/04
CIVIL
STATE OF CALIFORNIA

NOTES:

1. For notes, see "Girder Layout E3W" sheet.
2. For vent details, see "Girder Layout E3W" sheet.
3. Key to segment nomenclature: 1 E or W
   Segment No. — East or West
4. For web manhole details, see "Miscellaneous Details" sheets.
5. For deck manhole details, see B7-11.
6. Orientation of diaphragm and precast panel rib shall be normal to "W" Line.

MARK	DATE	DESCRIPTIONS	BY	CH'D	CCO
4	07/25/03	REVISE WEB MANHOLE LOCATIONS	MR	JC	245
3	07/25/03	REVISE PIER TABLE BOTTOM SLAB ACCESS OPENING	MR	JC	74
2	01/20/03	REVISE FUTURE TENDON DEV BLOCK LOCATION	MR	JC	52
1	01/20/03	REVISE DRAIN LOCATIONS	MR	SS	28

REVISIONS

CONTRACT CHANGE ORDER NO 28
SHEET 19 OF 48

DIST.	COUNTY	ROUTE	KILOMETER POST TOTAL PROJECT	SHEET NO.	TOTAL SHEETS
04	SF, Ala	80	13.9/14.3, 0.0/1.6	540R2	978

REGISTERED ENGINEER - CIVIL
6-4-01
PLANS APPROVAL DATE
Scott Hunter No. C 048066 Exp. 12/31/03 CIVIL STATE OF CALIFORNIA
The State of California or its officers or agents shall not be responsible for the accuracy or completeness of electronic copies of this plan sheet.
T.Y. LIN / MOFFATT & NICHOL
825 BATTERY STREET
SAN FRANCISCO, CA 94111
Caltrans now has a web site! To get to the web site, go to: http://www.dot.ca.gov

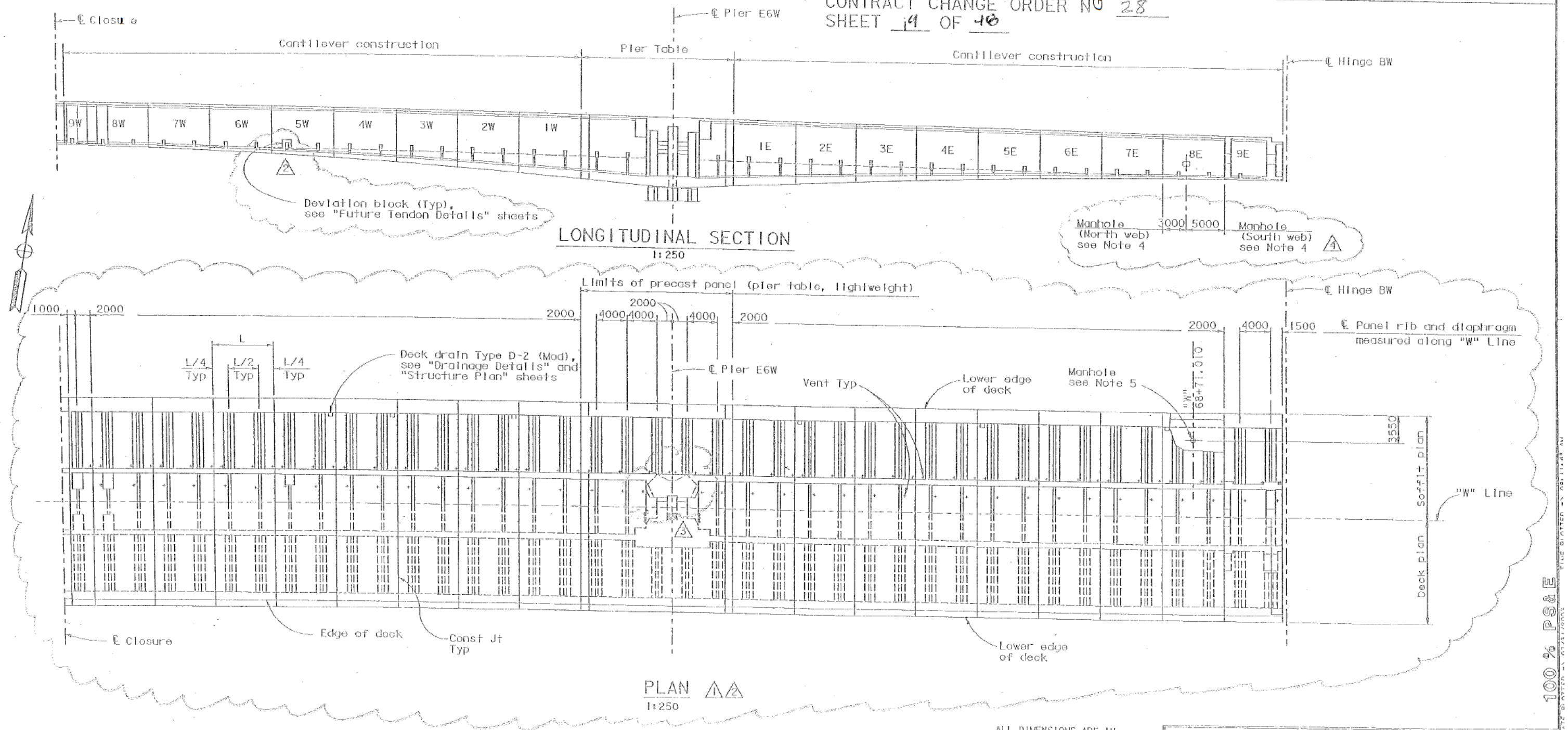

100 % P&E

DESIGN OVERSIGHT
8/6/2003
SIGN OFF DATE
Rev. Date 8-16-00

DESIGN	BY S. Hunter	CHECKED M. Lamont	
DETAILS	BY A. Lishansky	CHECKED M. Lamont	
QUANTITIES	BY K. Cornier	CHECKED S. Shi	

PREPARED FOR THE STATE OF CALIFORNIA DEPARTMENT OF TRANSPORTATION

ALL DIMENSIONS ARE IN MILLIMETERS UNLESS OTHERWISE SHOWN

Sajid Abbas
PROJECT ENGINEER

BRIDGE NO. 34-0006L/R
KILOMETER POST 13.9/14.3, 0.0/1.6

SAN FRANCISCO OAKLAND BAY BRIDGE
EAST SPAN SEISMIC SAFETY PROJECT

SKYWAY STRUCTURES

GIRDER LAYOUT E6W

ORIGINAL SCALE IN MILLIMETERS FOR REDUCED PLANS

CU 04

REVISION DATES (PRE-FINAL CONTRACT)

T·Y·LIN INTERNATIONAL
MOFFATT & NICHOL
a joint venture

SFOBB – Skyway Project
345 Burma Road, Oakland CA 94607
Telephone (510) 622-1071 Facsimile (510) 622-1069

REVISION MARKS ON CONTRACT PLAN CHANGES

SFOBB Skyway Project # 04-012024

Revisions to the following plans were prepared under the supervision of the undersigned engineer.

537R2, 540R2, 544R2, 551R2, 554R2, 558R2	Revision Marks 1 & 2	Dated	1/20/03
537R2, 540R2, 544R2, 551R2, 554R2, 558R2	Revision Marks 3 & 4	Dated	7/25/03
538R2, 539R2, 542R2, 543R2, 545R2, 546R2, 547R2, 552R2, 553R2, 555R2, 556R2, 557R2, 559R2, 560R2,561R2	Revision Marks 1 & 2	Dated	1/20/03
538R2, 539R2, 542R2, 543R2, 545R2, 546R2, 547R2, 552R2, 553R2, 555R2, 556R2, 557R2, 559R2, 560R2,561R2	Revision Marks 3	Dated	7/25/03
541R3	Revision Mark 1	Dated	3/04/02
541R3	Revision Marks 2 & 3	Dated	1/20/03
541R3	Revision Mark 4	Dated	7/25/03
548R3, 550R3, 562R3, 564R3	Revision Mark 1	Dated	3/04/02
548R3, 550R3, 562R3, 564R3	Revision Marks 2 & 3	Dated	1/20/03
548R3, 550R3, 562R3, 564R3	Revision Marks 4 & 5	Dated	7/25/03
549R3, 563R3	Revision Mark 1	Dated	3/04/02
549R3, 563R3	Revision Mark 2	Dated	1/20/03
549R3, 563R3	Revision Mark 3	Dated	7/25/03

For the project in SF/ALA County

Route XO

Km Post Description 04-SF, Ala-80-13.9/14.3,0.0/1.6

District/EA 012021

(Signature) 02/27/04 (Date)

Saiid Abbas
(Name)

(Title)

C 055274
(Registration No.)

12/31/04
(Date of Expiration)

REGISTERED PROFESSIONAL ENGINEER
Sajid Abbas
No. C 055274
Exp. 12/31/04
CIVIL
STATE OF CALIFORNIA

NOTES:

1. For notes, see "Girder Layout E3W" sheet.
2. For vent details, see "Girder Layout E3W" sheet.
3. Key to segment nomenclature: 1 E or W
   Segment No. — East or West
4. For deck manhole details, see (B7-11).

NOTE:

Orientation of diaphragm and precast panel rib shall be normal to "W" Line.

For steel grating detail, see "Miscellaneous Details" sheets.

DIST.	COUNTY	ROUTE	KILOMETER POST TOTAL PROJECT	SHEET NO.	TOTAL SHEETS
04	SF/Ala	80	13.9/14.3, 0.0/1.6	541R3	978

REGISTERED ENGINEER - CIVIL

6-4-01

PLANS APPROVAL DATE

Sajid Abbas No. C 055274 Exp. 12/31/04 CIVIL STATE OF CALIFORNIA REGISTERED PROFESSIONAL ENGINEER

The State of California or its officers or agents shall not be responsible for the accuracy or completeness of electronic copies of this plan sheet.

T.Y. LIN / MOFFATT & NICHOL
825 BATTERY STREET
SAN FRANCISCO, CA 94111

Caltrans now has a web site! To get to the web site, go to: http://www.dot.ca.gov

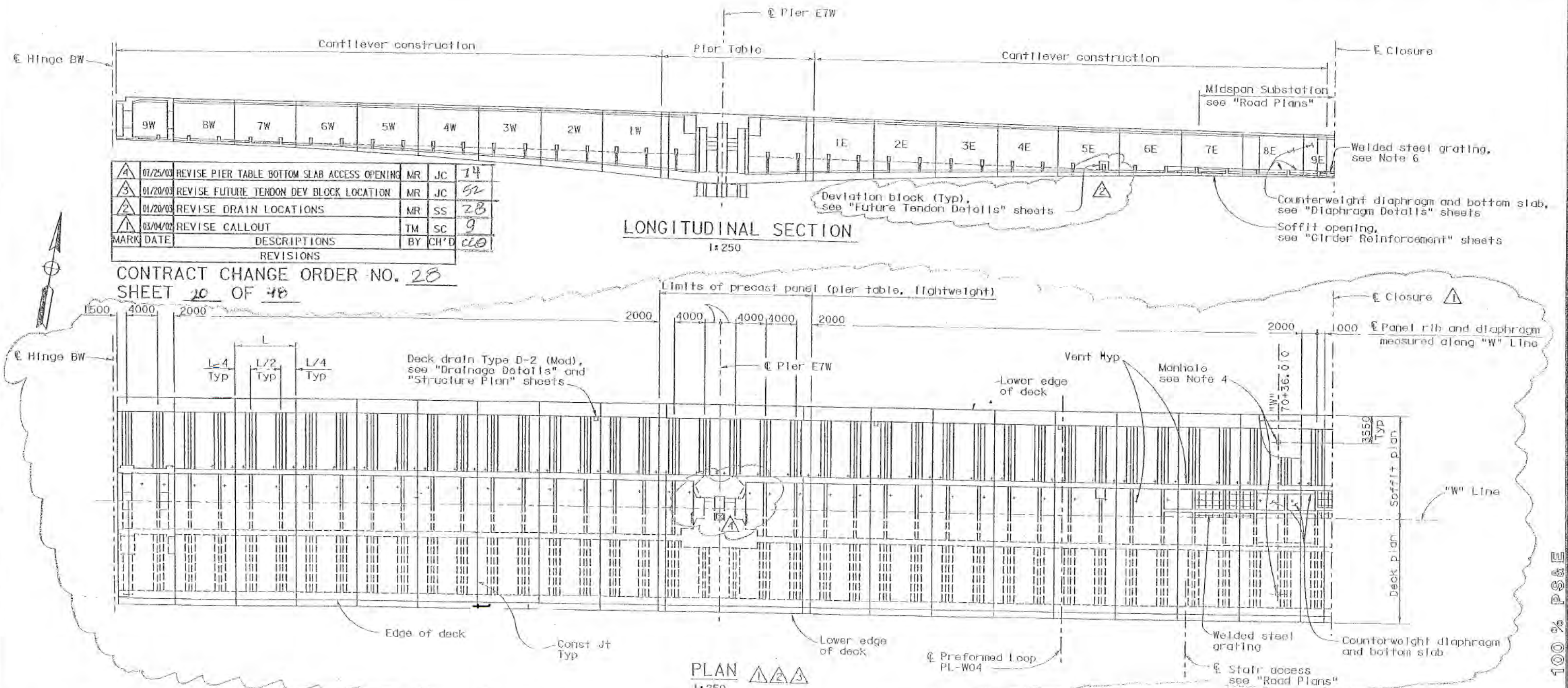

MARK	DATE	DESCRIPTIONS	BY	CH'D
4	07/25/03	REVISE PIER TABLE BOTTOM SLAB ACCESS OPENING	MR	JC
3	01/20/03	REVISE FUTURE TENDON DEV BLOCK LOCATION	MR	JC
2	01/20/03	REVISE DRAIN LOCATIONS	MR	SS
1	03/04/02	REVISE CALLOUT	TM	SC

REVISIONS

CONTRACT CHANGE ORDER NO. 28
SHEET 20 OF 48

ALL DIMENSIONS ARE IN MILLIMETERS UNLESS OTHERWISE SHOWN

DESIGN OVERSIGHT 8/6/2003
SIGN OFF DATE

DESIGN	S. Abbas	CHECKED	M. Lamont
DETAILS	A. Lishansky	CHECKED	M. Lamont
QUANTITIES	K. Cormier	CHECKED	S. Shi

PREPARED FOR THE STATE OF CALIFORNIA DEPARTMENT OF TRANSPORTATION

Sajid Abbas
PROJECT ENGINEER

BRIDGE NO. 34-0006L/R
KILOMETER POST 13.9/14.3, 0.0/1.6

SAN FRANCISCO OAKLAND BAY BRIDGE
EAST SPAN SEISMIC SAFETY PROJECT

SKYWAY STRUCTURES

GIRDER LAYOUT E7W

100% PS&E

T.Y.LIN INTERNATIONAL
MOFFATT & NICHOL
a joint venture

SFOBB – Skyway Project
345 Burma Road, Oakland CA 94607
Telephone (510)622-1071 Facsimile (510) 622-1069

REVISION MARKS ON CONTRACT PLAN CHANGES

SFOBB Skyway Project # 04-012024

Revisions to the following plans were prepared under the supervision of the undersigned engineer.

537R2, 540R2, 544R2, 551R2, 554R2, 558R2	Revision Marks 1 & 2	Dated	1/20/03
537R2, 540R2, 544R2, 551R2, 554R2, 558R2	Revision Marks 3 & 4	Dated	7/25/03
538R2, 539R2, 542R2, 543R2, 545R2, 546R2, 547R2, 552R2, 553R2, 555R2, 556R2, 557R2, 559R2, 560R2,561R2	Revision Marks 1 & 2	Dated	1/20/03
538R2, 539R2, 542R2, 543R2, 545R2, 546R2, 547R2, 552R2, 553R2, 555R2, 556R2, 557R2, 559R2, 560R2,561R2	Revision Marks 3	Dated	7/25/03
541R3	Revision Mark 1	Dated	3/04/02
541R3	Revision Marks 2 & 3	Dated	1/20/03
541R3	Revision Mark 4	Dated	7/25/03
548R3, 550R3, 562R3, 564R3	Revision Mark 1	Dated	3/04/02
548R3, 550R3, 562R3, 564R3	Revision Marks 2 & 3	Dated	1/20/03
548R3, 550R3, 562R3, 564R3	Revision Marks 4 & 5	Dated	7/25/03
549R3, 563R3	Revision Mark 1	Dated	3/04/02
549R3, 563R3	Revision Mark 2	Dated	1/20/03
549R3, 563R3	Revision Mark 3	Dated	7/25/03

For the project in SFIALA County

Route 80

Km Post Description 04-SF, **Ala-80**-13.9/14.3,0.0/1.6

District/EA 012021

(Signature) 02/27/04 (Date)

Sajid Abbas
(Name)

(Title)

C 055274
(Registration No.)

12131104
(Date of Expiration)

REGISTERED PROFESSIONAL ENGINEER
Sajid Abbas
No. C 055274
Exp. 12/31/04
CIVIL
STATE OF CALIFORNIA

NOTES:

1. For notes, see "Girder Layout E3W" sheet.
2. For vent details, see "Girder Layout E3W" sheet.
3. Key to segment nomenclature: | E or W
   Segment No. — East or West
4. For web manhole details, see "Miscellaneous Details" sheets.
5. For deck manhole details, see (B7-11).
6. Orientation of diaphragm and precast panel rib shall be normal to "W" Line.
7. For steel grating detail, see "Miscellaneous Details" sheets.

DIST.	COUNTY	ROUTE	KILOMETER POST TOTAL PROJECT	SHEET NO.	TOTAL SHEETS
04	SF, Ala	80	13.9 / 14.3, 0.0 / 1.6	542R2	978

REGISTERED ENGINEER - CIVIL

6-4-01
PLANS APPROVAL DATE

Scott Hunter No. C 048066 Exp. 12/31/03 CIVIL STATE OF CALIFORNIA

The State of California or its officers or agents shall not be responsible for the accuracy or completeness of electronic copies of this plan sheet.

T.Y. LIN / MOFFATT & NICHOL
825 BATTERY STREET
SAN FRANCISCO, CA 94111

Caltrans now has a web site! To get to the web site, go to: http://www.dot.ca.gov

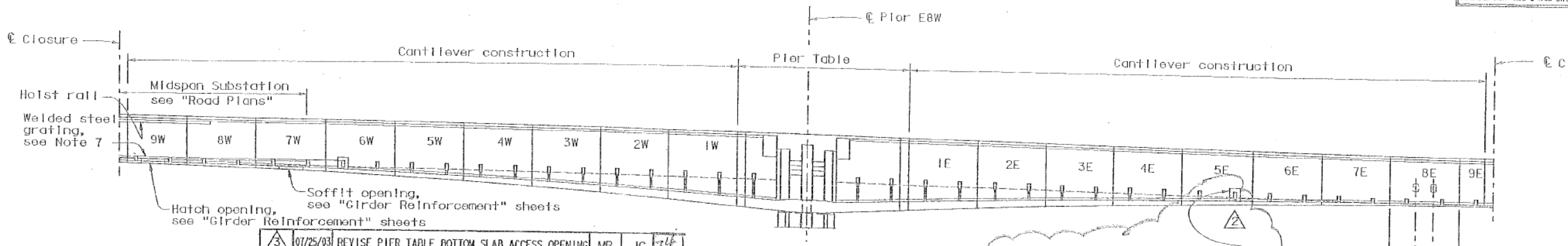

LONGITUDINAL SECTION
1:250

MARK	DATE	DESCRIPTIONS	BY	CH'D	ECO
3	01/25/03	REVISE PIER TABLE BOTTOM SLAB ACCESS OPENING	MR	JC	14
2	01/20/03	REVISE FUTURE TENDON DEV BLOCK LOCATION	MR	JC	52
1	01/20/03	REVISE DRAIN LOCATIONS	MR	SS	28

REVISIONS

CONTRACT CHANGE ORDER NO. 28
SHEET 21 OF 48

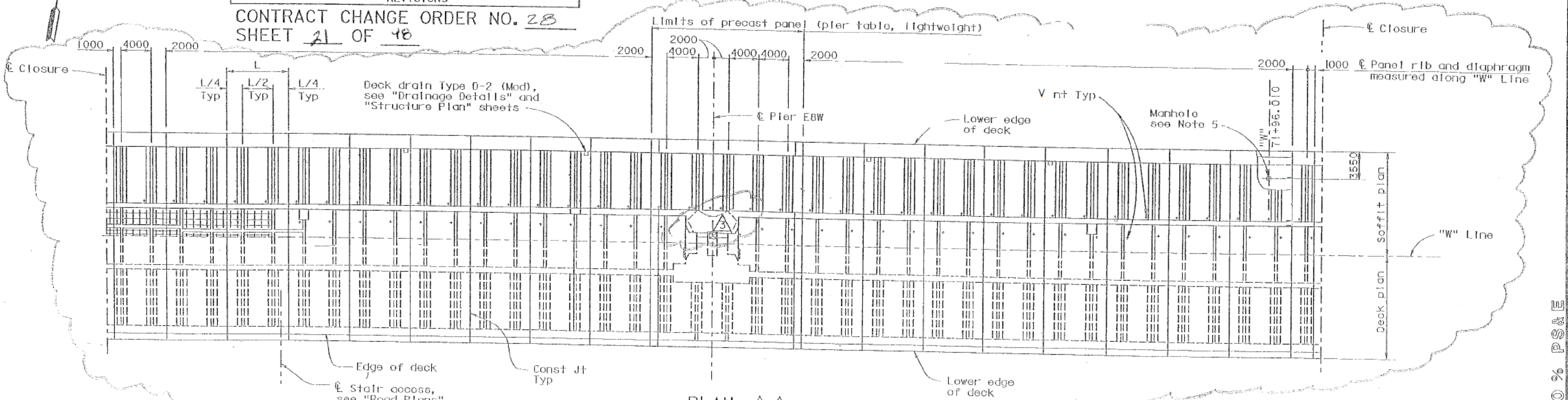

PLAN 1 2
1:250

100 % PS&E

ALL DIMENSIONS ARE IN MILLIMETERS UNLESS OTHERWISE SHOWN

DESIGN OVERSIGHT
8/6/2003
SIGN OFF DATE
Rev. Date: 5-18-09

DESIGN	BY S. Hunter	CHECKED M. Lamont	
DETAILS	BY A. Lishansky	CHECKED M. Lamont	
QUANTITIES	BY K. Cormier	CHECKED S. Shi	

PREPARED FOR THE STATE OF CALIFORNIA DEPARTMENT OF TRANSPORTATION

Sajid Abbas
PROJECT ENGINEER

BRIDGE NO. 34-0006L/R
KILOMETER POST 13.9/14.3, 0.0/1.6

SAN FRANCISCO OAKLAND BAY BRIDGE
EAST SPAN SEISMIC SAFETY PROJECT

SKYWAY STRUCTURES

GIRDER LAYOUT E8W

T.Y.LIN INTERNATIONAL
MOFFATT & NICHOL
a joint venture

SFOBB – Skyway Project
345 Burma Road, Oakland CA 94607
Telephone (510) 622-1071 Facsimile (510) 622-1069

REVISION MARKS ON CONTRACT PLAN CHANGES

SFOBB Skyway Project # 04-012024

Revisions to the following plans were prepared under the supervision of the undersigned engineer.

537R2, 540R2, 544R2, 551R2, 554R2, 558R2	Revision Marks 1 & 2	Dated	1/20/03
537R2, 540R2, 544R2, 551R2, 554R2, 558R2	Revision Marks 3 & 4	Dated	7/25/03
538R2, 539R2, 542R2, 543R2, 545R2, 546R2, 547R2, 552R2, 553R2, 555R2, 556R2, 557R2, 559R2, 560R2,561R2	Revision Marks 1 & 2	Dated	1/20/03
538R2, 539R2, 542R2, 543R2, 545R2, 546R2, 547R2, 552R2, 553R2, 555R2, 556R2, 557R2, 559R2, 560R2,561R2	Revision Marks 3	Dated	7/25/03
541R3	Revision Mark 1	Dated	3/04/02
541R3	Revision Marks 2 & 3	Dated	1/20/03
541R3	Revision Mark 4	Dated	7/25/03
548R3, 550R3, 562R3, 564R3	Revision Mark 1	Dated	3/04/02
548R3, 550R3, 562R3, 564R3	Revision Marks 2 & 3	Dated	1/20/03
548R3, 550R3, 562R3, 564R3	Revision Marks 4 & 5	Dated	7/25/03
549R3, 563R3	Revision Mark 1	Dated	3/04/02
549R3, 563R3	Revision Mark 2	Dated	1/20/03
549R3, 563R3	Revision Mark 3	Dated	7/25/03

For the project in SF/ALA County

Route 80

Km Post Description 04-SF, Ala-80-13.9/14.3,0 0/1.6

District/EA 012021

(Signature) 02/27/04 (Date)

Sajid Abbas
(Name)

(Title)

C 055274
(Registration No.)

12/31/04
(Date of Expiration)

REGISTERED PROFESSIONAL ENGINEER
Sajid Abbas
No. C 055274
Exp. 12/31/04
CIVIL
STATE OF CALIFORNIA

SA - CCO#28_2

NOTES:

1. For notes, see "Girder Layout E3W" sheet.
2. For vent details, see "Girder Layout E3W" sheet.
3. Key to segment nomenclature: 1 E or W — East or West; Segment N
4. For web manhole details, see "Miscellaneous Details" sheets.
5. For deck manhole details, see B7-11.
6. Orientation of diaphragm and precast panel rib shall be normal to 'W' Line.

MARK	DATE	DESCRIPTIONS	BY	CH'D
3	07/25/03	REVISE PIER TABLE BOTTOM SLAB ACCESS OPENING	MR	JC
2	01/20/03	REVISE FUTURE TENDON DEV BLOCK LOCATION	MR	JC
1	01/20/03	REVISE DRAIN LOCATIONS	MR	SS

REVISIONS

CONTRACT CHANGE ORDER NO. 28
SHEET 22 OF 48

DIST.	COUNTY	ROUTE	KILOMETER POST TOTAL PROJECT	SHEET NO.	TOTAL SHEETS
04	SF, Ala	80	13.9 / 14.3, 0.0 / 1.6	543R2	978

REGISTERED ENGINEER - CIVIL
6-4-01
PLANS APPROVAL DATE

REGISTERED PROFESSIONAL ENGINEER Scott Hunter No. C 048066 Exp. 12/31/03 CIVIL STATE OF CALIFORNIA

The State of California or its officers or agents shall not be responsible for the accuracy or completeness of electronic copies of this plan sheet.

T.Y. LIN / MOFFATT & NICHOL
825 BATTERY STREET
SAN FRANCISCO, CA 94111

Caltrans now has a web site! To get to the web site, go to: http://www.dot.ca.gov

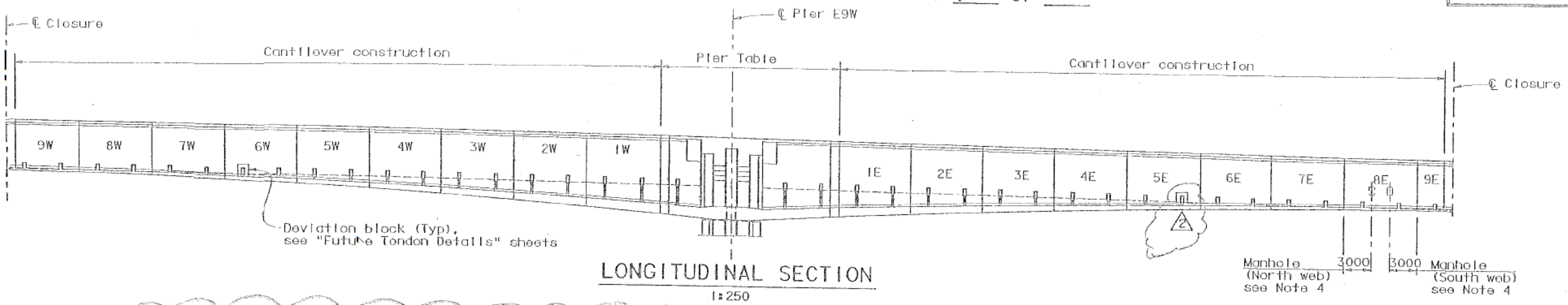

LONGITUDINAL SECTION
1:250

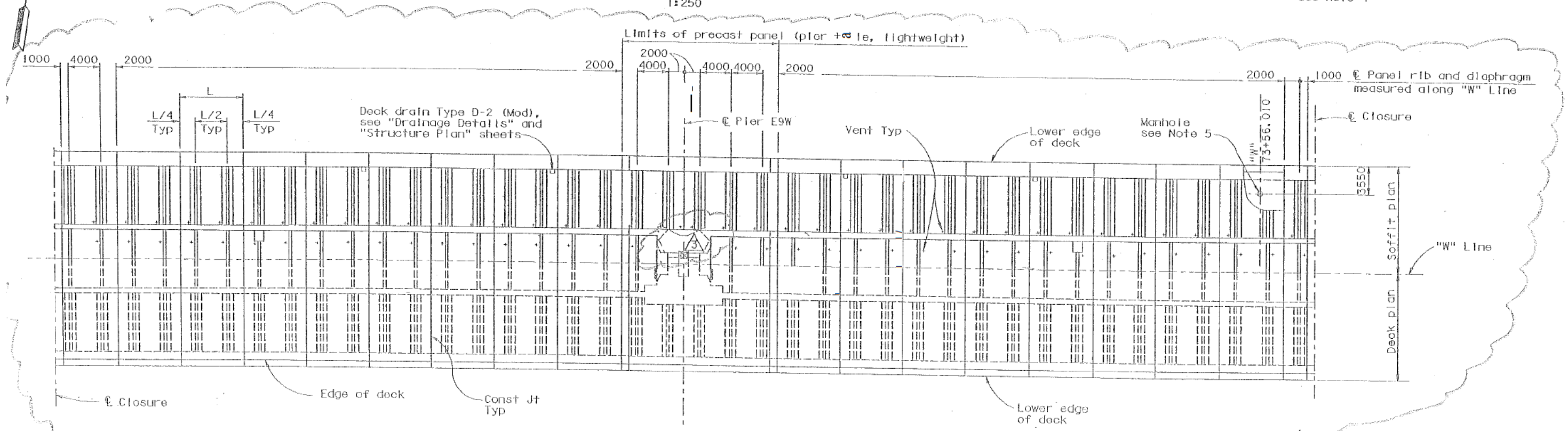

PLAN 1 2
1:250

100 % PS&E

DESIGN OVERSIGHT 8/6/2003
SIGN OFF DATE
Rev. Date: 5-16-03

DESIGN	BY S. Hunter	CHECKED M. Lamont	
DETAILS	BY A. Lishansky	CHECKED M. Lamont	
QUANTITIES	BY K. Cormier	CHECKED S. Shi	

PREPARED FOR THE STATE OF CALIFORNIA DEPARTMENT OF TRANSPORTATION

Sajid Abbas
PROJECT ENGINEER

ALL DIMENSIONS ARE IN MILLIMETERS UNLESS OTHERWISE SHOWN

BRIDGE NO. 34-0006L/R
KILOMETER POST 3.9/14.3, 0.0/1.6

SAN FRANCISCO OAKLAND BAY BRIDGE
EAST SPAN SEISMIC SAFETY PROJECT

SKYWAY STRUCTURES

GIRDER LAYOUT E9W

T.Y.LIN INTERNATIONAL
MOFFATT & NICHOL
a joint venture

SFOBB – Skyway Project
345 Burma Road, Oakland CA 94607
Telephone (510)622-1071 Facsimile (510) 622-1069

REVISION MARKS ON CONTRACT PLAN CHANGES

SFOBB Skyway Project # 04-012024

Revisions to the following plans were prepared under the supervision of the undersigned engineer.

537R2, 540R2, 544R2, 551R2, 554R2, 558R2	Revision Marks 1 & 2	Dated	1/20/03
537R2, 540R2, 544R2, 551R2, 554R2, 558R2	Revision Marks 3 & 4	Dated	7/25/03
538R2, 539R2, 542R2, 543R2, 545R2, 546R2, 547R2, 552R2, 553R2, 555R2, 556R2, 557R2, 559R2, 560R2,561R2	Revision Marks 1 & 2	Dated	1/20/03
538R2, 539R2, 542R2, 543R2, 545R2, 546R2, 547R2, 552R2, 553R2, 555R2, 556R2, 557R2, 559R2, 560R2,561R2	Revision Marks 3	Dated	7/25/03
541R3	Revision Mark 1	Dated	3/04/02
541R3	Revision Marks 2 & 3	Dated	1/20/03
541R3	Revision Mark 4	Dated	7/25/03
548R3, 550R3, 562R3, 564R3	Revision Mark 1	Dated	3/04/02
548R3, 550R3, 562R3, 564R3	Revision Marks 2 & 3	Dated	1/20/03
548R3, 550R3, 562R3, 564R3	Revision Marks 4 & 5	Dated	7/25/03
549R3, 563R3	Revision Mark 1	Dated	3/04/02
549R3, 563R3	Revision Mark 2	Dated	1/20/03
549R3, 563R3	Revision Mark 3	Dated	7/25/03

For the project in SFIALA County

Route 80

Km Post Description 04-SF. Ala-80-13 9/14 3.0.0/1.6

District/EA 012021

(Signature)

02/27/04
(Date)

Sajid Abbas
(Name)

(Title)

C 055274
(Registration No)

12/31/04
(Date of Expiration)

REGISTERED PROFESSIONAL ENGINEER
Sajid Abbas
No. C 055274
Exp. 12/31/04
CIVIL
STATE OF CALIFORNIA

NOTES:

1. For notes, see "Girder Layout E3W" sheet.
2. For vent details, see "Girder Layout E3W" sheet
3. Key to segment nomenclature: 1 E or W — Segment No. — East or West
4. For web manhole details, see "Miscellaneous Details" sheets.
5. For deck manhole details, see B7-11.
6. Orientation of diaphragm and precast panel rib shall be normal to "W" Line.

MARK	DATE	DESCRIPTIONS	BY	CH'D
4	07/25/03	REVISE WEB MANHOLE LOCATIONS	MR	JC
3	07/25/03	REVISE PIER TABLE BOTTOM SLAB ACCESS OPENING	MR	JC
2	01/20/03	REVISE FUTURE TENDON DEV BLOCK LOCATION	MR	JC
1	01/20/03	REVISE DRAIN LOCATIONS	MR	SS

REVISIONS

CONTRACT CHANGE ORDER NO. 28
SHEET 23 OF 48

DIST.	COUNTY	ROUTE	KILOMETER POST TOTAL PROJECT	SHEET NO.	TOTAL SHEETS
04	SF, Ala	80	13.9 / 14.3, 0.0 / 1.6	544R2	978

REGISTERED ENGINEER - CIVIL

6-4-01
PLANS APPROVAL DATE

Scott Hunter No. C 048066 Exp. 12/31/03 CIVIL STATE OF CALIFORNIA

The State of California or its officers or agents shall not be responsible for the accuracy or completeness of electronic copies of this plan sheet.

T.Y. LIN / MOFFATT & NICHOL
825 BATTERY STREET
SAN FRANCISCO, CA 94111

Caltrans now has a web site! To get to the web site, go to: http://www.dot.ca.gov

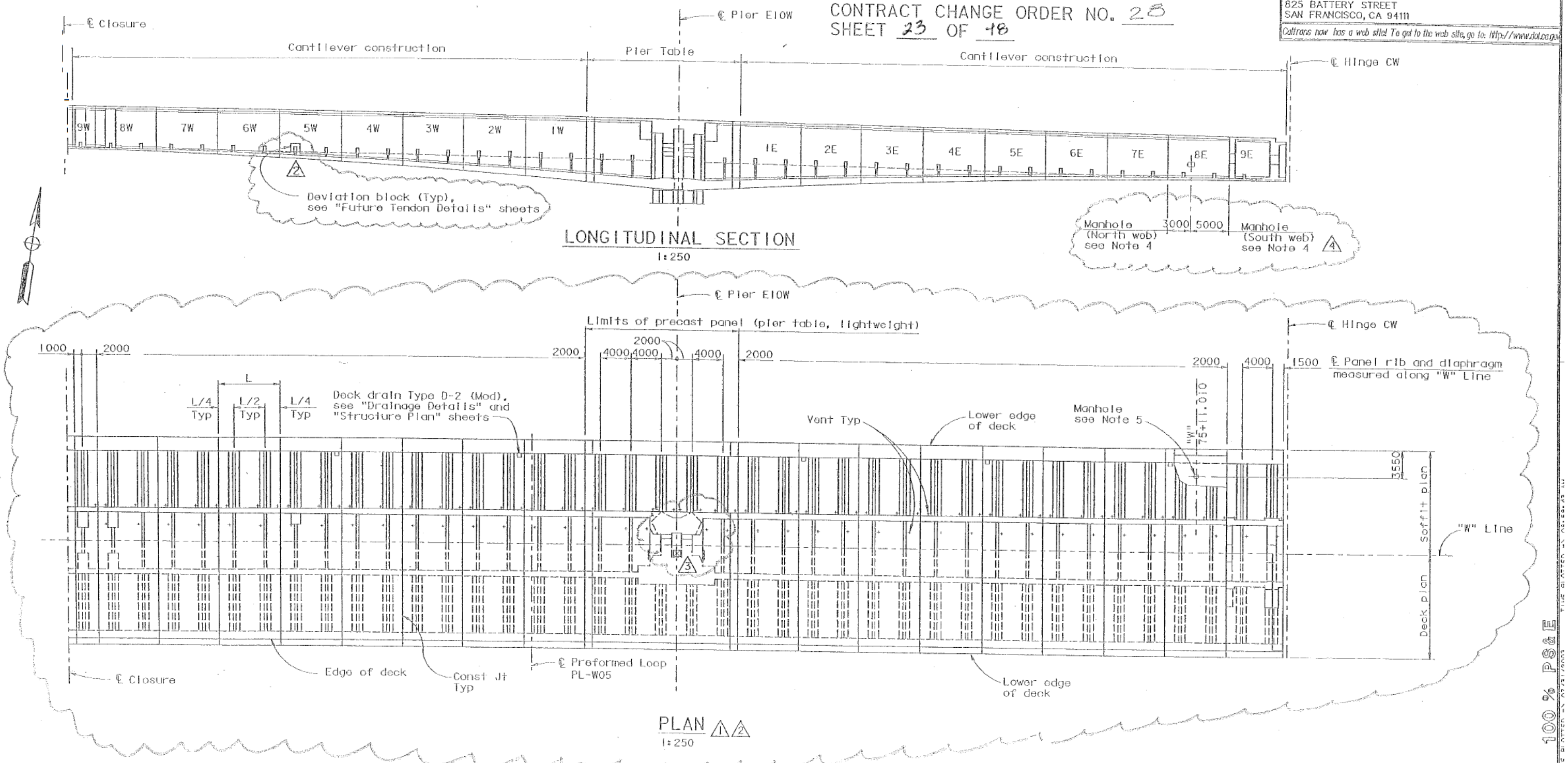

ALL DIMENSIONS ARE IN MILLIMETERS UNLESS OTHERWISE SHOWN

100% PS&E

DESIGN OVERSIGHT 8/6/2003
SIGN OFF DATE
Rev. Date: 5-18-03

DESIGN	BY S. Hunter	CHECKED M. Lamont	
DETAILS	BY A. Lishansky	CHECKED M. Lamont	
QUANTITIES	BY K. Cornier	CHECKED S. Shi	

PREPARED FOR THE STATE OF CALIFORNIA DEPARTMENT OF TRANSPORTATION

Sajid Abbas
PROJECT ENGINEER

BRIDGE NO. 34-0006L/R
KILOMETER POST 3.9/14.3, 0.0/1.6

SAN FRANCISCO OAKLAND BAY BRIDGE
EAST SPAN SEISMIC SAFETY PROJECT

SKYWAY STRUCTURES
GIRDER LAYOUT E10W

T·Y·LIN INTERNATIONAL
MOFFATT & NICHOL
a joint venture

SFOBB – Skyway Project
345 Burma Road, Oakland CA 94607
Telephone (510)622-1071 Facsimile (510) 622-1069

REVISION MARKS ON CONTRACT PLAN CHANGES

SFOBB Skyway Project # 04-012024

Revisions to the following plans were prepared under the supervision of the undersigned engineer.

537R2, 540R2, 544R2, 551R2, 554R2, 558R2	Revision Marks 1 & 2	Dated	1/20/03
537R2, 540R2, 544R2, 551R2, 554R2, 558R2	Revision Marks 3 & 4	Dated	7/25/03
538R2, 539R2, 542R2, 543R2, 545R2, 546R2, 547R2, 552R2, 553R2, 553R2, 556R2, 557R2, 559R2, 560R2,561R2	Revision Marks 1 & 2	Dated	1/20/03
538R2, 539R2, 542R2, 543R2, 545R2, 546R2, 547R2, 552R2, 553R2, 555R2, 556R2, 557R2, 559R2, 560R2,561R2	Revision Marks 3	Dated	7/25/03
541R3	Revision Mark 1	Dated	3/04/02
541R3	Revision Marks 2 & 3	Dated	1/20/03
541R3	Revision Mark 4	Dated	7/25/03
548R3, 550R3, 562R3, 564R3	Revision Mark 1	Dated	3/04/02
548R3, 550R3, 562R3, 564R3	Revision Marks 2 & 3	Dated	1/20/03
548R3, 550R3, 562R3, 564R3	Revision Marks 4 & 5	Dated	7/25/03
549R3, 563R3	Revision Mark 1	Dated	3/04/02
549R3, 563R3	Revision Mark 2	Dated	1/20/03
549R3, 563R3	Revision Mark 3	Dated	7/25/03

For the project in SF/ALA County

Route 80

Km Post Description 04-SF, Ala-80-13.9114 3.0 0/1 6

District/EA 012021

(Signature) 02/27/04 (Date)

Sajid Abbas
(Name)

(Title)

C 055274
(Registration No.)

12/31/04
(Date of Expiration)

REGISTERED PROFESSIONAL ENGINEER
Sajid Abbas
No. C 055274
Exp. 12/31/04
CIVIL
STATE OF CALIFORNIA

NOTES:

1. For notes, see "Girder Layout E3W" sheet.
2. For vent details, see "Girder Layout E3W" sheet.
3. Key to segment nomenclature: | E or W — Segment No. — East or West
4. For web manhole details, see "Miscellaneous Details" sheets.
5. For deck manhole details, see (B7-11).
6. Orientation of diaphragm and precast panel rib shall be normal to "W" Line.

DIST.	COUNTY	ROUTE	KILOMETER POST TOTAL PROJECT	SHEET NO.	TOTAL SHEETS
04	SF, Ala	80	13.9 / 14.3, 0.0 / 1.6	545R2	978

REGISTERED ENGINEER - CIVIL

6-4-01

PLANS APPROVAL DATE

REGISTERED PROFESSIONAL ENGINEER Scott Hunter No. C 048066 Exp. 12/31/03 CIVIL STATE OF CALIFORNIA

The State of California or its officers or agents shall not be responsible for the accuracy or completeness of electronic copies of this plan sheet.

T.Y. LIN / MOFFATT & NICHOL
825 BATTERY STREET
SAN FRANCISCO, CA 94111

Caltrans new has a web site! To get to the web site, go to: http://www.dot.ca.gov

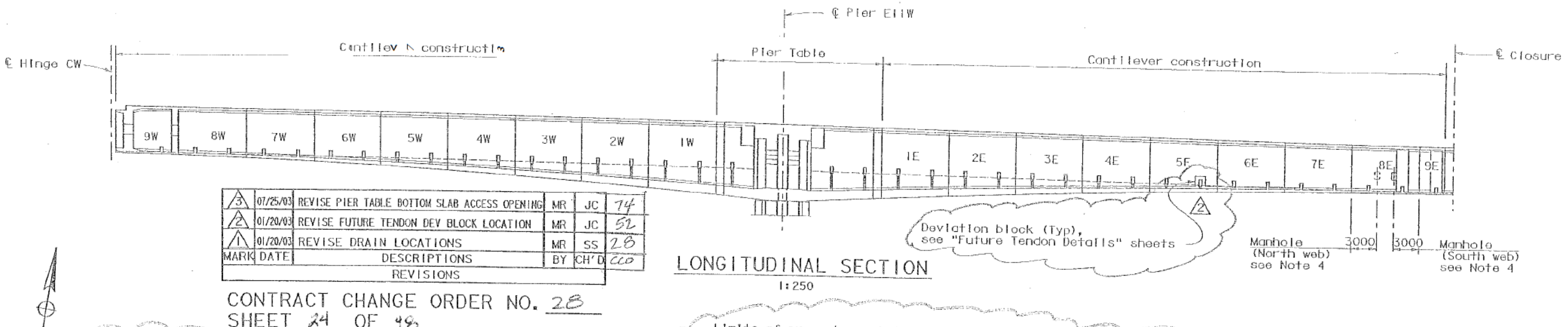

LONGITUDINAL SECTION
1:250

MARK	DATE	DESCRIPTIONS	BY	CH'D
3	07/25/03	REVISE PIER TABLE BOTTOM SLAB ACCESS OPENING	MR	JC
2	01/20/03	REVISE FUTURE TENDON DEV BLOCK LOCATION	MR	JC
1	01/20/03	REVISE DRAIN LOCATIONS	MR	SS

REVISIONS

CONTRACT CHANGE ORDER NO. 28
SHEET 24 OF 48

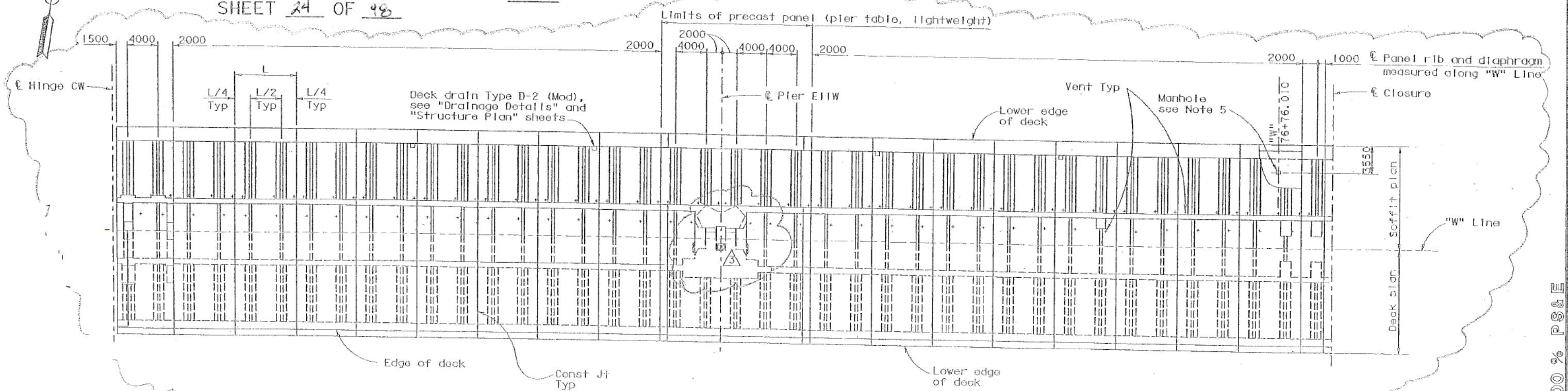

PLAN
1:250

ALL DIMENSIONS ARE IN MILLIMETERS UNLESS OTHERWISE SHOWN

DESIGN OVERSIGHT 8/6/2003
SIGN OFF DATE

Rev. Date: 5-10-98

DESIGN	BY S. Hunter	CHECKED	M. Lamont
DETAILS	BY A. Lishansky	CHECKED	M. Lamont
QUANTITIES	BY K. Cormier	CHECKED	S. Shi

PREPARED FOR THE STATE OF CALIFORNIA DEPARTMENT OF TRANSPORTATION

Sajid Abbas
PROJECT ENGINEER

BRIDGE NO. 34-0006L/R
KILOMETER POST 13.9/14.3, 0.0/1.6

SAN FRANCISCO OAKLAND BAY BRIDGE
EAST SPAN SEISMIC SAFETY PROJECT

SKYWAY STRUCTURES

GIRDER LAYOUT E11W

100 % PS&E

ORIGINAL SCALE IN MILLIMETERS

T.Y.LIN INTERNATIONAL
MOFFATT & NICHOL
a joint venture

SFOBB – Skyway Project
345 Burma Road, Oakland CA 94607
Telephone (510) 622-1071 Facsimile (510) 622-1069

REVISION MARKS ON CONTRACT PLAN CHANGES

SFOBB Skyway Project # 04-012024

Revisions to the following plans were prepared under the supervision of the undersigned engineer.

537R2, 540R2, 544R2, 551R2, 554R2, 558R2	Revision Marks 1 & 2	Dated	1/20/03
537R2, 540R2, 544R2, 551R2, 554R2, 558R2	Revision Marks 3 & 4	Dated	7/25/03
538R2, 539R2, 542R2, 543R2, 545R2, 546R2, 547R2, 552R2, 553R2, 555R2, 556R2, 557R2, 559R2, 560R2,561R2	Revision Marks 1 & 2	Dated	1/20/03
538R2, 539R2, 542R2, 543R2, 545R2, 546R2, 547R2, 552R2, 553R2, 555R2, 556R2, 557R2, 559R2, 560R2,561R2	Revision Marks 3	Dated	7/25/03
541R3	Revision Mark 1	Dated	3/04/02
541R3	Revision Marks 2 & 3	Dated	1/20/03
541R3	Revision Mark 4	Dated	7/25/03
548R3, 550R3, 562R3, 564R3	Revision Mark 1	Dated	3/04/02
548R3, 550R3, 562R3, 564R3	Revision Marks 2 & 3	Dated	1/20/03
548R3, 550R3, 562R3, 564R3	Revision Marks 4 & 5	Dated	7/25/03
549R3, 563R3	Revision Mark 1	Dated	3/04/02
549R3, 563R3	Revision Mark 2	Dated	1/20/03
549R3, 563R3	Revision Mark 3	Dated	7/25/03

For *the* project in SF/ALA County

Route– 80

Km Post Description 04-SF, Ala-80-13.9/14.3,0.0/1.6

District/EA 012021

(Signature)

02/27/04
(Datej

Sajid Abbas
(Name)

(Title)

C 055274
(Registration No.)

12131/04
(Date of Expiration)

REGISTERED PROFESSIONAL ENGINEER
Sajid Abbas
No. C 055274
Exp. 12/31/04
CIVIL
STATE OF CALIFORNIA

SA - CCO#28_2

NOTES:

1. For notes, see "Girder Layout E3W" sheet.
2. For vent details, see "Girder Layout E3W" sheet.
3. Key to segment nomenclature: 1 E or W
   Segment No. — East or West
4. For web manhole details, see "Miscellaneous Details" sheets.
5. For deck manhole details, see B7-11.
6. Orientation of diaphragm and precast panel rib shall be normal to "W" Line.

DIST.	COUNTY	ROUTE	KILOMETER POST TOTAL PROJECT	SHEET NO.	TOTAL SHEETS
04	SF, Ala	80	13.9 / 14.3, 0.0 / 1.6	546R2	978

REGISTERED ENGINEER - CIVIL

6-4-01
PLANS APPROVAL DATE

REGISTERED PROFESSIONAL ENGINEER Scott Hunter No. C 048066 Exp. 12/31/03 CIVIL STATE OF CALIFORNIA

The State of California or its officers or agents shall not be responsible for the accuracy or completeness of electronic copies of this plan sheet.

T.Y. LIN / MOFFATT & NICHOL
825 BATTERY STREET
SAN FRANCISCO, CA 94111

Caltrans now has a web site! To get to the web site, go to: http://www.dot.ca.gov

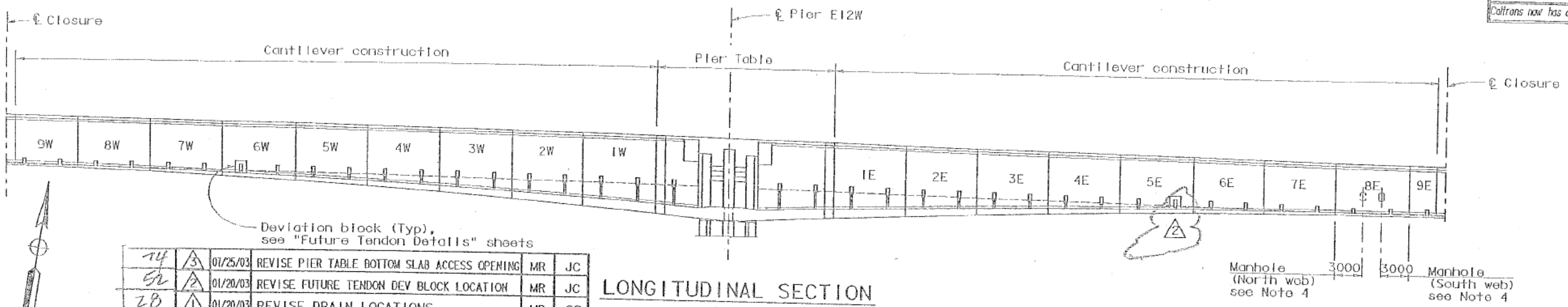

LONGITUDINAL SECTION
1:250

MARK	DATE	DESCRIPTIONS	BY	CH'D
3	01/25/03	REVISE PIER TABLE BOTTOM SLAB ACCESS OPENING	MR	JC
2	01/20/03	REVISE FUTURE TENDON DEV BLOCK LOCATION	MR	JC
1	01/20/03	REVISE DRAIN LOCATIONS	MR	SS

REVISIONS

CONTRACT CHANGE ORDER NO. 28
SHEET 25 OF 48

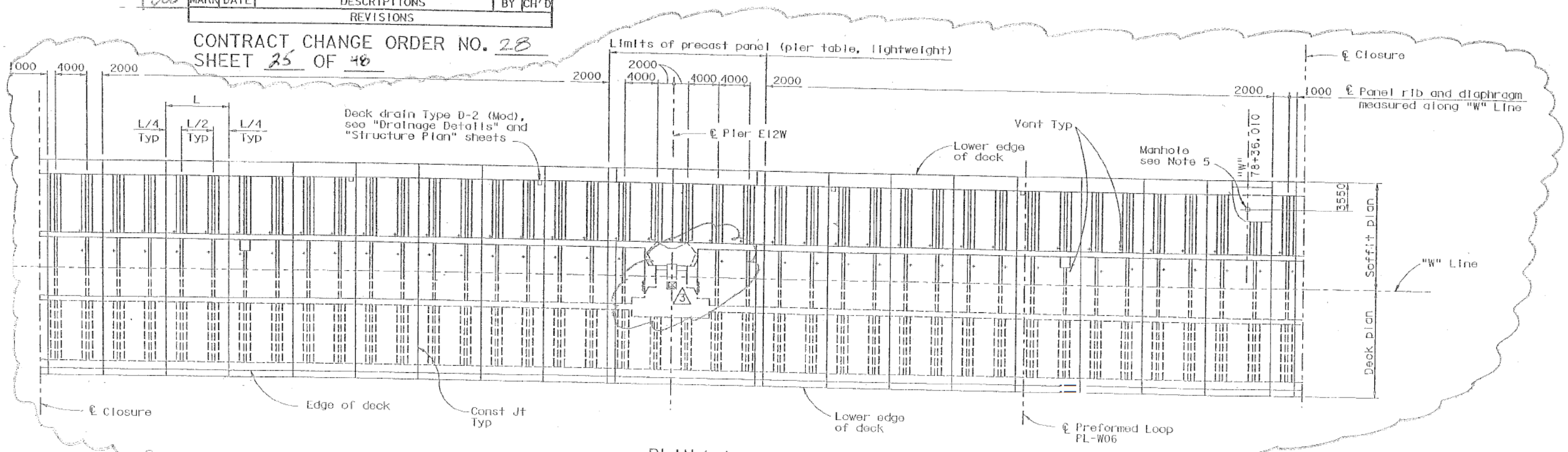

PLAN
1:250

ALL DIMENSIONS ARE IN MILLIMETERS UNLESS OTHERWISE SHOWN

DESIGN VERSION 8/6/2003
SIGN REF DATE
Rev. Date: 5-18-98

DESIGN	BY S. Hunter	CHECKED M. Lamont	
DETAILS	BY A. Lishansky	CHECKED M. Lamont	
QUANTITIES	BY K. Cormier	CHECKED S. Shi	

PREPARED FOR THE STATE OF CALIFORNIA DEPARTMENT OF TRANSPORTATION

Sajid Abbas
PROJECT ENGINEER

BRIDGE NO. 34-0006L/R
KILOMETER POST 13.9/14.3, 0.0/1.6

SAN FRANCISCO OAKLAND BAY BRIDGE
EAST SPAN SEISMIC SAFETY PROJECT

SKYWAY STRUCTURES

GIRDER LAYOUT E12W

ORIGINAL SCALE IN MILLIMETERS FOR REDUCED PLANS

CU-04

100 % PS&E

T.Y.LIN INTERNATIONAL
MOFFATT & NICHOL
a joint venture

SFOBB – Skyway Project
345 Burma Road, Oakland CA 94607
Telephone (510)622-1071 Facsimile (510) 622-1069

REVISION MARKS ON CONTRACT PLAN CHANGES

SFOBB Skyway Project # 04-012024

Revisions to the following plans were prepared under the supervision of the undersigned engineer.

537R2, 540R2, 544R2, 551R2, 554R2, 558R2	Revision Marks 1 & 2	Dated	1/20/03
537R2, 540R2, 544R2, 551R2, 554R2, 558R2	Revision Marks 3 & 4	Dated	7/25/03
538R2, 539R2, 542R2, 543R2, 545R2, 546R2, 547R2, 552R2, 553R2, 555R2, 556R2, 557R2, 559R2, 560R2,561R2	Revision Marks 1 & 2	Dated	1/20/03
538R2, 539R2, 542R2, 543R2, 545R2, 546R2, 547R2, 552R2, 553R2, 555R2, 556R2, 557R2, 559R2, 560R2,561R2	Revision Marks 3	Dated	7/25/03
541R3	Revision Mark 1	Dated	3/04/02
541R3	Revision Marks 2 & 3	Dated	1/20/03
541R3	Revision Mark 4	Dated	7/25/03
548R3, 550R3, 562R3, 564R3	Revision Mark 1	Dated	3/04/02
548R3, 550R3, 562R3, 564R3	Revision Marks 2 & 3	Dated	1/20/03
548R3, 550R3, 562R3, 564R3	Revision Marks 4 & 5	Dated	7/25/03
549R3, 563R3	Revision Mark 1	Dated	3/04/02
549R3, 563R3	Revision Mark 2	Dated	1/20/03
549R3, 563R3	Revision Mark 3	Dated	7/25/03

For the project in SFIALA County

Route 80

Km Post Description 04-SF, Ala-80-13.9/14.3,0.0/1.6

District/EA 012021

(Signature) 02/27/04 (Date)

Sajid Abbas
(Name)

(Title)

C 055274
(Registration No.)

12/31/04
(Date of Expiration)

REGISTERED PROFESSIONAL ENGINEER
Sajid Abbas
No. C 055274
Exp. 12/31/04
CIVIL
STATE OF CALIFORNIA

NOTES:

1. For notes, see "Girder Layout E3W" sheet.
2. For vent details, see "Girder Layout E3W" sheet.
3. Key to segment nomenclature: 1 E or W
   Segment No. — East or West
4. For web manhole details, see "Miscellaneous Details" sheets.
5. For deck manhole details, see (B7-11).
6. Orientation of diaphragm and precast panel rib shall be normal to "W" Line.

MARK	DATE	DESCRIPTIONS	BY	CH'D	
3	07/25/03	REVISE PIER TABLE BOTTOM SLAB ACCESS OPENING	MR	JC	74
2	01/20/03	REVISE FUTURE TENDON DEV BLOCK LOCATION	MR	JC	52
1	01/20/03	REVISE DRAIN LOCATIONS	MR	SS	28

REVISIONS

CONTRACT CHANGE ORDER NO. 28
SHEET 26 OF 48

DIST.	COUNTY	ROUTE	KILOMETER POST TOTAL PROJECT	SHEET NO.	TOTAL SHEETS
04	SF, Ala	80	13.9 / 14.3, 0.0 / 1.6	547R2	978

REGISTERED ENGINEER - CIVIL
6-4-01
PLANS APPROVAL DATE

REGISTERED PROFESSIONAL ENGINEER Scott Hunter No. C 048066 Exp. 12/31/03 CIVIL STATE OF CALIFORNIA

The State of California or its officers or agents shall not be responsible for the accuracy or completeness of electronic copies of this plan sheet.

T.Y. LIN / MOFFATT & NICHOL
825 BATTERY STREET
SAN FRANCISCO, CA 94111

Caltrans now has a web site! To get to the web site, go to: http://www.dot.ca.gov

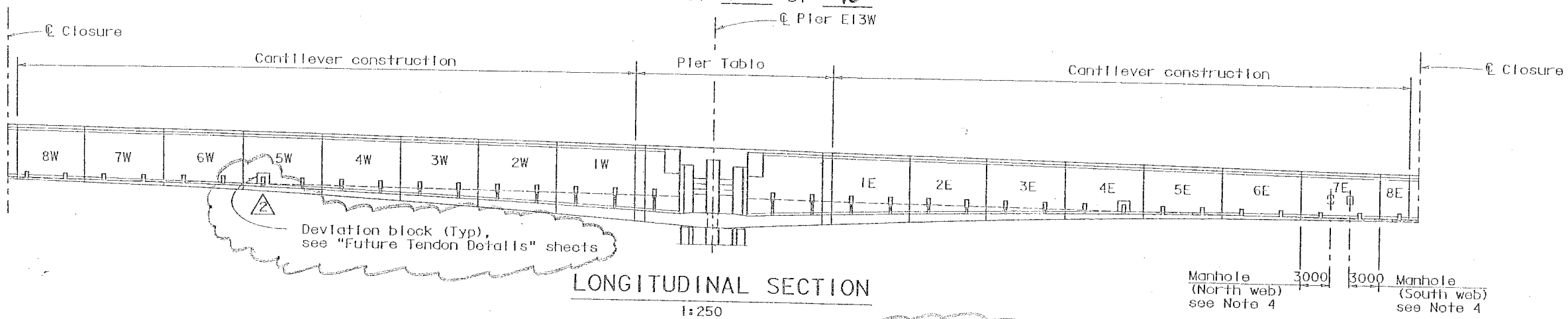

LONGITUDINAL SECTION
1:250

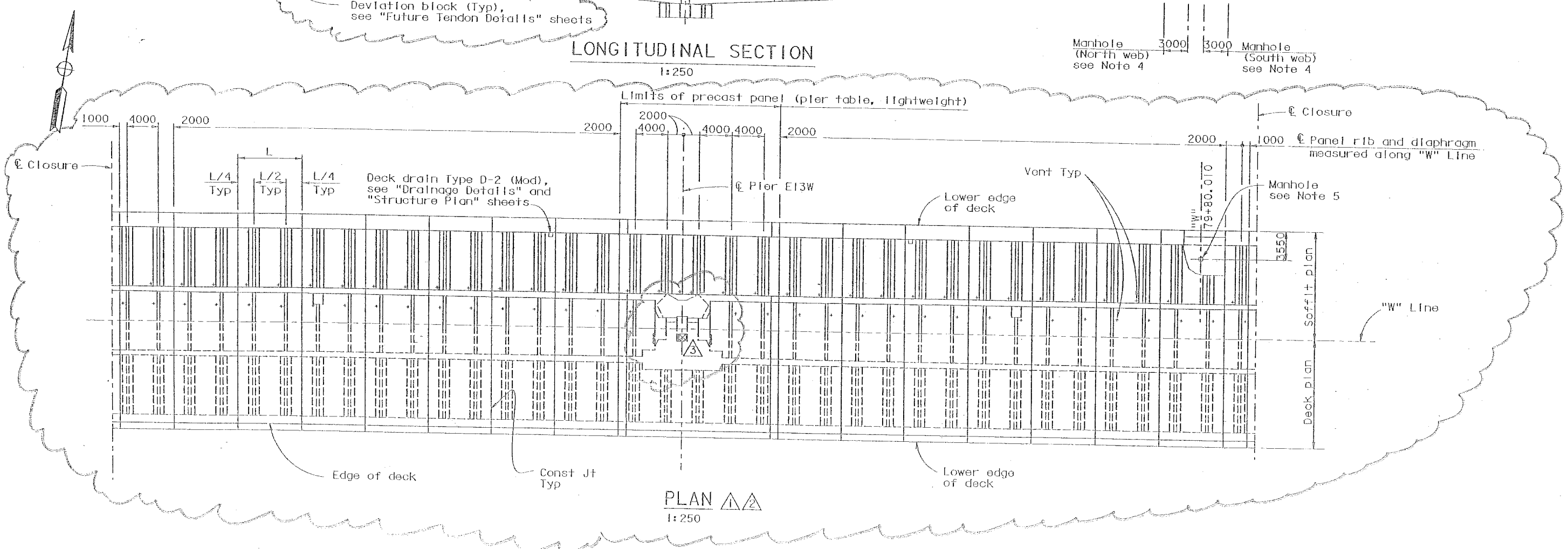

PLAN 1 2
1:250

ALL DIMENSIONS ARE IN MILLIMETERS UNLESS OTHERWISE SHOWN

DESIGN OVERSIGHT 8/6/2003
SIGN OFF DATE
Rev. Date: 5-18-98

	BY	CHECKED	
DESIGN	S. Hunter	M. Lamont	
DETAILS	A. Lishansky	M. Lamont	
QUANTITIES	K. Cormier	S. Shi	

PREPARED FOR THE STATE OF CALIFORNIA DEPARTMENT OF TRANSPORTATION

Sajid Abbas
PROJECT ENGINEER

BRIDGE NO. 34-0006L/R
KILOMETER POST 13.9/14.3, 0.0/1.6

SAN FRANCISCO OAKLAND BAY BRIDGE
EAST SPAN SEISMIC SAFETY PROJECT

SKYWAY STRUCTURES
GIRDER LAYOUT E13W

ORIGINAL SCALE IN MILLIMETERS

LOU 04

T.Y.LIN INTERNATIONAL
MOFFATT & NICHOL
a joint venture

SFOBB – Skyway Project
345 Burma Road, Oakland CA 94607
Telephone (510)622-1071 Facsimile (510) 622-1069

REVISION MARKS ON CONTRACT PLAN CHANGES

SFOBB Skyway Project # 04-012024

Revisions to the following plans were prepared under the supervision of the undersigned engineer.

537R2, 540R2, 544R2, 551R2, 554R2, 558R2	Revision Marks 1 & 2	Dated	1/20/03
537R2, 540R2, 544R2, 551R2, 554R2, 558R2	Revision Marks 3 & 4	Dated	7/25/03
538R2, 539R2, 542R2, 543R2, 545R2, 546R2, 547R2, 552R2, 553R2, 555R2, 556R2, 557R2, 559R2, 560R2,561R2	Revision Marks 1 & 2	Dated	1/20/03
538R2, 539R2, 542R2, 543R2, 545R2, 546R2, 547R2, 552R2, 553R2, 555R2, 556R2, 557R2, 559R2, 560R2,561R2	Revision Marks 3	Dated	7/25/03
541R3	Revision Mark 1	Dated	3/04/02
541R3	Revision Marks 2 & 3	Dated	1/20/03
541R3	Revision Mark 4	Dated	7/25/03
548R3, 550R3, 562R3, 564R3	Revision Mark 1	Dated	3/04/02
548R3, 550R3, 562R3, 564R3	Revision Marks 2 & 3	Dated	1/20/03
548R3, 550R3, 562R3, 564R3	Revision Marks 4 & 5	Dated	7/25/03
549R3, 563R3	Revision Mark 1	Dated	3/04/02
549R3, 563R3	Revision Mark 2	Dated	1/20/03
549R3, 563R3	Revision Mark 3	Dated	7/25/03

For the project in SF/ALA County

Koute 80

Km Post Description 04-SF, Ala-80-13.9/14.3,0.0/1.6

District/EA 012021

(Signature)

02/27/04
(Date)

Sajid Abbas
(Name)

(Title)

C 055274
(Registration No.)

12131104
(Date of Expiration)

REGISTERED PROFESSIONAL ENGINEER
Sajid Abbas
No. C 055274
Exp. 12/31/04
CIVIL
STATE OF CALIFORNIA

SA - CCO#28_2

NOTES:

1. For notes, see "Girder Layout E3W" sheet.
2. For vent details, see "Girder Layout E3W" sheet.
3. Key to segment nomenclature: 1 E or W — Segment No. — East or West
4. For web manhole details, see "Miscellaneous Details" sheets.
5. For deck manhole details, see (B7-11).
6. Orientation of diaphragm and precast panel rib shall be normal to "W" Line.

DIST.	COUNTY	ROUTE	KILOMETER POST TOTAL PROJECT	SHEET NO.	TOTAL SHEETS
04	SF/Ala	80	13.9/14.3, 0.0/1.6	548R3	978

REGISTERED ENGINEER - CIVIL
6-4-01
PLANS APPROVAL DATE

Sajid Abbas, No. C 055274, Exp. 12/31/04, CIVIL, State of California

The State of California or its officers or agents shall not be responsible for the accuracy or completeness of electronic copies of this plan sheet.

T.Y. LIN / MOFFATT & NICHOL
825 BATTERY STREET
SAN FRANCISCO, CA 94111

Caltrans now has a web site! To get to the web site, go to: http://www.dot.ca.gov

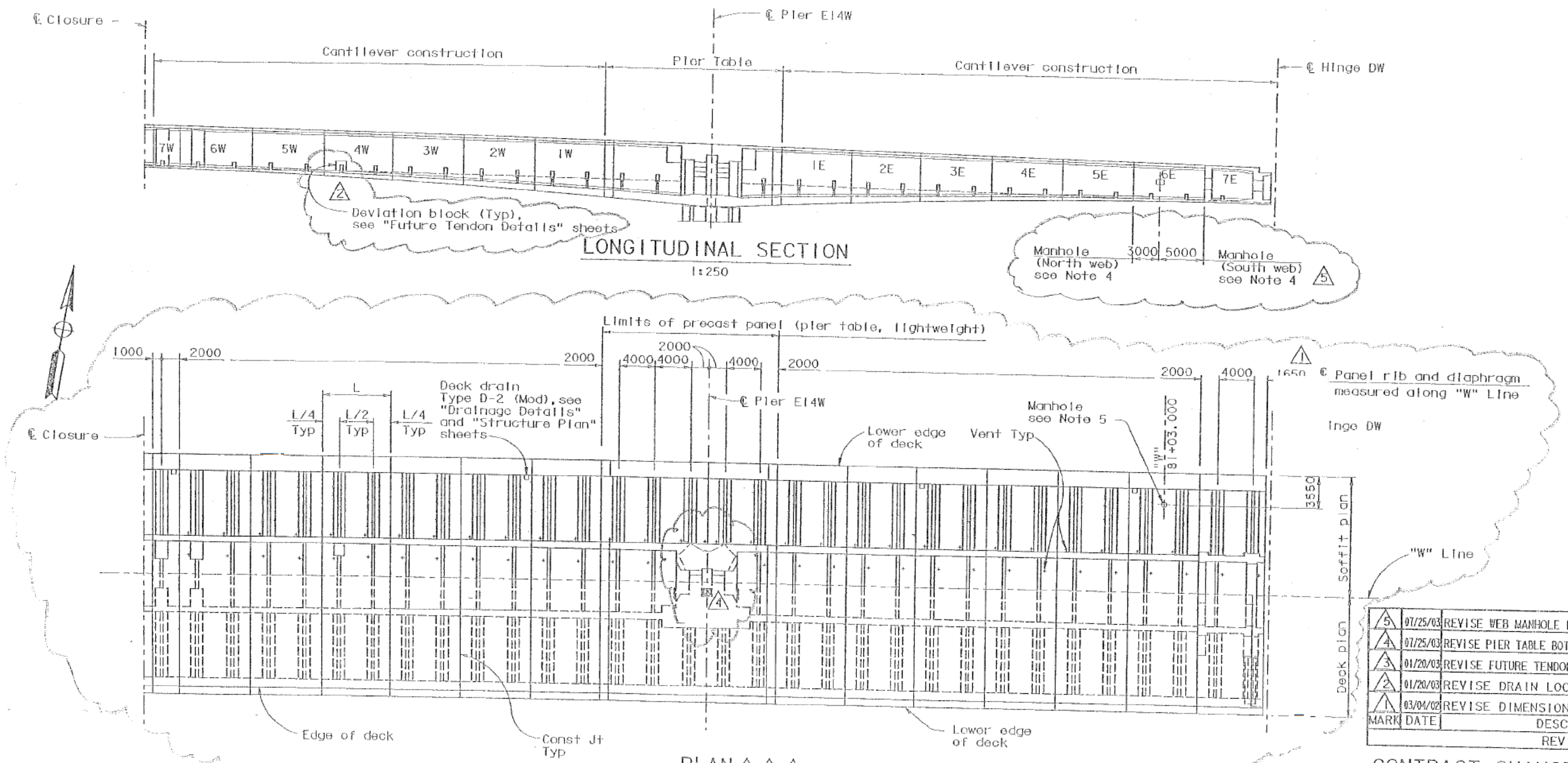

MARK	DATE	DESCRIPTIONS	CO	BY	CH'D
5	07/25/03	REVISE WEB MANHOLE LOCATIONS	24	MR	JC
4	07/25/03	REVISE PIER TABLE BOTTOM SLAB ACCESS OPENING		MR	JC
3	01/20/03	REVISE FUTURE TENDON DEV BLOCK LOCATION		MR	JC
2	01/20/03	REVISE DRAIN LOCATIONS	28	MR	SS
1	03/04/02	REVISE DIMENSION	9	TM	SC

REVISIONS

CONTRACT CHANGE ORDER NO. 28
SHEET 27 OF 48

100% PLANS

DESIGN OVERSIGHT
8/6/2007
SIGN OFF DATE
Rev. Dulet 6-10-98

DESIGN	BY S. Abbas	CHECKED M. Lamont	
DETAILS	BY A. Lishansky	CHECKED M. Lamont	
QUANTITIES	BY K. Cormier	CHECKED S. Shi	

ORIGINAL SCALE IN MILLIMETERS

PREPARED FOR THE STATE OF CALIFORNIA DEPARTMENT OF TRANSPORTATION

ALL DIMENSIONS ARE IN MILLIMETERS UNLESS OTHERWISE SHOWN

Sajid Abbas
PROJECT ENGINEER

BRIDGE NO. 34-0006L/R
KILOMETER POST 13.9/14.3, 0.0/1.6

SAN FRANCISCO OAKLAND BAY BRIDGE
EAST SPAN SEISMIC SAFETY PROJECT

SKYWAY STRUCTURES

GIRDER LAYOUT E14W

T·Y·LIN INTERNATIONAL
MOFFATT & NICHOL
a joint venture

SFOBB – Skyway Project
345 Burma Road, Oakland CA 94607
Telephone (510) 622-1071 Facsimile (510) 622-1069

REVISION MARKS ON CONTRACT PLAN CHANGES

SFOBB Skyway Project # 04-012024

Revisions to the following plans were prepared under the supervision of the undersigned engineer.

537R2, 540R2, 544R2, 551R2, 554R2, 558R2	Revision Marks 1 & 2	Dated	1/20/03
537R2, 540R2, 544R2, 551R2, 554R2, 558R2	Revision Marks 3 & 4	Dated	7/25/03
538R2, 539R2, 542R2, 543R2, 545R2, 546R2, 547R2, 552R2, 553R2, 555R2, 556R2, 557R2, 559R2, 560R2,561R2	Revision Marks 1 & 2	Dated	1/20/03
538R2, 539R2, 542R2, 543R2, 545R2, 546R2, 547R2, 552R2, 553R2, 555R2, 556R2, 557R2, 559R2, 560R2,561R2	Revision Marks 3	Dated	7/25/03
541R3	Revision Mark 1	Dated	3/04/02
541R3	Revision Marks 2 & 3	Dated	1/20/03
541R3	Revision Mark 4	Dated	7/25/03
548R3, 550R3, 562R3, 564R3	Revision Mark 1	Dated	3/04/02
548R3, 550R3, 562R3, 564R3	Revision Marks 2 & 3	Dated	1/20/03
548R3, 550R3, 562R3, 564R3	Revision Marks 4 & 5	Dated	7/25/03
549R3, 563R3	Revision Mark 1	Dated	3/04/02
549R3, 563R3	Revision Mark 2	Dated	1/20/03
549R3, 563R3	Revision Mark 3	Dated	7/25/03

For the project in SF/ALA County

Route 80

Km Post Description 04-SF, Ala-80-13.9/14.3,0.0/1.6

District/EA 012021

(Signature)

02/27/04
(Date)

Sajid Abbas
(Name)

(Title)

C 055274
(Registration No.)

12/31/04
(Date of Expiration)

REGISTERED PROFESSIONAL ENGINEER
Sajid Abbas
No. C 055274
Exp. 12/31/04
CIVIL
STATE OF CALIFORNIA

NOTES:

1. For notes, see "Girder Layout E3W" sheet.
2. For vent details, see "Girder Layout E3W" sheet.
3. Key to segment nomenclature: 1 E or W
   Segment No. — East or West
4. For web manhole details, see "Miscellaneous Details" sheets.
5. For deck manhole details, see B7-11.
6. Orientation of diaphragm and precast panel Nb shall be normal to "W" Line.

DIST.	COUNTY	ROUTE	KILOMETER POST TOTAL PROJECT	SHEET NO.	TOTAL SHEETS
04	SF/Ala	80	13.9/14.3, 0.0/1.6	549R3	978

Sajid Abbas
REGISTERED ENGINEER - CIVIL
6-4-01
PLANS APPROVAL DATE
REGISTERED PROFESSIONAL ENGINEER Sajid Abbas No. C 055274 Exp. 12/31/04 CIVIL STATE OF CALIFORNIA

The State of California or its officers or agents shall not be responsible for the accuracy or completeness of electronic copies of this plan sheet.

T.Y. LIN / MOFFATT & NICHOL
825 BATTERY STREET
SAN FRANCISCO, CA 94111

Caltrans now has a web site! To get to the web site, go to: http://www.dot.ca.gov

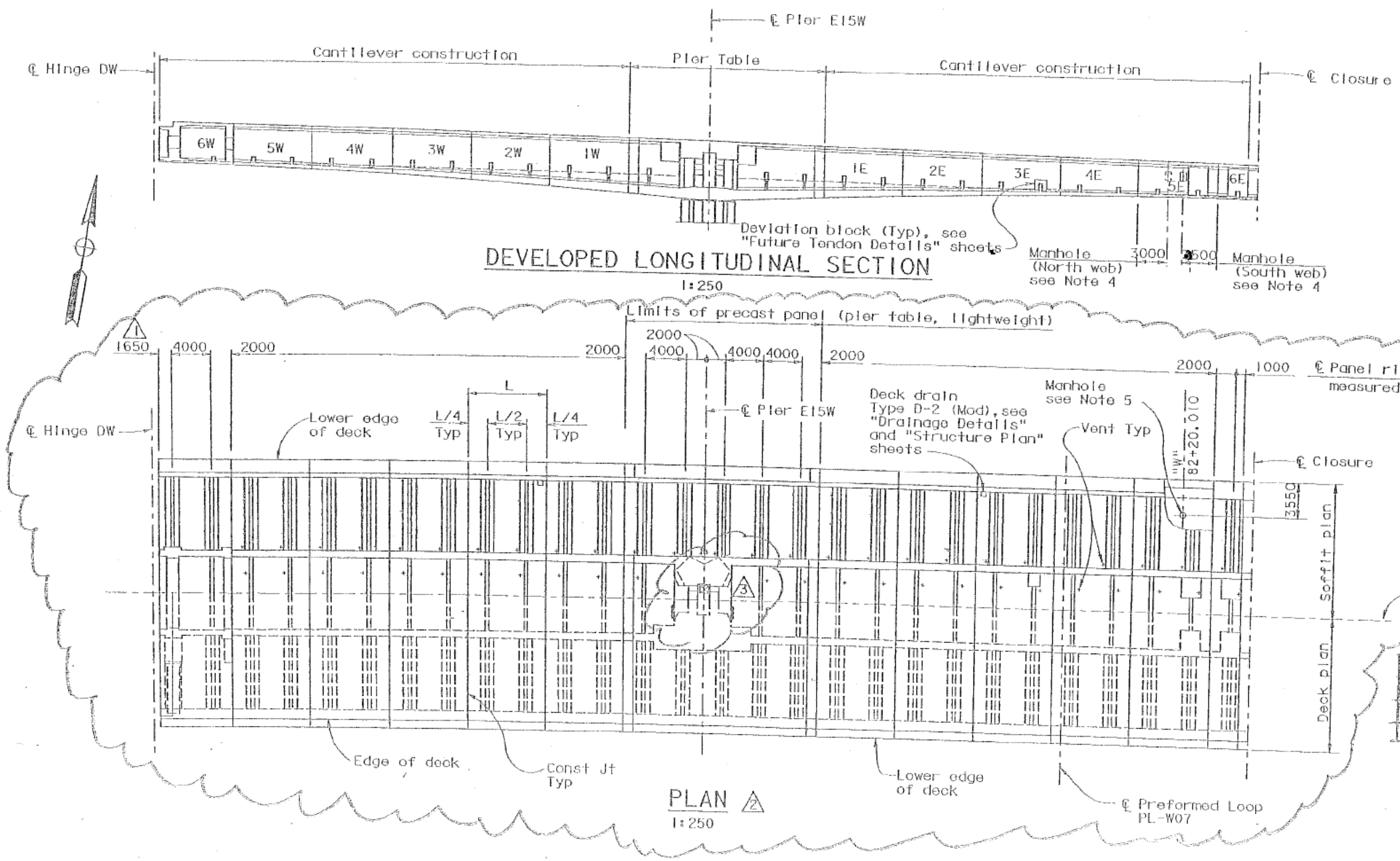

MARK	DATE	DESCRIPTIONS	BY	CH'D
52	3 07/25/03	REVISE PIER TABLE BOTTOM SLAB ACCESS OPENING	MR	JC
28	2 01/20/03	REVISE DRAIN LOCATIONS	MR	SS
9	1 03/04/02	REVISE DIMENSION	TM	SC
000		REVISIONS		

CONTRACT CHANGE ORDER NO. 28
SHEET 28 OF 48

100% P&E

DESIGN OVERSIGHT 8/6/2003
SIGN OFF DATE
Rev. Date: 5-18-98

DESIGN	BY S. Abbas	CHECKED M. Lamont	
DETAILS	BY A. Lishansky	CHECKED M. Lamont	
QUANTITIES	BY K. Cormier	CHECKED S. Shi	

ORIGINAL SCALE IN MILLIMETERS

PREPARED FOR THE STATE OF CALIFORNIA DEPARTMENT OF TRANSPORTATION

ALL DIMENSIONS ARE IN MILLIMETERS UNLESS OTHERWISE SHOWN

Sajid Abbas
PROJECT ENGINEER

BRIDGE NO. 34-0006L/R
KILOMETER POST 13.9/14.3, 0.0/1.6

SAN FRANCISCO OAKLAND BAY BRIDGE
EAST SPAN SEISMIC SAFETY PROJECT

SKYWAY STRUCTURES

GIRDER LAYOUT E15W

T.Y.LIN INTERNATIONAL
MOFFATT & NICHOL
a joint venture

SFOBB – Skyway Project
345 Burma Road, Oakland CA 94607
Telephone (510) 622-1071 Facsimile (510) 622-1069

REVISION MARKS ON CONTRACT PLAN CHANGES

SFOBB Skyway Project # 04-012024

Revisions to the following plans were prepared under the supervision of the undersigned engineer.

537R2, 540R2, 544R2, 551R2, 554R2, 558R2	Revision Marks 1 & 2	Dated	1/20/03
537R2, 540R2, 544R2, 551R2, 554R2, 558R2	Revision Marks 3 & 4	Dated	7/25/03
538R2, 539R2, 542R2, 543R2, 545R2, 546R2, 547R2, 552R2, 553R2, 555R2, 556R2, 557R2, 559R2, 560R2,561R2	Revision Marks 1 & 2	Dated	1/20/03
538R2, 539R2, 542R2, 543R2, 545R2, 546R2, 547R2, 552R2, 553R2, 555R2, 556R2, 557R2, 559R2, 560R2,561R2	Revision Marks 3	Dated	7/25/03
541R3	Revision Mark 1	Dated	3/04/02
541R3	Revision Marks 2 & 3	Dated	1/20/03
541R3	Revision Mark 4	Dated	7/25/03
548R3, 550R3, 562R3, 564R3	Revision Mark 1	Dated	3/04/02
548R3, 550R3, 562R3, 564R3	Revision Marks 2 & 3	Dated	1/20/03
548R3, 550R3, 562R3, 564R3	Revision Marks 4 & 5	Dated	7/25/03
549R3, 563R3	Revision Mark 1	Dated	3/04/02
549R3, 563R3	Revision Mark 2	Dated	1/20/03
549R3, 563R3	Revision Mark 3	Dated	7/25/03

For the project in SF/ALA County

Route 80

Km Pos! Description 04-SF, Ala-80-13 9/ 14 7.0 0/1.6

District/EA 012021

(Signature)

02/27/04
(Date)

Sajid Abbas
(Name)

(Title)

C 055274
(Registration No.)

12/3 1/04
(Date of Expiration)

REGISTERED PROFESSIONAL ENGINEER
Sajid Abbas
No C 055274
Exp 12/31/04
CIVIL
STATE OF CALIFORNIA

NOTES:

1. For notes, see "Girder Layout E3W" sheet.
2. For vent details, see "Girder Layout E3W" sheet.
3. Key to segment nomenclature: E or W — Segment No. — East or West
4. For web manhole details, see "Miscellaneous Details" sheets.
5. For deck manhole details, see (B7-11).
6. Orientation of diaphragm and precast panel rib shall be normal to "W" Line.

DIST.	COUNTY	ROUTE	KILOMETER POST TOTAL PROJECT	SHEET NO.	TOTAL SHEETS
04	SF/Ala	80	13.9/14.3. 0.0/1.6	550R3	978

REGISTERED ENGINEER - CIVIL

6-4-01
PLANS APPROVAL DATE

REGISTERED PROFESSIONAL ENGINEER Sajid Abbas No. C 055274 Exp. 12/31/04 CIVIL STATE OF CALIFORNIA

The State of California or its officers or agents shall not be responsible for the accuracy or completeness of electronic copies of this plan sheet.

T.Y. LIN / MOFFATT & NICHOL
825 BATTERY STREET
SAN FRANCISCO, CA 94111

Caltrans now has a web site! To get to the web site, go to: http://www.dot.ca.gov

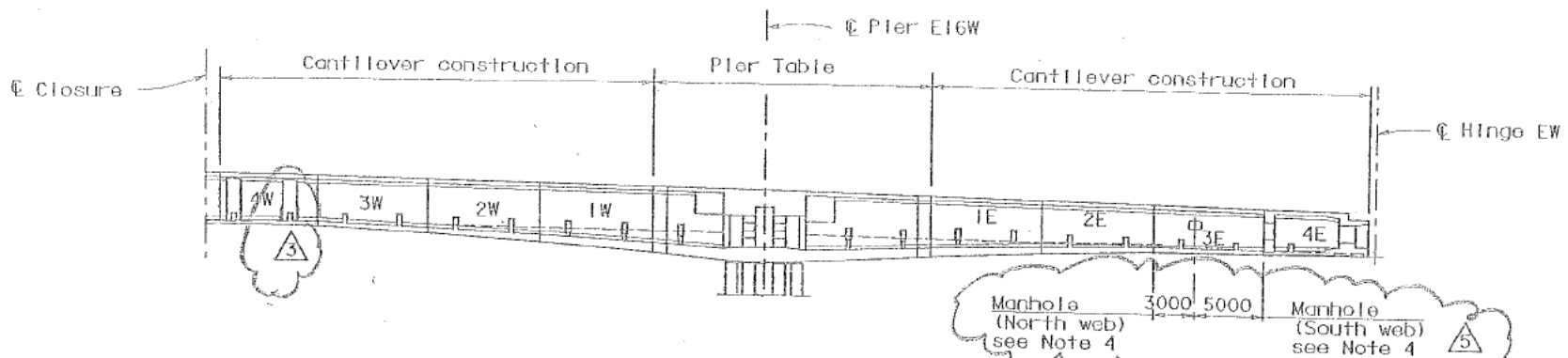

DEVELOPED LONGITUDINAL SECTION
1:250

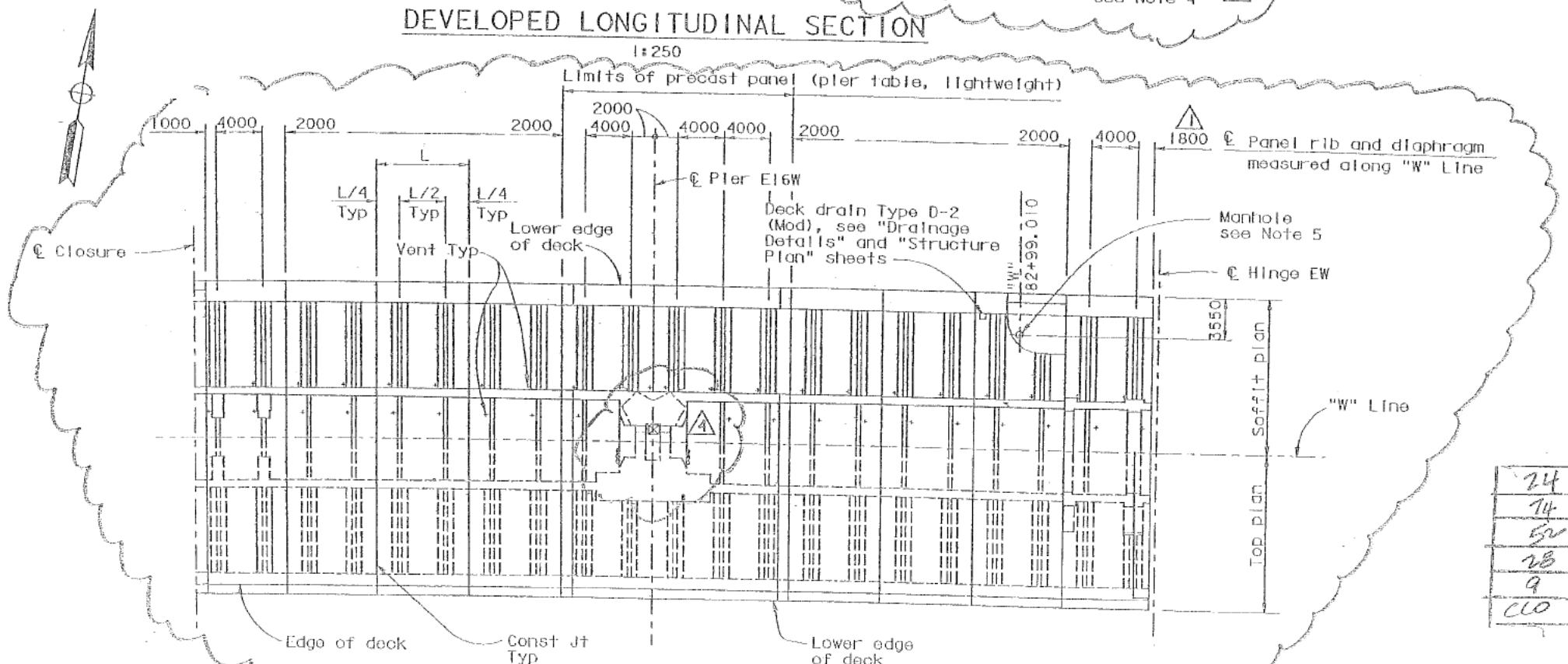

PLAN
1:250

MARK	DATE	DESCRIPTIONS	BY	CH'D
24	07/25/03	REVISE WEB MANHOLE LOCATIONS	MR	JC
14	07/25/03	REVISE PIER TABLE BOTTOM SLAB ACCESS OPENING	MR	SS
52	01/20/03	REVISE FUTURE TENDON DEV BLOCK LOCATION	MR	SS
28	01/20/03	REVISE DRAINAGE LOCATIONS	MR	SS
9	03/04/02	REVISE DIMENSION	TM	SC
CCO		REVISIONS		

CONTRACT CHANGE ORDER NO. 28
SHEET 29 OF 48

100% PS&E

DESIGN OVERSIGHT
8/6/2003
SIGN OFF DATE

Rev. Date: 5-18-98

DESIGN	BY S. Abbas	CHECKED M. Lamont	
DETAILS	BY A. Lishansky	CHECKED M. Lamont	
QUANTITIES	BY K. Cormier	CHECKED S. Shi	

PREPARED FOR THE STATE OF CALIFORNIA DEPARTMENT OF TRANSPORTATION

Sajid Abbas
PROJECT ENGINEER

BRIDGE NO. 34-0006L/R
KILOMETER POST 13.9/14.3, 0.0/1.6

ALL DIMENSIONS ARE IN MILLIMETERS UNLESS OTHERWISE SHOWN

SAN FRANCISCO OAKLAND BAY BRIDGE
EAST SPAN SEISMIC SAFETY PROJECT

SKYWAY STRUCTURES

GIRDER LAYOUT E16W

T.Y.LIN INTERNATIONAL
MOFFATT & NICHOL
a joint venture

SFOBB – Skyway Project
345 Burma Road, Oakland CA 94607
Telephone (510)622-1071 Facsimile (510) 622-1069

REVISION MARKS ON CONTRACT PLAN CHANGES

SFOBB Skyway Project # 04-012024

Revisions to the following plans were prepared under the supervision of the undersigned engineer.

537R2, 540R2, 544R2, 551R2, 554R2, 558R2	Revision Marks 1 & 2	Dated	1/20/03
537R2, 540R2, 544R2, 551R2, 554R2, 558R2	Revision Marks 3 & 4	Dated	7/25/03
538R2, 539R2, 542R2, 543R2, 545R2, 546R2, 547R2, 552R2, 553R2, 555R2, 556R2, 557R2, 559R2, 560R2,561R2	Revision Marks 1 & 2	Dated	1/20/03
538R2, 539R2, 542R2, 543R2, 545R2, 546R2, 547R2, 552R2, 553R2, 555R2, 556R2, 557R2, 559R2, 560R2,561R2	Revision Marks 3	Dated	7/25/03
541R3	Revision Mark 1	Dated	3/04/02
541R3	Revision Marks 2 & 3	Dated	1/20/03
541R3	Revision Mark 4	Dated	7/25/03
548R3, 550R3, 562R3, 564R3	Revision Mark 1	Dated	3/04/02
548R3, 550R3, 562R3, 564R3	Revision Marks 2 & 3	Dated	1/20/03
548R3, 550R3, 562R3, 564R3	Revision Marks 4 & 5	Dated	7/25/03
549R3, 563R3	Revision Mark 1	Dated	3/04/02
549R3, 563R3	Revision Mark 2	Dated	1/20/03
549R3, 563R3	Revision Mark 3	Dated	7/25/03

For the project in SF/ALA County

Route 80

Km Post Description 04-SF, Ala-80-13.9/14.3,0.0/1.6

District/EA 012021

(Signature)

02/27/04
(Date)

Sajid Abbas
(Name)

(Title)

C 055274
(Registration No.)

1213 1104
(Date of Expiration)

REGISTERED PROFESSIONAL ENGINEER
Sajid Abbas
No. C 055274
Exp. 12/31/04
CIVIL
STATE OF CALIFORNIA

NOTES:

1. For notes, see "Girder Layout E3W" sheet.
2. For vent details, see "Girder Layout E3W" sheet.
3. For bikepath details, see "Bikepath Details" sheets.
4. Key to segment nomenclature: 1 E or W
   Segment No. — East or West
5. For web manhole details, see "Miscellaneous Details" sheets.
6. For deck manhole details, see (87-11).
7. Orientation of diaphragm and precast panel rib shall be normal to "E" Li

MARK	DATE	DESCRIPTIONS	BY	CH'D
4	01/25/03	REVISE WEB MANHOLE LOCATIONS	MR	JC
3	01/25/03	REVISE PIER TABLE BOTTOM SLAB ACCESS OPENING	MR	JC
2	01/20/03	REVISE FUTURE TENDON DEV BLOCK LOCATION	MR	JC
1	01/20/03	REVISE DRAIN LOCATIONS	MR	SS

REVISIONS

CONTRACT CHANGE ORDER NO. 28
SHEET 30 OF 48

DIST.	COUNTY	ROUTE	KILOMETER POST TOTAL PROJECT	SHEET NO.	TOTAL SHEETS
04	SF, Ala	80	13.9 / 14.3, 0.0 / 1.6	551R2	978

REGISTERED ENGINEER - CIVIL
6-4-01
PLANS APPROVAL DATE
The State of California or its officers or agents shall not be responsible for the accuracy or completeness of electronic copies of this plan sheet.
REGISTERED PROFESSIONAL ENGINEER Scott Hunter No. C 048066 Exp. 12/31/03 CIVIL STATE OF CALIFORNIA

T.Y. LIN / MOFFATT & NICHOL
825 BATTERY STREET
SAN FRANCISCO, CA 94111

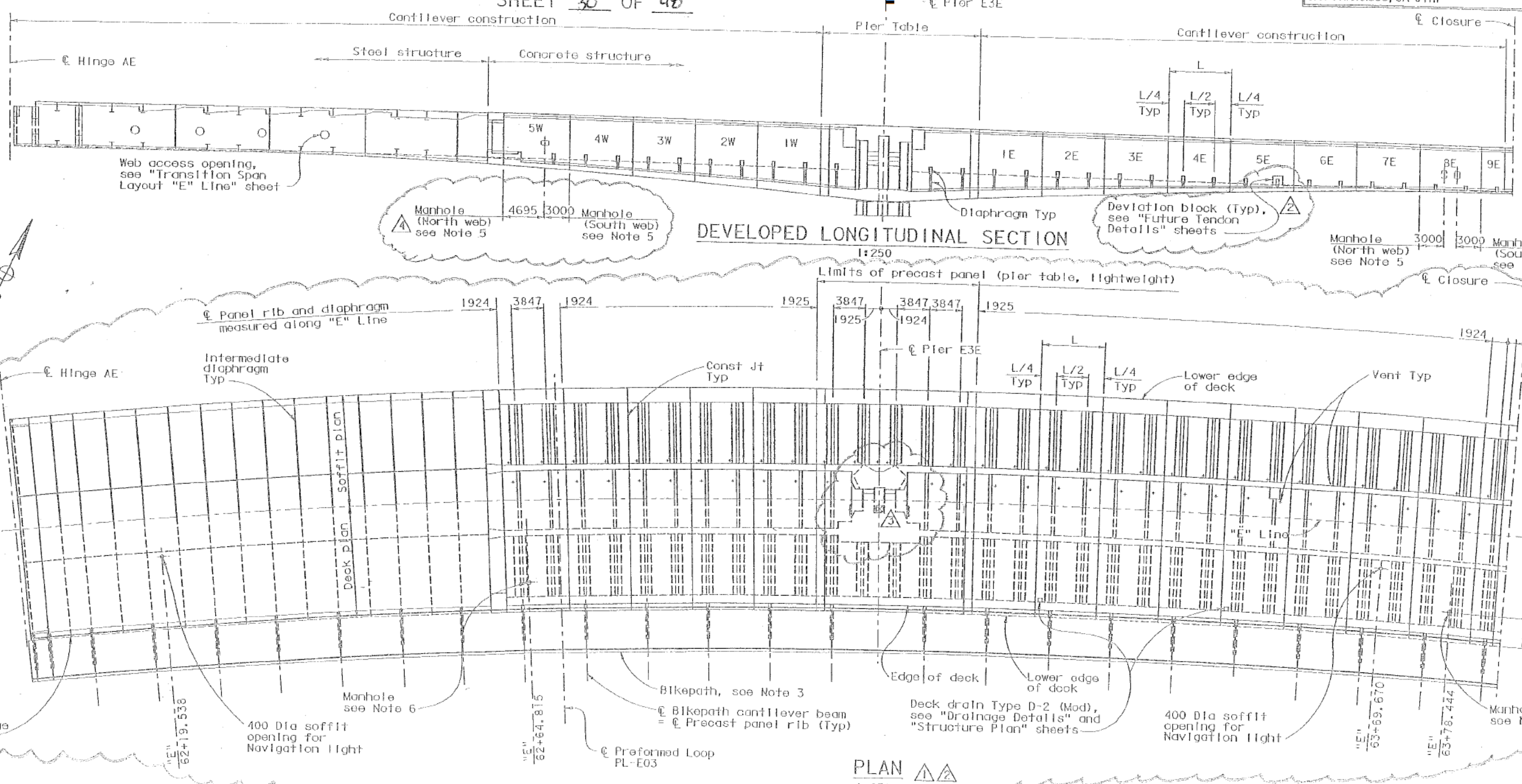

PLAN
1:250

ALL DIMENSIONS ARE IN MILLIMETERS UNLESS OTHERWISE SHOWN

DESIGN OVERSIGHT 8/6/2003
SIGN OFF DATE
Rev. Date: 5-30-86

DESIGN	BY S. Hunter	CHECKED M. Lamont	
DETAILS	BY A. Lishansky	CHECKED M. Lamont	
QUANTITIES	BY K. Cormier	CHECKED S. Shi	

PREPARED FOR THE STATE OF CALIFORNIA DEPARTMENT OF TRANSPORTATION

Sajid Abbas
PROJECT ENGINEER

BRIDGE NO. 34-0006L/R
KILOMETER POST 13.9/14.3, 0.0/1.6

SAN FRANCISCO OAKLAND BAY BRIDGE
EAST SPAN SEISMIC SAFETY PROJECT

SKYWAY STRUCTURES

GIRDER LAYOUT E3E

ORIGINAL SCALE IS MILLIMETRE

100% PSE

T.Y.LIN INTERNATIONAL
MOFFATT & NICHOL
a joint venture

SFOBB – Skyway Project
345 Burma Road, Oakland CA 94607
Telephone (510)622-1071 Facsimile (510) 622-1069

REVISION MARKS ON CONTRACT PLAN CHANGES

SFOBB Skyway Project # 04-012024

Revisions to the following plans were prepared under the supervision of the undersigned engineer.

537R2, 540R2, 544R2, 551R2, 554R2, 558R2	Revision Marks 1 & 2	Dated	1/20/03
537R2, 540R2, 544R2, 551R2, 554R2, 558R2	Revision Marks 3 & 4	Dated	7/25/03
538R2, 539R2, 542R2, 543R2, 545R2, 546R2, 547R2, 552R2, 553R2, 555R2, 556R2, 557R2, 559R2, 560R2, 561R2	Revision Marks 1 & 2	Dated	1/20/03
538R2, 539R2, 542R2, 543R2, 545R2, 546R2, 547R2, 552R2, 553R2, 555R2, 556R2, 557R2, 559R2, 560R2, 561R2	Revision Marks 3	Dated	7/25/03
541R3	Revision Mark 1	Dated	3/04/02
541R3	Revision Marks 2 & 3	Dated	1/20/03
541R3	Revision Mark 4	Dated	7/25/03
548R3, 550R3, 562R3, 564R3	Revision Mark 1	Dated	3/04/02
548R3, 550R3, 562R3, 564R3	Revision Marks 2 & 3	Dated	1/20/03
548R3, 550R3, 562R3, 564R3	Revision Marks 4 & 5	Dated	7/25/03
549R3, 563R3	Revision Mark 1	Dated	3/04/02
549R3, 563R3	Revision Mark 2	Dated	1/20/03
549R3, 563R3	Revision Mark 3	Dated	7/25/03

For the project in SF/ALA County

Route 80

Kin Post Description 04-SF, Ala-80-13 9/14 3.0 0/1 6

District/EA 012021

(Signature) 02/27/04 (Date)

Sajid Abbas
(Name)

(Title)

C 055274
(Registration No.)

12/3 1/04
(Date of Expiration)

REGISTERED PROFESSIONAL ENGINEER
Sajid Abbas
No. C 055274
Exp. 12/31/04
CIVIL
STATE OF CALIFORNIA

NOTES:

1. For notes, see "Girder Layout E3W" sheet.
2. For vent details, see "Girder Layout E3W" sheet.
3. For bikepath details, see "Bikepath Details" sheets.
4. Key to segment nomenclature: 1 E or W
   Segment No. — East or West
5. For web manhole details, see "Miscellaneous Details" sheets.
6. For deck manhole details, see (B7-11).
7. Orientation of diaphragm and precast panel rib shall be normal to "E" Line.

MARK	DATE	DESCRIPTIONS	BY	CH'D
3	07/25/03	REVISE PIER TABLE BOTTOM SLAB ACCESS OPENING	MR	JC
2	01/20/03	REVISE FUTURE TENDON DEV BLOCK LOCATION	MR	JC
1	01/20/03	REVISE DRAIN LOCATIONS	MR	SS

REVISIONS

CONTRACT CHANGE ORDER NO. 28
SHEET 31 OF 48

Caltrans Metric

DIST.	COUNTY	ROUTE	KILOMETER POST TOTAL PROJECT	SHEET NO.	TOTAL SHEETS
04	SF, Ala	80	13.9 / 14.3, 0.0 / 1.6	552R2	978

REGISTERED ENGINEER - CIVIL
6-4-01
PLANS APPROVAL DATE
The State of California or its officers or agents shall not be responsible for the accuracy or completeness of electronic copies of this plansheet.

REGISTERED PROFESSIONAL ENGINEER Scott Hunter No. C 048066 Exp. 12/31/03 CIVIL STATE OF CALIFORNIA

T.Y. LIN / MOFFATT & NICHOL
825 BATTERY STREET
SAN FRANCISCO, CA 94111

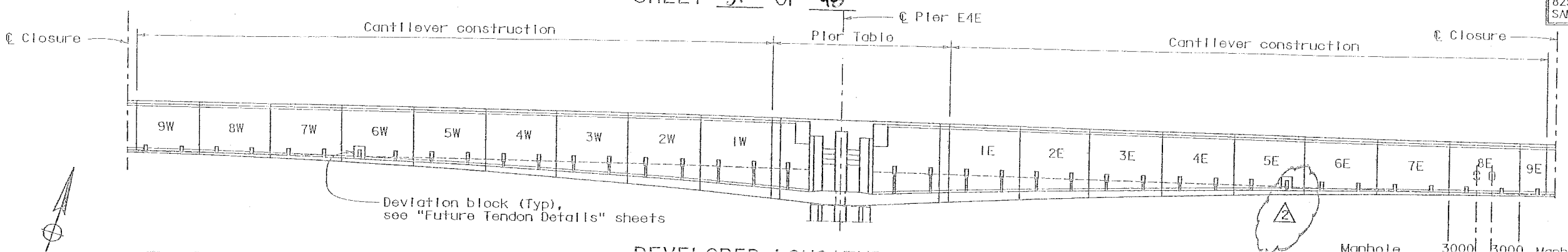

DEVELOPED LONGITUDINAL SECTION
1:250

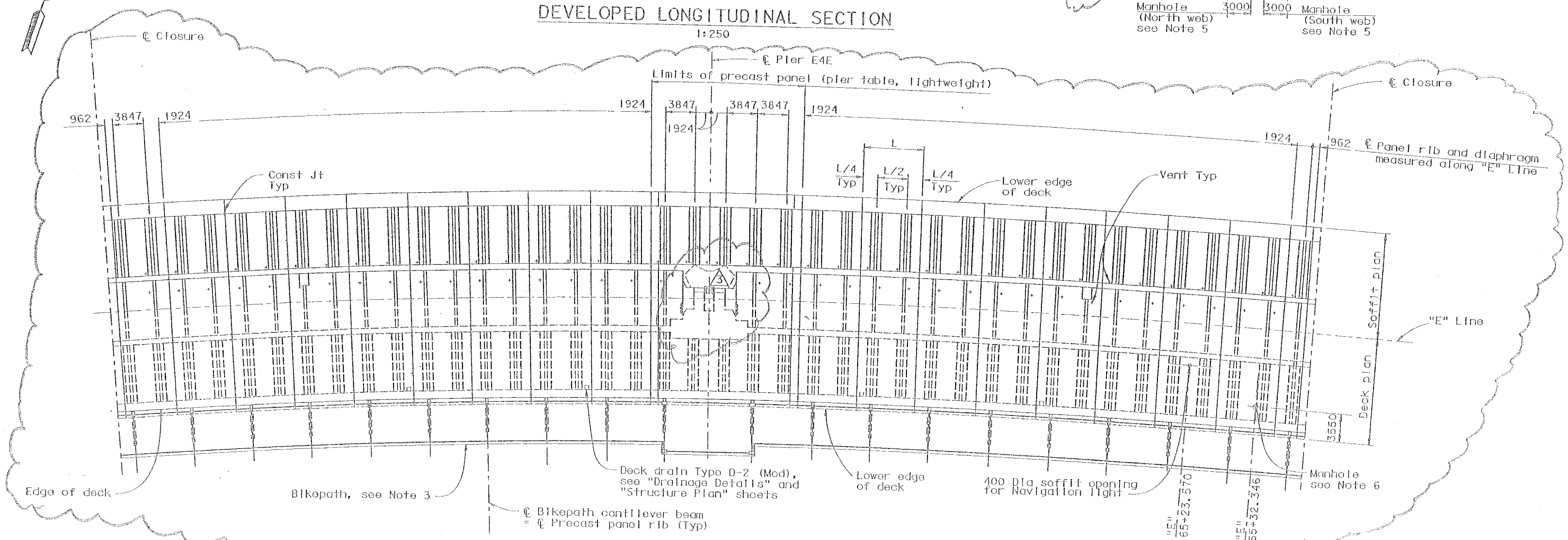

PLAN
1:250

ALL DIMENSIONS ARE IN MILLIMETERS UNLESS OTHERWISE SHOWN

DESIGN OVERSIGHT 8/6/2003
SIGN OFF DATE
Rev. Date: 5-18-99

DESIGN	BY S. Hunter	CHECKED M. Lamont	
DETAILS	BY A. Lishansky	CHECKED M. Lamont	
QUANTITIES	BY K. Cormier	CHECKED S. Shi	

PREPARED FOR THE STATE OF CALIFORNIA DEPARTMENT OF TRANSPORTATION

Sajid Abbas
PROJECT ENGINEER

BRIDGE NO. 34-0006L/R
KILOMETER POST 13.9/14.3, 0.0/1.6

SAN FRANCISCO OAKLAND BAY BRIDGE
EAST SPAN SEISMIC SAFETY PROJECT

SKYWAY STRUCTURES

GIRDER LAYOUT E4E

ORIGINAL SCALE IN MILLIMETERS

100% PS&E

T.Y.LIN INTERNATIONAL
MOFFATT & NICHOL
a joint venture

SFOBB – Skyway Project
345 Burma Road, Oakland CA 94607
Telephone (510) 622-1071 Facsimile (510) 622-1069

REVISION MARKS ON CONTRACT PLAN CHANGES

SFOBB Skyway Project # 04-012024

Revisions to the following plans were prepared under the supervision of the undersigned engineer.

537R2, 540R2, 544R2, 551R2, 554R2, 558R2	Revision Marks 1 & 2	Dated	1/20/03
537R2, 540R2, 544R2, 551R2, 554R2, 558R2	Revision Marks 3 & 4	Dated	7/25/03
538R2, 539R2, 542R2, 543R2, 545R2, 546R2, 547R2, 552R2, 553R2, 555R2, 556R2, 557R2, 559R2, 560R2,561R2	Revision Marks 1 & 2	Dated	1/20/03
538R2, 539R2, 542R2, 543R2, 545R2, 546R2, 547R2, 552R2, 553R2, 555R2, 556R2, 557R2, 559R2, 560R2,561R2	Revision Marks 3	Dated	7/25/03
541R3	Revision Mark 1	Dated	3/04/02
541R3	Revision Marks 2 & 3	Dated	1/20/03
541R3	Revision Mark 4	Dated	7/25/03
548R3, 550R3, 562R3, 564R3	Revision Mark 1	Dated	3/04/02
548R3, 550R3, 562R3, 564R3	Revision Marks 2 & 3	Dated	1/20/03
548R3, 550R3, 562R3, 564R3	Revision Marks 4 & 5	Dated	7/25/03
549R3, 563R3	Revision Mark 1	Dated	3/04/02
549R3, 563R3	Revision Mark 2	Dated	1/20/03
549R3, 563R3	Revision Mark 3	Dated	7/25/03

For the project in SF/ALA County

Route 80

Km Post Description 04-SF, Ala-80-13.9/14.3,0.0/1.6

District/EA 012021

(Signature)

02/27/04
(Date)

Sajid Abbas
(Name)

(Title)

C 055274
(Registration No.)

12/31/04
(Date of Expiration)

REGISTERED PROFESSIONAL ENGINEER
Sajid Abbas
No. C 055274
Exp. 12/31/04
CIVIL
STATE OF CALIFORNIA

NOTES:

1. For notes, see "Girder Layout E3W" sheet.
2. For vent details, see "Girder Layout E3W" sheet.
3. For bikepath details, see "Bikepath Details" sheets.
4. Key to segment nomenclature: 1 E or W (Segment No. — East or West)
5. For web manhole details, see "Miscellaneous Details" sheets.
6. For deck manhole details, see B7-11.
7. Orientation of diaphragm and precast panel rib shall be normal to "E" Line.

MARK	DATE	DESCRIPTIONS	BY	CH'D	
3	01/25/03	REVISE PIER TABLE BOTTOM SLAB ACCESS OPENING	MR	JC	74
2	01/20/03	REVISE FUTURE TENDON DEV BLOCK LOCATION	MR	JC	52
1	01/20/03	REVISE DRAIN LOCATIONS	MR	SS	28

REVISIONS

CONTRACT CHANGE ORDER NO. 28
SHEET 32 OF 48

DIST.	COUNTY	ROUTE	KILOMETER POST TOTAL PROJECT	SHEET NO.	TOTAL SHEETS
04	SF, Ala	80	13.9 / 14.3, 0.0 / 1.6	553R2	978

REGISTERED ENGINEER - CIVIL
6-4-01
PLANS APPROVAL DATE

REGISTERED PROFESSIONAL ENGINEER Scott Hunter No. C 048066 Exp. 12/31/03 CIVIL STATE OF CALIFORNIA

The State of California or its officers or agents shall not be responsible for the accuracy or completeness of electronic copies of this plan sheet.

T.Y. LIN / MOFFATT & NICHOL
825 BATTERY STREET
SAN FRANCISCO, CA 94111

Caltrans now has a web site! To get to the web site, go to: http://www.dot.ca.gov

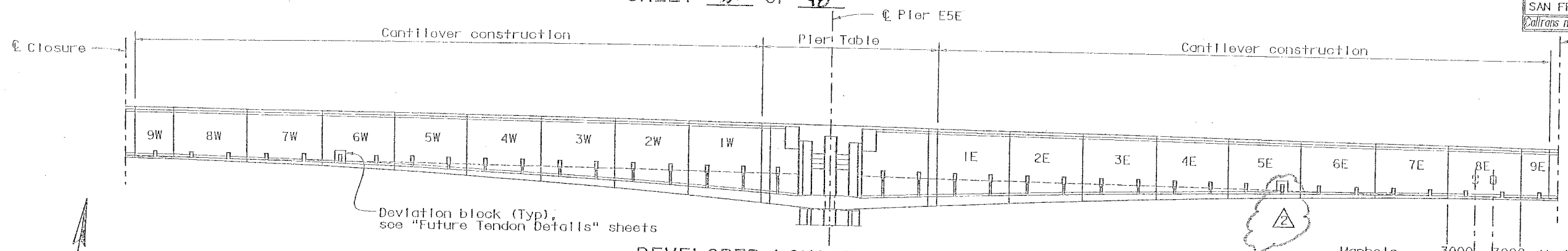

DEVELOPED LONGITUDINAL SECTION
1:250

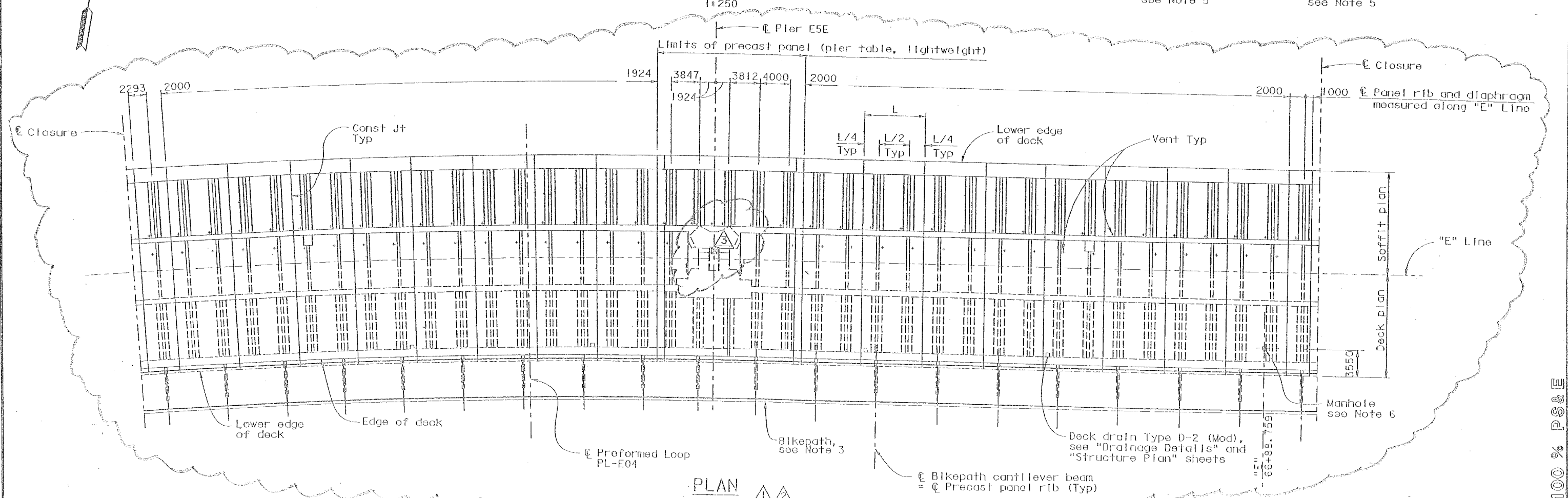

PLAN
1:250

ALL DIMENSIONS ARE IN MILLIMETERS UNLESS OTHERWISE SHOWN

DESIGN OVERSIGHT 8/6/2003
SIGN OFF DATE
Rev. Date: 5-18-98

DESIGN	BY S. Hunter	CHECKED M. Lamont	
DETAILS	BY A. Lishansky	CHECKED M. Lamont	
QUANTITIES	BY K. Cormier	CHECKED S. Shi	

PREPARED FOR THE STATE OF CALIFORNIA DEPARTMENT OF TRANSPORTATION

Sajid Abbas
PROJECT ENGINEER

BRIDGE NO. 34-0006L/R
KILOMETER POST 13.9/14.3, 0.0/1.6

SAN FRANCISCO OAKLAND BAY BRIDGE
EAST SPAN SEISMIC SAFETY PROJECT

SKYWAY STRUCTURES

GIRDER LAYOUT E5E

ORIGINAL SCALE IN MILLIMETERS

100% PS&E

T·Y·LIN INTERNATIONAL
MOFFATT & NICHOL
a joint venture

SFOBB – Skyway Project
345 Burma Road, Oakland **CA** 94607
Telephone (510)622-1071 Facsimile (510) 622-1069

REVISION MARKS ON CONTRACT PLAN CHANGES

SFOBB Skyway Project # 04-012024

Revisions to the following plans were prepared under the supervision of the undersigned engineer.

537R2, 540R2, 544R2, 551R2, 554R2, 558R2	Revision Marks 1 & 2	Dated	1/20/03
537R2, 540R2, 544R2, 551R2, 554R2, 558R2	Revision Marks 3 & 4	Dated	7/25/03
538R2, 539R2, 542R2, 543R2, 545R2, 546R2, 547R2, 552R2, 553R2, 555R2, 556R2, 557R2, 559R2, 560R2,561R2	Revision Marks 1 & 2	Dated	1/20/03
538R2, 539R2, 542R2, 543R2, 545R2, 546R2, 547R2, 552R2, 553R2, 555R2, 556R2, 557R2, 559R2, 560R2,561R2	Revision Marks 3	Dated	7/25/03
541R3	Revision Mark 1	Dated	3/04/02
541R3	Revision Marks 2 & 3	Dated	1/20/03
541R3	Revision Mark 4	Dated	7/25/03
548R3, 550R3, 562R3, 564R3	Revision Mark 1	Dated	3/04/02
548R3, 550R3, 562R3, 564R3	Revision Marks 2 & 3	Dated	1/20/03
548R3, 550R3, 562R3, 564R3	Revision Marks 4 & 5	Dated	7/25/03
549R3, 563R3	Revision Mark 1	Dated	3/04/02
549R3, 563R3	Revision Mark 2	Dated	1/20/03
549R3, 563R3	Revision Mark 3	Dated	7/25/03

For the project in SFIALA County

Route 80

Km Post Description 04-SF, Ala-80-13 9/14.3,0.0/1.6

District/EA 012021

(Signature)

02/27/04
(Date)

Sajid Abbas
(Name)

(Title)

C 055274
(Registration No.)

12131104
(Date of Expiration)

REGISTERED PROFESSIONAL ENGINEER
Sajid Abbas
No. C 055274
Exp. 12/31/04
CIVIL
STATE OF CALIFORNIA

NOTES:

1. For notes, see "Girder Layout E3W" sheet.
2. For vent details, see "Girder Layout E3W" sheet.
3. For bikepath details, see "Bikepath Details" sheets.
4. Key to segment nomenclature: 1 E or W
   Segment No. — East or West
5. For web manhole details, see "Miscellaneous Details" sheets.
6. For deck manhole details, see B7-11.
7. Orientation of diaphragm and precast panel rib shall be normal to "E" Line.

MARK	DATE	DESCRIPTIONS	BY	CH'D	
4	01/25/03	REVISE WEB MANHOLE LOCATIONS	MR	JC	24
3	01/25/03	REVISE PIER TABLE BOTTOM SLAB ACCESS OPENING	MR	JC	74
2	01/20/03	REVISE FUTURE TENDON DEV BLOCK LOCATION	MR	JC	52
1	01/20/03	REVISE DRAIN LOCATIONS	MR	SS	28

REVISIONS

CONTRACT CHANGE ORDER NO. 28
SHEET 33 OF 48

Caltrans Metric

DIST.	COUNTY	ROUTE	KILOMETER POST TOTAL PROJECT	SHEET NO.	TOTAL SHEETS
04	SF, Ala	80	13.9 / 14.3, 0.0 / 1.6	554R2	978

Scott Hunter
REGISTERED ENGINEER - CIVIL
6-4-01
PLANS APPROVAL DATE

REGISTERED PROFESSIONAL ENGINEER Scott Hunter No. C 046066 Exp. 12/31/03 CIVIL STATE OF CALIFORNIA

The State of California or its officers or agents shall not be responsible for the accuracy or completeness of electronic copies of this plan sheet.

T.Y. LIN / MOFFATT & NICHOL
825 BATTERY STREET
SAN FRANCISCO, CA 94111

Caltrans now has a web site! To get to the web site, go to: http://www.dot.ca.gov

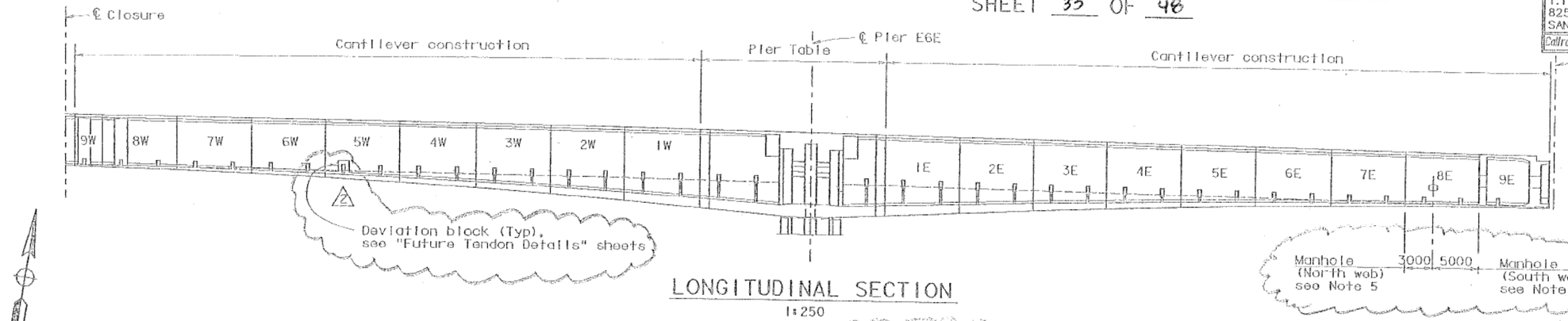

LONGITUDINAL SECTION
1:250

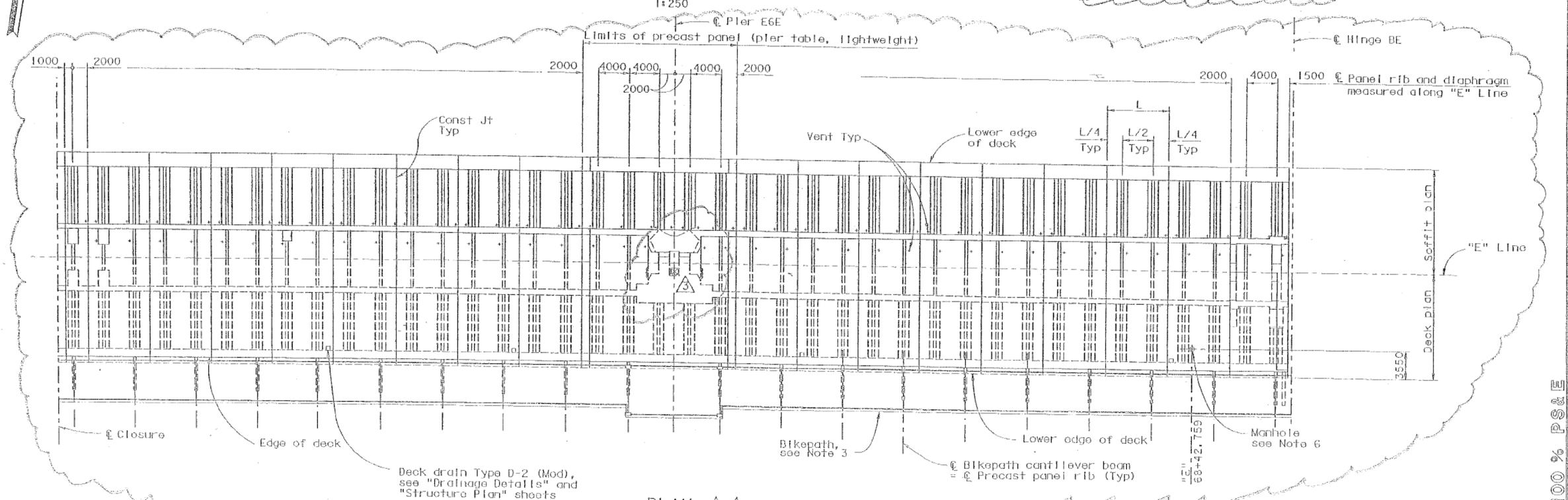

PLAN
1:250

ALL DIMENSIONS ARE IN MILLIMETERS UNLESS OTHERWISE SHOWN

DESIGN OVERSIGHT 8/6/2003
SIGN OFF DATE

DESIGN	BY S. Hunter	CHECKED M. Lamont	
DETAILS	BY A. Lishansky	CHECKED M. Lamont	
QUANTITIES	BY K. Cormier	CHECKED S. Shi	

PREPARED FOR THE STATE OF CALIFORNIA DEPARTMENT OF TRANSPORTATION

Salid Abbas
PROJECT ENGINEER

BRIDGE NO. 34-0006L/R
KILOMETER POST 13.9/14.3, 0.0/1.6

SAN FRANCISCO OAKLAND BAY BRIDGE
EAST SPAN SEISMIC SAFETY PROJECT

SKYWAY STRUCTURES

GIRDER LAYOUT E6E

Rev. Date 5-18-96

ORIGINAL SCALE IN MILLIMETERS

CU 04

T.Y.LIN INTERNATIONAL
MOFFATT & NICHOL
a joint venture

SFOBB – Skyway Project
345 Burma Road, Oakland CA 94607
Telephone (510) 622-1071 Facsimile (510) 622-1069

REVISION MARKS ON CONTRACT PLAN CHANGES

SFOBB Skyway Project # 04-012024

Revisions to the following plans were prepared under the supervision of the undersigned engineer.

537R2, 540R2, 544R2, 551R2, 554R2, 558R2	Revision Marks 1 & 2	Dated	1/20/03
537R2, 540R2, 544R2, 551R2, 554R2, 558R2	Revision Marks 3 & 4	Dated	7/25/03
538R2, 539R2, 542R2, 543R2, 545R2, 546R2, 547R2, 552R2, 553R2, 555R2, 556R2, 557R2, 559R2, 560R2,561R2	Revision Marks 1 & 2	Dated	1/20/03
538R2, 539R2, 542R2, 543R2, 545R2, 546R2, 547R2, 552R2, 553R2, 555R2, 556R2, 557R2, 559R2, 560R2,561R2	Revision Marks 3	Dated	7/25/03
541R3	Revision Mark 1	Dated	3/04/02
541R3	Revision Marks 2 & 3	Dated	1/20/03
541R3	Revision Mark 4	Dated	7/25/03
548R3, 550R3, 562R3, 564R3	Revision Mark 1	Dated	3/04/02
548R3, 550R3, 562R3, 564R3	Revision Marks 2 & 3	Dated	1/20/03
548R3, 550R3, 562R3, 564R3	Revision Marks 4 & 5	Dated	7/25/03
549R3, 563R3	Revision Mark 1	Dated	3/04/02
549R3, 563R3	Revision Mark 2	Dated	1/20/03
549R3, 563R3	Revision Mark 3	Dated	7/25/03

For the project in SF/ALA County

Route 80

Km Post Description 04-SF, Ala-80-13.9/14.3.0.0/1.6

District/EA 012021

(Signature) 02/27/04 (Date)

Sajid Abbas
(Name)

(Title)

C 055274
(Registration No.)

12131/04
(Date of Expiration)

REGISTERED PROFESSIONAL ENGINEER
Sajid Abbas
No. C 055274
Exp. 12/31/04
CIVIL
STATE OF CALIFORNIA

NOTES:

1. For notes, see "Girder Layout E3W" sheet.
2. For vent details, see "Girder Layout E3W" sheet.
3. For bikepath details, see "Bikepath Details" sheets.
4. Key to segment nomenclature: 1 E or W — Segment No. — East or West
5. For web manhole details, see "Miscellaneous Details" sheets.
6. For deck manhole details, see (B7-11).
7. Orientation of diaphragm and precast panel rib shall be normal to "E" Line.
8. For steel grating detail, see "Miscellaneous Details" sheets.

Caltrans may not be at web site. To go to the web site, go to: http://www.dot.ca.gov

DIST.	COUNTY	ROUTE	KILOMETER POST TOTAL PROJECT	SHEET NO.	TOTAL SHEETS
04	SF, Ala	80	13.9 / 14.3, 0.0 / 1.6	555R2	978

REGISTERED ENGINEER - CIVIL

6-4-01
PLANS APPROVAL DATE

Scott Hunter No. C 048066 Exp. 12/31/03 CIVIL STATE OF CALIFORNIA

The State of California or its officers or agents shall not be responsible for the accuracy or completeness of electronic copies of this plan sheet.

T.Y. LIN / MOFFATT & NICHOL
825 BATTERY STREET
SAN FRANCISCO, CA 94111

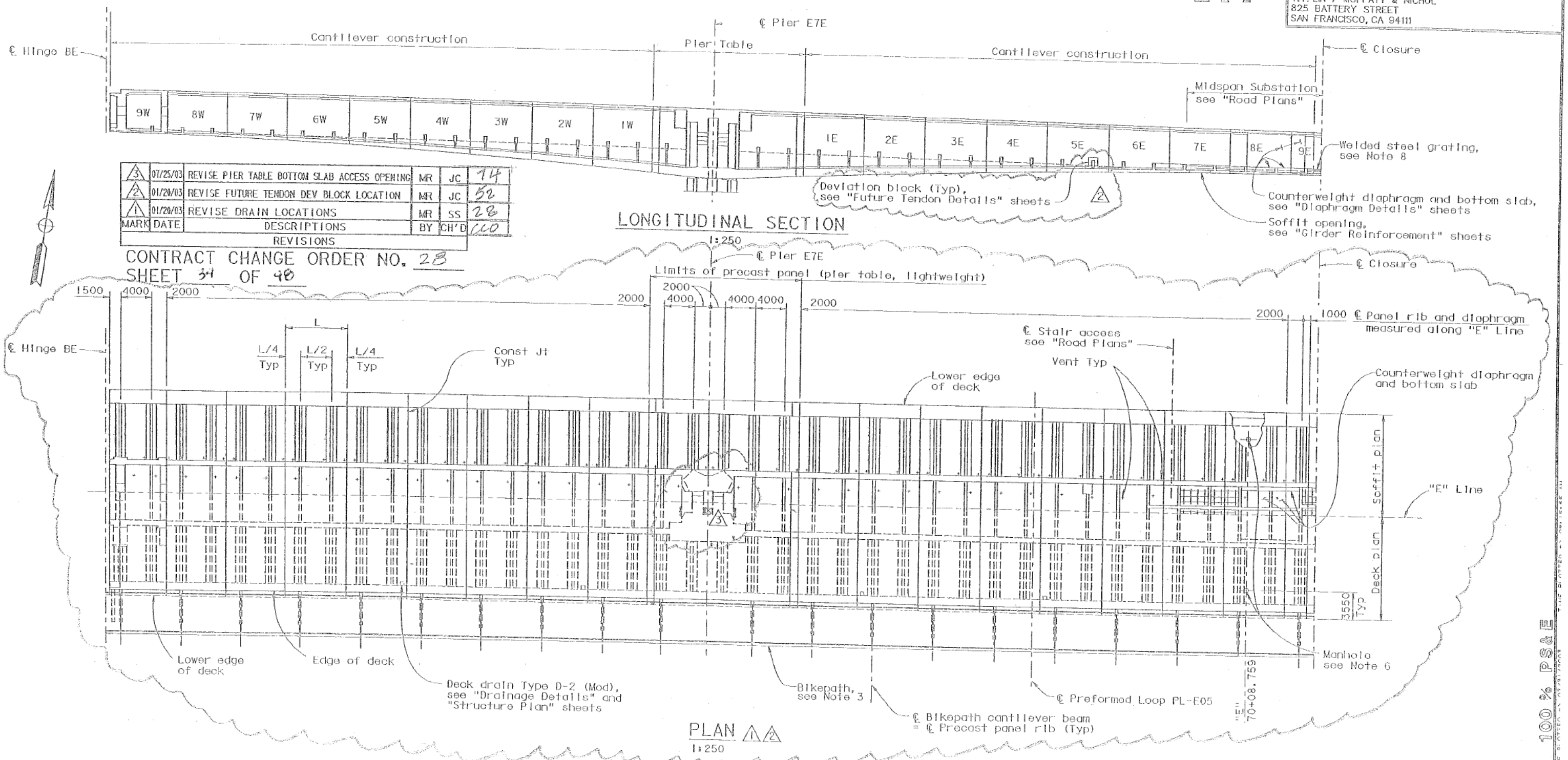

MARK	DATE	DESCRIPTIONS	BY	CH'D
3	07/25/03	REVISE PIER TABLE BOTTOM SLAB ACCESS OPENING	MR	JC
2	01/20/03	REVISE FUTURE TENDON DEV BLOCK LOCATION	MR	JC
1	01/20/03	REVISE DRAIN LOCATIONS	MR	SS

REVISIONS

CONTRACT CHANGE ORDER NO. 28
SHEET 34 OF 48

DESIGN OVERSIGHT 8/6/2003
SIGN OFF DATE

Rev. Date: 5-18-98

DESIGN	BY S. Hunter	CHECKED M. Lamont	
DETAILS	BY A. Lishansky	CHECKED M. Lamont	
QUANTITIES	BY K. Cornator	CHECKED S. Shi	

PREPARED FOR THE STATE OF CALIFORNIA DEPARTMENT OF TRANSPORTATION

Sajid Abbas
PROJECT ENGINEER

ALL DIMENSIONS ARE IN MILLIMETERS UNLESS OTHERWISE SHOWN

BRIDGE NO. 34-0006L/R
KILOMETER POST 13.9/14.3, 0.0/1.6

SAN FRANCISCO OAKLAND BAY BRIDGE
EAST SPAN SEISMIC SAFETY PROJECT

SKYWAY STRUCTURES

GIRDER LAYOUT E7E

100% PS&E

ORIGINAL SCALE IN MILLIMETERS

T.Y.LIN INTERNATIONAL
MOFFATT & NICHOL
a joint venture

SFOBB – Skyway Project
345 Burma Road, Oakland CA 94607
Telephone (510) 622-1071 Facsimile (510) 622-1069

REVISION MARKS ON CONTRACT PLAN CHANGES

SFOBB Skyway Project # 04-012024

Revisions *to* the following plans were prepared under the supervision of the undersigned engineer.

537R2, 540R2, 544R2, 551R2, 554R2, 558R2	Revision Marks 1 & 2	Dated	1/20/03
537R2, 540R2, 544R2, 551R2, 554R2, 558R2	Revision Marks 3 & 4	Dated	7/25/03
538R2, 539R2, 542R2, 543R2, 545R2, 546R2, 547R2, 552R2, 553R2, 555R2, 556R2, 557R2, 559R2, 560R2,561R2	Revision Marks 1 & 2	Dated	1/20/03
538R2, 539R2, 542R2, 543R2, 545R2, 546R2, 547R2, 552R2, 553R2, 555R2, 556R2, 557R2, 559R2, 560R2,561R2	Revision Marks 3	Dated	7/25/03
541R3	Revision Mark 1	Dated	3/04/02
541R3	Revision Marks 2 & 3	Dated	1/20/03
541R3	Revision Mark 4	Dated	7/25/03
548R3, 550R3, 562R3, 564R3	Revision Mark 1	Dated	3/04/02
548R3, 550R3, 562R3, 564R3	Revision Marks 2 & 3	Dated	1/20/03
548R3, 550R3, 562R3, 564R3	Revision Marks 4 & 5	Dated	7/25/03
549R3, 563R3	Revision Mark 1	Dated	3/04/02
549R3, 563R3	Revision Mark 2	Dated	1/20/03
549R3, 563R3	Revision Mark 3	Dated	7/25/03

For the project in SF/ALA County

Route X0

Km Post Description 04-SF, Ala-80-13.9/14.3,0.0/1.6

District/EA 012021

(Signature) 02/27/04 (Date)

Sajid Abbas
(Name)

(Title)

C 055274
(Registration No.)

12/3 1/04
(Date of Expiration)

REGISTERED PROFESSIONAL ENGINEER
Sajid Abbas
No. C 055274
Exp. 12/31/04
CIVIL
STATE OF CALIFORNIA

NOTES:

1. For notes, see "Girder Layout E3W" sheet.
2. For vent details, see "Girder Layout E3W" sheet.
3. For bikepath details, see "Bikepath Details" sheets.
4. Key to segment nomenclature: | E or W
   Segment No. — East or West
5. For web manhole details, see "Miscellaneous Details" sheets.
6. For deck manhole details, see (B7-11).
7. Orientation of diaphragm and precast panel rib shall be normal to "E" Line.
8. For steel grating detail, see "Miscellaneous Details" sheets.

DIST.	COUNTY	ROUTE	KILOMETER POST TOTAL PROJECT	SHEET NO.	TOTAL SHEETS
04	SF, Ala	80	13.9 / 14.3, 0.0 / 1.6	556R2	978

REGISTERED ENGINEER - CIVIL

6-4-01
PLANS APPROVAL DATE

Scott Hunter No. C 048066 Exp. 12/31/03 CIVIL STATE OF CALIFORNIA

The State of California or its officers or agents shall not be responsible for the accuracy or completeness of electronic copies of this plan sheet.

T.Y. LIN / MOFFATT & NICHOL
825 BATTERY STREET
SAN FRANCISCO, CA 94111

Caltrans now has a web site! To get to the web site, go to: http://www.dot.ca.gov

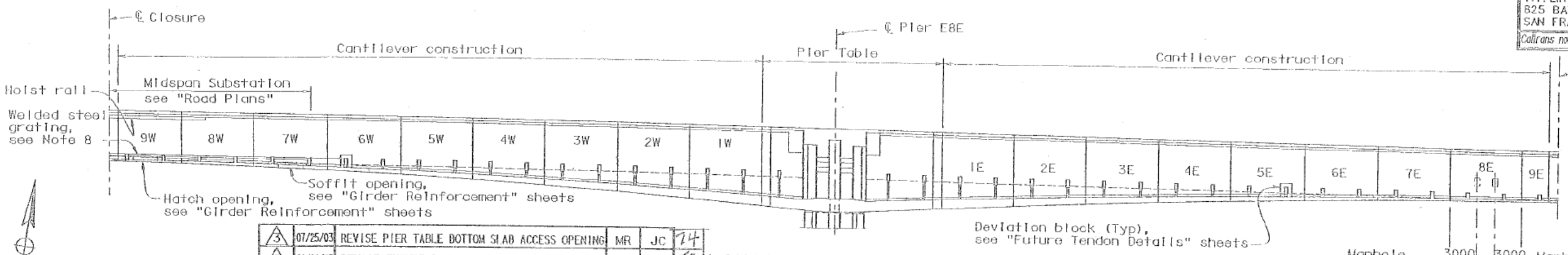

MARK	DATE	DESCRIPTIONS	BY	CH'D	
3	07/25/03	REVISE PIER TABLE BOTTOM SLAB ACCESS OPENING	MR	JC	74
2	01/20/03	REVISE FUTURE TENDON DEV BLOCK LOCATION	MR	JC	52
1	01/20/03	REVISE DRAIN LOCATIONS	MR	SS	28

REVISIONS

LONGITUDINAL SECTION
1:250

CONTRACT CHANGE ORDER NO. 28
SHEET 35 OF 48

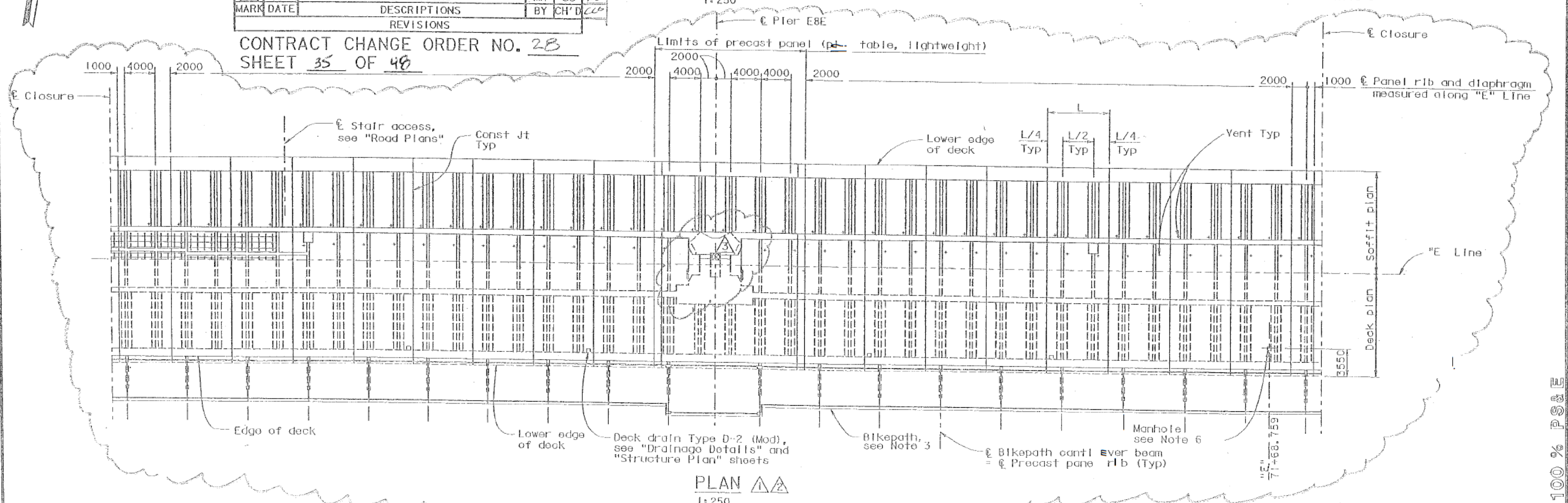

PLAN
1:250

ALL DIMENSIONS ARE IN MILLIMETERS UNLESS OTHERWISE SHOWN

DESIGN OVERSIGHT 8/6/2003
SIGN OFF DATE
Rev. Date: 5-18-98

DESIGN	BY S. Hunter	CHECKED M. Lamont	
DETAILS	BY A. Lishansky	CHECKED M. Lamont	
QUANTITIES	BY K. Comster	CHECKED S. Shi	

PREPARED FOR THE STATE OF CALIFORNIA DEPARTMENT OF TRANSPORTATION

Sajid Abbas
PROJECT ENGINEER

BRIDGE NO. 34-0006L/R
KILOMETER POST 13.9/14.3, 0.0/1.6

SAN FRANCISCO OAKLAND BAY BRIDGE
EAST SPAN SEISMIC SAFETY PROJECT

SKYWAY STRUCTURES

GIRDER LAYOUT E8E

100% PS&E

T.Y.LIN INTERNATIONAL
MOFFATT & NICHOL
a joint venture

SFOBB – Skyway Project
345 Burma Road, Oakland CA 94607
Telephone (510) 622-1071 Facsimile (510) 622-1069

REVISION MARKS ON CONTRACT PLAN CHANGES

SFOBB Skyway Project # 04-012024

Revisions *to* the following plans were prepared under the supervision of the undersigned engineer.

537R2, 540R2, 544R2, 551R2, 554R2, 558R2	Revision Marks 1 & 2	Dated	1/20/03
537R2, 540R2, 544R2, 551R2, 554R2, 558R2	Revision Marks 3 & 4	Dated	7/25/03
538R2, 539R2, 542R2, 543R2, 545R2, 546R2, 547R2, 552R2, 553R2, 555R2, 556R2, 557R2, 559R2, 560R2,561R2	Revision Marks 1 & 2	Dated	1/20/03
538R2, 539R2, 542R2, 543R2, 545R2, 546R2, 547R2, 552R2, 553R2, 555R2, 556R2, 557R2, 559R2, 560R2,561R2	Revision Marks 3	Dated	7/25/03
541R3	Revision Mark 1	Dated	3/04/02
541R3	Revision Marks 2 & 3	Dated	1/20/03
541R3	Revision Mark 4	Dated	7/25/03
548R3, 550R3, 562R3, 564R3	Revision Mark 1	Dated	3/04/02
548R3, 550R3, 562R3, 564R3	Revision Marks 2 & 3	Dated	1/20/03
548R3, 550R3, 562R3, 564R3	Revision Marks 4 & 5	Dated	7/25/03
549R3, 563R3	Revision Mark 1	Dated	3/04/02
549R3, 563R3	Revision Mark 2	Dated	1/20/03
549R3, 563R3	Revision Mark 3	Dated	7/25/03

For the project in SF/ALA County

Koute X0

Km Post Description 04-SF. Ala-80-13.9/14.3,0.0/1.6

District/EA 012021

(Signature)

02/27/04
(Date)

Sajid Abbas
(Name)

(Title)

C 055274
(Registration No.)

12/31J04
(Date of Expiration)

REGISTERED PROFESSIONAL ENGINEER
Sajid Abbas
No. C 055274
Exp. 12/31/04
CIVIL
STATE OF CALIFORNIA

NOTES:

1. For notes, see "Girder Layout E3W" sheet.
2. For vent details, see "Girder Layout E3W" sheet.
3. For bikepath details, see "Bikepath Details" sheets.
4. Key to segment nomenclature: 1 E or W
   Segment No. — East or West
5. For web manhole details, see "Miscellaneous Details" sheets.
6. For deck manhole details, see B7-11.
7. Orientation of diaphragm and precast panel rib shall be normal to "E" Line.

MARK	DATE	DESCRIPTIONS	BY	CH'D	
3	07/25/03	REVISE PIER TABLE BOTTOM SLAB ACCESS OPENING	MR	JC	74
2	01/20/03	REVISE FUTURE TENDON DEV BLOCK LOCATION	MR	JC	52
1	01/20/03	REVISE DRAIN LOCATIONS	MR	SS	28
		REVISIONS			

CONTRACT CHANGE ORDER NO. 28
SHEET 36 OF 48

DIST.	COUNTY	ROUTE	KILOMETER POST TOTAL PROJECT	SHEET NO.	TOTAL SHEETS
04	SF, Ala	80	13.9 / 14.3, 0.0 / 1.6	557R2	978

REGISTERED ENGINEER - CIVIL
6-4-01
PLANS APPROVAL DATE
Scott Hunter No. C 048066 Exp. 12/31/03 CIVIL STATE OF CALIFORNIA
The State of California or its officers or agents shall not be responsible for the accuracy or completeness of electronic copies of this plan sheet.

T.Y. LIN / MOFFATT & NICHOL
825 BATTERY STREET
SAN FRANCISCO, CA 94111

Caltrans now has a web site! To get to the web site, go to: http://www.dot.ca.gov

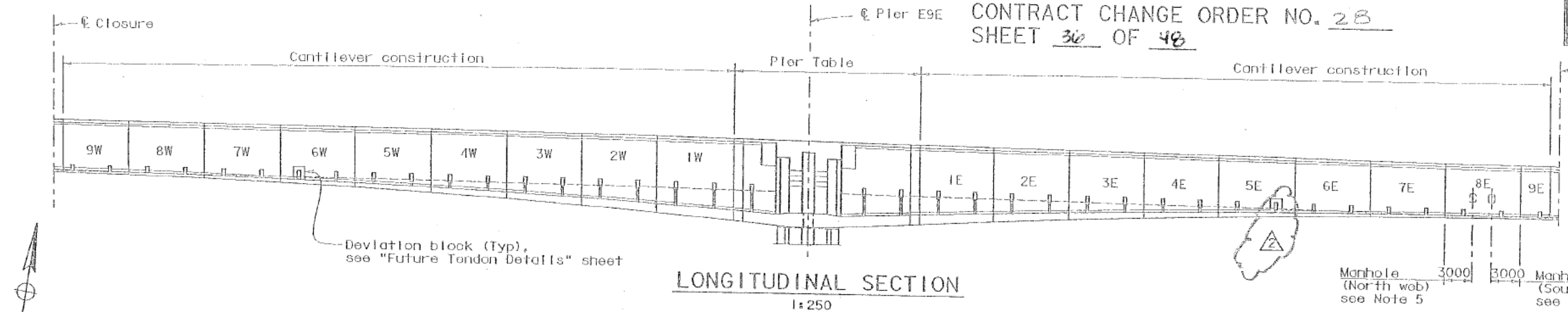

LONGITUDINAL SECTION
1:250

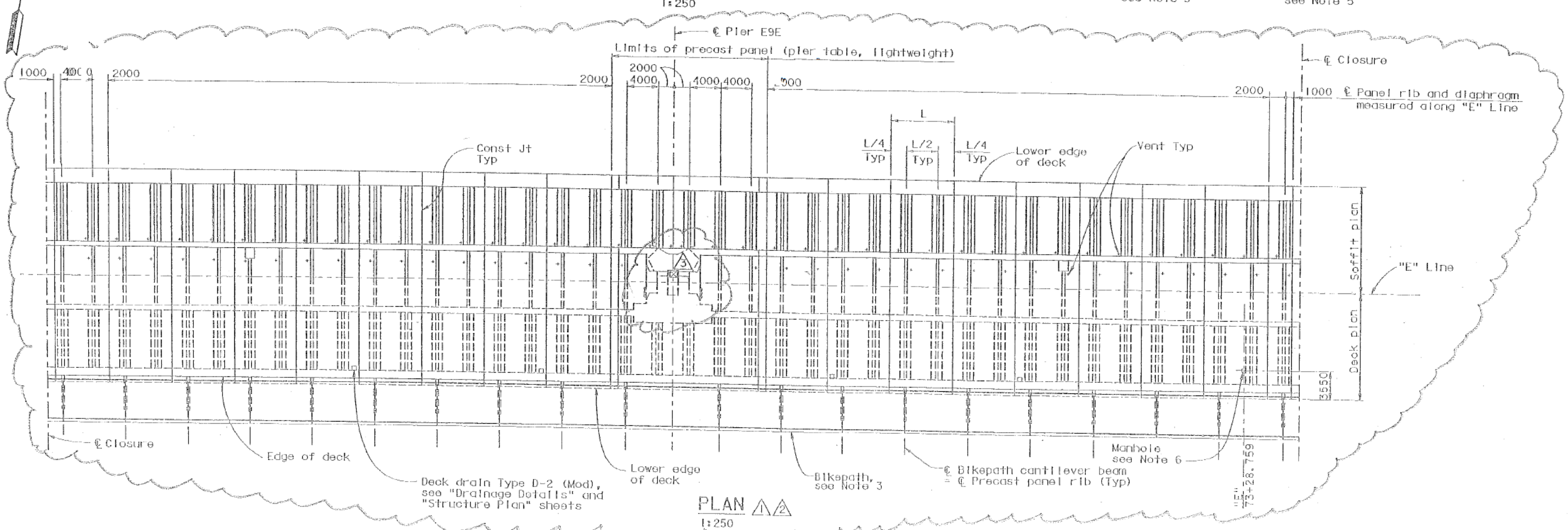

PLAN
1:250

ALL DIMENSIONS ARE IN MILLIMETERS UNLESS OTHERWISE SHOWN

DESIGN OVERSIGHT 8/16/2003
SIGN OFF DATE
Rev. Date: 5-13.03

DESIGN	BY S. Hunter	CHECKED M. Lamont	
DETAILS	BY A. Lishansky	CHECKED M. Lamont	
QUANTITIES	BY K. Cormier	CHECKED S. Shi	

PREPARED FOR THE STATE OF CALIFORNIA DEPARTMENT OF TRANSPORTATION

Sajid Abbas
PROJECT ENGINEER

BRIDGE NO. 34-0006L/R
KILOMETER POST 3.9/14.3, 0.0/1.6

SAN FRANCISCO OAKLAND BAY BRIDGE
EAST SPAN SEISMIC SAFETY PROJECT

SKYWAY STRUCTURES
GIRDER LAYOUT E9E

100 % PS&E

T.Y.LIN INTERNATIONAL
MOFFATT & NICHOL
a joint venture

SFOBB – Skyway Project
345 Burma Road, Oakland CA 94607
Telephone (510)622-1071 Facsimile (510) 622-1069

REVISION MARKS ON CONTRACT PLAN CHANGES

SFOBB Skyway Project # **04-012024**

Revisions to the following plans were prepared under the supervision of the undersigned engineer.

537R2, 540R2, 544R2, 551R2, 554R2, 558R2	Revision Marks 1 & 2	Dated	1/20/03
537R2, 540R2, 544R2, 551R2, 554R2, 558R2	Revision Marks 3 & 4	Dated	7/25/03
538R2, 539R2, 542R2, 543R2, 545R2, 546R2, 547R2, 552R2, 553R2, 555R2, 556R2, 557R2, 559R2, 560R2,561R2	Revision Marks 1 & 2	Dated	1/20/03
538R2, 539R2, 542R2, 543R2, 545R2, 546R2, 547R2, 552R2, 553R2, 555R2, 556R2, 557R2, 559R2, 560R2,561R2	Revision Marks 3	Dated	7/25/03
541R3	Revision Mark 1	Dated	3/04/02
541R3	Revision Marks 2 & 3	Dated	1/20/03
541R3	Revision Mark 4	Dated	7/25/03
548R3, 550R3, 562R3, 564R3	Revision Mark 1	Dated	3/04/02
548R3, 550R3, 562R3, 564R3	Revision Marks 2 & 3	Dated	1/20/03
548R3, 550R3, 562R3, 564R3	Revision Marks 4 & 5	Dated	7/25/03
549R3, 563R3	Revision Mark 1	Dated	3/04/02
549R3, 563R3	Revision Mark 2	Dated	1/20/03
549R3, 563R3	Revision Mark 3	Dated	7/25/03

For the project in SF/ALA County

Route 80

Km Post Description 04-SF, Ala-80-13.9/14.3,0.0/1.6

District/EA 012021

(Signature)

02/27/04
(Date)

Sajid Abbas
(Name)

(Title)

C 055274
(Registration No.)

12131104
(Date of Expiration)

REGISTERED PROFESSIONAL ENGINEER
Sajid Abbas
No. C 055274
Exp 12/31/04
CIVIL
STATE OF CALIFORNIA

NOTES:

1. For notes, see "Girder Layout E3W" sheet.
2. For vent details, see "Girder Layout E3W" sheet.
3. For bikepath details, see "Bikepath Details" sheets.
4. Key to segment nomenclature: 1 E or W (Segment No. — East or West)
5. For web manhole details, see "Miscellaneous Details" sheets.
6. For deck manhole details, see B7-11.
7. Orientation of diaphragm and precast panel rib shall be normal to "E" Line.

Caltrans now has a web site! To get to the web site, go to: http://www.dot.ca.gov

MARK	DATE	DESCRIPTIONS	BY	CH'D
4	07/25/03	REVISE WEB MANHOLE LOCATIONS	MR	JC
3	07/25/03	REVISE PIER TABLE BOTTOM SLAB ACCESS OPENING	MR	JC
2	01/20/03	REVISE FUTURE TENDON DEV BLOCK LOCATION	MR	JC
1	01/20/03	REVISE DRAIN LOCATIONS	MR	SS

REVISIONS

CONTRACT CHANGE ORDER NO. 28
SHEET 37 OF 48

DIST.	COUNTY	ROUTE	KILOMETER POST TOTAL PROJECT	SHEET NO.	TOTAL SHEETS
04	SF, Ala	80	13.9 / 14.3, 0.0 / 1.6	558R2	978

REGISTERED ENGINEER - CIVIL
6-4-01
PLANS APPROVAL DATE

REGISTERED PROFESSIONAL ENGINEER Scott Hunter No. C 048066 Exp. 12/31/03 CIVIL STATE OF CALIFORNIA

The State of California or its officers or agents shall not be responsible for the accuracy or completeness of electronic copies of this plan sheet.

T.Y. LIN / MOFFATT & NICHOL
825 BATTERY STREET
SAN FRANCISCO, CA 94111

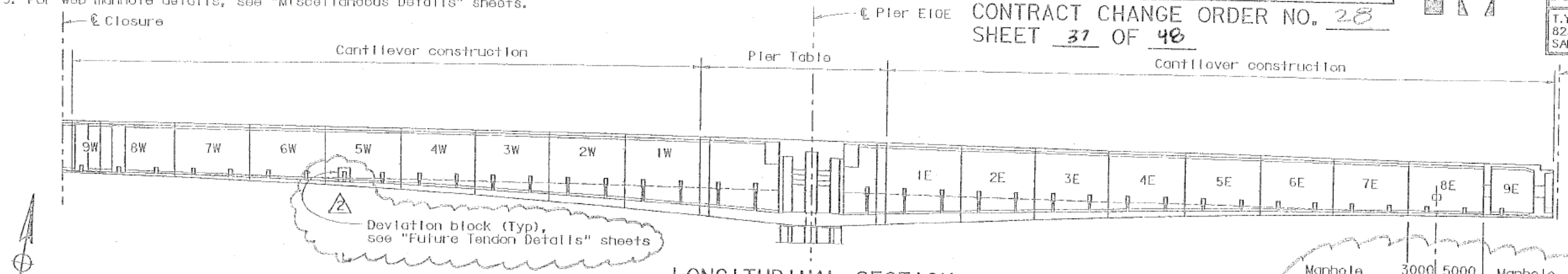

LONGITUDINAL SECTION
1:250

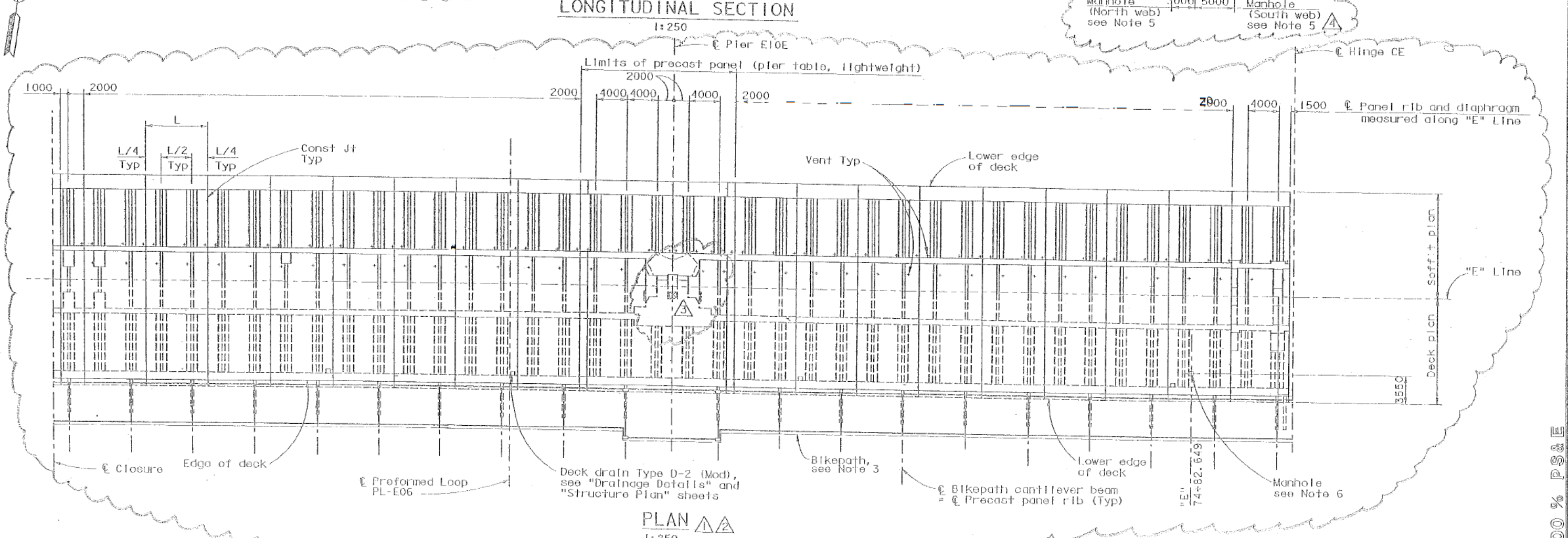

PLAN
1:250

ALL DIMENSIONS ARE IN MILLIMETERS UNLESS OTHERWISE SHOWN

DESIGN OVERSIGHT 8/6/2003
SIGN OFF DATE
Rev. Date: 5-18-80

	BY	CHECKED	
DESIGN	S. Hunter	M. Lamont	
DETAILS	A. Lishansky	M. Lamont	
QUANTITIES	K. Cormier	S. Shi	

PREPARED FOR THE STATE OF CALIFORNIA DEPARTMENT OF TRANSPORTATION

Sajid Abbas
PROJECT ENGINEER

BRIDGE NO. 34-0006L/R
KILOMETER POST 3.9/14.3, 0.0/1.6

SAN FRANCISCO OAKLAND BAY BRIDGE
EAST SPAN SEISMIC SAFETY PROJECT

SKYWAY STRUCTURES

GIRDER LAYOUT E10E

100% PS&E

ORIGINAL SCALE IN MILLIMETERS

T.Y.LIN INTERNATIONAL
MOFFATT & NICHOL
a joint venture

SFOBB – Skyway Project
345 Burma Road, Oakland CA 94607
Telephone (510) 622-1071 Facsimile (510) 622-1069

REVISION MARKS ON CONTRACT PLAN CHANGES

SFOBB Skyway Project # 04-012024

Revisions to the following plans were prepared under the supervision of the undersigned engineer.

537R2, 540R2, 544R2, 551R2, 554R2, 558R2	Revision Marks 1 & 2	Dated	1/20/03
537R2, 540R2, 544R2, 551R2, 554R2, 558R2	Revision Marks 3 & 4	Dated	7/25/03
538R2, 539R2, 542R2, 543R2, 545R2, 546R2, 547R2, 552R2, 553R2, 555R2, 556R2, 557R2, 559R2, 560R2,561R2	Revision Marks 1 & 2	Dated	1/20/03
538R2, 539R2, 542R2, 543R2, 545R2, 546R2, 547R2, 552R2, 553R2, 555R2, 556R2, 557R2, 559R2, 560R2,561R2	Revision Marks 3	Dated	7/25/03
541R3	Revision Mark 1	Dated	3/04/02
541R3	Revision Marks 2 & 3	Dated	1/20/03
541R3	Revision Mark 4	Dated	7/25/03
548R3, 550R3, 562R3, 564R3	Revision Mark 1	Dated	3/04/02
548R3, 550R3, 562R3, 564R3	Revision Marks 2 & 3	Dated	1/20/03
548R3, 550R3, 562R3, 564R3	Revision Marks 4 & 5	Dated	7/25/03
549R3, 563R3	Revision Mark 1	Dated	3/04/02
549R3, 563R3	Revision Mark 2	Dated	1/20/03
549R3, 563R3	Revision Mark 3	Dated	7/25/03

For the project in SF/ALA County

Route 80

Km Post Description 04-SF, Ala-80-13.9/14.3,0.0/1.6

District/EA 012021

(Signature) 02/27/04 (Date)

Sajid Abbas
(Name)

(Title)

C 055274
(Registration No.)

12/31/04
(Date of Expiration)

REGISTERED PROFESSIONAL ENGINEER
Sajid Abbas
No. C 055274
Exp. 12/31/04
CIVIL
STATE OF CALIFORNIA

NOTES:

1. For notes, see "Girder Layout E3W" sheet.
2. For vent details, see "Girder Layout E3W" sheet.
3. For bikepath details, see "Bikepath Details" sheets.
4. Key to segment nomenclature: 1 E or W
   Segment No. — East or West
5. For web manhole details, see "Miscellaneous Details" sheets.
6. For deck manhole details, see (B7-11).
7. Orientation of diaphragm and precast panel rib shall be normal to "E" Line.

DIST.	COUNTY	ROUTE	KILOMETER POST TOTAL / PROJECT	SHEET NO.	TOTAL SHEETS
04	SF, Ala	80	13.9 / 14.3, 0.0 / 1.6	559R2	978

REGISTERED ENGINEER - CIVIL

6-4-01
PLANS APPROVAL DATE

REGISTERED PROFESSIONAL ENGINEER Scott Hunter No. C 048066 Exp. 12/31/03 CIVIL STATE OF CALIFORNIA

The State of California or its officers or agents shall not be responsible for the accuracy or completeness of electronic copies of this plan sheet.

T.Y. LIN / MOFFATT & NICHOL
825 BATTERY STREET
SAN FRANCISCO, CA 94111

Caltrans now has a web site! To get to the web site, go to: http://www.dot.ca.gov

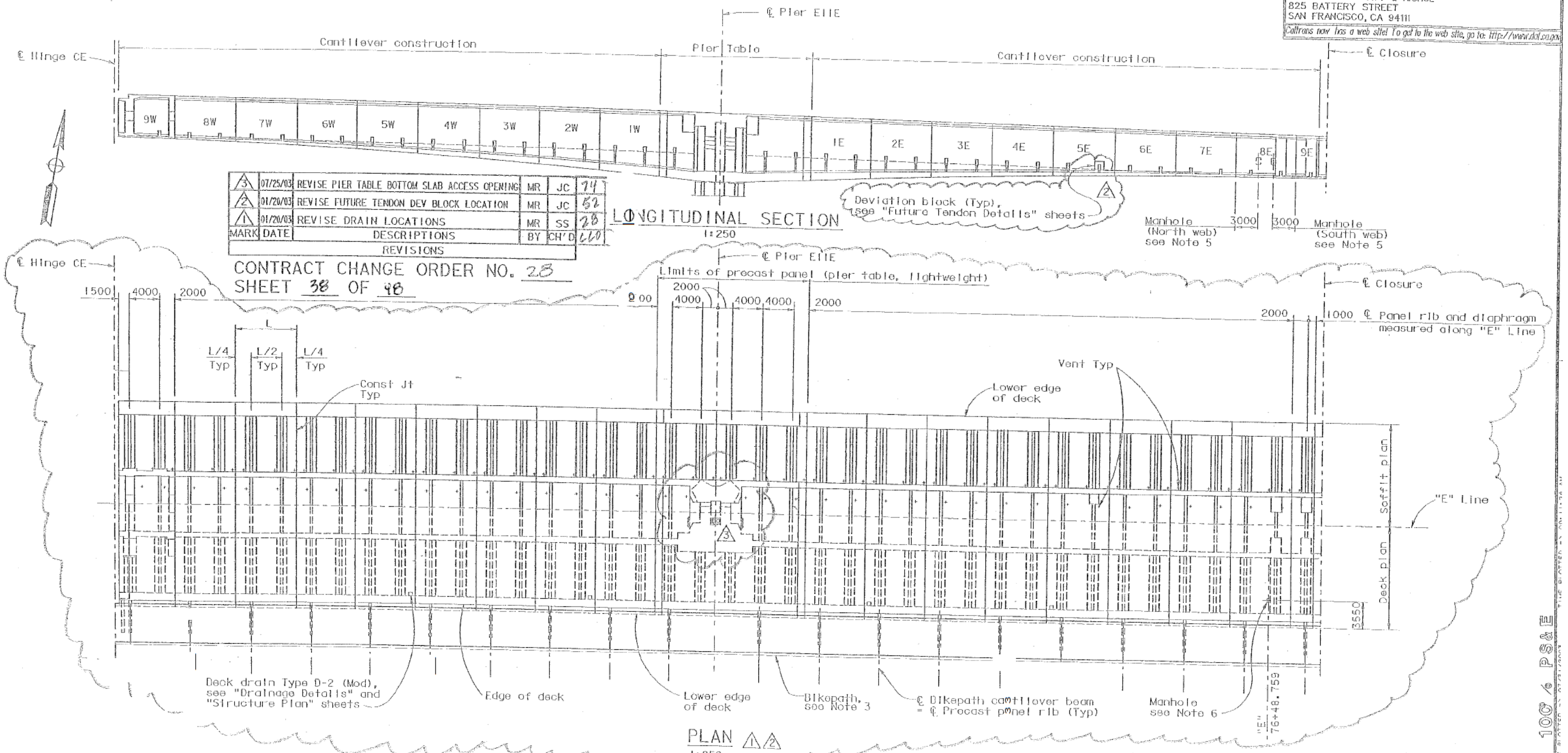

LONGITUDINAL SECTION
1:250

PLAN △1 △2
1:250

MARK	DATE	DESCRIPTIONS	BY	CH'D
△3	07/25/03	REVISE PIER TABLE BOTTOM SLAB ACCESS OPENING	MR	JC
△2	01/20/03	REVISE FUTURE TENDON DEV BLOCK LOCATION	MR	JC
△1	01/20/03	REVISE DRAIN LOCATIONS	MR	SS

REVISIONS

CONTRACT CHANGE ORDER NO. 28
SHEET 38 OF 48

ALL DIMENSIONS ARE IN MILLIMETERS UNLESS OTHERWISE SHOWN

DESIGN OVERSIGHT 8/6/2003
SIGN OFF DATE

	BY	CHECKED
DESIGN	S. Hunter	M. Lamont
DETAILS	A. Lishansky	M. Lamont
QUANTITIES	K. Cormier	S. Shi

PREPARED FOR THE STATE OF CALIFORNIA DEPARTMENT OF TRANSPORTATION

Sajid Abbas
PROJECT ENGINEER

BRIDGE NO. 34-0006L/R
KILOMETER POST 13.9/14.3, 0.0/1.6

SAN FRANCISCO OAKLAND BAY BRIDGE
EAST SPAN SEISMIC SAFETY PROJECT

SKYWAY STRUCTURES

GIRDER LAYOUT E11E

Rev. Date: 5-18-98

ORIGINAL SCALE IS MILLIMETERS

10C / PS&E

T.Y.LIN INTERNATIONAL
MOFFATT & NICHOL
a joint venture

SFOBB – Skyway Project
345 Burma Road, Oakland CA 94607
Telephone (510) 622-1071 Facsimile (510) 622-1069

REVISION MARKS ON CONTRACT PLAN CHANGES

SFOBB Skyway Project # 04-012024

Revisions to the following plans were prepared under the supervision of the undersigned engineer.

537R2, 540R2, 544R2, 551R2, 554R2, 558R2	Revision Marks 1 & 2	Dated	1/20/03
537R2, 540R2, 544R2, 551R2, 554R2, 558R2	Revision Marks 3 & 4	Dated	7/25/03
538R2, 539R2, 542R2, 543R2, 545R2, 546R2, 547R2, 552R2, 553R2, 555R2, 556R2, 557R2, 559R2, 560R2,561R2	Revision Marks 1 & 2	Dated	1/20/03
538R2, 539R2, 542R2, 543R2, 545R2, 546R2, 547R2, 552R2, 553R2, 555R2, 556R2, 557R2, 559R2, 560R2,561R2	Revision Marks 3	Dated	7/25/03
541R3	Revision Mark 1	Dated	3/04/02
541R3	Revision Marks 2 & 3	Dated	1/20/03
541R3	Revision Mark 4	Dated	7/25/03
548R3, 550R3, 562R3, 564R3	Revision Mark 1	Dated	3/04/02
548R3, 550R3, 562R3, 564R3	Revision Marks 2 & 3	Dated	1/20/03
548R3, 550R3, 562R3, 564R3	Revision Marks 4 & 5	Dated	7/25/03
549R3, 563R3	Revision Mark 1	Dated	3/04/02
549R3, 563R3	Revision Mark 2	Dated	1/20/03
549R3, 563R3	Revision Mark 3	Dated	7/25/03

For the project in **SFIALA** County

Route 80

Km Post Description 04-SF, Ala-80- 13.9/14.3.0.0/1.6

District/EA 012021

(Signature)

02/27/04
(Date)

Sajid Abbas
(Name)

(Title)

C 055274
(Registration No.)

12/3 1104
(Date of Expiration)

REGISTERED PROFESSIONAL ENGINEER
Sajid Abbas
No. C 055274
Exp. 12/31/04
CIVIL
STATE OF CALIFORNIA

NOTES:

1. For notes, see "Girder Layout E3W" sheet.
2. For vent details, see "Girder Layout E3W" sheet.
3. For bikepath details, see "Bikepath Details" sheets.
4. Key to segment nomenclature: 1 E or W
   Segment No. — East or West
5. For web manhole details, see "Miscellaneous Details" sheets.
6. For deck manhole details, see (B7-11).
7. Orientation of diaphragm and precast panel rib shall be normal to "E" Line.

74	3	07/25/03	REVISE PIER TABLE BOTTOM SLAB ACCESS OPENING	MR	JC
52	2	01/20/03	REVISE FUTURE TENDON DEV BLOCK LOCATION	MR	JC
28	1	01/20/03	REVISE DRAIN LOCATIONS	MR	SS
CO	MARK	DATE	DESCRIPTIONS	BY	CH'D
			REVISIONS		

CONTRACT CHANGE ORDER NO. 28
SHEET 39 OF 48

DIST.	COUNTY	ROUTE	KILOMETER POST TOTAL PROJECT	SHEET NO.	TOTAL SHEETS
04	SF, Ala	80	13.9 / 14.3, 0.0 / 1.6	560R2	978

Scott Hunter
REGISTERED ENGINEER - CIVIL
6-4-01
PLANS APPROVAL DATE

REGISTERED PROFESSIONAL ENGINEER Scott Hunter No. C 048066 Exp. 12/31/03 CIVIL STATE OF CALIFORNIA

The State of California or its officers or agents shall not be responsible for the accuracy or completeness of electronic copies of this plan sheet.

T.Y. LIN / MOFFATT & NICHOL
825 BATTERY STREET
SAN FRANCISCO, CA 94111

Caltrans now has a web site! To get to the web site, go to: http://www.dot.ca.gov

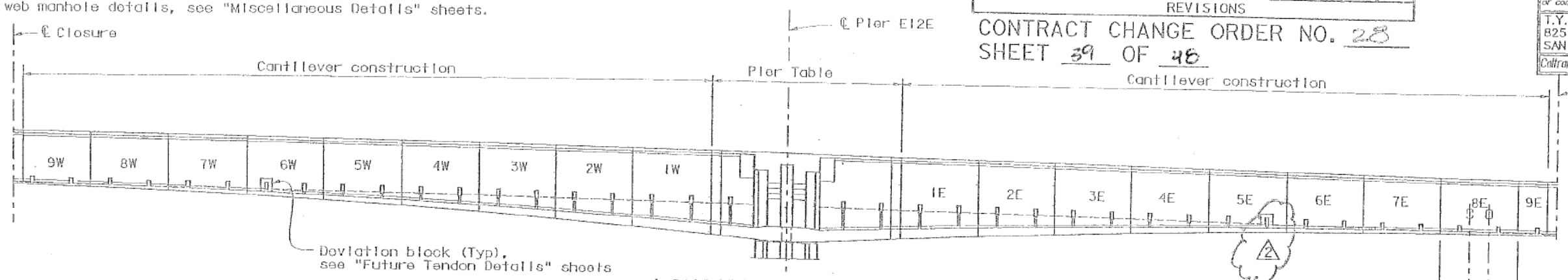

LONGITUDINAL SECTION
1:250

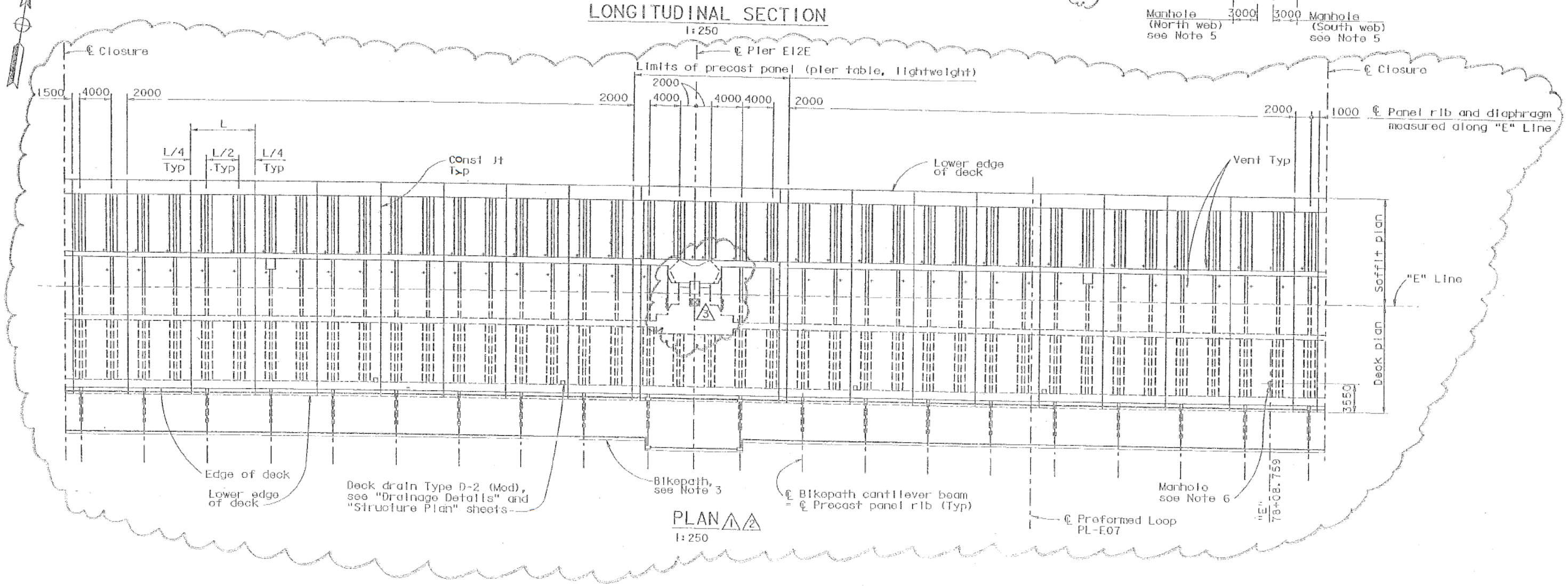

PLAN
1:250

ALL DIMENSIONS ARE IN MILLIMETERS UNLESS OTHERWISE SHOWN

DESIGN OVERSIGHT
8/6/2003
SIGN OFF DATE
Rev. Date: 5-16-88

DESIGN	BY S. Hunter	CHECKED M. Lamont	
DETAILS	BY A. Lishansky	CHECKED M. Lamont	
QUANTITIES	BY K. Corridor	CHECKED S. Shi	

PREPARED FOR THE STATE OF CALIFORNIA DEPARTMENT OF TRANSPORTATION

Sajid Abbas
PROJECT ENGINEER

BRIDGE NO. 34-0006L/R
KILOMETER POST 3.9/14.3, 0.0/1.6

SAN FRANCISCO OAKLAND BAY BRIDGE
EAST SPAN SEISMIC SAFETY PROJECT

SKYWAY STRUCTURES
GIRDER LAYOUT E12E

ORIGINAL SCALE IN MILLIMETERS

100 % PS&E

T·Y·LIN INTERNATIONAL
MOFFATT & NICHOL
a joint venture

SFOBB – Skyway Project
345 Burma Road, Oakland CA 94607
Telephone (510)622-1071 Facsimile (510) 622-1069

REVISION MARKS ON CONTRACT PLAN CHANGES

SFOBB Skyway Project # 04-012024

Revisions to the following plans were prepared under the supervision of the undersigned engineer.

537R2, 540R2, 544R2, 551R2, 554R2, 558R2	Revision Marks 1 & 2	Dated	1/20/03
537R2, 540R2, 544R2, 551R2, 554R2, 558R2	Revision Marks 3 & 4	Dated	7/25/03
538R2, 539R2, 542R2, 543R2, 545R2, 546R2, 547R2, 552R2, 553R2, 555R2, 556R2, 557R2, 559R2, 560R2,561R2	Revision Marks 1 & 2	Dated	1/20/03
538R2, 539R2, 542R2, 543R2, 545R2, 546R2, 547R2, 552R2, 553R2, 555R2, 556R2, 557R2, 559R2, 560R2,561R2	Revision Marks 3	Dated	7/25/03
541R3	Revision Mark 1	Dated	3/04/02
541R3	Revision Marks 2 & 3	Dated	1/20/03
541R3	Revision Mark 4	Dated	7/25/03
548R3, 550R3, 562R3, 564R3	Revision Mark 1	Dated	3/04/02
548R3, 550R3, 562R3, 564R3	Revision Marks 2 & 3	Dated	1/20/03
548R3, 550R3, 562R3, 564R3	Revision Marks 4 & 5	Dated	7/25/03
549R3, 563R3	Revision Mark 1	Dated	3/04/02
549R3, 563R3	Revision Mark 2	Dated	1/20/03
549R3, 563R3	Revision Mark 3	Dated	7/25/03

For the pro-ject in **SFIALA** County

Route 80

Km Post Description 04-SF, Ala-80-13 9/14 3,0 011 6

District/EA 012021

(Signature)

02/27/04
(Date)

Sajid Abbas
(Name)

(Title)

C 055274
(Registration No.)

12/3 1104
(Date of Expiration)

REGISTERED PROFESSIONAL ENGINEER
Sajid Abbas
No. C 055274
Exp. 12/31/04
CIVIL
STATE OF CALIFORNIA

NOTES:

1. For notes, see "Girder Layout E3W" sheet.
2. For vent details, see "Girder Layout E3W" sheet.
3. For bikepath details, see "Bikepath Details" sheets.
4. Key to segment nomenclature: 1 E or W
   Segment No. — East or West
5. For web manhole details, see "Miscellaneous Details" sheets.
6. For deck manhole details, see (B7-11).
7. Orientation of diaphragm and precast panel rib shall be normal to "E" Line.

DIST.	COUNTY	ROUTE	KILOMETER POST TOTAL PROJECT	SHEET NO.	TOTAL SHEETS
04	SF, Ala	80	13.9 / 14.3, 0.0 / 1.6	561R2	978

REGISTERED ENGINEER - CIVIL

6-4-01
PLANS APPROVAL DATE

REGISTERED PROFESSIONAL ENGINEER Scott Hunter No. C 048066 Exp. 12/31/03 CIVIL STATE OF CALIFORNIA

The State of California or its officers or agents shall not be responsible for the accuracy or completeness of electronic copies of this plan sheet.

T.Y. LIN / MOFFATT & NICHOL
825 BATTERY STREET
SAN FRANCISCO, CA 94111

Caltrans now has a web site! To get to the web site, go to: http://www.dot.ca.gov/

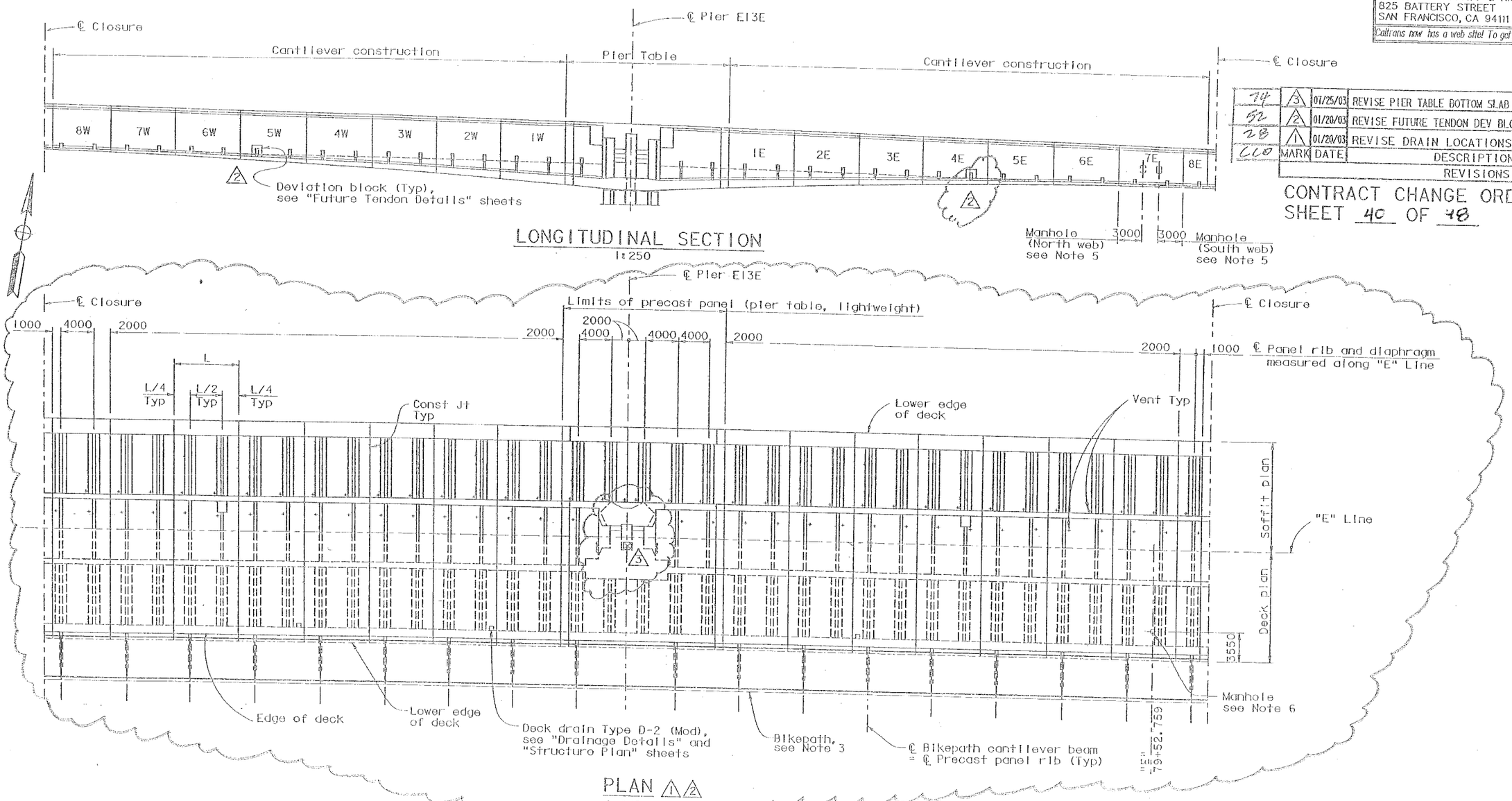

LONGITUDINAL SECTION
1:250

PLAN
1:250

MARK	DATE	DESCRIPTIONS	BY	CH'D
74	01/25/03	REVISE PIER TABLE BOTTOM SLAB ACCESS OPENING	MR	JC
52	01/20/03	REVISE FUTURE TENDON DEV BLOCK LOCATION	MR	JC
28	01/20/03	REVISE DRAIN LOCATIONS	MR	SS
CCO		REVISIONS		

CONTRACT CHANGE ORDER NO. 28
SHEET 40 OF 48

100% PS&E

DESIGN OVERSIGHT
8/6/2003
SIGN OFF DATE

Rev. Date: 5-16-98

DESIGN	BY S. Hunter	CHECKED M. Lamont	
DETAILS	BY A. Lishansky	CHECKED M. Lamont	
QUANTITIES	BY K. Cormier	CHECKED S. Shi	

PREPARED FOR THE STATE OF CALIFORNIA DEPARTMENT OF TRANSPORTATION

Sajid Abbas
PROJECT ENGINEER

ALL DIMENSIONS ARE IN MILLIMETERS UNLESS OTHERWISE SHOWN

ORIGINAL SCALE IN MILLIMETERS FOR PLOTTING

BRIDGE NO. 34-0006L/R
KILOMETER POST 13.9/14.3, 0.0/1.6

SAN FRANCISCO OAKLAND BAY BRIDGE
EAST SPAN SEISMIC SAFETY PROJECT

SKYWAY STRUCTURES

GIRDER LAYOUT E13E

T.Y.LIN INTERNATIONAL
MOFFATT & NICHOL
a joint venture

SFOBB – Skyway Project
345 Burma Road, Oakland CA 94607
Telephone (510)622-1071 Facsimile (510) 622-1069

REVISION MARKS ON CONTRACT PLAN CHANGES

SFOBB Skyway Project # **04-012024**

Revisions to the following plans were prepared under the supervision of the undersigned engineer.

537R2, 540R2, 544R2, 551R2, 554R2, 558R2	Revision Marks 1 & 2	Dated	1/20/03
537R2, 540R2, 544R2, 551R2, 554R2, 558R2	Revision Marks 3 & 4	Dated	7/25/03
538R2, 539R2, 542R2, 543R2, 545R2, 546R2, 547R2, 552R2, 553R2, 555R2, 556R2, 557R2, 559R2, 560R2,561R2	Revision Marks 1 & 2	Dated	1/20/03
538R2, 539R2, 542R2, 543R2, 545R2, 546R2, 547R2, 552R2, 553R2, 555R2, 556R2, 557R2, 559R2, 560R2,561R2	Revision Marks 3	Dated	7/25/03
541R3	Revision Mark 1	Dated	3/04/02
541R3	Revision Marks 2 & 3	Dated	1/20/03
541R3	Revision Mark 4	Dated	7/25/03
548R3, 550R3, 562R3, 564R3	Revision Mark 1	Dated	3/04/02
548R3, 550R3, 562R3, 564R3	Revision Marks 2 & 3	Dated	1/20/03
548R3, 550R3, 562R3, 564R3	Revision Marks 4 & 5	Dated	7/25/03
549R3, 563R3	Revision Mark 1	Dated	3/04/02
549R3, 563R3	Revision Mark 2	Dated	1/20/03
549R3, 563R3	Revision Mark 3	Dated	7/25/03

For the project in SF/ALA County

Koute 80

Km **Poct** Description 04-SF, Ala-80-13 9/14.3.0 0/1 6

District/EA 012021

(Signature)

02/27/04
(Date)

Sajid Abbas
(Name)

(Title)

C 055274
(Registration No.)

12/31/04
(Date of Expiration)

REGISTERED PROFESSIONAL ENGINEER
Sajid Abbas
No. C 055274
Exp. 12/31/04
CIVIL
STATE OF CALIFORNIA

NOTES:

1. For notes, see "Girder Layout E3W" sheet.
2. For vent details, see "Girder Layout E3W" sheet.
3. For bikepath details, see "Bikepath Details" sheets.
4. Key to segment nomenclature: 1 E or W
   Segment No. — East or West
5. For web manhole details, see "Miscellaneous Details" sheets.
6. For deck manhole details, see B7-11.
7. Orientation of diaphragm and precast panel rib shall be normal to "E" Line.

DIST.	COUNTY	ROUTE	KILOMETER POST TOTAL PROJECT	SHEET NO.	TOTAL SHEETS
04	SF/Ala	80	13.9/14.3, 0.0/1.6	562R3	978

REGISTERED ENGINEER - CIVIL

6-4-01
PLANS APPROVAL DATE

Registered Professional Engineer — Sajid Abbas, No. C 055274, Exp. 12/31/04, CIVIL, State of California

The State of California or its officers or agents shall not be responsible for the accuracy or completeness of electronic copies of this plan sheet.

T.Y. LIN / MOFFATT & NICHOL
825 BATTERY STREET
SAN FRANCISCO, CA 94111

Caltrans now has a web site! To get to the web site, go to: http://www.dot.ca.gov

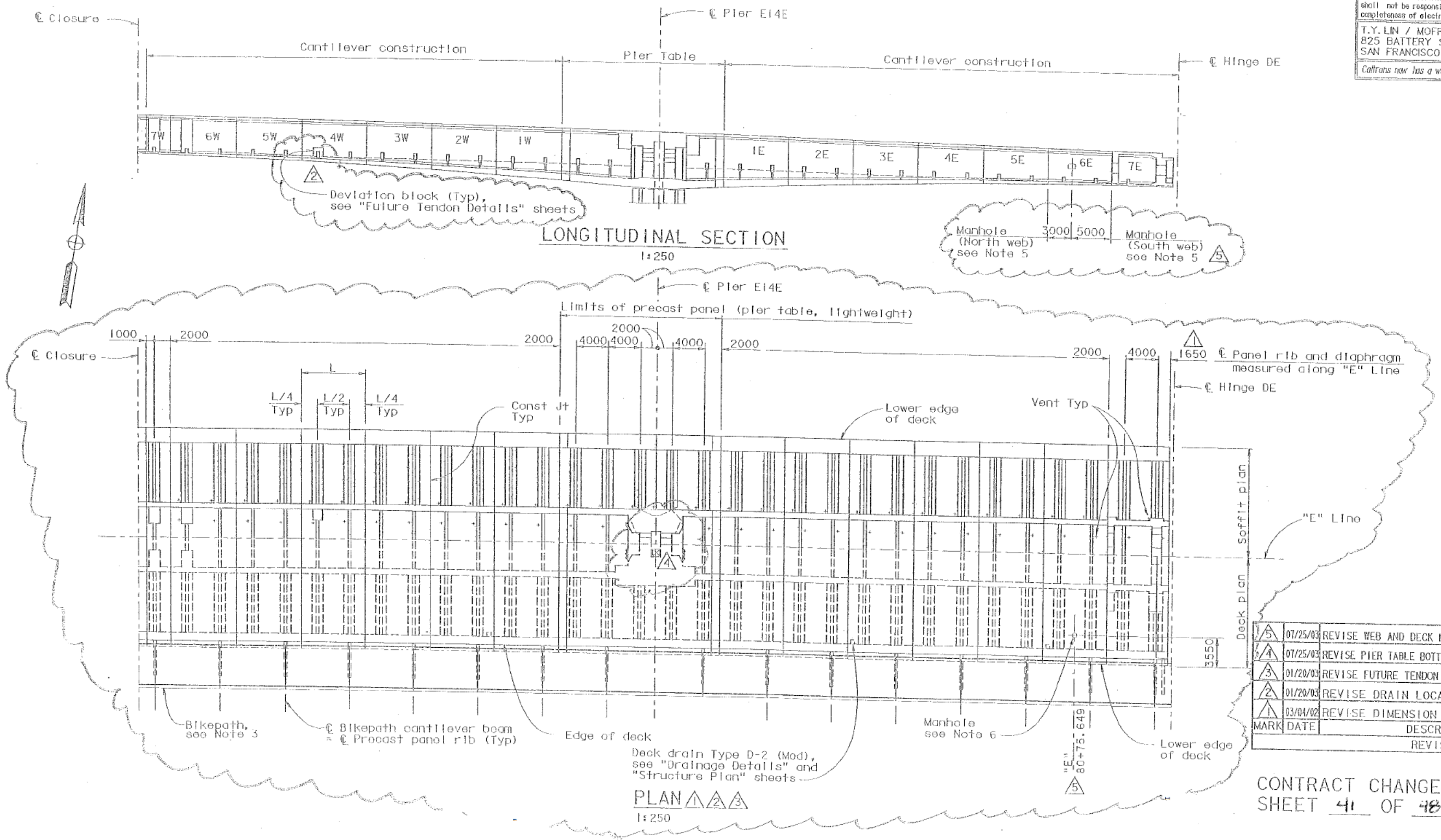

MARK	DATE	DESCRIPTIONS	BY	CH'D
5	07/25/03	REVISE WEB AND DECK MANHOLE LOCATIONS	MR	JC
4	07/25/03	REVISE PIER TABLE BOTTOM SLAB ACCESS OPENING	MR	JC
3	01/20/03	REVISE FUTURE TENDON DEV BLOCK LOCATION	MR	JC
2	01/20/03	REVISE DRAIN LOCATIONS	MR	SS
1	03/04/02	REVISE DIMENSION	TM	SC

REVISIONS

CONTRACT CHANGE ORDER NO. 28
SHEET 41 OF 48

100% PS&E

DESIGN OVERSIGHT 8/6/2003
SIGN OFF DATE

Rev. Date: 5-13-98

	BY	CHECKED	BY
DESIGN	S. Abbas	M. Lamont	
DETAILS	A. Lishansky	M. Lamont	
QUANTITIES	K. Cormier	S. Shi	

ORIGINAL SCALE IN MILLIMETERS

PREPARED FOR THE STATE OF CALIFORNIA DEPARTMENT OF TRANSPORTATION

ALL DIMENSIONS ARE IN MILLIMETERS UNLESS OTHERWISE SHOWN

Sajid Abbas
PROJECT ENGINEER

BRIDGE NO. 34-0006L/R
KILOMETER POST 13.9/14.3, 0.0/1.6

SAN FRANCISCO OAKLAND BAY BRIDGE
EAST SPAN SEISMIC SAFETY PROJECT

SKYWAY STRUCTURES

GIRDER LAYOUT E14E

T.Y.LIN INTERNATIONAL
MOFFATT & NICHOL
a joint venture

SFOBB – Skyway Project
345 Burma Road, Oakland CA 94607
Telephone (510) 622-1071 Facsimile (510) 622-1069

REVISION MARKS ON CONTRACT PLAN CHANGES

SFOBB Skyway Project # 04-012024

Revisions to the following plans were prepared under the supervision of the undersigned engineer.

537R2, 540R2, 544R2, 551R2, 554R2, 558R2	Revision Marks 1 & 2	Dated	1/20/03
537R2, 540R2, 544R2, 551R2, 554R2, 558R2	Revision Marks 3 & 4	Dated	7/25/03
538R2, 539R2, 542R2, 543R2, 545R2, 546R2, 547R2, 552R2, 553R2, 555R2, 556R2, 557R2, 559R2, 560R2,561R2	Revision Marks 1 & 2	Dated	1/20/03
538R2, 539R2, 542R2, 543R2, 545R2, 546R2, 547R2, 552R2, 553R2, 555R2, 556R2, 557R2, 559R2, 560R2,561R2	Revision Marks 3	Dated	7/25/03
541R3	Revision Mark 1	Dated	3/04/02
541R3	Revision Marks 2 & 3	Dated	1/20/03
541R3	Revision Mark 4	Dated	7/25/03
548R3, 550R3, 562R3, 564R3	Revision Mark 1	Dated	3/04/02
548R3, 550R3, 562R3, 564R3	Revision Marks 2 & 3	Dated	1/20/03
548R3, 550R3, 562R3, 564R3	Revision Marks 4 & 5	Dated	7/25/03
549R3, 563R3	Revision Mark 1	Dated	3/04/02
549R3, 563R3	Revision Mark 2	Dated	1/20/03
549R3, 563R3	Revision Mark 3	Dated	7/25/03

For the project in SFIALA County

Route 80

Km Post Description 04-SF, Ala-80-13.9/14.3,0.0/1.6

District/EA 012021

(Signature) 02/27/04 (Date)

Sajid Abbas
(Name)

(Title)

C 055274
(Registration No.)

12/31/04
(Date of Expiration)

REGISTERED PROFESSIONAL ENGINEER
Sajid Abbas
No. C 055274
Exp. 12/31/04
CIVIL
STATE OF CALIFORNIA

SA - CCO#28_2

NOTES:

1. For notes, see "Girder Layout E3W" sheet.
2. For vent details, see "Girder Layout E3W" sheet.
3. For bikepath details, see "Bikepath Details" sheets.
4. Key to segment nomenclature: E or W — Segment No. — East or West
5. For web manhole details, see "Miscellaneous Details" sheets.
6. For deck manhole details, see B7-11.
7. Orientation of diaphragm and precast panel rib shall be normal to "E" Line.

DIST.	COUNTY	ROUTE	KILOMETER POST TOTAL PROJECT	SHEET NO.	TOTAL SHEETS
04	SF/Ala	80	13.9/14.3, 0.0/1.6	563R3	978

REGISTERED ENGINEER - CIVIL
Sajid Abbas
6-4-01
PLANS APPROVAL DATE
REGISTERED PROFESSIONAL ENGINEER Sajid Abbas No. C 055274 Exp. 12/31/04 CIVIL STATE OF CALIFORNIA

The State of California or its officers or agents shall not be responsible for the accuracy or completeness of electronic copies of this plan sheet.

T.Y. LIN / MOFFATT & NICHOL
825 BATTERY STREET
SAN FRANCISCO, CA 94111

Caltrans now has a web site! To get to the web site, go to: http://www.dot.ca.gov

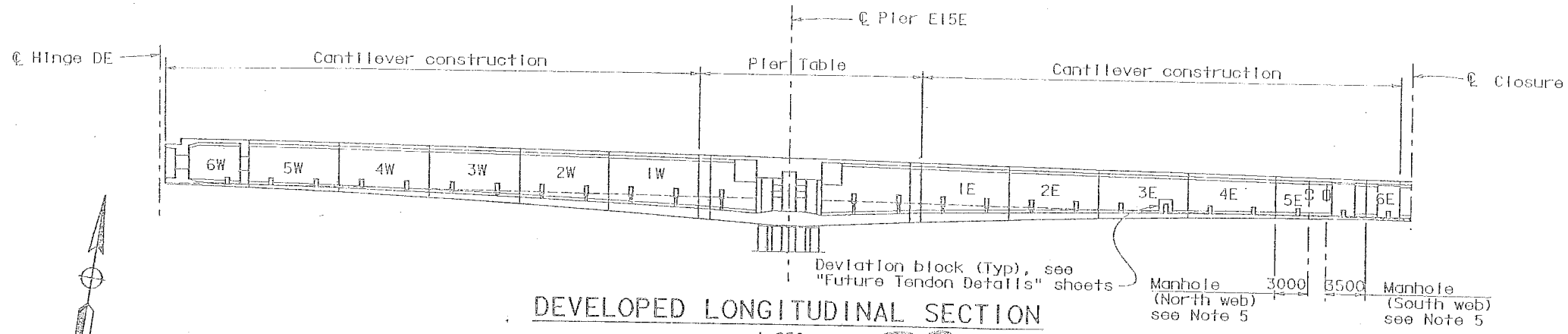

DEVELOPED LONGITUDINAL SECTION
1:250

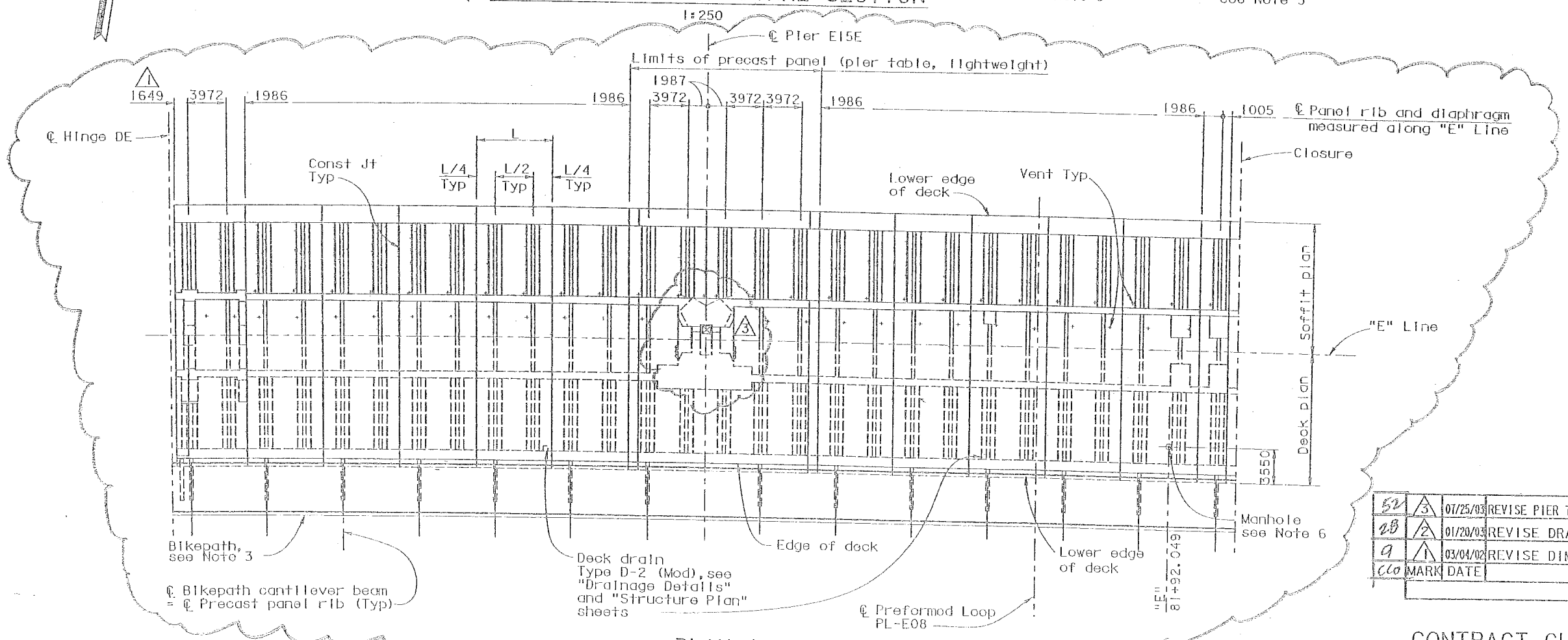

PLAN 2
1:250

MARK	DATE	DESCRIPTIONS	BY	CH'D
52 / 3	07/25/03	REVISE PIER TABLE BOTTOM SLAB ACCESS OPENING	MR	JC
28 / 2	01/20/03	REVISE DRAIN LOCATIONS	MR	SS
9 / 1	03/04/02	REVISE DIMENSION	TM	SC

REVISIONS

CONTRACT CHANGE ORDER NO. 28
SHEET 42 OF 48

100% PS&E

DESIGN OVERSIGHT
8/4/2003
SIGN OFF DATE

Rev. Date: 5-13-08

DESIGN	BY S. Abbas	CHECKED	M. Lamont
DETAILS	BY A. Lishansky	CHECKED	M. Lamont
QUANTITIES	BY K. Cormier	CHECKED	S. Shi

PREPARED FOR THE STATE OF CALIFORNIA DEPARTMENT OF TRANSPORTATION

ALL DIMENSIONS ARE IN MILLIMETERS UNLESS OTHERWISE SHOWN

Sajid Abbas
PROJECT ENGINEER

BRIDGE NO. 34-0006L/R
KILOMETER POST 13.9/14.3, 0.0/1.6

SAN FRANCISCO OAKLAND BAY BRIDGE
EAST SPAN SEISMIC SAFETY PROJECT

SKYWAY STRUCTURES

GIRDER LAYOUT E15E

T.Y.LIN INTERNATIONAL
MOFFATT & NICHOL
a joint venture

SFQBB – Skyway Project
345 Burma Road, Oakland CA 94607
Telephone (510) 622-1071 Facsimile (510) 622-1069

REVISION MARKS ON CONTRACT PLAN CHANGES

SFOBB Skyway Project # 04-012024

Revisions to the following plans were prepared under the supervision of the undersigned engineer.

537R2, 540R2, 544R2, 551R2, 554R2, 558R2	Revision Marks 1 & 2	Dated	1/20/03
537R2, 540R2, 544R2, 551R2, 554R2, 558R2	Revision Marks 3 & 4	Dated	7/25/03
538R2, 539R2, 542R2, 543R2, 545R2, 546R2, 547R2, 552R2, 553R2, 555R2, 556R2, 557R2, 559R2, 560R2,561R2	Revision Marks 1 & 2	Dated	1/20/03
538R2, 539R2, 542R2, 543R2, 545R2, 546R2, 547R2, 552R2, 553R2, 555R2, 556R2, 557R2, 559R2, 560R2,561R2	Revision Marks 3	Dated	7/25/03
541R3	Revision Mark 1	Dated	3/04/02
541R3	Revision Marks 2 & 3	Dated	1/20/03
541R3	Revision Mark 4	Dated	7/25/03
548R3, 550R3, 562R3, 564R3	Revision Mark 1	Dated	3/04/02
548R3, 550R3, 562R3, 564R3	Revision Marks 2 & 3	Dated	1/20/03
548R3, 550R3, 562R3, 564R3	Revision Marks 4 & 5	Dated	7/25/03
549R3, 563R3	Revision Mark 1	Dated	3/04/02
549R3, 563R3	Revision Mark 2	Dated	1/20/03
549R3, 563R3	Revision Mark 3	Dated	7/25/03

For the project in SF/ALA County

Route 80

Km Post Description 04-SF, Ala-80-13.9/14.3,0.0/1.6

District/EA 012021

(Signature) 02/27/04 (Date)

Sajid Abbas
(Name)

(Title)

C 055274
(Registration No.)

12/31/04
(Date of Expiration)

REGISTERED PROFESSIONAL ENGINEER
Sajid Abbas
No. C 055274
Exp. 12/31/04
CIVIL
STATE OF CALIFORNIA

NOTES:

1. For notes, see "Girder Layout E3W" sheet.
2. For vent details, see "Girder Layout E3W" sheet.
3. For bikepath details, see "Bikepath Details" sheets.
4. Key to segment nomenclature: 1 E or W
   Segment No. — East or West
5. For web manhole details, see "Miscellaneous Details" sheets.
6. For deck manhole details, see B7-11.
7. Orientation of diaphragm and precast panel rib shall be normal to "E" Line.

DIST.	COUNTY	ROUTE	KILOMETER POST TOTAL PROJECT	SHEET NO.	TOTAL SHEETS
04	SF/Ala	80	13.9/14.3, 0.0/1.6	564R3	978

Sajid Abbas
REGISTERED ENGINEER - CIVIL
6-4-01
PLANS APPROVAL DATE
REGISTERED PROFESSIONAL ENGINEER Sajid Abbas No. C 055274 Exp. 12/31/04 CIVIL STATE OF CALIFORNIA

The State of California or its officers or agents shall not be responsible for the accuracy or completeness of electronic copies of this plan sheet.

T.Y. LIN / MOFFATT & NICHOL
825 BATTERY STREET
SAN FRANCISCO, CA 94111

Caltrans now has a web site! To get to the web site, go to: http://www.dot.ca.gov

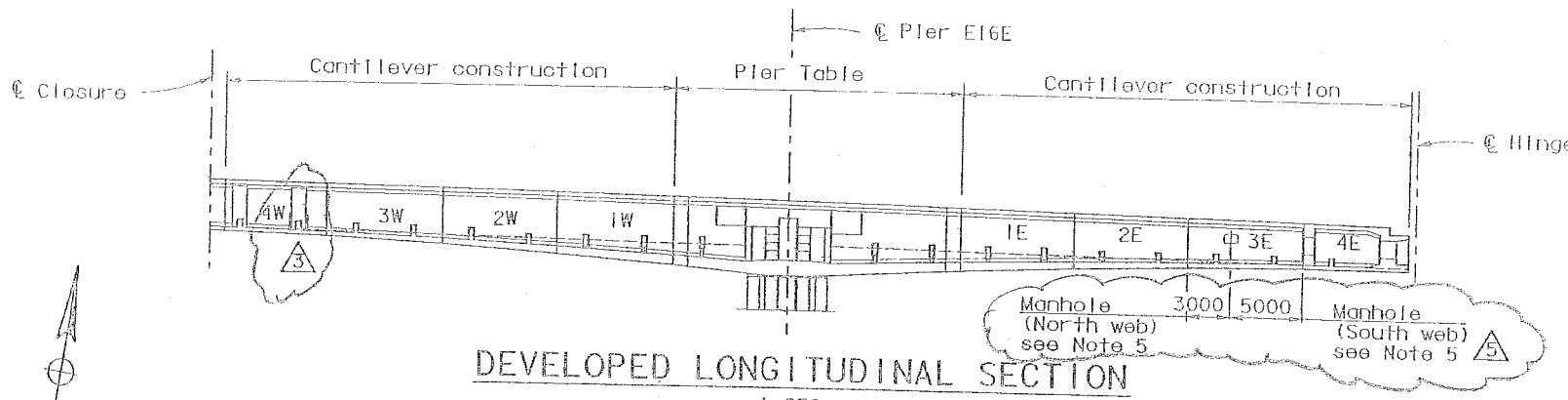

DEVELOPED LONGITUDINAL SECTION
1:250

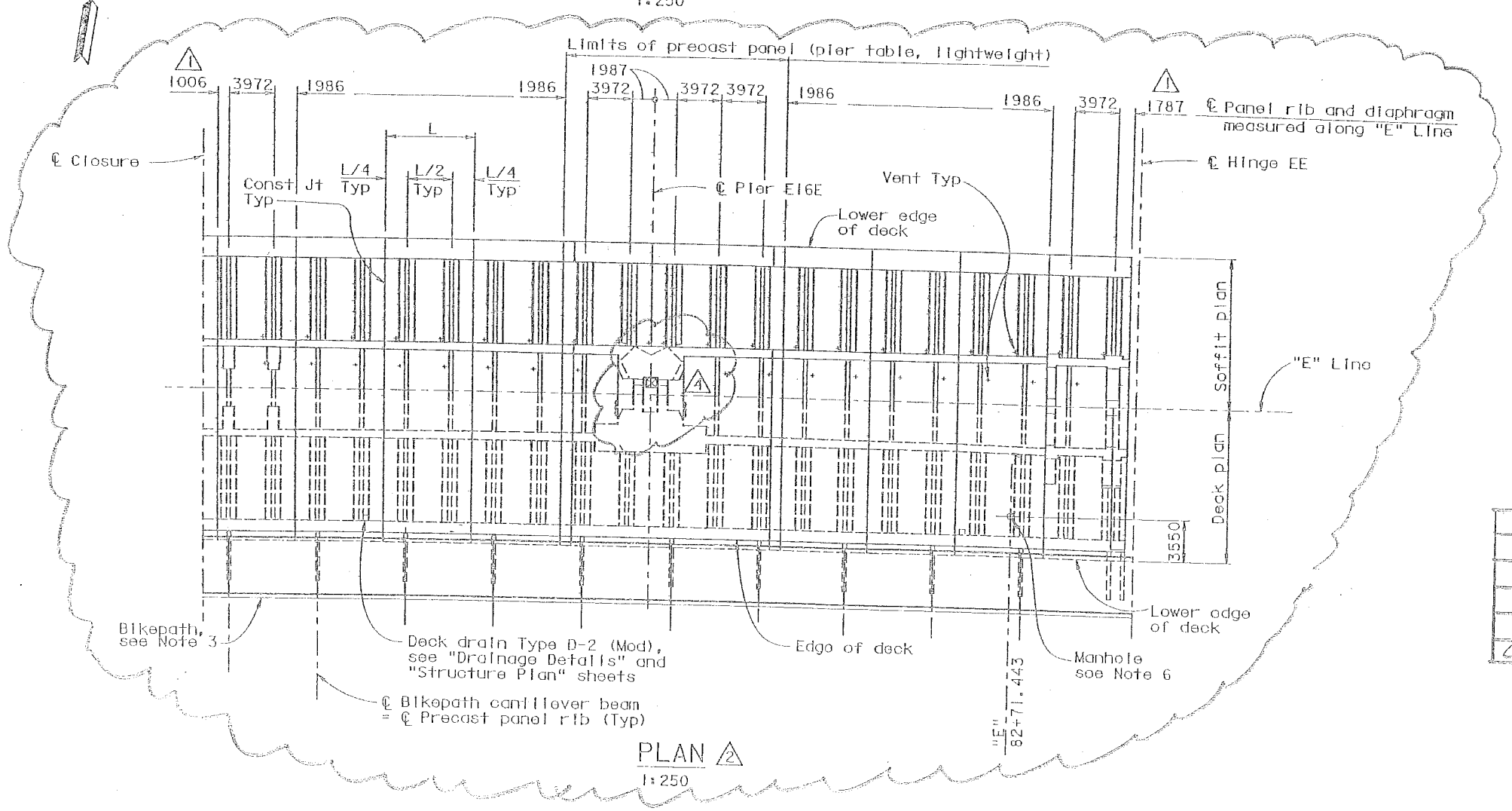

PLAN 2
1:250

MARK	DATE	DESCRIPTIONS	BY	CH'D
24	07/25/03	REVISE WEB MANHOLE LOCATIONS	MR	JC
74	07/25/03	REVISE PIER TABLE BOTTOM SLAB ACCESS OPENING	MR	SS
52	01/20/03	REVISE FUTURE TENDON DEV BLOCK LOCATION	MR	SS
28	01/20/03	REVISE DRAIN LOCATION	MR	SS
9	03/04/02	REVISE DIMENSIONS	TM	SC

REVISIONS

CONTRACT CHANGE ORDER NO. 28
SHEET 43 OF 48

100 % PS&E

DESIGN OVERSIGHT 8/6/2003
SIGN OFF DATE
Rev. Date: 5-16-96

DESIGN	BY S. Abbas	CHECKED M. Lamont	
DETAILS	BY A. Tishansky	CHECKED M. Lamont	
QUANTITIES	BY K. Cormier	CHECKED S. Shi	

PREPARED FOR THE STATE OF CALIFORNIA DEPARTMENT OF TRANSPORTATION

Sajid Abbas
PROJECT ENGINEER

ALL DIMENSIONS ARE IN MILLIMETERS UNLESS OTHERWISE SHOWN

BRIDGE NO. 34-0006L/R
KILOMETER POST 13.9/14.3, 0.0/1.6

SAN FRANCISCO OAKLAND BAY BRIDGE
EAST SPAN SEISMIC SAFETY PROJECT

SKYWAY STRUCTURES

GIRDER LAYOUT E16E

T.Y.LIN INTERNATIONAL
MOFFATT & NICHOL
a joint venture

SFOBB – Skyway *Project*
345 Burma Road, Oakland CA 94607
Telephone (510) 622-1071 Facsimile (510) 622-1069

REVISION MARKS ON CONTRACT PLAN CHANGES

SFOBB Skyway Project # 04-012024

Revisions to the following plans were prepared under the supervision of the undersigned engineer.

537R2, 540R2, 544R2, 551R2, 554R2, 558R2	Revision Marks 1 & 2	Dated	1/20/03
537R2, 540R2, 544R2, 551R2, 554R2, 558R2	Revision Marks 3 & 4	Dated	7/25/03
538R2, 539R2, 542R2, 543R2, 545R2, 546R2, 547R2, 552R2, 553R2, 555R2, 556R2, 557R2, 559R2, 560R2, 561R2	Revision Marks 1 & 2	Dated	1/20/03
538R2, 539R2, 542R2, 543R2, 545R2, 546R2, 547R2, 552R2, 553R2, 555R2, 556R2, 557R2, 559R2, 560R2, 561R2	Revision Marks 3	Dated	7/25/03
541R3	Revision Mark 1	Dated	3/04/02
541R3	Revision Marks 2 & 3	Dated	1/20/03
541R3	Revision Mark 4	Dated	7/25/03
548R3, 550R3, 562R3, 564R3	Revision Mark 1	Dated	3/04/02
548R3, 550R3, 562R3, 564R3	Revision Marks 2 & 3	Dated	1/20/03
548R3, 550R3, 562R3, 564R3	Revision Marks 4 & 5	Dated	7/25/03
549R3, 563R3	Revision Mark 1	Dated	3/04/02
549R3, 563R3	Revision Mark 2	Dated	1/20/03
549R3, 563R3	Revision Mark 3	Dated	7/25/03

For the project in SF/ALA County

Route — 80

Km Post Description 04-SF, Ala-80-13.9114 3,0.0/1.6

District/EA 012021

(Signature) 02/27/04 (Date)

Sajid Abbas
(Name)

(Title)

C 055274
(Registration No.)

12/31/04
(Date of Expiration)

REGISTERED PROFESSIONAL ENGINEER
Sajid Abbas
No. C 055274
Exp. 12/31/04
CIVIL
STATE OF CALIFORNIA

SA - CCO#28_2

DIST.	COUNTY	ROUTE	KILOMETER POST TOTAL PROJECT	SHEET NO.	TOTAL SHEETS
04	SF, Ala	80	13.9 / 14.3, 0.0 / 1.6	736R2	978

REGISTERED ENGINEER - CIVIL

6-04-01
PLANS APPROVAL DATE

REGISTERED PROFESSIONAL ENGINEER Scott Hunter No. C-048066 Exp. 12/31/03 CIVIL STATE OF CALIFORNIA

The State of California or its officers or agents shall not be responsible for the accuracy or completeness of electronic copies of this plan sheet.

T.Y. LIN / MOFFATT & NICHOL
825 BATTERY STREET
SAN FRANCISCO, CA 94111

Caltrans now has a web site! To get to the web site, go to: http://www.dot.ca.gov

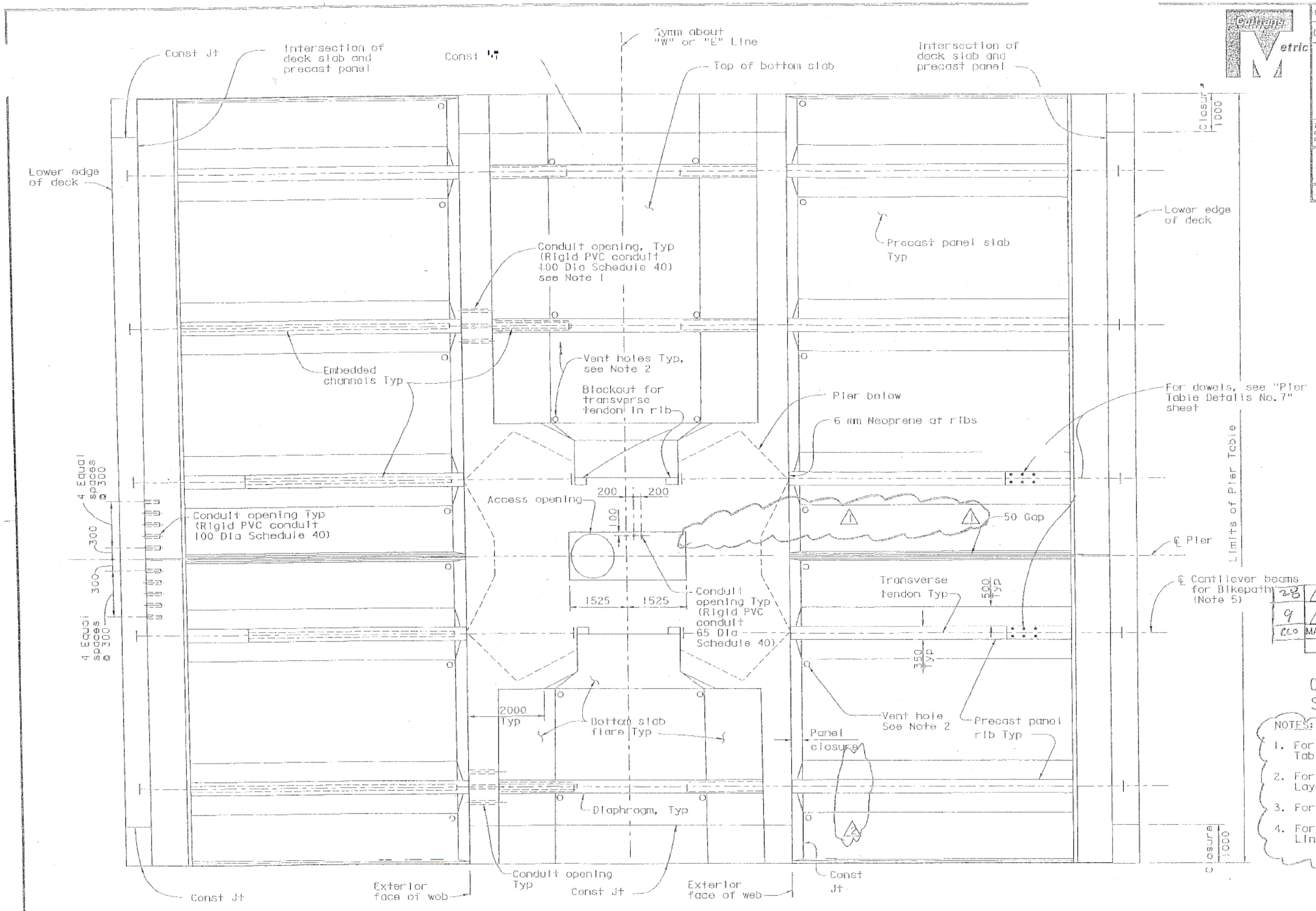

MARK	DATE	DESCRIPTIONS	BY	CH'D
28	01/20/03	REMOVE DRAINAGE PIPE	MR	SS
9	03/04/02	REVISE DRAINAGE PIPE DETAILS	TM	SC

REVISIONS

CONTRACT CHANGE ORDER NO. 28
SHEET 44 OF 48

NOTES:

1. For conduit opening location, see "Pier Table Details No. 3" sheet.
2. For location of vent holes, see "Girder Layout" sheets.
3. For conduit details, see "Road Plans".
4. For details of cantilever beams on "E" Line, see "Bikepath Details" sheets.

SOFFIT PLAN (Piers E3 through E14)

1:50

ALL DIMENSIONS ARE IN MILLIMETERS UNLESS OTHERWISE SHOWN

DESIGN OVERSIGHT 2/5/03
SIGN OFF DATE 11/17/00

	BY	CHECKED	
DESIGN	S. Hunter	M. Lamont	
DETAILS	S. Lee	M. Lamont	
QUANTITIES	S. Hunter	T. West	

PREPARED FOR THE STATE OF CALIFORNIA DEPARTMENT OF TRANSPORTATION

Sajid Abbas
PROJECT ENGINEER

BRIDGE NO. 34-0006L/R
KILOMETER POST 13.9/14.3, 0.0/1.6

SAN FRANCISCO OAKLAND BAY BRIDGE
EAST SPAN SEISMIC SAFETY PROJECT

SKYWAY STRUCTURES

PIER TABLE DETAILS NO. 2

Rev. Date: 5-18-99

ORIGINAL SCALE IN MILLIMETERS FOR REDUCED PLANS 0 10 20 30 40 50 60 70 80 90 100

CU 04
EA 04-012021

DISREGARD PRINTS BEARING EARLIER REVISION DATES

REVISION DATES (PRELIMINARY STAGE ONLY) 01/28/99 02/23/99 09/08/99 11/17/99 12/29/99 05/16/01 10/16/01 03/04/02 01/20/03

SHEET 304 OF

SERFACE => TMOFFATT DATE PLOTTED => 02/04/2003 TIME PLOTTED => 12:08:46 PM

100 % PSSL

T·Y·LIN INTERNATIONAL
MOFFATT & NICHOL
a joint venture

SFOBB – Skyway Project
345 Burma Road, Oakland CA 94607
Telephone (510) 622-1071 Facsimile (510) 622-1069

REVISION MARKS ON CONTRACT PLAN CHANGES

SFOBB Skyway Project # 04-012024

Revisions to the following plans were prepared under the supervision of the undersigned engineer.

443R1 thru 445R1	Revision Mark 1	Dated	01/20/03
446R1	Revision Mark 1	Dated	01/10/03
447R2	Revision Mark 1	Dated	03/04/02
447R2	Revision Mark 2	Dated	01/20/03
448R1, 449R1	Revision Mark 1	Dated	01/20/03
450R1	Revision Mark 1	Dated	01/10/03
502R2, 503R2	Revision Mark 1	Dated	03/04/02
502R2, 503R2	Revision Mark 2	Dated	01/20/03
506R1	Revision Mark 1	Dated	01/20/03
736R2, 738R2	Revision Mark 1	Dated	03/04/02
736R2, 738R2	Revision Mark 2	Dated	01/20/03
748R2, 750R2	Revision Mark 1	Dated	03/04/02
748R2, 750R2	Revision Mark 2	Dated	01/20/03
886R2	Revision Mark 1	Dated	01/10/03
886R2	Revision Mark 2	Dated	05/20/03

For the project in SF/ALA County

Route 80

Km Post Description 04-SF, Ala-80-13.9/14.3,0.0/1.6

District/EA 012021

(Signature) 02/27/04 (Date)

Sajid Abbas
(Name)

(Title)

C 055274
(Registration No.)

12/31/04
(Date of Expiration)

REGISTERED PROFESSIONAL ENGINEER
Sajid Abbas
No. C 055274
Exp. 12/31/04
CIVIL
STATE OF CALIFORNIA

DIST.	COUNTY	ROUTE	KILOMETER POST TOTAL PROJECT	SHEET NO.	TOTAL SHEETS
04	SF, Ala	80	13.9/14.3, 0.0/1.6	738R2	978

REGISTERED ENGINEER - CIVIL

6-04-01
PLANS APPROVAL DATE

The State of California or its officers or agents shall not be responsible for the accuracy or completeness of electronic copies of this plan sheet.

T.Y. LIN / MOFFATT & NICHOL
825 BATTERY STREET
SAN FRANCISCO, CA 94111

Caltrans now has a web site! To get to the web site, go to: http://www.dot.ca.gov

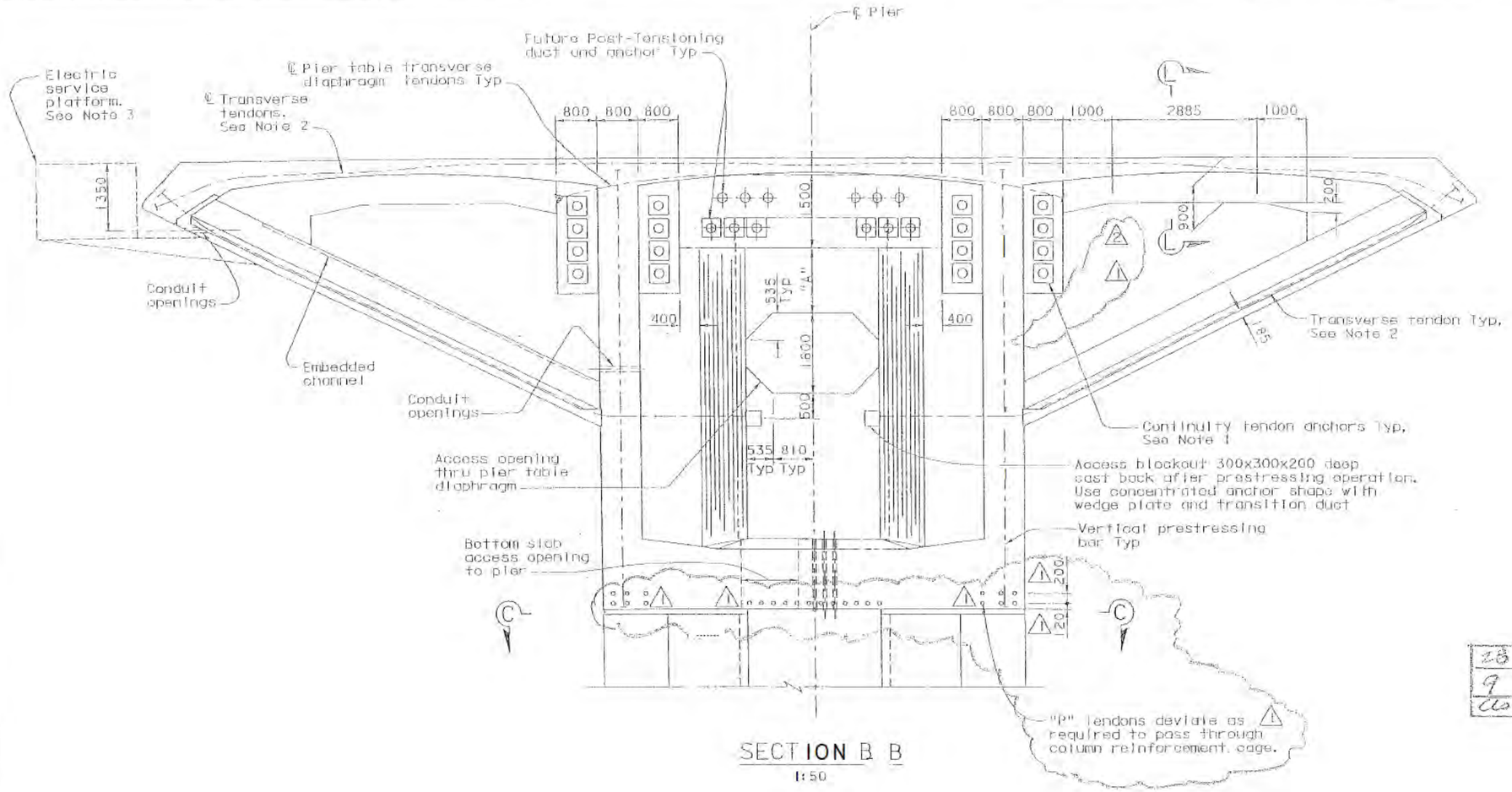

SECTION B B
1:50

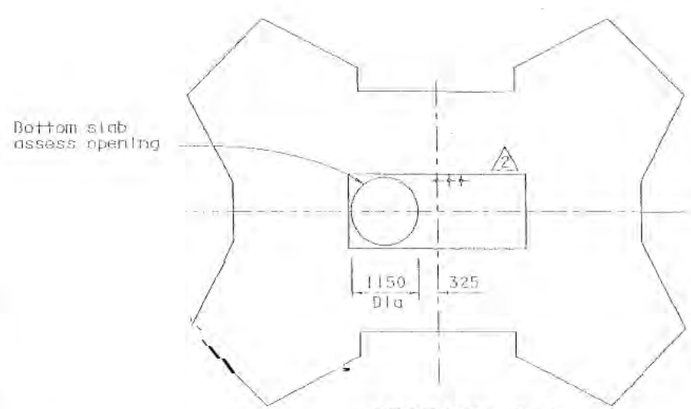

SECTION C-C
1:50

DIMENSION TABLE

	Pier E3 to E12	Pier E13	Pier E14
"A"	1300	913	181

* "A" varies, dimension given at ℄ Pier.

MARK	DATE	DESCRIPTIONS	BY	CH'D
28	01/20/03	REMOVE DRAINAGE PIPE	MR	SS
9	03/04/02	REVISE "P" TENDON DETAILS AND DRAINAGE PIPE DETAILS	TM	SC

REVISIONS

CONTRACT CHANGE ORDER NO. 28
SHEET 45 OF 48

NOTES:

1. For anchorage and number of continuity tendons, see "Continuity Tendon Details" and "Continuity Tendon Layout" sheets.
2. For transverse tendon profile, see "Transverse Tendon Details" sheets.
3. For electric service platform details, see "Road Plans".
4. For embedded channel details, see "Road Plans".
5. For Section L-L, see "Pier Table Details No. 12" sheet.

ALL DIMENSIONS ARE IN MILLIMETERS UNLESS OTHERWISE SHOWN

DESIGN OVERSIGHT 2/5/03
SIGN OFF DATE 11/27/00

	BY	CHECKED	BY
DESIGN	S. Hunter	M. Lamont	
DETAILS	S. Lee	M. Lamont	
QUANTITIES	S. Hunter	T. Nosi	

PREPARED FOR THE STATE OF CALIFORNIA DEPARTMENT OF TRANSPORTATION

Sajid Abbas
PROJECT ENGINEER

BRIDGE NO. 34-0006L/R
KILOMETER POST 13.9/14.3, 0.0/1.6

SAN FRANCISCO OAKLAND BAY BRIDGE
EAST SPAN SEISMIC SAFETY PROJECT

SKYWAY STRUCTURES

PIER TABLE DETAILS NO. 4

Rev. Date 5-8-98

ORIGINAL SCALE IN MILLIMETERS FOR REDUCED PLANS 0 10 20 30 40 50 60 70 80 90 100

CU 04
EA 04-012021

DISREGARD PRINTS BEARING EARLIER REVISION DATES

REVISION DATES (MM/DD/YYYY) STATE USE ONLY

SHEET OF

100 % PSSE

TIME PLOTTED => 12:10:18 PM
DATE PLOTTED => 02/04/2003
SERNAME => tmcpdata

T.Y.LIN INTERNATIONAL
MOFFATT & NICHOL
a joint venture

SFOBB – Skyway Project
345 Burma Road, Oakland CA 94607
Telephone (510)622-1071 Facsimile (510)622-1069

REVISION MARKS ON CONTRACT PLAN CHANGES

SFOBB Skyway Project # 04-012024

Revisions to the following plans were prepared under the supervision of the undersigned engineer.

443R1 thru 445R1	Revision Mark 1	Dated	01/20/03
446R1	Revision Mark 1	Dated	01/10/03
447R2	Revision Mark 1	Dated	03/04/02
447R2	Revision Mark 2	Dated	01/20/03
448R1, 449R1	Revision Mark 1	Dated	01/20/03
450R1	Revision Mark 1	Dated	01/10/03
502R2, 503R2	Revision Mark 1	Dated	03/04/02
502R2, 503R2	Revision Mark 2	Dated	01/20/03
506R1	Revision Mark 1	Dated	01/20/03
736R2, 738R2	Revision Mark 1	Dated	03/04/02
736R2, 738R2	Revision Mark 2	Dated	01/20/03
748R2, 750R2	Revision Mark 1	Dated	03/04/02
748R2, 750R2	Revision Mark 2	Dated	01/20/03
886R2	Revision Mark 1	Dated	01/10/03
886R2	Revision Mark 2	Dated	05/20/03

For the project in SF/ALA County

Route 80

Km Post Description 04-SF, Ala-80-13.9/14.3,0.0/1.6

District/EA 012021

(Signature)

02/27/04
(Date)

Sajid Abbas
(Name)

(Title)

C 055274
(Registration No)

12/31/04
(Date of Expiration)

REGISTERED PROFESSIONAL ENGINEER
Sajid Abbas
No C 055274
Exp. 12/31/04
CIVIL
STATE OF CALIFORNIA

DIST.	COUNTY	ROUTE	KILOMETER POST TOTAL PROJECT	SHEET NO.	TOTAL SHEETS
04	SF, Ala	80	13.9/14.3, 0.0/1.6	748R2	978

REGISTERED ENGINEER - CIVIL

6-04-01
PLANS APPROVAL DATE

REGISTERED PROFESSIONAL ENGINEER Scott Hunter No. C-048066 Exp. 12/31/03 CIVIL STATE OF CALIFORNIA

The State of California or its officers or agents shall not be responsible for the accuracy or completeness of electronic copies of this plan sheet.

T.Y. LIN / MOFFATT & NICHOL
825 BATTERY STREET
SAN FRANCISCO, CA 94111

Caltrans now has a web site! To get to the web site, go to: http://www.dot.ca.gov

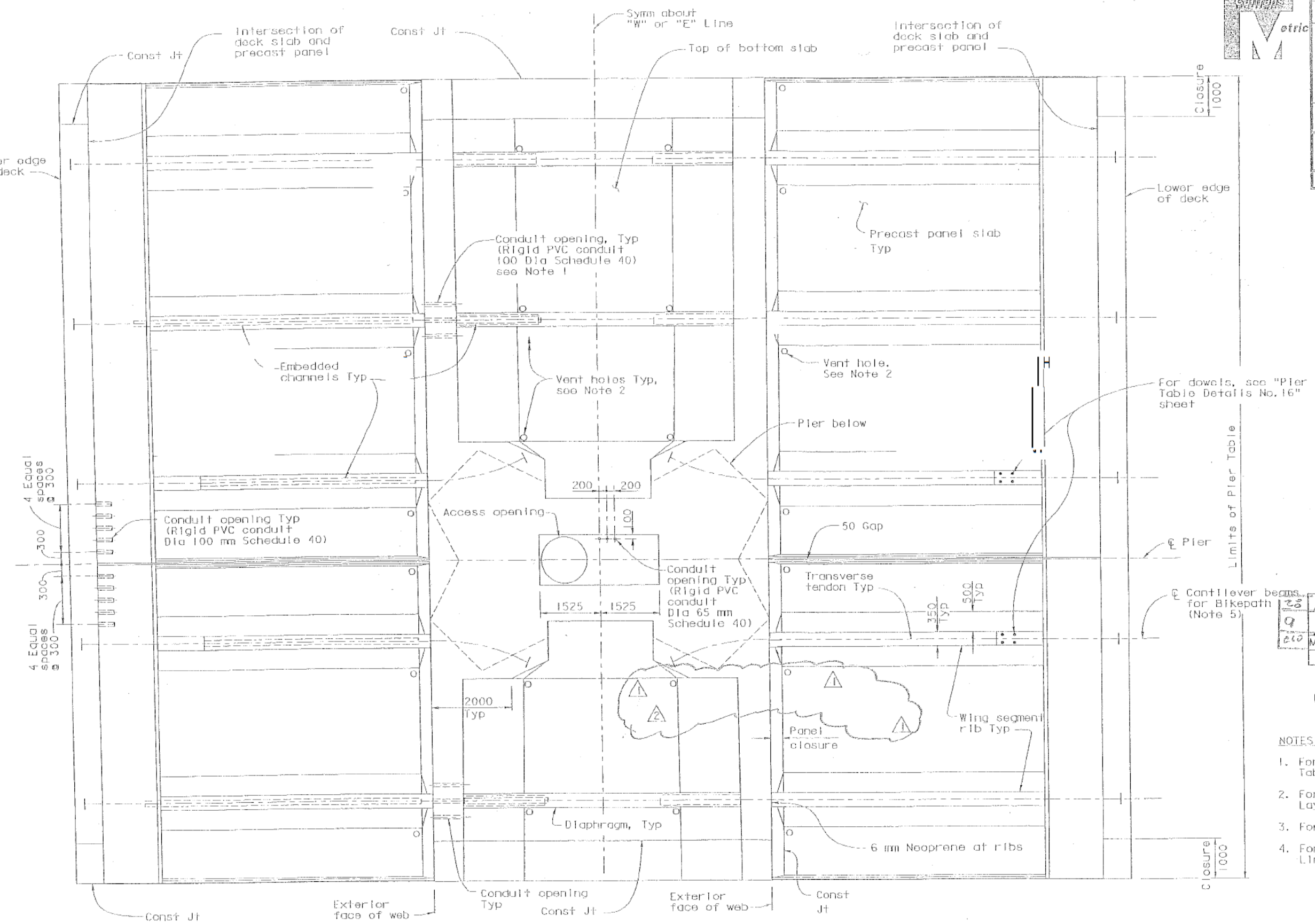

SOFFIT PLAN (Pier E15 and E16)
1:50

ALL DIMENSIONS ARE IN MILLIMETERS UNLESS OTHERWISE SHOWN

MARK	DATE	DESCRIPTIONS	BY	CH'D
2	01/20/03	REMOVE DRAINAGE PIPE	MR	SS
1	03/04/02	REVISE DRAINAGE PIPE DETAILS	TM	SC

REVISIONS

CONTRACT CHANGE ORDER NO. 28
SHEET 46 OF 48

NOTES:

1. For conduit opening location, see "Pier Table Details No. 15" sheet.
2. For location of vent holes, see "Girder Layout" sheets.
3. For conduit details, see "Road Plans".
4. For details of cantilever beams on "E" Line, see "Bikepath Details" sheets.

DESIGN OVERSIGHT 2/5/03
SIGN OFF DATE 11/17/00

	BY	CHECKED	
DESIGN	S. Hunter	M. Lamont	
DETAILS	F. Hung	M. Lamont	
QUANTITIES	S. Hunter	T. Wast	

PREPARED FOR THE STATE OF CALIFORNIA DEPARTMENT OF TRANSPORTATION

Sajid Abbas
PROJECT ENGINEER

BRIDGE NO. 34-0006L/R
KILOMETER POST 13.9/14.3, 0.0/1.6

SAN FRANCISCO OAKLAND BAY BRIDGE
EAST SPAN SEISMIC SAFETY PROJECT

SKYWAY STRUCTURES

PIER TABLE DETAILS NO. 14

Rev. Date: 5-18-98

ORIGINAL SCALE IN MILLIMETERS FOR REDUCED PLANS 0 10 20 30 40 50 60 70 80 90 100

CU 04
EA 04-012021

DISREGARD PRINTS BEARING EARLIER REVISION DATES 02/15/96 10/30/96 11/17/96 02/21/01 03/16/01 10/16/01 03/04/02 01/20/03

SHEET 316 OF

LEGENDNAME => smorgasbrd DATE PLOTTED => 02/04/2003 TIME PLOTTED => 12:10:49 PM

100% PS&E

T.Y.LIN INTERNATIONAL
MOFFATT & NICHOL
a joint venture

SFOBB – Skyway Project
345 Burma Road, Oakland CA 94607
Telephone (510) 622-1071 Facsimile (510) 622-1069

REVISION MARKS ON CONTRACT PLAN CHANGES

SFOBB Skyway Project # 04-012024

Revisions to the following plans were prepared under the supervision of the undersigned engineer.

443R1 thru 445R1	Revision Mark 1	Dated	01/20/03
446R1	Revision Mark 1	Dated	01/10/03
447R2	Revision Mark 1	Dated	03/04/02
447R2	Revision Mark 2	Dated	01/20/03
448R1, 449R1	Revision Mark 1	Dated	01/20/03
450R1	Revision Mark 1	Dated	01/10/03
502R2, 503R2	Revision Mark 1	Dated	03/04/02
502R2, 503R2	Revision Mark 2	Dated	01/20/03
506R1	Revision Mark 1	Dated	01/20/03
736R2, 738R2	Revision Mark 1	Dated	03/04/02
736R2, 738R2	Revision Mark 2	Dated	01/20/03
748R2, 750R2	Revision Mark 1	Dated	03/04/02
748R2, 750R2	Revision Mark 2	Dated	01/20/03
886R2	Revision Mark 1	Dated	01/10/03
886R2	Revision Mark 2	Dated	05/20/03

For the **project** in SF/ALA County

Route 80

Km Post Description 04-SF, Ala-80-13 9/14 3,0 0/1 6

District/EA 012021

(Signature)

02/27/04
(Date)

Sajid Ahbas
(Name)

(Title)

C 055274
(Registration No.)

12/3 1104
(Date of Expiration)

REGISTERED PROFESSIONAL ENGINEER
Sajid Abbas
No. C 055274
Exp. 12/31/04
CIVIL
STATE OF CALIFORNIA

DIST.	COUNTY	ROUTE	KILOMETER POST TOTAL PROJECT	SHEET NO.	TOTAL SHEETS
04	SF, Ala	80	13.9/14.3, 0.0/1.6	750R2	978

REGISTERED ENGINEER - CIVIL

6-04-01
PLANS APPROVAL DATE

Scott Hunter No. C-046066 Exp. 12/31/03 CIVIL STATE OF CALIFORNIA

The State of California or its officers or agents shall not be responsible for the accuracy or completeness of electronic copies of this plan sheet.

T.Y. LIN / MOFFATT & NICHOL
825 BATTERY STREET
SAN FRANCISCO, CA 94111

Caltrans now has a web site! To get to the web site, go to: http://www.dot.ca.gov

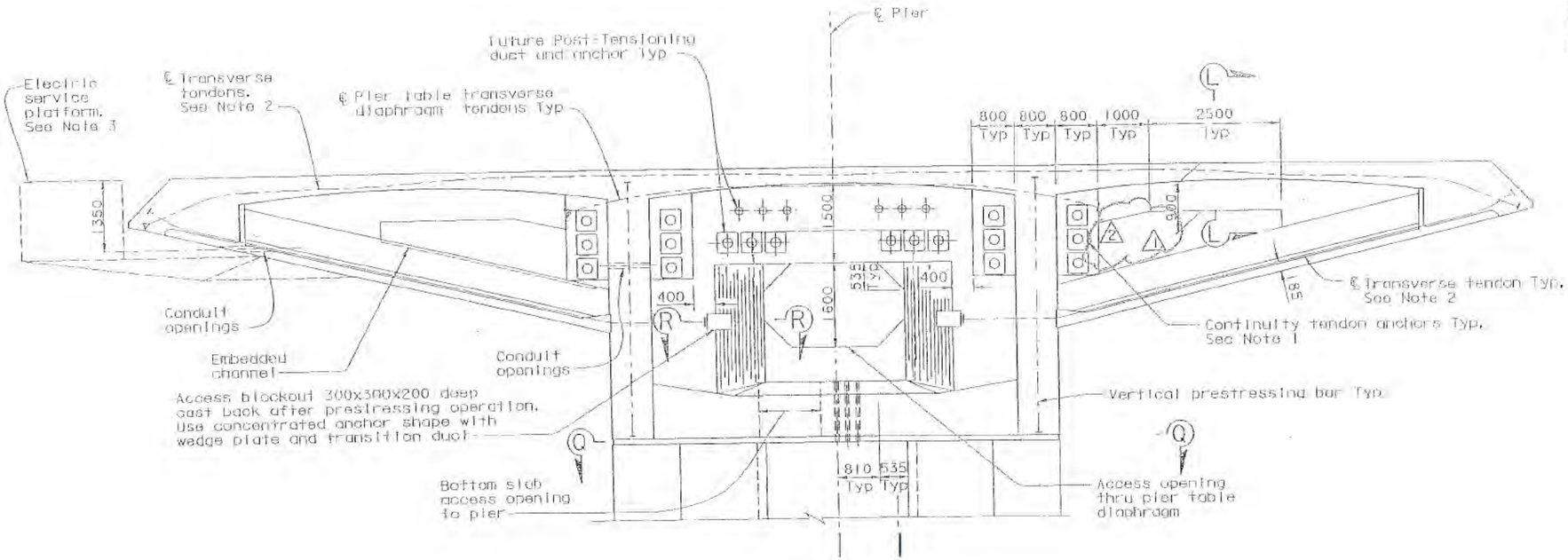

SECTION P-P
1:50

MARK	DATE	DESCRIPTIONS	BY	CH'D
28	01/20/03	REMOVE DRAINAGE PIPE	MR	SS
9	03/04/02	REVISE DRAINAGE PIPE DETAILS	TM	SC
CCO		REVISIONS		

CONTRACT CHANGE ORDER NO. 28
SHEET 47 OF 48

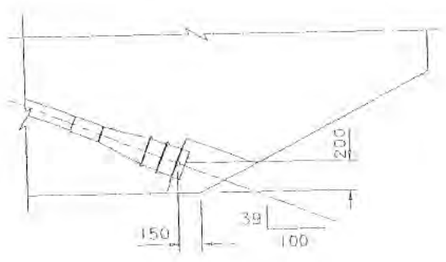

SECTION R-R
1:20

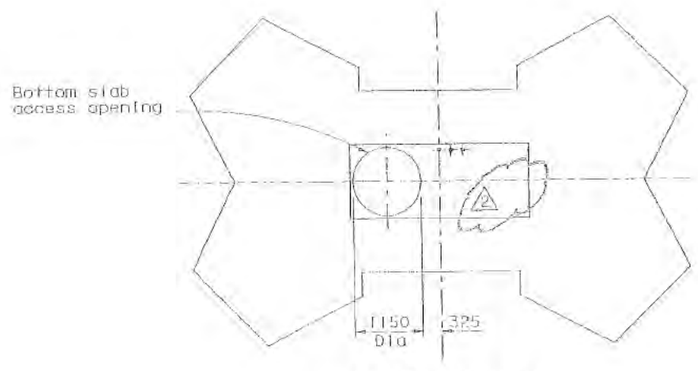

SECTION Q-Q
1:50

NOTES:

1. For anchorage and number of continuity tendons, see "Continuity Tendon Details" and "Continuity Tendon Layout" sheets.
2. For transverse tendons, see "Transverse Tendon Details" sheets.
3. For electric service platform details, see "Road Plans".
4. For embedded channel details, see "Road Plans".
5. For Section L-L, see "Pier Table Details No. 12" sheet.

100 % PS&E

ALL DIMENSIONS ARE IN MILLIMETERS UNLESS OTHERWISE SHOWN

SAN FRANCISCO OAKLAND BAY BRIDGE
EAST SPAN SEISMIC SAFETY PROJECT

SKYWAY STRUCTURES

PIER TABLE DETAILS NO. 16

DESIGN OVERSIGHT 2/5/02
SIGN OFF DATE 11/17/00

	BY	CHECKED
DESIGN	S. Hunter	M. Lamont
DETAILS	F. Rung	M. Lamont
QUANTITIES	S. Hunter	T. Nost

PREPARED FOR THE STATE OF CALIFORNIA DEPARTMENT OF TRANSPORTATION

Salid Abbas
PROJECT ENGINEER

BRIDGE NO. 34-0006L/R
KILOMETER POST 3.9/14.3, 0.0/1.6

ORIGINAL SCALE IN MILLIMETERS FOR REDUCED PLANS 0 10 20 30 40 50 60 70 80 90 100

CU 04
EA 04-012021

DISREGARD PRINTS BEARING EARLIER REVISION DATES

DIVISION DATES (PRELIMINARY STAGE ONLY)

SHEET 318 OF

USERNAME => TMCFORTO DATE PLOTTED => 02/05/2003 TIME PLOTTED => 12:11:46 PM

T.Y.LIN INTERNATIONAL
MOFFATT & NICHOL
a joint venture

SFOBB – Skyway Project
345 Burma Road, Oakland CA 94607
Telephone (510) 622-1071 Facsimile (510)622-1069

REVISION MARKS ON CONTRACT PLAN CHANGES

SFOBB Skyway Project # 04-012024

Revisions to the following plans were prepared under the supervision of the undersigned engineer.

443R1 thru 445R1	Revision Mark 1	Dated	01/20/03
446R1	Revision Mark 1	Dated	01/10/03
447R2	Revision Mark 1	Dated	03/04/02
447R2	Revision Mark 2	Dated	01/20/03
448R1, 449R1	Revision Mark 1	Dated	01/20/03
450R1	Revision Mark 1	Dated	01/10/03
502R2, 503R2	Revision Mark 1	Dated	03/04/02
502R2, 503R2	Revision Mark 2	Dated	01/20/03
506R1	Revision Mark 1	Dated	01/20/03
736R2, 738R2	Revision Mark 1	Dated	03/04/02
736R2, 738R2	Revision Mark 2	Dated	01/20/03
748R2, 750R2	Revision Mark 1	Dated	03/04/02
748R2, 750R2	Revision Mark 2	Dated	01/20/03
886R2	Revision Mark 1	Dated	01/10/03
886R2	Revision Mark 2	Dated	05/20/03

For the project in SF/Al,**A** ——-County

Route 80

Km Post Description 04-SF, Ala-80-13.9/14.3,0.0/1.6

District/EA 012021

(Signature) 02/27/04 (Date)

Sajid **Abbas**
(Name)

(Title)

C 055274
(Registration No.)

1 2131104
(Date of Expiration)

REGISTERED PROFESSIONAL ENGINEER
Sajid Abbas
No. C 055274
Exp. 12/31/04
CIVIL
STATE OF CALIFORNIA

DIST.	COUNTY	ROUTE	KILOMETER POST TOTAL PROJECT	SHEET NO.	TOTAL SHEETS
04	SF, Ala	80	13.9/14.3, 0.0/1.6	886R2	978

Caltrans Metric

Al Ely
REGISTERED ENGINEER - CIVIL

6-04-01
PLANS APPROVAL DATE

REGISTERED PROFESSIONAL ENGINEER A. L. Ely No. C 18880 Exp. 6/30/05 CIVIL STATE OF CALIFORNIA

The State of California or its officers or agents shall not be responsible for the accuracy or completeness of electronic copies of this plan sheet.

T.Y. LIN / MOFFATT & NICHOL
825 BATTERY STREET
SAN FRANCISCO, CA 94111

Caltrans now has a web site! To get to the web site, go to: http://www.dot.ca.gov

THIS SHEET REPLACES SHEET NO. 886 OF 978 OF PLAN APPROVED JUNE 04, 2001

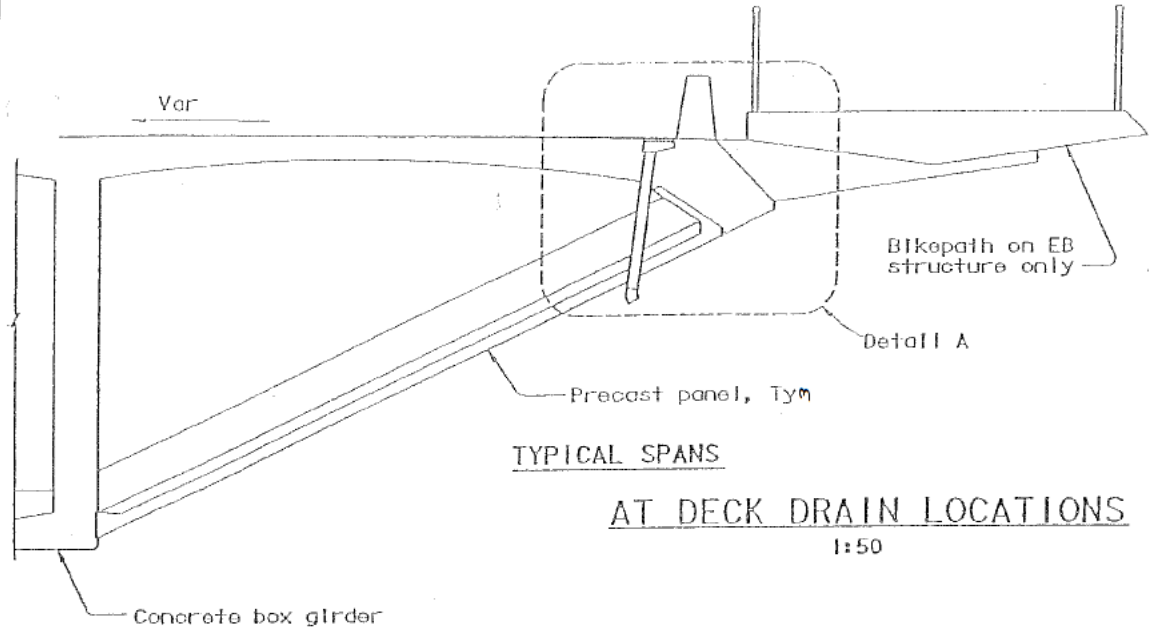

TYPICAL SPANS

AT DECK DRAIN LOCATIONS

1:50

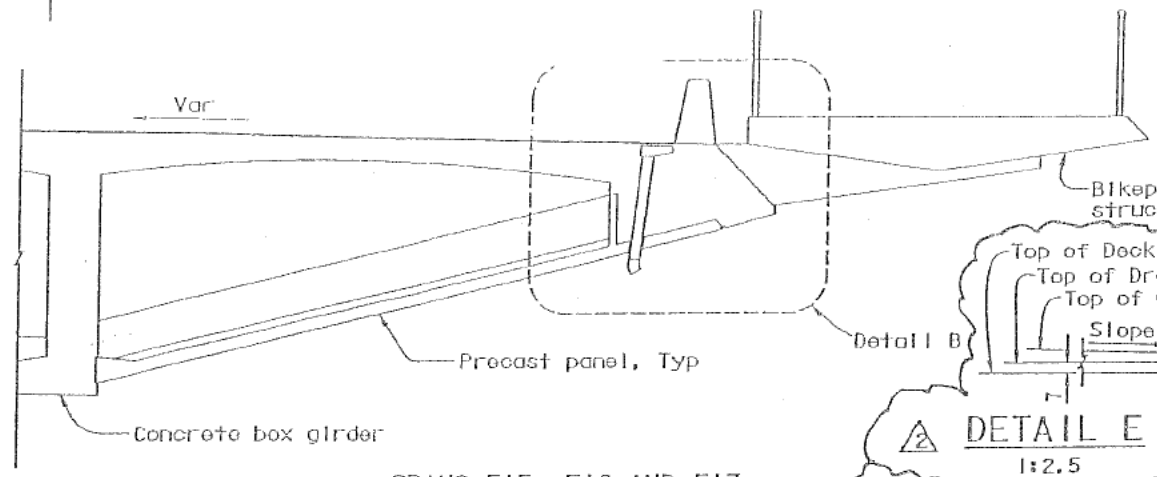

SPANS E15, E16 AND E17

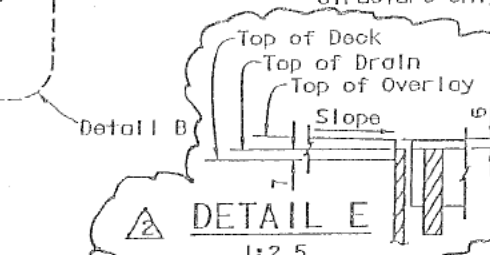

DETAIL E

1:2.5

DRAIN KEY PLAN

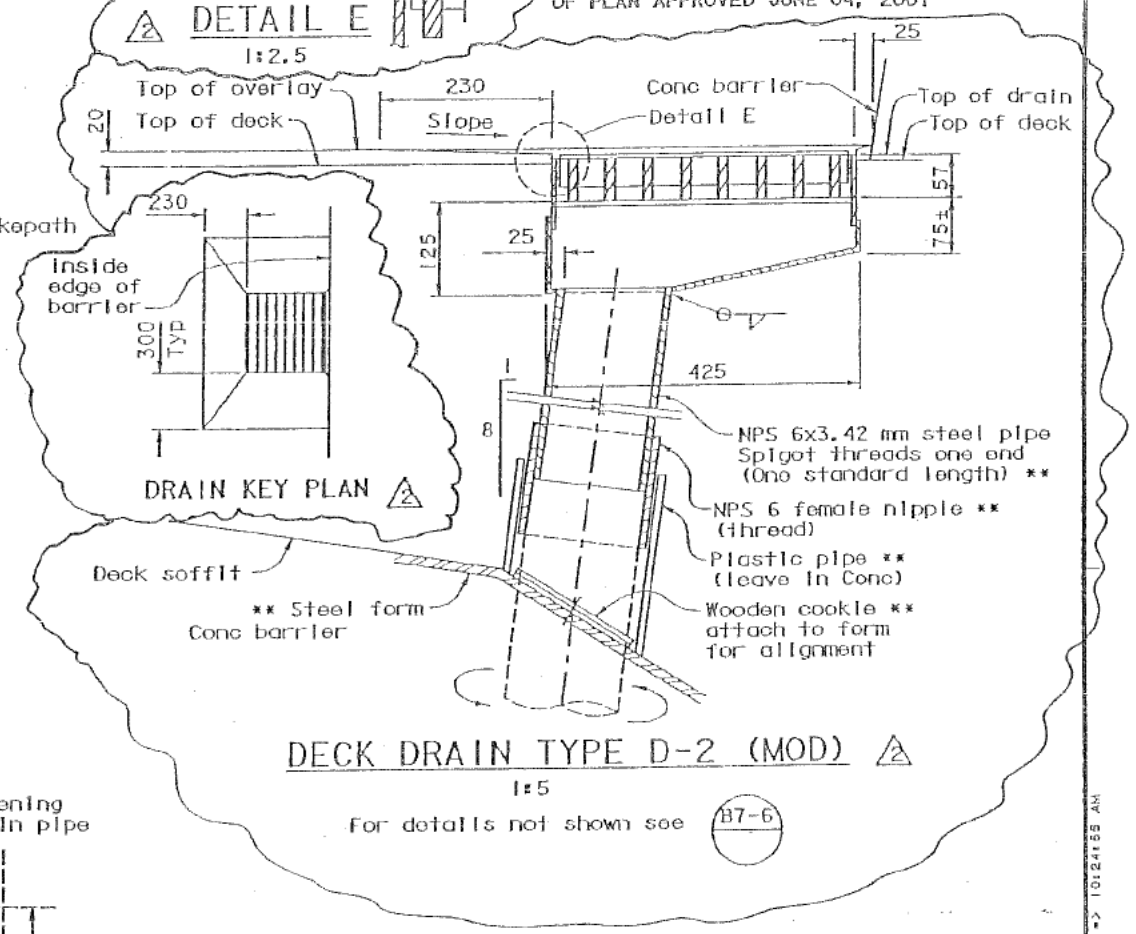

DECK DRAIN TYPE D-2 (MOD)

1:5

For details not shown see B7-6

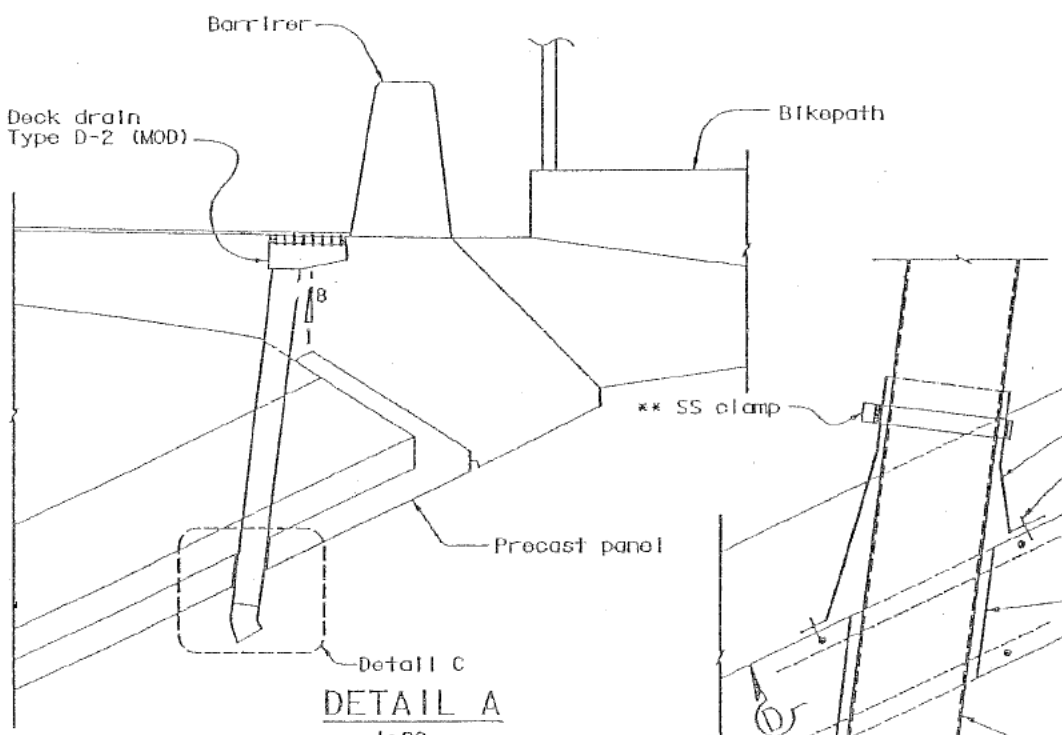

DETAIL A

1:20

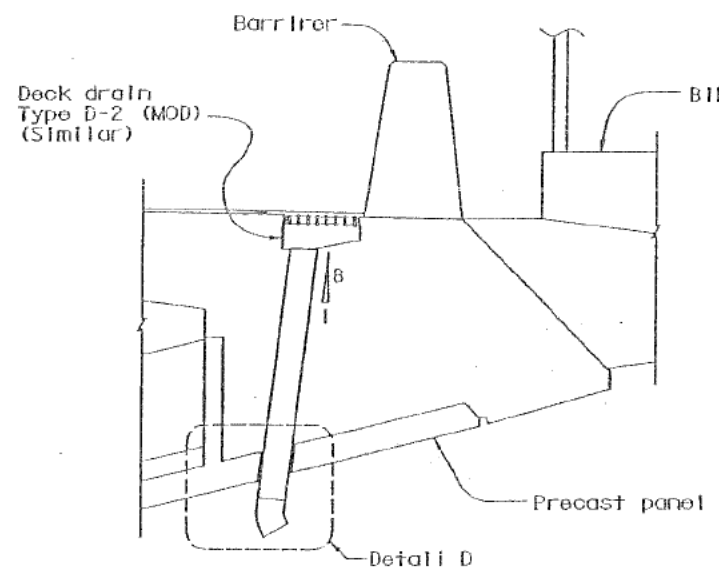

DETAIL B

1:20

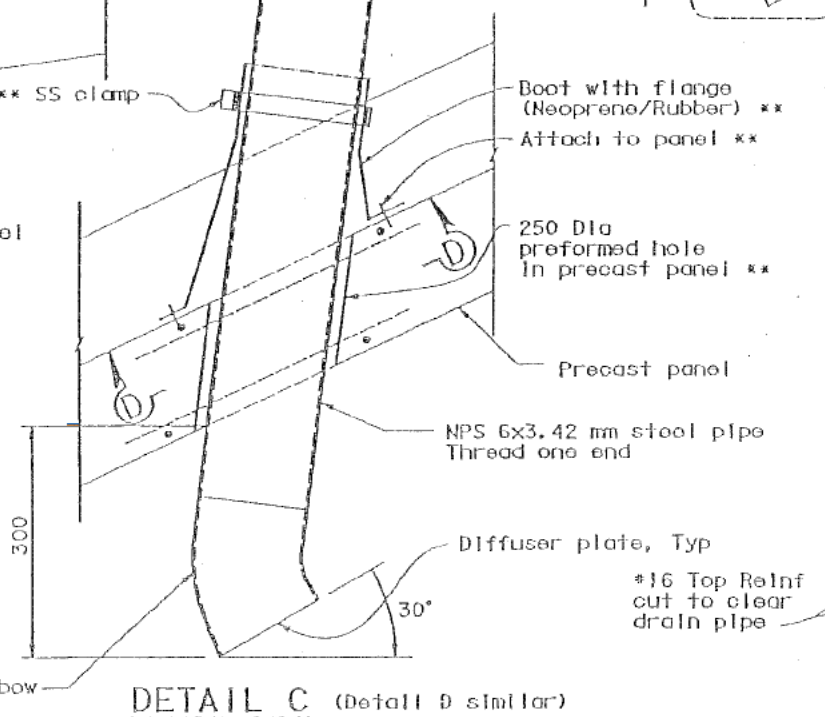

DETAIL C (Detail D similar)

1:5

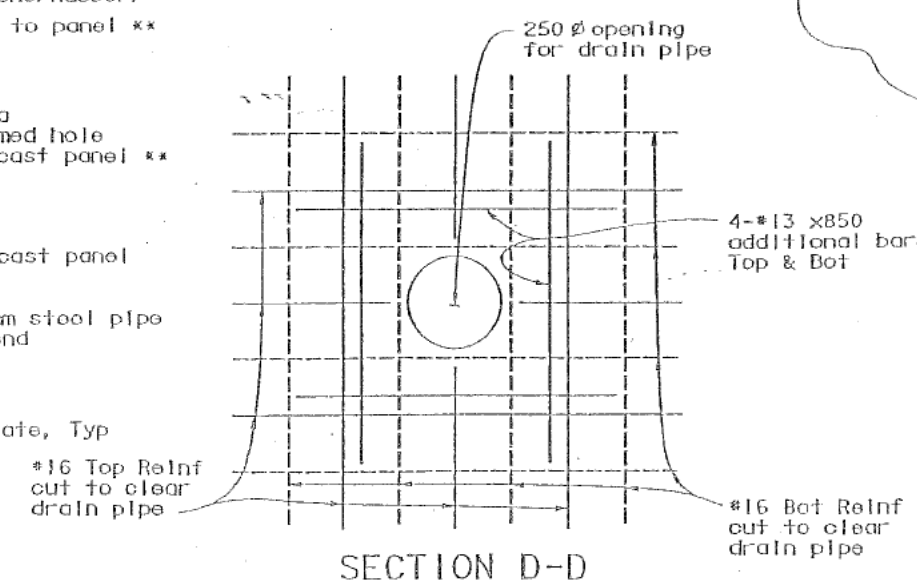

SECTION D-D

1:10

NOTES:

1. Deck drain shall be parallel to deck.
2. Place reinforcement along outside face of deck drain with edge beam or barrier.
3. Reinforcement in concrete box girder is not shown for clarity.
4. Items shown with (**) are based specifically upon contractor's input.

MARK	DATE	DESCRIPTIONS	BY	CH'D
2	05/20/03	REVISE DRAIN DETAIL	MS	MR
1	01/10/03	DRAINAGE DETAIL REVISIONS	MS	MR

REVISIONS

CONTRACT CHANGE ORDER NO. 28
SHEET 48 OF 48

ALL DIMENSIONS ARE IN MILLIMETERS UNLESS OTHERWISE SHOWN

SAN FRANCISCO OAKLAND BAY BRIDGE
EAST SPAN SEISMIC SAFETY PROJECT

SKYWAY STRUCTURES

DRAINAGE DETAILS

DESIGN OVERSIGHT 7/10/03
SIGN OFF DATE 11/17/00
Rev. Date: 5-19-86

DESIGN	A. Ely	J. Birdy	
DETAILS	K. Tom	J. Birdy	
QUANTITIES	L. Greer	D. Nguyen-Tan	

PREPARED FOR THE STATE OF CALIFORNIA DEPARTMENT OF TRANSPORTATION

Sajid Abbas
PROJECT ENGINEER

BRIDGE NO. 34-0006L/R
KILOMETER POST 13.9/14.3, 0.0/1.6

CU 04
EA 012021

ORIGINAL SCALE IN MILLIMETERS FOR REDUCED PLANS 0 10 20 30 40 50 60 70 80 90 100

DISREGARD PRINTS BEARING EARLIER REVISION DATES

REVISION DATES (PRELIMINARY STAGE ONLY)

SHEET 454

100% PS&E

TIME PLOTTED => 10:24:58 AM
DATE PLOTTED => 06/21/2003
USERNAME => thongvila

T.Y.LIN INTERNATIONAL
MOFFATT & NICHOL
a joint venture

SFOBB – Skyway Project
345 Burma Road, Oakland CA 94607
Telephone (510)622-1071 Facsimile (510)622-1069

REVISION MARKS ON CONTRACT PLAN CHANGES

SFOBB Skyway Project # 04-012024

Revisions to the following plans were prepared under the supervision of the undersigned engineer.

443R1 thru 445R1	Revision Mark 1	Dated	01/20/03
446R1	Revision Mark 1	Dated	01/10/03
447R2	Revision Mark 1	Dated	03/04/02
447R2	Revision Mark 2	Dated	01/20/03
448R1, 449R1	Revision Mark 1	Dated	01/20/03
450R1	Revision Mark 1	Dated	01/10/03
502R2, 503R2	Revision Mark 1	Dated	03/04/02
502R2, 503R2	Revision Mark 2	Dated	01/20/03
506R1	Revision Mark 1	Dated	01/20/03
736R2, 738R2	Revision Mark 1	Dated	03/04/02
736R2, 738R2	Revision Mark 2	Dated	01/20/03
748R2, 750R2	Revision Mark 1	Dated	03/04/02
748R2, 750R2	Revision Mark 2	Dated	01/20/03
886R2	Revision Mark 1	Dated	01/10/03
886R2	Revision Mark 2	Dated	05/20/03

For the project in SFIALA County

Route 80

Km Post Description 04-SF, Ala-80-13.9/14.3,0.0/1.6

District/EA 312021

(Signature)

02/27/04
(Date)

Sajid Abbas
(Name)

(Title)

C 055274
(Registration No)

12/31/04
(Date of Expiration)

REGISTERED PROFESSIONAL ENGINEER
Sajid Abbas
No C 055274
Exp. 12/31/04
CIVIL
STATE OF CALIFORNIA

STATE OF CALIFORNIA - DEPARTMENT OF TRANSPORTATION

CONTRACT CHANGE ORDER MEMORANDUM

TO: PETER SIEGENTHALER / COE D.	FILE: E.A. 04 - 012024
FROM: COE D.	CO-RTE-PM 04-SF,Ala-80-13.9/14.3,0.0/1.6
	FED. NO. ACIM-080-1(085)8N
CCO#: 28 SUPPLEMENT#: 0 Category Code: CCPV	CONTINGENCY BALANCE (incl. this change) $25,941,482.44
COST: ($164,120.00) INCREASE ☐ DECREASE ☑	HEADQUARTERS APPROVAL REQUIRED? ☐ YES ☑ NO
SUPPLEMENTAL FUNDS PROVIDED: $0.00	IS THIS REQUEST IN ACCORDANCE WITH ENVIRONMENTAL DOCUMENTS? ☑ YES ☐ NO
CCO DESCRIPTION: Revise deck drains	**PROJECT DESCRIPTION:** REPLACE SFOBB EAST SPAN

LOCATION: IN SAN FRANCISCO AND ALAMEDA COUNTIES IN SAN FRANCISCO AND OAKLAND FROM 1.3 KM EAST OF THE YERBA BUENA ISL

THIS CHANGE ORDER PROVIDES FOR:

restationing and deleting portions of the original drainage system, furnishing and installing a revised bridge deck drainage system, and installing revised outlets for mechanical piping low point drains.

The original bridge deck drainage system diverted runoff through the deck drain pans, into drainage pipes running through the segments, and down through the pier columns exiting into the bay from the pier base. During the development of the Contractor's composite working drawings for the precast segments, multiple conflicts between the deck drains, prestressing tendons, rebar, and segment joints were found. In addition, where the deck drains penetrated the pier columns, the space in the walkways did not meet CALOSHA standards.

This change order revises the drainage system so that it carries runoff from the deck, into deck drain pans that discharge through the segment directly into the bay. The revised drainage system relieves congestion and interference located in the segments and provides the required space at the pier stair towers' walkways for maintenance personnel. To avoid conflicts with the continuity tendons, deck drains originally located near the midspan of segment 7 were relocated to segment 5. In addition, the deck drains located in the hinge segments and flat portions of frame 1 were relocated to better facilitate runoff. Low point drains for the mechanical piping were originally designed to connect to the drainage system. With the new drainage system, revised outlets for the low point drains were incorporated to penetrate the lightweight precast panels at six locations to drain directly into the bay.

The revised plan sheets for this change order are 69R1, 70R1, 71R1, 443R1, 444R1, 445R1, 446R1, 447R2, 448R1, 449R1, 450R1, 502R2, 503R2, 506R1, 537R2, 538R2, 539R2, 540R2, 541R3, 542R2, 543R2, 544R2, 545R2, 546R2, 547R2, 548R3, 549R3, 550R3, 551R2, 552R2, 553R2, 554R2, 555R2, 556R2, 557R2, 558R2, 559R2, 560R2, 561R2, 562R3, 563R3, 564R3, 736R2, 738R2, 748R2, 750R2, and 886R2.

For this change, the State will receive a credit of $164,120.00. This credit has been found to be fair and reasonable based on an analysis performed by the Engineer. The analysis is on file in the project records. This change order will decrease the scope of work under Contract Item 88: Bridge Deck Drainage System.

No adjustment of contract time is warranted, as this change does not affect the controlling operation.

The Resident Engineer field approved this change order on September 5, 2003. Samad Hamoud of Structures Maintenance concurred with this change order on 07/22/03 by email. Nancy Bobb of FHWA provided an electronic prior approval form, FHWA 7-358(c) on 03/19/03.

CONCURRED BY:		
Construction Engineer: Douglas Coe	Date 2-23-04	
Bridge Engineer:	Date	
FHWA Representative: Nancy Bobb	Date 3/19/2003	
Project Engineer:	Date	
Other (specify): Hasan El-Natur	Date 2/5/2003	
Samad Hamoud	Date 7/22/2003	
	Date	
District Prior Approval By:	Date	
HQ (Issue Approve) By:	Date	
Resident Engineer's Signature:	Date 2-23-04	

ESTIMATE OF COST		
	THIS REQUEST	TOTAL TO DATE
ITEMS	$0.00	$0.00
FORCE ACCOUNT	$0.00	$0.00
AGREED PRICE	$0.00	$0.00
ADJUSTMENT	($164,120.00)	($164,120.00)
TOTAL	($164,120.00)	($164,120.00)

FEDERAL PARTICIPATION

☑ PARTICIPATING ☐ PARTICIPATING IN PART ☐ NONE
☐ NON-PARTICIPATING (MAINTENANCE) ☐ NON-PARTICIPATING

FEDERAL SEGREGATION (if more than one Funding Source or P.I.P. type)
☑ CCO FUNDED PER CONTRACT ☐ CCO FUNDED AS FOLLOWS

FEDERAL FUNDING SOURCE	PERCENT

California Department of Transportation

SFOBB New East Span

Contract: 04-012024, Skyway

CCO 28(1)

Deleted

STATE OF CALIFORNIA - DEPARTMENT OF TRANSPORTATION

CONTRACT CHANGE ORDER

Change Requested by: Engineer

CCO: 29	Suppl. No. 0	Contract No. 04 - 012024	Road 04-SF,Ala-80-13.9/14.3,0.0/1.6	FED. AID LOC.: ACIM-080-1(085)8N

To: **KIEWIT / FCI / MANSON a JV**

You are directed to make the following changes from the plans and specifications or do the following described work not included in the plans and specifications for this contract. ***NOTE: This change order is not effective until approved by the Engineer.***

Description of work to be done, estimate of quantities and prices to be paid. (Segregate between additional work at contract price, agreed price and force account.) Unless otherwise stated, rates for rental of equipment cover only such time as equipment is actually used and no allowance will be made for idle time. This last percentage shown is the net accumulated increase or decrease from the original

Extra Work at Lump Sum:

Construct the Transition Span on the SFOBB East Span Skyway, Bridge Nos. 34-006L/R, as shown on sheets 2-8 of this change order. For this work the Contractor will be paid the agreed lump sum of $91,422.00. This sum constitutes full compensation, including markups, for all direct and indirect costs; all associated project impacts; and Time Related Overhead (TRO) expenses, for this change.

The contract plan sheets revised by this change order are: 718R1, 719R1, 722R1, 785, 883, 884, 885A. The new plan sheets are: 718R2, 719R2, 722R2, 785R1, 883R1, 884R1, and 885AR1.

This additional work will not affect the overall project schedule; therefore, no additional contract time will be granted for this change order.

Estimated cost of Extra Work at Lump Sum $91,422.00

Estimated Cost: Increase ☑ Decrease ☐ $91,422.00

By reason of this order the time of completion will be adjusted as follows: 0 days

Submitted by

Signature	Resident Engineer: COE D.	Date 3-27-03

Approval Recommended by

Signature	Construction Engineer: COE D.	Date 3-27-03

Engineer Approval by

Signature	(Print name and title) PETER SIEGENTHALER - Chief	Date 4/17/03

We the undersigned contractor, have given careful consideration to the change proposed and agree, if this proposal is approved, that we will provide all equipment, furnish the materials, except as may otherwise be noted above, and perform all services necessary for the work above specified, and will accept as full payment therefor the prices shown above.

NOTE: If you, the contractor, do not sign acceptance of this order, your attention is directed to the requirements of the specifications as to proceeding with the ordered work and filing a written protest within the time therein specified.

Contractor Acceptance by

Signature	(Print name and title) A.T. Skoro, Project Director	Date 4/9/03

STATE OF CALIFORNIA - DEPARTMENT OF TRANSPORTATION

CONTRACT CHANGE ORDER MEMORANDUM

DATE: 3/24/03 Page 1 of 1

TO: PETER SIEGENTHALER / COE D.	FILE: E.A. 04 - 012024
	CO-RTE-PM 04-SF,Ala-80-13.9/14.3,0.0/1.6
FROM: COE D.	FED. NO. ACIM-080-1(085)8N
CCO# 29 SUPPLEMENT#: 0 Category Cod CHPT	CONTINGENCY BALANCE (incl. this change $52,927,820.27
COST: $91,422.00 INCREASE ☑ DECREASE ☐	HEADQUARTERS APPROVAL REQUIRED? ☑ YES ☐ NO
SUPPLEMENTAL FUNDS PROVIDED: $0.00	IS THIS REQUEST IN ACCORDANCE WITH ENVIRONMENTAL DOCUMENTS? ☑ YES ☐ NO
CCO DESCRIPTION: SAS Interface Drawings	**PROJECT DESCRIPTION:** REPLACE SFOBB EAST SPAN

LOCATION: IN SAN FRANCISCO AND ALAMEDA COUNTIES IN SAN FRANCISCO AND OAKLAND FROM 1.3 KM EAST OF THE YERBA BUENA ISL

THIS CHANGE ORDER PROVIDES FOR:

installing access opening sleeves in the Transition Structure and other minor changes on the SFOBB East Span Skyway, Bridge Nos. 34-006L/R. These changes include adding access opening pipe sleeves and modifications to the hinge A pipe beams and bearings.

Attached is a copy of the memo from Mr. Hasan El-Natur of the Division of Structures to Mr. Doug Coe dated 12/23/02 specifying the changes. This Change Order is required to complete the transition structure as the contract documents were not complete when the project was advertised.

EXTRA WORK AT AGREED LUMP SUM

For this work, the contractor will be paid the agreed lump sum of $91,422.00. This sum constitutes full and complete compensation, including all markups for this change. This Change Order will be paid as Extra Work at Agreed Lump Sum for this amount.

An analysis of the Contractor's proposal is on file; it has been found to be fair and reasonable based on a force account analysis prepared by the engineer. This analysis is also on file in the project records.

The contract plan sheets revised by this change order are: 718R1, 719R1, 722R1, 785, 883, 884, 885A. The new plan sheets are: 718R2, 719R2, 722R2, 785R1, 883R1, 884R1, and 885AR1.

This additional work will not affect the overall project schedule; therefore, no additional contract time will be granted for this change order.

Maintenance concurrence was obtained from Mr. Samad Hamoud, of Structures Maintenance, on March 21, 2003.

FHWA concurrence was obtained from Ms. Nancy Bobb on March 25, 2003.

CONCURRED BY:		
Construction Engineer: Douglas Coe	Date 2/28/03	
Bridge Engineer:	Date	
FHWA Representative: Nancy Bobb	Date 3/25/03	
Project Engineer:	Date	
Other (specify): Samad Hamoud	Date 3/21/03	
	Date	
	Date	
District Prior Approval By:	Date	
HQ (Issue Approve) By:	Date	
Resident Engineer's Signature:	Date 3-27-03	

ESTIMATE OF COST

	THIS REQUEST	TOTAL TO DATE
ITEMS	$0.00	$0.00
FORCE ACCOUNT	$0.00	$0.00
AGREED PRICE	$91,422.00	$91,422.00
ADJUSTMENT	$0.00	$0.00
TOTAL	$91,422.00	$91,422.00

FEDERAL PARTICIPATION

☐ PARTICIPATING ☐ PARTICIPATING IN PART ☐ NONE
☐ NON-PARTICIPATING (MAINTENANCE) ☐ NON-PARTICIPATING

FEDERAL SEGREGATION ☐ (If more than one Funding Source or P.I.P. type)
☑ CCO FUNDED PER CONTRACT ☐ CCO FUNDED AS FOLLOWS

FEDERAL FUNDING SOURCE: PERCENT

RECEIVED 007051 MAY -8 02

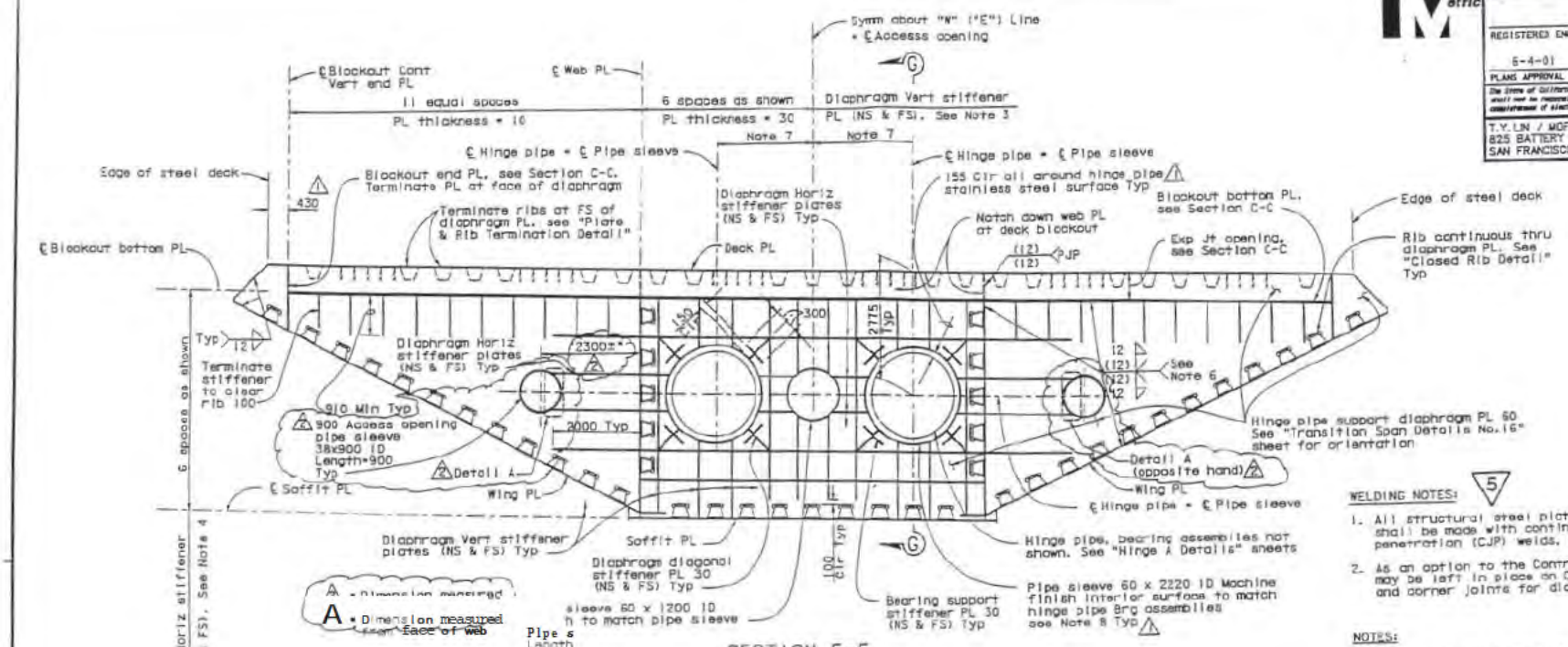

SECTION E-E
1:50

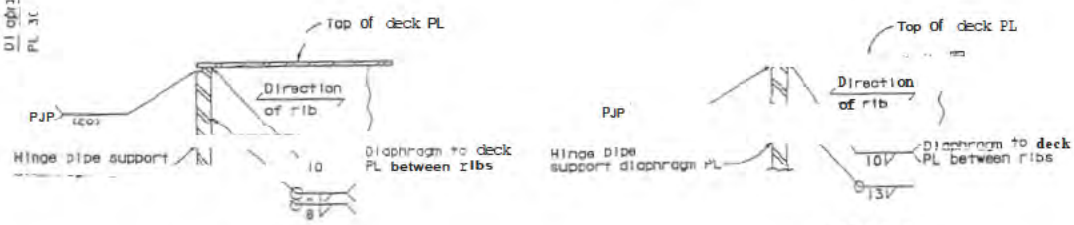

CLOSED RIB

OPEN RIB

PLATE & RIB TERMINATION DETAIL
1:10

WELDING NOTES:

1. All structural steel plate interface connections shall be made with continuous complete joint penetration (CJP) welds, unless otherwise shown.
2. As an option to the Contractor, steel backing may be left in place on CJP groove welds in T- and corner joints for diaphragm stiffener plates.

NOTES:

1. For details not shown, see "Transition Span Details No. 1" and "Typical Sections" sheets.
2. [illegible] sheets.
3. Space vertical stiffener plates to clear ribs on soffit plate. Terminate at diaphragm openings.
4. Space horizontal stiffener plates to clear ribs on web plate. Terminate at diaphragm openings.
5. Diaphragm horizontal and vertical stiffener plates are fracture critical members (FCMs).
6. Weld [illegible] connection of hinge pipe supports to web plate, and on soffit plate.
7. For location of pipes, see "Transition Span Details No. 16" sheet.
8. Align pipe sleeve to parallel hinge pipe.
9. For detail A, see "Transition Span Span Details No. 5" sheet.

REVISED PER ADDENDUM NO. 5 DATED OCTOBER 24, 2001

MARK	DATE	DESCRIPTIONS	BY	CH'D
2	12/17/02	ADD ACCESS OPENINGS	RN	MS
1	11/20/02	REVISE CALLOUTS, DIMENSION & ADD NOTE	MS	RM

REVISIONS

04-012024
CONTRACT CHANGE ORDER NO. 29
SHEET 2 OF 9

ALL DIMENSIONS ARE IN MILLIMETERS UNLESS OTHERWISE SHOWN

Metric

REGISTERED ENGINEER - CIVIL
6-4-01
PLANS APPROVAL DATE
Siew W. Chee C 41906 03/31/04 CIVIL STATE OF CALIFORNIA
T.Y. LIN / MOFFATT & NICHOL
825 BATTERY STREET
SAN FRANCISCO, CA 94111

SAN FRANCISCO OAKLAND BAY BRIDGE
EAST SPAN SEISMIC SAFETY PROJECT

SKYWAY STRUCTURES

TRANSITION SPAN DETAILS NO. 5

PREPARED FOR THE STATE OF CALIFORNIA DEPARTMENT OF TRANSPORTATION

DESIGN: S. Chee | CHECKED: A. Miller
DETAILS: F. Hung | CHECKED: A. Miller
QUANTITIES: S. Chee | CHECKED: J. Leventini

Solid Abbas, PROJECT ENGINEER

BRIDGE NO. 34-0006L/R
KILOMETER POST 2.9714.3 / 2.0716

N. El-Nemr, DESIGN OVERSIGHT
SIGN OFF DATE 11/17/00

CU 04

DISREGARD PRINTS BEARING EARLIER REVISION DATES

286

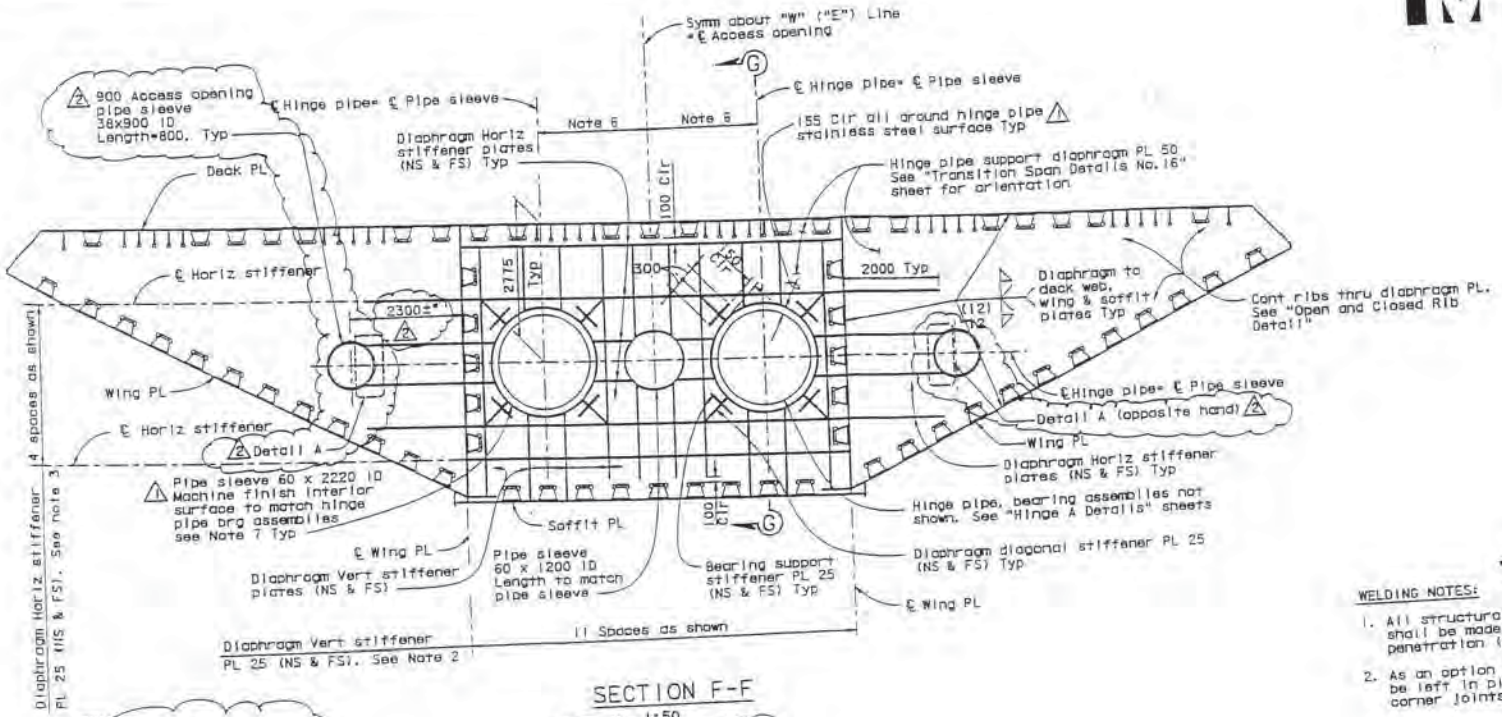

SECTION F-F

1:50

* Dimension measured from face of web

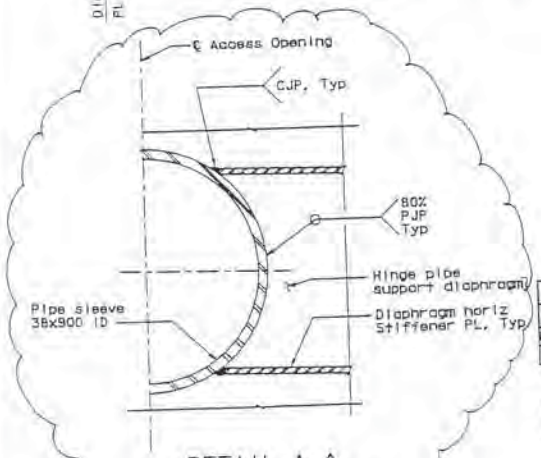

DETAIL A

1:10

MARK	DATE	DESCRIPTIONS	BY	CH'D
2	12/17/02	ADD ACCESS OPENINGS AND DETAIL A	RN	MS
1	11/20/02	REVISE CALLOUTS AND ADD NOTE	MS	RM

REVISIONS

04-012024
CONTRACT CHANGE ORDER NO. 29
SHEET 3 OF 3

WELDING NOTES: 5

1. All structural steel plate interface connections shall be made with continuous complete joint penetration (CJP) welds, unless otherwise shown.
2. As an option to the Contractor, steel backing may be left in place on CJP groove welds in T- and corner joints for diaphragm stiffener places.

NOTES:

1. For details not shown, see "Transition Span Details No. 1" and "Typical Sections" sheets.
2. Space vertical stiffener plates to clear ribs on soffit plate. Terminate at diaphragm openings.
3. Space horizontal stiffener plates to clear ribs on web plate. Terminate at diaphragm openings.
4. For Section G-G, see "Transition Span Details" sheet.
5. Diaphragm horizontal and vertical stiffener plates are fracture critical members (FCMs).
6. For location of hinge pipes, see "Transition Span Details No. 16" sheet.
7. Align pipe sleeve to parallel hinge pipe.

5 REVISED PER ADDENDUM NO. 5 DATED OCTOBER 24, 2001

Metric

04 | SF, A1a | 60 | 0.0/1.6

REGISTERED ENGINEER - CIVIL
6-4-01
PLANS APPROVAL DATE
REGISTERED PROFESSIONAL ENGINEER Siew W. Chee No. C 41906 Exp. 03/31/04 CIVIL STATE OF CALIFORNIA

The State of California or its officers or agents shall not be responsible for the accuracy or completeness of electronic copies of this plan sheet.

T.Y. LIN / MOFFATT & NICHOL
825 BATTERY STREET
SAN FRANCISCO, CA 94111

Caltrans now has a web site! To get to the web site, go to http://www.dot.ca.gov

ALL DIMENSIONS ARE IN MILLIMETERS UNLESS OTHERWISE SHOWN

SAN FRANCISCO OAKLAND BAY BRIDGE
EAST SPAN SEISMIC SAFETY PROJECT

SKYWAY STRUCTURES

TRANSITION SPAN DETAILS NO. 6

BRIDGE NO. 34-0006L/R
KILOMETER POST 33.9/14.3, 0.0/1.6
DISREGARD PRINTS BEARING EARLIER REVISION DATES
SHEET 2871

PREPARED FOR THE STATE OF CALIFORNIA DEPARTMENT OF TRANSPORTATION

Solid Abbas
PROJECT ENGINEER

DESIGN S. Chee CHECKED A. Miller
DETAILS F. Hung CHECKED A. Miller
QUANTITIES S. Chee CHECKED J. Leventini

CU 04
EA 04-012021

H. El-Nahr
DESIGN OVERSIGHT
SIGN OFF DATE 11/17/00

ORIGINAL SCALE IN MILLIMETERS FOR REDUCED PLANS

DIST.	COUNTY	ROUTE	KILOMETER POST TOTAL PROJECT	SHEET NO.	TOTAL SHEETS
04	SF, Alg	80	13.9/14.3, 0.0/1.8	72282	97

Caltrans

REGISTERED ENGINEER - CIVIL

6-4-01

PLANS APPROVAL DATE

The State of California or its officers or agents shall not be responsible for the accuracy or completeness of electronic copies of this plan sheet.

T.Y. LIN / MOFFATT & NICHOL
825 BATTERY STREET
SAN FRANCISCO, CA 94111

Caltrans now has a web site!

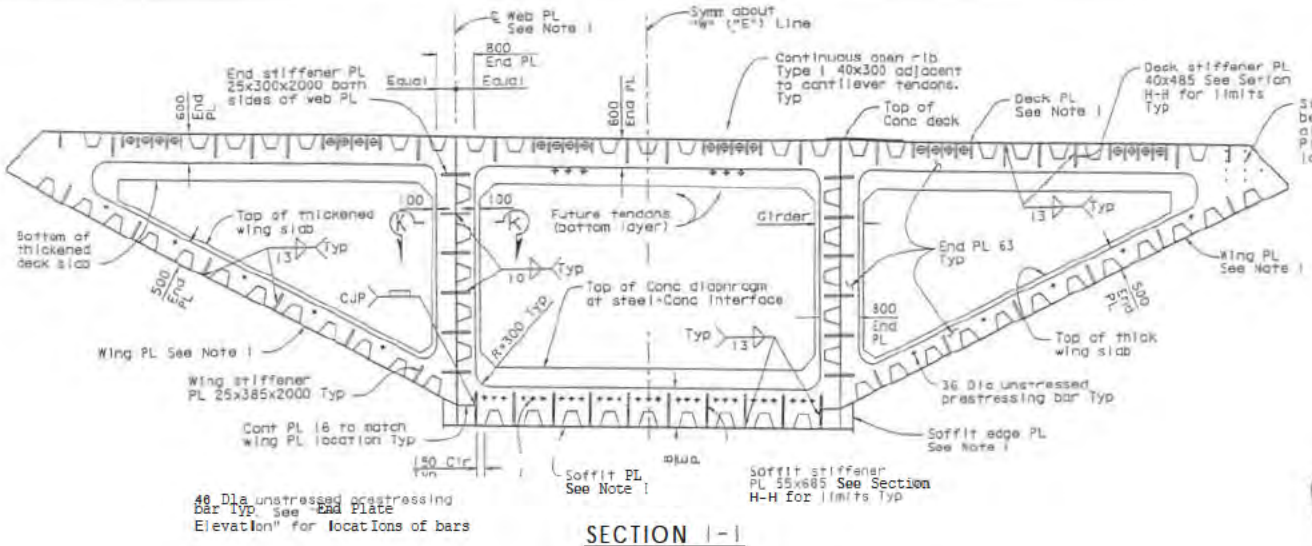

SECTION 1-1

1:50

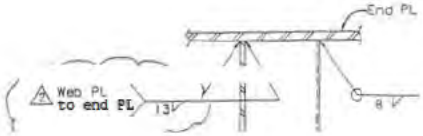

SECTION K-K

1:10

Notes: 1. For termination of ribs, deck plate, soffit plate, wing plates and soffit edge plates, see "Plate & Rib Termination Detail".

2. For details not shown, see "Transition Span Details No. 1" and "Typical Sections" sheets.

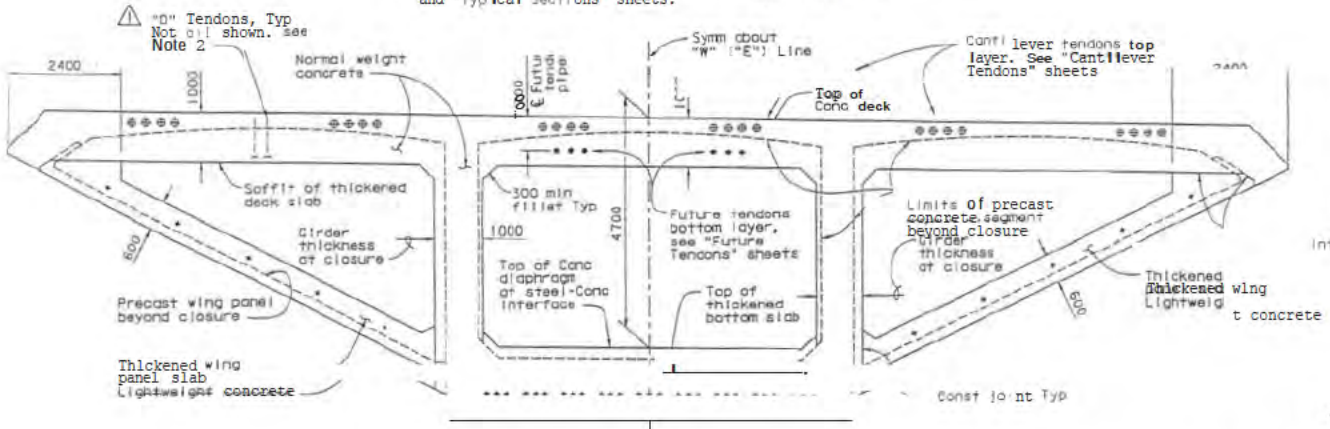

SECTION J-J

1:50

Notes: For details not shown, see "Typical Sections", "Diaphragm Details" and "Precast Panel Details" sheets.

MARK	DATE	DESCRIPTIONS	BY	CH'D
2	11/20/02	REVISE WELD SIZE	MS	RN
1	10/07/02	ADD "D" TENDONS (CCO #7)	JC	CR

REVISIONS

CONTRACT CHANGE ORDER NO. 4L
SHEET 4 OF 8
OH-012024

WELDING NOTES: 5

1. All structural steel plate Interface connections shall be made with continuous complete joint penetration (CJP) welds, unless otherwise shown.

2. For "D" Tendons, see "Cantilever Tendon Detail No. 5" sheet.

5 REVISED PER ADDENDUM NO. 5 DATED OCTOBER 24, 2001

ALL DIMENSIONS ARE IN MILLIMETERS UNLESS OTHERWISE SHOWN

SAN FRANCISCO OAKLAND BAY BRIDGE
EAST SPAN SEISMIC SAFETY PROJECT

SKYWAY STRUCTURES

TRANSITION SPAN DETAILS NO. 9

H. El-Natur
DESIGN OVERSIGHT
SIGN OFF DATE 10/07/02

DESIGN	S. Chen	A. Miller	
DETAILS	T. Mangalgan	A. Miller	
QUANTITIES	J. Chan	S. Shi	

PREPARED FOR THE STATE OF CALIFORNIA DEPARTMENT OF TRANSPORTATION

Salid Abdos
PROJECT ENGINEER

BRIDGE NO. 34-0006L/R
KILOMETER POST 13.9/14.3, 0.0/1.8

ORIGINAL SCALE IN MILLIMETERS

CU: 04

DISREGARD PRINTS BEARING EARLIER REVISION DATES

REVISION DATES (PRELIMINARY STAGE ONLY)

SHEET 290

DIST.	COUNTY	ROUTE	TOTAL PROJECT NO.
04	SF, Alc	80	13.9/14.3, 0.0/1.6 (785R)

REGISTERED ENGINEER - CIVIL

6-4-01

PLANS APPROVAL DATE

T.Y. LIN / MOFFATT & NICHOL

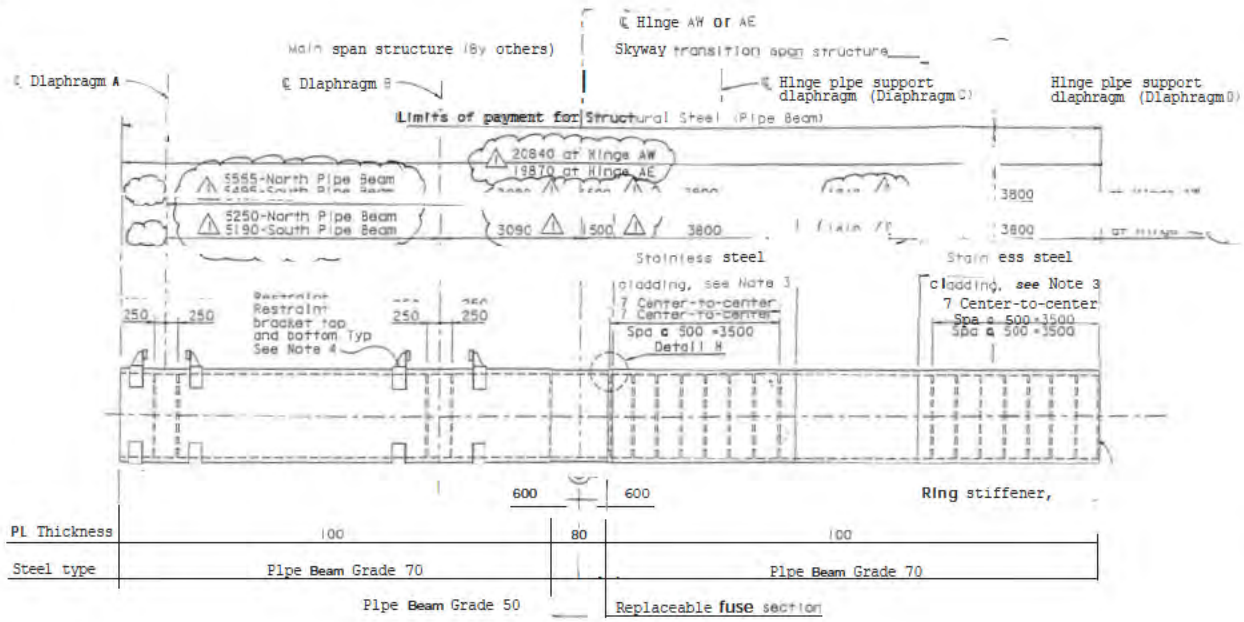

PIPE BEAM ELEVATION

NTS

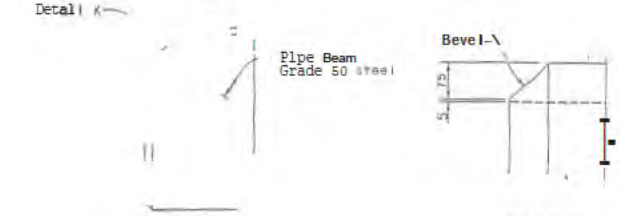

DETAIL K

1:5

SPARE PIPE BEAM FUSE ELEVATION*

1:25

* See Note 5

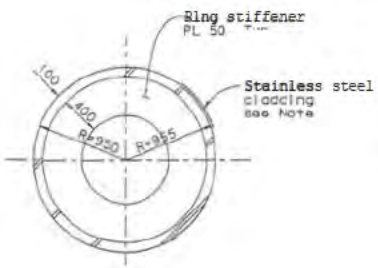

SECTION G-G

1:25

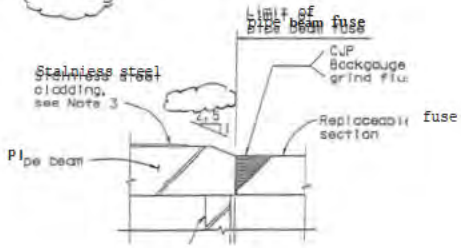

DETAIL H

NTS

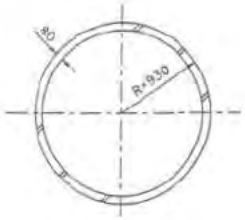

SECTION J-J

1:25

MARK	DATE	DESCRIPTIONS	BY	CH'D
2	11/20/02	REVISE SCALE	MS	JK
1	11/20/02	REVISE PIPE BEAM LENGTHS AND NOTE	MS	JK

REVISIONS

04-012024

CONTRACT CHANGE ORDER NO. 29

SHEET ____ OF ____

NOTES:

1. The pipe beam is fracture critical member (FCM).
2. All welds are CJP unless noted otherwise.
3. The areas noted as stainless steel cladding shall have a minimum buildup of two layers of weld overlay with AISI 316L stainless steel. The area shall be machine finished to the 955 theoretical radius.
4. For restraint bracket and bearing details, see "Bearing Details" sheet. Installation of restraint brackets on pipe beams in final positions by others. Bolt holes on pipe beams for restraint brackets to be field drilled by others.
5. Total 4 spare pipe beam fuses for hinges AW and AE shall be provided. Spare fuse will replace fuse section in case of damage due to earthquake (by others).
6. Hinge pipe beams shall be temporarily supported inside Skyway Structure. Installation of pipe beams into final positions by others.

7 REVISED PER ADDENDUM NO. 7 DATED NOVEMBER 2, 2001

ALL DIMENSIONS ARE IN MILLIMETERS UNLESS OTHERWISE SHOWN

SAN FRANCISCO OAKLAND BAY BRIDGE
EAST SPAN SEISMIC SAFETY PROJECT

H. El-Nemr — SIGN OFF DATE 11/01/02

DESIGN R. Mottk — DRAFTS QUANTITIES R. Malkinsky — CHECKED C. Werts — CHECKED C. Werts — CHECKED T. West

PREPARED FOR THE STATE OF CALIFORNIA DEPARTMENT OF TRANSPORTATION

Salid Abbas — PROJECT ENGINEER

BRIDGE NO. 34-0006L/R

13.9/14.3, 0.0/1.6

HINGE A PIPE BEAM DETAILS

ORIGINAL SCALE IN MILLIMETERS FOR REDUCED PLANS

ICA 012021

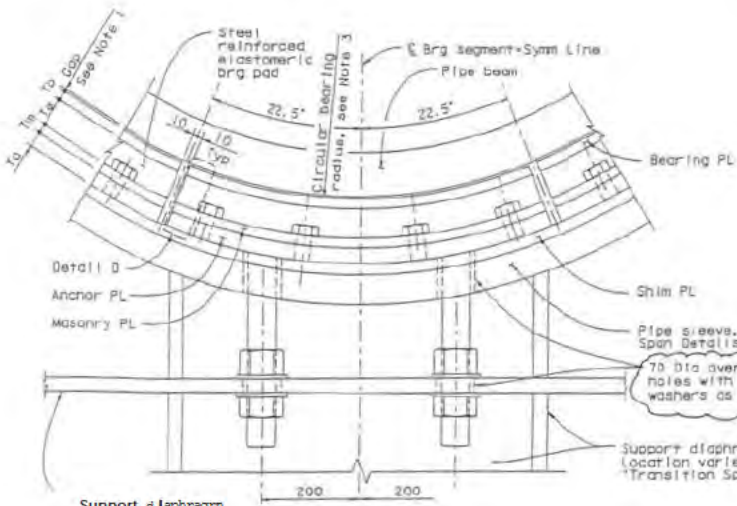

Fixed Brg Type III and IV

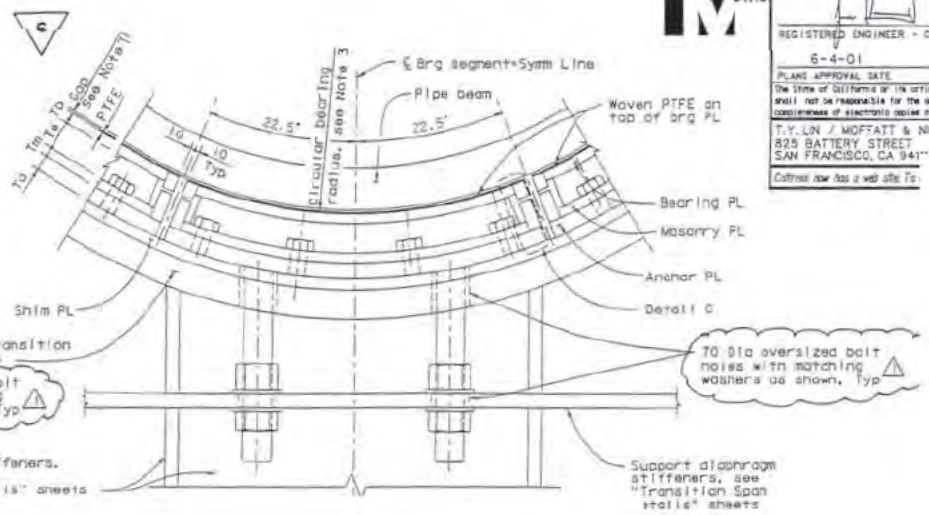

Sliding Brg Type I and II

SECTION D-D

No Scale

Notes:

1. Gap at installation of brg segment prior to releasing pipe beam from temporary support system. Gap obtained using spacers around pipe beam and then bolting into hinge pipe beam support diaphragm.
2. For details not shown, see "Transition Span Details" and "Construction Sequence" sheets.
3. Circular bearing radius measured to top of bearing PL for fixed bearings and top of PTFE for sliding bearings.

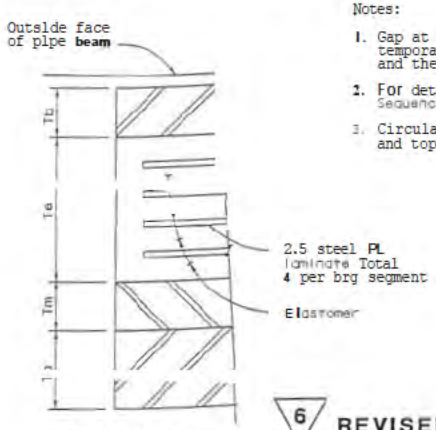

DETAIL D

No Scale

Note: Details at fixed brg type III & IV.

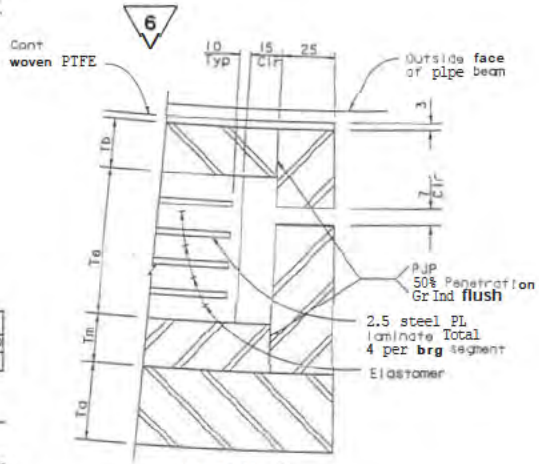

DETAIL C

No Scale

Note: Details at sliding brg type I & II.

MARK	DATE	DESCRIPTIONS	BY	CH'D
6	11/29/01	REVISE CALLOUTS	MS	JK
		REVISIONS		

04-012024

CONTRACT CHANGE ORDER NO. 29

SHEET 6 OF 8

6 REVISED PER ADDENDUM NO. 6 DATED OCTOBER 30, 2001

CIRCULAR SEGMENTED BEARINGS AT HINGE A

ALL DIMENSIONS ARE IN MILLIMETERS UNLESS OTHERWISE SHOWN

PREPARED FOR THE STATE OF CALIFORNIA DEPARTMENT OF TRANSPORTATION

SAN FRANCISCO OAKLAND BAY BRIDGE
EAST SPAN SEISMIC SAFETY PROJECT

SKYWAY STRUCTURES

Caltrans Metric

04 | SF.A1c | 80 | 13.9/14.3, 0.0/1.6 | 883R1 | 978

REGISTERED ENGINEER - CIVIL

6-4-01

PLANS APPROVAL DATE

T.Y. LIN / MOFFATT & NICHOL
825 BATTERY STREET
SAN FRANCISCO, CA 941

Caltrans now has a web site

DESIGN: J. Krizek/J. Stanton
DETAILS: J. Krizek/J. Stanton
WANTITIES: T. West
CHECKED: C. Werts, C. Werts, C. Werts, T. Greer
DESIGN OVERSIGHT: H. El-Mahdy
SIGN OFF DATE: 11/01/02
Rev. Date 3-18-98

CU EA 01202

13.9/14.3, 0.0/1.6

SHEET 45

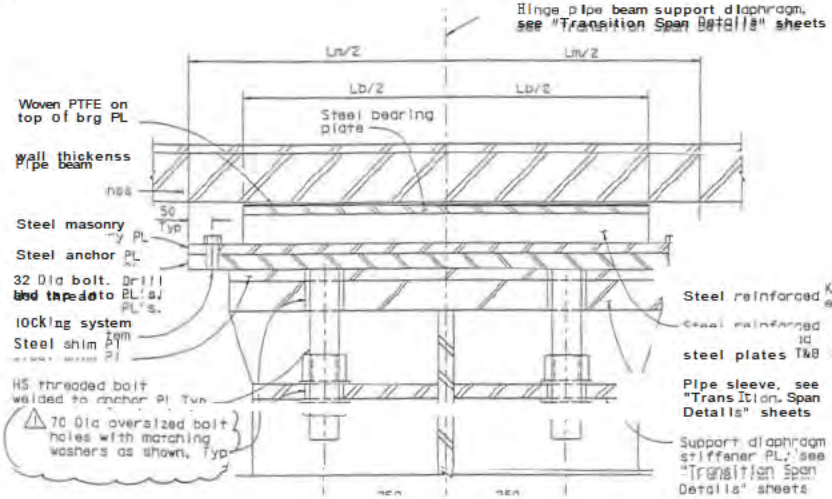

Sliding Brg Type I and II

SECTION E-E

No Scale

6

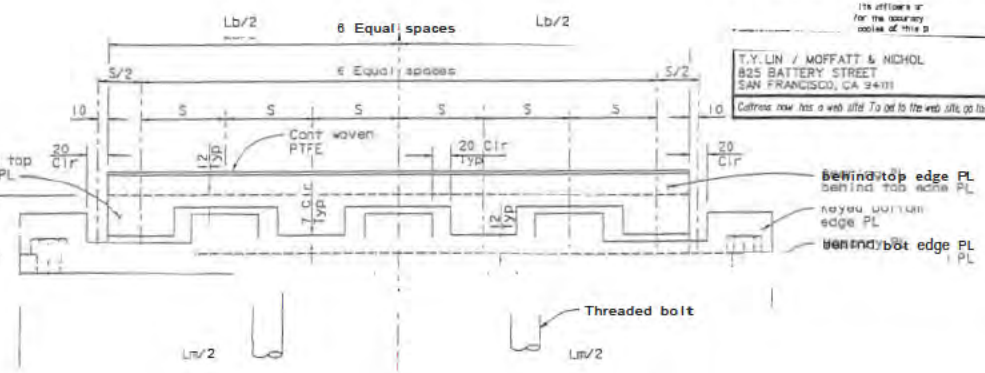

ELEVATION F-F

No Scale

6

Note: All keyed edge plates steel Grade 70.

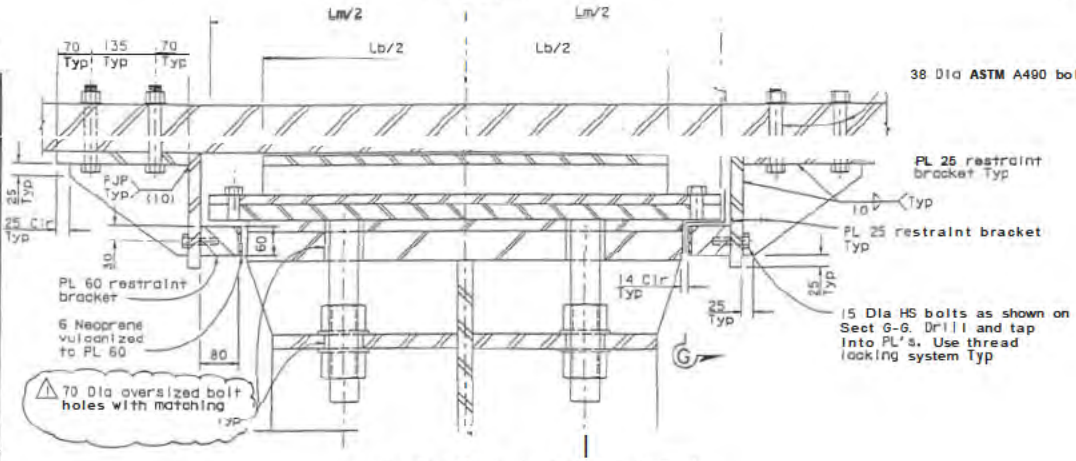

Fixed Brg Type III and IV

SECTION E-E

No Scale

6

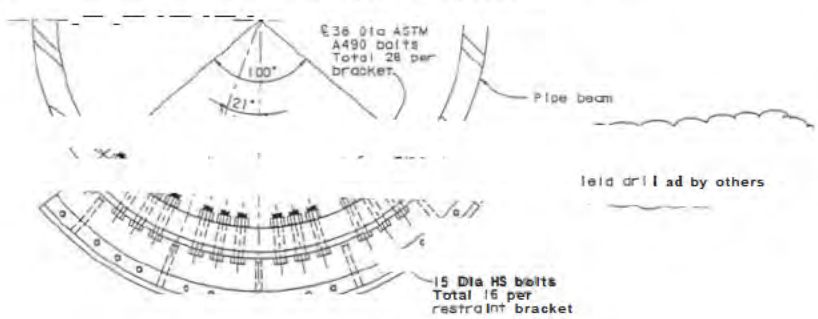

SECTION G-G

No Scale

6

Notes:

1. Restraint brackets on both sides of steel diaphragm.
2. For details not shown, see above.

CIRCULAR SEGMENTED BEARINGS AT HINGE A

REVISED PER ADDENDUM NO. 6
DATED OCTOBER 30, 2001

ALL DIMENSIONS ARE IN MILLIMETERS UNLESS OTHERWISE SHOWN

PREPARED FOR THE
STATE OF CALIFORNIA
DEPARTMENT OF TRANSPORTATION

SAN FRANCISCO OAKLAND BAY BRIDGE
EAST SPAN SEISMIC SAFETY PROJECT

SKYWAY STRUCTURES

Caltrans Metric

04	SF, Ala	80	13.9/14.3, 0.0/1.6	884R1	978

6-4-0

No. C 055760

T.Y. LIN / MOFFATT & NICHOL
825 BATTERY STREET
SAN FRANCISCO, CA 94111

Caltrans now has a web site! To get to the web site, go to: http://www.dot.ca.gov

REVISIONS

MARK DATE DESCRIPTIONS BY CH'D

REVISE CALLOUTS

CONTRACT CHANGE ORDER NO. 29
04-012201
SHEET 7 OF 8

H. El-Natur
DESIGN OVERSIGHT
SIGN WF DATE 11/01/02

DESIGN J. Grizak/J. Stanton
DETAILS A. Lishansky
QUANTITIES T. West
CHECKED C. Werts
CHECKED C. Werts
CHECKED L. Greer

Salid Abbas
PROJECT ENGINEER

CU 04
EA 012021

FILE = p:\04\012021\skyway\2002\sker905.dgn

	(mm)	(mm)	(mm)	(mm)	(mm)		(rad)	(rad)	(rad)
(See Note) Hinge AW, AE	179	1140	160	179	1170		0.009	0.0370	0.008
Hinge BW, BE	137	580	270	125	549	15			
Hinge CW, CE	136	540	224	125	576	15	0.011		
Hinge AW	83	298	117	75	369	15	0.006	0.0570	0.003
Hinge DE	83	298	117	75	369	15	0.006	0.0570	0.003
(See Note) Hinge EW	41	212	60	37	220	50	0.004	0.0470	0.004
(See Note) Hinge EE	41	212	60	37	220	50	0.004	0.0470	0.004

Hinge	Blockout Data "b" (mm)	Blockout Data "c" (mm)	Deck overlay thickness (mm)	Joint Seal Data Max "d" (mm)	Joint Seal Data Max "e" (mm)	Joint Seal Data Max "f" (mm)	Joint Seal Data No. of Cells "N"
AW, AE	2465	625	50	651	602	1407	20
EW, BE	1400	555	20	523	539		13
CW, CE	1400	555	20	516	532	880	12
DW, DE	800	470	20	433	449	614	7
	800	470	20	439	455	460	5

2. Dimensions "d", "e" and "f" provided by the Manufacturer.

3. Modular Joint seal assembly furnish and Install by others at hinges AW, AE, EW and EE.

MODULAR JOINT SEAL ASSEMBLY INSTALLATION WIDTH, "W" (mm)

Air Temperature (T)	Hinge BW, BE ("g" = 89 mm)	Hinge CW, CE ("g" = 64 mm)	Hinge DW, DE ("g" = 41 mm)
9°C	2112	1962	[illegible]
10°C	2077	1930	1155
15°C	2043	1898	1135
20°C	2008	1866	1114
25°C	1974	1834	1094
30°C	1939	1802	1073
35°C	1905	1770	1053

Notes: 1. Modular joint seal assembly Installation width, "W", Is based on a support beam width of 102 mm (data provided by the Manufacturer).

2. $"W" = \text{No. of cells} \times 102 + \text{SEE closing} - \frac{(T-20°C)g}{10°C}$

3. "g" is expansion joint movement per 10°C.

ADDED PER ADDENDUM NO. 4 DATED OCTOBER 16, 2001

Caltrans

DIST	COUNTY	ROUTE	TOTAL PROJECT NO.
04	SF/Ala	80	13.9/14.3 0.0/1.6 885AR1

REGISTERED ENGINEER - CIVIL
6-4-01

T.Y. LIN / MOFFATT & NICHOL
225 BATTERY STREET
SAN FRANCISCO, CA 94111

Caltrans now has a web site. To get to the web site, go to http://www.dot.ca.gov

MJSA Design Criteria

(1) No. of cells "N" Is the larger of Nservice and Nultimate

Where

$$N_{service} = \frac{\text{SEE closing} + CS + T_{drop}}{75\ mm}$$

$$N_{ultimate} = \frac{\text{SEE closing} + CS - 2/3\ \text{SEE opening}}{150\ mm}$$

(2) Support bar shall not unseat from Its supports when subjected to expansion Joint gap opening as specified In the special provisions.

LEGEND:

Trise - Uniform temperature rise and positive temperature gradient

Tdrop - Uniform temperature drop and negative temperature gradient

CS - Creep and shrinkage (Includes a factor of 1.5 over calculated theoretical values)

FEE - Functional Evaluation Earthquake

SEE - Safety Evaluation Earthquake

MARK	DATE	DESCRIPTIONS	BY	CHKD
4	10/01	REVISE VALUES IN TABLES	MS	JK

REVISIONS

CONTRACT CHANGE ORDER NO. 29

H. El-Ngtur
DESIGN OVERSIGHT

ALL DIMENSIONS ARE IN MILLIMETERS UNLESS OTHERWISE SHOWN

PREPARED FOR THE STATE OF CALIFORNIA DEPARTMENT OF TRANSPORTATION

Solid Abbas
PROJECT ENGINEER

BRIDGE NO. 34-0006L/R

EA 01202

SAN FRANCISCO OAKLAND BAY BRIDGE
EAST SPAN SEISMIC SAFETY PROJECT
SKYWAY STRUCTURES

FILE => p:\bb\04-01202\skyway\wdy2002\dk\m015.dgn

STATE OF CALIFORNIA - DEPARTMENT OF TRANSPORTATION

CONTRACT CHANGE ORDER

Change Requested by: Engineer

CCO: 30	Suppl. No. 0	Contract No. 04 - 012024	Road 04-SF,Ala-80-13.9/14.3,0.0/1.6	FED. AID LOC.: ACIM-080-1(085)8N

To: KIEWIT / FCI / MANSON a JV

You are directed to make the following changes from the plans and specifications or do the following described work not included in the plans and specifications for this contract. ***NOTE: This change order is not effective until approved by the Engineer.***

Description of work to be done, estimate of quantities and prices to be paid. (Segregate between additional work at contract price, agreed price and force account.) Unless otherwise stated, rates for rental of equipment cover only such time as equipment is actually used and no allowance will be made for idle time. This last percentage shown is the net accumulated increase or decrease from the original quantity in the Engineer's Estimate.

Extra Work at Lump Sum:

Perform additional pre-machining work of the steel hinge pipes to eliminate the high areas from circularity tolerances and ensure a 5 mm minimum thick stainless steel overlay for the hinge pipe beams. The steel fabricator shall perform pre-machine work on the steel hinge pipes only at the locations where stainless steel is to be applied. At these locations, the final wall thickness for the grade 70 steel beam shall not vary more than -5 mm from the nominal thickness shown on the approved shop drawings.

For this work, the Contractor will be paid an agreed lump sum of $206,800.00. This sum constitutes full compensation, including all markups, for this change.

Extra Work at Agreed Lump Sum $206,800.00

Estimated Cost: Increase ☑ Decrease ☐ **$206,800.00**

By reason of this order the time of completion will be adjusted as follows: 0 days

Submitted by

Signature	Resident Engineer: COE D.	Date
Daniel W. Wu	for	7-28-03

Approval Recommended by

Signature	Construction Engineer: COE D.	Date
Daniel W. Wu	for	7-28-03

Engineer Approval by

Signature	(Print name and title)	Date
P. E. Siegenthaler	PETER SIEGENTHALER - Chief	9/11/03

We the undersigned contractor, have given careful consideration to the change proposed and agree, if this proposal is approved, that we will provide all equipment, furnish the materials, except as may otherwise be noted above, and perform all services necessary for the work above specified, and will accept as full payment therefor the prices shown above.

NOTE: If you, the contractor, do not sign acceptance of this order, your attention is directed to the requirements of the specifications as to proceeding with the ordered work and filing a written protest within the time therein specified.

Contractor Acceptance by

Signature	(Print name and title)	Date
[illegible]	A.T. Skoro, Project Director	9/13/03

STATE OF CALIFORNIA - DEPARTMENT OF TRANSPORTATION

CONTRACT CHANGE ORDER MEMORANDUM

TO: PETER SIEGENTHALER / COE D.

FROM: COE D

FILE: E.A. 04 - 012024

CO-RTE-PM 04-SF,Ala-80-13.9/14.3,0.0/1.5

FED. NO. ACIM-080-1(085)8N

CCO#: 30 SUPPLEMENT#: 0 Category Code: CHSA

CONTINGENCY BALANCE (incl. this change) $42,155,412.49

COST: $206,800.00 INCREASE ✓ DECREASE ☐

HEADQUARTERS APPROVAL REQUIRED? ✓ YES ☐ NO

SUPPLEMENTAL FUNDS PROVIDED: $0.00

IS THIS REQUEST IN ACCORDANCE WITH ENVIRONMENTAL DOCUMENTS? ✓ YES ☐ NO

CCO DESCRIPTION:
Addt'l Re-Machining for Hinge Pipe Beam

PROJECT DESCRIPTION:
REPLACE SFOBB EAST SPAN

LOCATION: IN SAN FRANCISCO AND ALAMEDA COUNTIES IN SAN FRANCISCO AND OAKLAND FROM 1.3 KM EAST OF THE YERBA BUENA ISL

THIS CHANGE ORDER PROVIDES FOR:

performing additional pre-machining work of the steel hinge pipes to eliminate the high areas from circularity tolerances and ensuring a 5 mm minimum thick stainless steel overlay for the hinge pipe beams. The steel fabricator shall perform pre-machine work on the steel hinge pipes only at the locations where stainless steel is to be applied. At these locations, the final wall thickness for the grade 70 steel beam shall not vary more than -5 mm from the nominal thickness shown on the approved shop drawings.

To fabricate the hinge pipe beam, the process is to roll a 100 mm thick black steel plate into a pipe, apply a stainless steel overlay to the pipe, and machine the stainless steel cladded pipe. The Contract Plans show a 100 mm thick hinge pipe beam with a 5 mm stainless steel overlay; however, the Special Provisions allow a local roundness variation of up to 5 mm and an out-of-roundness tolerance of up to 8 mm. As a result of these tolerances, the stainless steel overlay may not have a minimum 5 mm thickness for duribility after machining.

The steel fabricator has stated that they can fabricate 100 mm minimum thick plates, which will allow them to roll plates up to 105 mm thick without altering the physical properties of the steel. This, in turn, will allow them to pre-machine the black pipe to eliminate high areas and produce a 100 mm minimum thick steel pipe with a minimum 5 mm thick stainless steel overlay. TY Lin International (Designer) has determined that a 100 mm nominal thick steel pipe is required to support the anticipated design loads and a 5 mm minimum thick stainless steel overlay is required for durability of the sliding surface.

For this extra work, the Contractor will be paid an agreed lump sum of $206,800.00. This sum constitutes full compensation, including all markups, for this change. A detailed cost analysis for this change is on file.

No time adjustment is warranted for this change as it does not affect the controlling operation.

This change order has been discussed and concurred by Mr. Sajid Abbas (Designer with TY Lin) on 12/16/02.
Maintenance concurrence is not required because the final product has not been altered. The process was modified to compensate for the allowable tolerances and insure final product is built to the Designer's intent.
FHWA concurrence was obtained from Ms. Nancy Bobb on April 15, 2003.

CONCURRED BY:

Construction Engineer: Douglas Coe	Date	
Bridge Engineer	Date	
FHWA Representative: Nancy Bobb	Date 4/15/2003	
Project Engineer:	Date	
Other (specify): Sajid Abbas	Date 2/16/2002	
	Date	
	Date	
District Prior Approval By	Date	
HQ (Issue Approve) By: Doug Saathoff	Date 4/7/2003	
Resident Engineer's Signature	Date	

ESTIMATE OF COST

	THIS REQUEST	TOTAL TO DATE
ITEMS	$0.00	$0.00
FORCE ACCOUNT	$0.00	$0.00
AGREED PRICE	$206,800.00	$206,800.00
ADJUSTMENT	$0.00	$0.00
TOTAL	$206,800.00	$206,800.00

FEDERAL PARTICIPATION

☑ PARTICIPATING ☐ PARTICIPATING IN PART ☐ NONE
☐ NON-PARTICIPATING (MAINTENANCE) ☐ NON-PARTICIPATING

FEDERAL SEGREGATION (if more than one Funding Source or P.I.P. type)
☑ CCO FUNDED PER CONTRACT ☐ CCO FUNDED AS FOLLOWS

FEDERAL FUNDING SOURCE	PERCENT

TEST PROCEDURE FOR TESTING AND ACCEPTANCE OF SELF CONSOLIDATING CONCRETE MIXES

I. Background

Self Consolidating Concrete (SCC) is intended to be poured and placed with minimal vibration used in the consolidation process. A key attribute of high-flow concrete is that it remains stable (does not segregate) during and after placement, maximizing the structural integrity and durability of the concrete. Currently, there are no standard ASTM test methods for the acceptance testing of high-flow concrete. The Department has adopted and modified existing test procedures to evaluate the performance of high flow mixes. These tests include: Air Content by both Volumetric and Pressure Method, Unit Weight, Bleeding, Slump Flow, Sampling Fresh Concrete, and Making, Handling and Storing PCC Cylinders.

II. Definitions

A. Halo: A cement paste or mortar ring that has clearly separated from the coarse aggregate around the outside circumference of concrete after flowing from the slump cone.

B. Self Consolidating Concrete: A concrete that has the ability to fill formwork and encase reinforcing steel through the action of gravity, and with maintained homogeneity.

C. Resistance to Segregation: The ability of the particle-aggregate-suspension (fresh concrete) to maintain homogeneity through the mixing, transportation, and placing process.

D. Viscosity Modifying Admixture: A liquid admixture, which is designed to modify the rheology of the concrete by increasing the viscosity of the concrete while still allowing the concrete to flow without segregation.

E. Visual Stability Index: The degree to which highly fluid concrete is segregated. See Table 1.

III. Scope

A. Self Consolidating Concrete

1. This test method describes the procedures for testing self consolidating concrete; measures the unconfined fluidity, and determining its stability based on the Visual Stability Index (VSI). VSI is a qualitative visual rating of the static stability of a self consolidating concrete mixture. This scale assigns a numerical rating of 0 to 3, in 0.5 increments, based on the criteria in Table 1.

2. This test method also increases the procedure for measuring the slump flow (unconfined fluidity) and provides an indication of the static stability of highly fluid concrete mixtures intended for placement.

3. This test method utilizes apparatuses and procedures specified in CT 556.

B. Slump Flow

1. This test method describes the procedure for determining the deformability of freshly mixed highly fluidized concrete under its own weight by observation of deforming speed and the spread diameter. This test method is intended for use with highly fluidized concretes made with superplasticizer and with or without a

viscosity-modifying agent. It is not applicable to concretes made with aggregate whose nominal maximum size exceeds 25 mm.

2. Apparatus for Slump Flow

   a. Slump cone: A slump cone as described in CT 556.

   b. Spreading Plate: A square plate with sides of at least 800 mm, consisting of a 20 mm thick piece of plywood with a rigid 6 mm thick galvanized or stainless steel plate or non-absorbent plate. A clearly visible concentric circle marked for positioning the slump cone shall be etched on the spread plate. In addition, a concentric circle with a diameter of 500 mm should be marked on the surface of the plate.

   c. Measuring tool: a ruler or measuring tape at least 900 mm long with millimeter divisions.

   d. A stopwatch that can measure 1/10 of a second to determine the time to 500 mm diameter flow.

   e. Scoop for placing concrete in the slump cone (a flat trowel is not suitable).

   f. Damp cloth for moistening the truncated cone mold and the spreading plate.

   g. Thermometer for determining the temperature of fresh concrete with a precision of 0.5 degrees Celsius.

C. Preparation of Sample

1. The sample of concrete from which test specimens are made shall be representative of the entire batch. It shall be obtained in accordance with California Test 539, method of sampling fresh concrete.

D. Procedures for Slump Flow

1. Sample concrete in accordance with Sampling Concrete described in Section 1.

2. Slump Flow

   a. The slump cone and spreading plate are to be wiped with a damp cloth. The slump cone is set up and centered on the appropriate markings on the spreading plate. The mold must be promptly filled with the concrete sample. It must be ensured that the slump cone does not float up during the filling operation.

   b. Spilled concrete is to be cleaned from the spreading plate.

   c. The form is to be lifted vertically in one continuous motion. Upon commencement of the lifting process, the time measurement for determining t_{500} is to be started.

   d. The raising of the truncated cone should take place no later than 90 seconds after the commencement of the filling process. The time measurement for determination of t_{500} is to be ended when the spreading concrete passes the circular marking with a diameter of 500 mm. In the event that this does not take place simultaneously on the entire circumference of the 500 mm circle, a visually determined average value is to be used.

   e. After visually determining the termination of the spreading process, the determination of the slump flow value is to be carried out. The two diameters

determined parallel to the edges may not deviate from each by other more than 30 mm. If a measured deviation is more than 30 mm the test must be repeated.

f. Visually compare the surface of the concrete flow with the Visual Stability Index (see Table) and related photographs.

E. Reporting of Slump Flow Results

1. Mix identification
2. Date and time of the test.
3. Temperature of the concrete sample.
4. Maximum aggregate size.
5. Indication of the slump-flow value calculated to the nearest 10 mm.
6. T_{500} to the nearest 0.5 second.
7. Note observed tendency for segregation or sedimentation. Provide rating value as determined from the attached Visual Stability Index (see Table 1).
8. Deviations in carrying out the tests.

F. Calculation of Slump Flow

1. Calculate the slump spread by averaging two measurements of the diameter of the spread concrete taken parallel to the sides of the spreading plate. Express the result to the nearest 10 mm.

G. Bleed Test

1. This is a test method to determine the relative quantity of mixing water that will bleed from a sample of freshly mixed concrete.
2. This test method provides procedures to be used for determining the effect of variables of composition, treatment, environment, or other factors in bleeding of concrete. It may also be used to determine the conformance of a product or treatment with a requirement relating to its effect on bleeding of concrete.
3. For a sample consolidated by filling only, and tested without further disturbance, simulates conditions in which the concrete, after placement, is not subject to intermittent vibration.
4. Apparatus of Bleed Test
   a. Concrete scoop
   b. 5-gallon plastic bucket
   c. Strike off plate-A flat Acrylic Rectangular plastic 0.5 in (12.7 mm) thick.
   d. A balance or scale accurate to within 0-0.3% of the sample mass
   e. 100-ml graduated cylinder

H. Procedure of Bleed Test

1. During the test, maintain the ambient temperature between 65 and 75°F (18 to 24 "C).

2. Immediately after troweling the surface of the specimen, record the time and determine the mass of the container and its contents.

3. Place the specimen and container on a level platform or floor free of noticeable vibration and cover the container to prevent evaporation of the bleed water. Keep the cover in place throughout the test, except when drawing off the water.

4. Draw off (with pipet or similar instrument) the water that has accumulated on the surface, at 10-minute intervals during the first 40 minutes and at 30-minute intervals thereafter until cessation of bleeding. To facilitate the collection of bleeding water, tilt the specimen carefully by placing a block approximately 2 inches (50 mm) thick under one side of the container 2 minutes prior to each time the water is withdrawn.

5. After the water is removed, return container to a level position without jarring.

6. After each withdrawal, transfer the water to a 100-ml graduated cylinder. Record the accumulated quantity of water after each transfer. When only the total volume of bleeding is desired to be determined, the periodic removal procedure may be omitted and the entire amount may be removed in a single operation.

7. If it is desired to determine the mass of bleeding water, carefully decant the contents of the cylinder into a metal beaker. Measure and record the mass of the beaker and its contents. Dry the beaker and its contents to constant mass and record the final mass. The difference between the two mass, D, is equal to the mass of the bleeding water.

8. The mass of the sludge may also be obtained, if desired, by initially determining he tare mass of the beaker.

I. Calculations of Bleed Test

1. Calculate the volume of bleeding water per unit area of surface, V, as follows:

   $V = V_1/A$, where:

   V_1 = volume of bleeding water measured during the selected time interval, mL, and

   A = area of exposed concrete, cm2

   The comparative rate of bleeding can be determined as the test progresses by comparing the volume of bleeding water for each equal time interval.

2. Calculate the accumulated bleeding water, expressed as a percent of the net mixing water contained within the test specimen, as follows:

   C = (w/W) x s

   Bleeding, % = (D/C) x 100, where:

   C = mass of water in the test specimen, g

   W = total mass of the batch, kg

   w = net mixing water, kg

   S = mass of the sample, g

J. Test Modifications of Applicable Test Methods

1. CT-539 (Sampling Fresh Concrete): Follow the test procedures for sampling fresh concrete to insure that the concrete sample is truly representative of the mixed concrete. The concrete sampled should be thoroughly mixed prior to and during the

obtainment of the composite sample and during the fabrication of the existing test specimen.

2. CT-555 (Temperature): Follow test procedure; no modifications required.

3. CT-540 (Making, Handling, and Storing PCC Cylinder): Following general procedures in CT-540 except the sample concrete shall be placed in single lift. The concrete shall not be rodded or vibrated but allowed to consolidate under its own weight. The sides of the mold during filling should be lightly tapped with the heel of the hand four to five times to eliminate air voids.

4. CT-504–CT-543 (Air Content by the Volumetric and the Pressures Method): Fill sample container in a single lift. The concrete shall not be rodded or vibrated but allowed to consolidate under its own weight. The sides of the mold during filling should be tapped lightly with a rubber mallet five to six times to eliminate air voids.

5. CT 518 (Unit Mass of the Concrete): The test shall be performed in general accordance with the test procedure, but the container pressure meter shall be tapped lightly with a rubber mallet five to six times to remove air bubbles.

Table 1. Visual Stability Index

Rating Value	Criteria
0	No evidence of segregation in slump flow patty, mixer drum, or wheelbarrow
1	No mortar halo in the slump flow patty, but some slight bleeding on the surface of the concrete in the mixer drum and/or wheelbarrow
2	A slight mortar halo (< 10 mm) in the slump flow patty and a noticeable layer of mortar on the surface of the resting concrete in the mixer drum and wheelbarrow
3	Clearly segregating by evidence of a large mortar halo (> 10 mm) and a thick layer of mortar and/or bleed water on the surface of the resting concrete in the mixer drum or wheelbarrow

Visual Stability Index (VSI) 0

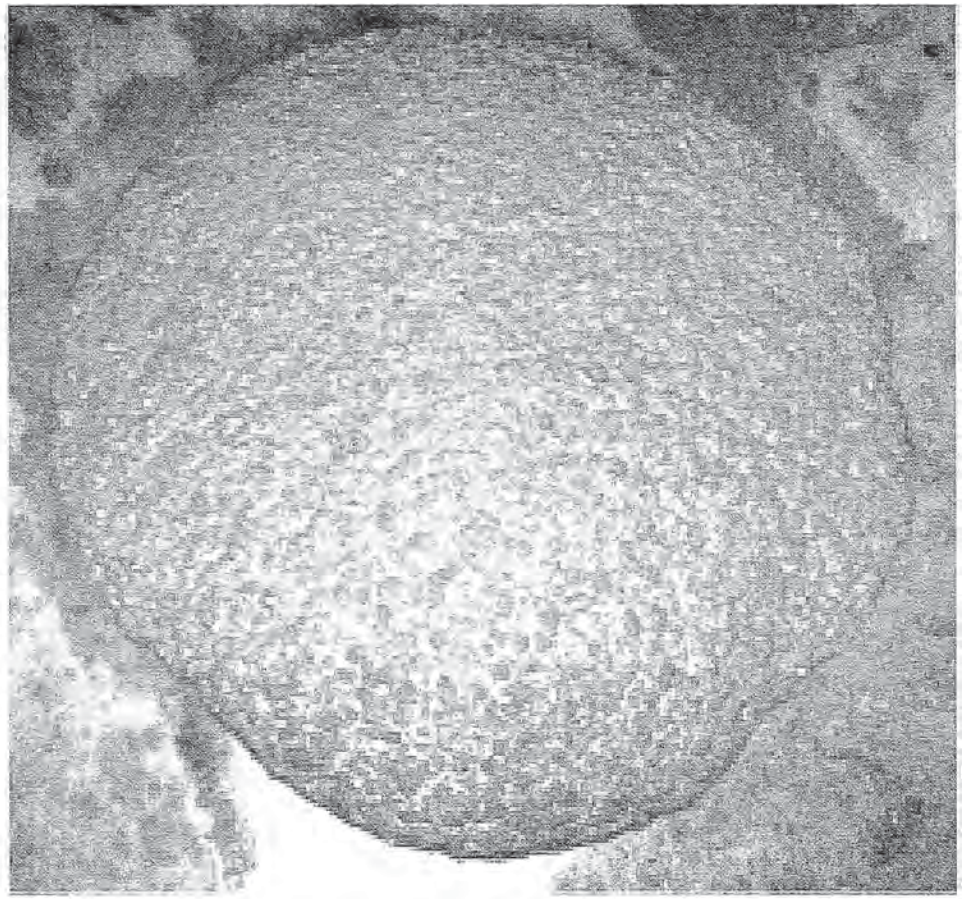

✓No Segregation

✓No Bleeding

CONTRACT NO. 04-012024
CCO NO. 31 51
PAGE 8 OF 11

Visual Stability Index (VSI) 1

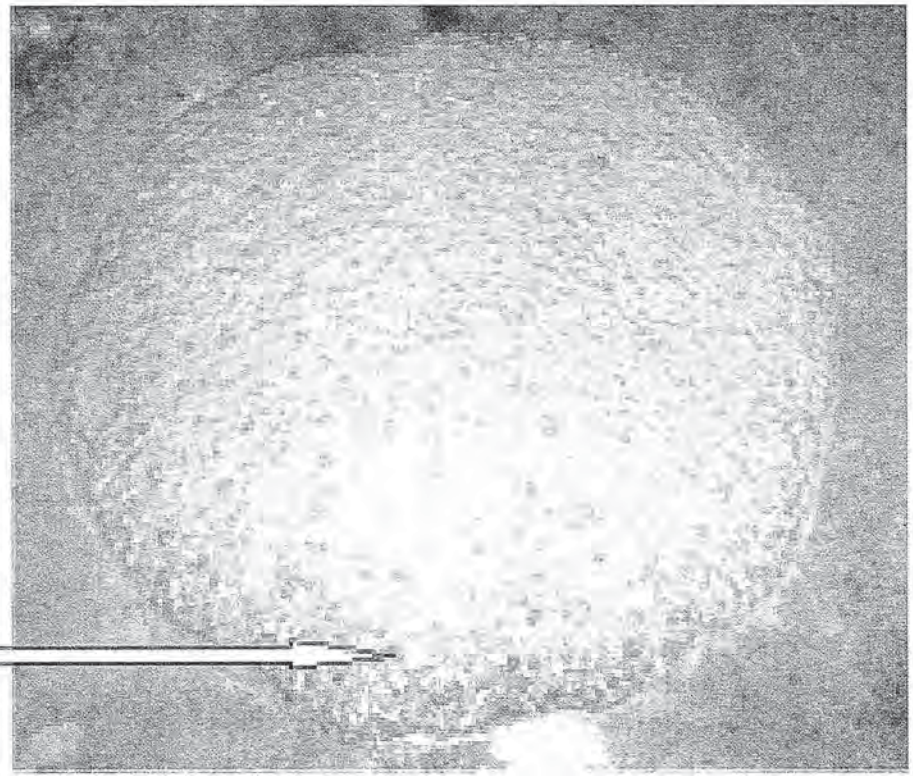

Slight Bleeding

✓No Segregation

✓Slight Bleeding

✓Slight Air Popping

CONTRACT NO. 04-012024
CCO NO. 31 51
PAGE 9 OF 11

Visual Stability Index (VSI) 2

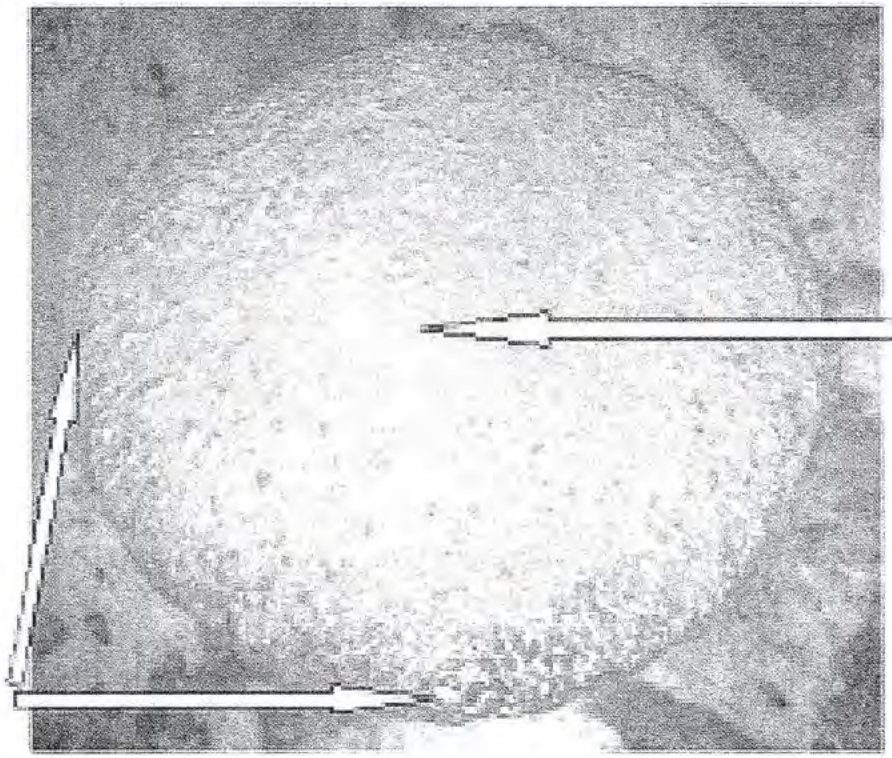

- ✓Slight Mortar Halo or Aggregate Pile
- ✓Paste Concentration
- ✓Noticeable Bleeding

CONTRACT NO. 04-0120Z4
CCO NO. 31 51
PAGE 10 OF 11

Visual Stability Index (VSI) 3

Mortar Halo

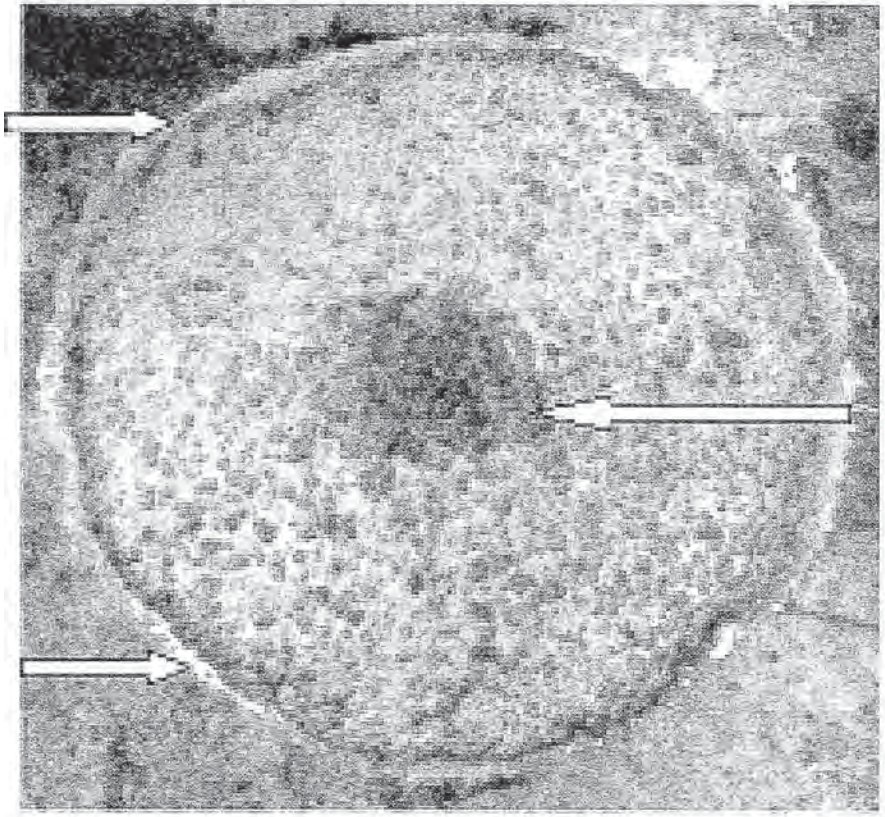

Aggregate Pile/
Clear Segregation

Noticeable Bleeding

✓ Large Mortar Halo

✓ Aggregate Pile

✓ Clear Segregation

✓ Noticeable Bleeding

CONTRACT NO. 04-012024
CCO NO. 3151
PAGE 11 OF 11

STATE OF CALIFORNIA - DEPARTMENT OF TRANSPORTATION

CONTRACT CHANGE ORDER

Change Requested by: Engineer

CCO: 31	Suppl. No. 0	Contract No. 04 - 012024	Road 04-SF,Ala-80-13.9/14.3,0.0/1.6	FED. AID LOC.: ACIM-080-1(085)8N

To: KIEWIT / FCI / MANSON a JV

You are directed to make the following changes from the plans and specifications or do the following described work not included in the plans and specifications for this contract. ***NOTE: This change order is not effective until approved by the Engineer.***

Description of work to be done, estimate of quantities and prices to be paid. (Segregate between additional work at contract price, agreed price and force account.) Unless otherwise stated, rates for rental of equipment cover only such time as equipment is actually used and no allowance will be made for idle time. This last percentage shown is the net accumulated increase or decrease from the original quantity in the Engineer's Estimate.

Machine drill and torch cut 50 mm diameter vent holes in 138 locations, and machine drill and torch cut two 120 mm diameter holes in the top plates of the footing boxes for Piers E15 and E16 as shown on sheet 2 of this Change Order and as noted below. In addition, machine drill and torch cut 50 mm diameter vent holes in 142 locations, and machine drill and torch cut two 120 mm diameter holes in the top plates of the footing boxes for Piers E3 through E14 as shown on sheet 3 and as noted below.

1. All holes shall be circular and neatly cut or drilled.
2. The edge of any hole shall not be closer than 300 mm from the centerline of a shear plate, pile sleeve, or pier socket.
3. The edge of any hole shall not be closer than 100 mm from the edge of the vertical exterior edge plate.
4. The edge of any hole shall not be closer than 50 mm from the edge of any stiffener plate.
5. No additional openings shall be allowed in the top plate of cells bounded by the pier socket casing.
6. 120 mm diameter holes for concrete placement will be allowed in the top plate of cells bounded by the vertical exterior edge plate provided the center of any hole is not closer than 1200 mm from the center of any other hole suitable for concrete placement (i.e. access, vent or concrete placement hole) and 500 mm from the center of any weep hole.

EXTRA WORK AT AGREED UNIT PRICE
$7500.00 per footing plate for 28 footings = $ 210,000.00

This sum constitutes full compensation, including markups, for all direct and indirect costs, all associated project impacts and Time Related Overhead (TRO) expenses. A detailed cost analysis is on file in the project records.

This additional work will not affect the overall project schedule; therefore, no additional contract time will be granted for this change order.

Extra Work at Unit Price:

Estimated cost of Extra Work at Agreed Unit Price $210,000.00

Estimated Cost: Increase ☑ Decrease ☐ $210,000.00

By reason of this order the time of completion will be adjusted as follows: 0 days

Submitted by

Signature	Resident Engineer: COE D.	Date
Daniel W. Wu for		7-17-03

Approval Recommended by

Signature	Construction Engineer: COE D.	Date
Daniel W. Wu for		7-17-03

Engineer Approval by

Signature	(Print name and title)	Date
P. Siegenthaler	PETER SIEGENTHALER - Chief	9/11/03

We the undersigned contractor, have given careful consideration to the change proposed and agree, if this proposal is approved, that we will provide all equipment, furnish the materials, except as may otherwise be noted above, and perform all services necessary for the work above specified, and will accept as full payment therefor the prices shown above.

NOTE: If you, the contractor, do not sign acceptance of this order, your attention is directed to the requirements of the specifications as to proceeding with the ordered work and filing a written protest within the time therein specified.

Contractor Acceptance by

Signature	(Print name and title)	Date
O. S	A.T. SKORO	8/4/03

TEST PROCEDURE FOR TESTING AND ACCEPTANCE OF SELF CONSOLIDATING CONCRETE MIXES

I. Background

Self Consolidating Concrete (SCC) is intended to be poured and placed with minimal vibration used in the consolidation process. A key attribute of high-flow concrete is that it remains stable (does not segregate) during and after placement, maximizing the structural integrity and durability of the concrete. Currently, there are no standard ASTM test methods for the acceptance testing of high-flow concrete. The Department has adopted and modified existing test procedures to evaluate the performance of high flow mixes. These tests include: Air Content by both Volumetric and Pressure Method, Unit Weight, Bleeding, Slump Flow, Sampling Fresh Concrete, and Making, Handling and Storing PCC Cylinders.

II. Definitions

A. Halo: A cement paste or mortar ring that has clearly separated from the coarse aggregate around the outside circumference of concrete after flowing from the slump cone.

B. Self Consolidating Concrete: A concrete that has the ability to fill formwork and encase reinforcing steel through the action of gravity, and with maintained homogeneity.

C. Resistance to Segregation: The ability of the particle-aggregate-suspension (fresh concrete) to maintain homogeneity through the mixing, transportation, and placing process.

D. Viscosity Modifying Admixture: A liquid admixture, which is designed to modify the rheology of the concrete by increasing the viscosity of the concrete while still allowing the concrete to flow without segregation.

E. Visual Stability Index: The degree to which highly fluid concrete is segregated. See Table 1.

III. Scope

A. Self Consolidating Concrete

1. This test method describes the procedures for testing self consolidating concrete; measures the unconfined fluidity, and determining its stability based on the Visual Stability Index (VSI). VSI is a qualitative visual rating of the static stability of a self consolidating concrete mixture. This scale assigns a numerical rating of 0 to 3, in 0.5 increments, based on the criteria in Table 1.

2. This test method also increases the procedure for measuring the slump flow (unconfined fluidity) and provides an indication of the static stability of highly fluid concrete mixtures intended for placement.

3. This test method utilizes apparatuses and procedures specified in CT 556.

B. Slump Flow

1. This test method describes the procedure for determining the deformability of freshly mixed highly fluidized concrete under its own weight by observation of deforming speed and the spread diameter. This test method is intended for use with highly fluidized concretes made with superplasticizer and with or without a

viscosity-modifying agent. It is not applicable to concretes made with aggregate whose nominal maximum size exceeds 25 mm.

2. Apparatus for Slump Flow

   a. Slump cone: A slump cone as described in CT 556.

   b. Spreading Plate: A square plate with sides of at least 800 mm, consisting of a 20 mm thick piece of plywood with a rigid 6 mm thick galvanized or stainless steel plate or non-absorbent plate. A clearly visible concentric circle marked for positioning the slump cone shall be etched on the spread plate. In addition, a concentric circle with a diameter of 500 mm should be marked on the surface of the plate.

   c. Measuring tool: a ruler or measuring tape at least 900 mm long with millimeter divisions.

   d. A stopwatch that can measure 1/10 of a second to determine the time to 500 mm diameter flow.

   e. Scoop for placing concrete in the slump cone (a flat trowel is not suitable).

   f. Damp cloth for moistening the truncated cone mold and the spreading plate.

   g. Thermometer for determining the temperature of fresh concrete with a precision of 0.5 degrees Celsius.

C. Preparation of Sample

1. The sample of concrete from which test specimens are made shall be representative of the entire batch. It shall be obtained in accordance with California Test 539, method of sampling fresh concrete.

D. Procedures for Slump Flow

1. Sample concrete in accordance with Sampling Concrete described in Section 1.

2. Slump Flow

   a. The slump cone and spreading plate are to be wiped with a damp cloth. The slump cone is set up and centered on the appropriate markings on the spreading plate. The mold must be promptly filled with the concrete sample. It must be ensured that the slump cone does not float up during the filling operation.

   b. Spilled concrete is to be cleaned from the spreading plate.

   c. The form is to be lifted vertically in one continuous motion. Upon commencement of the lifting process, the time measurement for determining t_{500} is to be started.

   d. The raising of the truncated cone should take place no later than 90 seconds after the commencement of the filling process. The time measurement for determination of t_{500} is to be ended when the spreading concrete passes the circular marking with a diameter of 500 mm. In the event that this does not take place simultaneously on the entire circumference of the 500 mm circle, a visually determined average value is to be used.

   e. After visually determining the termination of the spreading process, the determination of the slump flow value is to be carried out. ~~The two diameters~~

determined parallel to the edges may not deviate from each by other more than 30 mm. If a measured deviation is more than 30 mm the test must be repeated.

f. Visually compare the surface of the concrete flow with the Visual Stability Index (see Table) and related photographs.

E. Reporting of Slump Flow Results

1. Mix identification
2. Date and time of the test.
3. Temperature of the concrete sample.
4. Maximum aggregate size.
5. Indication of the slump-flow value calculated to the nearest 10 mm.
6. T_{500} to the nearest 0.5 second.
7. Note observed tendency for segregation or sedimentation. Provide rating value as determined from the attached Visual Stability Index (see Table 1).
8. Deviations in carrying out the tests.

F. Calculation of Slump Flow

1. Calculate the slump spread by averaging two measurements of the diameter of the spread concrete taken parallel to the sides of the spreading plate. Express the result to the nearest 10 mm.

G. Bleed Test

1. This is a test method to determine the relative quantity of mixing water that will bleed from a sample of freshly mixed concrete.
2. This test method provides procedures to be used for determining the effect of variables of composition, treatment, environment, or other factors in bleeding of concrete. It may also be used to determine the conformance of a product or treatment with a requirement relating to its effect on bleeding of concrete.
3. For a sample consolidated by filling only, and tested without further disturbance, simulates conditions in which the concrete, after placement, is not subject to intermittent vibration.
4. Apparatus of Bleed Test
   a. Concrete scoop
   b. 5-gallon plastic bucket
   c. Strike off plate-A flat Acrylic Rectangular plastic 0.5 in (12.7 mm) thick.
   d. A balance or scale accurate to within 0-0.3% of the sample mass
   e. 100-ml graduated cylinder

H. Procedure of Bleed Test

1. During the test, maintain the ambient temperature between 65 and 75°F (18 to 24 °C).

2. Immediately after troweling the surface of the specimen, record the time and determine the mass of the container and its contents.

3. Place the specimen and container on a level platform or floor free of noticeable vibration and cover the container to prevent evaporation of the bleed water. Keep the cover in place throughout the test, except when drawing off the water.

4. Draw off (with pipet or similar instrument) the water that has accumulated on the surface, at 10-minute intervals during the first 40 minutes and at 30-minute intervals thereafter until cessation of bleeding. To facilitate the collection of bleeding water, tilt the specimen carefully by placing a block approximately 2 inches (50 mm) thick under one side of the container 2 minutes prior to each time the water is withdrawn.

5. After the water is removed, return container to a level position without jarring.

6. After each withdrawal, transfer the water to a 100-ml graduated cylinder. Record the accumulated quantity of water after each transfer. When only the total volume of bleeding is desired to be determined, the periodic removal procedure may be omitted and the entire amount may be removed in a single operation.

7. If it is desired to determine the mass of bleeding water, carefully decant the contents of the cylinder into a metal beaker. Measure and record the mass of the beaker and its contents. Dry the beaker and its contents to constant mass and record the final mass. The difference between the two mass, D, is equal to the mass of the bleeding water.

8. The mass of the sludge may also be obtained, if desired, by initially determining he tare mass of the beaker.

I. Calculations of Bleed Test

1. Calculate the volume of bleeding water per unit area of surface, V, as follows:
   $V = V_1/A$, where:
   V_1 = volume of bleeding water measured during the selected time interval, mL, and
   A = area of exposed concrete, cm^2
   The comparative rate of bleeding can be determined as the test progresses by comparing the volume of bleeding water for each equal time interval.

2. Calculate the accumulated bleeding water, expressed as a percent of the net mixing water contained within the test specimen, as follows:
   $C = (w/W) \times S$
   Bleeding, % = $(D/C) \times 100$, where:
   C = mass of water in the test specimen, g
   W = total mass of the batch, kg
   w = net mixing water, kg
   S = mass of the sample, g

J. Test Modifications of Applicable Test Methods

1. CT-539 (Sampling Fresh Concrete): Follow the test procedures for sampling fresh concrete to insure that the concrete sample is truly representative of the mixed concrete. The concrete sampled should be thoroughly mixed prior to and during the

obtainment of the composite sample and during the fabrication of the existing test specimen.

2. CT-555 (Temperature): Follow test procedure; no modifications required.

3. CT-540 (Making, Handling, and Storing PCC Cylinder): Following general procedures in CT-540 except the sample concrete shall be placed in single lift. The concrete shall not be rodded or vibrated but allowed to consolidate under its own weight. The sides of the mold during filling should be lightly tapped with the heel of the hand four to five times to eliminate air voids.

4. CT-504–CT-543 (Air Content by the Volumetric and the Pressures Method): Fill sample container in a single lift. The concrete shall not be rodded or vibrated but allowed to consolidate under its own weight. The sides of the mold during filling should be tapped lightly with a rubber mallet five to six times to eliminate air voids.

5. CT 518 (Unit Mass of the Concrete): The test shall be performed in general accordance with the test procedure, but the container pressure meter shall be tapped lightly with a rubber mallet five to six times to remove air bubbles.

Table 1. Visual Stability Index

Rating Value	Criteria
0	No evidence of segregation in slump flow patty, mixer drum, or wheelbarrow
1	No mortar halo in the slump flow patty, but some slight bleeding on the surface of the concrete in the mixer drum and/or wheelbarrow
2	A slight mortar halo (< 10 mm) in the slump flow patty and a noticeable layer of mortar on the surface of the resting concrete in the mixer drum and wheelbarrow
3	Clearly segregating by evidence of a large mortar halo (> 10 mm) and a thick layer of mortar and/or bleed water on the surface of the resting concrete in the mixer drum or wheelbarrow

Visual Stability Index (VSI) 0

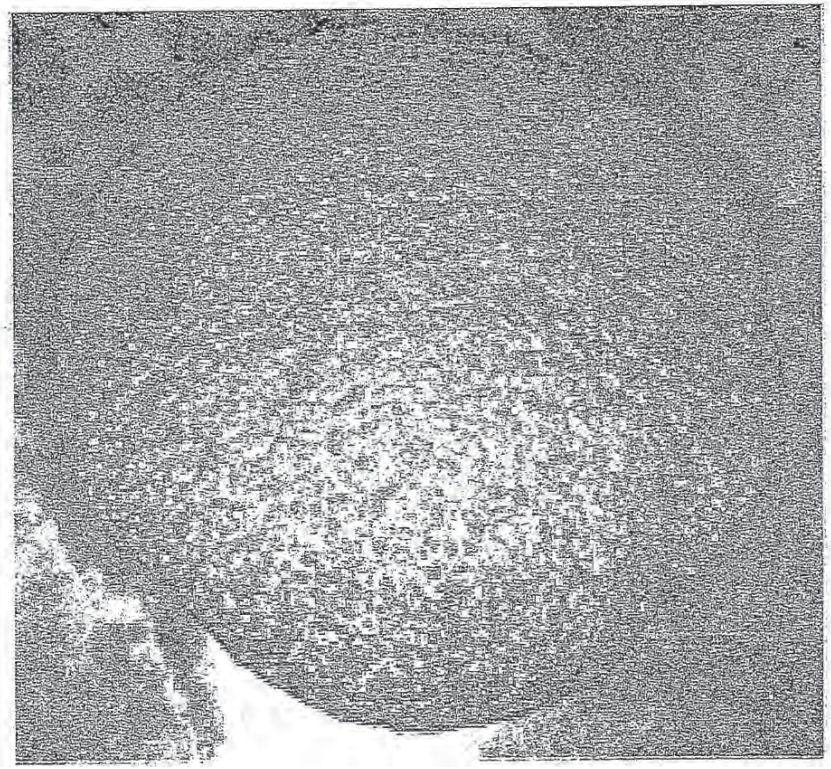

✓No Segregation

✓No Bleeding

CONTRACT NO. DH-012024
CCO NO. 31 S1
PAGE 8 OF 11

Visual Stability Index (VSI) 1

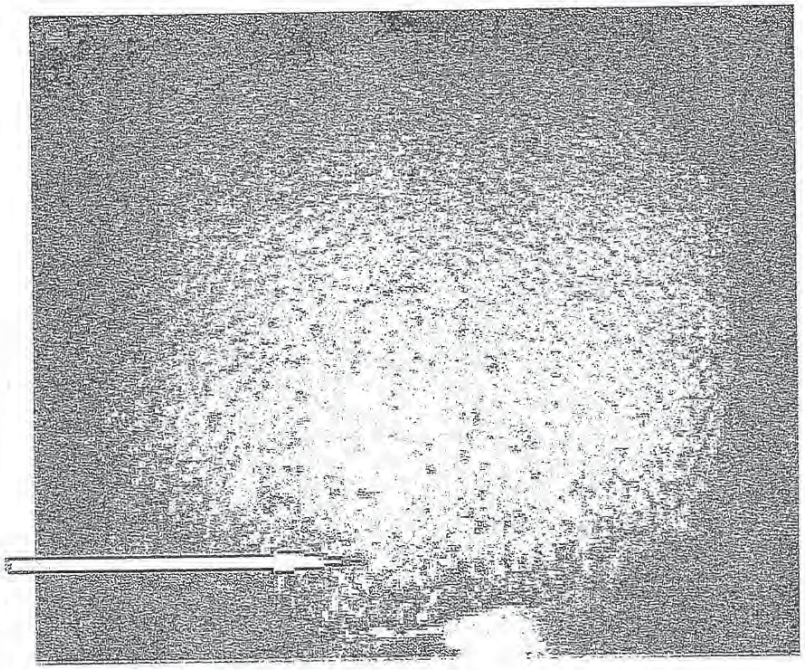

Slight Bleeding

✓No Segregation

✓Slight Bleeding

✓Slight Air Popping

CONTRACT NO. 04-012024
CCO NO. 31 51
PAGE 9 OF 11

Visual Stability Index (VSI) 2

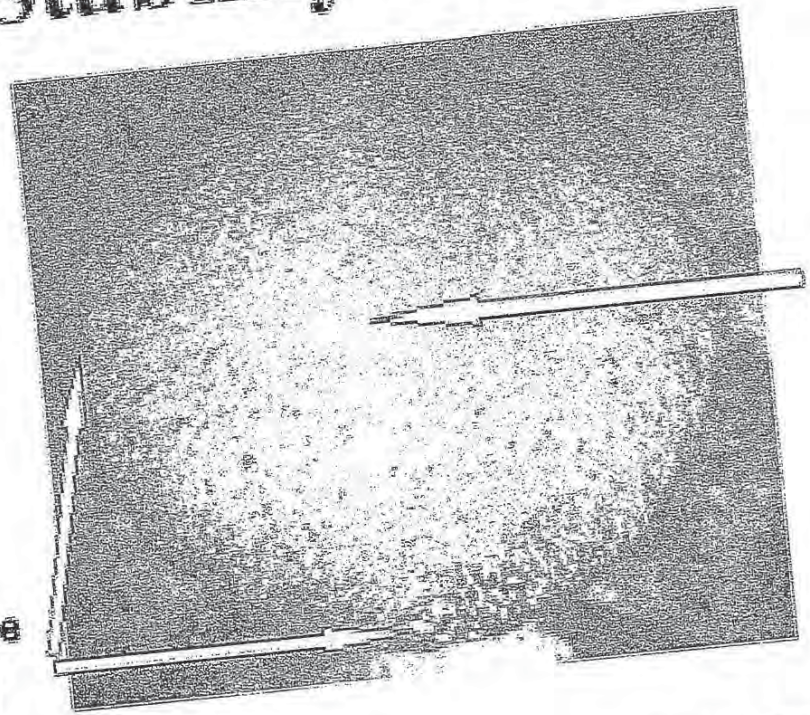

✓ Slight Mortar Halo or Aggregate Pile

✓ Paste Concentration

✓ Noticeable Bleeding

CONTRACT NO. 04-012024
CCO NO. 31 51
PAGE 10 OF 11

Visual Stability Index (VSI) 3

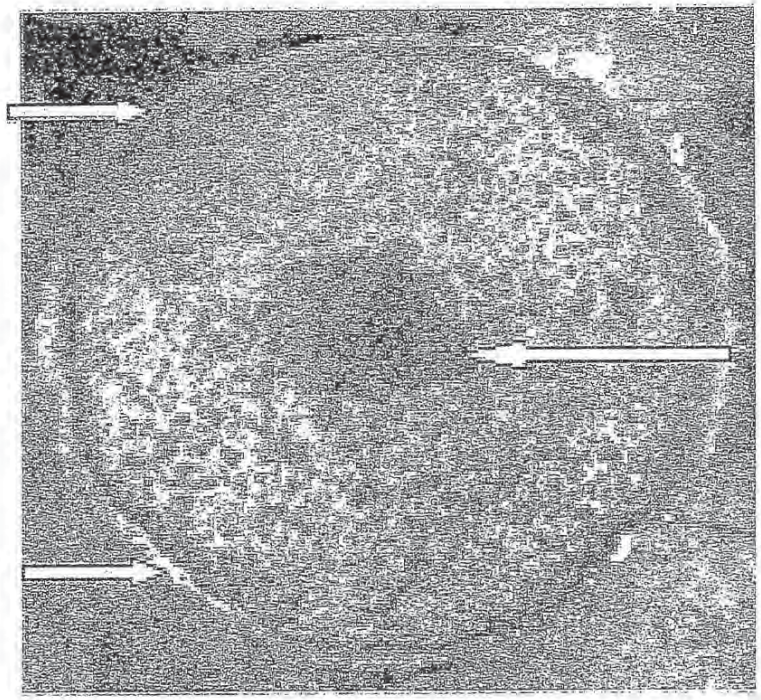

✓ Large Mortar Halo

✓ Aggregate Pile

✓ Clear Segregation

✓ Noticeable Bleeding

CONTRACT NO. 011-012024
CCO NO. 3151
PAGE 11 OF 11

STATE OF CALIFORNIA - DEPARTMENT OF TRANSPORTATION

CONTRACT CHANGE ORDER MEMORANDUM

DATE: 8/8/2003

TO: PETER SIEGENTHALER / COE D.	FILE: E.A. 04 - 012024
	CO-RTE-PM 04-SF,Ala-80-13.9/14.3,0.0/1.6
FROM: COE D.	FED. NO. ACIM-080-1(085)8N
CCO#: 31 SUPPLEMENT#: 0 Category Code: CHPA	CONTINGENCY BALANCE (incl. this change) $55,280,249.19
COST: $210,000.00 INCREASE ☑ DECREASE ☐	HEADQUARTERS APPROVAL REQUIRED? ☑ YES ☐ NO
SUPPLEMENTAL FUNDS PROVIDED: $0.00	IS THIS REQUEST IN ACCORDANCE WITH ENVIRONMENTAL DOCUMENTS? ☑ YES ☐ NO
CCO DESCRIPTION: Self-Compacting Concrete- Weep Holes	**PROJECT DESCRIPTION:** REPLACE SFOBB EAST SPAN

LOCATION: IN SAN FRANCISCO AND ALAMEDA COUNTIES IN SAN FRANCISCO AND OAKLAND FROM 1.3 KM EAST OF THE YERBA BUENA ISL

THIS CHANGE ORDER PROVIDES FOR:

machine drilling and torch cutting 50 mm and 120 mm diameter vent holes in the top plate of the footing boxes for Piers E3 through E16 (total of 4016 holes), to allow air to vent during placement of the Self Compacting Concrete (SCC) within the footing boxes. The 50 mm holes will also allow the SCC to be placed in bearing contact with the bottom surface of the top plate, and the additional 120 mm diameter holes are necessary so that the SCC can be placed in all the footing box cells.

EXTRA WORK AT AGREED UNIT PRICE
$7500.00 per footing plate for 28 footings = $210,000.00

The cost estimate is attached to this memorandum. This sum constitutes full compensation, including all markups for this change. This contract change order will not adjust the contract time; no additional contract time is required.

There will be Supplemental(s) to this Change Order to allow the use of chemical admixtures and changes in testing specifications and gradation so that SCC may be used for all 28 footing box foundations from Piers E3 through E16.

Madon Sah of TY Lin concurred with this change order and developed the allowable hole locations on October 17, 2002.
Concurrence from Nancy Bobb, FHWA was received on June 20, 2003.
Maintenance concurrence is not required, as this work does not affect any permanent work.

CONCURRED BY:		
Construction Engineer:	Douglas Coe	Date 7-15-03
Bridge Engineer:		Date
FHWA Representative:	Nancy Bobb	Date 6/20/2003
Project Engineer:		Date
Other (specify): Madon Sah		Date 10/17/2002
		Date
		Date
District Prior Approval By:		Date
HQ (Issue Approve) By:	Patrick Rochiani	Date 8/12/03
Resident Engineer's Signature:		Date

ESTIMATE OF COST

	THIS REQUEST	TOTAL TO DATE
ITEMS	$0.00	$0.00
FORCE ACCOUNT	$0.00	$0.00
AGREED PRICE	$210,000.00	$210,000.00
ADJUSTMENT	$0.00	$0.00
TOTAL	$210,000.00	$210,000.00

FEDERAL PARTICIPATION

☑ PARTICIPATING ☐ PARTICIPATING IN PART ☐ NONE
☐ NON-PARTICIPATING (MAINTENANCE) ☐ NON-PARTICIPATING

FEDERAL SEGREGATION (if more than one Funding Source or P.I.P. type)
☑ CCO FUNDED PER CONTRACT ☐ CCO FUNDED AS FOLLOWS

FEDERAL FUNDING SOURCE	PERCENT

CONTRACT CHANGE ORDER

Change Requested by: Engineer

CCO: 31	Suppl. No. 1	Contract No, 04 - 012024	Road 04-SF,Ala-80-13.9/14.3,0.0/1.6	FED. AID LOC.: ACIM-080-1(085)8N

To: KIEWIT / FCI / MANSON a JV

You are directed *to* make the following changes from the plans and specifications *or* do the following described work not included in the plans and specifications for this contract. ***NOTE: This change order is not effective until approved by the Engineer.***

Description of work to be done, estimate of quantities and prices to be paid. (Segregate between additional work at contract price, agreed price and force account.) Unless otherwise stated, rates for rental of equipment cover only such time as equipment is actually used and no allowance will be made for idle time. This last percentage shown is the net accumulated increase or decrease from the original quantity in the Engineer's Estimate.

Adjustment of Compensation at Lump Sum:

The Contractor shall utilize Normalweight and Lightweight Self Consolidating Concrete (SCC) for the in-fill concrete within the footing boxes, in lieu of the Normalweight and Lightweight Concrete, shown on sheets 483R1 through 487R1 of 978 of the Contract Plans.

'The Contractor shall produce SCC in conformance with the requirements and the placement procedures in the Special Provisions and Standard Specifications and in accordance with the requirements below and the attached test procedures, as shown on sheets 3 through 11 of this contract change order.

1. The Contractor's proposed high-flow ready mix designs shall be pre-qualified for use by a demonstration placement.

2. The concrete shall be batched, mixed, and placed in accordance with section 10-1.27, "Concrete Structures" and section 11-2, "Portland Cement Concrete" of the Special Provisions for this project.

3. The concrete shall be designed to provide the required compressive strength and designated water/cement ratio when specified.

4. The maximum size aggregate shall conform to grading requirements as outlined in Section 11-2, "Portland Cement Concrete," paragraph 90-3.02 of the Special Provisions for either a nominal size of 12.5 mm X 4.75 mm or 25 mm X 4.75 mm aggregate.

5. The flow when measured by the slump flow test shall be between 406 to 610 mm. The target flow shall be established for the mix from the results of the demonstration placement involving the specific structural component.

6. The bleed water shall not exceed 4.0 percent of the total mix water when determined by ASTM C 232.

7. The measured unit weight shall not vary from the mix design by more than 65 KG/M3, based on the result of three samples from within each test batch.

8. The mix stability, when determined by the Visual Rating Criteria for Static Stability, shall not exceed VSI Rating 2.

9. All admixtures used in the concrete shall be from the same manufacturer and certified to be compatible when used in the same mixture. The dose rates shall be in accordance with the manufacturer's recommendations.

10. The consolidation of concrete "by means of high frequency internal vibrators" required in section 51-1.09, "Placing Concrete," of the Standard Specifications will not be required in footings where SCC is used.

11. Section 51-1.13, "Bonding," of the Standard Specifications shall be revised such that cleaning of surface laitance shall not be required between the second and third lifts of concrete within the footing boxes.

The Contractor agrees to accept the sum of $177,000.00 for costs incurred for testing and implementing Normalweight and Lightweight Self Consolidating Concrete for the footing in-fill.

Cost of Adjustment of Compensation at Agreed Lump Sum $177,000.00

CONTRACT CHANGE ORDER

Change Requested by: Engineer

CCO: 31	Suppl. No. 1	Contract No, 04- 012024	Road 04-SF,Ala-80-13.9/14.3,0.0/1.6	FED. AID LOC.: ACIM-080-1(085)8N

Estimated Cost: Increase ☑ Decrease ☐ $177,000.00

By reason of this order the time of completion will be adjusted as follows: 0 days

Submitted by		
Signature	Resident Engineer: COE D.	Date 12-18-03
Approval Recommended by		
Signature	Construction Engineer: COE D.	Date 12-18-03
Engineer Approval by		
Signature	(Print name and title) PETER SIEGENTHALER - Chief	Date

We the undersigned contractor, have given careful consideration to the change proposed and agree, if this proposal is approved, that we will provide all equipment, furnish the materials, except as may otherwise be noted above, and perform all services necessary for the work above specified, and will accept as full payment therefor the prices shown above.

NOTE: If you, the contractor, do not sign acceptance of this order, your attention is directed to the requirements of the specifications as to proceeding with the ordered work and filing a written protest within the time therein specified.

Contractor Acceptance by		
Signature	(Print name and title)	Date

STATE OF CALIFORNIA - DEPARTMENT OF TRANSPORTATION

CONTRACT CHANGE ORDER

Change Requested by: Engineer

CCO: 32	Suppl. No. 0	Contract No. 04 - 012024	Road 04-SF,Ala-80-13.9/14.3,0.0/1.6	FED. AID LOC.: ACIM-080-1(085)8N

To: **KIEWIT / FCI / MANSON a JV**

You are directed to make the following changes from the plans and specifications or do the following described work not included in the plans and specifications for this contract. ***NOTE: This change order is not effective until approved by the Engineer.***

Description of work to be done, estimate of quantities and prices to be paid. (Segregate between additional work at contract price, agreed price and force account.) Unless otherwise stated, rates for rental of equipment cover only such time as equipment is actually used and no allowance will be made for idle time. This last percentage shown is the net accumulated increase or decrease from the original

Extra Work at Force Account:

Perform additional construction engineering to resolve congestion and conflict issues while preparing composite segment working drawings for the precast concrete Skyway structures, Bridge No.34-0006L/R. This work is being coordinated by the Contractor's and Department's representatives in the Pier 7 "Mission Control" office.

The Contractor and the Department shall determine on a weekly basis the additional construction engineering required to resolve and implement the solutions to these issues. The Contractor's and Department's representatives shall agree on issues covered under this change order and the corresponding labor hours.

The costs will be reimbursed as Extra Work at Force Account as specified in Section 5-1.21, "Force Account Payment" of the Special Provisions.

Estimated cost increase at Force Account is $500,000.00

TIME DEFERRED

Consideration of time adjustment and related impacts, as provided in Section 4-1.03A of the Standard Specifications, shall be deferred until completion of the work specified in the change order.

Estimated Cost: **Increase** ☐ **Decrease** ☐ $500,000.00

By reason of this order the time of completion will be adjusted as follows: 0 days

Submitted by

Signature	**Resident Engineer:** COE D.	Date 3-12-03

Approval Recommended by

Signature	Construction Engineer: COE D.	Date 3-12-03

Engineer Approval by

Signature	(Print name and title) PETER SIEGENTHALER - Chief	Date 3/18/03

We the undersigned contractor, have given careful consideration to the change proposed and agree, if this proposal is approved, that we will provide all equipment, furnish the materials, except as may otherwise be noted above, and perform all services necessary for the work above specified, and will accept as full payment therefor the prices shown above.

NOTE: If you, the contractor, do not sign acceptance of this order, your attention is directed to the requirements of the specifications as to proceeding with the ordered work and filing a written protest within the time therein specified.

Contractor Acceptance by

Signature	(Print name and title) A. T. (Tom) Kiko, Project Director	Date 3/13/03

PARSONS

3500 Financial Plaza • Suite 300 • Tallahassee, Florida 32312-5998 • (850) 422-0000 • Fax: (850) 422-3373 • www.parsons.com

March 5,2003

VIA: Electronic Mail and Federal Express

Mr. Ralph Salamie, P.E.
Kiewit, FCI, Manson A Joint Venture
220 Burma Road
Oakland, CA 94607

RE: Supplemental Invoice No. 12H – Conflict Resolution On-site Support
SFOBB East Span Replacement – Skyway Project
CALTRANS Contract No. 04-012024
Federal Aid Project No. ACIM-080-1(085) 8N
Parsons Job No. 645128

Dear Ralph:

Attached please find our Supplemental Invoice No. 12H for the above referenced project. This invo ce is for our services providing Conflict Resolution On-site Support for the week ending February 28,2003.

Below is a listing of all of the Supplemental Invoices for the Conflict Resolution On-site Support sent to date.

Supplemental Invoice #	Work Ending Week of:	Hours	Invoice Amount
10E	December 13.2002	271.50	$34,946.00
10F	December 20.2002	302.00	$25,677.61
11B	**January 3,2003**	**159.50**	**$15,575.57**
11D	**January 10,2003**	**273.00**	**$22,500.65**
11F	**January 17,2003**	**410.50**	**$40,312.16**
11H	January 24,2003	400.50	$35,011.10
11J	January 31,2003	437.00	$40,983.22
12B	February 7,2003	509.50	$47,250.62
12D	February 14,2003	491.00	$44,368.78
12F	February 21,2003	448.00	$36,970.90
12H	February 28,2003	423.00	$37,326.61

Parsons Transportation Group
C/O Bank of America
96922 Collections Center Drive
Lock Box 96922
Chicago, IL 60693

Should you have any questions regarding this week's invoice or you would like to discuss any of these items further, please do not hesitate to give me a call.

Sincerely,

W. Scott McNary, P.E.
Project Manager

WSM/kmg

Copy: Andrea Fortunas

PARSONS

3500 Financial Plaza, Suite 300 • Tallahassee, Florida 32312-5998 • (850) 422-000 • Fax: (850) 422-3373 • www.parsons.com

SFOBB East Span Replacement - Skyway Project
Caltrans Contract No. 04-012024
Federal Aid Project No. ACIM-080-1(085) 8N

Parsons Job Number 645128

March 5,2003

For the week ending February 28,2003

INVOICE # 12H

SERVICES PERFORMED:

Weekly services to provide Conflict Resolution On-site Support for KFM.
For the week ending February 28,2003

EMPLOYEE	CLASSIFICATION	HOURS	RATE	TOTAL
Week Ending February 28,2003				
MC-CRS CONFLICT RESOLUTION SUPPORT (See Attached Time Sheets)				
WSM	Principal	32.00	$159.00	$5,088.00
PMH	Sr. Bridge Engineer	2.00	$127.20	$254.40
JDJ	Bridge Engineer	50.00	$100.70	$5,035.00
SS	Bridge Designer	42.00	$79.50	$3,339.00
CWN	Sr. Technician	28.00	$90.10	$2,522.80
DEP	Sr. Technician	50.00	$90.10	$4,505.00
TE	Technician	48.00	$74.20	$3,561.60
JS	Technician	41.00	$74.20	$3,042.20
RS	Technician	43.50	$74.20	$3,227.70
SP	Detailer	18.00	$58.30	$1,049.40
LAM	Detailer	32.50	$58.30	$1,894.75
KG	Admin	24.00	$42.40	$1,017.60
WK	Admin	3.50	$42.40	$148.40
AF	Admin	8.00	$42.40	$339.20
CN	Admin	0.50	$42.40	$21.20
	Subtotal Hours/Cost	***423.00***		***$35,046.25***

Travel Expenses: (Expenses Reports are attached)

JDJ	$245.00
SS	$245.00
CWN	$29.12
DEP	$245.00
TE	$344.23
JS	$867.50
RS	$22.41
SP	$282.10
Subtotal (direct expenses)	***$2,280.36***

TOTAL FOR WEEK ENDING FEBRURARY 28, 2003: $37,326.61

Parsons ransportati Group Inc.

Employee: MCNARY, WILLIAM S *(97412)* **Typesheet:** Original **Approval Group:** BTFINLEY
Week ending: Feb 28 2003 **PRISM Batch Number:** 751

Job	WBS	CC	CT	Task	Func	2/22			Regular Hours			2/28			Status/Approver
Project/Description						SAT			Overtime Hours			FRI		ot	Error Description
645128	89515 (59710)	89	01	000	00						2.00			2.00	**Approved** by GRAY, ZANE
Skyway RFI 245 (Precast Panel Rebar)															
Regular Hours Total:															= 2.0 hrs
Overtime Hours Total:															

Printed: 3/12/2003

Principal

** These hours are in addition to hours already faxed.

PARSONS

3500 Financial Plaza • Suite 300 • Tallahassee, Florida 32312-5998 • (850) 422-0000 • Fax: (850) 422-3373 • www.parsons.com

February 26,2003

VIA: Electronic Mail and Federal Express

Mr. Ralph Salamie, P.E.
Kiewit, FCI, Manson A Joint Venture
220 Burma Road
Oakland, CA 94607

RE: Supplemental Invoice No. 12F – Conflict Resolution On-site Support
SFOBB East Span Replacement – Skyway Project
CALTRANS Contract No. 04-012024
Federal Aid Project No. ACIM-080-1(085) 8N
Parsons Job No. 645128

Dear Ralph:

Attached please find our Supplemental Invoice No. 12F for the above referenced project. This invoice is for our services providing Conflict Resolution On-site Support for the week ending February 21,2003.

Below is a listing of all of the Supplemental Invoices for the Conflict Resolution On-site Support sent to date.

10E	December 13,2002	271.50	$34,946.00
10F	December 20,2002	302.00	$25,677.61
11B	January 3,2003	159.50	$15,575.57
11D	January 10,2003	273.00	$22,500.65
11F	January 17,2003	410.50	$40,312.16
11H	January 24,2003	400.50	$35,011.10
11J	January 31,2003	437.00	$40,983.22
12B	February 7,2003	509.50	$47,250.62
12D	February 14,2003	491.00	$44,368.78
12F	February 21,2003	448.00	$36,970.90
	Total Hours/Costs to Date:	**3,702.50**	**$343,596.61**

Please remit payments as follows:

Parsons Transportation Group
C/O Bank of America
96922 Collections Center Drive
Lock Box 96922
Chicago, IL 60693

Should you have any questions regarding this week's invoice or you would like to discuss any of these items further, please do not hesitate to give me a call.

Sincerely,

W. Scott McNary, P.E.
Project Manager

WSM/kmg

Copy: Andrea Fortunas

PARSONS

3500 Financial Plaza, Suite 300 • Tallahassee, Florida 32312-5998 • (850) 422-000 • Fax: (850) 422-3373 • www.parsons.com

SFOBB East Span Replacement - Skyway Project
Caltrans Contract No. 04-012024
Federal Aid Project No. ACIM-080-1(085) 8N

Parsons Job Number 645128

February 26,2003

For the week ending February 21,2003

INVOICE # 12F

SERVICES PERFORMED:

Weekly services to provide Conflict Resolution On-site Support for KFM.
For the week ending February 21, 2003

EMPLOYEE	CLASSIFICATION	HOURS	RATE	TOTAL
Week Ending February 21,2003				
MC-CRS CONFLICT RESOLUTION SUPPORT (See Attached Time Sheets)				
WSM	Principal	12.00	$159.00	$1,908.00
PMH	Sr. Bridge Engineer	1.00	$127.20	$127.20
JDJ	Bridge Engineer	50.00	$100.70	$5,035.00
SS	Bridge Designer	58.00	$79.50	$4,611.00
CWN	Sr. Technician	24.00	$90.10	$2,162.40
DEP	Sr. Technician	50.00	$90.10	$4,505.00
JH	Sr. Technician	1.00	$90.10	$90.10
TE	Technician	55.00	$74.20	$4,081.00
JS	Technician	32.00	$74.20	$2,374.40
RS	Technician	58.50	$74.20	$4,340.70
SP	Detailer	59.00	$58.30	$3,439.70
LAM	Detailer	16.00	$58.30	$932.80
KG	Admin	16.00	$42.40	$678.40
WK	Admin	5.00	$42.40	$212.00
AF	Admin	9.50	$42.40	$402.80
CN	Admin	1.00	$42.40	$42.40
	Subtotal Hours/Cost	***448.00***		***$34,942.90***

Travel Expenses: (Expenses Reports are attached)

JDJ	$591.50
SS	$245.00
DEP	$426.50
TE	$245.00
RS	$245.00
SP	$275.00
Subtotal (direct expenses)	***$2,028.00***

TOTAL FOR WEEK ENDING FEBRURARY 21, 2003: $36,970.90

Parsons Transportation Group Inc.

Employee: MAY, LORIA *(97375)* **Typesheet:** Original **Approval Group:** BTMehle
Week ending: Feb 21 2003 **PRISM Batch Number:** 751

Job	WBS	CC	CT	Task	Func	2/15			Regular Hours				2/21	Tot	Status/Approver
Project/ Description						SAT			Overtime Hours				FRI		Error Description
645128	89514 (59710)	89	01	000	00				5.00	8.00	3.00			16.00	Approved by MEHLE, JEFFREY
SFOBB - Pre-Cast Panel Production															Less than 40 hours charged for the week (W)

Totals

Regular Hours Total:										= 16.0 hrs
Overtime Hours Total:										

Printed: 3/12/2003

Detailer

** These hours are in addition to hours already faxed.

Parsons Transportation Group Inc.

Employee: MCNARY, WILLIAM S *(97412)* **Typesheet:** Original **Approval Group:** BTFINLEY
Week ending: Feb 21 2003 **PRISM Batch Number:** 751

Job	WBS	CC	CT	Task	Func	2/15 SAT			Regular Hours / Overtime Hours			2/21 FRI		Tot	Status/Approver / Error Description
Project/Description															
645128	89515 (59710)	89	01	000	00						2.00	2.00		4.00	**Approved** by FINLEY JR., ROBERT C
Skyway RFI 245 (Precast Panel Rebar)															

Totals

Regular Hours Total:										= 4.0 hrs
Overtime Hours Total:										

Printed: 3/12/2003

Principal

** These hours are in addition to hours already faxed.

PARSONS

3500 Financial Plaza • Suite 300 • Tallahassee, Florida 32312-5998 • (850) 422-0000 • Fax: (850) 422-3373 • www.parsons.com

February 18,2003

VIA: Electronic Mail and Federal Express

Mr. Ralph Salamie, P.E.
Kiewit, FCI, Manson A Joint Venture
220 Burma Road
Oakland, CA 94607

RE: Supplemental Invoice No. 12D – Conflict Resolution On-site Support
SFOBB East Span Replacement – Skyway Project
CALTRANS Contract No. 04-012024
Federal Aid Project No. ACIM-080-1(085) 8N
Parsons Job No. 645128

Dear Ralph:

Attached please find our Supplemental Invoice No. 12D for the above referenced project. This invoice is for our services providing Conflict Resolution On-site Support for the week ending February 14,2003.

Below is a listing of all of the Supplemental Invoices for the Conflict Resolution On-site Support sent to date.

10E	December 13,2002	271.50	$34,946.00
10F	December 20,2002	302.00	$25,677.61
11B	Januarv 3.2003	159.50	$15.575.57
11D	Januarv 10,2003	273.00	$22.500.65
11F	January 17,2003	410.50	$40,3 12.16
11H	January 24,2003	400.50	$35,011.10
11J	January 31,2003	437.00	$40,983.22
12B	February 7,2003	509.50	$47,250.62
12D	February 14,2003	491.00	$44,368.78
	Total Hours/Costs to Date:	**3,254.5**	**$306,625.71**

Please remit payments as follows:

Parsons Transportation Group
C/O Bank of America
96922 Collections Center Drive
Lock **Box** 96922
Chicago, IL 60693

Should you have any questions regarding this week's invoice or you would like to discuss any of these items further, please do not hesitate to give me a call.

Sincerely,

W. Scott McNary, P.E.
Project Manager

WSM/kmg

Copy: Andrea Fortunas

PARSONS

3500 Financial Plaza, Suite 300 • Tallahassee, Florida 32312-5998 • (850) 422-000 • Fax: (850) 422-3373 • www.parsons.com

SFOBB East Span Replacement - Skyway Project
Caltrans Contract No. 04-012024
Federal Aid Project No. ACIM-080-1(085) 8N

Parsons Job Number 645128

February 18, 2003

For the week ending February 14, 2003

INVOICE # 12D

SERVICES PERFORMED:

Weekly services to provide Conflict Resolution On-site Support for KFM.
For the week ending February 14, 2003

EMPLOYEE	CLASSIFICATION	HOURS	RATE	TOTAL
Week Ending February 14, 2003				
MC-CRS CONFLICT RESOLUTION SUPPORT (See Attached Time Sheets)				
WSN	Principal	24.00	$159.00	$3,816.00
PMH	Sr. Bridge Engineer	2.00	$127.20	$254.40
JDJ	Bridge Engineer	60.00	$100.70	$6,042.00
SS	Bridge Designer	57.00	$79.50	$4,531.50
CWN	Sr. Technician	29.50	$90.10	$2,657.95
DEP	Sr. Technician	40.00	$90.10	$3,604.00
JH	Sr. Technician	12.00	$90.10	$1,081.20
TE	Technician	60.00	$74.20	$4,452.00
JS	Technician	60.00	$74.20	$4,452.00
RS	Technician	52.50	$74.20	$3,895.50
SP	Detailer	60.00	$58.30	$3,498.00
LAM	Detailer	22.50	$58.30	$1,311.75
KG	Admin	5.00	$42.40	$212.00
WK	Admin	3.50	$42.40	$148.40
RN	Admin	3.00	$42.40	$127.20
	Subtotal Hours/Cost	***491.00***		***$40,083.90***

Travel Expenses: (Expenses Reports are attached)

WSM	$2,014.78
JDJ	$245.00
SS	$245.00
TE	$245.00
JS	$245.00
RS	$1,016.55
SP	$245.00
Shipping Charges	$28.55
Subtotal (direct expenses)	***$4,284.88***

TOTAL FOR WEEK ENDING FEBRURARY 14, 2003: $44,368.78

Parsons Transportation Group Inc.

Employee: MAY, LORI A *(97375)* **Typesheet:** Original **Approval Group:** BTMehle
Week ending: Feb 14 2003 **PRISM Batch Number:** 751

Job	WBS	CC	CT	Task	Func	2/8 SAT			Regular Hours / Overtime Hours				2/14 FRI	Tot	Status/Approver / Error Description
Project/Description															
645128	89514 (59710)	89	01	000	00					5.00	4.50	8.00	5.00	22.50	**Approved** by MEHLE, JEFFREY
SFOBB - Pre-Cast Panel Production															for the week (W)

Regular Hours Total:										= 22.5 hrs
Overtime Hours Total:										

Detailer

** These hours are in addition to hours already faxed.

PARSONS

3500 Financial Plaza • Suite 300 • Tallahassee, Florida 32312-5998 • (850) 422-0000 • Fax: (850) 422-3373 • www.parsons.com

February 14,2003 **VIA:** Electronic Mail and Federal Express

Mr. Ralph Salamie, P.E.
Kiewit, FCI, Manson A Joint Venture
220 Burma Road
Oakland, CA 94607

RE: Supplemental Invoice No. 12B – Conflict Resolution On-site Support
SFOBB East Span Replacement – Skyway Project
CALTRANS Contract No. 04-012024
Federal Aid Project No. ACIM-080-1(085) 8N
Parsons Job No. 645128

Dear Ralph:

Attached please find our Supplemental Invoice No. 12B for the above referenced project. This invoice is for our services providing Conflict Resolution On-site Support for the week ending February 7,2003.

Below is a listing of all of the Supplemental Invoices for the Conflict Resolution On-site Support sent to date.

Supplemental Invoice #	Work Ending Week of:	Hours	Invoice Amount
10E	December 13.2002	271.50	$34,946.00
10F	December 20.2002	302.00	$25,677.61
11B	January 3,2003	159.50	$15,575.57
11D	January 10,2003	273.00	$22,500.65
11F	January 17,2003	410.50	$40,312.16
11H	January 24,2003	400.50	$35,011.10
11J	January 31,2003	437.00	$40,983.22
12B	February 7,2003	509.50	$47,250.62
	Total Hours/Costs to Date:	**2,763.5**	**$262,256.93**

Please remit payments as follows:

Parsons Transportation Group
C/O Bank of America
96922 Collections Center Drive
Lock Box 96922
Chicago, IL 60693

Should you have any questions regarding this week's invoice or you would like to discuss any of these items further, please do not hesitate to give me a call.

Sincerely,

W. Scott McNary, P.E.
Project Manager

WSM/kmg

Copy: Andrea Fortunas

PARSONS

3500 Financial Plaza, Suite 300 • Tallahassee, Florida 32312-5998 • (850) 422-000 • Fax: (850) 422-3373 • www.parsons.com

SFOBB East Span Replacement - Skyway Project
Caltrans Contract No, 04-012024
Federal Aid Project No. ACIM-080-1(085) 8N

Parsons Job Number 645128

February 14,2003

For the week ending February 7,2003

INVOICE # 12B

SERVICES PEFZFORMED:

Weekly services to provide Conflict Resolution On-site Support for KFM.
For the week ending February 7,2003

EMPLOYEE	CLASSIFICATION	HOURS	RATE	TOTAL
Week Ending February 7,2003				
MC-CRS CONFLICT RESOLUTION SUPPORT (See Attached Time Sheets)				
WSM	Principal	24.00	$159.00	$3,8 16.00
PMH	Sr. Bridge Engineer	4.00	$127.20	$508.80
JDJ	Bridge Engineer	62.00	$100.70	$6,243.40
SS	Bridge Designer	51.00	$79.50	$4,054.50
CWN	Sr. Technician	61.50	$90.10	$5,541.15
DEP	Sr. Technician	40.00	$90.10	$3,604.00
JH	Sr. Technician	21.00	$90.10	$1,892.10
TE	Technician	64.00	$74.20	$4,748.80
JS	Technician	64.50	$74.20	$4,785.90
RS	Technician	28.00	$74.20	$2,077.60
SP	Detailer	63.00	$58.30	$3,672.90
KG	Admin	13.00	$42.40	$55 1.20
WK	Admin	2.50	$42.40	$106.00
AF	Admin	3.00	$42.40	$127.20
RN	Admin	8.00	$42.40	$339.20
		509.50		***$42,068.75***

Travel Expenses: (Expenses Reports are attached)

JDJ	$1,33 1.92
SS	$68 1.50
CWN	$783.21
KDK	$470.63
TE	$287.60
JS	$175.00
SP	$245.00
CDW Computer Center, Inc.	$467.25
CDW Computer Center, Inc.	$554.61
Shipping Charges	$185.15
Subtotal (direct expenses)	***$5,181.87***

TOTAL FOR WEEK ENDING FEBRURARY 7, 2003: $47,250.62

Parsons Transportation Group Inc.

Employee: PIEKSMA, DOUGLAS E *(99807)* **Typesheet:** Original **Approval Group:** BTmehle
Week ending: Feb 7 2003 **PRISM Batch Number:** 750

Job	WBS	CC	CT	Task	Func	2/1			Regular Hours			217	T	Status/Approver
Project/Description						SAT			Overtime Hours			FRI		Error Description
645128	89514 (59710)	89	01	000	00				4.00	8.00		8.00	20.00	**Approved** by MEHLE, JEFFREY
Skyway-Pre-cast Panels Production														

Regular Hours Total:										= 20.0 hrs
Overtime Hours Total:										

Sr. Technician

** These hours are in addition. to hours already faxed.

Parsons Transportation Group Inc.

Employee: MCNARY, WILLIAM S *(97412)* **Typesheet:** Original **Approval Group:** BTFINLEY
Week ending: Feb 7 2003 **PRISM Batch Number:** 751

Job	WBS	CC	CT	Task	Func	2/1 SAT			Regular Hours / Overtime Hours				2/7 FRI	Tot	Status/Approver / Error Description
Project/Description															
645128	89515 (59710)	89	01	000	00					2.00	2.00			4.00	**Approved** by BRYAN, CHERYL R
Skyway RFI 245 (Precast Panel Rebar)															

Totals

Regular Hours Total:										= 4.0 hrs
Overtime Hours Total:										

Printed: 3/12/2003

Principal

** These hours are in addition to hours already faxed.

STATE OF CALIFORNIA - DEPARTMENT OF TRANSPORTATION

CONTRACT CHANGE ORDER MEMORANDUM

DATE: 3/12/03

TO: PETER SIEGENTHALER / COE D.	FILE: E.A. 04 - 012324
FROM: COED.	CO-RTE-PM 04-SF,Ala-80-13.9/14.3,0.0/1.6
	FED. NO. ACIM-080-1(085)8N
CCO# 32 SUPPLEMENT#: 0 Category Cod EXAX	CONTINGENCY BALANCE (Incl. this change $52,927,820.27
COST: $500,000.00 INCREASE ☐ DECREASE ☐	HEADQUARTERS APPROVAL REQUIRED? ☑ YES ☐ NO
SUPPLEMENTAL FUNDS PROVIDED: $0.00	IS THIS REQUEST IN ACCORDANCE WITH ENVIRONMENTAL DOCUMENTS? ☑ YES ☐ NO
CCO DESCRIPTION: Design Conflict Resolution	**PROJECT DESCRIPTION:** REPLACE SFOBB EAST SPAN

The Contractor filed Notice of Potential Claim #3 on September 19, 2002, for additional costs and time required to revise the integrated composite segment working drawings. There are many issues regarding congestion due to reinforcing steel, prestress tendons and other embedded items in the Contract Plans that cannot be mitigated by using the tolerances given in the Special Provisions. After many discussions with the Contractor, the Engineer determined that locating the Designer, Contractor, Contractor's Construction Engineer and the Department's engineers all onsite, in the same building (in lieu of each party working in different locations in the United States), would expedite the resolution of these issues and be of value to the project. The construction of the new office trailers (Mission Control) began December 8, 2002, and was completed the following week. Staffs from all parties have now co-located there and have begun resolving congestion issues. The Contractor and the Department shall on a weekly basis, while monitoring the work in Mission Control, agree on the Contractor's costs due to this conflict mitigation. This change order covers the Contractor's additional engineering costs.

EXTRA WORK AT FORCE ACCOUNT

The costs will be reimbursed as Extra Work at Force Account as specified in Section 5-1.21, "Force Account Payment" of the Special Provisions.

Estimated cost at Force Account is $500,000.00.

Since it is not feasible at this time to determine the effect this change will have on the Contractor's operations, it is proposed to defer the determination of any contract time adjustment until completion of the work specified in this change order.

Maintenance concurrence is not required for this extra work.

FHWA concurrence has been received from Ms. Nancy Bobb on March 12,2003.

Mr. Andy Fremier, Deputy Director of Construction; Mr. Pete Siegenthaler, Principal Transportation Engineer; and Mr. Doug Coe, Area Construction Manager; have recommended this change order.

CONCURRED BY:			
Construction Engineer:	Doug Coe	Date	3/11/03
Bridge Engineer:		Date	
FHWA Representative:	Nancy Bobb	Date	3/12/03
Project Engineer:	Peter Siegenthaler	Date	3/11/03
Other (specify): Andrew Fremier		Date	3/11/03
		Date	
District Prior Approval By:		Date	
HQ (Issue Approve) By:	Ronald Bacani	Date	3/12/03
Resident Engineer's Signature:		Date	3-12-03

ESTIMATE OF COST

	THIS REQUEST	TOTAL TO DATE
ITEMS	$0.00	$0.00
FORCE ACCOUNT	$500,000.00	$500,000.00
AGREED PRICE	$0.00	$0.00
ADJUSTMENT		

FEDERAL PARTICIPATION

☐ PARTICIPATING ☐ PARTICIPATING IN PART ☐ NONE
☐ NON-PARTICIPATING (MAINTENANCE) ☐ NON-PARTICIPATING

☑ CCO FUNDED PER CONTRACT ☐ CCO FUNDED AS FOLLOWS

FEDERAL FUNDING SOURCE	PERCENT

TELECOPY

FAXED: 3/12/03

California Department of Transportation
CONSTRUCTION DIVISION

FAX: (510) 622-5165

TO: District4 CCO Desk

Date: 3/12/2003

Contract No.: 4 - 012024

Woad: SF,ALA-80-13.9/14.3,0.0/1.6

FED. No.: NONE

To: SARTIPI - 04

Attention: 04 -MADRA / GREG / DOUG COE

HQ Direction: TO ISSUE AND APPROVE

CCO No. 032 Sup. No. Rev. No. Old CCO Code: 2 - A - 9

Per Your Submittal Dated 3/10/2003 New CCO Code: E - X - A - X

ADDITIONAL ENGINEERING COST FOR THE STATE AND THE CONTRACTOR TO EXPEDITIOUSL AND EFFICIENTLY RESOLVE CONTRACT PLAN CONFLICTS TO PRODUCE COMPOSITE SEGME WORKING DRAWINGS WITHOUT DELAYING THE PROJECT.

Items:	$0.00
Force Account:	$500,000.00
Agreed Price:	$0.00
Adj. of Comp.	$0.00
Total:	**$500,000.00**
Time:	**(DEFERRED)**

ROBERT PIEPLOW, by:
Division Chief

Ronald P. Bacani

Division of Construction
1120 "N" Street, MS-44, Sacramento, CA 95814
Fax Number: (916) 654-5735
To Confirm Transmission, Call (916) 6544452

STATE OF CALIFORNIA - DEPARTMENT OF TRANSPORTATION

CONTRACT CHANGE ORDER

Change Requested by: Engineer

CCO: 32	Suppl. No. 1	Contract No. 04 - 012024	Road 04-SF,Ala-80-13.9/14.3,0.0/1.6	FED. AID LOC.: ACIM-080-1(085)8N

To: KIEWIT / FCI / MANSON a JV

You are directed to make the following changes from the plans and specifications or do the following described work not included in the plans and specifications for this contract. ***NOTE: This change order is not effective until approved by the Engineer.***

Description of work to be done, estimate of quantities and prices to be paid. (Segregate between additional work at contract price, agreed price and force account.) Unless otherwise stated, rates for rental of equipment cover only such time as equipment is actually used and no allowance will be made for idle time. This last percentage shown is the net accumulated increase or decrease from the original

Extra Work at Force Account:

Perform additional construction engineering to resolve congestion and conflict issues while preparing composite segment working drawings for the precast concrete Skyway structures, Bridge No.34-0006L/R. This work is being coordinated by the Contractor's and Department's representatives in the Pier 7 "Mission Control" office.

The Contractor and the Department shall determine on a weekly basis the additional construction engineering required to resolve and implement the solutions to these issues. The Contractor's and Department's representatives shall agree on issues covered under this change order and the corresponding labor hours.

The costs will be reimbursed as Extra Work at Force Account as specified in Section 5-1.21, "Force Account Payment" of the Special Provisions.

TIME DEFERRED

Consideration of time adjustment and related impacts, as provided in Section 4-1.03A of the Standard Specifications, shall be deferred until completion of the work specified in this change order.

Estimated cost of Extra Work at Force Account $2,080,000.00

Estimated Cost: Increase ☑ Decrease ☐ **$2,080,000.00**

By reason of this order the time of completion will be adjusted as follows: Deferred

Submitted by

Signature	Resident Engineer: COE D.	Date 4-28-03

Approval Recommended by

Signature	Construction Engineer: COE D.	Date 4-28-03

Engineer Approval by

Signature	(Print name and title) PETER SIEGENTHALER - Chief	Date

We the undersigned contractor, have given careful consideration to the change proposed and agree, if this proposal is approved, that we will provide all equipment, furnish the materials, except as may otherwise be noted above, and perform all services necessary for the work above specified, and will accept as full payment therefor the prices shown above.

NOTE: If you, the contractor, do not sign acceptance of this order, your attention is directed to the requirements of the specifications as to proceeding with the ordered work and filing a written protest within the time therein specified.

Contractor Acceptance by

Signature	(Print name and title) A.T. Okoso, Project Director	Date 5/1/03

STATE OF CALIFORNIA - DEPARTMENT OF TRANSPORTATION

CONTRACT CHANGE ORDER MEMORANDUM

DATE: 4/21/03

TO: PETER SIEGENTHALER / COE D.	FILE: E.A. 04 - 012024
FROM: COE D.	CO-RTE-PM 04-SF,Ala-80-13.9/14.3,0.0/1.6
	FED. NO. ACIM-080-1(085)8N
CCO#: 32 SUPPLEMENT#: 1 Category Code CHSA	CONTINGENCY BALANCE (incl. this change) $52,927,820.27
COST: $2,080,000.00 INCREASE ☑ DECREASE ☐	HEADQUARTERS APPROVAL REQUIRED? ☑ YES ☐ NO
SUPPLEMENTAL FUNDS PROVIDED: $0.00	IS THIS REQUEST IN ACCORDANCE WITH ENVIRONMENTAL DOCUMENTS? ☑ YES ☐ NO
CCO DESCRIPTION: Design Conflict Resolution - add 6 mos.	**PROJECT DESCRIPTION:** REPLACE SFOBB EAST SPAN

LOCATION: IN SAN FRANCISCO AND ALAMEDA COUNTIES IN SAN FRANCISCO AND OAKLAND FROM 1.3 KM EAST OF THE YERBA BUENA ISL

THIS CHANGE ORDER PROVIDES FOR:

additional engineering costs necessary for the Contractor and Department to expeditiously and efficiently resolve congestion and conflict issues in the Contract Plans, so that the Contractor's construction engineer (Parsons Transportation Group, PTG) can produce "Composite" segment working drawings required by the Special Provisions without delaying the project. This work is being performed in trailers, located on-site at Pier 7, known as the "Mission Control" office.

The Contractor filed Notice of Potential Claim #3 on September 19, 2002, for additional costs and time required to revise the integrated composite segment working drawings. There are many issues regarding congestion due to reinforcing steel, prestress tendons and other embedded items in the Contract Plans that cannot be mitigated by using the tolerances given in the Special Provisions. After many discussions with the Contractor, the Engineer determined that locating the Designer, Contractor, Contractor's Construction Engineer, and the Department's engineers onsite, all in the same building (in lieu of each party working in different locations in the United States), would expedite the resolution of these issues and be of value to the project. The construction of the new office trailers (Mission Control) began December 8, 2002, and was completed the following week. Staffs from all parties have now co-located thére and have begun resolving congestion issues. The Contractor and the Department shall on a weekly basis, while monitoring the work in Mission Control, agree on the Contractor's costs due to this conflict mitigation. This change order covers the Contractor's additional engineering costs.

EXTRA WORK AT FORCE ACCOUNT

The costs will be reimbursed as Extra Work at Force Account as specified in Section 5-1.21, "Force Account Payment" of the Special Provisions.

SUPPLEMENT NO. 1

This change order covers the costs for the Contractor's Engineer, Parson's Transportation Group, and other subcontractors/suppliers. Change Order No. 26 covers the Contractor's costs to house the engineers and the office facilities used by the engineers.

The current Change Order No. 32 amount is $551,000.00. The accrued cost through March 2003 is $454,841.00. There will be additional charges as it has been determined the construction engineering staff will be required for an additional six months. There will also be increase in current staffing.

Estimated cost at Force Account for Supplement No. 1 is $2,080,000.00. This amount assumes a cost of $80,000.00 per week.

The work being performed in this office space will partially resolve NOPC #3, filed on September 19, 2002.

Since it is not feasible at this time to determine the effect this change will have on the Contractor's operations, it is proposed to defer the determination of any contract time adjustment until completion of the work specified in this change order.

Maintenance concurrence is not required for this extra work.

FHWA concurrence has been received from Ms. Nancy Bobb on April 16, 2003.

Mr. Andy Fremier, Deputy Director of Construction, Mr. Peter Siegenthaler, Principal Transportation Engineer, and Mr. Doug Coe, Area Construction Manager, have recommended this change order.

RECEIVED APR 16 2003

CONCURRED BY:		
Construction Engineer:	Douglas Coe	Date
Bridge Engineer:		Date
FHWA Representative:		Date
Project Engineer:	Pete Siegenthaler	Date
Other (specify): Andrew Fremier		Date
		Date
		Date
District Prior Approval By:		Date
HQ (Issue Approve) By:	Patrick Bockari	Date
Resident Engineer's Signature		Date 6-9-03

ESTIMATE OF COST		
	THIS REQUEST	TOTAL TO DATE
ITEMS	$0.00	$0.00
FORCE ACCOUNT	$2,080,000.00	$2,580,000.00
AGREED PRICE	$0.00	$0.00
ADJUSTMENT	$0.00	$0.00
TOTAL	$2,080,000.00	$2,580,000.00

FEDERAL PARTICIPATION

☑ PARTICIPATING ☐ PARTICIPATING IN PART ☐ NONE
☐ NON-PARTICIPATING (MAINTENANCE) ☐ NON-PARTICIPATING

FEDERAL SEGREGATION (if more than one Funding Source or P.I.P. type)
☑ CCO FUNDED PER CONTRACT ☐ CCO FUNDED AS FOLLOWS

FEDERAL FUNDING SOURCE	PERCENT

STATE OF CALIFORNIA - DEPARTMENT OF TRANSPORTATION

CONTRACT CHANGE ORDER

Change Requested by: Engineer

CCO: 32	Suppl. No. 2	Contract No. 04 - 012024	Road 04-SF,Ala-80-13.9/14.3,0.0/1.6	FED. AID LOC.: ACIM-080-1(085)8N

To: **KIEWIT / FCI / MANSON a JV**

You are directed to make the following changes from the plans and specifications or do the following described work not included in the plans and specifications for this contract. ***NOTE: This change order is not effective until approved by the Engineer.***

Description of work to be done, estimate of quantities and prices to be paid. (Segregate between additional work at contract price, agreed price and force account.) Unless otherwise stated, rates for rental of equipment cover only such time as equipment is actually used and no allowance will be made for idle time. This last percentage shown is the net accumulated increase or decrease from the original quantity in the Engineer's Estimate.

Extra Work at Force Account:

This contract change order partially resolves Notice of Potential Claim #3, dated September 20, 2002, by compensating the additional construction engineering work to resolve congestion and conflict issues while preparing composite segment working drawings for the precast concrete Skyway structures, Bridge Nos. 34-0006L/R.

Consideration of time adjustment and related impacts, as provided in Section 4-1.03A of the Standard Specifications, shall be deferred until completion of the work specified in this change order.

Provide additional funds $2,600,000.00

Estimated Cost: Increase ☑ Decrease ☐ **$2,600,000.00**

By reason of this order the time of completion will be adjusted as follows: 0-days DEFERRED

Submitted by		
Signature	**Resident Engineer:** COE D.	Date 10-3-03
Approval Recommended by		
Signature	**Construction Engineer:** COE D.	Date 10-3-03
Engineer Approval by		
Signature	**(Print name and title)** PETER SIEGENTHALER - Chief	Date 10/14/03

We the undersigned contractor, have given careful consideration to the change proposed and agree, if this proposal is approved, that we will provide all equipment, furnish the materials, except as may otherwise be noted above, and perform all services necessary for the work above specified, and will accept as full payment therefor the prices shown above.

NOTE: If you, the contractor, do not sign acceptance of this order, your attention is directed to the requirements of the specifications as to proceeding with the ordered work and filing a written protest within the time therein specified.

Contractor Acceptance by		
Signature	**(Print name and title)** A.T. Skoro, Project Director	Date 10/7/03

STATE OF CALIFORNIA - DEPARTMENT OF TRANSPORTATION

CONTRACT CHANGE ORDER MEMORANDUM

TO: PETER SIEGENTHALER / COE D.	FILE: E.A. 04 - 012024
	CO-RTE-PM 04-SF,Ala-80-13.9/14.3,0.0/1.6
FROM: COE D.	FED. NO. ACIM-080-1(085)8N
CCO#: 32 SUPPLEMENT#: 2 Category Code: EXBA	CONTINGENCY BALANCE (incl. this change) $36,486,717.43
COST: $2,600,000.00 INCREASE ☑ DECREASE ☐	HEADQUARTERS APPROVAL REQUIRED? ☑ YES ☐ NO
SUPPLEMENTAL FUNDS PROVIDED: $0.00	IS THIS REQUEST IN ACCORDANCE WITH ENVIRONMENTAL DOCUMENTS? ☑ YES ☐ NO
CCO DESCRIPTION: Design Conflict Resolution- Add 6 mos.	**PROJECT DESCRIPTION:** REPLACE SFOBB EAST SPAN

LOCATION: IN SAN FRANCISCO AND ALAMEDA COUNTIES IN SAN FRANCISCO AND OAKLAND FROM 1.3 KM EAST OF THE YERBA BUENA ISL

THIS CHANGE ORDER PROVIDES FOR:

compensating the Contractor's construction engineer (Parsons Transportation Group, PTG) for $2,600,00.00 in additional construction engineering costs to be incurred while expeditiously and efficiently resolving congestion and conflict issues in the Contract Plans, so that composite segment working drawings required by the Special Provisions can be produced without delaying the project.

The Contractor filed Notice of Potential Claim #3 on September 20, 2002, for additional costs and time to revise the integrated composite segment working drawings. Numerous congestion issues due to reinforcing steel, prestress tendons and other embedded items in the Contract Plans could not be mitigated, using the tolerances provided in the Special Provisions. After discussions with the Contractor, the Engineer determined that locating the Designer, Contractor, Contractor's Construction Engineer, and the Department's engineers onsite, in the same building (in lieu of each party working in different locations in the United States), would expedite the resolution of these issues and be of value to the project. The construction of the new office trailers (Mission Control) began December 8, 2002, and was completed
the following week. Staffs from all parties have now co-located there and have begun resolving congestion issues. The Contractor and the Department shall on a weekly basis, while monitoring the work in Mission Control, agree on the Contractor's costs due to this conflict mitigation.

This contract change order will partially resolve NOPC #3, by covering the Contractor's additional engineering costs of $2,600,000.00 (from $2,580,000.00 to $5,180,000.00) from September 2003 to March 2004 at an estimated cost of $100,000.00 per week for 26 weeks. The anticipated compensation to the Contractor's construction engineer is the cost difference between the actual work performed and the Construction Engineer's bid amount (current baseline cost) to the Contractor. The Contractor's construction engineering baseline cost is currently being re-evaluted by the Engineer. If it is determined that a credit is due to the Engineer, a supplement to this CCO will be executed. It is anticipated that this CCO will be rolled into an agreed lump sum within the next few months.

Payment for this work under Supplement 2 will be at Extra Work Force Account for an estimate cost of $2,600,000.00 which will be financed from the contingency fund.

Since it is not feasible at this time to determine the effect this change will have on the Contractor's operations, it is proposed to defer the determination of any contract time adjustment until completion of the work specified in this change order.

Maintenance concurrence is not required because this extra work is not related to any permanent Caltrans facility.

CONCURRED BY:		
Construction Engineer:	Douglas Coe	Date 10-3-03
Bridge Engineer:		Date
FHWA Representative:	Nancy Bobb	Date9/24/2003
Project Engineer:	Ade Akinsanya	Date9/19/2003
Other (specify):		Date
		Date
		Date
District Prior Approval By:		Date
HQ (Issue Approve) By:	Patrick Bockari	Date9/24/2003
Resident Engineer's Signature:		Date 10-3-03

ESTIMATE OF COST

	THIS REQUEST	TOTAL TO DATE
ITEMS	$0.00	$0.00
FORCE ACCOUNT	$2,600,000.00	$5,180,000.00
AGREED PRICE	$0.00	$0.00
ADJUSTMENT	$0.00	$0.00
TOTAL	$2,600,000.00	$5,180,000.00

FEDERAL PARTICIPATION

☑ PARTICIPATING ☐ PARTICIPATING IN PART ☐ NONE
☐ NON-PARTICIPATING (MAINTENANCE) ☐ NON-PARTICIPATING

FEDERAL SEGREGATION (if more than one Funding Source or P.I.P. type)
☑ CCO FUNDED PER CONTRACT ☐ CCO FUNDED AS FOLLOWS

FEDERAL FUNDING SOURCE	PERCENT

CONTRACT CHANGE ORDER

Change Requested by: Engineer

CCO: 32	Suppl. No. 3	Contract No. 04 - 012024	Road 04-SF,Ala-80-13.9/14.3,0.0/1.6	FED. AID LOC.: ACIM-080-1(085)8N

To: **KIEWIT / FCI / MANSON a JV**

You are directed to make the following changes from the plans and specifications or do the following described work not included in the plans and specifications for this contract. ***NOTE: This change order is not effective until approved by the Engineer.***

Description of work to be done, estimate of quantities and prices to be paid. (Segregate between additional work at contract price, agreed price and force account.) Unless otherwise stated, rates for rental of equipment cover only such time as equipment is actually used and no allowance will be made for idle time. This last percentage shown is the net accumulated increase or decrease from the original quantity in the Engineer's Estimate.

RESOLUTION OF DEFERRED TIME ADJUSTMENTS:

The deferred time portion of CCO 32, CCO 32-S1, and CCO 32-S2 are resolved with the acceptance and issuance of CCO 107.

If the Contractor requests future time extensions for CCO 32, CCO 32-S1, or CCO 32-S2 related work after October 20, 2003, a new time impact analysis will be submitted. The Department will review each Time Impact Analysis in accordance with Special Provision 10-1.10, Progress Schedule (Critical Path).

Estimated Cost: Increase ☐ **Decrease** ☐ **$0.00**

By reason of this order the time of completion will be adjusted as follows: 0 days

Submitted by

CCO: 32	Suppl. No. 4	Contract No, 04 - 012024	Road 04-SF,Ala-80-13.9/14.3,0.0/1.6	FED. AID LOC.: ACIM-080-1(085)8N

To: **KIEWIT / FCI / MANSON a JV**

You are directed to make the following changes from the plans and specifications or do the following described work not included in the plans and specifications for this contract. ***NOTE: This change order is not effective until approved by the Engineer.***

Description of work to be done, estimate of quantities and prices to be paid. (Segregate between additional work at contract price, agreed price and force account.) Unless otherwise stated, rates for rental of equipment cover only such time as equipment is actually used and no allowance will be made for idle time. This last percentage shown is the net accumulated increase or decrease from the original quantity in the Engineer's Estimate.

Extra Work at Force Account:

Compensate the Contractor's construction engineer for additional work to resolve congestion and conflict issues while preparing composite segment working drawings for the precast concrete Skyway structures, Bridge Nos. 34-0006L/R.

Consideration of time adjustment and related impacts for the period after October 20,2003, as provided in Section 4-1.03A of the Standard Specifications, shall be deferred until completion of the work specified in this change order. Any determination of a commensurate time extension will be made in accordance with Section 8-1.07, "Liquidated Damages", o the Standard Specifications.

Provide additional funds $2,600,000.00

Estimated Cost: Increase ☑ **Decrease** ☐ **$2,600,000.00**

By reason of this order the time of completion will be adjusted as follows: Deferred

Submitted by		
Signature	**Resident Engineer:** COE D.	Date 3-11-04
Approval Recommended by		
Signature	**Construction Engineer:** COE D.	Date 3-11-04
Engineer Approval by		
Signature	**(Print name and title)** PETER SIEGENTHALER - Chief	Date

We the undersigned contractor, have given careful consideration to the change proposed and agree, if this proposal is approved, that we will provide all equipment, furnish the materials, except as may otherwise be noted above, and perform all services necessary for the work above specified, and will accept as full payment therefor the prices shown above.

NOTE: If you, the contractor, do not sign acceptance of this order, your attention is directed to the requirements of the specifications as to proceeding with the ordered work and filing a written protest within the time therein specified.

Contractor Acceptance by		
Signature	**(Print name and title)** A.T. Skoro, Project Director	Date 3/12/04

TELECOPY

California Department of Transportation

CONSTRUCTION DIVISION

TO: District 4 CCO Desk

Date: 3/22/04

Contract No.: 4 - 012024

Road: SF,ALA-80-13.9/14.3,0.0/1.6

FED. No.: ACIM-080-1(085)8N

To: SARTIPI - 04

Attention: 04 - MOLERA

HQ Direction: TO ISSUE AND APPROVE

CCO No. 032 **Sup. No.** 4 **Rev. No.** 1 **Old CCO Code:** -

Per Your Submittal Dated 3/22/04 **New CCO Code:** E - X - B - A

PARTIAL RESOLUTION OF NOPC NO. 3: COMPENSATE THE CONTRACTOR FOR ADDITIONAL ENGINEERING COSTS AND TIME FROM APRIL 2004 THROUGH SEPTEMBER 2004, TO REVISE THE INTEGRATED COMPOSITE SEGMENT WORKING DRAWINGS AT MISSION CONTROL FOR THE PRECAST CONCRETE SKYWAY STRUCTURE, BR. NO. 34-0006L/R.

NOTES:

1. SUPPLEMENTAL CCO TO RESOLVE THE DEFERRAL OF TIME SHOULD BE PROCESSED IN A TIMELY FASHION AND IN ACCORDANCE WITH SECTION 8-1.07, "LIQUIDATED DAMAGES," OF THE STANDARD SPECIFICATIONS.

TOTAL ESTIMATED COST OF THIS CHANGE, INCLUDING THIS SUPPLEMENT NO. 4 = $7,780,000.00

Items:	$0.00
Force Account:	$2,600,000.00
Agreed Price:	$0.00
Adj. of Comp.	$0.00
Total:	**$2,600,000.00**
Time:	**(DEFERRED)**

ROBERT PIEPLOW, by:
Division Chief

Ken Darby

Ken Darby

Division of Construction
1120 "N" Street, MS-44, Sacramento, CA 95814
Fax Number: (916) 654-5735
To Confirm Transmission, Call (916) 654-5259

TELECOPY

California Department of Transportation

CONSTRUCTION DIVISION

TO: District 4 CCO Desk

Date: 3/ 8/04

Contract No.: 4 - 012024

Road: SF,ALA-80-13.9/14.3,0.0/1.6

FED. No.: ACIM-080-1(085)8N

To: SARTIPI - 04

Attention: 04 - MOLERA

HQ Direction: **TO PROCEED WITH THE WORK**

CCO No. 032 **Sup. No.** 4 **Rev. No.** 0 **Old CCO Code:** -

Per Your Submittal Dated 3/ 5/04 **New CCO Code:** C - H - S - A

PARTIAL RESOLUTION OF NOPC NO. 3: COMPENSATE THE CONTRACTOR FOR ADDITIONAL ENGINEERING COSTS AND TIME BETWEEN APRIL 2004 THROUGH SEPTEMBER 2004, TO REVISE THE INTEGRATED COMPOSITE SEGMENT WORKING DRAWINGS AT MISSION CONCTROL FOR THE PRECAST CONCRETE SKYWAY STRUCTURE, BR. NO. 34-0006L/R.

AUTHORIZATION TO PROCEED CONTINGENT ON THE FOLLOWING REVISIONS FOR I&A REQUEST:

1. INCLUDE NAMES AND DATES OF CONCURRING PARTIES, INCLUDING FHWA, UPON THE MEMORANDUM.

2. THE CCO CODING ON THE MEMORANDUM APPEARS INCORRECT. PREVIOUS CODE WAS EXBA ASSOCIATED WITH THE PARTIAL RESOLUTION OF NOPC #3. EXPLAIN THE CHANGE.

3. I&A REQUEST MUST CONTAIN SIGNATURES IN THE "SUBMITTED BY" AND "APPROVAL RECOMMENDED BY" BOXES OF THE CCO IN ACCORDANCE WITH SECTION 5-311A, "DIVISION OF CONSTRUCITON APPROVAL," OF THE CONSTRUCTION MANUAL.

4. MEMORANDUM SHOULD PROVIDE AN ESTIMATE OF THE DURATION FOR WHICH THESE COSTS WILL CONTINUE TO ACCRUE (I.E. WHEN WILL THE NEED FOR MISSION CONTROL CEASE AND HOW MUCH PROGRESS HAS THERE BEEN TO DATE TOWARDS THE COMPLETION/APPROVAL OF COMPOSITE SEGMENT WORKING DRAWINGS).

5. MEMORANDUM FOR SUPPLEMENTAL 4 SHOULD EXPLAIN THAT DEFERRAL OF A TIME ADJUSTMENT IS FOR THE PERIOD AFTER OCTOBER 20,2003 AND THAT TIME ADJUSTMENTS PRIOR TO THAT DATE ARE BEING ADDRESSED IN CCO 032 S3 AND CCOS 107 SO & S1. LIKEWISE THE CCO ITSELF SHOULD BE REVISED TO CLARIFY THAT TIME ADJUSTMENTS AND RELATED IMPACTS FOR WORK PERFORMED AFTER OCTOBER 20,2003 ARE DEFERRED.

TOTAL ESTIMATED COST OF THIS CHANGE, INCLUDING THIS SUPPLEMENT NO. 4 = $7,780,000.00

Items:	$0.00
Force Account:	$2,600,000.00
Agreed Price:	$0.00
Adj. of Comp.	$0.00

Date: 3/ 8/04

Contract No.: 4 - 012024

Road: SF,ALA-80-13.9/14.3,0.

FED. NO.: ACIM-080-1(085)8N

CCO No. 032 **Sup. No.** 4 **Rev. No.** 0 **CCO Category Code:** - -

Continued:

Total: **$2,600,000.00**

Time: **(DEFERRED)**

ROBERT PIEPLOW, by:
Division Chief

Ken Darby

Ken Darby

Division of Construction
1120 "N" Street, MS-44, Sacramento, CA 95814
Pax Number: (916) 654-5735
To Confirm Transmission, Call (916) 654-5259

U.S. DEPARTMENT OF TRANSPORTATION FEDERAL HIGHWAY ADMINISTRATION CALIFORNIA DIVISION OFFICE

RECORD OF PRIOR APPROVAL FOR MAJOR CONTRACT CHANGE ORDERS

PROJECT NO.	CCO NO.	CONTRACT NO.	DIST-CO-RTE-PM
ACIM -080-1(085)8N	32 S4	04-012024	04-SF,Ala-80-13.9/14.3,0.0/1.6

REQUESTED BY:	CALTRANS HQ	DATE
Trang Hoang	**X** RE/DISTRICT	**3/4/04**

PROPOSED CHANGE:

Compensation for the additional Contractor and Contractor's Engineer costs required to efficiently resolve congestion and conflict issues. This work is being performed in the Pier 7 "Mission Control" office, a site where the contractor's engineers and the project designers can be co-located.

This supplement adds additional funds for the work. This change order covers the Contractor's additional engineering costs of $2,600,000.00 (from 5,180,000.00 to 7,780,000) from April, 2004 to September 2004 at an estimated cost of $100,000.00 per week for 26 weeks. This work will partially resolve NOPC #3.

REASON FOR CHANGE:

The Contractor filed Notice of Potential Claim #3 on September 19, 2002 for additional work and time required to revise integrated segment working drawings. There were many issues regarding congestion due to reinforcing steel, prestress tendons and other embedded items; after many discussions the Contractor and the Engineer determined that locating the Designer, Contractor, Contractor's Engineer and the CALTRANS engineers all in one onsite building (the involved parties were working in different locations) would expedite the resolution of these issues.

FHWA has determined that this change order is the most cost-effective and expeditious way of resolving the issue, as it is not clear whether the project plans provided insufficient information or if the contractor misinterpretedthe plans. Without this change order, costly claims and project delays would result. In addition, the contractor would have included most of the added costs in his bid if he had anticipated the extra work.

The costs associated with this change order will be reviewed on a monthly basis and, if necessary, supplemental change orders will be issued. The Contractor's construction engineering baseline cost is currently being re-evaluated by the Engineer. If it is determined that a credit is due to the Engineer, a supplement to this CCO will be executed.

AS DISCUSSED IN FIELD (REPORT NO. 3)

TIME EXTENSIONS	ACTIVITY ON CRITICAL PATH AFFECTED BY CCO (IF TIME EXTENSION INVOLVED)
* NONE ___ DAYS ___ DEFERRED	

ESTIMATE OF COST:	CCO:	METHOD OF PAYMENT
$ 2,600,000 INCREASE $ _____ DECREASE	CONTRACT ITEM AGREED PRICE	ADJUSTMENT OF COMPENSATION X EXTRA WORK AT FORCE ACCOUNT

THE WORK COVERED BY THE PROPOSED REVISION AS DESCRIBED ABOVE IS APPROVED SUBJECT TO SUBMISSION OF SUPPORTING DOCUMENTATION INCLUDING COST EVALUATION AND JUSTIFICATION OF TIME EXTENSIONS.

OTHER CONDITIONS:

PRIOR APPROVAL TO PROCEED GRANTED BY:	DATE OF AUTHORIZATION:
Nancy E. Bobb	3/8/04

Form **FHWA** 7-358(c) Rev **3/93 (Copy to CT)**

Janet Adams
03/08/2004 11:01 AM

To: Trang T Hoang/D03/Caltrans/CAGov@DOT
cc: Ade Akinsanya/HQ/Caltrans/CAGov
Subject: Re: CCO 32-S4: Concurrence

concur. What is the total estimated cost to the end of the project?

Trang T Hoang

Trang T Hoang
03/08/2004 10:48 AM

To: Janet Adams/D04/Caltrans/CAGov@DOT
cc:
Subject: Re: CCO 32-S4: Concurrence

Would I be able to get your concurrence by **COB** tomorrow? Thanks.
----- Forwarded by Trang T Hoang/D03/Caltrans/CAGov on 03/08/2004 10:44 AM -----

Ade Akinsanya
03/05/2004 02:47 PM

To: Trang T Hoang/D03/Caltrans/CAGov@DOT
cc: Janet Adams/D04/Caltrans/CAGov@DOT
Subject: Re: CCO 32-S4: Concurrence

I do agree with the CCO.
Trang T Hoang

Trang T Hoang
03/04/2004 04:21 PM

To: Janet Adams/D04/Caltrans/CAGov@DOT, Ade Akinsanya/HQ/Caltrans/CAGov@DOT
cc:
Subject: CCO 32-S4: Concurrence

For your concurrence.

CCO32-S4_Memo.pd CCO32-S4_Report.pd

Trang T Hoang
03/10/2004 09:13 AM

To: Peter Siegenthaler/D04/Caltrans/CAGov@DOT
cc: Dave Wu/D04/Caltrans/CAGov@DOT, Kannu Balan/D03/Caltrans/CAGov@DOT
Subject: Re: CCO 32-S4: Total estimate

Hi Pete-

Here's the history on CCO 32:

This CCO pays for additional construction engineering costs to resolve congestion and conflict issues in the Contract Plans to produce composite segment working drawings as required by the Spec Provisions.

SO:	$ 500,000	Way under
S1:	$2,080,000	
S2:	$2,600,000	6 months (26 weeks thru March) at $100k/week
S3:	$0; Resolved deferred time up to Oct 20, 2003 with CCO 107	
S4:	$2,600,000	6 months (26 weeks thru Sept) at $100k/week

TOTAL to Date: $7.78M

We decided to maintain the 6 month interval for pay out, so we can evaluate our spending. Also, we may be a bit short for the month of March cause we messed up a bit by paying for stuff that should have been paid under CCO 26. (The last supplement to CCO 26 explained this)....errr someone will clean this up. Talking to Dave Wu, it is anticipated (hope, more like it) that work should be completed by the end of this year, maybe sooner...like Sept. We have been spending about $100k per week. Janet asked how much we anticipate paying out total for this CCO, so I roughly projected about $9.08M to Dec 2004 based on past EWBs.

Hopefully, you should have signed CCO 32-S3. Trying to get this supplement to the D04 by the end of this week to give them some time for the next pay period (this week). I see you signed the C-93, so I take it that I can proceed with the CCO and memo. Kinda rushed on the C-93 so I could start the CCO and memo and had hoped to explain it a bit more in the CCO memo.

BTW- I've transferred to OSC and now work for Dave Wu. So this is my last CCO.

----- Forwarded by Trang T Hoang/D03/Caltrans/CAGov on 03/10/2004 08:39 AM -----

Trang T Hoang
03/08/2004 11:22 AM

To: Janet Adams/D04/Caltrans/CAGov@DOT
cc: Ade Akinsanya/HQ/Caltrans/CAGov@DOT, Dave Wu/D04/Caltrans/CAGov@DOT, Kannu Balan/D03/Caltrans/CAGov@DOT
Subject: Re: CCO 32-S4: Total estimate

Estimated cost of $9.08M total for CCO 32 thru Dec 2004 at $100k/week.
Hoping work will be completed earlier and not extend thru next year.

This CCO does not include Pier Table work which is being paid under CCQ 99.

Janet Adams

Janet Adams

To: Trang T Hoang/D03/Caltrans/CAGov@DOT

03/08/2004 11:01 AM

cc: Ade Akinsanya/HQ/Caltrans/CAGov
Subject: Re: CCO 32-S4: Concurrence

concur. What is the total estimated cost to the end of the project?

Trang T Hoang

Trang T Hoang
03/08/2004 10:48 AM

To: Janet Adams/D04/Caltrans/CAGov@DOT
cc:
Subject: Re: CCO 32-S4: Concurrence

Would I be able to get your concurrence by COB tomorrow? Thanks.
----- Forwarded by Trang T Hoang/D03/Caltrans/CAGov on 03/08/2004 10:44 AM -----

Ade Akinsanya
03/05/2004 02:47 PM

To: Trang T Hoang/D03/Caltrans/CAGov@DOT
cc: Janet Adams/D04/Caltrans/CAGov@DOT
Subject: Re: CCO 32-S4: Concurrence

I do agree with the CCO.
Trang T Hoang

Trang T Hoang
03/04/2004 04:21 PM

To: Janet Adams/D04/Caltrans/CAGov@DOT, Ade Akinsanya/HQ/Caltrans/CAGov@DOT
cc:
Subject: CCO 32-S4: Concurrence

For your concurrence.

CCO32-S4_Memo.pd CCO32-S4_Report.pd

Department of Transportation
EAST SPAN SEISMIC SAFETY PROJECT
CONCURRENCE FOR CHANGE ORDERS
Contract No. 04-012024
Co. & Rte Ala-80-13.9/14.3, 0.0/1.6

CCO#: 32 **S#:** 4
Title: Design Conflict Resolution- add **six** months
Date: 02/27/04

To: DOUGLAS COE, Resident Engineer

Requested By: David Wu, Senior Engineer (initials DWW)

Description of Work:
Provide additional funds to perform additional construction engineering.

Reason for Change:
Additional construction engineering is necessary for the Contractor and Department to expeditiously and efficiently resolve congestion and conflict issues in the Contract Plans, so that the Contractor's construction engineer (Parsons Transportation Group, PTG) can produce composite segment working drawings required by the Special Provisions, without delaying the project. This CCO will cover expenses from April 2004 through September 2004 at an estimated cost of $100,000/ week for 26 weeks.

Discussed with persons noted below:

FHWA: Nancy Bobb -	Date: TBD	Br. Const: Ade Akinsanya	Date ~~TBD~~ 3/5/04
District:	Date	Br. Design:	Date:
Other: Janet Adams, Project Mgr	Date: ~~TBD~~ 3/8/04	Br. Geology:	Date
		Br. Maintenance:	Date

Estimated Cost: $2,600,000.00

Recommended Method of Payment:
- ☐ Contract Items
- X Extra Work at Force Account
- ☐ Agreed Price (LS or *UP)*
- ☐ Other:

Recommended Time Adjustment: Deferred

Prior Approvals:

1. This represents an acknowledgement that the individuals below are in concurrence with the change order.
2. This represents an acknowledgement that I am in concurrence with this change order which must be approved before any work is done.

Comments:

Douglas Coe, Resident Engineer	3-8-04 Date	1. X 2. ___
Pete Siegenthaler, Principal Construction Engineer	3-9-04 Date	1. ___ 2. ✓
for Robert Kobal, HQ Construction Coordinator	3/11/04 Date	1. X 2. ___

STATE OF CALIFORNIA - DEPARTMENT OF TRANSPORTATION

CONTRACT CHANGE ORDER MEMORANDUM

TO: PETER SIEGENTHALER / COE D.	FILE: **E.A.** 04 - 012024
FROM: COED.	**CO-RTE-PM** 04-SF,Ala-80-13.9/14.3,0.0/1.6
	FED. NO. ACIM-080-1(085)8N
CCO#: **32** | SUPPLEMENT#: **4** | Category Code: **EXBA**	CONTINGENCY BALANCE (incl. this change) **$23,189,810.67**
COST: **$2,600,000.00** INCREASE ☑ DECREASE ☐	HEADQUARTERS APPROVAL REQUIRED? ☑ YES ☐ NO
SUPPLEMENTAL FUNDS PROVIDED: **$0.00**	IS THIS REQUEST IN ACCORDANCE WITH ENVIRONMENTAL DOCUMENTS? ☑ YES ☐ NO
CCO DESCRIPTION: Design Conflict Resolution-Add 6 mos.	**PROJECT DESCRIPTION:** REPLACE SFOBB EAST SPAN

LOCATION: IN SAN FRANCISCO AND ALAMEDA COUNTIES IN SAN FRANCISCO AND OAKLAND FROM 1.3 KM EAST OF THE YERBA BUENA ISL

THIS CHANGE ORDER PROVIDES FOR:

compensating the Contractor's construction engineer, Parsons Transportation Group (PTG) for $2,600,000.00 (from $5,180,000.00 to $7,780,000.00) in additional construction engineering costs to be incurred while expeditiously and efficiently resolving congestion and conflict issues in the Contract Plans, so that composite segment working drawings required by the Special Provisions can be produced without delaying the project.

Numerous congestion issues due to reinforcing steel, prestress tendons and other embedded items in the Contract Plans could not be mitigated, using the tolerances provided in the Special Provisions. After discussions with the Contractor, the Engineer determined that locating the Designer, Contractor, Contractor's Construction Engineer, and the Department's engineers onsite, in the same building (in lieu of each party working in different locations in the United States), would expedite the resolution of these issues and be of value to the project. The construction of the new office trailers (Mission Control) began December 8, 2002, and was completed the following week. Staffs from all parties have now co-located there and have begun resolving congestion and conflict issues. The Contractor and the Department shall on a weekly basis, while monitoring the work in Mission Control, agree on the Contractor's costs due to this conflict mitigation.

This contract change order will compensate the Contractor's additional engineering costs of $2,600,000.00 from April 2004 through September 2004 at an estimated cost of $100,000.00 per week for 26 weeks. Work under this contract change order is currently 50% complete. It is anticipated that work will continue until December 2004 at an estimated total cost of $9,080,000.00. The anticipated compensation to the Contractor's construction engineer is the cost difference between the actual work performed and the Construction Engineer's bid amount (current baseline cost) to the Contractor. The Contractor's construction engineering baseline cost is currently being re-evaluated by the Engineer. If it is determined that a credit is due to the Engineer, a supplement to this CCO will be executed. Payment for this Extra Work will be at Force Account for $2,600,000.00 which will be financed from the contingency fund.

Adjustment of contract time for the period after October 20, 2003 is deferred pending completion of the work specified in this change as it may affect the controlling operation. Time adjustments prior to that date were addressed in CCO 107 and 107-S1. Time adjustments will be made in accordance with Section 8-1.07, "Liquidated Damages," of the Standard Specifications.

Concurrence via email from Janet Adams, Project Manager and Ade Akinsanya, Structures Construction were received on March 8, 2004 and March 5, 2004 respectively and are filed in the project records. Prior approval from Nancy Bobb of FHWA was received on March 8, 2004 and is attached to this change order. Maintenance concurrence is not required because this extra work is not related to any permanent Caltrans facility.

The Resident Engineer recommends this change order be approved.

CONCURRED BY:		
Construction Engineer:	Douglas Coe	Date 3-11-04
Bridge Engineer:	Douglas Coe	Date 3-11-04
FHWA Representative:	Nancy **Bobb**	Date 3/8/2004
Project Engineer:	Ade Akinsanya	Date 3/5/2004
Other (specify): Janet Adams		Date 3/8/2804
		Date
		Date
District Prior Approval By:		Date
HQ (Issue Approve) By:		Date
Resident Engineer's Signature		Date 3-11-04

ESTIMATE OF COST

	THIS REQUEST	TOTAL TO DATE
ITEMS	$0.00	$0.00
FORCE ACCOUNT	$2,600,000.00	$7,780,000.00
AGREED PRICE	$0.00	$0.00
ADJUSTMENT	$0.00	$0.00
TOTAL	$2,600,000.00	$7,780,000.00

FEDERAL PARTICIPATION

☐ PARTICIPATING ☐ PARTICIPATING IN PART ☐ NONE
☐ NON-PARTICIPATING (MAINTENANCE) ☐ NON-PARTICIPATING

FEDERAL SEGREGATION (if more than one Funding Source or P.I.P. type)
☑ CCO FUNDED PER CONTRACT ☐ CCO FUNDED AS FOLLOWS

FEDERAL FUNDING SOURCE	PERCENT

TELECOPY

California Department of Transportation

CONSTRUCTION DIVISION

TO: District 4 CCO Desk

Date: 3/22/04

Contract No.: 4 - 012024

Road: SF,ALA-80-13.9/14.3,0.0/1.6

FED. No.: ACIM-080-1(085)8N

To: SARTIPI - 04

Attention: 04 - MOLERA

HQ Direction: TO ISSUE AND APPROVE

CCO No. 032 **Sup. No.** 4 **Rev. No.** 1 **Old CCO Code:** -

Per Your Submittal Dated 3/22/04 **New CCO Code:** E - X - B - A

PARTIAL RESOLUTION OF NOPC NO. 3: COMPENSATE THE CONTRACTOR FOR ADDITIONAL ENGINEERING COSTS AND TIME FROM APRIL 2004 THROUGH SEPTEMBER 2004, TO REVISE THE INTEGRATED COMPOSITE SEGMENT WORKING DRAWINGS AT MISSION CONTROL FOR THE PRECAST CONCRETE SKYWAY STRUCTURE, BR. NO. 34-0006L/R.

NOTES:

1. SUPPLEMENTAL CCO TO RESOLVE THE DEFERRAL OF TIME SHOULD BE PROCESSED IN A TIMELY FASHION AND IN ACCORDANCE WITH SECTION 8-1.07, "LIQUIDATED DAMAGES," OF THE STANDARD SPECIFICATIONS.

TOTAL ESTIMATED COST OF THIS CHANGE, INCLUDING THIS SUPPLEMENT NO. 4 = $7,780,000.00

Items:	$0.00
Force Account:	$2,600,000.00
Agreed Price:	$0.00
Adj. of Comp.	$0.00
Total:	**$2,600,000.00**
Time:	**(DEFERRED)**

ROBERT PIEPLOW, by:
Division Chief

Ken Darby

Ken Darby

Division of Construction
1120 "N" Street, MS-44, Sacramento, CA 95814
Fax Number: (916) 654-5735
To Confirm Transmission, Call (916) 654-5259

STATE OF CALIFORNIA - DEPARTMENT OF TF. .SPORTATION

CONTRACT CHANGE ORDER

Change Requested by: Engineer

CCO: 32	Suppl. No. 5	Contract No. 04 - 012024	Road 04-SF,Ala-80-13.9/14.3,0.0/1.6	FED. AID LOC.: ACIM-080-1(085)8N

To: KIEWIT / FCI / MANSON a JV

You are directed to make the following changes from the plans and specifications or do the following described work not included in the plans and specifications for this contract. ***NOTE: This change order is not effective until approved by the Engineer.***

Description of work to be done, estimate of quantities and prices to be paid. (Segregate between additional work at contract price, agreed price and force account.) Unless otherwise stated, rates for rental of equipment cover only such time as equipment is actually used and no allowance will be made for idle time. This last percentage shown is the net accumulated increase or decrease from the original quantity in the Engineer's Estimate.

Extra Work at Force Account:

Compensate the Contractor for the additional construction engineering services required to resolve congestion and conflict issues during the preparation of the composite segment working drawings for the SFOBB East Span Skyway structures, Bridge Nos. 34-0006L/R.

Consideration of time adjustment and related impacts for the period after October 20, 2003, as provided in Section 4-1.03, "Changes," of the Standard Specifications, shall be deferred until completion of the work specified in this change order. Any determination of a commensurate time extension will be made in accordance with Section 4, "Beginning of Work, Time of Completion and Liquidated Damages," of the Special Provisions.

Provide Additional Funds $3,900,000.00

Estimated Cost: Increase ☑ Decrease ☐ **$3,900,000.00**

By reason of this order the time of completion will be adjusted as follows: Deferred

Submitted by

Signature	Resident Engineer: COE D.	Date 11/15/04

Approval Recommended by

Signature	Construction Engineer: COE D.	Date 11/15/04

Engineer Approval by

Signature	(Print name and title) PETER SIEGENTHALER - Chief	Date 11/18/04

We the undersigned contractor, have given careful consideration to the change proposed and agree, if this proposal is approved, that we will provide all equipment, furnish the materials, except as may otherwise be noted above, and perform all services necessary for the work above specified, and will accept as full payment therefor the prices shown above.

NOTE: If you, the contractor, do not sign acceptance of this order, your attention is directed to the requirements of the specifications as to proceeding with the ordered work and filing a written protest within the time therein specified.

Contractor Acceptance by

Signature	(Print name and title) A.T. Skaro, Project Director	Date 11-18-04

STATE OF CALIFORNIA - DEPARTMENT OF TRANSPORTATION

CONTRACT CHANGE ORDER MEMORANDUM

TO: PETER SIEGENTHALER / COE D.	FILE: E.A. 04 - 012024 CO-RTE-PM 04-SF,Ala-80-13.9/14.3,0.0/1.6 FED. NO. ACIM-080-1(085)8N
FROM: COE D.	
CCO#: 32 SUPPLEMENT#: 5 Category Code: EXBA	CONTINGENCY BALANCE (incl. this change) **$65,112,365.30**
COST: **$3,900,000.00** INCREASE ☑ DECREASE ☐	HEADQUARTERS APPROVAL REQUIRED? ☑ YES ☐ NO
SUPPLEMENTAL FUNDS PROVIDED: **$0.00**	IS THIS REQUEST IN ACCORDANCE WITH ENVIRONMENTAL DOCUMENTS? ☑ YES ☐ NO
CCO DESCRIPTION: Design Conflict Resolution- Add 9 months	**PROJECT DESCRIPTION:** REPLACE SFOBB EAST SPAN

LOCATION: IN SAN FRANCISCO AND ALAMEDA COUNTIES IN SAN FRANCISCO AND OAKLAND FROM 1.3 KM EAST OF THE YERBA BUENA ISL

THIS CHANGE ORDER PROVIDES FOR:
additional funds for construction engineering services (performed by Parsons Transportation Group (PTG)) to resolve congestion and conflict issues in the Contract Plans.

This change is needed to compensate the contractor for the period from October 2004 through June 2005 for the additional engineering services necessary to resolve drawing conflicts in the Contract Plans, so that the composite segment working drawings required by the Special Provisions can be produced without delaying the project. The scope of the work required to resolve all of the congestion and conflict issues could not be pre-determined, as more conflicts were discovered after executing the initial and supplemental change orders. The amount of additional engineering services necessary to resolve the congestion and conflict issues only became apparent as conflicts were encountered during the progress of the work and during the development of the composite segment working drawings. All work under this change order is currently 75% complete. Five (5) of fourteen (14) hinge composite drawings have been approved, and it is anticipated that all hinge composite drawings will be completed by the end of January 2005. It is further anticipated that all remaining composite drawings will be completed by the end of June 2005. The Contractor has submitted an estimate of costs for the additional engineering services that will be needed to resolve the congestion and conflict issues for the remainder of this project. The Engineer has reviewed the Contractor's estimate of cost to complete the work and has determined the estimate to be consistent and accurate with the work performed to date, and that it is also consistent with the work necessary to resolve the remaining issues.

This contract change order will compensate the Contractor for costs to provide additional engineering services for the period from October 2004 through June 2005 at an estimated cost of $150,000.00 / week (October 2004 through January 2005), and an estimated cost of $75,000.00 / week (February 2005 through June 2005). The estimated weekly costs between October 2004 and June 2005 fluctuate due to the need to produce composite drawings to meet the Contractor's production schedule. The anticipated compensation to the Contractor is the cost difference between the actual work performed and PTG's bid amount (current baseline cost) to the Contractor. PTG's baseline cost is currently being re-evaluated by the Engineer. If it is determined that a credit is due to the State, a supplement to this contract change order will be executed.

The method of payment for the additional engineering services will be Extra Work at Force Account. This contract change will result in a net cost increase of $3,900,000.00, which can be financed from the contingency funds. A complete cost analysis is on file with the project records.

Adjustment of contract time for the period after October 20, 2003, is deferred pending completion of the work specified in this change order, as it may affect the controlling operation. Time adjustments prior to that date were addressed in Contract Change Order No. 107 and 107, Supplement No. 1. Time adjustments will be made in accordance with Section 4, "Beginning of Work, Time of Completion and Liquidated Damages," of the Special Provisions.

Concurrence via email from Janet Adams, Project Manager was received on November 15, 2004. A copy of Ms. Adams concurrence is filed in the project records. Prior approval from Nancy Bobb of FHWA was received via email on November 15, 2004. Maintenance concurrence is not required because this extra work will not involve maintenance funds and does not affect maintenance facilities or operations.

030620 NOV 29 ?

CONCURRED BY:		
Construction Engineer:	Douglas Coe	Date 11-17-04
Bridge Engineer:	Douglas Coe	Date 11-17-04
FHWA Representative:	Nancy Bobb	Date 11/15/2004
Project Engineer:		Date
Other (specify): Janet Adams		Date 11/15/2004
Pete Siegenthaler		Date 8/10/2004
		Date
District Prior Approval By:	David Salladay	Date 8/10/2004
HQ (Issue Approve) By:	Ken Darby	Date 1/16/2004
Resident Engineer's Signature:		Date 11-17-04

ESTIMATE OF COST

	THIS REQUEST	TOTAL TO DATE
ITEMS	$0.00	$0.00
FORCE ACCOUNT	$3,900,000.00	$11,680,000.00
AGREED PRICE	$0.00	$0.00
ADJUSTMENT	$0.00	$0.00
TOTAL	$3,900,000.00	$11,680,000.00

FEDERAL PARTICIPATION

☑ PARTICIPATING ☐ PARTICIPATING IN PART ☐ NONE
☐ NON-PARTICIPATING (MAINTENANCE) ☐ NON-PARTICIPATING

FEDERAL SEGREGATION (if more than one Funding Source or P.I.P. type)
☑ CCO FUNDED PER CONTRACT ☐ CCO FUNDED AS FOLLOWS

FEDERAL FUNDING SOURCE	PERCENT

STATE OF CALIFORNIA - DEPARTMENT OF TRANSPORTATION

CONTRACT CHANGE ORDER

Change Requested by: Engineer

CCO: 32	Suppl. No. 6	Contract No. 04 - 012024	Road 04-SF,Ala-80-13.9/14.3,0.0/1.6	FED. AID LOC.: ACIM-080-1(085)8N

To: **KIEWIT / FCI / MANSON a JV**

You are directed to make the following changes from the plans and specifications or do the following described work not included in the plans and specifications for this contract. ***NOTE: This change order is not effective until approved by the Engineer.***

Description of work to be done, estimate of quantities and prices to be paid. (Segregate between additional work at contract price, agreed price and force account.) Unless otherwise stated, rates for rental of equipment cover only such time as equipment is actually used and no allowance will be made for idle time. This last percentage shown is the net accumulated increase or decrease from the original quantity in the Engineer's Estimate.

Adjustment of Compensation at Lump Sum:

This change order shall close the deferred time element of Contract Change Order Nos. 32, Supplement Nos. 0 through 5, and resolve Notice of Potential Claim Number 3, "Integrated Shop Drawing Details," dated September 20, 2002, for the SFOBB East Span Skyway, Bridge No. 34-0006L/R.

Adjustment of Compensation at Agreed Lump Sum $0.00

Estimated Cost: Increase ☐ Decrease ☐ **$0.00**

By reason of this order the time of completion will be adjusted as follows: 0 days

Submitted by

Signature	Resident Engineer: DOUG COE, Supervising Br. Eng.	Date 2-6-2006

Approval Recommended by

Signature	Construction Engineer: DOUG COE, Supervising Br. Eng.	Date 2-6-2006

Engineer Approval by

Signature	(Print name and title) PETER SIEGENTHALER - Chief	Date 3-14-06

We the undersigned contractor, have given careful consideration to the change proposed and agree, if this proposal is approved, that we will provide all equipment, furnish the materials, except as may otherwise be noted above, and perform all services necessary for the work above specified, and will accept as full payment therefor the prices shown above.

NOTE: If you, the contractor, do not sign acceptance of this order, your attention is directed to the requirements of the specifications as to proceeding with the ordered work and filing a written protest within the time therein specified.

Contractor Acceptance by

Signature	(Print name and title) Lee Zink Project Director	Date 2/10/06

STATE OF CALIFORNIA - DEPARTMENT OF TRANSPORTATION

CONTRACT CHANGE ORDER MEMORANDUM

TO: PETER SIEGENTHALER / DOUG COE, Supervising Br. Eng.	FILE: E.A. 04 - 012024
FROM: DOUG COE, Supervising Br. Eng.	CO-RTE-PM 04-SF,Ala-80-13.9/14.3,0.0/1.6 FED. NO. ACIM-080-1(085)8N
CCO#: 32 SUPPLEMENT#: 6 Calegory Code: EXBB	CONTINGENCY BALANCE (incl. this change) $55,550,627.03
COST: $0.00 INCREASE ☐ DECREASE ☐	HEADQUARTERS APPROVAL REQUIRED? ☑ YES ☐ NO
SUPPLEMENTAL FUNDS PROVIDED: $0.00	IS THIS REQUEST IN ACCORDANCE WITH ENVIRONMENTAL DOCUMENTS? ☑ YES ☐ NO
CCO DESCRIPTION: Resolution of NOPC No. 3	**PROJECT DESCRIPTION:** REPLACE SFOBB EAST SPAN

LOCATION: IN SAN FRANCISCO AND ALAMEDA COUNTIES IN SAN FRANCISCO AND OAKLAND FROM 1.3 KM EAST OF THE YERBA BUENA ISL

THIS CHANGE ORDER PROVIDES FOR:

closing out the deferred time element of Contract Change Order Nos. 32, "Design Conflict Resolution," Supplement No.'s 0 through 5, and resolving Notice of Potential Claim No. 3, "Integrated Shop Drawing Details," dated September 20, 2002.

The work has been completed and the Engineer and the Contractor both agree that there were no impacts to the controlling operation of work. The time element of this change order is therefore resolved.

It is also mutually agreed that this contract change order resolves Notice of Potential Claim Number 3, " Integrated Shop Drawing Details," dated September 20, 2002, submitted by the Contractor as a consequence of the additional work and time required to revise and re-detail the integrated segment shop drawings.

For this change order, the Engineer and the Contractor both agree that there are no costs to either the State or the Contractor, and that this change order results in a zero cost adjustment.

Mr. Jon Tapping, Acting SFOBB Toll Bridge Project Manager, concurs with this change order. Mr. Tapping provided concurrence via electronic message on December 16, 2005. A copy of the concurrence provided by Mr. Tapping is attached.

Mr. Pete Siegenthaler, SFOBB Construction Manager, concurs with this change. A copy of the concurrence signed by Mr. Siegenthaler on December 15, 2005, is attached.

Prior Approval was obtained from Ms. Nancy Bobb, FHWA Bay Bridge Project Manager, via electronic message on December 20, 2005. A printed copy of the prior approval provided by Ms. Bobb is attached.

Concurrence from Maintenance is not required as this change order does not use maintenance funds or affect maintenance facilities or operations.

A determination has been made that no time adjustment is warranted for this change as it does not affect the controlling operation.

RECEIVED
050635 MAR 27 98

CONCURRED BY:		
Construction Engineer:	Douglas Coe	Date 12-14-05
Bridge Engineer:	Douglas Coe	Date 12-14-05
FHWA Representative:	Nancy Bobb	Date
Project Engineer		Date
Other (specify):		Date
		Date
		Date
District Prior Approval By:		Date
HQ (Issue Approve) By:		Date
Resident Engineer's Signature:		Date 12-14-05

ESTIMATE OF COST

	THIS REQUEST	TOTAL TO DATE
ITEMS	$0.00	$0.00
FORCE ACCOUNT	$0.00	$11,680,000.00
AGREED PRICE	$0.00	$0.00
ADJUSTMENT	$0.00	$0.00
TOTAL	$0.00	$11,680,000.00

FEDERAL PARTICIPATION

☑ PARTICIPATING ☐ PARTICIPATING IN PART ☐ NONE
☐ NON-PARTICIPATING (MAINTENANCE) ☐ NON-PARTICIPATING

FEDERAL SEGREGATION (if more than one Funding Source or P.I.P. type)
☑ CCO FUNDED PER CONTRACT ☐ CCO FUNDED AS FOLLOWS

FEDERAL FUNDING SOURCE	PERCENT

STATE OF CALIFORNIA - DEPARTMENT OF TR. .SPORTATION

CONTRACT CHANGE ORDER

Change Requested by: Engineer

CCO: 33	Suppl. No. 0	Contract No. 04 - 012024	Road 04-SF,Ala-80-13.9/14.3,0.0/1.6	FED. AID LOC.: ACIM-080-1(085)8N

To: KIEWIT / FCI / MANSON a JV

You are directed to make the following changes from the plans and specifications or do the following described work not included in the plans and specifications for this contract. ***NOTE: This change order is not effective until approved by the Engineer.***

Description of work to be done, estimate of quantities and prices to be paid. (Segregate between additional work at contract price, agreed price and force account.) Unless otherwise stated, rates for rental of equipment cover only such time as equipment is actually used and no allowance will be made for idle time. This last percentage shown is the net accumulated increase or decrease from the original quantity in the Engineer's Estimate.

Extra Work at Lump Sum:

Implement changes to the support connection at the expansion joints of the SFOBB East Span Skyway, Bridge No. 34-006L/R, as shown on sheets 2 and 3 of this change order. These details shall be applied to the walkways at hinges BE, BW, CE, CW, DE, and DW.

For this extra work, the Contractor will be paid an agreed lump sum of $4,300.00. This sum constitutes full compensation, including markups, for this change.

Cost of Extra Work at Agreed Lump Sum $4,300.00

Estimated Cost: Increase ☑ Decrease ☐ $4,300.00

By reason of this order the time of completion will be adjusted as follows: 0 days

Submitted by		
Signature Daniel W. Wu	Resident Engineer: for COE D.	Date 9-10-03
Approval Recommended by		
Signature Daniel W. Wu	Construction Engineer: for COE D.	Date 9-10-03
Engineer Approval by		
Signature	(Print name and title) PETER SIEGENTHALER - Chief	Date

We the undersigned contractor, have given careful consideration to the change proposed and agree, if this proposal is approved, that we will provide all equipment, furnish the materials, except as may otherwise be noted above, and perform all services necessary for the work above specified, and will accept as full payment therefor the prices shown above.

NOTE: If you, the contractor, do not sign acceptance of this order, your attention is directed to the requirements of the specifications as to proceeding with the ordered work and filing a written protest within the time therein specified.

Contractor Acceptance by		
Signature	(Print name and title) A.T. Skoro, Project Director	Date 9/23/03

CONTRACT NO. 04-012024
CCO NO. 33
PAGE 2 OF 3

DIST.	COUNTY	ROUTE	KILOMETER POST TOTAL PROJECT	SHEET NO.	TOTAL SHEETS
04	SF	80			

REGISTERED ENGINEER - CIVIL
4/23/03
PLANS APPROVAL DATE

REGISTERED PROFESSIONAL ENGINEER
Tien Hung Ho
No. C 43990
Exp. 08/03/05
CIVIL
STATE OF CALIFORNIA

The State of California or its officers or agents shall not be responsible for the accuracy or completeness of electronic copies of this plan sheet.

T.Y. LIN / MOFFATT & NICHOL
825 BATTERY STREET
SAN FRANCISCO, CA 94111

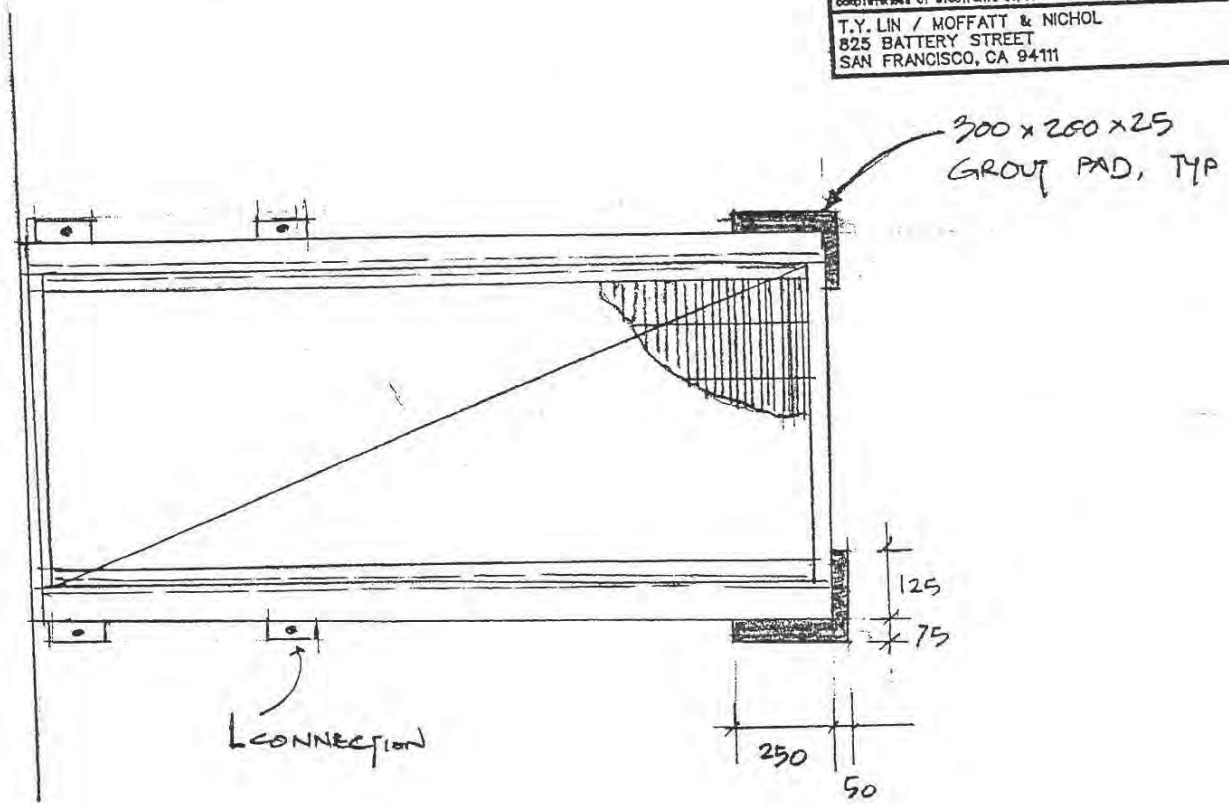

PLAN B-B (NTS)

SKETCH 1

(RFI 421R1)

REFER
SHEET 109A OF 978

CONTRACT NO. 04-012024
CCO NO. 33
PAGE 3 OF 3

DIST.	COUNTY	ROUTE	KILOMETER POST TOTAL PROJECT	SHEET NO.	TOTAL SHEETS
04	SF	80			

REGISTERED ENGINEER - CIVIL

4/07/03
PLANS APPROVAL DATE

REGISTERED PROFESSIONAL ENGINEER
Tien Hung Ho
No. C 43990
Exp. 06/03/05
CIVIL
STATE OF CALIFORNIA

The State of California or its officers or agents shall not be responsible for the accuracy or completeness of electronic copies of this plan sheet.

T.Y. LIN / MOFFATT & NICHOL
825 BATTERY STREET
SAN FRANCISCO, CA 94111

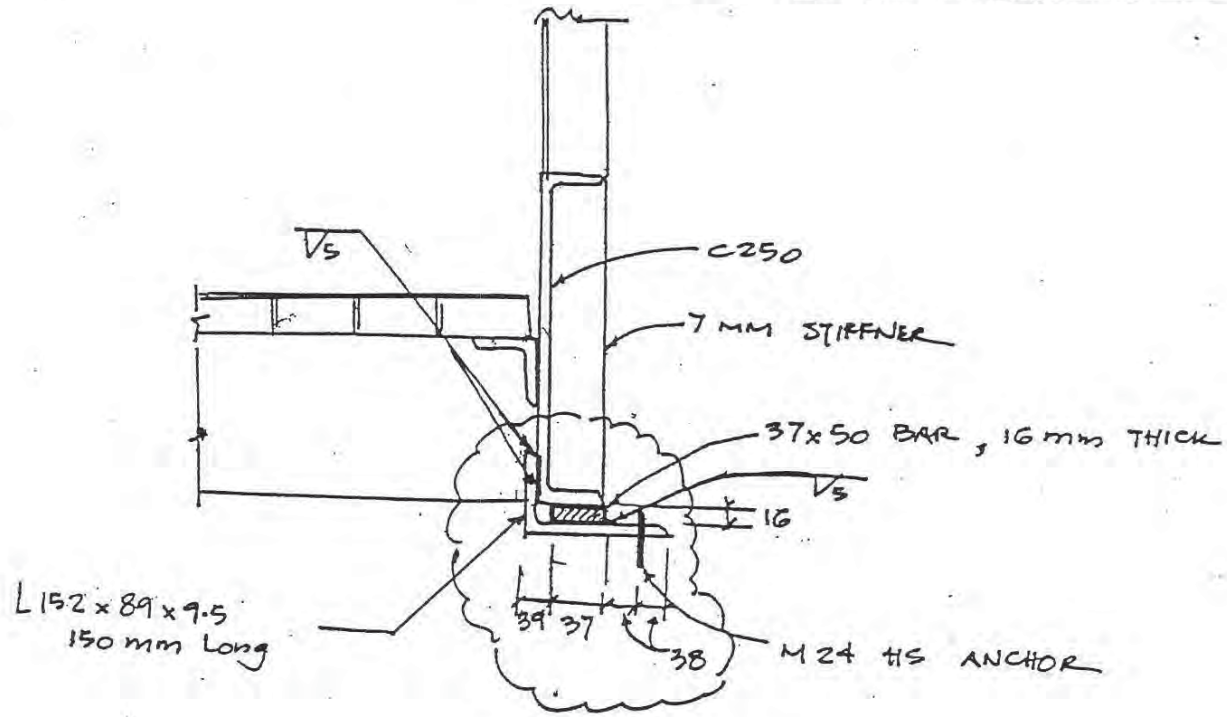

SECTION (NTS)

(MODIFIED DETAIL)

RFI 421 R1
SHT: 109 A OF 978

STATE OF CALIFORNIA - DEPARTMENT OF TRANSPORTATION

CONTRACT CHANGE ORDER MEMORANDUM

DATE: 9/10/2003 Page 1 of 1

TO: PETER SIEGENTHALER / COE D.	FILE: E.A. 04 - 012024
FROM: COE D.	CO-RTE-PM 04-SF,Ala-80-13.9/14.3,0.0/1.6
	FED. NO. ACIM-080-1(085)8N
CCO#: 33 SUPPLEMENT#: 0 Category Code: CHPA	CONTINGENCY BALANCE (incl. this change) $42,878,857.45
COST: $4,300.00 INCREASE ☑ DECREASE ☐	HEADQUARTERS APPROVAL REQUIRED? ☐ YES ☑ NO
SUPPLEMENTAL FUNDS PROVIDED: $0.00	IS THIS REQUEST IN ACCORDANCE WITH ENVIRONMENTAL DOCUMENTS? ☑ YES ☐ NO
CCO DESCRIPTION: Walkway Connection at Expansion Joints	**PROJECT DESCRIPTION:** REPLACE SFOBB EAST SPAN

LOCATION: IN SAN FRANCISCO AND ALAMEDA COUNTIES IN SAN FRANCISCO AND OAKLAND FROM 1.3 KM EAST OF THE YERBA BUENA ISL

THIS CHANGE ORDER PROVIDES FOR:

Implement minor changes to the support connection detail for the fixed end of walkways spanning expansion joints on the SFOBB East Span Skyway, Bridge No. 34-006L/R.

This change is required to resolve conflicting details of the same connection, shown on the original contract plans, to improve constructibility. The change will add grout pads to non-fixed end of walkways spanning expansion joints that will facilitate the movement of these during a seismic event. These changes apply to walkways at hinges BE, BW, CE, CW, DE and DW as shown on details on sheet 2 and 3 of this change order. This change order has been discussed with Sajid Abbas of TY Lin on 12-19-03.

The extra work will be paid by an agreed lump sum price of $4,300.00. This sum constitutes full and complete compensation including all markups for this change. An analysis of the Contractor's proposal is on file with the project records and it has been found to be fair and reasonable based on a force account analysis.

This additional work will not affect the overall project schedule; therefore, no adjustment of contract time is warranted by this change.

Maintenance concurrence is not necessary since it does affect the performance of the facility. FHWA concurrence is not required.

CONCURRED BY: D.W.W		
Construction Engineer: for Douglas Coe		Date 9-12-03
Bridge Engineer:		Date
FHWA Representative:	N/A	Date
Project Engineer:	Ade Akinsanya	Date 9/10/2003
Other (specify):		Date
		Date
		Date
District Prior Approval By:		Date
HQ (Issue Approve) By:		Date
Resident Engineer's Signature: Dan W. Wu for D. Coe		Date 9-12-03

ESTIMATE OF COST

	THIS REQUEST	TOTAL TO DATE
ITEMS	$0.00	$0.00
FORCE ACCOUNT	$0.00	$0.00
AGREED PRICE	$4,300.00	$4,300.00
ADJUSTMENT	$0.00	$0.00
TOTAL	$4,300.00	$4,300.00

FEDERAL PARTICIPATION

☑ PARTICIPATING ☐ PARTICIPATING IN PART ☐ NONE
☐ NON-PARTICIPATING (MAINTENANCE) ☐ NON-PARTICIPATING

FEDERAL SEGREGATION (if more than one Funding Source or P.I.P. type)
☑ CCO FUNDED PER CONTRACT ☐ CCO FUNDED AS FOLLOWS

FEDERAL FUNDING SOURCE	PERCENT

California Department of Transportation

SFOBB New East Span

Contract: 04-012024, Skyway

CCO 34(0)

Deleted

California Department of Transportation

SFOBB New East Span

Contract: 04-012024, Skyway

CCO 35(0)

Deleted

CONTRACT CHANGE ORDER

Change Requested by: Engineer

CCO: 36	Suppl. No. 0	Contract No. 04 - 012024	Road 04-SF,Ala-80-13.9/14.3,0.0/1.6	FED. AID LOC.: ACIM-080-1(085)8N

To: KIEWIT / FCI / MANSON a JV

You are directed to make the following changes from the plans and specifications or do the following described work not included in the plans and specifications for this contract. ***NOTE: This change order is not effective until approved by the Engineer.***

Description of work to be done, estimate of quantities and prices to be paid. (Segregate between additional work at contract price, agreed price and force account.) Unless otherwise stated, rates for rental of equipment cover only such time as equipment is actually used and no allowance will be made for idle time. This last percentage shown is the net accumulated increase or decrease from the original

Extra Work at Force Account:

Perform the following additional concrete trial batches for Concrete Mix No. 8301 "Lightweight concrete for precast panels."

1. Add 0.5 gallons of shrinkage reducing admixture per cubic yard to Mix No. 8301 and perform the following:
   a. Wet cure the test specimens and then perform compressive strength tests at 12 hours, 15 hours, and 18 hours
   b. Wet cure the test specimens for 3 days; allow the test specimens to air dry for 1, 3, 5, 7, 14, 28, 56, and 90 days; and perform compressive strength and shrinkage coefficient tests at each of the time intervals.
2. Add 1.0 gallons of shrinkage reducing admixture per cubic yard to Mix No. 8301 and perform the following:
   a. Wet cure the test specimens and then perform compressive strength tests at 12 hours, 15 hours, and 18 hours
   b. Wet cure the test specimens for 3 days; allow the test specimens to air dry for 1, 3, 5, 7, 14, 28, 56, and 90 days; and perform compressive strength and shrinkage coefficient tests at each of the time intervals.
3. Produce a concrete mix with a shrinkage reducing admixture which conforms to lightweight concrete for precast panels for this Contract with the following additional criteria:
   a. Shrinkage coefficient is less than 0.05% at 180-days based on ASTM C157.
   b. Concrete compressive strength is equal to or greater than 10.4 MPa (1,500 psi) at 12-hours after casting.

The Contractor shall submit a copy of each test result requested in this change order to the State immediately as the test results become available. In addition, upon completion of all the tests requested in this change order, the Contractor shall compile all the test results into a final report and submit this report to the State. This report shall also include a copy of the final concrete mix design developed for Item 3 of this change order and all test results to substantiate that the criteria have been met.

The Contractor shall notify the State a minimum of 48-hours in advance of each and every trial batch and test requested in this change order so that the State can witness these activities.

ESTIMATE OF EXTRA WORK AT FORCE ACCOUNT..... $25,000.00

Payment for this work shall be in accordance with Section 5-1.21, "Extra Work at Force Account" of the Special Provisions.

No adjustment in Contract time will be made as this change order does not affect the controlling operations.

STATE OF CALIFORNIA - DEPARTMENT OF TRANSPORTATION

CONTRACT CHANGE ORDER

Change Requested by: Engineer

CCO: 36	Suppl. No. 0	Contract No. 04 - 012024	Road 04-SF,Ala-80-13.9/14.3,0.0/1.6	FED. AID LOC.: ACIM-080-1(085)8N

Estimated Cost: Increase ☑ Decrease ☐ $25,000.00

By reason of this order the time of completion will be adjusted as follows: 0 days

Submitted by

Signature	Resident Engineer: COE D.	Date 4-14-03

Approval Recommended by

Signature	Construction Engineer: COE D.	Date 4-14-03

Engineer Approval by

Signature	(Print name and title) COE D. - Construction Engineer	Date 5/27/03

We the undersigned contractor, have given careful consideration to the change proposed and agree, if this proposal is approved, that we will provide all equipment, furnish the materials, except as may otherwise be noted above, and perform all services necessary for the work above specified, and will accept as full payment therefor the prices shown above.

NOTE: If you, the contractor, do not sign acceptance of this order, your attention is directed to the requirements of the specifications as to proceeding with the ordered work and filing a written protest within the time therein specified.

Contractor Acceptance by

Signature	(Print name and title) A.T. Sakoro, Project Director	Date 5/9/03

STATE OF CALIFORNIA - DEPARTMENT OF TRANSPORTATION

CONTRACT CHANGE ORDER MEMORANDUM

DATE: 4/10/03

TO: PETER SIEGENTHALER / COE D.	FILE: E.A. 04 - 012024
	CO-RTE-PM 04-SF,Ala-80-13.9/14.3,0.0/1.6
FROM: COE D.	FED. NO. ACIM-080-1(085)8N
CCO# 36 SUPPLEMENT#: 0 Category Cod **CHSA**	CONTINGENCY BALANCE (Incl. this change **$52,927,820.27**
COST: **$25,000.00** INCREASE ☑ DECREASE ☐	HEADQUARTERS APPROVAL REQUIRED? ☑ YES ☐ NO
SUPPLEMENTAL FUNDS PROVIDED: **$0.00**	IS THIS REQUEST IN ACCORDANCE WITH ENVIRONMENTAL DOCUMENTS? ☑ YES ☐ NO
CCO DESCRIPTION: PC Panel Concrete - SRA Test	**PROJECT DESCRIPTION:** REPLACE SFOBB EAST SPAN

LOCATION: IN SAN FRANCISCO AND ALAMEDA COUNTIES IN SAN FRANCISCO AND OAKLAND FROM 1.3 KM EAST OF THE YERBA BUENA ISL

THIS CHANGE ORDER PROVIDES FOR:

perform additional concrete trial batches by adding various amounts of shrinkage reducing admixtures (SRA) to Concrete Mix No. 8301, Lightweight Concrete for Precast Panels. This change order will develop a lightweight concrete mix design that minimizes the differential shrinkage between the precast lightweight concrete panel and the corresponding precast bridge segment based on a panel dry time of 3 to 5 days.

Section 10-1.27, "Concrete Structures," Subsection "Lightweight Concrete," of the Special Provisions, states that precast panels shall be maintained wet until placed in the formwork for attachment to the segments. The purpose of this wet curing requirement was to minimize the differential shrinkage between the concrete precast panel and the concrete segment based on the assumption that the panel and segment concrete would have similar shrinkage coefficients. However, the precast panel is lightweight concrete while the segment is normal weight concrete. The Contractor has performed several tests and it has been determined that the shrinkage coefficient of lightweight concrete is substantially larger than the shrinkage coefficient of normal weight concrete. Therefore, if the panels are maintained wet until they are placed into the formwork for the segments as required by the Contract, there will be differential shrinkage and the panels will crack. The Contractor's baseline schedule shows that the Contractor is scheduled to cast panels into the segments every 3 to 5 days after initial wet cure. Therefore, there will be a serious impact to the Contractor's schedule if they are required to allow the panels to dry for 14-days. CALTRANS, the Designer (TY Lin), and the Contractor have determined that the most economical solution will be to modify the existing approved lightweight concrete mix by adding a shrinkage reducing admixture.

For this work the Contractor will be paid Extra Work at Force Account.

Maintenance concurrence for this change order is not required.

No time adjustment is warranted for this change as it does not affect the controlling operation.

CONCURRED BY:		
Construction Engineer: Douglas Coe	Date	
Bridge Engineer:	Date	
FHWA Representative:	Date	
Project Engineer:	Date	
Other (specify):	Date	
	Date	
	Date	
District Prior Approval By:	Date	
HQ (Issue, Approve) By: Ronald Bacani	Date 3/11/03	
Resident Engineer's Signature:	Date 4-14-03	

ESTIMATE OF COST

	THIS REQUEST	TOTAL TO DATE
ITEMS	$0.00	$0.00
FORCE ACCOUNT	$25,000.00	$25,000.00
AGREED PRICE	$0.00	$0.00
ADJUSTMENT	$0.00	$0.00
TOTAL	$25,000.00	$25,000.00

FEDERAL PARTICIPATION

☑ PARTICIPATING ☐ PARTICIPATING IN PART ☐ NONE
☐ NON-PARTICIPATING (MAINTENANCE) ☐ NON-PARTICIPATING

FEDERAL SEGREGATION (if more than one Funding Source or P.I.P. type)
☑ CCO FUNDED PER CONTRACT ☐ CCO FUNDED AS FOLLOWS

FEDERAL FUNDING SOURCE PERCENT

RECEIVED 008065 JUN 19 03

79.036

California Department of Transportation

SFOBB New East Span

Contract: 04-012024, Skyway

CCO 37(0)

Deleted

CCO: 38	Suppl. No. 0	Contract No, 04 - 012024	Road 04-SF,Ala-80-13.9/14.3,0.0/1.6	FED. AID LOC.: ACIM-080-1(085)8N

To: **KIEWIT / FCI / MANSON a JV**

You are directed to make *the* following changes from *the* plans and specifications *or* do the following described work not included in the plans and specifications for this contract. ***NOTE: This change order is not effective until approved by the Engineer.***

Description of work to be done, estimate of quantities and prices to be paid. (Segregate between additional work at contract price, agreed price and force account.) Unless otherwise stated, rates for rental of equipment cover only such time as equipment is actually used and no allowance will be made for idle time. This last percentage shown is the net accumulated increase or decrease from the original quantity in the Engineer's Estimate.

Estimate of Decrease in Contract Item at Contract Price:

(F) Item No. 39: STRUCTURAL CONCRETE
-21.4 M3 (–0.08%) @ $425.00 /M3 = –$9,095.00 (–0.08%)

Item No. 55: JOINT SEAL (TYPE B - MR 30 MM)
-790 M (–100.00%) @ $92.00 /M = –$72,680.00 (–100.00%)

(F) Item No. 63: BAR REINFORCING STEEL (EPOXY COATED)
-4060 KG (–0.04%) @ $2.60 /KG = –$10,556.00 (–0.25%)

Total Decrease in Contract Items ($92,331.00)

The quantity decrease shown here for Contract Item Numbers 39 and 63, when combined with quantities shown in the engineer's estimate, and as modified by any previous change orders, will be the final quantities for which payment will be made for each contract item.

Extra Work at Lump Sum:

Modify the footing details at the base of the Pier Access Casing on top of the Pier Footing at each footing location as shown on sheets 3 through 9 of this change for the SFOBB East Span Skyway, Bridge Nos. 34-0006L/R. The concrete curb shall be cast monolithically with the footing concrete top slab.

The revised contract plan sheets plans reflecting this change are 484R2, 485R2, 489R2, 490R2, 495R2, 496R2, and 497R2 of 978.

The contract Special Provisions shall be amended by eliminating Section 10-1.32, "Sealing Joints," and replacing it with revised Special Provision Section 10-1.32 as provided on sheet 10 of this change.

For this work, the Contractor will be paid an agreed lump sum amount of $823,198. This sum constitutes full compensation, including all markups, for all direct and indirect costs, all associated project impacts, and all Time Related Overhead (TRO) expenses.

This agreed lump sum will be paid to the Contractor per the following pay schedule for the 20 locations affected by this contract change:

Cast Footing Curb	(20 ea. @ $20,579.95)	=	$411,599.00
Complete Curb, Wall Detail, & Joint Seal	(20 ea. @ $20,579.95)	=	$411,599.00
	TOTAL	=	$823,198.00

In no case will the total amount of all the paid installments exceed the agreed lump sum amount of $823,198.

CCO: 38	Suppl. No. 0	Contract No, 04 - 012024	Road 04-SF,Ala-80-13.9/14.3,0.0/1.6	**FED. AID LOC.:** ACIM-080-1(085)8N

Total cost of Extra Work at Agreed Lump Sum $823,198.00

Total cost this change order $730,867.00

No adjustment in Contract time will be made as this change order does not affect the controlling operations.

Estimated Cost: Increase ☑ Decrease ☐ $730,867.00

By reason of this order the time of completion will be adjusted as follows: 0 days

Submitted by		
Signature	**Resident Engineer:** COE D.	**Date** 10-17-03
Approval Recommended by		
Signature	Construction Engineer: COE D.	**Date** 10-17-03
Engineer Approval by		
Signature	(Print name and title) PETER SIEGENTHALER - Chief	**Date**

We the undersigned contractor, have given careful consideration to the change proposed and agree, if this proposal is approved, that we will provide all equipment, furnish the materials, except as may otherwise be noted above, and perform all services necessary for the work above specified, and will accept as full payment therefor the prices shown above.

NOTE: If you, the contractor, do not sign acceptance of this order, your attention is directed to the requirements of the specifications as to proceeding with the ordered work and filing a written protest within the time therein specified.

Contractor Acceptance by		
Signature	**(Print name and title)** A.T. Okoro, Project Director	**Date** 11/14/03

TELECOPY

California Department of Transportation

CONSTRUCTION DIVISION

TO District 4 CCO Desk

Date: 12/9/2003

Contract No.: 4 - 012024

Road: SF,ALA-80-13.9/14.3,0.0/1.6

FED. No.: ACIM-080-1(085)8N

To: SARTIPI - 04

Attention: 04 - MOLERA

HQ Direction: TO ISSUE AND APPROVE

CCO No. 038 **Sup. No.** 0 **Rev. No.** 0 **Old CCO Code:** -

Per Your Submittal Dated 12/9/2003 **NewCCOCode:** C - H - P - R

MODIFY THE DETAILS AT THE BASE OF THE PEIR ACCESS CASING ON TOP OF THE PIER FOOTING AT EACH FOOTING LOCATION FOR THE SFOBB EAST SPAN SKYWAY, BR. NO. 34-0006L/R AS SHOWN IN THE REVISED PLAN SHEET NOS. 484R2, 485R2, 489R2, 490R2, 495R2, 496R2, AND 497R2 OF 978. ALSO MODIFY THE SPECIAL PROVISIONS TO REPLACE SECTION 10-1.32 "SEALING JOINTS" TO PROVIDE FOR POURABLE POLYURETHANE SEAL.

NOTE:

TOTAL COST OF THIS CHANGE: $730,867.00

items:	($92,331.00)
Force Account:	$0.00
Agreed Price:	$823,198.00
Adj. of Comp.	$0.00
Total:	**$730,867.00**
Time	**(NONE)**

ROBERT PIEPLOW, by:
Division Chief

Patrick S. Bockari

Division of Construction
1120 "N" Street, MS-44, Sacramento, CA 95814
Fax Number: (916) 654-5735
To Confirm Transmission, Call (916) 654-5196

Department of Transportation
EAST SPAN SEISMIC SAFETY PROJECT
CONCURRENCE FOR CHANGE ORDERS

Contract No. 04-012024
Co. & Rte Ala-80-13.9/14.3, 0.0/1.6

CCO#: 38 **S#:** (
Title: Access Casing Waterstop
Date: 08/25/03

To: DOUGLAS COE, Resident Engineer

Requested By: William S. Casey, Senior Engineer (initials

Description of Work
Revised the design at the base of the access casing wall to replace the Type 'B' Seal shown on plan sheet 496 of 978 with a pourable polyurethane seal.

Reason for Change:
Design has requested a contract change order to replace the Type 'B' Seal shown on plan sheet 496 of 978 with a pourable polyurethane seal. In order to address constructibility issues with the proper installation of the Type 'B' Seal as shown on the contract plans and concerns with the performance of the Type 'B' Seal in a submerged environment, design has requested this change. Preliminary costs are estimated at $750,000.

Discussed with persons noted below:

FHWA:	Date	Br. Const:	Date
District:	Date	Br. Design: Sajid Abbas	Date
Other:	Date	Br. Geology:	Date
		Br. Maintenance:	Date

Estimated Cost: $750,000.00

Recommended Method of Payment:
- ☐ Contract Items
- ☐ Extra Work at Force Account
- ☒ Agreed Price (LS or UP)
- ☐ Other:

Recommended Time Adjustment: 0 Working Days

Prior Approvals:

1. This represents an acknowledgement that the individuals below are in concurrence with the change order.
2. This represents an acknowledgement that I am in concurrence with this change order which must be approved before any work is done.

Comments:

Douglas Coe, Resident Engineer — 9-5-03 Date — 1. ___ 2. X

Robert Kobal, HQ CCO Coordinator — 9/17/03 Date

P. E. Siegenthaler 9/9/03 1. ___ 2. ✓

Pete Siegenthaler, Principal Construction Engineer Date

TELECOPY

FAX No: (510) 622-5165

California Department of Transpodon
CONSTRUCTION DIVISION

TO: District 4 CCO Desk

Date: 7/31/2003
Contract No.: 4 - 012024
Road: SF,ALA-80-13.9/14.3,0.0/1.6

CoE

CCO No. 038 Sup. No. 0 Rev. No. 0 Old CCO Code: - -

Per Your Submittal Dated 7/17/2003 New CCO Code: C - H - P - T

MODIFY THE ACCESS CASING AND FOOTING CONCRETE CONNECTION DETAIL ON THE SFOBB EAST SPAN SKYWAY, BR. NO.34-006L/R AS SHOWN ON THE VARIOUS NEW CONTRACT PLAN SHEETS.

NOTES:

WRITE AND SUBMIT AS SOON AS POSSIBLE, THE CCO WITH ALL REQUIRED SINGATURES OR EMAIL CONCURRENCES INCLUDING DATES. INCLUDEANY TIME ADJUSTMENT, OR EXPLANATION FOR DEFERRING TIME ADJUSTMENTS. EXPLAIN WOW YOU ARRIVED AT THE AGREED LUMP SUM PAYMENT, AND WHY YOU SELECTED THE PAYMENT METHOD.

Items:	$0.00
Force Account:	$0.00
Agreed Price;	$650,000.00
Adj, of Comp.	$0.00
Total:	$650,000.00
Time:	(NONE)

ROBERT PIEPLOW, by:
Division Chief

Patrick S. Bockarl
Division of Constructior
3120 "N" Street, MS-44, Sacramento, CA 958
Fax Number: (916) 654-5735
To Confirm Transmission, Call (916) 654-5196

Form Revised: 1/15/03 12:58:37 PM RECEIVED 16078

009924 JUL 31 03

TOTAL P.01

5.06.4
49.038

U.S. DEPARTMENT OF TRANSPORTATION FEDERAL HIGHWAY ADMINISTRATION CALIFORNIA DIVISION OFFICE

RECORD OF PRIOR APPROVAL FOR MAJOR CONTRACT CHANGE ORDERS

PROJECT NO.	CCO NO.	CONTRACT NO.	DIST-CO-RTE-PM
ACIM -080-1(085)8N	38	04-012024	04-SF,Ala-80-13.9/14.3,0.0/1.6

REQUESTED BY:	CALTRANS HQ	DATE
Derek Davis	X RE/DISTRICT	12/2/03

PROPOSED CHANGE:

This change order provides for modifying the details at the base of the Pier Access Casing on top of the Pier Footing at each footing location for the SFOBB.

REASON FOR CHANGE

The design details for the construction joint between the base of the access casing wall and the top of the footing utilize both a waterstop and a Type B Joint Seal to block the flow of water into the access casings. The use of a Type B Seal at this location presents constructabiliy and performance issues, and may not function properly as designed. In order to resolve these issues, TY Lin, the Designer of Record, recommended the use of a concrete curb and pourable polyurethane seal instead of the Type B Joint Seal detail. The Designer has also recommended the installation of a "DuraJect" System in the casing wall at the construction joint interface as a retrofit measure in the event that leaks develop.

This contract change order eliminates Contract Item Number 55, "Joint Seal (Type B - MR 30 MM)." This change also decreases quantities of Contract Item Nos. 39, "Structural Concrete," and 63, "Bar Reinforcing Steel (Epoxy Coated)".

This change provides for compensating the contractor a lump sum amount for the extra work involved in constructing the concrete curb and furnishing and installing the pourable polyurethane seal and "DuraJect" system in the pier casing wall.

AS DISCUSSED IN FIELD (REPORT NO. ____)

TME EXTENSIONS	ACTIVITY ON CRITICAL PATH AFFECTED BY CCO (IF TIME EXTENSION INVOLVED)
* NONE ___ DAYS ___ DEFERRED	

ESTIMATE OF COST:	CCO:	METHOD OF PAYMENT
$_730,867.00_ INCREASE $____DECREASE	CONTRACT ITEM X AGREED PRICE	ADJUSTMENT OF COMPENSATION EXTRA WORK AT FORCE ACCOUNT

THE WORK COVERED BY THE PROPOSED REVISION AS DESCRIBED ABOVE IS APPROVED SUBJECT TO SUBMISSION OF SUPPORTING DOCUMENTATION INCLUDING COST EVALUATION AND JUSTIFICATION OF TIME EXTENSIONS.

OTHER CONDITIONS:

PRIOR APPROVAL TO PROCEED GRANTED BY:	DATE OF AUTHORIZATION:
Nancy E. Bobb	12/2/03

DIST.	COUNTY	ROUTE	KILOMETER POST TOTAL PROJECT	SHEET NO.	TOTAL SHEETS
04	SF, Ala	EO	13.9/14.3, 0.0/1.6	484R2	978

REGISTERED ENGINEER - CIVIL

6-4-01

PLANS APPROVAL DATE

Medan Kumar Sah, No. C 59203, Exp. 6/30/03, CIVIL, STATE OF CALIFORNIA, PROFESSIONAL ENGINEER

The State of California or its officers or agents shall not be responsible for the accuracy or completeness of electronic copies of this plan sheet.

T.Y. LIN / MOFFATT & NICHOL
825 BATTERY STREET
SAN FRANCISCO, CA 94111

Caltrans now has a web site! To get to the web site, go to: http://www.dot.ca.gov

THIS SHEET REPLACES SHEET 0001484 Of 978 OF PLAN APPROVED JUNE 04.

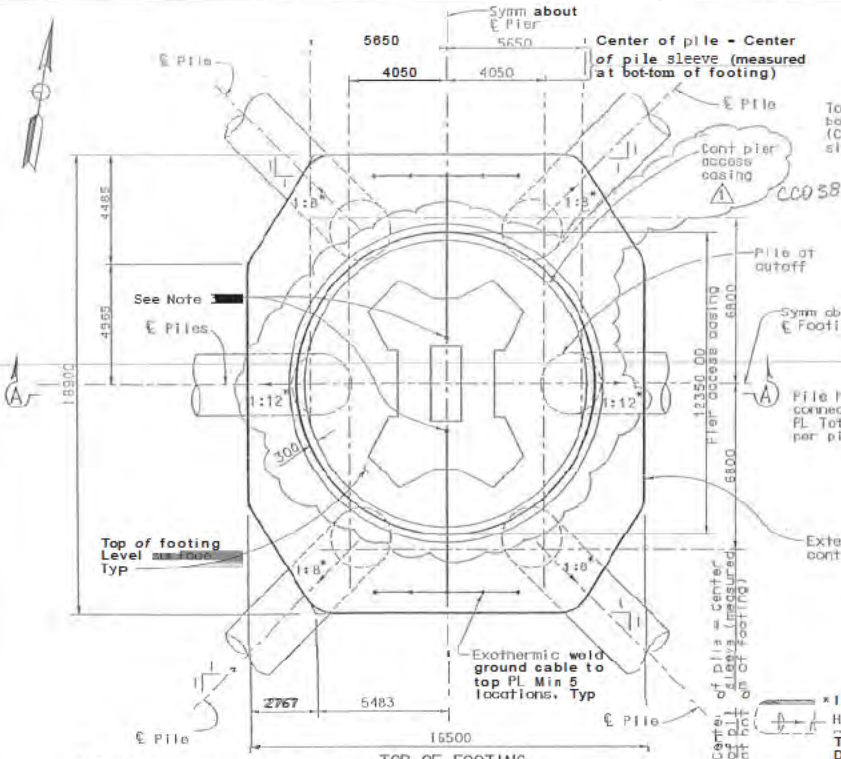

TOP OF FOOTING PLAN
1:100

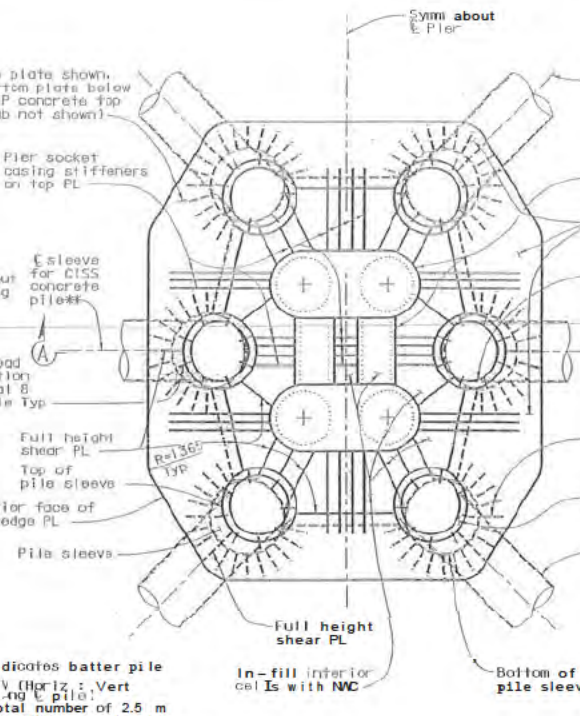

PARTIALLY ENCASED STRUCTURAL STEEL PLAN
1:100

** Batter pile sleeve to match alignment of pile

LEGEND:

Approximate water Level

NOTES:

1. For pile details, see "Pile Details" sheets.
2. For footing reinforcement, see "Footing Details" sheets.
3. Embedded ground cable 250 Kcmil bare copper. For cable termination at top of pier, see "Pier Layout" sheets.
4. In-fill exterior cells with a 1500 mm bottom lift of NWC, fill the remainder with LWC.
5. For footing construction tolerances, see "Footing Construction Tolerances" sheet.

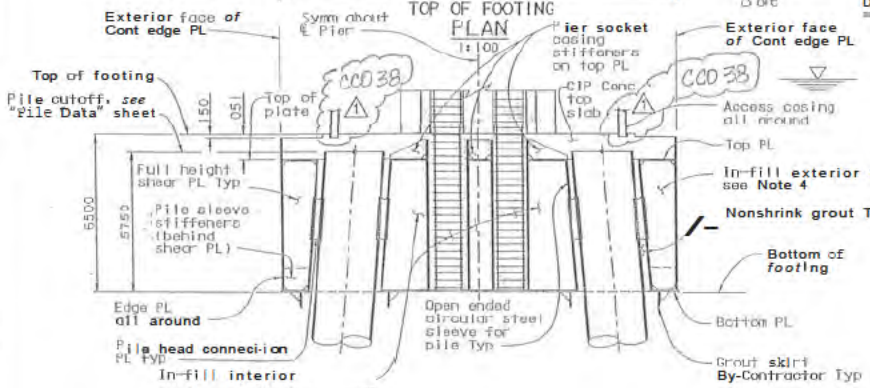

SECTION A-A
1:100

MARK	DATE	DESCRIPTIONS	BY	CH'D
1	07/03/03	REVISE PIER ACCESS CASING BASE DETAIL	RN	MS

REVISIONS

CONTRACT CHANGE ORDER NO. 38

SHEET 3 OF 10

ALL DIMENSIONS ARE IN MILLIMETERS UNLESS OTHERWISE SHOWN

SECTION CHIEF 7/3/03
SIGN OFF DATE

DESIGN	M. Sah/R. Nutt/J. Dents	CHECKED	T. Ingham
DETAILS	M. Sah	CHECKED	T. Ho
QUANTITIES	J. Lavoptini	CHECKED	D. Berton

PREPARED FOR THE STATE OF CALIFORNIA DEPARTMENT OF TRANSPORTATION

Sajid Abbas
PROJECT ENGINEER

BRIDGE NO. 34-0006L/R
DRAWING SHEET 13.9/14.3

ALL DIMENSIONS ARE IN MILLIMETERS UNLESS OTHERWISE SHOWN

SAN FRANCISCO OAKLAND BAY BRIDGE
EAST SPAN SEISMIC SAFETY PROJECT

SKYWAY STRUCTURES

FOOTING LAYOUT PIERS E7 THRU E14

TIME PLOTTED => 09:56:21 am
DATE PLOTTED => 07/03/2003

DIST	COUNTY	ROUTE	KILOMETER POST TOTAL PROJECT	SHEET NO.	TOTAL SHEETS
04	SF, Ala	80	13.9/14.3, 0.0/1.6	485R2	978

REGISTERED ENGINEER - CIVIL

6-4-01

PLANS APPROVAL DATE

The State of California or its officers or agents shall not be responsible for the accuracy or completeness of electronic copies of this plan sheet.

T.Y. LIN / MOFFATT & NICHOL
825 BATTERY STREET
SAN FRANCISCO, CA 94111

Caltrans now has a web site! To get to the web site, go to http://www.dot.ca.gov

THIS SHEET REPLACES SHEET NO. 485 OF 978 OF PLAN APPROVED JUNE 04w 2001

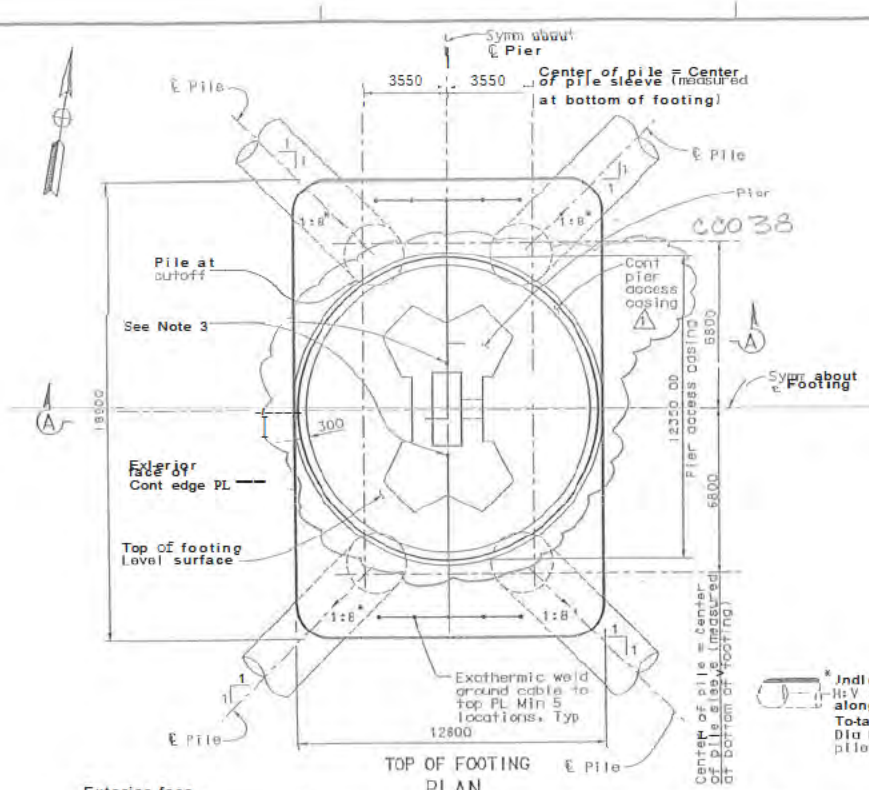

TOP OF FOOTING
PLAN
1:100

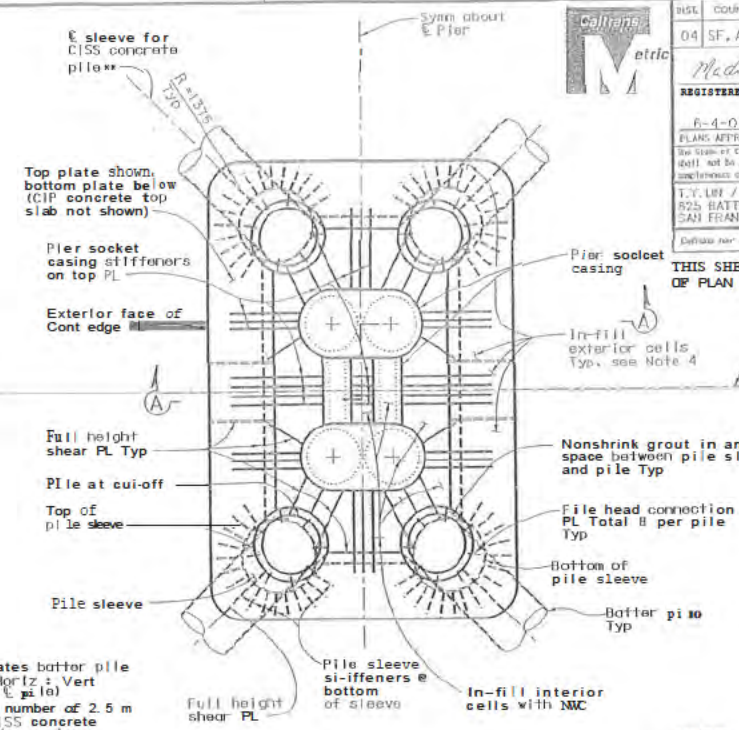

PARTIALLY ENCASED STRUCTURAL STEEL
PLAN
1:100

** Batter pile sleeve to match alignment of pile

* Indicates batter pile
1:V (Horiz : Vert along ℄ pile)
Total number of 2.5 m Dia CISS concrete pile=4 per pier

LEGEND:

Approximate water Level

NOTES:

1. For pile details, see "Pile Details" sheets.
2. For footing reinforcement, see "Footing Details" sheets.
3. Embedded ground cable 250 Kcml, bare copper. For cable layout, see sheet at top of pier, see
4. In-fill exterior cells with a 1500 mm bottom diff of NWC, fill reminder with LWC.
5. For footing construction tolerances, see "Footing Construction Tolerances" sheet.

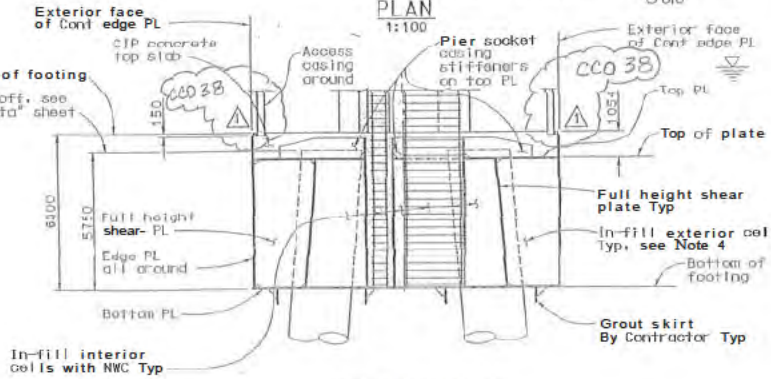

SECTION A-A
1:100

CCO 38

MARK	DATE	DESCRIPTIONS	BY	CH'D
1	8/11/03	REVISE PIER ACCESS CASING BASE DETAIL	RN	MS
		REVISIONS		

CONTRACT CHANGE ORDER NO. 38
SHEET 4 OF 10

ALL DIMENSIONS ARE IN MILLIMETERS UNLESS OTHERWISE SHOWN

SAN FRANCISCO OAKLAND BAY BRIDGE
EAST SPAN SEISMIC SAFETY PROJECT

SKYWAY STRUCTURES

FOOTING LAYOUT PIERS E15 THRU E16

DESIGN: M. Sdv/R. Nitt/J. Denis — CHECKED: T. Ingham
DETAILS: M. Sdh — CHECKED: T. Ho
QUANTITIES: J. Laventini — CHECKED: D. Harrison

PREPARED FOR THE STATE OF CALIFORNIA DEPARTMENT OF TRANSPORTATION

Sajid Abbas
PROJECT ENGINEER

7/3/03

CU 04

BRIDGE NO. 34-0006L/R
KILOMETER POST 13.9/14.3, 0.0/1.6

REVISION DATES (PRE-CONTRACT STAGE ONLY)

SHEET 4 OF 4

NOMINAL SCALE IN MILLIMETERS

BORDERS PRINTED BLACK

TIME PLOTTED: 07/30/2003

DIST	COUNTY	ROUTE	KILOMETER POST TOTAL PROJECT	SHEET NO.	TOTAL SHEETS
04	SF, Ala	80	13.9/14.3, 0.0/1.6	489R2	978

REGISTERED ENGINEER - CIVIL

6-4-01

PLANS APPROVAL DATE

The State of California or its officers or agents shall not be responsible for the accuracy or completeness of electronic media of this plan sheet.

PROFESSIONAL ENGINEER — Madan Kumar Sah — No. C 38203 — Exp. 6/30/03 — CIVIL — STATE OF CALIFORNIA

B25 BATTERY SHEET
SAN FRANCISCO, CA 94118

Caltrans now has a web site! To get to the web site go to http://www.dot.ca.gov

THIS SHEET REPLACES SHEET NO. 489 OF 978 OF PLAN APPROVED JUNE 04, 2001

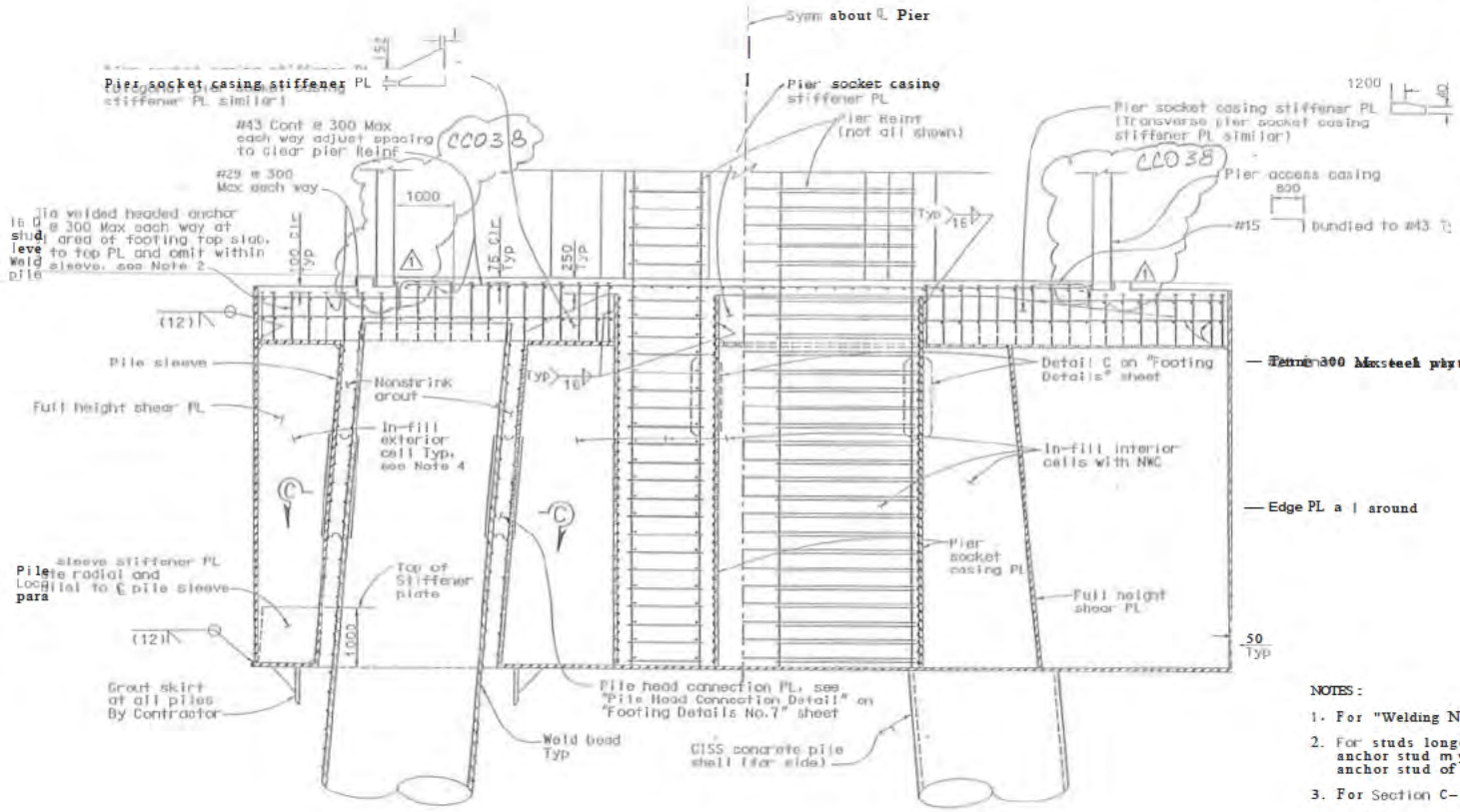

SECTION A-A (At Piers E7 through E14)

1:40

NOTES:

1. For "Welding Notes," see "Footing Details No.1" sheet.
2. For studs longer than 200 mm, as an option headed anchor stud may be substituted with deformed bar anchor stud of the same diameter and length.
3. For Section C-C, see "Footing Details No.6" sheet.
4. In-fill exterior cells with a 1500 mm bottom lift of NWC; fill the remainder with LWC.

MARK	DATE	DESCRIPTIONS	BY	CH'D
1	07/03/03	REVISE PIER ACCESS CASING BASE DETAIL	RM	MS

REVISIONS

CC038

CONTRACT CHANGE ORDER NO. 38
SHEET 5 OF 10

ALL DIMENSIONS ARE IN MILLIMETERS UNLESS OTHERWISE SHOWN

SIGN OFF DATE 7/3/03

DESIGNED M. Sah/R. Holt/J. Lewis
CHECKED M. Sah
QUANTITIES J. Leventini
DRAWN T. Inchon
CHECKED T. Ho
REVIEWED D. Harrison

PREPARED FOR THE STATE OF CALIFORNIA DEPARTMENT OF TRANSPORTATION

Sajid Abbas
PROJECT ENGINEER

BRIDGE NO. 34-0006L/R
KILOMETER POST 13.9/14.3, 0.0/1.6

SAN FRANCISCO OAKLAND BAY BRIDGE
EAST SPAN SEISMIC SAFETY PROJECT

SKYWAY STRUCTURES

FOOTING DETAILS NO. 4

DIST.	COUNTY	ROUTE	KILOMETER POST TOTAL PROJECT	SHEET NO.	TOTAL SHEETS
04	SF, Ala	80	13.9/14.3, 0.0/1.6	490R2	978

REGISTERED ENGINEER - CIVIL

6-4-01

PLANS APPROVAL DATE

The State of California or its officers or agents shall not be responsible for the accuracy or completeness of electronic copies of this plan sheet.

T.Y. LIN / MOFFATT & NICHOL
825 BATTERY STREET
SAN FRANCISCO, CA 94111

Caltrans now has a web site! To get to the web site, go to http://www.dot.ca.gov

THIS SHEET REPLACES SHEET NO. 490 OF 978 OF PLAN APPROVED JUNE 04, 2001

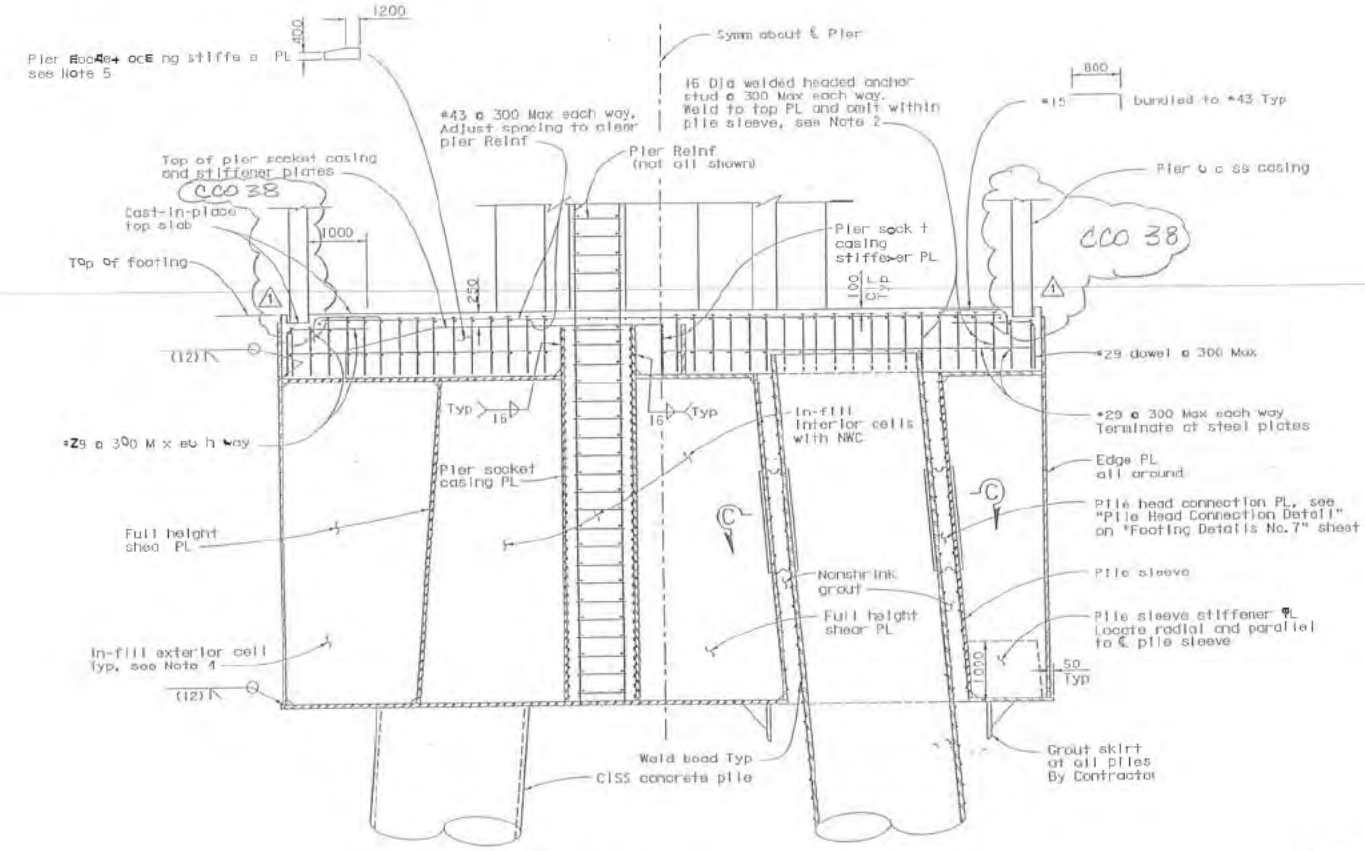

SECTION B-B
1:40

NOTES:

1. For "Welding Notes", see "Footing Details No.2" sheet.
2. For studs longer than 200 mm, as an option headed anchor stud may be substituted with deformed bar anchor stud of the same diameter and length.
3. For Section C-C, see "Footing Details No.6 sheet.
4. In-fill exterior cells with a 1500 mm bottom lift of NWC, fill the remainder with LWC.
5. Diagonal pier socket casing stiffener plate

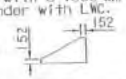

CCO 38

MARK	DATE	DESCRIPTIONS	BY	CH'D
1	01/01/03	REVISE PIER ACCESS CASING BASE DETAIL	RN	MS

REVISIONS

CONTRACT CHANGE ORDER NO. 38
SHEET 6 OF 10

ALL DIMENSIONS ARE IN MILLIMETERS UNLESS OTHERWISE SHOWN

SAN FRANCISCO OAKLAND BAY BRIDGE
EAST SPAN SEISMIC SAFETY PROJECT

SKYWAY STRUCTURES

FOOTING DETAILS NO.5

DESIGN-CONSULTANT 7/3/03
SIGN OFF DATE

DESIGN	R. Soh/R. Nett/J. Davis	DRAWN	T. Ingham
DETAILS	R. Soh	CHECKED	T. Ho
QUANTITIES	J. Lavadini	DESIGN	D. Harrison

PREPARED FOR THE STATE OF CALIFORNIA DEPARTMENT OF TRANSPORTATION

Sajid Abbas
PROJECT ENGINEER

BRIDGE NO. 34-0006L/R
KILOMETER POST 13.9/14.3, 0.0/1.6

CU 04
CA 013021

DISREGARD PRINTS DATED
EARLIER REVISION DATES

REVISION DATES WHEN PRINT SHOWS

SHEET 059

ORIGINAL SCALE IN MILLIMETERS FOR REVISED PLANS

Rev. Date 5-18-99

100 % PLANS

TIME PLOTTED: 13 09:43:58 AM

DIST.	COUNTY	ROUTE	KILOMETER POST TOTAL PROJECT	SHEET NO.	TOTAL SHEETS
04	SF, Ala	80	13.9/4.3, 0.0/1.6	495R2	978

Madan K. Sah
REGISTERED ENGINEER - CIVIL

6-04-01
PLANS APPROVAL DATE

The State of California or its officers or agents shall not be responsible for the accuracy or completeness of electronic copies of this plan sheet.

REGISTERED PROFESSIONAL ENGINEER Madan Kumar Sah No. C 59203 Exp. 6/30/03 CIVIL STATE OF CALIFORNIA

T.Y. LIN / MOFFATT & NICHOL
825 BATTERY STREET
SAN FRANCISCO, CA 94111

Caltrans our has a web site! To get to the web site, go to http://www.dot.ca.gov

THIS SHEET REPLACES SHEET NO. 495 OF 978 OF PLAN APPROVED JUNE 04, 2001

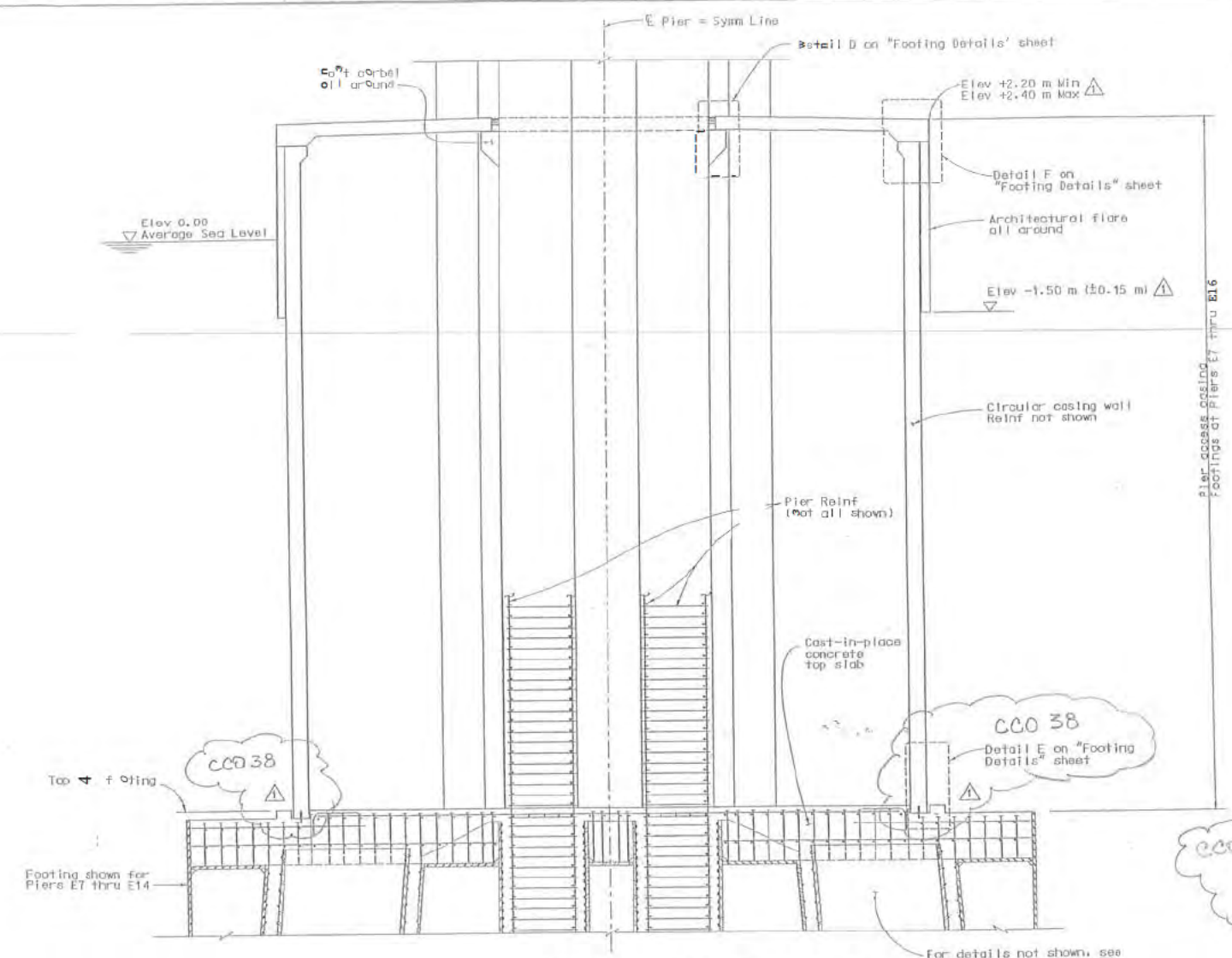

SECTION F-F (TOP OF SUBMERGED FOOTING)
1:40

For details not shown, see Sections A-A for Piers E7 thru E14, and Section B-B for Piers E15 thru E16

ALL DIMENSIONS ARE IN MILLIMETERS UNLESS OTHERWISE SHOWN

NOTES:

1. For Sections A-A and B-B, see "Footing Details" sheets.

CCO 38

MARK	DATE	DESCRIPTIONS	BY	CH'D
1	07/03/03	REVISE ACCESS CASING BASE DETAIL AND ELEVATIONS	RN	MS

REVISIONS

CONTRACT CHANGE ORDER NO. 38
SHEET 7 OF 10

SAN FRANCISCO OAKLAND BAY BRIDGE
EAST SPAN SEISMIC SAFETY PROJECT

SKYWAY STRUCTURES

FOOTING DETAILS NO. 10

DESIGN-ENGINEER 7/3/03
SIGN OFF DATE

DESIGN	BY M. Sah/R. Nutt/J. Davis	CHECKED T. Ingham	
DETAILS	BY M. Sah	CHECKED T. Ho	
QUANTITIES	BY J. Lavantini	CHECKED D. Harrison	

PREPARED FOR THE STATE OF CALIFORNIA DEPARTMENT OF TRANSPORTATION

Sajid Abbas
PROJECT ENGINEER

BRIDGE NO. 34-0006L/R
KILOMETER POST 13.5/14.3, 0.0/1.6
CU 04

ORIGINAL SCALE IN MILLIMETERS

DATE PLOTTED => 27/02/2001 TIME PLOTTED => 08:58:33 AM

SHEET 100 OF 978

DIST.	COUNTY	ROUTE	KILOMETER POST TOTAL PROJECT	SHEET No.	TOTAL SHEETS
04	SF/Ala	80	13.9/14.3, 0.0/1.6	496R2	978

REGISTERED ENGINEER - CIVIL

6-4-01

PLANS APPROVAL DATE

The State of California or its officers or agents shall not be responsible for the accuracy or completeness of electronic copies of this plan sheet.

T.Y. LIN / MOFFATT & NICHOL
835 BATTERY STREET
SAN FRANCISCO, CA 94111

THIS SHEET REPLACES SHEET NO. 496 OF 978 OF PLAN APPROVED JUNE 04, 2001

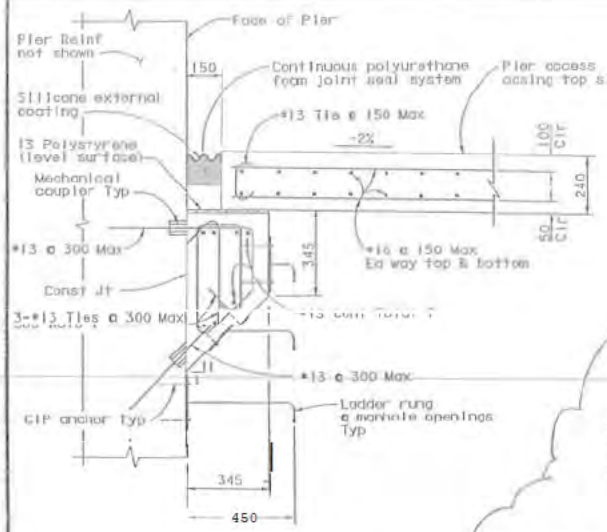

DETAIL D
1:10

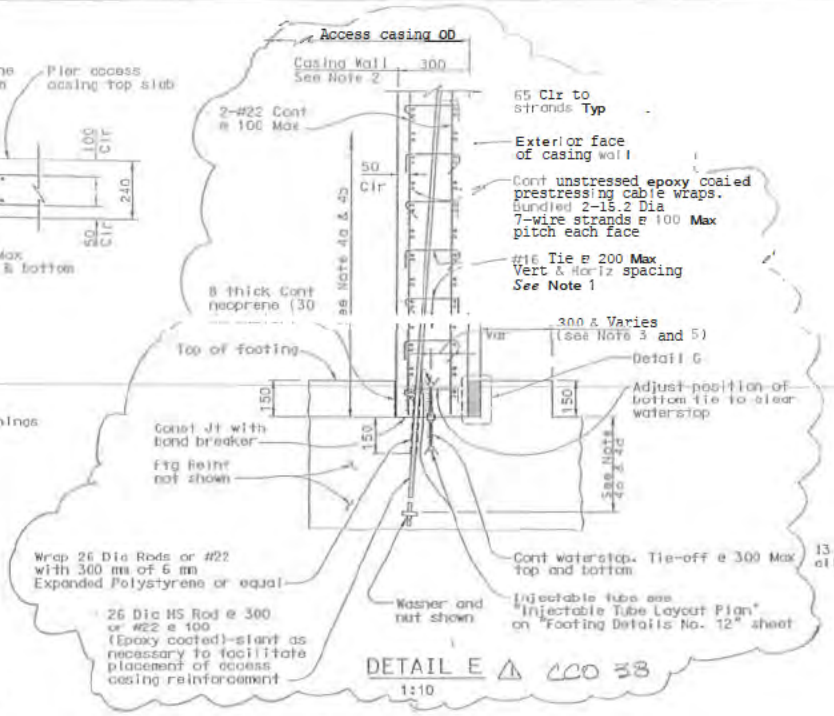

DETAIL E △ CCO 38
1:10

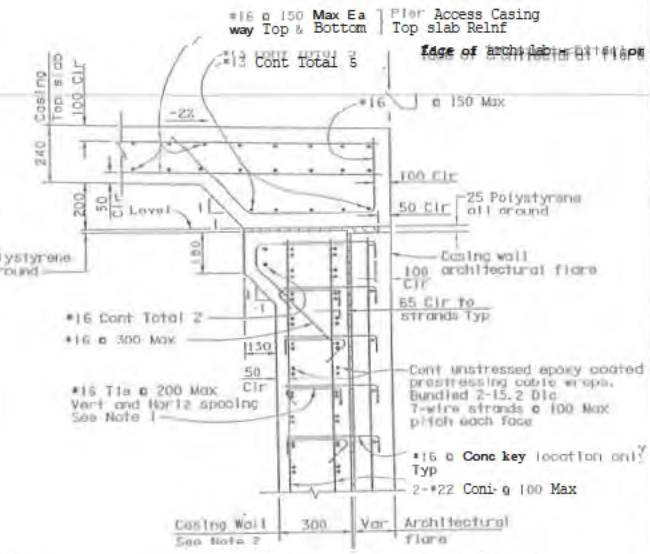

DETAIL F
1:10

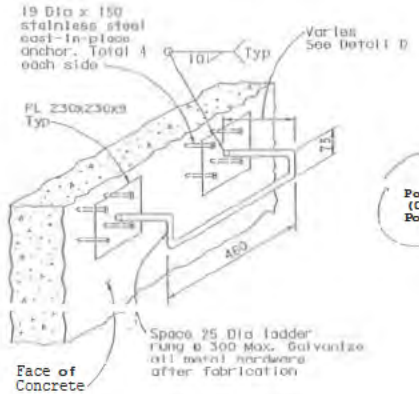

LADDER RUNG DETAILS
1:10

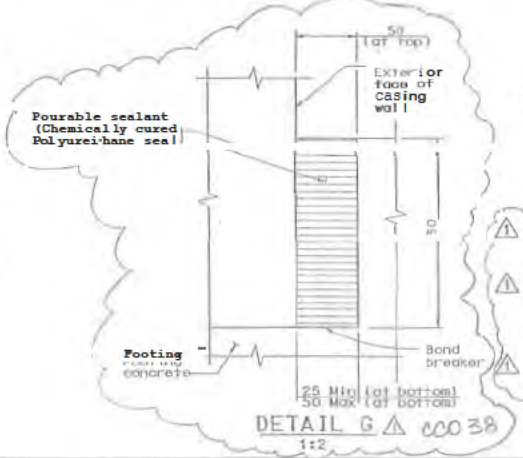

DETAIL G △ CCO 38
1:2

NOTES:

1. All erndte 90° and 135° hooks between adjacent ties. Orientate hook diagonally to engage both vertical and horizontal bars in the mat.
2. No Const joint allowed within the casing wall unless approved by the Engineer.
3. △ Reduce width of curb to conform to interior vertical surface of steel edge plate at Piers E15 and E16.
4. △ Provide the following minimum embedment of HS rods or bars
   a. 26 Dia HS Rod - 2220 mm
   b. #22 - 1200 mm
   c. 26 Dia HS Rod with 100 Dia x 25 washer and nut - 810 mm
   d. #22 with welded headed anchor - 380 mm
5. △ Horizontal 25 Dia temporary drain holes at 3000 minimum spacing may be provided at Contractor's option. Holes to be permanently sealed prior to placement of permanent sealant.

CCO 38

ALL DIMENSIONS ARE IN MILLIMETERS UNLESS OTHERWISE SHOWN

MARK	DATE	DESCRIPTIONS	BY	CH'D
△	07/03/01	REVISE DETAIL E, NOTES & ADD DETAIL G	RN	MS
		REVISIONS		

CONTRACT CHANGE ORDER NO. 38
SHEET 8 OF 10

SAN FRANCISCO OAKLAND BAY BRIDGE
EAST SPAN SEISMIC SAFETY PROJECT

SKYWAY STRUCTURES

FOOTING DETAILS NO. 11

DESIGN M. Sah/M. Nutt/J. Davis
DETAILS M. Sah
QUANTITIES J. Leventini
CHECKED T. Ingham
T. Ho
D. Hamilton

PREPARED FOR THE STATE OF CALIFORNIA DEPARTMENT OF TRANSPORTATION

Sajid Abaas
PROJECT ENGINEER

34-0006L/R
13.9/14.3, 0.0/1.6

CU 04

DESIGN OFFICE CHIEF

SIGN-OFF DATE

Rev. Date: 5-8-00

DIST.	COUNTY	ROUTE	KILOMETER POST TOTAL PROJECT	SHEET NO.	TOTAL SHEETS
04	SF/Alo	80	13.9/14.3. 0.0/1.6	497R2	978

REGISTERED ENGINEER - CIVIL

6-4-01

PLANS APPROVAL DATE

The State of California or its officers or agents shall not be responsible for the accuracy or completeness of electronic copies of this plan sheet.

T.Y. LIN / MOFFATT & NICHOL
825 BATTERY STREET
SAN FRANCISCO, CA 94111

Caltrans now has a web site! To get to the web site, go to http://www.dot.ca.gov

THIS SHEET REPLACES SHEET NO. 497 OF 978 OF PLAN APPROVED JUNE 04, 2001

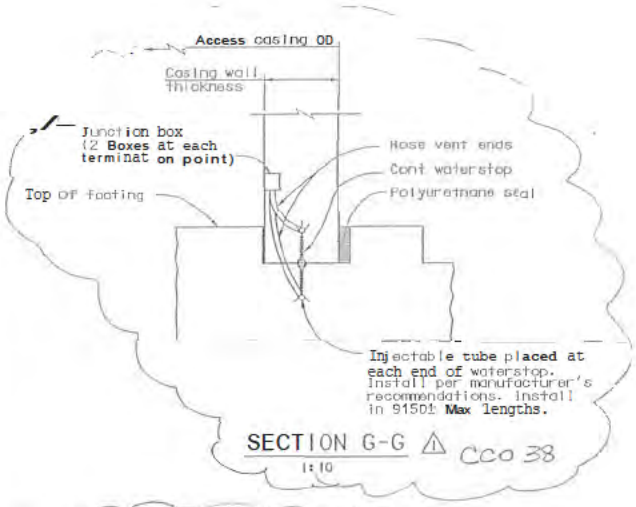

SECTION G-G ⚠ CCO 38

1:10

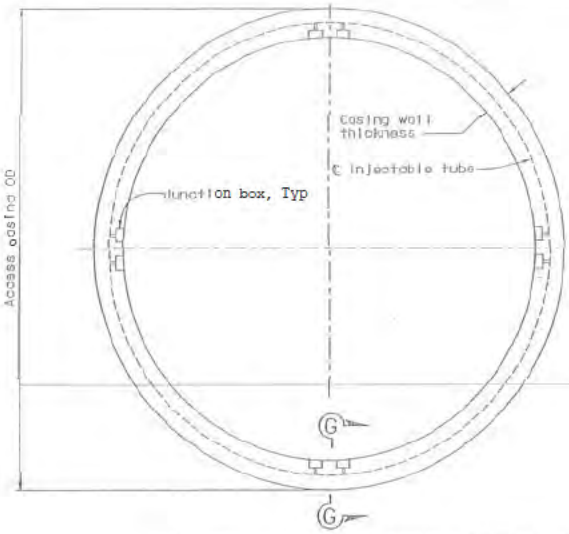

INJECTABLE TUBE LAYOUT PLAN ⚠

NTS

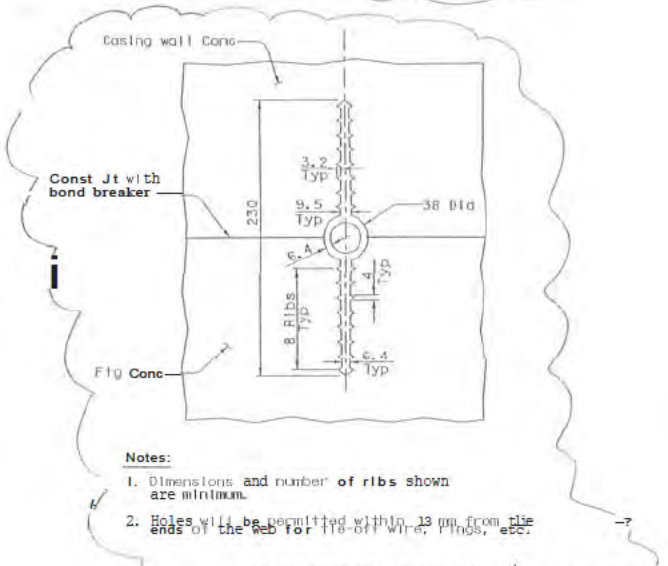

Notes:

1. Dimensions and number of ribs shown are minimum.
2. Holes will be permitted within 13 mm from the ends of the web for tie-off wire, rings, etc.

WATERSTOP DETAIL ⚠ CCO 38

1:2

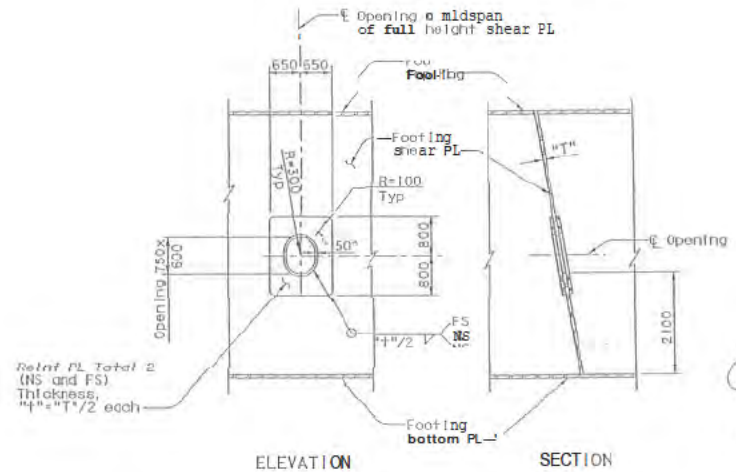

FOOTING SHEAR PLATE
ACCESS OPENING

1:50

ALL DIMENSIONS ARE IN MILLIMETERS UNLESS OTHERWISE SHOWN

CCO 38

MARK	DATE	DESCRIPTIONS	BY	CHK'D
1	6/4/03	REVISE WATERSTOP DETAIL & ADD INJECTABLE TUBE DETAILS	RN	MS

REVISIONS

CONTRACT CHANGE ORDER NO. 38
SHEET 9 OF 10

SAN FRANCISCO OAKLAND BAY BRIDGE
EAST SPAN SEISMIC SAFETY PROJECT

SKYWAY STRUCTURES

FOOTING DETAILS NO. 12

DESIGN DIVISION 7/3/03 SIGN OFF DATE

DESIGN: M. Sala/R. Ruttl/A. Denis
DETAILS: M. Soh
QUANTITIES: J. Leventini
DRAWN: T. Ingham
CHECKED: T. Ho
CHECKED: D. Harrison

PREPARED FOR THE STATE OF CALIFORNIA DEPARTMENT OF TRANSPORTATION

Sajid Abbas, PROJECT ENGINEER

BRIDGE NO. 34-0006L/R
KILOMETER POST 13.9/14.3, 0.0/1.6

CU 04
EA 017021

ORIGINAL SCALE IN MILLIMETERS FOR REDUCED PLANS

DISREGARD PRINTS BEARING EARLIER REVISION DATES

REVISION DATES (PRELIMINARY STAGE ONLY)

SHEET OF 000

10-1.32 SEALING JOINTS (Revised)

Joints at the pier access casings shall be sealed in conformance with the details shown on the plans, the manufacturer's recommendations, the provisions in Section 51, "Concrete Structures," of the Standard Specifications, and these special provisions.

Silicone seals shall not be permitted.

Polyurethane seals shall be "Sikaflex-2c" as supplied by the following manufacturer, or equal:

SIKA CORPORATION
201 Polito Avenue
Lyndhurst, NJ 07071

TEL: (800) 933-7452
FAX: (201)933-6225

Inject-able tubes and junction boxes shall be DuraJect Injection Hose system supplied by the following manufacturer, or equal:

BBZ USA, Inc.
P.O. Box 2111
Bristol, CT 06011-2111

TEL: (860) 583-3232
FAX: (860) 583-3434

CCO: 38	Suppl. No. 0	Contract No, 04 - 012024	Road 04-SF,Ala-80-13.9/14.3,0.0/1.6	FED. AID LOC.: ACIM-080-1(085)8N

To: **KIEWIT / FCI / MANSON a JV**

You are directed to make *the* following changes from *the* plans and specifications *or* do the following described work not included in the plans and specifications for this contract. ***NOTE: This change order is not effective until approved by the Engineer.***

Description of work to be done, estimate of quantities and prices to be paid. (Segregate between additional work at contract price, agreed price and force account.) Unless otherwise stated, rates for rental of equipment cover only such time as equipment is actually used and no allowance will be made for idle time. This last percentage shown is the net accumulated increase or decrease from the original quantity in the Engineer's Estimate.

Estimate of Decrease in Contract Item at Contract Price:

(F) Item No. 39: STRUCTURAL CONCRETE
-21.4 M3 (–0.08%) @ $425.00 /M3 = –$9,095.00 (–0.08%)

Item No. 55: JOINT SEAL (TYPE B - MR 30 MM)
-790 M (–100.00%) @ $92.00 /M = –$72,680.00 (–100.00%)

(F) Item No. 63: BAR REINFORCING STEEL (EPOXY COATED)
-4060 KG (–0.04%) @ $2.60 /KG = –$10,556.00 (–0.25%)

Total Decrease in Contract Items ($92,331.00)

The quantity decrease shown here for Contract Item Numbers 39 and 63, when combined with quantities shown in the engineer's estimate, and as modified by any previous change orders, will be the final quantities for which payment will be made for each contract item.

Extra Work at Lump Sum:

Modify the footing details at the base of the Pier Access Casing on top of the Pier Footing at each footing location as shown on sheets 3 through 9 of this change for the SFOBB East Span Skyway, Bridge Nos. 34-0006L/R. The concrete curb shall be cast monolithically with the footing concrete top slab.

The revised contract plan sheets plans reflecting this change are 484R2, 485R2, 489R2, 490R2, 495R2, 496R2, and 497R2 of 978.

The contract Special Provisions shall be amended by eliminating Section 10-1.32, "Sealing Joints," and replacing it with revised Special Provision Section 10-1.32 as provided on sheet 10 of this change.

For this work, the Contractor will be paid an agreed lump sum amount of $823,198. This sum constitutes full compensation, including all markups, for all direct and indirect costs, all associated project impacts, and all Time Related Overhead (TRO) expenses.

This agreed lump sum will be paid to the Contractor per the following pay schedule for the 20 locations affected by this contract change:

Cast Footing Curb	(20 ea. @ $20,579.95)	=	$411,599.00
Complete Curb, Wall Detail, & Joint Seal	(20 ea. @ $20,579.95)	=	$411,599.00
	TOTAL	=	$823,198.00

In no case will the total amount of all the paid installments exceed the agreed lump sum amount of $823,198.

CCO: 38	Suppl. No. 0	Contract No, 04 - 012024	Road 04-SF,Ala-80-13.9/14.3,0.0/1.6	**FED. AID LOC.:** ACIM-080-1(085)8N

Total cost of Extra Work at Agreed Lump Sum $823,198.00

Total cost this change order $730,867.00

No adjustment in Contract time will be made as this change order does not affect the controlling operations.

Estimated Cost: Increase ☑ Decrease ☐ $730,867.00

By reason of this order the time of completion will be adjusted as follows: 0 days

Submitted by		
Signature	**Resident Engineer:** COE D.	**Date** 10-17-03
Approval Recommended by		
Signature	Construction Engineer: COE D.	**Date** 10-17-03
Engineer Approval by		
Signature	(Print name and title) PETER SIEGENTHALER - Chief	**Date**

We the undersigned contractor, have given careful consideration to the change proposed and agree, if this proposal is approved, that we will provide all equipment, furnish the materials, except as may otherwise be noted above, and perform all services necessary for the work above specified, and will accept as full payment therefor the prices shown above.

NOTE: If you, the contractor, do not sign acceptance of this order, your attention is directed to the requirements of the specifications as to proceeding with the ordered work and filing a written protest within the time therein specified.

Contractor Acceptance by		
Signature	**(Print name and title)** A.T. Okoro, Project Director	**Date** 11/14/03

CONTRACT CHANGE ORDER

Change Requested by: Engineer

CCO: 38	Suppl. No. 1	Contract No. 04 - 012024	Road 04-SF,Ala-80-13.9/14.3,0.0/1.6	FED. AID LOC.: ACIM-080-1(085)8N

To: **KIEWIT / FCI / MANSON a JV**

You are directed to make the following changes from the plans and specifications or do the following described work not included in the plans and specifications for this contract. ***NOTE: This change order is not effective until approved by the Engineer.***

Description of work to be done, estimate of quantities and prices to be paid. (Segregate between additional work at contract price, agreed price and force account.) Unless otherwise stated, rates for rental of equipment cover only such time as equipment is actually used and no allowance will be made for idle time. This last percentage shown is the net accumulated increase or decrease from the original quantity in the Engineer's Estimate.

As shown on sheets 2 through 5 of 5 of this change order, furnish and install bar reinforcing steel for the pier/footing access casing concrete curbs, and furnish 153 mm waterstop in lieu of 230 mm waterstop for the pier access casing walls.

The revised contract plan sheets reflecting this change are 485R3, 496R4, 497R4, and 497A of 978.

Extra Work at Lump Sum:

For the extra work required to fabricate, furnish, and install the bar reinforcing steel for the pier/footing access casing curb, the Contractor shall receive an agreed lump sum amount of $47,646.00. This agreed amount constitutes full compensation, including all mark-ups, for all direct and indirect costs, all overhead expenses, and all associated project impacts.

Cost of Extra Work at Agreed Lump Sum $47,646.00

Adjustment of Compensation at Lump Sum:

For furnishing 153 mm waterstop in lieu of 230 mm waterstop and for restocking any unused 230 mm waterstop already delivered to the project, the Contractor shall receive an adjustment in compensation for an agreed lump sum amount of $6,711.00. This agreed amount constitutes full compensation, including all mark-ups, for all direct and indirect costs, all overhead expenses, and all associated project impacts.

Adjustment of Compensation at Agreed Lump Sum $6,711.00

Estimated Cost: Increase ☑ Decrease ☐ **$54,357.00**

By reason of this order the time of completion will be adjusted as follows: 0 days

Submitted by

Signature	Resident Engineer: COE D.	Date 5-5-04

Approval Recommended by

Signature	Construction Engineer: COE D.	Date 5-5-04

Engineer Approval by

Signature	(Print name and title) PETER SIEGENTHALER - Chief	Date

We the undersigned contractor, have given careful consideration to the change proposed and agree, if this proposal is approved, that we will provide all equipment, furnish the materials, except as may otherwise be noted above, and perform all services necessary for the work above specified, and will accept as full payment therefor the prices shown above.

NOTE: If you, the contractor, do not sign acceptance of this order, your attention is directed to the requirements of the specifications as to proceeding with the ordered work and filing a written protest within the time therein specified.

Contractor Acceptance by

Signature	(Print name and title) A. T. Skoro, Project Director	Date 4/22/04

Department of Transportation
EAST SPAN SEISMIC SAFETY PROJECT
CONCURRENCE FOR CHANGE ORDERS

Contract No. 04-012024
Co. & Rte Ala-80-13.9/14.3, 0.0/1.6

CCO#: 38 **S#:** 1
Title: Access Casing Curb Rebar
Date: February 10, 2004

To: DOUGLAS COE, Resident Engineer

Requested By: Bill Casey, Senior Engineer (initials ____)

Description of Work:
Contractor to furnish and install bar reinforcing steel to the footing/access casing curbs and replace the 9" waterstop of the contract plans with a 6" waterstop.

Reason for Change:
The original contract change order included constructing the footing/access casing curbs without reinforcement. The Designer has since then revisited the detail and has requested reinforcment be added to the curbs.
Replacing the 9" waterstop with a 6" waterstop is necessary to resolve the conflict issue the 9" waterstop had with the top mat of the footing reinforcement.

Discussed with persons noted below:

FHWA:	Date	Br. Const:	Date
District:	Date	Br. Design:	Date
Other:	Date	Br. Geology:	Date
		Br. Maintenance:	Date

Estimated Cost: $60,000.00

Recommended Method of Payment:
- ☒ Contract Items
- ☐ Extra Work at Force Account
- ☒ Agreed Price (LS or UP)
- ☐ Other:

Recommended Time Adjustment: 0 Working Days

Prior Approvals:

1. This represents an acknowledgement that the individuals below are in concurrence with the change order.
2. This represents an acknowledgement that I am in concurrence with this change order which must be approved before any work is done.

Comments:

2-17-04 — 1. ✓ 2. ___
Douglas Coe, Resident Engineer — Date

2-24-04 — 1. ✓ 2. ___
Pete Siegenthaler, Principal Construction Engineer — Date

1. ___ 2. ___
Robert Kobal, HQ Construction Coordinator — Date

TELECOPY

California Department of Transportation

CONSTRUCTION DIVISION

TO: District 4 CCO Desk

Date: 9/10/04

Contract No.: 4 - 012024

Road: SF,ALA-80-13,9/14.3,0.0/1.6

FED. No.: ACIM-080-1(085)8N

To: SARTIPI - 04

Attention: 04 - AQRABAWI

HQ Direction: TO ISSUE AND APPROVE

CCO No. 038 **Sup. No.** 1 **Rev. No.** 1 **Old CCO Code:** - -

Per Your Submittal Dated 9/10/04 **New CCO Code:** C - H - P - A

PROVIDES FOR FURNISHING AND INSTALLING BAR REINFORCING STEEL FOR THE PIER FOOTING/ACCESS CASING CURBS AND REPLACING THE 230 MM WATERSTOP WITH A 153 MM WATERSTOP DUE TO CONSTRUCTABILITY ISSUES. NOTE THAT CCO 038 S0 PROVIDED FOR AN UNREINFORCED CURB AND THE DESIGNER HAS SINCE DETERMINED THAT REINFORCEMENT IS REQUIRED.

I&A IS CONTINGENT ON THE FOLLOWING:

1.OBTAINING THE CONTRACTOR'S SIGNATURE ON THE AGREED PRICE CHANGE ORDER. FAILURE TO OBTAIN THE CONTRACTOR'S SIGNATURE WILL REQUIRE AN ALTERNATE PAY METHOD AND RESULT IN THE NEED FOR A REVISED I&A REQUEST.

2. OBTAINING THE DESIGN ENGINEER'S VALID STAMP ON EACH REVISED PLAN SHEET DENOTING ITS APPLICABILITY TO ONLY THE REVISIONS. THE COVER LETTER PROVIDED DOES NOT APPEAR TO PROVIDE AN EASY METHOD TO TRACK THESE CHANGES, ESPECIALLY FOR AS-BUILT PURPOSES.

THE TOTAL COST OF THIS CHANGE, INCLUDING THIS SUPPLEMENT, IS SHOWN AS $785,224.00.

Items:	$0.00
Force Account:	$0.00
Agreed Price:	$47,646.00
Adj. of Comp.	$6,711.00
Total:	**$54,357.00**

U.S. DEPARTMENT OF TRANSPORTATION FEDERAL HIGHWAY ADMINISTRATION CALIFORNIA DIVISION OFFICE

RECORD OF PRIOR APPROVAL FOR MAJOR CONTRACT CHANGE ORDERS

PROJECT NO.	CCO NO.	CONTRACT NO.	DIST-CO-RTE-PM
ACIM -080-1(085)8N	38 S1	04-012024	04-SF,Ala-80-13.9/14.3,0.0/1.6

REQUESTED BY:	CALTRANS HQ	DATE
Derek Davis	X RE/DISTRICT	8/25/04

PROPOSED CHANGE:

This change order provides for furnishing and installing bar reinforcing steel for the pier footing/access casing curbs and replacing 230 mm waterstop as provided in the contract plans with 153 mm waterstop.

REASON FOR CHANGE:

The original design details for the construction joint between the base of the access casing wall and the top of the footing utilized both a waterstop and a Type B Joint Seal to block the flow of water into the access casings. The use of a Type B Seal at this location presented constructabiliy and performance issues. In order to resolve these issues, TY Lin, the Designer of Record, recommended the use of a concrete curb and pourable polyurethane seal instead of the Type B Joint Seal detail. The Designer also recommended the installation of a "DuraJect" System in the casing wall at the construction joint interface as a retrofit measure in the event that leaks develop.

Contract Change Order No. 38 (given prior approval on December 2, 2003) included provisions for constructing the pier footing /access casing curbs without bar reinforcing steel. The Designer, TYLin International, JV (TYLin), re-examined the design and has determined that bar reinforcing steel is required in the curbs and has revised the contract plans to reflect this change. This change order is also needed to resolve the conflict between the waterstop in the pier casing access walls and the top mat of footing bar reinforcing steel by modifying the size of the waterstop.

This change provides for compensating the contractor a lump sum amount for the extra work required to fabricate, furnish, and install the additional bar reinforcing steel for the pier footing/access casing curbs and for furnishing 153 mm waterstop in lieu of 230 mm waterstop, and restocking the unused 153 mm waterstop delivered to the project.

AS DISCUSSED IN FIELD (REPORT NO. ___)

TIME EXTENSIONS	ACTIVITY ON CRITICAL PATH AFFECTED BY CCO (IF TIME EXTENSION INVOLVED)
* NONE ___ DAYS ___ DEFERRED	

ESTIMATE OF COST:	CCO:	METHOD OF PAYMENT
$ 54,357.00 INCREASE $____DECREASE	CONTRACT ITEM X AGREED PRICE	X ADJUSTMENT OF COMPENSATION EXTRA WORK AT FORCE ACCOUNT

THE WORK COVERED BY THE PROPOSED REVISION AS DESCRIBED ABOVE IS APPROVED SUBJECT TO SUBMISSION OF SUPPORTING DOCUMENTATION INCLUDING COST EVALUATION AND JUSTIFICATION OF TIME EXTENSIONS.

OTHER CONDITIONS:

PRIOR APPROVAL TO PROCEED GRANTED BY:	DATE OF AUTHORIZATION:
Nancy E. Bobb	8/26/04

Alfred Martinez
Sent by: Alfred Martinez

08/24/2004 12:45 PM

To: Bill Howe/D04/Caltrans/CAGov@DOT
cc: Bill Casey/D04/Caltrans/CAGov@DOT, Bernard R Feather/D04/Caltrans/CAGov@DOT, Derek Davis/D04/Caltrans/CAGov@DOT, Samad Hamoud/HQ/Caltrans/CAGov@DOT
Subject: EA 012024_CCO_No 38_Supplement_No 1 Waterstop and rebar

Structure's Maintenance concurs with CCO_38_supplement No 1.

Al Martinez
Structure's Maintenance Liaison

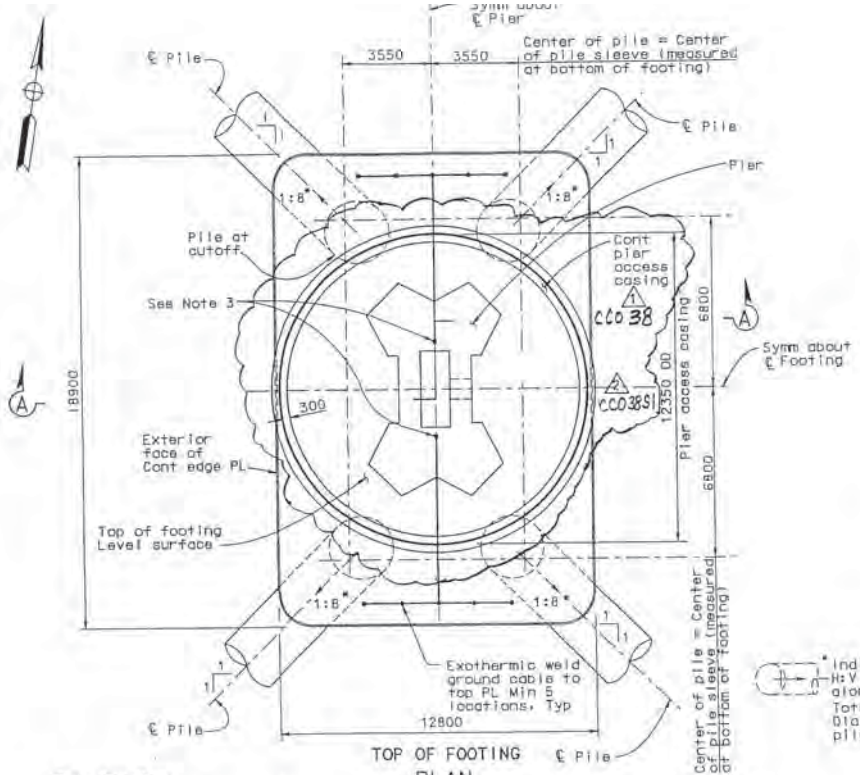

TOP OF FOOTING
PLAN
1:100

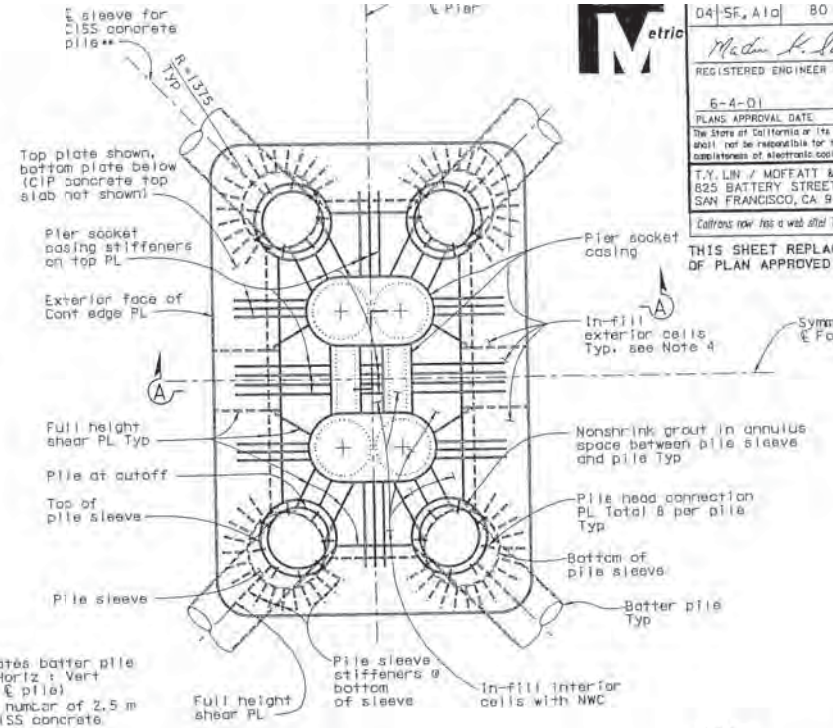

PARTIALLY ENCASED STRUCTURAL STEEL
PLAN
1:100

** Batter pile sleeve to match alignment of pile

* indicates batter pile
H:V (Horiz : Vert along ℄ pile)
Total number of 2.5 m Dia CISS concrete piles=4 per pier

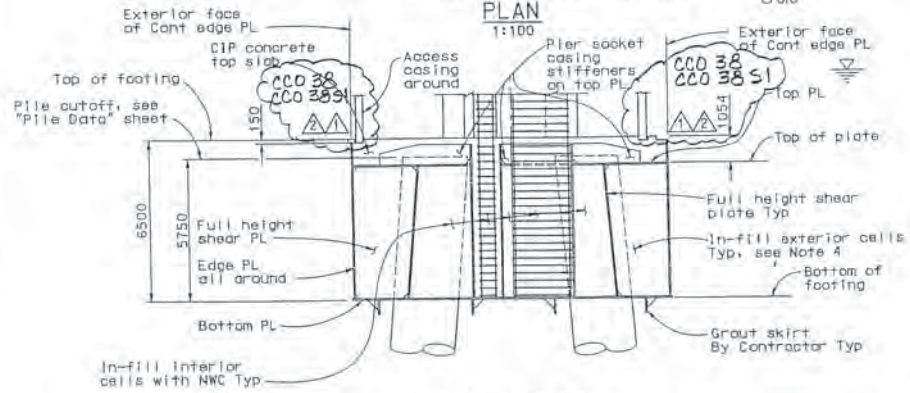

SECTION A-A
1:100

LEGEND:

Approximate water Level

NOTES:

1. For pile details, see "Pile Details" sheets.
2. For footing reinforcement, see "Footing Details" sheets.
3. Embedded ground cable 250 Kcml, bare copper. For cable termination at top of pier, see "Pier Layout" sheets.
4. In-fill exterior cells with a 1500 mm bottom lift of NWC, fill remainder with LWC.
5. For footing construction tolerances, see "Footing Construction Tolerances" sheet.

MARK	DATE	DESCRIPTIONS	BY	CH'D	CCO#
2	03/16/04	REVISE CURB TO SHOW CANTILEVER	MS	SA	38S1
1	07/03/03	REVISE PIER ACCESS CASING BASE DETAIL	RN	MS	38

REVISIONS

CONTRACT CHANGE ORDER NO. 38 S1
SHEET 2 OF 5

100 % PS&E

ALL DIMENSIONS ARE IN MILLIMETERS UNLESS OTHERWISE SHOWN

04 SF, A10 80 0.0/1.6 485R3 978

REGISTERED ENGINEER - CIVIL
Madan Kumar Sah
Exp. 6/30/03
CIVIL
STATE OF CALIFORNIA

6-4-01
PLANS APPROVAL DATE

The State of California or its officers or agents shall not be responsible for the accuracy or completeness of electronic copies of this plan sheet.

T.Y. LIN / MOFFATT & NICHOL
625 BATTERY STREET
SAN FRANCISCO, CA 94111

Caltrans now has a web site! To get to the web site, go to http://www.dot.ca.gov

THIS SHEET REPLACES SHEET NO. 485 OF 978 OF PLAN APPROVED JUNE 04, 2001

SAN FRANCISCO OAKLAND BAY BRIDGE
EAST SPAN SEISMIC SAFETY PROJECT

SKYWAY STRUCTURES

FOOTING LAYOUT PIERS E15 THRU E16

DESIGN OVERSIGHT 3/29/04
SIGN-OFF DATE

DESIGN	BY W. Soh/R. Nutt/J. Denis	CHECKED T. Ingham	
DETAILS	BY M. Soh	CHECKED T. Ho	
QUANTITIES	BY J. Levantini	CHECKED D. Harrison	

PREPARED FOR THE STATE OF CALIFORNIA DEPARTMENT OF TRANSPORTATION

Sajid Abbas
PROJECT ENGINEER

BRIDGE NO. 34-0006L/R
KILOMETER POST 3.9/14.3, 0.0/1.6

CU 04
EA 01202

DIRECTORY PRINTS BEARING EARLIER REVISION DATES

REVISION DATES (PRELIMINARY STAGE ONLY)

SHEET 054 OF

Rev. Date: 5-10-99

ORIGINAL SCALE IN MILLIMETERS FOR REDUCED PLANS 0 10 20 30 40 50 60 70 80 90 100

T·Y·LIN INTERNATIONAL
MOFFATT & NICHOL
a joint venture

SFOBB – Skyway Project
345 Burma Road, Oakland CA 94607
Telephone (510) 622-1071 Facsimile (510) 622-1069

REVISION MARKS ON CONTRACT PLAN CHANGES

SFOBB Skyway Project # 04-012024

Revisions to the following plans were prepared under the supervision of the undersigned engineer.

485R3	Revision Mark 1	Dated	07/03/03
485R3	Revision Mark 2	Dated	03/16/04
496R4	Revision Mark 3	Dated	03/16/04

For the project in SF/ALA County

Route 80

Km Post Description 04-SF, Ala-80-13.9/14.3,0.0/1.6

District/EA 012021

(Signature) 03/16/04 (Date)

Madon Sah
(Name)

(Title)

C 59203
(Registration No.)

06/30/07
(Date of Expiration)

REGISTERED PROFESSIONAL ENGINEER
Madon Kumar Sah
No. C 59203
Exp. 6/30/07
CIVIL
STATE OF CALIFORNIA

OF PLAN APPROVED JUNE 04, 2001

04	SF/Ala	80	13.9/14.3, 0.0/1.6	496R4	978

REGISTERED ENGINEER - CIVIL

6-4-01

PLANS APPROVAL DATE

The State of California or its officers or agents shall not be responsible for the accuracy or completeness of electronic copies of this plan sheet.

Madan Kumar Sah, No. C 59203, Exp. 6/30/03, CIVIL, STATE OF CALIFORNIA

T.Y. LIN / MOFFATT & NICHOL
825 BATTERY STREET
SAN FRANCISCO, CA 94111

Caltrans now has a web site! To get to the web site, go to http://www.dot.ca.gov

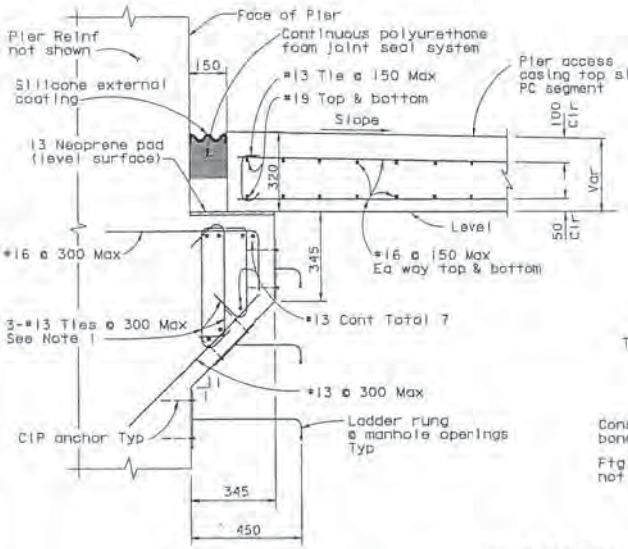

DETAIL D △2 CCO 62
1:10

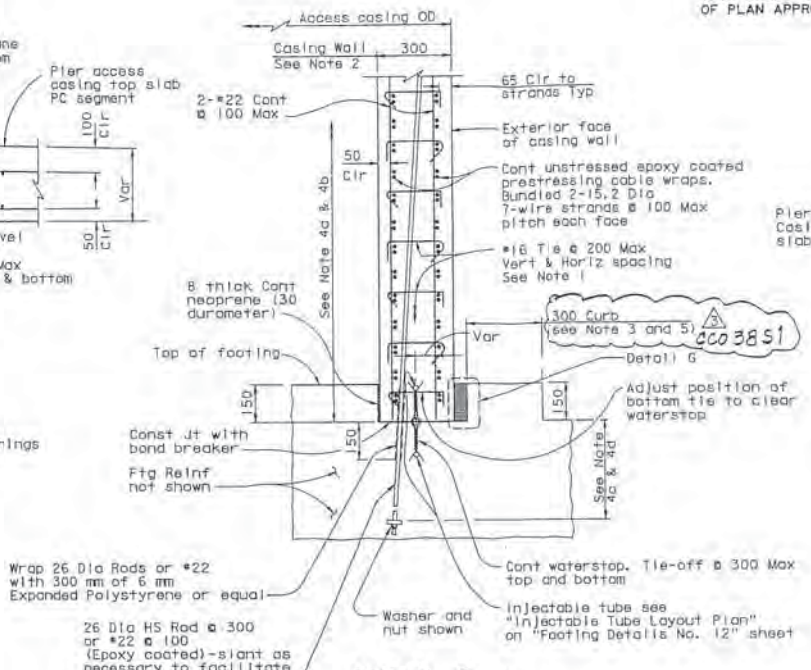

DETAIL E △1
1:10

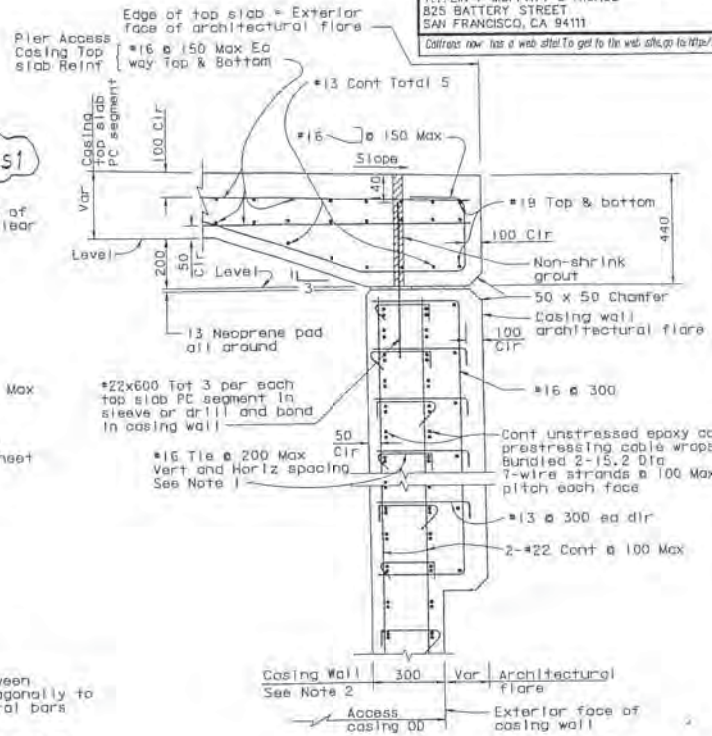

DETAIL F △2 CCO 62
1:10

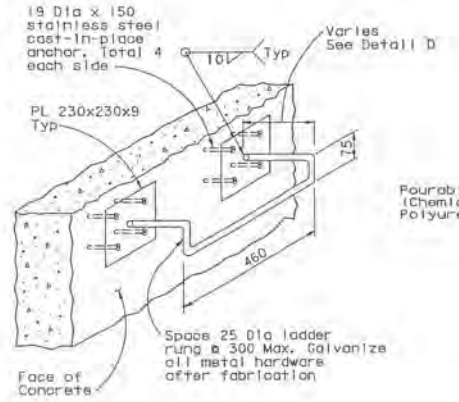

LADDER RUNG DETAILS
1:10

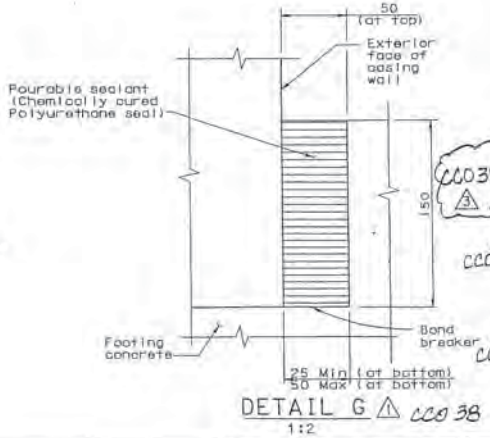

DETAIL G △1 CCO 38
1:2

NOTES:

1. Alternate 90° and 135° hooks between adjacent ties. Orientate hook diagonally to engage both vertical and horizontal bars in the mat.
2. No Const joint allowed within the casing wall unless approved by the Engineer.
3. For curb reinforcement, see "Footing Details No. 13" sheet. △3 △1 CCO 38S1
4. Provide the following minimum embedment of HS rods or bars △1 CCO 38
   a. 26 Dia HS Rod - 2220 mm
   b. #22 - 1200 mm
   c. 26 Dia HS Rod with 100 Dia x 25 washer and nut - 810 mm
   d. #22 with welded headed anchor - 360 mm
5. Horizontal 25 Dia temporary drain holes at 3000 minimum spacing may be provided at Contractor's option. Holes to be permanently sealed prior to placement of permanent sealant. △1 CCO 38

MARK	DATE	DESCRIPTIONS	BY	CH'D	CCO#
△3	03/16/04	REVISE NOTE FOR CURB REINFORCEMENT	MS	SA	38S1
△2	09/19/03	REVISE DETAIL D & F FOR TOP SLAB, CORBEL & ARCHITECTURAL FLARE	CR	MS	62
△1	07/03/03	REVISE DETAIL E, NOTES & ADD DETAIL G	RN	MS	38

REVISIONS

CONTRACT CHANGE ORDER NO. 38S1
SHEET 3 OF 5

100% PS&E

ALL DIMENSIONS ARE IN MILLIMETERS UNLESS OTHERWISE SHOWN

SAN FRANCISCO OAKLAND BAY BRIDGE
EAST SPAN SEISMIC SAFETY PROJECT

SKYWAY STRUCTURES

FOOTING DETAILS NO. 11

DESIGN OFFICE CHIEF 3/29/04
SIGN OFF DATE

DESIGN	BY M. Sah/R. Nutt/J. Denis	CHECKED T. Ingham	
DETAILS	BY M. Sah	CHECKED T. Ho	
QUANTITIES	BY J. Leventini	CHECKED D. Harrison	

PREPARED FOR THE STATE OF CALIFORNIA DEPARTMENT OF TRANSPORTATION

Salid Abbas
PROJECT ENGINEER

BRIDGE NO. 34-0006L/R
KILOMETER POST 13.9/14.3, 0.0/1.6

CU 04
EA 012021

DISREGARD PRINTS BEARING EARLIER REVISION DATES

REVISION DATES (PRELIMINARY STAGE ONLY)

SHEET 065 OF

ORIGINAL SCALE IN MILLIMETERS FOR REDUCED PLANS

Rev. Date: 5-19-98

T·Y·LIN INTERNATIONAL
MOFFATT & NICHOL
a joint venture

SFOBB – Skyway Project
345 Burma Road, Oakland CA 94607
Telephone (510) 622-1071 Facsimile (510) 622-1069

REVISION MARKS ON CONTRACT PLAN CHANGES

SFOBB Skyway Project # 04-012024

Revisions to the following plans were prepared under the supervision of the undersigned engineer.

485R3	Revision Mark 1	Dated	07/03/03
485R3	Revision Mark 2	Dated	03/16/04
496R4	Revision Mark 3	Dated	03/16/04

For the project in SF/ALA County

Route 80

Km Post Description 04-SF, Ala-80-13.9/14.3,0.0/1.6

District/EA 012021

(Signature) 03/16/04 (Date)

Madon Sah
(Name)

(Title)

C 59203
(Registration No.)

06/30/07
(Date of Expiration)

REGISTERED PROFESSIONAL ENGINEER
Madon Kumar Sah
No. C 59203
Exp. 6/30/07
CIVIL
STATE OF CALIFORNIA

Metric

REGISTERED ENGINEER - CIVIL

6-4-01
PLANS APPROVAL DATE

Madan Kumar Sah, No. C 59203, Exp. 6/30/03, CIVIL, STATE OF CALIFORNIA, REGISTERED PROFESSIONAL ENGINEER

The State of California or its officers or agents shall not be responsible for the accuracy or completeness of electronic copies of this plan sheet.

T.Y. LIN / MOFFATT & NICHOL
825 BATTERY STREET
SAN FRANCISCO, CA 94111

Caltrans now has a web site! To get to the web site, go to: http://www.dot.ca.gov

THIS SHEET REPLACES SHEET NO. 497 OF 978 OF PLAN APPROVED JUNE 04, 2001

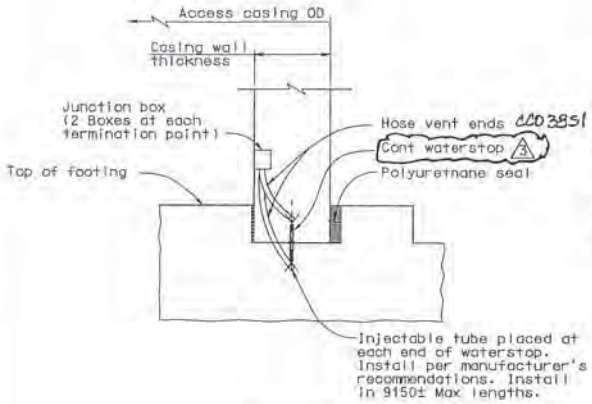

SECTION G-G 1 CCO 38
1:10

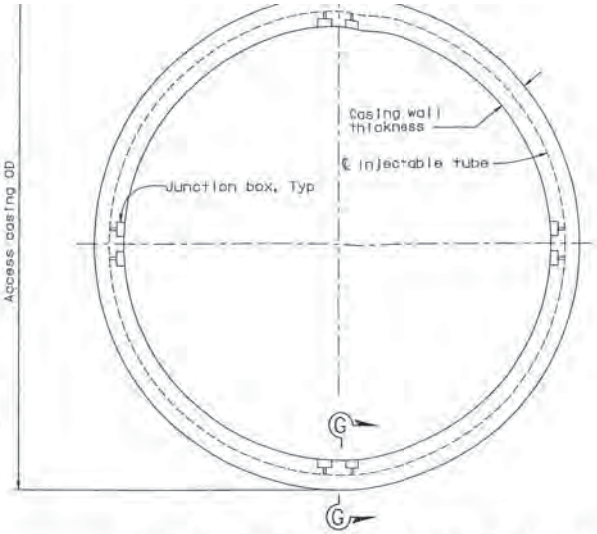

INJECTABLE TUBE LAYOUT PLAN 1 CCO 38
NTS

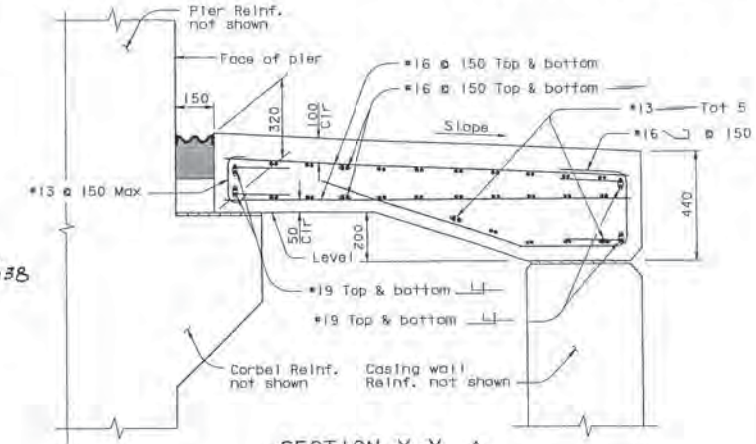

SECTION X-X 2
1:10

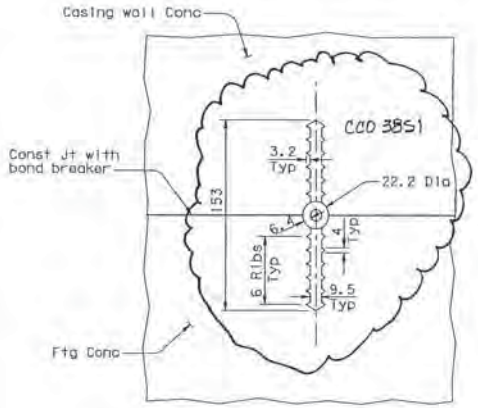

Notes:

1. Dimensions and number of ribs shown are minimum.
2. Holes will be permitted within 13 mm from the ends of the web for tie-off wire, rings, etc.

WATERSTOP DETAIL 1 3 CCO 3851
1:2 CCO38

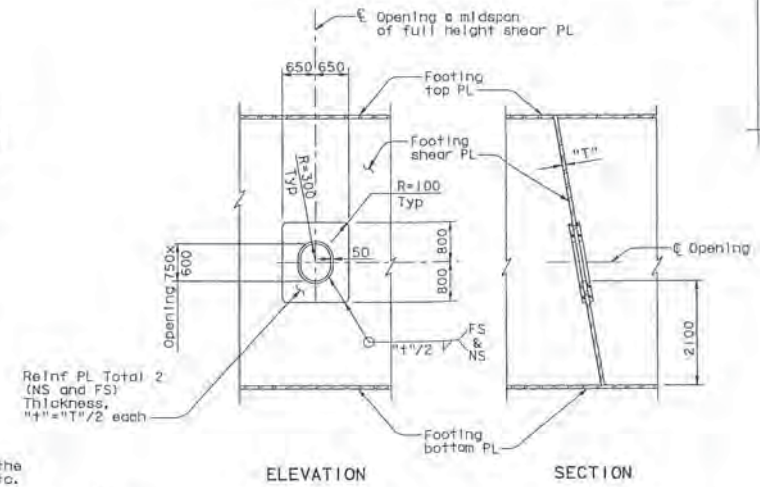

FOOTING SHEAR PLATE ACCESS OPENING
1:50

MARK	DATE	DESCRIPTIONS	BY	CH'D	CCO#
3	07/01/04	REVISE WATERSTOP	MS	SA	3851
2	05/19/03	ADD SECTION X-X	CR	MS	62
1	07/03/03	REVISE WATERSTOP DETAIL & ADD INJECTABLE TUBE DETAILS	RN	MS	38

REVISIONS

CONTRACT CHANGE ORDER NO. 3851
SHEET 4 OF 5

100 % PS&E

ALL DIMENSIONS ARE IN MILLIMETERS UNLESS OTHERWISE SHOWN

DESIGN OVERSIGHT: T.Y. Ingham
SIGN OFF DATE: 7/8/04

DESIGN	M. Sah/R. Nutt/J. Denis	CHECKED	T. Ingham
DETAILS	M. Sah	CHECKED	T. Ho
QUANTITIES	J. Leventini	CHECKED	D. Harrison

PREPARED FOR THE STATE OF CALIFORNIA DEPARTMENT OF TRANSPORTATION

Sajid Abbas
PROJECT ENGINEER

BRIDGE NO. 34-0006L/R
KILOMETER POST 3.9/14.3, 0.0/1.6

CU 04
EA 012021

DISREGARD PRINTS BEARING EARLIER REVISION DATES

SAN FRANCISCO OAKLAND BAY BRIDGE
EAST SPAN SEISMIC SAFETY PROJECT

SKYWAY STRUCTURES

FOOTING DETAILS NO. 12

SHEET 066

Rev. Date: 5-15-98

ORIGINAL SCALE IN MILLIMETERS FOR REDUCED PLANS 0 10 20 30 40 50 60 70 80 90 100

T.Y.LIN INTERNATIONAL
MOFFATT & NICHOL
a joint venture

SFOBB – Skyway Project
345 Burma Road, Oakland CA 94607
Telephone (510) 622-1071 Facsimile (510) 622-1069

REVISION MARKS ON CONTRACT PLAN CHANGES

SFOBB Skyway Project # 04-012024

Revisions to the following plans were prepared under the supervision of the undersigned engineer.

497R4 Revision Mark 3 Dated 07/01/04

For the project in SF/ALA County

Route 80

Km Post Description 04-SF, Ala-80-13.9/14.3,0.0/1.6

District/EA 012021

Madon Sah
(Signature)

07/01/04
(Date)

Madon Sah
(Name)

(Title)

C 59203
(Registration No.)

06/30/07
(Date of Expiration)

REGISTERED PROFESSIONAL ENGINEER
Madon Kumar Sah
No. C 59203
Exp. 6/30/07
CIVIL
STATE OF CALIFORNIA

DIST.	COUNTY	ROUTE	KILOMETER POST TOTAL PROJECT	SHEET NO.	TOTAL SHEETS
04	SF/ALA	80	13.9/14.3, 0.0/1.6	497A	978

Caltrans Metric

REGISTERED ENGINEER - CIVIL

6-4-01

PLANS APPROVAL DATE

The State of California or its officers or agents shall not be responsible for the accuracy or completeness of electronic copies of this plan sheet.

REGISTERED PROFESSIONAL ENGINEER Madan Kumar Sah No. C 59203 Exp. 6/30/07 CIVIL STATE OF CALIFORNIA

T.Y. LIN / MOFFATT & NICHOL
825 BATTERY STREET
SAN FRANCISCO, CA 94111

Caltrans now has a web site! To get to the web site, go to http://www.dot.ca.gov

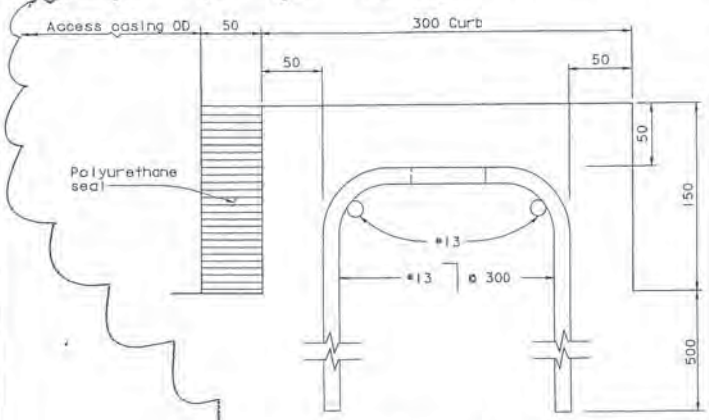

TYPICAL CURB REINF (AT ALL PIERS EXCEPT E16E)
1:2

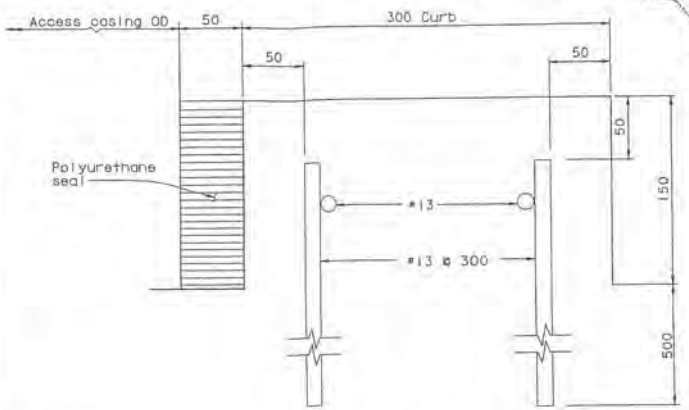

TYPICAL CURB REINF (AT PIER E16E ONLY)
1:2

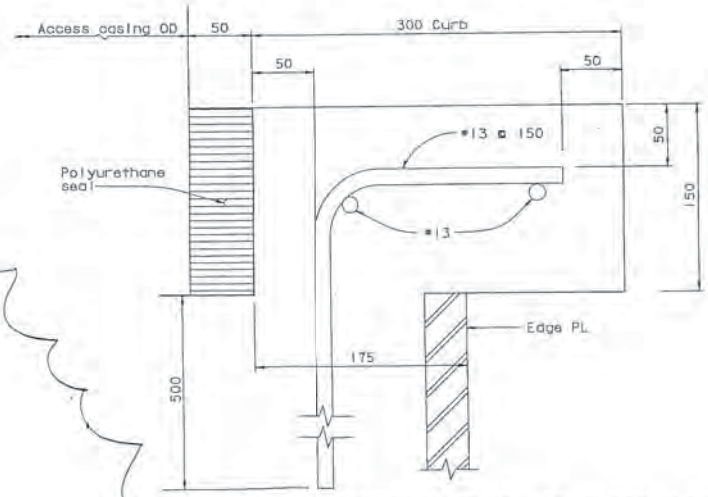

CANTILEVERED CURB REINF (AT PIERS 15 AND E16)
1:2
(Note: For limits of cantilevered curb, see 'Key Plan')

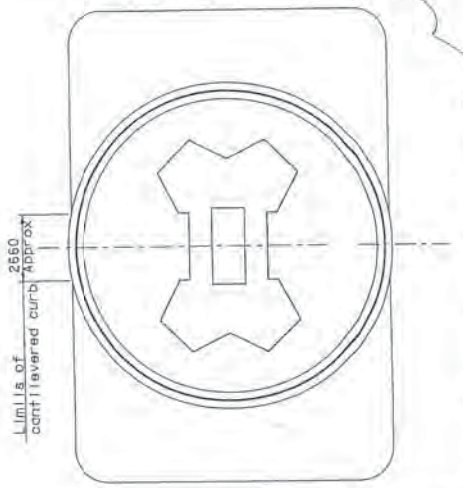

KEY PLAN (PIERS E15 AND E16)

ADDITIONAL SHEET
CONTRACT CHANGE ORDER NO. 3851
SHEET 5 OF 5

ALL DIMENSIONS ARE IN MILLIMETERS UNLESS OTHERWISE SHOWN

SAN FRANCISCO OAKLAND BAY BRIDGE
EAST SPAN SEISMIC SAFETY PROJECT

SKYWAY STRUCTURES

FOOTING DETAILS NO. 13

DESIGN	BY M. Sah	CHECKED R. Nutt	
DETAILS	BY H. Li	CHECKED R. Nutt	
QUANTITIES	BY M. Sah	CHECKED M. Roberts	

DESIGN OVERSIGHT
SIGN OFF DATE 3/29/04

PREPARED FOR THE STATE OF CALIFORNIA DEPARTMENT OF TRANSPORTATION

Sajid Abbas
PROJECT ENGINEER

BRIDGE NO. 34-0006L/R
KILOMETER POST 13.9/14.3, 0.0/1.6

CU 04
EA 012021

DISREGARD PRINTS BEARING EARLIER REVISION DATES

REVISION DATES (PRELIMINARY STAGE ONLY) | SHEET 066A | OF

Rev. Date 5-15-98

ORIGINAL SCALE IN MILLIMETERS FOR REDUCED PLANS 0 10 20 30 40 50 60 70 80 90 100

RESIDENT ENGINEER COE, DOUG

CONTRACT CHANGE ORDER 03B-015

CONTRACT NO. 04-012024

PHONE NUMBER 510 622-5101

FILING DATE 10/07/04

DESCRIPTION ACCESS CASING CURB REBAR

CCO CATEGORY CHPA

APPROVAL DATE 10/07/04

TIME EXTENSION DAY NONE

ITEM NO.	DESCRIPTION OF CHANGE	APPROVED CHANGE QUANTITY	APPROVED CHANGE AMOUNT	CHANGES TO DATE CCO	CHANGES TO DATE QB	AUTHORIZED QUANTITY	QUANTITY PAID TO DATE	EST NO.
	EXTRA WORK -- LUMP SUM (+)		$47,646.00					
	ADJUSTMENT OF COMPENSATION -- LUMP SUM (+)		$6,711.00					
	NET CHANGE THIS C.C.O.		$54,357.00					
	AMOUNT OF 'BRIDGEWORK'		$54,357.00					

*** C.C.O. ACCEPTED AND FILED ***

FEDERAL PARTICIPATION				FEDERAL SEGREGATION				
DISP	TYPE	COST	TYPE	COST	TYPE	FUNDING SOURCE	PCT	FUNDING SOURCE	PCT
NEW	P	54,357.00		.00					

STATE OF CALIFORNIA - DEPARTMENT OF TRANSPORTATION

CONTRACT CHANGE ORDER MEMORANDUM

TO: PETER SIEGENTHALER / COE D.	FILE: **E.A.** 04 - 012024
FROM: COE D.	**CO-RTE-PM** 04-SF,Ala-80-13.9/14.3,0.0/1.6
	FED. NO. ACIM-080-1(085)8N
CCO#: **38** SUPPLEMENT#: **1** Category Code: **CHPA**	CONTINGENCY BALANCE (incl. this change) **$2,162,508.31**
COST: **$54,357.00** INCREASE ☑ DECREASE ☐	HEADQUARTERS APPROVAL REQUIRED? ☑ YES ☐ NO
SUPPLEMENTAL FUNDS PROVIDED: **$0.00**	IS THIS REQUEST IN ACCORDANCE WITH ENVIRONMENTAL DOCUMENTS? ☑ YES ☐ NO
CCO DESCRIPTION: Access Casing Curb Rebar	**PROJECT DESCRIPTION:** REPLACE SFOBB EAST SPAN

LOCATION: IN SAN FRANCISCO AND ALAMEDA COUNTIES IN SAN FRANCISCO AND OAKLAND FROM 1.3 KM EAST OF THE YERBA BUENA ISL

THIS CHANGE ORDER PROVIDES FOR:

furnishing and installing bar reinforcing steel for the pier footing/access casing curbs and replacing 230 mm waterstop as provided in the contract plans with 153 mm waterstop.

This contract change order is needed to compensate the contractor for furnishing and installing bar reinforcing steel for the concrete curb located on top of the footing at the base of the pier walls. Contract Change Order No. 38 (executed on December 17, 2003) included provisions for constructing the pier footing /access casing curbs without bar reinforcing steel. The Designer, TYLin International, JV (TYLin), re-examined the design and has determined that bar reinforcing steel is required in the curbs and has revised the contract plans to reflect this change.

This change order is also needed to resolve the conflict between the waterstop in the pier casing access walls and the top mat of footing bar reinforcing steel by modifying the size of the waterstop. It is necessary to reduce the size of the waterstop from 230 mm to 153 mm to resolve this constructibility issue. The 230 mm waterstop was specified in the original Contract Plans and later also used in the updated design for Contract Change Order No.62, (sheet 497R3). Contract plan sheet number 497R4 is updated to reflect the change.

This change provides for compensating the contractor a lump sum amount for the extra work required to fabricate, furnish, and install the additional bar reinforcing steel for the pier footing/access casing curbs and for furnishing 153 mm waterstop in lieu of 230 mm waterstop, and restocking the unused 153 mm waterstop delivered to the project.

This contract change order will result in a net cost increase of $54,357.00, which can be financed from the contingency funds. A complete cost analysis is on file with the project records.

Prior approval was obtained from Mr. Pete Siegenthaler on February 24, 2004. A copy of the Prior Approval provided by Mr. Siegenthaler is attached.

FHWA concurrence was obtained from Ms. Nancy Bobb via electronic message on August 26, 2004. A copy of the concurrence provided by Ms. Bobb is attached.

Maintenance concurrence was obtained from Mr. Alfred Martinez, Structure's Maintenance Liaison, via electronic message on August 24, 2004. A copy of the concurrence provided by Mr. Martinez is attached.

Design concurrence was obtained from Mr. Hasan El-Natur on March 29, 2004, for revised contract plan sheet numbers 485R3, 496R4, and 497A, and on July 8, 2004, for revised contract plan sheet number 497R4.

This change does not affect the controlling item of work. Therefore, no adjustment in contract time is warranted for this change.

CONCURRED BY:		
Construction Engineer:	Douglas Coe	Date 9-2-04
Bridge Engineer:	Douglas Coe	Date 9-2-04
FHWA Representative:	Nancy Bobb	Date 8/26/2004
Project Engineer:	Hasan El-Natur	Date 3/29/2004
Other (specify): Alfred Martinez		Date 8/24/2004
		Date
		Date
District Prior Approval By:	Pete Siegenthaler	Date 2/24/2004
HQ (Issue, Approve) By:		Date
Resident Engineer's Signature:		Date 9-2-04

ESTIMATE OF COST

	THIS REQUEST	TOTAL TO DATE
ITEMS	$0.00	($92,331.00)
FORCE ACCOUNT	$0.00	$0.00
AGREED PRICE	$47,646.00	$870,844.00
ADJUSTMENT	$6,711.00	$6,711.00
TOTAL	$54,357.00	$785,224.00

FEDERAL PARTICIPATION

☑ PARTICIPATING ☐ PARTICIPATING IN PART ☐ NONE
☐ NON-PARTICIPATING (MAINTENANCE) ☐ NON-PARTICIPATING

FEDERAL SEGREGATION (if more than one Funding Source or P.I.P. type)
☑ CCO FUNDED PER CONTRACT ☐ CCO FUNDED AS FOLLOWS

FEDERAL FUNDING SOURCE	PERCENT

California Department of Transportation

SFOBB New East Span

Contract: 04-012024, Skyway

CCO 39(0)

Deleted

CCO: 40	Suppl. No. 0	Contract No. 04 - 012024	Road 04-SF,Ala-80-13.9/14.3,0.0/1.6	FED. AID LOC.: ACIM-080-1(085)8N

To: **KIEWIT / FCI / MANSON a JV**

You are directed to make the following changes from the plans and specifications or do the following described work not included in the plans and specifications for this contract. ***NOTE: This change order is not effective until approved by the Engineer.***

Description of work to be done, estimate of quantities and prices to be paid. (Segregate between additional work at contract price, agreed price and force account.) Unless otherwise stated, rates for rental of equipment cover only such time as equipment is actually used and no allowance will be made for idle time, This last percentage shown is the net accumulated increase or decrease from the original quantity in the Engineer's Estimate.

Extra Work at Unit Price:

Furnish and install additional mild and reinforcing steel in 876 lightweight segment precast panels for the SFOBB- East Span Skyway Project, Bridge Nos. 34-006L/R as shown on revised contract plan sheets 757R1, 758R1, 759R1, and 760R1 (sheets 2 - 5 of this Contract Change Order).

For this work, the contractor will be paid an agreed unit price of $340.00 per panel for 876 lightweight segment precast panels. This price constitutes full compensation, including all markups and concrete placement costs, for the work of this change.

Cost of Extra Work at Agreed Unit Price $297,840.00

Estimated Cost: Increase ☑ Decrease ☐ $297,840.00

By reason of this order the time of completion will be adjusted as follows: 0 days

Submitted by

Signature	Resident Engineer: COE D.	Date 2-24-04

Approval Recommended by

Signature	Construction Engineer: COE D.	Date 2-24-04

Engineer Approval by

Signature	(Print name and title) PETER SIEGENTHALER - Chief	Date

We the undersigned contractor, have given careful consideration to the change proposed and agree, if this proposal is approved, that we will provide all equipment, furnish the materials, except as may otherwise be noted above, and perform all services necessary for the work above specified, and will accept as full payment therefor the prices shown above.

NOTE: If you, the contractor, do not sign acceptance of this order, your attention is directed to the requirements of the specifications as to proceeding with the ordered work and filing a written protest within the time therein specified.

Contractor Acceptance by

Signature	(Print name and title) A.T. Sikoro, Project Director	Date 2/27/04

STATE OF CALIFORNIA - DEPARTMENT OF TRANSPORTATION

CONTRACT CHANGE ORDER MEMORANDUM

TO: PETERSIEGENTHALER / COE D.	FILE: **E.A.** 04 - 012024
	CO-RTE-PM 04-SF,Ala-80-13.9/14.3,0.0/1.6
FROM: COED.	**FED. NO.** ACIM-080-1(085)8N
CCO#: **40** SUPPLEMENT#: **0** Category Code: **CHPT**	CONTINGENCY BALANCE (incl. this change) **$25,411,464.62**
COST: $297,840.00 INCREASE ☐ DECREASE ☐	HEADQUARTERS APPROVAL REQUIRED? ☑ YES ☐ NO
SUPPLEMENTAL FUNDS PROVIDED: $0.00	IS THIS REQUEST IN ACCORDANCE WITH ENVIRONMENTAL DOCUMENTS? ☑ YES ☐ NO
CCO DESCRIPTION: PC Panel Mild Steel	**PROJECT DESCRIPTION:** REPLACE SFOBB EAST SPAN

LOCATION: IN SAN FRANCISCO AND ALAMEDA COUNTIES IN SAN FRANCISCO AND OAKLAND FROM 1.3 KM EAST OF THE YERBA BUENA ISL

THIS CHANGE ORDER PROVIDES FOR:

furnishing and installing additional mild and reinforcing steel in 876 lightweight segment precast panels. The mild steel will control shrinkage cracking; whereas, the additional steel reinforcing will limit cracking in the upturn stem wall. Revised contract plan sheets are 757R1, 758R1, 759R1, and 760R1.

Section 10-1.27, "Concrete Structures", subsection "Lightweight Concrete", of the Special Provisions states that precast panels shall be maintained wet until placed in the formwork for the segments. This curing requirement is to minimize the differential shrinkage between the precast panel and segment, assuming both would have similar shrinkage coefficients; however, the precast panel consists of lightweight concrete while the segment consists of normal weight concrete. The Contractor has performed several tests and it has been determined that the shrinkage coefficient of the lightweight concrete is substantially larger than of normal weight concrete. Therefore, if the panels are maintained wet until placed into the formwork for the segments as required by the Contract, differential shrinkage will develop between the panels and segments and the panels will crack.

TY Lin International, the designer, has determined the panels need a minimum of 14 days to dry after the initial wet cure to allow the majority of the panel shrinkage to occur before they are cast into the segments. Any differential shrinkage will be minimal. The Contractor's baseline schedule shows the casting of panels into the segments every 3 to 5 days after the initial wet cure; therefore, a serious impact to the schedule may result if they are required to allow the panels to dry for 14 days. In lieu of allowing the concrete to dry for 14 days, it has been determined to install additional steel reinforcing bars. Any induced tension loads due to differential shrinkage will be carried by the steel bars. The State, TY Lin, and the Contractor have determined that this is the most economical solution. The State, TY Lin, and the Contractor are also exploring the option to modify the existing approved lightweight concrete mix by adding a shrinkage-reducing admixture under CCO No. 36.

The contract plans did not detail any steel reinforcing bars to run the width of the panel's stem wall. This change order will also eliminate cracking in the upturned stem wall of the precast panels by providing additional reinforcing steel.

An analysis of the Contractor's proposal is on file with the project records and it has been found to be fair and reasonable. Payment will be by extra work at an agreed unit price of $340.00 per panel for all 876 lightweight segment precast panels for a total of $297,840.00. This price constitutes full compensation, including markups and additional concrete placement costs such as vibration and patching as a result of the congestion from the additional steel.

This contract change order does not affect the overall project schedule; therefore, no additional contract time is required.

This change order has been discussed with and concurred by Hasan El-Natur on 09/30/03. Prior approval from Nancy Bobb, FHWA was obtained on 02/23/04 by email. Concurrence from Maintenance is not required as this change does not effect the maintenance of the structure.

The Resident Engineer recommends this change order be approved.

CONCURRED BY:		
Construction Engineer:	Douglas Coe	Date 2-24-04
Bridge Engineer:		Date
FHWA Representative:	Nancy Bobb	Date 2/23/2004
Project Engineer:	Hasan El-Natur	Date 9/30/2003
Other (specify):		Date
		Date
		Date
District Prior Approval By:		Date
HQ (Issue Approve) By:		Date
Resident Engineer's Signature:		Date 2-24-04

ESTIMATE OF COST

	THIS REQUEST	TOTAL TO DATE
ITEMS	$0.00	$0.00
FORCE ACCOUNT	$0.00	$0.00
AGREED PRICE	$297,840.00	$297,840.00
ADJUSTMENT	$0.00	$0.00
TOTAL	$297,840.00	$297,840.00

FEDERAL PARTICIPATION

☑ PARTICIPATING ☐ PARTICIPATING IN PART ☐ NONE
☐ NON-PARTICIPATING (MAINTENANCE) ☐ NON-PARTICIPATING

FEDERAL SEGREGATION (if more than one Funding Source or P I P type)
☑ CCO FUNDED PER CONTRACT ☐ CCO FUNDED AS FOLLOWS

FEDERAL FUNDING SOURCE	PERCENT

C

CCO: 40	Suppl. No. 1	Contract No. 04 - 012024	Road 04-SF,Ala-80-13.9/14.3,0.0/1.6	FED. AID LOC.: ACIM-080-1(085)8N

To: KIEWIT / FCI / MANSON a JV

You are directed to make the following changes from the plans and specifications or do the following described work not included in the plans and specifications for this contract. **NOTE: This change order is not effective *until* approved *by* the Engineer.**

Description of work to be done, estimate of quantities and prices to be paid (Segregate between additional work at contract price, agreed price and force account) Unless otherwise stated, rates for rental of equipment cover only such time as equipment is actually used and no allowance will be made for idle time This last percentage shown is the net accumulated increase or decrease from the original quantity in the Engineer's Estimate

Extra Work at Lump Sum:

Furnish and install additional mild bar reinforcing steel in the lightweight pier table precast panel upturned stem walls as shown on sheet 2 of this change order for the SFOBB East Span Skyway Project, Bridge Nos. 34-0006L/R.

The revised contract plan sheet reflecting this change is 759R2 of 978 (sheet 2 of 2 of this change order.)

For this work, the contractor shall receive and accept the agreed lump sum of $25,115.00. This agreed lump sum constitutes full and complete compensation, including all markups, for all direct and indirect costs, all associated project impacts, including all overhead expenses.

Estimated cost of Extra Work at Lump Sum $25,115.00

Estimated Cost: Increase ☑ Decrease ☐ $25,115.00

By reason of this order the time of completion will be adjusted as follows: 0 days

Submitted by		
Signature	Resident Engineer: COE D.	Date 12-20-04
Approval Recommended by		
Signature	Construction Engineer: COE D.	Date 12-20-04
Engineer Approved by		
Signature	(Print name and title) PETER SIEGENTHALER - Chief	Date 01/27/05

We the undersigned contractor, have given careful consideration to the change proposed and agree, if this proposal is approved, that we will provide all equipment, furnish the materials, except as may otherwise be noted above, and perform all services necessary for the work above specified, and will accept as full payment therefor the prices shown above.

NOTE: If you, the contractor, do not sign acceptance of this order, your attention is directed to the requirements of the specifications as to proceeding with the ordered work and filing a written protest within the time therein specified.

Contractor Acceptance by		
Signature	(Print name and title) A.T. Sterro, Project Director	Date 1-17-05

STATE OF CALIFORNIA - DEPARTMENT OF TRANSPORTATION

CONTRACT CHANGE ORDER

Change Requested by: Engineer

CCO: 41	Suppl. No. 0	Contract No. 04 - 012024	Road 04-SF,Ala-80-13.9/14.3,0.0/1.6	FED. AID LOC.: ACIM-080-1(085)8N

To: KIEWIT / FCI / MANSON a JV

You are directed to make the following changes from the plans and specifications or do the following described work not included in the plans and specifications for this contract. ***NOTE: This change order is not effective until approved by the Engineer.***

Description of work to be done, estimate of quantities and prices to be paid. (Segregate between additional work at contract price, agreed price and force account.) Unless otherwise stated, rates for rental of equipment cover only such time as equipment is actually used and no allowance will be made for idle time. This last percentage shown is the net accumulated increase or decrease from the original quantity in the Engineer's Estimate.

Extra Work at Lump Sum:

Construct the bike path for the SFOBB - East Span Skyway, Bridge Nos. 34-0006L/R as shown on revised contract plan sheets 870R5, 871R5, and 875R4 of 978 (pages 2 through 4 of this change order).

For this work, the Contractor will be paid an agreed lump sum of $1,945.00. This sum constitutes full compensation, including markups, for all direct and indirect costs; all associated project impacts; and Time Related Overhead (TRO) expenses, for this change.

Estimated cost of Extra Work at Lump Sum $1,945.00

Estimated Cost: Increase ☑ Decrease ☐ **$1,945.00**

By reason of this order the time of completion will be adjusted as follows: 0 days

Submitted by

Signature	Resident Engineer: COE D.	Date 6-2-04

Approval Recommended by

Signature	Construction Engineer: COE D.	Date 6-2-04

Engineer Approval by

Signature for	(Print name and title) PETER SIEGENTHALER - Chief	Date 6/28/04

We the undersigned contractor, have given careful consideration to the change proposed and agree, if this proposal is approved, that we will provide all equipment, furnish the materials, except as may otherwise be noted above, and perform all services necessary for the work above specified, and will accept as full payment therefor the prices shown above.

NOTE: If you, the contractor, do not sign acceptance of this order, your attention is directed to the requirements of the specifications as to proceeding with the ordered work and filing a written protest within the time therein specified.

Contractor Acceptance by

Signature	(Print name and title) A.T. Skaro, Project Director	Date 6-7-04

Department of Transportation
EAST SPAN SEISMIC SAFETY PROJECT
CONCURRENCE FOR CHANGE ORDERS

CCO#: 41 S#: _____
Title: Bike Path Anchor Bolts/PT Bars Conflict
Date: September 23, 2003

Contract No. 04-012024
Co. & Rte Ala-SO-13.9i14.3, 0.0/1.6

TO: DOUGLAS COE, Resident Engineer

Requested By: DAVID WU, Senior Bridge Engineer (initials DWW)

Description of Work

The Contractor shall furnish and install the following modified bike path details as shown on sheets 870 R2 and 871 R2 of 97s:

A) For all applicable locations, the 36 mm dia HS pre-stress bars shall have a length of no less than 1000 mm. B) For the lower set of 29 mm dia HS bolts in frame 4, specifically for segments adjacent to Pier 15 and 16, the grip may be reduced to 300 mm instead of 350 mm. C) The 1055 kN stress in the 36 mm dia HS pre-stress bar shall be changed to 700 kN after seating. D) The contractor has option to use a 'dead-end' anchor for the 36 mm dia HS pre-stress bar at the wing tip for Piers 15 and 16 only, and in remaining locations where a typical top-span tendon blister is present. E) The Contractor has option to use beveled washers and/or anchor plates at the block-outs for the pre-stressing bars on the underside of the precast panel.

Reason for Change:

Bike path connections to the segments require a modification of their details to fix design errors for the following reason:

In all the frames, whenever there is a top span blister in the wing tips, the post tensioning bolts will have to pierce not only the pre cast panel but the blister as well. This detail shown on the Contract Plans will not work because the bolts will conflict with the strand and anchor going through these blisters.

Discuss with persons noted below

FHWA	Date	Br. Const	Date
District	Date	Br. Design Hamson	Date 9-03
Other	Date	Br. Geology	Date
		Br. Maintenance	Date

Estimated Cost: $ 300,000.-

Recommended Method of Payment:
- ☐ Contract Items
- ☐ Extra Work at Force Account
- Agreed Price (UP or LS)
- Other: _____

Recommended Time Adjustment: 0 Working Days

Prior Approvals:

1. This represents an acknowledgement that the individuals below are in concurrence with the change order.
2. This represents an acknowledgement that I am in concurrence with this change order which must be approved before any work is done.

Comments:

Douglas Coe, Resident Engineer	10-3-03 Date	1 ___ 2
Pete Siegenthaler, Principal Construction Engineer	Date	1. ___ 2
Robert Kobal, HQ CCO Coordinator	10-7-03 Date	1 ___ 2. X

Comments:

Douglas Coe, Resident Engineer	10-3-03 Date	1 ___ 2
Pete Siegenthaler, Principal Construction Engineer	Date	1. ___ 2
Robert Kobal, HQ CCO Coordinator	10-7-03 Date	1 ___ 2. X

Department of Transportation
EAST SPAN SEISMIC SAFETY PROJECT
CONCURRENCE FOR CHANGE ORDERS

CCO#: 41 S#: _____
Title: Bike Path Anchor Bolts/PT Bars Conflict
Date: September 23, 2003

Contract No. 04-0 12024
Co. & Rte Ala-SO-13.9i14.3, 0.0/1.6

TO:: DOUGLAS COE, Resident Engineer

Requested By: DAVID WU, Senior Bridge Engineer (initials DWW)

Description of Work

The Contractor shall furnish and install the following modified bike path details as shown on sheets 870 R2 and 871 R2 of 97s:

A) For all applicable locations, the 36 mm dia HS pre-stress bars shall have a length of no less than 1000 mm. B) For the lower set of 29 mm dia HS bolts in frame 4, specifically for segments adjacent to Pier 15 and 16. the grip may be reduced to 300 mm instead of 350 mm. C) The 1055 kN stress in the 36 mm dia HS pre-stress bar shall be changed to 700 kN after seating. D) The contractor has option to use a 'dead-end' anchor for the 36 mm dia HS pre-stress bar at the wing tip for Piers 15 and 16 only, and in remaining locations where a typical top-span tendon blister is present. E) The Contractor has option to use beveled washers and/or anchor plates at the block-outs for the pre-stressing bars on the underside of the precast panel.

Reason for Change:

Bike path connections to the segments require a modification of their details to fix design errors for the following reason:

In all the frames. whenever there is a top span blister in the wing tips. the post tensioning bolts will have to pierce not only the pre cast panel but the blister as well. This detail shown on the Contract Plans will not work because the bolts will conflict with the strand and anchor going through these blisters.

Discuss with persons noted below

need a name

FHWA	Date	Br. Const	Date
District	Date	Br. Design Hamson	Date 9-03
Other	Date	Br. Geology	Date
		Br. Maintenance	Date

Estimated Cost: $ 300,000

Recommended Method of Payment:
- ☐ Contract Items
- ☐ Extra Work at Force Account
- Agreed Price (UP or LS)
- Other: _____

Recommended Time Adjustment: 0 Working Days

Prior Approvals:

1. This represents an acknowledgement that the individuals below are in concurrence with the change order.
2. This represents an acknowledgement that I am in concurrence with this change order which must be approved before any work is done.

DIST.	COUNTY	ROUTE	KILOMETER POST TOTAL PROJECT	SHEET NO.	TOTAL SHEETS
04	SF. Ala	80	13.9/14.3, 0.0/1.6	875R4	978

REGISTERED ENGINEER - CIVIL

E-04-01

PLANS APPROVAL DATE

The State of California or its officers or agents shall not be responsible for the accuracy or completeness of electronic copies of this plan sheet.

REGISTERED PROFESSIONAL ENGINEER Madan Kunar Sah No. C 59203 Exp. 6/30/03 CIVIL STATE OF CALIFORNIA

T.Y. LIN / MOFFATT & NICHOL
825 BATTERY STREET
SAN FRANCISCO, CA 94111

Caltrans now has a web site! To get to the web site go to http://www.dot.ca.gov

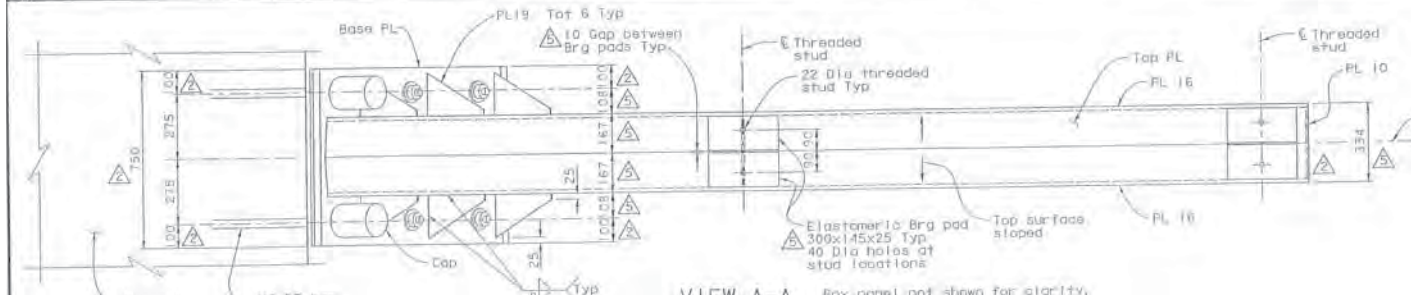

VIEW A-A
1:10

Box panel not shown for clarity.

Note : Slot in base PL not shown. Washers are schematically shown (NTS).

Dimensions	'S1'	'S2'
Hinge B & C	300	575
Hinge D	214	600
Hinge E	300	514

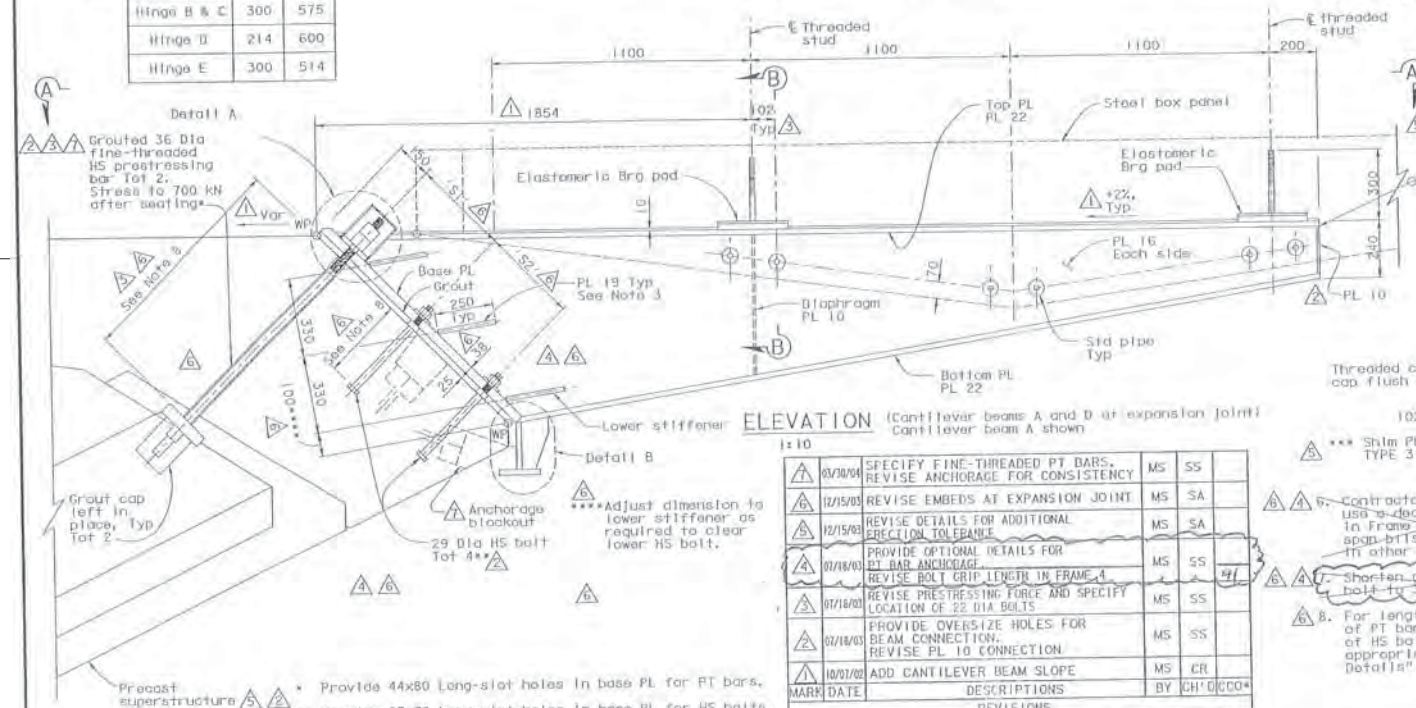

ELEVATION
1:10

(Cantilever beams A and D at expansion joint)
Cantilever beam A shown

****Adjust dimension to lower stiffener as required to clear lower HS bolt.

* Provide 44x80 Long-slot holes in base PL for PT bars.

** Provide 37x73 Long-slot holes in base PL for HS bolts. Shim in slots to provide bearing against HS bolts-ASTM A240, Type 316 SS shims. Provide structural grade plate washer-12mm thick, 146 diameter. Hardened washer shall also be provided over the plate washer.

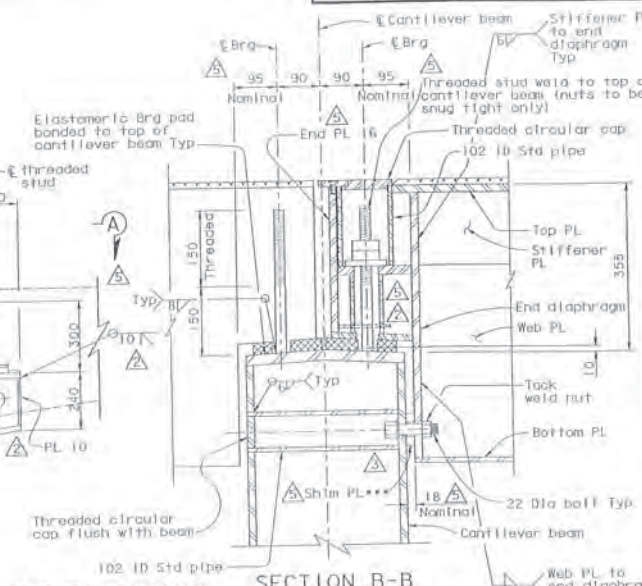

SECTION B-B
1:5

For completion of section, see "Bikepath Details No.3" sheet

*** Shim PL-ASTM A240, TYPE 316 SS shims

NOTES:

1. For Detail A and B, see "Bikepath Details No. 5" sheet.
2. For additional reinforcement, see "Girder Reinforcement" sheets.
3. Stiffeners are oriented parallel to the bottom PL of the cantilever beam.
4. All structural steel plate interface connections shall be made with continuous CJP welds, unless otherwise shown.
5. ~~Contractor has option to use beveled washer-anchor plate.~~
6. Contractor has option to use a dead-end anchor in Frame 4 and at top span blister locations in other frames.
7. ~~Shorten grip of lower bolt to 300 in Frame 4.~~
8. For length and anchorage of PT bars and for length of HS bolts, see appropriate "Hinge Details" sheets.

MARK	DATE	DESCRIPTIONS	BY	CH'D	CCO#
7	03/30/04	SPECIFY FINE-THREADED PT BARS. REVISE ANCHORAGE FOR CONSISTENCY	MS	SS	
6	12/15/03	REVISE EMBEDS AT EXPANSION JOINT	MS	SA	
5	12/15/03	REVISE DETAILS FOR ADDITIONAL ERECTION TOLERANCE	MS	SA	
4	07/18/03	PROVIDE OPTIONAL DETAILS FOR PT BAR ANCHORAGE. REVISE BOLT GRIP LENGTH IN FRAME 4	MS	SS	41
3	07/18/03	REVISE PRESTRESSING FORCE AND SPECIFY LOCATION OF 22 DIA BOLTS	MS	SS	
2	07/18/03	PROVIDE OVERSIZE HOLES FOR BEAM CONNECTION. REVISE PL 10 CONNECTION	MS	SS	
1	10/01/02	ADD CANTILEVER BEAM SLOPE	MS	CR	

REVISIONS

CONTRACT CHANGE ORDER NO. 41
SHEET 4 OF 4

ALL DIMENSIONS ARE IN MILLIMETERS UNLESS OTHERWISE SHOWN

SAN FRANCISCO OAKLAND BAY BRIDGE
EAST SPAN SEISMIC SAFETY PROJECT

SKYWAY STRUCTURES

BIKEPATH DETAILS NO. 9

DESIGN OVERSIGHT 4/8/04
SIGN OFF DATE

DESIGN M. Sah — CHECKED C. Warts
DETAILS F. Rung — CHECKED C. Warts
QUANTITIES K. Corsiar — CHECKED J. Leventhal

PREPARED FOR THE STATE OF CALIFORNIA DEPARTMENT OF TRANSPORTATION

Salid Abbas
PROJECT ENGINEER

BRIDGE NO. 34-0006L/R
KILOMETER POST 13.9/14.3, 0.0/1.6

CU 04
EA 012021

ORIGINAL SCALE IN MILLIMETERS FOR REDUCED PLANS

BIDDERS CONTACT PLANS BEARING LATEST REVISION DATES

DIVISION DATES-REQUIREMENTS START ONLY

SHEET 443

STATE OF CALIFORNIA - DEPARTMENT OF TRANSPORTATION

CONTRACT CHANGE ORDER MEMORANDUM

DATE: 5/24/2004 Page 1 of 1

TO: PETER SIEGENTHALER / COE D.

FROM: COED.

FILE: **E.A.** 04 - 012024
CO-RTE-PM 04-SF,Ala-80-13.9/14.3,0.0/1.6
FED. NO. ACIM-080-1(085)8N

CCO#: **41** | SUPPLEMENT#: **0** | Category Code: **CHPT**

CONTINGENCY BALANCE (incl. this change) **$22,209,910.94**

COST: **$1,945.00** INCREASE ☑ DECREASE ☐

HEADQUARTERS APPROVAL REQUIRED? ☐ YES ☑ NO

SUPPLEMENTAL FUNDS PROVIDED: **$0.00**

IS THIS REQUEST IN ACCORDANCE WITH ENVIRONMENTAL DOCUMENTS? ☑ YES ☐ NO

CCO DESCRIPTION:
Bike Path Anchor Bolts at Frame 4

PROJECT DESCRIPTION:
REPLACE SFOBB EAST SPAN

LOCATION: IN SAN FRANCISCO AND ALAMEDA COUNTIES IN SAN FRANCISCO AND OAKLAND FROM 1.3 KM EAST OF THE YERBA BUENA ISL

THIS CHANGE ORDER PROVIDES FOR:

furnishing and installing bike path details as shown on revised plan sheets 870R5, 871R5, and 875R4 of 978.

During detailing of the shop drawings it was discovered that the 29 mm diameter HS bolts in frame 4 come very close to the edge of the segment resulting in limited concrete cover. This may cause spalling or failure of the concrete in these areas. Therefore, the grip for the lower set of 29 mm diameter HS bolts in frame 4 will be reduced from 350 mm to 300 mm.

For this work, the Contractor shall receive and accept the agreed lump sum of $1,945.00. This sum constitutes full and complete compensation for providing all labor, material, equipment, tools, and incidentals, including all markups by reason of this change. A cost analysis at force account is on file in the project office.

No adjustment of contract time is warranted, as this change does not affect the controlling operation.

FHWA concurrence is not required. Maintenance concurrence is not required, as this change does not affect maintenance operations.

CONCURRED BY:

Construction Engineer	Douglas Coe	Date 6-2-04
Bridge Engineer:	Douglas Coe	Date 6-2-04
FHWA Representative		Date
Project Engineer		Date
Other (specify): Hasan El-Natur		Date 8/7/2003
		Date
		Date
District Prior Approval By:		Date
HQ (Issue Approve) By:		Date
Resident Engineer's Signature:		Date 6-2-04

ESTIMATE OF COST

	THIS REQUEST	TOTAL TO DATE
ITEMS	$0.00	$0.00
FORCE ACCOUNT	$0.00	$0.00
AGREED PRICE	$1,945.00	$1,945.00
ADJUSTMENT	$0.00	$0.00
TOTAL	$1,945.00	$1,945.00

FEDERAL PARTICIPATION

☑ PARTICIPATING ☐ PARTICIPATING IN PART ☐ NONE
☐ NON-PARTICIPATING (MAINTENANCE) ☐ NON-PARTICIPATING

FEDERAL SEGREGATION (if more than one Funding Source or P.I P type)
☑ CCO FUNDED PER CONTRACT ☐ CCO FUNDED AS FOLLOWS

FEDERAL FUNDING SOURCE	PERCENT

CCO: 42	Suppl. No. 0	Contract No. 04 - 012024	Road 04-SF,Ala-80-13.9/14.3,0.0/1.6	FED. AID LOC.: ACIM-080-1(085)8N

To: KIEWIT / FCI / MANSON a JV

You are directed to make the following changes from the plans and specifications or do the following described work not included in the plans and specifications for this contract. ***NOPE: This change order is not effective until approved by the Engineer.***

Description of work to be done, estimate of quantities and prices to be paid. (Segregate between additional work at contract price, agreed price and force account.) Unless otherwise stated, rates for rental of equipment cover only such time as equipment is actually used and no allowance will be made for idle time. This last percentage shown is the net accumulated increase or decrease from the original quantity in the Engineer's Estimate.

In lieu of the original transverse tendon anchorage detail on plan sheet 702 of 978, the Contractor shall furnish and install the revised transverse tendon anchorage detail, as shown on sheet 2 of this Change Order. The Contractor agrees that any additional detailing costs, field adjustment costs, and future conflicts as a result of this change order will be the sole responsibility of the Contractor.

Adjustment of Compensation at Lump Sum:

In accordance with State letter 5.03.1-000980, the Contractor shall receive one half of the cost savings associated with the reduction in materials and shall also be reimbursed for the costs of their construction engineer.

Adjustment of Compensation at Agreed Lump Sum ..... ($373,212.00)

Estimated Cost: Increase ☐ Decrease ☑ **($373,212.00)**

By reason of this order the time of **will be** **as follows:** 0

Submitted by

Signature	Resident Engineer: COE D.	Date
David W. Wu for		9-9-03

Approval Recommended by

Signature	Construction Engineer: COE D.	Date
David W. Wu for		9-9-03

Engineer Approval by

Signature	(Print name and title) PETER SIEGENTHALER - Chief	Date

We the undersigned contractor, have given careful consideration to the change proposed and agree, if this proposal is approved, that we will provide all equipment, furnish the materials, except as may otherwise be noted above, and perform all services necessary for the work above specified, and will accept as full payment therefor the prices shown above.

NOTE: If you, the contractor, do not sign acceptance of this order, your attention is directed to the requirements of the specifications as to proceeding with the ordered work and filing a written protest within the time therein specified.

Contractor Acceptance by

Signature	(Print name and title)	Date
	A. T. Sikoro, Project Director	9/23/03

STATE OF CALIFORNIA - DEPARTMENT OF TRANSPORTATION

CONTRACT CHANGE ORDER MEMORANDUM

DATE: 8/20/2003 Page 1 of 1

TO: PETER SIEGENTHALER / COE D.	FILE: E.A. 04 - 012024
FROM: COED.	CO-RTE-PM 04-SF,Ala-80-13.9/14.3,0.0/1.6
	FED. NO. ACIM-080-1(085)8N
CCO#: 42 SUPPLEMENT#: 0 Category Code: CHPT	CONTINGENCY BALANCE (incl. this change) $39,707,881.35
COST: ($373,212.00) INCREASE ☐ DECREASE ☑	HEADQUARTERS APPROVAL REQUIRED? ☑ YES ☐ NO
SUPPLEMENTAL FUNDS PROVIDED: $0.00	IS THIS REQUEST IN ACCORDANCE WITH ENVIRONMENTAL DOCUMENTS? ☑ YES ☐ NO
CCO DESCRIPTION: Transverse Tendon Blockout	**PROJECT DESCRIPTION:** REPLACE SFOBB EAST SPAN

LOCATION: IN SAN FRANCISCO AND ALAMEDA COUNTIES IN SAN FRANCISCO AND OAKLAND FROM 1.3 KM EAST OF THE YERBA BUENA ISL

THIS CHANGE ORDER PROVIDES FOR:

furnishing and installing the revised transverse tendon anchorage detail, as shown on plan sheet 702R2 of 978, in lieu of the original transverse tendon anchorage detail.

The original transverse tendon anchorage detail was a standard reinforcing steel grillage unit to reinforce the concrete around the transverse tendon. In addition, there were several steel reinforcing bars required to reinforce and tie the continuous recessed blockout area to the segment concrete. The Contractor's integrated shop drawings demonstrated this area was already very congested with reinforcing steel and prestress tendons and that there was significant potential for serious field installation problems. In order to mitigate the congestion, the Contractor is proposing to use a smaller local prestress bursting steel detail designed by their prestress subcontractor specifically for their prestress system. In addition, the Contractor is proposing to use pocket form blockouts which will eliminate the steel needed to tie the continuous recessed blockout to the segment concrete. The revised transverse tendon anchorage detail is shown on Sheet No. 702R2.

Based on tests of the Contractor's proposed transverse tendon anchorage system, and meetings with the designer (TY Lin International) and METS, the Engineer has determined that there is no compromise to the structure as a result of this change. Therefore, the Engineer recommends that this change order be approved. This will result in a material cost savings of ($792,744.00). In accordance with State letter 5.03.1-000980, the Contractor shall receive one half of the cost savings ($396,372.00) and shall also be reimbursed for the markup costs of $23,160.00 for their construction engineer. This change order will credit a lump sum of $373,212.00. A detailed cost analysis is on file.

This sum constitutes full compensation, including all markups, for this change. The Contractor agrees that any additional detailing costs, field adjustment costs, and future conflicts as a result of this change order will be the sole responsibility of the Contractor. No adjustment in Contract time will be made as this change order does not affect the controlling operations.

This change order has been concurred by Hasan El-Natur on 3/5/03 and FHWA on 4/16/03.
Maintenance concurrence is not required because this work does not effect any maintenance facilities.

CONCURRED BY:		
Construction Engineer: Douglas Coe	Date	
Bridge Engineer:	Date	
FHWA Representative: Nancy Bobb	Date 4/16/2003	
Project Engineer:	Date	
Other (specify): Hasan El-Natur	Date 3/5/2003	
	Date	
	Date	
District Prior Approval By:	Date	
HQ (Issue Approve) By:	Date	
Resident Engineer's Signature: David W. Wu for D. Coe	Date 4-10-03	

ESTIMATE OF COST

	THIS REQUEST	TOTAL TO DATE
ITEMS	$0.00	$0.00
FORCE ACCOUNT	$0.00	$0.00
AGREED PRICE	$0.00	$0.00
ADJUSTMENT	($373,212.00)	($373,212.00)
TOTAL	($373,212.00)	($373,212.00)

FEDERAL PARTICIPATION

☑ PARTICIPATING ☐ PARTICIPATING IN PART ☐ NONE
☐ NON-PARTICIPATING (MAINTENANCE) ☐ NON-PARTICIPATING

FEDERAL SEGREGATION (if more than one Funding Source or P.I.P. type)

☑ CCO FUNDED PER CONTRACT ☐ CCO FUNDED AS FOLLOWS

FEDERAL FUNDING SOURCE	PERCENT

California Department of Transportation

SFOBB New East Span

Contract: 04-012024, Skyway

CCO 43(0)

Deleted

CONTRACT CHANGE ORDER

Change Requested by: Engineer

CCO: 44	Suppl. No. 0	Contract No. 04 - 012024	Road 04-SF,Ala-80-13.9/14.3,0.0/1.6	FED. AID LOC.: ACIM-080-1(085)8N

To: KIEWIT / FCI / MANSON a JV

You are directed to make the following changes from the plans and specifications or do the following described work not included in the plans and specifications for this contract. ***NOTE: This change order is not effective until approved by the Engineer.***

Description of work to be done, estimate of quantities and prices to be paid. (Segregate between additional work at contract price, agreed price and force account.) Unless otherwise stated, rates for rental of equipment cover only such time as equipment is actually used and no allowance will be made for idle time. This last percentage shown is the net accumulated increase or decrease from the original

Adjustment of Compensation at Lump Sum:

The Special Provisions, Section 90, "Portland Cement Concrete", Section 90-1.01, "Description", the tenth paragraph is revised as follows:

Unless otherwise designated on the plans or specified in these specifications or the special provisions, the amount of cementitious material used per cubic meter of concrete in structures of portions of structures shall conform to the following:

USE	Cementitious Material Content(kg/m3)
Concrete designated by compressive strength:	
Deck slabs and slab span of bridges	400 min., 550 max.
Roof sections of exposed top box culverts	400 min., 550 max.
Other portions of structures	350 min., 550 max.
Concrete not designated by compressive strength:	
Deck slabs and slab span of bridges	400 min.
Roof sections of exposed top box culverts	400 min.
Prestressed members	400 min.
Seal courses	400 min.
Other portions of structures	350 min.
Concrete for precast members	350 min., 550 max.

The Contractor agrees that there will be no additional compensation as a result of this change order. The Contractor shall be responsible for all additional costs, including but not limited to, costs to comply with the Special Provisions and Standard Specifications, Section 10-1.27, "Mass Concrete".

No adjustment in Contract time will be made as this change order does not affect the controlling operations.

CONTRACT CHANGE ORDER

Change Requested by: Engineer

CCO: 44	Suppl. No. 0	Contract No. 04 - 012024	Road 04-SF,Ala-80-13.9/14.3,0.0/1.6	FED. AID LOC.: ACIM-080-1(085)8N

Estimated Cost: Increase ☐ Decrease ☐ $0.00

By reason of this order the time of completion will be adjusted as follows: 0 days

Submitted by

Signature	Resident Engineer: COE D.	Date 4-14-03

Approval Recommended by

Signature	Construction Engineer: COE D.	Date 4-14-03

Engineer Approval by

Signature	(Print name and title) PETER SIEGENTHALER - Chief	Date

We the undersigned contractor, have given careful consideration to the change proposed and agree, if this proposal is approved, that we will provide all equipment, furnish the materials, except as may otherwise be noted above, and perform all services necessary for the work above specified, and will accept as full payment therefor the prices shown above.

NOTE: If you, the contractor, do not sign acceptance of this order, your attention is directed to the requirements of the specifications as to proceeding with the ordered work and filing a written protest within the time therein specified.

Contractor Acceptance by

Signature	(Print name and title) A.T. Giuro, Project Director	Date 5/1/03

STATE OF CALIFORNIA - DEPARTMENT OF TRANSPORTATION

CONTRACT CHANGE ORDER MEMORANDUM

DATE: 4/10/03

TO: PETER SIEGENTHALER / COE D.	FILE: E.A. 04 - 012024
FROM: COE D.	CO-RTE-PM 04-SF,Ala-80-13.9/14.3,0.0/1.6
	FED. NO. ACIM-080-1(085)8N
CCO# 44 SUPPLEMENT#: 0 Category Cod **CXSA**	CONTINGENCY BALANCE (incl. this change **$52,927,820.27**
COST: **$0.00** INCREASE ☐ DECREASE ☐	HEADQUARTERS APPROVAL REQUIRED? ☑ YES ☐ NO
SUPPLEMENTAL FUNDS PROVIDED: **$0.00**	IS THIS REQUEST IN ACCORDANCE WITH ENVIRONMENTAL DOCUMENTS? ☑ YES ☐ NO
CCO DESCRIPTION: CIP Concrete 550 Kg	**PROJECT DESCRIPTION:** REPLACE SFOBB EAST SPAN

LOCATION: IN SAN FRANCISCO AND ALAMEDA COUNTIES IN SAN FRANCISCO AND OAKLAND FROM 1.3 KM EAST OF THE YERBA BUENA ISL

THIS CHANGE ORDER PROVIDES FOR:

Increasing the maximum allowable cementitious material per cubic meter of concrete. This will be done by revising the tenth paragraph of the Special Provisions, Section 90, "Portland Cement Concrete", Section 90-1.01, "Description", as follows:

Unless otherwise designated on the plans, or specified in these specifications or the special provisions, the amount of cementitious material used per cubic meter of concrete in structures of portions of structures shall conform to the following:

USE	Cementitious Material Content(kg/m3)
Concrete designated by compressive strength:	
Deck slabs and slab span of bridges	400 min., 550 max.
Roof sections of exposed top box culverts	400 min., 550 max.
Other portions of structures	350 min., 550 max.
Concrete not designated by compressive strength:	
Deck slabs and slab span of bridges	400 min.
Roof sections of exposed top box culverts	400 min.
Prestressed members	400 min.
Seal courses	400 min.
Other portions of structures	350 min.
Concrete for precast members	350 min., 550 max.

This change order raises the maximum allowable cementitious material per cubic meter of concrete from 475 kg/m3 to 550 kg/m3 for concrete designated by compressive strength. This change is necessary because the Contract requires that the concrete superstructure obtain a 56-day compressive strength of up to either 55 MPa or 70 Mpa (dependent on location), as well as a 28-day modulus of elasticity of 35,600 MPa. The State has determined that a 56-day compressive strength of 55 MPa can be achieved with an allowable cementitious material of 475 kg/m3, but it may not be possible to consistently obtain a 56-day compressive strength of 70 MPa or a 28-day modulus of elasticity of 35,000 MPa with the maximum allowable cementitious material of 475 kg/m3. In order to safely reach the design criteria on a consistent basis, the allowable cementitious material must be raised to 550 kg/m3 maximum. The Contract already allows an allowable cementitious material of 550kg/m3 for precast members only, and METS has determined that there is no technical difference between the allowable cementitious material for concrete placed in a precast yard versus concrete placed in the field. The State believes that it is to our advantage to have a higher margin of safety in obtaining the design criteria of the concrete as long as the Contractor can still meet the heat of hydration requirements for mass concrete as required in the Special Provisions.

The Contractor has agreed that there will be no additional costs as a result of this change order.

This change order has been discussed and concurred by Mr. Sajid Abbas (Designer with TY Lin), Mr. Ric Maggenti, and Mr. Keith Hoffman (METS).

Maintenance concurrence for this change order is required and has been discussed and concurred with by Mr. Samad Hamoud on March 12, 2003.

FHWA concurrence was obtained from Ms. Nancy Bobb on March 19, 2003.

No time adjustment is warranted for this change as it does not affect the controlling operation.

CONCURRED BY:			
Construction Engineer:	Douglas Coe	Date	3/13/03
Bridge Engineer:		Date	
FHWA Representative:	Nancy Bobb	Date	3/19/03
Project Engineer:		Date	
Other (specify): Samad Hamoud		Date	3/12/03
Keith Hoffman		Date	8/9/02
		Date	
District Prior Approval By:		Date	
HQ (Issue Approve) By:	Ronald Bacani	Date	3/12/03
Resident Engineer's Signature:		Date	4-14-03

ESTIMATE OF COST

	THIS REQUEST	TOTAL TO DATE
ITEMS	$0.00	$0.00
FORCE ACCOUNT	$0.00	$0.00
AGREED PRICE	$0.00	$0.00
ADJUSTMENT	$0.00	$0.00
TOTAL	$0.00	$0.00

FEDERAL PARTICIPATION

☐ PARTICIPATING ☐ PARTICIPATING IN PART ☐ NONE
☐ NON-PARTICIPATING (MAINTENANCE) ☐ NON-PARTICIPATING

FEDERAL SEGREGATION (if more than one Funding Source or P.I.P. type)
☐ CCO FUNDED PER CONTRACT ☐ CCO FUNDED AS FOLLOWS

FEDERAL FUNDING SOURCE	PERCENT

California Department of Transportation

SFOBB New East Span

Contract: 04-012024, Skyway

CCO 45(0) Is a part of CCO 200

REGISTERED ENGINEER - CIVIL
Siu Fu John Chan
REGISTERED PROFESSIONAL ENGINEER No. C39457 Exp. 12/31/05 CIVIL STATE OF CALIFORNIA
6-4-01
PLANS APPROVAL DATE

The State of California or its officers or agents shall not be responsible for the accuracy or completeness of electronic copies of this plan sheet.

T.Y. LIN / MOFFATT & NICHOL
825 BATTERY STREET
SAN FRANCISCO, CA 94111

Caltrans now has a web site! To get to the web site, go to: http://www.dot.ca.gov

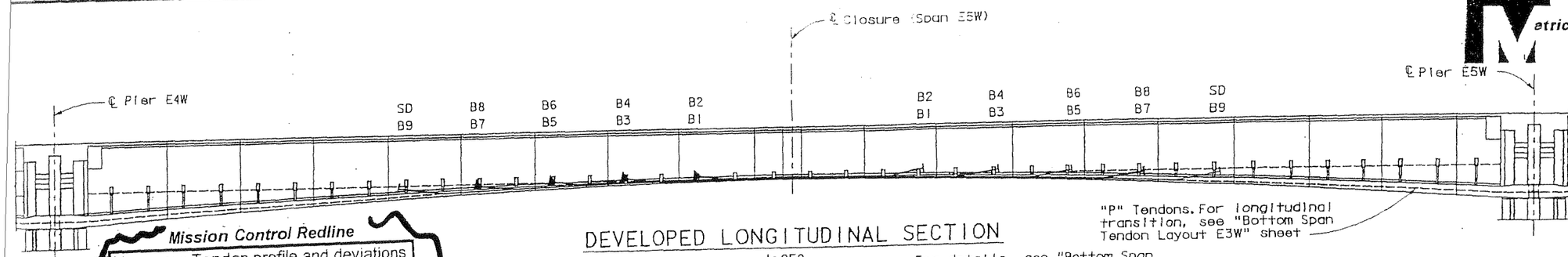

Mission Control Redline

Numerous Tendon profile and deviations changes, (see KFM letter 717). See approved composite drawings for revisions. See PT elongation submittals for revisions to stressing ends.

DEVELOPED LONGITUDINAL SECTION

1:250

For details, see "Bottom Span Tendon Details" sheets

"P" Tendons, Typ. For position of tendons in the pier hoop reinforcement cage, see "Pier Table Details No. 6" sheet.

"P" Tendons Typ

Exterior face of girder

Interior face of girder

1000 Typ

1000

Spare Duct (SD) to accommodate 19-15 Dia tendons

Segment No. Typ

Floor Access See "Cantilever Tendon Details No. 3B" sheet CCO 45

"W" Line

Direction from ℄ Pier Typ

10 Typ

100

"P" tendons of Pier E4W. For tendon strand number and jacking force, see "Bottom Span Tendon Layout E4W" sheet

TENDON LAYOUT PLAN

Longitudinal 1:250
Transverse 1:25

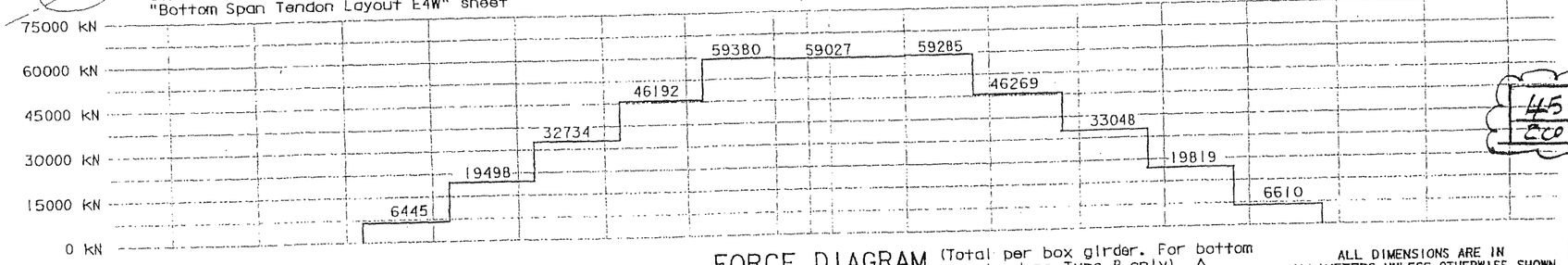

FORCE DIAGRAM

(Total per box girder. For bottom span tendons Type B only) △1

ALL DIMENSIONS ARE IN MILLIMETERS UNLESS OTHERWISE SHOWN

BOTTOM SPAN TENDONS (*per box girder)

Tendon	No. of tendons* x No. of strands (15 Dia)	Jacking Force per Tendon kN
E5W B 1	2 x 19	3705
E5W B 2	2 x 19	3705
E5W B 3	2 x 19	3705
E5W B 4	2 x 19	3705
E5W B 5	2 x 19	3705
E5W B 6	2 x 19	3705
E5W B 7	2 x 19	3705
E5W B 8	2 x 19	3705
E5W B 9	2 x 19	3705
△3 E5W P1-4	8 x 12	See note 6
△1 E5W P5-10	12 x 12	1400 (1)
△3 E5W P11-12	4 x 12	See note 6

NOTES:

1. Tendons are symmetrical with respect to "W" Line.
2. Anchorage symbols are as follows:
   - |—— Jacking end
   - ▶—— Dead end
3. The force diagram shows forces which only account for losses due to friction, anchor set and elastic shortening.
4. Key to tendon nomenclature:
   - E5W B 1
   - Span No. — E5W
   - Tendon type — B
   - Tendon mark — 1
5. For "P" Tendon details, see "Cantilever Tendon Details" sheets.
6. △3 (1) No stressing and anchorage required for tendons P1-4 & P11-12. Tendons shall be preassembled units and installed by pulling through duct and then grouted.

MARK	DATE	DESCRIPTIONS	BY	CH'D
45	△3 08/01/03	ELIMINATE STRESSING AND ANCHORAGE REQUIREMENT FOR NOTED TENDONS	MR	JC
ECO		REVISIONS		

CONTRACT CHANGE ORDER NO. 45
SHEET 4 OF 24

100% PS&E

STL-003082 11/24/03

MARK	DATE	DESCRIPTION	BY	CH'D
△2	03/05/03	ADD FLOOR ACCESS DETAIL CCO 45	JC	MS
△1	10/07/02	SHOW AND EXTEND "P" TENDONS	JC	MS

DESIGN OVERSIGHT: Habib Matta 8/15/03
SIGN OFF DATE

DESIGN: J. Chan — CHECKED: H. Lund
DETAILS: E. Zharkov — CHECKED: H. Lund
QUANTITIES: R. Cormier — CHECKED: J. Chan

ORIGINAL SCALE IN MILLIMETERS FOR REDUCED PLANS

PREPARED FOR THE STATE OF CALIFORNIA DEPARTMENT OF TRANSPORTATION

Sajid Abbas
PROJECT ENGINEER

BRIDGE NO. 34-0006L/R
KILOMETER POST 13.9/14.3, 0.0/1.5
CU 02
EA 01202

DISREGARD PRINTS BEARING EARLIER REVISION DATES

SAN FRANCISCO OAKLAND BAY BRIDGE
EAST SPAN SEISMIC SAFETY PROJECT

SKYWAY STRUCTURES

BOTTOM SPAN TENDON LAYOUT E5W

REVISION DATES (PRELIMINARY STAGE ONLY) | SHEET | OF

Rev. Date: 5-18-90

Mission Control Redline

Numerous Tendon profile and deviations changes, (see KFM letter 717). See approved composite drawings for revisions. See PT elongation submittals for revisions to stressing ends.

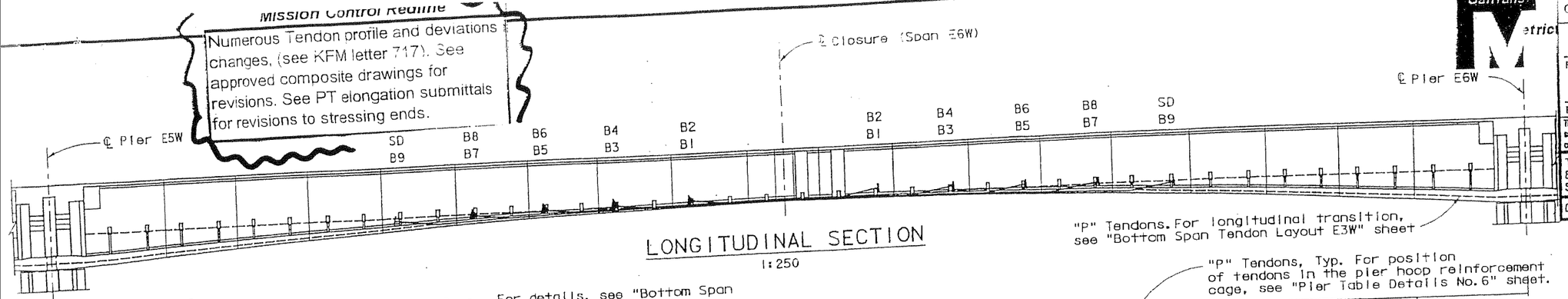

LONGITUDINAL SECTION
1:250

"P" Tendons. For longitudinal transition, see "Bottom Span Tendon Layout E3W" sheet

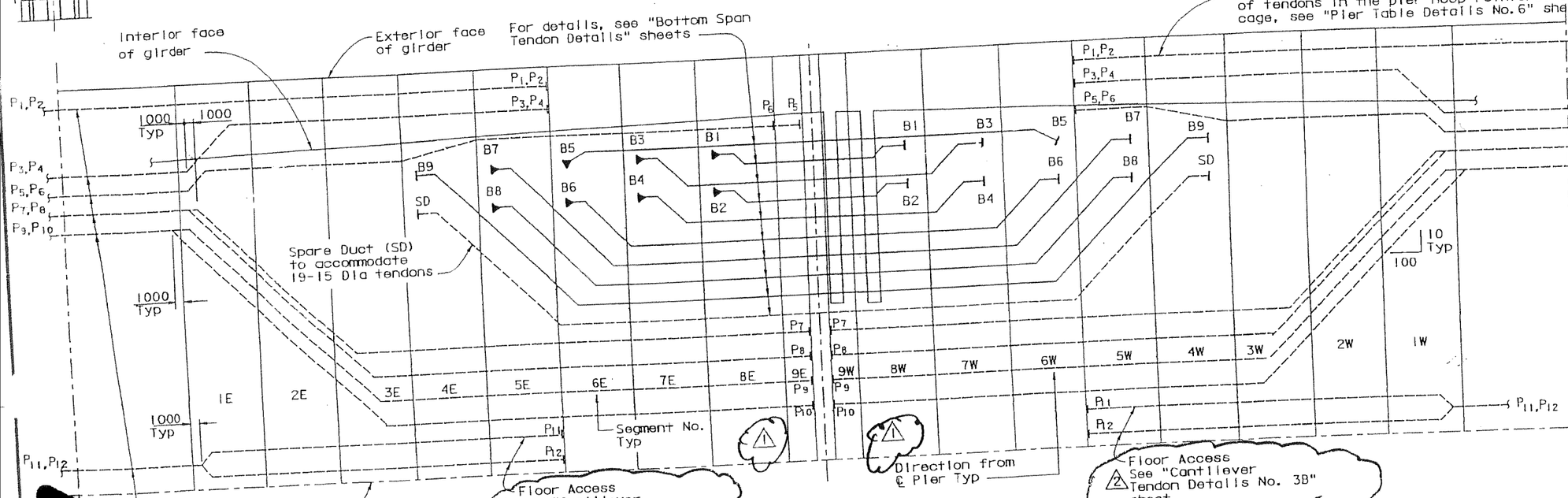

TENDON LAYOUT PLAN
Longitudinal 1:250
Transverse 1:25

BOTTOM SPAN TENDONS (*per box girder)

Tendon	No. of tendons* x No. of strands (15 Dia)	Jacking Force per Tendon kN
E6W B 1	2 x 19	3705
E6W B 2	2 x 19	3705
E6W B 3	2 x 19	3705
E6W B 4	2 x 19	3705
E6W B 5	2 x 19	3705
E6W B 6	2 x 19	3705
E6W B 7	2 x 19	3705
E6W B 8	2 x 19	3705
E6W B 9	2 x 19	3705
3 1 E6W P1-4	8 x 12	See note 6
1 1 E6W P5-10	12 x 12	1400 2
3 1 E6W P11-12	4 x 12	See note 6

NOTES:

1. Tendons are symmetrical with respect to "W" Line.
2. Anchorage symbols are as follows:
   - ├── Jacking end
   - ►── Dead end
3. The force diagram shows forces which only account for losses due to friction, anchor set and elastic shortening.
4. Key to tendon nomenclature: E6W B 1
   - Span No.
   - Tendon type
   - Tendon mark
5. For "P" Tendon details, see "Cantilever Tendon Details" sheets.
6. 3 2 No stressing and anchorage required for tendons P1-4 & P11-12. Tendons shall be preassembled units and installed by pulling through duct and then grouted. CCO 45

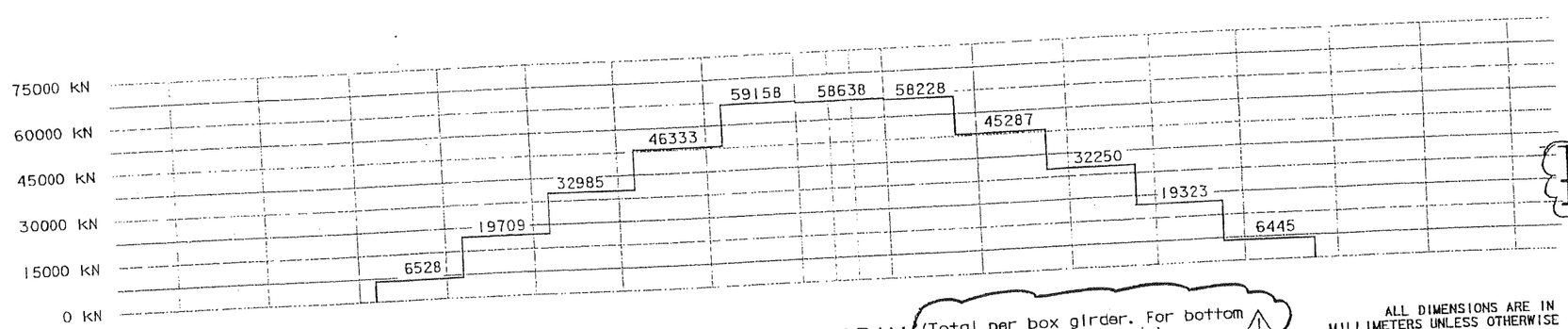

FORCE DIAGRAM (Total per box girder. For bottom span tendons Type B only) 1

CCO	MARK	DATE	DESCRIPTIONS	BY	CH'D
45	3	08/01/03	ELIMINATE STRESSING AND ANCHORAGE REQUIREMENT FOR NOTED TENDONS	MR	JC

REVISIONS

CONTRACT CHANGE ORDER NO. 45
SHEET 5 OF 34

ALL DIMENSIONS ARE IN MILLIMETERS UNLESS OTHERWISE SHOWN

PREPARED FOR THE STATE OF CALIFORNIA DEPARTMENT OF TRANSPORTATION

Sajid Abbas
PROJECT ENGINEER

BRIDGE NO. 34-0006L/R
KILOMETER POST 3.9/4.3, 0.0/1.8

SAN FRANCISCO OAKLAND BAY BRIDGE
EAST SPAN SEISMIC SAFETY PROJECT

SKYWAY STRUCTURES

BOTTOM SPAN TENDON LAYOUT E6W

SHEET 194

DESIGN: J. Chan; DETAILS: E. Zhorkov; QUANTITIES: K. Cormier; CHECKED: H. Lund, H. Lund, J. Chan

MARK	DATE	DESCRIPTION	BY	CH'D
2	03/05/03	ADD FLOOR ACCESS DETAIL CCO 45	JC	MS
1	10/07/02	SHOW AND EXTEND ROF TENDONS CCO 7	JC	MS

DESIGN OVERSIGHT 8/15/03
SIGN OFF DATE

REGISTERED ENGINEER - CIVIL
6-04-01
PLANS APPROVAL DATE

Siu Fu John Chan, No. C 39457, Exp. 12/31/05, CIVIL, REGISTERED PROFESSIONAL ENGINEER, STATE OF CALIFORNIA

The State of California or its officers or agents shall not be responsible for the accuracy or completeness of electronic copies of this plan sheet.

T.Y. LIN / MOFFATT & NICHOL
825 BATTERY STREET
SAN FRANCISCO, CA 94111

Caltrans now has a web site! To get to the web site, go to: http://www.dot.ca.gov

100 % PS&E

STL-003082 11/24/03

Numerous Tendon profile and deviations changes. (see KFM letter 717). See approved composite drawings for revisions. See PT elongation submittals for revisions to stressing ends.

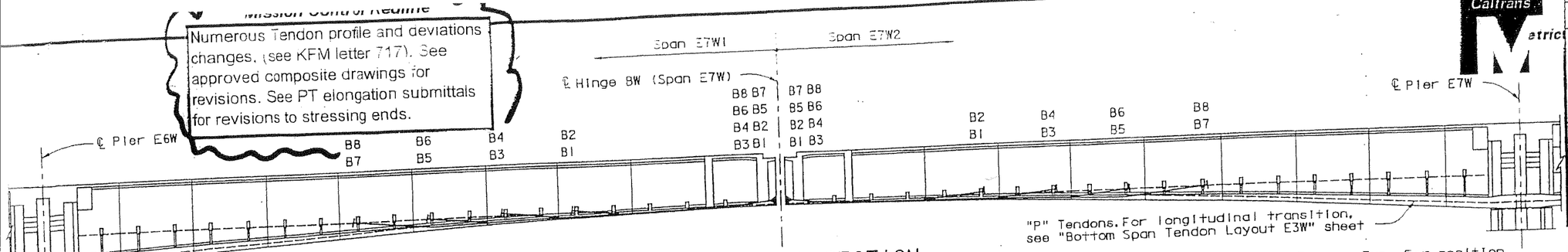

LONGITUDINAL SECTION

1:250

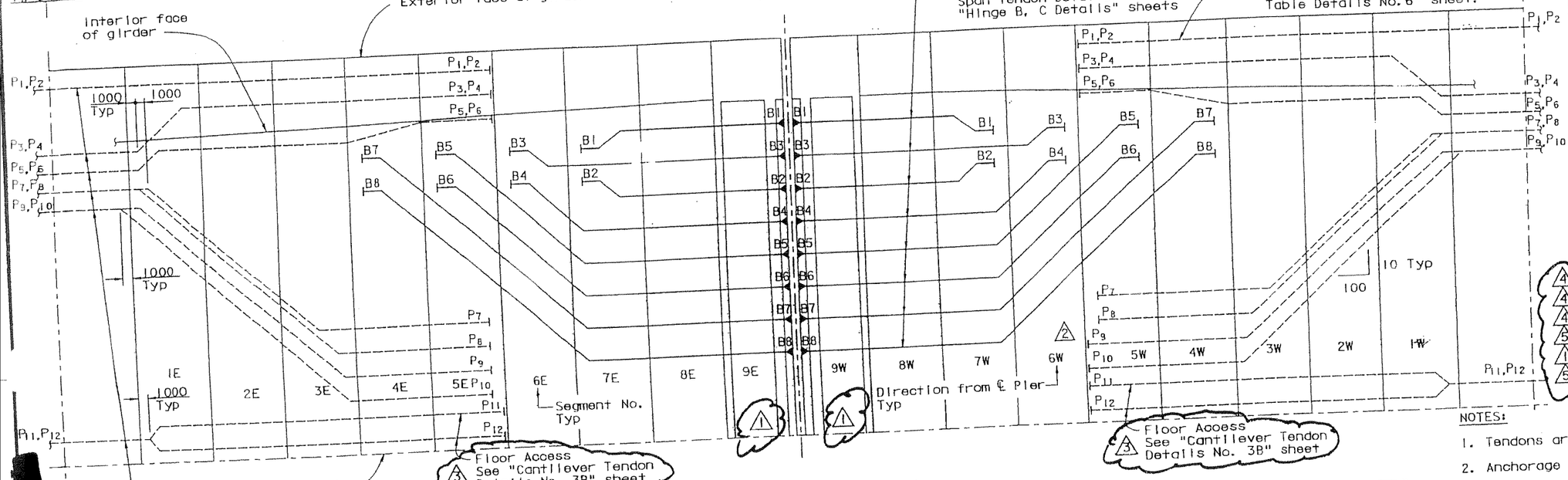

TENDON LAYOUT PLAN

Longitudinal 1:250
Transverse 1:25

MARK	DATE	DESCRIPTIONS	BY	CH'D
5	08/01/03	ELIMINATE STRESSING AND ANCHORAGE REQUIREMENT FOR NOTED TENDONS	MR	JC
4	08/01/03	RESTORE B6, B7 & B8 TO TABLE	MR	JC

REVISIONS

CCO 45
Non CCO

CONTRACT CHANGE ORDER NO. 45
SHEET 6 OF 34

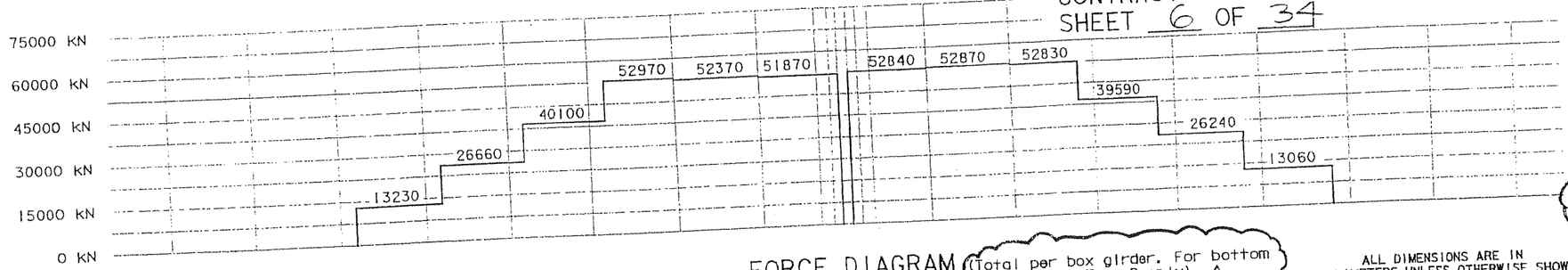

FORCE DIAGRAM

(Total per box girder. For bottom span tendons Type B only)

ALL DIMENSIONS ARE IN MILLIMETERS UNLESS OTHERWISE SHOWN

BOTTOM SPAN TENDONS (*per box girder)

Tendon	No. of tendons* x No. of strands (15 Dia)	Jacking Force per Tendon kN
E7W1 B 1	2 x 19	3705
E7W1 B 2	2 x 19	3705
E7W1 B 3	2 x 19	3705
E7W1 B 4	2 x 19	3705
E7W1 B 5	2 x 19	3705
E7W1 B 6	2 x 19	3705
E7W1 B 7	2 x 19	3705
E7W1 B 8	2 x 19	3705
E7W2 B 1	2 x 19	3705
E7W2 B 2	2 x 19	3705
E7W2 B 3	2 x 19	3705
E7W2 B 4	2 x 19	3705
E7W2 B 5	2 x 19	3705
4 E7W2 B 6 (1)	2 x 19	3705
4 E7W2 B 7 (1)	2 x 19	3705
4 E7W2 B 8 (1)	2 x 19	3705
5 E7W2 P1-4	8 x 12	See note 6
1 E7W2 P5-10	12 x 12	1400 (2)
5 E7W2 P11-12	4 x 12	See note 6

2

NOTES:

1. Tendons are symmetrical with respect to "W" Line.
2. Anchorage symbols are as follows:
   - ├── Jacking end
   - ►── Dead end
3. The force diagram shows forces which only account for losses due to friction, anchor set and elastic shortening.
4. Key to tendon nomenclature:
   - E7W1 — Span No.
   - B — Tendon type
   - 1 — Tendon mark
5. For "P" tendon details, see "Cantilever Tendon Details" sheets.
6. (5) (2) No stressing and anchorage required for tendons P1-4 & P11-12. Tendons shall be preassembled units and installed by pulling through duct and then grouted.

Caltrans District 4 — Metric

04	SF, Ala	30	13.9/14.3, 0.0/1.5	627R3	978

REGISTERED ENGINEER - CIVIL
Siu Fu John Chan
No. C 39457
Exp. 12/31/05
CIVIL
STATE OF CALIFORNIA

6-04-01
PLANS APPROVAL DATE

The State of California or its officers or agents shall not be responsible for the accuracy or completeness of electronic copies of this plan sheet.

T.Y. LIN / MOFFATT & NICHOL
825 BATTERY STREET
SAN FRANCISCO, CA 94111

Caltrans now has a web site! To get to the web site, go to: http://www.dot.ca.gov

100 % PS&E

STL-003082 11/24/03

SAN FRANCISCO OAKLAND BAY BRIDGE
EAST SPAN SEISMIC SAFETY PROJECT

SKYWAY STRUCTURES

BOTTOM SPAN TENDON LAYOUT E7W

MARK	DATE	DESCRIPTION	BY	CH'D
3	03/05/03	ADD FLOOR ACCESS DETAIL CCO 45	JC	MS
2	03/05/03	REVISE P9 AND P10 ANCHOR LOCATIONS AND STRAND NO.	JC	MS
1	10/07/02	SHOW AND EXTEND "D" TENDON.	JC	MS

DESIGN OVERSIGHT 8/15/03
SIGN OFF DATE

DESIGN — BY J. Chan — CHECKED H. Lund
DETAILS — BY S. Lee — CHECKED H. Lund
QUANTITIES — BY K. Cormier — CHECKED J. Chan

PREPARED FOR THE STATE OF CALIFORNIA DEPARTMENT OF TRANSPORTATION

Sajid Abbas
PROJECT ENGINEER

BRIDGE NO. 34-0006L/R
KILOMETER POST 13.9/14.3, 0.0/1.5

CU 02
EA 01202

ORIGINAL SCALE IN MILLIMETERS FOR REDUCED PLAN

DISREGARD PRINTS BEARING EARLIER REVISION DATE:

REVISION DATES (PRELIMINARY STAGE ONLY): 02/07/00 | 06/28/00 | 11/17/00 | 02/16/01 | 07/26/01 | 01/15/02 | 10/07/02 | 01/17/03 | 03/05/03 | 08/01/03

SHEET 195 OF

Rev. Date: 5-18-98

Numerous Tendon profile and deviations changes. (see KFM letter 717). See approved composite drawings for revisions. See PT elongation submittals for revisions to stressing ends.

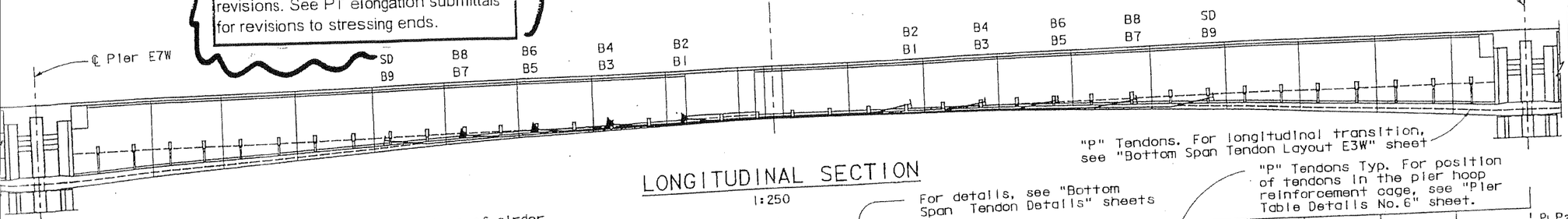

"P" Tendons. For longitudinal transition, see "Bottom Span Tendon Layout E3W" sheet

LONGITUDINAL SECTION

1:250

For details, see "Bottom Span Tendon Details" sheets

"P" Tendons Typ. For position of tendons in the pier hoop reinforcement cage, see "Pier Table Details No. 6" sheet.

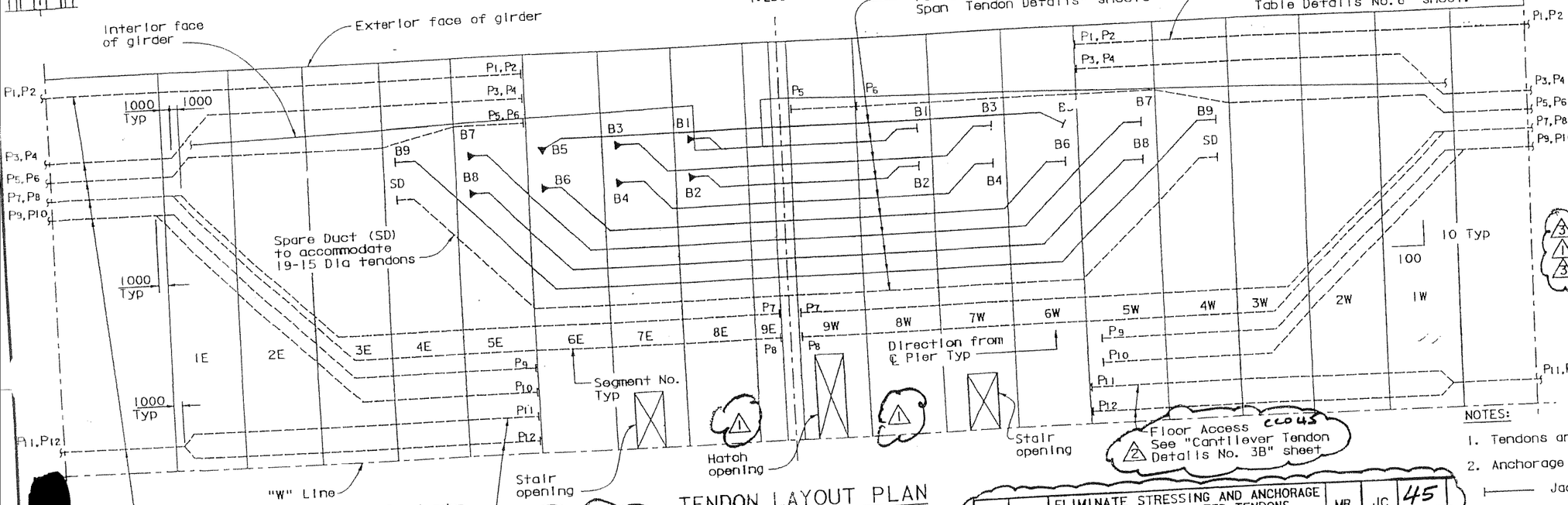

"P" tendons of Pier E7W. For tendon strand number and jacking force, see "Bottom Span Tendon Layout E7W" sheet

TENDON LAYOUT PLAN

Longitudinal 1:250
Transverse 1:25

BOTTOM SPAN TENDONS (*per box girder)

Tendon	No. of tendons* x No. of strands (15 Dia)	Jacking Force per Tendon kN
E8W B 1	2 x 19	3705
E8W B 2	2 x 19	3705
E8W B 3	2 x 19	3705
E8W B 4	2 x 19	3705
E8W B 5	2 x 19	3705
E8W B 6	2 x 19	3705
E8W B 7	2 x 19	3705
E8W B 8	2 x 19	3705
E8W B 9	2 x 19	3705
3 E8W P1-4	8 x 12	See note 6
1 E8W P5-10	12 x 12	1400 (1)
3 E8W P11-12	4 x 12	See note 6

NOTES:

1. Tendons are symmetrical with respect to "W" Line.
2. Anchorage symbols are as follows:
   - ⊢— Jacking end
   - ▶— Dead end
3. The force diagram shows forces which only account for losses due to friction, anchor set and elastic shortening.
4. Key to tendon nomenclature:
   - E8W — Span No.
   - B — Tendon type
   - 1 — Tendon mark
5. For "P" Tendon details, see "Cantilever Tendon Details" sheets.
6. 3 No stressing and anchorage required for tendons P1-4 & P11-12. Tendons shall be preassembled units and installed by pulling through duct and then grouted. CCO 45 (1)

MARK	DATE	DESCRIPTIONS	BY	CH'D
3	06/01/03	ELIMINATE STRESSING AND ANCHORAGE REQUIREMENT FOR NOTED TENDONS	MR	JC
			JC	45
			BY	CH'D
				CCO

REVISIONS

CONTRACT CHANGE ORDER NO. 45
SHEET 7 OF 34

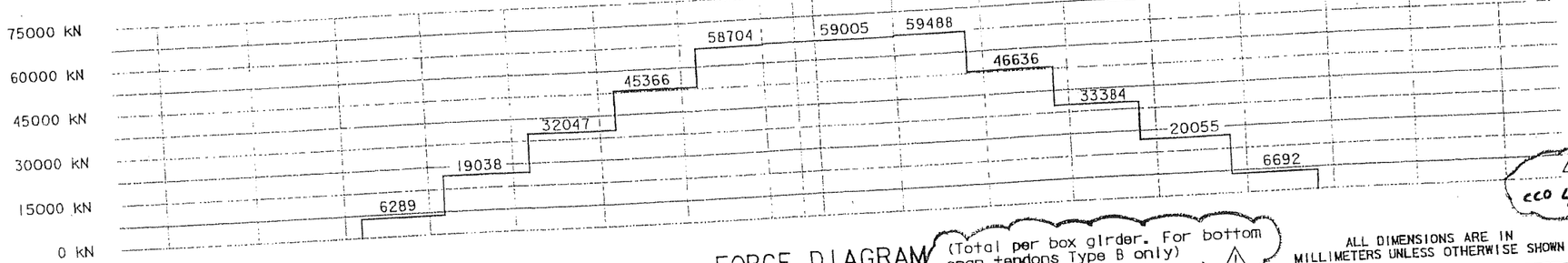

FORCE DIAGRAM

(Total per box girder. For bottom span tendons Type B only) 1

ALL DIMENSIONS ARE IN MILLIMETERS UNLESS OTHERWISE SHOWN

Caltrans Metric

041SF.A1d | 30 | 3.9/14.3. 0.0/1.6 | 628R3 978

REGISTERED ENGINEER - CIVIL
Siu Fu John Chan
No. C 39457
Exp. 12/31/05
CIVIL
STATE OF CALIFORNIA
PROFESSIONAL ENGINEER

6-04-01
PLANS APPROVAL DATE

The State of California or its officers or agents shall not be responsible for the accuracy or completeness of electronic copies of this plan sheet.

T.Y. LIN / MOFFATT & NICHOL
825 BATTERY STREET
SAN FRANCISCO, CA 94111

Caltrans now has a web site! To get to the web site, go to: http://www.dot.ca.gov

SAN FRANCISCO OAKLAND BAY BRIDGE
EAST SPAN SEISMIC SAFETY PROJECT

SKYWAY STRUCTURES

BOTTOM SPAN TENDON LAYOUT E8W

BRIDGE NO. 34-0006L/R
KILOMETER POST 3.9/14.3. 0.0/1.6

Sajid Abbas
PROJECT ENGINEER

PREPARED FOR THE STATE OF CALIFORNIA DEPARTMENT OF TRANSPORTATION

DESIGN: J. Chan | CHECKED: H. Lund
DETAILS: E. Zharkov | CHECKED: H. Lund
QUANTITIES: L. Cormier | CHECKED: J. Chan

DESIGN OVERSIGHT: Harold Chan 8/15/02
SIGN OFF DATE

MARK	DATE	DESCRIPTION	BY	CH'D
3	03/05/03	ADD FLOOR ACCESS DETAIL CCO 45	JC	MS
1	10/07/02	SHOW AND EXTEND TENDONS CCO 7	JC	MS

ORIGINAL SCALE IN MILLIMETERS FOR REDUCED PLANS

CU 02
EA 01202

DISREGARD PRINTS BEARING EARLIER REVISION DATES:

REVISION DATES (PRELIMINARY STAGE ONLY) 02/15/00 | 06/30/00 | 11/30/00 | 12/30/00 | 03/30/01 | 07/31/01 | 10/09/02 | 01/31/03 | 03/05/03 | 06/01/03

SHEET ___ OF 196

100% PS&E

STL-003082 11/24/03

Mission Control Redline

Numerous Tendon profile and deviations changes, (see KFM letter 717). See approved composite drawings for revisions. See PT elongation submittals for revisions to stressing ends.

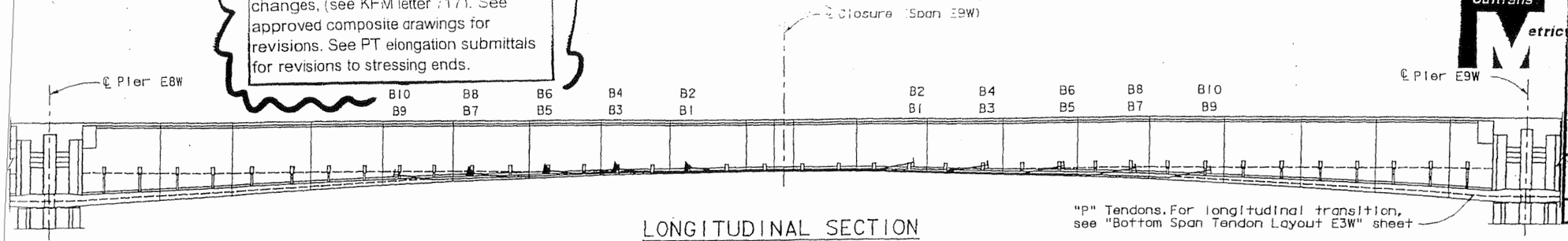

"P" Tendons. For longitudinal transition, see "Bottom Span Tendon Layout E3W" sheet

LONGITUDINAL SECTION

1:250

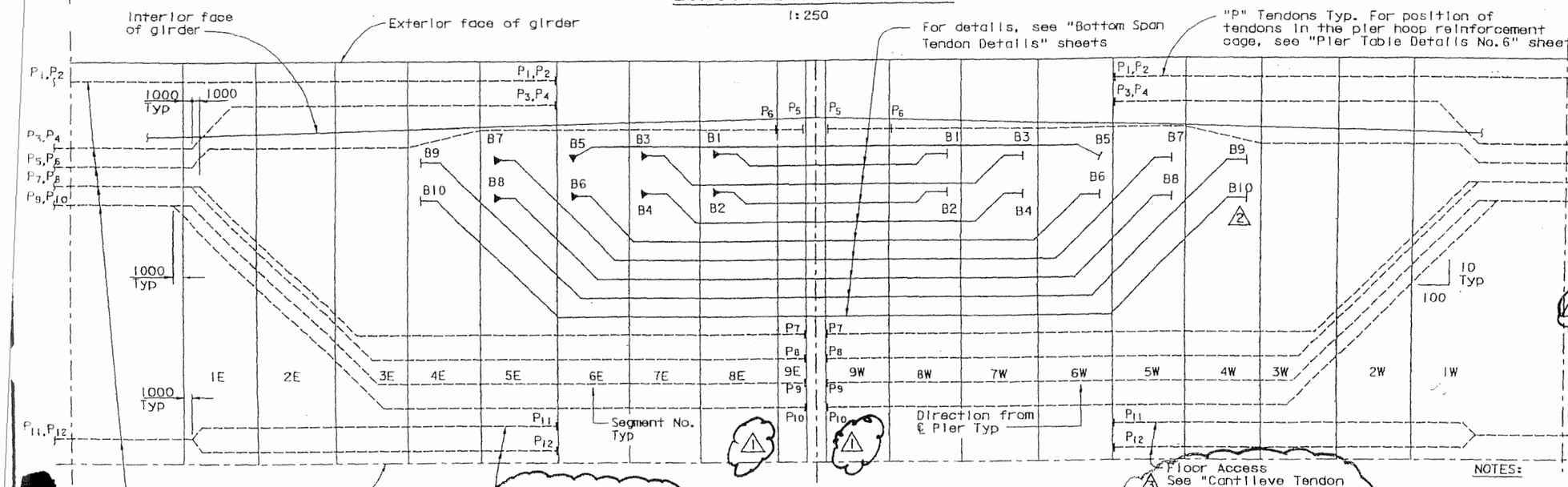

TENDON LAYOUT PLAN

Longitudinal 1:250
Transverse 1:25

BOTTOM SPAN TENDONS (*per box girder)

Tendon	No. of tendons* x No. of strands (15 Dia)	Jacking Force per Tendon kN
E9W B 1	2 x 19	3705
E9W B 2	2 x 19	3705
E9W B 3	2 x 19	3705
E9W B 4	2 x 19	3705
E9W B 5	2 x 19	3705
E9W B 6	2 x 19	3705
E9W B 7	2 x 19	3705
E9W B 8	2 x 19	3705
E9W B 9	2 x 19	3705
2 E9W B10	2 x 19	3705
4 1 E9W P_{1-4}	8 x 12	1 See note 6
E9W P_{5-10}	12 x 12	1400
4 E9W P_{11-12}	4 x 12	1 See note 6

NOTES:

1. Tendons are symmetrical with respect to "W" Line.
2. Anchorage symbols are as follows:
   - ├── Jacking end
   - ▶── Dead end
3. The force diagram shows forces which only account for losses due to friction, anchor set and elastic shortening.
4. Key to tendon nomenclature:
   - E9W — Span No.
   - B — Tendon type
   - 1 — Tendon mark
5. For "P" tendon details, see "Cantilever Tendon Details" sheets.
6. 4 1 CCO 45 No stressing and anchorage required for tendons P_{1-4} & P_{11-12}. Tendons shall be preassembled units and installed by pulling through duct and then grouted.

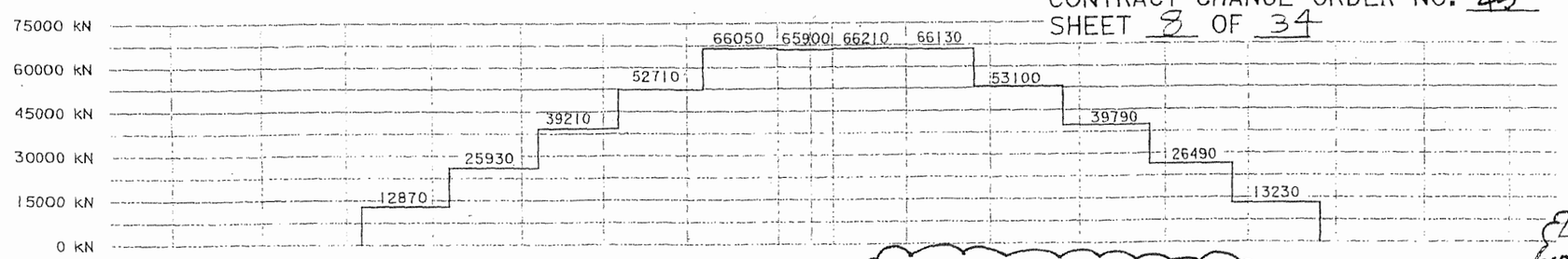

FORCE DIAGRAM

(Total per box girder. For bottom span tendons Type B only) 1 2

ALL DIMENSIONS ARE IN MILLIMETERS UNLESS OTHERWISE SHOWN

MARK	DATE	DESCRIPTION	BY	CH'D
45	08/01/03	ELIMINATE STRESSING AND ANCHORAGE REQUIREMENT FOR NOTED TENDONS	MR	JC
CCO		REVISIONS		

CONTRACT CHANGE ORDER NO. 45
SHEET 8 OF 34

MARK	DATE	DESCRIPTION	BY	CH'D
3	03/05/03	ADD FLOOR ACCESS DETAIL CCO 45	JC	MS
2	10/07/02	CHANGE BOTTOM SPAN TENDON CCO	JC	MS
1	10/07/02	SHOW AND EXTEND "P" TENDONS CCO	JC	MS

DESIGN OVERSIGHT: 8/15/03
SIGN OFF DATE

DESIGN: J. Chan; DETAILS: E. Zharkov; QUANTITIES: L. Cormier; CHECKED: H. Lund; CHECKED: H. Lund; CHECKED: J. Chen

PREPARED FOR THE STATE OF CALIFORNIA DEPARTMENT OF TRANSPORTATION

Sajid Abbas, PROJECT ENGINEER

BRIDGE NO. 34-0006L/R
KILOMETER POST 13.9/14.3, 0.0/1.6

SAN FRANCISCO OAKLAND BAY BRIDGE
EAST SPAN SEISMIC SAFETY PROJECT

SKYWAY STRUCTURES

BOTTOM SPAN TENDON LAYOUT E9W

ORIGINAL SCALE IN MILLIMETERS FOR REDUCED PLANS

CU 04
EA 01202

DISREGARD PRINTS DATED: EARLIER REVISION DATES:

REVISION DATES (PRELIMINARY STAGE ONLY): 07/03/99 | 02/08/00 | 06/09/00 | 11/07/00 | 02/06/01 | 02/22/01 | 07/18/02 | 10/07/02 | 03/05/03 | 08/01/03

SHEET 197 OF

Caltrans Metric

04 | SF-Ala | 30 | 13.9/14.3, 0.0/1.6 | 629R3 | 978

REGISTERED ENGINEER - CIVIL
Siu Fu John Chan
6-04-01
PLANS APPROVAL DATE

REGISTERED PROFESSIONAL ENGINEER Siu Fu John Chan No. C 39457 Exp. 12/31/05 CIVIL STATE OF CALIFORNIA

The State of California or its officers or agents shall not be responsible for the accuracy or completeness of electronic copies of this plan sheet.

T.Y. LIN / MOFFATT & NICHOL
825 BATTERY STREET
SAN FRANCISCO, CA 94111

Caltrans now has a web site! To get to the web site, go to: http://www.dot.ca.gov

100 % PS&E

STL-003082 11/24/03

Mission Control Redline

Numerous Tendon profile and deviations changes. (see KFM letter 717). See approved composite drawings for revisions. See PT elongation submittals for revisions to stressing ends.

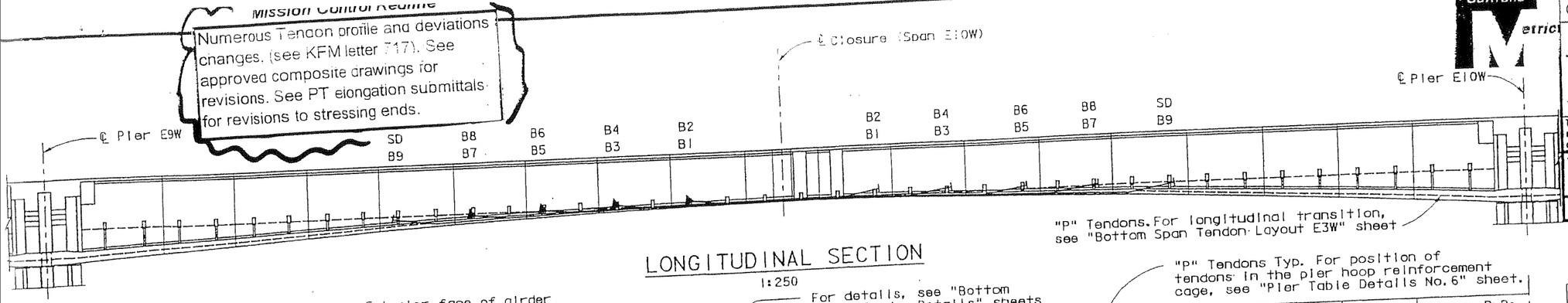

LONGITUDINAL SECTION

1:250

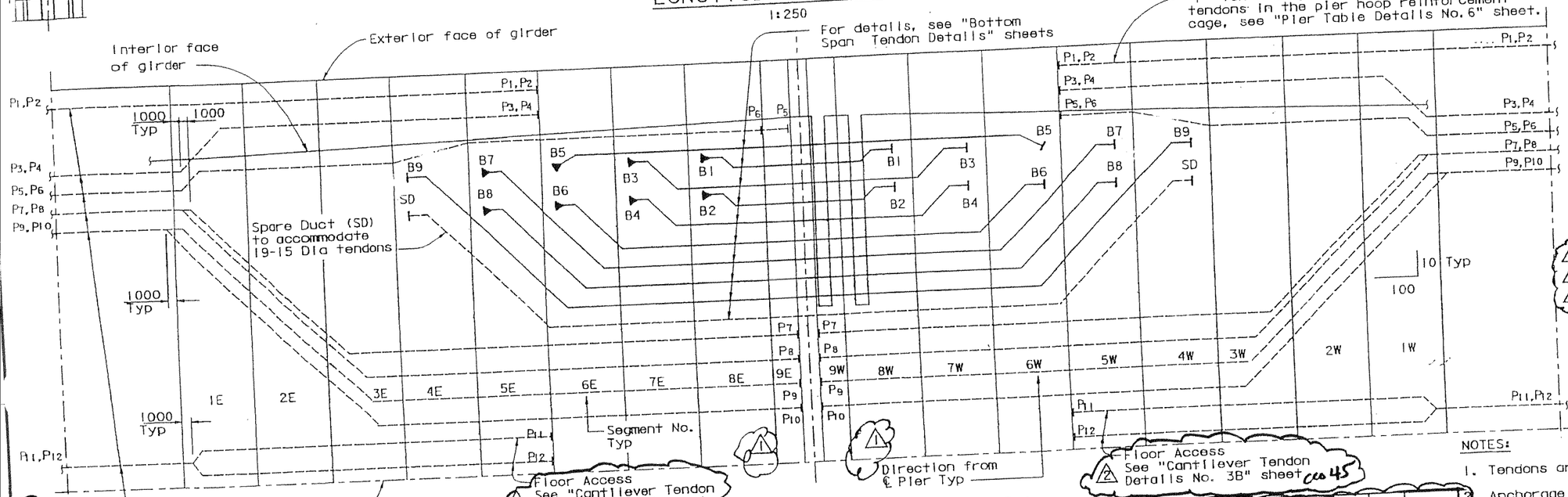

TENDON LAYOUT PLAN

Longitudinal 1:250
Transverse 1:25

MARK	DATE	DESCRIPTIONS	BY	CH'D
3	08/01/03	ELIMINATE STRESSING AND ANCHORAGE REQUIREMENT FOR NOTED TENDONS	MR	JC
		REVISIONS		45 CCO

CONTRACT CHANGE ORDER NO. 45
SHEET 9 OF 34

BOTTOM SPAN TENDONS (*per box girder)

Tendon	No. of tendons* x No. of strands (15 Dia)	Jacking Force per Tendon kN
E10W B 1	2 x 19	3705
E10W B 2	2 x 19	3705
E10W B 3	2 x 19	3705
E10W B 4	2 x 19	3705
E10W B 5	2 x 19	3705
E10W B 6	2 x 19	3705
E10W B 7	2 x 19	3705
E10W B 8	2 x 19	3705
E10W B 9	2 x 19	3705
3 E10W P1-4	8 x 12	1 See note 6
1 E10W P5-10	12 x 12	1400
3 E1WE P11-12	4 x 12	1 See note 6

NOTES:

1. Tendons are symmetrical with respect to "W" Line.
2. Anchorage symbols are as follows:
   - Jacking end
   - Dead end
3. The force diagram shows forces which only account for losses due to friction, anchor set and elastic shortening.
4. Key to tendon nomenclature:
   - E10W — Span No.
   - B — Tendon type
   - 1 — Tendon mark
5. For "P" Tendon details, see "Cantilever Tendon Details" sheets.
6. 3 No stressing and anchorage required for tendons P1-4 & P11-12. Tendons shall be 1 preassembled units and installed by pulling through duct and then grouted.

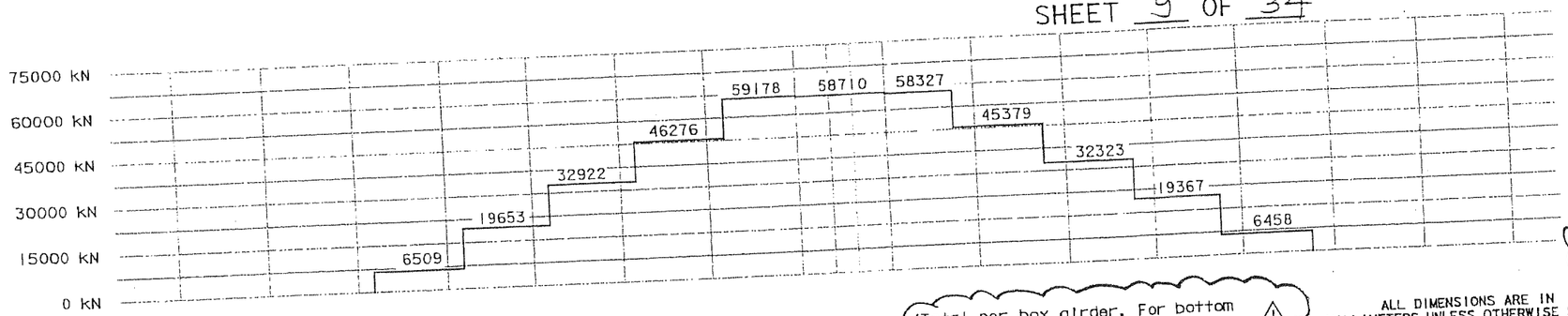

FORCE DIAGRAM (Total per box girder. For bottom span tendons Type B only) 1

ALL DIMENSIONS ARE IN MILLIMETERS UNLESS OTHERWISE SHOWN

MARK	DATE	DESCRIPTION	BY	CH'D
2	03/05/03	ADD FLOOR ACCESS DETAIL CCO 45	JC	MS
1	10/07/02	SHOW AND EXTEND "P" TENDONS CCO 7	JC	MS

DESIGN OVERSIGHT 8/15/03
SIGN OFF DATE
Rev. Date: 5-18-99

DESIGN BY J. Chan CHECKED H. Lund
DETAILS BY E. Zharkov CHECKED H. Lund
QUANTITIES BY K. Cormier CHECKED J. Chan

PREPARED FOR THE STATE OF CALIFORNIA DEPARTMENT OF TRANSPORTATION

Sajid Abbas
PROJECT ENGINEER

BRIDGE NO. 34-0006L/R
KILOMETER POST 13.9/14.3 0.0/1.6

DISREGARD PRINTS BEARING EARLIER REVISION DATE

ORIGINAL SCALE IN MILLIMETERS FOR REDUCED PLANS

CU 04
EA 01202

SAN FRANCISCO OAKLAND BAY BRIDGE
EAST SPAN SEISMIC SAFETY PROJECT

SKYWAY STRUCTURES

BOTTOM SPAN TENDON LAYOUT E10W

REVISION DATES (PRELIMINARY STAGE ONLY) 01/05/99 02/25/00 06/02/00 11/27/00 02/06/01 07/23/02 10/24/02 01/03/03 08/01/03

SHEET 198 OF

100 % PS&E

STL-003082 11/24/03

REGISTERED ENGINEER - CIVIL
6-04-01
PLANS APPROVAL DATE
Siu Fu John Chan No. C 39457 Exp. 12/31/05 CIVIL STATE OF CALIFORNIA PROFESSIONAL ENGINEER

The State of California or its officers or agents shall not be responsible for the accuracy or completeness of electronic copies of this plan sheet.

T.Y. LIN / MOFFATT & NICHOL
825 BATTERY STREET
SAN FRANCISCO, CA 94111

Caltrans now has a web site! To get to the web site, go to: http://www.dot.ca.gov

Mission Control Redline

Numerous Tendon profile and deviations changes. (see KFM letter 717). See approved composite drawings for revisions. See PT elongation submittals for revisions to stressing ends.

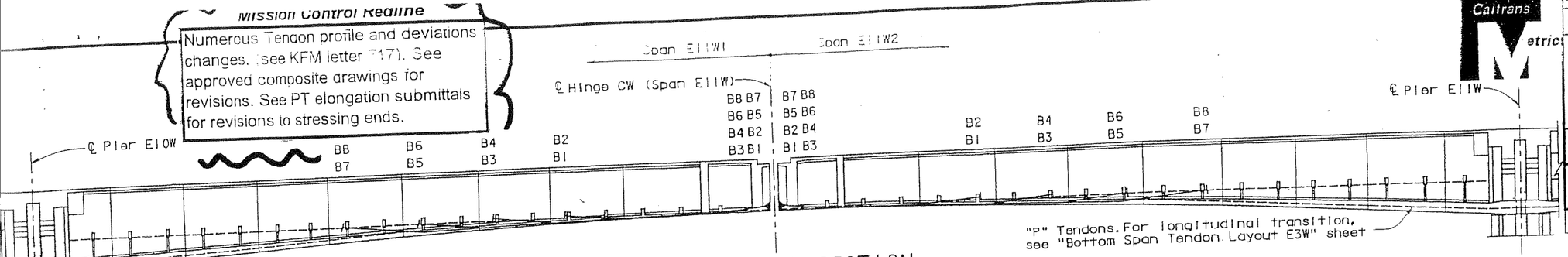

LONGITUDINAL SECTION

1:250

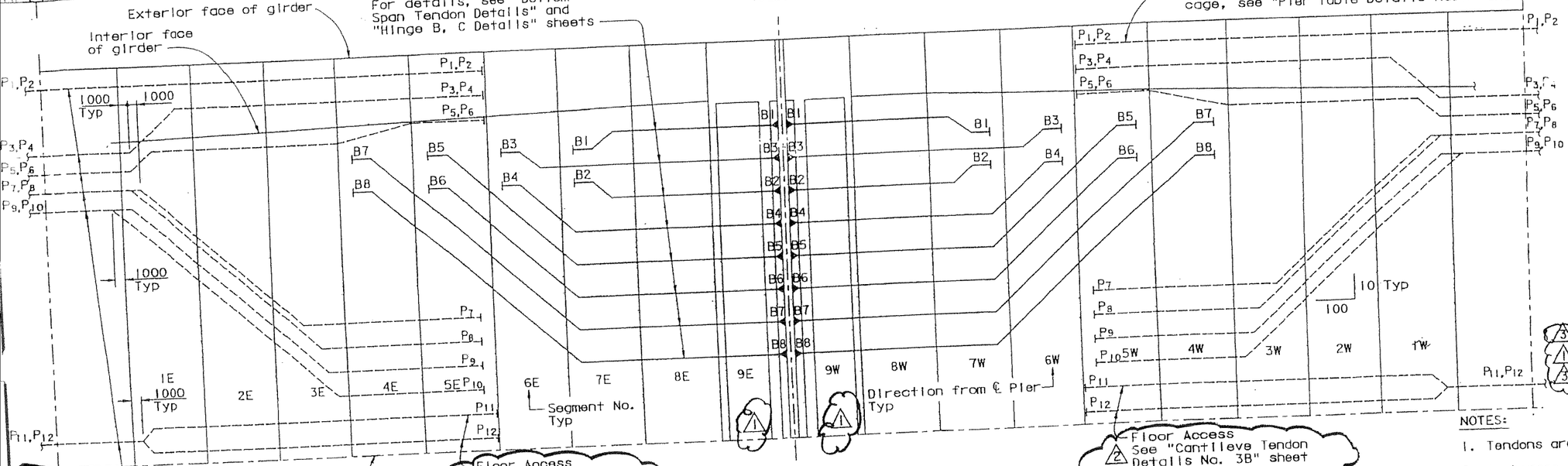

TENDON LAYOUT PLAN

Longitudinal 1:250
Transverse 1:25

CCO	MARK	DATE	DESCRIPTIONS	BY	CH'D
45	3	06/01/03	ELIMINATE STRESSING AND ANCHORAGE REQUIREMENT FOR NOTED TENDONS	MR	JC

REVISIONS

CONTRACT CHANGE ORDER NO. 45
SHEET 10 OF 34

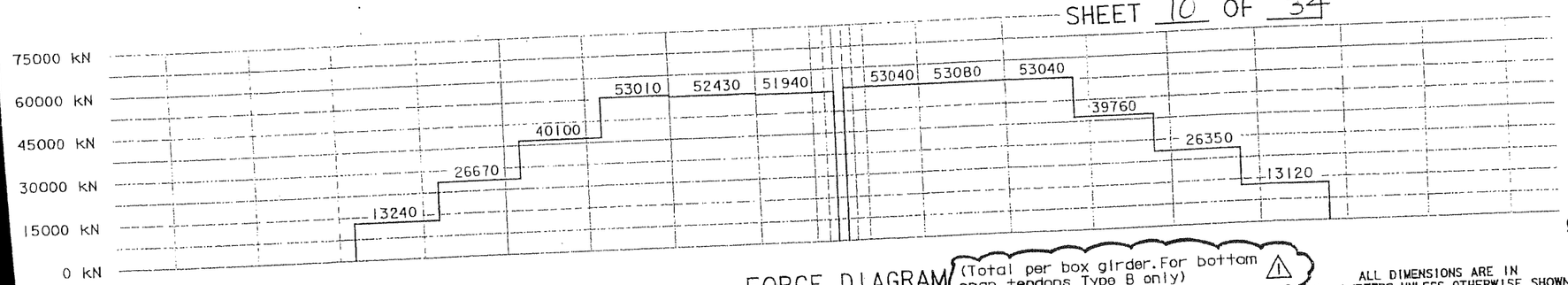

FORCE DIAGRAM (Total per box girder. For bottom span tendons Type B only)

ALL DIMENSIONS ARE IN MILLIMETERS UNLESS OTHERWISE SHOWN

BOTTOM SPAN TENDONS (*per box girder)

Tendon	No. of tendons* x No. of strands (15 Dia)	Jacking Force per Tendon kN
E11W1 B 1	2 x 19	3705
E11W1 B 2	2 x 19	3705
E11W1 B 3	2 x 19	3705
E11W1 B 4	2 x 19	3705
E11W1 B 5	2 x 19	3705
E11W1 B 6	2 x 19	3705
E11W1 B 7	2 x 19	3705
E11W1 B 8	2 x 19	3705
E11W2 B 1	2 x 19	3705
E11W2 B 2	2 x 19	3705
E11W2 B 3	2 x 19	3705
E11W2 B 4	2 x 19	3705
E11W2 B 5	2 x 19	3705
E11W2 B 6	2 x 19	3705
E11W2 B 7	2 x 19	3705
E11W2 B 8	2 x 19	3705
3 E11W2 P1-4	8 x 12	1 See note 6
1 E11W2 P5-10	12 x 12	1400
3 E11W2 P11-12	4 x 12	1 See note 6

NOTES:

1. Tendons are symmetrical with respect to "W" Line.
2. Anchorage symbols are as follows:
   - |—— Jacking end
   - ▶—— Dead end
3. The force diagram shows forces which only account for losses due to friction, anchor set and elastic shortening.
4. Key to tendon nomenclature:
   - E11W1 — Span No.
   - B — Tendon type
   - 1 — Tendon mark
5. For "P" tendon details, see "Cantilever Tendon Details" sheets.
6. 3 1 No stressing and anchorage required for tendons P1-4 & P11-12. Tendons shall be preassembled units and installed by pulling through duct and grouted.

Caltrans Metric

04 | SF.Alai | 30 | 13.3/14.3, 0.0/1.6 | 631R2 | 978

Siu Fu John Chan
REGISTERED ENGINEER - CIVIL
6-4-01
PLANS APPROVAL DATE

REGISTERED PROFESSIONAL ENGINEER Siu Fu John Chan No. C 39457 Exp. 12/31/05 CIVIL STATE OF CALIFORNIA

The State of California or its officers or agents shall not be responsible for the accuracy or completeness of electronic copies of this plan sheet.

T.Y. LIN / MOFFATT & NICHOL
825 BATTERY STREET
SAN FRANCISCO, CA 94111

Caltrans now has a web site! To get to the web site, go to: http://www.dot.ca.gov

SAN FRANCISCO OAKLAND BAY BRIDGE
EAST SPAN SEISMIC SAFETY PROJECT

SKYWAY STRUCTURES

BOTTOM SPAN TENDON LAYOUT E11W

BRIDGE NO. 34-0006L/R
KILOMETER POST 13.9/14.3, 0.0/1.6
Sajid Abbas, PROJECT ENGINEER

PREPARED FOR THE STATE OF CALIFORNIA DEPARTMENT OF TRANSPORTATION

DESIGN: J. Chan — CHECKED: H. Lund
DETAILS: S. Lee — CHECKED: H. Lund
QUANTITIES: L. Cornier — CHECKED: J. Chan

DESIGN OVERSIGHT: Hani Shahrouri 8/15/03
SIGN OFF DATE

MARK	DATE	DESCRIPTION	BY	CH'D
2	03/06/03	ADD FLOOR ACCESS DETAIL CCO 45	JC	MS
1	10/07/02	SHOW AND EXTEND "P" TENDONS CCO -	JC	MS

ORIGINAL SCALE IN MILLIMETERS FOR REDUCED PLANS

DISREGARD PRINTS BEARING EARLIER REVISION DATES: 02/28/00 | 06/26/00 | 10/09/02 | 02/14/01 | 02/26/01 | 07/25/02 | 10/09/02 | 01/14/03 | 02/25/03 | 06/01/03

CU 04
EA 01202

SHEET 195 OF

100% PS&E

STL-003082 11/24/03

Numerous Tendon profile and deviations changes. (see KFM letter 717). See approved composite drawings for revisions. See PT elongation submittals for revisions to stressing ends.

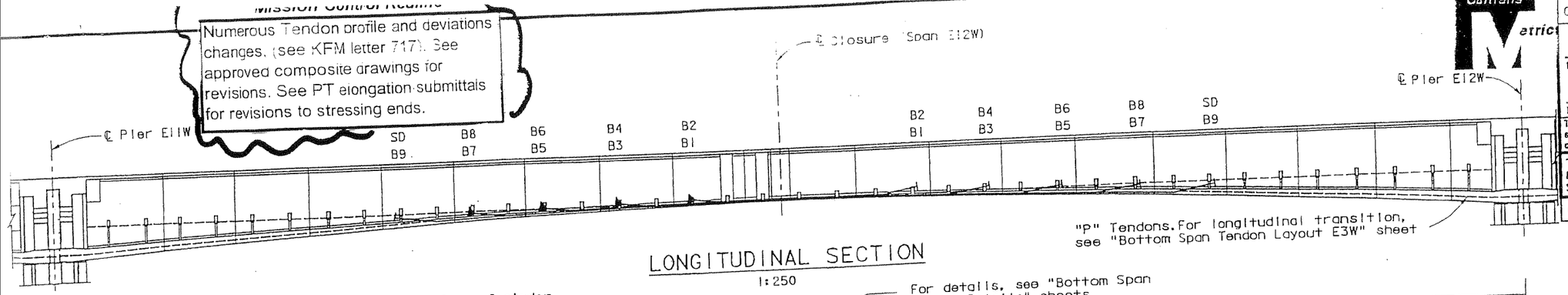

LONGITUDINAL SECTION

1:250

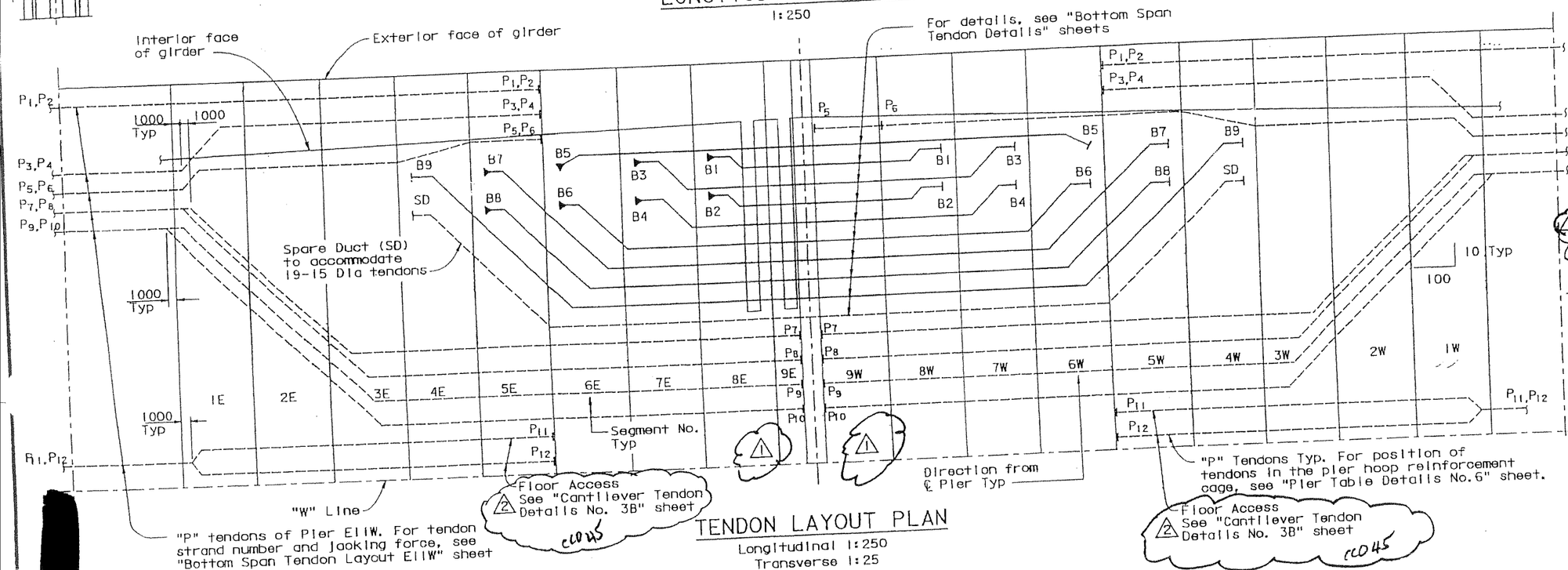

TENDON LAYOUT PLAN

Longitudinal 1:250
Transverse 1:25

BOTTOM SPAN TENDONS (*per box girder)

Tendon	No. of tendons* x No. of strands (15 Dia)	Jacking Force per Tendon kN
E12W B 1	2 x 19	3705
E12W B 2	2 x 19	3705
E12W B 3	2 x 19	3705
E12W B 4	2 x 19	3705
E12W B 5	2 x 19	3705
E12W B 6	2 x 19	3705
E12W B 7	2 x 19	3705
E12W B 8	2 x 19	3705
E12W B 9	2 x 19	3705
E12W P1-4	8 x 12	See note 6
E12W P5-10	12 x 12	1400
E12W P11-12	4 x 12	See note 6

NOTES:

1. Tendons are symmetrical with respect to "W" Line.
2. Anchorage symbols are as follows:
   - Jacking end
   - Dead end
3. The force diagram shows forces which only account for losses due to friction, anchor set and elastic shortening.
4. Key to tendon nomenclature:
   - E12W — Span No.
   - B — Tendon type
   - 1 — Tendon mark
5. For "P" Tendon details, see "Cantilever Tendon Details" sheets.
6. No stressing and anchorage required for tendons P1-4 & P11-12. Tendons shall be preassembled units and installed by pulling through duct and then grouted.

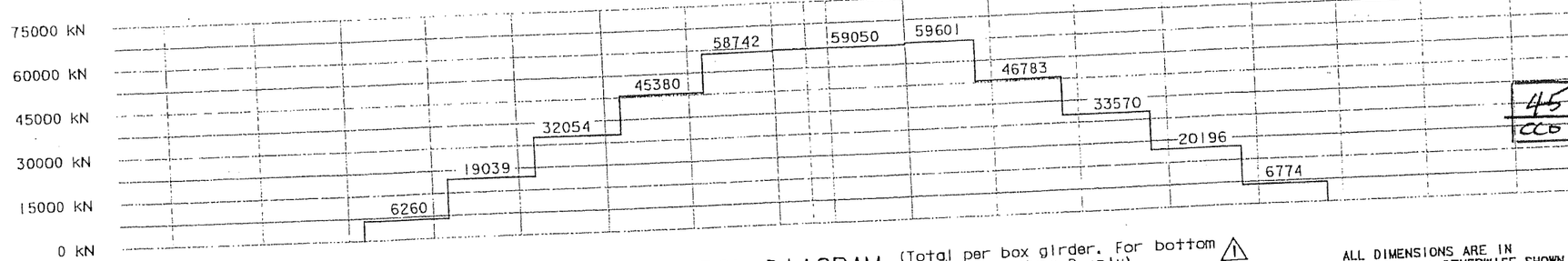

FORCE DIAGRAM

(Total per box girder. For bottom span tendons Type B only)

ALL DIMENSIONS ARE IN MILLIMETERS UNLESS OTHERWISE SHOWN

MARK	DATE	DESCRIPTIONS	BY	CH'D
3	08/01/03	ELIMINATE STRESSING AND ANCHORAGE REQUIREMENT FOR NOTED TENDONS	MR	JC

REVISIONS

CONTRACT CHANGE ORDER NO. 45
SHEET 11 OF 34

100% PS&E

SAN FRANCISCO OAKLAND BAY BRIDGE
EAST SPAN SEISMIC SAFETY PROJECT

SKYWAY STRUCTURES

BOTTOM SPAN TENDON LAYOUT E12W

DESIGN	J. Chan	H. Lund	
DETAILS	E. Zharkov	H. Lund	
QUANTITIES	T. Cormier	J. Chan	

PREPARED FOR THE STATE OF CALIFORNIA DEPARTMENT OF TRANSPORTATION

Sajid Abbas, PROJECT ENGINEER

BRIDGE NO. 34-0006L/R
KILOMETER POST 13.9/14.3 + 0.0/1.5

CU 04
EA 01202

DESIGN OVERSIGHT 8/15/03
SIGN OFF DATE

MARK	DATE	DESCRIPTION	BY	CH'D
2	03/05/03	ADD FLOOR ACCESS DETAIL CCO 45	JC	MS
1	10/07/02	SHOW AND EXTEND "P" TENDONS	JC	MS

Rev. Date: 5-18-01

ORIGINAL SCALE IN MILLIMETERS FOR REDUCED PLANS

DISREGARD PRINTS BEARING EARLIER REVISION DATE

REVISION DATES (PRELIMINARY STAGE ONLY): 07/13/99 | 02/13/00 | 06/07/00 | 11/27/00 | 02/09/01 | 01/15/02 | 10/07/02 | 03/05/03 | 08/01/03

SHEET 200 OF

STL-003082 11/24/03

Caltrans Metric

REGISTERED ENGINEER - CIVIL
Siu Fu John Chan, No. C 39457, Exp. 12/31/05, CIVIL, STATE OF CALIFORNIA
6-4-01
PLANS APPROVAL DATE

The State of California or its officers or agents shall not be responsible for the accuracy or completeness of electronic copies of this plan sheet.

T.Y. LIN / MOFFATT & NICHOL
825 BATTERY STREET
SAN FRANCISCO, CA 94111

Caltrans now has a web site! To get to the web site, go to: http://www.dot.ca.gov

Mission Control Redline

Numerous Tendon profile and deviations changes. (see KFM letter 717). See approved composite drawings for revisions. See PT elongation submittals for revisions to stressing ends.

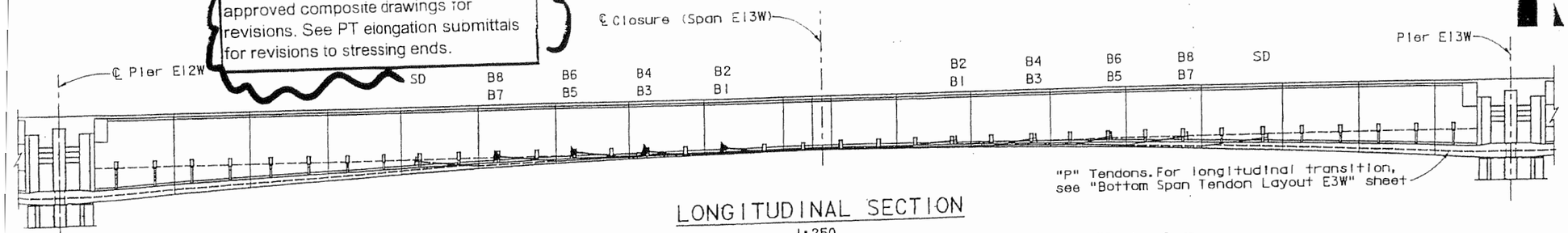

LONGITUDINAL SECTION

1:250

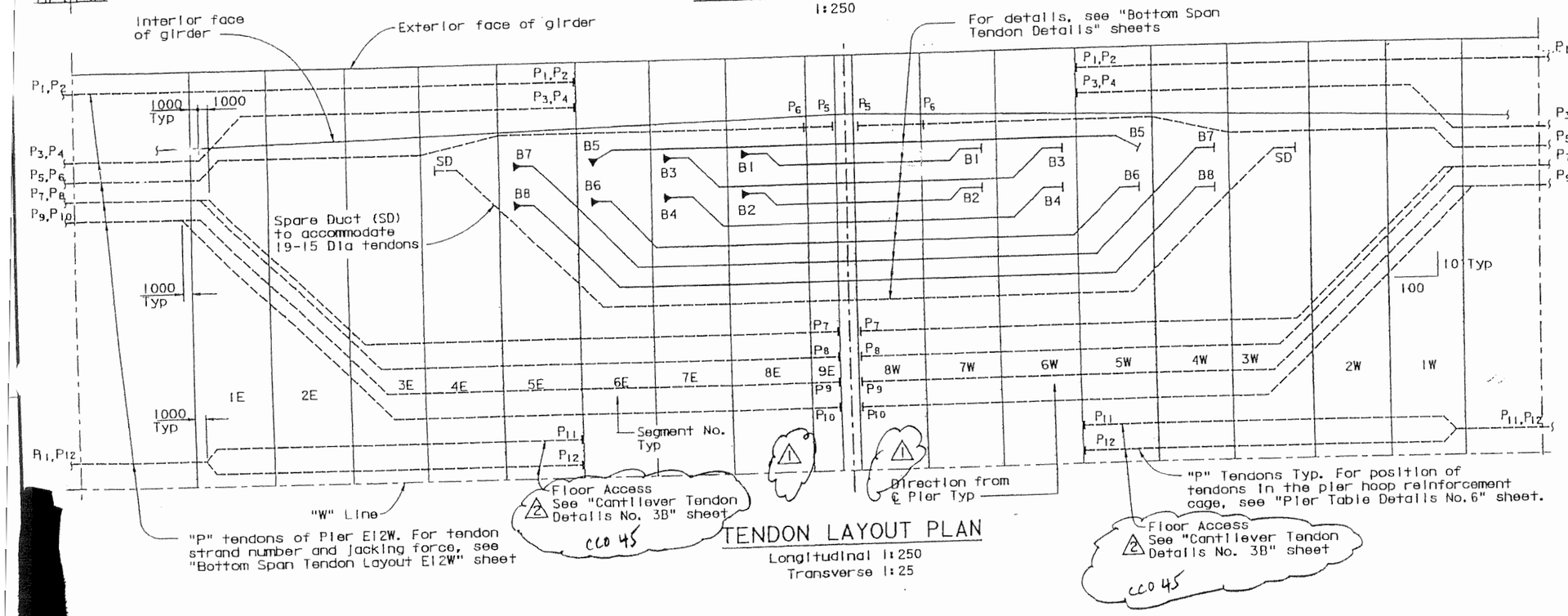

TENDON LAYOUT PLAN

Longitudinal 1:250
Transverse 1:25

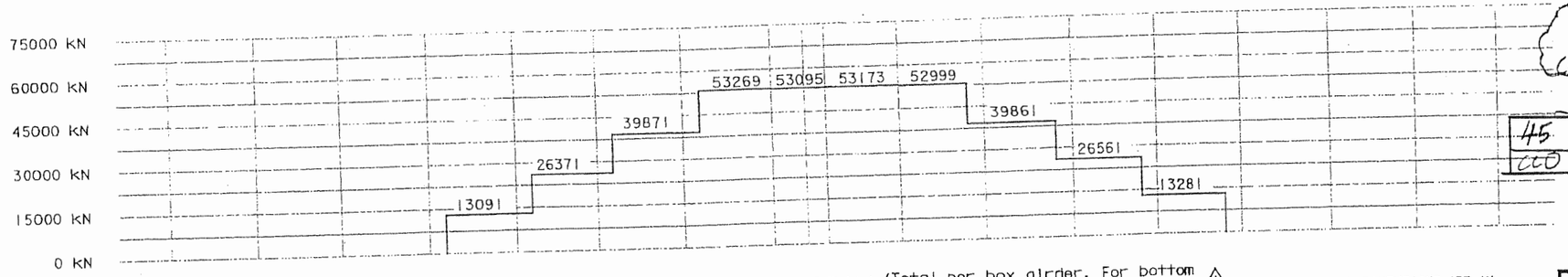

FORCE DIAGRAM (Total per box girder. For bottom span tendons Type B only)

ALL DIMENSIONS ARE IN MILLIMETERS UNLESS OTHERWISE SHOWN

Caltrans Metric

04 SF 101 30 | 13.9/14.3, 0.0/1.6 | 633R3 978

REGISTERED ENGINEER - CIVIL

6-4-01
PLANS APPROVAL DATE

REGISTERED PROFESSIONAL ENGINEER Siu Fu John Chan No. C 39457 Exp. 12/31/05 CIVIL STATE OF CALIFORNIA

The State of California or its officers or agents shall not be responsible for the accuracy or completeness of electronic copies of this plan sheet.

T.Y. LIN / MOFFATT & NICHOL
825 BATTERY STREET
SAN FRANCISCO, CA 94111

Caltrans now has a web site! To get to the web site, go to: http://www.dot.ca.gov

BOTTOM SPAN TENDONS (*per box girder)

Tendon	No. of tendons* x No. of strands (15 Dia)	Jacking Force per Tendon kN
E13W B 1	2 x 19	3705
E13W B 2	2 x 19	3705
E13W B 3	2 x 19	3705
E13W B 4	2 x 19	3705
E13W B 5	2 x 19	3705
E13W B 6	2 x 19	3705
E13W B 7	2 x 19	3705
E13W B 8	2 x 19	3705
3 E13E P1-4	8 x 12	1 See note 6
1 E13E P5-10	12 x 12	1400
3 E13E P11-12	4 x 12	1 See note 6

NOTES:

1. Tendons are symmetrical with respect to "W" Line.
2. Anchorage symbols are as follows:
   - ⊢—— Jacking end
   - ▶—— Dead end
3. The force diagram shows forces which only account for losses due to friction, anchor set and elastic shortening.
4. Key to tendon nomenclature:
   - E13W B 1
   - Span No. — E13W
   - Tendon type — B
   - Tendon mark — 1
5. For "P" Tendon details, see "Cantilever Tendon Details" sheets.
6. 3 1 CCO 45 No stressing and anchorage required for tendons P1-4 & P11-12. Tendons shall be preassembled units and installed by pulling through duct and then grouted.

MARK	DATE	DESCRIPTIONS	BY	CH'D
45 CCO	3 08/01/03	ELIMINATE STRESSING AND ANCHORAGE REQUIREMENT FOR NOTED TENDONS	MR	JC

REVISIONS

CONTRACT CHANGE ORDER NO. 45
SHEET 12 OF 34

100 % PS&E

STL-003082 11/24/03

SAN FRANCISCO OAKLAND BAY BRIDGE
EAST SPAN SEISMIC SAFETY PROJECT

SKYWAY STRUCTURES

BOTTOM SPAN TENDON LAYOUT E13W

MARK	DATE	DESCRIPTION	BY	CH'D
3	03/05/03	ADD FLOOR ACCESS DETAIL CCO 45	JC	MS
1	10/07/02	SHOW AND EXTEND "P" TENDONS CCO 1	JC	MS

DESIGN OVERSIGHT 8/15/03
SIGN OFF DATE
Rev. Date: 5-18-98

DESIGN BY J. Chan CHECKED H. Lund
DETAILS BY E. Zharkov CHECKED H. Lund
QUANTITIES BY K. Cormier CHECKED J. Chan

PREPARED FOR THE STATE OF CALIFORNIA DEPARTMENT OF TRANSPORTATION

Sajid Abbas
PROJECT ENGINEER

BRIDGE NO. 34-0006L/R
KILOMETER POST 13.9/14.3, 0.0/1.6

CU 04
EA 01202

DISREGARD PRINTS BEARING EARLIER REVISION DATES

REVISION DATES (PRELIMINARY STAGE ONLY) 01/25/99 02/15/99 01/05/00 11/27/00 02/08/01 07/25/02 10/24/02 03/05/03 06/01/03

SHEET 201

ORIGINAL SCALE IN MILLIMETERS FOR REDUCED PLAN

DATE PLOTTED: 11-24-03
TIME PLOTTED: 14:41

Mission Control Realm

Numerous Tendon profile and deviations changes, (see KFM letter 717). See approved composite drawings for revisions. See PT elongation submittals for revisions to stressing ends.

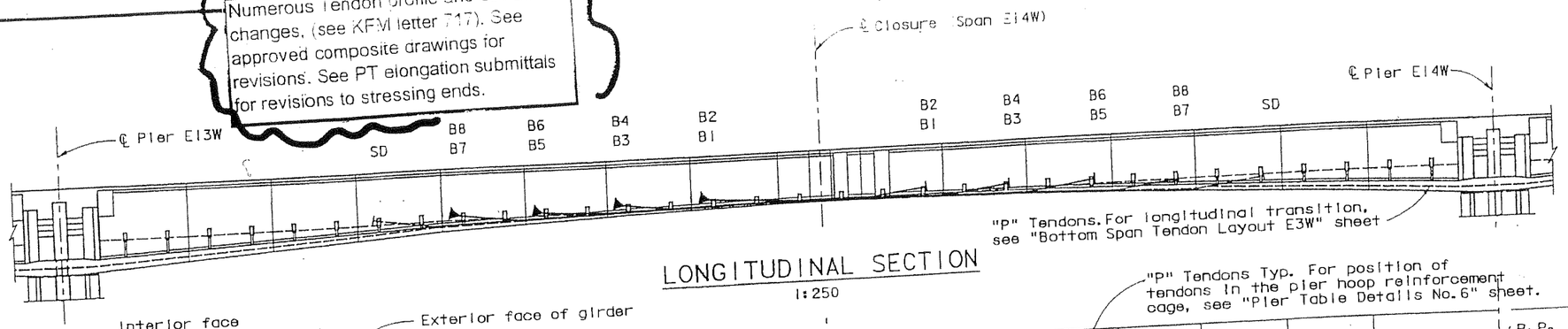

LONGITUDINAL SECTION
1:250

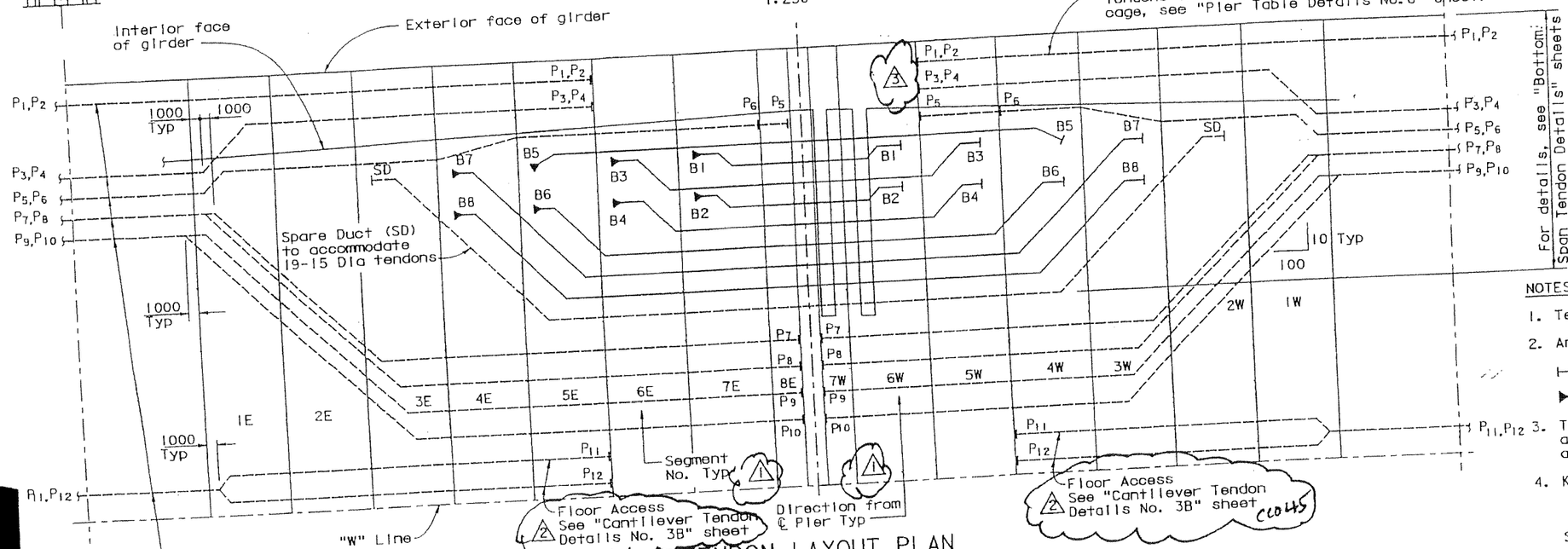

TENDON LAYOUT PLAN
Longitudinal 1:250
Transverse 1:25

For details, see "Bottom Span Tendon Details" sheets

BOTTOM SPAN TENDONS (*per box girder)

Tendon	No. of tendons* x No. of strands (15 Dia)	Jacking Force per Tendon kN
E14W B 1	2 x 19	3705
E14W B 2	2 x 19	3705
E14W B 3	2 x 19	3705
E14W B 4	2 x 19	3705
E14W B 5	2 x 19	3705
E14W B 6	2 x 19	3705
E14W B 7	2 x 19	3705
E14W B 8	2 x 19	3705
5 E14W P1-3	6 x 12	1 See note 6
4 1 E14W P4-6	6 x 12	1400
5 E14W P7	2 x 12	1 See note 6
5 E14W P8-10	6 x 12	1400
5 E14W P11-12	4 x 12	1 See note 6

NOTES:

1. Tendons are symmetrical with respect to "W" Line.
2. Anchorage symbols are as follows:
   - ├── Jacking end
   - ►── Dead end
3. The force diagram shows forces which only account for losses due to friction, anchor set and elastic shortening.
4. Key to tendon nomenclature:
   - E14W — Span No.
   - B — Tendon type
   - 1 — Tendon mark
5. For "P" Tendon details, see "Cantilever Tendon Details" sheets.
6. 5 No stressing and anchorage required for tendons P1-3, P7 & P11-12. Tendons shall be preassembled units and installed by pulling through duct and then grouted. CCO 45 1

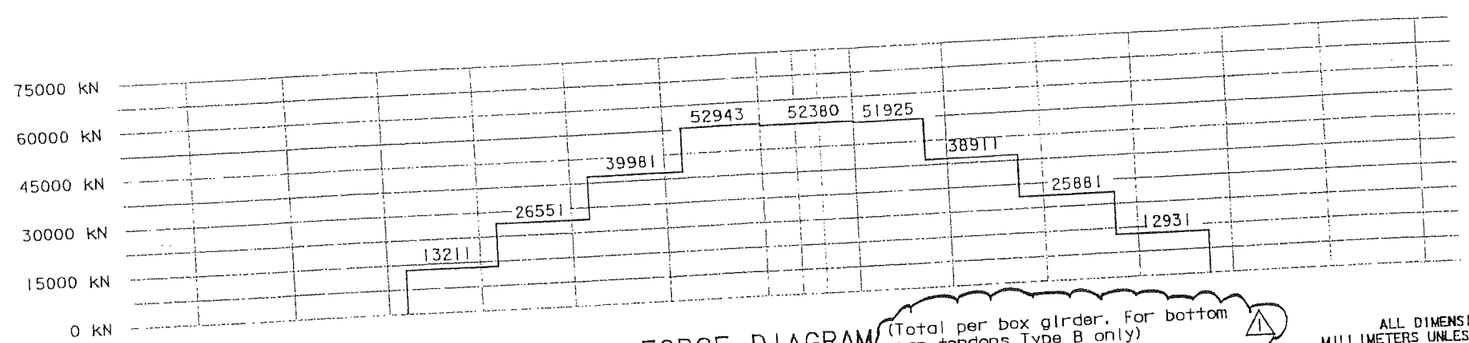

FORCE DIAGRAM (Total per box girder. For bottom span tendons Type B only)

MARK	DATE	DESCRIPTION	BY	CH'D
5	08/01/03	ELIMINATE STRESSING AND ANCHORAGE REQUIREMENT FOR NOTED TENDONS	MR	JC
4	03/05/03	REVISE P4 AND P7 TENDON JACKING FORCE - 45	JC	MS
3	03/05/03	REVISE "P" TENDON ANCHOR LOCATIONS - 45	JC	MS
2	03/05/03	ADD FLOOR ACCESS DETAIL CCO - 45	JC	MS
1	10/07/02	SHOW AND EXTEND "P" TENDONS CCO	JC	MS

REVISIONS

CONTRACT CHANGE ORDER NO. 45
SHEET 13 OF 34

ALL DIMENSIONS ARE IN MILLIMETERS UNLESS OTHERWISE SHOWN

DESIGN OVERSIGHT: Hadad Ghat 8/18/03
SIGN OFF DATE:

DESIGN BY J. Chan CHECKED H. Lund
DETAILS BY E. Zhorkov CHECKED H. Lund
QUANTITIES BY L. Cormier CHECKED J. Chan

PREPARED FOR THE STATE OF CALIFORNIA DEPARTMENT OF TRANSPORTATION

Sajid Abbas
PROJECT ENGINEER

BRIDGE NO. 34-0006L/R
KILOMETER POST 13.9/14.3, 0.0/1.6

CU 04
EA 01202

DISREGARD PRINTS BEARING EARLIER REVISION DATE:

ORIGINAL SCALE IN MILLIMETERS FOR REDUCED PLANS

SAN FRANCISCO OAKLAND BAY BRIDGE
EAST SPAN SEISMIC SAFETY PROJECT

SKYWAY STRUCTURES

BOTTOM SPAN TENDON LAYOUT E14W

SHEET 202

REVISION DATES (PRELIMINARY STAGE ONLY): 01/22/99 02/25/99 04/26/99 11/23/99 02/26/01 01/23/02 10/23/02 01/23/03 03/25/03 06/01/03

04ISF,A1d1 30 0.0/1.6 B34R3 978

REGISTERED ENGINEER - CIVIL
Siu Fu John Chan
6-4-01
PLANS APPROVAL DATE

REGISTERED PROFESSIONAL ENGINEER Siu Fu John Chan No. C 39457 Exp. 12/31/05 CIVIL STATE OF CALIFORNIA

The State of California or its officers or agents shall not be responsible for the accuracy or completeness of electronic copies of this plan sheet.

T.Y. LIN / MOFFATT & NICHOL
825 BATTERY STREET
SAN FRANCISCO, CA 94111

Caltrans now has a web site! To get to the web site, go to: http://www.dot.ca.gov

100 % PS&E

STL-003082 11/24/03

Mission Control Redline

Numerous Tendon profile and deviations changes. (see KFM letter 717). See approved composite drawings for revisions. See PT elongation submittals for revisions to stressing ends.

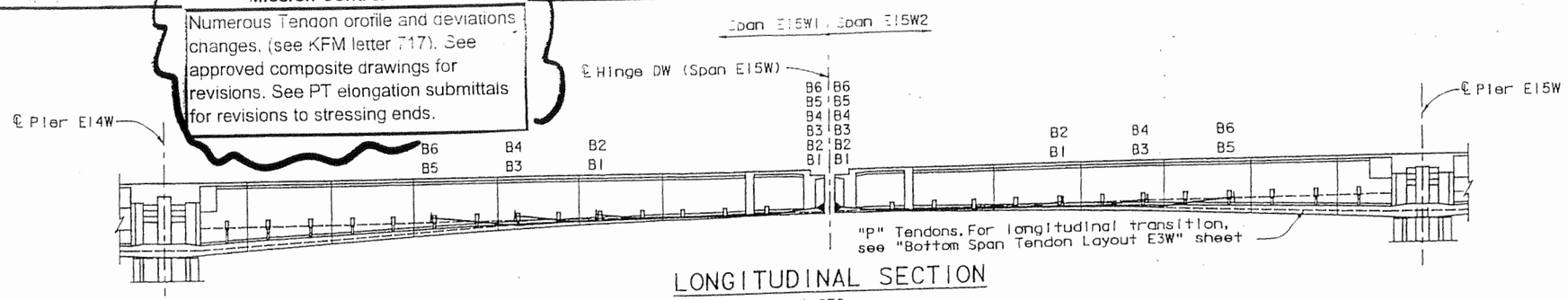

LONGITUDINAL SECTION

1:250

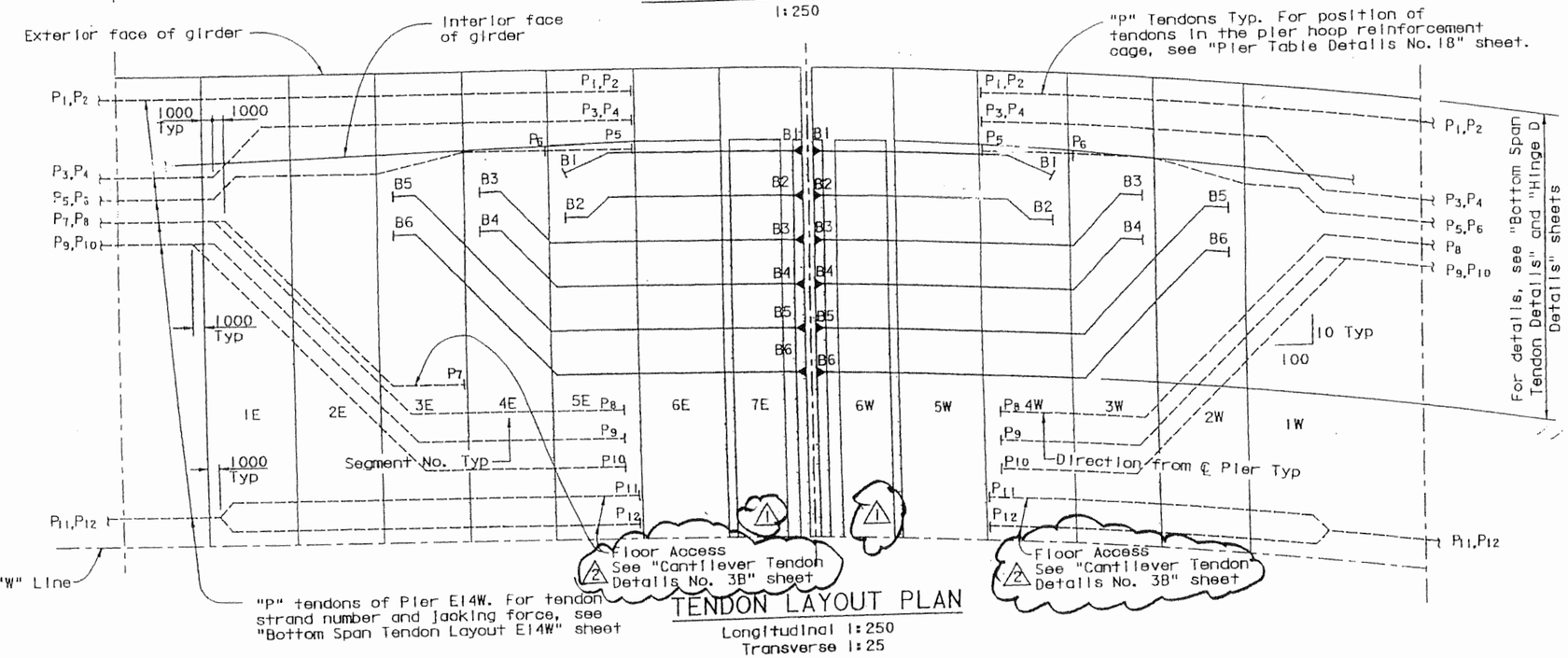

TENDON LAYOUT PLAN

Longitudinal 1:250
Transverse 1:25

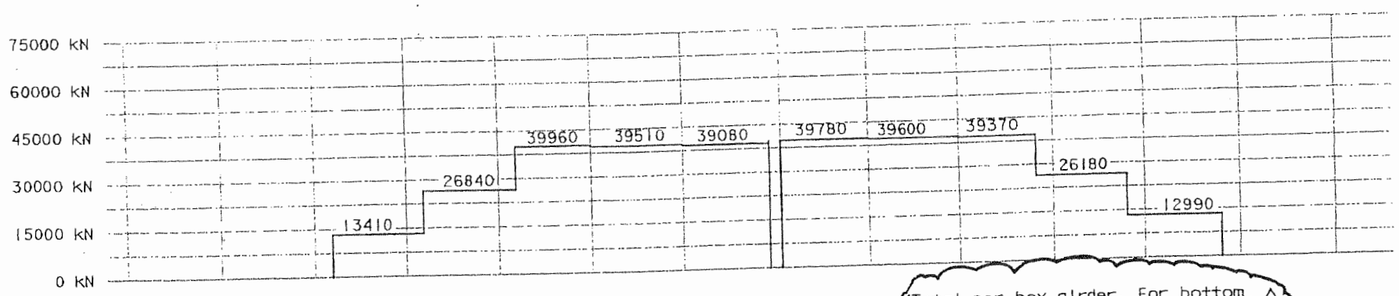

FORCE DIAGRAM (Total per box girder. For bottom span tendons Type B only)

ALL DIMENSIONS ARE IN MILLIMETERS UNLESS OTHERWISE SHOWN

Metric

04 | SF, Alal 30 | 0.0/1.6

REGISTERED ENGINEER - CIVIL

6-4-01

PLANS APPROVAL DATE

REGISTERED PROFESSIONAL ENGINEER Stu Fu John Chan No. C 39457 Exp. 12/31/05 CIVIL STATE OF CALIFORNIA

The State of California or its officers or agents shall not be responsible for the accuracy or completeness of electronic copies of this plan sheet.

T.Y. LIN / MOFFATT & NICHOL
825 BATTERY STREET
SAN FRANCISCO, CA 94111

Caltrans now has a web site! To get to the web site, go to: http://www.dot.ca.gov

BOTTOM SPAN TENDONS (*per box girder)

Tendon	No. of tendons* x No. of strands (15 Dia)	Jacking Force per Tendon kN
E15W1 B 1	2 x 19	3705
E15W1 B 2	2 x 19	3705
E15W1 B 3	2 x 19	3705
E15W1 B 4	2 x 19	3705
E15W1 B 5	2 x 19	3705
E15W1 B 6	2 x 19	3705
E15W2 B 1	2 x 19	3705
E15W2 B 2	2 x 19	3705
E15W2 B 3	2 x 19	3705
E15W2 B 4	2 x 19	3705
E15W2 B 5	2 x 19	3705
E15W2 B 6	2 x 19	3705
3 E15W2 P_{1-4}	8 x 12 (1)	See note 6
1 E15W2 $P_{5,6}$	4 x 12	1400
E15W2 P_{8-10}	6 x 12	1400
3 E15W2 P_{11-12}	4 x 12 (1)	See note 6

NOTES:

1. Tendons are symmetrical with respect to "W" Line.
2. Anchorage symbols are as follows:
   - ├── Jacking end
   - ►── Dead end
3. The force diagram shows forces which only account for losses due to friction, anchor set and elastic shortening.
4. Key to tendon nomenclature:
   - E15W1 B 1
   - Span No. — E15W1
   - Tendon type — B
   - Tendon mark — 1
5. For "P" tendon details, see "Cantilever Tendon Details" sheets.
6. 3 (1) No stressing and anchorage required for tendons P1-4 & P11-12. Tendons shall be preassembled units and installed by pulling through duct and then grouted.

MARK	DATE	DESCRIPTIONS	BY	CH'D
45	3 08/01/03	ELIMINATE STRESSING AND ANCHORAGE REQUIREMENT FOR NOTED TENDONS	MR	JC
CCO		REVISIONS		

CONTRACT CHANGE ORDER NO. 45

SHEET 14 OF 34

100 % PS&E

SAN FRANCISCO OAKLAND BAY BRIDGE
EAST SPAN SEISMIC SAFETY PROJECT

SKYWAY STRUCTURES

BOTTOM SPAN TENDON LAYOUT E15W

DESIGN OVERSIGHT 8/15/03

SIGN OFF DATE

MARK	DATE	DESCRIPTION	BY	CH'D
2	03/05/03	ADD FLOOR ACCESS DETAIL CCO 43	JC	MS
1	10/07/02	SHOW AND EXTEND "P" TENDONS CCO 7	JC	MS

DESIGN BY J. Chan CHECKED H. Lund
DETAILS BY E. Zharkov CHECKED H. Lund
QUANTITIES BY K. Cormier CHECKED J. Chan

PREPARED FOR THE STATE OF CALIFORNIA DEPARTMENT OF TRANSPORTATION

Sajid Abbas
PROJECT ENGINEER

BRIDGE NO. 34-0006L/R
KILOMETER POST 13.9/14.3, 0.0/1.6

CU 02
EA 01202

ORIGINAL SCALE IN MILLIMETERS FOR REDUCED PLAN

DISREGARD PRINTS BEARING EARLIER REVISION DATES

REVISION DATES (PRELIMINARY STAGE ONLY) 02/15/00 06/07/00 11/27/00 02/14/01 02/26/01 07/25/02 10/07/02 01/27/03 03/05/03 08/01/03

SHEET 203 OF

STL-003082 11/24/03

DIST.	COUNTY	ROUTE	KILOMETER POST TOTAL PROJECT	SHEET NO.	TOTAL SHEETS
04	SF, Ala	30	3.9/14.3, 0.0/1.6	636R3	978

Caltrans Metric

REGISTERED ENGINEER - CIVIL

6-4-01
PLANS APPROVAL DATE

Registered Professional Engineer — Shu Fu John Chen, No. C 39457, Exp. 12/31/05, CIVIL, State of California

The State of California or its officers or agents shall not be responsible for the accuracy or completeness of electronic copies of this plan sheet.

T.Y. LIN / MOFFATT & NICHOL
825 BATTERY STREET
SAN FRANCISCO, CA 94111

Caltrans now has a web site! To get to the web site, go to: http://www.dot.ca.gov

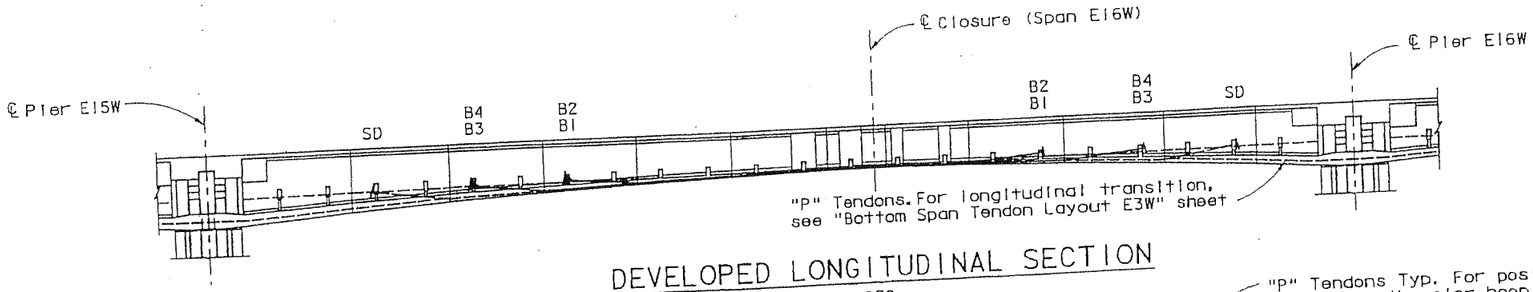

DEVELOPED LONGITUDINAL SECTION

1:250

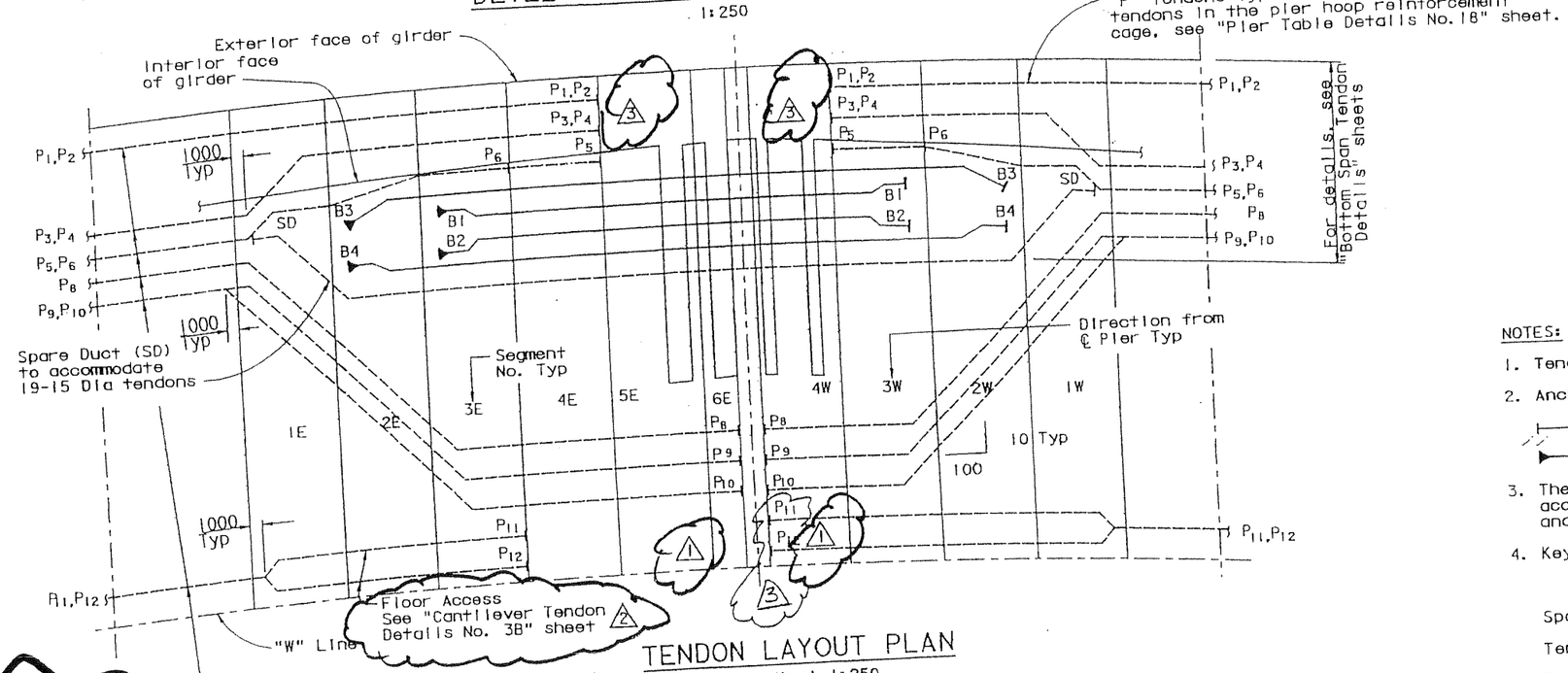

TENDON LAYOUT PLAN

Longitudinal 1:250
Transverse 1:25

BOTTOM SPAN TENDONS (*per box girder)

Tendon	No. of tendons* × No. of strands (15 Dia)	Jacking Force per Tendon kN
E16W B 1	2 × 19	3705
E16W B 2	2 × 19	3705
E16W B 3	2 × 19	3705
E16W B 4	2 × 19	3705
4 E16W P1-4	8 × 12	1 See note 6
1 E16W P5,6	4 × 12	1400
E16W P8-10	6 × 12	1400
4 E16W P11-12	4 × 12	1 See note 6

NOTES:

1. Tendons are symmetrical with respect to "W" Line.
2. Anchorage symbols are as follows:
   - Jacking end
   - Dead end
3. The force diagram shows forces which only account for losses due to friction, anchor set and elastic shortening.
4. Key to tendon nomenclature:
   - E16W — Span No.
   - B — Tendon type
   - Tendon mark
5. For "P" Tendon details, see "Cantilever Tendon Details" sheets.
6. 4 1 No stressing and anchorage required for tendons P1-4 & P11-12. Tendons shall be preassembled units and installed by pulling through duct and then grouted.

Mission Control Redline

Numerous Tendon profile and deviations changes, (see KFM letter 717). See approved composite drawings for revisions. See PT elongation submittals for revisions to stressing ends.

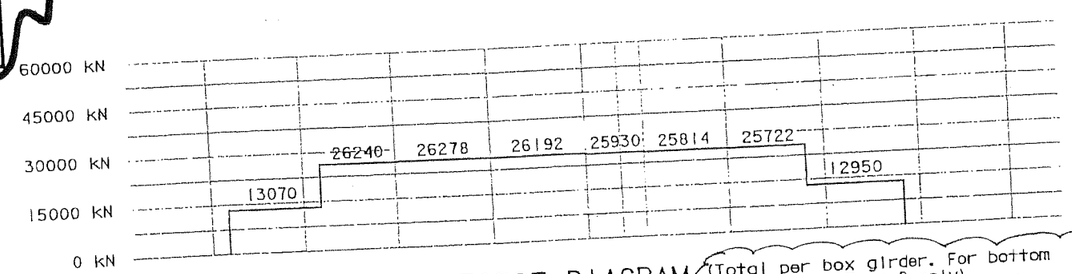

FORCE DIAGRAM

(Total per box girder. For bottom span tendons Type B only) 1

MARK	DATE	DESCRIPTIONS	BY	CH'D
45	4 08/01/03	ELIMINATE STRESSING AND ANCHORAGE REQUIREMENT FOR NOTED TENDONS	MR	JC
CCO		REVISIONS		

CONTRACT CHANGE ORDER NO. 45
SHEET 15 OF 34

100 % PS&E

STL-003082 11/24/03

ALL DIMENSIONS ARE IN MILLIMETERS UNLESS OTHERWISE SHOWN

MARK	DATE	DESCRIPTION	BY	CH'D
4	03/05/03	REVISE "P" TENDON ANCHOR LOCATIONS	JC	MS
2	03/05/03	ADD FLOOR ACCESS DETAIL	JC	MS
1	10/07/02	SHOW AND EXTEND "P" TENDONS	JC	MS

DESIGN: J. Chan — CHECKED: K. Lund
DETAILS: E. Zharkov — CHECKED: K. Lund
QUANTITIES: K. Cormier — CHECKED: J. Chan

PREPARED FOR THE STATE OF CALIFORNIA DEPARTMENT OF TRANSPORTATION

Sajid Abbas
PROJECT ENGINEER

BRIDGE NO. 34-0006L/R
KILOMETER POST 3.9/14.3, 0.0/1.6

SAN FRANCISCO OAKLAND BAY BRIDGE
EAST SPAN SEISMIC SAFETY PROJECT

SKYWAY STRUCTURES

BOTTOM SPAN TENDON LAYOUT E16W

DESIGN OVERSIGHT: 8/15/02

ORIGINAL SCALE IN MILLIMETERS ON REDUCED PLANS

CU 04
EA 01202

DISREGARD PRINTS BEARING EARLIER REVISION DATES:

REVISION DATES (PRELIMINARY STAGE ONLY): 01/25/99 02/25/00 06/06/00 11/17/00 02/06/01 01/25/02 10/07/02 01/27/03 01/29/03 08/01/03

SHEET 204

04	SF, A1a	80	13.9/14.3, 0.0/1.6	637R2	978

REGISTERED ENGINEER - CIVIL

6-4-01
PLANS APPROVAL DATE

REGISTERED PROFESSIONAL ENGINEER Siu Fu John Chan No. C 39457 Exp. 12/31/05 CIVIL STATE OF CALIFORNIA

The State of California or its officers or agents shall not be responsible for the accuracy or completeness of electronic copies of this plan sheet.

T.Y. LIN / MOFFATT & NICHOL
825 BATTERY STREET
SAN FRANCISCO, CA 94111

Caltrans now has a web site! To get to the web site, go to: http://www.dot.ca.gov

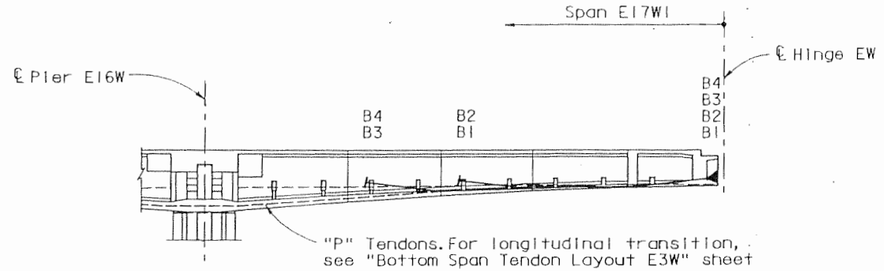

DEVELOPED LONGITUDINAL SECTION

1:250

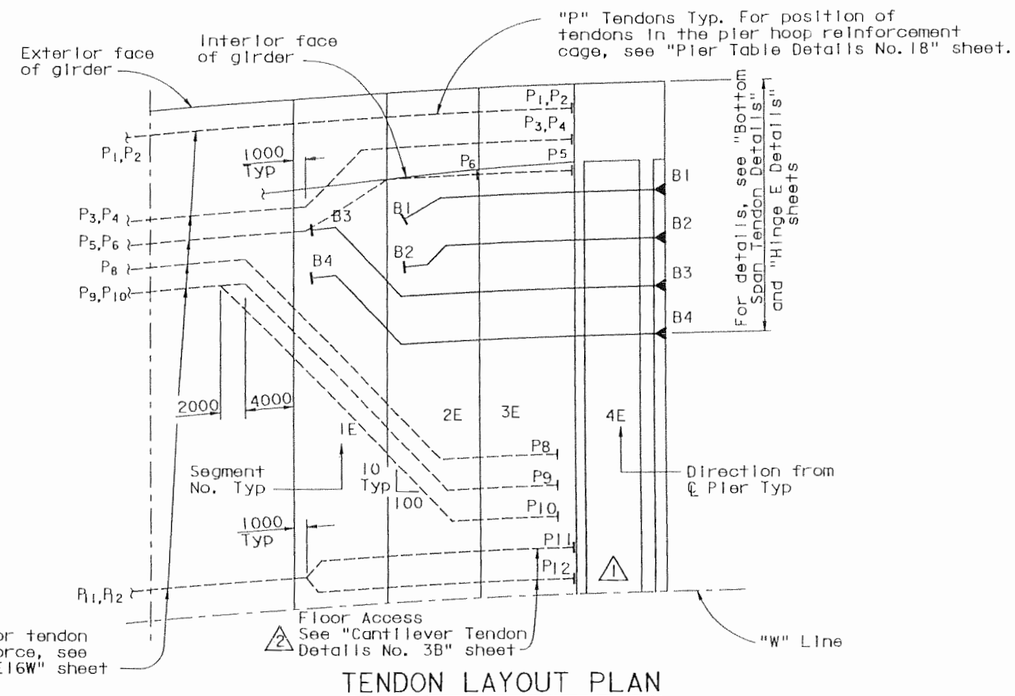

TENDON LAYOUT PLAN

Longitudinal 1:250
Transverse 1:25

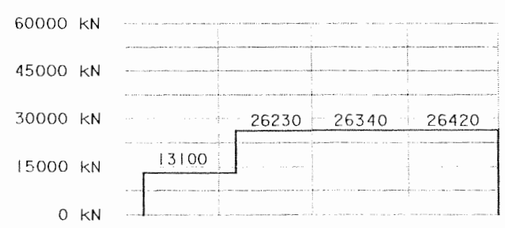

FORCE DIAGRAM

(Total per box girder. For bottom span tendons Type B only) △1

ALL DIMENSIONS ARE IN MILLIMETERS UNLESS OTHERWISE SHOWN

BOTTOM SPAN TENDONS (*per box girder)

Tendon	No. of tendons* x No. of strands (15 Dia)	Jacking Force per Tendon kN
E17W1 B 1	2 x 19	3705
E17W1 B 2	2 x 19	3705
E17W1 B 3	2 x 19	3705
E17W1 B 4	2 x 19	3705

NOTES:

1. Tendons are symmetrical with respect to "W" Line.
2. Anchorage symbols are as follows:
   - |—— Jacking end
   - ▶—— Dead end
3. The force diagram shows forces which only account for losses due to friction, anchor set and elastic shortening.
4. Key to tendon nomenclature:
   - E17W1 B 1
   - Span No. — E17W1
   - Tendon type — B
   - Tendon mark — 1
5. For "P" tendon details, see "Cantilever Tendon Details" sheets.

MARK	DATE	DESCRIPTIONS	BY	CH'D
△2	03/05/03	ADD FLOOR ACCESS DETAIL	JC	MS
△1	10/07/02	SHOW AND EXTEND "P" TENDONS	JC	MS

REVISIONS

CONTRACT CHANGE ORDER NO. 45
SHEET 16 OF 34

100% PS&E

DESIGN OVERSIGHT 3/5/03
SIGN OFF DATE

Rev. Date: 5-16-98

	BY	CHECKED
DESIGN	J. Chan	H. Lund
DETAILS	D. Leung	H. Lund
QUANTITIES	K. Cormier	J. Chan

PREPARED FOR THE STATE OF CALIFORNIA DEPARTMENT OF TRANSPORTATION

Sajid Abbas
PROJECT ENGINEER

BRIDGE NO. 34-0006L/R
KILOMETER POST 13.9/14.3, 0.0/1.6

SAN FRANCISCO OAKLAND BAY BRIDGE
EAST SPAN SEISMIC SAFETY PROJECT

SKYWAY STRUCTURES

BOTTOM SPAN TENDON LAYOUT E17W

ORIGINAL SCALE IN MILLIMETERS FOR REDUCED PLANS 0 10 20 30 40 50 60 70 80 90 100

CU 04
EA 012021

DISREGARD PRINTS BEARING EARLIER REVISION DATES

REVISION DATES (PRELIMINARY STAGE ONLY) 01/25/99 02/25/00 08/28/00 11/27/00 02/28/01 02/28/01 03/28/01 10/28/02 03/05/03

SHEET 205 OF

USERNAME => H11 DATE PLOTTED => 03/05/2003 TIME PLOTTED => 10:56:48 AM

DIST.	COUNTY	ROUTE	KILOMETER POST TOTAL PROJECT	SHEET NO.	TOTAL SHEETS
04	SF, Ala	80	13.9/14.3, 0.0/1.6	638R2	978

Caltrans Metric

Sin Fu Chan
REGISTERED ENGINEER - CIVIL

6-4-01
PLANS APPROVAL DATE

REGISTERED PROFESSIONAL ENGINEER Sin Fu John Chan No. C 39457 Exp. 12/31/05 CIVIL STATE OF CALIFORNIA

The State of California or its officers or agents shall not be responsible for the accuracy or completeness of electronic copies of this plan sheet.

T.Y. LIN / MOFFATT & NICHOL
825 BATTERY STREET
SAN FRANCISCO, CA 94111

Caltrans now has a web site! To get to the web site, go to: http://www.dot.ca.gov

Mission Control Redline

Numerous Tendon profile and deviations changes, (see KFM letter 717). See approved composite drawings for revisions. See PT elongation submittals for revisions to stressing ends.

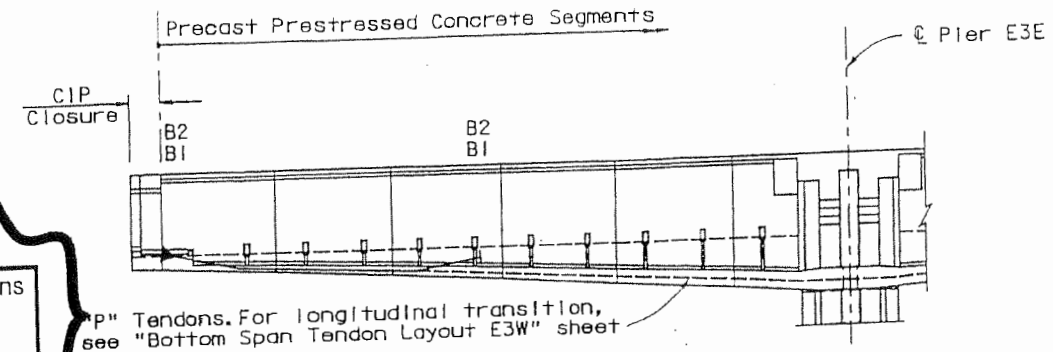

DEVELOPED LONGITUDINAL SECTION

1:250

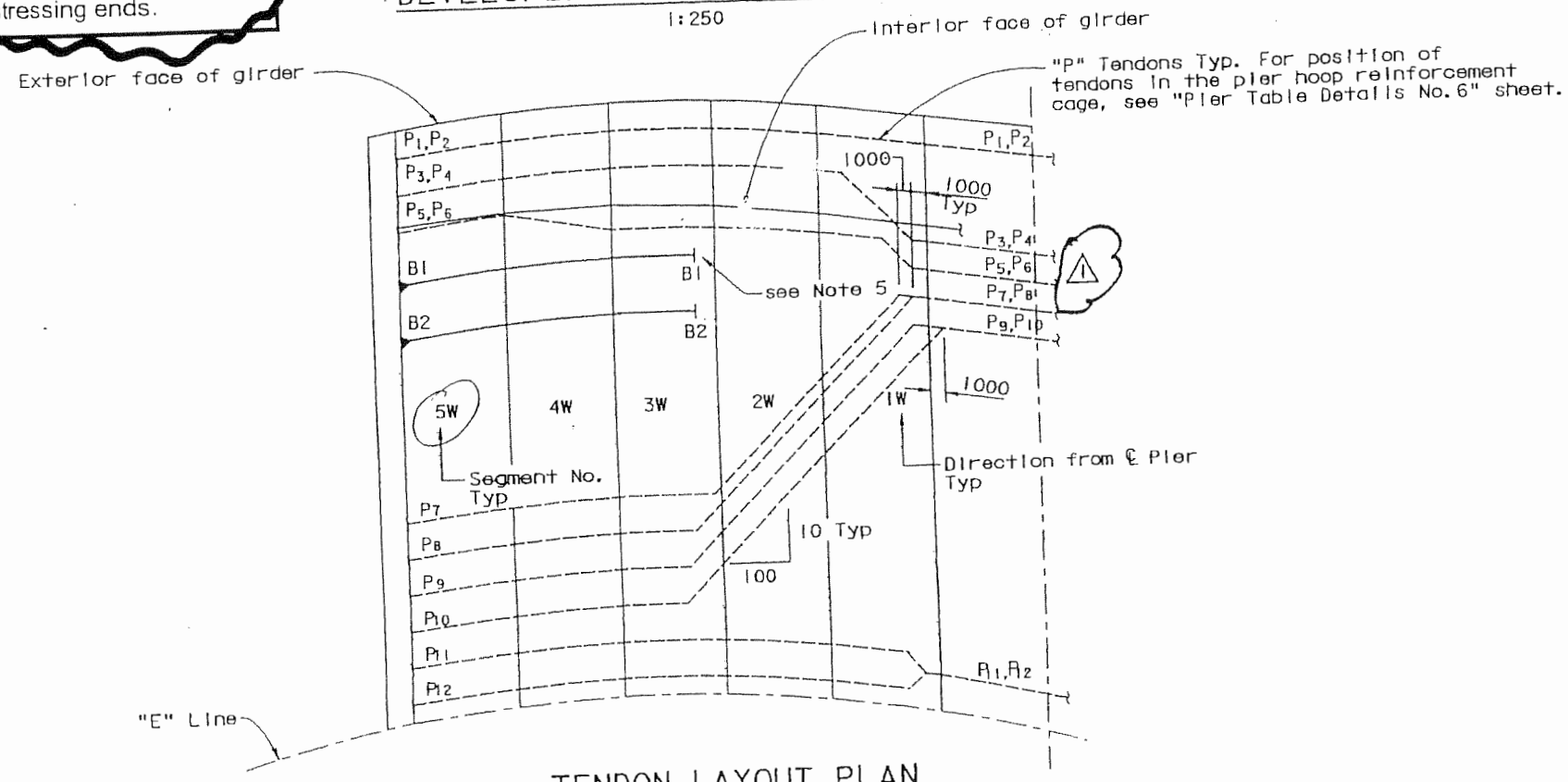

TENDON LAYOUT PLAN

Longitudinal 1:250
Transverse 1:25

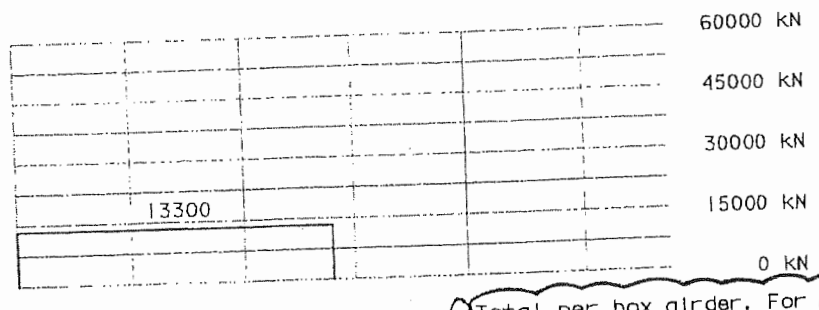

FORCE DIAGRAM

(Total per box girder. For bottom span tendons Type B only)

BOTTOM SPAN TENDONS (*per box girder)

Tendon	No. of tendons* x No. of strands (15 Dia)	Jacking Force per Tendon kN
E3E B 1	2 x 19	3705
E3E B 2	2 x 19	3705
E3E P1-4	8 x 12	See note 7
E3E P5-10	12 x 12	1400
E3E P11-12	4 x 12	See note 7
E3E P13-16	8 x 12	1400

NOTES:

1. Tendons are symmetrical with respect to "E" Line.
2. Anchorage symbols are as follows:
   - |—— Jacking end
   - ▶—— Dead end
3. The force diagram shows forces which only account for losses due to friction, anchor set and elastic shortening.
4. Key to tendon nomenclature:
   - E3E — Span No.
   - B — Tendon type
   - 1 — Tendon mark
5. For details, see "Bottom Span Tendon Details" sheet.
6. For "P" tendon details, see "Cantilever Tendon Details" sheets.
7. No stressing and anchorage required for tendons P1-4 & P11-12. Tendons shall be preassembled units and installed by pulling through duct and then grouted.

MARK	DATE	DESCRIPTIONS	BY	CH'D
45	08/01/03	ELIMINATE STRESSING AND ANCHORAGE REQUIREMENT FOR NOTED TENDONS	MR	JC
CCO		REVISIONS		

CONTRACT CHANGE ORDER NO. 45
SHEET 17 OF 34

100% PS&E

STL-003082 11/24/03

ALL DIMENSIONS ARE IN MILLIMETERS UNLESS OTHERWISE SHOWN

PREPARED FOR THE STATE OF CALIFORNIA DEPARTMENT OF TRANSPORTATION

Sajid Abbas
PROJECT ENGINEER

BRIDGE NO. 34-0006L/R
KILOMETER POST 13.9/14.3, 0.0/1.6

SAN FRANCISCO OAKLAND BAY BRIDGE
EAST SPAN SEISMIC SAFETY PROJECT

SKYWAY STRUCTURES

BOTTOM SPAN TENDON LAYOUT E3E

SHEET 206

DESIGN OVERSIGHT 8/15/03

MARK	DATE	DESCRIPTION	BY	CH'D
A	10/07/02	SHOW AND EXTEND "DW" TENDONS	JC	MS

DESIGN: J. Chan — CHECKED: H. Lund
DETAIL: E. Znarko — CHECKED: H. Lund
QUANTITIES: K. Cormier — CHECKED: J. Chan

CU 0
EA 012021

DISREGARD PRINTS BEARING EARLIER REVISION DATES

REVISION DATES (PRELIMINARY STAGE ONLY): 01/25/99 | 02/15/00 | 06/09/00 | 11/17/00 | 02/26/01 | 02/26/01 | 01/15/02 | 10/07/02 | 08/01/03

ORIGINAL SCALE IN MILLIMETERS FOR PLOTTER PLAN: 0 10 20 30 40 50 60 70 80 90 100

DIST.	COUNTY	ROUTE	KILOMETER POST TOTAL PROJECT	SHEET NO.	TOTAL SHEETS
04	SF, Ala	30	13.3/14.3, 0.0/1.6	639R3	978

Caltrans Metric

REGISTERED ENGINEER - CIVIL

6-4-01
PLANS APPROVAL DATE

REGISTERED PROFESSIONAL ENGINEER Siu Fu John Chan No. C 39457 Exp. 12/31/05 CIVIL STATE OF CALIFORNIA

The State of California or its officers or agents shall not be responsible for the accuracy or completeness of electronic copies of this plan sheet.

T.Y. LIN / MOFFATT & NICHOL
825 BATTERY STREET
SAN FRANCISCO, CA 94111

Caltrans now has a web site! To get to the web site, go to: http://www.dot.ca.gov

Mission Control Redline

Numerous Tendon profile and deviations changes, (see KFM letter 717). See approved composite drawings for revisions. See PT elongation submittals for revisions to stressing ends.

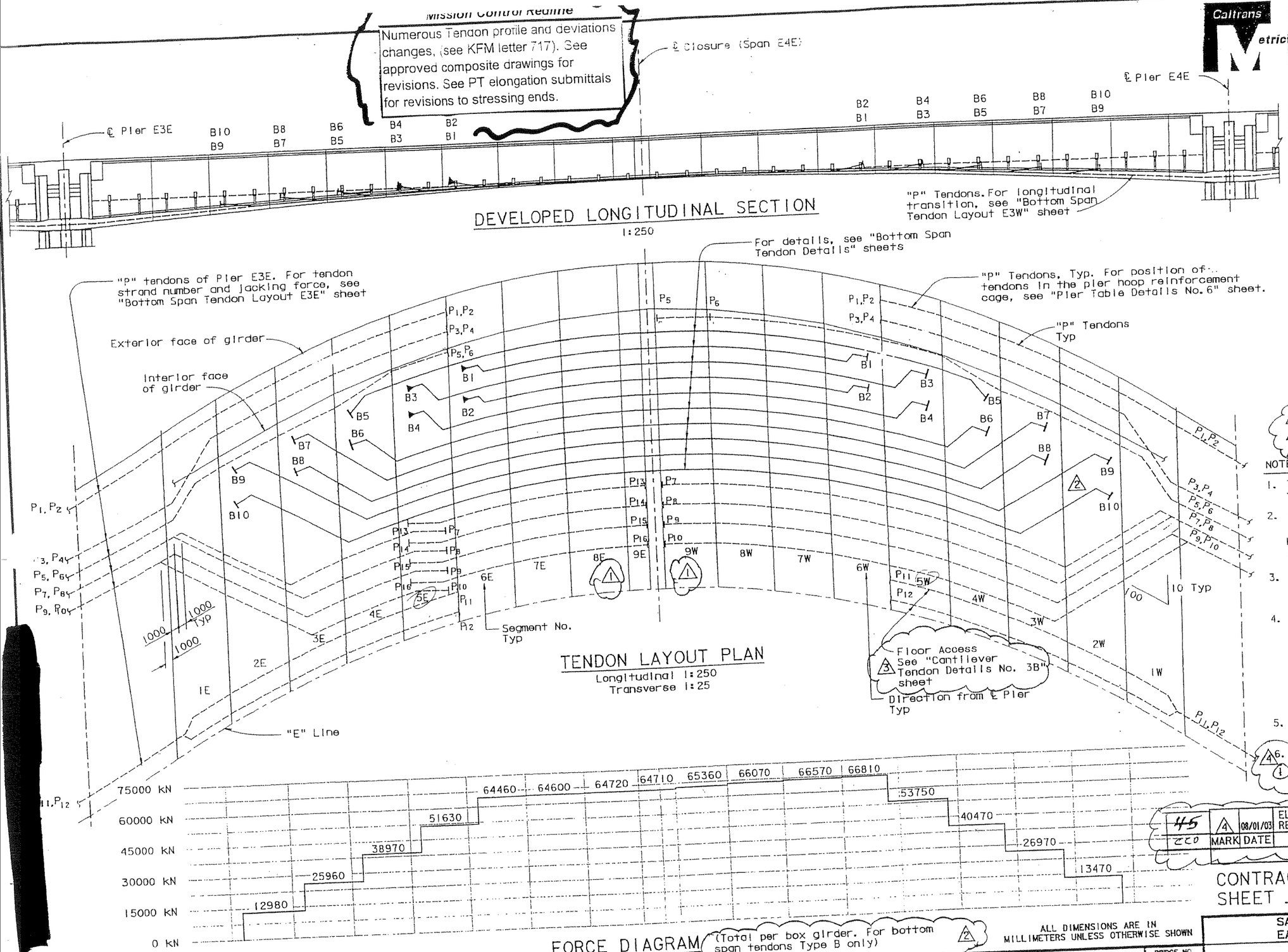

BOTTOM SPAN TENDONS (*per box girder)

Tendon	No. of tendons* x No. of strands (15 Dia)	Jacking Force per Tendon kN
E4E B 1	2 x 19	3705
E4E B 2	2 x 19	3705
E4E B 3	2 x 19	3705
E4E B 4	2 x 19	3705
E4E B 5	2 x 19	3705
E4E B 6	2 x 19	3705
E4E B 7	2 x 19	3705
E4E B 8	2 x 19	3705
E4E B 9	2 x 19	3705
E4E B 10	2 x 19	3705
4 E4E P1-4	8 x 12 (1)	See note 6
1 E4E P5-10	12 x 12	1400
4 E4E P11-12	4 x 12 (1)	See note 6

NOTES:

1. Tendons are symmetrical with respect to "E" Line.
2. Anchorage symbols are as follows:
   - Jacking end
   - Dead end
3. The force diagram shows forces which only account for losses due to friction, anchor set and elastic shortening.
4. Key to tendon nomenclature:
   - E4E — Span No.
   - B — Tendon type
   - 1 — Tendon mark
5. For "P" Tendon details, see "Cantilever Tendon Details" sheets.
6. No stressing and anchorage required for tendons P1-4 & P11-12. Tendons shall be preassembled units and installed by pulling through duct and then grouted.

MARK	DATE	DESCRIPTIONS	BY	CH'D
45	08/01/03	ELIMINATE STRESSING AND ANCHORAGE REQUIREMENT FOR NOTED TENDONS	MR	JC

REVISIONS

CONTRACT CHANGE ORDER NO. 45
SHEET 18 OF 34

100 % PS&E

STL-003082 11/24/03

MARK	DATE	DESCRIPTION	BY	CH'D
3	03/05/03	ADD FLOOR ACCESS DETAIL	JC	MS
2	10/07/02	EXTEND BOTTOM SPAN TENDONS	JC	MS
1	10/07/02	SHORTEN AND EXTEND POW TENDONS	JC	MS

DESIGN OVERSIGHT: 8/15/03

DESIGN BY J. Chan CHECKED R. Lund
DETAILS BY E. Zharkov CHECKED R. Lund
QUANTITIES BY L. Cormier CHECKED J. Chan

PREPARED FOR THE STATE OF CALIFORNIA DEPARTMENT OF TRANSPORTATION

ALL DIMENSIONS ARE IN MILLIMETERS UNLESS OTHERWISE SHOWN

Sajid Abbas
PROJECT ENGINEER

BRIDGE NO. 34-0006L/R
KILOMETER POST 13.9/14.3, 0.0/1.6

SAN FRANCISCO OAKLAND BAY BRIDGE
EAST SPAN SEISMIC SAFETY PROJECT

SKYWAY STRUCTURES

BOTTOM SPAN TENDON LAYOUT E4E

CU 04
EA 012021

DISREGARD PRINTS BEARING EARLIER REVISION DATES

REVISION DATES (PRELIMINARY STAGE ONLY) 07/25/95 02/27/01 06/28/01 11/27/01 02/06/01 07/25/02 10/07/02 03/05/03 08/01/03

SHEET 207 OF

ORIGINAL SCALE IN MILLIMETERS FOR REDUCED PLANS 0 10 20 30 40 50 60 70 80 90 100

TIME PLOTTED: 11:03:47.06 BY

DIST.	COUNTY	ROUTE	KILOMETER POST TOTAL PROJECT	SHEET NO.	TOTAL SHEETS
04	SF, Alal	30	13.9/14.3, 0.0/1.5	640R3	978

Caltrans Metric

Mission Control Redline

Numerous Tendon profile and deviations changes. (see KFM letter 717). See approved composite drawings for revisions. See PT elongation submittals for revisions to stressing ends.

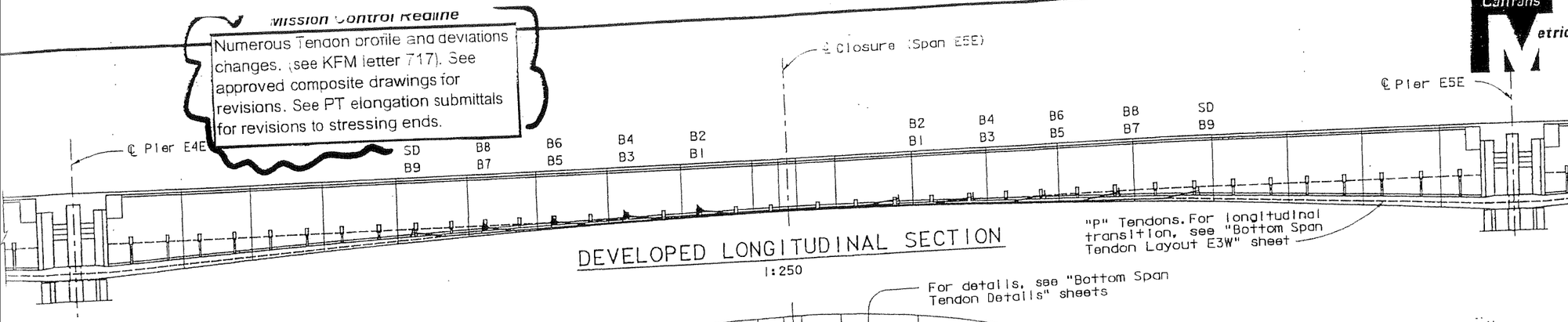

DEVELOPED LONGITUDINAL SECTION

1:250

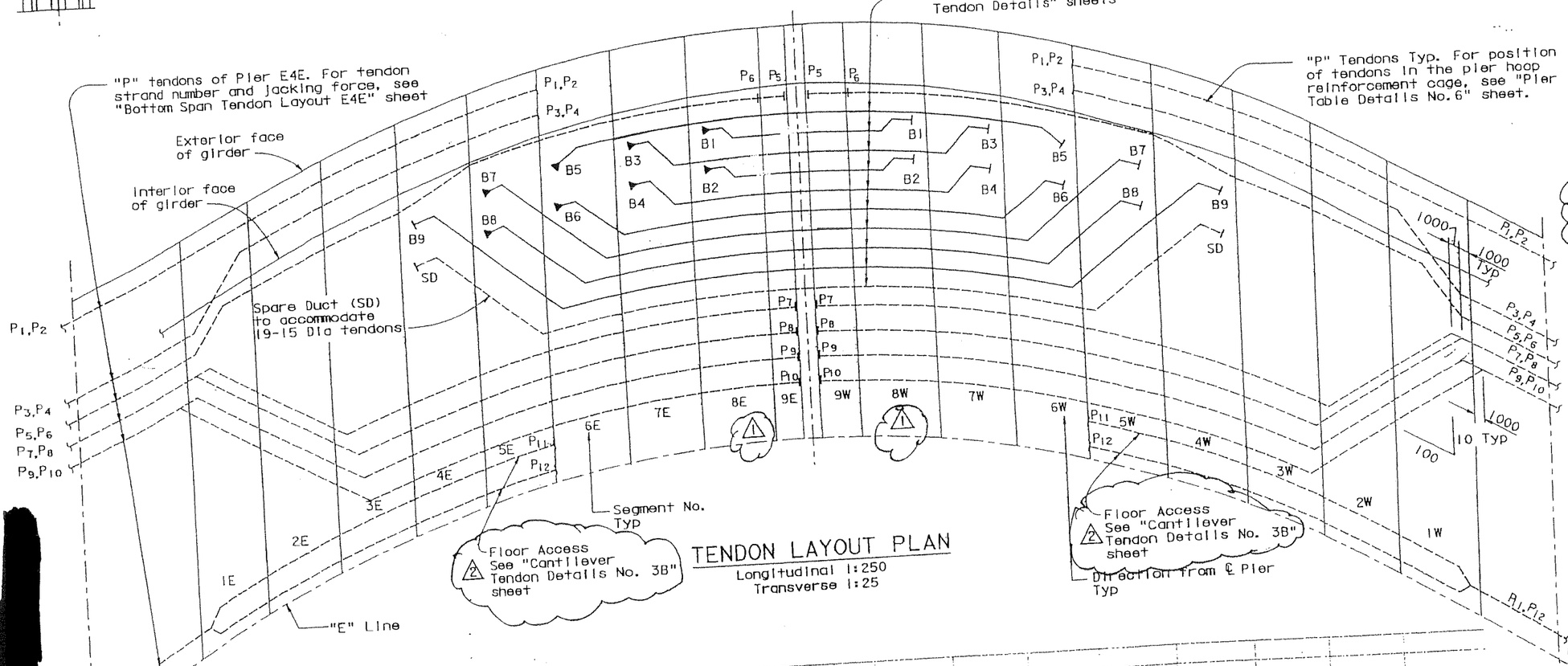

TENDON LAYOUT PLAN

Longitudinal 1:250
Transverse 1:25

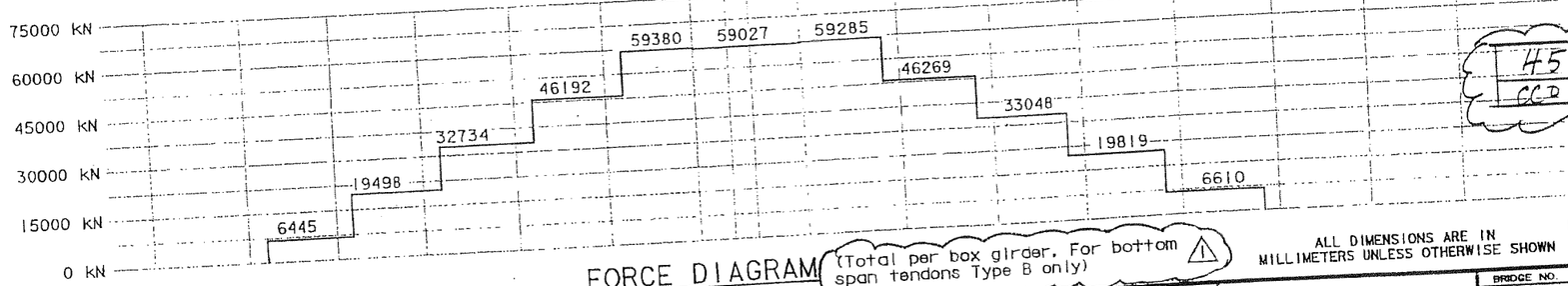

FORCE DIAGRAM (Total per box girder. For bottom span tendons Type B only)

BOTTOM SPAN TENDONS (*per box girder)

Tendon	No. of tendons* x No. of strands (15 Dia)	Jacking Force per Tendon kN
E5E B 1	2 x 19	3705
E5E B 2	2 x 19	3705
E5E B 3	2 x 19	3705
E5E B 4	2 x 19	3705
E5E B 5	2 x 19	3705
E5E B 6	2 x 19	3705
E5E B 7	2 x 19	3705
E5E B 8	2 x 19	3705
E5E B 9	2 x 19	3705
3 E5E P1-4	8 x 12 (1)	See note 6
1 E5E P5-10	12 x 12	1400
3 E5E P11-12	4 x 12 (1)	See note 6

NOTES:

1. Tendons are symmetrical with respect to "E" Line.
2. Anchorage symbols are as follows:
   - ├── Jacking end
   - ►── Dead end
3. The force diagram shows forces which only account for losses due to friction, anchor set and elastic shortening.
4. Key to tendon nomenclature:
   - E5E B 1
   - Span No. — E5E
   - Tendon type — B
   - Tendon mark — 1
5. For "P" Tendon details, see "Cantilever Tendon Details" sheets.
6. (3) (1) No stressing and anchorage required for tendons P1-4 & P11-12. Tendons shall be preassembled units and installed by pulling through duct and then grouted.

Sin Fu Chan
REGISTERED ENGINEER - CIVIL
6-4-01
PLANS APPROVAL DATE

REGISTERED PROFESSIONAL ENGINEER Siu Fu John Chan No. C 39457 Exp. 12/31/05 CIVIL STATE OF CALIFORNIA

The State of California or its officers or agents shall not be responsible for the accuracy or completeness of electronic copies of this plan sheet.

T.Y. LIN / MOFFATT & NICHOL
825 BATTERY STREET
SAN FRANCISCO, CA 94111

Caltrans now has a web site! To get to the web site, go to: http://www.dot.ca.gov

MARK	DATE	DESCRIPTIONS	BY	CH'D
45 (CCD)	3 08/01/03	ELIMINATE STRESSING AND ANCHORAGE REQUIREMENT FOR NOTED TENDONS	MR	JC

REVISIONS

CONTRACT CHANGE ORDER NO. 45
SHEET 19 OF 34

100 % P S&E

STL-003082 11/24/03

ALL DIMENSIONS ARE IN MILLIMETERS UNLESS OTHERWISE SHOWN

PREPARED FOR THE STATE OF CALIFORNIA DEPARTMENT OF TRANSPORTATION

Sajid Abbas
PROJECT ENGINEER

BRIDGE NO. 34-0006L/R
KILOMETER POST 13.9/14.3, 0.0/1.5

SAN FRANCISCO OAKLAND BAY BRIDGE
EAST SPAN SEISMIC SAFETY PROJECT

SKYWAY STRUCTURES

BOTTOM SPAN TENDON LAYOUT E5E

	BY	CHECKED
DESIGN	J. Chan	H. Lund
DETAILS	E. Znarkov	H. Lund
QUANTITIES	R. Cormier	J. Chan

DESIGN OVERSIGHT

DATE	DESCRIPTION	BY	CH'D
3 03/05/03	ADD FLOOR ACCESS DETAIL CCD 45	JC	MS
1 10/07/02	SHOW AND EXTEND PIER TENDONS CCD —	JC	MS

ORIGINAL SCALE IN MILLIMETERS FOR REDUCED PLANS

DISREGARD PRINTS BEARING EARLIER REVISION DATES

REVISION DATES (PRELIMINARY STAGE ONLY) 07/25/02 02/28/02 06/06/02 11/27/02 02/04/03 01/24/02 10/07/02 03/05/03 08/01/03

CU 04
EA 01202

SHEET 206 OF

Mission Control Redline

Numerous Tendon profile and deviations changes. (see KFM letter 717). See approved composite drawings for revisions. See PT elongation submittals for revisions to stressing ends.

DIST.	COUNTY	ROUTE	KILOMETER POST TOTAL	KILOMETER POST PROJECT	SHEET NO.	TOTAL SHEETS
04	SF, Ala	30	13.9/14.3,	0.0/1.6	641R3	978

REGISTERED ENGINEER - CIVIL

6-4-01
PLANS APPROVAL DATE

REGISTERED PROFESSIONAL ENGINEER Stu Fu John Chan No. C 39457 Exp. 12/31/05 CIVIL STATE OF CALIFORNIA

The State of California or its officers or agents shall not be responsible for the accuracy or completeness of electronic copies of this plan sheet.

T.Y. LIN / MOFFATT & NICHOL
825 BATTERY STREET
SAN FRANCISCO, CA 94111

Caltrans now has a web site! To get to the web site, go to: http://www.dot.ca.gov

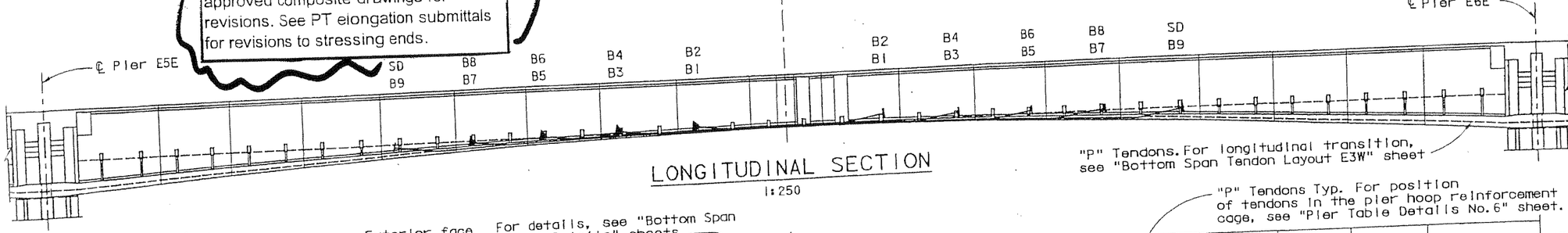

LONGITUDINAL SECTION
1:250

"P" Tendons. For longitudinal transition, see "Bottom Span Tendon Layout E3W" sheet

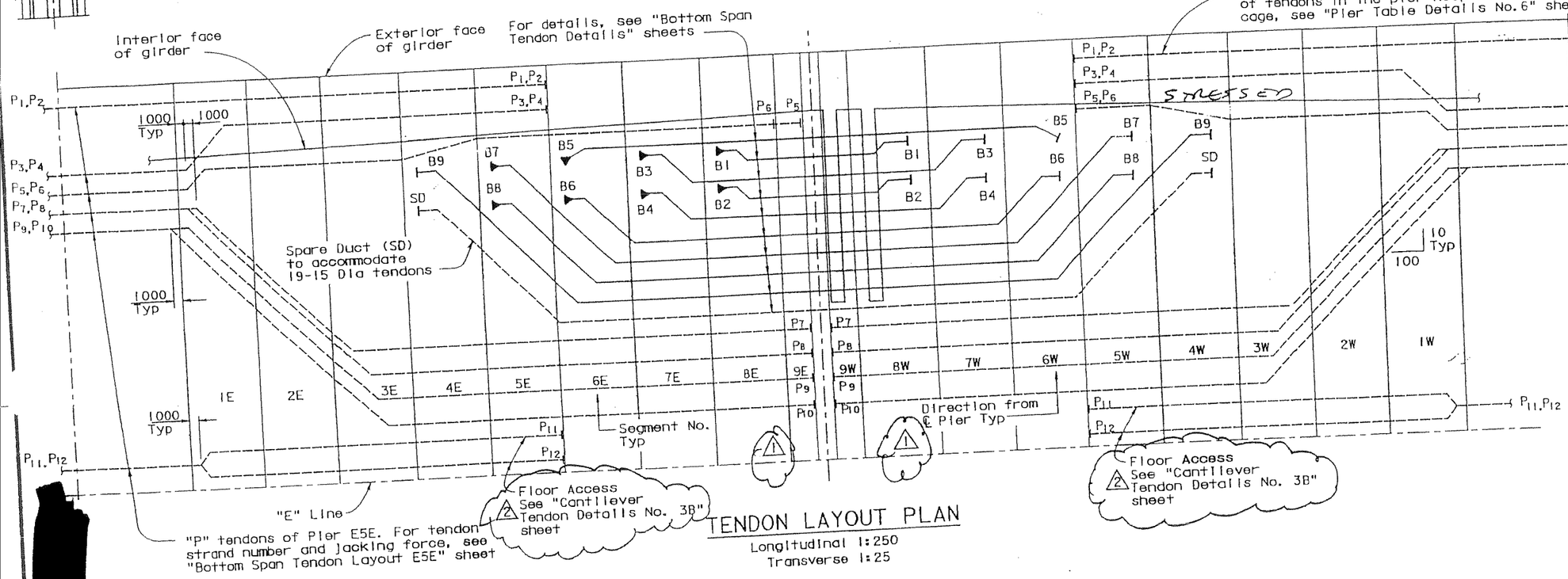

TENDON LAYOUT PLAN
Longitudinal 1:250
Transverse 1:25

BOTTOM SPAN TENDONS (*per box girder)

Tendon	No. of Tendons* x No. of strands (15 Dia)	Jacking Force per Tendon kN
E6E B 1	2 x 19	3705
E6E B 2	2 x 19	3705
E6E B 3	2 x 19	3705
E6E B 4	2 x 19	3705
E6E B 5	2 x 19	3705
E6E B 6	2 x 19	3705
E6E B 7	2 x 19	3705
E6E B 8	2 x 19	3705
E6E B 9	2 x 19	3705
3 E6E P1-4	8 x 12 (1)	See note 6
1 E6E P5-10	12 x 12	1400
3 E6E P11-12	4 x 12 (1)	See note 6

NOTES:

1. Tendons are symmetrical with respect to "E" Line.
2. Anchorage symbols are as follows:
   - ├── Jacking end
   - ▶── Dead end
3. The force diagram shows forces which only account for losses due to friction, anchor set and elastic shortening.
4. Key to tendon nomenclature:
   - E6E B 1
   - Span No. — E6E
   - Tendon type — B
   - Tendon mark — 1
5. For "P" Tendon details, see "Cantilever Tendon Details" sheets.
6. (3) (1) No stressing and anchorage required for tendons P1-4 & P11-12. Tendons shall be preassembled units and installed by pulling through duct and then grouted.

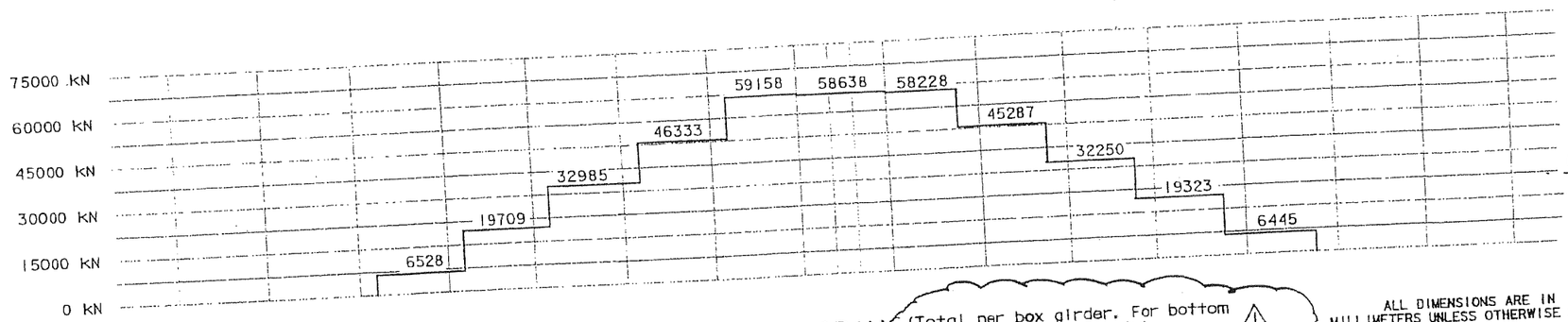

FORCE DIAGRAM (Total per box girder. For bottom span tendons Type B only)

ECO MARK	DATE	REVISIONS	BY	CH'D
45 (3)	08/01/03	ELIMINATE STRESSING AND ANCHORAGE REQUIREMENT FOR NOTED TENDONS	MR	JC

CONTRACT CHANGE ORDER NO. 45
SHEET 20 OF 34

100 % PS&E

ALL DIMENSIONS ARE IN MILLIMETERS UNLESS OTHERWISE SHOWN

SAN FRANCISCO OAKLAND BAY BRIDGE
EAST SPAN SEISMIC SAFETY PROJECT

SKYWAY STRUCTURES

BOTTOM SPAN TENDON LAYOUT E6E

BRIDGE NO. 34-0006L/R
KILOMETER POST 13.9/14.3, 0.0/1.6

Sajid Abbas
PROJECT ENGINEER

PREPARED FOR THE STATE OF CALIFORNIA DEPARTMENT OF TRANSPORTATION

DESIGN: J. Chan — CHECKED: H. Lund
DETAIL: E. Zharkov — CHECKED: H. Lund
QUANTITIES: R. Cormier — CHECKED: J. Chan

DESIGN OVERSIGHT

MARK	DATE	DESCRIPTION	BY	CH'D
3	03/05/03	ADD FLOOR ACCESS DETAIL	JC	MS
1	10/07/02	SHOW AND EXTEND "P" TENDON	JC	MS

ORIGINAL SCALE IN MILLIMETERS FOR REDUCED PLANS

CU 04
EA 01202

DISREGARD PRINTS BEARING EARLIER REVISION DATES

REVISION DATES (PRELIMINARY STAGE ONLY): 01/25/99 | 02/25/00 | 06/26/00 | 11/27/00 | 02/26/01 | 07/13/01 | 10/09/02 | 03/25/03 | 08/01/03

SHEET 209

STL-003082 11/24/03

DIST.	COUNTY	ROUTE	KILOMETER POST TOTAL PROJECT	SHEET NO.	TOTAL SHEETS
04	SF, ALA	80	13.9/14.3 0.0/1.6	642R3	978

Caltrans Metric

REGISTERED ENGINEER - CIVIL

6-4-01

PLANS APPROVAL DATE

Siu Fu John Chan No. C 39457 Exp. 12/31/05 CIVIL STATE OF CALIFORNIA REGISTERED PROFESSIONAL ENGINEER

The State of California or its officers or agents shall not be responsible for the accuracy or completeness of electronic copies of this plan sheet.

T.Y. LIN / MOFFATT & NICHOL
825 BATTERY STREET
SAN FRANCISCO, CA 94111

Caltrans now has a web site! To get to the web site, go to: http://www.dot.ca.gov

Mission Control Realme

Numerous Tendon profile and deviations changes, (see KFM letter 717). See approved composite drawings for revisions. See PT elongation submittals for revisions to stressing ends.

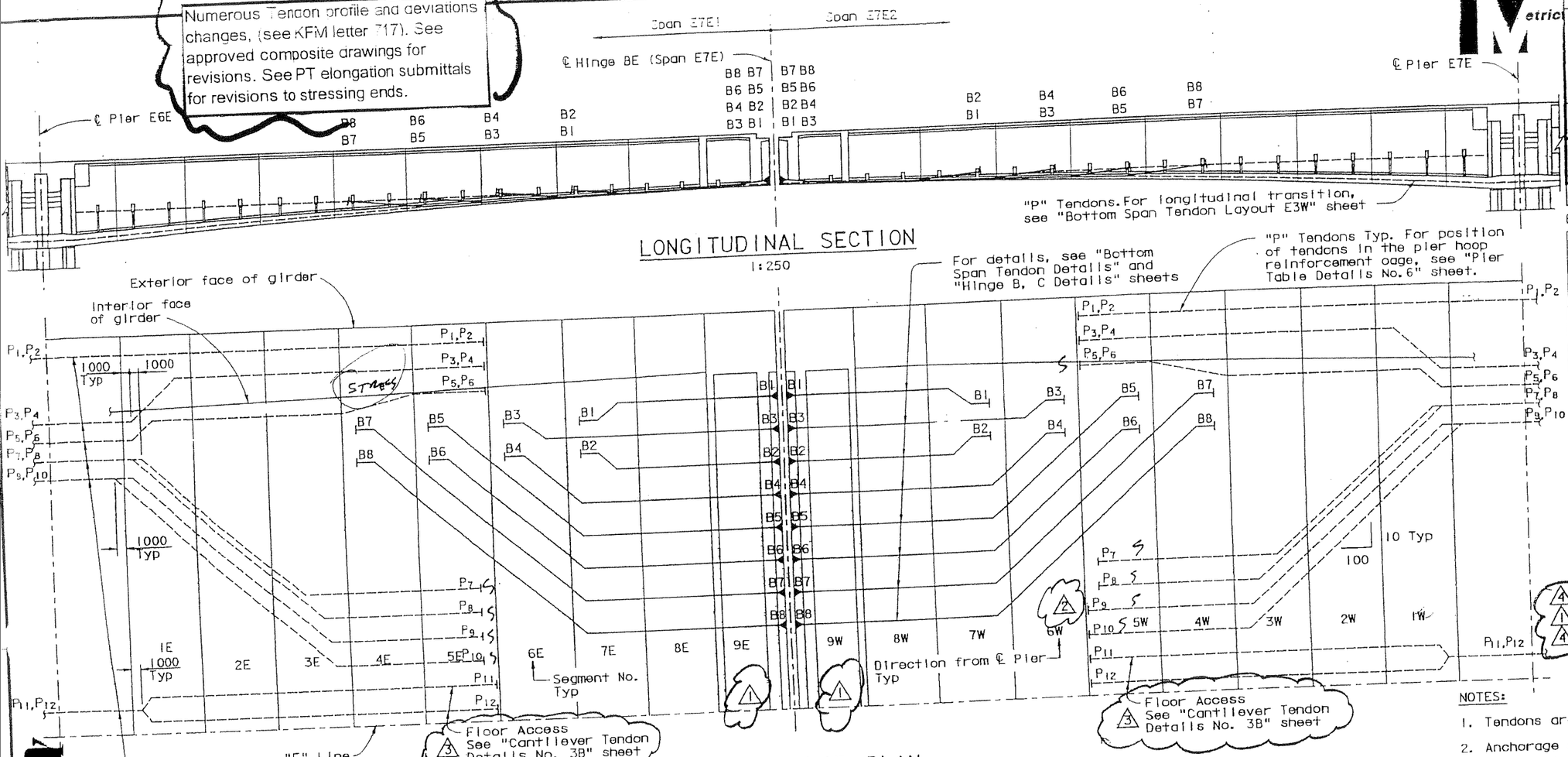

BOTTOM SPAN TENDONS (*per box girder)

Tendon	No. of tendons* x No. of strands (15 Dia)	Jacking Force per Tendon kN
E7E1 B 1	2 x 19	3705
E7E1 B 2	2 x 19	3705
E7E1 B 3	2 x 19	3705
E7E1 B 4	2 x 19	3705
E7E1 B 5	2 x 19	3705
E7E1 B 6	2 x 19	3705
E7E1 B 7	2 x 19	3705
E7E1 B 8	2 x 19	3705
E7E2 B 1	2 x 19	3705
E7E2 B 2	2 x 19	3705
E7E2 B 3	2 x 19	3705
E7E2 B 4	2 x 19	3705
E7E2 B 5	2 x 19	3705
E7E2 B 6	2 x 19	3705
E7E2 B 7	2 x 19	3705
E7E2 B 8	2 x 19	3705
4 E7E2 P1-4	8 x 12 (1)	See note 6
1 E7E2 P5-10	12 x 12	1400
4 E7E2 P11-12	4 x 12 (1)	See note 6

NOTES:

1. Tendons are symmetrical with respect to "E" Line.
2. Anchorage symbols are as follows:
   - |—— Jacking end
   - ▶—— Dead end.
3. The force diagram shows forces which only account for losses due to friction, anchor set and elastic shortening.
4. Key to tendon nomenclature:
   - E7E1 — Span No.
   - B — Tendon type
   - 1 — Tendon mark
5. For "P" tendon details, see "Cantilever Tendon Details" sheets.
6. (4)(1) No stressing and anchorage required for tendons P1-4 & P11-12. Tendons shall be preassembled units and installed by pulling through duct and then grouted.

MARK	DATE	DESCRIPTIONS	BY	CH'D
4	06/01/03	ELIMINATE STRESSING AND ANCHORAGE REQUIREMENT FOR NOTED TENDONS	MR	JC

REVISIONS

45 CCO

CONTRACT CHANGE ORDER NO. 45
SHEET 21 OF 34

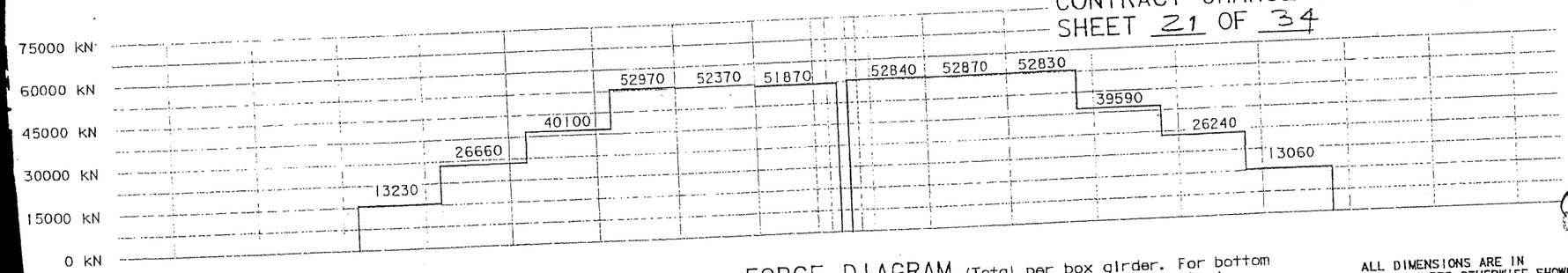

FORCE DIAGRAM (Total per box girder. For bottom span tendons Type B only) (1)

ALL DIMENSIONS ARE IN MILLIMETERS UNLESS OTHERWISE SHOWN

MARK	DATE	DESCRIPTION	BY	CH'D
3	03/05/03	ADD FLOOR ACCESS DETAIL	CCO 45 JC	MS
2	03/05/03	REVISE P9 AND P10 ANCHOR LOCATIONS AND STRAND NO.	CCO45 JC	MS
1	10/07/02	SHOW AND EXTEND "B" TENDONS	CCO- JC	MS

DESIGN OVERSIGHT 8/15/07

DESIGN BY J. Chan CHECKED H. Lund
DETAILS BY S. Lee CHECKED H. Lund
QUANTITIES BY K. Comlet CHECKED S. Chor

PREPARED FOR THE STATE OF CALIFORNIA DEPARTMENT OF TRANSPORTATION

Sajid Abbas
PROJECT ENGINEER

BRIDGE NO. 34-0006L/R
KILOMETER POST 13.9/14.3 0.0/1.6
CU 0-
EA 01202

DISREGARD PRINTS BEARING EARLIER REVISION DATES

ORIGINAL SCALE IN MILLIMETERS 0 10 20 30 40 50 60 70 80 90 100

SAN FRANCISCO OAKLAND BAY BRIDGE
EAST SPAN SEISMIC SAFETY PROJECT

SKYWAY STRUCTURES

BOTTOM SPAN TENDON LAYOUT E7E

REVISION DATES (PRELIMINARY STAGE ONLY) 02/13/00 06/26/00 11/27/00 02/12/01 02/28/01 01/25/02 10/07/02 01/27/03 02/25/03 06/01/03

SHEET 0 210

100% PS&E

STL-003082 11/24/03

Mission Control Redline

Numerous Tendon profile and deviations changes. (see KFM letter 717). See approved composite drawings for revisions. See PT elongation submittals for revisions to stressing ends.

DIST.	COUNTY	ROUTE	KILOMETER POST TOTAL PROJECT	SHEET NO.	TOTAL SHEETS
04	SF, Ala	80	13.9/14.3, 0.0/1.6	643R2	978

Caltrans Metric

REGISTERED ENGINEER - CIVIL

6-4-01

PLANS APPROVAL DATE

The State of California or its officers or agents shall not be responsible for the accuracy or completeness of electronic copies of this plan sheet.

REGISTERED PROFESSIONAL ENGINEER Stu Fu John Chan No. C 39457 Exp. 12/31/05 CIVIL STATE OF CALIFORNIA

T.Y. LIN / MOFFATT & NICHOL
825 BATTERY STREET
SAN FRANCISCO, CA 94111

Caltrans now has a web site! To get to the web site, go to: http://www.dot.ca.gov

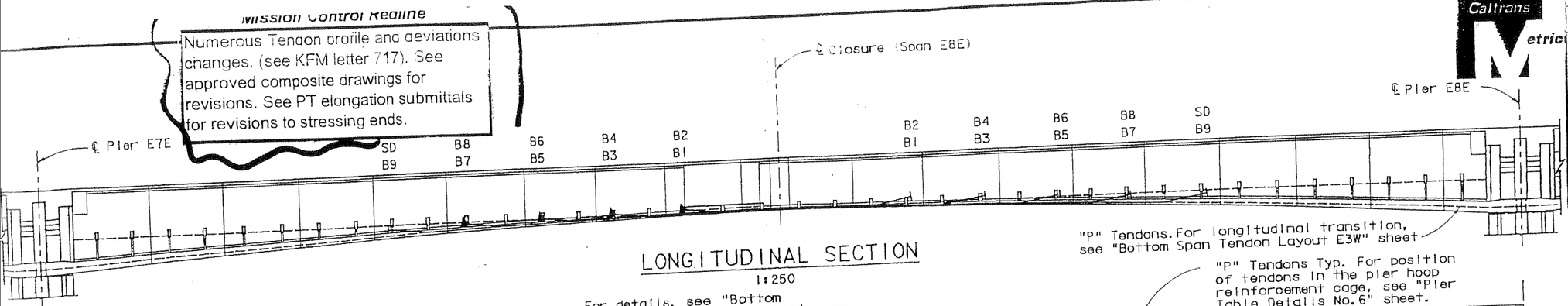

LONGITUDINAL SECTION

1:250

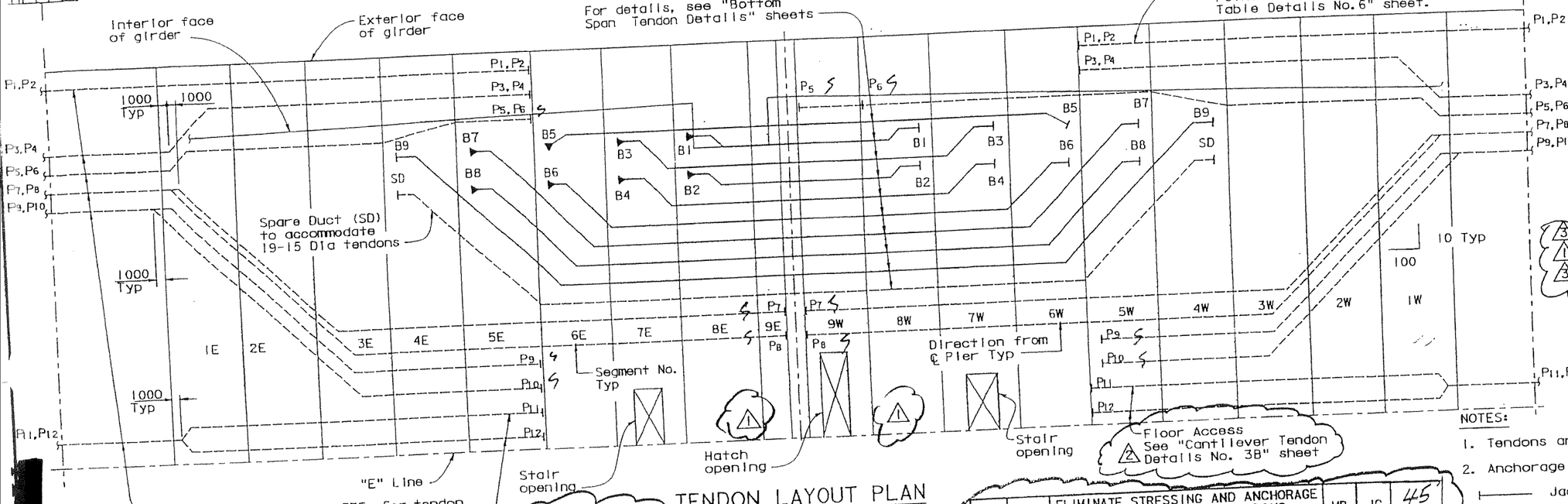

TENDON LAYOUT PLAN

Longitudinal 1:250
Transverse 1:25

BOTTOM SPAN TENDONS (*per box girder)

Tendon	No. of tendons* x No. of strands (15 Dia)	Jacking Force per Tendon KN
E8E B 1	2 x 19	3705
E8E B 2	2 x 19	3705
E8E B 3	2 x 19	3705
E8E B 4	2 x 19	3705
E8E B 5	2 x 19	3705
E8E B 6	2 x 19	3705
E8E B 7	2 x 19	3705
E8E B 8	2 x 19	3705
E8E B 9	2 x 19	3705
3 E8E P1-4	8 x 12 (1)	See note 6
1 E8E P5-10	12 x 12	1400
3 E8E P11-12	4 x 12 (1)	See note 6

NOTES:

1. Tendons are symmetrical with respect to "E" Line.
2. Anchorage symbols are as follows:
   - ├── Jacking end
   - ►── Dead end
3. The force diagram shows forces which only account for losses due to friction, anchor set and elastic shortening.
4. Key to tendon nomenclature:
   - E8E — Span No.
   - B — Tendon type
   - 1 — Tendon mark
5. For "P" tendon details, see "Cantilever Tendon Details" sheets.
6. (3) (1) No stressing and anchorage required for tendons P1-4 & P11-12. Tendons shall be preassembled units and installed by pulling through duct and then grouted.

MARK	DATE	DESCRIPTIONS	BY	CH'D
3	08/01/03	ELIMINATE STRESSING AND ANCHORAGE REQUIREMENT FOR NOTED TENDONS	MR	JC
		REVISIONS		

CONTRACT CHANGE ORDER NO. 45
SHEET 22 OF 34

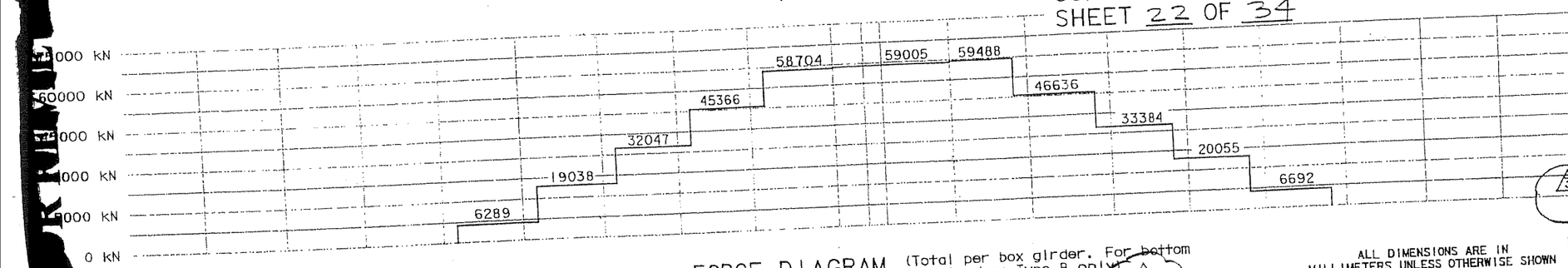

FORCE DIAGRAM

(Total per box girder. For bottom span tendons Type B only)

ALL DIMENSIONS ARE IN MILLIMETERS UNLESS OTHERWISE SHOWN

MARK	DATE	DESCRIPTION	BY	CH'D
2	03/05/03	ADD FLOOR ACCESS DETAIL	JC	MS
1	10/07/02	SHOW AND EXTEND PT TENDONS	JC	MS

DESIGN OVERSIGHT 8/15/03

DESIGN BY J. Chan CHECKED H. Lund
DETAILS BY E. Zharkov CHECKED L. Lund
QUANTITIES BY L. Cormier CHECKED L. Char

PREPARED FOR THE STATE OF CALIFORNIA DEPARTMENT OF TRANSPORTATION

Sajid Abbas
PROJECT ENGINEER

BRIDGE NO. 34-0006L/R
KILOMETER POST 13.9/14.3, 0.0/1.6

DISREGARD PRINTS BEARING EARLIER REVISION DATES

ORIGINAL SCALE IN MILLIMETERS FOR REDUCED PLANS

CU 0-
EA 012021

SAN FRANCISCO OAKLAND BAY BRIDGE
EAST SPAN SEISMIC SAFETY PROJECT

SKYWAY STRUCTURES

BOTTOM SPAN TENDON LAYOUT E8E

REVISION DATES (PRELIMINARY STAGE ONLY) 08/28/02 11/27/02 12/20/02 02/28/01 01/15/02 10/07/02 01/24/03 01/05/03 04/01/03

SHEET 21 OF

100 % PS&E

STL-003082 11/24/03

Mission Control Redline

Numerous Tendon profile and deviations changes, (see KFM letter 717). See approved composite drawings for revisions. See PT elongation submittals for revisions to stressing ends.

DIST.	COUNTY	ROUTE	KILOMETER POST TOTAL PROJECT	SHEET NO.	TOTAL SHEETS
04	SF, ALA	30	13.3/14.3 0.0/1.6	644R3	978

Caltrans Metric

REGISTERED ENGINEER - CIVIL

6-4-01

PLANS APPROVAL DATE

REGISTERED PROFESSIONAL ENGINEER Shu Fu John Chen No. C 39457 Exp. 12/31/05 CIVIL STATE OF CALIFORNIA

The State of California or its officers or agents shall not be responsible for the accuracy or completeness of electronic copies of this plan sheet.

T.Y. LIN / MOFFATT & NICHOL
825 BATTERY STREET
SAN FRANCISCO, CA 94111

Caltrans now has a web site! To get to the web site, go to: http://www.dot.ca.gov

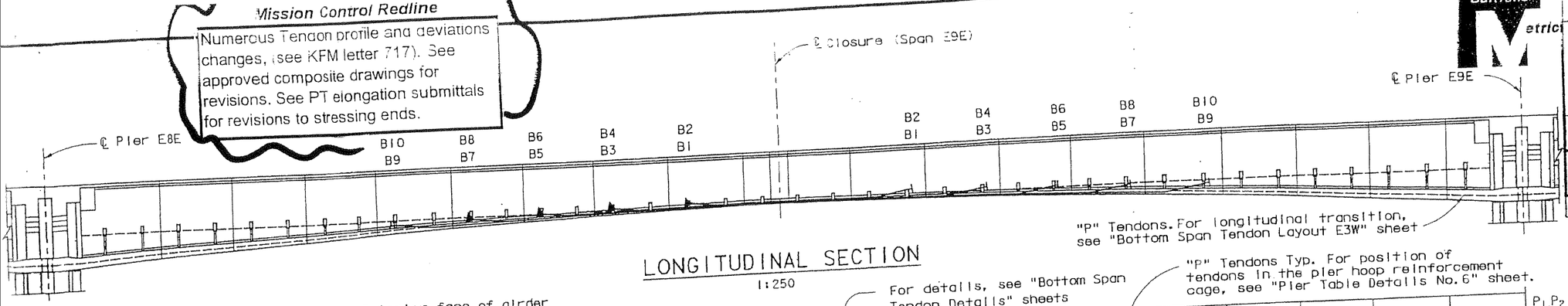

LONGITUDINAL SECTION

1:250

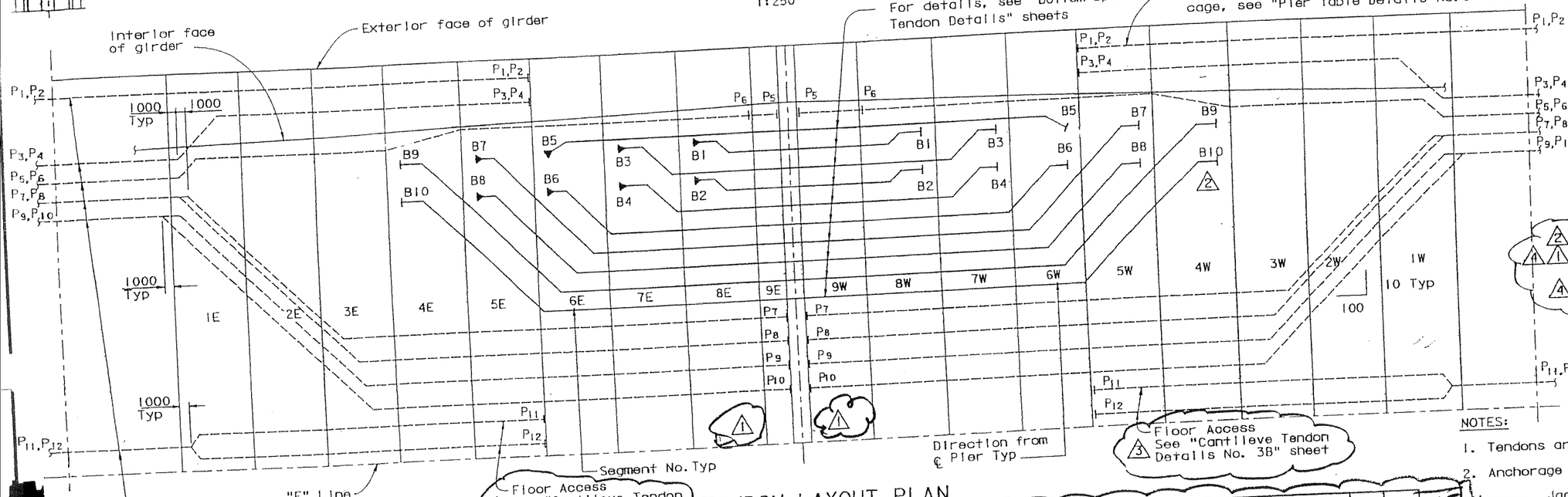

TENDON LAYOUT PLAN

Longitudinal 1:250
Transverse 1:25

BOTTOM SPAN TENDONS (*per box girder)

Tendon	No. of tendons* x No. of strands (15 Dia)	Jacking Force per Tendon kN
E9E B 1	2 x 19	3705
E9E B 2	2 x 19	3705
E9E B 3	2 x 19	3705
E9E B 4	2 x 19	3705
E9E B 5	2 x 19	3705
E9E B 6	2 x 19	3705
E9E B 7	2 x 19	3705
E9E B 8	2 x 19	3705
E9E B 9	2 x 19	3705
E9E B10	2 x 19	3705
E9E P1-4	8 x 12 (1)	See note 6
E9E P5-10	12 x 12	1400
E9E P11-12	4 x 12 (1)	See note 6

NOTES:

1. Tendons are symmetrical with respect to "E" Line.
2. Anchorage symbols are as follows:
   - Jacking end
   - Dead end
3. The force diagram shows forces which only account for losses due to friction, anchor set and elastic shortening.
4. Key to tendon nomenclature:
   - E9E — Span No.
   - B — Tendon type
   - 1 — Tendon mark
5. For "P" Tendon details, see "Cantilever Tendon Details" sheets.
6. (1) No stressing and anchorage required for tendons P1-4 & P11-12. Tendons shall be preassembled units and installed by pulling through duct and then grouted.

MARK	DATE	DESCRIPTIONS	BY	CH'D
4	08/01/03	ELIMINATE STRESSING AND ANCHORAGE REQUIREMENT FOR NOTED TENDONS	MR	JC

REVISIONS

CONTRACT CHANGE ORDER NO. 45
SHEET 23 OF 34

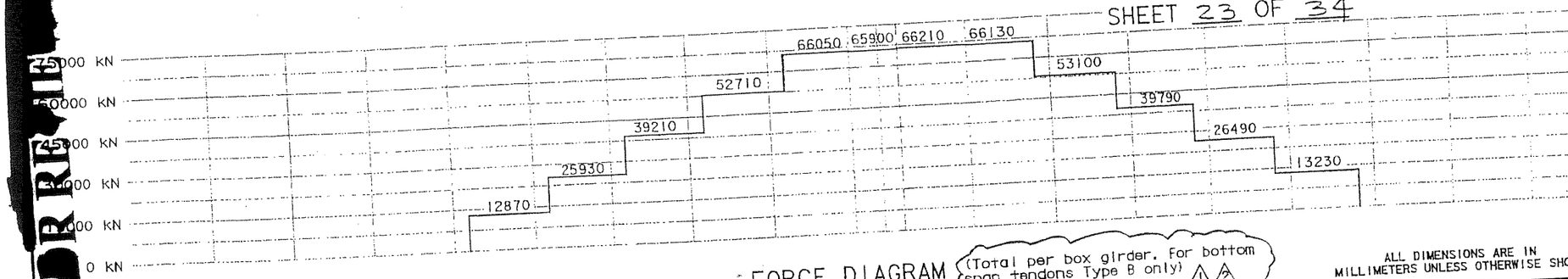

FORCE DIAGRAM

(Total per box girder. For bottom span tendons Type B only)

ALL DIMENSIONS ARE IN MILLIMETERS UNLESS OTHERWISE SHOWN

MARK	DATE	DESCRIPTION	BY	CH'D
3	03/05/03	ADD FLOOR ACCESS DETAIL CCO 45	JC	MS
2	10/07/02	CHANGE BOTTOM SPAN TENDONS CCO -	JC	MS
1	10/07/02	SHOW AND EXTEND "P" TENDONS CCO -	JC	MS

DESIGN OVERSIGHT 8/15/03

DESIGN BY J. Chan CHECKED H. Lund
DETAIL BY E. Zharkov CHECKED H. Lund
QUANTITIES BY K. Cormier CHECKED J. Chan

PREPARED FOR THE STATE OF CALIFORNIA DEPARTMENT OF TRANSPORTATION

Sajid Abbas
PROJECT ENGINEER

BRIDGE NO. 34-0006L/R
KILOMETER POST 13.9/14.3 0.0/1.6

CU 04
EA 01202

DISREGARD PRINTS BEARING EARLIER REVISION DATES:

SAN FRANCISCO OAKLAND BAY BRIDGE
EAST SPAN SEISMIC SAFETY PROJECT

SKYWAY STRUCTURES

BOTTOM SPAN TENDON LAYOUT E9E

SHEET 212

100 % PS&E

STL-003082 11/24/03

Mission Control Redline

Numerous Tendon profile and deviations changes, (see KFM letter 717). See approved composite drawings for revisions. See PT elongation submittals for revisions to stressing ends.

DIST.	COUNTY	ROUTE	TOTAL PROJECT	NO.	SHEETS
04	SF, Ala	80	13.3/14.3, 0.0/1.3	645R3	978

Caltrans Metric

REGISTERED ENGINEER - CIVIL

6-4-01

PLANS APPROVAL DATE

The State of California or its officers or agents shall not be responsible for the accuracy or completeness of electronic copies of this plan sheet.

REGISTERED PROFESSIONAL ENGINEER Siu Fu John Chan No. C 39457 Exp. 12/31/05 CIVIL STATE OF CALIFORNIA

T.Y. LIN / MOFFATT & NICHOL
825 BATTERY STREET
SAN FRANCISCO, CA 94111

Caltrans now has a web site! To get to the web site, go to: http://www.dot.ca.gov

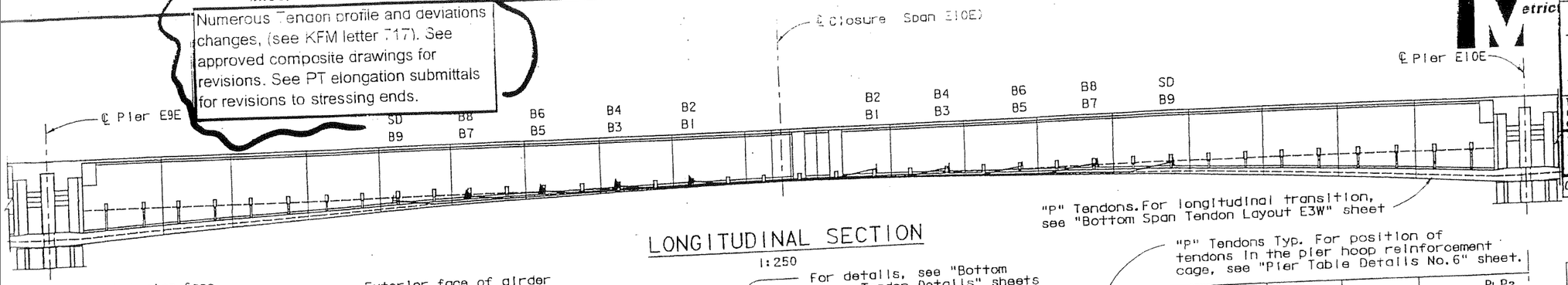

LONGITUDINAL SECTION

1:250

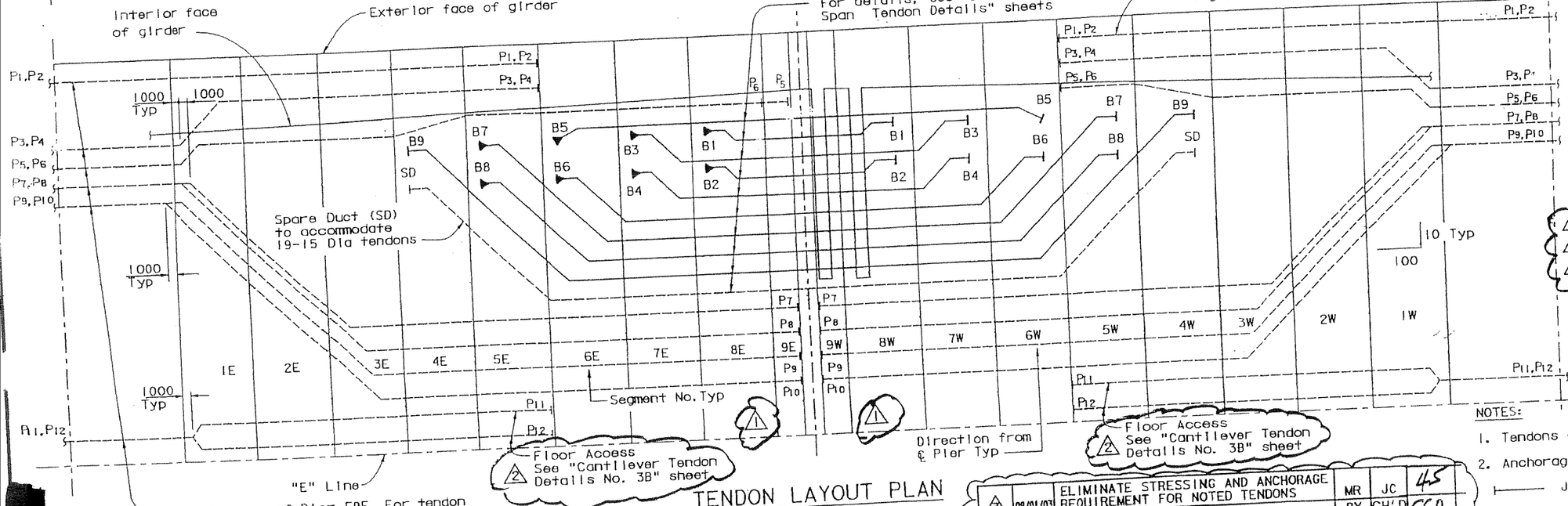

TENDON LAYOUT PLAN

Longitudinal 1:250
Transverse 1:25

MARK	DATE	DESCRIPTIONS	BY	CH'D
3	08/01/03	ELIMINATE STRESSING AND ANCHORAGE REQUIREMENT FOR NOTED TENDONS	MR	JC

REVISIONS

CONTRACT CHANGE ORDER NO. 45
SHEET 24 OF 34

BOTTOM SPAN TENDONS (*per box girder)

Tendon	No. of tendons* x No. of strands (15 Dia)	Jacking Force per Tendon kN
E10E B 1	2 x 19	3705
E10E B 2	2 x 19	3705
E10E B 3	2 x 19	3705
E10E B 4	2 x 19	3705
E10E B 5	2 x 19	3705
E10E B 6	2 x 19	3705
E10E B 7	2 x 19	3705
E10E B 8	2 x 19	3705
E10E B 9	2 x 19	3705
3 E10E P1-4	8 x 12	See note 6
1 E10E P5-10	12 x 12	1400
3 E10E P11-12	4 x 12	See note 6

NOTES:

1. Tendons are symmetrical with respect to "E" Line.
2. Anchorage symbols are as follows:
   - ⊢ Jacking end
   - ▶ Dead end
3. The force diagram shows forces which only account for losses due to friction, anchor set and elastic shortening.
4. Key to tendon nomenclature:
   - E10E — Span No.
   - B — Tendon type
   - 1 — Tendon mark
5. For "P" tendon details, see "Cantilever Tendon Details" sheets.
6. 3 No stressing and anchorage required for tendons P1-4 & P11-12. Tendons shall be preassembled units and installed by pulling through duct and then grouted.

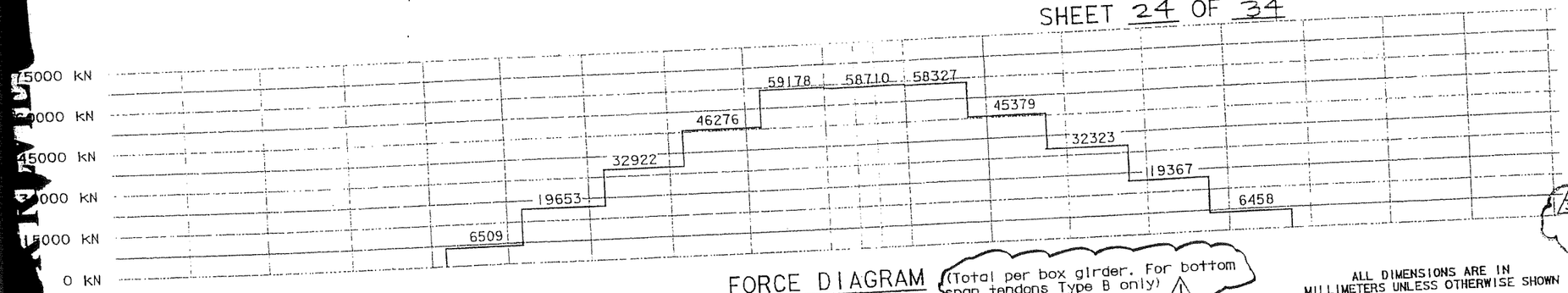

FORCE DIAGRAM

(Total per box girder. For bottom span tendons Type B only) 1

ALL DIMENSIONS ARE IN MILLIMETERS UNLESS OTHERWISE SHOWN

SAN FRANCISCO OAKLAND BAY BRIDGE
EAST SPAN SEISMIC SAFETY PROJECT

SKYWAY STRUCTURES

BOTTOM SPAN TENDON LAYOUT E10E

BRIDGE NO. 34-0006L/R

KILOMETER POST 13.9/14.3, 0.0/1.3

Sajid Abbas
PROJECT ENGINEER

PREPARED FOR THE STATE OF CALIFORNIA DEPARTMENT OF TRANSPORTATION

DESIGN: J. Chan — CHECKED: H. Lund
DETAILS: E. Zharkov — CHECKED: H. Lund
QUANTITIES: J. Cormier — CHECKED: J. Chan

DESIGN OVERSIGHT: 8/15/03

MARK	DATE	DESCRIPTION	BY	CH'D
2	03/05/03	ADD FLOOR ACCESS DETAIL	JC	MS
1	10/07/02	SHOW AND EXTEND PDT TENDONS	JC	MS

CL 04
EA 01202

DISREGARD PRINTS BEARING EARLIER REVISION DATES:

REVISION DATES (PRELIMINARY STAGE ONLY): 07/25/99 | 02/28/00 | 06/28/00 | 11/27/00 | 02/27/01 | 02/28/01 | 07/25/02 | 10/07/02 | 03/05/03 | 06/01/03

SHEET 213 OF

ORIGINAL SCALE IN MILLIMETERS FOR REDUCED PLANS

100 % PS&E

STL-003082 11/24/03

Mission Control Redline

Numerous Tendon profile and deviations changes, (see KFM letter 717). See approved composite drawings for revisions. See PT elongation submittals for revisions to stressing ends.

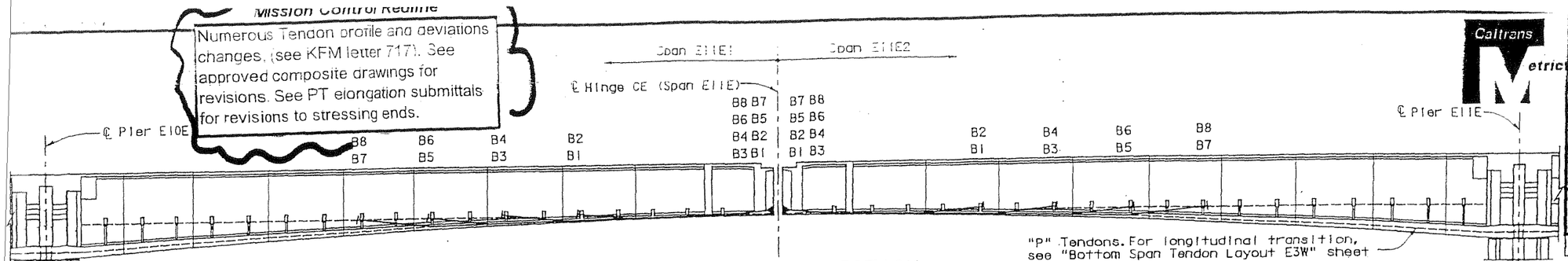

LONGITUDINAL SECTION

1:250

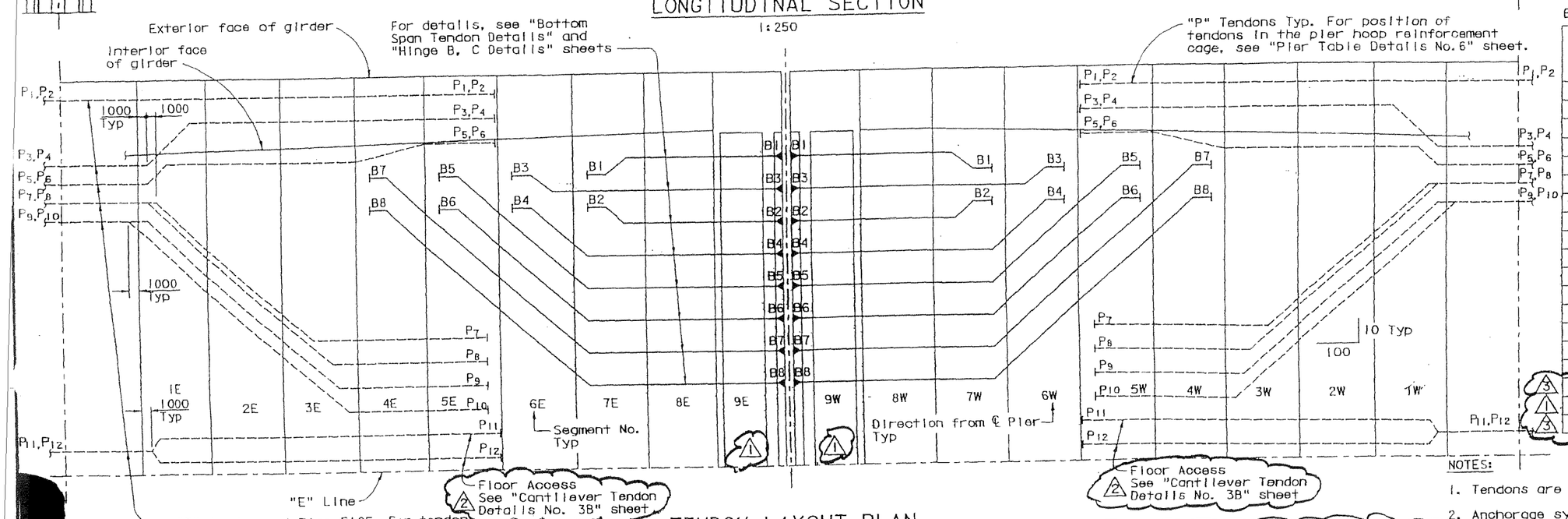

TENDON LAYOUT PLAN

Longitudinal 1:250
Transverse 1:25

MARK	DATE	DESCRIPTIONS	BY	CH'D	CCO
3	08/01/03	ELIMINATE STRESSING AND ANCHORAGE REQUIREMENT FOR NOTED TENDONS	MR	JC	45

REVISIONS

CONTRACT CHANGE ORDER NO. 45
SHEET 25 OF 34

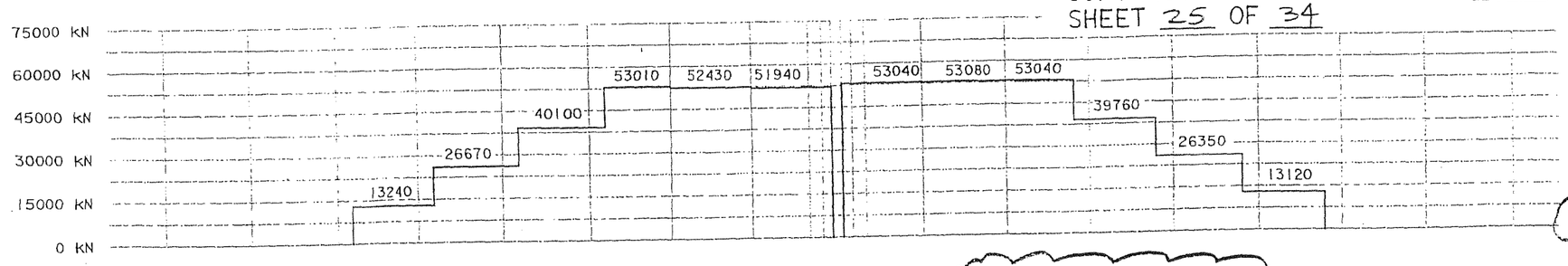

FORCE DIAGRAM (Total per box girder. For bottom span tendons Type B only)

BOTTOM SPAN TENDONS (*per box girder)

Tendon	No. of tendons* x No. of strands (15 Dia)	Jacking Force per Tendon kN
E11E1 B 1	2 x 19	3705
E11E1 B 2	2 x 19	3705
E11E1 B 3	2 x 19	3705
E11E1 B 4	2 x 19	3705
E11E1 B 5	2 x 19	3705
E11E1 B 6	2 x 19	3705
E11E1 B 7	2 x 19	3705
E11E1 B 8	2 x 19	3705
E11E2 B 1	2 x 19	3705
E11E2 B 2	2 x 19	3705
E11E2 B 3	2 x 19	3705
E11E2 B 4	2 x 19	3705
E11E2 B 5	2 x 19	3705
E11E2 B 6	2 x 19	3705
E11E2 B 7	2 x 19	3705
E11E2 B 8	2 x 19	3705
3 E11E2 P1-4	8 x 12 (1)	See note 6
1 E11E2 P5-10	12 x 12	1400
3 E11E2 P11-12	4 x 12 (1)	See note 6

NOTES:

1. Tendons are symmetrical with respect to "E" Line.
2. Anchorage symbols are as follows:
   - ├── Jacking end
   - ►── Dead end
3. The force diagram shows forces which only account for losses due to friction, anchor set and elastic shortening.
4. Key to tendon nomenclature:
   - E11E1 B 1
   - Span No. — E11E1
   - Tendon type — B
   - Tendon mark — 1
5. For "P" tendon details, see "Cantilever Tendon Details" sheets.
6. (3)(1) No stressing and anchorage required for tendons P1-4 & P11-12. Tendons shall be preassembled units and installed by pulling through duct and then grouted.

ALL DIMENSIONS ARE IN MILLIMETERS UNLESS OTHERWISE SHOWN

MARK	DATE	DESCRIPTION	BY	CH'D
3	03/05/03	ADD FLOOR ACCESS DETAIL	JC	MS
1	10/07/02	SHOW AND EXTEND "P" TENDONS	JC	MS

DESIGN OVERSIGHT: SIGN OFF DATE 8/15/03

DESIGN BY J. Chan CHECKED H. Lund
DETAILS BY S. Lee CHECKED H. Lund
QUANTITIES BY L. Cormier CHECKED J. Chan

PREPARED FOR THE STATE OF CALIFORNIA DEPARTMENT OF TRANSPORTATION

Sajid Abbas
PROJECT ENGINEER

BRIDGE NO. 34-0006L/R
KILOMETER POST 15.9/14.3, 0.0/1.6

ORIGINAL SCALE IN MILLIMETERS FOR REDUCED PLANS

CL 0-
EA 01202

DISREGARD PRINTS BEARING EARLIER REVISION DATES

REVISION DATES (PRELIMINARY STAGE ONLY) 02/25/00 | 08/28/00 | 11/21/00 | 02/14/01 | 02/26/01 | 01/15/02 | 10/07/02 | 01/27/03 | 03/05/03 | 08/01/03

SHEET 21 OF 41

DIST.	COUNTY	ROUTE	KILOMETER POST TOTAL PROJECT	PROJECT NO.	TOTAL SHEETS
04	SF, Ala	80	15.3/14.3, 0.0/1.6	646R3	978

Sid Fu John Chan
REGISTERED ENGINEER - CIVIL

6-4-01
PLANS APPROVAL DATE

REGISTERED PROFESSIONAL ENGINEER Sid Fu John Chan No. C 39457 Exp. 12/31/05 CIVIL STATE OF CALIFORNIA

The State of California or its officers or agents shall not be responsible for the accuracy or completeness of electronic copies of this plan sheet.

T.Y. LIN / MOFFATT & NICHOL
825 BATTERY STREET
SAN FRANCISCO, CA 94111

Caltrans now has a web site! To get to the web site, go to: http://www.dot.ca.gov

SAN FRANCISCO OAKLAND BAY BRIDGE
EAST SPAN SEISMIC SAFETY PROJECT

SKYWAY STRUCTURES

BOTTOM SPAN TENDON LAYOUT E11E

100 % PS&E

STL-003082 11/24/03

Numerous Tendon profile and deviations changes, see KFM letter 717). See approved composite drawings for revisions. See PT elongation submittals for revisions to stressing ends.

DIST.	COUNTY	ROUTE	KILOMETER POST TOTAL PROJECT	SHEET NO.	TOTAL SHEETS
04	SF, ALA	30	13.9/14.3, 0.0/1.6	647R3	978

REGISTERED ENGINEER - CIVIL

6-4-01

PLANS APPROVAL DATE

The State of California or its officers or agents shall not be responsible for the accuracy or completeness of electronic copies of this plan sheet.

PROFESSIONAL ENGINEER REGISTERED Siu Fu John Chan No. C 39457 Exp. 12/31/05 CIVIL STATE OF CALIFORNIA

T.Y. LIN / MOFFATT & NICHOL
825 BATTERY STREET
SAN FRANCISCO, CA 94111

Caltrans now has a web site! To get to the web site, go to: http://www.dot.ca.gov

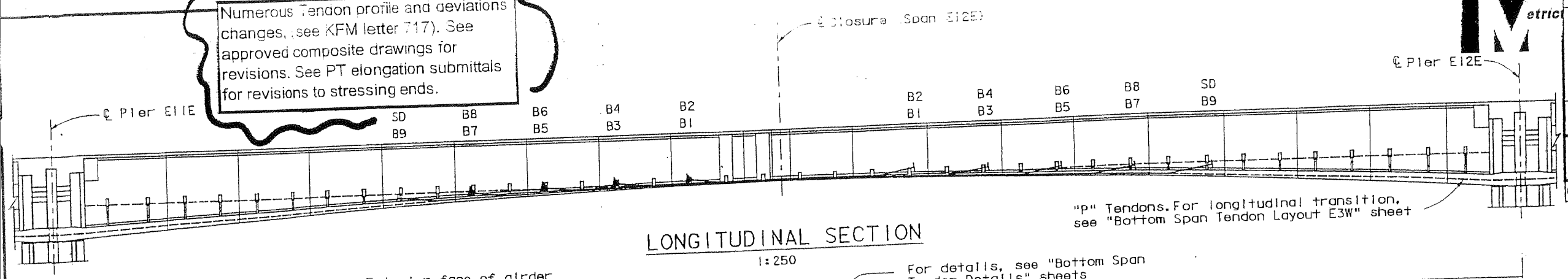

LONGITUDINAL SECTION

1:250

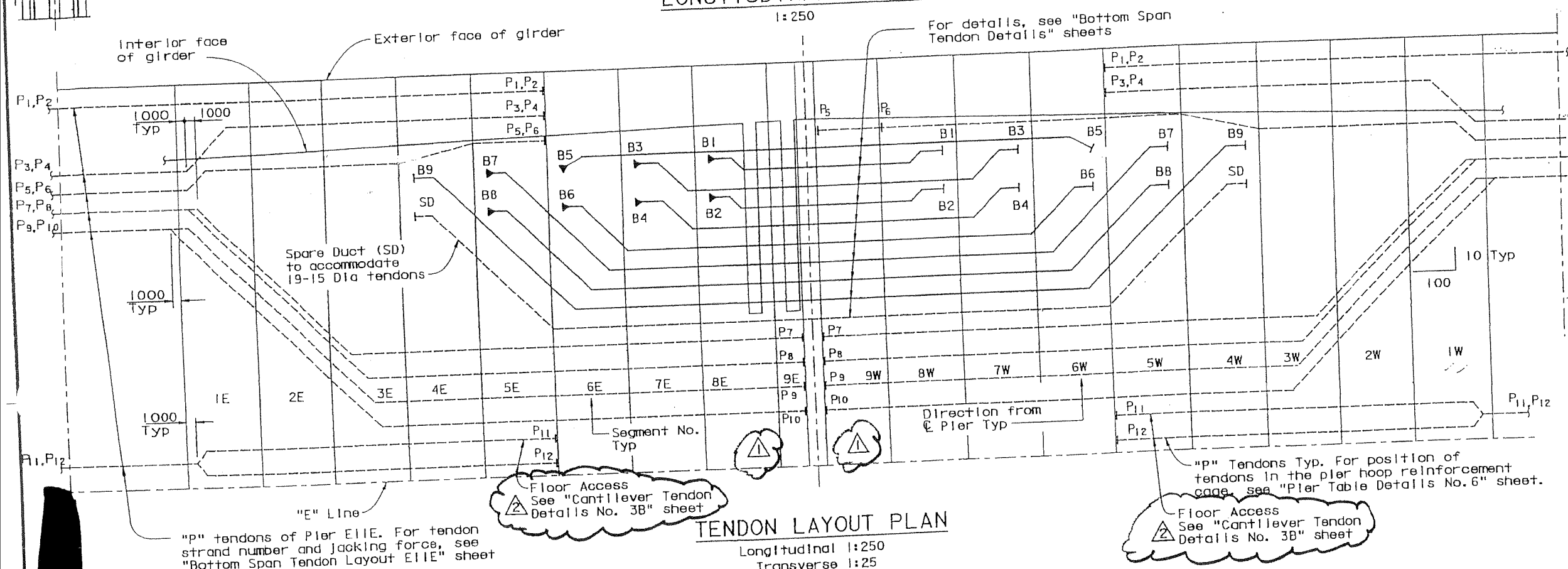

TENDON LAYOUT PLAN

Longitudinal 1:250
Transverse 1:25

BOTTOM SPAN TENDONS (*per box girder)

Tendon	No. of tendons* x No. of strands (15 Dia)	Jacking Force per Tendon kN
E12E B 1	2 x 19	3705
E12E B 2	2 x 19	3705
E12E B 3	2 x 19	3705
E12E B 4	2 x 19	3705
E12E B 5	2 x 19	3705
E12E B 6	2 x 19	3705
E12E B 7	2 x 19	3705
E12E B 8	2 x 19	3705
E12E B 9	2 x 19	3705
E12E P1-4	8 x 12 (1)	See note 6
E12E P5-10	12 x 12	1400
E12E P11-12	4 x 12 (1)	See note 6

NOTES:

1. Tendons are symmetrical with respect to "E" Line.
2. Anchorage symbols are as follows:
   - ├── Jacking end
   - ►── Dead end
3. The force diagram shows forces which only account for losses due to friction, anchor set and elastic shortening.
4. Key to tendon nomenclature:
   - E12E — Span No.
   - B — Tendon type
   - 1 — Tendon mark
5. For "P" Tendon details, see "Cantilever Tendon Details" sheets.
6. No stressing and anchorage required for tendons P1-4 & P11-12. Tendons shall be preassembled units and installed by pulling through duct and then grouted.

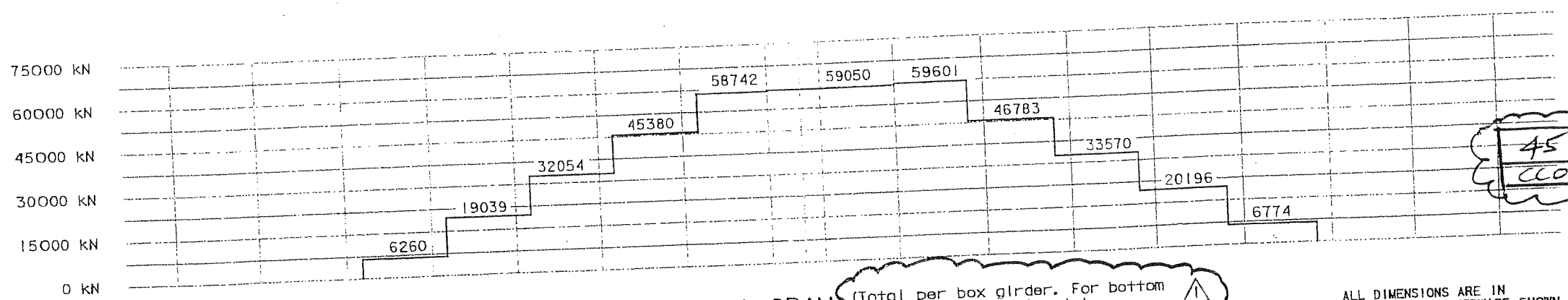

FORCE DIAGRAM

(Total per box girder. For bottom span tendons Type B only)

MARK	DATE	DESCRIPTIONS	BY	CH'D
45	08/01/03	ELIMINATE STRESSING AND ANCHORAGE REQUIREMENT FOR NOTED TENDONS	MR	JC
CCO		REVISIONS		

CONTRACT CHANGE ORDER NO. 45
SHEET 26 OF 34

100% PS&E

ALL DIMENSIONS ARE IN MILLIMETERS UNLESS OTHERWISE SHOWN

SAN FRANCISCO OAKLAND BAY BRIDGE
EAST SPAN SEISMIC SAFETY PROJECT

SKYWAY STRUCTURES

BOTTOM SPAN TENDON LAYOUT E12E

DESIGN OVERSIGHT 8/15/03
SIGN OFF DATE

MARK	DATE	DESCRIPTION	BY	CH'D
2	03/05/03	ADD FLOOR ACCESS DETAIL CCO45	JC	MS
1	10/07/02	SHOW AND EXTEND "P" TENDONS CCO7	JC	MS

DESIGN: J. Chan — CHECKED: H. Lund
DETAILS: E. Zhankov — CHECKED: H. Lund
QUANTITIES: R. Cormier — CHECKED: J. Chan

PREPARED FOR THE STATE OF CALIFORNIA DEPARTMENT OF TRANSPORTATION

Salid Abbas
PROJECT ENGINEER

BRIDGE NO. 34-0006L/R
KILOMETER POST 13.9/14.3, 0.0/1.6

CU 04
EA 01202

DISREGARD PRINTS BEARING EARLIER REVISION DATES

REVISION DATES (PRELIMINARY STAGE ONLY) 01/25/99 | 02/19/00 | 08/08/00 | 11/17/00 | 02/06/01 | 01/15/02 | 10/07/02 | 03/05/03 | 08/01/03

ORIGINAL SCALE IN MILLIMETERS FOR REDUCED PLANS

SHEET 215

STL-003082 11/24/03

DIST.	COUNTY	ROUTE	KILOMETER POST TOTAL PROJECT	SHEET NO.	TOTAL SHEETS
04	SF, Ala	80	13.3/14.3, 0.0/1.6	648R3	978

Caltrans Metric

REGISTERED ENGINEER - CIVIL

6-4-01

PLANS APPROVAL DATE

REGISTERED PROFESSIONAL ENGINEER Stu Fu John Chan No. C 39457 Exp. 12/31/05 CIVIL STATE OF CALIFORNIA

The State of California or its officers or agents shall not be responsible for the accuracy or completeness of electronic copies of this plan sheet.

T.Y. LIN / MOFFATT & NICHOL
825 BATTERY STREET
SAN FRANCISCO, CA 94111

Caltrans now has a web site! To get to the web site, go to: http://www.dot.ca.gov

Mission Control Room

Numerous Tendon profile and deviations changes, (see KFM letter 717). See approved composite drawings for revisions. See PT elongation submittals for revisions to stressing ends.

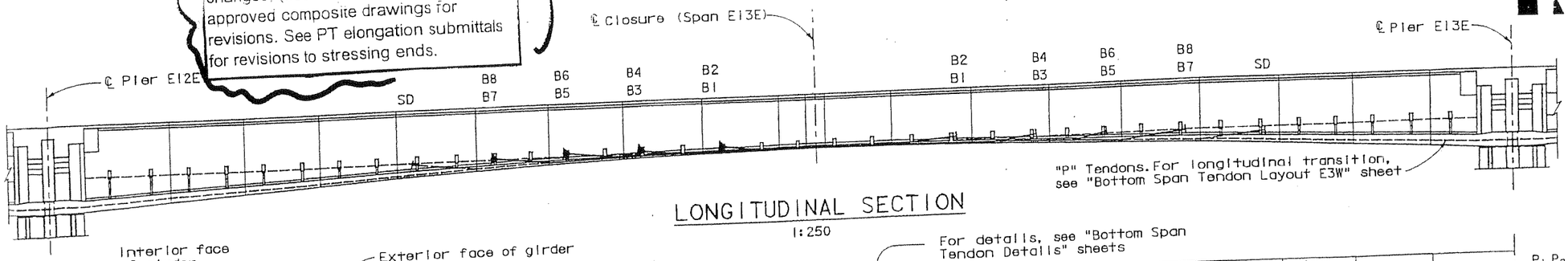

LONGITUDINAL SECTION

1:250

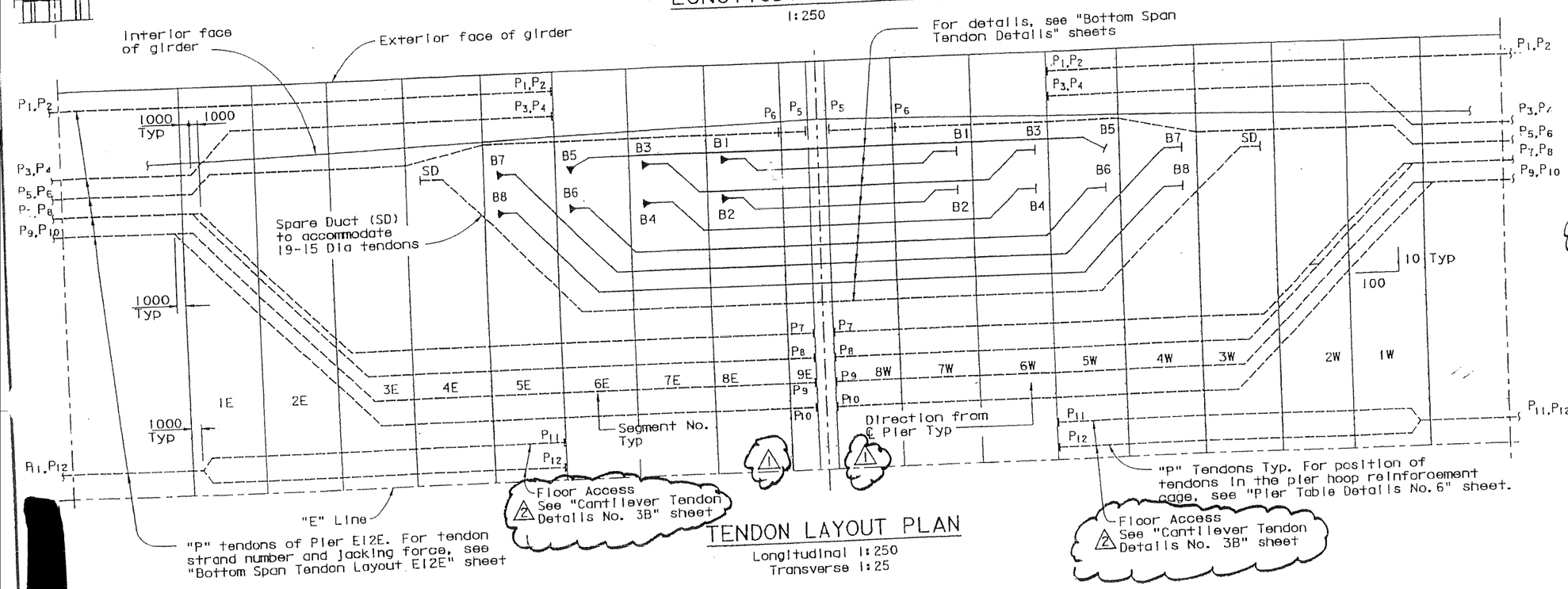

TENDON LAYOUT PLAN

Longitudinal 1:250
Transverse 1:25

BOTTOM SPAN TENDONS (*per box girder)

Tendon	No. of tendons* x No. of strands (15 Dia)	Jacking Force per Tendon kN
E13E B 1	2 x 19	3705
E13E B 2	2 x 19	3705
E13E B 3	2 x 19	3705
E13E B 4	2 x 19	3705
E13E B 5	2 x 19	3705
E13E B 6	2 x 19	3705
E13E B 7	2 x 19	3705
E13E B 8	2 x 19	3705
3 E13E P1-4	8 x 12	See note 6
1 E13E P5-10	12 x 12	1400
3 E13E P11-12	4 x 12	See note 6

NOTES:

1. Tendons are symmetrical with respect to "E" Line.
2. Anchorage symbols are as follows:
   - ├── Jacking end
   - ►── Dead end
3. The force diagram shows forces which only account for losses due to friction, anchor set and elastic shortening.
4. Key to tendon nomenclature:
   - E13E1 B 1
   - Span No.
   - Tendon type
   - Tendon mark
5. For "P" Tendon details, see "Cantilever Tendon Details" sheets.
6. 3 1 No stressing and anchorage required for tendons P1-4 & P11-12. Tendons shall be preassembled units and installed by pulling through duct and then grouted.

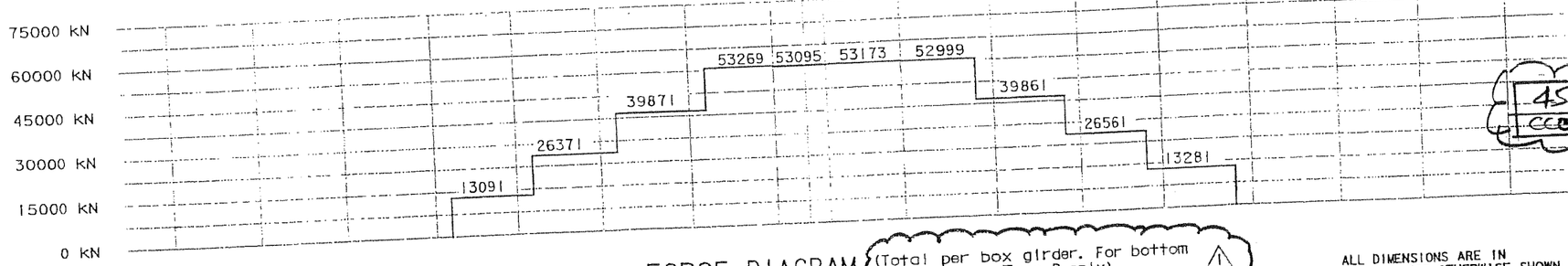

FORCE DIAGRAM

(Total per box girder. For bottom span tendons Type B only) 1

MARK	DATE	DESCRIPTIONS	BY	CH'D
45 CCO	3 08/01/03	ELIMINATE STRESSING AND ANCHORAGE REQUIREMENT FOR NOTED TENDONS	MR	JC

REVISIONS

CONTRACT CHANGE ORDER NO. 45
SHEET 27 OF 34

100 % PS&E

STL-003082 11/24/03

ALL DIMENSIONS ARE IN MILLIMETERS UNLESS OTHERWISE SHOWN

MARK	DATE	DESCRIPTION	BY	CH'D
2	03/05/03	ADD FLOOR ACCESS DETAIL CCO 4	JC	MS
1	10/07/02	SHOW AND EXTEND "P" TENDONS CCO 7	JC	MS

DESIGN OVERSIGHT 8/15/03
SIGN OFF DATE

DESIGN BY J. Chan CHECKED H. Lund
DETAILS BY E. Zharkov CHECKED H. Lund
QUANTITIES BY K. Cormier CHECKED J. Char

PREPARED FOR THE STATE OF CALIFORNIA DEPARTMENT OF TRANSPORTATION

Sajid Abbas
PROJECT ENGINEER

BRIDGE NO. 34-0006L/R
KILOMETER POST 13.9/14.3, 0.0/1.6
CU 04
EA 01202

SAN FRANCISCO OAKLAND BAY BRIDGE
EAST SPAN SEISMIC SAFETY PROJECT

SKYWAY STRUCTURES

BOTTOM SPAN TENDON LAYOUT E13E

SHEET 216 OF

DISREGARD PRINTS BEARING EARLIER REVISION DATES 07/15/99 02/15/00 06/07/00 11/17/00 02/20/01 07/15/02 10/07/02 01/05/03 08/01/03

ORIGINAL SCALE IN MILLIMETERS FOR REDUCED PLANS 0 10 20 30 40 50 60 70 80 90 100

DATE PLOTTED = 08/13/2003
TIME PLOTTED = 09:49:46 PM

Mission Control Redline

Numerous Tendon profile and deviations changes. (see KFM letter 717). See approved composite drawings for revisions. See PT elongation submittals for revisions to stressing ends.

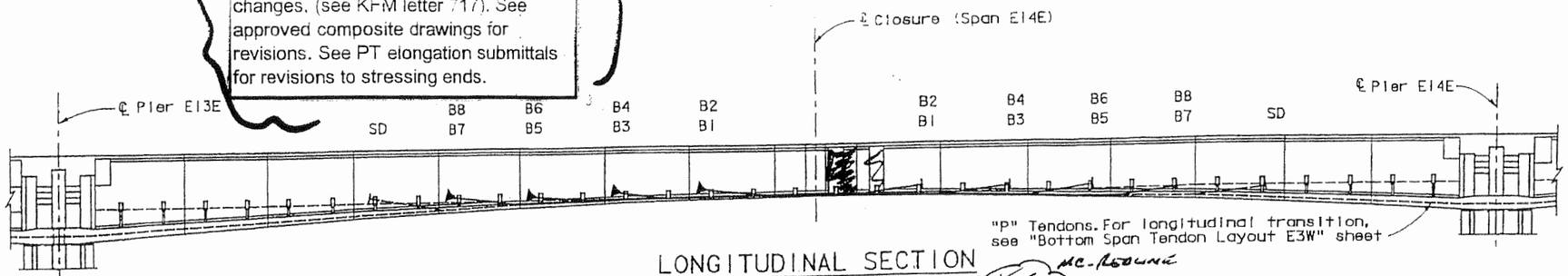

LONGITUDINAL SECTION

1:250

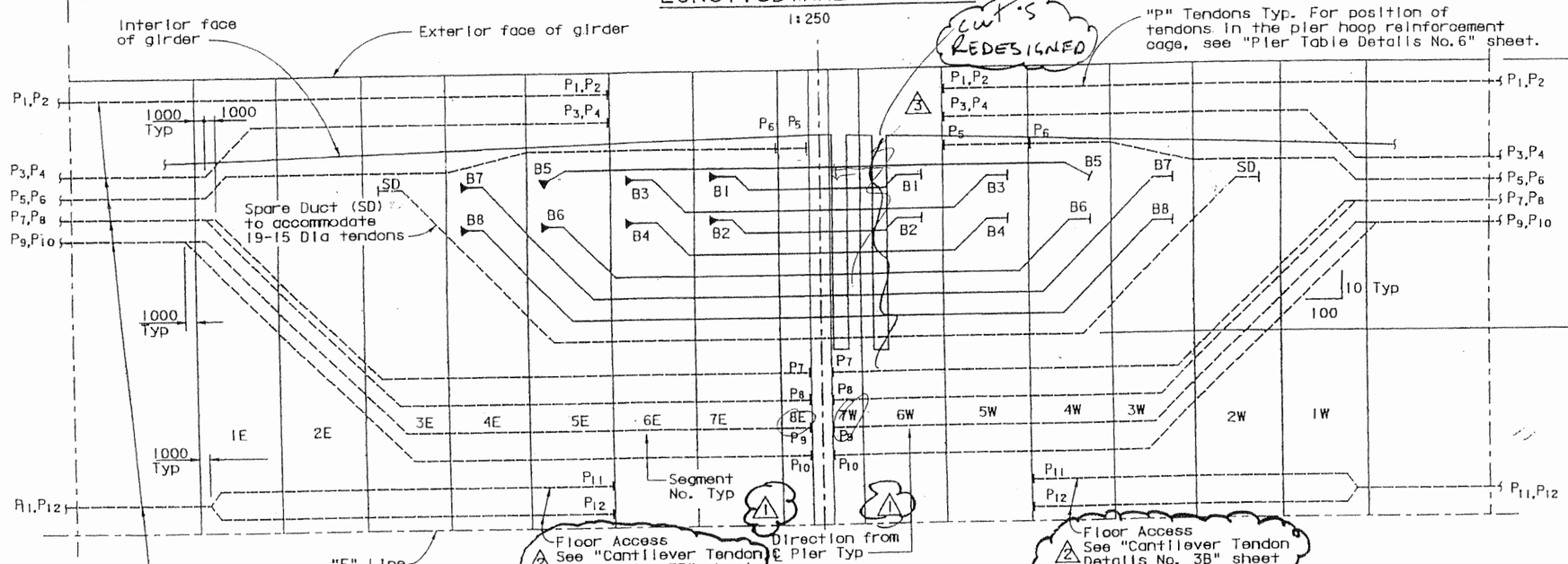

TENDON LAYOUT PLAN

Longitudinal 1:250
Transverse 1:25

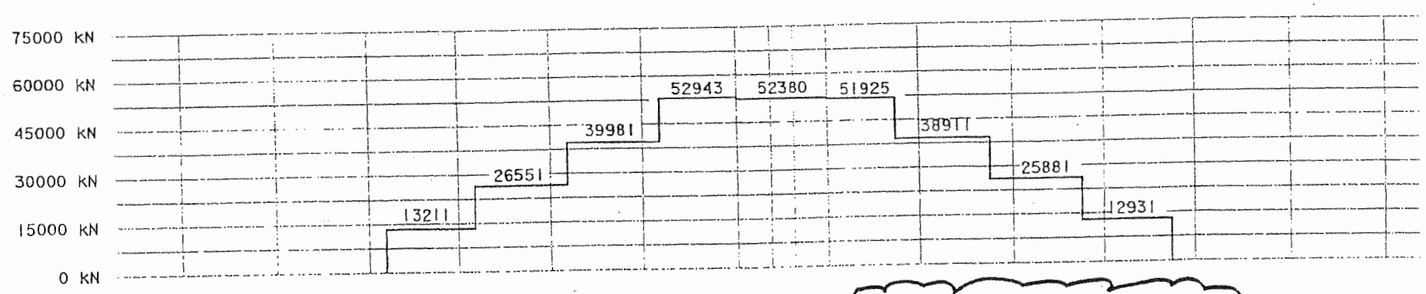

FORCE DIAGRAM

(Total per box girder. For bottom span tendons Type B only)

ALL DIMENSIONS ARE IN MILLIMETERS UNLESS OTHERWISE SHOWN

Caltrans Metric

DIST	COUNTY	ROUTE	KILOMETER POST TOTAL PROJECT	SHEET NO.	TOTAL SHEETS
04	SF, Ala	80	13.9/14.3, 0.0/1.6	649R3	978

REGISTERED ENGINEER - CIVIL

6-4-01
PLANS APPROVAL DATE

REGISTERED PROFESSIONAL ENGINEER Siu Fu John Chan No. C 39457 Exp. 12/31/05 CIVIL STATE OF CALIFORNIA

The State of California or its officers or agents shall not be responsible for the accuracy or completeness of electronic copies of this plan sheet.

T.Y. LIN / MOFFATT & NICHOL
825 BATTERY STREET
SAN FRANCISCO, CA 94111

Caltrans now has a web site! To get to the web site, go to: http://www.dot.ca.gov

BOTTOM SPAN TENDONS (*per box girder)

Tendon	No. of tendons* x No. of strands (15 Dia)	Jacking Force per Tendon kN
E14E B 1	2 x 19	3705
E14E B 2	2 x 19	3705
E14E B 3	2 x 19	3705
E14E B 4	2 x 19	3705
E14E B 5	2 x 19	3705
E14E B 6	2 x 19	3705
E14E B 7	2 x 19	3705
E14E B 8	2 x 19	3705
5 E14E P1-3	6 x 12 (1)	See note 6
4 1 E14E P4-6	6 x 12	1400
5 E14E P7	2 x 12 (1)	See note 6
E14E P8-10	6 x 12	1400
5 E14E P11-12	4 x 12 (1)	See note 6

NOTES:

1. Tendons are symmetrical with respect to "E" Line.
2. Anchorage symbols are as follows:
   - |—— Jacking end
   - ▶—— Dead end
3. The force diagram shows forces which only account for losses due to friction, anchor set and elastic shortening.
4. Key to tendon nomenclature:
   - E14E B 1
   - Span No. — E14E
   - Tendon type — B
   - Tendon mark — 1
5. For "P" tendon details, see "Cantilever Tendon Details" sheets.
6. 5 (1) No stressing and anchorage required for tendons P1-3, P7 & P11-12. Tendons shall be preassembled units and installed by pulling through duct and then grouted.

MARK	DATE	DESCRIPTIONS	BY	CH'D
45	5 08/01/03	ELIMINATE STRESSING AND ANCHORAGE REQUIREMENT FOR NOTED TENDONS	MR	JC
CCO		REVISIONS		

CONTRACT CHANGE ORDER NO. 45
SHEET 28 OF 34

100% PS&E

MARK	DATE	DESCRIPTION	BY	CH'D
4	03/05/03	REVISE P4 AND P7 TENDON JACKING FORCE 4	JC	MS
3	03/05/03	REVISE "P" TENDON ANCHOR LOCATIONS 4	JC	MS
2	03/05/03	ADD FLOOR ACCESS DETAIL CCO 4	JC	MS
1	10/07/02	SHOR AND EXTEND "P" TENDONS CCO 2	JC	MS

DESIGN OVERSIGHT 8/5/03

DESIGN	J. Chan	N. Lunk
DETAILS	E. Zhanko	N. Lunk
QUANTITIES	K. Cormier	J. Chan

PREPARED FOR THE STATE OF CALIFORNIA DEPARTMENT OF TRANSPORTATION

Salid Abbas
PROJECT ENGINEER

BRIDGE NO. 34-0006L/R
KILOMETER POST 13.9/14.3, 0.0/1.6

SAN FRANCISCO OAKLAND BAY BRIDGE
EAST SPAN SEISMIC SAFETY PROJECT

SKYWAY STRUCTURES

BOTTOM SPAN TENDON LAYOUT E14E

CU 04
EA 012021

ORIGINAL SCALE IN MILLIMETERS

DISREGARD PRINTS BEARING EARLIER REVISION DATES

REVISION DATES (PRELIMINARY STAGE ONLY)

SHEET 217 OF

STL-003082 11/24/03

Mission Control Redline

Numerous Tendon profile and deviations changes, (see KFM letter 717). See approved composite drawings for revisions. See PT elongation submittals for revisions to stressing ends.

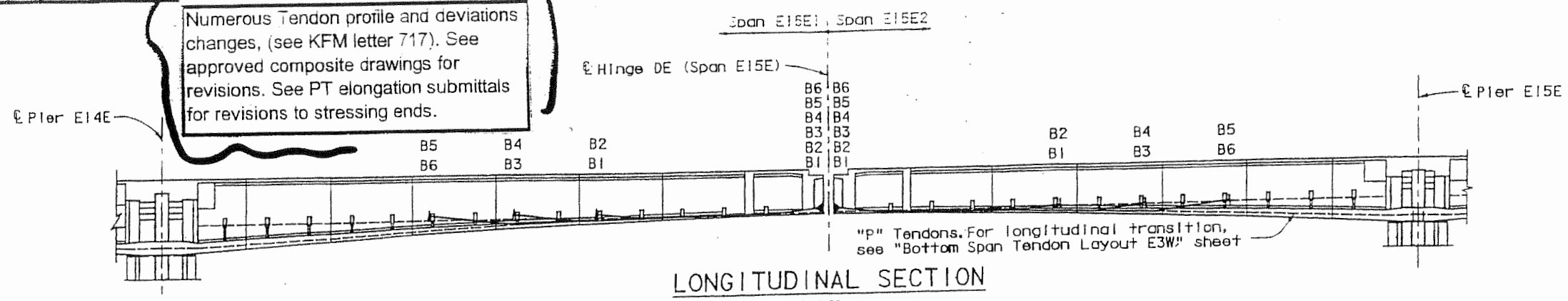

LONGITUDINAL SECTION

1:250

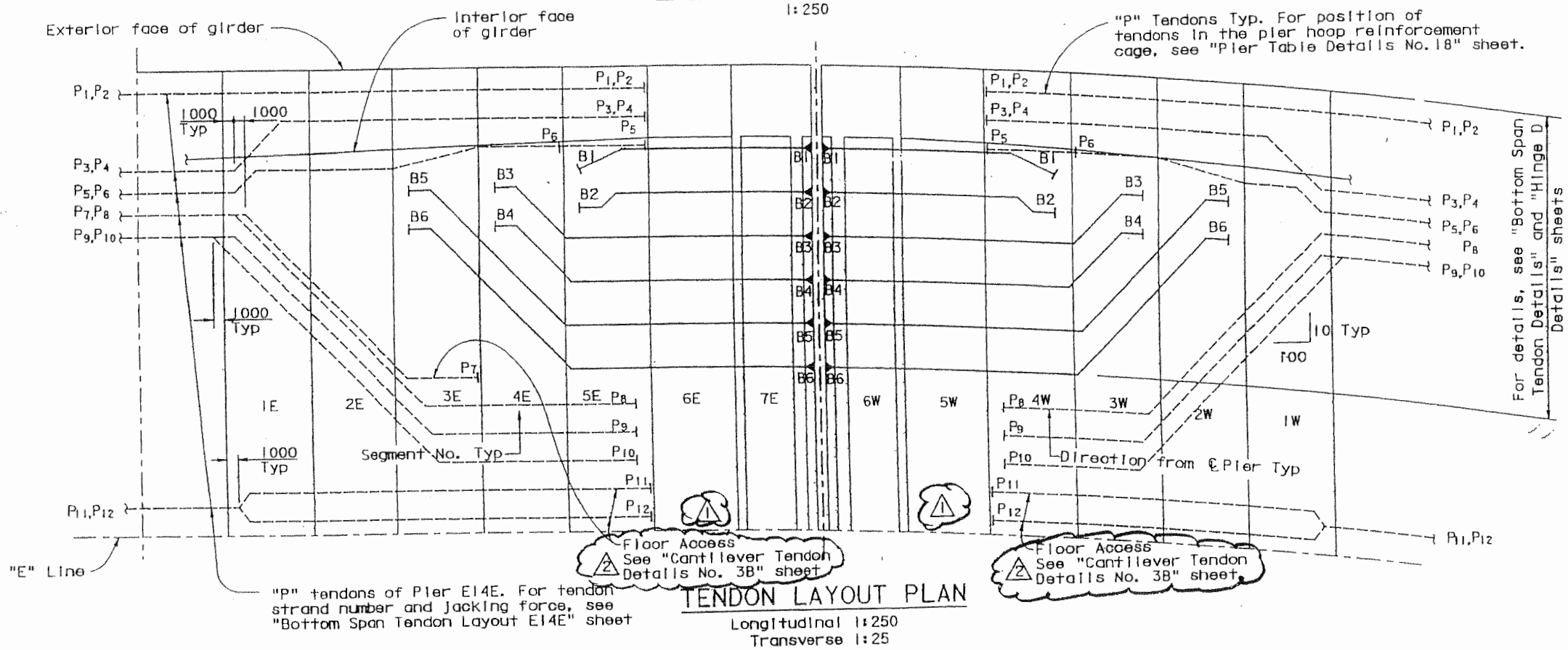

TENDON LAYOUT PLAN

Longitudinal 1:250
Transverse 1:25

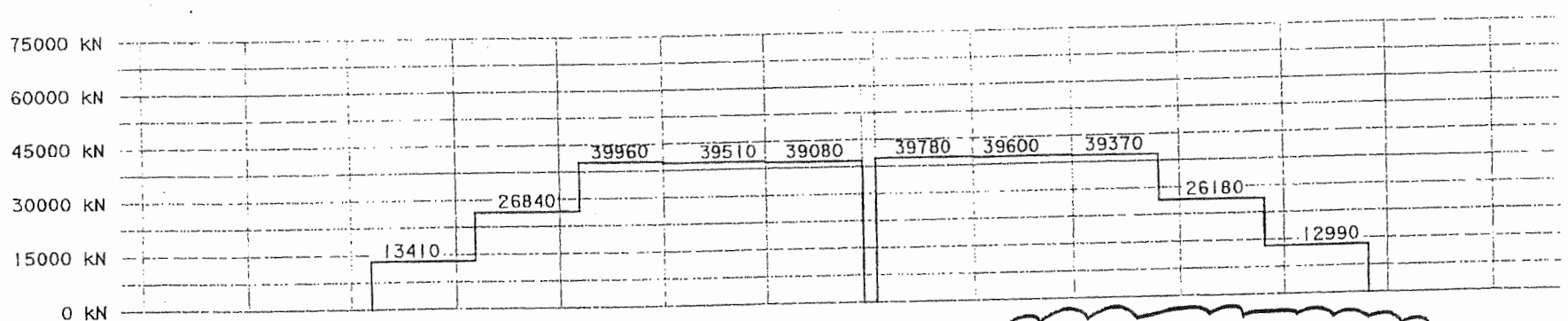

FORCE DIAGRAM

(Total per box girder. For bottom span tendons Type B only)

ALL DIMENSIONS ARE IN MILLIMETERS UNLESS OTHERWISE SHOWN

Caltrans Metric

DIST.	COUNTY	ROUTE	KILOMETER POST TOTAL PROJECT	SHEET NO.	TOTAL SHEETS
04	SF, Ala	30	3.3/14.3, 0.0/1.6	650R3	978

REGISTERED ENGINEER - CIVIL

6-4-01
PLANS APPROVAL DATE

The State of California or its officers or agents shall not be responsible for the accuracy or completeness of electronic copies of this plan sheet.

REGISTERED PROFESSIONAL ENGINEER Siu Fu John Chan No. C 39457 Exp. 12/31/05 CIVIL STATE OF CALIFORNIA

T.Y. LIN / MOFFATT & NICHOL
825 BATTERY STREET
SAN FRANCISCO, CA 94111

Caltrans now has a web site! To get to the web site, go to: http://www.dot.ca.gov

BOTTOM SPAN TENDONS (*per box girder)

Tendon	No. of tendons* x No. of strands (15 Dia)	Jacking Force per Tendon kN
E15E1 B 1	2 x 19	3705
E15E1 B 2	2 x 19	3705
E15E1 B 3	2 x 19	3705
E15E1 B 4	2 x 19	3705
E15E1 B 5	2 x 19	3705
E15E1 B 6	2 x 19	3705
E15E2 B 1	2 x 19	3705
E15E2 B 2	2 x 19	3705
E15E2 B 3	2 x 19	3705
E15E2 B 4	2 x 19	3705
E15E2 B 5	2 x 19	3705
E15E2 B 6	2 x 19	3705
3 E15E2 P1-4	8 x 12	1 See note 6
1 E15E2 P5,6	4 x 12	1400
E15E2 P8-10	6 x 12	1400
3 E15E2 P11-12	4 x 12	1 See note 6

NOTES:

1. Tendons are symmetrical with respect to "E" Line.
2. Anchorage symbols are as follows:
   - ├── Jacking end
   - ▶── Dead end
3. The force diagram shows forces which only account for losses due to friction, anchor set and elastic shortening.
4. Key to tendon nomenclature:
   - E15E1 B 1
   - Span No. — E15E1
   - Tendon type — B
   - Tendon mark — 1
5. For "P" tendon details, see "Cantilever Tendon Details" sheet.
6. 3,6 1 No stressing and anchorage required for tendons P1-4 & P11-12. Tendons shall be preassembled units and installed by pulling through duct and then grouted.

MARK	DATE	DESCRIPTIONS	BY	CH'D
45	3 08/01/03	ELIMINATE STRESSING AND ANCHORAGE REQUIREMENT FOR NOTED TENDONS	MR	JC
CCO		REVISIONS		

CONTRACT CHANGE ORDER NO. 45
SHEET 29 OF 34

100% PS&E

STL-003082 11/24/03

MARK	DATE	DESCRIPTION	BY	CH'D
2	03/05/03	ADD FLOOR ACCESS DETAIL CCO 45	JC	MS
1	10/07/02	SHOW AND EXTEND "P" TENDONS CCO -	JC	MS

DESIGN OVERNIGHT 8/15/03

DESIGN BY J. Chan CHECKED H. Lund
DETAILS BY E. Zharkov CHECKED K. Lunc
QUANTITIES BY K. Cormier CHECKED J. Chan

PREPARED FOR THE STATE OF CALIFORNIA DEPARTMENT OF TRANSPORTATION

Salid Abbas
PROJECT ENGINEER

BRIDGE NO. 34-0006L/R
KILOMETER POST 3.3/14.3, 0.0/1.6

SAN FRANCISCO OAKLAND BAY BRIDGE
EAST SPAN SEISMIC SAFETY PROJECT

SKYWAY STRUCTURES

BOTTOM SPAN TENDON LAYOUT E15E

CU 04
EA 01202

DISREGARD PRINTS BEARING EARLIER REVISION DATES

REVISION DATES (PRELIMINARY STAGE ONLY) 01/25/99 02/25/99 06/08/00 11/27/00 02/27/01 02/26/01 01/25/02 10/25/02 01/25/03 04/01/03

SHEET 218

ORIGINAL SCALE IN MILLIMETERS FOR REDUCED PLANS 0 10 20 30 40 50 60 70 80 90 100

DIST.	COUNTY	ROUTE	KILOMETER POST TOTAL PROJECT	SHEET NO.	TOTAL SHEETS
04	SF, ALA	80	13.9/14.3, 0.0/1.5	651R3	978

Caltrans Metric

REGISTERED ENGINEER - CIVIL

6-4-01
PLANS APPROVAL DATE

REGISTERED PROFESSIONAL ENGINEER Siu Fu John Chan No. C 39457 Exp. 12/31/05 CIVIL STATE OF CALIFORNIA

The State of California or its officers or agents shall not be responsible for the accuracy or completeness of electronic copies of this plan sheet.

T.Y. LIN / MOFFATT & NICHOL
825 BATTERY STREET
SAN FRANCISCO, CA 94111

Caltrans now has a web site! To get to the web site, go to: http://www.dot.ca.gov

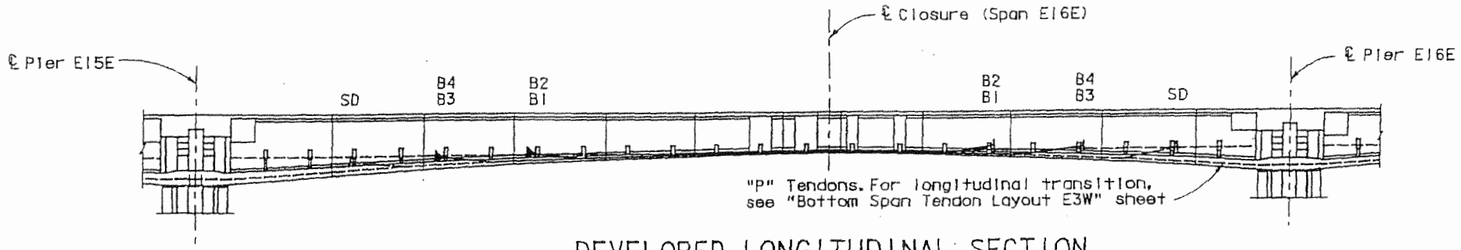

DEVELOPED LONGITUDINAL SECTION

1:250

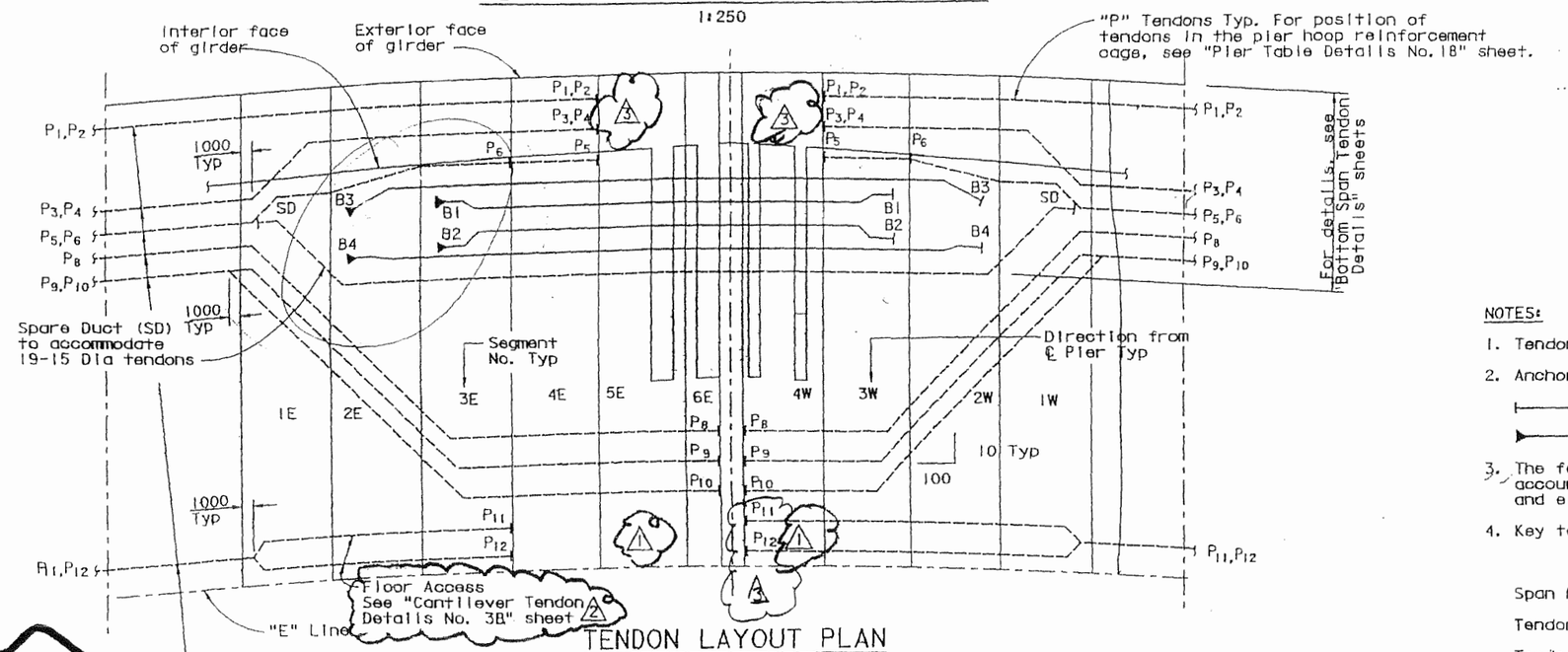

TENDON LAYOUT PLAN

Longitudinal 1:250
Transverse 1:25

BOTTOM SPAN TENDONS (*per box girder)

Tendon	No. of tendons* x No. of strands (15 Dia)	Jacking Force per Tendon kN
E16E B 1	2 x 19	3705
E16E B 2	2 x 19	3705
E16E B 3	2 x 19	3705
E16E B 4	2 x 19	3705
4 E16E P_{1-4}	8 x 12 (1)	See note 6
1 E16E $P_{5,6}$	4 x 12	1400
E16E P_{8-10}	6 x 12	1400
4 E16E P_{11-12}	4 x 12 (1)	See note 6

NOTES:

1. Tendons are symmetrical with respect to "E" Line.
2. Anchorage symbols are as follows:
   - ├── Jacking end
   - ►── Dead end
3. The force diagram shows forces which only account for losses due to friction, anchor set and elastic shortening.
4. Key to tendon nomenclature:
   - E16E — Span No.
   - B — Tendon type
   - Tendon mark
5. For "P" Tendon details, see "Cantilever Tendon Details" sheets.
6. 4 (1) No stressing and anchorage required for tendons P_{1-4} & P_{11-12}. Tendons shall be preassembled units and installed by pulling through duct and then grouted.

Mission Control Redline

Numerous Tendon profile and deviations changes, (see KFM letter 717). See approved composite drawings for revisions. See PT elongation submittals for revisions to stressing ends.

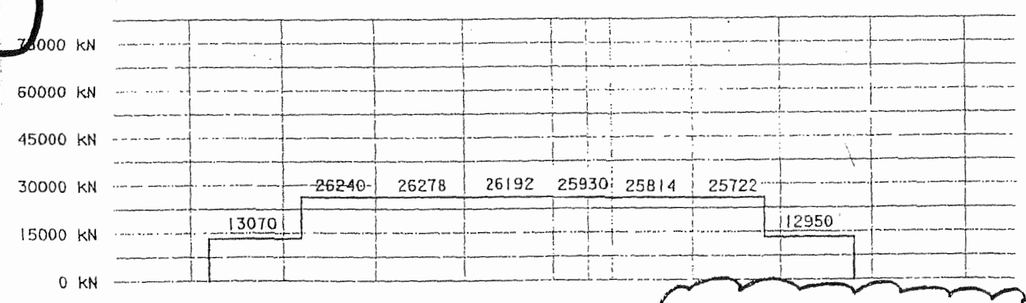

FORCE DIAGRAM

(Total per box girder. For bottom span tendons Type B only) 1

MARK	DATE	DESCRIPTION	BY	CH'D
45	08/01/03	ELIMINATE STRESSING AND ANCHORAGE REQUIREMENT FOR NOTED TENDONS	MR	JC
CCO	MARK DATE	DESCRIPTIONS	BY	CH'D

REVISIONS

CONTRACT CHANGE ORDER NO. 45
SHEET 30 OF 34

100% PS&E

ALL DIMENSIONS ARE IN MILLIMETERS UNLESS OTHERWISE SHOWN

MARK	DATE	DESCRIPTION	BY	CH'D
3	03/05/03	REVISE "P" TENDON ANCHOR LOCATIONS	JC	MS
2	03/05/03	ADD FLOOR ACCESS DETAIL	JC	MS
1	10/07/02	SHOW AND EXTEND "P" TENDONS	JC	MS

DESIGN OVERSIGHT 8/15/03

DESIGN: J. Chan; DETAILS: E. Zharkov; QUANTITIES: L. Cormier; CHECKED: H. Lund; CHECKED: H. Lund; CHECKED: S. Chan

PREPARED FOR THE STATE OF CALIFORNIA DEPARTMENT OF TRANSPORTATION

Sajid Abbas, PROJECT ENGINEER

BRIDGE NO. 34-0006L/R
KILOMETER POST 13.9/14.3, 0.0/1.5

SAN FRANCISCO OAKLAND BAY BRIDGE
EAST SPAN SEISMIC SAFETY PROJECT

SKYWAY STRUCTURES

BOTTOM SPAN TENDON LAYOUT E16E

ORIGINAL SCALE IN MILLIMETERS FOR REVISED PRINTS

CU 04
EA 01202

DISREGARD PRINTS BEARING EARLIER REVISION DATE:

REVISION DATES (PRELIMINARY STAGE ONLY): 02/15/00, 04/28/00, 11/21/00, 02/21/01, 02/26/01, 07/09/02, 10/07/02, 01/07/03, 03/05/03, 08/01/03

SHEET 219

STL-003082 11/24/03

04	SF, Ala	80	13.9/14.3, 0.0/1.6	652R2	978

REGISTERED ENGINEER - CIVIL

6-4-01
PLANS APPROVAL DATE

The State of California or its officers or agents shall not be responsible for the accuracy or completeness of electronic copies of this plan sheet.

REGISTERED PROFESSIONAL ENGINEER Siu Fu John Chan No. C 39457 Exp. 12/31/05 CIVIL STATE OF CALIFORNIA

T.Y. LIN / MOFFATT & NICHOL
825 BATTERY STREET
SAN FRANCISCO, CA 94111

Caltrans now has a web site! To get to the web site, go to: http://www.dot.ca.gov

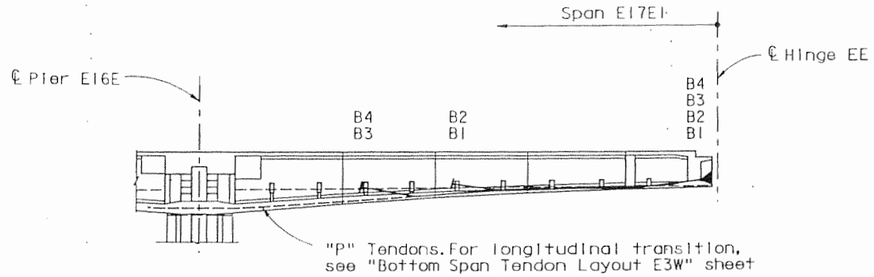

DEVELOPED LONGITUDINAL SECTION

1:250

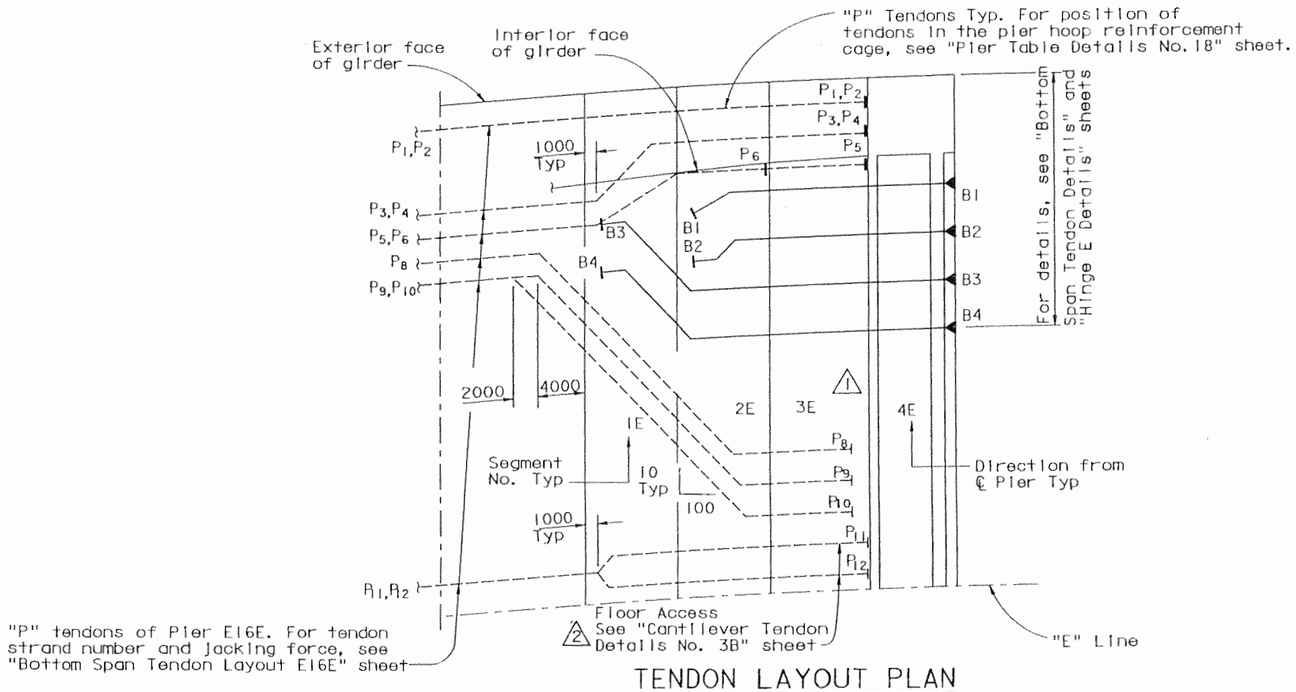

TENDON LAYOUT PLAN

Longitudinal 1:250
Transverse 1:25

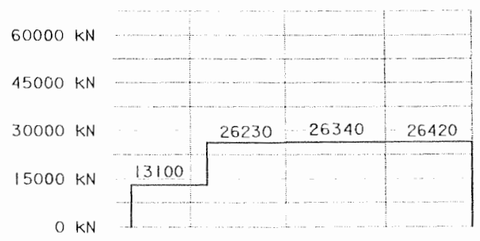

FORCE DIAGRAM

(Total per box girder. For bottom span tendons Type B only) △1

BOTTOM SPAN TENDONS (*per box girder)

Tendon	No. of tendons* x No. of strands (15 Dia)	Jacking Force per Tendon kN
E17E1 B 1	2 x 19	3705
E17E1 B 2	2 x 19	3705
E17E1 B 3	2 x 19	3705
E17E1 B 4	2 x 19	3705

NOTES:

1. Tendons are symmetrical with respect to "E" Line.
2. Anchorage symbols are as follows:
   - ├── Jacking end
   - ▶── Dead end
3. The force diagram shows forces which only account for losses due to friction, anchor set and elastic shortening.
4. Key to tendon nomenclature:
   - E17E — Span No.
   - B — Tendon type
   - 1 — Tendon mark
5. For details, see "Bottom Span Tendon Details" sheets.
6. For "P" tendon details, see "Cantilever Tendon Details" sheets.

MARK	DATE	DESCRIPTIONS	BY	CH'D
△2	03/05/03	ADD FLOOR ACCESS DETAIL	JC	MS
△1	10/07/02	SHOW AND EXTEND "P" TENDONS	JC	MS

REVISIONS

CONTRACT CHANGE ORDER NO. 45
SHEET 31 OF 34

100% PS&E

ALL DIMENSIONS ARE IN MILLIMETERS UNLESS OTHERWISE SHOWN

DESIGN OVERSIGHT 3/5/03
SIGN OFF DATE

Rev. Date: 5-18-98

	BY	CHECKED
DESIGN	J. Chan	H. Lund
DETAILS	D. Leung	H. Lund
QUANTITIES	K. Cormier	J. Chan

PREPARED FOR THE STATE OF CALIFORNIA DEPARTMENT OF TRANSPORTATION

Sajid Abbas
PROJECT ENGINEER

CU 04
EA 012021

BRIDGE NO. 34-0006L/R
KILOMETER POST 13.9/14.3, 0.0/1.6

DISREGARD PRINTS BEARING EARLIER REVISION DATES

REVISION DATES (PRELIMINARY STAGE ONLY): 01/13/95 07/13/96 08/08/96 11/13/96 02/14/01 02/26/01 01/15/02 10/07/02 03/05/03

SHEET 220 OF

ORIGINAL SCALE IN MILLIMETERS FOR REDUCED PLANS 0 10 20 30 40 50 60 70 80 90 100

SAN FRANCISCO OAKLAND BAY BRIDGE
EAST SPAN SEISMIC SAFETY PROJECT

SKYWAY STRUCTURES

BOTTOM SPAN TENDON LAYOUT E17E

USERNAME => H11 DATE PLOTTED => 03/05/2003 TIME PLOTTED => 11:08:15 AM

DIST.	COUNTY	ROUTE	KILOMETER POST TOTAL PROJECT	SHEET NO.	TOTAL SHEETS
04	SF, Ala	80	13.9/14.3, 0.0/1.6	688R3	978

REGISTERED ENGINEER - CIVIL

6-4-01

PLANS APPROVAL DATE

The State of California or its officers or agents shall not be responsible for the accuracy or completeness of electronic copies of this plan sheet.

REGISTERED PROFESSIONAL ENGINEER Charles Redfield No. C 27605 Exp. 12/31/05 CIVIL STATE OF CALIFORNIA

T.Y. LIN / MOFFATT & NICHOL
825 BATTERY STREET
SAN FRANCISCO, CA 94111

Caltrans now has a web site! To get to the web site, go to: http://www.dot.ca.gov

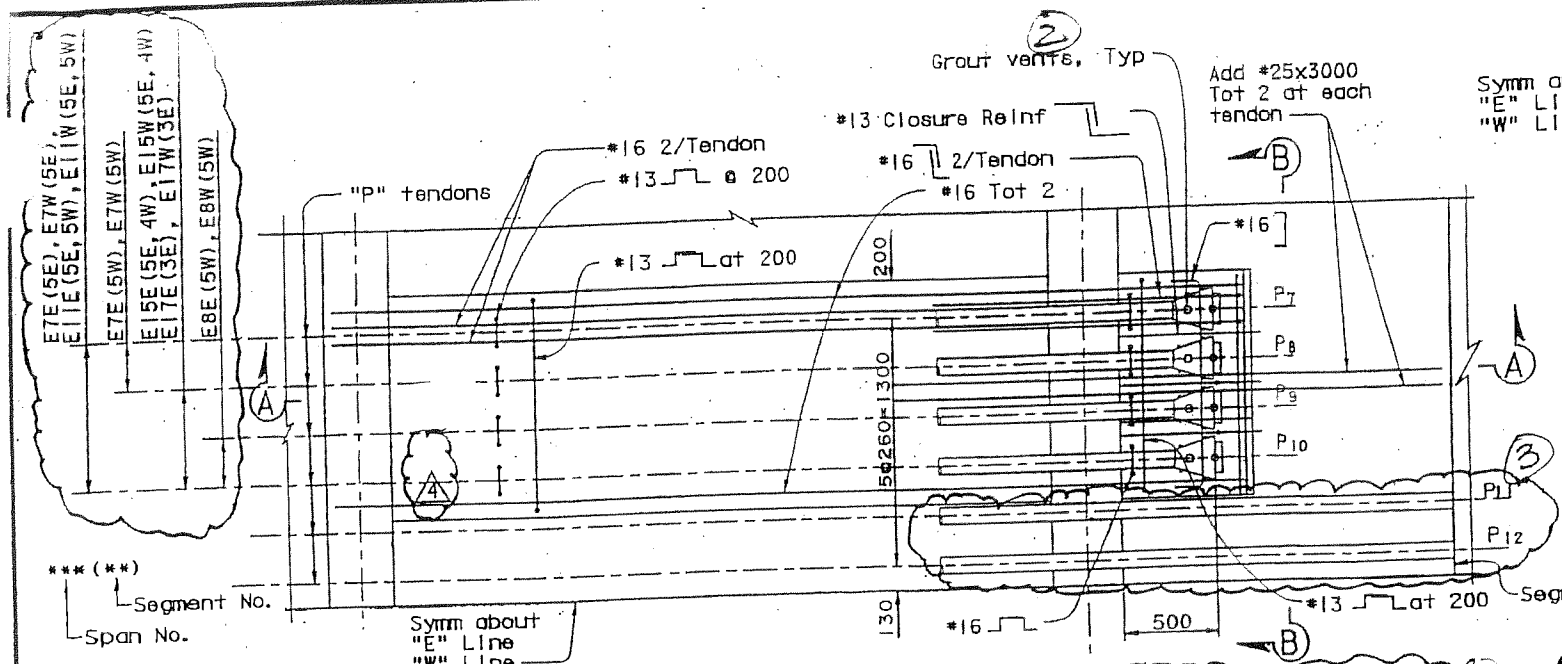

PARTIAL PLAN
1:20

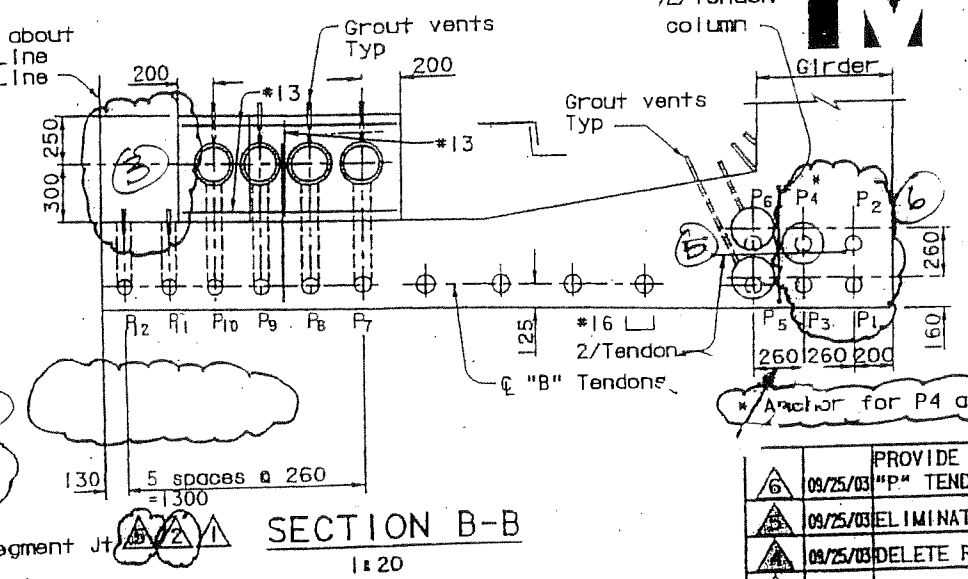

SECTION B-B
1:20

MARK	DATE	DESCRIPTIONS	BY	CH'D	CCO#
6	09/25/03	PROVIDE ALT SHAPE OPTION FOR "P" TENDON ANCHORAGE REINF	JC	MS	45
5	09/25/03	ELIMINATE ANCHOR FOR P1-P4, P11 & P12	JC	MS	45
4	09/25/03	DELETE REINF CALLOUT	JC	MS	—
3	03/05/03	REVISE BLOCKOUT DIMENSION	JC	CR	45
2	03/05/03	REVISE "P" TENDON BLISTER LOCATION	JC	CR	45
1	10/07/02	ADD ANCHORAGE DETAILS FOR "P" TENDONS	JC	CR	7

REVISIONS

CONTRACT CHANGE ORDER NO. 45
SHEET 32 OF 34

Mission Control Redline

Numerous PT duct spacing and concrete cover changes. (see KFM letter 717). See approved composite drawings for final details.

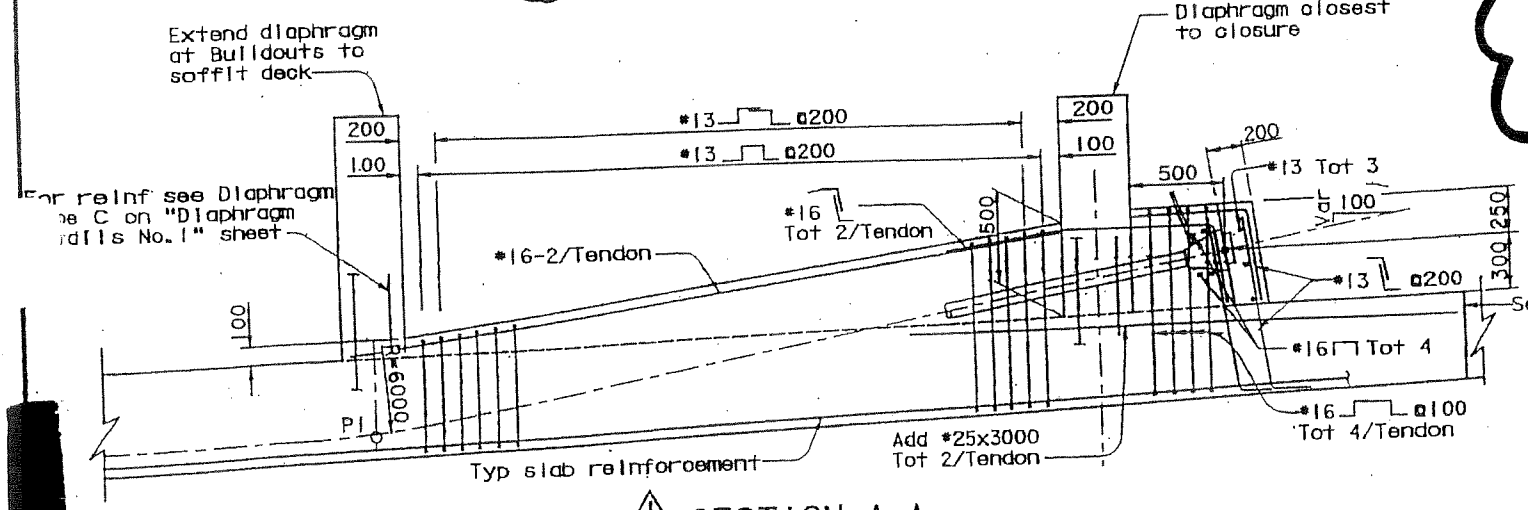

SECTION A-A
1:20

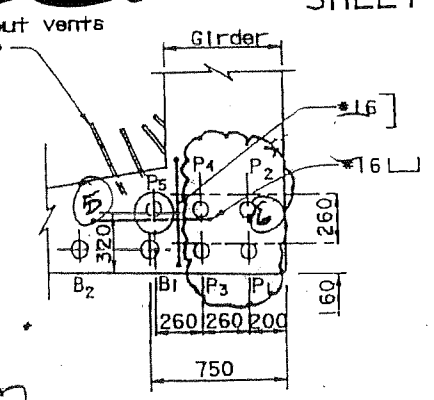

SECTION C-C
1:20

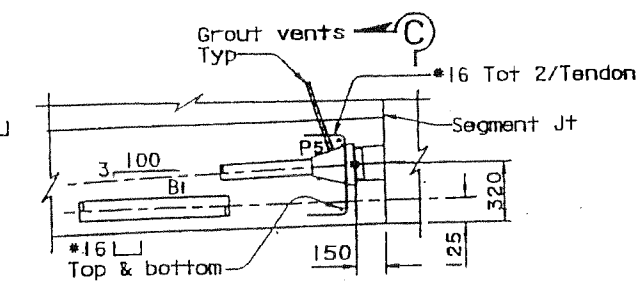

ELEVATION
1:20
(Spans E15E & E15W)

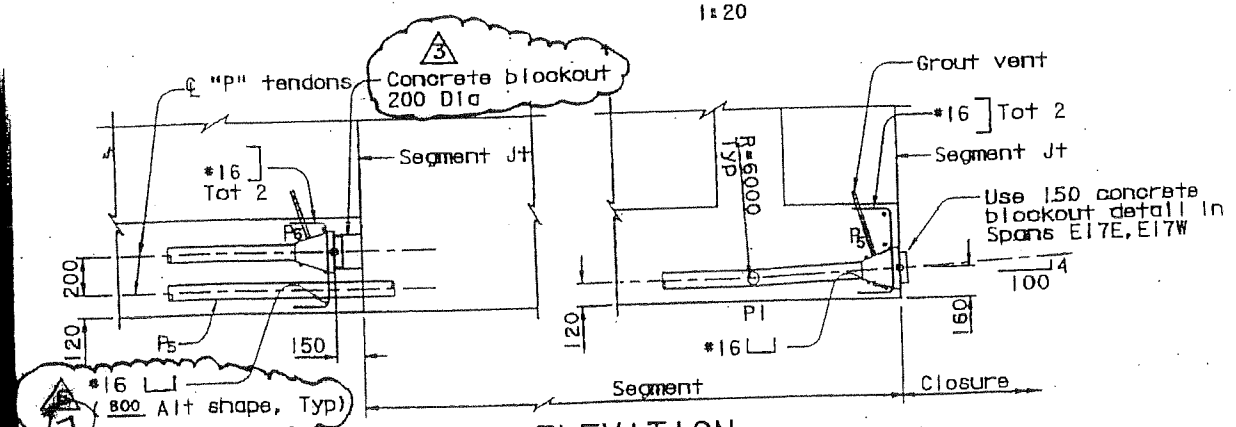

ELEVATION (Near Midspan)
1:20

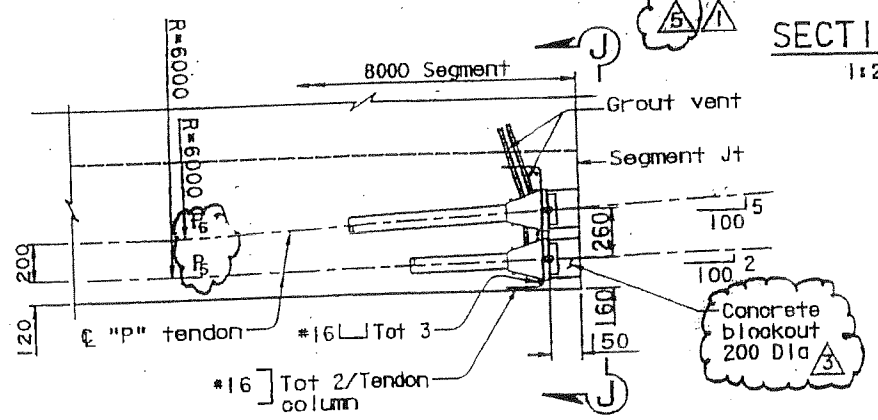

ELEVATION (Near 1/4 Span)
1:20

NOTES:

1. Not all reinforcements are shown for clarity.
2. For Girder reinforcement, see "Girder Reinforcement" sheets.
3. "P" tendons shall be stressed prior to the construction of mid-span closure.
4. For "T" dimension, see "Typical Section" sheets.
5. All "P" tendons are 12-15 Dia tendons anchorages without spirals.
6. For section J-J see "Cantilever Tendon Details No. 3B" sheet.

ALL DIMENSIONS ARE IN MILLIMETERS UNLESS OTHERWISE SHOWN

SAN FRANCISCO OAKLAND BAY BRIDGE
EAST SPAN SEISMIC SAFETY PROJECT

SKYWAY STRUCTURES

CANTILEVER TENDON DETAILS NO. 3

DESIGN OVERSIGHT 9/30/03

DESIGN	C. Redfield	CHECKED	K. Lund
DETAIL	F. Hung	CHECKED	C. Werts
QUANTITIES	L. Cormier	CHECKED	C. Chen

PREPARED FOR THE STATE OF CALIFORNIA DEPARTMENT OF TRANSPORTATION

District Director: Salid Abdo

BRIDGE NO. 34-0006L/R

KILOMETER POST 13.9/14.3, 0.0/1.6

DISREGARD PRINTS BEARING

REVISION DATES (PRELIMINARY STAGE ONLY)

SHEET OF

CU 04

100 % PS&E

STL-003082-11/24/03

Mission Control Redline

Numerous repair and concrete cover changes. (see KFM letter 717 and MCCRS-232). See approved composite drawings for final details.

DIST.	COUNTY	ROUTE	KILOMETER POST TOTAL PROJECT	SHEET NO.	TOTAL SHEETS
04	SF, Ala	80	13.9/14.3, 0.0/1.6	688AR2	978

REGISTERED ENGINEER - CIVIL

6-4-01

PLANS APPROVAL DATE

The State of California or its officers or agents shall not be responsible for the accuracy or completeness of electronic copies of this plan sheet.

REGISTERED PROFESSIONAL ENGINEER Charles Redfield No. C 27605 Exp. 12/31/05 CIVIL STATE OF CALIFORNIA

T.Y. LIN / MOFFATT & NICHOL
825 BATTERY STREET
SAN FRANCISCO, CA 94111

Caltrans now has a web site! To get to the web site, go to: http://www.dot.ca.gov

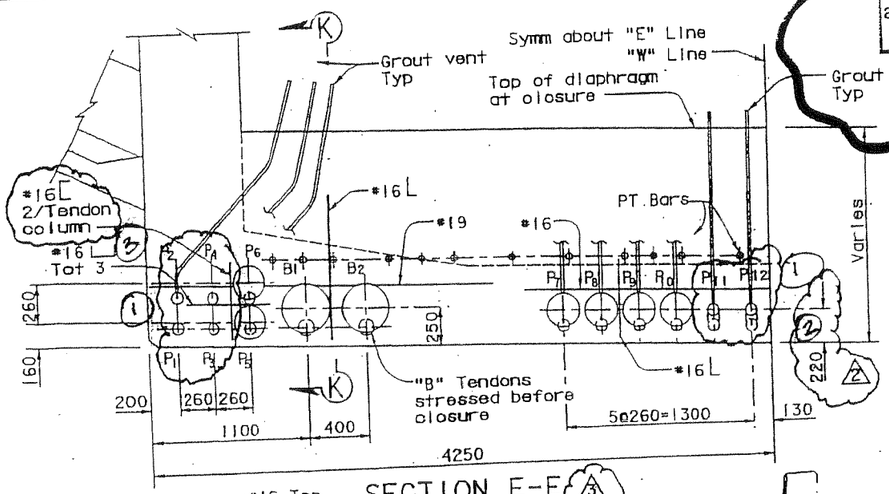

SECTION E-E
1:20

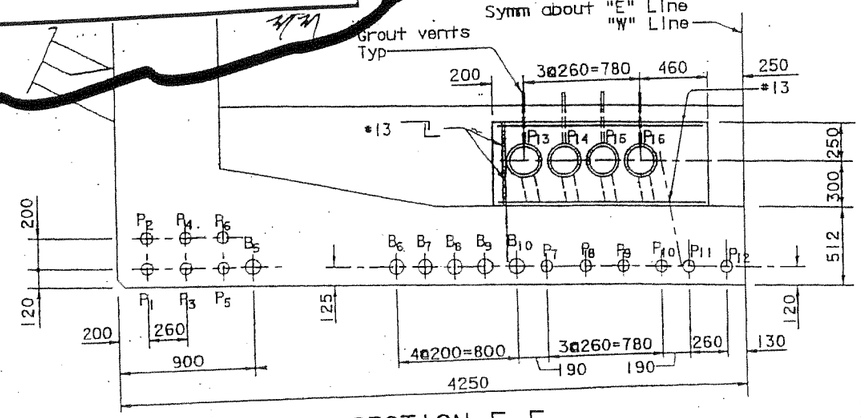

SECTION F-F
1:20

NOTES:

1. Work this sheet with "Cantilever Tendon Details No.3" sheet.
2. For Sections G-G, H-H and K-K, see "Cantilever Tendon Details No.3B" sheet.

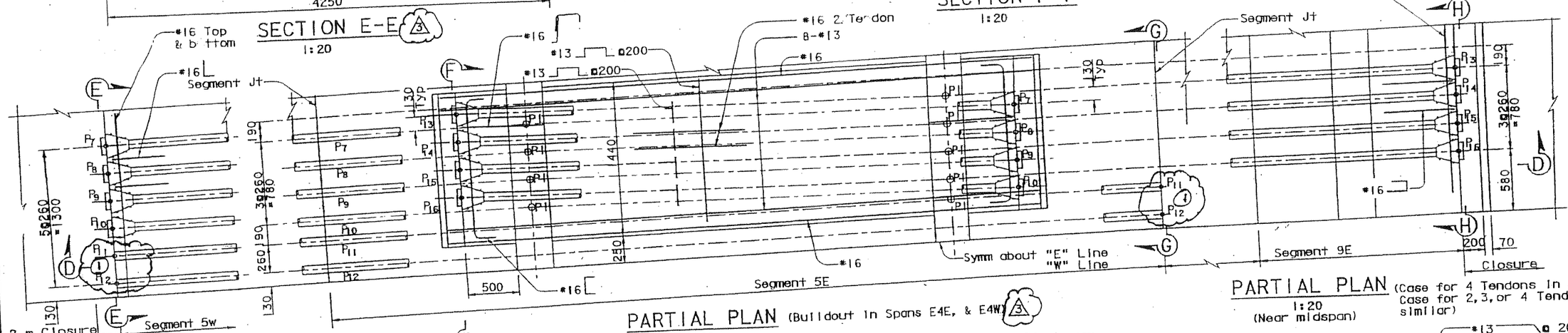

PARTIAL PLAN (For Segment 5W, Spans E3E, E3W)
1:20

PARTIAL PLAN (Buildout In Spans E4E, & E4W)
1:20

PARTIAL PLAN (Case for 4 Tendons In spans E4E, E4W shown Case for 2,3, or 4 Tendons In other spans similar)
1:20
(Near midspan)

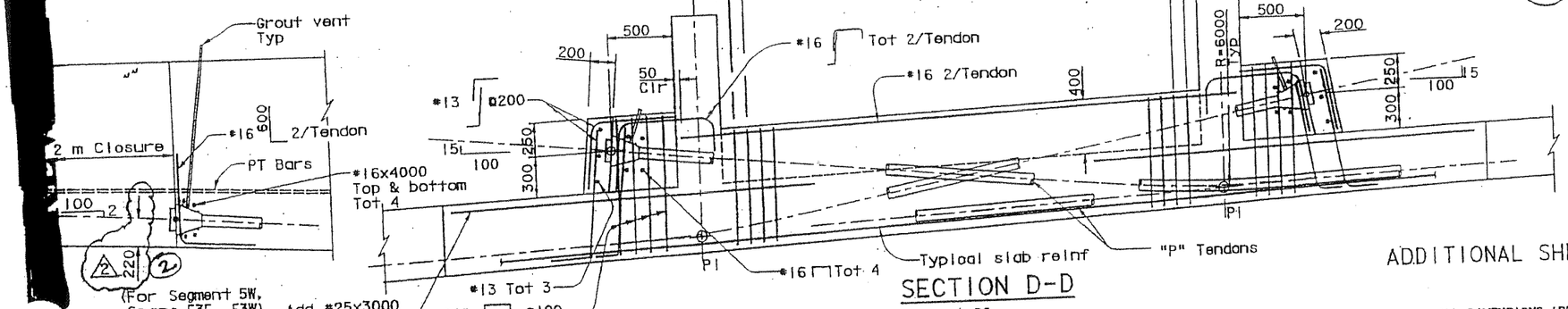

SECTION D-D
1:20
(Tendon slope in relationship to bottom soffit)

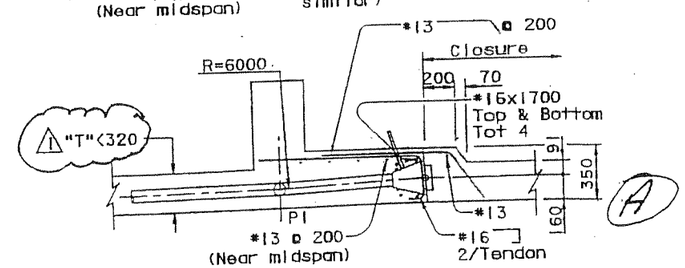

MARK	DATE	DESCRIPTIONS	BY	CH' D	CCO#
3	09/25/03	ELIMINATE ANCHOR FOR P1-P4, P11 & P12	JC	MS	45
2	09/25/03	REVISE 'P' TENDON ANCHOR LOCATION	JC	MS	45
1	03/05/03	DEFINE MINIMUM THICKNESS	JC	CR	45

REVISIONS

ADDITIONAL SHEET

CONTRACT CHANGE ORDER NO. 45
SHEET 33 OF 34

ALL DIMENSIONS ARE IN MILLIMETERS UNLESS OTHERWISE SHOWN

SAN FRANCISCO OAKLAND BAY BRIDGE
EAST SPAN SEISMIC SAFETY PROJECT

SKYWAY STRUCTURES

CANTILEVER TENDON DETAILS NO. 3A

DESIGN OVERSIGHT 9/30/03

DESIGN C. Redfield — CHECKED J. Chan
DETAILS K. Ide — CHECKED J. Chan
QUANTITIES C. Mibell — CHECKED J. Leventini

PREPARED FOR THE STATE OF CALIFORNIA DEPARTMENT OF TRANSPORTATION

Sajid Abbas
PROJECT ENGINEER

BRIDGE NO. 34-0006L/R
KILOMETER POST 13.9/14.3, 0.0/1.6

DISREGARD PRINTS BEARING

REVISION DATES PRELIMINARY STAGE ONLY

SHEET

CU 04

100 % PS&E

STL-0030882 11/24/03

DIST.	COUNTY	ROUTE	KILOMETER POST TOTAL PROJECT	SHEET NO.	TOTAL SHEETS
04	SF, Ala	80	13.9/14.3, 0.0/1.6	688BR2	978

REGISTERED ENGINEER - CIVIL

6-4-01
PLANS APPROVAL DATE

Charles Redfield No. C 27605 Exp. 12/31/05 CIVIL STATE OF CALIFORNIA REGISTERED PROFESSIONAL ENGINEER

The State of California or its officers or agents shall not be responsible for the accuracy or completeness of electronic copies of this plan sheet.

T.Y. LIN / MOFFATT & NICHOL
825 BATTERY STREET
SAN FRANCISCO, CA 94111

Caltrans now has a web site! To get to the web site, go to: http://www.dot.ca.gov

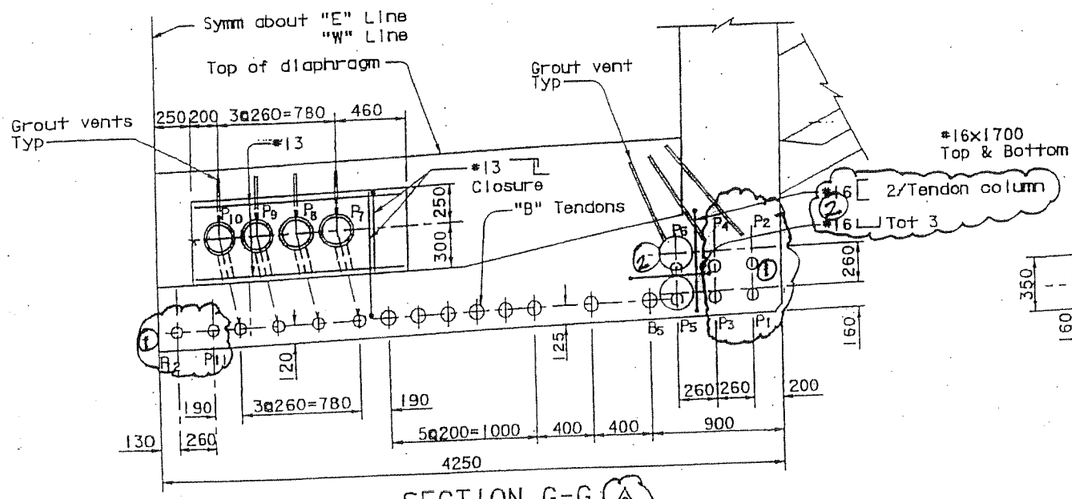

SECTION G-G (2)
1:20

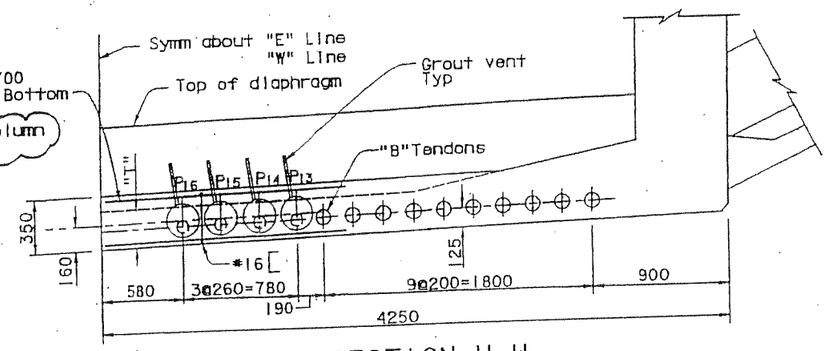

SECTION H-H
1:20

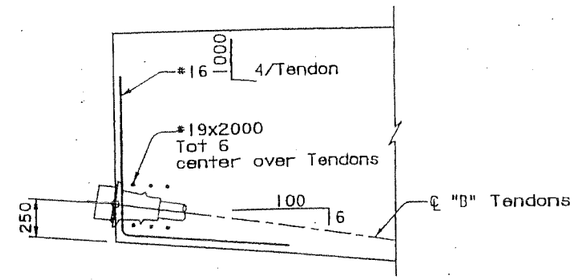

SECTION K-K
1:20

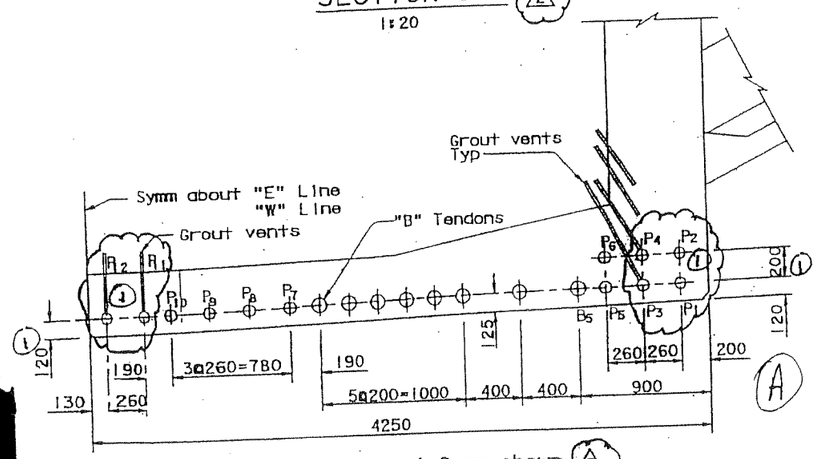

Typical Span shown (2)

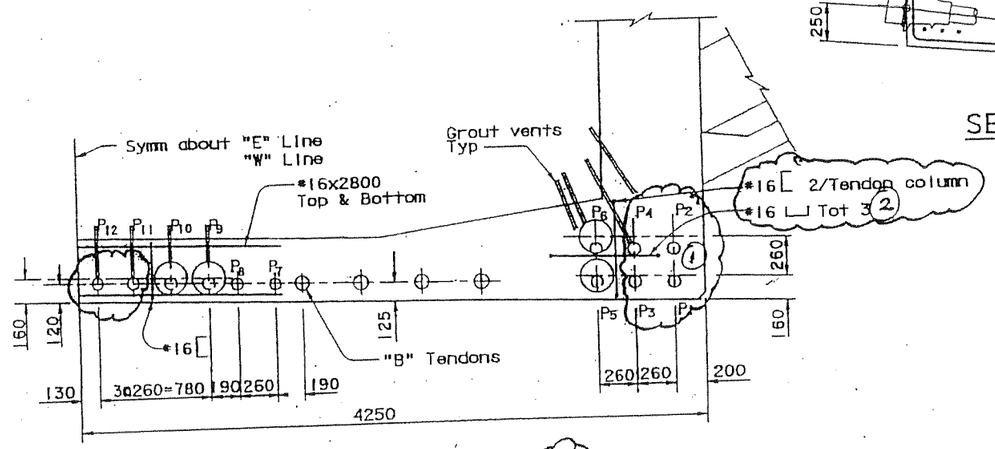

Spans E8E & E8W (2)

SECTION J-J
1:20

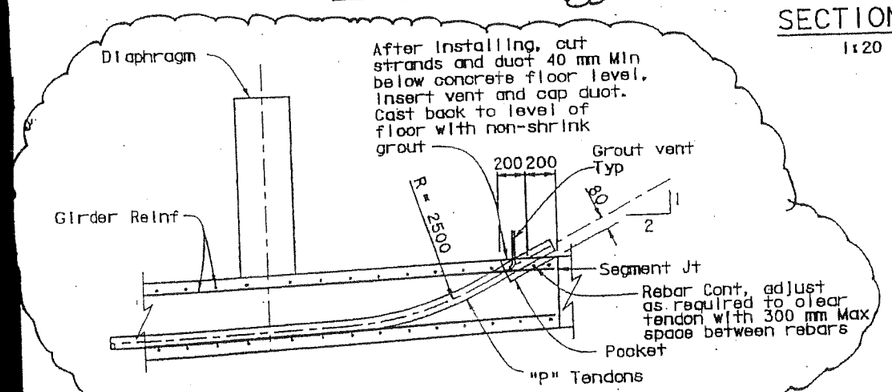

ELEVATION (Floor Access) (1)
1:20

Mission Control Redline

Numerous PT duct spacing and concrete cover changes. (see KFM letter 717). See approved composite drawings for final details.

MARK	DATE	DESCRIPTIONS	BY	CH'D	CCO#
2	09/25/03	ELIMINATE ANCHOR FOR P1-P4, P11 & P12	JC	MS	45
1	03/05/03	ADD ELEVATION AND NOTE FOR FLOOR ACCESS DETAIL	JC	CR	45

REVISIONS

CONTRACT CHANGE ORDER NO. 45
SHEET 34 OF 34

NOTES:

1. Work this sheet with "Cantilever Tendon Details No.3" sheet.
2. For "P" tendon floor access location, see "Bottom Span Tendon Layout" sheets.

ALL DIMENSIONS ARE IN MILLIMETERS UNLESS OTHERWISE SHOWN

SAN FRANCISCO OAKLAND BAY BRIDGE
EAST SPAN SEISMIC SAFETY PROJECT

SKYWAY STRUCTURES

CANTILEVER TENDON DETAILS NO. 3B

DESIGN	C. Redfield	CHECKED	J. Chan
DETAILS	K. Tan	CHECKED	J. Chan

PREPARED FOR THE STATE OF CALIFORNIA DEPARTMENT OF TRANSPORTATION

Salic Abbas
PROJECT ENGINEER

BRIDGE NO. 34-0006L/R
KILOMETER POST 13.9/14.3, 0.0/1.6

100 % PS&E

STL-003082 11/24/03

STATE OF CALIFORNIA - DEPARTMENT OF TRANSPORTATION

CONTRACT CHANGE ORDER MEMORANDUM

TO: PETER SIEGENTHALER / DOUG COE, Supervising Br. Eng.	FILE: E.A. 04 - 012024
FROM: DOUG COE, Supervising Br. Eng.	CO-RTE-PM 04-SF,Ala-80-13.9/14.3,0.0/1.6 FED. NO. ACIM-080-1(085)8N
CCO#: 45 SUPPLEMENT#: 0 Category Code: CHPT	CONTINGENCY BALANCE (incl. this change)
COST: INCREASE ☐ DECREASE ☑	HEADQUARTERS APPROVAL REQUIRED? ☐ YES ☑ NO
SUPPLEMENTAL FUNDS PROVIDED: $0.00	IS THIS REQUEST IN ACCORDANCE WITH ENVIRONMENTAL DOCUMENTS? ☑ YES ☐ NO
CCO DESCRIPTION: P Tendons Anchor	**PROJECT DESCRIPTION:** REPLACE SFOBB EAST SPAN

LOCATION: IN SAN FRANCISCO AND ALAMEDA COUNTIES IN SAN FRANCISCO AND OAKLAND FROM 1.3 KM EAST OF THE YERBA BUENA ISL

THIS CHANGE ORDER PROVIDES FOR:

extending tendons P11 and P12 to the mid-span closure of cantilevers E16E and W. At other locations, provide block-outs (floor access) in the bottom slab to install tendons P11 and P12 after erection of the cantilever. In addition, at all cantilevers, do not stress tendons P1 to P4 and P11 & P12 (except for Cantilevers E14E & W, where P4 is stressed and P7 is not stressed) and install without anchorage hardware.

The revised contract plan sheets reflecting this change are 623R2, 624R3, 625R3, 626R3, 627R3, 628R3, 629R3, 630R3, 631R3, 632R3, 633R3, 634R3, 635R3, 636R3, 637R2, 638R2, 639R3, 640R3, 641R3, 642R3, 643R3, 644R3, 645R3, 646R3, 647R3, 648R3, 649R3, 650R3, 651R3, 652R2, 688, 688A, and 688B of 978.

At Cantilevers E16E & W, the contract plans show tendons P11 and P12 anchoring on the face of segment 2W and in a blister on the bottom slab of segment 3E. When 3E is erected there is no access to the segment face on 2W (because 3W is on the short side and is erected before 3E). To permit installation, Tendons P11 and P12 need to be extended to the bulkhead face of segment 3W. The Contractor's preference is to extend tendons P11 and P12 to the face of segment 4W, the mid-span closure in span E16. At all other locations the layout on the contract plans is constructible, however, the Contractor prefers to provide block-outs in the bottom slab to enable installation of tendons P11 and P12 after erection. This is possible, now that P11 and P12 are unstressed tendons. In addition, tendons P1 to P4 typically (P7, instead of P4, in Cantilevers E14E & W) are also not stressed and installed without hardware. Tendons P1 to P4, P11 and P12 originally had a low stressing force, which after further review by the designer, was found to be not required.

The agreed compensation for this change order is included in the lump sum compensation portion of resolution CCO No. 200. For this work, the Contractor has agreed to provide the State a lump sum credit of $77,177.00 for not stressing the tendons mentioned above.

This credit has been found to be fair and reasonable based on an analysis performed by the Engineer. Records and calculations used to determine the adjustment of compensation are on file in the project records.

Design concurrence was obtained from Hasan El-Natur, Senior Bridge Engineer on August 12, 2005.

This is a minor change order and does not require prior approval from FHWA.

Concurrence from maintenance is not required because this change does not affect maintenance facilities or operations.

No adjustment of contract time is warranted, as this change does not affect the controlling operation.

CONCURRED BY:		
Construction Engineer:	Douglas Coe	Date 8-24-06
Bridge Engineer:	Douglas Coe	Date 8-24-06
FHWA Representative:	Nancy Bobb	Date
Project Engineer:		Date
Other (specify): Hasan El-Natur, Senior Bridge Engineer		Date 8/12/2005
		Date
		Date
District Prior Approval By:		Date
HQ (Issue Approve) By:		Date
Resident Engineer's Signature:		Date 8-24-06

ESTIMATE OF COST

	THIS REQUEST	TOTAL TO DATE
ITEMS	$0.00	$0.00
FORCE ACCOUNT	$0.00	$0.00
AGREED PRICE	$0.00	$0.00
ADJUSTMENT		
TOTAL		

FEDERAL PARTICIPATION

☑ PARTICIPATING ☐ PARTICIPATING IN PART ☐ NONE
☐ NON-PARTICIPATING (MAINTENANCE) ☐ NON-PARTICIPATING

FEDERAL SEGREGATION (if more than one Funding Source or P.I.P. type)
☑ CCO FUNDED PER CONTRACT ☐ CCO FUNDED AS FOLLOWS

FEDERAL FUNDING SOURCE	PERCENT

REGISTERED ENGINEER - CIVIL
Siu Fu John Chan
REGISTERED PROFESSIONAL ENGINEER No. C39457 Exp. 12/31/05 CIVIL STATE OF CALIFORNIA
6-4-01
PLANS APPROVAL DATE

The State of California or its officers or agents shall not be responsible for the accuracy or completeness of electronic copies of this plan sheet.

T.Y. LIN / MOFFATT & NICHOL
825 BATTERY STREET
SAN FRANCISCO, CA 94111

Caltrans now has a web site! To get to the web site, go to: http://www.dot.ca.gov

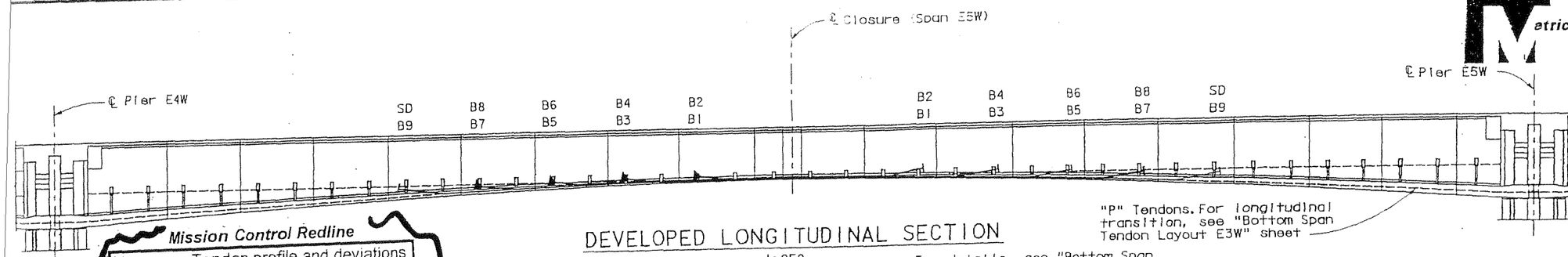

Mission Control Redline

Numerous Tendon profile and deviations changes, (see KFM letter 717). See approved composite drawings for revisions. See PT elongation submittals for revisions to stressing ends.

DEVELOPED LONGITUDINAL SECTION

1:250

For details, see "Bottom Span Tendon Details" sheets

"P" Tendons, Typ. For position of tendons in the pier hoop reinforcement cage, see "Pier Table Details No. 6" sheet.

"P" Tendons Typ

Exterior face of girder

Interior face of girder

1000 Typ

1000

Spare Duct (SD) to accommodate 19-15 Dia tendons

Segment No. Typ

Floor Access See "Cantilever Tendon Details No. 3B" sheet CCO 45

"W" Line

Direction from ℄ Pier Typ

10 Typ

100

"P" tendons of Pier E4W. For tendon strand number and jacking force, see "Bottom Span Tendon Layout E4W" sheet

TENDON LAYOUT PLAN

Longitudinal 1:250
Transverse 1:25

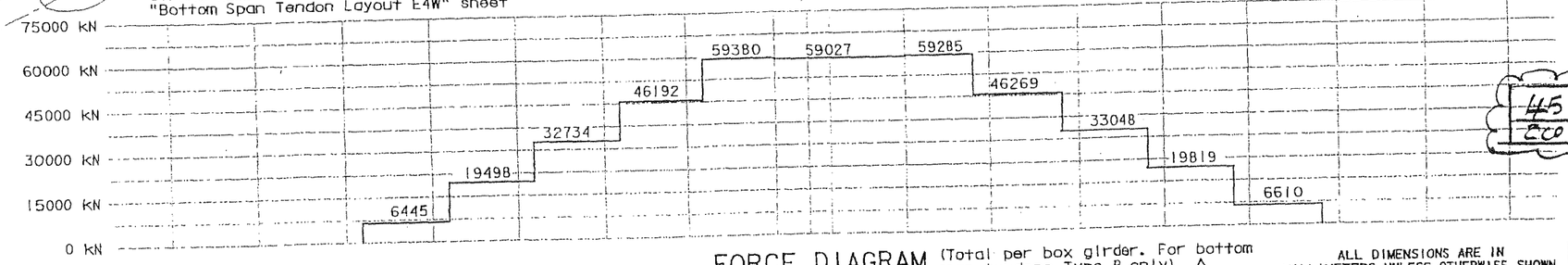

FORCE DIAGRAM

(Total per box girder. For bottom span tendons Type B only) △1

ALL DIMENSIONS ARE IN MILLIMETERS UNLESS OTHERWISE SHOWN

BOTTOM SPAN TENDONS (*per box girder)

Tendon	No. of tendons* x No. of strands (15 Dia)	Jacking Force per Tendon kN
E5W B 1	2 x 19	3705
E5W B 2	2 x 19	3705
E5W B 3	2 x 19	3705
E5W B 4	2 x 19	3705
E5W B 5	2 x 19	3705
E5W B 6	2 x 19	3705
E5W B 7	2 x 19	3705
E5W B 8	2 x 19	3705
E5W B 9	2 x 19	3705
△3 E5W P1-4	8 x 12	See note 6
△1 E5W P5-10	12 x 12	1400 (1)
△3 E5W P11-12	4 x 12	See note 6

NOTES:

1. Tendons are symmetrical with respect to "W" Line.
2. Anchorage symbols are as follows:
   - |—— Jacking end
   - ▶—— Dead end
3. The force diagram shows forces which only account for losses due to friction, anchor set and elastic shortening.
4. Key to tendon nomenclature:
   - E5W B 1
   - Span No. — E5W
   - Tendon type — B
   - Tendon mark — 1
5. For "P" Tendon details, see "Cantilever Tendon Details" sheets.
6. △3 (1) No stressing and anchorage required for tendons P1-4 & P11-12. Tendons shall be preassembled units and installed by pulling through duct and then grouted.

MARK	DATE	DESCRIPTIONS	BY	CH'D
45	△3 08/01/03	ELIMINATE STRESSING AND ANCHORAGE REQUIREMENT FOR NOTED TENDONS	MR	JC
ECO		REVISIONS		

CONTRACT CHANGE ORDER NO. 45
SHEET 4 OF 24

100% PS&E

STL-003082 11/24/03

MARK	DATE	DESCRIPTION	BY	CH'D
△2	03/05/03	ADD FLOOR ACCESS DETAIL CCO 45	JC	MS
△1	10/07/02	SHOW AND EXTEND "P" TENDONS	JC	MS

DESIGN OVERSIGHT: Habib Matta 8/15/03
SIGN OFF DATE

DESIGN: J. Chan — CHECKED: H. Lund
DETAILS: E. Zharkov — CHECKED: H. Lund
QUANTITIES: R. Cormier — CHECKED: J. Chan

ORIGINAL SCALE IN MILLIMETERS FOR REDUCED PLANS

PREPARED FOR THE STATE OF CALIFORNIA DEPARTMENT OF TRANSPORTATION

Sajid Abbas
PROJECT ENGINEER

BRIDGE NO. 34-0006L/R
KILOMETER POST 13.9/14.3, 0.0/1.5
CU 02
EA 01202

DISREGARD PRINTS BEARING EARLIER REVISION DATES

SAN FRANCISCO OAKLAND BAY BRIDGE
EAST SPAN SEISMIC SAFETY PROJECT

SKYWAY STRUCTURES

BOTTOM SPAN TENDON LAYOUT E5W

REVISION DATES (PRELIMINARY STAGE ONLY) | SHEET | OF

Rev. Date: 5-18-90

Mission Control Redline

Numerous Tendon profile and deviations changes, (see KFM letter 717). See approved composite drawings for revisions. See PT elongation submittals for revisions to stressing ends.

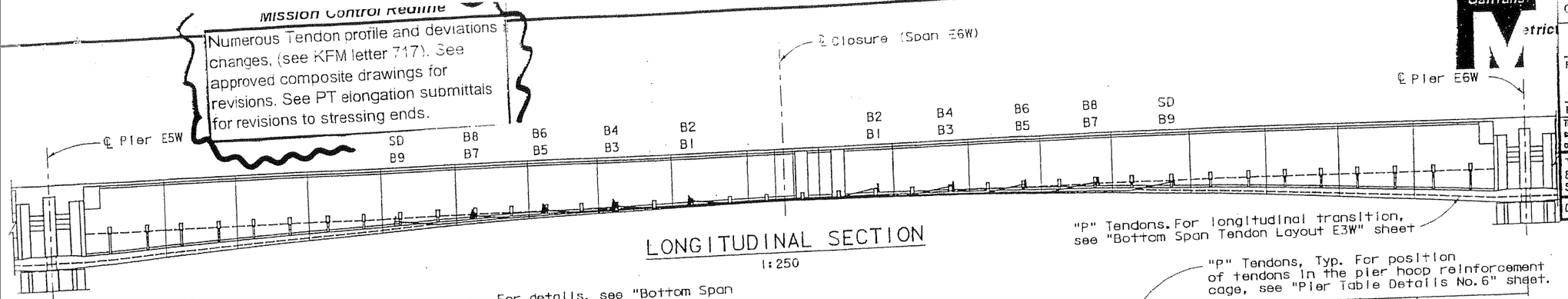

LONGITUDINAL SECTION
1:250

"P" Tendons. For longitudinal transition, see "Bottom Span Tendon Layout E3W" sheet

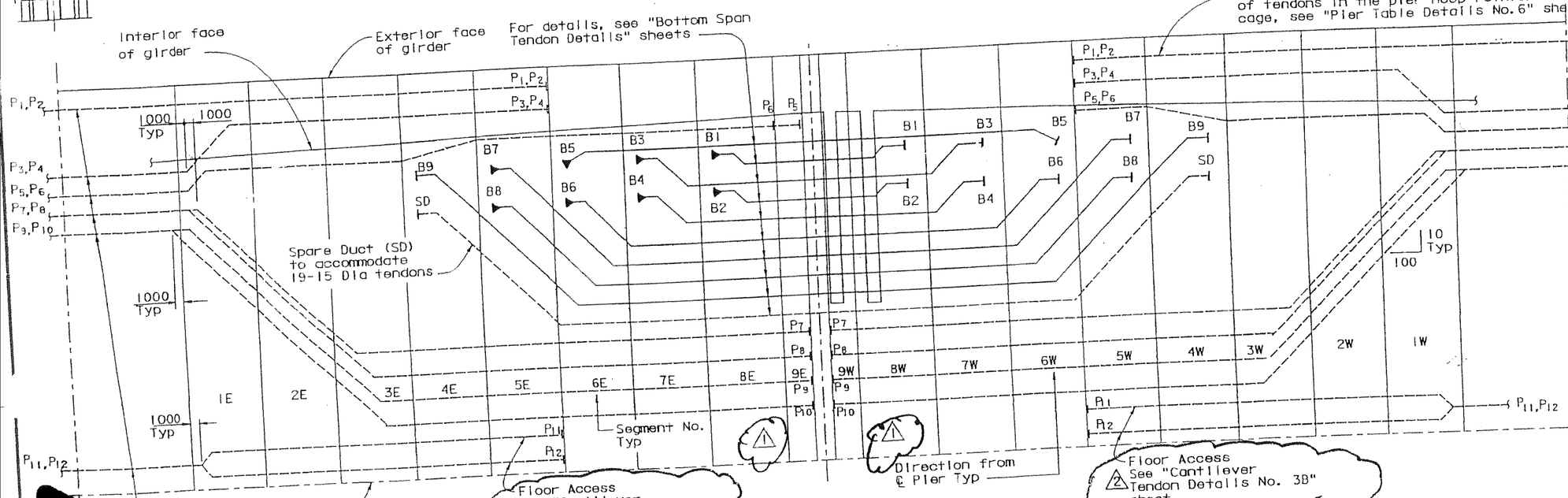

TENDON LAYOUT PLAN
Longitudinal 1:250
Transverse 1:25

BOTTOM SPAN TENDONS (*per box girder)

Tendon	No. of tendons* x No. of strands (15 Dia)	Jacking Force per Tendon kN
E6W B 1	2 x 19	3705
E6W B 2	2 x 19	3705
E6W B 3	2 x 19	3705
E6W B 4	2 x 19	3705
E6W B 5	2 x 19	3705
E6W B 6	2 x 19	3705
E6W B 7	2 x 19	3705
E6W B 8	2 x 19	3705
E6W B 9	2 x 19	3705
3 1 E6W P1-4	8 x 12	See note 6
1 1 E6W P5-10	12 x 12	1400 2
3 1 E6W P11-12	4 x 12	See note 6

NOTES:

1. Tendons are symmetrical with respect to "W" Line.
2. Anchorage symbols are as follows:
   - ├── Jacking end
   - ►── Dead end
3. The force diagram shows forces which only account for losses due to friction, anchor set and elastic shortening.
4. Key to tendon nomenclature: E6W B 1
   - Span No.
   - Tendon type
   - Tendon mark
5. For "P" Tendon details, see "Cantilever Tendon Details" sheets.
6. 3 2 No stressing and anchorage required for tendons P1-4 & P11-12. Tendons shall be preassembled units and installed by pulling through duct and then grouted. CCO 45

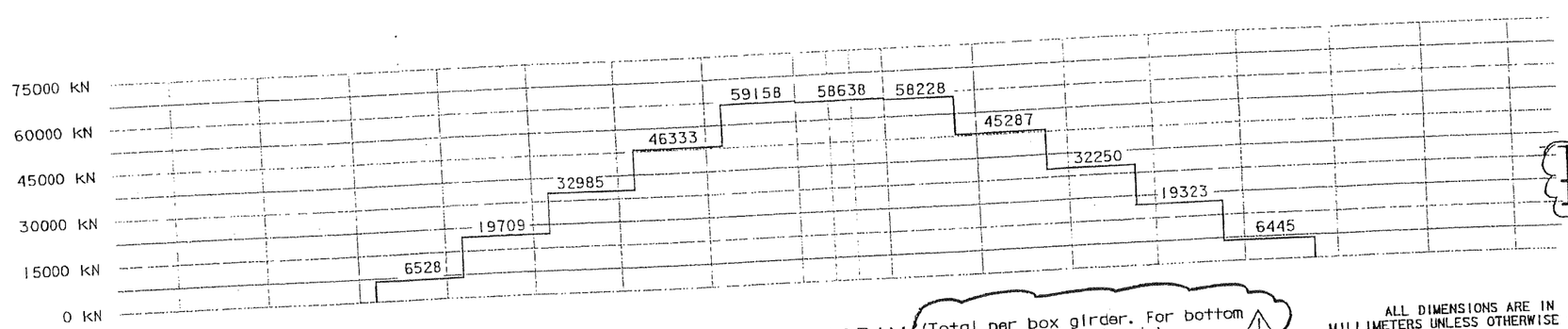

FORCE DIAGRAM (Total per box girder. For bottom span tendons Type B only) 1

CCO	MARK	DATE	DESCRIPTIONS	BY	CH'D
45	3	08/01/03	ELIMINATE STRESSING AND ANCHORAGE REQUIREMENT FOR NOTED TENDONS	MR	JC

REVISIONS

CONTRACT CHANGE ORDER NO. 45
SHEET 5 OF 34

ALL DIMENSIONS ARE IN MILLIMETERS UNLESS OTHERWISE SHOWN

PREPARED FOR THE STATE OF CALIFORNIA DEPARTMENT OF TRANSPORTATION

Sajid Abbas
PROJECT ENGINEER

BRIDGE NO. 34-0006L/R
KILOMETER POST 3.9/4.3, 0.0/1.8

SAN FRANCISCO OAKLAND BAY BRIDGE
EAST SPAN SEISMIC SAFETY PROJECT

SKYWAY STRUCTURES

BOTTOM SPAN TENDON LAYOUT E6W

SHEET 194

DESIGN: J. Chan; DETAILS: E. Zhorkov; QUANTITIES: K. Cormier; CHECKED: H. Lund, H. Lund, J. Chan

MARK	DATE	DESCRIPTION	BY	CH'D
2	03/05/03	ADD FLOOR ACCESS DETAIL CCO 45	JC	MS
1	10/07/02	SHOW AND EXTEND ROF TENDONS CCO 7	JC	MS

DESIGN OVERSIGHT 8/15/03
SIGN OFF DATE

REGISTERED ENGINEER - CIVIL
6-04-01
PLANS APPROVAL DATE

Siu Fu John Chan, No. C 39457, Exp. 12/31/05, CIVIL, REGISTERED PROFESSIONAL ENGINEER, STATE OF CALIFORNIA

The State of California or its officers or agents shall not be responsible for the accuracy or completeness of electronic copies of this plan sheet.

T.Y. LIN / MOFFATT & NICHOL
825 BATTERY STREET
SAN FRANCISCO, CA 94111

Caltrans now has a web site! To get to the web site, go to: http://www.dot.ca.gov

100 % PS&E

STL-003082 11/24/03

Numerous Tendon profile and deviations changes. (see KFM letter 717). See approved composite drawings for revisions. See PT elongation submittals for revisions to stressing ends.

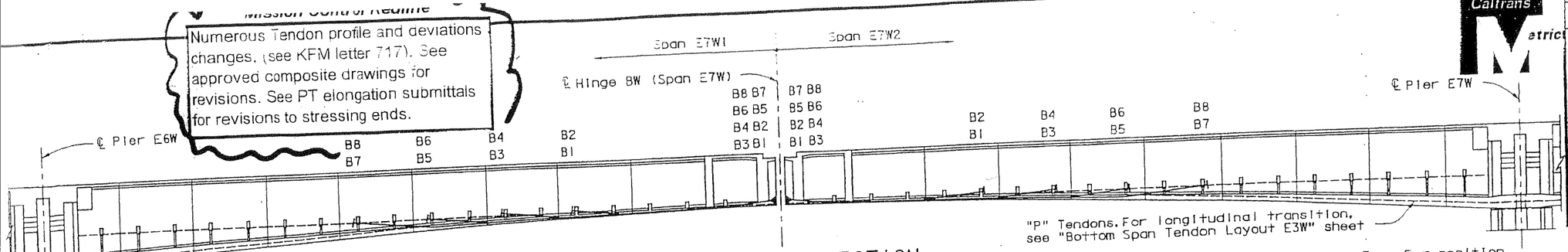

LONGITUDINAL SECTION

1:250

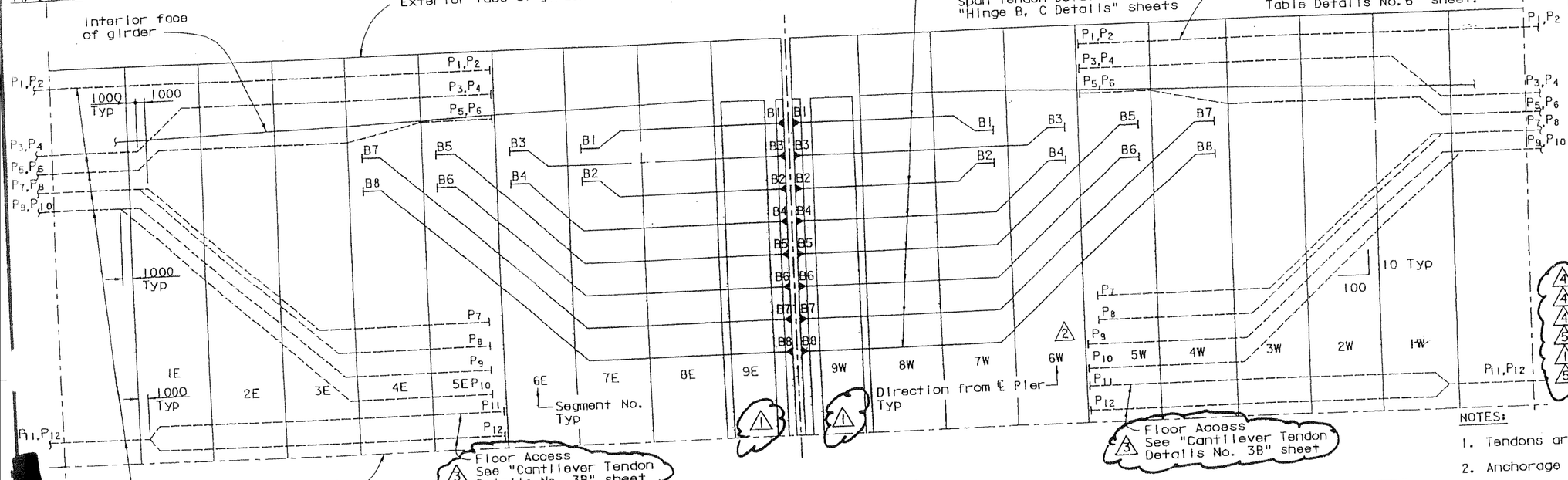

TENDON LAYOUT PLAN

Longitudinal 1:250
Transverse 1:25

MARK	DATE	DESCRIPTIONS	BY	CH'D
5	08/01/03	ELIMINATE STRESSING AND ANCHORAGE REQUIREMENT FOR NOTED TENDONS	MR	JC
4	08/01/03	RESTORE B6, B7 & B8 TO TABLE	MR	JC

REVISIONS

CCO 45
Non CCO

CONTRACT CHANGE ORDER NO. 45
SHEET 6 OF 34

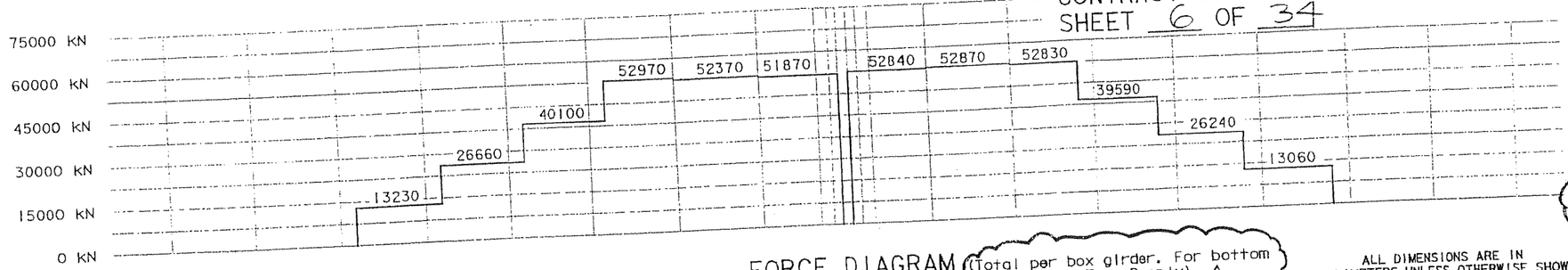

FORCE DIAGRAM

(Total per box girder. For bottom span tendons Type B only)

ALL DIMENSIONS ARE IN MILLIMETERS UNLESS OTHERWISE SHOWN

BOTTOM SPAN TENDONS (*per box girder)

Tendon	No. of tendons* x No. of strands (15 Dia)	Jacking Force per Tendon kN
E7W1 B 1	2 x 19	3705
E7W1 B 2	2 x 19	3705
E7W1 B 3	2 x 19	3705
E7W1 B 4	2 x 19	3705
E7W1 B 5	2 x 19	3705
E7W1 B 6	2 x 19	3705
E7W1 B 7	2 x 19	3705
E7W1 B 8	2 x 19	3705
E7W2 B 1	2 x 19	3705
E7W2 B 2	2 x 19	3705
E7W2 B 3	2 x 19	3705
E7W2 B 4	2 x 19	3705
E7W2 B 5	2 x 19	3705
4 E7W2 B 6 (1)	2 x 19	3705
4 E7W2 B 7 (1)	2 x 19	3705
4 E7W2 B 8 (1)	2 x 19	3705
5 E7W2 P1-4	8 x 12	See note 6
1 E7W2 P5-10	12 x 12	1400 (2)
5 E7W2 P11-12	4 x 12	See note 6

2

NOTES:

1. Tendons are symmetrical with respect to "W" Line.
2. Anchorage symbols are as follows:
   - ├── Jacking end
   - ►── Dead end
3. The force diagram shows forces which only account for losses due to friction, anchor set and elastic shortening.
4. Key to tendon nomenclature:
   - E7W1 — Span No.
   - B — Tendon type
   - 1 — Tendon mark
5. For "P" tendon details, see "Cantilever Tendon Details" sheets.
6. (5) (2) No stressing and anchorage required for tendons P1-4 & P11-12. Tendons shall be preassembled units and installed by pulling through duct and then grouted.

Caltrans District 4 — Metric

04	SF, Ala	30	13.9/14.3, 0.0/1.5	627R3	978

REGISTERED ENGINEER - CIVIL
Siu Fu John Chan
No. C 39457
Exp. 12/31/05
CIVIL
STATE OF CALIFORNIA

6-04-01
PLANS APPROVAL DATE

The State of California or its officers or agents shall not be responsible for the accuracy or completeness of electronic copies of this plan sheet.

T.Y. LIN / MOFFATT & NICHOL
825 BATTERY STREET
SAN FRANCISCO, CA 94111

Caltrans now has a web site! To get to the web site, go to: http://www.dot.ca.gov

100 % PS&E

STL-003082 11/24/03

SAN FRANCISCO OAKLAND BAY BRIDGE
EAST SPAN SEISMIC SAFETY PROJECT

SKYWAY STRUCTURES

BOTTOM SPAN TENDON LAYOUT E7W

MARK	DATE	DESCRIPTION	BY	CH'D
3	03/05/03	ADD FLOOR ACCESS DETAIL CCO 45	JC	MS
2	03/05/03	REVISE P9 AND P10 ANCHOR LOCATIONS AND STRAND NO.	JC	MS
1	10/07/02	SHOW AND EXTEND "D" TENDON.	JC	MS

DESIGN OVERSIGHT 8/15/03
SIGN OFF DATE

DESIGN — BY J. Chan — CHECKED H. Lund
DETAILS — BY S. Lee — CHECKED H. Lund
QUANTITIES — BY K. Cormier — CHECKED J. Chan

PREPARED FOR THE STATE OF CALIFORNIA DEPARTMENT OF TRANSPORTATION

Sajid Abbas
PROJECT ENGINEER

BRIDGE NO. 34-0006L/R
KILOMETER POST 13.9/14.3, 0.0/1.5

CU 02
EA 01202

ORIGINAL SCALE IN MILLIMETERS FOR REDUCED PLAN

DISREGARD PRINTS BEARING EARLIER REVISION DATE:

REVISION DATES (PRELIMINARY STAGE ONLY): 02/07/00 | 06/28/00 | 11/17/00 | 02/16/01 | 07/26/01 | 01/15/02 | 10/07/02 | 01/17/03 | 03/05/03 | 08/01/03

SHEET 195 OF

Rev. Date: 5-18-98

Numerous Tendon profile and deviations changes. (see KFM letter 717). See approved composite drawings for revisions. See PT elongation submittals for revisions to stressing ends.

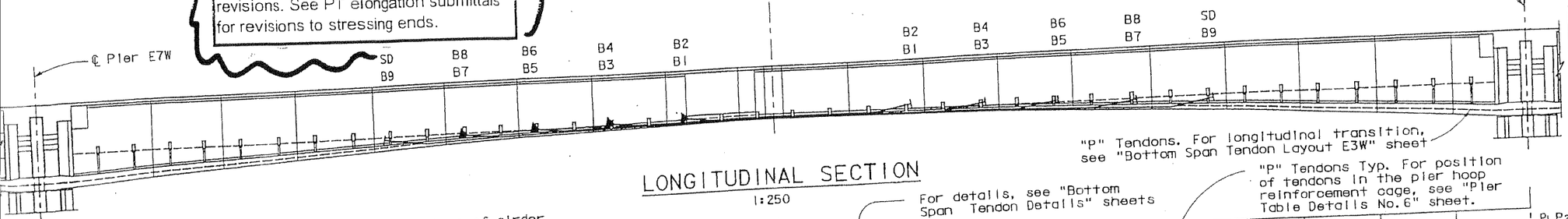

"P" Tendons. For longitudinal transition, see "Bottom Span Tendon Layout E3W" sheet

LONGITUDINAL SECTION

1:250

For details, see "Bottom Span Tendon Details" sheets

"P" Tendons Typ. For position of tendons in the pier hoop reinforcement cage, see "Pier Table Details No. 6" sheet.

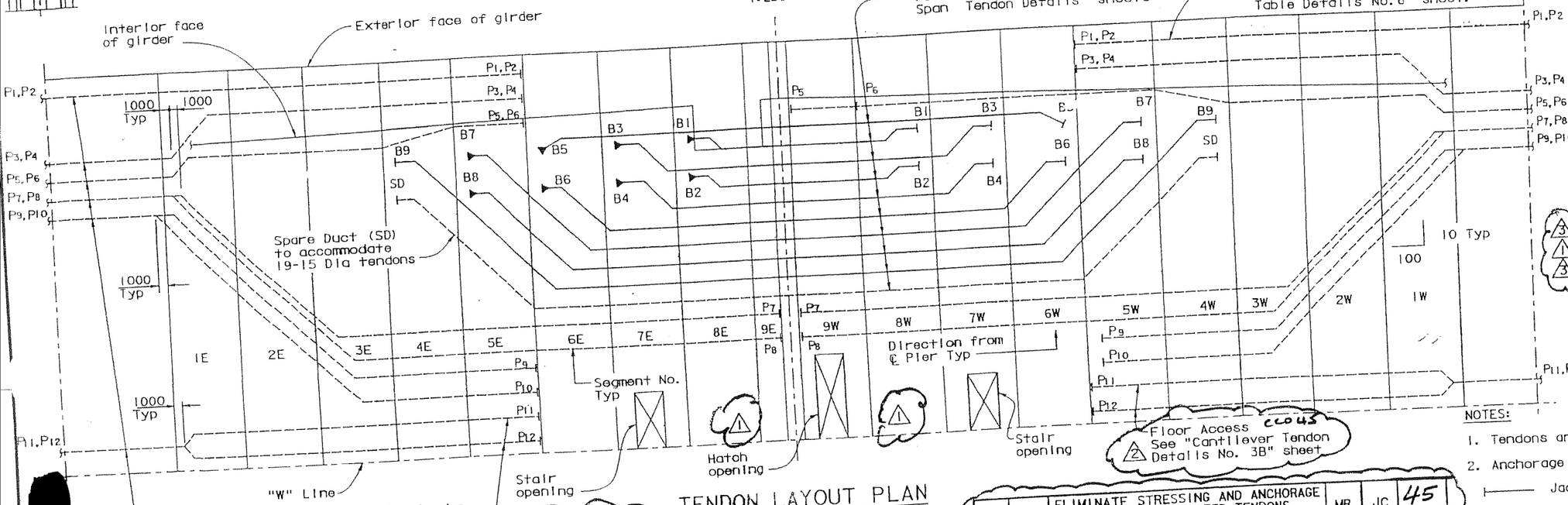

"P" tendons of Pier E7W. For tendon strand number and jacking force, see "Bottom Span Tendon Layout E7W" sheet

TENDON LAYOUT PLAN

Longitudinal 1:250
Transverse 1:25

BOTTOM SPAN TENDONS (*per box girder)

Tendon	No. of tendons* x No. of strands (15 Dia)	Jacking Force per Tendon kN
E8W B 1	2 x 19	3705
E8W B 2	2 x 19	3705
E8W B 3	2 x 19	3705
E8W B 4	2 x 19	3705
E8W B 5	2 x 19	3705
E8W B 6	2 x 19	3705
E8W B 7	2 x 19	3705
E8W B 8	2 x 19	3705
E8W B 9	2 x 19	3705
3 E8W P1-4	8 x 12	See note 6
1 E8W P5-10	12 x 12	1400 (1)
3 E8W P11-12	4 x 12	See note 6

NOTES:

1. Tendons are symmetrical with respect to "W" Line.
2. Anchorage symbols are as follows:
   - ⊢— Jacking end
   - ▶— Dead end
3. The force diagram shows forces which only account for losses due to friction, anchor set and elastic shortening.
4. Key to tendon nomenclature:
   - E8W — Span No.
   - B — Tendon type
   - 1 — Tendon mark
5. For "P" Tendon details, see "Cantilever Tendon Details" sheets.
6. 3 No stressing and anchorage required for tendons P1-4 & P11-12. Tendons shall be preassembled units and installed by pulling through duct and then grouted. CCO 45 (1)

MARK	DATE	DESCRIPTIONS	BY	CH'D
3	06/01/03	ELIMINATE STRESSING AND ANCHORAGE REQUIREMENT FOR NOTED TENDONS	MR	JC
			JC	45
			BY	CH'D
				CCO

REVISIONS

CONTRACT CHANGE ORDER NO. 45
SHEET 7 OF 34

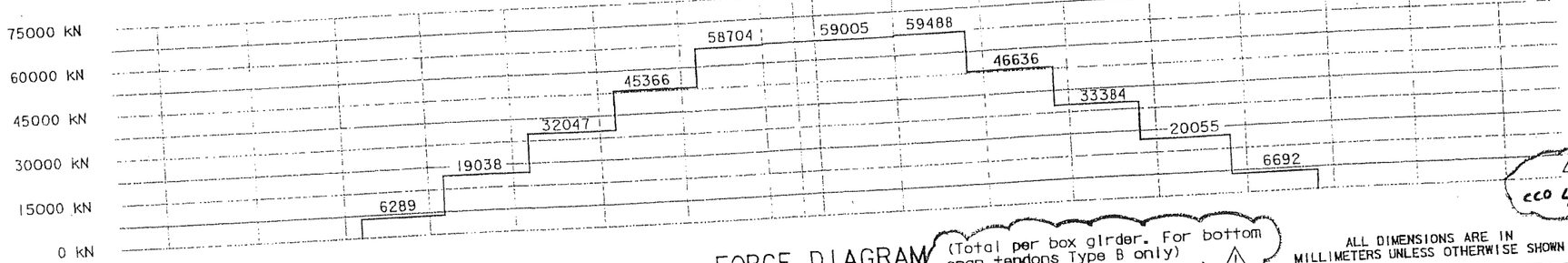

FORCE DIAGRAM

(Total per box girder. For bottom span tendons Type B only) 1

ALL DIMENSIONS ARE IN MILLIMETERS UNLESS OTHERWISE SHOWN

Caltrans Metric

041SF.A1d | 30 | 3.9/14.3. 0.0/1.6 | 628R3 978

REGISTERED ENGINEER - CIVIL
Siu Fu John Chan
No. C 39457
Exp. 12/31/05
CIVIL
STATE OF CALIFORNIA
PROFESSIONAL ENGINEER

6-04-01
PLANS APPROVAL DATE

The State of California or its officers or agents shall not be responsible for the accuracy or completeness of electronic copies of this plan sheet.

T.Y. LIN / MOFFATT & NICHOL
825 BATTERY STREET
SAN FRANCISCO, CA 94111

Caltrans now has a web site! To get to the web site, go to: http://www.dot.ca.gov

SAN FRANCISCO OAKLAND BAY BRIDGE
EAST SPAN SEISMIC SAFETY PROJECT

SKYWAY STRUCTURES

BOTTOM SPAN TENDON LAYOUT E8W

BRIDGE NO. 34-0006L/R
KILOMETER POST 3.9/14.3. 0.0/1.6

Sajid Abbas
PROJECT ENGINEER

PREPARED FOR THE STATE OF CALIFORNIA DEPARTMENT OF TRANSPORTATION

DESIGN: J. Chan | CHECKED: H. Lund
DETAILS: E. Zharkov | CHECKED: H. Lund
QUANTITIES: L. Cormier | CHECKED: J. Chan

DESIGN OVERSIGHT: Harold Chan 8/15/02
SIGN OFF DATE

MARK	DATE	DESCRIPTION	BY	CH'D
3	03/05/03	ADD FLOOR ACCESS DETAIL CCO 45	JC	MS
1	10/07/02	SHOW AND EXTEND TENDONS CCO 7	JC	MS

ORIGINAL SCALE IN MILLIMETERS FOR REDUCED PLANS

CU 02
EA 01202

DISREGARD PRINTS BEARING EARLIER REVISION DATES:

REVISION DATES (PRELIMINARY STAGE ONLY) 02/15/00 | 06/30/00 | 11/30/00 | 12/30/00 | 03/30/01 | 07/31/01 | 10/09/02 | 01/31/03 | 03/05/03 | 06/01/03

SHEET ___ OF 196

100% PS&E

STL-003082 11/24/03

Mission Control Redline

Numerous Tendon profile and deviations changes, (see KFM letter 717). See approved composite drawings for revisions. See PT elongation submittals for revisions to stressing ends.

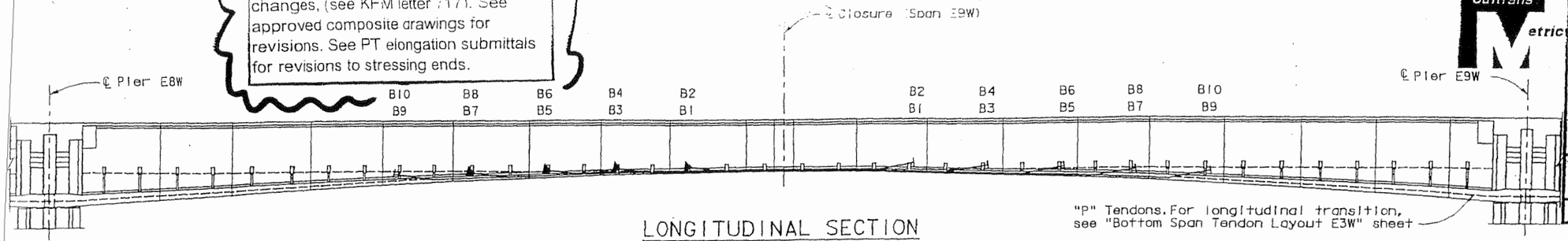

"P" Tendons. For longitudinal transition, see "Bottom Span Tendon Layout E3W" sheet

LONGITUDINAL SECTION

1:250

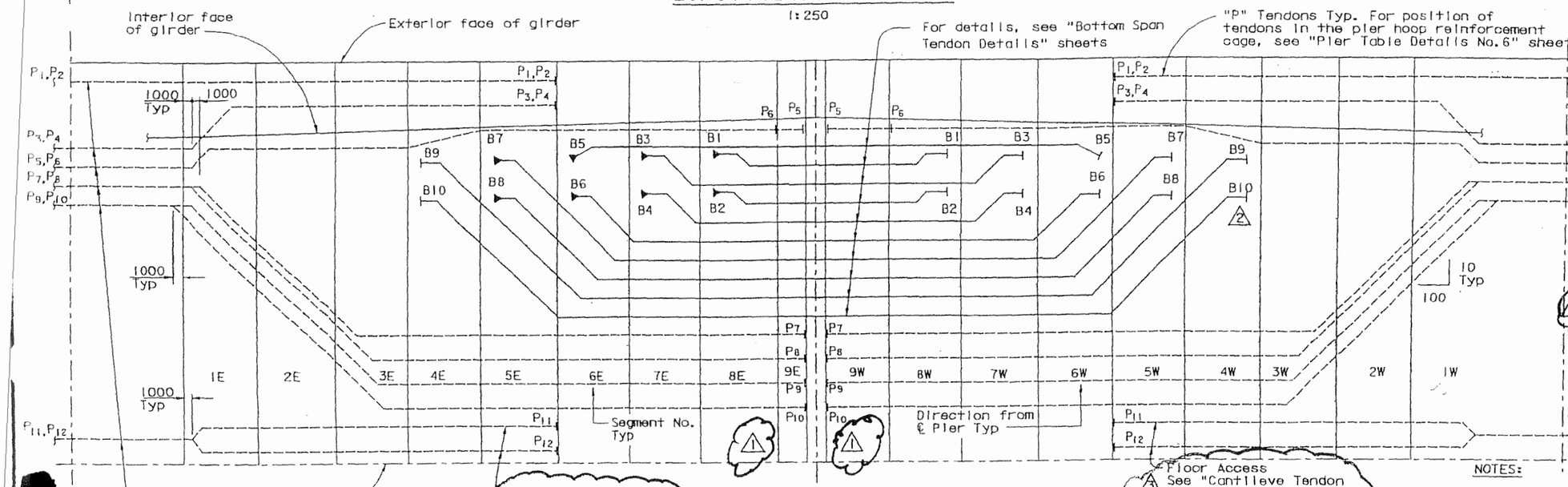

TENDON LAYOUT PLAN

Longitudinal 1:250
Transverse 1:25

BOTTOM SPAN TENDONS (*per box girder)

Tendon	No. of tendons* x No. of strands (15 Dia)	Jacking Force per Tendon kN
E9W B 1	2 x 19	3705
E9W B 2	2 x 19	3705
E9W B 3	2 x 19	3705
E9W B 4	2 x 19	3705
E9W B 5	2 x 19	3705
E9W B 6	2 x 19	3705
E9W B 7	2 x 19	3705
E9W B 8	2 x 19	3705
E9W B 9	2 x 19	3705
2 E9W B10	2 x 19	3705
4 1 E9W P_{1-4}	8 x 12	1 See note 6
E9W P_{5-10}	12 x 12	1400
4 E9W P_{11-12}	4 x 12	1 See note 6

NOTES:

1. Tendons are symmetrical with respect to "W" Line.
2. Anchorage symbols are as follows:
   - ├── Jacking end
   - ▶── Dead end
3. The force diagram shows forces which only account for losses due to friction, anchor set and elastic shortening.
4. Key to tendon nomenclature:
   - E9W — Span No.
   - B — Tendon type
   - 1 — Tendon mark
5. For "P" tendon details, see "Cantilever Tendon Details" sheets.
6. 4 1 CCO 45 No stressing and anchorage required for tendons P_{1-4} & P_{11-12}. Tendons shall be preassembled units and installed by pulling through duct and then grouted.

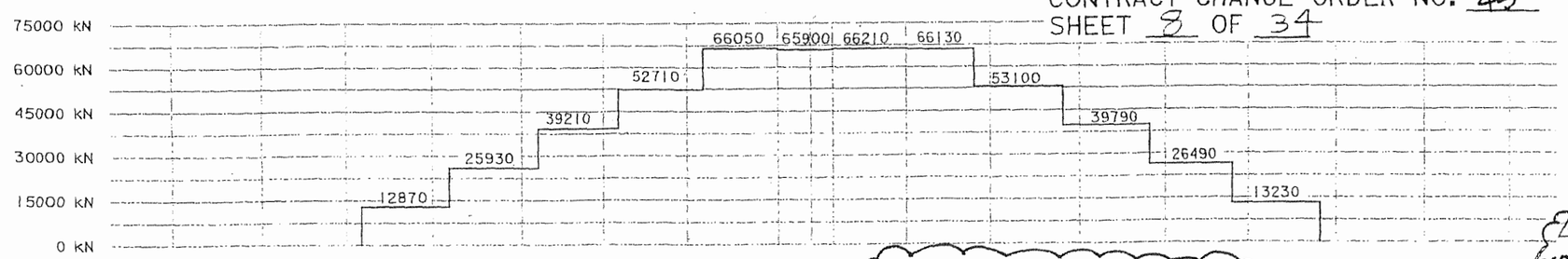

FORCE DIAGRAM

(Total per box girder. For bottom span tendons Type B only) 1 2

ALL DIMENSIONS ARE IN MILLIMETERS UNLESS OTHERWISE SHOWN

MARK	DATE	DESCRIPTION	BY	CH'D
45	08/01/03	ELIMINATE STRESSING AND ANCHORAGE REQUIREMENT FOR NOTED TENDONS	MR	JC
CCO		REVISIONS		

CONTRACT CHANGE ORDER NO. 45
SHEET 8 OF 34

MARK	DATE	DESCRIPTION	BY	CH'D
3	03/05/03	ADD FLOOR ACCESS DETAIL CCO 45	JC	MS
2	10/07/02	CHANGE BOTTOM SPAN TENDON CCO	JC	MS
1	10/07/02	SHOW AND EXTEND "P" TENDONS CCO	JC	MS

DESIGN OVERSIGHT: 8/15/03
SIGN OFF DATE

DESIGN: J. Chan; DETAILS: E. Zharkov; QUANTITIES: L. Cormier; CHECKED: H. Lund; CHECKED: H. Lund; CHECKED: J. Chen

PREPARED FOR THE STATE OF CALIFORNIA DEPARTMENT OF TRANSPORTATION

Sajid Abbas, PROJECT ENGINEER

BRIDGE NO. 34-0006L/R
KILOMETER POST 13.9/14.3, 0.0/1.6

SAN FRANCISCO OAKLAND BAY BRIDGE
EAST SPAN SEISMIC SAFETY PROJECT

SKYWAY STRUCTURES

BOTTOM SPAN TENDON LAYOUT E9W

ORIGINAL SCALE IN MILLIMETERS FOR REDUCED PLANS

CU 04
EA 01202

DISREGARD PRINTS DATED: EARLIER REVISION DATES:

REVISION DATES (PRELIMINARY STAGE ONLY): 07/03/99 | 02/08/00 | 06/09/00 | 11/07/00 | 02/06/01 | 02/22/01 | 07/18/02 | 10/07/02 | 03/05/03 | 08/01/03

SHEET 197 OF

Caltrans Metric

04 | SF-Ala | 30 | 13.9/14.3, 0.0/1.6 | 629R3 | 978

REGISTERED ENGINEER - CIVIL
Siu Fu John Chan
6-04-01
PLANS APPROVAL DATE

REGISTERED PROFESSIONAL ENGINEER Siu Fu John Chan No. C 39457 Exp. 12/31/05 CIVIL STATE OF CALIFORNIA

The State of California or its officers or agents shall not be responsible for the accuracy or completeness of electronic copies of this plan sheet.

T.Y. LIN / MOFFATT & NICHOL
825 BATTERY STREET
SAN FRANCISCO, CA 94111

Caltrans now has a web site! To get to the web site, go to: http://www.dot.ca.gov

100 % PS&E

STL-003082 11/24/03

Mission Control Redline

Numerous Tendon profile and deviations changes. (see KFM letter 717). See approved composite drawings for revisions. See PT elongation submittals for revisions to stressing ends.

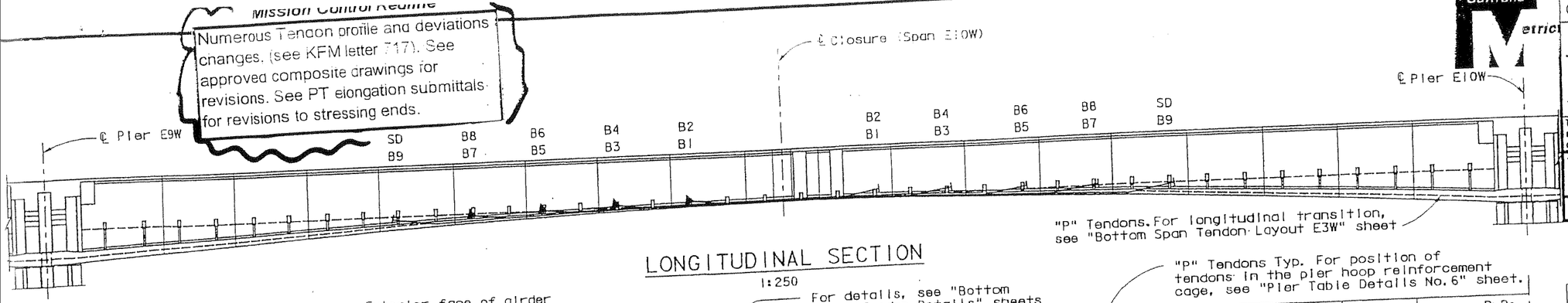

LONGITUDINAL SECTION

1:250

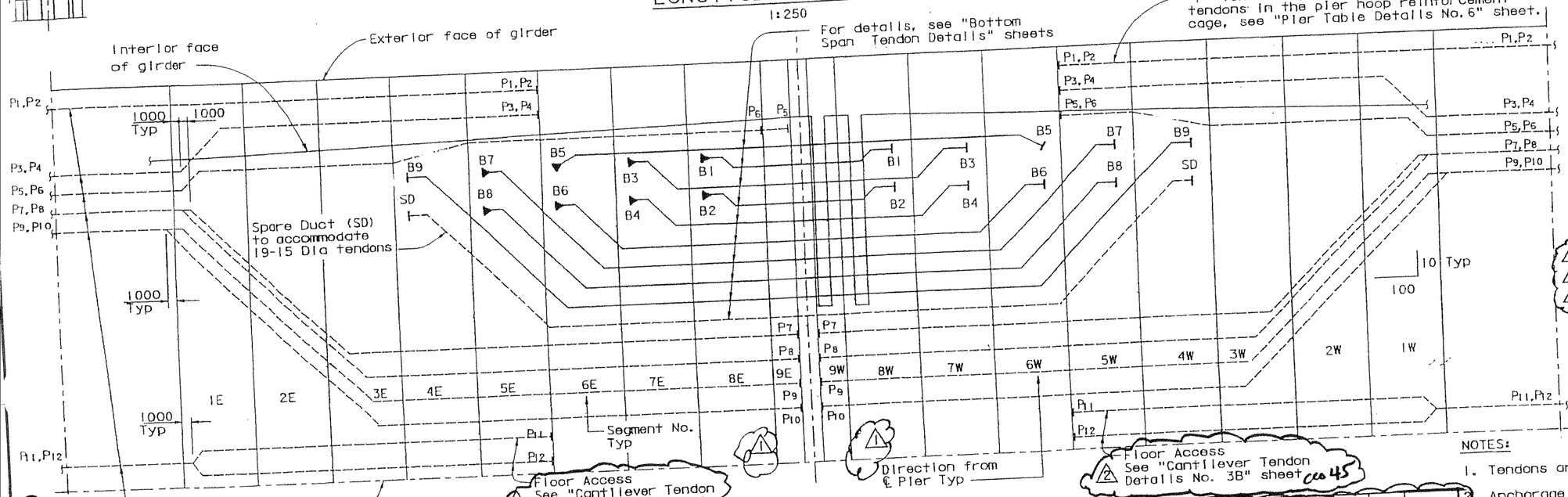

TENDON LAYOUT PLAN

Longitudinal 1:250
Transverse 1:25

MARK	DATE	DESCRIPTIONS	BY	CH'D
3	08/01/03	ELIMINATE STRESSING AND ANCHORAGE REQUIREMENT FOR NOTED TENDONS	MR	JC
		REVISIONS		45 CCO

CONTRACT CHANGE ORDER NO. 45
SHEET 9 OF 34

BOTTOM SPAN TENDONS (*per box girder)

Tendon	No. of tendons* x No. of strands (15 Dia)	Jacking Force per Tendon kN
E10W B 1	2 x 19	3705
E10W B 2	2 x 19	3705
E10W B 3	2 x 19	3705
E10W B 4	2 x 19	3705
E10W B 5	2 x 19	3705
E10W B 6	2 x 19	3705
E10W B 7	2 x 19	3705
E10W B 8	2 x 19	3705
E10W B 9	2 x 19	3705
3 E10W P1-4	8 x 12	1 See note 6
1 E10W P5-10	12 x 12	1400
3 E1WE P11-12	4 x 12	1 See note 6

NOTES:

1. Tendons are symmetrical with respect to "W" Line.
2. Anchorage symbols are as follows:
   - Jacking end
   - Dead end
3. The force diagram shows forces which only account for losses due to friction, anchor set and elastic shortening.
4. Key to tendon nomenclature:
   - E10W — Span No.
   - B — Tendon type
   - 1 — Tendon mark
5. For "P" Tendon details, see "Cantilever Tendon Details" sheets.
6. 3 No stressing and anchorage required for tendons P1-4 & P11-12. Tendons shall be 1 preassembled units and installed by pulling through duct and then grouted.

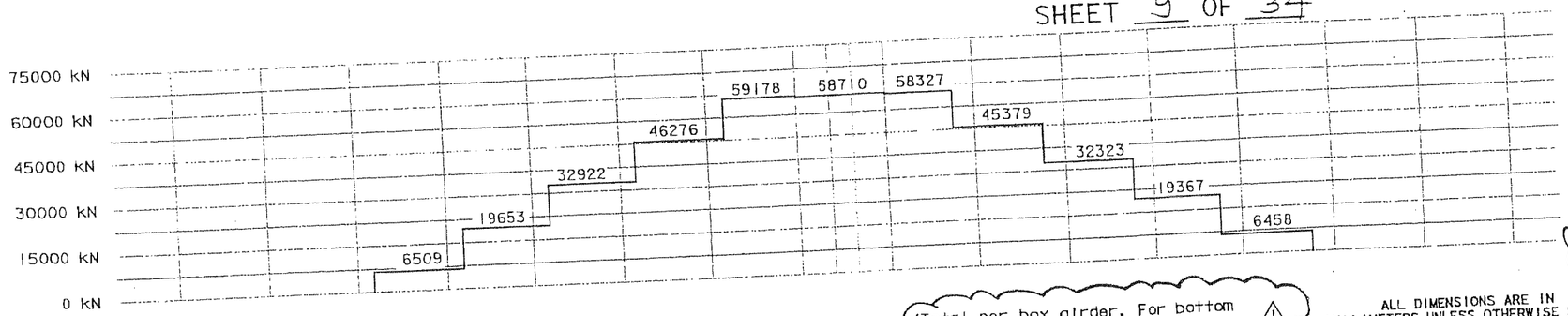

FORCE DIAGRAM (Total per box girder. For bottom span tendons Type B only) 1

ALL DIMENSIONS ARE IN MILLIMETERS UNLESS OTHERWISE SHOWN

MARK	DATE	DESCRIPTION	BY	CH'D
2	03/05/03	ADD FLOOR ACCESS DETAIL CCO 45	JC	MS
1	10/07/02	SHOW AND EXTEND "P" TENDONS CCO 7	JC	MS

DESIGN OVERSIGHT 8/15/03
SIGN OFF DATE
Rev. Date: 5-18-99

DESIGN BY J. Chan CHECKED H. Lund
DETAILS BY E. Zharkov CHECKED H. Lund
QUANTITIES BY K. Cormier CHECKED J. Chan

PREPARED FOR THE STATE OF CALIFORNIA DEPARTMENT OF TRANSPORTATION

Sajid Abbas
PROJECT ENGINEER

BRIDGE NO. 34-0006L/R
KILOMETER POST 13.9/14.3 0.0/1.6

DISREGARD PRINTS BEARING EARLIER REVISION DATE

ORIGINAL SCALE IN MILLIMETERS FOR REDUCED PLANS

CU 04
EA 01202

SAN FRANCISCO OAKLAND BAY BRIDGE
EAST SPAN SEISMIC SAFETY PROJECT

SKYWAY STRUCTURES

BOTTOM SPAN TENDON LAYOUT E10W

REVISION DATES (PRELIMINARY STAGE ONLY) 01/05/99 02/25/00 06/02/00 11/27/00 02/06/01 07/23/02 10/24/02 01/03/03 08/01/03

SHEET 198 OF

100 % PS&E

STL-003082 11/24/03

REGISTERED ENGINEER - CIVIL
6-04-01
PLANS APPROVAL DATE
Siu Fu John Chan No. C 39457 Exp. 12/31/05 CIVIL STATE OF CALIFORNIA PROFESSIONAL ENGINEER

The State of California or its officers or agents shall not be responsible for the accuracy or completeness of electronic copies of this plan sheet.

T.Y. LIN / MOFFATT & NICHOL
825 BATTERY STREET
SAN FRANCISCO, CA 94111

Caltrans now has a web site! To get to the web site, go to: http://www.dot.ca.gov

Mission Control Redline

Numerous Tendon profile and deviations changes. (see KFM letter 717). See approved composite drawings for revisions. See PT elongation submittals for revisions to stressing ends.

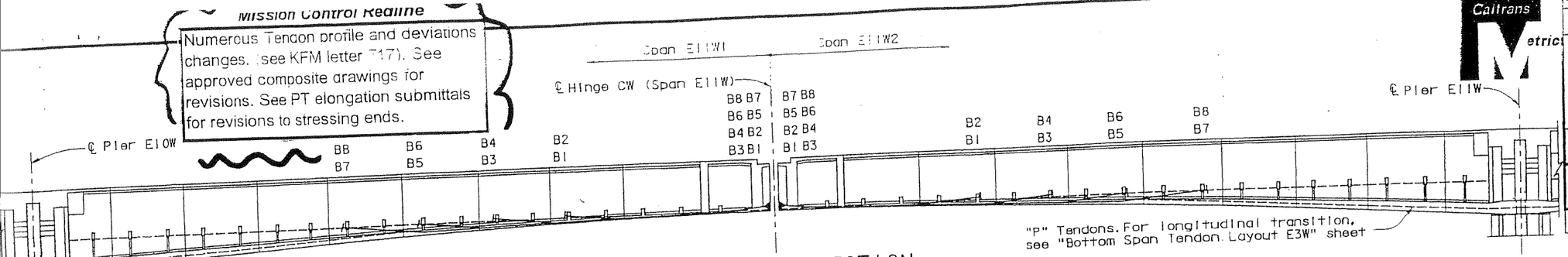

LONGITUDINAL SECTION

1:250

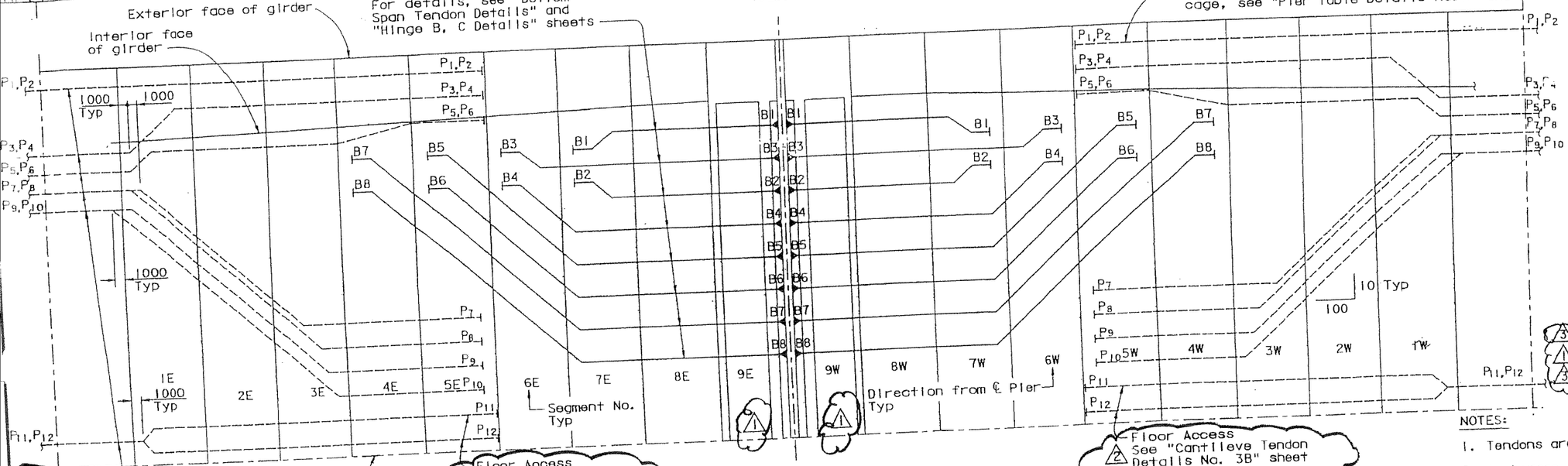

TENDON LAYOUT PLAN

Longitudinal 1:250
Transverse 1:25

CCO	MARK	DATE	DESCRIPTIONS	BY	CH'D
45	3	06/01/03	ELIMINATE STRESSING AND ANCHORAGE REQUIREMENT FOR NOTED TENDONS	MR	JC

REVISIONS

CONTRACT CHANGE ORDER NO. 45
SHEET 10 OF 34

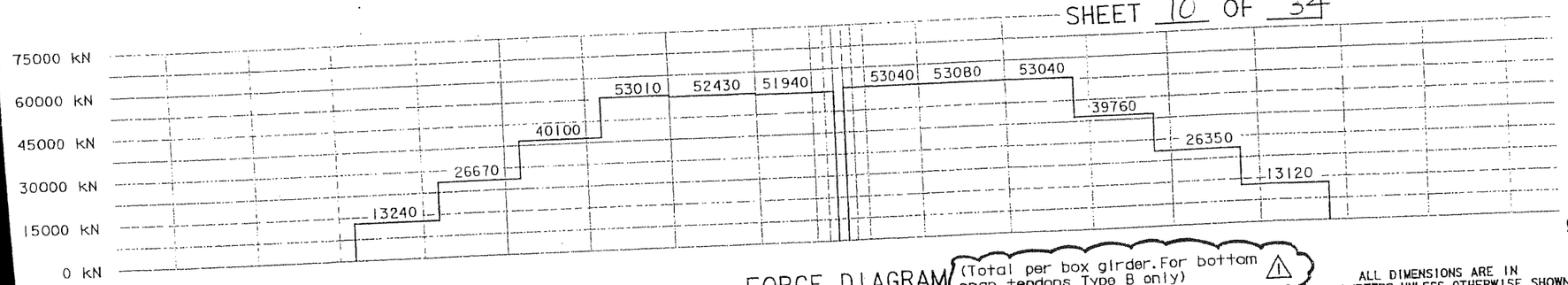

FORCE DIAGRAM (Total per box girder. For bottom span tendons Type B only)

ALL DIMENSIONS ARE IN MILLIMETERS UNLESS OTHERWISE SHOWN

BOTTOM SPAN TENDONS (*per box girder)

Tendon	No. of tendons* x No. of strands (15 Dia)	Jacking Force per Tendon kN
E11W1 B 1	2 x 19	3705
E11W1 B 2	2 x 19	3705
E11W1 B 3	2 x 19	3705
E11W1 B 4	2 x 19	3705
E11W1 B 5	2 x 19	3705
E11W1 B 6	2 x 19	3705
E11W1 B 7	2 x 19	3705
E11W1 B 8	2 x 19	3705
E11W2 B 1	2 x 19	3705
E11W2 B 2	2 x 19	3705
E11W2 B 3	2 x 19	3705
E11W2 B 4	2 x 19	3705
E11W2 B 5	2 x 19	3705
E11W2 B 6	2 x 19	3705
E11W2 B 7	2 x 19	3705
E11W2 B 8	2 x 19	3705
3 E11W2 P1-4	8 x 12	1 See note 6
1 E11W2 P5-10	12 x 12	1400
3 E11W2 P11-12	4 x 12	1 See note 6

NOTES:

1. Tendons are symmetrical with respect to "W" Line.
2. Anchorage symbols are as follows:
   - |—— Jacking end
   - ▶—— Dead end
3. The force diagram shows forces which only account for losses due to friction, anchor set and elastic shortening.
4. Key to tendon nomenclature:
   - E11W1 — Span No.
   - B — Tendon type
   - 1 — Tendon mark
5. For "P" tendon details, see "Cantilever Tendon Details" sheets.
6. 3 1 No stressing and anchorage required for tendons P1-4 & P11-12. Tendons shall be preassembled units and installed by pulling through duct and grouted.

Caltrans Metric

04 | SF.Alai | 30 | 13.3/14.3, 0.0/1.6 | 631R2 | 978

Siu Fu John Chan
REGISTERED ENGINEER - CIVIL
6-4-01
PLANS APPROVAL DATE

REGISTERED PROFESSIONAL ENGINEER Siu Fu John Chan No. C 39457 Exp. 12/31/05 CIVIL STATE OF CALIFORNIA

The State of California or its officers or agents shall not be responsible for the accuracy or completeness of electronic copies of this plan sheet.

T.Y. LIN / MOFFATT & NICHOL
825 BATTERY STREET
SAN FRANCISCO, CA 94111

Caltrans now has a web site! To get to the web site, go to: http://www.dot.ca.gov

SAN FRANCISCO OAKLAND BAY BRIDGE
EAST SPAN SEISMIC SAFETY PROJECT

SKYWAY STRUCTURES

BOTTOM SPAN TENDON LAYOUT E11W

BRIDGE NO. 34-0006L/R
KILOMETER POST 13.9/14.3, 0.0/1.6
Sajid Abbas, PROJECT ENGINEER

PREPARED FOR THE STATE OF CALIFORNIA DEPARTMENT OF TRANSPORTATION

DESIGN: J. Chan — CHECKED: H. Lund
DETAILS: S. Lee — CHECKED: H. Lund
QUANTITIES: L. Cornier — CHECKED: J. Chan

DESIGN OVERSIGHT: Hani Shahrouri 8/15/03
SIGN OFF DATE

MARK	DATE	DESCRIPTION	BY	CH'D
2	03/06/03	ADD FLOOR ACCESS DETAIL CCO 45	JC	MS
1	10/07/02	SHOW AND EXTEND "P" TENDONS CCO -	JC	MS

ORIGINAL SCALE IN MILLIMETERS FOR REDUCED PLANS

DISREGARD PRINTS BEARING EARLIER REVISION DATES: 02/28/00 | 06/26/00 | 10/09/02 | 02/14/01 | 02/26/01 | 07/25/02 | 10/09/02 | 01/14/03 | 02/25/03 | 06/01/03

CU 04
EA 01202

SHEET 195 OF

100% PS&E

STL-003082 11/24/03

Numerous Tendon profile and deviations changes. (see KFM letter 717). See approved composite drawings for revisions. See PT elongation submittals for revisions to stressing ends.

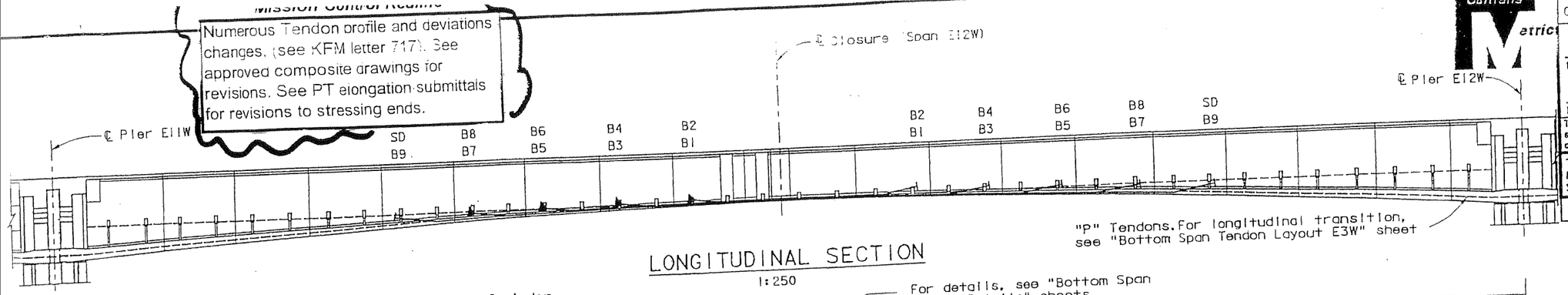

LONGITUDINAL SECTION

1:250

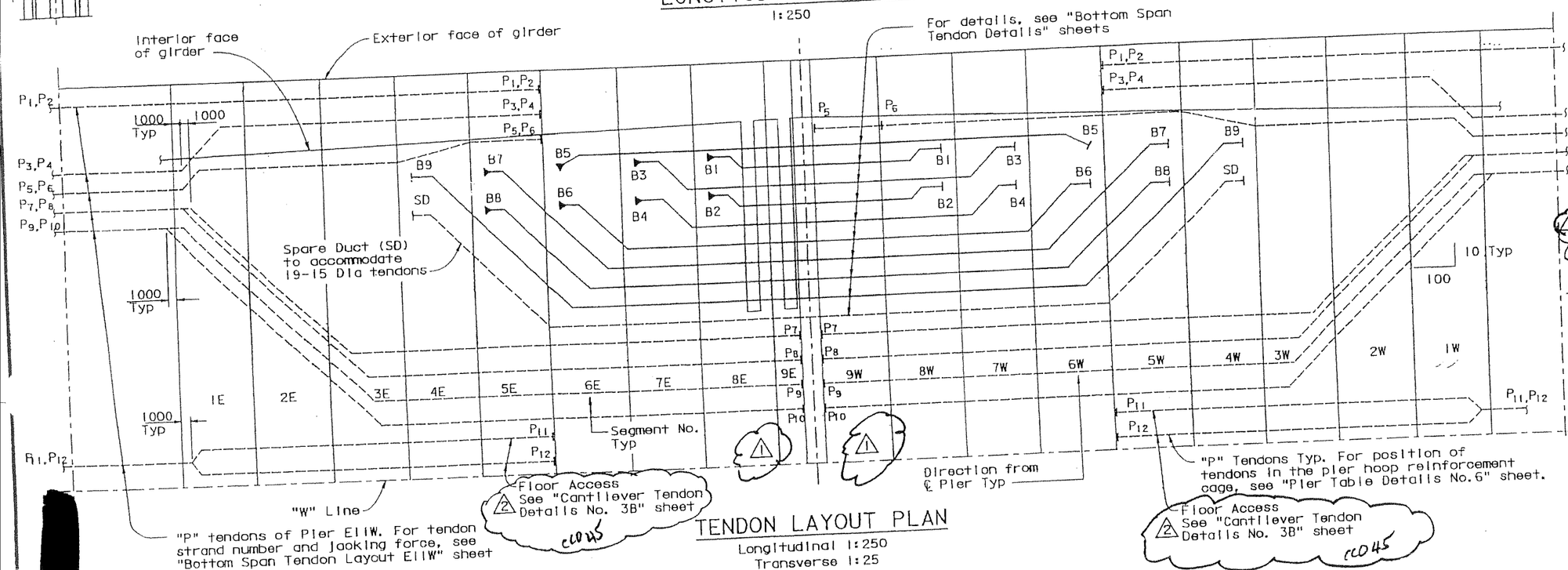

TENDON LAYOUT PLAN

Longitudinal 1:250
Transverse 1:25

BOTTOM SPAN TENDONS (*per box girder)

Tendon	No. of tendons* x No. of strands (15 Dia)	Jacking Force per Tendon kN
E12W B 1	2 x 19	3705
E12W B 2	2 x 19	3705
E12W B 3	2 x 19	3705
E12W B 4	2 x 19	3705
E12W B 5	2 x 19	3705
E12W B 6	2 x 19	3705
E12W B 7	2 x 19	3705
E12W B 8	2 x 19	3705
E12W B 9	2 x 19	3705
E12W P1-4	8 x 12	See note 6
E12W P5-10	12 x 12	1400
E12W P11-12	4 x 12	See note 6

NOTES:

1. Tendons are symmetrical with respect to "W" Line.
2. Anchorage symbols are as follows:
   - Jacking end
   - Dead end
3. The force diagram shows forces which only account for losses due to friction, anchor set and elastic shortening.
4. Key to tendon nomenclature:
   - E12W — Span No.
   - B — Tendon type
   - 1 — Tendon mark
5. For "P" Tendon details, see "Cantilever Tendon Details" sheets.
6. No stressing and anchorage required for tendons P1-4 & P11-12. Tendons shall be preassembled units and installed by pulling through duct and then grouted.

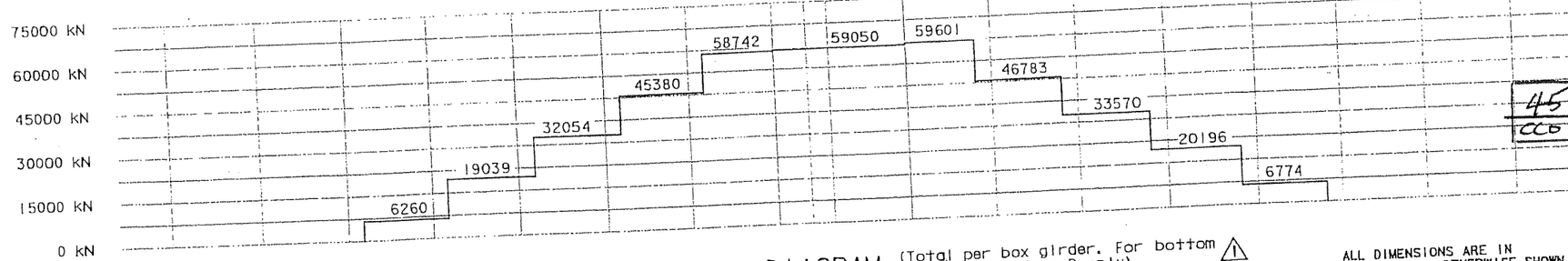

FORCE DIAGRAM

(Total per box girder. For bottom span tendons Type B only)

ALL DIMENSIONS ARE IN MILLIMETERS UNLESS OTHERWISE SHOWN

MARK	DATE	DESCRIPTIONS	BY	CH'D
3	08/01/03	ELIMINATE STRESSING AND ANCHORAGE REQUIREMENT FOR NOTED TENDONS	MR	JC

REVISIONS

CONTRACT CHANGE ORDER NO. 45
SHEET 11 OF 34

100% PS&E

SAN FRANCISCO OAKLAND BAY BRIDGE
EAST SPAN SEISMIC SAFETY PROJECT

SKYWAY STRUCTURES

BOTTOM SPAN TENDON LAYOUT E12W

DESIGN	J. Chan	H. Lund	
DETAILS	E. Zharkov	H. Lund	
QUANTITIES	T. Cormier	J. Chan	

PREPARED FOR THE STATE OF CALIFORNIA DEPARTMENT OF TRANSPORTATION

Sajid Abbas, PROJECT ENGINEER

BRIDGE NO. 34-0006L/R
KILOMETER POST 13.9/14.3 + 0.0/1.5

CU 04
EA 01202

DESIGN OVERSIGHT 8/15/03
SIGN OFF DATE

MARK	DATE	DESCRIPTION	BY	CH'D
2	03/05/03	ADD FLOOR ACCESS DETAIL CCO 45	JC	MS
1	10/07/02	SHOW AND EXTEND "P" TENDONS	JC	MS

Rev. Date: 5-18-01

ORIGINAL SCALE IN MILLIMETERS FOR REDUCED PLANS

DISREGARD PRINTS BEARING EARLIER REVISION DATE

REVISION DATES (PRELIMINARY STAGE ONLY): 07/13/99 | 02/13/00 | 06/07/00 | 11/27/00 | 02/09/01 | 01/15/02 | 10/07/02 | 03/05/03 | 08/01/03

SHEET 200 OF

STL-003082 11/24/03

Caltrans Metric

REGISTERED ENGINEER - CIVIL
Siu Fu John Chan, No. C 39457, Exp. 12/31/05, CIVIL, STATE OF CALIFORNIA
6-4-01
PLANS APPROVAL DATE

The State of California or its officers or agents shall not be responsible for the accuracy or completeness of electronic copies of this plan sheet.

T.Y. LIN / MOFFATT & NICHOL
825 BATTERY STREET
SAN FRANCISCO, CA 94111

Caltrans now has a web site! To get to the web site, go to: http://www.dot.ca.gov

Mission Control Redline

Numerous Tendon profile and deviations changes. (see KFM letter 717). See approved composite drawings for revisions. See PT elongation submittals for revisions to stressing ends.

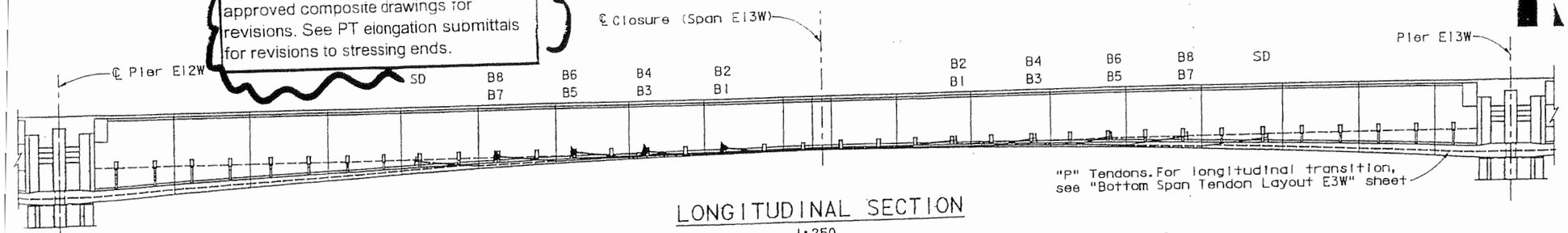

LONGITUDINAL SECTION

1:250

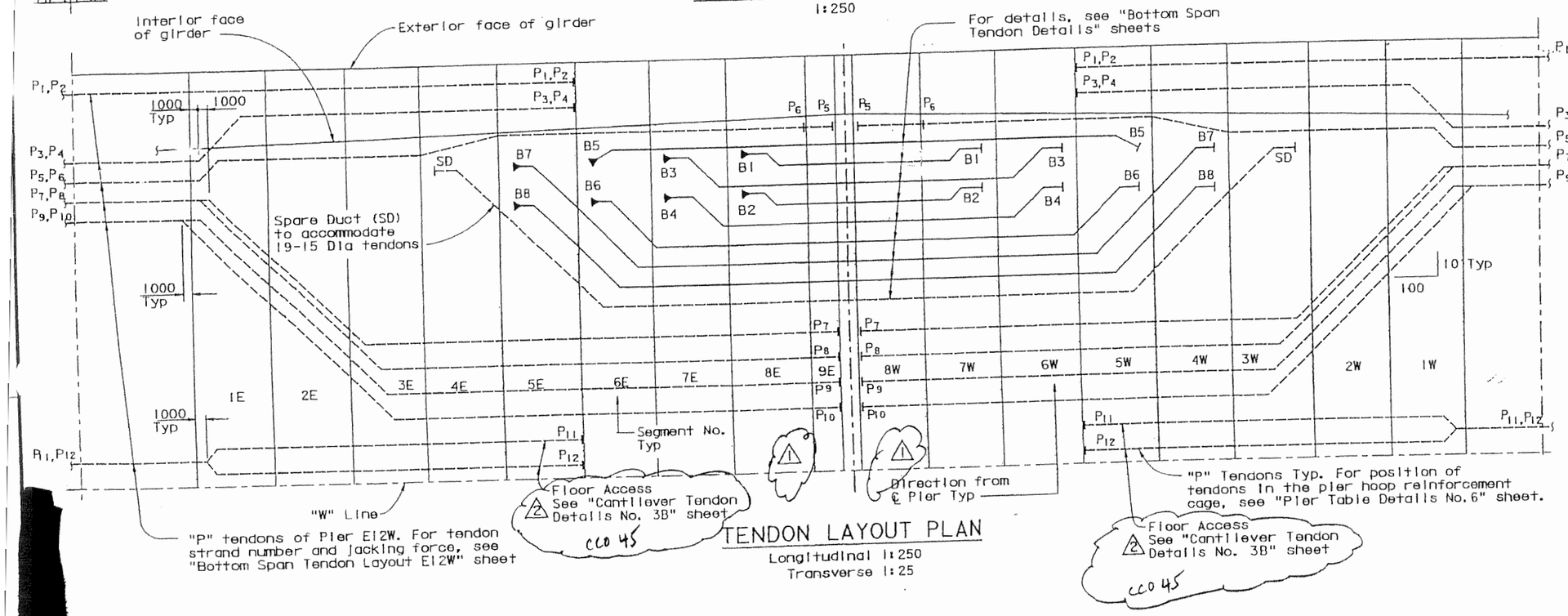

TENDON LAYOUT PLAN

Longitudinal 1:250
Transverse 1:25

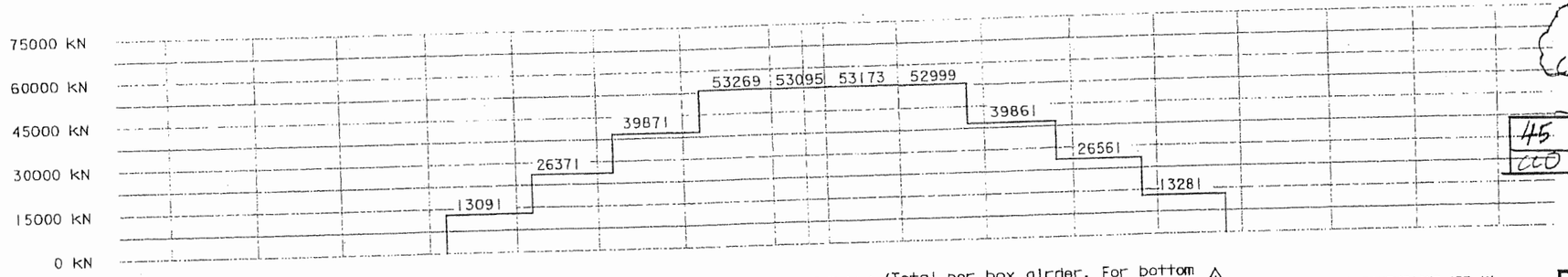

FORCE DIAGRAM (Total per box girder. For bottom span tendons Type B only)

ALL DIMENSIONS ARE IN MILLIMETERS UNLESS OTHERWISE SHOWN

Caltrans Metric

04 SF 101 30 | 13.9/14.3, 0.0/1.6 | 633R3 978

REGISTERED ENGINEER - CIVIL

6-4-01
PLANS APPROVAL DATE

REGISTERED PROFESSIONAL ENGINEER Siu Fu John Chan No. C 39457 Exp. 12/31/05 CIVIL STATE OF CALIFORNIA

The State of California or its officers or agents shall not be responsible for the accuracy or completeness of electronic copies of this plan sheet.

T.Y. LIN / MOFFATT & NICHOL
825 BATTERY STREET
SAN FRANCISCO, CA 94111

Caltrans now has a web site! To get to the web site, go to: http://www.dot.ca.gov

BOTTOM SPAN TENDONS (*per box girder)

Tendon	No. of tendons* x No. of strands (15 Dia)	Jacking Force per Tendon kN
E13W B 1	2 x 19	3705
E13W B 2	2 x 19	3705
E13W B 3	2 x 19	3705
E13W B 4	2 x 19	3705
E13W B 5	2 x 19	3705
E13W B 6	2 x 19	3705
E13W B 7	2 x 19	3705
E13W B 8	2 x 19	3705
3 E13E P1-4	8 x 12	1 See note 6
1 E13E P5-10	12 x 12	1400
3 E13E P11-12	4 x 12	1 See note 6

NOTES:

1. Tendons are symmetrical with respect to "W" Line.
2. Anchorage symbols are as follows:
   - ⊢—— Jacking end
   - ▶—— Dead end
3. The force diagram shows forces which only account for losses due to friction, anchor set and elastic shortening.
4. Key to tendon nomenclature:
   - E13W B 1
   - Span No. — E13W
   - Tendon type — B
   - Tendon mark — 1
5. For "P" Tendon details, see "Cantilever Tendon Details" sheets.
6. 3 1 CCO 45 No stressing and anchorage required for tendons P1-4 & P11-12. Tendons shall be preassembled units and installed by pulling through duct and then grouted.

MARK	DATE	DESCRIPTIONS	BY	CH'D
45 CCO	3 08/01/03	ELIMINATE STRESSING AND ANCHORAGE REQUIREMENT FOR NOTED TENDONS	MR	JC

REVISIONS

CONTRACT CHANGE ORDER NO. 45
SHEET 12 OF 34

100 % PS&E

STL-003082 11/24/03

SAN FRANCISCO OAKLAND BAY BRIDGE
EAST SPAN SEISMIC SAFETY PROJECT

SKYWAY STRUCTURES

BOTTOM SPAN TENDON LAYOUT E13W

MARK	DATE	DESCRIPTION	BY	CH'D
3	03/05/03	ADD FLOOR ACCESS DETAIL CCO 45	JC	MS
1	10/07/02	SHOW AND EXTEND "P" TENDONS CCO 1	JC	MS

DESIGN OVERSIGHT 8/15/03
SIGN OFF DATE
Rev. Date: 5-18-98

DESIGN BY J. Chan CHECKED H. Lund
DETAILS BY E. Zharkov CHECKED H. Lund
QUANTITIES BY K. Cormier CHECKED J. Chan

PREPARED FOR THE STATE OF CALIFORNIA DEPARTMENT OF TRANSPORTATION

Sajid Abbas
PROJECT ENGINEER

BRIDGE NO. 34-0006L/R
KILOMETER POST 13.9/14.3, 0.0/1.6

CU 04
EA 01202

DISREGARD PRINTS BEARING EARLIER REVISION DATES

REVISION DATES (PRELIMINARY STAGE ONLY) 01/25/99 02/15/99 01/05/00 11/27/00 02/08/01 07/25/02 10/24/02 03/05/03 06/01/03

SHEET 201

ORIGINAL SCALE IN MILLIMETERS FOR REDUCED PLAN

DATE PLOTTED: 11-24-03
TIME PLOTTED: 14:41

Mission Control Realm

Numerous Tendon profile and deviations changes, (see KFM letter 717). See approved composite drawings for revisions. See PT elongation submittals for revisions to stressing ends.

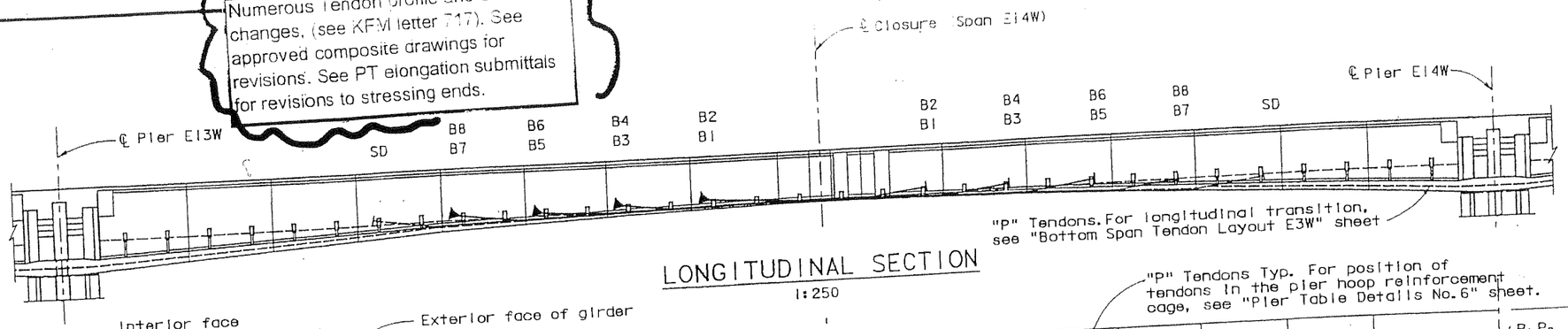

LONGITUDINAL SECTION
1:250

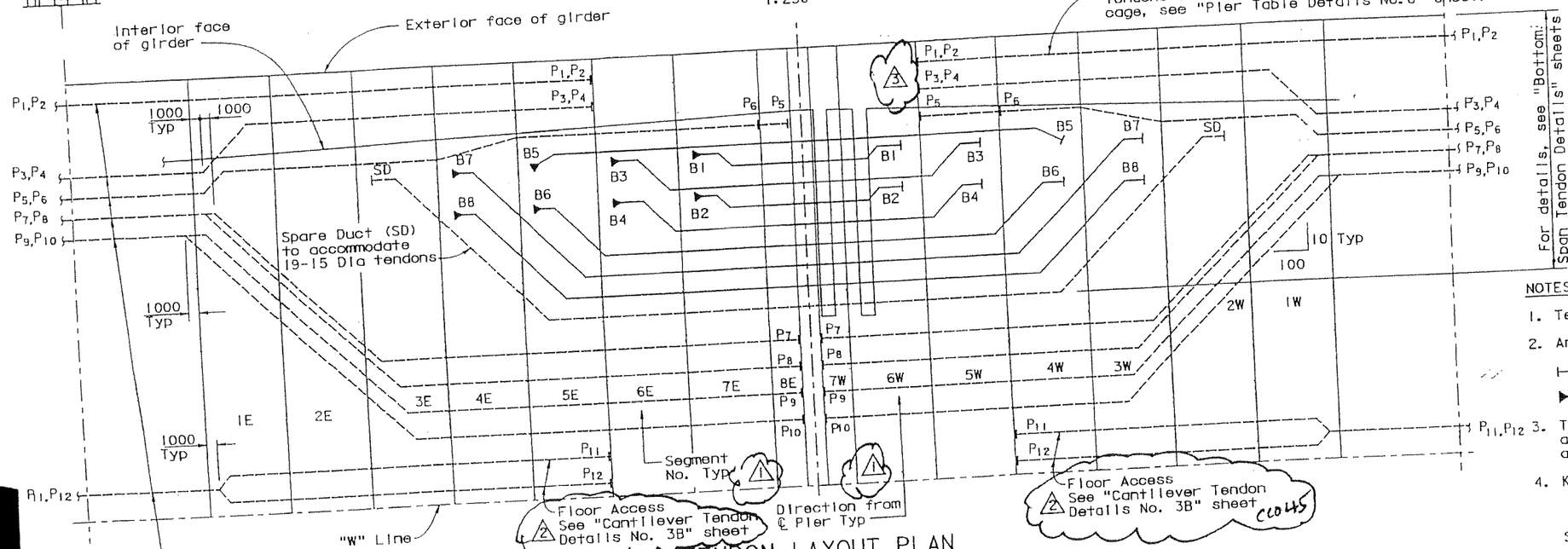

TENDON LAYOUT PLAN
Longitudinal 1:250
Transverse 1:25

For details, see "Bottom Span Tendon Details" sheets

BOTTOM SPAN TENDONS (*per box girder)

Tendon	No. of tendons* x No. of strands (15 Dia)	Jacking Force per Tendon kN
E14W B 1	2 x 19	3705
E14W B 2	2 x 19	3705
E14W B 3	2 x 19	3705
E14W B 4	2 x 19	3705
E14W B 5	2 x 19	3705
E14W B 6	2 x 19	3705
E14W B 7	2 x 19	3705
E14W B 8	2 x 19	3705
5 E14W P1-3	6 x 12	1 See note 6
4 1 E14W P4-6	6 x 12	1400
5 E14W P7	2 x 12	1 See note 6
5 E14W P8-10	6 x 12	1400
5 E14W P11-12	4 x 12	1 See note 6

NOTES:

1. Tendons are symmetrical with respect to "W" Line.
2. Anchorage symbols are as follows:
   - ├── Jacking end
   - ►── Dead end
3. The force diagram shows forces which only account for losses due to friction, anchor set and elastic shortening.
4. Key to tendon nomenclature:
   - E14W — Span No.
   - B — Tendon type
   - 1 — Tendon mark
5. For "P" Tendon details, see "Cantilever Tendon Details" sheets.
6. 5 No stressing and anchorage required for tendons P1-3, P7 & P11-12. Tendons shall be preassembled units and installed by pulling through duct and then grouted. CCO 45 1

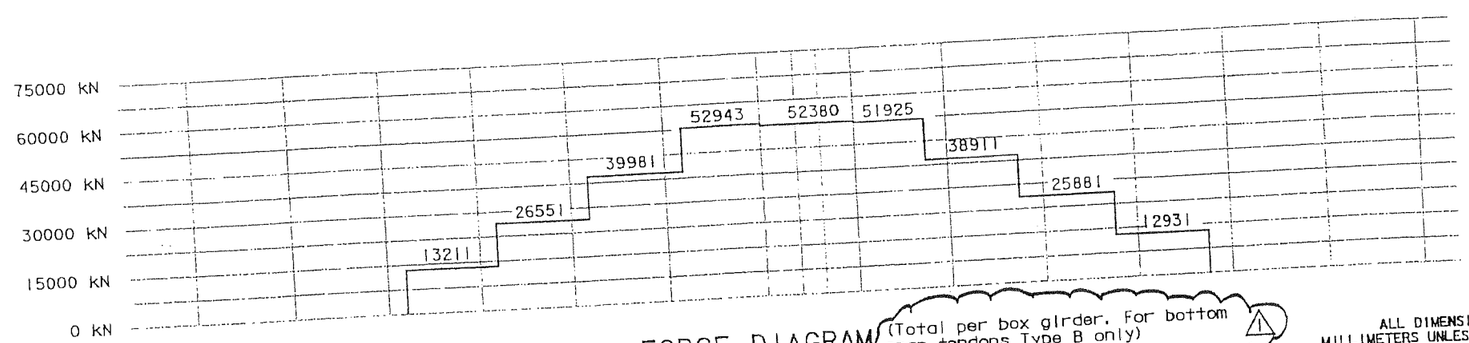

FORCE DIAGRAM (Total per box girder. For bottom span tendons Type B only)

MARK	DATE	DESCRIPTION	BY	CH'D
5	08/01/03	ELIMINATE STRESSING AND ANCHORAGE REQUIREMENT FOR NOTED TENDONS	MR	JC
4	03/05/03	REVISE P4 AND P7 TENDON JACKING FORCE - 45	JC	MS
3	03/05/03	REVISE "P" TENDON ANCHOR LOCATIONS - 45	JC	MS
2	03/05/03	ADD FLOOR ACCESS DETAIL CCO - 45	JC	MS
1	10/07/02	SHOW AND EXTEND "P" TENDONS CCO	JC	MS

REVISIONS

CONTRACT CHANGE ORDER NO. 45
SHEET 13 OF 34

ALL DIMENSIONS ARE IN MILLIMETERS UNLESS OTHERWISE SHOWN

DESIGN OVERSIGHT: Hadad Ghat 8/18/03
SIGN OFF DATE:

DESIGN BY J. Chan CHECKED H. Lund
DETAILS BY E. Zhorkov CHECKED H. Lund
QUANTITIES BY L. Cormier CHECKED J. Chan

PREPARED FOR THE STATE OF CALIFORNIA DEPARTMENT OF TRANSPORTATION

Sajid Abbas
PROJECT ENGINEER

BRIDGE NO. 34-0006L/R
KILOMETER POST 13.9/14.3, 0.0/1.6

CU 04
EA 01202

DISREGARD PRINTS BEARING EARLIER REVISION DATE:

ORIGINAL SCALE IN MILLIMETERS FOR REDUCED PLANS

SAN FRANCISCO OAKLAND BAY BRIDGE
EAST SPAN SEISMIC SAFETY PROJECT

SKYWAY STRUCTURES

BOTTOM SPAN TENDON LAYOUT E14W

SHEET 202

REVISION DATES (PRELIMINARY STAGE ONLY): 01/22/99 02/25/99 04/26/99 11/23/99 02/26/01 01/23/02 10/23/02 01/23/03 03/25/03 06/01/03

04ISF,A1d1 30 0.0/1.6 B34R3 978

REGISTERED ENGINEER - CIVIL
Siu Fu John Chan
6-4-01
PLANS APPROVAL DATE

REGISTERED PROFESSIONAL ENGINEER Siu Fu John Chan No. C 39457 Exp. 12/31/05 CIVIL STATE OF CALIFORNIA

The State of California or its officers or agents shall not be responsible for the accuracy or completeness of electronic copies of this plan sheet.

T.Y. LIN / MOFFATT & NICHOL
825 BATTERY STREET
SAN FRANCISCO, CA 94111

Caltrans now has a web site! To get to the web site, go to: http://www.dot.ca.gov

100 % PS&E

STL-003082 11/24/03

Mission Control Redline

Numerous Tendon profile and deviations changes. (see KFM letter 717). See approved composite drawings for revisions. See PT elongation submittals for revisions to stressing ends.

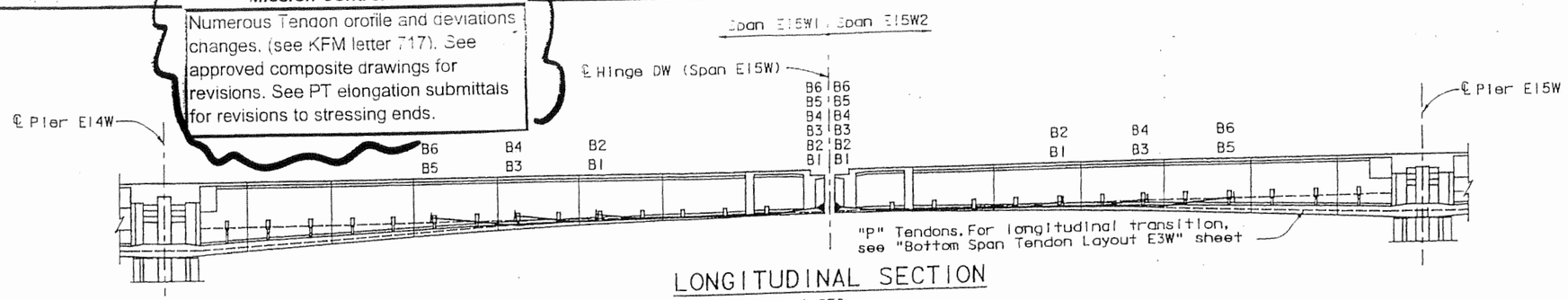

LONGITUDINAL SECTION

1:250

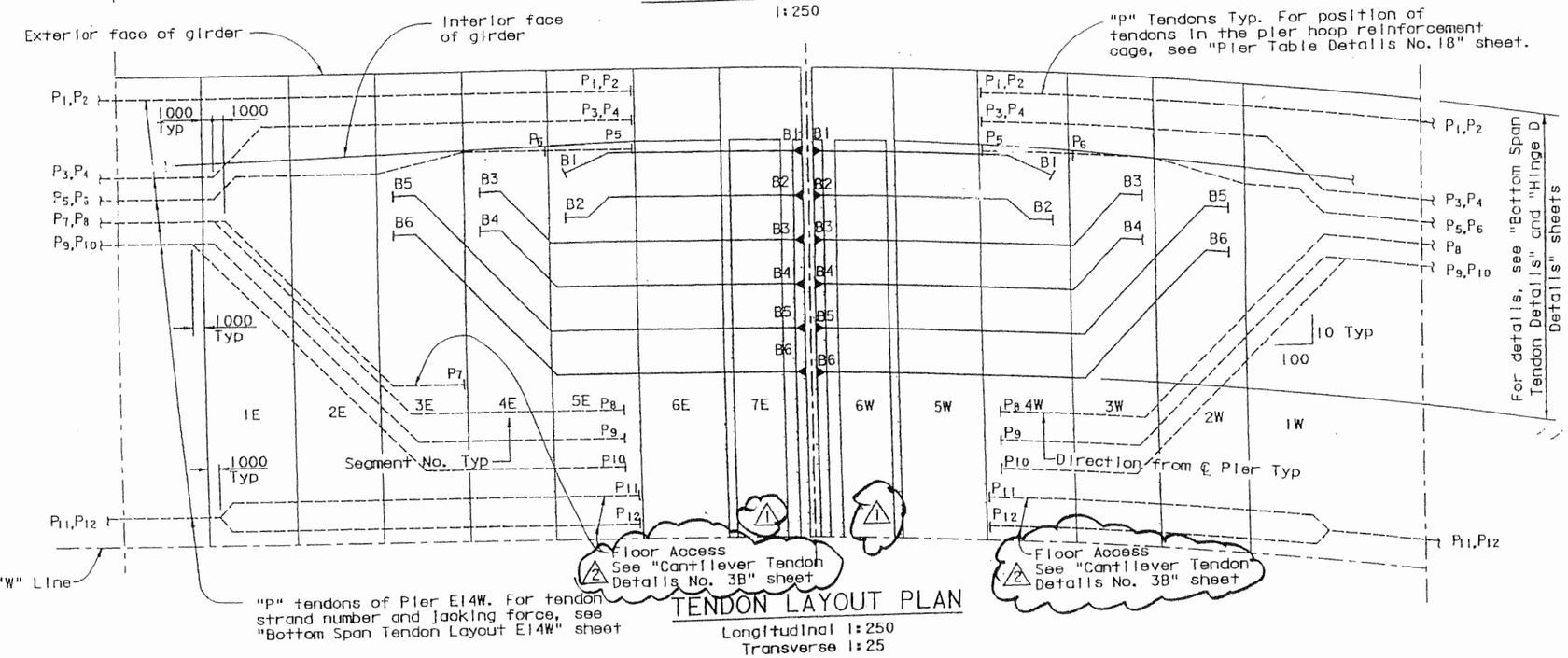

TENDON LAYOUT PLAN

Longitudinal 1:250
Transverse 1:25

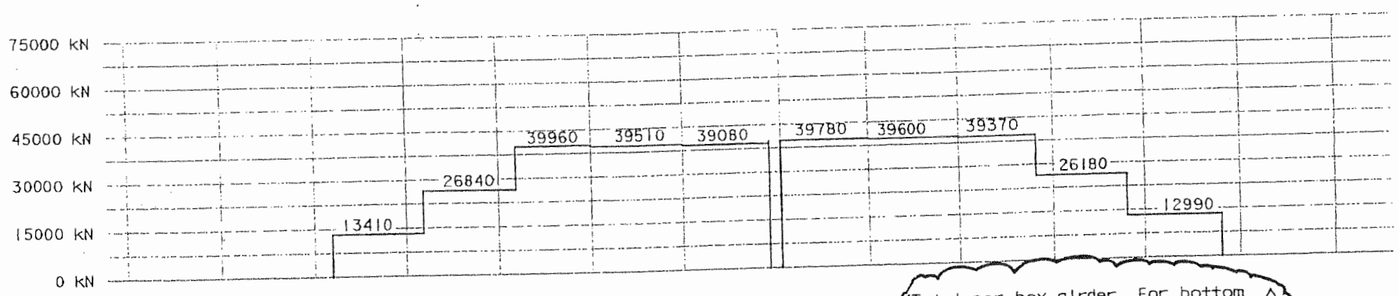

FORCE DIAGRAM (Total per box girder. For bottom span tendons Type B only)

ALL DIMENSIONS ARE IN MILLIMETERS UNLESS OTHERWISE SHOWN

Metric

04 | SF, Alal 30 | 0.0/1.6

REGISTERED ENGINEER - CIVIL

6-4-01

PLANS APPROVAL DATE

REGISTERED PROFESSIONAL ENGINEER Stu Fu John Chan No. C 39457 Exp. 12/31/05 CIVIL STATE OF CALIFORNIA

The State of California or its officers or agents shall not be responsible for the accuracy or completeness of electronic copies of this plan sheet.

T.Y. LIN / MOFFATT & NICHOL
825 BATTERY STREET
SAN FRANCISCO, CA 94111

Caltrans now has a web site! To get to the web site, go to: http://www.dot.ca.gov

BOTTOM SPAN TENDONS (*per box girder)

Tendon	No. of tendons* x No. of strands (15 Dia)	Jacking Force per Tendon kN
E15W1 B 1	2 x 19	3705
E15W1 B 2	2 x 19	3705
E15W1 B 3	2 x 19	3705
E15W1 B 4	2 x 19	3705
E15W1 B 5	2 x 19	3705
E15W1 B 6	2 x 19	3705
E15W2 B 1	2 x 19	3705
E15W2 B 2	2 x 19	3705
E15W2 B 3	2 x 19	3705
E15W2 B 4	2 x 19	3705
E15W2 B 5	2 x 19	3705
E15W2 B 6	2 x 19	3705
3 E15W2 P_{1-4}	8 x 12 (1)	See note 6
1 E15W2 $P_{5,6}$	4 x 12	1400
E15W2 P_{8-10}	6 x 12	1400
3 E15W2 P_{11-12}	4 x 12 (1)	See note 6

NOTES:

1. Tendons are symmetrical with respect to "W" Line.
2. Anchorage symbols are as follows:
   - ├── Jacking end
   - ►── Dead end
3. The force diagram shows forces which only account for losses due to friction, anchor set and elastic shortening.
4. Key to tendon nomenclature:
   - E15W1 B 1
   - Span No. — E15W1
   - Tendon type — B
   - Tendon mark — 1
5. For "P" tendon details, see "Cantilever Tendon Details" sheets.
6. 3 (1) No stressing and anchorage required for tendons P1-4 & P11-12. Tendons shall be preassembled units and installed by pulling through duct and then grouted.

MARK	DATE	DESCRIPTIONS	BY	CH'D
45	3 08/01/03	ELIMINATE STRESSING AND ANCHORAGE REQUIREMENT FOR NOTED TENDONS	MR	JC
CCO		REVISIONS		

CONTRACT CHANGE ORDER NO. 45

SHEET 14 OF 34

100 % PS&E

SAN FRANCISCO OAKLAND BAY BRIDGE
EAST SPAN SEISMIC SAFETY PROJECT

SKYWAY STRUCTURES

BOTTOM SPAN TENDON LAYOUT E15W

DESIGN OVERSIGHT 8/15/03

SIGN OFF DATE

MARK	DATE	DESCRIPTION	BY	CH'D
2	03/05/03	ADD FLOOR ACCESS DETAIL CCO 43	JC	MS
1	10/07/02	SHOW AND EXTEND "P" TENDONS CCO 7	JC	MS

DESIGN BY J. Chan CHECKED H. Lund
DETAILS BY E. Zharkov CHECKED H. Lund
QUANTITIES BY K. Cormier CHECKED J. Chan

PREPARED FOR THE STATE OF CALIFORNIA DEPARTMENT OF TRANSPORTATION

Sajid Abbas
PROJECT ENGINEER

BRIDGE NO. 34-0006L/R
KILOMETER POST 13.9/14.3, 0.0/1.6

CU 02
EA 01202

ORIGINAL SCALE IN MILLIMETERS FOR REDUCED PLAN

DISREGARD PRINTS BEARING EARLIER REVISION DATES

REVISION DATES (PRELIMINARY STAGE ONLY) 02/15/00 06/07/00 11/27/00 02/14/01 02/26/01 07/25/02 10/07/02 01/27/03 03/05/03 08/01/03

SHEET 203 OF

STL-003082 11/24/03

DIST.	COUNTY	ROUTE	KILOMETER POST TOTAL PROJECT	SHEET NO.	TOTAL SHEETS
04	SF, Ala	30	3.9/14.3, 0.0/1.6	636R3	978

Caltrans Metric

REGISTERED ENGINEER - CIVIL

6-4-01
PLANS APPROVAL DATE

Registered Professional Engineer — Shu Fu John Chen, No. C 39457, Exp. 12/31/05, CIVIL, State of California

The State of California or its officers or agents shall not be responsible for the accuracy or completeness of electronic copies of this plan sheet.

T.Y. LIN / MOFFATT & NICHOL
825 BATTERY STREET
SAN FRANCISCO, CA 94111

Caltrans now has a web site! To get to the web site, go to: http://www.dot.ca.gov

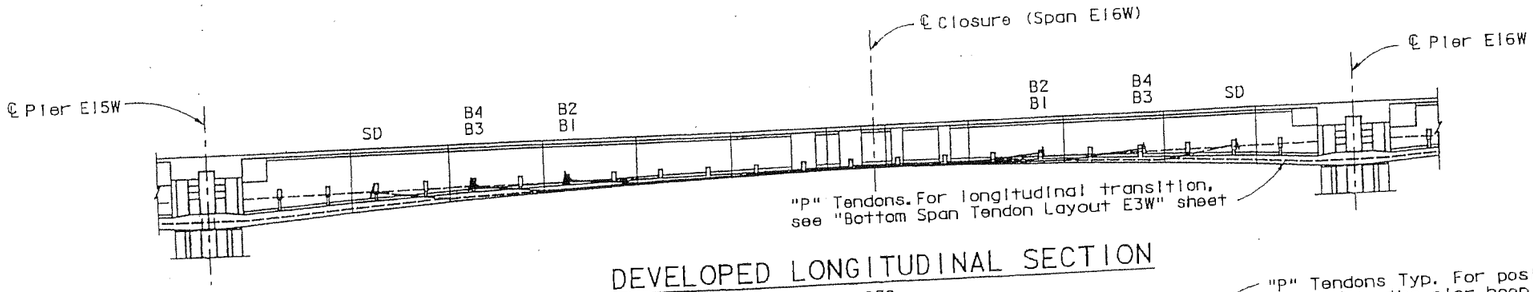

DEVELOPED LONGITUDINAL SECTION

1:250

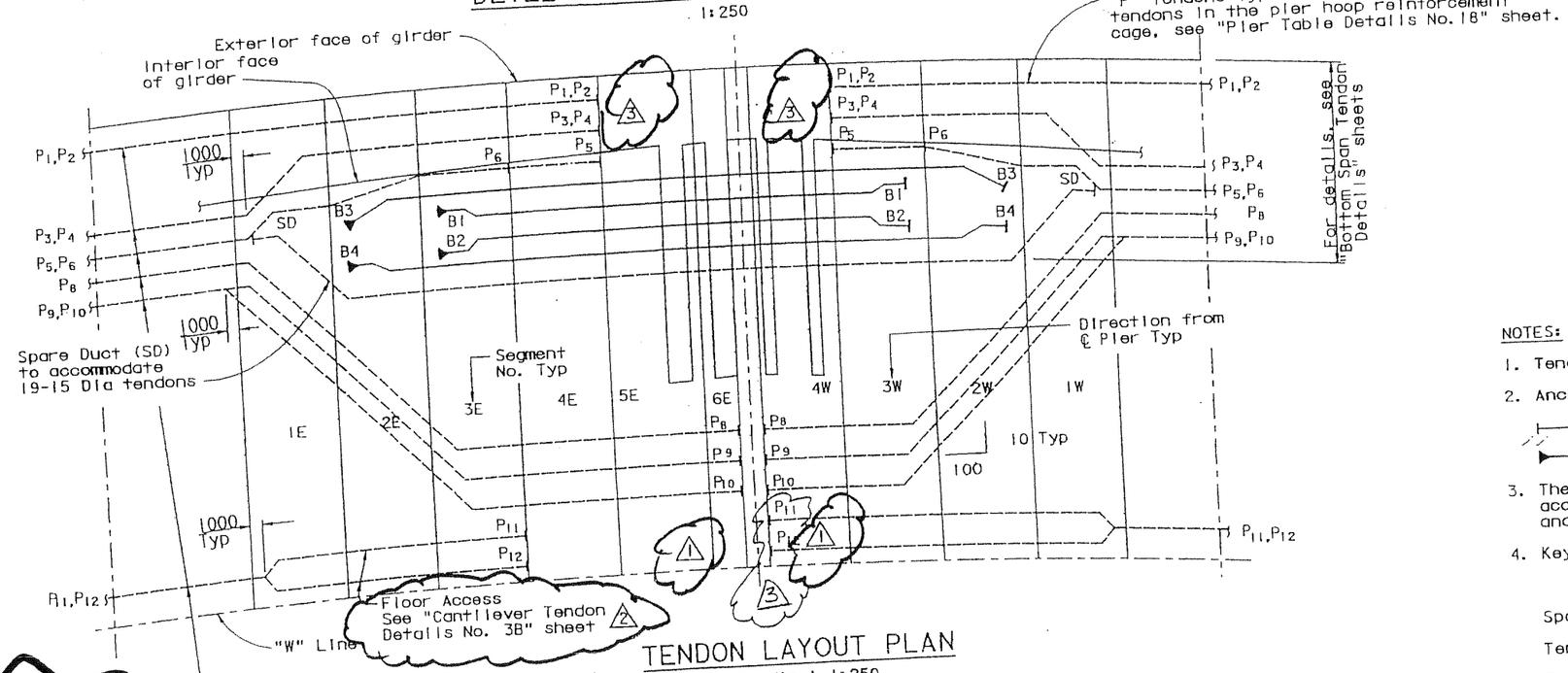

TENDON LAYOUT PLAN

Longitudinal 1:250
Transverse 1:25

BOTTOM SPAN TENDONS (*per box girder)

Tendon	No. of tendons* × No. of strands (15 Dia)	Jacking Force per Tendon kN
E16W B 1	2 × 19	3705
E16W B 2	2 × 19	3705
E16W B 3	2 × 19	3705
E16W B 4	2 × 19	3705
4 E16W P1-4	8 × 12	1 See note 6
1 E16W P5,6	4 × 12	1400
E16W P8-10	6 × 12	1400
4 E16W P11-12	4 × 12	1 See note 6

NOTES:

1. Tendons are symmetrical with respect to "W" Line.
2. Anchorage symbols are as follows:
   - Jacking end
   - Dead end
3. The force diagram shows forces which only account for losses due to friction, anchor set and elastic shortening.
4. Key to tendon nomenclature:
   - E16W — Span No.
   - B — Tendon type
   - Tendon mark
5. For "P" Tendon details, see "Cantilever Tendon Details" sheets.
6. 4 1 No stressing and anchorage required for tendons P1-4 & P11-12. Tendons shall be preassembled units and installed by pulling through duct and then grouted.

Mission Control Redline

Numerous Tendon profile and deviations changes, (see KFM letter 717). See approved composite drawings for revisions. See PT elongation submittals for revisions to stressing ends.

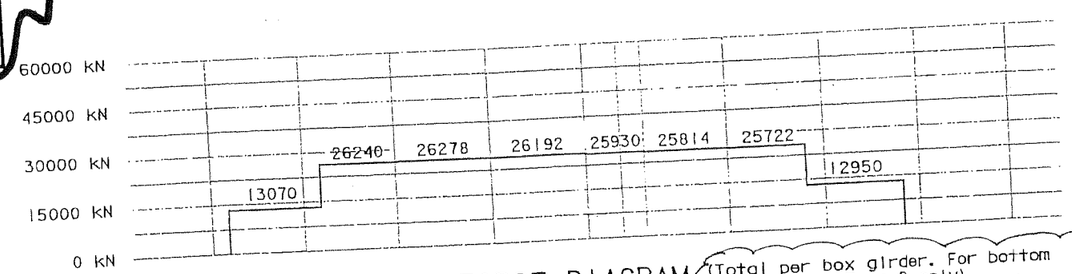

FORCE DIAGRAM

(Total per box girder. For bottom span tendons Type B only) 1

MARK	DATE	DESCRIPTIONS	BY	CH'D
45	4 08/01/03	ELIMINATE STRESSING AND ANCHORAGE REQUIREMENT FOR NOTED TENDONS	MR	JC
CCO		REVISIONS		

CONTRACT CHANGE ORDER NO. 45
SHEET 15 OF 34

100 % PS&E

STL-003082 11/24/03

ALL DIMENSIONS ARE IN MILLIMETERS UNLESS OTHERWISE SHOWN

MARK	DATE	DESCRIPTION	BY	CH'D
4	03/05/03	REVISE "P" TENDON ANCHOR LOCATIONS	JC	MS
2	03/05/03	ADD FLOOR ACCESS DETAIL	JC	MS
1	10/07/02	SHOW AND EXTEND "P" TENDONS	JC	MS

DESIGN: J. Chan — CHECKED: K. Lund
DETAILS: E. Zharkov — CHECKED: K. Lund
QUANTITIES: K. Cormier — CHECKED: J. Chan

PREPARED FOR THE STATE OF CALIFORNIA DEPARTMENT OF TRANSPORTATION

Sajid Abbas
PROJECT ENGINEER

BRIDGE NO. 34-0006L/R
KILOMETER POST 3.9/14.3, 0.0/1.6

SAN FRANCISCO OAKLAND BAY BRIDGE
EAST SPAN SEISMIC SAFETY PROJECT

SKYWAY STRUCTURES

BOTTOM SPAN TENDON LAYOUT E16W

DESIGN OVERSIGHT: 8/15/02

ORIGINAL SCALE IN MILLIMETERS ON REDUCED PLANS

CU 04
EA 01202

DISREGARD PRINTS BEARING EARLIER REVISION DATES:

REVISION DATES (PRELIMINARY STAGE ONLY): 01/25/99 02/25/00 06/06/00 11/17/00 02/06/01 01/25/02 10/07/02 01/27/03 01/29/03 08/01/03

SHEET 204

04	SF, A1a	80	13.9/14.3, 0.0/1.6	637R2	978

REGISTERED ENGINEER - CIVIL

6-4-01
PLANS APPROVAL DATE

REGISTERED PROFESSIONAL ENGINEER Siu Fu John Chan No. C 39457 Exp. 12/31/05 CIVIL STATE OF CALIFORNIA

The State of California or its officers or agents shall not be responsible for the accuracy or completeness of electronic copies of this plan sheet.

T.Y. LIN / MOFFATT & NICHOL
825 BATTERY STREET
SAN FRANCISCO, CA 94111

Caltrans now has a web site! To get to the web site, go to: http://www.dot.ca.gov

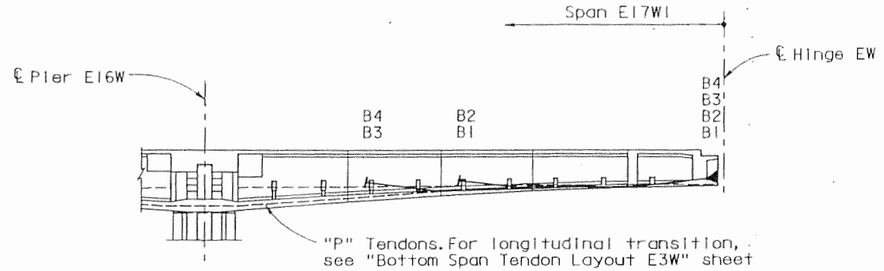

DEVELOPED LONGITUDINAL SECTION

1:250

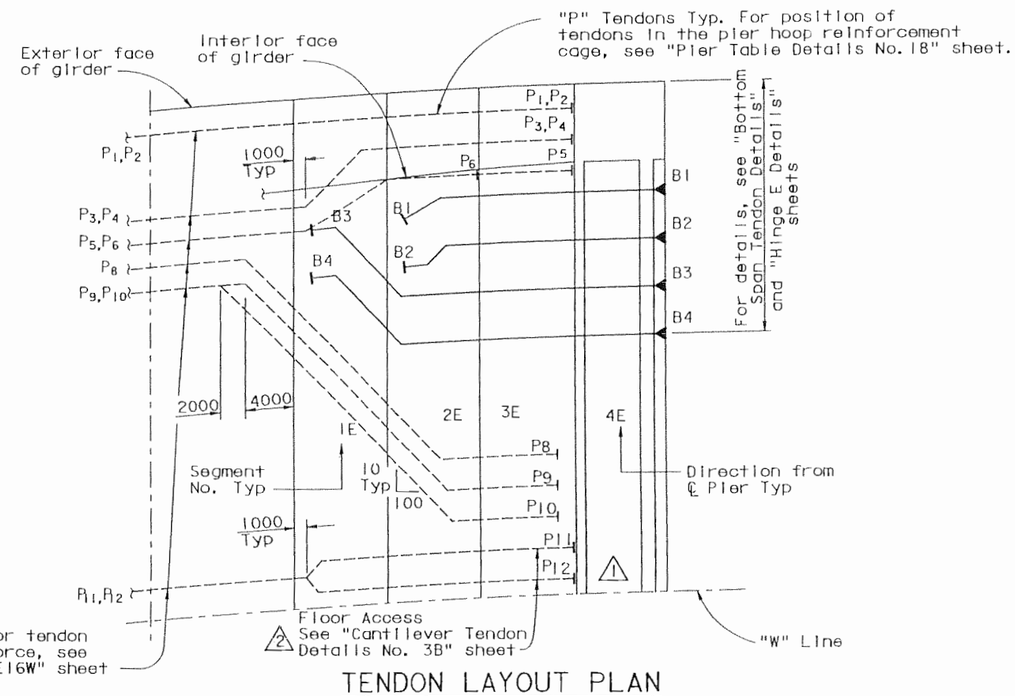

TENDON LAYOUT PLAN

Longitudinal 1:250
Transverse 1:25

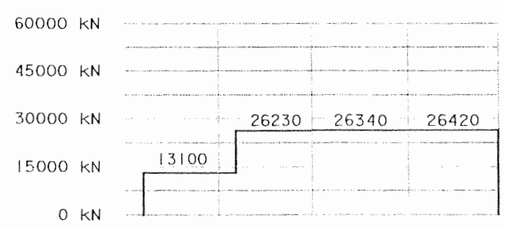

FORCE DIAGRAM

(Total per box girder. For bottom span tendons Type B only) △1

ALL DIMENSIONS ARE IN MILLIMETERS UNLESS OTHERWISE SHOWN

BOTTOM SPAN TENDONS (*per box girder)

Tendon	No. of tendons* x No. of strands (15 Dia)	Jacking Force per Tendon kN
E17W1 B 1	2 x 19	3705
E17W1 B 2	2 x 19	3705
E17W1 B 3	2 x 19	3705
E17W1 B 4	2 x 19	3705

NOTES:

1. Tendons are symmetrical with respect to "W" Line.
2. Anchorage symbols are as follows:
   - |—— Jacking end
   - ▶—— Dead end
3. The force diagram shows forces which only account for losses due to friction, anchor set and elastic shortening.
4. Key to tendon nomenclature:
   - E17W1 B 1
   - Span No. — E17W1
   - Tendon type — B
   - Tendon mark — 1
5. For "P" tendon details, see "Cantilever Tendon Details" sheets.

MARK	DATE	DESCRIPTIONS	BY	CH'D
△2	03/05/03	ADD FLOOR ACCESS DETAIL	JC	MS
△1	10/07/02	SHOW AND EXTEND "P" TENDONS	JC	MS

REVISIONS

CONTRACT CHANGE ORDER NO. 45
SHEET 16 OF 34

100% PS&E

DESIGN OVERSIGHT 3/5/03
SIGN OFF DATE

Rev. Date: 5-16-98

	BY	CHECKED
DESIGN	J. Chan	H. Lund
DETAILS	D. Leung	H. Lund
QUANTITIES	K. Cormier	J. Chan

PREPARED FOR THE STATE OF CALIFORNIA DEPARTMENT OF TRANSPORTATION

Sajid Abbas
PROJECT ENGINEER

BRIDGE NO. 34-0006L/R
KILOMETER POST 13.9/14.3, 0.0/1.6

SAN FRANCISCO OAKLAND BAY BRIDGE
EAST SPAN SEISMIC SAFETY PROJECT

SKYWAY STRUCTURES

BOTTOM SPAN TENDON LAYOUT E17W

ORIGINAL SCALE IN MILLIMETERS FOR REDUCED PLANS 0 10 20 30 40 50 60 70 80 90 100

CU 04
EA 012021

DISREGARD PRINTS BEARING EARLIER REVISION DATES

REVISION DATES (PRELIMINARY STAGE ONLY) 01/25/99 02/25/00 08/28/00 11/27/00 02/28/01 02/28/01 03/28/01 10/28/02 03/05/03

SHEET 205 OF

USERNAME => H11 DATE PLOTTED => 03/05/2003 TIME PLOTTED => 10:56:48 AM

DIST.	COUNTY	ROUTE	KILOMETER POST TOTAL PROJECT	SHEET NO.	TOTAL SHEETS
04	SF, Ala	80	13.9/14.3, 0.0/1.6	638R2	978

Caltrans Metric

Sin Fu Chan
REGISTERED ENGINEER - CIVIL

6-4-01
PLANS APPROVAL DATE

REGISTERED PROFESSIONAL ENGINEER Sin Fu John Chan No. C 39457 Exp. 12/31/05 CIVIL STATE OF CALIFORNIA

The State of California or its officers or agents shall not be responsible for the accuracy or completeness of electronic copies of this plan sheet.

T.Y. LIN / MOFFATT & NICHOL
825 BATTERY STREET
SAN FRANCISCO, CA 94111

Caltrans now has a web site! To get to the web site, go to: http://www.dot.ca.gov

Mission Control Redline

Numerous Tendon profile and deviations changes, (see KFM letter 717). See approved composite drawings for revisions. See PT elongation submittals for revisions to stressing ends.

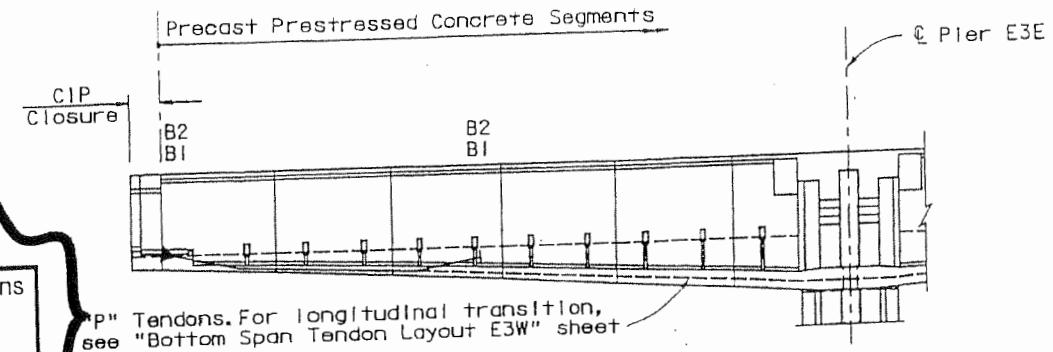

DEVELOPED LONGITUDINAL SECTION

1:250

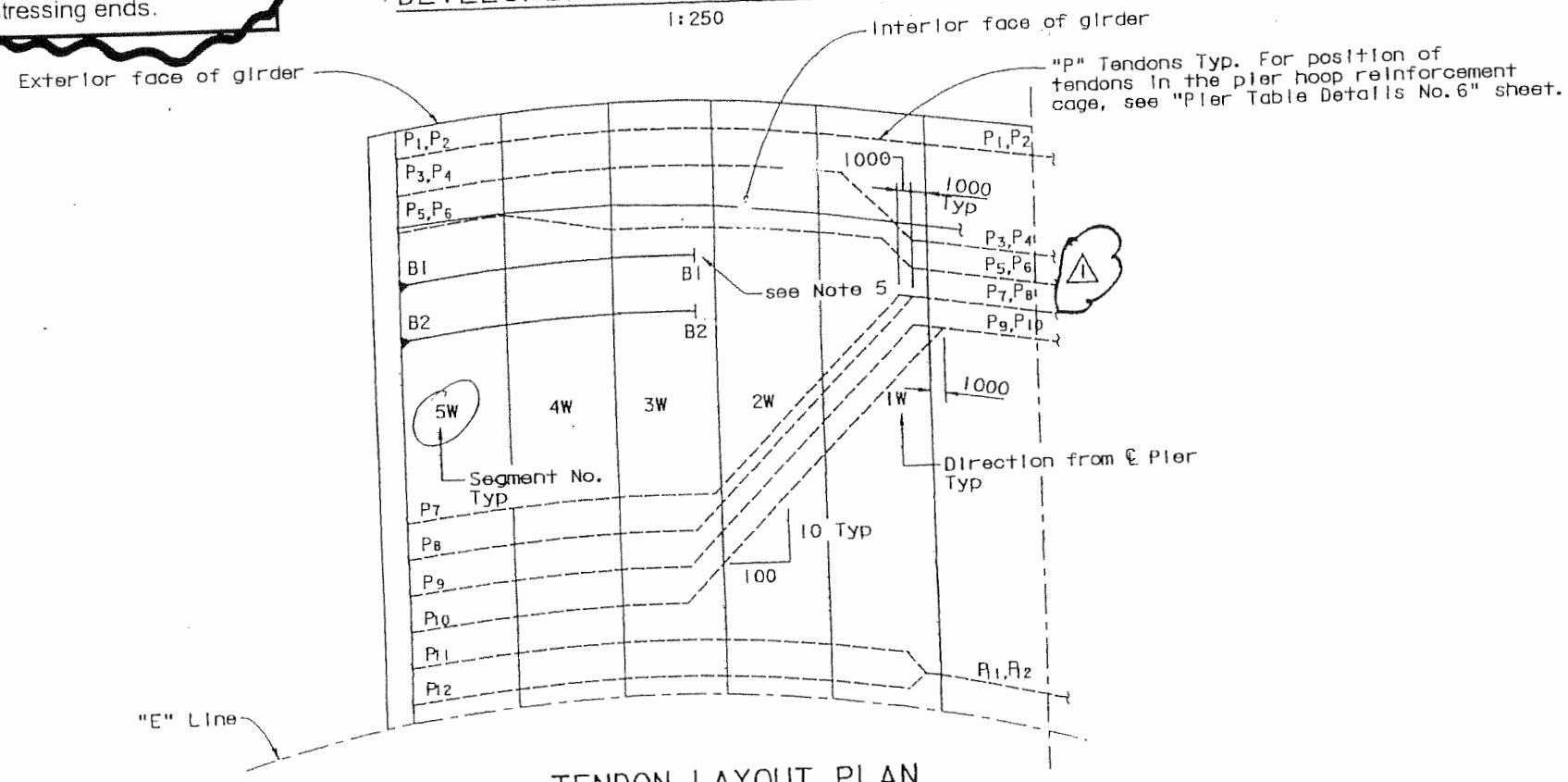

TENDON LAYOUT PLAN

Longitudinal 1:250
Transverse 1:25

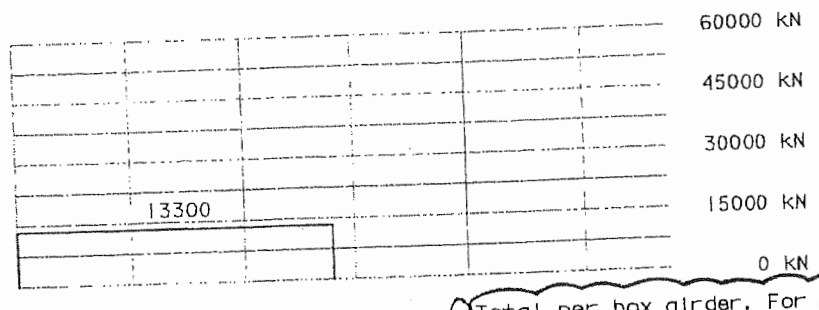

FORCE DIAGRAM

(Total per box girder. For bottom span tendons Type B only)

BOTTOM SPAN TENDONS (*per box girder)

Tendon	No. of tendons* x No. of strands (15 Dia)	Jacking Force per Tendon kN
E3E B 1	2 x 19	3705
E3E B 2	2 x 19	3705
E3E P1-4	8 x 12	See note 7
E3E P5-10	12 x 12	1400
E3E P11-12	4 x 12	See note 7
E3E P13-16	8 x 12	1400

NOTES:

1. Tendons are symmetrical with respect to "E" Line.
2. Anchorage symbols are as follows:
   - |—— Jacking end
   - ▶—— Dead end
3. The force diagram shows forces which only account for losses due to friction, anchor set and elastic shortening.
4. Key to tendon nomenclature:
   - E3E — Span No.
   - B — Tendon type
   - 1 — Tendon mark
5. For details, see "Bottom Span Tendon Details" sheet.
6. For "P" tendon details, see "Cantilever Tendon Details" sheets.
7. No stressing and anchorage required for tendons P1-4 & P11-12. Tendons shall be preassembled units and installed by pulling through duct and then grouted.

MARK	DATE	DESCRIPTIONS	BY	CH'D
45	08/01/03	ELIMINATE STRESSING AND ANCHORAGE REQUIREMENT FOR NOTED TENDONS	MR	JC
CCO		REVISIONS		

CONTRACT CHANGE ORDER NO. 45
SHEET 17 OF 34

100% PS&E

STL-003082 11/24/03

ALL DIMENSIONS ARE IN MILLIMETERS UNLESS OTHERWISE SHOWN

PREPARED FOR THE STATE OF CALIFORNIA DEPARTMENT OF TRANSPORTATION

Sajid Abbas
PROJECT ENGINEER

BRIDGE NO. 34-0006L/R
KILOMETER POST 13.9/14.3, 0.0/1.6

SAN FRANCISCO OAKLAND BAY BRIDGE
EAST SPAN SEISMIC SAFETY PROJECT

SKYWAY STRUCTURES

BOTTOM SPAN TENDON LAYOUT E3E

SHEET 206

DESIGN OVERSIGHT 8/15/03

MARK	DATE	DESCRIPTION	BY	CH'D
A	10/07/02	SHOW AND EXTEND "DW" TENDONS	JC	MS

DESIGN: J. Chan — CHECKED: H. Lund
DETAIL: E. Znarko — CHECKED: H. Lund
QUANTITIES: K. Cormier — CHECKED: J. Chan

CU 0
EA 012021

DISREGARD PRINTS BEARING EARLIER REVISION DATES

REVISION DATES (PRELIMINARY STAGE ONLY): 01/25/99 | 02/15/00 | 06/09/00 | 11/17/00 | 02/26/01 | 02/26/01 | 01/15/02 | 10/07/02 | 08/01/03

ORIGINAL SCALE IN MILLIMETERS FOR PLOTTER PLAN: 0 10 20 30 40 50 60 70 80 90 100

DIST.	COUNTY	ROUTE	KILOMETER POST TOTAL PROJECT	SHEET NO.	TOTAL SHEETS
04	SF, Ala	30	13.3/14.3, 0.0/1.6	639R3	978

Caltrans Metric

REGISTERED ENGINEER - CIVIL

6-4-01
PLANS APPROVAL DATE

REGISTERED PROFESSIONAL ENGINEER Siu Fu John Chan No. C 39457 Exp. 12/31/05 CIVIL STATE OF CALIFORNIA

The State of California or its officers or agents shall not be responsible for the accuracy or completeness of electronic copies of this plan sheet.

T.Y. LIN / MOFFATT & NICHOL
825 BATTERY STREET
SAN FRANCISCO, CA 94111

Caltrans now has a web site! To get to the web site, go to: http://www.dot.ca.gov

Mission Control Redline

Numerous Tendon profile and deviations changes, (see KFM letter 717). See approved composite drawings for revisions. See PT elongation submittals for revisions to stressing ends.

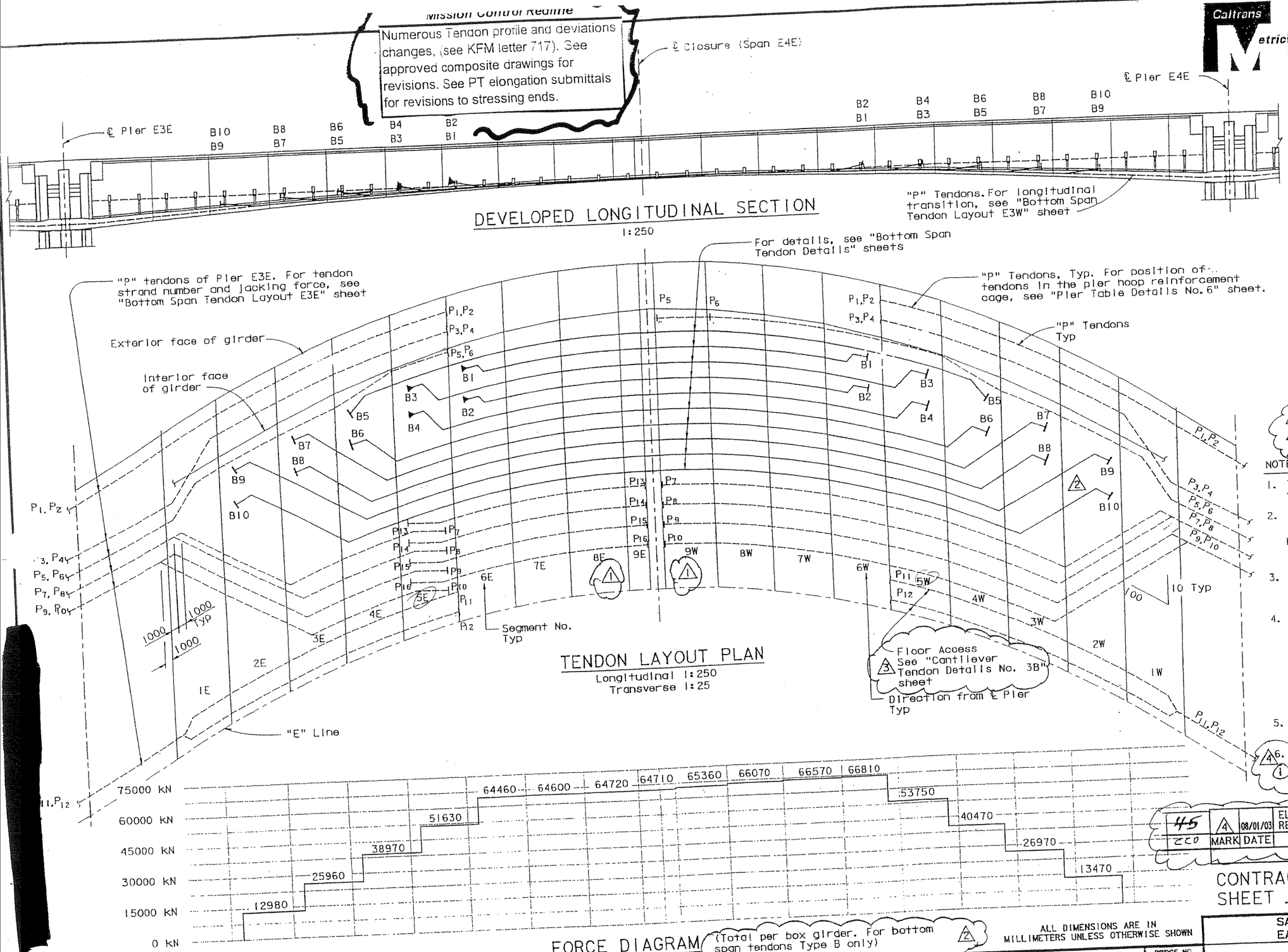

BOTTOM SPAN TENDONS (*per box girder)

Tendon	No. of tendons* x No. of strands (15 Dia)	Jacking Force per Tendon kN
E4E B 1	2 x 19	3705
E4E B 2	2 x 19	3705
E4E B 3	2 x 19	3705
E4E B 4	2 x 19	3705
E4E B 5	2 x 19	3705
E4E B 6	2 x 19	3705
E4E B 7	2 x 19	3705
E4E B 8	2 x 19	3705
E4E B 9	2 x 19	3705
E4E B 10	2 x 19	3705
4 E4E P1-4	8 x 12 (1)	See note 6
1 E4E P5-10	12 x 12	1400
4 E4E P11-12	4 x 12 (1)	See note 6

NOTES:

1. Tendons are symmetrical with respect to "E" Line.
2. Anchorage symbols are as follows:
   - Jacking end
   - Dead end
3. The force diagram shows forces which only account for losses due to friction, anchor set and elastic shortening.
4. Key to tendon nomenclature:
   - E4E — Span No.
   - B — Tendon type
   - 1 — Tendon mark
5. For "P" Tendon details, see "Cantilever Tendon Details" sheets.
6. No stressing and anchorage required for tendons P1-4 & P11-12. Tendons shall be preassembled units and installed by pulling through duct and then grouted.

MARK	DATE	DESCRIPTIONS	BY	CH'D
45	08/01/03	ELIMINATE STRESSING AND ANCHORAGE REQUIREMENT FOR NOTED TENDONS	MR	JC

REVISIONS

CONTRACT CHANGE ORDER NO. 45
SHEET 18 OF 34

100 % PS&E

STL-003082 11/24/03

MARK	DATE	DESCRIPTION	BY	CH'D
3	03/05/03	ADD FLOOR ACCESS DETAIL	JC	MS
2	10/07/02	EXTEND BOTTOM SPAN TENDONS	JC	MS
1	10/07/02	SHORTEN AND EXTEND POW TENDONS	JC	MS

DESIGN OVERSIGHT: 8/15/03

DESIGN BY J. Chan CHECKED R. Lund
DETAILS BY E. Zharkov CHECKED R. Lund
QUANTITIES BY L. Cormier CHECKED J. Chan

PREPARED FOR THE STATE OF CALIFORNIA DEPARTMENT OF TRANSPORTATION

ALL DIMENSIONS ARE IN MILLIMETERS UNLESS OTHERWISE SHOWN

Sajid Abbas
PROJECT ENGINEER

BRIDGE NO. 34-0006L/R
KILOMETER POST 13.9/14.3, 0.0/1.6

SAN FRANCISCO OAKLAND BAY BRIDGE
EAST SPAN SEISMIC SAFETY PROJECT

SKYWAY STRUCTURES

BOTTOM SPAN TENDON LAYOUT E4E

CU 04
EA 012021

DISREGARD PRINTS BEARING EARLIER REVISION DATES

REVISION DATES (PRELIMINARY STAGE ONLY) 07/25/95 02/27/01 06/28/01 11/27/01 02/06/01 07/25/02 10/07/02 03/05/03 08/01/03

SHEET 207 OF

ORIGINAL SCALE IN MILLIMETERS FOR REDUCED PLANS 0 10 20 30 40 50 60 70 80 90 100

TIME PLOTTED: 11:03:47.06 BY

DIST.	COUNTY	ROUTE	KILOMETER POST TOTAL PROJECT	SHEET NO.	TOTAL SHEETS
04	SF, Alal	30	13.9/14.3, 0.0/1.5	640R3	978

Caltrans Metric

Mission Control Redline

Numerous Tendon profile and deviations changes. (see KFM letter 717). See approved composite drawings for revisions. See PT elongation submittals for revisions to stressing ends.

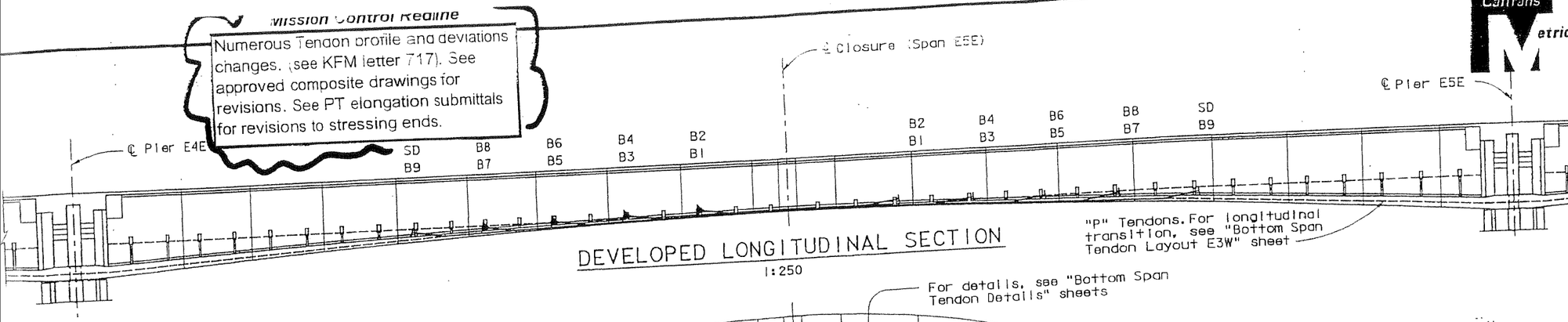

DEVELOPED LONGITUDINAL SECTION

1:250

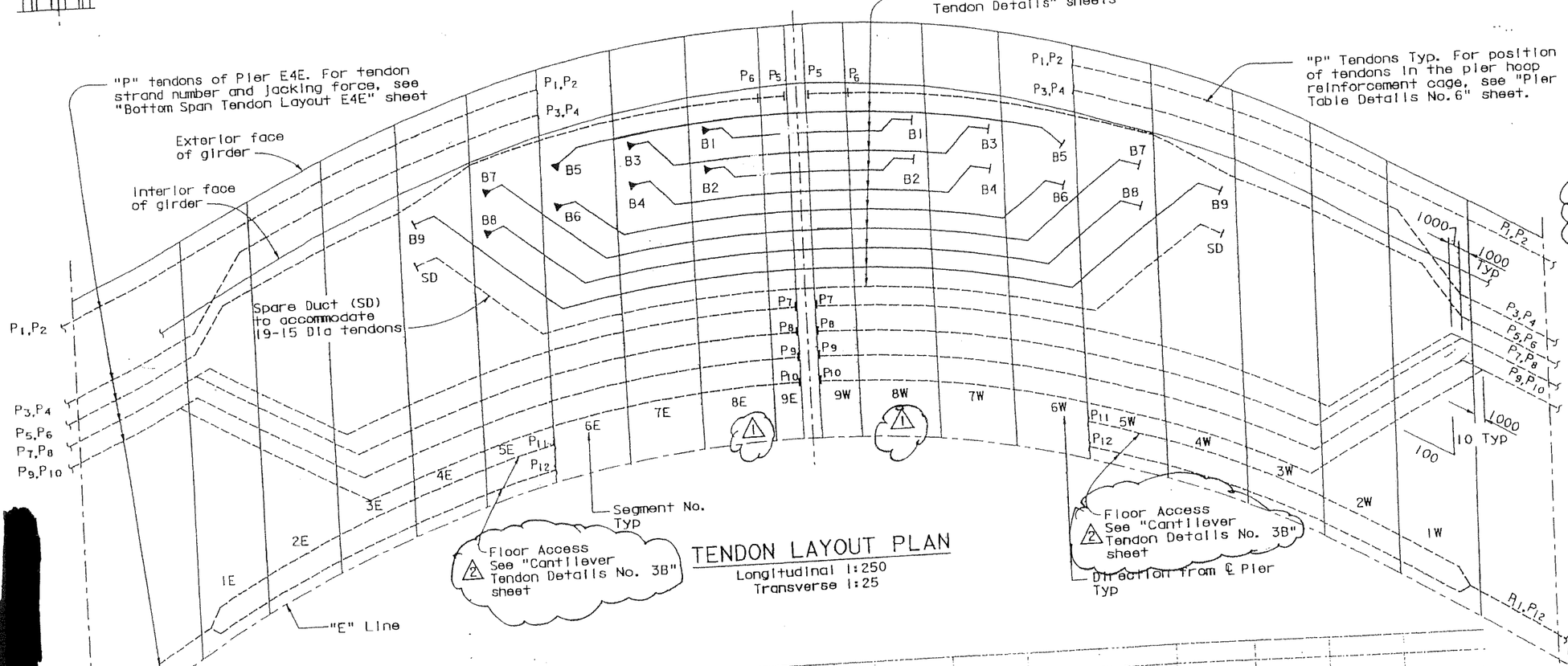

TENDON LAYOUT PLAN

Longitudinal 1:250
Transverse 1:25

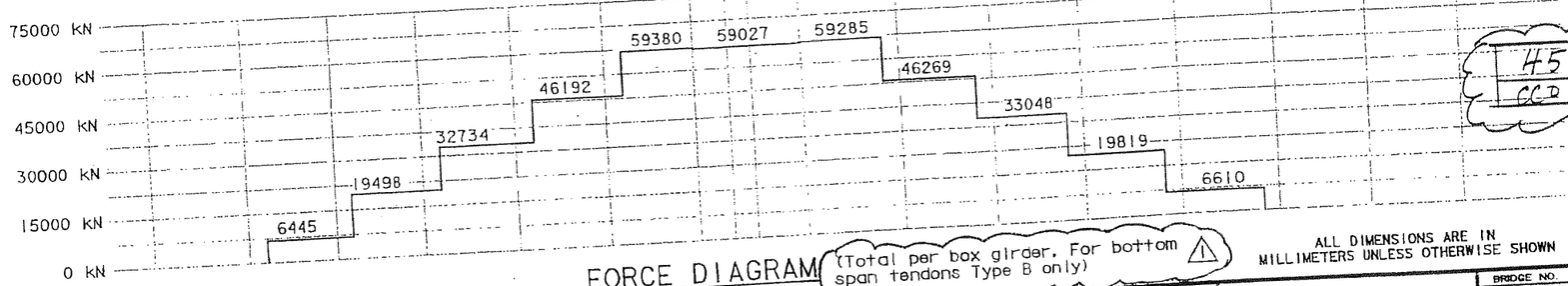

FORCE DIAGRAM (Total per box girder. For bottom span tendons Type B only)

BOTTOM SPAN TENDONS (*per box girder)

Tendon	No. of tendons* x No. of strands (15 Dia)	Jacking Force per Tendon kN
E5E B 1	2 x 19	3705
E5E B 2	2 x 19	3705
E5E B 3	2 x 19	3705
E5E B 4	2 x 19	3705
E5E B 5	2 x 19	3705
E5E B 6	2 x 19	3705
E5E B 7	2 x 19	3705
E5E B 8	2 x 19	3705
E5E B 9	2 x 19	3705
3 E5E P1-4	8 x 12 (1)	See note 6
1 E5E P5-10	12 x 12	1400
3 E5E P11-12	4 x 12 (1)	See note 6

NOTES:

1. Tendons are symmetrical with respect to "E" Line.
2. Anchorage symbols are as follows:
   - ├── Jacking end
   - ►── Dead end
3. The force diagram shows forces which only account for losses due to friction, anchor set and elastic shortening.
4. Key to tendon nomenclature:
   - E5E B 1
   - Span No. — E5E
   - Tendon type — B
   - Tendon mark — 1
5. For "P" Tendon details, see "Cantilever Tendon Details" sheets.
6. (3) (1) No stressing and anchorage required for tendons P1-4 & P11-12. Tendons shall be preassembled units and installed by pulling through duct and then grouted.

Sin Fu Chan
REGISTERED ENGINEER - CIVIL
6-4-01
PLANS APPROVAL DATE

REGISTERED PROFESSIONAL ENGINEER Siu Fu John Chan No. C 39457 Exp. 12/31/05 CIVIL STATE OF CALIFORNIA

The State of California or its officers or agents shall not be responsible for the accuracy or completeness of electronic copies of this plan sheet.

T.Y. LIN / MOFFATT & NICHOL
825 BATTERY STREET
SAN FRANCISCO, CA 94111

Caltrans now has a web site! To get to the web site, go to: http://www.dot.ca.gov

MARK	DATE	DESCRIPTIONS	BY	CH'D
45 (CCD)	3 08/01/03	ELIMINATE STRESSING AND ANCHORAGE REQUIREMENT FOR NOTED TENDONS	MR	JC

REVISIONS

CONTRACT CHANGE ORDER NO. 45
SHEET 19 OF 34

100 % P S&E

STL-003082 11/24/03

ALL DIMENSIONS ARE IN MILLIMETERS UNLESS OTHERWISE SHOWN

PREPARED FOR THE STATE OF CALIFORNIA DEPARTMENT OF TRANSPORTATION

Sajid Abbas
PROJECT ENGINEER

BRIDGE NO. 34-0006L/R
KILOMETER POST 13.9/14.3, 0.0/1.5

SAN FRANCISCO OAKLAND BAY BRIDGE
EAST SPAN SEISMIC SAFETY PROJECT

SKYWAY STRUCTURES

BOTTOM SPAN TENDON LAYOUT E5E

	BY	CHECKED
DESIGN	J. Chan	H. Lund
DETAILS	E. Znarkov	H. Lund
QUANTITIES	R. Cormier	J. Chan

DESIGN OVERSIGHT

DATE	DESCRIPTION	BY	CH'D
3 03/05/03	ADD FLOOR ACCESS DETAIL CCD 45	JC	MS
1 10/07/02	SHOW AND EXTEND PIER TENDONS CCD —	JC	MS

ORIGINAL SCALE IN MILLIMETERS FOR REDUCED PLANS

DISREGARD PRINTS BEARING EARLIER REVISION DATES

REVISION DATES (PRELIMINARY STAGE ONLY) 07/25/02 02/28/02 06/06/02 11/27/02 02/04/03 01/24/02 10/07/02 03/05/03 08/01/03

CU 04
EA 01202

SHEET 206 OF

Mission Control Redline

Numerous Tendon profile and deviations changes. (see KFM letter 717). See approved composite drawings for revisions. See PT elongation submittals for revisions to stressing ends.

DIST.	COUNTY	ROUTE	KILOMETER POST TOTAL	KILOMETER POST PROJECT	SHEET NO.	TOTAL SHEETS
04	SF, Ala	30	13.9/14.3,	0.0/1.6	641R3	978

REGISTERED ENGINEER - CIVIL

6-4-01
PLANS APPROVAL DATE

REGISTERED PROFESSIONAL ENGINEER Stu Fu John Chan No. C 39457 Exp. 12/31/05 CIVIL STATE OF CALIFORNIA

The State of California or its officers or agents shall not be responsible for the accuracy or completeness of electronic copies of this plan sheet.

T.Y. LIN / MOFFATT & NICHOL
825 BATTERY STREET
SAN FRANCISCO, CA 94111

Caltrans now has a web site! To get to the web site, go to: http://www.dot.ca.gov

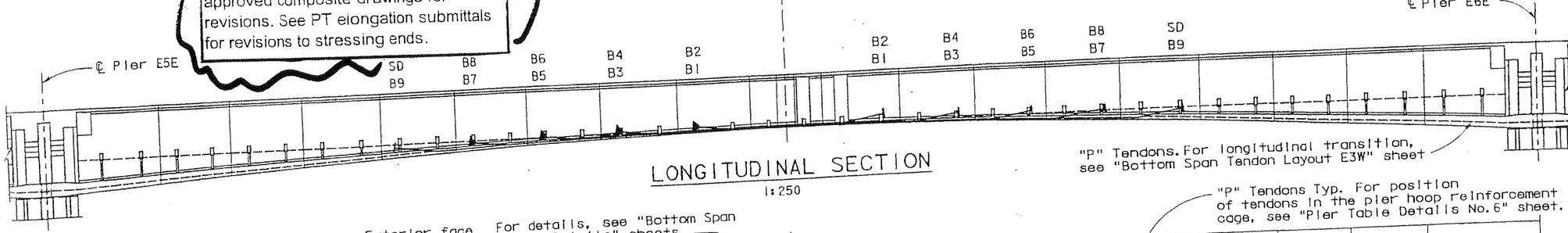

LONGITUDINAL SECTION
1:250

"P" Tendons. For longitudinal transition, see "Bottom Span Tendon Layout E3W" sheet

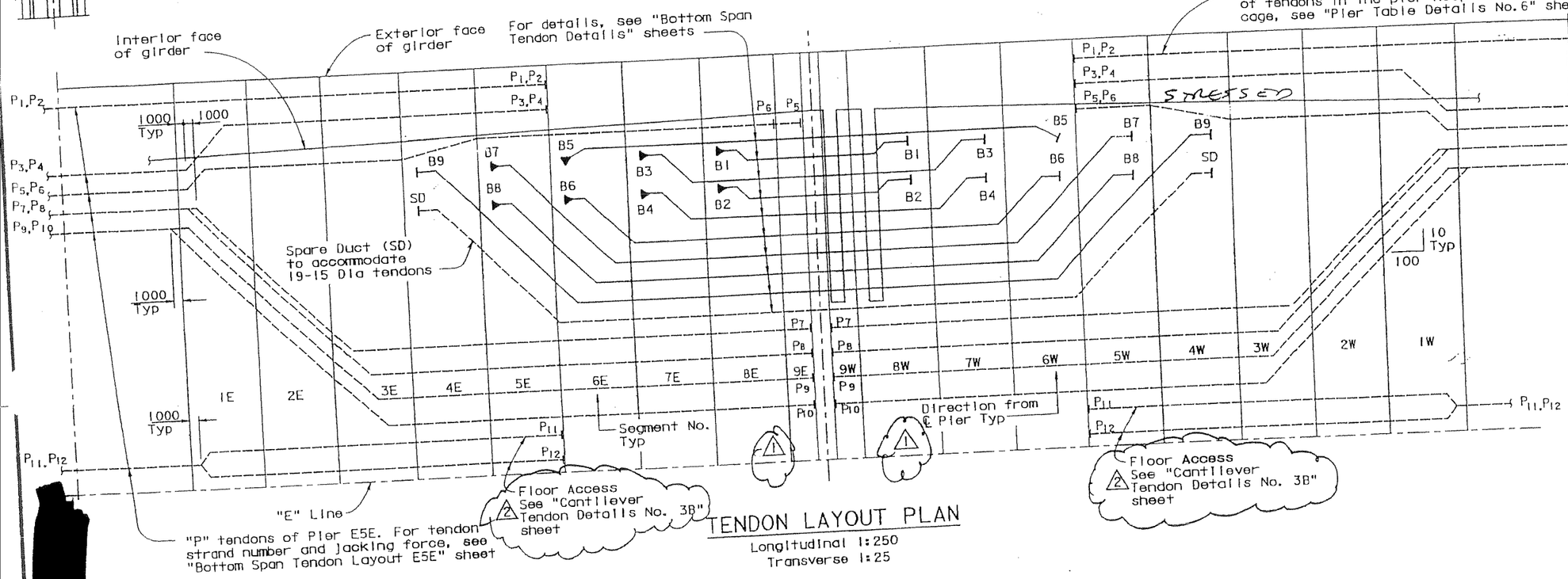

TENDON LAYOUT PLAN
Longitudinal 1:250
Transverse 1:25

BOTTOM SPAN TENDONS (*per box girder)

Tendon	No. of Tendons* x No. of strands (15 Dia)	Jacking Force per Tendon kN
E6E B 1	2 x 19	3705
E6E B 2	2 x 19	3705
E6E B 3	2 x 19	3705
E6E B 4	2 x 19	3705
E6E B 5	2 x 19	3705
E6E B 6	2 x 19	3705
E6E B 7	2 x 19	3705
E6E B 8	2 x 19	3705
E6E B 9	2 x 19	3705
3 E6E P1-4	8 x 12 (1)	See note 6
1 E6E P5-10	12 x 12	1400
3 E6E P11-12	4 x 12 (1)	See note 6

NOTES:

1. Tendons are symmetrical with respect to "E" Line.
2. Anchorage symbols are as follows:
   - ├── Jacking end
   - ▶── Dead end
3. The force diagram shows forces which only account for losses due to friction, anchor set and elastic shortening.
4. Key to tendon nomenclature:
   - E6E B 1
   - Span No. — E6E
   - Tendon type — B
   - Tendon mark — 1
5. For "P" Tendon details, see "Cantilever Tendon Details" sheets.
6. (3) (1) No stressing and anchorage required for tendons P1-4 & P11-12. Tendons shall be preassembled units and installed by pulling through duct and then grouted.

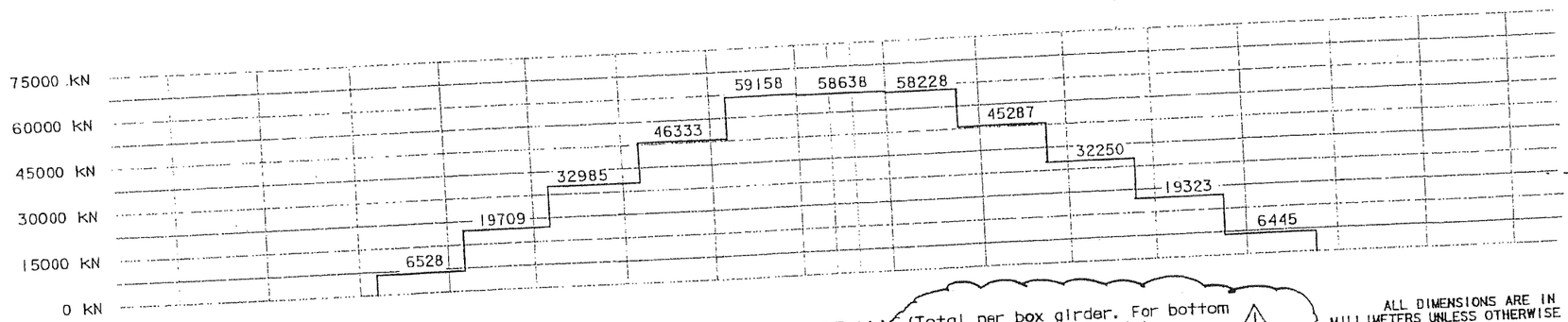

FORCE DIAGRAM (Total per box girder. For bottom span tendons Type B only)

ECO MARK	DATE	REVISIONS	BY	CH'D
45 (3)	08/01/03	ELIMINATE STRESSING AND ANCHORAGE REQUIREMENT FOR NOTED TENDONS	MR	JC

CONTRACT CHANGE ORDER NO. 45
SHEET 20 OF 34

100 % PS&E

ALL DIMENSIONS ARE IN MILLIMETERS UNLESS OTHERWISE SHOWN

SAN FRANCISCO OAKLAND BAY BRIDGE
EAST SPAN SEISMIC SAFETY PROJECT

SKYWAY STRUCTURES

BOTTOM SPAN TENDON LAYOUT E6E

BRIDGE NO. 34-0006L/R
KILOMETER POST 13.9/14.3, 0.0/1.6

Sajid Abbas
PROJECT ENGINEER

PREPARED FOR THE STATE OF CALIFORNIA DEPARTMENT OF TRANSPORTATION

DESIGN: J. Chan — CHECKED: H. Lund
DETAIL: E. Zharkov — CHECKED: H. Lund
QUANTITIES: R. Cormier — CHECKED: J. Chan

DESIGN OVERSIGHT

MARK	DATE	DESCRIPTION	BY	CH'D
3	03/05/03	ADD FLOOR ACCESS DETAIL	JC	MS
1	10/07/02	SHOW AND EXTEND "P" TENDON	JC	MS

ORIGINAL SCALE IN MILLIMETERS FOR REDUCED PLANS

CU 04
EA 01202

DISREGARD PRINTS BEARING EARLIER REVISION DATES

REVISION DATES (PRELIMINARY STAGE ONLY): 01/25/99 | 02/25/00 | 06/26/00 | 11/27/00 | 02/26/01 | 07/13/01 | 10/09/02 | 03/25/03 | 08/01/03

SHEET 209

STL-003082 11/24/03

DIST.	COUNTY	ROUTE	KILOMETER POST TOTAL PROJECT	SHEET NO.	TOTAL SHEETS
04	SF, ALA	80	13.9/14.3 0.0/1.6	642R3	978

Caltrans Metric

REGISTERED ENGINEER - CIVIL

6-4-01

PLANS APPROVAL DATE

Siu Fu John Chan No. C 39457 Exp. 12/31/05 CIVIL STATE OF CALIFORNIA REGISTERED PROFESSIONAL ENGINEER

The State of California or its officers or agents shall not be responsible for the accuracy or completeness of electronic copies of this plan sheet.

T.Y. LIN / MOFFATT & NICHOL
825 BATTERY STREET
SAN FRANCISCO, CA 94111

Caltrans now has a web site! To get to the web site, go to: http://www.dot.ca.gov

Mission Control Realme

Numerous Tendon profile and deviations changes, (see KFM letter 717). See approved composite drawings for revisions. See PT elongation submittals for revisions to stressing ends.

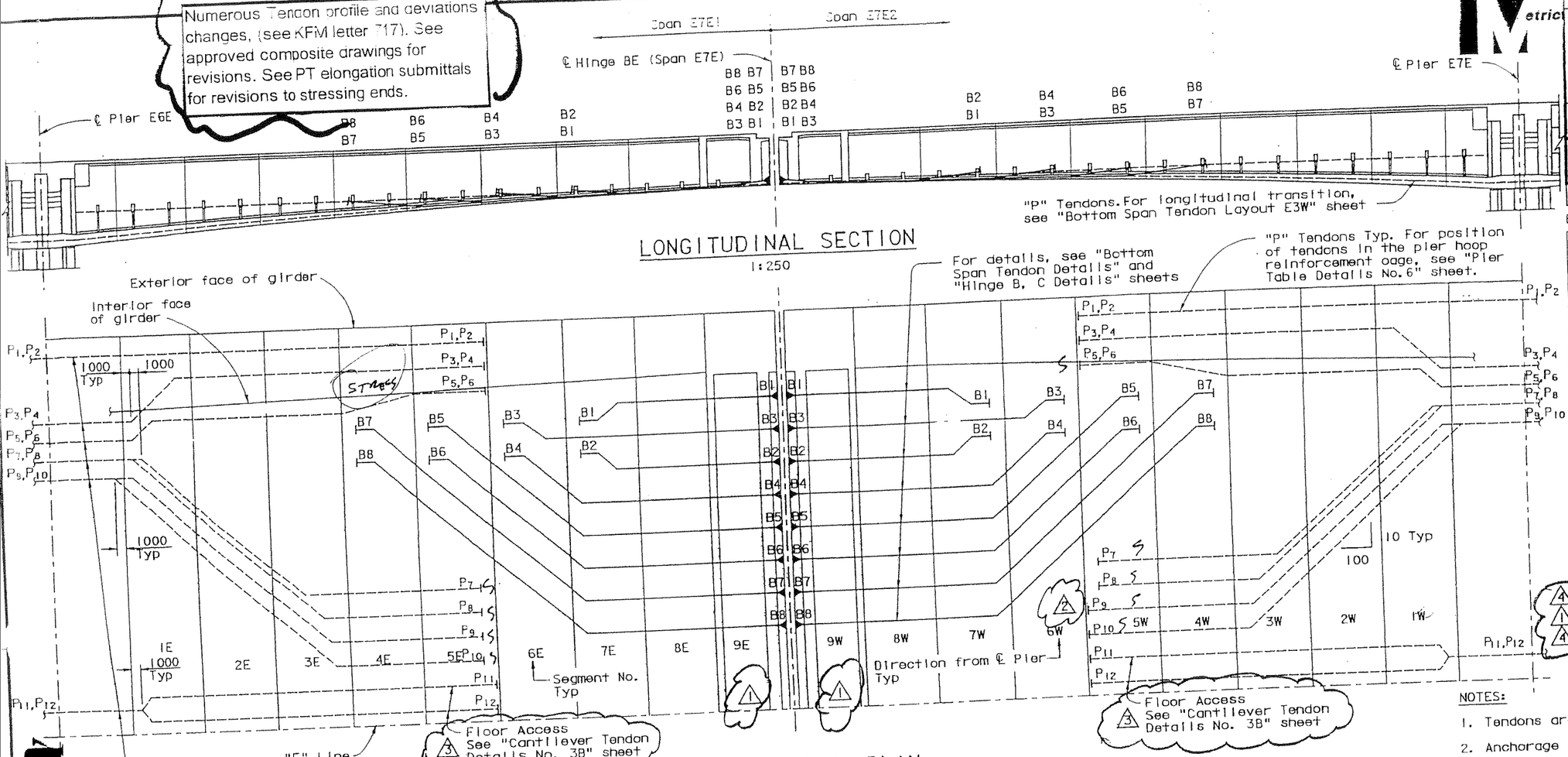

BOTTOM SPAN TENDONS (*per box girder)

Tendon	No. of tendons* x No. of strands (15 Dia)	Jacking Force per Tendon kN
E7E1 B 1	2 x 19	3705
E7E1 B 2	2 x 19	3705
E7E1 B 3	2 x 19	3705
E7E1 B 4	2 x 19	3705
E7E1 B 5	2 x 19	3705
E7E1 B 6	2 x 19	3705
E7E1 B 7	2 x 19	3705
E7E1 B 8	2 x 19	3705
E7E2 B 1	2 x 19	3705
E7E2 B 2	2 x 19	3705
E7E2 B 3	2 x 19	3705
E7E2 B 4	2 x 19	3705
E7E2 B 5	2 x 19	3705
E7E2 B 6	2 x 19	3705
E7E2 B 7	2 x 19	3705
E7E2 B 8	2 x 19	3705
4 E7E2 P1-4	8 x 12 (1)	See note 6
1 E7E2 P5-10	12 x 12	1400
4 E7E2 P11-12	4 x 12 (1)	See note 6

NOTES:

1. Tendons are symmetrical with respect to "E" Line.
2. Anchorage symbols are as follows:
   - |—— Jacking end
   - ▶—— Dead end.
3. The force diagram shows forces which only account for losses due to friction, anchor set and elastic shortening.
4. Key to tendon nomenclature:
   - E7E1 — Span No.
   - B — Tendon type
   - 1 — Tendon mark
5. For "P" tendon details, see "Cantilever Tendon Details" sheets.
6. (4)(1) No stressing and anchorage required for tendons P1-4 & P11-12. Tendons shall be preassembled units and installed by pulling through duct and then grouted.

MARK	DATE	DESCRIPTIONS	BY	CH'D
4	06/01/03	ELIMINATE STRESSING AND ANCHORAGE REQUIREMENT FOR NOTED TENDONS	MR	JC

REVISIONS

45 CCO

CONTRACT CHANGE ORDER NO. 45
SHEET 21 OF 34

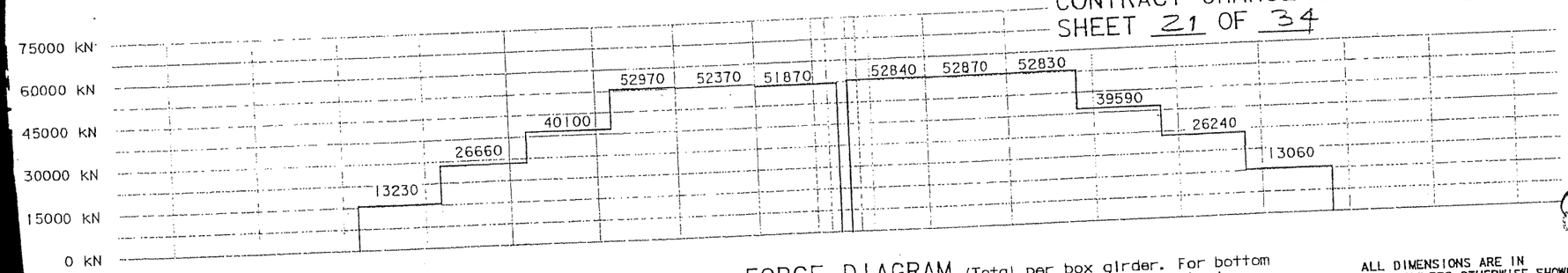

FORCE DIAGRAM (Total per box girder. For bottom span tendons Type B only) (1)

ALL DIMENSIONS ARE IN MILLIMETERS UNLESS OTHERWISE SHOWN

MARK	DATE	DESCRIPTION	BY	CH'D
3	03/05/03	ADD FLOOR ACCESS DETAIL	CCO 45 JC	MS
2	03/05/03	REVISE P9 AND P10 ANCHOR LOCATIONS AND STRAND NO.	CCO45 JC	MS
1	10/07/02	SHOW AND EXTEND "B" TENDONS	CCO- JC	MS

DESIGN OVERSIGHT 8/15/07

DESIGN BY J. Chan CHECKED H. Lund
DETAILS BY S. Lee CHECKED H. Lund
QUANTITIES BY K. Comlet CHECKED S. Chor

PREPARED FOR THE STATE OF CALIFORNIA DEPARTMENT OF TRANSPORTATION

Sajid Abbas
PROJECT ENGINEER

BRIDGE NO. 34-0006L/R
KILOMETER POST 13.9/14.3 0.0/1.6
CU 0-
EA 01202

DISREGARD PRINTS BEARING EARLIER REVISION DATES

ORIGINAL SCALE IN MILLIMETERS 0 10 20 30 40 50 60 70 80 90 100

SAN FRANCISCO OAKLAND BAY BRIDGE
EAST SPAN SEISMIC SAFETY PROJECT

SKYWAY STRUCTURES

BOTTOM SPAN TENDON LAYOUT E7E

REVISION DATES (PRELIMINARY STAGE ONLY) 02/13/00 06/26/00 11/27/00 02/12/01 02/28/01 01/25/02 10/07/02 01/27/03 02/25/03 06/01/03

SHEET 0 210

100% PS&E

STL-003082 11/24/03

Mission Control Redline

Numerous Tendon profile and deviations changes. (see KFM letter 717). See approved composite drawings for revisions. See PT elongation submittals for revisions to stressing ends.

DIST.	COUNTY	ROUTE	KILOMETER POST TOTAL PROJECT	SHEET NO.	TOTAL SHEETS
04	SF, Ala	80	13.9/14.3, 0.0/1.6	643R2	978

Caltrans Metric

REGISTERED ENGINEER - CIVIL

6-4-01

PLANS APPROVAL DATE

The State of California or its officers or agents shall not be responsible for the accuracy or completeness of electronic copies of this plan sheet.

REGISTERED PROFESSIONAL ENGINEER Stu Fu John Chan No. C 39457 Exp. 12/31/05 CIVIL STATE OF CALIFORNIA

T.Y. LIN / MOFFATT & NICHOL
825 BATTERY STREET
SAN FRANCISCO, CA 94111

Caltrans now has a web site! To get to the web site, go to: http://www.dot.ca.gov

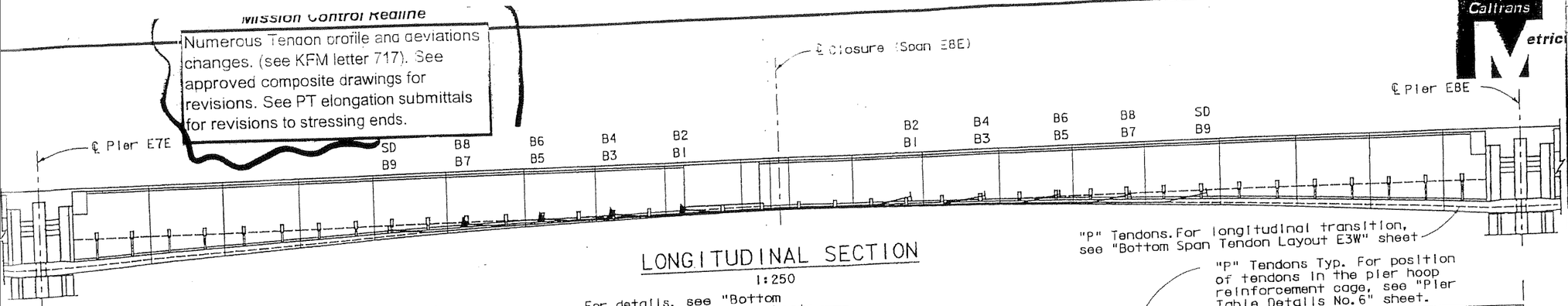

LONGITUDINAL SECTION

1:250

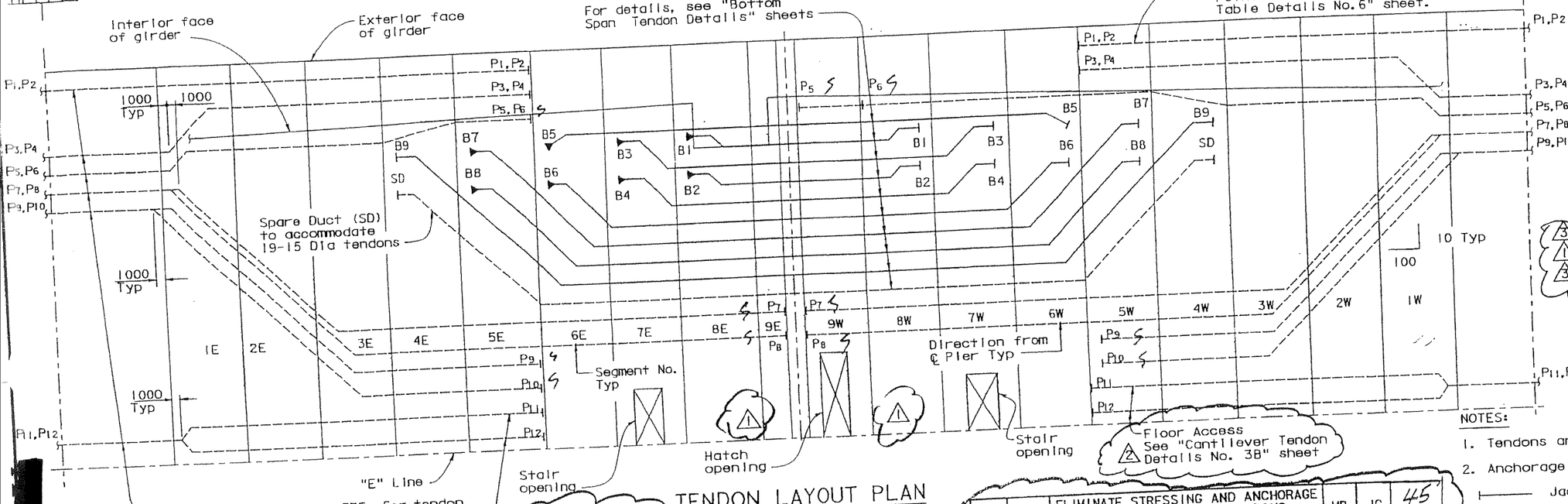

TENDON LAYOUT PLAN

Longitudinal 1:250
Transverse 1:25

BOTTOM SPAN TENDONS (*per box girder)

Tendon	No. of tendons* x No. of strands (15 Dia)	Jacking Force per Tendon KN
E8E B 1	2 x 19	3705
E8E B 2	2 x 19	3705
E8E B 3	2 x 19	3705
E8E B 4	2 x 19	3705
E8E B 5	2 x 19	3705
E8E B 6	2 x 19	3705
E8E B 7	2 x 19	3705
E8E B 8	2 x 19	3705
E8E B 9	2 x 19	3705
3 E8E P1-4	8 x 12 (1)	See note 6
1 E8E P5-10	12 x 12	1400
3 E8E P11-12	4 x 12 (1)	See note 6

NOTES:

1. Tendons are symmetrical with respect to "E" Line.
2. Anchorage symbols are as follows:
   - ├── Jacking end
   - ►── Dead end
3. The force diagram shows forces which only account for losses due to friction, anchor set and elastic shortening.
4. Key to tendon nomenclature:
   - E8E — Span No.
   - B — Tendon type
   - 1 — Tendon mark
5. For "P" tendon details, see "Cantilever Tendon Details" sheets.
6. (3) (1) No stressing and anchorage required for tendons P1-4 & P11-12. Tendons shall be preassembled units and installed by pulling through duct and then grouted.

MARK	DATE	DESCRIPTIONS	BY	CH'D
3	08/01/03	ELIMINATE STRESSING AND ANCHORAGE REQUIREMENT FOR NOTED TENDONS	MR	JC
		REVISIONS		

CONTRACT CHANGE ORDER NO. 45
SHEET 22 OF 34

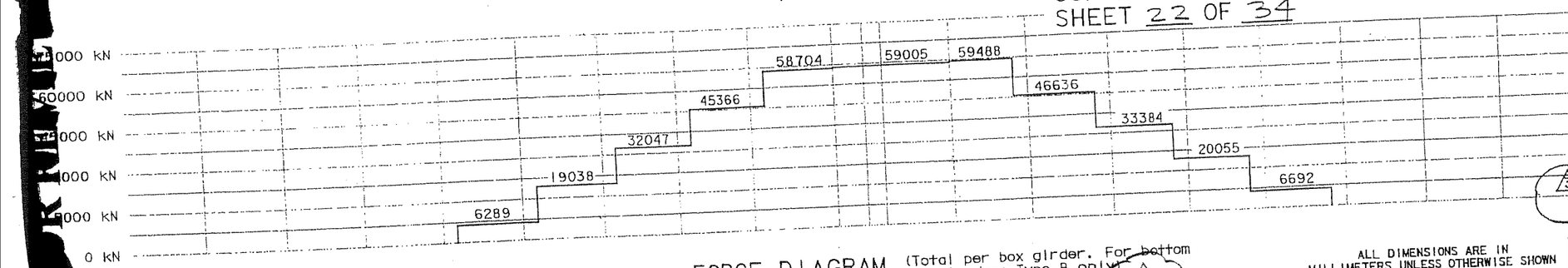

FORCE DIAGRAM

(Total per box girder. For bottom span tendons Type B only)

ALL DIMENSIONS ARE IN MILLIMETERS UNLESS OTHERWISE SHOWN

MARK	DATE	DESCRIPTION	BY	CH'D
2	03/05/03	ADD FLOOR ACCESS DETAIL	JC	MS
1	10/07/02	SHOW AND EXTEND PT TENDONS	JC	MS

DESIGN OVERSIGHT 8/15/03

DESIGN BY J. Chan CHECKED H. Lund
DETAILS BY E. Zharkov CHECKED L. Lund
QUANTITIES BY L. Cormier CHECKED L. Char

PREPARED FOR THE STATE OF CALIFORNIA DEPARTMENT OF TRANSPORTATION

Sajid Abbas
PROJECT ENGINEER

BRIDGE NO. 34-0006L/R
KILOMETER POST 13.9/14.3, 0.0/1.6

DISREGARD PRINTS BEARING EARLIER REVISION DATES

ORIGINAL SCALE IN MILLIMETERS FOR REDUCED PLANS

CU 0-
EA 012021

SAN FRANCISCO OAKLAND BAY BRIDGE
EAST SPAN SEISMIC SAFETY PROJECT

SKYWAY STRUCTURES

BOTTOM SPAN TENDON LAYOUT E8E

REVISION DATES (PRELIMINARY STAGE ONLY) 08/28/02 11/27/02 12/20/02 02/28/01 01/15/02 10/07/02 01/24/03 01/05/03 04/01/03

SHEET 21 OF

100 % PS&E

STL-003082 11/24/03

Mission Control Redline

Numerous Tendon profile and deviations changes, (see KFM letter 717). See approved composite drawings for revisions. See PT elongation submittals for revisions to stressing ends.

DIST.	COUNTY	ROUTE	KILOMETER POST TOTAL PROJECT	SHEET NO.	TOTAL SHEETS
04	SF, ALA	30	13.3/14.3 0.0/1.6	644R3	978

Caltrans Metric

REGISTERED ENGINEER - CIVIL

6-4-01

PLANS APPROVAL DATE

REGISTERED PROFESSIONAL ENGINEER Shu Fu John Chen No. C 39457 Exp. 12/31/05 CIVIL STATE OF CALIFORNIA

The State of California or its officers or agents shall not be responsible for the accuracy or completeness of electronic copies of this plan sheet.

T.Y. LIN / MOFFATT & NICHOL
825 BATTERY STREET
SAN FRANCISCO, CA 94111

Caltrans now has a web site! To get to the web site, go to: http://www.dot.ca.gov

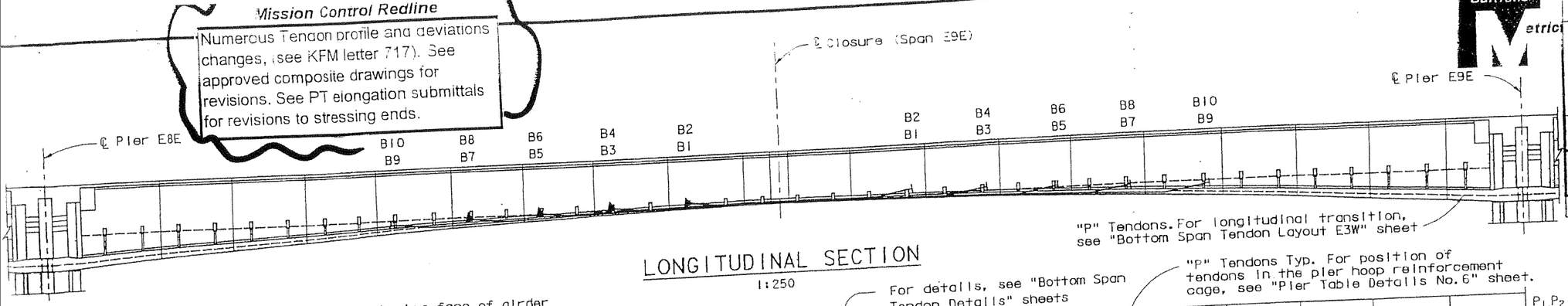

LONGITUDINAL SECTION

1:250

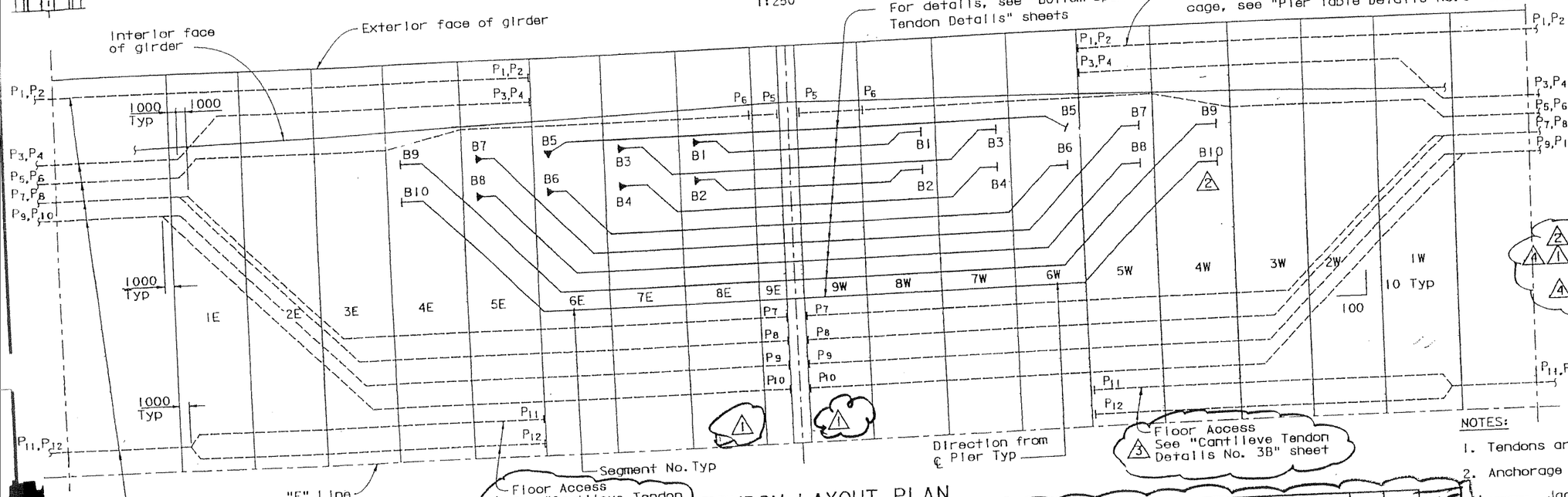

TENDON LAYOUT PLAN

Longitudinal 1:250
Transverse 1:25

BOTTOM SPAN TENDONS (*per box girder)

Tendon	No. of tendons* x No. of strands (15 Dia)	Jacking Force per Tendon kN
E9E B 1	2 x 19	3705
E9E B 2	2 x 19	3705
E9E B 3	2 x 19	3705
E9E B 4	2 x 19	3705
E9E B 5	2 x 19	3705
E9E B 6	2 x 19	3705
E9E B 7	2 x 19	3705
E9E B 8	2 x 19	3705
E9E B 9	2 x 19	3705
E9E B10	2 x 19	3705
E9E P1-4	8 x 12 (1)	See note 6
E9E P5-10	12 x 12	1400
E9E P11-12	4 x 12 (1)	See note 6

NOTES:

1. Tendons are symmetrical with respect to "E" Line.
2. Anchorage symbols are as follows:
   - Jacking end
   - Dead end
3. The force diagram shows forces which only account for losses due to friction, anchor set and elastic shortening.
4. Key to tendon nomenclature:
   - E9E — Span No.
   - B — Tendon type
   - 1 — Tendon mark
5. For "P" Tendon details, see "Cantilever Tendon Details" sheets.
6. (1) No stressing and anchorage required for tendons P1-4 & P11-12. Tendons shall be preassembled units and installed by pulling through duct and then grouted.

MARK	DATE	DESCRIPTIONS	BY	CH'D
4	08/01/03	ELIMINATE STRESSING AND ANCHORAGE REQUIREMENT FOR NOTED TENDONS	MR	JC

REVISIONS

CONTRACT CHANGE ORDER NO. 45
SHEET 23 OF 34

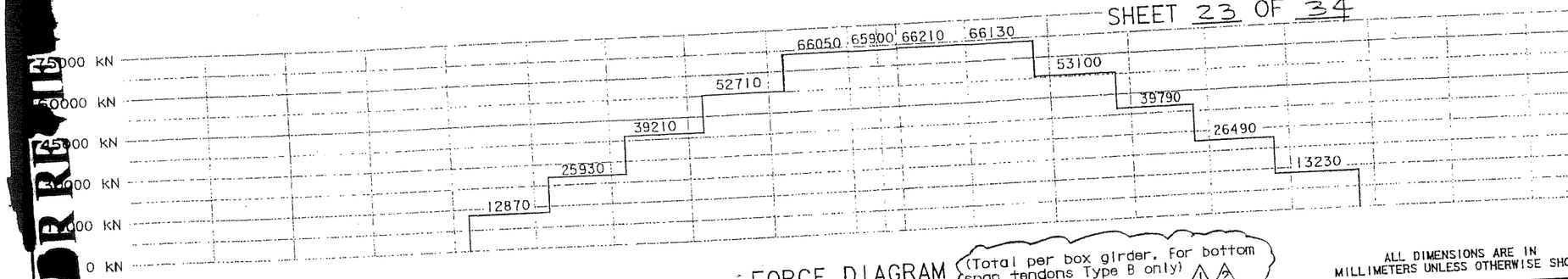

FORCE DIAGRAM

(Total per box girder. For bottom span tendons Type B only)

ALL DIMENSIONS ARE IN MILLIMETERS UNLESS OTHERWISE SHOWN

MARK	DATE	DESCRIPTION	BY	CH'D
3	03/05/03	ADD FLOOR ACCESS DETAIL CCO 45	JC	MS
2	10/07/02	CHANGE BOTTOM SPAN TENDONS CCO -	JC	MS
1	10/07/02	SHOW AND EXTEND "P" TENDONS CCO -	JC	MS

DESIGN OVERSIGHT 8/15/03

DESIGN BY J. Chan CHECKED H. Lund
DETAIL BY E. Zharkov CHECKED H. Lund
QUANTITIES BY K. Cormier CHECKED J. Chan

PREPARED FOR THE STATE OF CALIFORNIA DEPARTMENT OF TRANSPORTATION

Sajid Abbas
PROJECT ENGINEER

BRIDGE NO. 34-0006L/R
KILOMETER POST 13.9/14.3 0.0/1.6

CU 04
EA 01202

DISREGARD PRINTS BEARING EARLIER REVISION DATES:

SAN FRANCISCO OAKLAND BAY BRIDGE
EAST SPAN SEISMIC SAFETY PROJECT

SKYWAY STRUCTURES

BOTTOM SPAN TENDON LAYOUT E9E

SHEET 212

100 % PS&E

STL-003082 11/24/03

Mission Control Redline

Numerous Tendon profile and deviations changes, (see KFM letter 717). See approved composite drawings for revisions. See PT elongation submittals for revisions to stressing ends.

DIST.	COUNTY	ROUTE	TOTAL PROJECT	NO.	SHEETS
04	SF, Ala	80	13.3/14.3, 0.0/1.3	645R3	978

Caltrans Metric

REGISTERED ENGINEER - CIVIL

6-4-01

PLANS APPROVAL DATE

The State of California or its officers or agents shall not be responsible for the accuracy or completeness of electronic copies of this plan sheet.

REGISTERED PROFESSIONAL ENGINEER Siu Fu John Chan No. C 39457 Exp. 12/31/05 CIVIL STATE OF CALIFORNIA

T.Y. LIN / MOFFATT & NICHOL
825 BATTERY STREET
SAN FRANCISCO, CA 94111

Caltrans now has a web site! To get to the web site, go to: http://www.dot.ca.gov

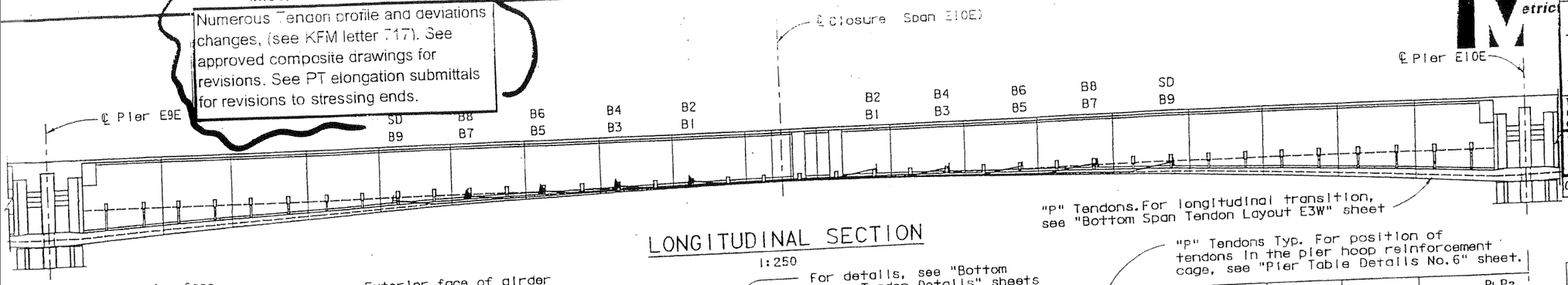

LONGITUDINAL SECTION

1:250

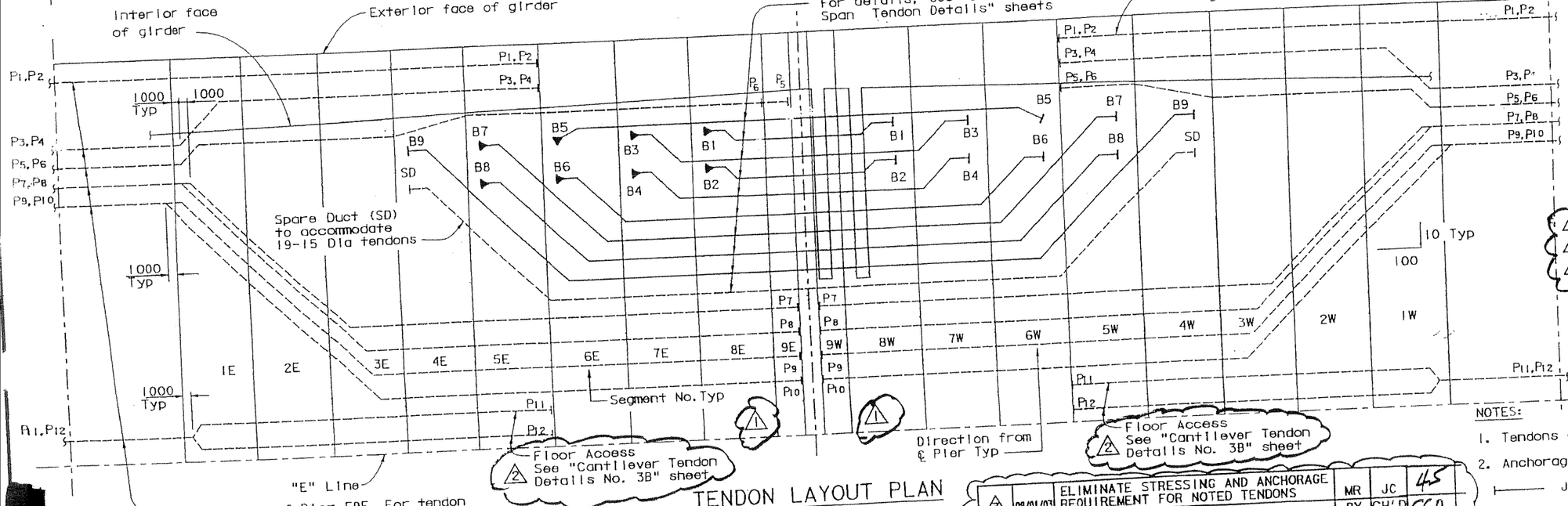

TENDON LAYOUT PLAN

Longitudinal 1:250
Transverse 1:25

MARK	DATE	DESCRIPTIONS	BY	CH'D
3	08/01/03	ELIMINATE STRESSING AND ANCHORAGE REQUIREMENT FOR NOTED TENDONS	MR	JC

REVISIONS

CONTRACT CHANGE ORDER NO. 45
SHEET 24 OF 34

BOTTOM SPAN TENDONS (*per box girder)

Tendon	No. of tendons* x No. of strands (15 Dia)	Jacking Force per Tendon kN
E10E B 1	2 x 19	3705
E10E B 2	2 x 19	3705
E10E B 3	2 x 19	3705
E10E B 4	2 x 19	3705
E10E B 5	2 x 19	3705
E10E B 6	2 x 19	3705
E10E B 7	2 x 19	3705
E10E B 8	2 x 19	3705
E10E B 9	2 x 19	3705
3 E10E P1-4	8 x 12	See note 6
1 E10E P5-10	12 x 12	1400
3 E10E P11-12	4 x 12	See note 6

NOTES:

1. Tendons are symmetrical with respect to "E" Line.
2. Anchorage symbols are as follows:
   - ⊢ Jacking end
   - ▶ Dead end
3. The force diagram shows forces which only account for losses due to friction, anchor set and elastic shortening.
4. Key to tendon nomenclature:
   - E10E — Span No.
   - B — Tendon type
   - 1 — Tendon mark
5. For "P" tendon details, see "Cantilever Tendon Details" sheets.
6. 3 No stressing and anchorage required for tendons P1-4 & P11-12. Tendons shall be preassembled units and installed by pulling through duct and then grouted.

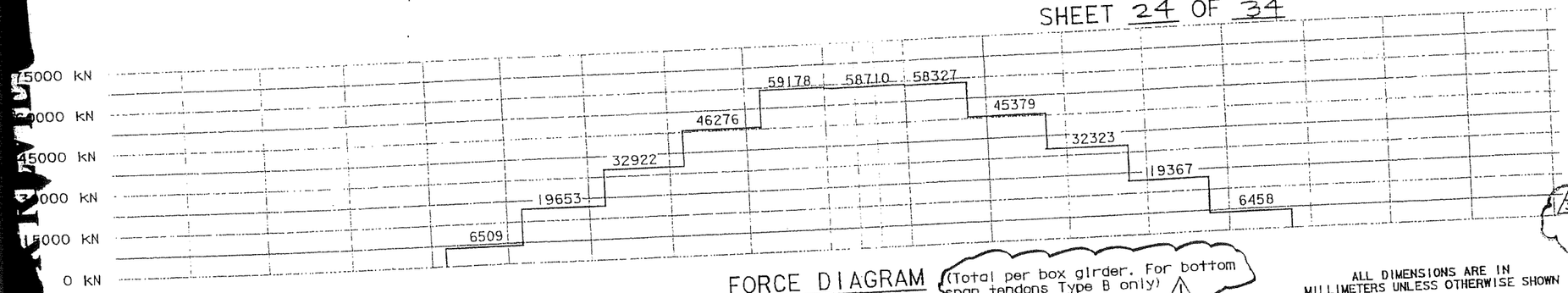

FORCE DIAGRAM

(Total per box girder. For bottom span tendons Type B only) 1

ALL DIMENSIONS ARE IN MILLIMETERS UNLESS OTHERWISE SHOWN

SAN FRANCISCO OAKLAND BAY BRIDGE
EAST SPAN SEISMIC SAFETY PROJECT

SKYWAY STRUCTURES

BOTTOM SPAN TENDON LAYOUT E10E

BRIDGE NO. 34-0006L/R

KILOMETER POST 13.9/14.3, 0.0/1.3

Sajid Abbas
PROJECT ENGINEER

PREPARED FOR THE STATE OF CALIFORNIA DEPARTMENT OF TRANSPORTATION

DESIGN: J. Chan — CHECKED: H. Lund
DETAILS: E. Zharkov — CHECKED: H. Lund
QUANTITIES: J. Cormier — CHECKED: J. Chan

DESIGN OVERSIGHT: 8/15/03

MARK	DATE	DESCRIPTION	BY	CH'D
2	03/05/03	ADD FLOOR ACCESS DETAIL	JC	MS
1	10/07/02	SHOW AND EXTEND PDT TENDONS	JC	MS

CL 04
EA 01202

DISREGARD PRINTS BEARING EARLIER REVISION DATES:

REVISION DATES (PRELIMINARY STAGE ONLY): 07/25/99 | 02/28/00 | 06/28/00 | 11/27/00 | 02/27/01 | 02/28/01 | 07/25/02 | 10/07/02 | 03/05/03 | 06/01/03

SHEET 213 OF

ORIGINAL SCALE IN MILLIMETERS FOR REDUCED PLANS

100 % PS&E

STL-003082 11/24/03

Mission Control Redline

Numerous Tendon profile and deviations changes, (see KFM letter 717). See approved composite drawings for revisions. See PT elongation submittals for revisions to stressing ends.

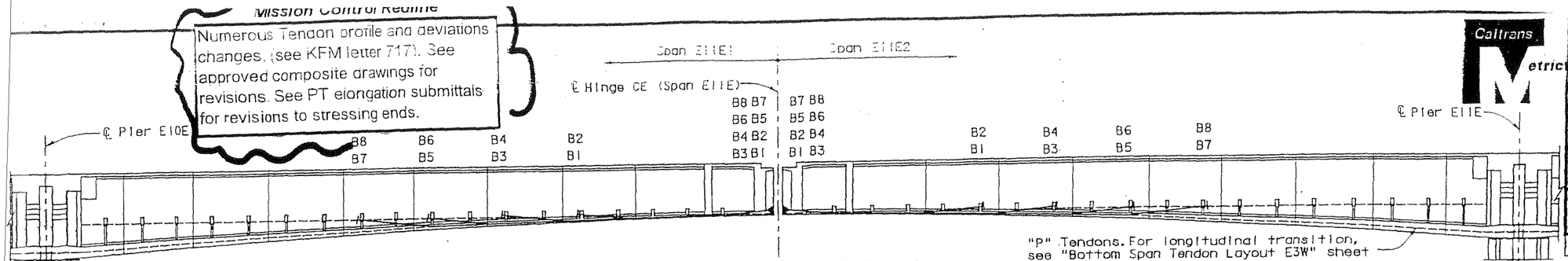

LONGITUDINAL SECTION

1:250

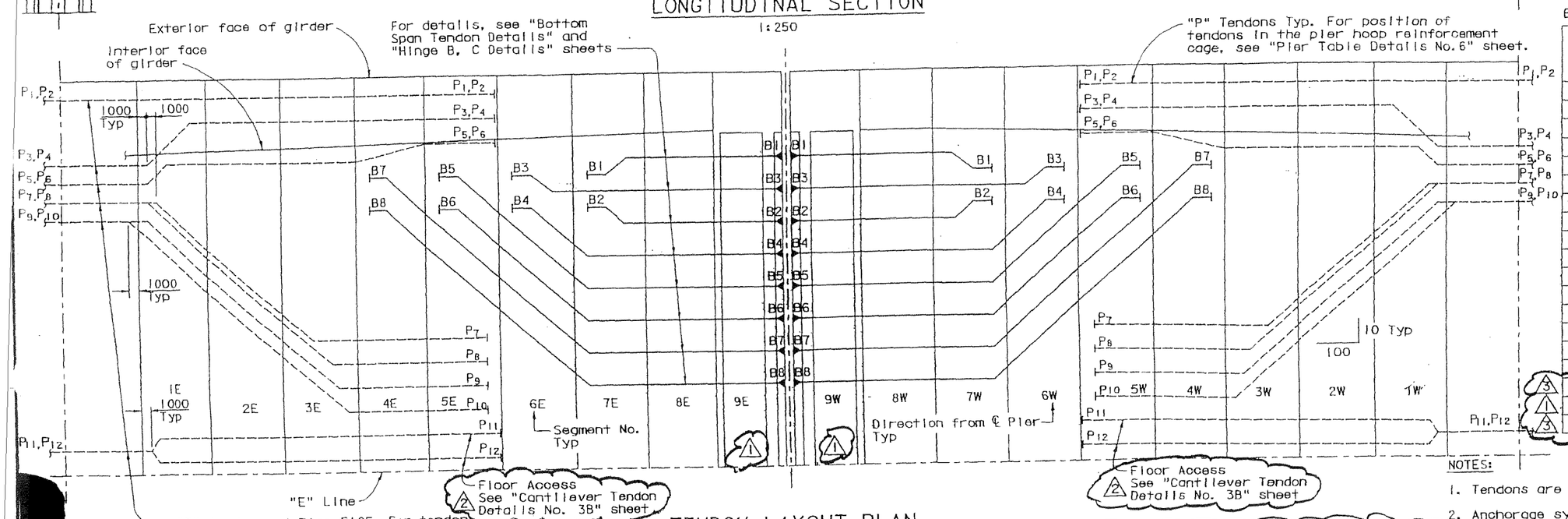

TENDON LAYOUT PLAN

Longitudinal 1:250
Transverse 1:25

MARK	DATE	DESCRIPTIONS	BY	CH'D	CCO
3	08/01/03	ELIMINATE STRESSING AND ANCHORAGE REQUIREMENT FOR NOTED TENDONS	MR	JC	45

REVISIONS

CONTRACT CHANGE ORDER NO. 45
SHEET 25 OF 34

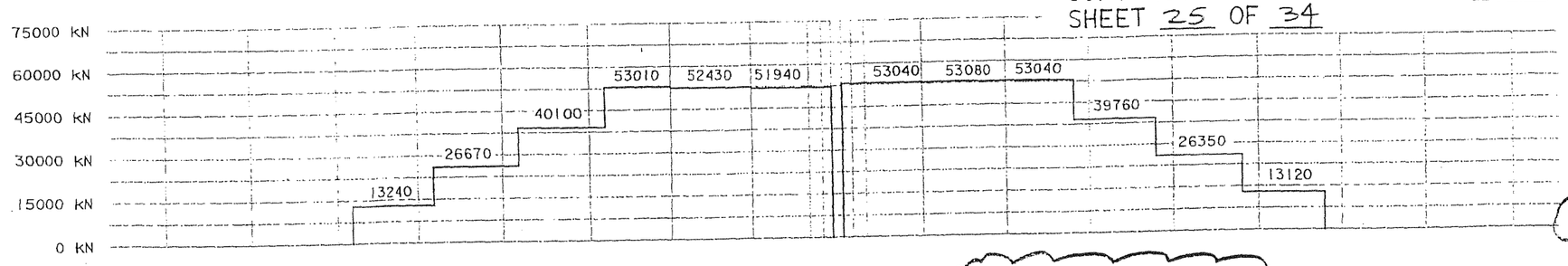

FORCE DIAGRAM (Total per box girder. For bottom span tendons Type B only)

BOTTOM SPAN TENDONS (*per box girder)

Tendon	No. of tendons* x No. of strands (15 Dia)	Jacking Force per Tendon kN
E11E1 B 1	2 x 19	3705
E11E1 B 2	2 x 19	3705
E11E1 B 3	2 x 19	3705
E11E1 B 4	2 x 19	3705
E11E1 B 5	2 x 19	3705
E11E1 B 6	2 x 19	3705
E11E1 B 7	2 x 19	3705
E11E1 B 8	2 x 19	3705
E11E2 B 1	2 x 19	3705
E11E2 B 2	2 x 19	3705
E11E2 B 3	2 x 19	3705
E11E2 B 4	2 x 19	3705
E11E2 B 5	2 x 19	3705
E11E2 B 6	2 x 19	3705
E11E2 B 7	2 x 19	3705
E11E2 B 8	2 x 19	3705
3 E11E2 P1-4	8 x 12 (1)	See note 6
1 E11E2 P5-10	12 x 12	1400
3 E11E2 P11-12	4 x 12 (1)	See note 6

NOTES:

1. Tendons are symmetrical with respect to "E" Line.
2. Anchorage symbols are as follows:
   - ├── Jacking end
   - ►── Dead end
3. The force diagram shows forces which only account for losses due to friction, anchor set and elastic shortening.
4. Key to tendon nomenclature:
   - E11E1 B 1
   - Span No. — E11E1
   - Tendon type — B
   - Tendon mark — 1
5. For "P" tendon details, see "Cantilever Tendon Details" sheets.
6. (3)(1) No stressing and anchorage required for tendons P1-4 & P11-12. Tendons shall be preassembled units and installed by pulling through duct and then grouted.

ALL DIMENSIONS ARE IN MILLIMETERS UNLESS OTHERWISE SHOWN

MARK	DATE	DESCRIPTION	BY	CH'D
3	03/05/03	ADD FLOOR ACCESS DETAIL	JC	MS
1	10/07/02	SHOW AND EXTEND "P" TENDONS	JC	MS

DESIGN OVERSIGHT: SIGN OFF DATE 8/15/03

DESIGN BY J. Chan CHECKED H. Lund
DETAILS BY S. Lee CHECKED H. Lund
QUANTITIES BY L. Cormier CHECKED J. Chan

PREPARED FOR THE STATE OF CALIFORNIA DEPARTMENT OF TRANSPORTATION

Sajid Abbas
PROJECT ENGINEER

BRIDGE NO. 34-0006L/R
KILOMETER POST 15.9/14.3, 0.0/1.6

ORIGINAL SCALE IN MILLIMETERS FOR REDUCED PLANS

CL 0-
EA 01202

DISREGARD PRINTS BEARING EARLIER REVISION DATES

REVISION DATES (PRELIMINARY STAGE ONLY) 02/25/00 | 08/28/00 | 11/21/00 | 02/14/01 | 02/26/01 | 01/15/02 | 10/07/02 | 01/27/03 | 03/05/03 | 08/01/03

SHEET 21 OF 41

DIST.	COUNTY	ROUTE	KILOMETER POST TOTAL PROJECT	PROJECT NO.	TOTAL SHEETS
04	SF, Ala	80	15.3/14.3, 0.0/1.6	646R3	978

Sid Fu John Chan
REGISTERED ENGINEER - CIVIL

6-4-01
PLANS APPROVAL DATE

REGISTERED PROFESSIONAL ENGINEER Sid Fu John Chan No. C 39457 Exp. 12/31/05 CIVIL STATE OF CALIFORNIA

The State of California or its officers or agents shall not be responsible for the accuracy or completeness of electronic copies of this plan sheet.

T.Y. LIN / MOFFATT & NICHOL
825 BATTERY STREET
SAN FRANCISCO, CA 94111

Caltrans now has a web site! To get to the web site, go to: http://www.dot.ca.gov

SAN FRANCISCO OAKLAND BAY BRIDGE
EAST SPAN SEISMIC SAFETY PROJECT

SKYWAY STRUCTURES

BOTTOM SPAN TENDON LAYOUT E11E

100 % PS&E

STL-003082 11/24/03

Numerous Tendon profile and deviations changes, see KFM letter 717). See approved composite drawings for revisions. See PT elongation submittals for revisions to stressing ends.

DIST.	COUNTY	ROUTE	KILOMETER POST TOTAL PROJECT	SHEET NO.	TOTAL SHEETS
04	SF, ALA	30	13.9/14.3, 0.0/1.6	647R3	978

REGISTERED ENGINEER - CIVIL

6-4-01

PLANS APPROVAL DATE

The State of California or its officers or agents shall not be responsible for the accuracy or completeness of electronic copies of this plan sheet.

PROFESSIONAL ENGINEER REGISTERED Siu Fu John Chan No. C 39457 Exp. 12/31/05 CIVIL STATE OF CALIFORNIA

T.Y. LIN / MOFFATT & NICHOL
825 BATTERY STREET
SAN FRANCISCO, CA 94111

Caltrans now has a web site! To get to the web site, go to: http://www.dot.ca.gov

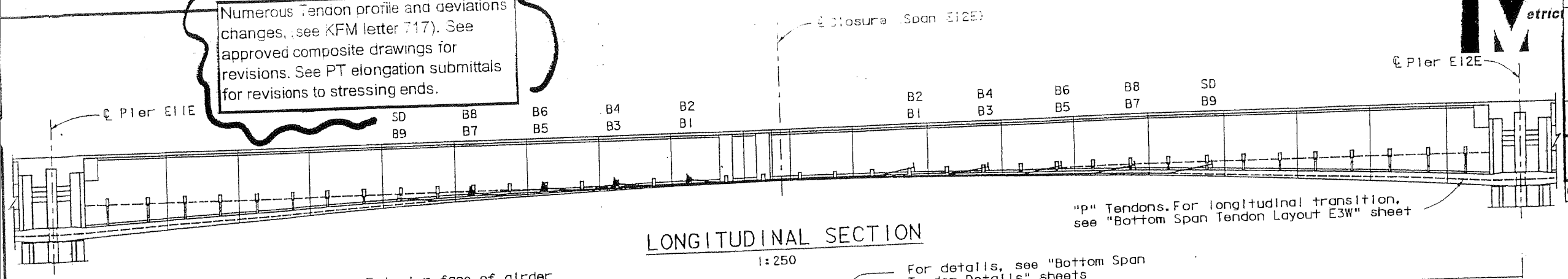

LONGITUDINAL SECTION

1:250

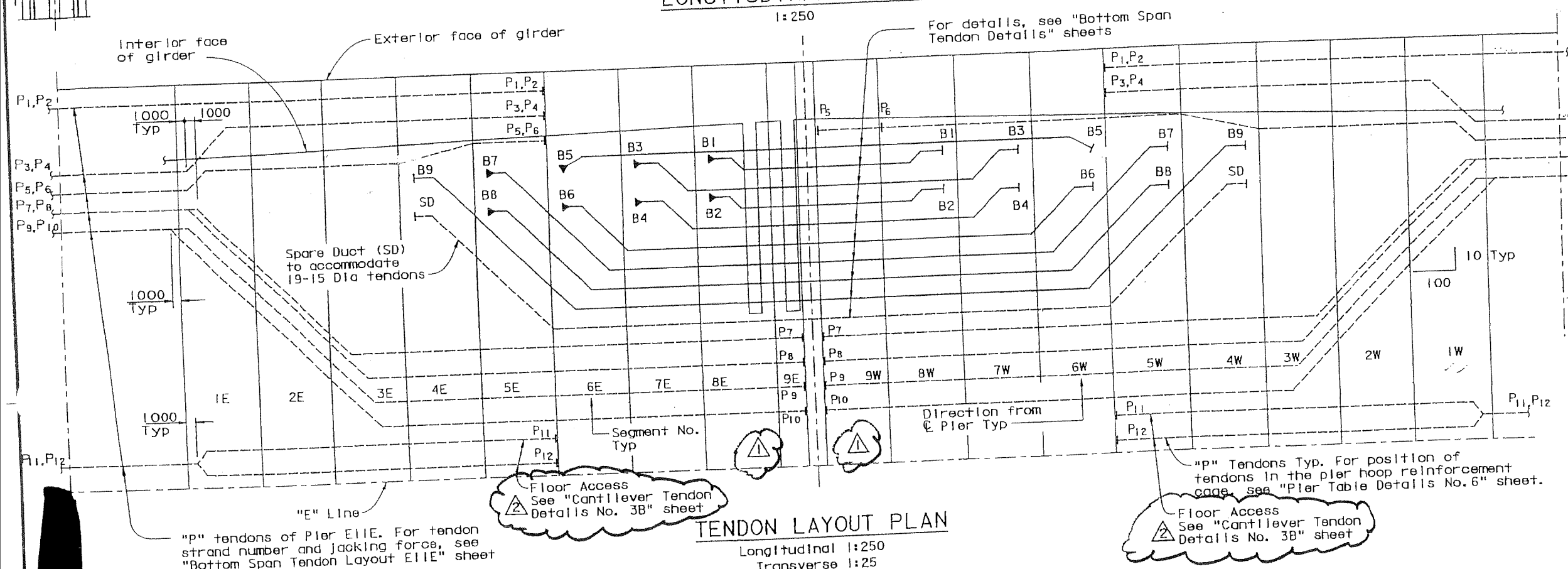

TENDON LAYOUT PLAN

Longitudinal 1:250
Transverse 1:25

BOTTOM SPAN TENDONS (*per box girder)

Tendon	No. of tendons* x No. of strands (15 Dia)	Jacking Force per Tendon kN
E12E B 1	2 x 19	3705
E12E B 2	2 x 19	3705
E12E B 3	2 x 19	3705
E12E B 4	2 x 19	3705
E12E B 5	2 x 19	3705
E12E B 6	2 x 19	3705
E12E B 7	2 x 19	3705
E12E B 8	2 x 19	3705
E12E B 9	2 x 19	3705
E12E P1-4	8 x 12 (1)	See note 6
E12E P5-10	12 x 12	1400
E12E P11-12	4 x 12 (1)	See note 6

NOTES:

1. Tendons are symmetrical with respect to "E" Line.
2. Anchorage symbols are as follows:
   - ├── Jacking end
   - ►── Dead end
3. The force diagram shows forces which only account for losses due to friction, anchor set and elastic shortening.
4. Key to tendon nomenclature:
   - E12E — Span No.
   - B — Tendon type
   - 1 — Tendon mark
5. For "P" Tendon details, see "Cantilever Tendon Details" sheets.
6. No stressing and anchorage required for tendons P1-4 & P11-12. Tendons shall be preassembled units and installed by pulling through duct and then grouted.

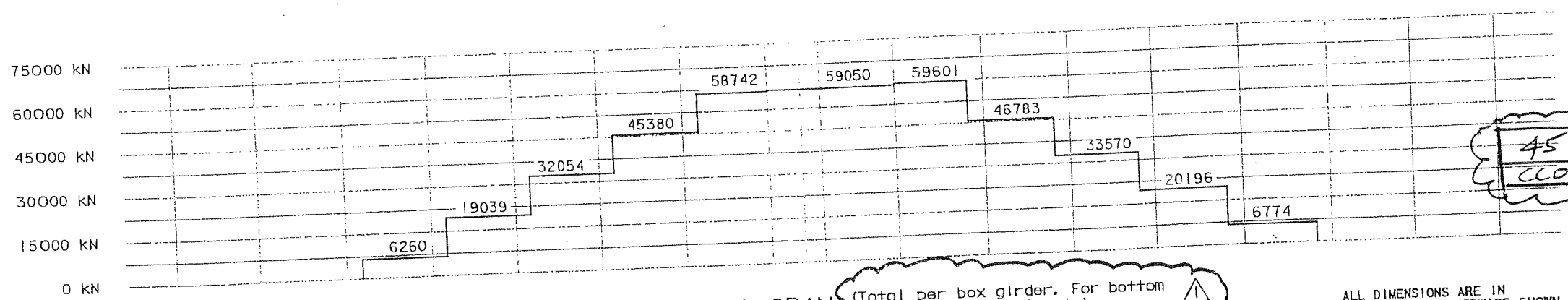

FORCE DIAGRAM

(Total per box girder. For bottom span tendons Type B only)

MARK	DATE	DESCRIPTIONS	BY	CH'D
45	08/01/03	ELIMINATE STRESSING AND ANCHORAGE REQUIREMENT FOR NOTED TENDONS	MR	JC
CCO		REVISIONS		

CONTRACT CHANGE ORDER NO. 45
SHEET 26 OF 34

100% PS&E

ALL DIMENSIONS ARE IN MILLIMETERS UNLESS OTHERWISE SHOWN

SAN FRANCISCO OAKLAND BAY BRIDGE
EAST SPAN SEISMIC SAFETY PROJECT

SKYWAY STRUCTURES

BOTTOM SPAN TENDON LAYOUT E12E

DESIGN OVERSIGHT 8/15/03
SIGN OFF DATE

MARK	DATE	DESCRIPTION	BY	CH'D
2	03/05/03	ADD FLOOR ACCESS DETAIL CCO45	JC	MS
1	10/07/02	SHOW AND EXTEND "P" TENDONS CCO7	JC	MS

DESIGN: J. Chan — CHECKED: H. Lund
DETAILS: E. Zhankov — CHECKED: H. Lund
QUANTITIES: R. Cormier — CHECKED: J. Chan

PREPARED FOR THE STATE OF CALIFORNIA DEPARTMENT OF TRANSPORTATION

Salid Abbas
PROJECT ENGINEER

BRIDGE NO. 34-0006L/R
KILOMETER POST 13.9/14.3, 0.0/1.6

CU 04
EA 01202

DISREGARD PRINTS BEARING EARLIER REVISION DATES

REVISION DATES (PRELIMINARY STAGE ONLY) 01/25/99 | 02/19/00 | 08/08/00 | 11/17/00 | 02/06/01 | 01/15/02 | 10/07/02 | 03/05/03 | 08/01/03

ORIGINAL SCALE IN MILLIMETERS FOR REDUCED PLANS

SHEET 215

STL-003082 11/24/03

DIST.	COUNTY	ROUTE	KILOMETER POST TOTAL PROJECT	SHEET NO.	TOTAL SHEETS
04	SF, Ala	80	13.3/14.3, 0.0/1.6	648R3	978

Caltrans Metric

REGISTERED ENGINEER - CIVIL

6-4-01

PLANS APPROVAL DATE

REGISTERED PROFESSIONAL ENGINEER Stu Fu John Chan No. C 39457 Exp. 12/31/05 CIVIL STATE OF CALIFORNIA

The State of California or its officers or agents shall not be responsible for the accuracy or completeness of electronic copies of this plan sheet.

T.Y. LIN / MOFFATT & NICHOL
825 BATTERY STREET
SAN FRANCISCO, CA 94111

Caltrans now has a web site! To get to the web site, go to: http://www.dot.ca.gov

Mission Control Room

Numerous Tendon profile and deviations changes, (see KFM letter 717). See approved composite drawings for revisions. See PT elongation submittals for revisions to stressing ends.

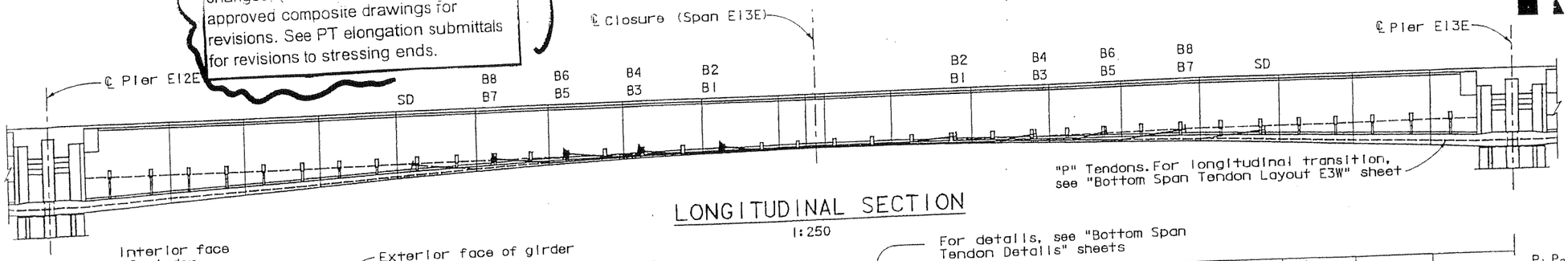

LONGITUDINAL SECTION

1:250

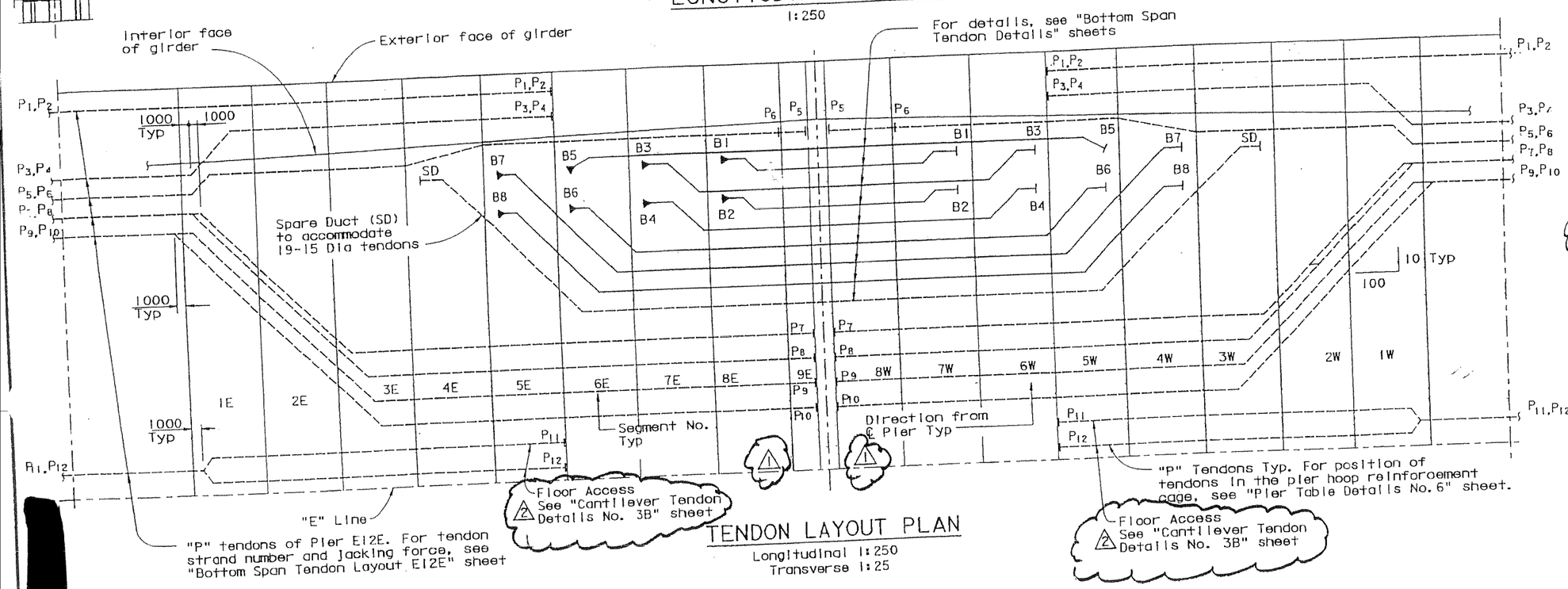

TENDON LAYOUT PLAN

Longitudinal 1:250
Transverse 1:25

BOTTOM SPAN TENDONS (*per box girder)

Tendon	No. of tendons* x No. of strands (15 Dia)	Jacking Force per Tendon kN
E13E B 1	2 x 19	3705
E13E B 2	2 x 19	3705
E13E B 3	2 x 19	3705
E13E B 4	2 x 19	3705
E13E B 5	2 x 19	3705
E13E B 6	2 x 19	3705
E13E B 7	2 x 19	3705
E13E B 8	2 x 19	3705
3 E13E P1-4	8 x 12	See note 6
1 E13E P5-10	12 x 12	1400
3 E13E P11-12	4 x 12	See note 6

NOTES:

1. Tendons are symmetrical with respect to "E" Line.
2. Anchorage symbols are as follows:
   - ├── Jacking end
   - ►── Dead end
3. The force diagram shows forces which only account for losses due to friction, anchor set and elastic shortening.
4. Key to tendon nomenclature:
   - E13E1 B 1
   - Span No.
   - Tendon type
   - Tendon mark
5. For "P" Tendon details, see "Cantilever Tendon Details" sheets.
6. 3 1 No stressing and anchorage required for tendons P1-4 & P11-12. Tendons shall be preassembled units and installed by pulling through duct and then grouted.

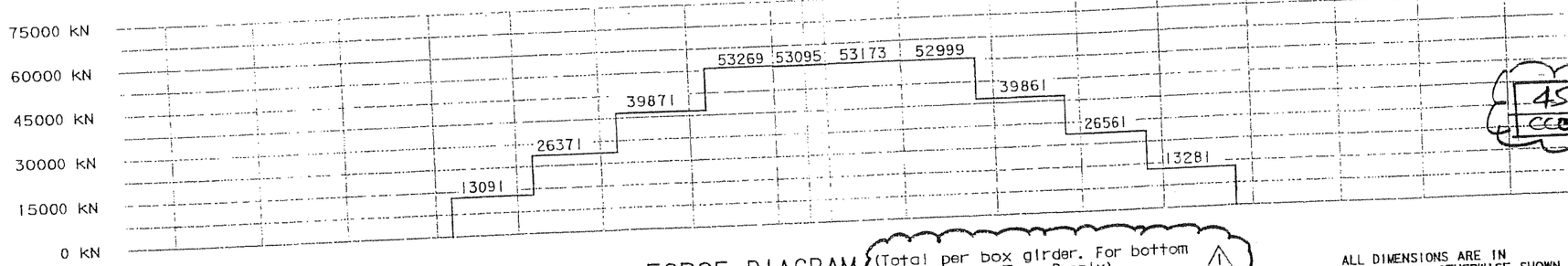

FORCE DIAGRAM

(Total per box girder. For bottom span tendons Type B only) 1

MARK	DATE	DESCRIPTIONS	BY	CH'D
45 CCO	3 08/01/03	ELIMINATE STRESSING AND ANCHORAGE REQUIREMENT FOR NOTED TENDONS	MR	JC

REVISIONS

CONTRACT CHANGE ORDER NO. 45
SHEET 27 OF 34

100 % PS&E

STL-003082 11/24/03

ALL DIMENSIONS ARE IN MILLIMETERS UNLESS OTHERWISE SHOWN

MARK	DATE	DESCRIPTION	BY	CH'D
2	03/05/03	ADD FLOOR ACCESS DETAIL CCO 4	JC	MS
1	10/07/02	SHOW AND EXTEND "P" TENDONS CCO 7	JC	MS

DESIGN OVERSIGHT 8/15/03
SIGN OFF DATE

DESIGN BY J. Chan CHECKED H. Lund
DETAILS BY E. Zharkov CHECKED H. Lund
QUANTITIES BY K. Cormier CHECKED J. Char

PREPARED FOR THE STATE OF CALIFORNIA DEPARTMENT OF TRANSPORTATION

Sajid Abbas
PROJECT ENGINEER

BRIDGE NO. 34-0006L/R
KILOMETER POST 13.9/14.3, 0.0/1.6
CU 04
EA 01202

SAN FRANCISCO OAKLAND BAY BRIDGE
EAST SPAN SEISMIC SAFETY PROJECT

SKYWAY STRUCTURES

BOTTOM SPAN TENDON LAYOUT E13E

SHEET 216 OF

DISREGARD PRINTS BEARING EARLIER REVISION DATES 07/15/99 02/15/00 06/07/00 11/17/00 02/20/01 07/15/02 10/07/02 01/05/03 08/01/03

ORIGINAL SCALE IN MILLIMETERS FOR REDUCED PLANS 0 10 20 30 40 50 60 70 80 90 100

DATE PLOTTED = 08/13/2003
TIME PLOTTED = 09:49:46 PM

Mission Control Redline

Numerous Tendon profile and deviations changes. (see KFM letter 717). See approved composite drawings for revisions. See PT elongation submittals for revisions to stressing ends.

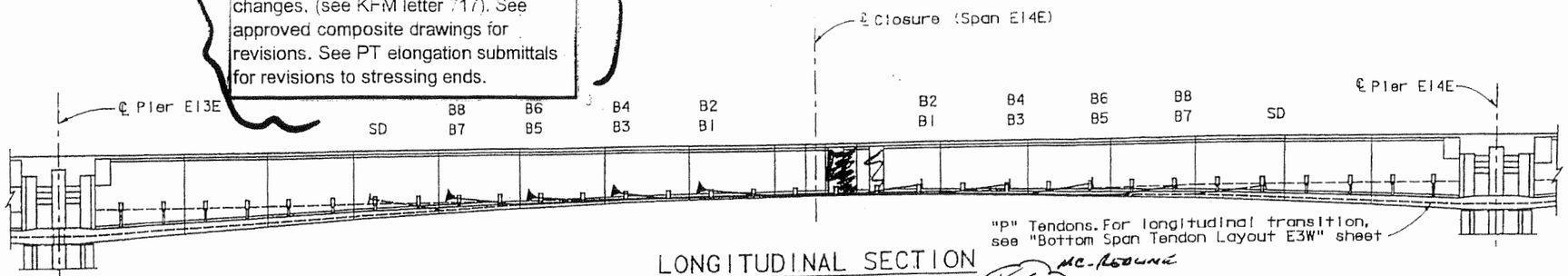

LONGITUDINAL SECTION

1:250

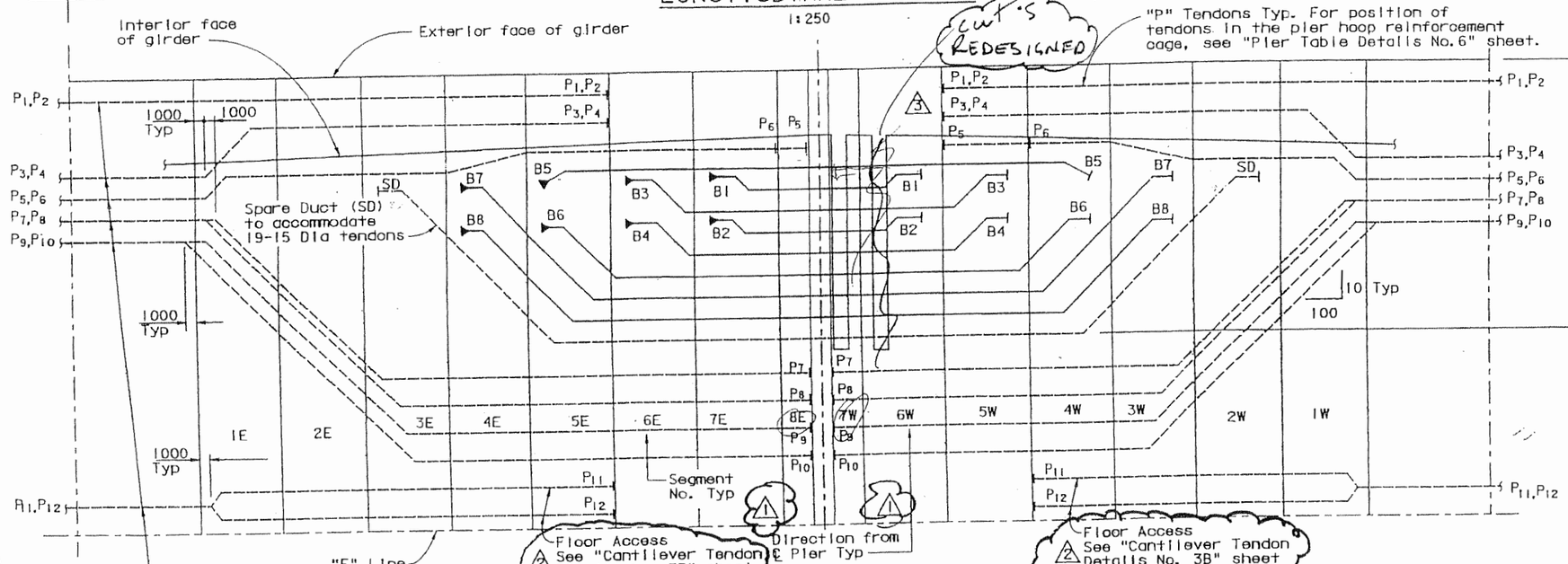

TENDON LAYOUT PLAN

Longitudinal 1:250
Transverse 1:25

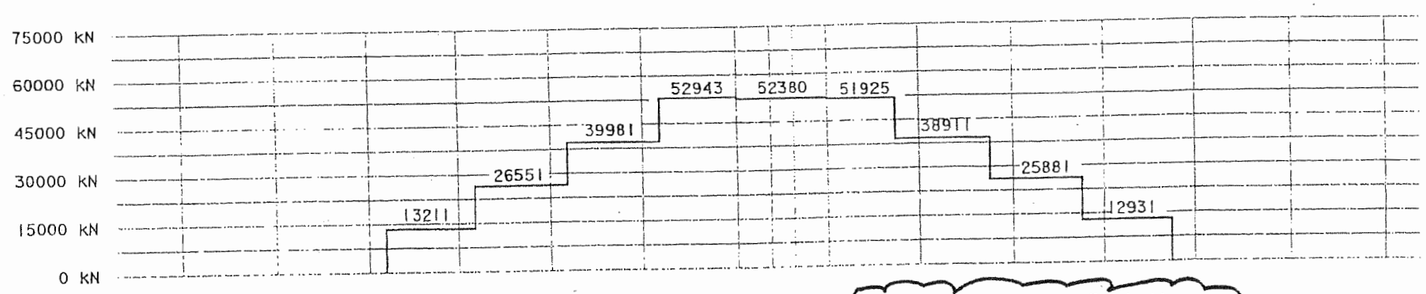

FORCE DIAGRAM

(Total per box girder. For bottom span tendons Type B only)

ALL DIMENSIONS ARE IN MILLIMETERS UNLESS OTHERWISE SHOWN

Caltrans Metric

DIST	COUNTY	ROUTE	KILOMETER POST TOTAL PROJECT	SHEET NO.	TOTAL SHEETS
04	SF, Ala	80	13.9/14.3, 0.0/1.6	649R3	978

REGISTERED ENGINEER - CIVIL

6-4-01
PLANS APPROVAL DATE

REGISTERED PROFESSIONAL ENGINEER Siu Fu John Chan No. C 39457 Exp. 12/31/05 CIVIL STATE OF CALIFORNIA

The State of California or its officers or agents shall not be responsible for the accuracy or completeness of electronic copies of this plan sheet.

T.Y. LIN / MOFFATT & NICHOL
825 BATTERY STREET
SAN FRANCISCO, CA 94111

Caltrans now has a web site! To get to the web site, go to: http://www.dot.ca.gov

BOTTOM SPAN TENDONS (*per box girder)

Tendon	No. of tendons* x No. of strands (15 Dia)	Jacking Force per Tendon kN
E14E B 1	2 x 19	3705
E14E B 2	2 x 19	3705
E14E B 3	2 x 19	3705
E14E B 4	2 x 19	3705
E14E B 5	2 x 19	3705
E14E B 6	2 x 19	3705
E14E B 7	2 x 19	3705
E14E B 8	2 x 19	3705
5 E14E P1-3	6 x 12 (1)	See note 6
4 1 E14E P4-6	6 x 12	1400
5 E14E P7	2 x 12 (1)	See note 6
E14E P8-10	6 x 12	1400
5 E14E P11-12	4 x 12 (1)	See note 6

NOTES:

1. Tendons are symmetrical with respect to "E" Line.
2. Anchorage symbols are as follows:
   - |—— Jacking end
   - ▶—— Dead end
3. The force diagram shows forces which only account for losses due to friction, anchor set and elastic shortening.
4. Key to tendon nomenclature:
   - E14E B 1
   - Span No. — E14E
   - Tendon type — B
   - Tendon mark — 1
5. For "P" tendon details, see "Cantilever Tendon Details" sheets.
6. 5 (1) No stressing and anchorage required for tendons P1-3, P7 & P11-12. Tendons shall be preassembled units and installed by pulling through duct and then grouted.

MARK	DATE	DESCRIPTIONS	BY	CH'D
45	5 08/01/03	ELIMINATE STRESSING AND ANCHORAGE REQUIREMENT FOR NOTED TENDONS	MR	JC
CCO		REVISIONS		

CONTRACT CHANGE ORDER NO. 45
SHEET 28 OF 34

100% PS&E

MARK	DATE	DESCRIPTION	BY	CH'D
4	03/05/03	REVISE P4 AND P7 TENDON JACKING FORCE 4	JC	MS
3	03/05/03	REVISE "P" TENDON ANCHOR LOCATIONS 4	JC	MS
2	03/05/03	ADD FLOOR ACCESS DETAIL CCO 4	JC	MS
1	10/07/02	SHOR AND EXTEND "P" TENDONS CCO 2	JC	MS

DESIGN OVERSIGHT 8/5/03

DESIGN	J. Chan	N. Lunk
DETAILS	E. Zhanko	N. Lunk
QUANTITIES	K. Cormier	J. Chan

PREPARED FOR THE STATE OF CALIFORNIA DEPARTMENT OF TRANSPORTATION

Salid Abbas
PROJECT ENGINEER

BRIDGE NO. 34-0006L/R
KILOMETER POST 13.9/14.3, 0.0/1.6

SAN FRANCISCO OAKLAND BAY BRIDGE
EAST SPAN SEISMIC SAFETY PROJECT

SKYWAY STRUCTURES

BOTTOM SPAN TENDON LAYOUT E14E

CU 04
EA 012021

ORIGINAL SCALE IN MILLIMETERS

DISREGARD PRINTS BEARING EARLIER REVISION DATES

REVISION DATES (PRELIMINARY STAGE ONLY)

SHEET 217 OF

STL-003082 11/24/03

Mission Control Redline

Numerous Tendon profile and deviations changes, (see KFM letter 717). See approved composite drawings for revisions. See PT elongation submittals for revisions to stressing ends.

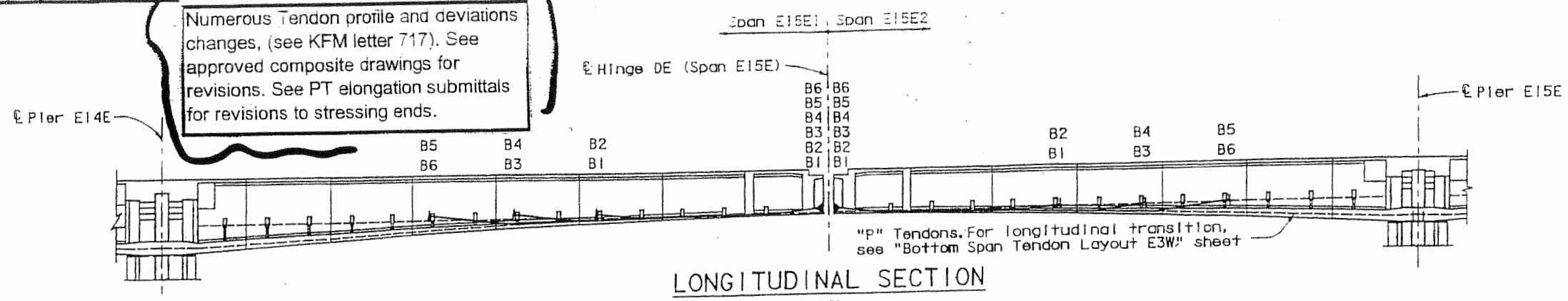

LONGITUDINAL SECTION

1:250

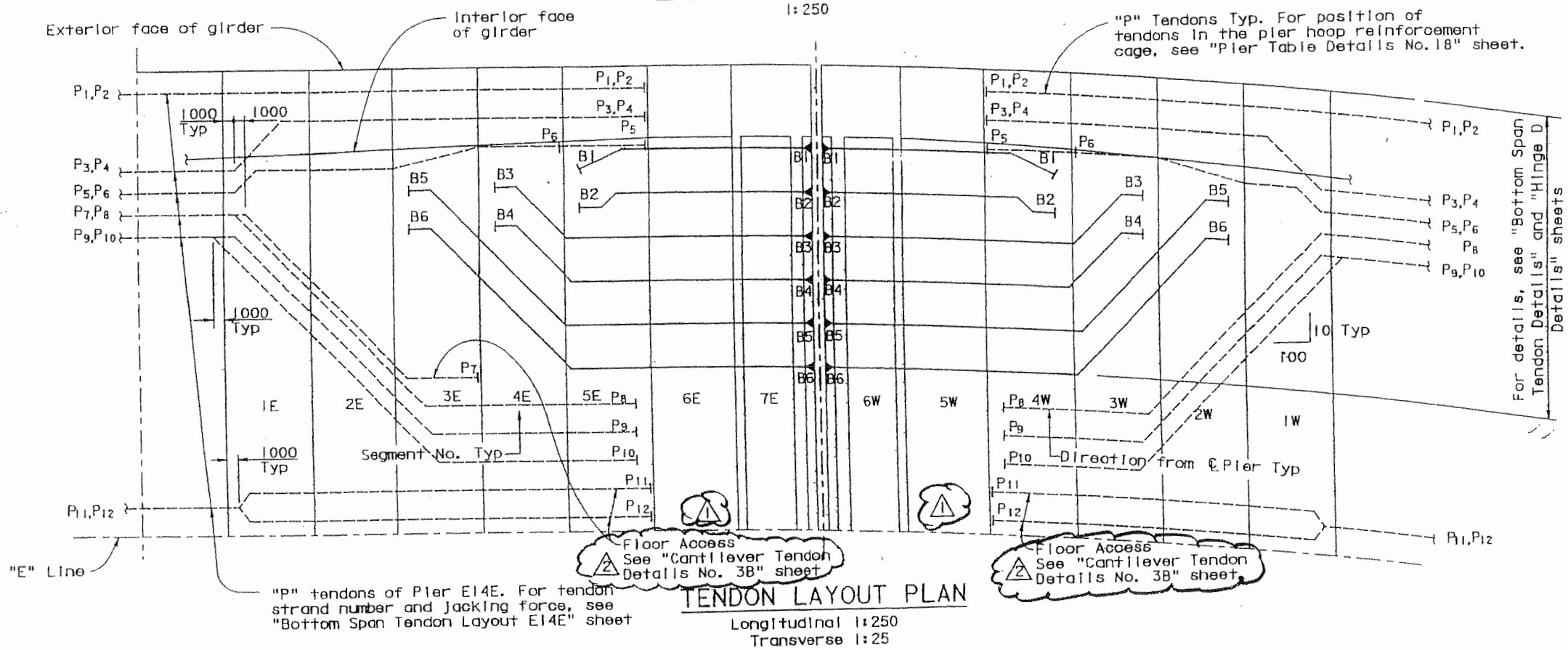

TENDON LAYOUT PLAN

Longitudinal 1:250
Transverse 1:25

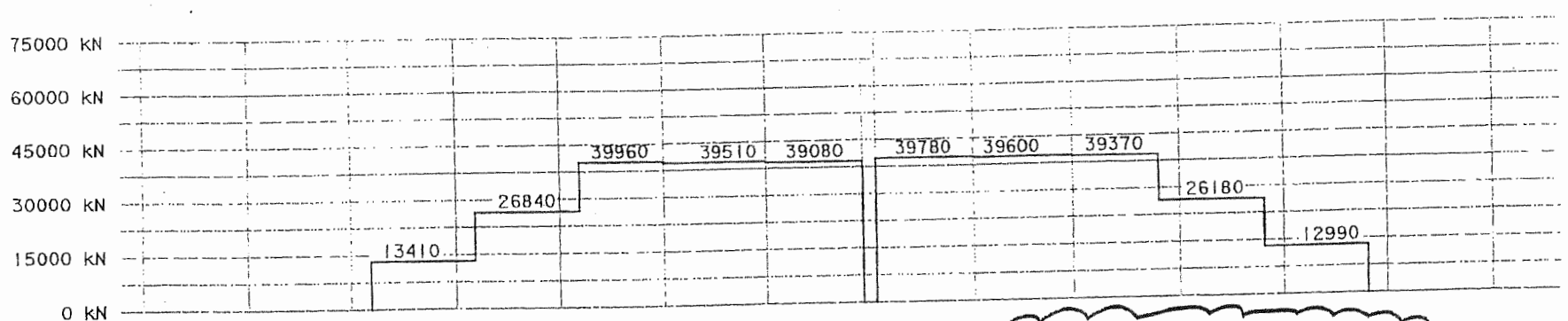

FORCE DIAGRAM

(Total per box girder. For bottom span tendons Type B only)

ALL DIMENSIONS ARE IN MILLIMETERS UNLESS OTHERWISE SHOWN

Caltrans Metric

DIST.	COUNTY	ROUTE	KILOMETER POST TOTAL PROJECT	SHEET NO.	TOTAL SHEETS
04	SF, Ala	30	3.3/14.3, 0.0/1.6	650R3	978

REGISTERED ENGINEER - CIVIL

6-4-01
PLANS APPROVAL DATE

The State of California or its officers or agents shall not be responsible for the accuracy or completeness of electronic copies of this plan sheet.

REGISTERED PROFESSIONAL ENGINEER Siu Fu John Chan No. C 39457 Exp. 12/31/05 CIVIL STATE OF CALIFORNIA

T.Y. LIN / MOFFATT & NICHOL
825 BATTERY STREET
SAN FRANCISCO, CA 94111

Caltrans now has a web site! To get to the web site, go to: http://www.dot.ca.gov

BOTTOM SPAN TENDONS (*per box girder)

Tendon	No. of tendons* x No. of strands (15 Dia)	Jacking Force per Tendon kN
E15E1 B 1	2 x 19	3705
E15E1 B 2	2 x 19	3705
E15E1 B 3	2 x 19	3705
E15E1 B 4	2 x 19	3705
E15E1 B 5	2 x 19	3705
E15E1 B 6	2 x 19	3705
E15E2 B 1	2 x 19	3705
E15E2 B 2	2 x 19	3705
E15E2 B 3	2 x 19	3705
E15E2 B 4	2 x 19	3705
E15E2 B 5	2 x 19	3705
E15E2 B 6	2 x 19	3705
3 E15E2 P1-4	8 x 12	1 See note 6
1 E15E2 P5,6	4 x 12	1400
E15E2 P8-10	6 x 12	1400
3 E15E2 P11-12	4 x 12	1 See note 6

NOTES:

1. Tendons are symmetrical with respect to "E" Line.
2. Anchorage symbols are as follows:
   - ├── Jacking end
   - ▶── Dead end
3. The force diagram shows forces which only account for losses due to friction, anchor set and elastic shortening.
4. Key to tendon nomenclature:
   - E15E1 B 1
   - Span No. — E15E1
   - Tendon type — B
   - Tendon mark — 1
5. For "P" tendon details, see "Cantilever Tendon Details" sheet.
6. 3,6 1 No stressing and anchorage required for tendons P1-4 & P11-12. Tendons shall be preassembled units and installed by pulling through duct and then grouted.

MARK	DATE	DESCRIPTIONS	BY	CH'D
45	3 08/01/03	ELIMINATE STRESSING AND ANCHORAGE REQUIREMENT FOR NOTED TENDONS	MR	JC
CCO		REVISIONS		

CONTRACT CHANGE ORDER NO. 45
SHEET 29 OF 34

100% PS&E

STL-003082 11/24/03

MARK	DATE	DESCRIPTION	BY	CH'D
2	03/05/03	ADD FLOOR ACCESS DETAIL CCO 45	JC	MS
1	10/07/02	SHOW AND EXTEND "P" TENDONS CCO -	JC	MS

DESIGN OVERNIGHT 8/15/03

DESIGN BY J. Chan CHECKED H. Lund
DETAILS BY E. Zharkov CHECKED K. Lunc
QUANTITIES BY K. Cormier CHECKED J. Chan

PREPARED FOR THE STATE OF CALIFORNIA DEPARTMENT OF TRANSPORTATION

Salid Abbas
PROJECT ENGINEER

BRIDGE NO. 34-0006L/R
KILOMETER POST 3.3/14.3, 0.0/1.6

SAN FRANCISCO OAKLAND BAY BRIDGE
EAST SPAN SEISMIC SAFETY PROJECT

SKYWAY STRUCTURES

BOTTOM SPAN TENDON LAYOUT E15E

CU 04
EA 01202

DISREGARD PRINTS BEARING EARLIER REVISION DATES

REVISION DATES (PRELIMINARY STAGE ONLY) 01/25/99 02/25/99 06/08/00 11/27/00 02/27/01 02/26/01 01/25/02 10/25/02 01/25/03 04/01/03

SHEET 218

ORIGINAL SCALE IN MILLIMETERS FOR REDUCED PLANS 0 10 20 30 40 50 60 70 80 90 100

DIST.	COUNTY	ROUTE	KILOMETER POST TOTAL PROJECT	SHEET NO.	TOTAL SHEETS
04	SF, ALA	80	13.9/14.3, 0.0/1.5	651R3	978

Caltrans Metric

REGISTERED ENGINEER - CIVIL

6-4-01
PLANS APPROVAL DATE

REGISTERED PROFESSIONAL ENGINEER Siu Fu John Chan No. C 39457 Exp. 12/31/05 CIVIL STATE OF CALIFORNIA

The State of California or its officers or agents shall not be responsible for the accuracy or completeness of electronic copies of this plan sheet.

T.Y. LIN / MOFFATT & NICHOL
825 BATTERY STREET
SAN FRANCISCO, CA 94111

Caltrans now has a web site! To get to the web site, go to: http://www.dot.ca.gov

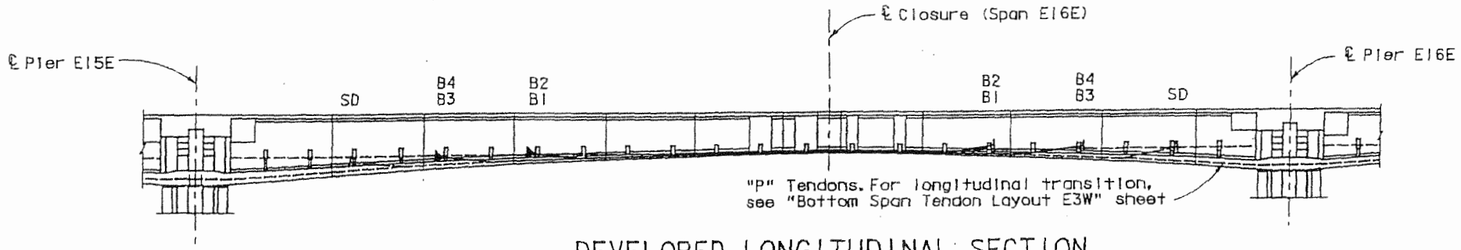

DEVELOPED LONGITUDINAL SECTION

1:250

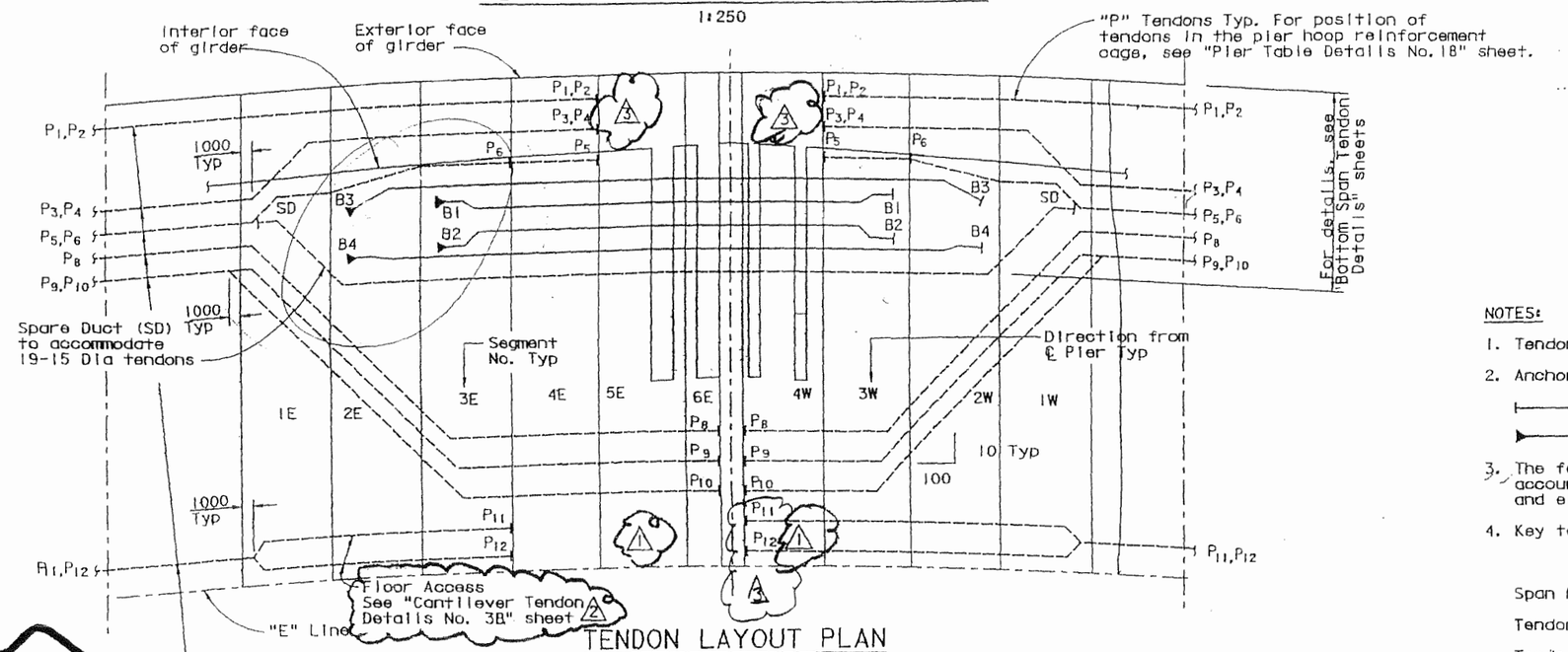

TENDON LAYOUT PLAN

Longitudinal 1:250
Transverse 1:25

BOTTOM SPAN TENDONS (*per box girder)

Tendon	No. of tendons* x No. of strands (15 Dia)	Jacking Force per Tendon kN
E16E B 1	2 x 19	3705
E16E B 2	2 x 19	3705
E16E B 3	2 x 19	3705
E16E B 4	2 x 19	3705
4 E16E P_{1-4}	8 x 12 (1)	See note 6
1 E16E $P_{5,6}$	4 x 12	1400
E16E P_{8-10}	6 x 12	1400
4 E16E P_{11-12}	4 x 12 (1)	See note 6

NOTES:

1. Tendons are symmetrical with respect to "E" Line.
2. Anchorage symbols are as follows:
   - ├── Jacking end
   - ►── Dead end
3. The force diagram shows forces which only account for losses due to friction, anchor set and elastic shortening.
4. Key to tendon nomenclature:
   - E16E — Span No.
   - B — Tendon type
   - Tendon mark
5. For "P" Tendon details, see "Cantilever Tendon Details" sheets.
6. 4 (1) No stressing and anchorage required for tendons P_{1-4} & P_{11-12}. Tendons shall be preassembled units and installed by pulling through duct and then grouted.

Mission Control Redline

Numerous Tendon profile and deviations changes, (see KFM letter 717). See approved composite drawings for revisions. See PT elongation submittals for revisions to stressing ends.

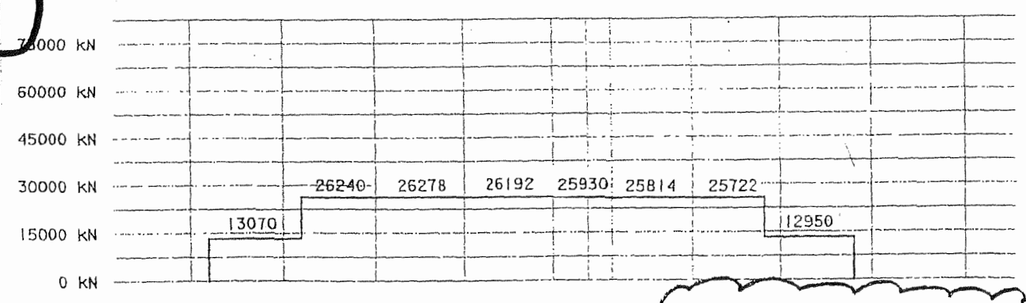

FORCE DIAGRAM

(Total per box girder. For bottom span tendons Type B only) 1

MARK	DATE	DESCRIPTION	BY	CH'D
45	08/01/03	ELIMINATE STRESSING AND ANCHORAGE REQUIREMENT FOR NOTED TENDONS	MR	JC
CCO	MARK DATE	DESCRIPTIONS	BY	CH'D

REVISIONS

CONTRACT CHANGE ORDER NO. 45
SHEET 30 OF 34

100% PS&E

ALL DIMENSIONS ARE IN MILLIMETERS UNLESS OTHERWISE SHOWN

MARK	DATE	DESCRIPTION	BY	CH'D
3	03/05/03	REVISE "P" TENDON ANCHOR LOCATIONS	JC	MS
2	03/05/03	ADD FLOOR ACCESS DETAIL	JC	MS
1	10/07/02	SHOW AND EXTEND "P" TENDONS	JC	MS

DESIGN OVERSIGHT 8/15/03

DESIGN: J. Chan; DETAILS: E. Zharkov; QUANTITIES: L. Cormier; CHECKED: H. Lund; CHECKED: H. Lund; CHECKED: S. Chan

PREPARED FOR THE STATE OF CALIFORNIA DEPARTMENT OF TRANSPORTATION

Sajid Abbas, PROJECT ENGINEER

BRIDGE NO. 34-0006L/R
KILOMETER POST 13.9/14.3, 0.0/1.5

SAN FRANCISCO OAKLAND BAY BRIDGE
EAST SPAN SEISMIC SAFETY PROJECT

SKYWAY STRUCTURES

BOTTOM SPAN TENDON LAYOUT E16E

ORIGINAL SCALE IN MILLIMETERS FOR REVISED PRINTS

CU 04
EA 01202

DISREGARD PRINTS BEARING EARLIER REVISION DATE:

REVISION DATES (PRELIMINARY STAGE ONLY): 02/15/00, 04/28/00, 11/21/00, 02/21/01, 02/26/01, 07/09/02, 10/07/02, 01/07/03, 03/05/03, 08/01/03

SHEET 219

STL-003082 11/24/03

04	SF, Ala	80	13.9/14.3, 0.0/1.6	652R2	978

REGISTERED ENGINEER - CIVIL

6-4-01
PLANS APPROVAL DATE

The State of California or its officers or agents shall not be responsible for the accuracy or completeness of electronic copies of this plan sheet.

REGISTERED PROFESSIONAL ENGINEER Siu Fu John Chan No. C 39457 Exp. 12/31/05 CIVIL STATE OF CALIFORNIA

T.Y. LIN / MOFFATT & NICHOL
825 BATTERY STREET
SAN FRANCISCO, CA 94111

Caltrans now has a web site! To get to the web site, go to: http://www.dot.ca.gov

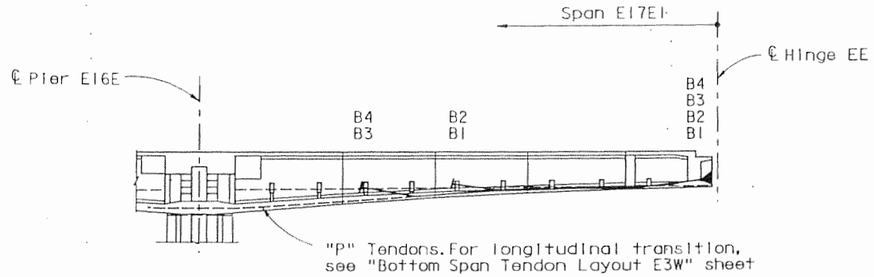

DEVELOPED LONGITUDINAL SECTION

1:250

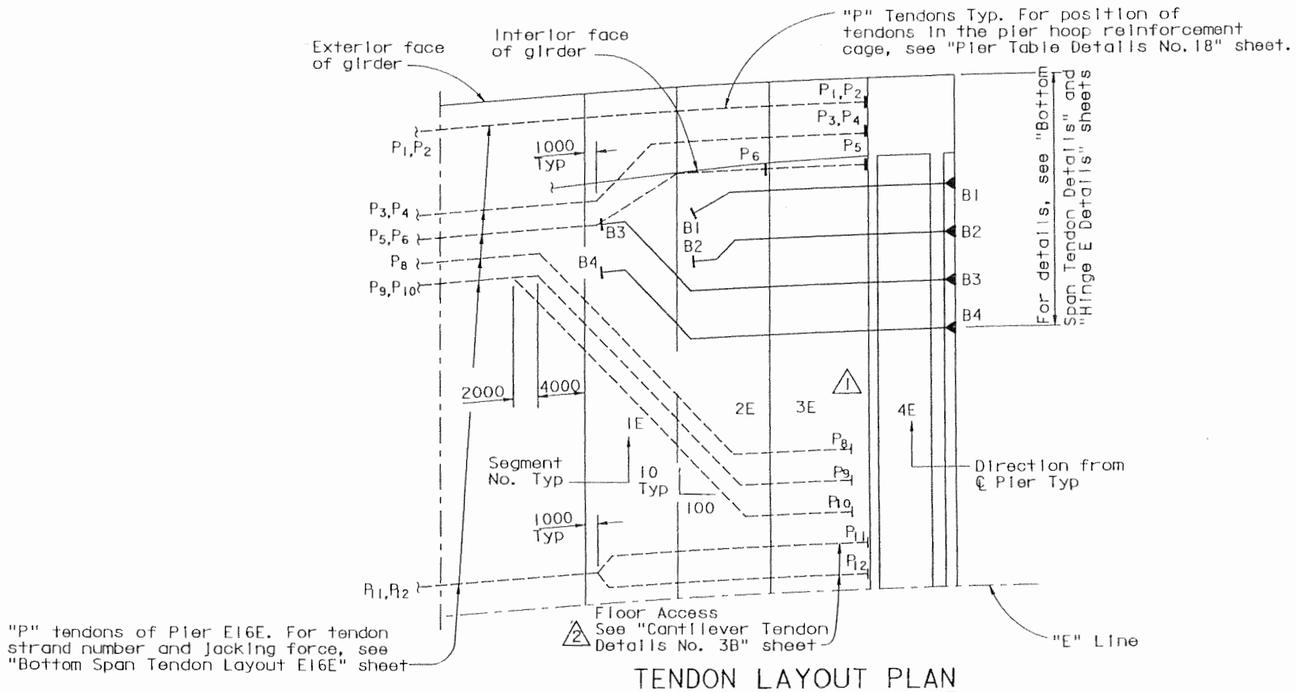

TENDON LAYOUT PLAN

Longitudinal 1:250
Transverse 1:25

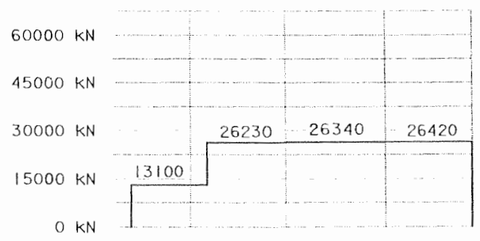

FORCE DIAGRAM

(Total per box girder. For bottom span tendons Type B only) △1

BOTTOM SPAN TENDONS (*per box girder)

Tendon	No. of tendons* x No. of strands (15 Dia)	Jacking Force per Tendon kN
E17E1 B 1	2 x 19	3705
E17E1 B 2	2 x 19	3705
E17E1 B 3	2 x 19	3705
E17E1 B 4	2 x 19	3705

NOTES:

1. Tendons are symmetrical with respect to "E" Line.
2. Anchorage symbols are as follows:
   - ├── Jacking end
   - ▶── Dead end
3. The force diagram shows forces which only account for losses due to friction, anchor set and elastic shortening.
4. Key to tendon nomenclature:
   - E17E — Span No.
   - B — Tendon type
   - 1 — Tendon mark
5. For details, see "Bottom Span Tendon Details" sheets.
6. For "P" tendon details, see "Cantilever Tendon Details" sheets.

MARK	DATE	DESCRIPTIONS	BY	CH'D
△2	03/05/03	ADD FLOOR ACCESS DETAIL	JC	MS
△1	10/07/02	SHOW AND EXTEND "P" TENDONS	JC	MS

REVISIONS

CONTRACT CHANGE ORDER NO. 45
SHEET 31 OF 34

100% PS&E

ALL DIMENSIONS ARE IN MILLIMETERS UNLESS OTHERWISE SHOWN

DESIGN OVERSIGHT 3/5/03
SIGN OFF DATE

Rev. Date: 5-18-98

	BY	CHECKED
DESIGN	J. Chan	H. Lund
DETAILS	D. Leung	H. Lund
QUANTITIES	K. Cormier	J. Chan

PREPARED FOR THE STATE OF CALIFORNIA DEPARTMENT OF TRANSPORTATION

Sajid Abbas
PROJECT ENGINEER

CU 04
EA 012021

BRIDGE NO. 34-0006L/R
KILOMETER POST 13.9/14.3, 0.0/1.6

DISREGARD PRINTS BEARING EARLIER REVISION DATES

REVISION DATES (PRELIMINARY STAGE ONLY): 01/13/95 07/13/96 08/08/96 11/13/96 02/14/01 02/26/01 01/15/02 10/07/02 03/05/03

SHEET 220 OF

ORIGINAL SCALE IN MILLIMETERS FOR REDUCED PLANS 0 10 20 30 40 50 60 70 80 90 100

SAN FRANCISCO OAKLAND BAY BRIDGE
EAST SPAN SEISMIC SAFETY PROJECT

SKYWAY STRUCTURES

BOTTOM SPAN TENDON LAYOUT E17E

USERNAME => H11 DATE PLOTTED => 03/05/2003 TIME PLOTTED => 11:08:15 AM

DIST.	COUNTY	ROUTE	KILOMETER POST TOTAL PROJECT	SHEET NO.	TOTAL SHEETS
04	SF, Ala	80	13.9/14.3, 0.0/1.6	688R3	978

REGISTERED ENGINEER - CIVIL

6-4-01

PLANS APPROVAL DATE

The State of California or its officers or agents shall not be responsible for the accuracy or completeness of electronic copies of this plan sheet.

REGISTERED PROFESSIONAL ENGINEER Charles Redfield No. C 27605 Exp. 12/31/05 CIVIL STATE OF CALIFORNIA

T.Y. LIN / MOFFATT & NICHOL
825 BATTERY STREET
SAN FRANCISCO, CA 94111

Caltrans now has a web site! To get to the web site, go to: http://www.dot.ca.gov

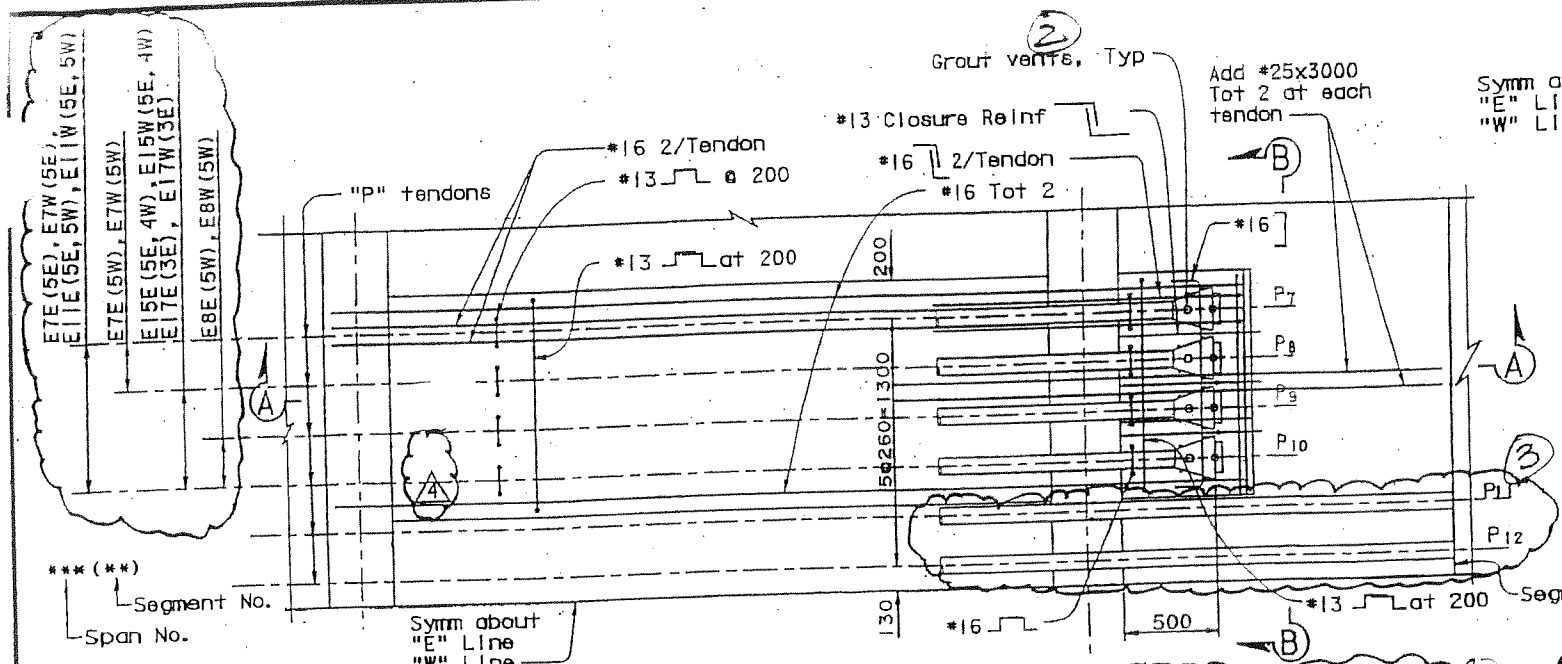

PARTIAL PLAN
1:20

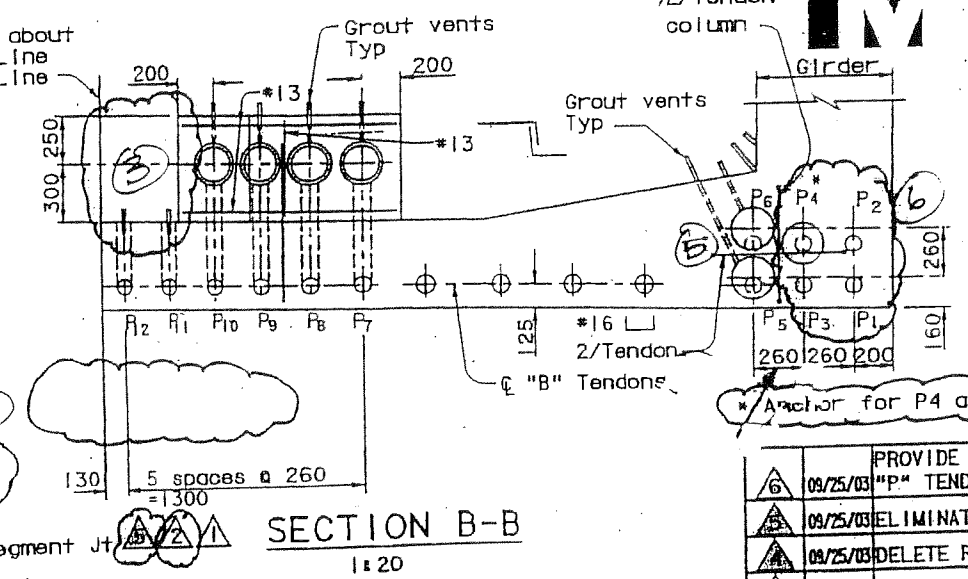

SECTION B-B
1:20

MARK	DATE	DESCRIPTIONS	BY	CH'D	CCO#
6	09/25/03	PROVIDE ALT SHAPE OPTION FOR "P" TENDON ANCHORAGE REINF	JC	MS	45
5	09/25/03	ELIMINATE ANCHOR FOR P1-P4, P11 & P12	JC	MS	45
4	09/25/03	DELETE REINF CALLOUT	JC	MS	—
3	03/05/03	REVISE BLOCKOUT DIMENSION	JC	CR	45
2	03/05/03	REVISE "P" TENDON BLISTER LOCATION	JC	CR	45
1	10/07/02	ADD ANCHORAGE DETAILS FOR "P" TENDONS	JC	CR	7

REVISIONS

CONTRACT CHANGE ORDER NO. 45
SHEET 32 OF 34

Mission Control Redline

Numerous PT duct spacing and concrete cover changes. (see KFM letter 717). See approved composite drawings for final details.

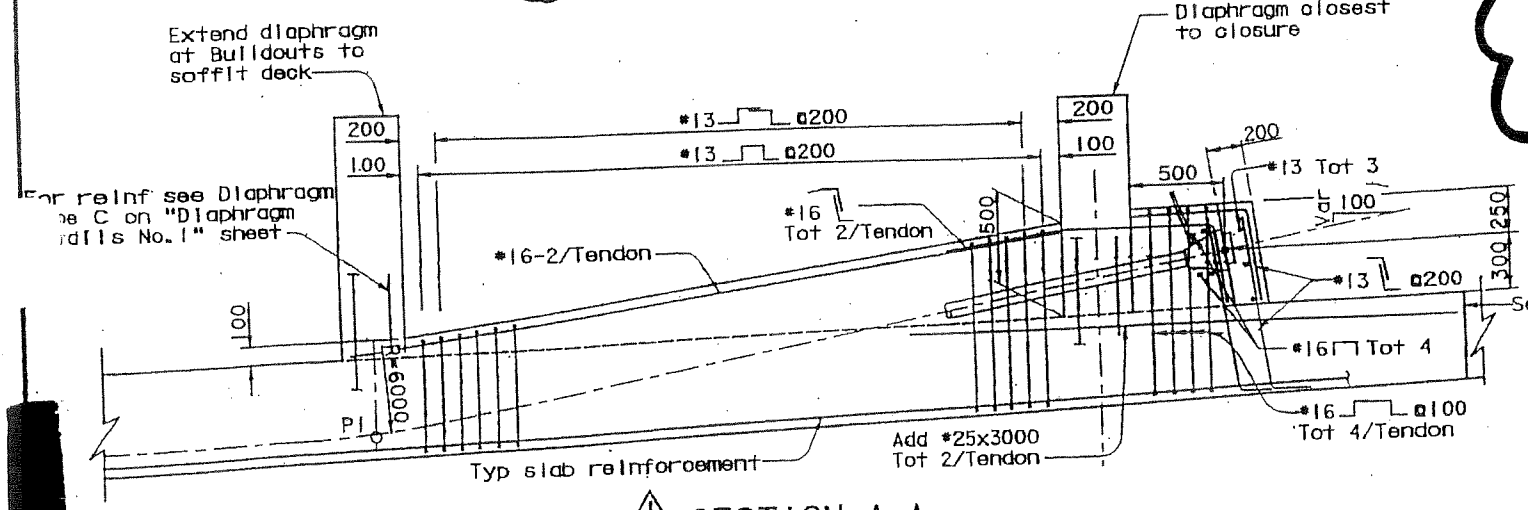

SECTION A-A
1:20

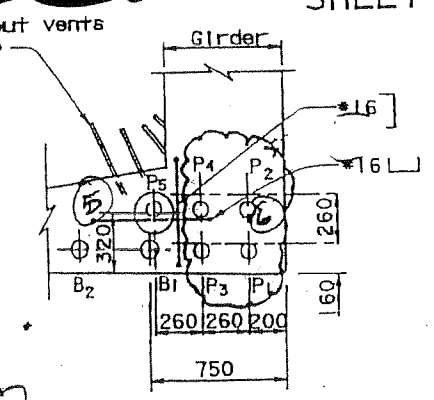

SECTION C-C
1:20

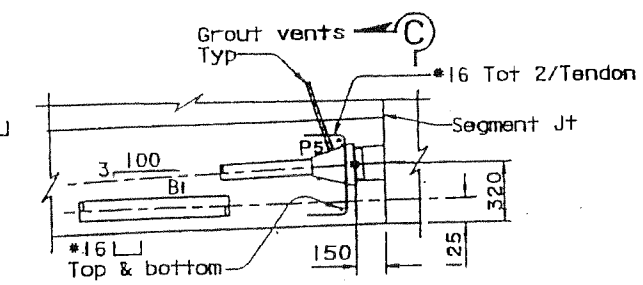

ELEVATION
1:20
(Spans E15E & E15W)

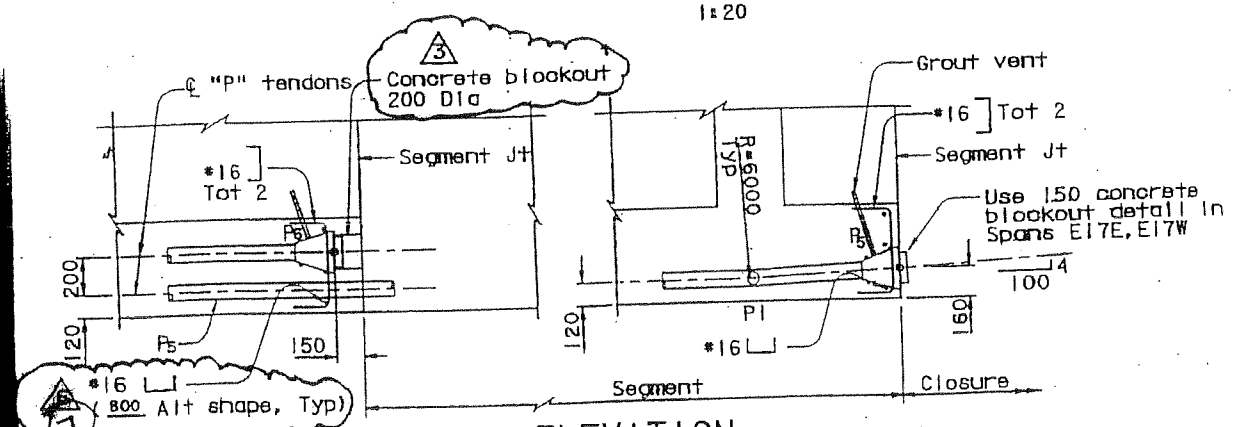

ELEVATION (Near Midspan)
1:20

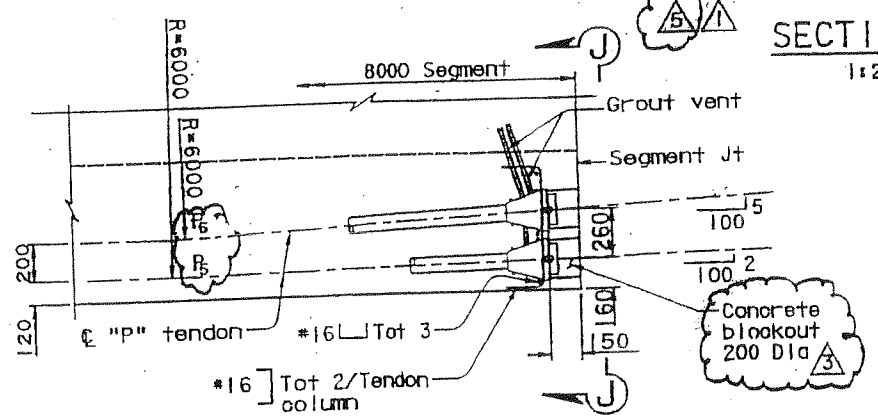

ELEVATION (Near 1/4 Span)
1:20

NOTES:

1. Not all reinforcements are shown for clarity.
2. For Girder reinforcement, see "Girder Reinforcement" sheets.
3. "P" tendons shall be stressed prior to the construction of mid-span closure.
4. For "T" dimension, see "Typical Section" sheets.
5. All "P" tendons are 12-15 Dia tendons anchorages without spirals.
6. For section J-J see "Cantilever Tendon Details No. 3B" sheet.

ALL DIMENSIONS ARE IN MILLIMETERS UNLESS OTHERWISE SHOWN

SAN FRANCISCO OAKLAND BAY BRIDGE
EAST SPAN SEISMIC SAFETY PROJECT

SKYWAY STRUCTURES

CANTILEVER TENDON DETAILS NO. 3

DESIGN OVERSIGHT 9/30/03

DESIGN	C. Redfield	CHECKED	K. Lund
DETAIL	F. Hung	CHECKED	C. Werts
QUANTITIES	L. Cormier	CHECKED	C. Chen

PREPARED FOR THE STATE OF CALIFORNIA DEPARTMENT OF TRANSPORTATION

District Director: Salid Abdo

BRIDGE NO. 34-0006L/R

KILOMETER POST 13.9/14.3, 0.0/1.6

DISREGARD PRINTS BEARING

REVISION DATES (PRELIMINARY STAGE ONLY)

SHEET OF

CU 04

100 % PS&E

STL-003082-11/24/03

Mission Control Redline

Numerous repair and concrete cover changes. (see KFM letter 717 and MCCRS-232). See approved composite drawings for final details.

DIST.	COUNTY	ROUTE	KILOMETER POST TOTAL PROJECT	SHEET NO.	TOTAL SHEETS
04	SF, Ala	80	13.9/14.3, 0.0/1.6	688AR2	978

REGISTERED ENGINEER - CIVIL

6-4-01

PLANS APPROVAL DATE

The State of California or its officers or agents shall not be responsible for the accuracy or completeness of electronic copies of this plan sheet.

REGISTERED PROFESSIONAL ENGINEER Charles Redfield No. C 27605 Exp. 12/31/05 CIVIL STATE OF CALIFORNIA

T.Y. LIN / MOFFATT & NICHOL
825 BATTERY STREET
SAN FRANCISCO, CA 94111

Caltrans now has a web site! To get to the web site, go to: http://www.dot.ca.gov

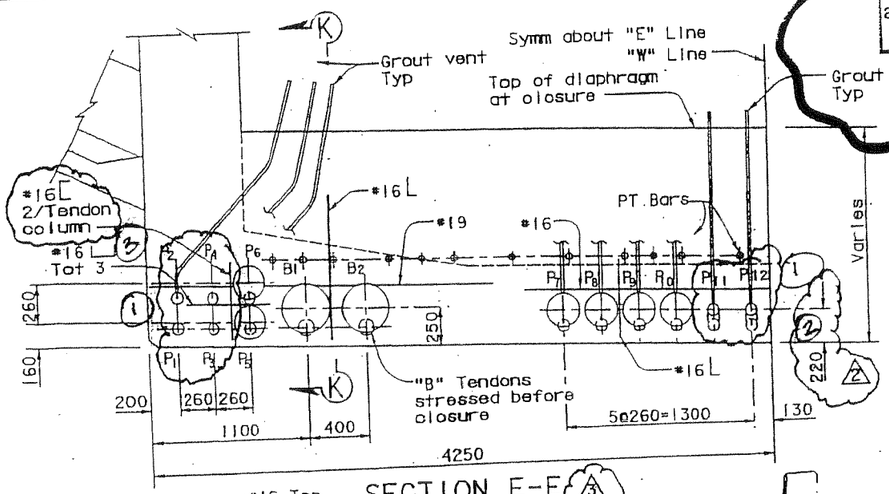

SECTION E-E
1:20

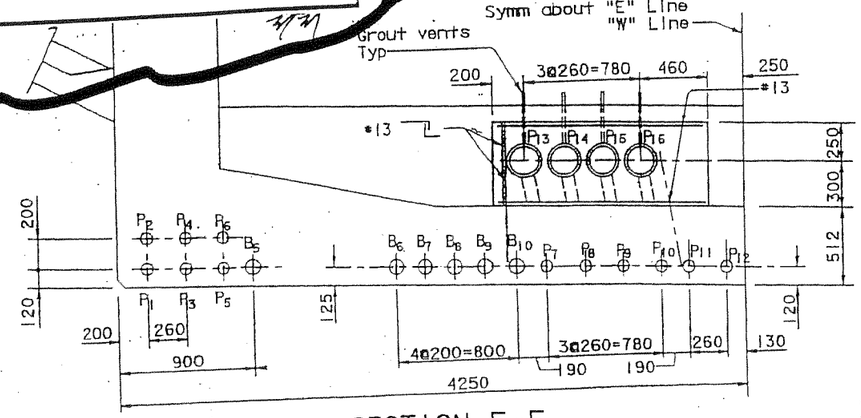

SECTION F-F
1:20

NOTES:

1. Work this sheet with "Cantilever Tendon Details No.3" sheet.
2. For Sections G-G, H-H and K-K, see "Cantilever Tendon Details No.3B" sheet.

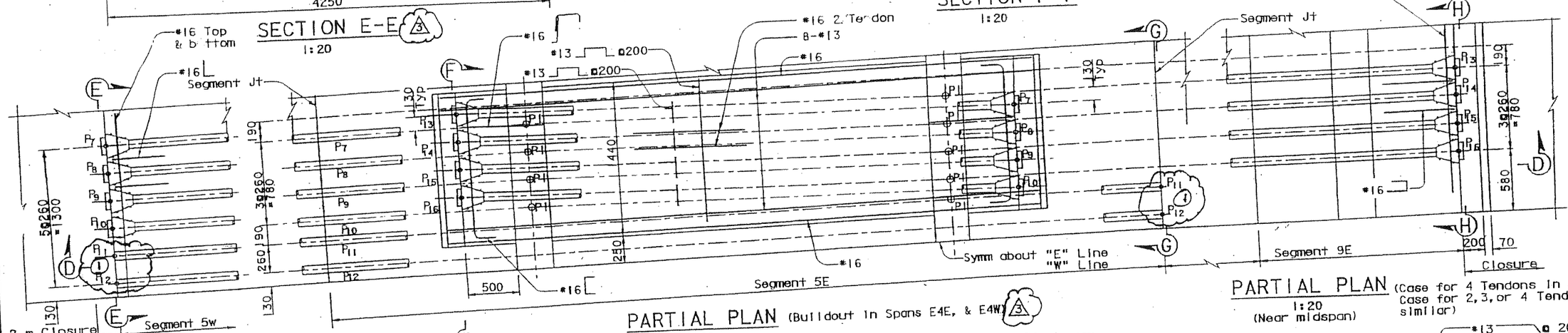

PARTIAL PLAN (For Segment 5W, Spans E3E, E3W)
1:20

PARTIAL PLAN (Buildout In Spans E4E, & E4W)
1:20

PARTIAL PLAN (Case for 4 Tendons In spans E4E, E4W shown Case for 2,3, or 4 Tendons In other spans similar)
1:20
(Near midspan)

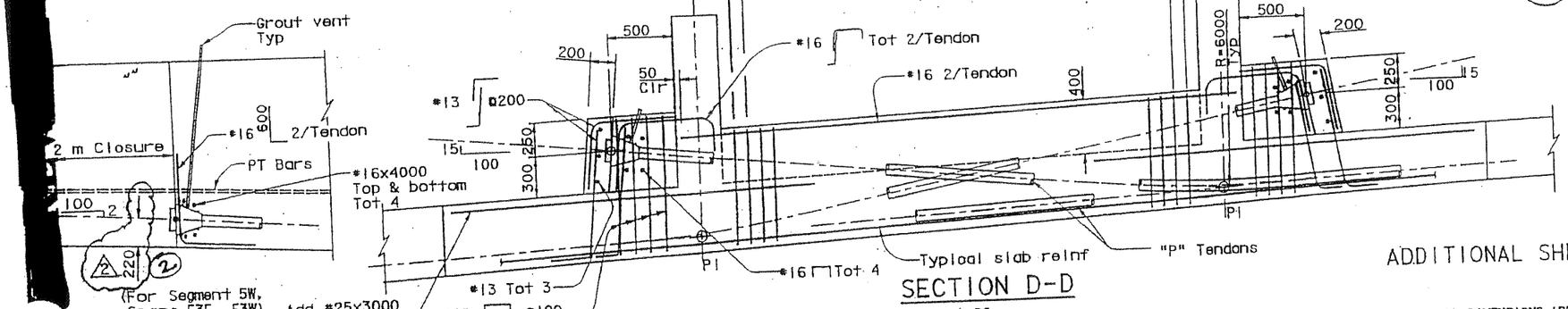

SECTION D-D
1:20
(Tendon slope in relationship to bottom soffit)

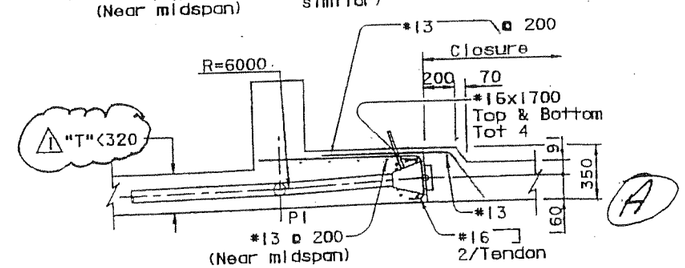

MARK	DATE	DESCRIPTIONS	BY	CH' D	CCO#
3	09/25/03	ELIMINATE ANCHOR FOR P1-P4, P11 & P12	JC	MS	45
2	09/25/03	REVISE 'P' TENDON ANCHOR LOCATION	JC	MS	45
1	03/05/03	DEFINE MINIMUM THICKNESS	JC	CR	45

REVISIONS

ADDITIONAL SHEET

CONTRACT CHANGE ORDER NO. 45
SHEET 33 OF 34

ALL DIMENSIONS ARE IN MILLIMETERS UNLESS OTHERWISE SHOWN

SAN FRANCISCO OAKLAND BAY BRIDGE
EAST SPAN SEISMIC SAFETY PROJECT

SKYWAY STRUCTURES

CANTILEVER TENDON DETAILS NO. 3A

DESIGN OVERSIGHT 9/30/03

DESIGN C. Redfield — CHECKED J. Chan
DETAILS K. Ide — CHECKED J. Chan
QUANTITIES C. Mibell — CHECKED J. Leventini

PREPARED FOR THE STATE OF CALIFORNIA DEPARTMENT OF TRANSPORTATION

Sajid Abbas
PROJECT ENGINEER

BRIDGE NO. 34-0006L/R
KILOMETER POST 13.9/14.3, 0.0/1.6

DISREGARD PRINTS BEARING

REVISION DATES PRELIMINARY STAGE ONLY

SHEET

CU 04

100 % PS&E

STL-0030882 11/24/03

DIST.	COUNTY	ROUTE	KILOMETER POST TOTAL PROJECT	SHEET NO.	TOTAL SHEETS
04	SF, Ala	80	13.9/14.3, 0.0/1.6	688BR2	978

REGISTERED ENGINEER - CIVIL

6-4-01
PLANS APPROVAL DATE

Charles Redfield No. C 27605 Exp. 12/31/05 CIVIL STATE OF CALIFORNIA REGISTERED PROFESSIONAL ENGINEER

The State of California or its officers or agents shall not be responsible for the accuracy or completeness of electronic copies of this plan sheet.

T.Y. LIN / MOFFATT & NICHOL
825 BATTERY STREET
SAN FRANCISCO, CA 94111

Caltrans now has a web site! To get to the web site, go to: http://www.dot.ca.gov

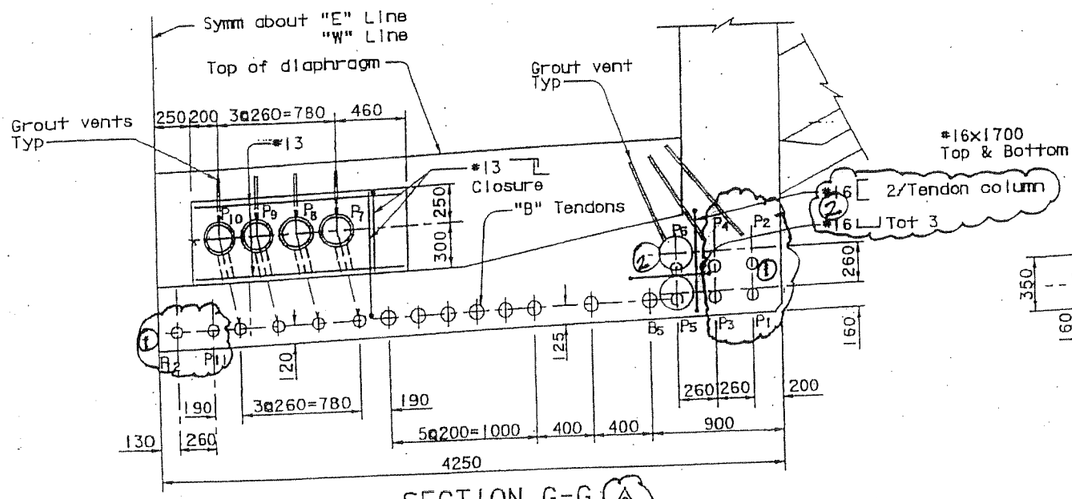

SECTION G-G (2)
1:20

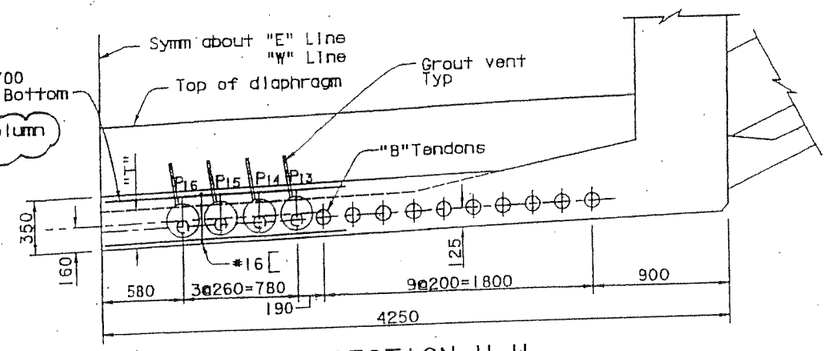

SECTION H-H
1:20

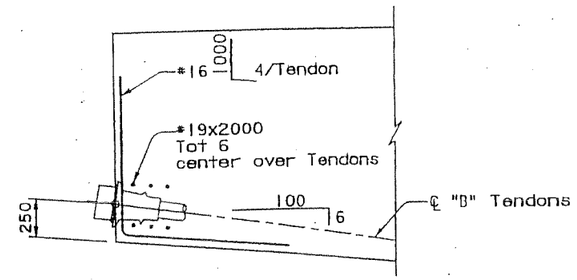

SECTION K-K
1:20

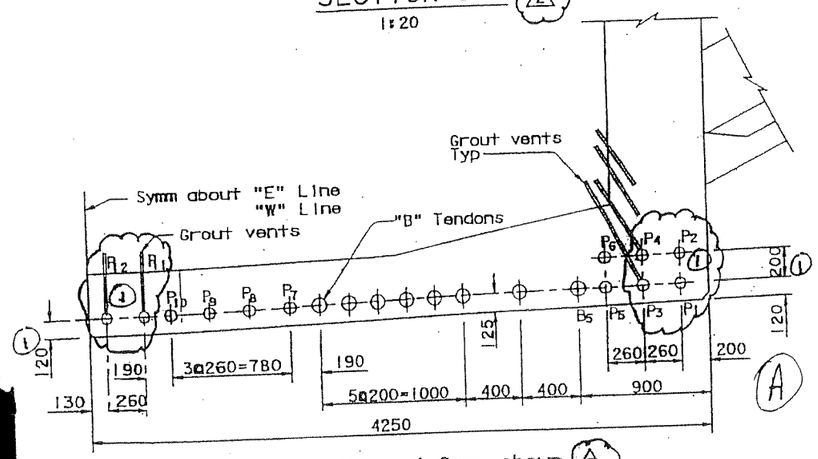

Typical Span shown (2)

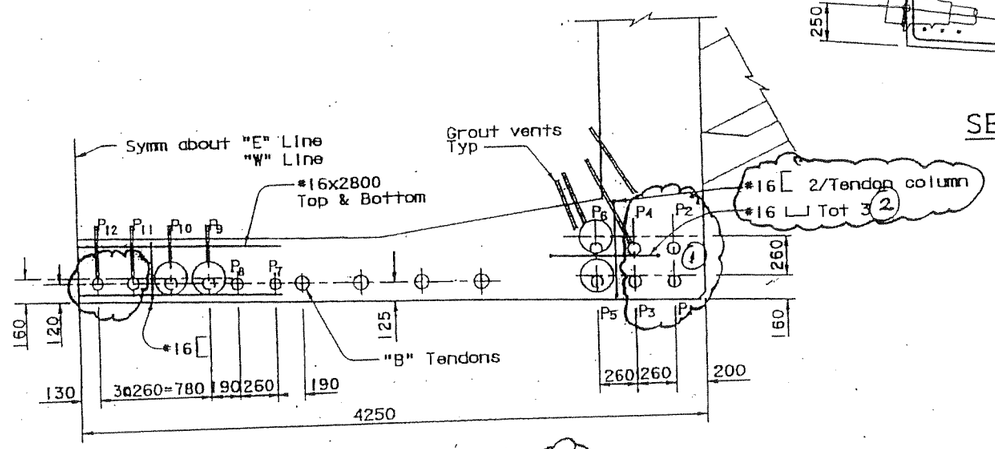

Spans E8E & E8W (2)

SECTION J-J
1:20

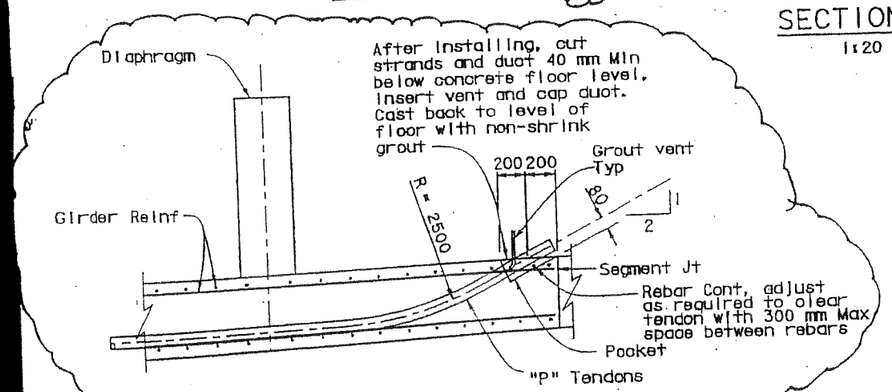

ELEVATION (Floor Access) (1)
1:20

Mission Control Redline

Numerous PT duct spacing and concrete cover changes. (see KFM letter 717). See approved composite drawings for final details.

MARK	DATE	DESCRIPTIONS	BY	CH'D	CCO#
2	09/25/03	ELIMINATE ANCHOR FOR P1-P4, P11 & P12	JC	MS	45
1	03/05/03	ADD ELEVATION AND NOTE FOR FLOOR ACCESS DETAIL	JC	CR	45

REVISIONS

CONTRACT CHANGE ORDER NO. 45
SHEET 34 OF 34

NOTES:

1. Work this sheet with "Cantilever Tendon Details No.3" sheet.
2. For "P" tendon floor access location, see "Bottom Span Tendon Layout" sheets.

ALL DIMENSIONS ARE IN MILLIMETERS UNLESS OTHERWISE SHOWN

SAN FRANCISCO OAKLAND BAY BRIDGE
EAST SPAN SEISMIC SAFETY PROJECT

SKYWAY STRUCTURES

CANTILEVER TENDON DETAILS NO. 3B

DESIGN	C. Redfield	CHECKED	J. Chan
DETAILS	K. Tan	CHECKED	J. Chan

PREPARED FOR THE STATE OF CALIFORNIA DEPARTMENT OF TRANSPORTATION

Salic Abbas
PROJECT ENGINEER

BRIDGE NO. 34-0006L/R
KILOMETER POST 13.9/14.3, 0.0/1.6

100 % PS&E

STL-003082 11/24/03

CONTRACT CHANGE ORDER

Change Requested by: Engineer

CCO: 46	Suppl. No. 0	Contract No. 04 - 012024	Road 04-SF,Ala-80-13.9/14.3,0.0/1.6	FED. AID LOC.: ACIM-080-1(085)8N

To: KIEWIT / FCI / MANSON a JV

You are directed to make the following changes from the plans and specifications or do the following described work not included in the plans and specifications for this contract. ***NOTE: This change order is not effective until approved by the Engineer.***

Description of work to be done, estimate of quantities and prices to be paid. (Segregate between additional work at contract price, agreed price and force account.) Unless otherwise stated, rates for rental of equipment cover only such time as equipment is actually used and no allowance will be made for idle time. This last percentage shown is the net accumulated increase or decrease from the original quantity in the Engineer's Estimate.

Extra Work at Lump Sum:

Compensate the Contractor's vendor to test 19.6 and 27.6 strand dead end anchorages for the transverse tendons in the hinge segment diaphragms.

For this change, the Contractor will receive an agreed Lump Sum of $51,414. This agreed lump sum constitutes full compensation, including all markups, for all direct and indirect costs, all associated project impacts, and all Time Related Overhead (TRO) expenses.

Cost of Extra Work at Agreed Lump Sum $51,414.00

Estimated Cost: Increase ☑ Decrease ☐ $51,414.00

By reason of this order the time of completion will be adjusted as follows: 0 days

Submitted by		
Signature	**Resident Engineer:** COE D.	Date 10-27-03
Approval Recommended by		
Signature	**Construction Engineer:** COE D.	Date 10-27-03
Engineer Approval by		
Signature	(Print name and title) PETER SIEGENTHALER - Chief	Date

We the undersigned contractor, have given careful consideration to the change proposed and agree, if this proposal is approved, that we will provide all equipment, furnish the materials, except as may otherwise be noted above, and perform all services necessary for the work above specified, and will accept as full payment therefor the prices shown above.

NOTE: If you, the contractor, do not sign acceptance of this order, your attention is directed to the requirements of the specifications as to proceeding with the ordered work and filing a written protest within the time therein specified.

Contractor Acceptance by		
Signature	(Print name and title) A.T. Skoro (Project Director)	Date 11/6/03

CONTRACT CHANGE ORDER MEMORANDUM

TO: PETERSIEGENTHALER / COE D.	FILE: E.A. 04 - 012024
FROM: COED.	CO-RTE-PM 04-SF,Ala-80-13.9/14.3,0.0/1.6
	FED. NO. ACIM-080-1(085)8N
CCO#: 46 | SUPPLEMENT#: 0 | Category Code: CHPT	CONTINGENCY BALANCE (incl. this change) $25,940,080.44
COST: $51,414.00 INCREASE ☑ DECREASE ☐	HEADQUARTERS APPROVAL REQUIRED? ☐ YES ☑ NO
SUPPLEMENTAL FUNDS PROVIDED: $0.00	IS THIS REQUEST IN ACCORDANCE WITH ENVIRONMENTAL DOCUMENTS? ☑ YES ☐ NO
CCO DESCRIPTION: Test PT Dead End Anchorage for Hinge	**PROJECT DESCRIPTION:** REPLACE SFOBB EAST SPAN

LOCATION: IN SAN FRANCISCO AND ALAMEDA COUNTIES IN SAN FRANCISCO AND OAKLAND FROM 1.3 KM EAST OF THE YERBA BUENA ISL

THIS CHANGE ORDER PROVIDES FOR:

Compensate the Contractor's vendor, Schwager Davis International (SDI), for testing 19.6 and 27.6 strand dead end anchorages for the transverse tendons in the hinge segment diaphragms. SDI is responsible for testing and supplying the pre-stressing hardware.

Spiral reinforcement of adjacent face anchors conflicted with each other and did not allow the Contractor to develop a face anchor for the transverse tendons in the hinge segments. By allowing the use of dead end anchors, fully embedded into the concrete, dead end and face anchors can be staggered and alternated to eliminate the spiral reinforcement conflict. This also opens up space to reduce surrounding reinforcement congestion.

For this extra work, the Contractor will be paid an agreed lump sum of $51,414.00, which will be financed from the contingency fund for this project. This sum constitutes full compensation, including all markups, for this change. SDI's invoice, filed in the project records, was reviewed by the Senior Bridge Engineer and found to be fair and reasonable.

No adjustment of contract time is warranted, as this change order does not affect the controlling operation.

FHWA concurrence is not required. Design concurrence is not required to compensate SDI for testing. Maintenance concurrence is not required, as this change order does not affect any permanent work.

CONCURRED BY:		
Construction Engineer:	Douglas Coe	Date 10-27-03
Bridge Engineer:		Date
FHWA Representative:	N/A	Date
Project Engineer:		Date
		Date 10/20/2003
		Date
		Date
District Prior Approval By:		Date
HQ (Issue Approve) By:		Date
Resident Engineer's Signature:		Date 10-27-03

ESTIMATE OF COST

	THIS REQUEST	TOTAL TO DATE
ITEMS	$0.00	$0.00
FORCE ACCOUNT	$0.00	$0.00
AGREED PRICE	$51,414.00	$51,414.00
ADJUSTMENT	$0.00	$0.00
TOTAL		

☑ PARTICIPATING ☐ PARTICIPATING IN PART ☐ NONE
☐ NON-PARTICIPATING (MAINTENANCE) ☐ NON-PARTICIPATING

FEDERAL SEGREGATION (if more than one Funding Source or P.I.P. type)
☑ CCO FUNDED PER CONTRACT ☐ CCO FUNDED AS FOLLOWS

FEDERAL FUNDING SOURCE	PERCENT

CONTRACT CHANGE ORDER

Change Requested by: Engineer

CCO: 46	Suppl. No. 0	Contract No. 04 - 012024	Road 04-SF,Ala-80-13.9/14.3,0.0/1.6	FED. AID LOC.: ACIM-080-1(085)8N

To: KIEWIT / FCI / MANSON a JV

You are directed to make the following changes from the plans and specifications or do the following described work not included in the plans and specifications for this contract. ***NOTE: This change order is not effective until approved by the Engineer.***

Description of work to be done, estimate of quantities and prices to be paid. (Segregate between additional work at contract price, agreed price and force account.) Unless otherwise stated, rates for rental of equipment cover only such time as equipment is actually used and no allowance will be made for idle time. This last percentage shown is the net accumulated increase or decrease from the original quantity in the Engineer's Estimate.

Extra Work at Lump Sum:

Compensate the Contractor's vendor to test 19.6 and 27.6 strand dead end anchorages for the transverse tendons in the hinge segment diaphragms.

For this change, the Contractor will receive an agreed Lump Sum of $51,414. This agreed lump sum constitutes full compensation, including all markups, for all direct and indirect costs, all associated project impacts, and all Time Related Overhead (TRO) expenses.

Cost of Extra Work at Agreed Lump Sum $51,414.00

Estimated Cost: Increase ☑ Decrease ☐ $51,414.00

By reason of this order the time of completion will be adjusted as follows: 0 days

Submitted by		
Signature	**Resident Engineer:** COE D.	Date 10-27-03
Approval Recommended by		
Signature	**Construction Engineer:** COE D.	Date 10-27-03
Engineer Approval by		
Signature	(Print name and title) PETER SIEGENTHALER - Chief	Date

We the undersigned contractor, have given careful consideration to the change proposed and agree, if this proposal is approved, that we will provide all equipment, furnish the materials, except as may otherwise be noted above, and perform all services necessary for the work above specified, and will accept as full payment therefor the prices shown above.

NOTE: If you, the contractor, do not sign acceptance of this order, your attention is directed to the requirements of the specifications as to proceeding with the ordered work and filing a written protest within the time therein specified.

Contractor Acceptance by		
Signature	(Print name and title) A.T. Skoro (Project Director)	Date 11/6/03

CONTRACT CHANGE ORDER

Change Requested by: Engineer

CCO: 47	Suppl. No. 0	Contract No. 04 - 012024	Road 04-SF,Ala-80-13.9/14.3,0.0/1.6	FED. AID LOC.: ACIM-080-1(085)8N

To: **KIEWIT / FCI / MANSON a JV**

You are directed to make the following changes from the plans and specifications or do the following described work not included in the plans and specifications for this contract. ***NOTE: This change order is not effective until approved by the Engineer.***

Description of work to be done, estimate of quantities and prices to be paid. (Segregate between additional work at contract price, agreed price and force account.) Unless otherwise stated, rates for rental of equipment cover only such time as equipment is actually used and no allowance will be made for idle time. This last percentage shown is the net accumulated increase or decrease from the original quantity in the Engineer's Estimate.

Adjustment of Compensation at Lump Sum:

1) Furnish and install the revised blister top reinforcement and stirrups;

2) revise the blister dimension and trim the lightweight precast panel edge; and

3) revise the revision table (Fillet Size Representation) by adding the detail (Additional Reinforcement Near Bulkhead).

This work shall be done in accordance with revised plan sheets 689R2, 690R2, 691R2, and 852R2 of 978 as shown on pages 2 to 5 of this change order.

For this work, the Contractor will receive and accept the agreed lump sum of $67,411. This sum constitutes full compensation for providing all labor, material, equipment, tools and incidentals, including markups, for all direct and indirect costs, and all associated project impacts for this work.

No adjustment of contract time is warranted, as this change does not affect the controlling operation.

Estimated cost of Adjustment of Compensation at Lump Sum $67,411.00

Estimated Cost: **Increase** ☑ **Decrease** ☐ **$67,411.00**

By reason of this order the time of completion will be adjusted as follows: 0 days

Submitted by

Signature	Resident Engineer: DOUG COE, Supervising Br. Eng.	Date 6-20-05

Approval Recommended by

Signature	Construction Engineer: DOUG COE, Supervising Br. Eng.	Date 6-20-05

Engineer Approval by

Signature	(Print name and title) DOUG COE, Supervising Br. Eng. - Construction Engin	Date

We the undersigned contractor, have given careful consideration to the change proposed and agree, if this proposal is approved, that we will provide all equipment, furnish the materials, except as may otherwise be noted above, and perform all services necessary for the work above specified, and will accept as full payment therefor the prices shown above.

NOTE: If you, the contractor, do not sign acceptance of this order, your attention is directed to the requirements of the specifications as to proceeding with the ordered work and filing a written protest within the time therein specified.

Contractor Acceptance by

Signature	(Print name and title) DEPUTY PROJECT DIRECTOR	Date 6-29-05

STATE OF CALIFORNIA • DEPARTMENT OF TRANSPORTATION

CONTRACT CHANGE ORDER INPUT

CEM-4901 REV 5/1993 CT# 7541-3516-2

ADA Notice

For individuals with sensory disabilities, this document is available in alternate formats. For information call (916) 263-2041 or TDD (916) 263-2044 or write Records and Forms Managment, 1120 N Street, MS-89, Sacramento, CA 95814.

CASOAC

CONTRACT NO. 0 4 0 1 2 0 2 4 (1–8) CCO NO. 0 4 7 (9–12) SUPPL. 0 0 (13)

CONSTRUCTION DEPT. USE ONLY ☐ FUNCTION (14) ☐ OVERRIDE (15)

CARD TYPE 1 (15)

C. C. O. DESCRIPTION: T O P S P A N T E N D O N (17–56)

NET $ CHANGE THIS CCO: + 6 7 4 1 1 . 0 0 (58–66)

APPROVAL DATE (67): - -

TIME EXTENSION DAYS: - 0 (74)

CATEGORY: C H P T (77)

CARD TYPE 2 (15)

	PAYMENT METHOD			$ AMOUNT
EW ☐ (17)	AC ☒ (18)	FA ☐ (19)	LS ☒ (20)	UP ☐	+ 6 7 4 1 1 . 0 0 (23–31)
EW ☐	AC ☐	FA ☐	LS ☐	UP ☐	
EW ☐	AC ☐	FA ☐	LS ☐	UP ☐	

CARD TYPE 4 (16)

NET $ AMOUNT BRIDGE WORK THIS CCO

+ 6 7 4 1 1 . 0 0 (18–26)

CARD TYPE 3 (16)

ITEM NUMBER (17–19)		QUANTITY (21–32)
	+	.
	+	.
	+	.
	+	.
	+	.
	+	.
	+	.
	+	.
	+	.
	+	.

ITEM NUMBER (17–19)		QUANTITY (21–32)
	+	.
	+	.
	+	.
	+	.
	+	.
	+	.
	+	.
	+	.
	+	.
	+	.

CARD TYPE 5 (16)

FEDERAL PARTICIPATION: P (17)

P = PARTICIPATING

M = NON-PARTICIPATING (MAINTENANCE)

N = NON-PARTICIPATING (OTHER THAN MAINTENANCE)

R = NON-PARTICIPATING (REIMBURSEMENT BY OTHERS)

S = PARTICIPATING IN PART

IF PARTICIPATING IN PART (S), BREAKDOWN COST AS FOLLOWS: (INPUT TYPE AS P,M,N,R)

TYPE (18)	COST (19–27)
	.
	.
	.
	.

FEDERAL SEGREGATION (IF MORE THAN ONE FUNDING SOURCE)

E (28) E = CCO to be funded as per contract

☐ (29) F = CCO to be funded as follows:

FEDERAL FUNDING SOURCE (30–44)	PERCENT (45)

IN CASE OF QUESTIONS CONTACT: *NAME*

Doug Coe / Kannu Balan *{Sent to D04 on 7/1/2005 by Bahram Foadi, (510)622-5142}*

BUSINESS PHONE (510) 622-5151

VERIFY

Department of Transportation
EAST SPAN SEISMIC SAFETY PROJECT
CONCURRENCE FOR CHANGE ORDERS

CCO#: 47 S#: 0
Title: Top Span Blister / Tendon Layout
Date: October 24, 2003

Contract No. 04-012024
Co. & Rte Ala-80-13.9/14.3, 0.0/1.6

To: DOUGLAS COE, Resident Engineer

Requested By: David Wu, Senior Engineer (initials DWW).

Description of Work:

The Contractor shall furnish and install the revised top span tendon blisters and revised precast panel end wall as shown in the revised Contract Plan drawings.

Reason for Change:

The top slab tendon anchor blisters need to be revised because additional strands were added to the top span tendons as a result of the portion of CCO work that eliminated the rebar and concrete closure pours between segments. Due to space constraints, the blister could not simply be widened to handle the additional forces resulting from the additional strands. Instead, the reinforcing steel in the blister and surrounding area had to be re-designed to handle the additional forces. In addition, top slab longitudinal rebar and stirrups in the top span tendon blisters above the webs were modified to relieve congestion.

The upper half of the precast panel end wall needs to be trimmed due to a conflict with the top span tendon. The problem is the top span tendon blister starts on the inside face of the of the panel end wall, but as the tendon runs longitudinally along the bridge, the tendon path crosses over to the outside face of the panel end wall. This conflict only occurs in Spans E15, E16 and E17.

Discussed with persons noted below:

FHWA:	Date	Br. Const:		Date	
District:	Date	Br. Design:	Hasan El-Natur	Date	8/5/03
Other:	Date	Br. Geology:		Date	
		Br. Maintenance:		Date	

Estimated Cost: $0 (Arnel verifying, 10/23/03)

Recommended Method of Payment:

- ☐ Contract Items
- ☐ Extra Work at Force Account
- ☒ Agreed Price (LS or UP)
- ☐ Other:

Recommended Time Adjustment: Possible time savings

Prior Approvals:

1. This represents an acknowledgement that the individuals below are in concurrence with the change order.
2. This represents an acknowledgement that I am in concurrence with this change order which must be approved before any work is done.

Comments:

Douglas Coe, Resident Engineer — Date 10-27-03 — 1. X 2. ___

Pete Siegenthaler, Principal Construction Engineer — Date 10/27/03 — 1. ✓ 2. ___

Robert Kobal, HQ CCO Coordinator — Date 10/29/03 — 1. X 2. ___

DIST.	COUNTY	ROUTE	KILOMETER POST TOTAL PROJECT	SHEET NO.	TOTAL SHEETS
04	SF, Ala	80	13.9/14.3, 0.0/1.6	689R2	978

REGISTERED ENGINEER - CIVIL

6-4-01
PLANS APPROVAL DATE

REGISTERED PROFESSIONAL ENGINEER Charles Redfield No. C 27605 Exp. 12/31/01 CIVIL STATE OF CALIFORNIA

The State of California or its officers or agents shall not be responsible for the accuracy or completeness of electronic copies of this plan sheet.

T.Y. LIN / MOFFATT & NICHOL
B25 BATTERY STREET
SAN FRANCISCO, CA 94111

Caltrans now has a web site! To get to the web site, go to: http://www.dot.ca.gov

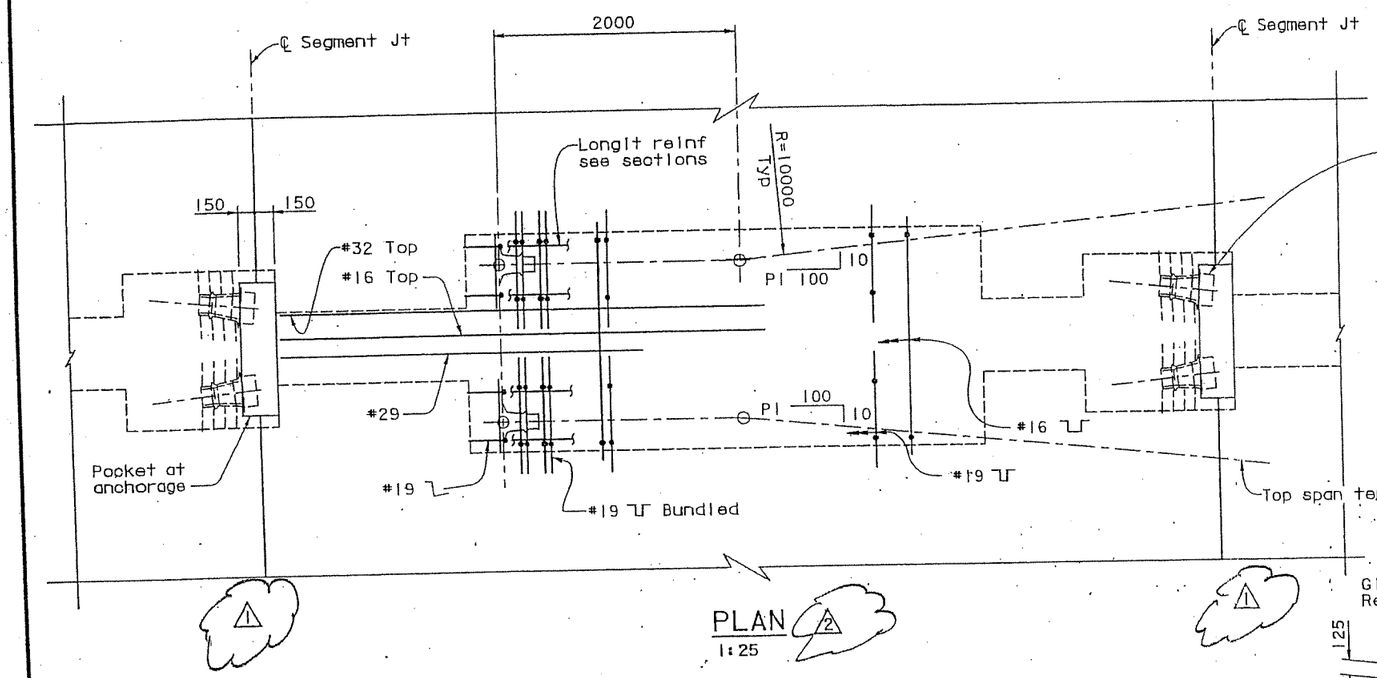

PLAN
1:25

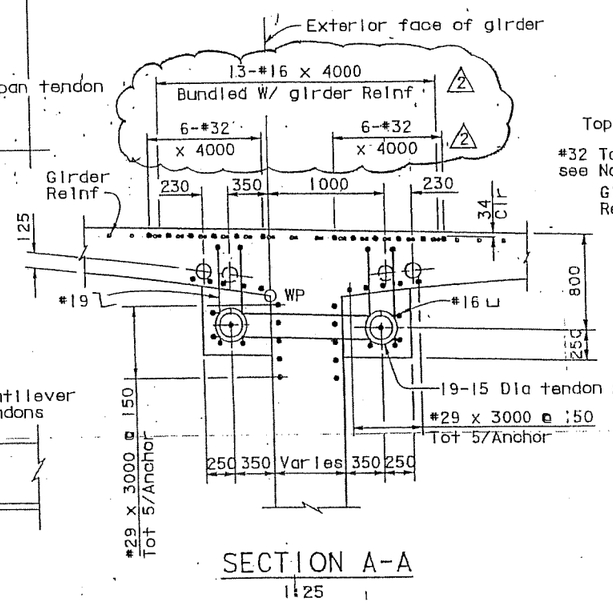

SECTION A-A
1:25

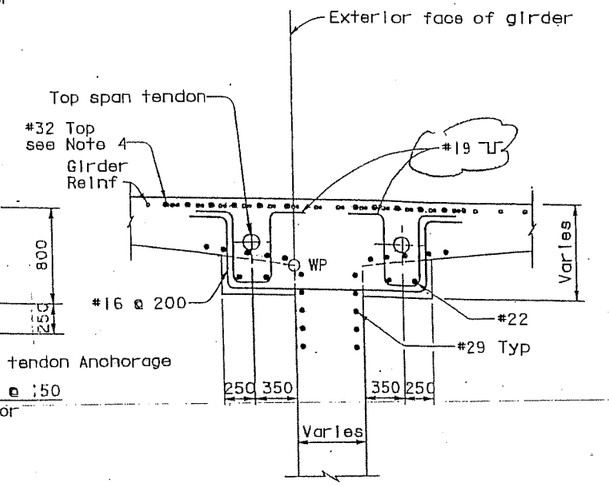

SECTION B-B
1:25

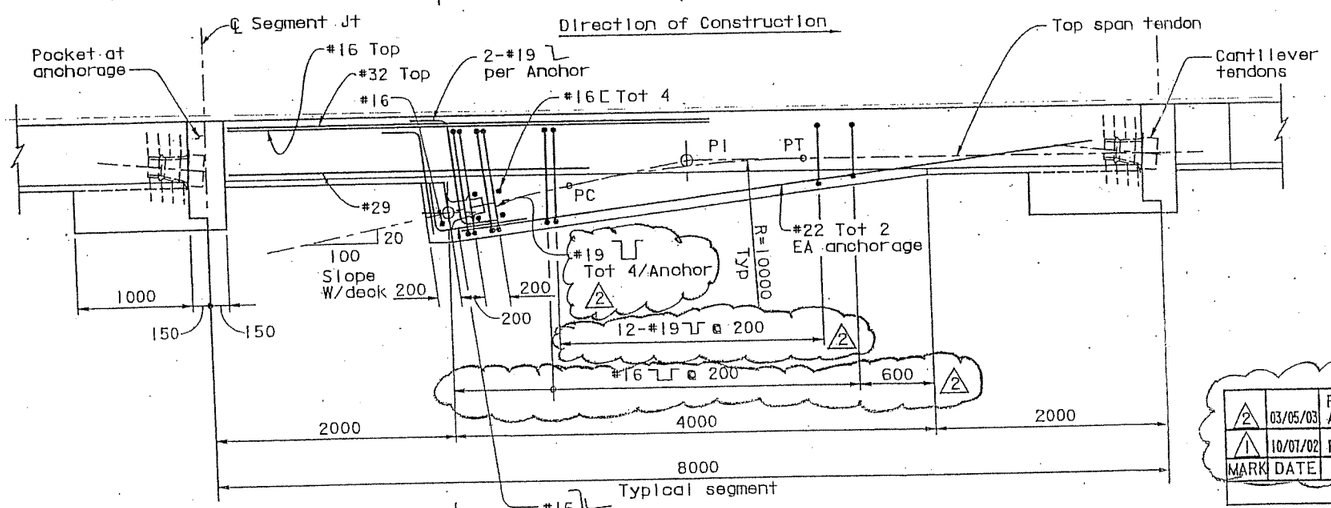

LONGITUDINAL SECTION
1:25

MARK	DATE	DESCRIPTIONS	BY	CH'D	CCO
2	03/05/03	REVISE BLISTER TOP REINFORCEMENT AND STIRRUPS	JC	CR	47
1	10/07/02	REVISE TO MATCH CAST DECK JOINT	JC	CR	7

REVISIONS

CONTRACT CHANGE ORDER NO. 47
SHEET 2 OF 5

NOTES:

1. For prestressing notes, see "Prestressing Notes" sheet.
2. For top slab tendon layout, see "Top Span Tendon Layout" sheets.
3. For clarity, not all reinforcement is shown in sections.
4. #32 Bars may be adjusted to clear vertical PT in girders.

ALL DIMENSIONS ARE IN MILLIMETERS UNLESS OTHERWISE SHOWN

DESIGN OVERSIGHT 3/5/03

	BY	CHECKED	
DESIGN	C. Redfield	H. Lund	
DETAILS	E. Zharkov	H. Lund	
QUANTITIES	K. Cormier	J. Chan	

PREPARED FOR THE STATE OF CALIFORNIA DEPARTMENT OF TRANSPORTATION

Sajid Abbas
PROJECT ENGINEER

BRIDGE NO. 34-0006L/R
KILOMETER POST 13.9/14.3, 0.0/1.6

SAN FRANCISCO OAKLAND BAY BRIDGE
EAST SPAN SEISMIC SAFETY PROJECT

SKYWAY STRUCTURES

TOP SPAN TENDON DETAILS NO. 1

100% PS&E

DATE PLOTTED => 03/05/2003 TIME PLOTTED => 10:29:25 AM
NAME => H11

DIST.	COUNTY	ROUTE	KILOMETER POST TOTAL PROJECT	SHEET NO.	TOTAL SHEETS
04	SF, Ala	80	13.9/14.3, 0.0/1.6	690R2	978

REGISTERED ENGINEER - CIVIL

6-4-01
PLANS APPROVAL DATE

REGISTERED PROFESSIONAL ENGINEER Charles Redfield No. C 27605 Exp. 12/31/01 CIVIL STATE OF CALIFORNIA

The State of California or its officers or agents shall not be responsible for the accuracy or completeness of electronic copies of this plan sheet.

T.Y. LIN / MOFFATT & NICHOL
825 BATTERY STREET
SAN FRANCISCO, CA 94111

Caltrans now has a web site! To get to the web site, go to: http://www.dot.ca.gov

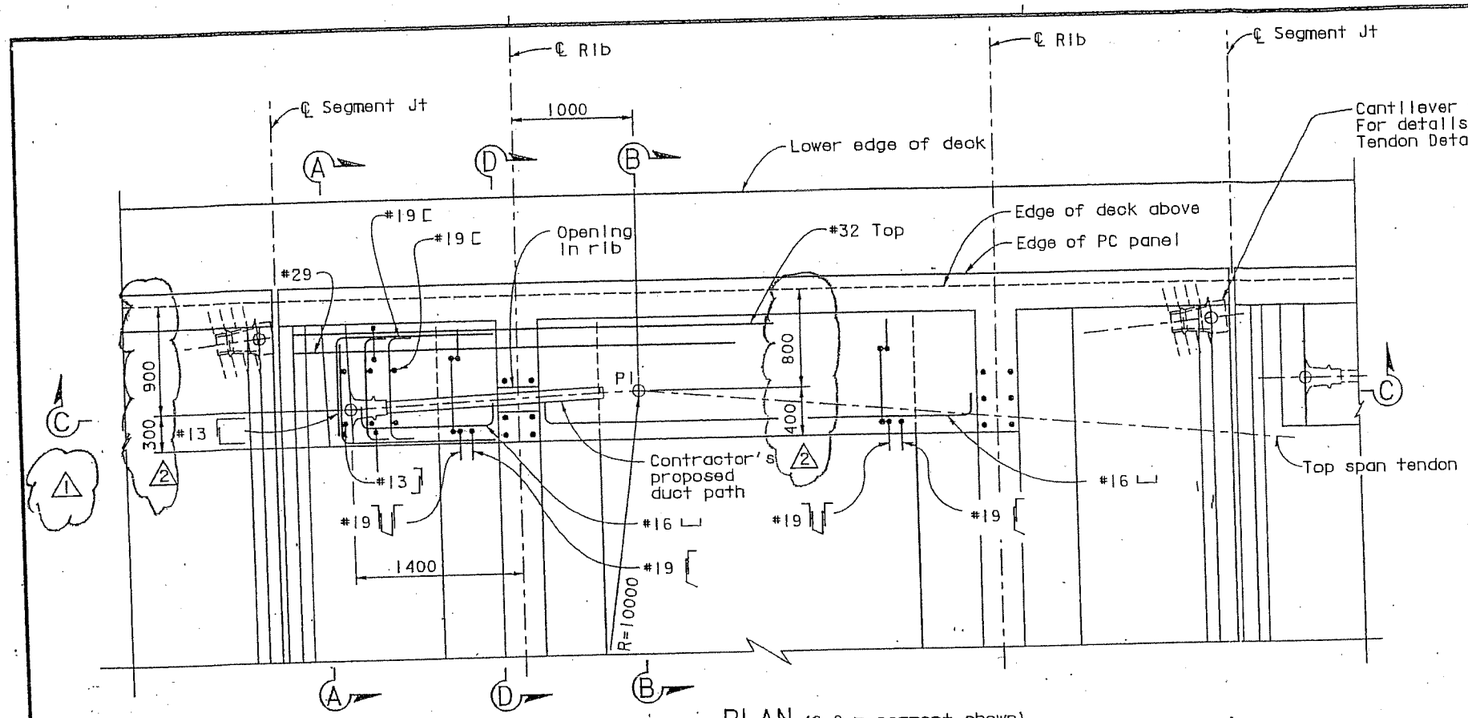

PLAN (8.0 m segment shown) (Other segments similar)
1:25

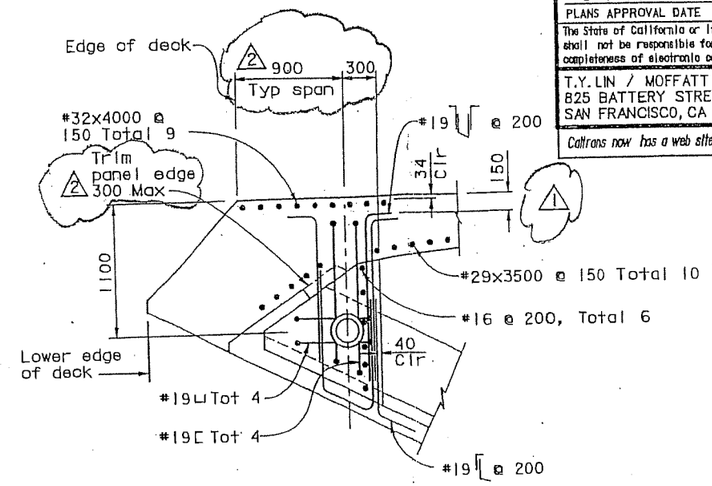

SECTION A-A
1:25

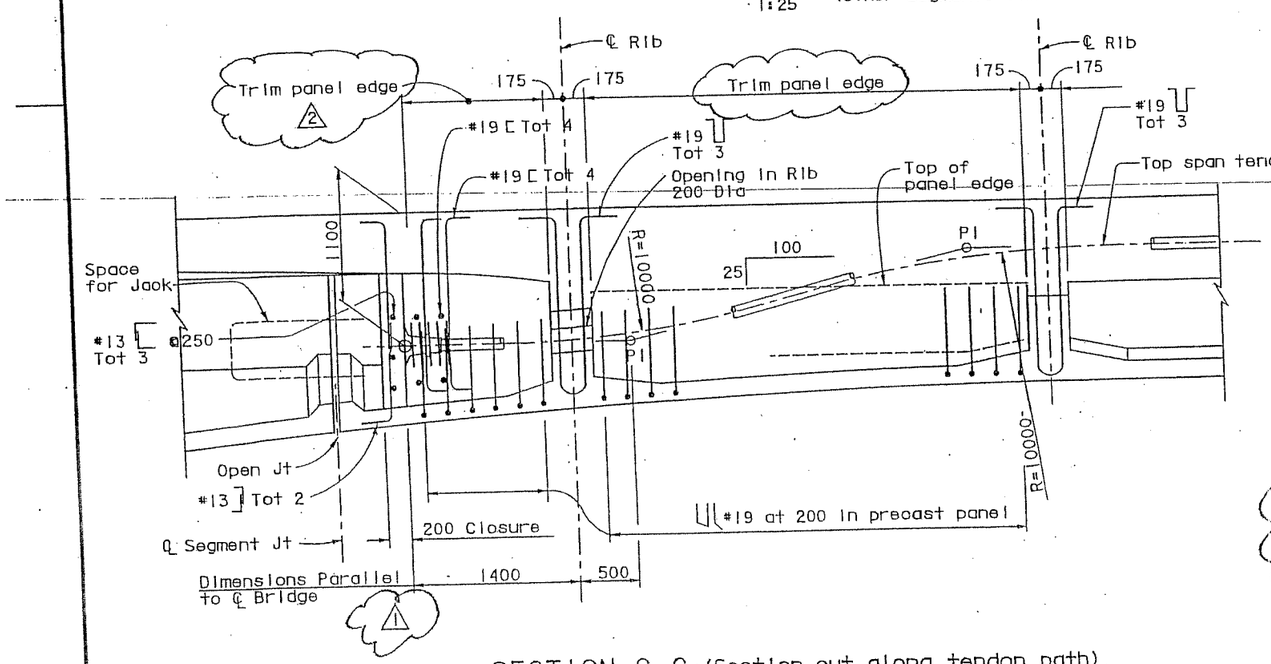

SECTION C-C (Section cut along tendon path)
1:25

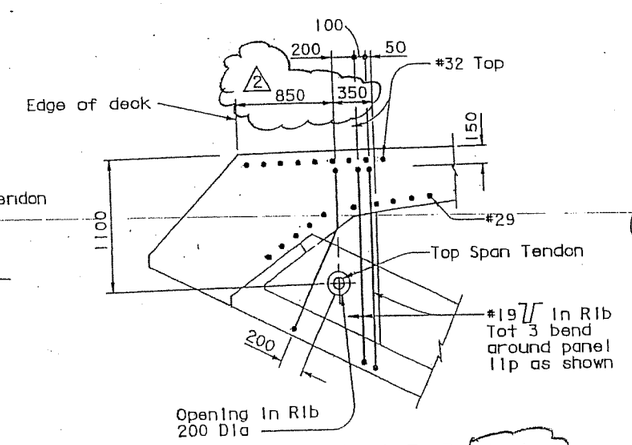

SECTION D-D
1:25

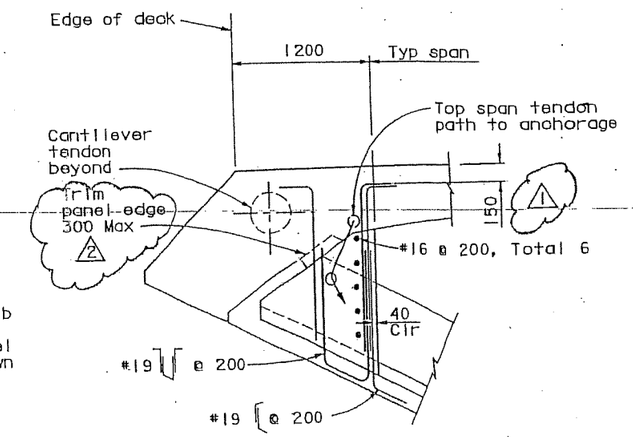

SECTION B-B
1:25

MARK	DATE	DESCRIPTIONS	BY	CH'D	
2	03/05/03	REVISE BLISTER DIMENSION AND TRIM PANEL EDGE	JC	CR	47
1	10/07/02	ADJUST DIMENSIONS AND DETAILS OF TOP SPAN TENDON	JC	CR	7

REVISIONS

CONTRACT CHANGE ORDER NO. 47
SHEET 3 OF 5

NOTES:

1. For prestressing notes, see "Prestressing Notes" sheet.
2. For top slab tendon layout, see "Top Span Tendon Layout" sheets.
3. The tendon slope may be adjusted to fit the required radius.
4. For precast panel details, see "Precast Panel Details" sheets.

ALL DIMENSIONS ARE IN MILLIMETERS UNLESS OTHERWISE SHOWN

DESIGN OVERSIGHT 3/5/03

DESIGN	BY C. Redfield	CHECKED	H. Lund
DETAILS	BY A. Lishansky	CHECKED	H. Lund
QUANTITIES	BY	CHECKED	

PREPARED FOR THE STATE OF CALIFORNIA DEPARTMENT OF TRANSPORTATION

Sajid Abbas
PROJECT ENGINEER

BRIDGE NO. 34-0006L/R
KILOMETER POST 13.9/14.3,

SAN FRANCISCO OAKLAND BAY BRIDGE
EAST SPAN SEISMIC SAFETY PROJECT

SKYWAY STRUCTURES

TOP SPAN TENDON DETAILS NO. 2

100% PS&E

DATE PLOTTED => 03/05/2003 TIME PLOTTED => 10:30:33 AM

DIST.	COUNTY	ROUTE	KILOMETER POST TOTAL PROJECT	SHEET NO.	TOTAL SHEETS
04	SF, Ala	80	13.9/14.3, 0.0/1.6	691R2	978.

REGISTERED ENGINEER - CIVIL

6-4-01
PLANS APPROVAL DATE

REGISTERED PROFESSIONAL ENGINEER Charles Redfield No. C 27605 Exp. 12/31/01 CIVIL STATE OF CALIFORNIA

The State of California or its officers or agents shall not be responsible for the accuracy or completeness of electronic copies of this plan sheet.

T.Y. LIN / MOFFATT & NICHOL
825 BATTERY STREET
SAN FRANCISCO, CA 94111

Caltrans now has a web site! To get to the web site, go to: http://www.dot.ca.gov

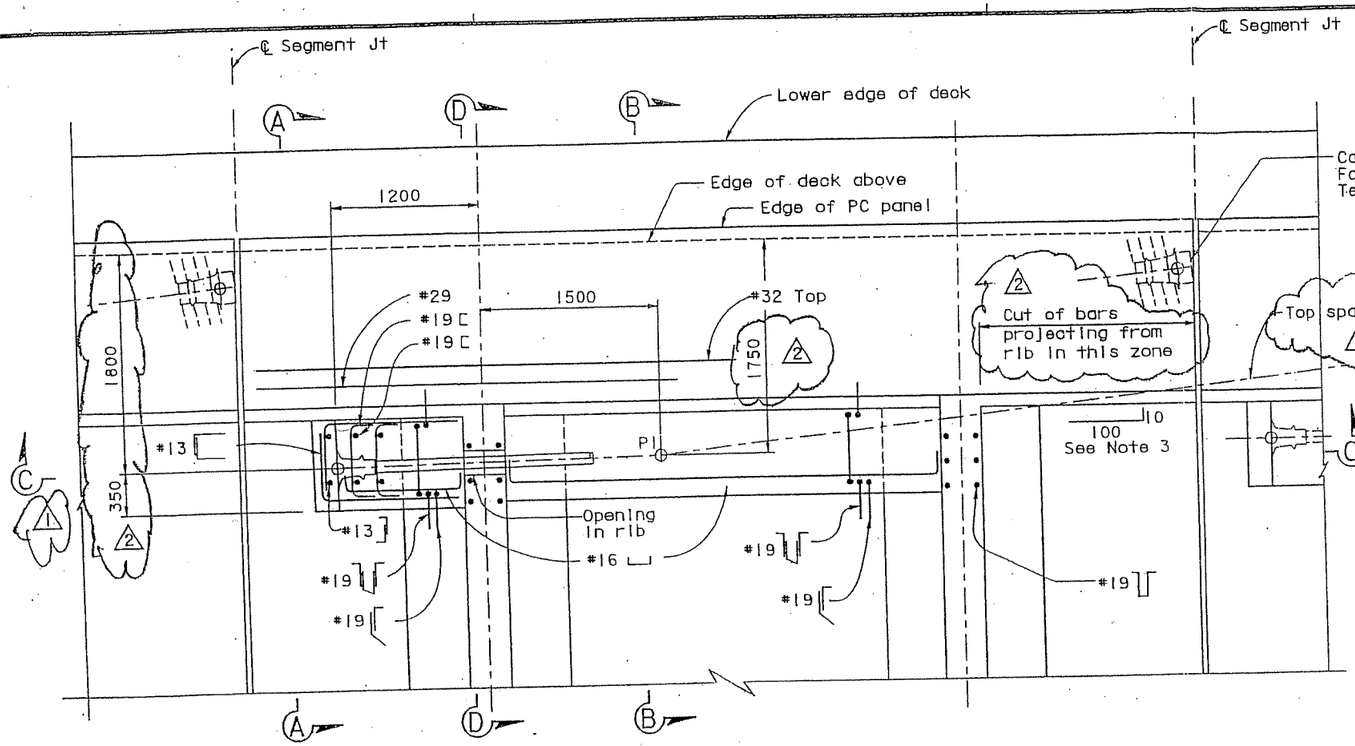

PLAN (8.0 m segment shown)
(Other segments similar)
1:25

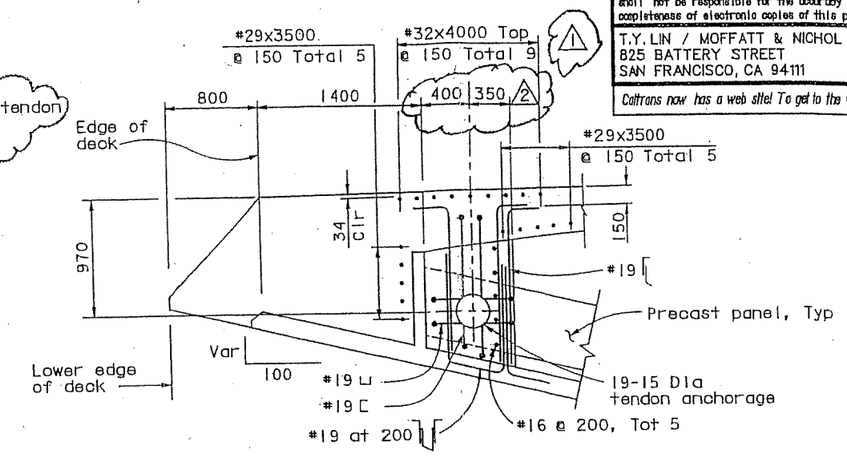

SECTION A-A
1:25

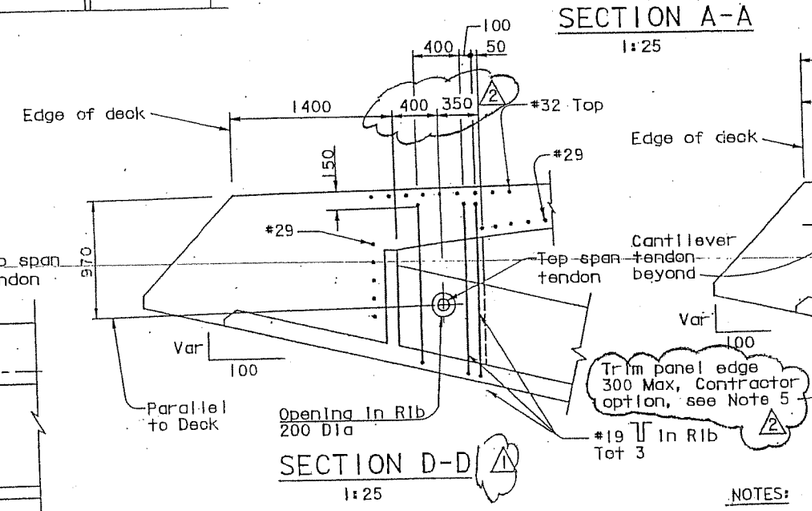

SECTION D-D
1:25

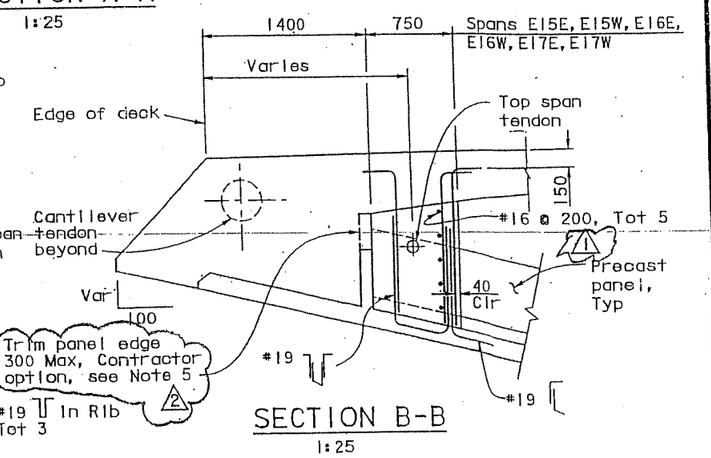

SECTION B-B
1:25

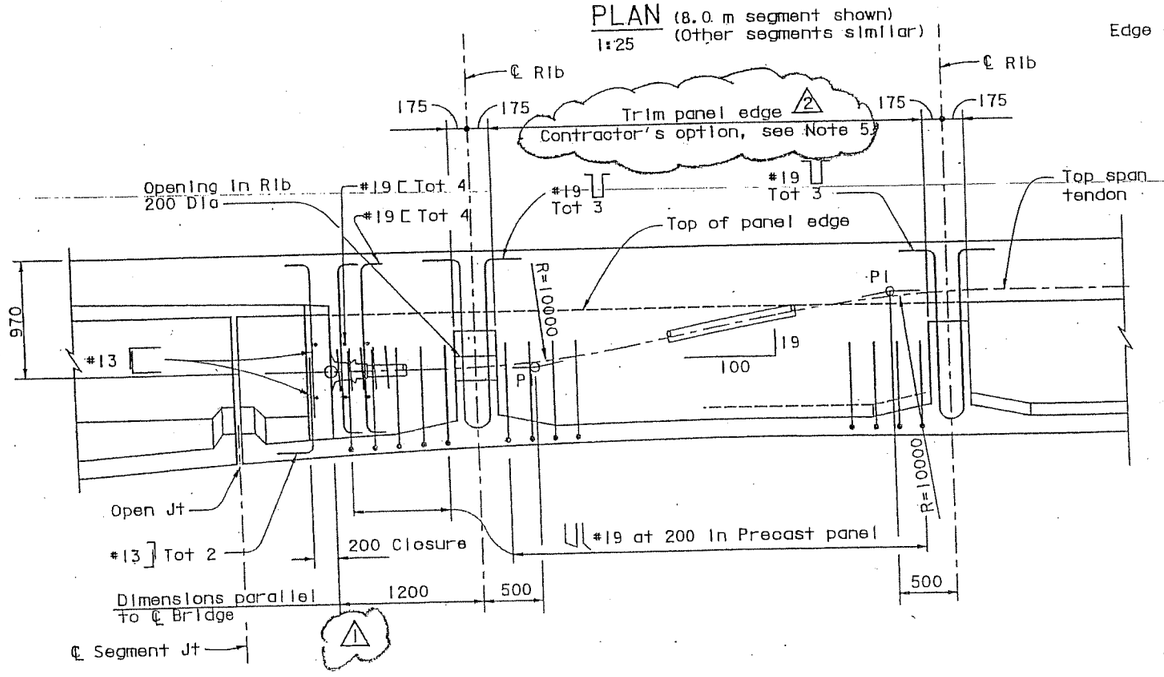

SECTION C-C
1:25

NOTES:

1. For prestressing notes, see "Prestressing Notes" sheet.
2. For top slab tendon layout, see "Top Span Tendon Layout" sheets.
3. The tendon slope may be adjusted to fit the required radius.
4. For precast panel details, see "Precast Panel Details" sheets.
5. If Contractor trims panel edge, Contractor is to take the necessary measures to allow stripping and handling of the panels.

MARK	DATE	DESCRIPTIONS	BY	CH'D	CCO
2	03/05/03	ADD NOTE, REVISE BLISTER DIMENSIONS AND TRIM PANEL EDGE	JC	CR	47
1	10/07/02	ADJUST DIMENSIONS AND DETAILS OF TOP SPAN TENDON	JC	CR	7

REVISIONS

CONTRACT CHANGE ORDER NO. 47
SHEET 4 OF 5

ALL DIMENSIONS ARE IN MILLIMETERS UNLESS OTHERWISE SHOWN

100% PS&E
DATE PLOTTED => 03/05/2003 TIME PLOTTED => 10:31:26 AM
FILE NAME => H11

SAN FRANCISCO OAKLAND BAY BRIDGE
EAST SPAN SEISMIC SAFETY PROJECT

SKYWAY STRUCTURES

TOP SPAN TENDON DETAILS NO. 3

DESIGN OVERSIGHT 3/5/03

	BY	CHECKED
DESIGN	C. Redfield	H. Lund
DETAILS	A. Lishansky	H. Lund
QUANTITIES	K. Cormier	J. Chan

PREPARED FOR THE STATE OF CALIFORNIA DEPARTMENT OF TRANSPORTATION

Sajid Abbas
PROJECT ENGINEER

BRIDGE NO. 34-0006L/R
KILOMETER POST 13.9/14.3, 0.0/1.6

DIST.	COUNTY	ROUTE	KILOMETER POST TOTAL PROJECT	SHEET NO.	TOTAL SHEETS
04	SF, Ala	80	13.9/14.3, 0.0/1.6	852R2	978

REGISTERED ENGINEER - CIVIL

6-4-01
PLANS APPROVAL DATE

REGISTERED PROFESSIONAL ENGINEER Esmond C. Chan No. C 39454 Exp. 12/31/01 CIVIL STATE OF CALIFORNIA

The State of California or its officers or agents shall not be responsible for the accuracy or completeness of electronic copies of this plan sheet.

T.Y. LIN / MOFFATT & NICHOL
825 BATTERY STREET
SAN FRANCISCO, CA 94111

Caltrans now has a web site! To get to the web site, go to: http://www.dot.ca.gov

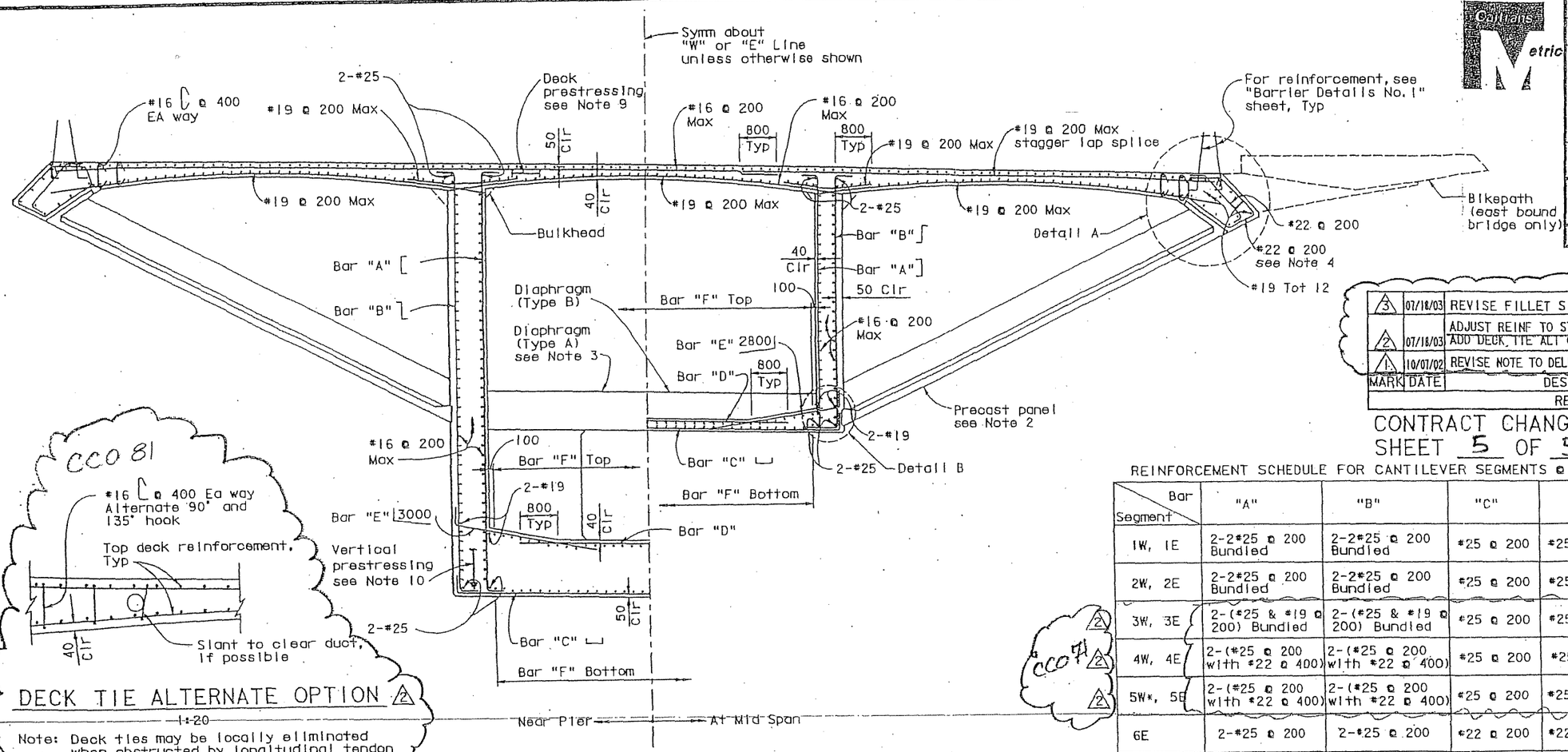

TYPICAL SECTION (CANTILEVER SEGMENTS @ PIERS E3W, E3E)
1:50

DECK TIE ALTERNATE OPTION 2
1:20

Note: Deck ties may be locally eliminated when obstructed by longitudinal tendon paths (10% Max per segment).

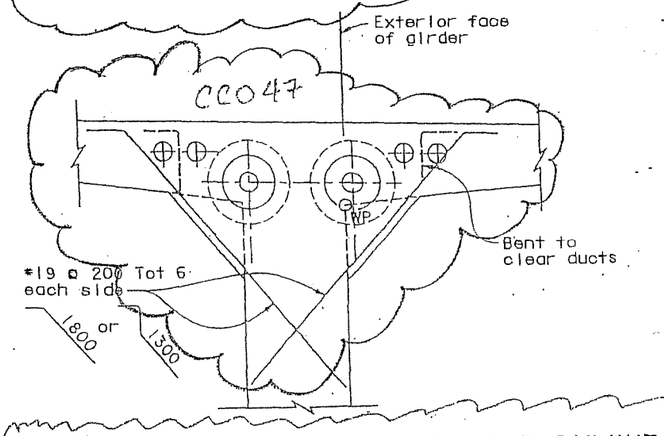

ADDITIONAL REINFORCEMENT NEAR BULKHEAD 3
1:20

MARK	DATE	DESCRIPTIONS	BY	CH'D	CCO.
3	07/18/03	REVISE FILLET SIZE REPRESENTATION	MS	MR	47
2	07/18/03	ADJUST REINF TO STANDARDIZE SPACING. ADD DECK TIE ALT OPTION	MS	MR	71 81
1	10/01/02	REVISE NOTE TO DELETE TOP DECK CLOSURE	EC	CR	7

REVISIONS

CONTRACT CHANGE ORDER NO. 47
SHEET 5 OF 5

REINFORCEMENT SCHEDULE FOR CANTILEVER SEGMENTS @ PIERS E3W, E3E

Segment \ Bar	"A"	"B"	"C"	"D"	"E"	"F"
1W, 1E	2-2#25 @ 200 Bundled	2-2#25 @ 200 Bundled	#25 @ 200	#25 @ 200	2-#25 @ 200	#25 @ 200
2W, 2E	2-2#25 @ 200 Bundled	2-2#25 @ 200 Bundled	#25 @ 200	#25 @ 200	2-#25 @ 200	#25 @ 200
3W, 3E	2-(#25 & #19 @ 200) Bundled	2-(#25 & #19 @ 200) Bundled	#25 @ 200	#25 @ 200	2-#25 @ 200	#22 @ 200
4W, 4E	2-(#25 @ 200 with #22 @ 400)	2-(#25 @ 200 with #22 @ 400)	#25 @ 200	#25 @ 200	2-#25 @ 200	#22 @ 200
5W*, 5E	2-(#25 @ 200 with #22 @ 400)	2-(#25 @ 200 with #22 @ 400)	#25 @ 200	#25 @ 200	2-#25 @ 200	#19 @ 200
6E	2-#25 @ 200	2-#25 @ 200	#22 @ 200	#22 @ 200	2-#22 @ 200	#16 @ 200
7E	2-#25 @ 200	2-#25 @ 200	#22 @ 200	#22 @ 200	2-#22 @ 200	#16 @ 200
8E	2-#25 @ 200	2-#25 @ 200	#22 @ 200	#22 @ 200	2-#22 @ 200	#16 @ 200
9E	2-#25 @ 200	2-#25 @ 200	#22 @ 200	#22 @ 200	2-#22 @ 200	#16 @ 200
Closure	2-#25 @ 200	2-#25 @ 200	#22 @ 200	#22 @ 200	2-#22 @ 200	#16 @ 200

CCO71 2 2

* See Note 8

NOTES:

1. No. of bars shown in reinforcement schedule is total for one box girder.
2. For detail of precast panels, see "Precast Panel Details" sheets.
3. For diaphragm details, see "Diaphragm Details No. 1" through "Diaphragm Details No. 5" sheets.
4. Adjust reinforcement to clear prestressing tendons and prestressing bars, as approved by the Engineer.
5. For Detail A, see "Precast Panel Details No. 5" sheet.
6. For Detail B, see "Precast Panel details No. 6" sheet.
7. Contractor shall propose locations of holes for temporary anchorages for Engineer's approval.
8. For reinforcement termination in cast-in-place closure between steel girder and precast segment, see "Transition Span Details" sheets.
9. For deck prestressing, see "Transverse Tendon Details" sheets.
10. For vertical prestressing, see "Vertical PT Details" sheets. 1
11. For closure reinforcement splice details, see "Girder Details No. 2" sheet. CCO 2
12. For electrical, mechanical and other embeds or inserts not shown, see "Road Plans".
13. For additional reinforcement at continuity tendon duct, see "Girder Reinforcement No. 2" sheet.

ALL DIMENSIONS ARE IN MILLIMETERS UNLESS OTHERWISE SHOWN

100 % PS&E

	BY	CHECKED
DESIGN	E. Chan	W. Lamont
DETAILS	K. Lo	W. Lamont

DESIGN OVERSIGHT

PREPARED FOR THE STATE OF CALIFORNIA

Sajid Abbas
PROJECT ENGINEER

BRIDGE NO. 34-0006L/R
KILOMETER POST 13.9/14.3

SAN FRANCISCO OAKLAND BAY BRIDGE
EAST SPAN SEISMIC SAFETY PROJECT

SKYWAY STRUCTURES

GIRDER REINFORCEMENT NO. 1

STATE OF CALIFORNIA - DEPARTMENT OF TRANSPORTATION

CONTRACT CHANGE ORDER MEMORANDUM

TO: PETER SIEGENTHALER / DOUG COE, Supervising Br. Eng.	FILE: **E.A.** 04 - 012024
FROM: DOUG COE, Supervising Br. Eng.	**CO-RTE-PM** 04-SF,Ala-80-13.9/14.3,0.0/1.6
	FED. NO. ACIM-080-1(085)8N
CCO#: **47** SUPPLEMENT#: **0** Category Code: **CHPT**	CONTINGENCY BALANCE (incl. this change) **$57,195,205.68**
COST: **$67,411.00** INCREASE ☑ DECREASE ☐	HEADQUARTERS APPROVAL REQUIRED? ☐ YES ☑ NO
SUPPLEMENTAL FUNDS PROVIDED: **$0.00**	IS THIS REQUEST IN ACCORDANCE WITH ENVIRONMENTAL DOCUMENTS? ☑ YES ☐ NO
CCO DESCRIPTION: Top Span Tendons	**PROJECT DESCRIPTION:** REPLACE SFOBB EAST SPAN

LOCATION: IN SAN FRANCISCO AND ALAMEDA COUNTIES IN SAN FRANCISCO AND OAKLAND FROM 1.3 KM EAST OF THE YERBA BUENA ISL

THIS CHANGE ORDER PROVIDES FOR:

1) furnishing and installing the revised blister top reinforcement and stirrups;

2) revising the blister dimension and trim the lightweight precast panel edge; and

3) revising the revision table (Fillet Size Representation) by adding the detail (Additional Reinforcement Near Bulkhead).

This work shall be done in accordance with revised plan sheets 689R2, 690R2, 691R2, and 852R2 of 978 as shown on pages 2 to 5 of this change order.

The top slab tendon anchor blisters need to be revised due to the additional strands that were added to the top span tendons as a result of the portion of CCO No. 7 that eliminated the rebar and concrete closure pours between segments. Due to space constraints, the blister could not simply be widened to handle the additional forces resulting from the additional strands. Instead, the reinforcing steel in the blister and surrounding area had to be re-designed to handle the additional forces. In addition, rebar and concrete was added to the top fillet area to achieve proper concrete cover for the spiral reinforcement of the tendon anchors.

The upper half of the precast panel end wall needs to be trimmed due to a conflict with the top span tendon. The problem is the top span tendon blister starts on the inside face of the panel end wall, but as the tendon runs longitudinally along the bridge, the tendon path crosses over to the outside face of the panel end wall. The conflict occurs in Spans E15, E16, and E17.

For this work, the Contractor will receive and accept the agreed lump sum of $67,411.00. This sum constitutes full compensation for providing all labor, material, equipment, tools and incidentals, including markups, for all direct and indirect costs, and all associated project impacts for this work.

No adjustment of contract time is warranted, as this change does not affect the controlling operation.

An analysis of the Contractor's cost proposal is on file with the project records and it has been determined by the Engineer to be fair and reasonable based on a force account analysis.

Concurrence from Hasan El-Natur, Structures Design, was obtained on August 5th ,2003

Concurrence from maintenance is not required because this change does not affect maintenance facilities or operations.

FHWA concurrence is not required because this change is less than $200,000 without change of specifications.

CONCURRED BY:		
Construction Engineer:	Douglas Coe DB Coe	Date 6-20-05
Bridge Engineer:	DB Coe	Date 6-20-05
FHWA Representative:		Date
Project Engineer:	Hasan El-Natur	Date 8/5/2003
Other (specify): Senior BE: David Wu		Date
		Date
		Date
District Prior Approval By:		Date
HQ (Issue Approve) By:		Date
Resident Engineer's Signature:		Date 6-20-05

ESTIMATE OF COST

	THIS REQUEST	TOTAL TO DATE
ITEMS	$0.00	$0.00
FORCE ACCOUNT	$0.00	$0.00
AGREED PRICE	$0.00	$0.00
ADJUSTMENT	$67,411.00	$67,411.00
TOTAL	$67,411.00	$67,411.00

FEDERAL PARTICIPATION

☑ PARTICIPATING ☐ PARTICIPATING IN PART ☐ NONE
☐ NON-PARTICIPATING (MAINTENANCE) ☐ NON-PARTICIPATING

FEDERAL SEGREGATION (if more than one Funding Source or P.I.P. type)
☑ CCO FUNDED PER CONTRACT ☐ CCO FUNDED AS FOLLOWS

FEDERAL FUNDING SOURCE	PERCENT

CONTRACT CHANGE ORDER

Change Requested by: Engineer

CCO: 48	Suppl. No. 0	Contract No. 04 - 012024	Road 04-SF,Ala-80-13.9/14.3,0.0/1.6	FED. AID LOC.: ACIM-080-1(085)8N

To: **KIEWIT / FCI / MANSON a JV**

You are directed to make the following changes from the plans and specifications or do the following described work not included in the plans and specifications for this contract. ***NOTE: This change order is not effective until approved by the Engineer.***

Description of work to be done, estimate of quantities and prices to be paid. (Segregate between additional work at contract price, agreed price and force account.) Unless otherwise stated, rates for rental of equipment cover only such time as equipment is actually used and no allowance will be made for idle time. This last percentage shown is the net accumulated increase or decrease from the original quantity in the Engineer's Estimate.

Adjustment of Compensation at Lump Sum:

Furnish and install sixteen (16) hinge pipe beam conduit supports for Hinges A through D as shown on revised contract plan sheet numbers 109DR2, 109ER3, 109FR2, 109GR1, 109HR3, 109JR3, 109KR2, 109LR2, 109NR1,109OR1, 109SR1, 109T, 109U, 109V, 109W, and 109X of 978 (sheets 2 through 17 of this change order) for the SFOBB East Span Skyway Bridge Replacement Project, Bridge No. 34-0006L/R.

The conduit supports shall be installed in the hinge pipe beams at the shop and delivered to the project site as one unit.

For this work, the Contractor will be paid an agreed lump sum amount of $296,992.00 This sum constitutes full compensation, including all markups, for all direct and indirect costs, all associated project impacts, and all overhead expenses.

Adjustment of Compensation at Agreed Lump Sum $296,992.00

Estimated Cost: **Increase** ☑ **Decrease** ☐ **$296,992.00**

By reason of this order the time of completion will be adjusted as follows: 0 days

Submitted by

Signature	Resident Engineer: DOUG COE, Supervising Br. Eng.	Date 4-18-05

Approval Recommended by

Signature	Construction Engineer: DOUG COE, Supervising Br. Eng.	Date 4-18-05

Engineer Approval by

Signature	(Print name and title) PETER SIEGENTHALER - Chief	Date 5-25-05

We the undersigned contractor, have given careful consideration to the change proposed and agree, if this proposal is approved, that we will provide all equipment, furnish the materials, except as may otherwise be noted above, and perform all services necessary for the work above specified, and will accept as full payment therefor the prices shown above.

NOTE: If you, the contractor, do not sign acceptance of this order, your attention is directed to the requirements of the specifications as to proceeding with the ordered work and filing a written protest within the time therein specified.

Contractor Acceptance by

Signature	(Print name and title) Chris Vika, Deputy Project Director	Date 5-10-05

Kannu Balan
05/20/2005 02:44 PM

To: Derek Davis/D04/Caltrans/CAGov@DOT
cc:
Subject: Re: Need Concurrence for CCO 048 S0 Skyway Contract

fyi

Kannu Balan
Senior Transportation Engineer
CCO/Claims/Schedule Coordination
SFOBB - Skyway
(510) 622-5151
Cell# (510) 867-6774
----- Forwarded by Kannu Balan/D03/Caltrans/CAGov on 05/20/2005 02:42 PM -----

Janet Adams
05/20/2005 02:36 PM

To: Peter Siegenthaler/D04/Caltrans/CAGov@DOT
cc: kannu.balan@dot.ca.gov
Subject: Re: Need Concurrence for CCO 048 S0 Skyway Contract

concur
Peter Siegenthaler

Peter Siegenthaler
05/18/2005 03:45 PM

To: Janet Adams/D04/Caltrans/CAGov@DOT
cc: kannu.balan@dot.ca.gov@DOT
Subject: Need Concurrence for CCO 048 S0 Skyway Contract

Janet,
Request your concurrence for CCO #48 (file copy).

What: modify bridge electrical conduit support system in all 10 hinge pipe beams for Skyway - EB and WB bridges

Why: construciton conflict between conduit support system and ring stiffeners inside hinge pipe beam. This occured due to a late change (addition) of stiffeners without reconciliation with the electrical system.

How: LS agreed payment of $30k per location for a total of $296,992

Note: does not include the cost of re-routing the actual cable outside the hinge pipe beams. To be covered later by other CCO.

----- Forwarded by Peter Siegenthaler/D04/Caltrans/CAGov on 05/18/2005 15:34 -----

Kannu Balan
05/17/2005 08:16

To: Peter Siegenthaler/D04/Caltrans/CAGov@DOT
cc: David Salladay/D04/Caltrans/CAGov@DOT
Subject: 04-012024 CCO 048 S0

Pete,

This is ready for your signature, but part of I&A from HQ requests that we get PM's concurrence, so please get Janet's concurrence on this.

This CCO for:

U.S. DEPARTMENT OF TRANSPORTATION FEDERAL HIGHWAY ADMINISTRATION CALIFORNIA DIVISION OFFICE

RECORD OF PRIOR APPROVAL FOR MAJOR CONTRACT CHANGE ORDERS

PROJECT NO.	CCO NO.	CONTRACT NO.	DIST-CO-RTE-PM
ACIM -080-1(085)8N	48	04-012024	04-SF,Ala-80-13.9/14.3,0.0/1.6

REQUESTED BY:	CALTRANS HQ	DATE
Derek Davis	X RE/DISTRICT	4/12/05

PROPOSED CHANGE:

This change order provides for revising the bridge electrical conduit support system through the pipe beams at Hinges A through D.

REASON FOR CHANGE:

The original design for routing conduit through the pipe beams did not account for ring stiffeners that were added late in the design process. The ring stiffeners decreased the available space within the pipe beams, rendering the original design for stacked conduit routing unconstructable. This change order modifies the original conduit routing to account for the ring stiffeners.

This change order includes only the work required to re-route conduit through the pipe beams at Hinges A through D. The re-route work will result in modifications to the electrical circuitry to re-route the electrical cabling through the hinge pipe beams. Since the electrical drawings are not yet completed and the costs have not been negotiated, this work, as well as re-routing the conduit at Hinge E, will be addressed in a supplement to this change order.

AS DISCUSSED IN FIELD (REPORT NO. ____)

TIME EXTENSIONS	ACTIVITY ON CRITICAL PATH AFFECTED BY CCO (IF TIME EXTENSION INVOLVED)
_X_NONE ___ DAYS ___ DEFERRED	

ESTIMATE OF COST:	CCO:	METHOD OF PAYMENT
$ 296,992.00 INCREASE $_____ DECREASE	CONTRACT ITEM AGREED PRICE	ADJUSTMENT OF COMPENSATION EXTRA WORK AT FORCE ACCOUNT

THE WORK COVERED BY THE PROPOSED REVISION AS DESCRIBED ABOVE IS APPROVED SUBJECT TO SUBMISSION OF SUPPORTING DOCUMENTATION INCLUDING COST EVALUATION AND JUSTIFICATION OF TIME EXTENSIONS.

OTHER CONDITIONS:

PRIOR APPROVAL TO PROCEED GRANTED BY:	DATE OF AUTHORIZATION:
Nancy E. Bobb	4/14/05

TELECOPY

California Department of Transportation

CONSTRUCTION DIVISION

TO: District 4 CCO Desk

Date: 2/18/2005

Contract No.: 4 - 012024

Road: 04-SF,ALA-80-13.9/14.3,0.0/1.6

FED. No.: ACIM-080-1(085)8N

To: SARTIPI - 04

Attention: 04 - AQRABAWI

HQ Direction: TO PROCEED WITH THE WORK

CCO No. 048 **Sup. No.** 0 **Rev. No.** 0

Per Your Submittal Dated: 2/18/2005 **CCO Category Code:** C - B - P - C

MODIFYING THE BRIDGE ELECTRICAL CONDUIT THROUGH THE PIPE BEAMS AT HINGES A THROUGH BY REVISING THE CONDUIT SUPPORT SYSTEM IN THE HINGE PIPEBEAMS.

THE ORIGINAL DESIGN FOR ROUTING CONDUIT THROUGH THE BEAMS DID NOT ACCOUNT FOR RING STIFFENERS THAT WERE ADDED LATE IN THE DESIGN PROCESS. THE RING STIFFENERS DECREASED THE AVAILABLE SPACE WITHIN THE PIPE BEAM, RENDING THE ORIGINAL DESIGN FOR CONDUIT ROUTING UN CONSTRUCTIBLE.

AUTHORIZATION TO PROCEED WITH WORK IS CONDITIONAL ON THE FOLLOWING:
1. OBTAIN FHWA APPROVAL AND CONTRACTOR WRITTEN AGREEMENT.
2. OBTAINING CONCURRENCE, REQUIRED SIGNATURES AND DATES FOR THIS CHANGE.

THE TOTAL COST OF THIS CHANGE IS SHOWN AS $660,465.00

Items:	$0.00
Force Account:	$0.00
Agreed Price:	$0.00
Adj. of Comp.	$660,456.00
Total:	**$660,456.00**
Time:	**(NONE)**

EUGENE MALLETTE,
by: Assistant Division Chief

Sey Hossnieh

Sey Hossnieh

Division of Construction
1120 "N" Street, MS-44, Sacramento, CA 95814
Fax Number: (916) 654-5735
To Confirm Transmission, Call (916) 654-2735

Department of Transportation
EAST SPAN SEISMIC SAFETY PROJECT
CONCURRENCE FOR CHANGE ORDERS

Contract No. 04-012024
Co. & Rte Ala-80-13.9/14.3, 0.0/1.6

CCO#: 48 **S#:** 0
Title: Conduit Routing At Hinges
Date: 10/10/03

To: DOUGLAS COE, Resident Engineer

Requested By: Bill Howe, Senior Engineer (initials WBH)

Description of Work:
Modifying the conduit routing at the hinges by adding, revising, and/or deleting electrical and substation architectural plan sheets and revising the conduit and tray schedule in the Supplement of the Special Provisions and Plans.

Reason for Change:
The original design for routing conduit through the pipe beams did not account for ring stiffeners that were added late in the design process.

Discussed with persons noted below:

FHWA: Nancy Bobb	Date 07/25/03	Br. Const:	Date
District: B. Zandipour	Date 04/21/03	Br. Design: Tony Shakal, CDMG	Date 12/05/02
Other: Pat Hipley, CT Earthquake Eng	Date 12/30/02	Br. Geology:	Date
		Br. Maintenance: Samad Hamoud	Date 06/24/03

Estimated Cost: $80,000.00

Recommended Method of Payment:
- ☐ Contract Items
- ☐ Extra Work at Force Account
- ☒ Agreed Price (LS or UP)
- ☐ Other:

Recommended Time Adjustment: 0 Working Days

Prior Approvals:

1. This represents an acknowledgement that the individuals below are in concurrence with the change order.
2. This represents an acknowledgement that I am in concurrence with this change order which must be approved before any work is done.

Comments:
The 80,000 estimate was a preliminary "off the top" estimate. Arnel has not done an estimate but I will get him to start. KFH will start estimating as soon as they have plans.

Douglas Coe, Resident Engineer — 10-10-03 Date — 1. ___ 2. X

Pete Siegenthaler, Principal Construction Engineer — 10/14/03 Date — 1. ✓ 2. ___

Robert Kobal, HQ Construction Coordinator — Date — 1. ___ 2. ___

TELECOPY

California Department of Transportation

CONSTRUCTION DIVISION

TO: District 4 CCO Desk

Date: 4/18/2005

Contract No.: 4 - 012024

Road: 04-SF, ALA-80-13.9/14.3, 0.0/1.6

FED. No.: ACIM-080-1(085)8N

To: SARTIPI - 04

Attention: 04 - AQRABAWI

HQ Direction: **TO ISSUE AND APPROVE**

CCO No. 048 **Sup. No.** 0 **Rev. No.** 1

Per Your Submittal Dated: 4/15/2005 **CCO Category Code:** C - B - P - C

MODIFYING THE BRIDGE ELECTRICAL CONDUIT THROUGH THE PIPE BEAMS AT HINGES A THROUGH D BY REVISING THE CONDUIT SUPPORT SYSTEM IN THE HINGE PIPE BEAMS.

THE ORIGINAL DESIGN FOR ROUTING CONDUIT THROUGH THE BEAMS DID NOT ACCOUNT FOR RING STIFFENERS THAT WERE ADDED LATE IN THE DESIGN PROCESS. THE RING STIFFENERS DECREASED THE AVAILABLE SPACE WITHIN THE PIPE BEAM, RENDERING THE ORIGINAL DESIGN FOR CONDUIT ROUTING UNCONSTRUCTIBLE.

ISSUE AND APPROVE IS CONTINGENT ON THE FOLLOWING:

1. OBTAINING THE PROJECT MANAGER'S CONCURRENCE ON THIS CHANGE AND SO NOTING WITHIN THE CCO MEMO.

2. REVISING THE CCO LANGUAGE TO "ALL OVERHEAD" IN LIEU OF "ALL TIME RELATED OVERHEAD (TRO)".

3. OBTAINING THE CONTRACTOR'S SIGNATURE ON THE AGREED PRICE CHANGE. NOTE THAT FAILURE TO OBTAIN THE CONTRACTOR'S SIGNATURE WILL REQUIRE A REVISED CCO AND NEW I&A REQUEST.

THE TOTAL COST OF THIS CHANGE IS SHOWN AS $296,992.00 WITH NO TIME ADJUSTMENT.

Items:	$0.00
Force Account:	$0.00
Agreed Price:	$0.00
Adj. of Comp.	$296,992.00
Total:	**$296,992.00**
Time:	**(NONE)**

Date: 4/18/2005

Contract No.: 4 - 012024

Road: 04-SF, ALA-80-13.9/14.

FED. NO.: ACIM-080-1(085)8N

CCO No. 048 **Sup. No.** 0 **Rev. No.** 1 **CCO Category Code:** C - B - P - C

Continued:

EUGENE MALLETTE,
by: Assistant Division Chief

Ken Darby

Ken Darby

Division of Construction
1120 "N" Street, MS-44, Sacramento, CA 95814
Fax Number: (916) 654-5735
To Confirm Transmission, Call (916) 654-5259

Trang T Hoang
07/25/2003 10:15 AM

To: Kapal Madra/D04/Caltrans/CAGov@DOT
cc:
Subject: CCO #48: Conduit Routing at Hinges: ATP

Hi Kappy-

Checking on the ATP for the following CCO. I deleted CCO 56 since we already got an ATP for that.
Thanks!

----- Forwarded by Trang T Hoang/D03/Caltrans/CAGov on 07/25/2003 10:02 AM -----

Trang T Hoang
06/25/2003 01:57 PM

To: Kapal Madra/D04/Caltrans/CAGov@DOT
cc: Greg Mah-Hing/D04/Caltrans/CAGov@DOT
Subject: CCO #56 Future Light Pipe & CCO #48: Conduit Routing at Hinges

Hi Kappy -

We are requesting ATPs for the following CCOs.
Although the cost estimate is yet to be determined, we'd like your concurrence on the scope. Thanks!

CCO Memo 48R1.doc CCO 48.doc

Samad Hamoud
06/24/2003 03:17 PM

To: Trang T Hoang/D03/Caltrans/CAGov@DOT
cc:
Subject: Re: CCO 48: CCO 60

Trang;

We reviewed both CCO's 48 and 60, and we concur with both requests.
If you need a hard copy for your record, we can forward it to you.

Thanks

Samad Hamoud
Sr. Bridge Engineer
SM&I, Toll Bridge Seismic Retrofit
Trang T Hoang

Trang T Hoang
05/20/03 11:32 AM

To: Samad Hamoud/HQ/Caltrans/CAGov@DOT
cc:
Subject: 012024: CCO 48: Conduit Routing at Hinges: Maint Concurrence

Hi Samad-

Have you been alerted to CCO 48: Conduit Routing at Hinges?
I've been requested to ask for your concurrence but I'm not sure how much you know about this CCO.
Presently, I know little.

I can email you a memo Marcus Cinco drafted, but it references additional/modified plan sheets that I am tracking down.
Let me know how much or little you need and I'll see how much I can gather up for your concurrence.

Thank you very much.

-Trang

Parviz Boozarpour

04/12/2005 02:50 PM

To: Karen T Truong/D04/Caltrans/CAGov@DOT, Bill Howe/D04/Caltrans/CAGov@DOT
cc: Behzad Golemohammadi/D04/Caltrans/CAGov@DOT
Subject: Contract 04-012024, CCO # 48

After discussing with Karen Truong and seeing the stamped/signed EE sheet by Nabeel/Cheema, I concur with CCO #48.

Thanks,
Parviz

DEPARTMENT OF TRANSPORTATION – District 4 Toll Bridge
SFOBB – Skyway Project
345 Burma Road
Oakland, CA 94607
Telephone (510) 622-5100 Facsimile (510) 622-5165

LETTER OF TRANSMITTAL

To: Caltrans- D.O.
111 Grand Ave

Oakland CA 94623
Attn: Mr. George Huang

Subject: CCO for Hinges

Date: 11-May-2005

Contract No: 04-012024
04-SF, Ala-80-13.9/14.3,0.0/1.6
Job Name: Skyway Project - SFOBB
Transmittal No.: 5.01.2-000298

Enclosed please find the following items:

	Shop Drawings	X	Change Order		Submittal(s)
	WSWD Report(s)		Plans		Other
	Daily Extra Work Reports		Progress Payment		Certified Payroll
	RFI		State Letter		Certificates of Compliance

Copies	Item	Date	Sheets	Description
6	1	11-May-2005		CCO 048, Conduit Routing at Hinges

These Are Transmitted As Checked Below:

X	For Approval or Action		Approved as submitted		Resubmit	___ Copies for approval
	For Your Use		Approved as Noted		Submit	___ Copies for distribution
	As Requested		Returned for Corrections		Return	___ Corrected prints
	For Review & Comment		Other		Sign and Return	

Remarks:

Signed: B. [illegible]

Copy To:
Ms. Ruth Puell

File: 49.048, 5.01.2

PROGRAM CAS121
DATE 06/02/05
TIME 07:26 AM

STATE OF CALIFORNIA - DEPARTMENT O

RESIDENT ENGINEER COE, DOUG

C O N T R A C T C H A N G E O R

PHONE NUMBER 510 622-5101

DESCRIPTION CONDUIT ROUTING AT HINGES CCC

APPROVAL DATE 05/25/05

TIME EXTENSION DAY NONE

ITEM NO.	DESCRIPTION OF CHANGE	APPROVED CHANGE QUANTITY	AMOUNT
	ADJUSTMENT OF COMPENSATION -- LUMP SUM (+)		$296,992.00
	NET CHANGE THIS C.C.O.		$296,992.00
	AMOUNT OF 'BRIDGEWORK'		$296,992.00

*** C.C.O. ACCEPTED AND FILED. ***

F E D E R A L P A R T I C I P A T I O N				F E D E R A L S E G R E G A		
DISP	TYPE	COST	TYPE	COST	TYPE	FUNDING SOURCE	PCT
NEW	P	296,992.00		.00			

DIST	COUNTY	ROUTE	KILOMETER POST TOTAL PROJECT	SHEET No	TOTAL SHEETS
04	SF, Ala	80	13.9 / 14.3, 0.0 / 1.6	1090 R2	978

REGISTERED CIVIL ENGINEER — DATE 3/06/03

4-18-03
PLANS APPROVAL DATE

REGISTERED PROFESSIONAL ENGINEER — NEE SHING OWYANG — No. 24960 — Exp. 12/31/05 — CIVIL — STATE OF CALIFORNIA

PARSONS BRINCKERHOFF QUADE & DOUGLAS, INC.
303 SECOND STREET, SUITE 700 N
SAN FRANCISCO, CA 94107

The State of California or its officers or agents shall not be responsible for the accuracy or completeness of electronic copies of this plan sheet.

Caltrans Metric

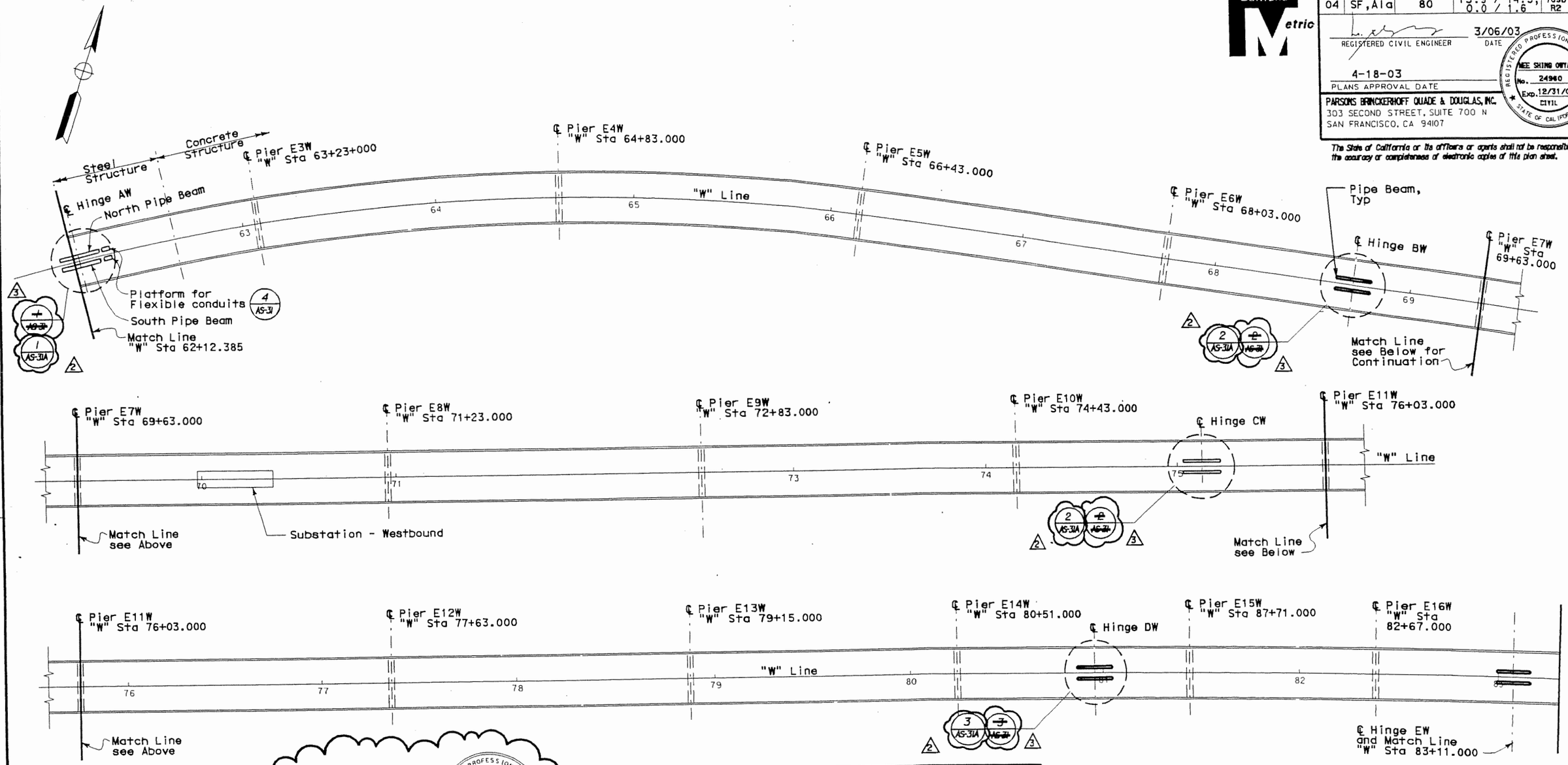

William Howe 10/1/04
REGISTERED CIVIL ENGINEER — DATE

REGISTERED PROFESSIONAL ENGINEER — WILLIAM BRADFORD HOWE — No. 53321 — Exp. 6/30/07 — CIVIL — STATE OF CALIFORNIA

MARK	DATE	DESCRIPTIONS	REV	CK	
3	10/1/04	Deleted callouts to reference sheet AS-31.	BRF	BRF	CCO NO.48
2	10/1/04	Add callouts to reference sheet AS-31A	BRF		CCO NO.48
1	04/18/03	New Drawing	EJL	MSO	CCO NO.48

REVISIONS

CONTRACT CHANGE ORDER NO. 48
SHEET 2 OF 17

NOTES:

1. The contractor shall verify all controlling field dimensions before ordering or fabricating any material.
2. For structural notes, see "General Plan, Stairway" sheet AS-1.

NO SCALE

ALL DIMENSIONS ARE IN MILLIMETERS UNLESS OTHERWISE SHOWN

DESIGN	BY E. Lucas	CHECKED N. S. Owyang	
LAYOUT	BY E. Lucas	CHECKED N. S. Owyang	
QUANTITIES	BY	CHECKED	

STATE OF CALIFORNIA
DEPARTMENT OF TRANSPORTATION

DIVISION OF STRUCTURES
STRUCTURAL DESIGN

BRIDGE NO. 34-0006
KILOMETER POST 13.0/14.3, 0.0/1.6

STRUCTURE - WESTBOUND
HINGE LOCATION

AS-30

ORIGINAL SCALE IN MILLIMETERS FOR REDUCED PLANS 0 10 20 30 40 50 60 70 80 90 100

CU 04251
EA 012021

DISREGARD PRINTS BEARING EARLIER REVISION DATES

REVISION DATES (PRELIMINARY STAGE ONLY) 10/01

SHEET 21 OF 47

DGN FILE => 401202ac30.cco

DIST	COUNTY	ROUTE	TOTAL PROJECT	NO	SHEETS
04	SF, Ala	80	13.9 / 14.3, 0.0 / 1.6	109E R3	978

Caltrans Metric

REGISTERED CIVIL ENGINEER — DATE 3/06/03

4-18-03
PLANS APPROVAL DATE

REGISTERED PROFESSIONAL ENGINEER — MEE SHING OWYANG — No. 24960 — Exp. 12/31/05 — CIVIL — STATE OF CALIFORNIA

PARSONS BRINCKERHOFF QUADE & DOUGLAS, INC.
303 SECOND STREET, SUITE 700 N
SAN FRANCISCO, CA 94107

The State of California or its officers or agents shall not be responsible for the accuracy or completeness of electronic copies of this plan sheet.

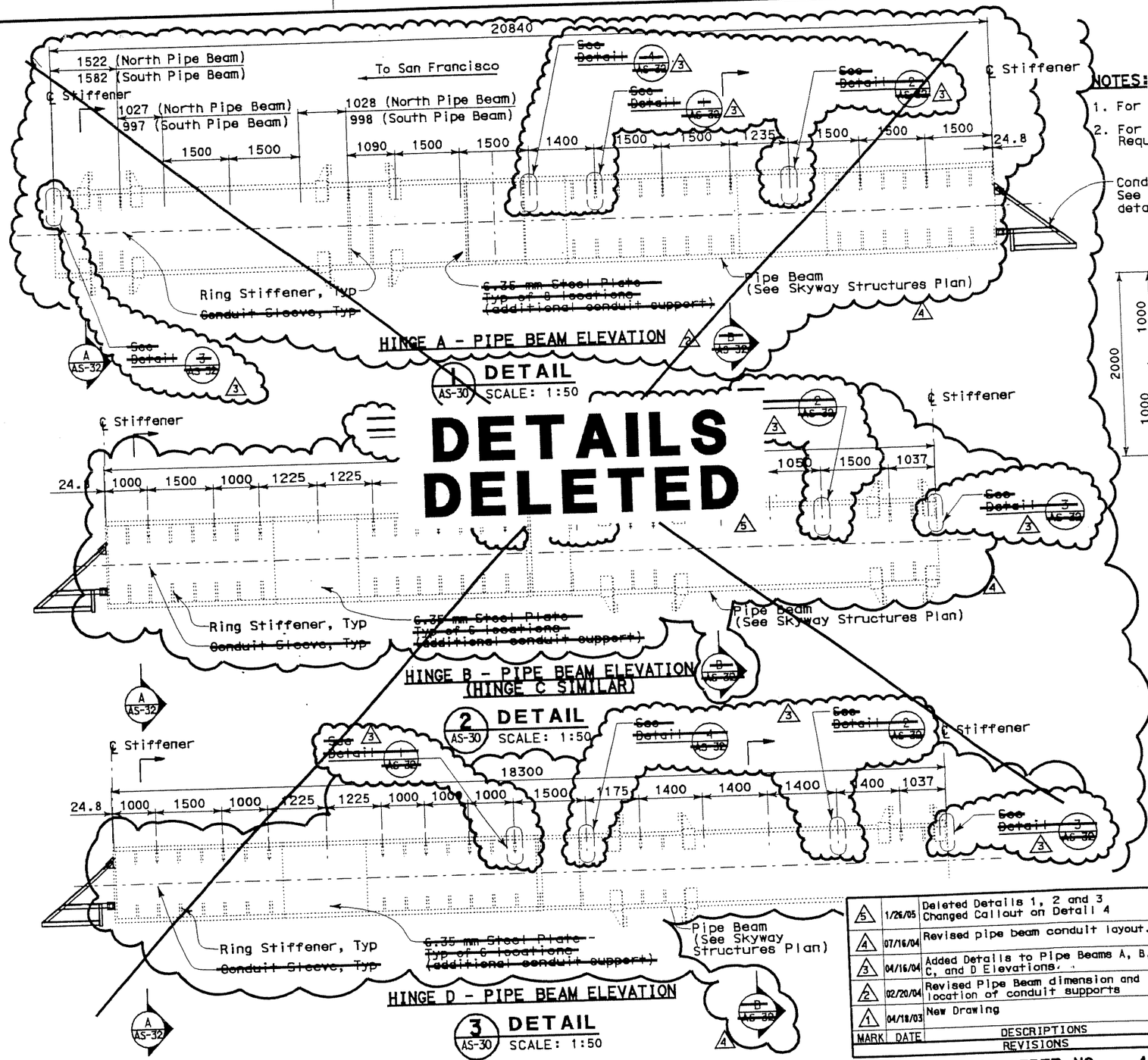

DETAILS DELETED

NOTES:

1. For General Structural Notes, see AS-1
2. For Electrical Conduit Details and Requirements, see Electrical Plans.

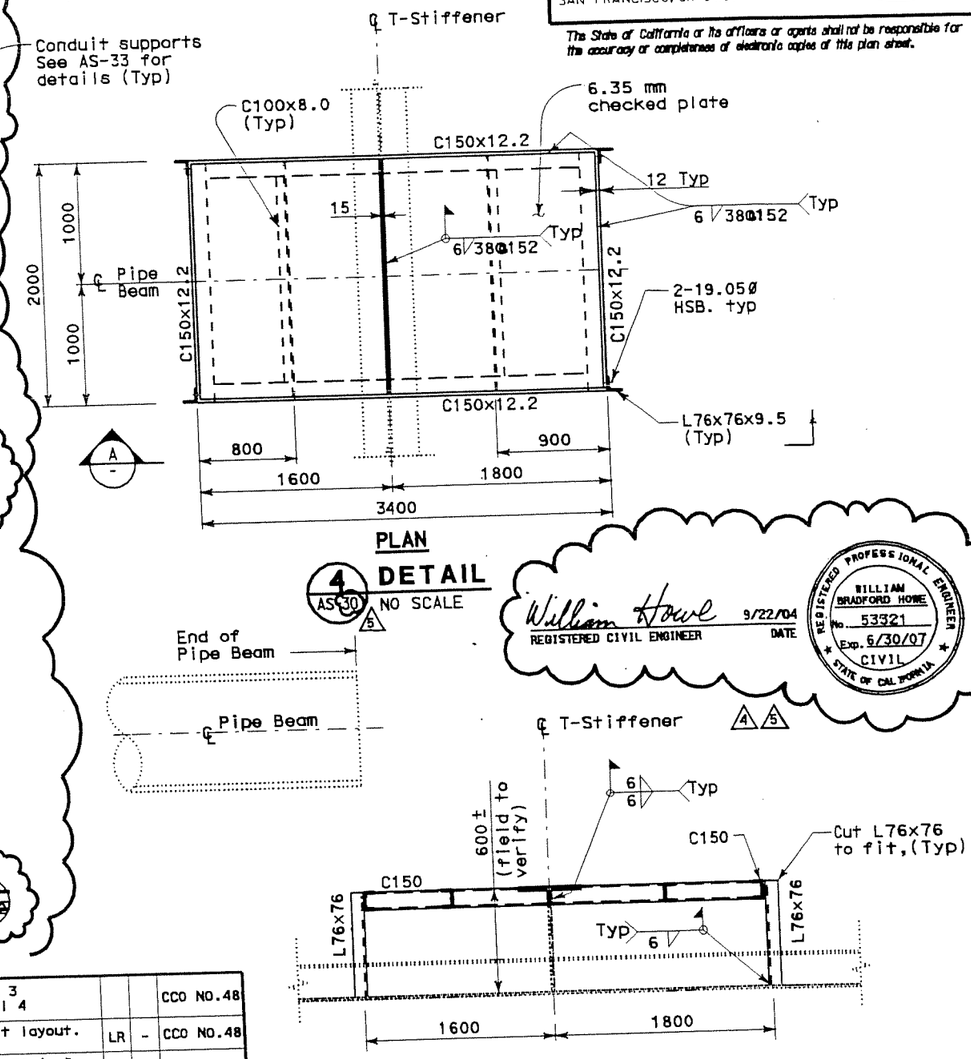

REGISTERED PROFESSIONAL ENGINEER — WILLIAM BRADFORD HOWE — No. 53321 — Exp. 6/30/07 — CIVIL — STATE OF CALIFORNIA

William Howe 9/22/04
REGISTERED CIVIL ENGINEER — DATE

MARK	DATE	DESCRIPTIONS	REV	CK	
5	1/26/05	Deleted Details 1, 2 and 3 Changed Callout on Detail 4			CCO NO.48
4	07/16/04	Revised pipe beam conduit layout.	LR	-	CCO NO.48
3	04/16/04	Added Details to Pipe Beams A, B, C, and D Elevations.	EJL	MSO	CCO NO.48
2	02/20/04	Revised Pipe Beam dimension and location of conduit supports	EJL	MSO	CCO NO.48
1	04/18/03	New Drawing	EJL	MSO	CCO NO.48

REVISIONS

CONTRACT CHANGE ORDER NO. 48
SHEET 3 OF 17

ALL DIMENSIONS ARE IN MILLIMETERS UNLESS OTHERWISE SHOWN

	BY	CHECKED
DESIGN	E. Lucas	M. S. Owyang
LAYOUT	E. Lucas	M. S. Owyang
QUANTITIES		

STATE OF CALIFORNIA
DEPARTMENT OF TRANSPORTATION

DIVISION OF STRUCTURES

CU 04251
EA 012021

BRIDGE NO. 34-0006
KILOMETER POST 13.0/14.3 0.0/1.6

STRUCTURE - WESTBOUND
TYPICAL PIPE BEAM CONDUIT SUPPORT

AS-3

ORIGINAL SCALE IN MILLIMETERS FOR REDUCED PLANS 0 10 20 30 40 50 60 70 80 90 100

DISREGARD PRINTS BEARING EARLIER REVISION DATES

REVISION DATES (PRELIMINARY STAGE ONLY) — SHEET — OF

DGN FILE => 0401202ac31.cco
USERNAME => bfeather

DIST	COUNTY	ROUTE	KILOMETER POST TOTAL PROJECT	SHEET No	TOTAL SHEETS
04	SF, Ala	80	13.9 / 14.3, 0.0 / 1.6	109F R2	978

Caltrans Metric

REGISTERED CIVIL ENGINEER 3/06/03 DATE

4-18-03
PLANS APPROVAL DATE

REGISTERED PROFESSIONAL ENGINEER MEE SHING OWYANG No. 24960 Exp. 12/31/05 CIVIL STATE OF CALIFORNIA

PARSONS BRINCKERHOFF QUADE & DOUGLAS, INC.
303 SECOND STREET, SUITE 700 N
SAN FRANCISCO, CA 94107

The State of California or its officers or agents shall not be responsible for the accuracy or completeness of electronic copies of this plan sheet.

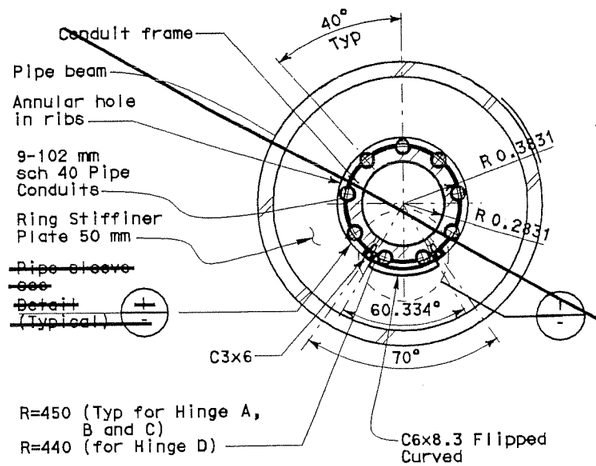

TYPICAL FOR HINGES A, B, C AND D

A AS-31 SECTION
SCALE: 1:20

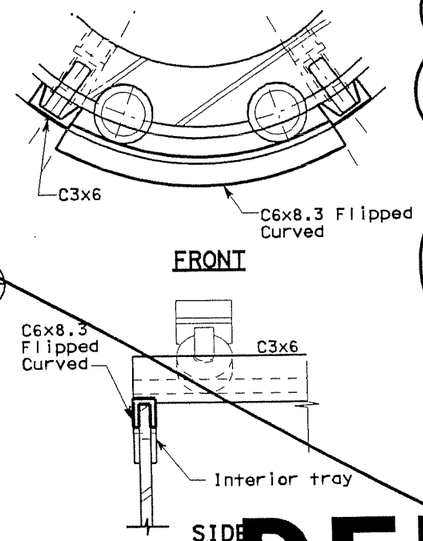

SIDE

1 DETAIL
SCALE: 1:5

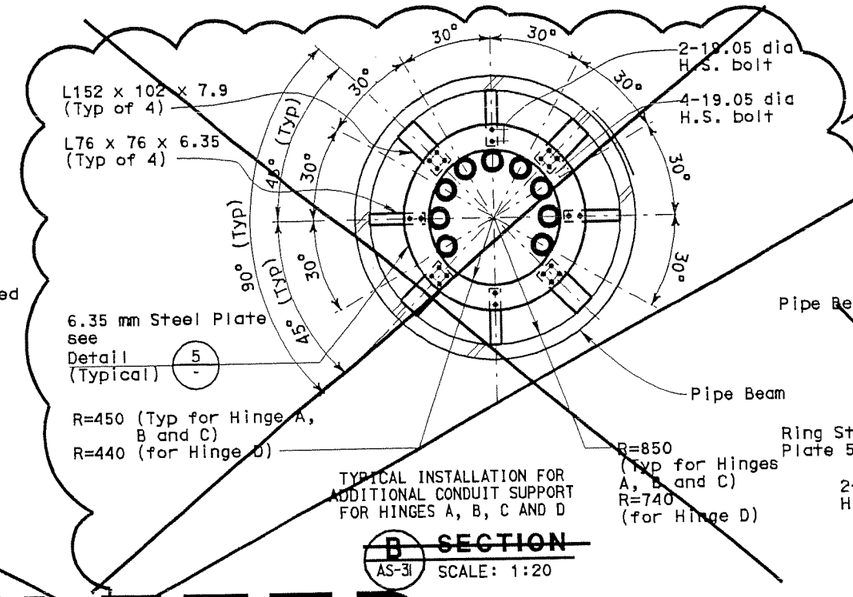

TYPICAL INSTALLATION FOR ADDITIONAL CONDUIT SUPPORT FOR HINGES A, B, C AND D

B AS-31 SECTION
SCALE: 1:20

DELETED

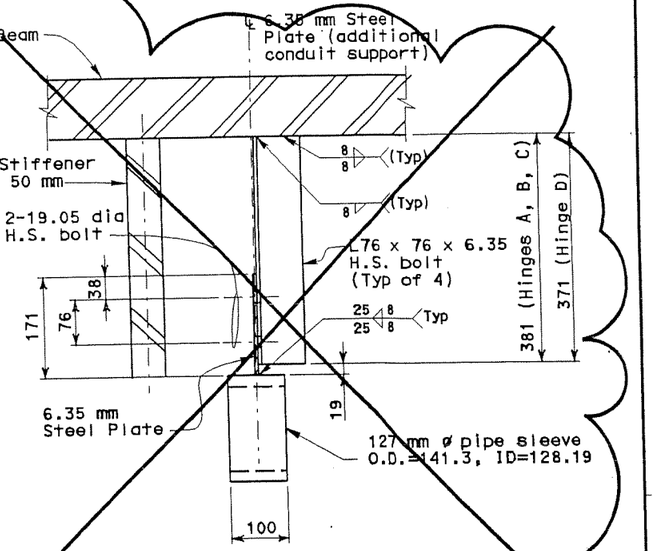

4 DETAIL
SCALE: 1:5

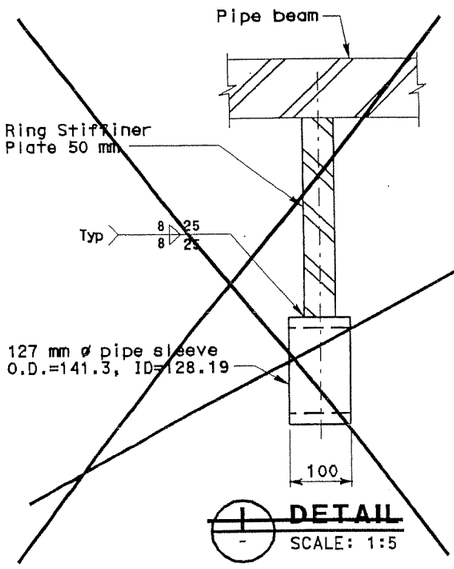

1 DETAIL
SCALE: 1:5

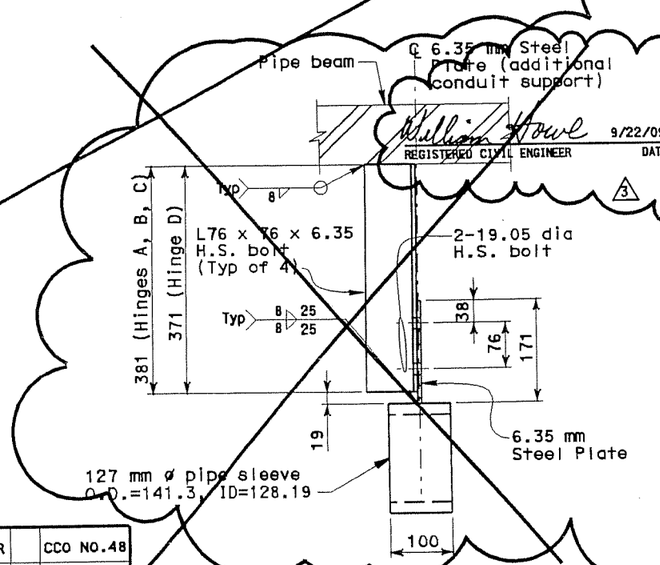

2 DETAIL
SCALE: 1:5

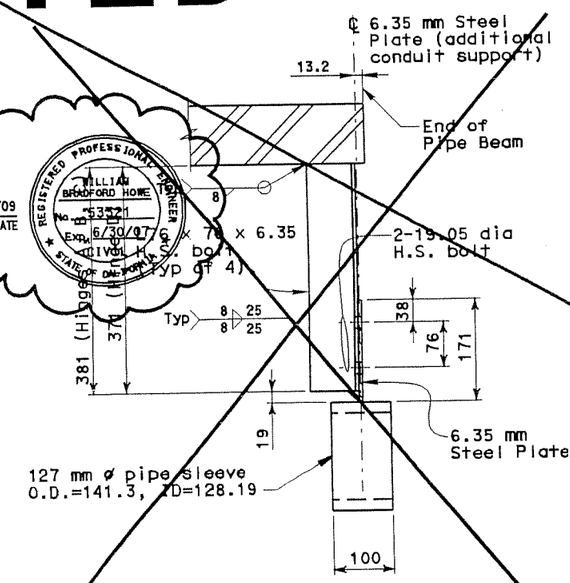

3 DETAIL
SCALE: 1:5

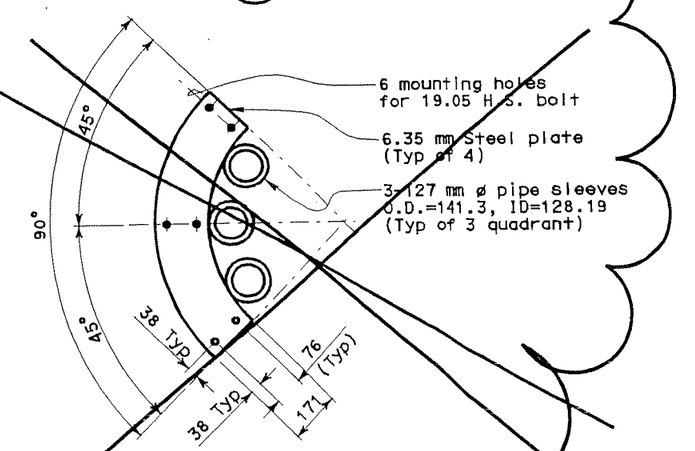

5 DETAIL
SCALE: 1:10

MARK	DATE	DESCRIPTIONS	REV	CK	
3	09/21/04	Sheet Deleted	LR		CCO NO.48
2	04/16/04	Revised Section B, Details 2, 3. Added Details 4 and 5.	EJL	MSO	CCO NO.48
1	04/18/03	New Drawing	EJL	MSO	CCO NO.48

REVISIONS

CONTRACT CHANGE ORDER NO. 48
SHEET 4 OF 10

NOTES:

1. For general structural notes, see AS-31.

ALL DIMENSIONS ARE IN MILLIMETERS UNLESS OTHERWISE SHOWN

	BY	CHECKED
DESIGN	E. Lucas	N. S. Owyang
LAYOUT	E. Lucas	N. S. Owyang
QUANTITIES		

STATE OF CALIFORNIA
DEPARTMENT OF TRANSPORTATION

DIVISION OF STRUCTURES

CU 04251
EA 012021

BRIDGE NO. 34-0006
KILOMETER POST 13.0/14.3, 0.0/1.6

STRUCTURE - WESTBOUND
TYPICAL PIPE BEAM CONDUIT SUPPORT

AS-32

ORIGINAL SCALE IN MILLIMETERS FOR REDUCED PLANS 0 10 20 30 40 50 60 70 80 90 100

DISREGARD PRINTS BEARING EARLIER REVISION DATES

REVISION DATES (PRELIMINARY STAGE ONLY)

SHEET OF

DIST	COUNTY	ROUTE	KILOMETER POST TOTAL PROJECT	SHEET No	TOTAL SHEETS
04	SF, Ala	80	13.9 / 14.3, 0.0 / 1.6	109G R1	978

Caltrans Metric

REGISTERED CIVIL ENGINEER — DATE 3/06/03

4-18-03
PLANS APPROVAL DATE

REGISTERED PROFESSIONAL ENGINEER — MEE SHING OWYANG — No. 24960 — Exp. 12/31/05 — CIVIL — STATE OF CALIFORNIA

PARSONS BRINCKERHOFF QUADE & DOUGLAS, INC.
303 SECOND STREET, SUITE 700 N
SAN FRANCISCO, CA 94107

The State of California or its officers or agents shall not be responsible for the accuracy or completeness of electronic copies of this plan sheet.

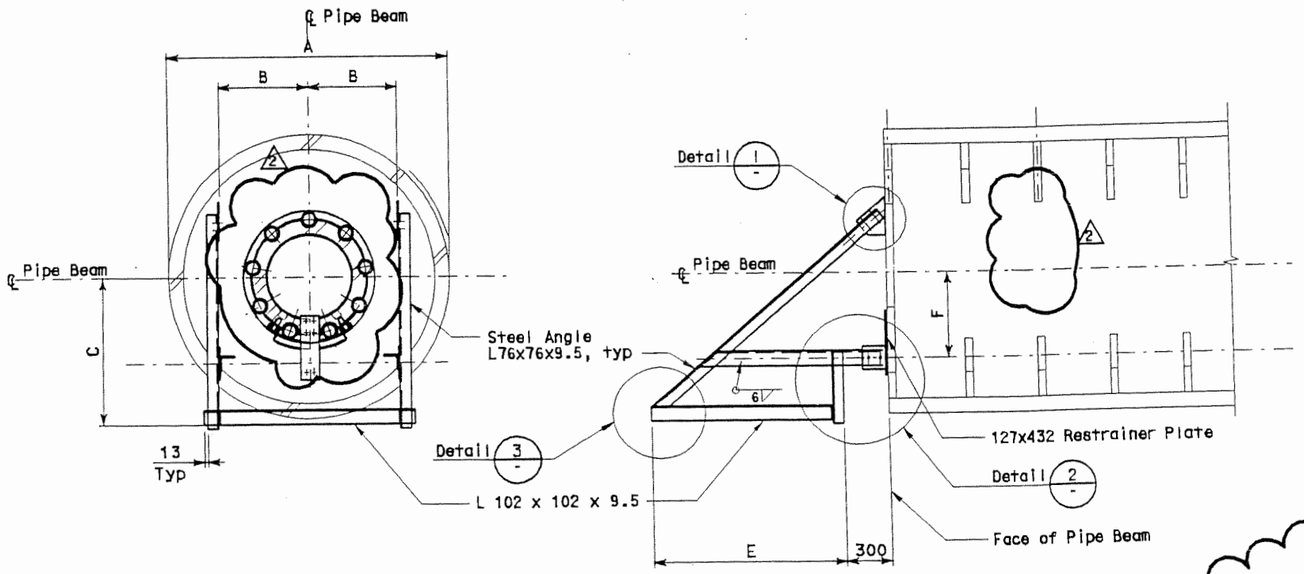

CONDUIT SUPPORT AT PIPE BEAM

SEE TABLE FOR DIMENSIONS
SCALE: NO SCALE

William Howe — REGISTERED CIVIL ENGINEER — 9/22/09 DATE

REGISTERED PROFESSIONAL ENGINEER — WILLIAM BRADFORD HOWE — No. 53321 — Exp. 6/30/07 — CIVIL — STATE OF CALIFORNIA

TABLE
CONDUIT SUPPORT DIMENSIONS

	Hinges A, B, C	Hinge D
A	1900	1650
B	600	500
C	991	747
D	420	420
E	1335	1300
F	574	553

NOTES:

1. For General Structural Notes, see AS-1.
2. For other details not shown, see electrical plans.

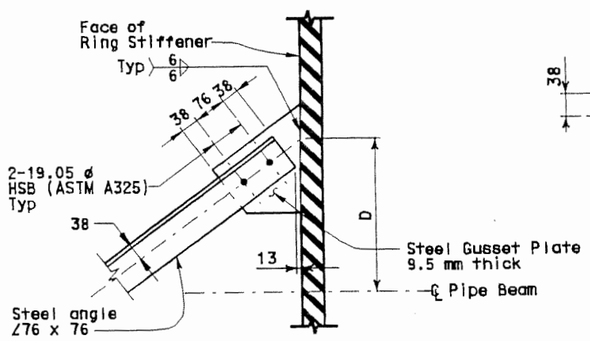

1 DETAIL
SEE TABLE FOR DIMENSIONS
NO SCALE

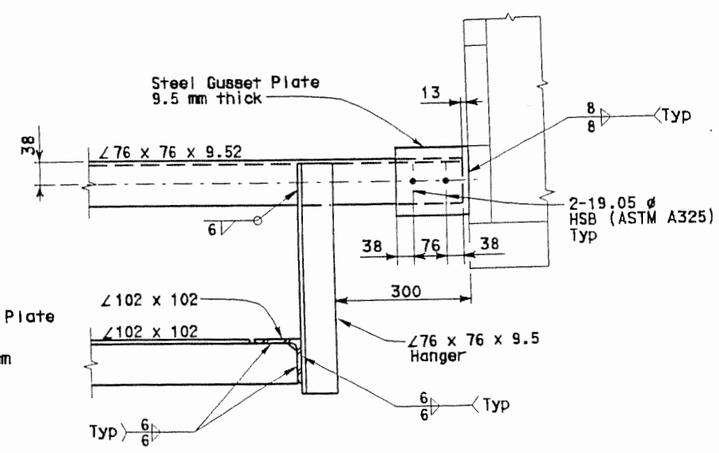

2 DETAIL
NO SCALE

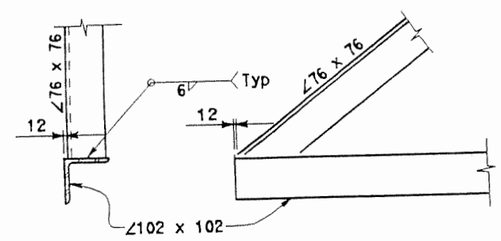

3 DETAIL
NO SCALE

MARK	DATE	DESCRIPTIONS	REV	CK	
2	9/22/04	Revised pipe beam conduit layout.	GF	BRF	CCO NO.48
1	04/18/03	New Drawing	EJL	MSO	CCO NO.48

REVISIONS

CONTRACT CHANGE ORDER NO. 48
SHEET 5 OF 17

ALL DIMENSIONS ARE IN MILLIMETERS UNLESS OTHERWISE SHOWN

	BY	CHECKED
DESIGN	E. Lucas	N. S. Owyang
LAYOUT	E. Lucas	N. S. Owyang
QUANTITIES		

STATE OF CALIFORNIA
DEPARTMENT OF TRANSPORTATION

DIVISION OF STRUCTURES

BRIDGE NO. 34-0006
KILOMETER POST 13.0/14.3, 0.0/1.6

STRUCTURE - WESTBOUND
TYPICAL PIPE BEAM CONDUIT SUPPORT

AS-33

CU 04251
EA 012021

DISREGARD PRINTS BEARING EARLIER REVISION DATES

REVISION DATES (PRELIMINARY STAGE ONLY) — SHEET — OF

ORIGINAL SCALE IN MILLIMETERS FOR REDUCED PLANS 0 10 20 30 40 50 60 70 80 90 100

DGN FILE => 401202ac33.cco

DATE PLOTTED => 08-FEB-2005 TIME PLOTTED => 10:02

DIST	COUNTY	ROUTE	TOTAL PROJECT	NO	SHEETS
04	SF, Ala	80	13.9 / 14.3, 0.0 / 1.6	109H R3	978

Caltrans Metric

REGISTERED CIVIL ENGINEER — DATE 3/06/03

4-18-03
PLANS APPROVAL DATE

REGISTERED PROFESSIONAL ENGINEER — NEE SHING OWYANG — No. 24960 — Exp. 12/31/05 — CIVIL — STATE OF CALIFORNIA

PARSONS BRINCKERHOFF QUADE & DOUGLAS, INC.
303 SECOND STREET, SUITE 700 N
SAN FRANCISCO, CA 94107

The State of California or its officers or agents shall not be responsible for the accuracy or completeness of electronic copies of this plan sheet.

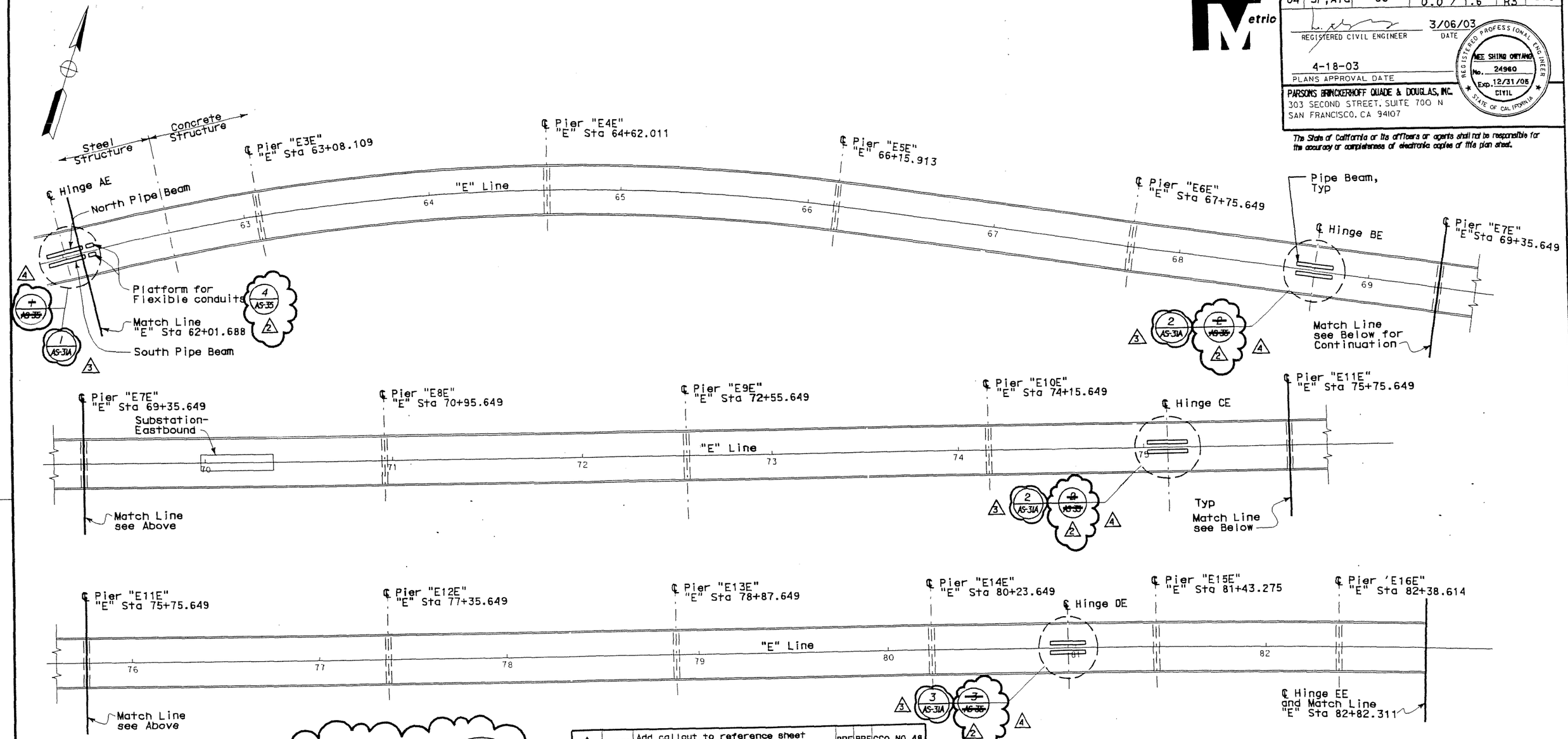

William Howe — REGISTERED CIVIL ENGINEER — 10/1/04 DATE

REGISTERED PROFESSIONAL ENGINEER — WILLIAM BRADFORD HOWE — No. 53321 — Exp. 6/30/07 — CIVIL — STATE OF CALIFORNIA

MARK	DATE	DESCRIPTIONS	REV	CK	
4	2/1/05	Add callout to reference sheet AS-35.	BRF	BRF	CCO NO.48
3	10/1/04	Add callout to reference sheet AS-31A.	BRF		CCO NO.48
2	10/10/03	Change drawing No. from AS-26 to AS-34.	EJL	MSO	CCO NO.48
1	04/18/03	New Drawing	EJL	MSO	CCO NO.48

REVISIONS

CONTRACT CHANGE ORDER NO. 48
SHEET 6 OF 17

NOTES:

1. The contractor shall verify all controlling field dimensions before ordering or fabricating any material.
2. For structural notes, see "General Plan, Stairway sheet AS-1.

NO SCALE

ALL DIMENSIONS ARE IN MILLIMETERS UNLESS OTHERWISE SHOWN

	BY	CHECKED
DESIGN	E. Lucas	N. S. Owyang
LAYOUT	E. Lucas	N. S. Owyang
QUANTITIES		

STATE OF CALIFORNIA
DEPARTMENT OF TRANSPORTATION

DIVISION OF STRUCTURES
STRUCTURAL DESIGN

CU 04251
EA 012021

BRIDGE NO. 34-0006
KILOMETER POST 13.0/14.3, 0.0/1.6

STRUCTURE - EASTBOUND
HINGE LOCATION

AS-34

SHEET 17 OF 47

DISREGARD PRINTS BEARING EARLIER REVISION DATES

REVISION DATES (PRELIMINARY STAGE ONLY) 10/01

ORIGINAL SCALE IN MILLIMETERS FOR REDUCED PLANS 0 10 20 30 40 50 60 70 80 90 100

DGN FILE => 401202ac34.cco
USERNAME => bfeather

DIST	COUNTY	ROUTE	KILOMETER POST TOTAL PROJECT	SHEET No	TOTAL SHEETS
04	SF, Ala	80	13.9 / 14.3, 0.0 / 1.6	109J R3	978

Caltrans Metric

REGISTERED CIVIL ENGINEER — DATE 3/06/03

4-18-03
PLANS APPROVAL DATE

REGISTERED PROFESSIONAL ENGINEER — MEE SHING OWYANG No. 24960 Exp. 12/31/05 CIVIL — STATE OF CALIFORNIA

PARSONS BRINCKERHOFF QUADE & DOUGLAS, INC.
303 SECOND STREET, SUITE 700 N
SAN FRANCISCO, CA 94107

The State of California or its officers or agents shall not be responsible for the accuracy or completeness of electronic copies of this plan sheet.

NOTES:

1. For General Structural Notes, see AS-1
2. For Electrical Conduit Details and Requirements, see Electrical Plans.

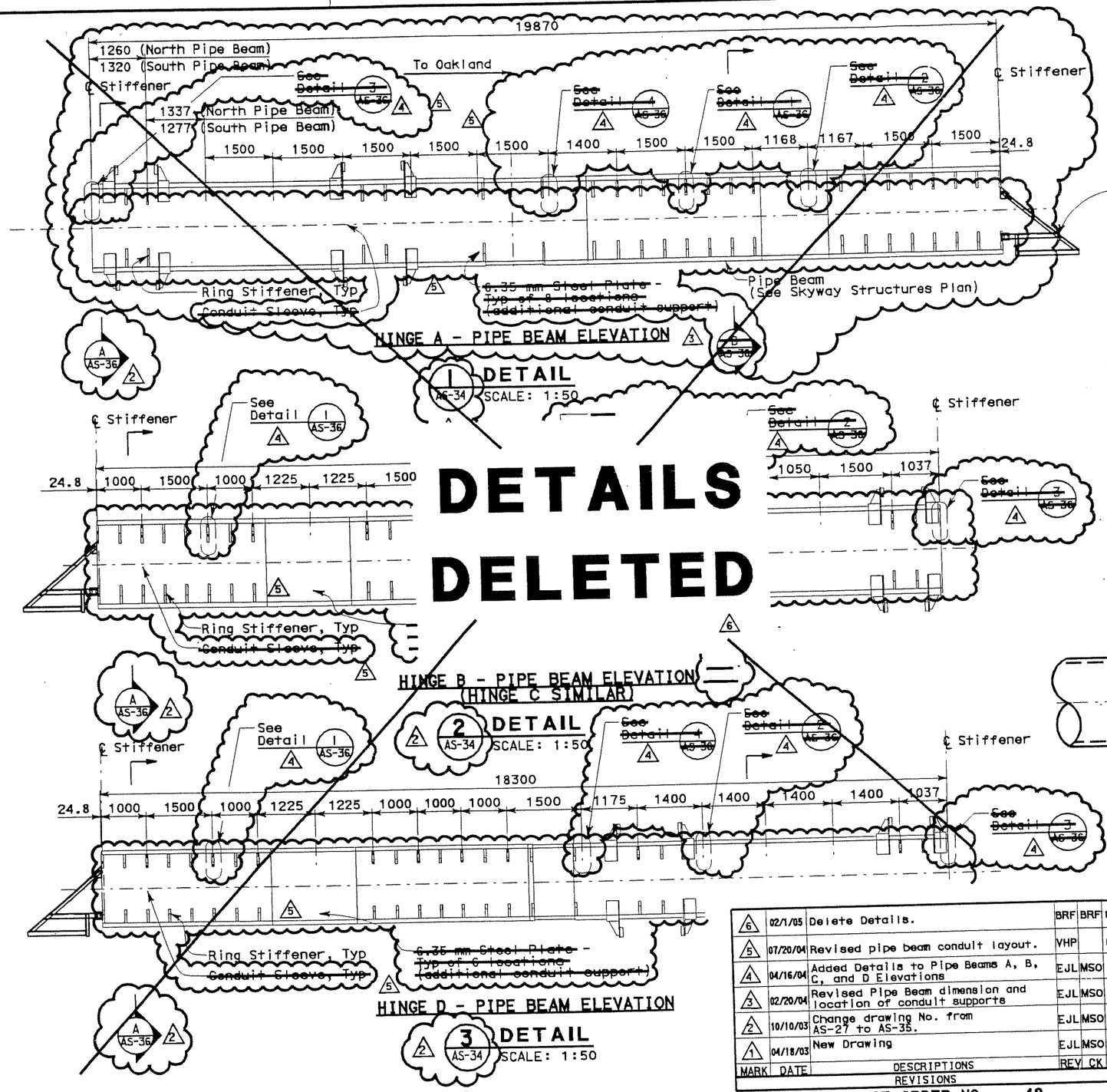

DETAILS DELETED

1 DETAIL (AS-34) SCALE: 1:50

2 DETAIL (AS-34) SCALE: 1:50

3 DETAIL (AS-34) SCALE: 1:50

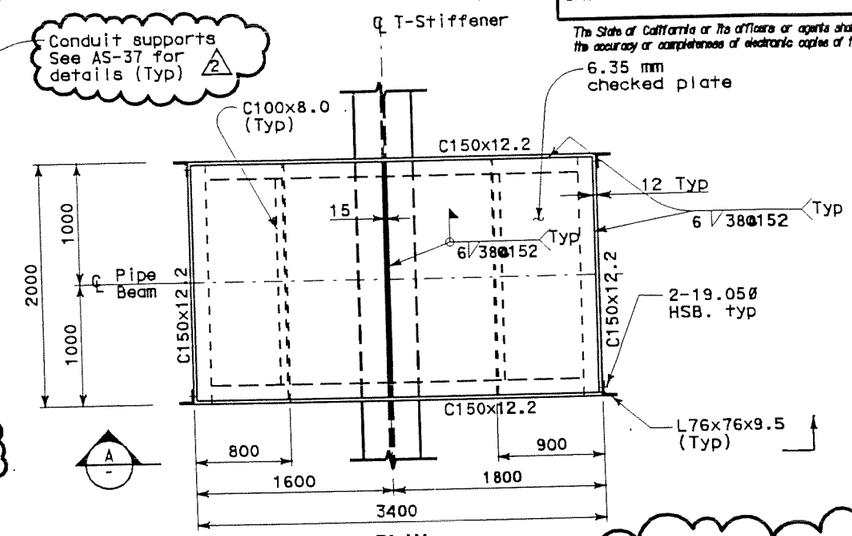

PLAN

4 DETAIL (AS-34) NO SCALE

William Howe 9/22/04
REGISTERED CIVIL ENGINEER — DATE

REGISTERED PROFESSIONAL ENGINEER — WILLIAM BRADFORD HOWE No. 53321 Exp. 6/30/07 CIVIL — STATE OF CALIFORNIA

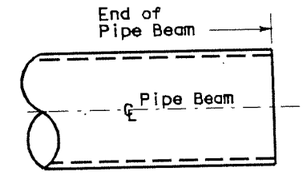

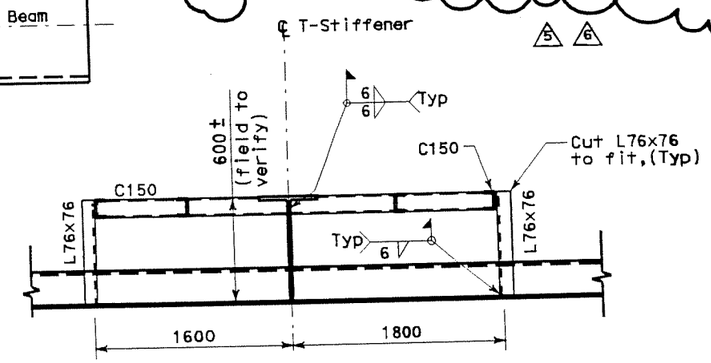

ELEVATION

A SECTION NO SCALE

MARK	DATE	DESCRIPTIONS	REV	CK	
6	02/1/05	Delete Details.	BRF	BRF	CCO NO.48
5	07/20/04	Revised pipe beam conduit layout.	VHP		CCO NO.48
4	04/16/04	Added Details to Pipe Beams A, B, C, and D Elevations	EJL	MSO	CCO NO.48
3	02/20/04	Revised Pipe Beam dimension and location of conduit supports	EJL	MSO	CCO NO.48
2	10/10/03	Change drawing No. from AS-27 to AS-35.	EJL	MSO	CCO NO.48
1	04/18/03	New Drawing	EJL	MSO	CCO NO.48

REVISIONS

CONTRACT CHANGE ORDER NO. 48
SHEET 9 OF 12

ALL DIMENSIONS ARE IN MILLIMETERS UNLESS OTHERWISE SHOWN

	BY	CHECKED
DESIGN	E. Lucas	N. S. Owyang
LAYOUT	E. Lucas	N. S. Owyang
QUANTITIES		

STATE OF CALIFORNIA
DEPARTMENT OF TRANSPORTATION

DIVISION OF STRUCTURES

BRIDGE NO. 34-0006
KILOMETER POST 13.0/14.3 0.0/1.6

STRUCTURE - EASTBOUND
TYPICAL PIPE BEAM CONDUIT SUPPORT

AS-35

ORIGINAL SCALE IN MILLIMETERS FOR REDUCED PLANS 0 10 20 30 40 50 60 70 80 90 100

CU 04251
EA 012021

DGN FILE => 401202ac35.cco
USERNAME => bfeather

DISREGARD PRINTS BEARING EARLIER REVISION DATES

REVISION DATES (PRELIMINARY STAGE ONLY)

SHEET OF

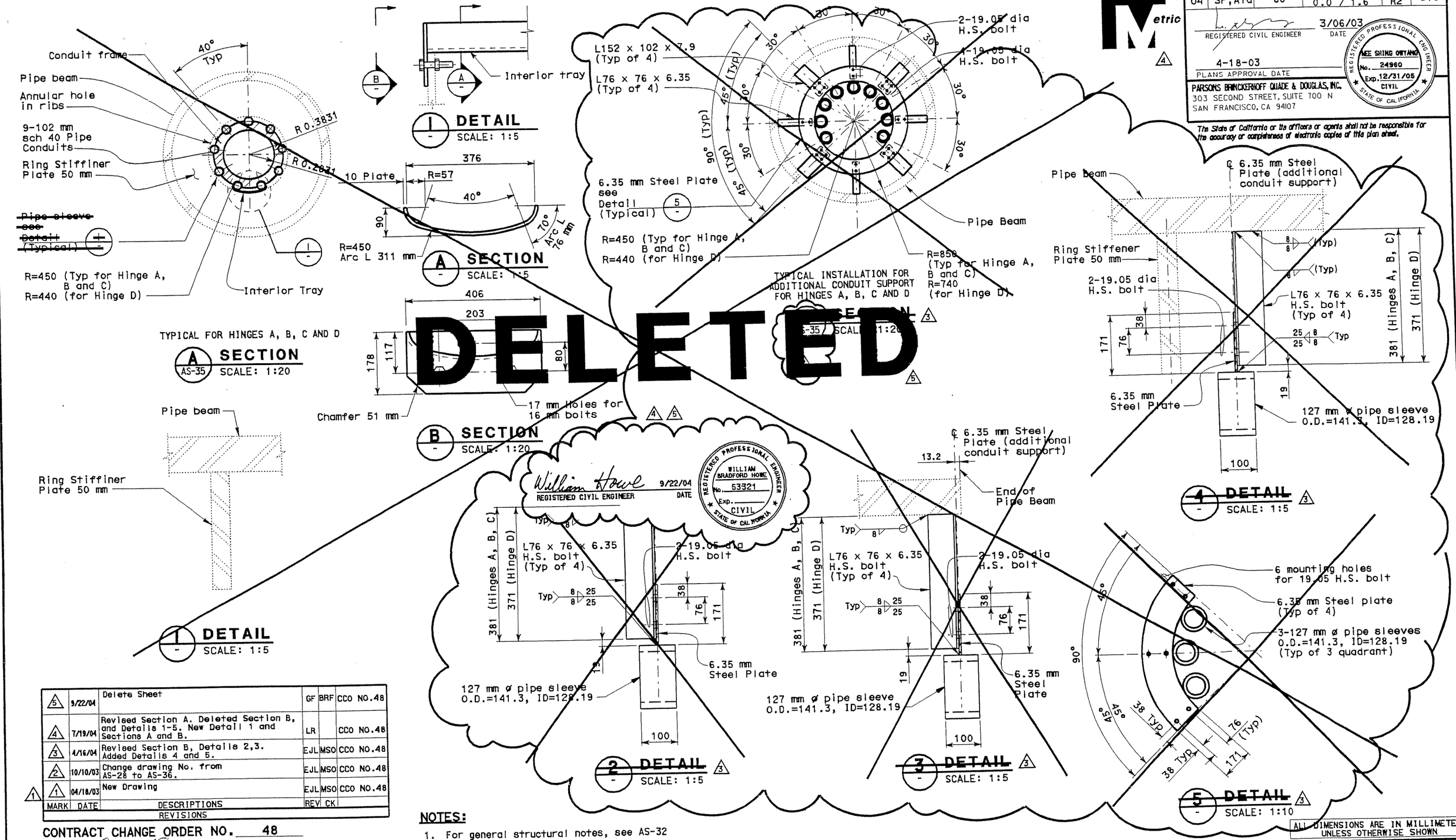

MARK	DATE	DESCRIPTIONS	REV	CK	
5	9/22/04	Delete Sheet	GF	BRF	CCO NO.48
4	7/19/04	Revised Section A. Deleted Section B, and Details 1-5. New Detail 1 and Sections A and B.	LR		CCO NO.48
3	4/16/04	Revised Section B, Details 2,3. Added Details 4 and 5.	EJL	MSO	CCO NO.48
2	10/10/03	Change drawing No. from AS-28 to AS-36.	EJL	MSO	CCO NO.48
1	04/18/03	New Drawing	EJL	MSO	CCO NO.48

REVISIONS

CONTRACT CHANGE ORDER NO. 48

SHEET 8 OF 17

NOTES:

1. For general structural notes, see AS-32

ALL DIMENSIONS ARE IN MILLIMETERS UNLESS OTHERWISE SHOWN

William Howe 9/22/04
REGISTERED CIVIL ENGINEER DATE

REGISTERED PROFESSIONAL ENGINEER WILLIAM BRADFORD HOWE No. 53321 Exp. CIVIL STATE OF CALIFORNIA

REGISTERED CIVIL ENGINEER 3/06/03 DATE

4-18-03
PLANS APPROVAL DATE

REGISTERED PROFESSIONAL ENGINEER MEE SHING OWYANG No. 24960 Exp. 12/31/05 CIVIL STATE OF CALIFORNIA

PARSONS BRINCKERHOFF QUADE & DOUGLAS, INC.
303 SECOND STREET, SUITE 700 N
SAN FRANCISCO, CA 94107

The State of California or its officers or agents shall not be responsible for the accuracy or completeness of electronic copies of this plan sheet.

DESIGN	BY E. Lucas	CHECKED N. S. Owyang	
LAYOUT	BY E. Lucas	CHECKED N. S. Owyang	
QUANTITIES	BY	CHECKED	

STATE OF CALIFORNIA
DEPARTMENT OF TRANSPORTATION

DIVISION OF STRUCTURES

CU 04251
EA 012021

BRIDGE NO. 34-0006
KILOMETER POST 13.0/14.3 0.0/1.6

STRUCTURE - EASTBOUND
TYPICAL PIPE BEAM CONDUIT SUPPORT

AS-36

SHEET OF

DISREGARD PRINTS BEARING EARLIER REVISION DATES

REVISION DATES (PRELIMINARY STAGE ONLY)

ORIGINAL SCALE IN MILLIMETERS FOR REDUCED PLANS 0 10 20 30 40 50 60 70 80 90 100

DGN FILE => 401202ac36.cco
USERNAME => bfeather

DATE PLOTTED => 10-FEB-2005 TIME PLOTTED => 13:11

DIST	COUNTY	ROUTE	KILOMETER POST TOTAL PROJECT	SHEET No	TOTAL SHEETS
04	SF, Ala	80	13.9 / 14.3, 0.0 / 1.6	109L R2	978

REGISTERED CIVIL ENGINEER — DATE 3/06/03

4-18-03
PLANS APPROVAL DATE

REGISTERED PROFESSIONAL ENGINEER — WEE SHING OWYANG — No. 24960 — Exp. 12/31/06 — CIVIL — STATE OF CALIFORNIA

PARSONS BRINCKERHOFF QUADE & DOUGLAS, INC.
303 SECOND STREET, SUITE 700 N
SAN FRANCISCO, CA 94107

The State of California or its officers or agents shall not be responsible for the accuracy or completeness of electronic copies of this plan sheet.

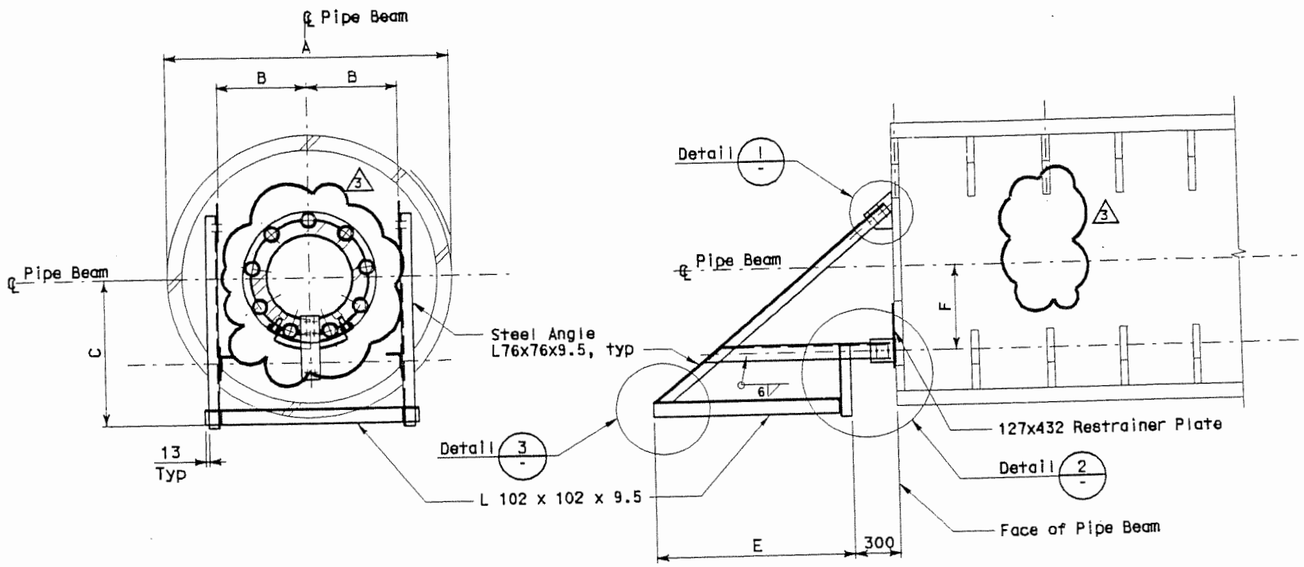

CONDUIT SUPPORT AT PIPE BEAM

SEE TABLE FOR DIMENSIONS
SCALE: NO SCALE

TABLE
CONDUIT SUPPORT DIMENSIONS

	Hinges A, B, C	Hinge D
A	1900	1650
B	600	500
C	991	747
D	420	420
E	1335	1300
F	574	553

NOTES:

1. For General Structural Notes, see AS-1.
2. For other details not shown, see electrical plans.

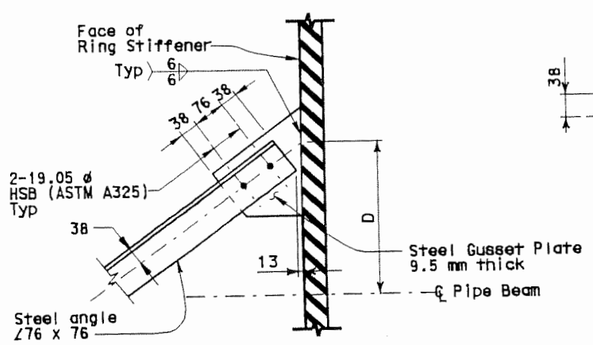

1 DETAIL
SEE TABLE FOR DIMENSIONS
NO SCALE

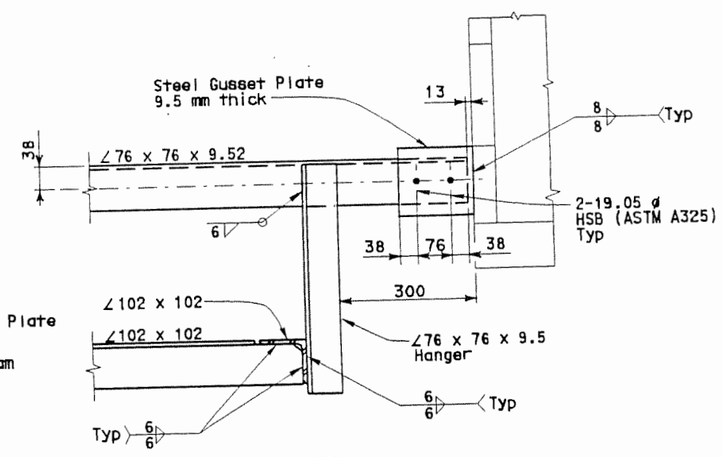

2 DETAIL
NO SCALE

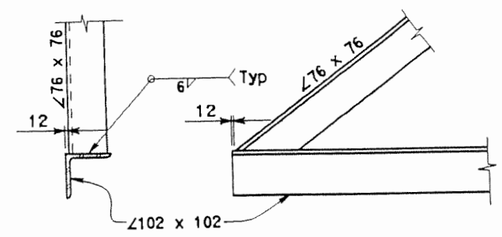

3 DETAIL
NO SCALE

William Howe 9/22/04
REGISTERED CIVIL ENGINEER — DATE

REGISTERED PROFESSIONAL ENGINEER — WILLIAM BRADFORD HOWE — No. 53321 — Exp. 6/30/07 — CIVIL — STATE OF CALIFORNIA

3

MARK	DATE	DESCRIPTIONS	REV	CK
3	09/07/04	Revised pipe beam conduit layout.	LR	CCO NO.48
2	10/10/03	Change drawing No. from AS-29 to AS-37.	EJL	MSO CCO NO.48
1	04/18/03	New Drawing	EJL	MSO CCO NO.48

REVISIONS

CONTRACT CHANGE ORDER NO. 48
SHEET 9 OF 17

1

ALL DIMENSIONS ARE IN MILLIMETER UNLESS OTHERWISE SHOWN

	BY	CHECKED
DESIGN	E. Lucas	N. S. Owyang
LAYOUT	E. Lucas	N. S. Owyang
QUANTITIES		

STATE OF CALIFORNIA
DEPARTMENT OF TRANSPORTATION

DIVISION OF STRUCTURES

BRIDGE NO. 34-0006
KILOMETER POST 13.0/14.3, 0.0/1.6

CU 04251
EA 012021

DISREGARD PRINTS BEARING EARLIER REVISION DATES

STRUCTURE - EASTBOUND
TYPICAL PIPE BEAM CONDUIT SUPPORT

2

AS-3

REVISION DATES (PRELIMINARY STAGE ONLY) — SHEET

ORIGINAL SCALE IN MILLIMETERS FOR REPRINTED PLANS 0 10 20 30 40 50 60 70 80 90 100

DIST	COUNTY	ROUTE	KILOMETER POST TOTAL PROJECT	SHEET No	TOTAL SHEETS
04	SF, Ala	80	13.9/14.3 0.0/1.6	109N R1	978

William Howe 9/23/04
REGISTERED CIVIL ENGINEER DATE

PLANS APPROVAL DATE

REGISTERED PROFESSIONAL ENGINEER WILLIAM BRADFORD HOWE No. 53321 Exp. 6/30/07 CIVIL STATE OF CALIFORNIA

The State of California or its officers or agents shall not be responsible for the accuracy or completeness of electronic copies of this plan sheet.

Caltrans now has a web site! To get to the web site, go to: http://www.dot.ca.gov

Caltrans Metric

Wheel Size Dia x Wd	Hub Lg.	For Axle Dia.±	Cap Each, lbs.
4" x 1½"	2 3/16"	5/8"	1,400

	Hinge A, B, C	Hinge D
Ⓐ Ring Stiffener I.D.	900 mm	880 mm
Ⓑ Scallop Ring I.D.	574.6750 mm	551.3883 mm
Ⓒ Scallop Ring O.D.	746.9200 mm	723.6333 mm
Conduit O.D.	861.8200 mm	837.9333 mm
Conduit - RS Clearance	42.0675 mm	42.0675 mm

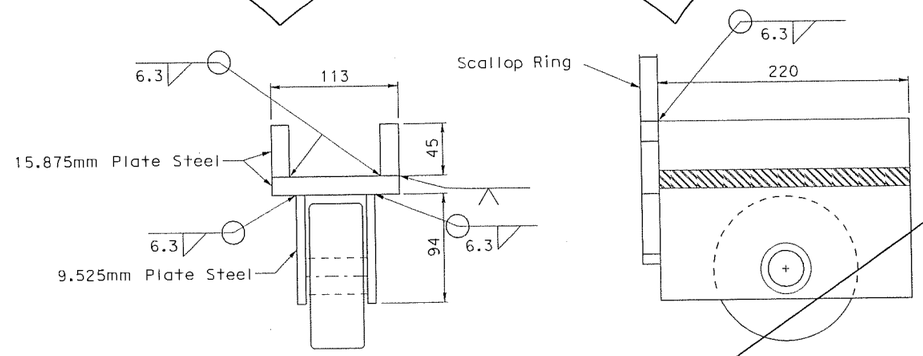

WHEEL BRACKET DETAIL
1:2.5

NOTES:

1. FOR NOTES, SEE SHEET AS-32B.

DELETED

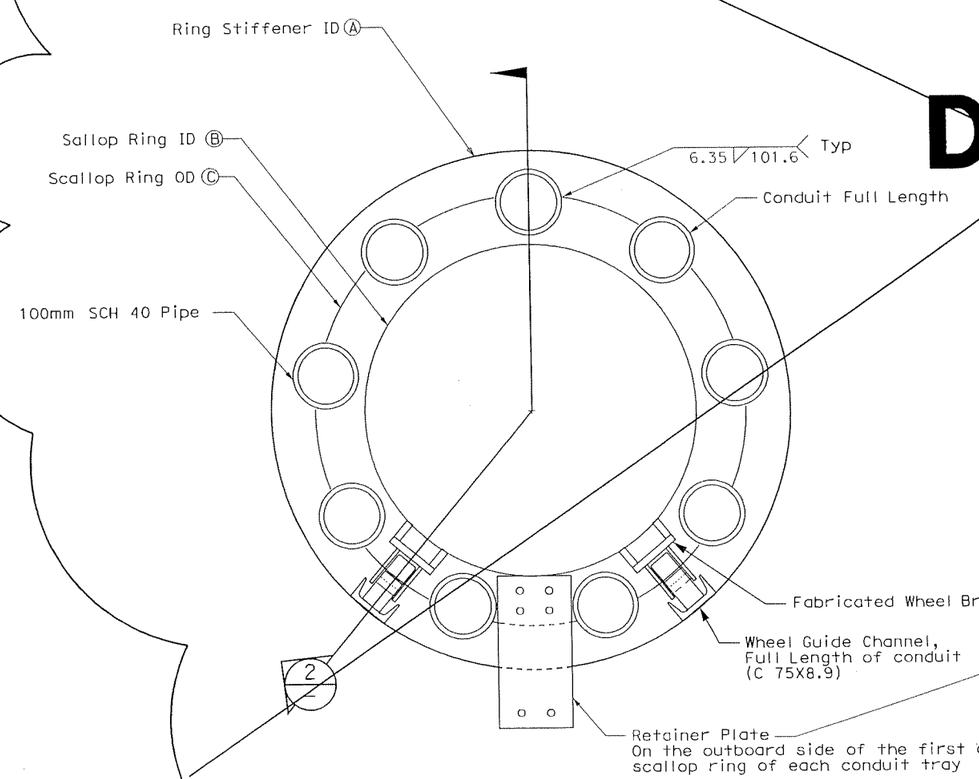

1 AS-31A SECTION
1:5

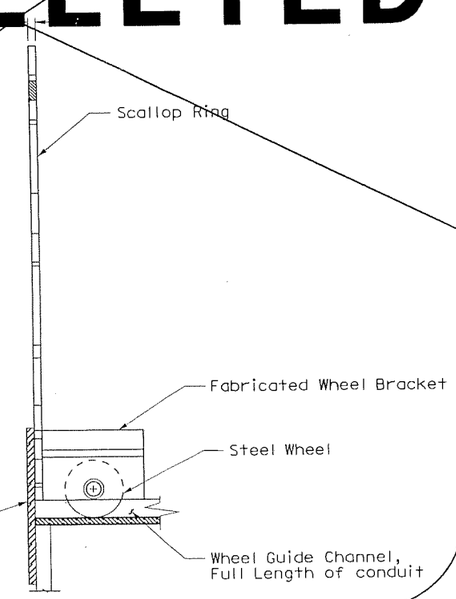

2 — SECTION
1:5

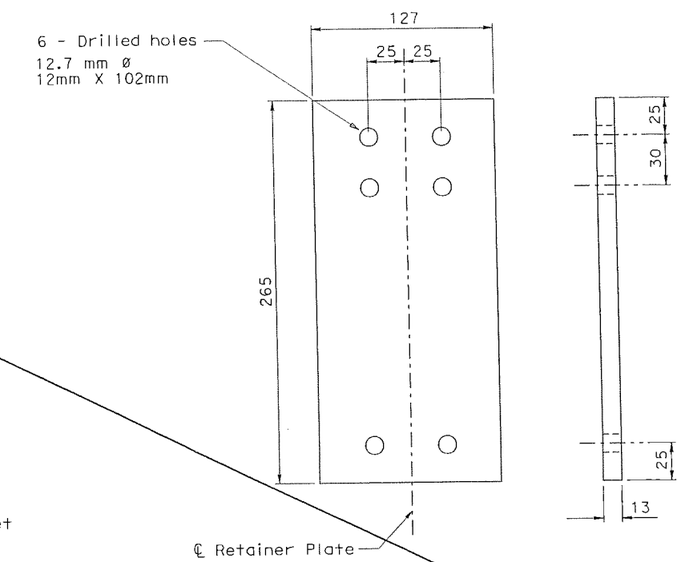

RETAINER PLATE DETAIL
1:2

MARK	DATE	DESCRIPTIONS	REV	CK	
2	3/18/05	Sheet Deleted	GF		CCO NO. 48
	9/18/04	New Drawing	GF	BRF	CCO NO. 48

REVISIONS

CONTRACT CHANGE ORDER NO. 48
SHEET 10 OF 17

ALL DIMENSIONS ARE IN MILLIMETERS UNLESS OTHERWISE SHOWN

	BY	CHECKED
DESIGN	Glenn Fleming	
DETAILS	C Fassett	
QUANTITIES	Glen Fleming	

STATE OF CALIFORNIA
DEPARTMENT OF TRANSPORTATION

DIVISION OF ENGINEERING SERVICES
STRUCTURE DESIGN
DESIGN BRANCH

BRIDGE NO.
KILOMETER POST

SKYWAY STRUCTURES
ROLLER GUIDE DETAIL 1

AS-32A

ORIGINAL SCALE IN MILLIMETERS FOR REDUCED PLANS 0 10 20 30 40 50 60 70 80 90 100

CU
EA

DISREGARD PRINTS BEARING EARLIER REVISION DATES

REVISION DATES

SHEET SPAGENUM OF SPAGETOT

FILE => 04-012024_0109NR1.dgn

STRUCTURES DESIGN DETAIL SHEET (METRIC) (REV.03-17-04)

USERNAME => mhossain DATE PLOTTED => 18-MAR-2005 TIME PLOTTED => 11:27

DIST	COUNTY	ROUTE	KILOMETER POST TOTAL PROJECT	SHEET No	TOTAL SHEETS
04	SF, Ala	80	13.9/14.3, 0.0/1.6	1090 R1	978

William Howe 9/22/04
REGISTERED CIVIL ENGINEER DATE

PLANS APPROVAL DATE

REGISTERED PROFESSIONAL ENGINEER WILLIAM BRADFORD HOWE No. 53321 Exp. 6/30/07 CIVIL STATE OF CALIFORNIA

The State of California or its officers or agents shall not be responsible for the accuracy or completeness of electronic copies of this plan sheet.

Caltrans now has a web site! To get to the web site, go to: http://www.dot.ca.gov

Caltrans Metric

	Hinge A, B, C	Hinge D
θ_2	630.62 mm	614.35 mm
L_1	554.42 mm	538.15 mm
L_2	70.33°	70.08°

DELETED

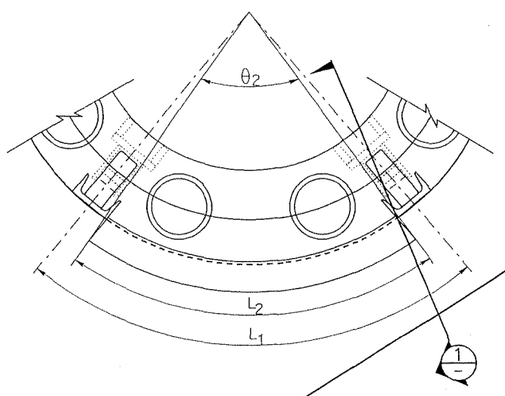

3 AS-31A SECTION 1:5

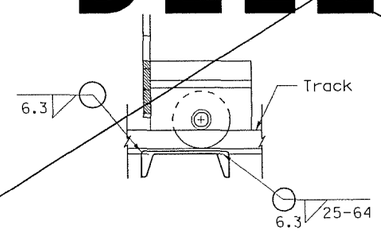

1 SECTION 1:5

NOTES

1. A partial pen weld shall be used to splice the conduits. See contract plans for details
2. Scallop ring shall be A36-12.7mm plate
3. Bolts in the stiffener ring muct be a minimum of three hole diameters from the edge of the stiffener ring.
4. On the fixed end of the pipe beam, the wheel will be mounted on the inboard side of the scallop ring. The channel (wheel guide) will terminate at the last stiffener ring on the fixed end.
5. Welding procedures shall be tested and qualified in accordance with AWS D1.1.
6. The existing WPS shall be used as the Fabrication Procedure Submittal. The existing WPS must be resubmitted.
7. Cleaning and painting of the conduit assembly shall conform to the provisions in Section 59-1, "General" and Section 59-2 of the Standard Specifications.
8. The conduit assembly shall be painted with zinc-rich primer and shall conform to the provisions in Section 59-2.12, "Painting," and Section 59-2.13, "Application of Zinc-Rich Primer."

MARK	DATE	DESCRIPTIONS	REV	CK	
2	3/18/05	Sheet Deleted	GF		CCO NO. 48
	9/18/04	New Drawing	GF	BRF	CCO NO. 48

REVISIONS

CONTRACT CHANGE ORDER NO. 48
SHEET 11 OF 17

ALL DIMENSIONS ARE IN MILLIMETERS UNLESS OTHERWISE SHOWN

	BY	CHECKED
DESIGN	Glenn Fleming	
DETAILS	C Fassett	
QUANTITIES	Glenn Fleming	

STATE OF CALIFORNIA
DEPARTMENT OF TRANSPORTATION

DIVISION OF ENGINEERING SERVICES
STRUCTURE DESIGN
STRUCTURAL DESIGN

BRIDGE NO.
KILOMETER POST

SKYWAY STRUCTURES
ROLLER GUIDE DETAIL NO 2

AS-32B

ORIGINAL SCALE IN MILLIMETERS FOR REDUCED PLANS 0 10 20 30 40 50 60 70 80 90 100

CU
EA

DISREGARD PRINTS BEARING EARLIER REVISION DATES

REVISION DATES

SHEET OF
PAGENUM PAGETOT

FILE => 04-012024_01090R1.dgn

STRUCTURES DESIGN DETAIL SHEET (METRIC) (REV.03-17-04)

USERNAME => mhossain DATE PLOTTED => 18-MAR-2005 TIME PLOTTED => 11:23

DIST	COUNTY	ROUTE	TOTAL PROJECT MILES	PROJECT NO.	SHEET NO.
04	SF, Ala	80	13.9/14.3, 0.0/1.6	109S R1	978

Caltrans Metric

William Howe 9/22/04
REGISTERED CIVIL ENGINEER

PLANS APPROVAL DATE

REGISTERED PROFESSIONAL ENGINEER WILLIAM BRADFORD HOWE No. 53321 Exp. 6/30/07 CIVIL STATE OF CALIFORNIA

The State of California or its officers or agents shall not be responsible for the accuracy or completeness of electronic copies of this plan sheet.

MARK	DATE	DESCRIPTIONS	REV	CK	
1	2/1/05	Added notes.	BRF	BRF	CCO NO. 48
	9/18/04	New Drawing	GF	BRF	CCO NO. 48

REVISIONS

CONTRACT CHANGE ORDER NO. 48
SHEET 12 OF 17

NOTES:

1. WHEELS #1 AND #4 WILL BE LOCATED ON THE INBOARD SIDE OF THE SCALLOP RING.
2. WHEELS #2 AND #3 WILL BE LOCATED ON THE SIDE OF THE SCALLOP RING CLOSEST TO THE END OF THE PIPE BEAM.
3. (#) 1-6 ARE THE LOCATIONS OF THE CHANNEL BRACKETS. THE ℄ OF THE BRACKET SHALL BE LOCATED AT THE ℄ OF THE INVERT OF THE INTERIOR OF THE RING STIFFENER.
4. FOR ADDITIONAL NOTES SEE SHEET 32B.
5. FOR EASTBOUND, IDENTICAL.

LENGTH & SCALLOP SPACING		
Hinge	"L"	"S"
AW	20 840	1603.0
AE	19 870	1528.5
B,C,D	18 300	1407.7

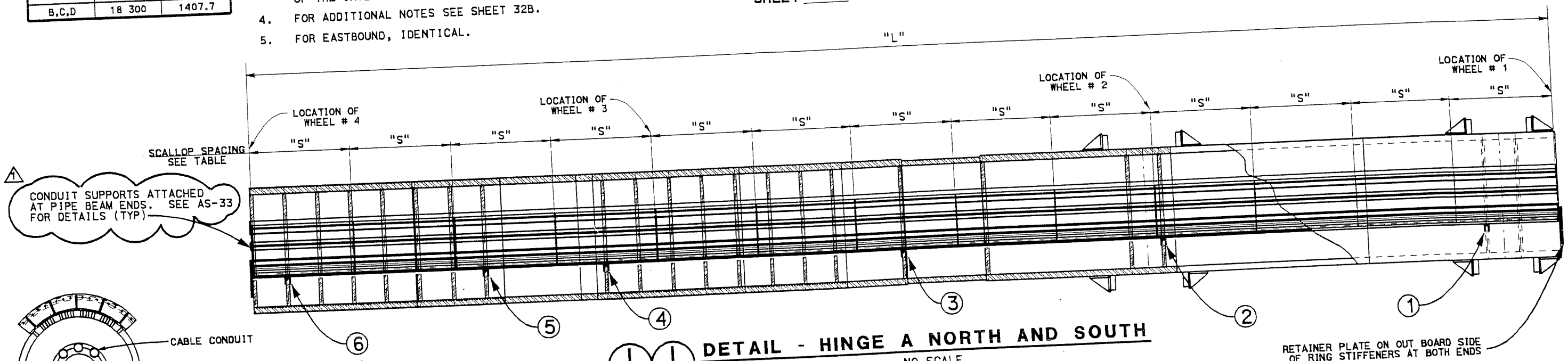

1/AS-30 1/AS-34 DETAIL - HINGE A NORTH AND SOUTH
NO SCALE

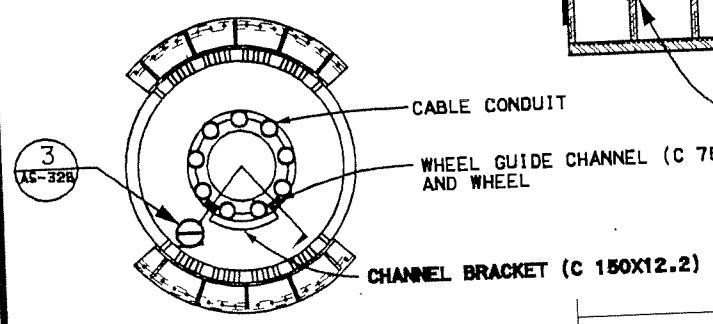

2/- SECTION
NO SCALE

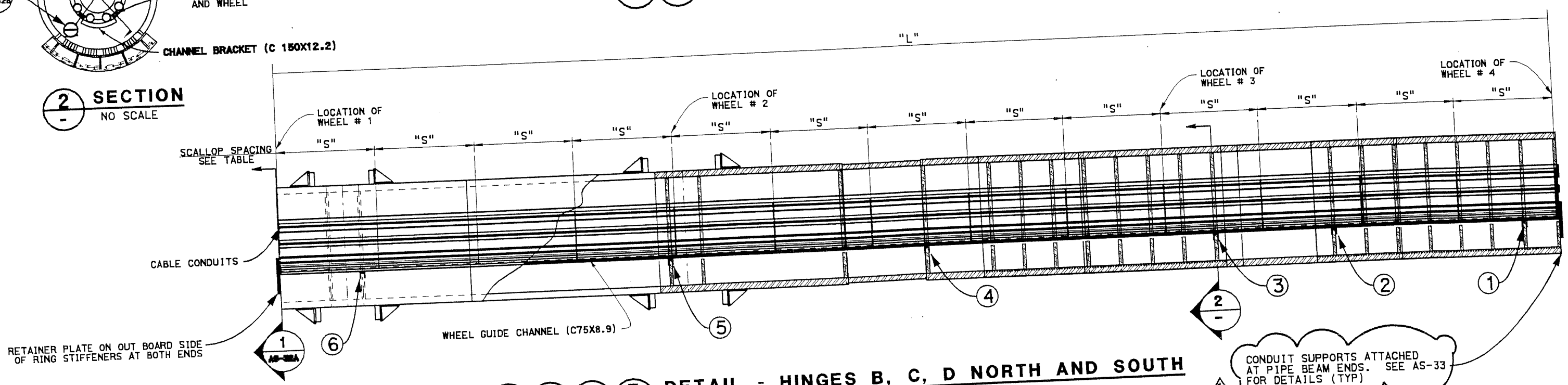

2/AS-30 3/AS-30 2/AS-34 3/AS-34 DETAIL - HINGES B, C, D NORTH AND SOUTH
NO SCALE

	BY	CHECKED
DESIGN	GLENN FLEMING	
DETAILS	C FASSETT	
QUANTITIES	GLENN FLEMING	

ORIGINAL SCALE IN INCHES FOR REDUCED PLANS 0 1 2 3

STATE OF CALIFORNIA
DEPARTMENT OF TRANSPORTATION

DIVISION OF STRUCTURES
STRUCTURE DESIGN

CU 04
EA 012024

BRIDGE NO. 34-0006L/R
POST MILE 13.9/14.3 0.0/1.6

DISREGARD PRINTS BEARING EARLIER REVISION DATES 9-09-04

STRUCTURE - WB/EB

TYPICAL PIPE BEAM CONDUIT SUPPORTS

REVISION DATES (PRELIMINARY STAGE ONLY)

AS-31A

SHEET OF

FILE => 0401202ac31a.cco

STRUCTURES DESIGN DETAIL SHEET (ENGLISH) (REV. 1/1/99)

TIME PLOTTED => 16:55

DIST	COUNTY	ROUTE	KILOMETER POST TOTAL PROJECT	SHEET NO.	TOTAL SHEETS
04	SF, ALA	80	13.9/14.3 0.0/1.6	109T	978

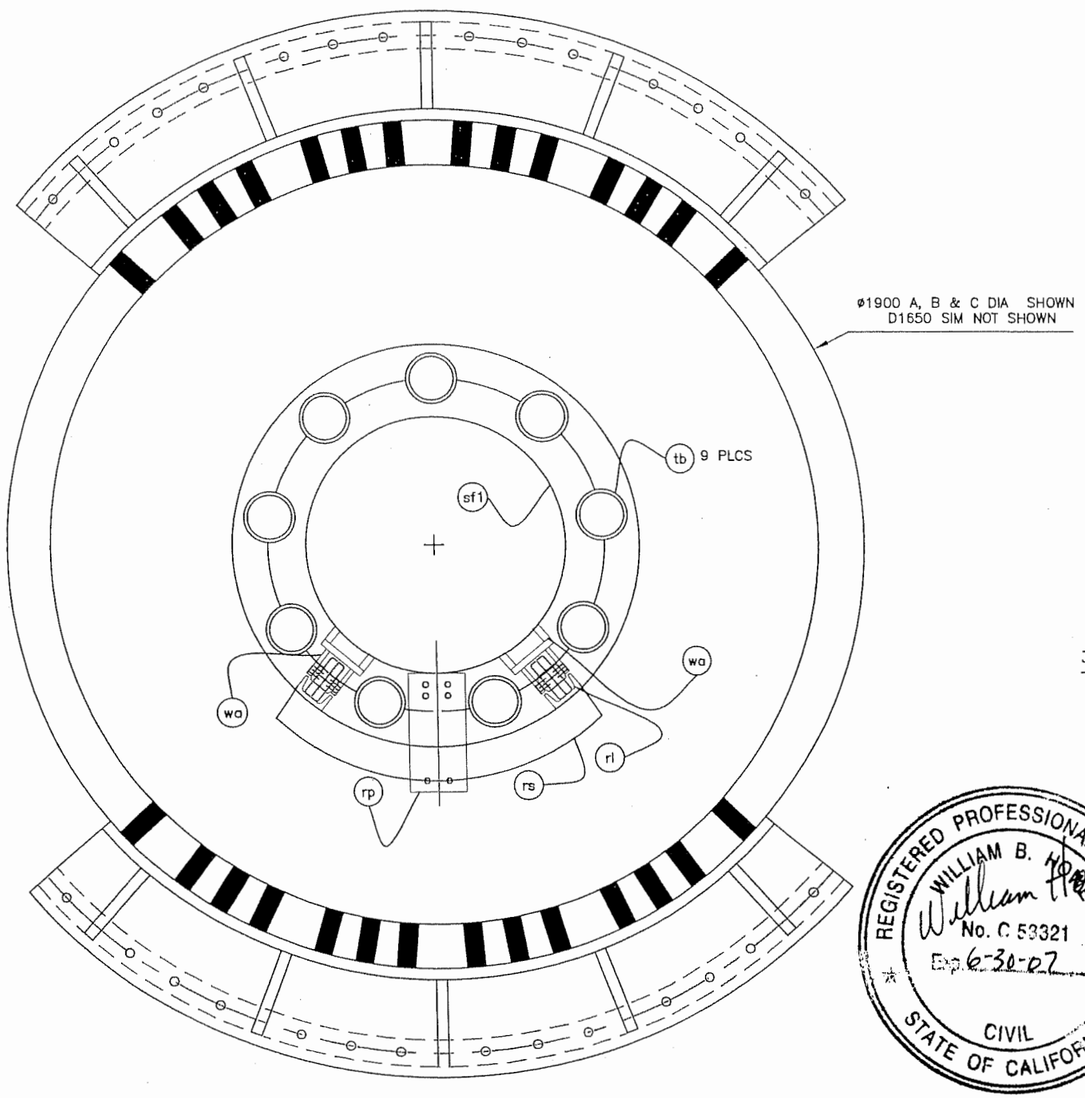

END VIEW @ AE HINGE SLIDING END TYP ALL HINGES

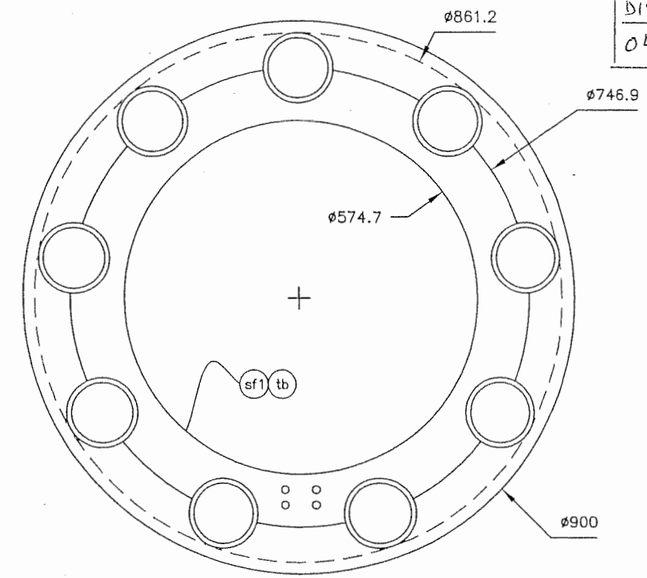

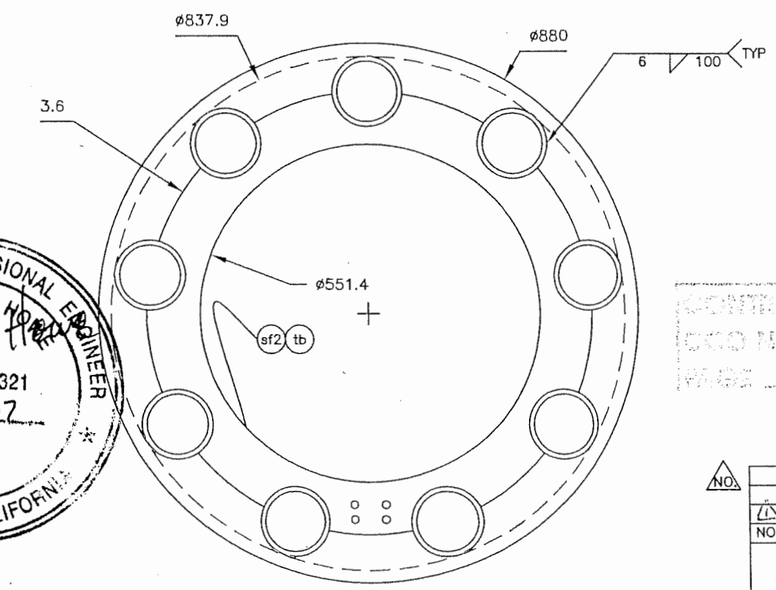

NOTES:

1. CONDUIT SPLICES ARE PJP WELDS.

2. SCALLOP RING SHALL BE A36 MALT., 12MM TO 13MM PLT. (1/2").

3. BOLTS IN STIFFENER RING (RN1) MUST BE A MINIMUM OF THREE HOLE DIA. FROM THE EDGE THE RING STIFFENER.

4. ON THE FIXED END OF THE PIPE BEAM THE WHEEL WILL BE MOUNTED THE ON THE IN BOARD SIDE OF THE SCALLOP RING. THE CHANNEL WHEEL GUIDE WILL TERMINATE AT THE LAST RING STIFFENER AT THE FIXED END.

5. WELDING PROCEDURES SHALL BE TESTED AND QUALIFIED IN ACCORDANCE WITH AWS D1.1.

6. THE EXISTING WPS SHALL BE USED AS THE FABRICATION PROCEDURE SUBMITTAL. THE EXISTING WPS MUST BE RESUBMITTED.

7. CLEANING AND PAINTING OF THE CONDUIT ASSEMBLY SHALL CONFORM TO THE PROVISIONS IN 59-1, "GENERAL" AND SECTION 59-2 OF THE STANDARD SPECIFICATIONS.

8. THE CONDUIT ASSEMBLY SHALL BE PAINTED WITH A ZINC-RICH PRIMER AND SHALL CONFORM TO THE PROVISIONS IN SECTION 59-2.12, "PAINTING" AND SECTION 59-2.13, "APPLICATION OF ZINC-RICH PRIMER."

CONTRACT NO. 04-012024
BRID NO. 48
SHEET 13 OF 17

REGISTERED PROFESSIONAL ENGINEER
WILLIAM B. HOWARD
No. C 53321
Exp. 6-30-07
CIVIL
STATE OF CALIFORNIA

SCALLOP SPACING	
AW	VARIES AWN,AWS
AE	VARIES AEN,AES
B,C,D	1407.7

CONDUIT RS CLEARANCE		
A,B,C HINGE STIFFINER RN1 ID	42.0675	
D HINGE STIFFINER RN1 ID	42.0675	

CONDUIT BUNDEL COMPONENT QTY & LENGTH						
CHANNEL RAILS (rl)	HINGE AE	HINGE AW	HINGE B, C & D			
rl LENGTH	2 @ 19128MM	2 @ 19772MM	12 @ 17775MM			
TUBE BUNDEL (tb)	2 @ 9 TUBES	2 @ 9 TUBES	12 @ 9 TUBES			
tb LENGTH	19870	208040	18300			
WHEEL ASSY (wa)	16 REQD	16 REQD	96 REQD			
SCALLOP FRAME(sf1)	28 REQD	28 REQD	112 REQD @ B&C			
SCALLOP FRAME(sf2)	0	0	56 REQD @ D			
RETAINER PLTS (rp)	4 REQD	4 REQD	24 REQD			
RAIL STIFFINER (rs)	12 REQD	12 REQD	48 @ B&C 24 @ D			

NO.	REVISION DESCRIPTION	DATE	BY
1	New Drawing	3/18/05	GF

CONDUIT SUPPORTS

BRIDGE NUMBER : 34-0006L/R
CONTRACT NUMBER : 04-~~0120E4~~ 012024

DISTRICT	COUNTY	ROUTE	KILOMETER POST TOTAL PROJECT
04	SF	80	13.4, 13.8

TRANSBAY STEEL 1025 KAISER RD. NAPA, CA
PH.707-259-0777, FAX 707-259-1072

CONDUIT SUPPORTS

1788-3

DRAWN	WHM	XX/XX/XX	DRAWING NO.	REV.
CHKD.	DW		1788-3-D1	0
APPVD.	JK			
SCALE	NONE	DATE		

DIST	COUNTY	ROUTE	KILOMETER POST TOTAL PROJECT	SHEET NO	TOTAL SHEET
04	SF, MRN	80	13.9/14.3 0.0/1.6	1094	9 78

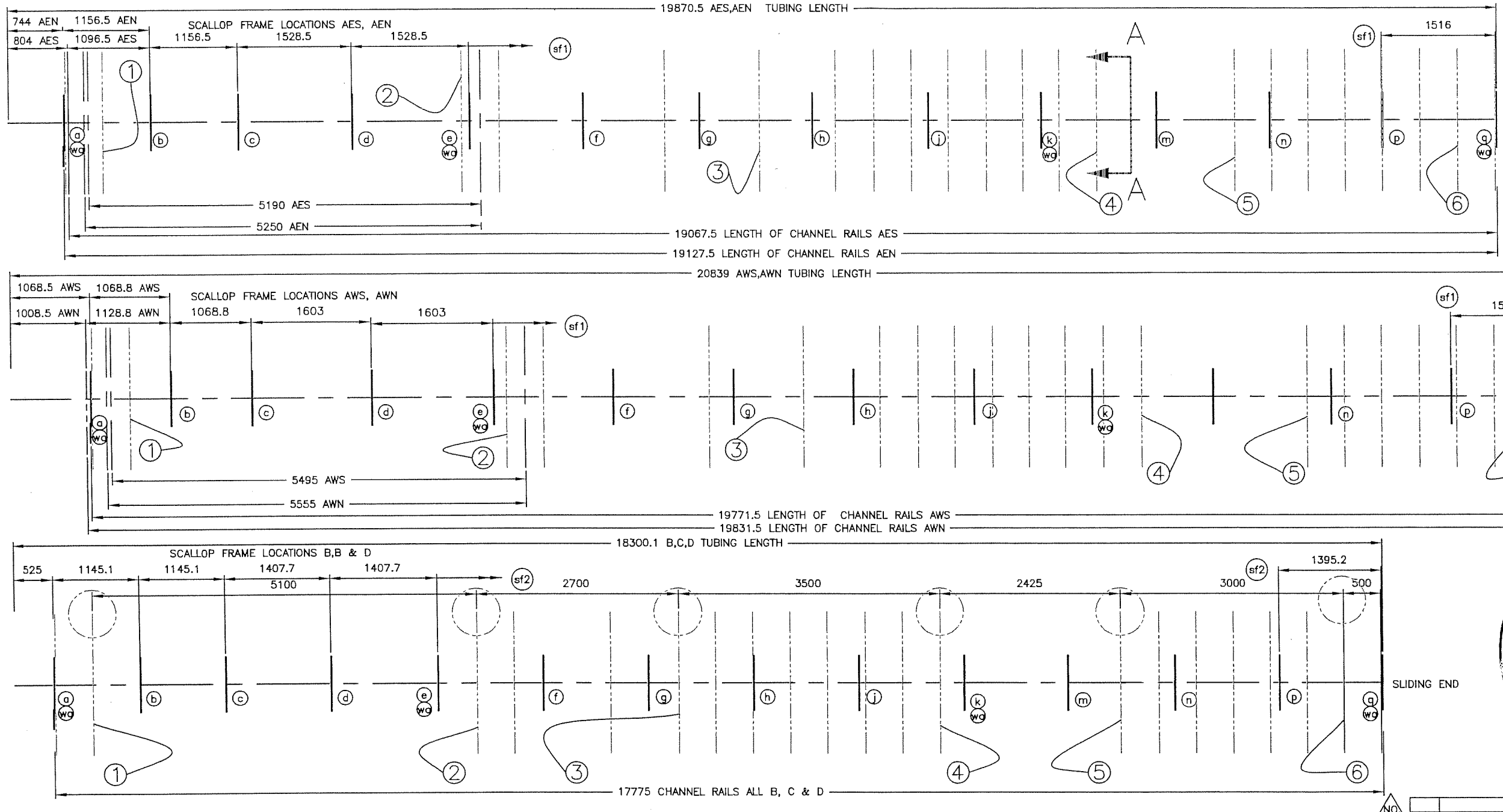

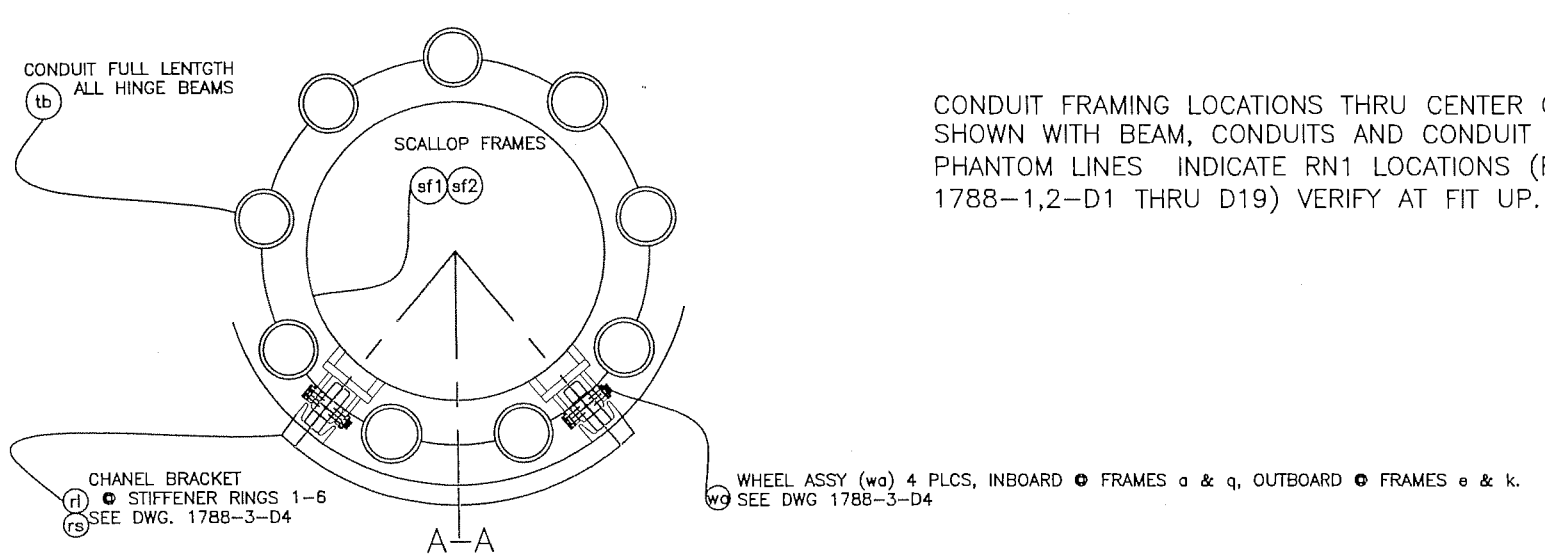

CONDUIT FRAMING LOCATIONS THRU CENTER OF PIPE HINGE BEAMS SHOWN WITH BEAM, CONDUITS AND CONDUIT RAILS REMOVED FOR CLARITY. PHANTOM LINES INDICATE RN1 LOCATIONS (RING STIFFENERS SEE DWGS 1788-1,2-D1 THRU D19) VERIFY AT FIT UP.

NOTES:
1. WHEEL ASSY. 1 & 4 LOCATED INBOARD OF SCALLOP FRAMES a & q
2. WHEEL ASSY. 2 & 3 LOCATED OUTBOARD OF SCALLOP FRAMES e & k
3. CHANNEL BRACKETS LOCATED AT ℄ OF RING STIFFNERS NO. 1-6

REGISTERED PROFESSIONAL ENGINEER
WILLIAM B. HOWE
No. C 53321
Exp. 6-30-07
CIVIL
STATE OF CALIFORNIA

CONTRACT NO. 04-012024
CCC NO. 48
PAGE 14 OF 17

NO.	REVISION DESCRIPTION	DATE	BY
1	New Drawing	3/18/05	GF

SKYWAY STRUCTURES
BRIDGE NUMBER : 34-0006L/R
CONTRACT NUMBER : 04-~~012014~~ 012024

DISTRICT	COUNTY	ROUTE	KILOMETER POST TOTAL PROJECT
04	SF	80	13.4, 13.8

TRANSBAY STEEL 1025 KAISER RD. NAPA, CA
PH.707-259-0777, FAX 707-259-1072

CONDUIT SUPPORT FRAME LOCATIONS
1788-3

DRAWN	WHM	9/20/04	DRAWING NO.	REV.
CHKD.	DW	JK	1788-3-D2	0
APPVD.	JK			
SCALE	NONE	DATE		

DIST	COUNTY	ROUTE	KILOMETER POST TOTAL PROJECT	SHEET NO	TOTAL SHEETS
04	SF, ALA	80	13.4/14.3 0.0/1.6	109V	978

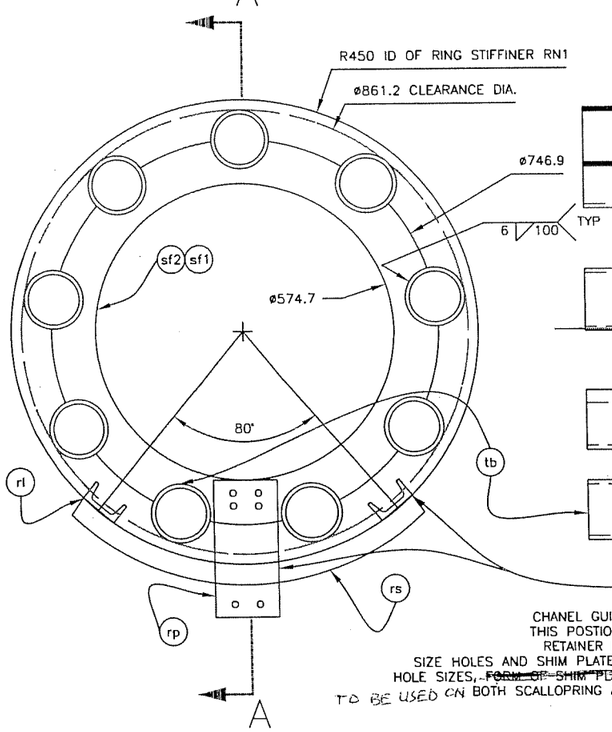

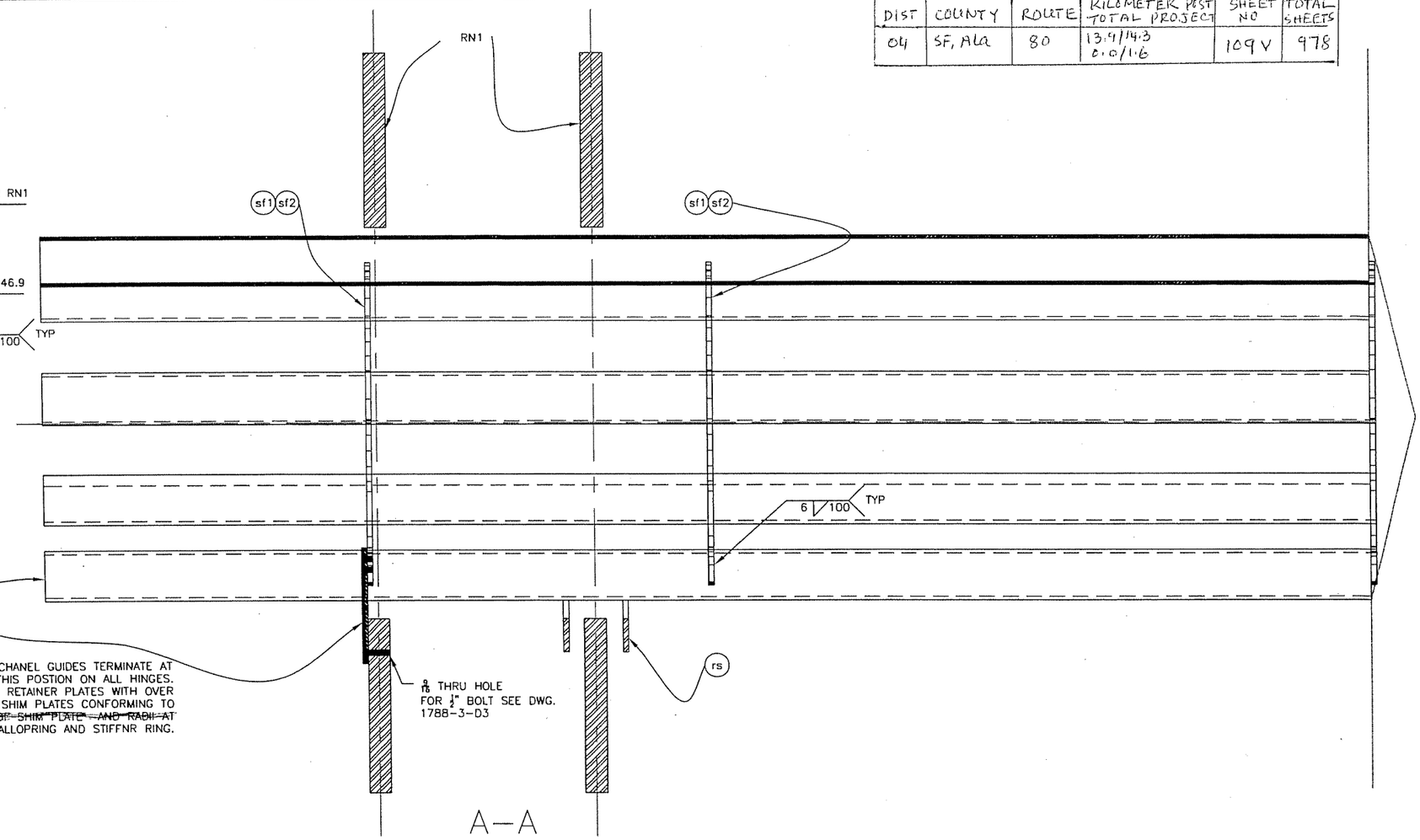

SECTION SHOWN AT FIXED END

SIM. AT SLIDING END

CONTRACT NO. 04-012024
CCO NO. 48
PAGE 15 OF 17

REGISTERED PROFESSIONAL ENGINEER
WILLIAM B. HOWARD
No. C 53321
Exp. 6-30-07
CIVIL
STATE OF CALIFORNIA

NO.	REVISION DESCRIPTION	DATE	BY
1	NEW DRAWING	3/18/05	GT

SKWAY STRUCTURES
BRIDGE NUMBER : 34-0006L/R
CONTRACT NUMBER : 04-~~042024~~ 012024

DISTRICT	COUNTY	ROUTE	KILOMETER POST TOTAL PROJECT
04	SF	80	13.4, 13.8

TRANSBAY STEEL 1025 KAISER RD. NAPA, CA
PH.707-259-0777, FAX 707-259-1072

DETAILS

1788

DRAWN	WHM	11/20/04	DRAWING NO. 1788-3-D3 REV. 0
CHKD.	DW		
APPVD.	JK		
SCALE	NONE	DATE	

DIST	COUNTY	ROUTE	KILOMETER POST TOTAL PROJECT	SHEET NO.	TOTAL SHEETS
04	SF, ALA	80	13.9/14.3 0.0/1.6	109W	978

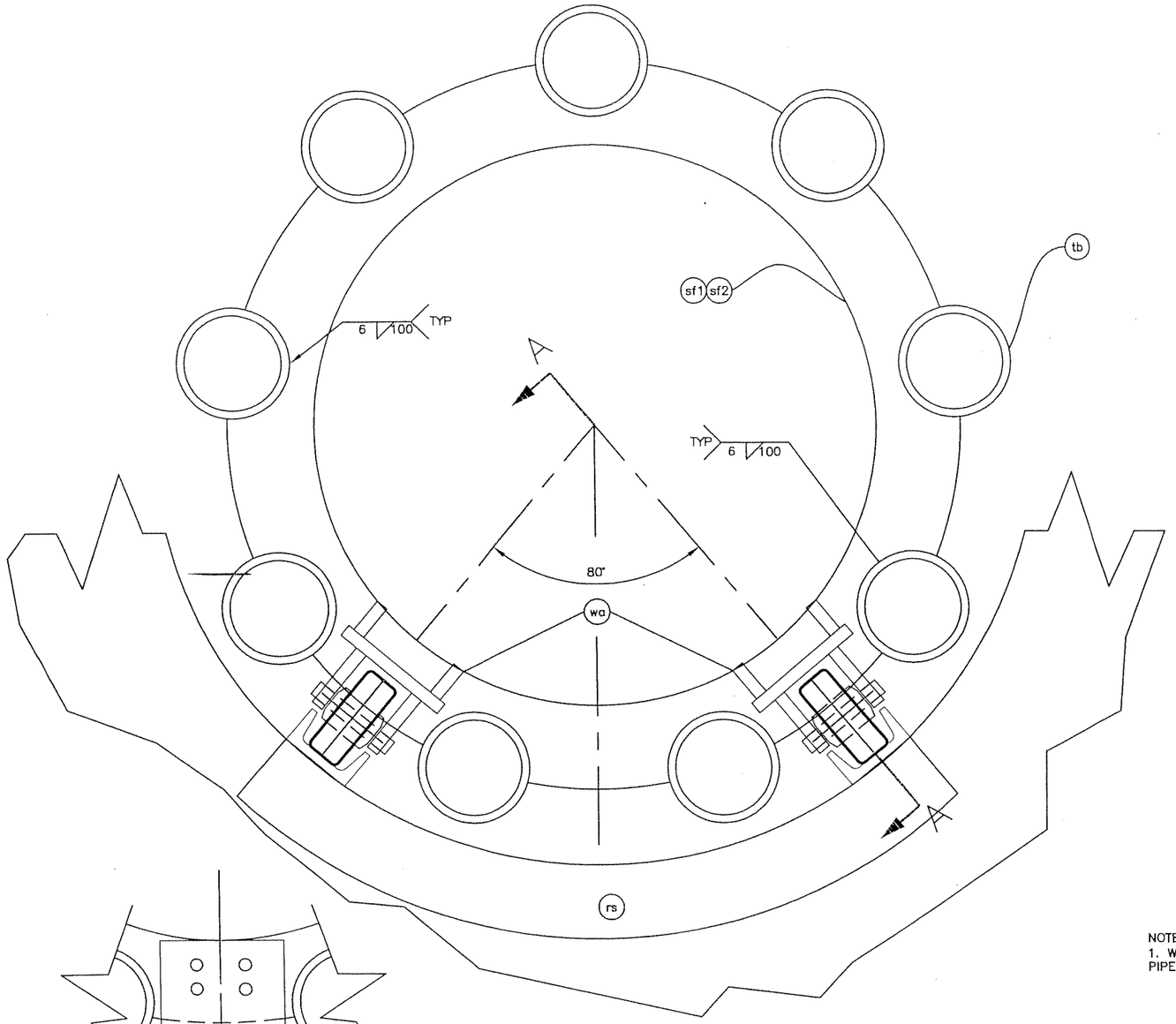

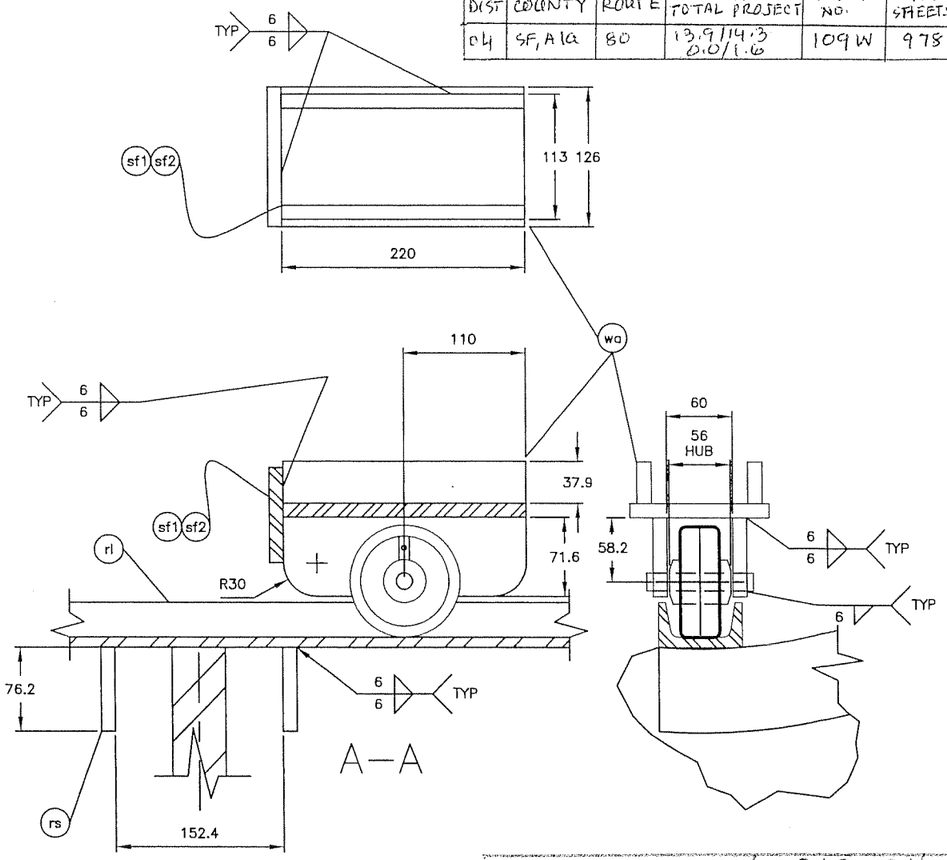

WHEEL ASSY wa

CONTRACT NO. 04-012024
CCO NO. 48
PAGE 16 OF 17

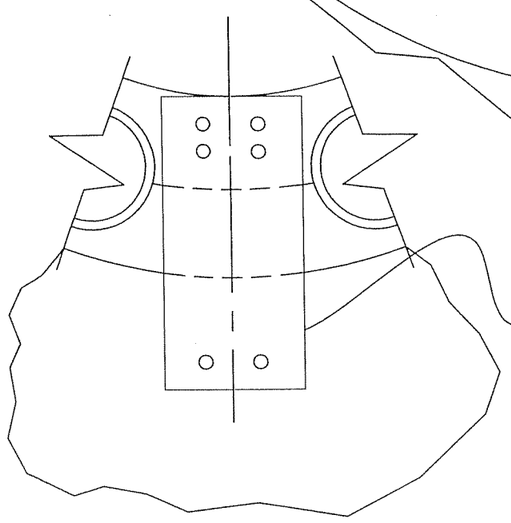

RETAINER PLATE AT OUT BOARD ENDS OF PIPE HINGE BEAM CONDUIT SUPPORTS (rp)

NOTE:
1. WHEEL ASSY (wa) SHOWN AT POSTIONS 1 THRU 6 TYP ALL PIPE HINGE BEAMS SEE DWG. 1788-3-D2

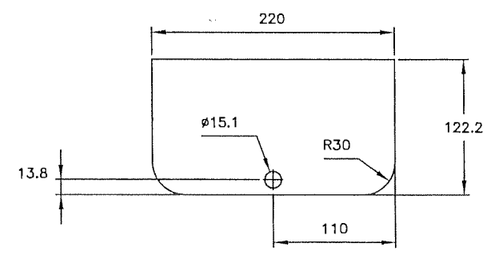

VERIFY HOLE DIA WITH ASSY AXLE

REGISTERED PROFESSIONAL ENGINEER
WILLIAM H. OWEN
No. C 53321
Exp. 6-30-07
CIVIL
STATE OF CALIFORNIA

NO.	REVISION DESCRIPTION	DATE	BY
1	New Drawing	3/15/05	GF

CONDUIT SUPPORTS
BRIDGE NUMBER : 34-0006L/R
CONTRACT NUMBER : 04-~~012024~~ 012024

DISTRICT	COUNTY	ROUTE	KILOMETER POST TOTAL PROJECT
04	SF	80	13.4, 13.8

TRANSBAY STEEL 1025 KAISER RD. NAPA, CA
PH.707-259-0777, FAX 707-259-1072

WHEEL ASSY
1788-3

DRAWN	WHM	XX/XX/XX	DRAWING NO.	REV.
CHKD.	DW		1788-3-D4	0
APPVD.	JK			
SCALE	NONE	DATE		

CONTRACT NO. 04-012024
CCO NO. 48
PAGE 17 OF 17

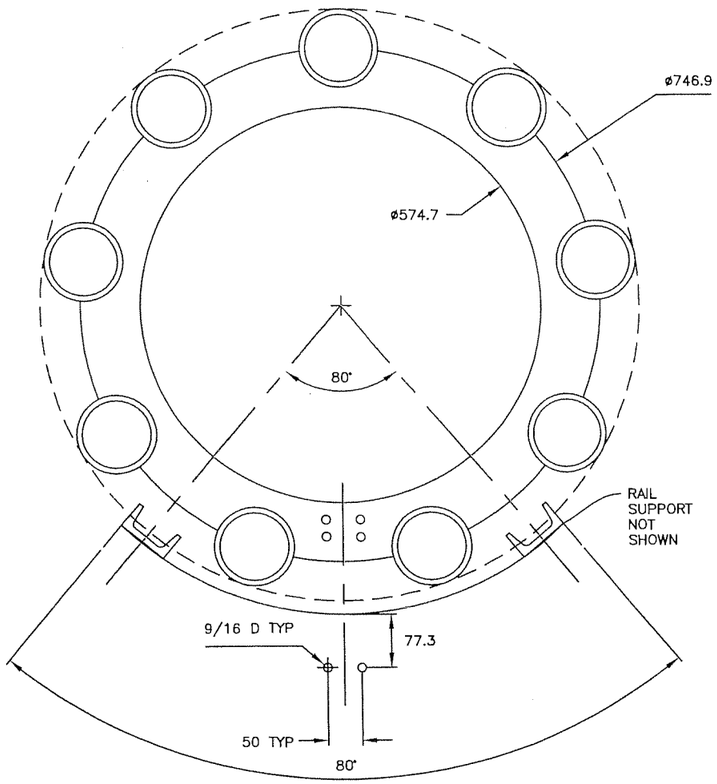

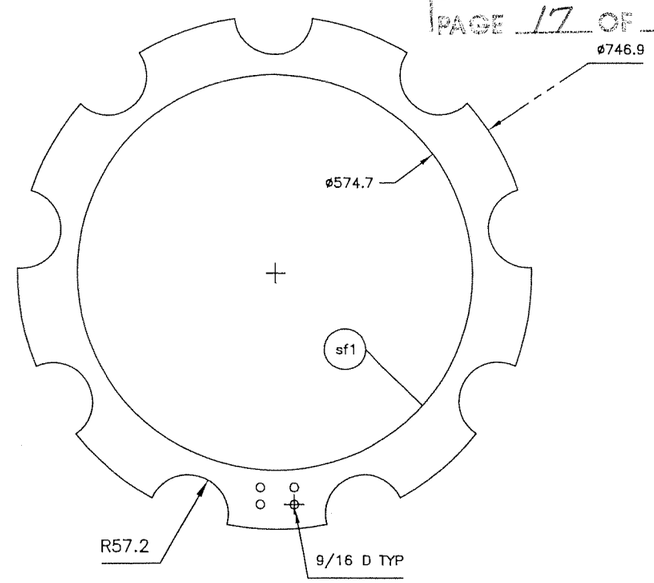

HOLE PATTERN FOR RETAINER PLATE @ SF1 & SF2 TYP AT OUTER RING STIFFINERS ONLY
NOTE DIFFERENT HOLE PLACEMENT FOR D HINGE USING SAME RETAINER PLT FOR ALL

RAIL SUPPORT FOR 900MM ID

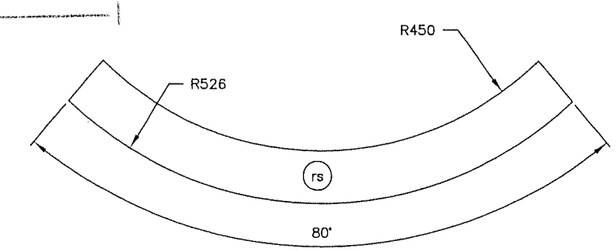

RAIL SUPPORT FOR 880MM ID

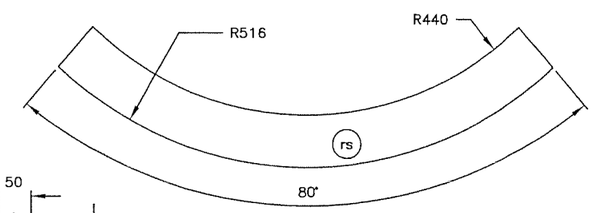

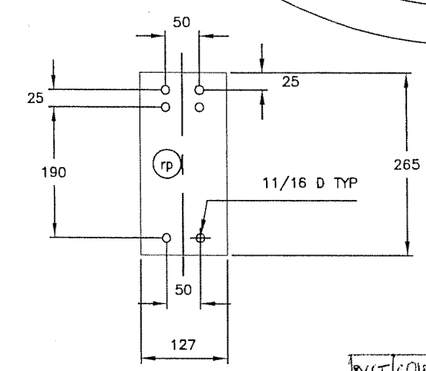

RETAINER PLATE TYP

NOTE:
SHIM PLATES AS NEEDED TO MAKE UP DISTANCE BETWEEN THE SF1 & 2 AND THE RING STIFFENER RN1. VARIOUS THICKNESS TO MATCH HOLE PATTERN, PLATE EDGE, AND THE RADII OF SF1–SF2 AND RN1.

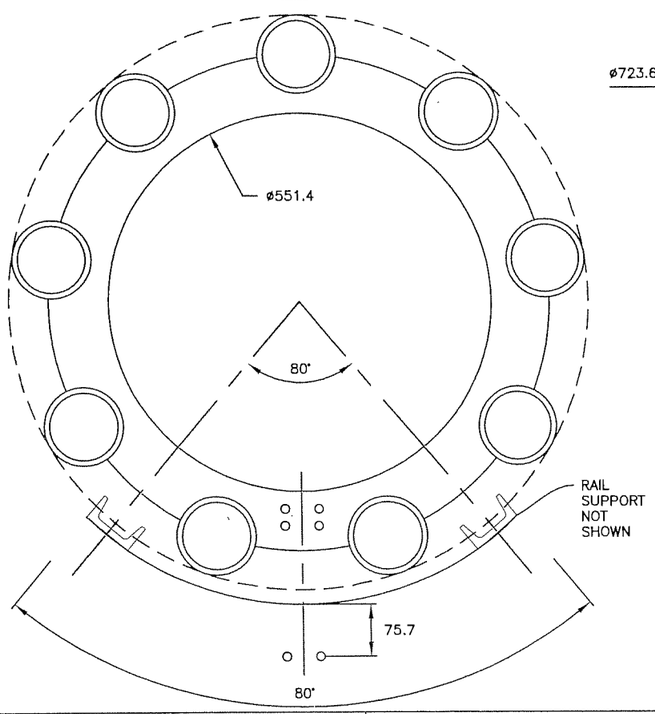

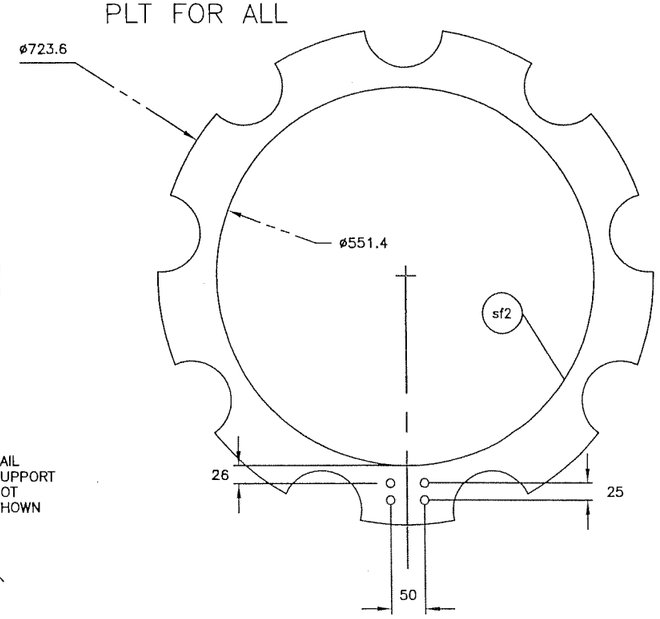

REGISTERED PROFESSIONAL ENGINEER
WILLIAM B. HOWE
No. C 53321
Exp. 6-30-07
CIVIL
STATE OF CALIFORNIA

DIST	COUNTY	ROUTE	KILOMETER POST TOTAL PROJECT	SHEET NO.	TOTAL SHEETS
04	SF, ALA	80	13.9/14.3 0.0/1.6	109X	978

NO.	REVISION DESCRIPTION	DATE	BY
1	New Drawing	3/18/05	GF

CONDUIT SUPPORTS
BRIDGE NUMBER : 34-0006L/R
CONTRACT NUMBER : 04-~~012014~~ 012024

DISTRICT	COUNTY	ROUTE	KILOMETER POST TOTAL PROJECT
04	SF	80	13.4, 13.8

TRANSBAY STEEL 1025 KAISER RD. NAPA, CA
PH.707-259-0777, FAX 707-259-1072

PLATE DETAILS
1788-3

DRAWN	WHM	xx/xx/xx	DRAWING NO. / REV.
CHKD.	DW		1788-3-D5 / X
APPVD.	JK		
SCALE	NONE	DATE	

STATE OF CALIFORNIA - DEPARTMENT OF TRANSPORTATION

CONTRACT CHANGE ORDER MEMORANDUM

TO: PETER SIEGENTHALER / DOUG COE, Supervising Br. Eng.	FILE: **E.A.** 04 - 012024
FROM: DOUG COE, Supervising Br. Eng.	**CO-RTE-PM** 04-SF,Ala-80-13.9/14.3,0.0/1.6
	FED. NO. ACIM-080-1(085)8N
CCO#: **48** SUPPLEMENT#: **0** Category Code: **CBPC**	CONTINGENCY BALANCE (incl. this change) **$57,372,109.72**
COST: **$296,992.00** INCREASE ☑ DECREASE ☐	HEADQUARTERS APPROVAL REQUIRED? ☑ YES ☐ NO
SUPPLEMENTAL FUNDS PROVIDED: **$0.00**	IS THIS REQUEST IN ACCORDANCE WITH ENVIRONMENTAL DOCUMENTS? ☑ YES ☐ NO
CCO DESCRIPTION: Counduit Routing at Hinges	**PROJECT DESCRIPTION:** REPLACE SFOBB EAST SPAN

LOCATION: IN SAN FRANCISCO AND ALAMEDA COUNTIES IN SAN FRANCISCO AND OAKLAND FROM 1.3 KM EAST OF THE YERBA BUENA ISL

THIS CHANGE ORDER PROVIDES FOR:

modifying the bridge electrical conduit support system through the pipe beams at Hinges A through D for the SFOBB East Span Skyway, Bridge Nos. 34-0006L/R.

The revised contract plans reflecting this change are 109DR2, 109ER3, 109FR2, 109GR1, 109HR3, 109JR3, 109KR2, 109LR2, 109NR1,109OR1, 109SR1, 109T, 109U, 109V, 109W, and 109X of 978 (sheets 2 through 17 of the change order).

This change order is needed to resolve the conflict between the electrical conduit system that is routed through the hinge pipe beams and the hinge pipe beam ring stiffener plates at Hinges A, B, C, and D.

The original design for routing conduit through the hinge pipe beams did not account for the ring stiffener plates that were added late in the design process. The stiffener plates were added by the hinge pipe beam designer prior to bid time; however, this information was not communicated to the electrical designer prior to bid time. As a result, the contract plans contain a conflict between the electrical conduit routing through the hinge pipe beam and the ring stiffener plates that were added to the inside of the hinge pipe beams. The added ring stiffener plates decreased the available space within the pipe beams, rendering the original design for stacked conduit routing unconstructible. This change order modifies the original conduit routing and support system to account for the ring stiffener plates. The revised plan at Hinges A, B, C, and D arranges the conduit radially along the diameter of the ring stiffner plate to allow the conduit to remain within the hinge pipe beam. At Hinge E, due to the pipe beam's smaller diameter, the conduit is re-routed by penetrating the web wall through a manhole and is routed through the hinge in the wing section.

This change order includes only the work required to modify the conduit support system through the pipe beams at Hinges A through D. The work necessary to re-route the conduit through the hinge pipe beams will result in changes to the Conduit Tray Schedules of the Supplement to the Special Provisions and Plans, and will require additional Substation Architectural drawings related to the hinge pipe beam conduit support. The re-route work will also result in modifications to the electrical circuitry to re-route the electrical cabling through the hinge pipe beams. Since the electrical drawings are not yet completed and the costs have not been determined, this work, as well as re-routing the conduit at Hinge E, will be addressed in a supplement to this change order.

The cost for this change was originally estimated to be $75,000.00. However, with completion of re-design, it is evident that this change is more complex and costly than originally anticipated. The Contractor has submitted a lump sum price of $651,597 for the work required to fabricate and install sixteen (16) electrical conduit support frames in the hinge pipe beams for Hinges A through D. The Contractor has also submitted an estimated credit of $354,605 for the change from the original contract at all eight (8) hinge locations. Thus, this change order will result in a net cost of $296,992 ($651,597 - $354,605). The Engineer has determined that this price is reasonable and actually reflects the cost to perform this work. A cost analysis is on file in the project records.

For revising the conduit support system through the hinge pipe beams at Hinges A through D, the Contractor will be paid an agreed lump sum amount of $296,992.00. The method of payment will be Adjustment of Compensation at Agreed Lump Sum.

Pete Siegenthaler, Construction Manager, SFOBB Toll Bridge, provided concurrence on October 14, 2003. A copy of the concurrence provided by Mr. Siegenthaler is attached.

Janet Adams, SFOBB Toll Bridge Project Manager, provided concurrence on May 20, 2005. A copy of the concurrence provided by Ms. Adams is attached.

Prior Approval was obtained from Ms. Nancy Bobb, FHWA Bay Bridge Project Manager, via electronic message on April 14, 2005. A printed copy of the prior approval provided by Ms. Bobb is attached.

Concurrence from Maintenance was received on June 24, 2003 from Mr. Samad Hamoud. A copy of the concurrence provided by Mr. Hamoud is attached.

Design concurrence was obtained from Mr. Parviz Boozarpour, Project Engineer, District 4 Electrical Design, via electronic message on April 12, 2005. A copy of the concurrence provided by Mr. Boozarpour is attached.

No adjustment of contract time is warranted, as this change does not affect the controlling operation.

RECEIVED
JUN 6 '05
039044

CONCURRED BY:		
Construction Engineer:	Douglas Coe	Date 5-23-05
Bridge Engineer:	Douglas Coe	Date 5-23-05
FHWA Representative:	Nancy Bobb	Date 4/14/2005
Project Engineer:	Parviz Boozarpour	Date 4/12/2005
Other (specify):		Date
	Samad Hamoud- Struct Maint	Date 6/24/2003
		Date
District Prior Approval By:		Date
HQ (Issue Approve) By:	Ken Darby	Date 4/15/2005
Resident Engineer's Signature:		Date 5-23-05

ESTIMATE OF COST

	THIS REQUEST	TOTAL TO DATE
ITEMS	$0.00	$0.00
FORCE ACCOUNT	$0.00	$0.00
AGREED PRICE	$0.00	$0.00
ADJUSTMENT	$296,992.00	$296,992.00
TOTAL	$296,992.00	$296,992.00

FEDERAL PARTICIPATION

☑ PARTICIPATING ☐ PARTICIPATING IN PART ☐ NONE
☐ NON-PARTICIPATING (MAINTENANCE) ☐ NON-PARTICIPATING

FEDERAL SEGREGATION (if more than one Funding Source or P.I.P. type)
☑ CCO FUNDED PER CONTRACT ☐ CCO FUNDED AS FOLLOWS

FEDERAL FUNDING SOURCE	PERCENT

CONTRACT CHANGE ORDER

Change Requested by: Engineer

CCO: 48	Suppl. No. 1	Contract No. 04 - 012024	Road 04-SF,Ala-80-13.9/14.3,0.0/1.6	FED. AID LOC.: ACIM-080-1(085)8N

To: **KIEWIT / FCI / MANSON a JV**

You are directed to make the following changes from the plans and specifications or do the following described work not included in the plans and specifications for this contract. ***NOTE: This change order is not effective until approved by the Engineer.***

Description of work to be done, estimate of quantities and prices to be paid. (Segregate between additional work at contract price, agreed price and force account.) Unless otherwise stated, rates for rental of equipment cover only such time as equipment is actually used and no allowance will be made for idle time. This last percentage shown is the net accumulated increase or decrease from the original

Adjustment of Compensation at Lump Sum:

Implement the following changes:

1) Add a face plate between the pipe beam conduit supports and the ring stiffeners,
2) Eliminate the flex conduit connections at Hinge A,
3) Revise electrical conduit system between the hinge pipe beams and the cable trays at Hinges B, C, and D, in accordance with the revised drawings.
4) Re-route the conduits through the wing sections at Hinge E, as shown on revised contract plan sheets,109GR3, 109YR1 171R2, 187R2, 188R1, 191R2, 207R1, 208R1, 224R2, 225R2, 250R1, 262R1, 313R1, 340AR1, 340A0R2, 340A1R4, 340A2, 340BR1, 340B0, 340B1R2, 340CR1, 340C0, 340C1R2, 340DR1, 340D0, 340D1R2, 340ER2, 340E0R1, 340E1R2, 341R1, 341A, 341A0R2, 341A1R4, 341A2, 341B, 342R2, 342A, 342BR2, 343R2, 343A, 343BR2, 344R2, 344A, 344BR2, 345R2, 345AR2, 345BR2, 346R2, 346AR2, 346BR3, 347R2, 347AR1, 347BR2, 347CR2, 347DR2, 347ER2, 355R2, 355A, 355B, 388R3, 389R3, and 405R1 (sheets 2 through 63 of 67 of this change order), and
5) Provide payment for cable tray support changes in the steel transition span, as shown on the revised contract plan sheet submitted with Contract Change Order No. 48 Supplement 0, executed on May 25, 2005 for the SFOBB East Span Skyway, Bridge Nos. 34-0006L/R.

Also, add to the Supplement To The Special Provisions and Plans, Binder 1 of 2 - Westbound, Circuit Schedule Westbound, Sheet EE-324E (6 pages), Conduit and Tray Schedule Westbound, Sheet EE-325G (60 pages); and add to Binder 2 of 2 - Eastbound, Circuit Schedule Eastbound, Sheet EE-327E (5 pages), Conduit and Tray Schedule Eastbound, Sheet EE-328G (67 pages) provided herein (sheets 64 through 67 of this change order).

Full compensation for all costs, including markups, all direct and indirect costs, all associated project impacts, all overhead expenses, and all risk associated with this work is included in the lump sum payment of CCO No. 200 and no further payment will be made as a result of this CCO.

Estimated Cost: Increase ☐ Decrease ☐

By reason of this order the time of completion will be adjusted as follows: 0 days

Submitted by

Signature	Resident Engineer: DOUG COE, Supervising Br. Eng.	Date 8-24-06

Approval Recommended by

Signature	Construction Engineer: DOUG COE, Supervising Br. Eng.	Date 8-24-06

Engineer Approval by

Signature	(Print name and title) PETER SIEGENTHALER - Chief	Date

We the undersigned contractor, have given careful consideration to the change proposed and agree, if this proposal is approved, that we will provide all equipment, furnish the materials, except as may otherwise be noted above, and perform all services necessary for the work above specified, and will accept as full payment therefor the prices shown above.

NOTE: If you, the contractor, do not sign acceptance of this order, your attention is directed to the requirements of the specifications as to proceeding with the ordered work and filing a written protest within the time therein specified.

Contractor Acceptance by

Signature	(Print name and title) Lee Zink, Project Director	Date 9/5/06

Kannu Balan
07/07/2006 07:29 AM

To: Jake VanEnckevort/D04/Caltrans/CAGov@DOT
cc:
Subject: Re: CCO 48S1 - C93, Report and Memo for PM's concurrence

Kannu Balan
Senior Transportation Engineer
CCO/Claims/Schedule Coordination
SFOBB - Skyway
(510) 622-5151
Cell# (510) 867-6774
----- Forwarded by Kannu Balan/D03/Caltrans/CAGov on 07/07/2006 07:24 AM -----

Ken Terpstra
07/06/2006 05:43 PM

To: Kannu Balan/D03/Caltrans/CAGov@DOT
cc: Doug Coe/D04/Caltrans/CAGov@DOT, Peter Siegenthaler/D04/Caltrans/CAGov@DOT
Subject: Re: CCO 48S1 - C93, Report and Memo for PM's concurrence

concur
Kannu Balan

Kannu Balan
07/06/2006 04:19 PM

To: Ken Terpstra/D04/Caltrans/CAGov@DOT
cc: Peter Siegenthaler/D04/Caltrans/CAGov@DOT, Doug Coe/D04/Caltrans/CAGov@DOT
Subject: CCO 48S1 - C93, Report and Memo for PM's concurrence

Ken,
attached are the CCO # 48S1 "Conduit Routing at Hinges (Electrical)"- C93, Report, and Memo for your concurrence. Pete concurred with this CCO.

CCO_48_S1_PM_Report.pc CCO_48_S1_PM_Memo.pc CCO_48_S1_C-93.pd

Kannu Balan
Senior Transportation Engineer
CCO/Claims/Schedule Coordination
SFOBB - Skyway
(510) 622-5151
Cell# (510) 867-6774

Bill Howe
07/07/2006 03:38 PM

To: Kannu Balan/D03/Caltrans/CAGov@DOT
cc: Mahbub Hossain/D04/Caltrans/CAGov@DOT
Subject: Re: CCO 48-1 concurrence

William Howe, P.E.
Senior Transportation Engineer
Electrical/Mechanical/Safety/SWPPP
SFOBB East Span Replacement-Skyway
Office: (510) 622-5105
Cell: (510) 385-7084

----- Forwarded by Bill Howe/D04/Caltrans/CAGov on 07/07/2006 03:32 PM -----

Kenneth Brown
07/07/2006 02:51 PM

To: Bill Howe/D04/Caltrans/CAGov@DOT
cc:
Subject: Re: CCO 48-1 concurrence

CCO 48,Hinge Pipe Conduit Extension, has been reviewed with no objections. Maintenance concurrence is given.

Ken Brown
SMI Toll Bridges
510-520-8843
Bill Howe

Bill Howe 07/07/2006 12:44 PM

To: Kenneth Brown/D04/Caltrans/CAGov@DOT
cc:
Subject: CCO 48-1 concurrence

Ken: Attached are the drawings related to the hinge pipe beam conduit frame rack extensions we spoke of earlier. If we could get your concurrence today it would be much appreciated.

58593.pdf

William Howe, P.E.
Senior Transportation Engineer
Electrical/Mechanical/Safety/SWPPP
SFOBB East Span Replacement-Skyway
Office: (510) 622-5105
Cell: (510) 385-7084

U.S. DEPARTMENT OF TRANSPORTATION . FEDERAL HIGHWAY ADMINISTRATION CALIFORNIA DIVISION OFFICE

RECORD OF PRIOR APPROVAL FOR MAJOR CONTRACT CHANGE ORDERS

PROJECT NO.	CCO NO.	CONTRACT NO.	DIST-CO-RTE-PM
ACIM -080-1(085)8N	48 S1	04-012024	04-SF,Ala-80-13.9/14.3,0.0/1.6

REQUESTED BY:	CALTRANS HQ	DATE
Jake VanEnckevort	X RE/DISTRICT	7/7/06

PROPOSED CHANGE:

This change order provides for changes to the electrical conduit connections between the cable trays and the hinge conduits at Hinges A, B, C, and D and for re-routing of the electrical conduit through the segment wings instead of the hinge pipe beams at Hinge E.

REASON FOR CHANGE:

The original design for routing conduit through the pipe beams did not account for ring stiffeners that were added late in the design process. The ring stiffeners decreased the available space within the pipe beams, making it impossible to construct the original design of stacked conduit routing.

The designer required the addition of a steel face plate between the ring stiffener and the conduit support bracket at the hinge pipe beam which can be bolted to the ring stiffener through existing holes. This will prevent welding directly to the fracture critical hinge pipe beam as shown on the revised contract plan sheets submitted with CCO 48 Supplement 0. Hinge pipe beams at hinge A cannot be placed in their final position due to the delay of the SAS contract thereby preventing the installation of the flex conduit connections and cable trays. The Engineer eliminated this portion of the work from the contract and the agreed amount of the change order reflects the credit for this change.

The revisions to the hinge pipe beam conduit at hinges B, C, and D required changing the routing and connections of the flex conduit transition between the cable trays and the hinge pipe beam conduits. At hinge E, the already smaller diameter of the pipe beam did not leave enough room for the conduits after installation of the ring stiffeners, requiring the conduits to be re-routed through the web walls into the wing sections at the hinge. Cable tray support revisions. Revisions to the cable tray supports in the steel transition spans at hinge A were included in contract change order 48 supplement 0, although compensation was not.

AS DISCUSSED IN FIELD (REPORT NO. ____)

TIME EXTENSIONS	ACTIVITY ON CRITICAL PATH AFFECTED BY CCO (IF TIME EXTENSION INVOLVED)
__X_NONE ___ DAYS ___ DEFERRED	

ESTIMATE OF COST:	CCO:	METHOD OF PAYMENT
$ 602,194.00 INCREASE $_____ DECREASE	CONTRACT ITEM AGREED PRICE	ADJUSTMENT OF COMPENSATION EXTRA WORK AT FORCE ACCOUNT

THE WORK COVERED BY THE PROPOSED REVISION AS DESCRIBED ABOVE IS APPROVED SUBJECT TO SUBMISSION OF SUPPORTING DOCUMENTATION INCLUDING COST EVALUATION AND JUSTIFICATION OF TIME EXTENSIONS.

OTHER CONDITIONS:

PRIOR APPROVAL TO PROCEED GRANTED BY:	DATE OF AUTHORIZATION:
Nancy E. Bobb	7/13/06

Department of Transportation
EAST SPAN SEISMIC SAFETY PROJECT
CONCURRENCE FOR CHANGE ORDERS (08/04)

CCO#: 48 **S#:** 1
Title: Conduit Routing at Hinges (Electrical)
Date: 3/28/04

Contract No. 04-012024
Co. & Rte Ala-80-13.9/14.3, 0.0/1.6

To: DOUGLAS COE, Resident Engineer

Requested By: BILL HOWE, Senior Engineer (initials WBH)

Description of Work:
Modify the conduit routing at hinge locations A, B, C, and D in both the Eastbound and Westbound spans to account for the modified conduit configuration within the hinge pipe beams which is addressed in CCO 48 Supplement 0. Modify the conduit routing at hinge location E, Eastbound and Westbound, by routing the conduit through the wings of the structure instead of through the hinge pipe beams as shown on the contract plans.

Reason for Change:
The original design for routing conduit through the hinge pipe beams required the modification addressed in CCO 48 Supplement 0. However, CCO 48 Supplement 0 did not address the changes in conduit routing outside of the hinge pipe beams. The modified conduit system inside hinge pipe beams A, B, C, and D requires modifications to the conduit routing from the cable trays to the hinge pipe beams. The reduced area within the smaller hinge pipe beam E does not leave enough room for routing the conduits through the hinge pipe as originally anticipated. The redesign, at hinge E, will route the conduits through the wings of the structure and eliminate the conduit system inside the hinge pipe beams.

Approvals Required By:
- ☒ Division of Construction, HQ
- ☒ FHWA
- ☐ District

Concurrence Required By:
- ☒ Design
- ☒ Maintenance
- ☐

Discussed with persons noted below:

FHWA:	Date	Br. Design: Parviz Boozarpour	Date 4/21/03
District: B. Zandipour	Date 4/21/03	Br. Geology:	Date
Other:	Date	Br. Maintenance: Samad Hamoud	Date 6/24/03

Estimated Cost: $500,000.00

Recommended Method of Payment:
- ☐ Contract Items
- ☐ Agreed Price (LS or UP)
- ☒ Extra Work at Force Account
- ☐ Other:

Recommended Time Adjustment: 0 Working Days

Prior Approvals:
- ☐ This represents Prior Approval to proceed with the work.
- ☒ This represents an acknowledgement that the individuals below are in concurrence with this change order, which requires Division of Construction approval before proceeding with the work.

Comments:

Douglas Coe, Resident Engineer — Date 5-5-06

Pete Siegenthaler, Principal Construction Engineer — Date 5-5-06

David Salladay, District Representative — Date 5-5-06

Patrick Treacy, Division of Construction — Date 5/5/06

DIST	COUNTY	ROUTE	KILOMETER POST TOTAL PROJECT	SHEET No	TOTAL SHEETS
04	SF, Ala	80	13.9 / 14.3, 0.0 / 1.6	109G R3	978

REGISTERED CIVIL ENGINEER — DATE 3/06/03

4-18-03
PLANS APPROVAL DATE

REGISTERED PROFESSIONAL ENGINEER — WEE SHING OWYANG — No. 24960 — Exp. 12/31/05 — CIVIL — STATE OF CALIFORNIA

PARSONS BRINCKERHOFF QUADE & DOUGLAS, INC.
303 SECOND STREET, SUITE 700 N
SAN FRANCISCO, CA 94107

The State of California or its officers or agents shall not be responsible for the accuracy or completeness of electronic copies of this plan sheet.

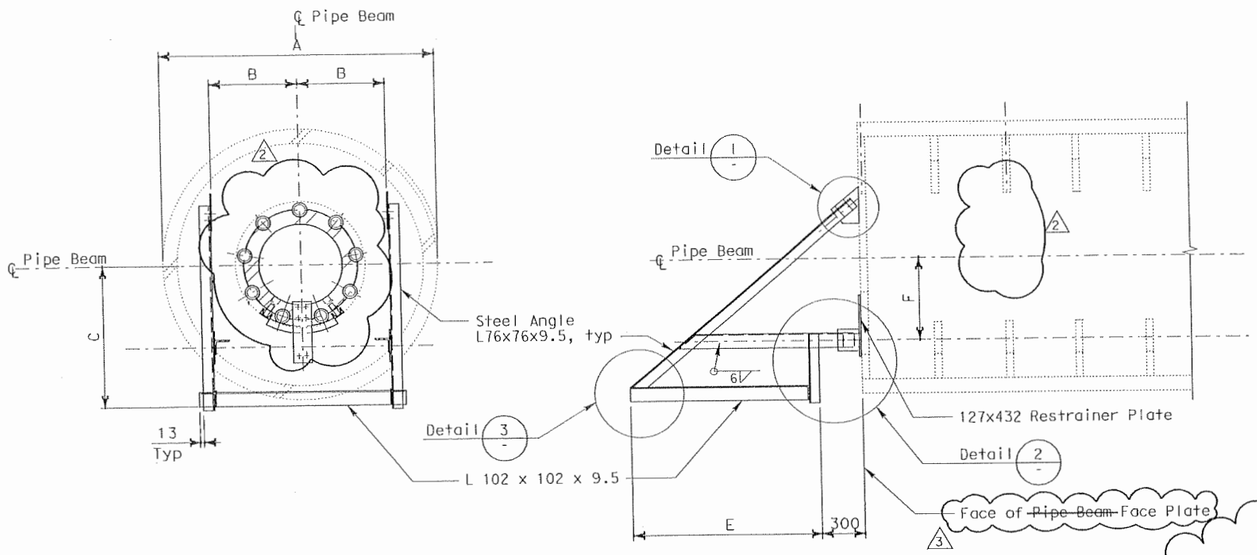

CONDUIT SUPPORT AT PIPE BEAM

SEE TABLE FOR DIMENSIONS
SCALE: NO SCALE

REGISTERED CIVIL ENGINEER — DATE 1/31/06

REGISTERED PROFESSIONAL ENGINEER — WILLIAM BRADFORD HOWE — No. 53321 — Exp. 6/30/07 — CIVIL — STATE OF CALIFORNIA

2 3 4

TABLE
CONDUIT SUPPORT DIMENSIONS

	Hinges A, B, C	Hinge D
A	1900	1650
B	600	500
C	991	747
D	420	420
E	1335	1300
F	574	553

NOTES:

1. For General Structural Notes, see AS-1.
2. For other details not shown, see electrical plans.
3. See additional drawing of face plate.

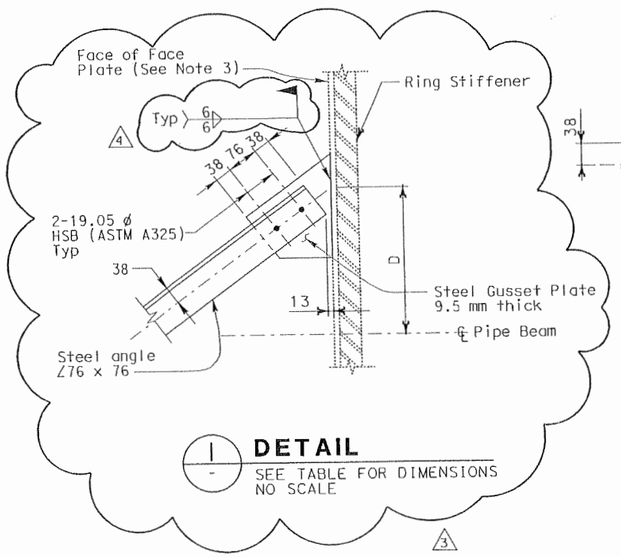

1 **DETAIL**
SEE TABLE FOR DIMENSIONS
NO SCALE

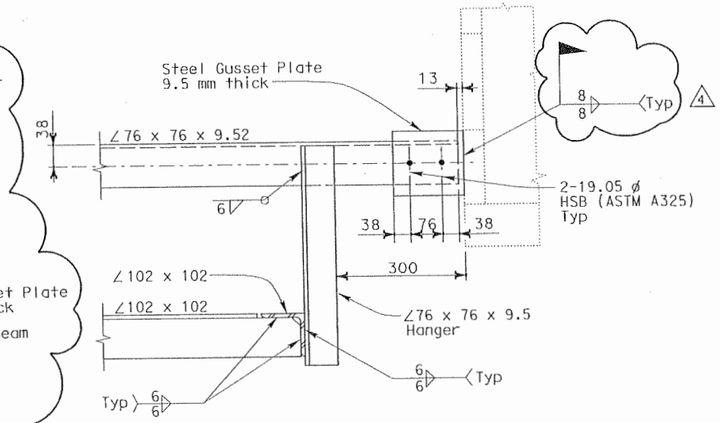

2 **DETAIL**
NO SCALE

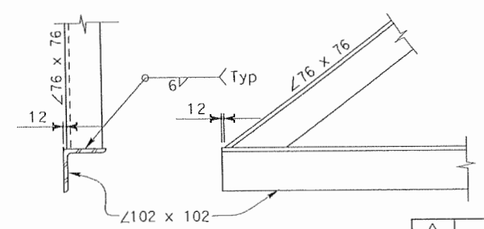

3 **DETAIL**
NO SCALE

MARK	DATE	DESCRIPTIONS	REV	CK	
4	1/31/06	Changed shop weld to field weld.	MH	WBH	CCO NO.48
3	12/05/05	Revised Detail 1.	MH	WBH	CCO NO.48
2	9/22/04	Revised pipe beam conduit layout.	GF	BRF	CCO NO.48
1	04/18/03	New Drawing	EJL	MSO	CCO NO.48

REVISIONS

1

CONTRACT CHANGE ORDER NO. 48 S1
SHEET 2 OF 67

ALL DIMENSIONS ARE IN MILLIMETERS UNLESS OTHERWISE SHOWN

	BY	CHECKED
DESIGN	E. Lucas	M. S. Owyang
LAYOUT	E. Lucas	M. S. Owyang
QUANTITIES		

STATE OF CALIFORNIA
DEPARTMENT OF TRANSPORTATION

DIVISION OF STRUCTURES

BRIDGE NO. 34-0006
KILOMETER POST 13.0/14.3, 0.0/1.6

STRUCTURE - WESTBOUND
TYPICAL PIPE BEAM CONDUIT SUPPORT

AS-33

ORIGINAL SCALE IN MILLIMETERS FOR REDUCED PLANS 0 10 20 30 40 50 60 70 80 90 100

CU 04251
EA 012021

DISREGARD PRINTS BEARING EARLIER REVISION DATES

REVISION DATES (PRELIMINARY STAGE ONLY) — SHEET — OF

DGN FILE => 04-012024_0109GR3.dgn

DATE PLOTTED => 31-JAN-2006 TIME PLOTTED => 15:03

DIST	COUNTY	ROUTE	KILOMETER POST TOTAL PROJECT	SHEET No	TOTAL SHEETS
04	SF,Ala	80	13.9 / 14.3, 0.0 / 1.6	109Y R1	978

William Howe 12/02/05
REGISTERED CIVIL ENGINEER DATE

PLANS APPROVAL DATE

REGISTERED PROFESSIONAL ENGINEER WILLIAM BRADFORD HOWE No. 53321 Exp. 6/30/07 CIVIL STATE OF CALIFORNIA

The State of California or its officers or agents shall not be responsible for the accuracy or completeness of electronic copies of this plan sheet.

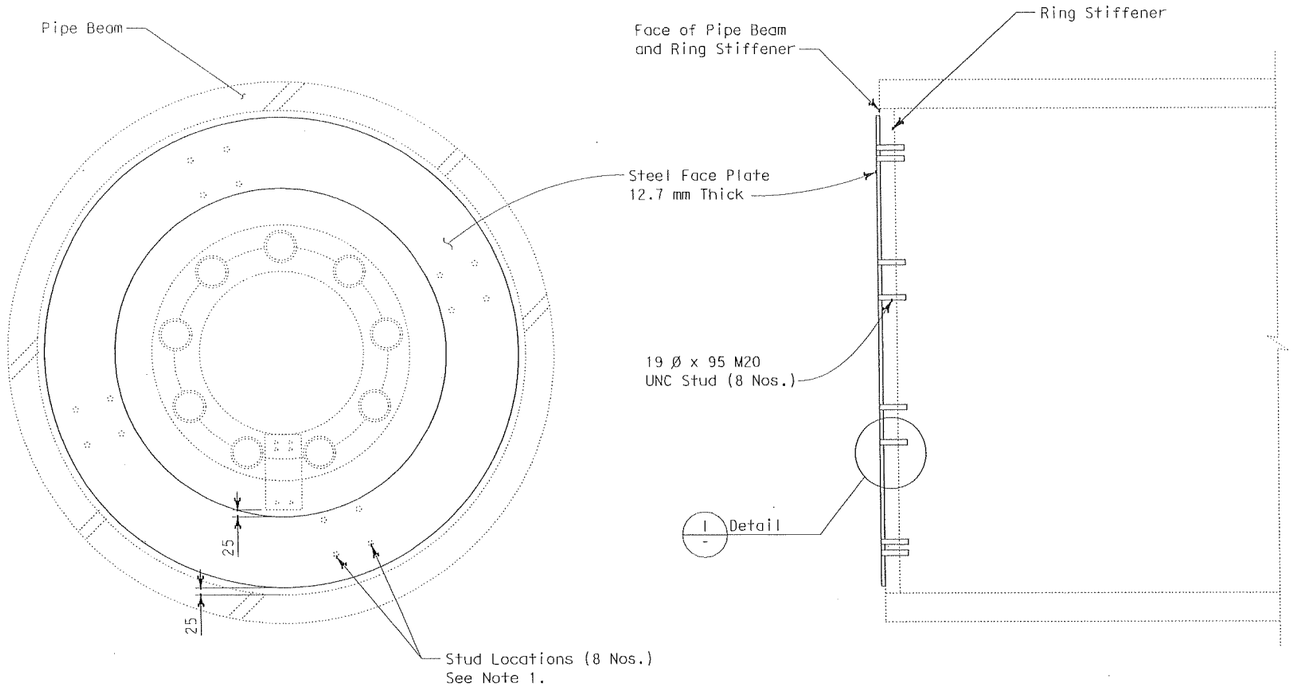

FACE PLATE AT PIPE BEAM

SCALE: NO SCALE

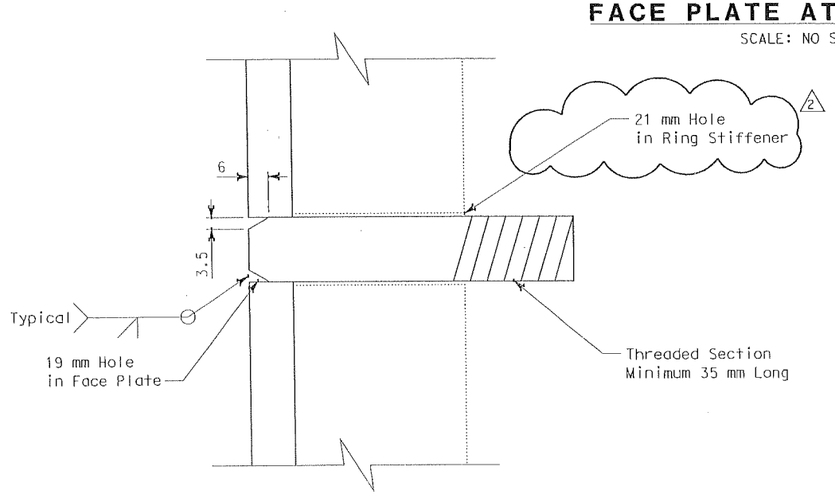

1 DETAIL

NO SCALE

NOTES:

1. Stud locations in face plate shall match existing bolt pattern in ring stiffener as shown.
2. Bracket side welds shall be partial joint penetration and ground flush with plate surfaces when complete.
3. Stud shall be installed with lock washer.

MARK	DATE	DESCRIPTIONS	REV	CK	
2	1/31/06	Showed hole in ring stiffener.	MH	WBH	CCO NO.48
1	12/02/05	New Drawing.	MH	WBH	CCO NO.48

REVISIONS

CONTRACT CHANGE ORDER NO. 48 S1
SHEET 3 OF 67

DETAILS
TYPICAL FACE PLATE INSTALLATION

SCALE AS NOTED

AS-33A

ALL DIMENSIONS ARE IN MILLIMETERS UNLESS OTHERWISE SHOWN

DATE	REVISED BY	DATE REVISED

CALCULATED/DESIGNED BY
CHECKED BY
DESIGN OVERSIGHT

STATE OF CALIFORNIA - DEPARTMENT OF TRANSPORTATION
Caltrans

LAST REVISION 00-00-00 DATE PLOTTED => 31-JAN-2006 TIME PLOTTED => 15:31

DIST	COUNTY	ROUTE	KILOMETER POST TOTAL PROJECT	SHEET No	TOTAL SHEETS
04	SF, Ala	80	13.9 / 14.3, 0.0 / 1.6	171R2	978

REGISTERED ELECTRICAL ENGINEER — DATE 03/02/01

6-4-01
PLANS APPROVAL DATE

REGISTERED PROFESSIONAL ENGINEER — JENS ERLINGSSON — No. 8249 — Exp. 9/30/02 — ELECTRICAL — STATE OF CALIFORNIA

PB POWER, Inc.
A Parsons Brinckerhoff Company
303 Second St., Suite 700N
San Francisco, CA 94107-1317

The State of California or its officers or agents shall not be responsible for the accuracy or completeness of electronic copies of this plan sheet.

Caltrans Metric

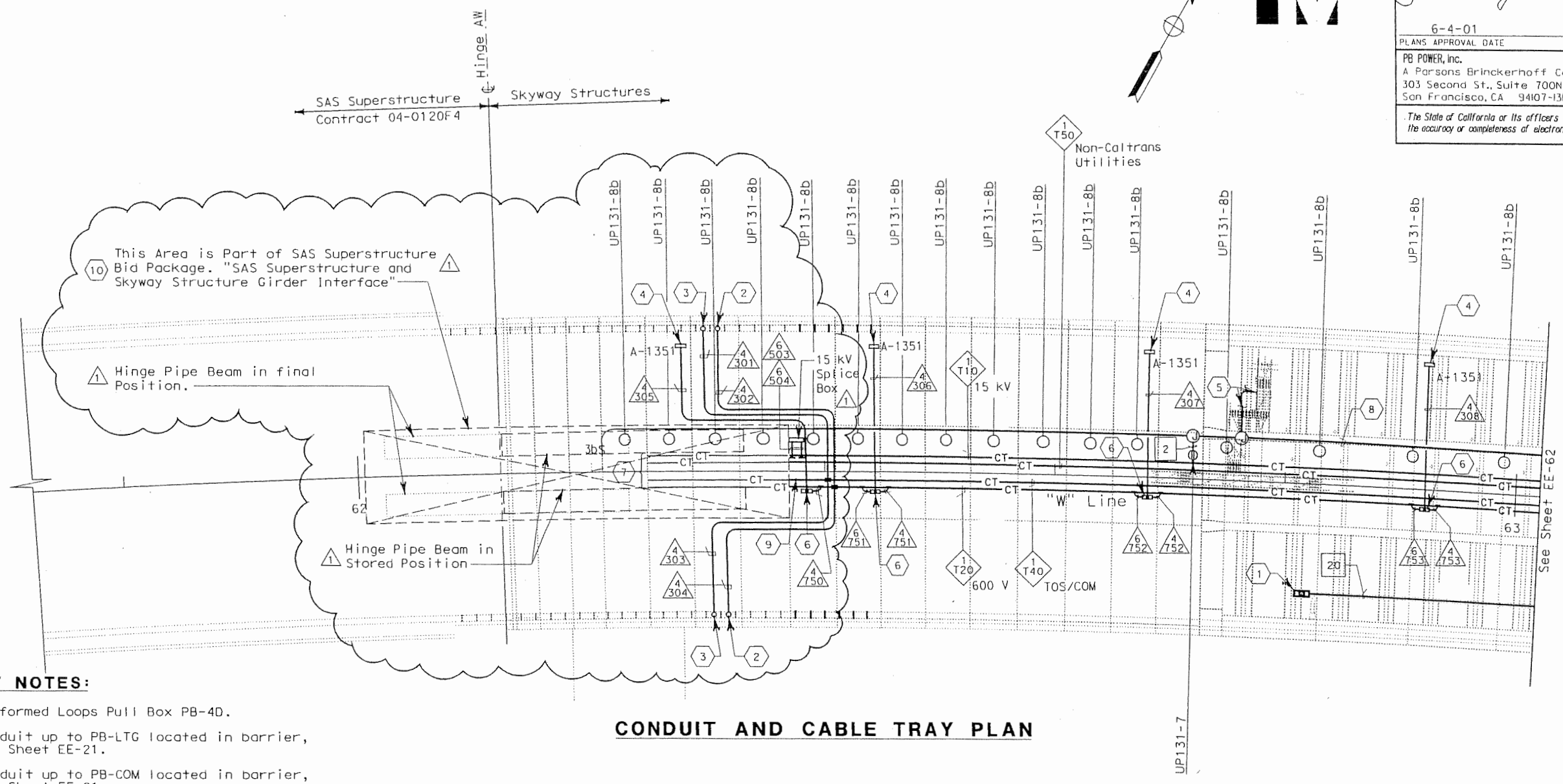

CONDUIT AND CABLE TRAY PLAN

SHEET NOTES:

(1) Preformed Loops Pull Box PB-4D.

(2) Conduit up to PB-LTG located in barrier, See Sheet EE-21.

(3) Conduit up to PB-COM located in barrier, See Sheet EE-21.

(4) PB-2A with circuit for future Light Pipes.

(5) For continuation of Span E3W walkway lighting, see Sheet EE-80.

(6) PB-2C, locate on top of floor.

(7) For cable trays at Hinge AW and cable tray arrangement at the transition section, see Sheet~~s EE-295A and~~ EE-264 ~~respectively~~. (2)

(8) Main conduit run shall be 21 mm minimum and 53 mm maximum. For number of conductors of girder and pier lighting circuits, see Sheets EE-171 and EE-172 respectively. For number of conductors of convenience outlet circuits, see Circuit Schedule EE-324.

(9) TOS Fiber Splice closure, for details, see Sheet EE-388. (1)

(10) Electrical installation of cable trays, conduits, and lighting fixtures in this area is by SAS Superstructure Contractor. (2)

THIS PLAN ACCURATE FOR ELECTRICAL WORK ONLY.

NOTES:

1. References:
   - TOS equipment is shown for conduit routing only. For typical details of TOS contraller and devices, see Sheets EE-381 through EE-389.
   - For types of pull boxes, splice boxes and enclosures, see Sheet EE-323.
   - For bridge grounding plan, see Sheet EE-78.
   - For circuit, conduit and cable tray schedules, see Sheets EE-324 and EE-325.
   - For Light Pipe Schedules, see Sheets EE-316 through EE-318.
2. For other work related to Hinge AW and items not shown on this sheet, see Electrical Special Provisions.
3. The girder lighting fixtures are shown diagrammatically. Contractor shall install fixtures at railing posts with a maximum of 8000 mm between fixtures. For types and typical lighting fixture installation details, see Sheet EE-261.
4. The cable trays are shown diagrammatically. For typical girder cable tray plans and sections, see Sheets EE-262 and EE-263.

REGISTERED ELECTRICAL ENGINEER — 7/5/05 DATE

REGISTERED PROFESSIONAL ENGINEER — K.T. Truong — No. 16240 — Exp. 12-31-06 — ELECTRICAL — STATE OF CALIFORNIA

MARK	DATE	DESCRIPTIONS	REV	CK	
2	07/05/05	Revised sheet notes 7 and 10.	MH	KT	CCO NO.48
1	02/20/04	Add Hinge A interface, 15 kV splice box, sheet notes 9 and 10. Deleted cable trays, conduits and lighting fixtures.	CYF	EJL	CCO NO.48

REVISIONS

CONTRACT CHANGE ORDER NO. 48 S1
SHEET 4 OF 67

GIRDER LEVEL WESTBOUND
LIGHTING AND ELECTRICAL SYSTEMS
SCALE: 1:200

EE-61

CALCULATED/DESIGNED BY	IAH	DATE 11/99	REVISED BY EJL
CHECKED BY	JP	5/00	DATE REVISED 2/20/04

DESIGN OVERSIGHT — BEHZAD GOLEMOHAMMADI

STATE OF CALIFORNIA - DEPARTMENT OF TRANSPORTATION — Caltrans

LAST REVISION 00-00-00 — DATE PLOTTED => 13-JUL-2005 — TIME PLOTTED => 08:55

FOR REDUCED PLANS ORIGINAL SCALE IS IN MILLIMETERS 0 20 40 60 80

DGN FILE =>04-012024_0171R2.dgn
USERNAME =>mhossain

CU 04251 — EA 012021

DIST	COUNTY	ROUTE	KILOMETER POST TOTAL PROJECT	SHEET No	TOTAL SHEETS
04	SF, Ala	80	13.9 / 14.3 ; 0.0 / 1.6	187R2	978

Caltrans Metric

REGISTERED ELECTRICAL ENGINEER 03/19/01 DATE

REGISTERED PROFESSIONAL ENGINEER JENS ERLINGSSON No. 8249 Exp. 9/30/02 ELECTRICAL STATE OF CALIFORNIA

6-4-01
PLANS APPROVAL DATE

PB POWER, Inc.
A Parsons Brinckerhoff Company
303 Second St., Suite 700N
San Francisco, CA 94107-1317

The State of California or its officers or agents shall not be responsible for the accuracy or completeness of electronic copies of this plan sheet.

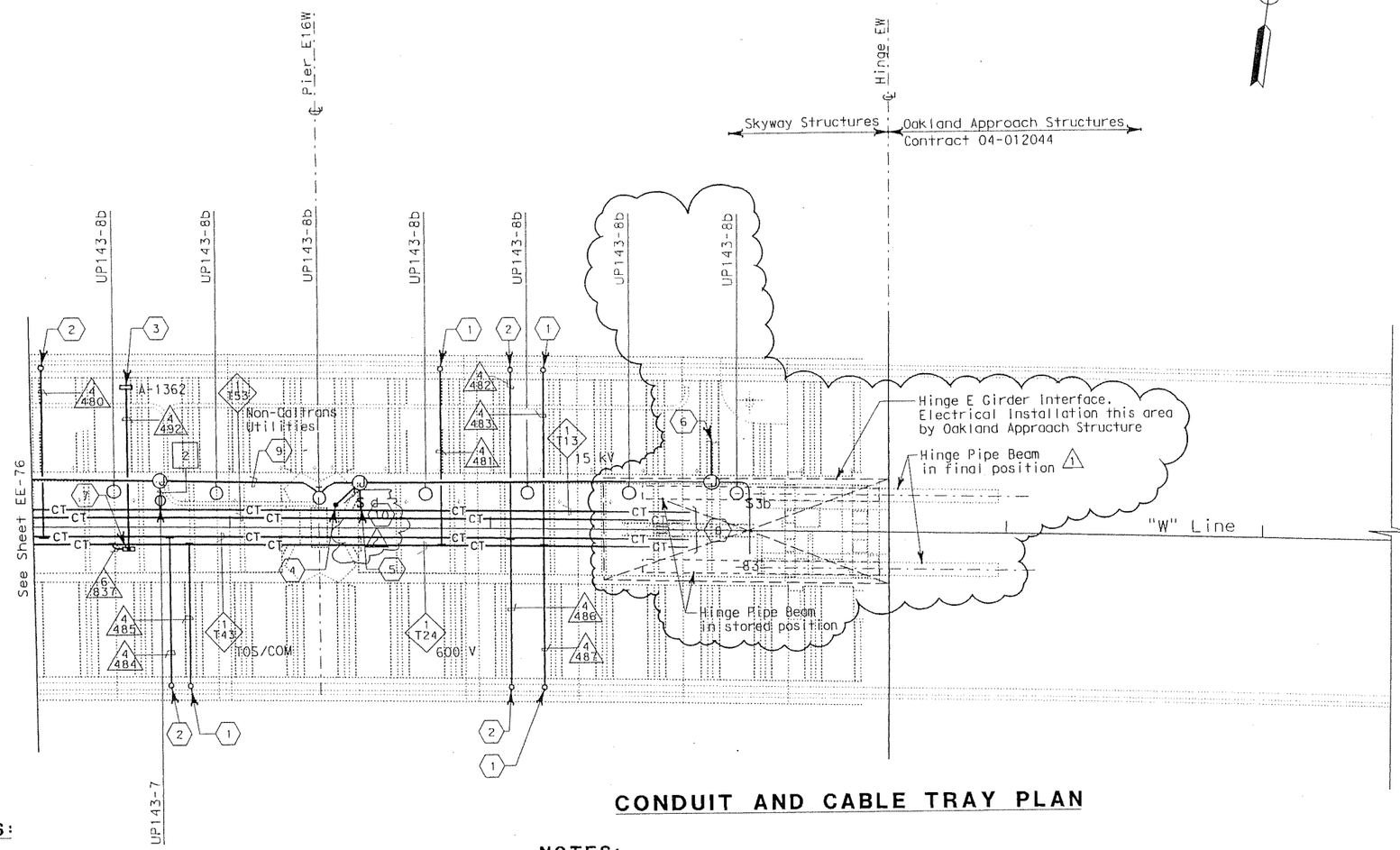

2

ORIGINAL SIGNED 10/13/04
REGISTERED ELECTRICAL ENGINEER DATE

REGISTERED PROFESSIONAL ENGINEER NABEEL F. ABDELRAHMAN No. 17162 Exp. 9/30/05 ELECTRICAL STATE OF CALIFORNIA

CONDUIT AND CABLE TRAY PLAN

SHEET NOTES:

(1) Conduit up to PB-LTG located in barrier, See Sheet EE-37.

(2) Conduit up to PB-COM located in barrier, See Sheet EE-37.

(3) PB-2A with circuit for future Light Pipes.

(4) Conduit down to lights and receptacles located inside pier. See Sheet EE-79.

(5) Switch for pier lighting.

(6) For continuation of Span E17W walkway lighting, see sheet EE-80.

(7) PB-2C, locate on top of floor.

(8) For cable trays at Hinge EW, see Sheet EE-299A.

(9) Main conduit run shall be 21 mm minimum and 53 mm maximum. For number of conductors of girder and pier lighting circuits, see Sheets EE-171 and EE-172 respectively. For number of conductors of convenience outlet circuits, see Circuit Schedule EE-324.

(10) Replace Three-Way Switch with Single Pole Switch. 2

THIS PLAN ACCURATE FOR ELECTRICAL WORK ONLY.

NOTES:

1. References:
   - TOS equipment is shown for conduit routing only. For typical details of TOS controller and devices, see Sheets EE-381 through EE-389.
   - For types of pull boxes, splice boxes and enclosures, see Sheet EE-323.
   - For bridge grounding plan, see Sheet EE-78.
   - For circuit, conduit and cable tray schedules, see Sheets EE-324 and EE-326.
   - For Light Pipe Schedules, see Sheets EE-316 through EE-318.
2. For other work related to Hinge EW and items not shown on this sheet, see Electrical Special Provisions.
3. The girder lighting fixtures are shown diagrammatically. Contractor shall install fixtures at railing posts with a maximum of 8000 mm between fixtures. For types and typical lighting fixture installation details, see Sheet EE-261.
4. The cable trays are shown diagrammatically. For typical girder cable tray plans and sections, see Sheets EE-262 and EE-263.

MARK	DATE	DESCRIPTIONS	REV	CK	
2	9/13/04	Added sheet note 10. Revised pier lighting switch.	RS	NA	CCO NO.120
1	02/20/04	Added Hinge E interface. Deleted cable trays, conduits, lighting fixtures.	CYF	EJL	CCO NO.48

REVISIONS

CONTRACT CHANGE ORDER NO. 48 S1
SHEET 5 OF 67

GIRDER LEVEL WESTBOUND
LIGHTING AND ELECTRICAL SYSTEMS
SCALE: 1:200

EE-77

DATE	REVISED BY	DATE	REVISED BY
11/99	5/00	2/20/04	9/13/04
IAH	JP	EJL	RS

CALCULATED/DESIGNED BY IAH
CHECKED BY JP

DESIGN OVERSIGHT
BEHZAD GOLEMOHAMMADI

STATE OF CALIFORNIA - DEPARTMENT OF TRANSPORTATION
Caltrans

LAST REVISION 00-00-00
DATE PLOTTED => 29-JUL-2005
TIME PLOTTED => 10:18

FOR REDUCED PLANS ORIGINAL SCALE IS IN MILLIMETERS 0 20 40 60 80

DGN FILE =>04-012024_0187R2.dgn
USERNAME =>mhossain

CU 04251 EA 012021

DIST	COUNTY	ROUTE	KILOMETER POST TOTAL PROJECT	SHEET No	TOTAL SHEETS
04	SF, Ala	80	13.9 / 14.3, 0.0 / 1.6	188R1	978

Jens Erlingsson 02/20/04
REGISTERED ELECTRICAL ENGINEER DATE

6-4-01
PLANS APPROVAL DATE

REGISTERED PROFESSIONAL ENGINEER JENS ERLINGSSON No. 8249 Exp. 9/30/06 ELECTRICAL STATE OF CALIFORNIA

PB POWER, Inc.
A Parsons Brinckerhoff Company
303 Second St., Suite 700N
San Francisco, CA 94107-1317

The State of California or its officers or agents shall not be responsible for the accuracy or completeness of electronic copies of this plan sheet.

Caltrans Metric

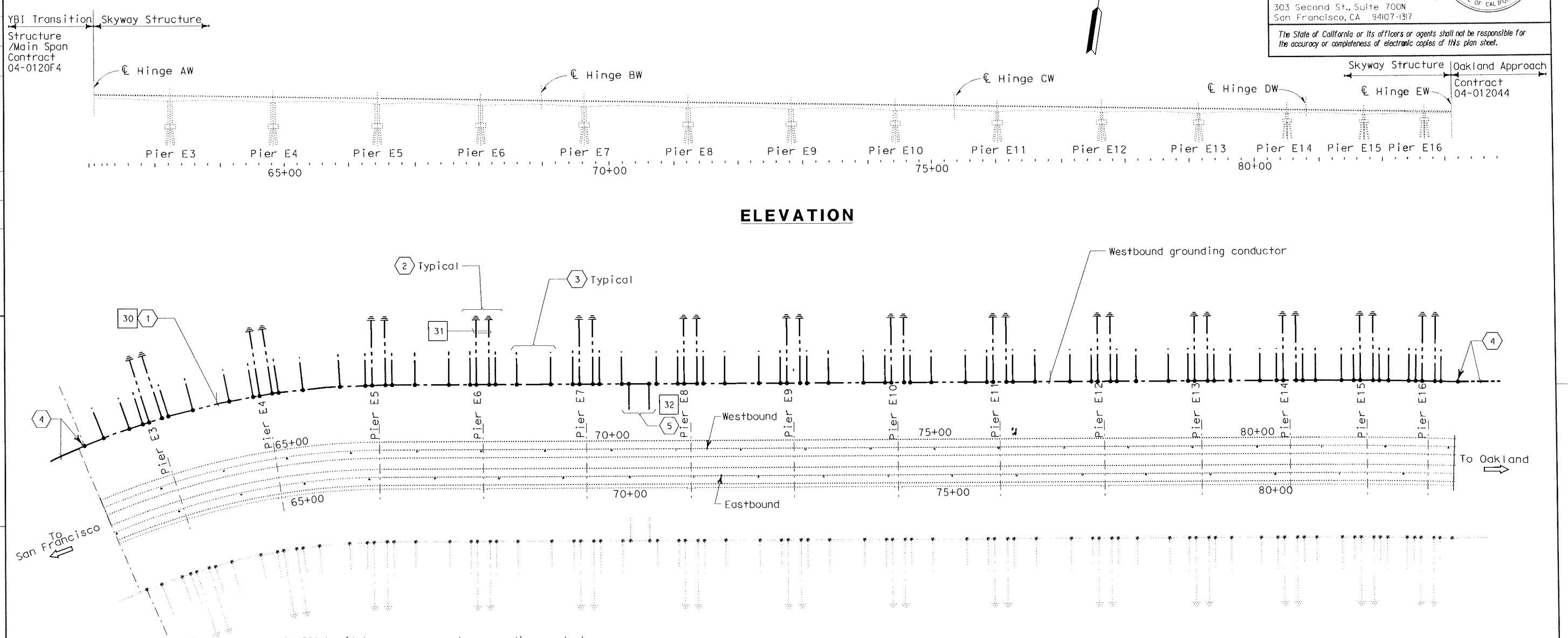

SHEET NOTES:

(1) ~~Install one separate~~ 500 kcmil bare copper system grounding ~~conductor~~ in westbound girder, ~~spanning the entire Skyway Structure~~. The system-~~grounding conductor shall~~ be physically attached ~~to the 15 kV cable tray~~.

(2) At each pier, two 250 kcmil bare copper ground conductors shall be exothermically welded to the 500 kcmil system grounding conductor, run embedded down the pier column, and shall be exothermically welded to the pier footing collar.
At each pier, the 500 kcmil bare copper system grounding conductor shall be connected to two ground bars located in the girder, one on each side of the pier. These ground bars shall provide a ground point of connection for cable trays and equipment located near the pier in the girder or on the platform.

(3) Approximately 1/3 the distance between piers, two #4/0 bare copper ground conductors shall be exothermically welded to the 500 kcmil system grounding conductor and bonded to all the cable trays.

(1)(4) Install one separate 500 kcmil bare copper system grounding conductor in westbound girder, spanning the entire Skyway Structure shall be exothermically weld to adjoining 500 kcmil system grounding conductor SAS Superstructure and Oaklan Approach under a different contract. Addendum #6.

(4) 500 kcmil system grounding conductor, at Skyway Structure shall be exothermically weld to adjoining 500 kcmil system grounding conductor SAS Superstructure and Oaklan Approach under a different contract.

(5) Ground connections in Substations.

NOTES:

1. References:
   - For grounding inside girder at each pier, and service platform grounding, see service platform equipment arrangement Sheets EE-266 thru EE-278.
   - For other grounding connections in westbound substation, see Sheet EE-14.
   - For bridge grounding eastbound, see Sheet EE-98.

MARK	DATE	DESCRIPTIONS	REV	CK	
1	2/20/04	Revised sheet notes 4	JE	EJL	CCO NO.48

REVISIONS

CONTRACT CHANGE ORDER NO. 48 S1
SHEET 6 OF 67

GIRDER LEVEL WESTBOUND
BRIDGE GROUNDING
SCALE: 1:3000

EE-78

	DATE	REVISED BY	DATE	REVISED	
					EJL 2/20/04

CALCULATED/DESIGNED BY	JE	DATE 11/99
CHECKED BY	EJL	4/00

DESIGN OVERSIGHT
BEHZAD GOLEMOHAMMADI

STATE OF CALIFORNIA - DEPARTMENT OF TRANSPORTATION
Caltrans

THIS PLAN ACCURATE FOR ELECTRICAL WORK ONLY.

FOR REDUCED PLANS ORIGINAL SCALE IS IN MILLIMETERS 0 20 40 60 80

DGN FILE =>04-012024_0188R1.dgn
USERNAME =>mhossain

CU 04251 EA 012021

LAST REVISION 00-00-00 DATE PLOTTED => 08-AUG-2006 TIME PLOTTED => 09:13

DIST	COUNTY	ROUTE	KILOMETER POST TOTAL PROJECT	SHEET No	TOTAL SHEETS
04	SF, Ala	80	13.9 / 14.3, 0.0 / 1.6	191R2	978

REGISTERED ELECTRICAL ENGINEER 03/02/01 DATE

6-4-01
PLANS APPROVAL DATE

PB POWER, Inc.
A Parsons Brinckerhoff Company
303 Second St., Suite 700N
San Francisco, CA 94107-1317

REGISTERED PROFESSIONAL ENGINEER JENS ERLINGSSON No. 6249 Exp. 9/30/02 ELECTRICAL STATE OF CALIFORNIA

The State of California or its officers or agents shall not be responsible for the accuracy or completeness of electronic copies of this plan sheet.

Caltrans Metric

REGISTERED ELECTRICAL ENGINEER 7/5/05 DATE

REGISTERED PROFESSIONAL ENGINEER K.T. Truong No. 16240 Exp. 12-31-06 ELECTRICAL STATE OF CALIFORNIA

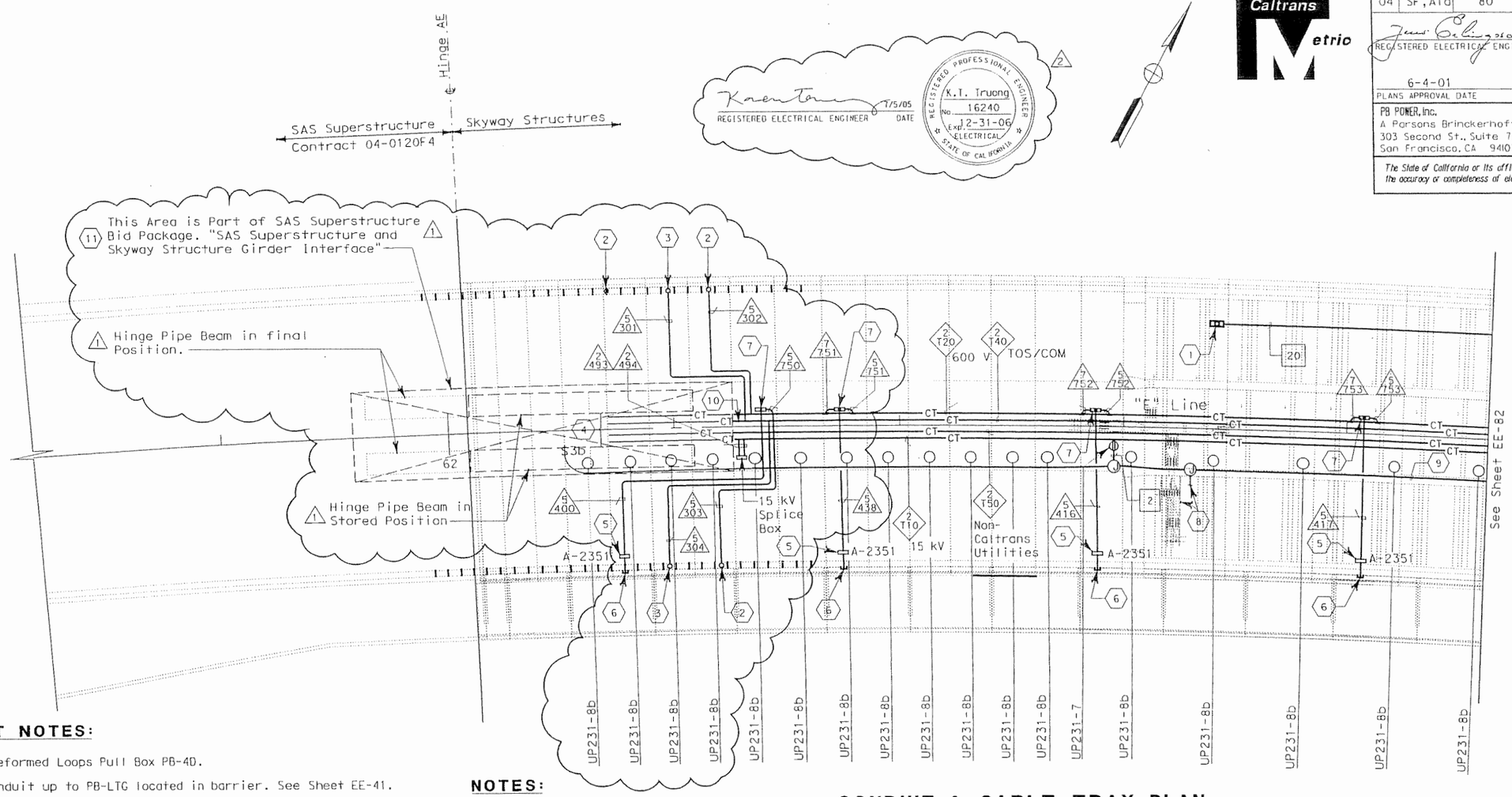

SHEET NOTES:

1. Preformed Loops Pull Box PB-4D.
2. Conduit up to PB-LTG located in barrier. See Sheet EE-41.
3. Conduit up to PB-COM located in barrier. See Sheet EE-41.
4. For cable trays at Hinge AE and cable tray arrangement at the transition section. See Sheet ~~EE-300A and~~ EE-264 ~~respectively~~. (2)
5. PB-2A with circuit for future light pipes.
6. 41C, stub out through barrier and cap. For details, see Sheet EE-309. (For future light pipes).
7. PB-2C, locate on top of floor.
8. For continuation of Span E3E walkway lighting, see Sheet EE-100.
9. Main conduit run shall be 21 mm minimum and 53 mm maximum. For number of conductors of girder and pier lighting circuits, see Sheets EE-184 and EE-185, respectively. For number of convenience outlet circuits, see Circuit Schedule EE-327.
10. TOS Fiber splice closure, for details see Sheet EE-388.
11. Electrical installation of cable trays, conduits, and lighting fixtures in this area is by SAS Superstructure Contractor. (1) (2)

NOTES:

1. References:
   - TOS equipment is shown for conduit routing only. For typical details of TOS controller and devices, see Sheets EE-381 through EE-389.
   - For types of pull boxes, splice boxes and enclosures, see Sheet EE-323.
   - For bridge grounding plan, see Sheet EE-98.
   - For circuit, conduit and cable tray schedules, see Sheets EE-327 and EE-328.
   - For light pipe schedules, see Sheets EE-320 through EE-322.
2. For other work related to Hinge AE and items not shown on this sheet, see Electrical Special Provisions.
3. The lighting fixtures are shown diagrammatically. Contractor shall install fixtures at railing posts with a maximum of 8000 mm between fixtures. For types and typical lighting fixture installation details, see Sheet EE-261.
4. The cable trays are shown diagrammatically. For typical girder cable tray plans and sections, see Sheets EE-262 and EE-263.

CONDUIT & CABLE TRAY PLAN

MARK	DATE	DESCRIPTIONS	REV	CK	
2	07/05/05	Revised sheet notes 4 and 11.	MH	KT	CCO NO.48
1	02/20/04	Added Hinge A interface, 15 kV splice box, sheet notes 10 and 11. Deleted cable trays, conduits and lighting fixtures.	CYF	EJL	CCO NO.48

REVISIONS

CONTRACT CHANGE ORDER NO. 48 S1
SHEET 7 OF 67

GIRDER LEVEL EASTBOUND
LIGHTING AND ELECTRICAL SYSTEMS
SCALE: 1:200

EE-81

CALCULATED/DESIGNED BY	BP	DATE 11/99	REVISED BY	EJL
CHECKED BY	JP	5/00	DATE REVISED	2/20/04

DESIGN OVERSIGHT
BEHZAD GOLEMOHAMMADI

STATE OF CALIFORNIA - DEPARTMENT OF TRANSPORTATION
Caltrans

LAST REVISION 00-00-00 | DATE PLOTTED => 13-JUL-2005 | TIME PLOTTED => 09:12

THIS PLAN ACCURATE FOR ELECTRICAL WORK ONLY.

ALL DIMENSIONS ARE IN MILLIMETERS UNLESS OTHERWISE SHOWN

FOR REDUCED PLANS ORIGINAL SCALE IS IN MILLIMETERS 0 20 40 60 80

DGN FILE =>04-012024_0191R2.dgn
USERNAME =>mhassain

CU 04251 | EA 012021

DIST	COUNTY	ROUTE	KILOMETER POST TOTAL PROJECT	SHEET No	TOTAL SHEETS
04	SF, Ala	80	13.9 / 14.3, 0.0 / 1.6	207R1	978

Jens Erlingsson 02/20/04
REGISTERED ELECTRICAL ENGINEER DATE

6-4-01
PLANS APPROVAL DATE

REGISTERED PROFESSIONAL ENGINEER JENS ERLINGSSON No. 8249 Exp. 9/30/06 ELECTRICAL STATE OF CALIFORNIA

PB POWER, Inc.
A Parsons Brinckerhoff Company
303 Second St., Suite 700N
San Francisco, CA 94107-1317

The State of California or its officers or agents shall not be responsible for the accuracy or completeness of electronic copies of this plan sheet.

Caltrans Metric

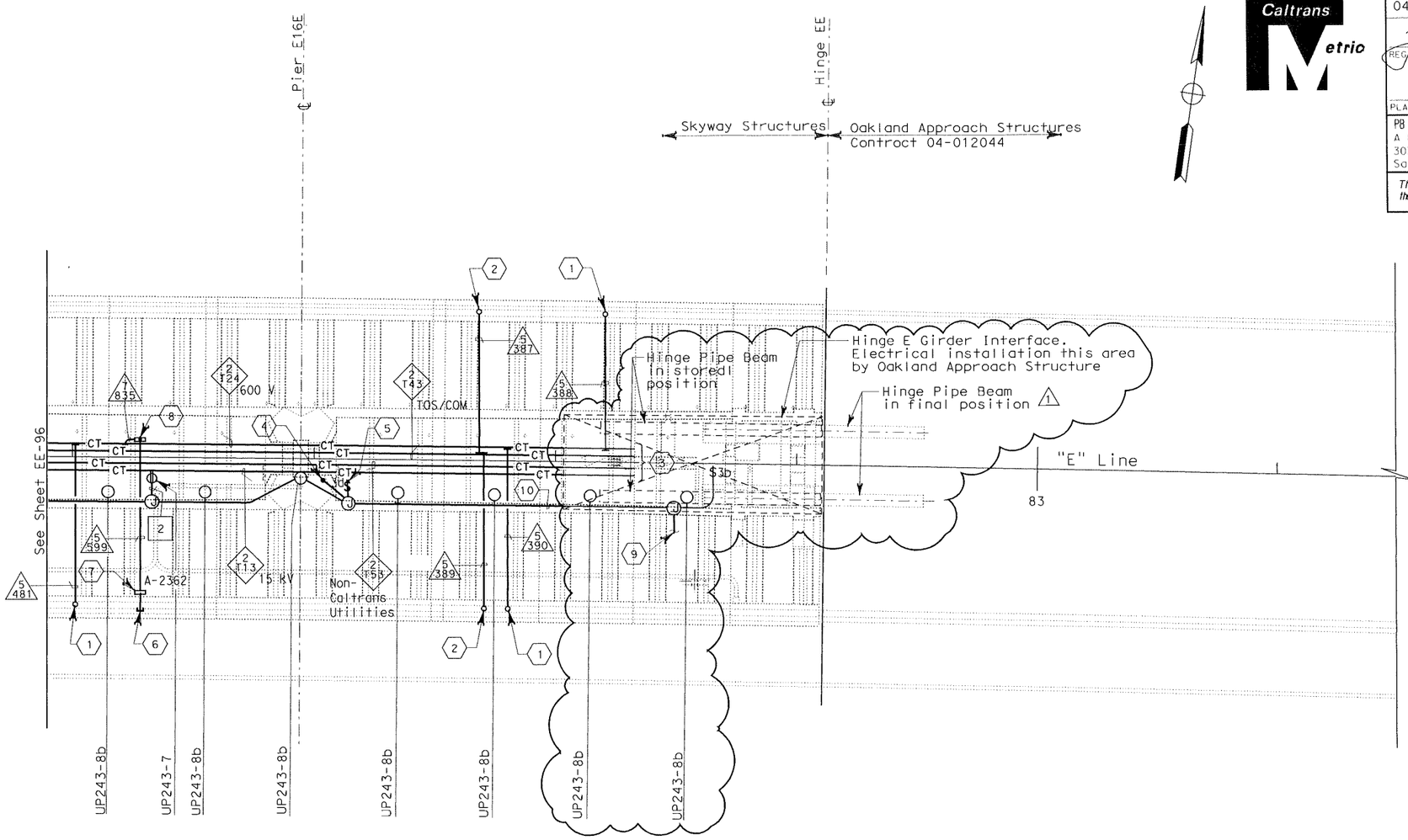

CONDUIT AND CABLE TRAY PLAN

SHEET NOTES:

1. Conduit up to PB-LTG located in barrier. See Sheet EE-57.
2. Conduit up to PB-COM located in barrier. See Sheet EE-57.
3. For continuation of cable trays at Hinge EE, see Sheet EE-304.
4. Conduit down to lights and receptacles located inside pier. See Sheet EE-99.
5. Switch for pier lighting.
6. 41C, stub out through barrier and cap. For details, see Sheet EE-309. (For future light pipes).
7. PB-2A with circuit for future Light Pipes.
8. PB-2C, locate on top of floor.
9. For continuation of Span E17E walkway lighting, see Sheet EE-100.
10. Main conduit run shall be 21 mm minimum and 53 mm maximum. For number of conductors of girder and pier lighting circuits, see Sheets EE-184 and EE-185, respectively. For number of convenience outlet circuits, see Circuit Schedule EE-327.

NOTES:

1. References:
   - TOS equipment is shown for conduit routing only. For typical details of TOS controller and devices, see Sheets EE-381 through EE-389.
   - For types of pull boxes, splice boxes and enclosures, see Sheet EE-323.
   - For bridge grounding plan, see Sheet EE-98.
   - For circuit, conduit and cable tray schedules, see Sheets EE-327 and EE-328.
   - For light pipe schedules, see Sheets EE-320 through EE-322
2. For other work related to Hinge EE and items not shown on this sheet, see Electrical Special Provisions.
3. The locations of girder lighting fixtures are shown diagrammatically and for clarity only. Contractor shall install fixtures at railing posts with a maximum of 8000 mm between fixtures. For types and typical lighting fixture installation details, see Sheet EE-261.
4. The cable trays are shown diagrammatically. For typical girder cable tray plans and sections, see Sheets EE-262 and EE-263.

MARK	DATE	DESCRIPTIONS	REV	CK	
1	2/20/04	Added Hinge E girder interface. Deleted cable trays, conduits and lighting fixtures.	CYF	EJL	CCO NO.48

REVISIONS

CONTRACT CHANGE ORDER NO. 48 S1
SHEET 8 OF 67

GIRDER LEVEL EASTBOUND
LIGHTING AND ELECTRICAL SYSTEMS
SCALE: 1:200

EE-97

	BP	DATE 11/99	REVISED BY	EJL
CALCULATED/DESIGNED BY	JP	5/00	DATE REVISED	2/20/04
CHECKED BY				

DESIGN OVERSIGHT
BEHZAD GOLEMOHAMMADI

STATE OF CALIFORNIA - DEPARTMENT OF TRANSPORTATION
Caltrans

LAST REVISION 00-00-00
DATE PLOTTED => 08-AUG-2006
TIME PLOTTED => 09:15

THIS PLAN ACCURATE FOR ELECTRICAL WORK ONLY.
ALL DIMENSIONS ARE IN MILLIMETERS UNLESS OTHERWISE SHOWN
FOR REDUCED PLANS ORIGINAL SCALE IS IN MILLIMETERS 0 20 40 60 80
DGN FILE =>04-012024_0207R1.dgn
USERNAME =>mhossain
CU 04251
EA 012021

DIST	COUNTY	ROUTE	KILOMETER POST TOTAL PROJECT	SHEET No	TOTAL SHEETS
04	SF, Ala	80	13.9 / 14.3, 0.0 / 1.6	208R1	978

Jens Erlingsson 02/20/04
REGISTERED ELECTRICAL ENGINEER DATE

6-4-01
PLANS APPROVAL DATE

REGISTERED PROFESSIONAL ENGINEER
JENS ERLINGSSON
No. 8249
Exp. 9/30/06
ELECTRICAL
STATE OF CALIFORNIA

PB POWER, Inc.
A Parsons Brinckerhoff Company
303 Second St., Suite 700N
San Francisco, CA 94107-1317

The State of California or its officers or agents shall not be responsible for the accuracy or completeness of electronic copies of this plan sheet.

Caltrans Metric

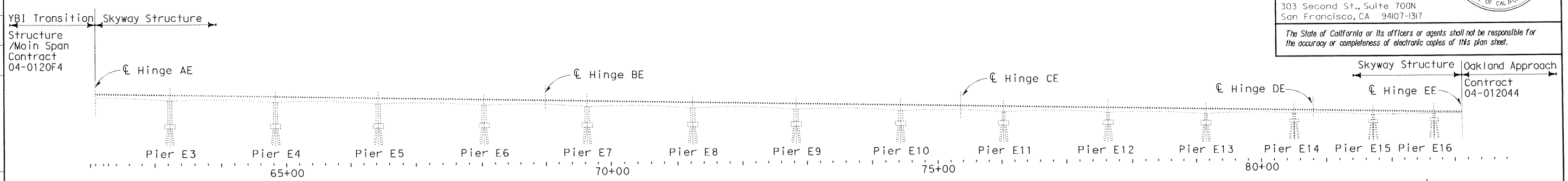

ELEVATION

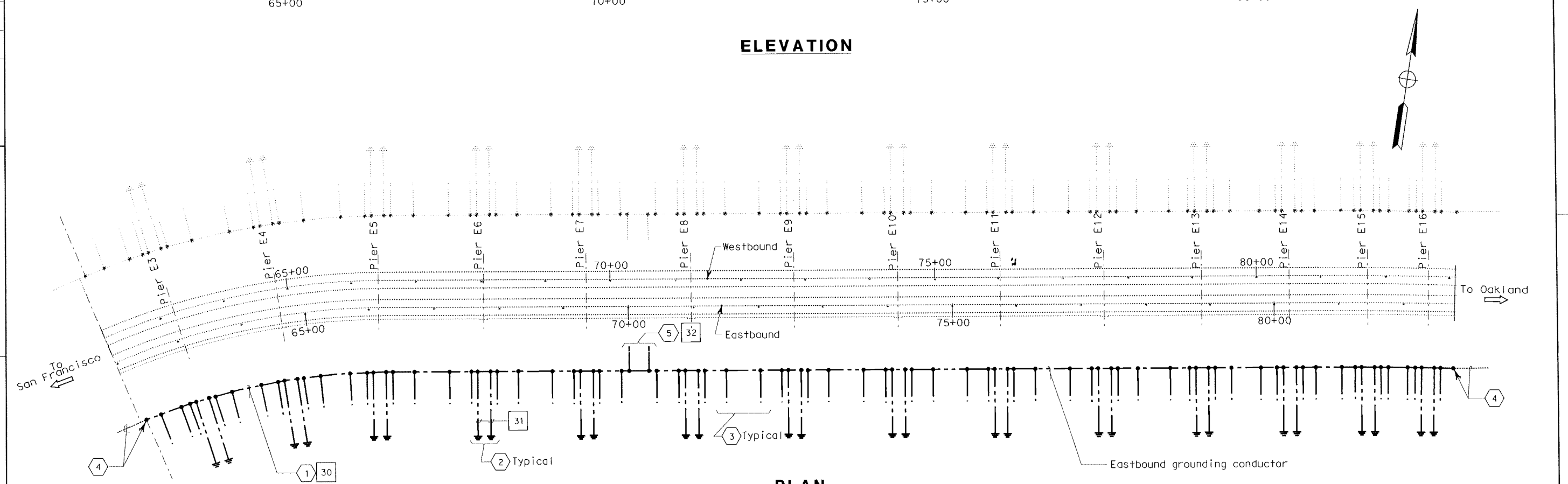

PLAN

SHEET NOTES:

Install one separate 500 kcmil bare copper system grounding conductor in westbound girder, spanning the entire Skyway Structure. The system-grounding conductor shall be physically attached to the 15 kV cable tray, and 15 kV conduits (flexible and rigid) routed through the pipe beams in hinges. Addendum #6.

1. ~~Install one separate 500 kcmil bare copper system grounding conductor in eastbound girder, spanning the entire Skyway Structure. The system-grounding conductor shall be physically attached to the 15 kV cable tray.~~

2. At each pier, two 250 kcmil bare copper ground conductors shall be exothermically welded to the 500 kcmil system grounding conductor, run embedded down the pier column, and shall be exothermically welded to the pier footing collar.
   At each pier, the 500 kcmil bare copper system grounding conductor shall be connected to two ground bars located in the girder, one on each side of the pier. These ground bars shall provide a ground point of connection for cable trays and equipment located near the pier in girder or on the platform.

3. Approximately 1/3 the distance between piers, two #4/0 bare copper ground conductors shall be exothermically welded to the 500 kcmil system grounding conductor and bonded to all the cable trays.

1 4. 500 kcmil system grounding conductor, at Skyway Structure shall be exothermically weld to adjoining 500 kcmil system grounding conductor SAS Superstructure and Ooklan Approach under a different contract.

5. Ground connections in Substations.

NOTES:

1. References:
   - For grounding inside girder at each pier, and service platform grounding, see service platform equipment arrangement Sheets EE-281 thru EE-293.
   - For other grounding connections in eastbound substation, see Sheet EE-19.

2. For bridge grounding westbound, see Sheet EE-78.

THIS PLAN ACCURATE FOR ELECTRICAL WORK ONLY.

MARK	DATE	DESCRIPTIONS	REV	CK	
1	2/20/04	Revised sheet notes 4	JE	EJL	CCO NO.48
		REVISIONS			

CONTRACT CHANGE ORDER NO. 48 S1
SHEET 9 OF 67

GIRDER LEVEL EASTBOUND
BRIDGE GROUNDING
SCALE: 1:3000

EE-98

CALCULATED/DESIGNED BY	JE	DATE 11/99.	REVISED BY EJL
CHECKED BY	EJL	4/00	DATE REVISED 2/20/04

DESIGN OVERSIGHT
BEHZAD GOLEMOHAMMADI

STATE OF CALIFORNIA - DEPARTMENT OF TRANSPORTATION
Caltrans

LAST REVISION 00-00-00
DATE PLOTTED => 08-AUG-2006
TIME PLOTTED => 09:17

FOR REDUCED PLANS ORIGINAL SCALE IS IN MILLIMETERS 0 20 40 60 80
DGN FILE =>04-012024_0208R1.dgn
USERNAME =>mhossain
CU 04251
EA 012021

DIST	COUNTY	ROUTE	KILOMETER POST TOTAL PROJECT	SHEET NO	TOTAL SHEETS
04	SF, Ala	80	13.9 / 14.3, 0.0 / 1.6	224R2	978

REGISTERED ELECTRICAL ENGINEER — 03/19/01 DATE

6-4-01
PLANS APPROVAL DATE

REGISTERED PROFESSIONAL ENGINEER — JENS ERLINGSSON No. 8249 Exp. 9/30/02 ELECTRICAL — STATE OF CALIFORNIA

PB POWER, Inc.
A Parsons Brinckerhoff Company
303 Second St., Suite 700N
San Francisco, CA 94107-1317

The State of California or its officers or agents shall not be responsible for the accuracy or completeness of electronic copies of this plan sheet.

Caltrans Metric

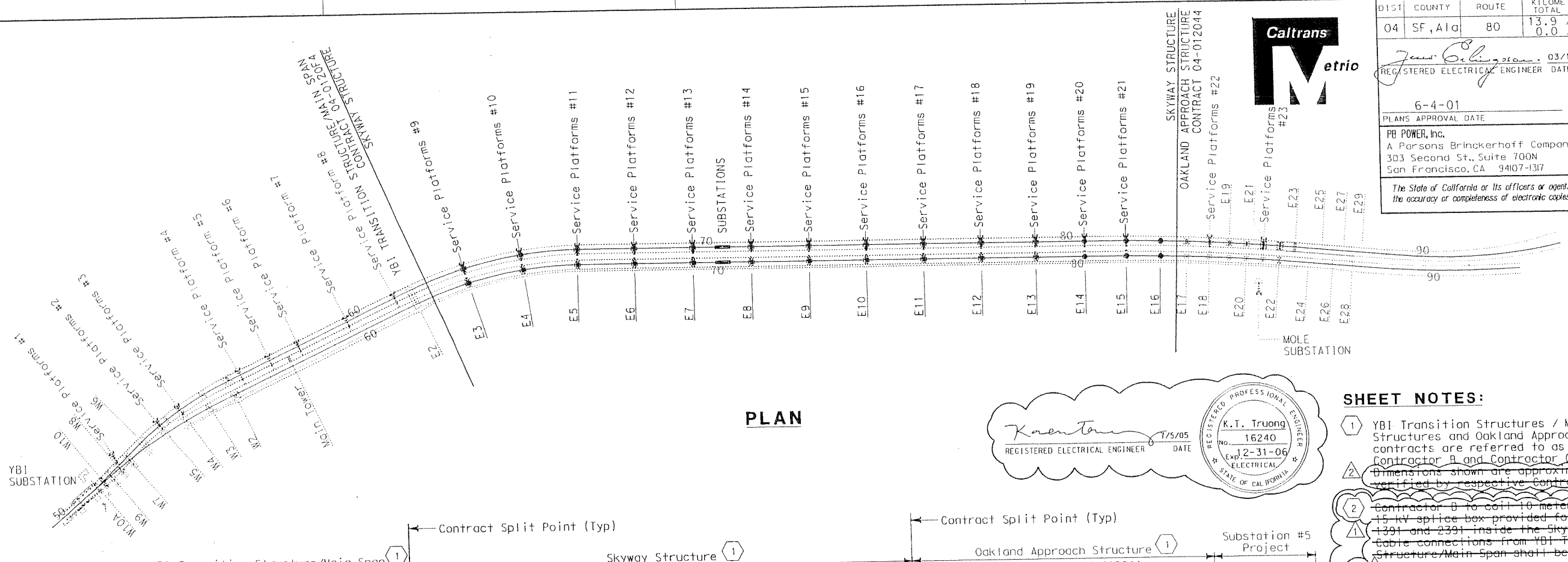

PLAN

REGISTERED ELECTRICAL ENGINEER — 7/5/05 DATE

REGISTERED PROFESSIONAL ENGINEER — K.T. Truong No. 16240 Exp. 12-31-06 ELECTRICAL — STATE OF CALIFORNIA

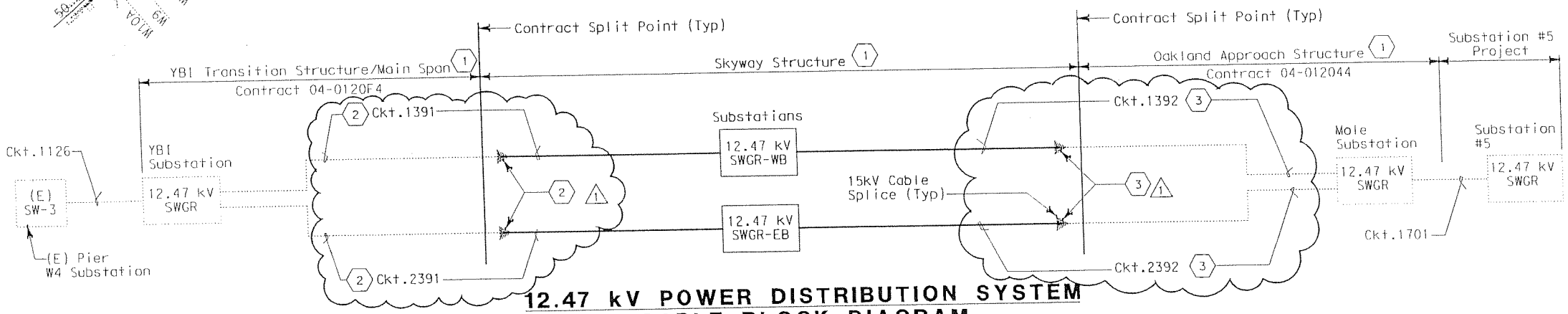

12.47 kV POWER DISTRIBUTION SYSTEM CABLE BLOCK DIAGRAM

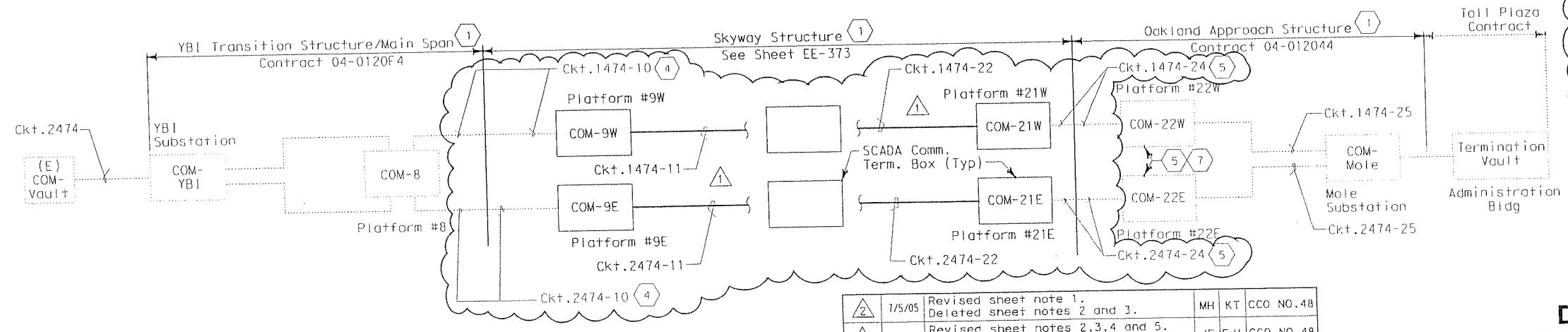

SCADA COMMUNICATION SYSTEM CABLE BLOCK DIAGRAM

SHEET NOTES:

(1) YBI Transition Structures / Main Span, Skyway Structures and Oakland Approach Structures contracts are referred to as Contractor A, Contractor B and Contractor C respectively.

(2) ~~Dimensions shown are approximate and shall be verified by respective Contractors.~~

(2) (1) ~~Contractor B to coil 10 meters of cable inside 15 kV splice box provided for cable/circuits 1391 and 2391 inside the Skyway Structures. Cable connections from YBI Transition Structure/Main Span shall be Contractor A.~~

(2) (3) (1) ~~Contractor B to coil 10 meters of cable inside 15 kV splice box provided for cable/circuits 1392 and 2392 inside the Skyway Structures. Cables connections from Oakland Approach Structure shall be Contractor C.~~

(4) (1) Cable/circuits 1474-10 and 2474-10 are provided by Contractor A. Routing and termination to COM-9W and COM-9E inside the Skyway Structures respectively shall be Contractor A.

(5) (1) Cable/circuits 1474-24 and 2474-24 are provided by Contractor C. Routing and termination to COM-21W and COM-21E inside the Skyway Structures respectively shall be Contractor C.

(6) (1) ~~Contractor A to provide and coil 145 meters of cable beyond the contract split point. Contractor B shall route and terminate circuit No. 2474-10 to scada communication terminal box COM-9E. For connection see Skyway Structure Sheet No. EE-372.~~

(7) (1) ~~Contractor C to provide and coil 70 meters of cable beyond the contract split point. Contractor B shall route and terminate circuit No. 2474-24 to scada communication terminal box COM-21E. For connection see Skyway Structure Sheet No. EE-372.~~

NOTES:

1- This drawing is for information only and shall not be used for the purpose of bid items.

MARK	DATE	DESCRIPTIONS	REV	CK	
(2)	7/5/05	Revised sheet note 1. Deleted sheet notes 2 and 3.	MH	KT	CCO NO.48
(1)	2/20/04	Revised sheet notes 2,3,4 and 5. Deleted sheet notes 6 and 7.	JE	EJL	CCO NO.48

REVISIONS

CONTRACT CHANGE ORDER NO. 48 S1
SHEET 10 OF 67

DETAILS
CONTRACT INTERFACE BLOCK DIAGRAMS
NO SCALE

EE-129

CALCULATED/DESIGNED BY	JE	DATE 11/99	REVISED BY	EJL
CHECKED BY	EJL	5/00	DATE REVISED	2/20/04

DESIGN OVERSIGHT — BEHZAD GOLEMOHAMMADI

STATE OF CALIFORNIA - DEPARTMENT OF TRANSPORTATION — Caltrans

FOR REDUCED PLANS ORIGINAL SCALE IS IN MILLIMETERS 0 20 40 60 80

DGN FILE => 04-012024_0224R2.dgn
USERNAME => mhossain

CU 04251 | EA 012021

LAST REVISION 00-00-00 | DATE PLOTTED => 29-JUL-2005 TIME PLOTTED => 10:27

DIST	COUNTY	ROUTE	KILOMETER POST TOTAL PROJECT	SHEET No	TOTAL SHEETS
04	SF, Ala	80	13.9 / 14.3, 0.0 / 1.6	225 R2	978

REGISTERED ELECTRICAL ENGINEER 03/19/01 DATE

6-4-01
PLANS APPROVAL DATE

REGISTERED PROFESSIONAL ENGINEER JENS EBLINGSSON No. 8249 Exp. 9/30/02 ELECTRICAL STATE OF CALIFORNIA

PB POWER, Inc.
A Parsons Brinckerhoff Company
303 Second St., Suite 700N
San Francisco, CA 94107-1317

The State of California or its officers or agents shall not be responsible for the accuracy or completeness of electronic copies of this plan sheet.

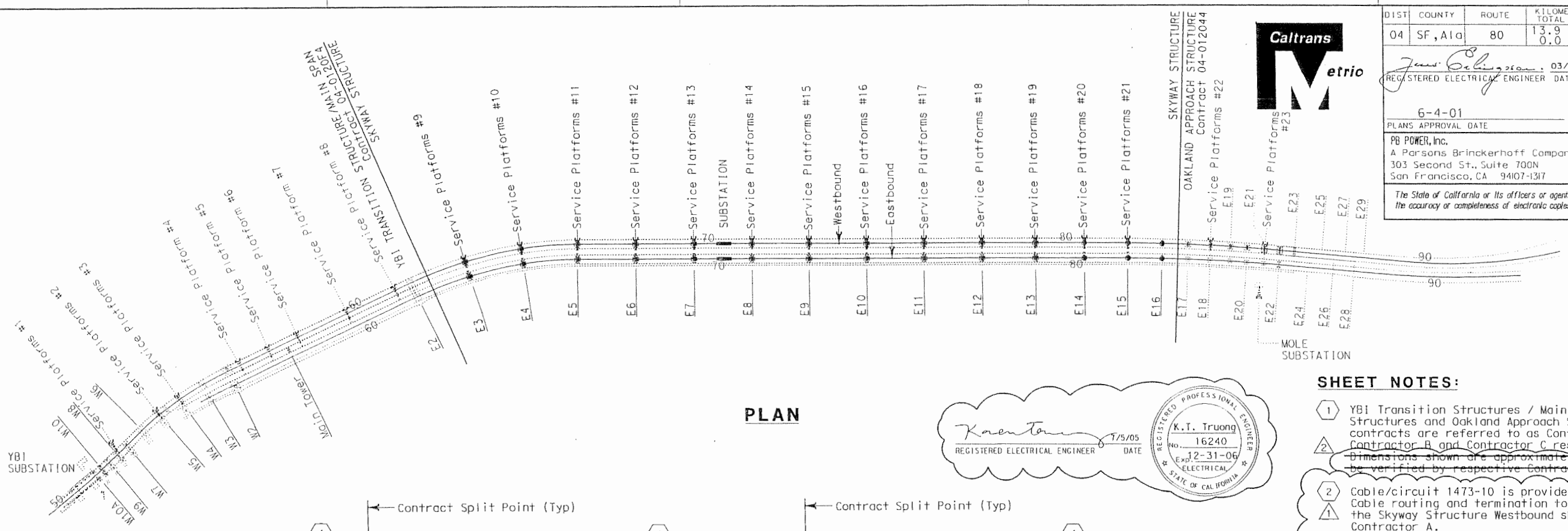

PLAN

REGISTERED ELECTRICAL ENGINEER 7/5/05 DATE

REGISTERED PROFESSIONAL ENGINEER K.T. Truong No. 16240 Exp. 12-31-06 ELECTRICAL STATE OF CALIFORNIA

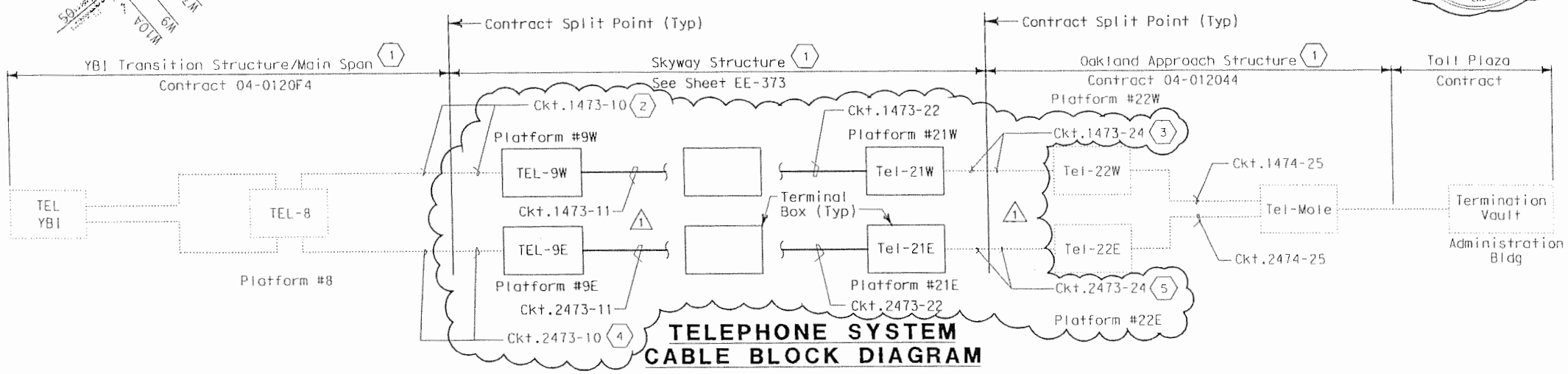

TELEPHONE SYSTEM CABLE BLOCK DIAGRAM

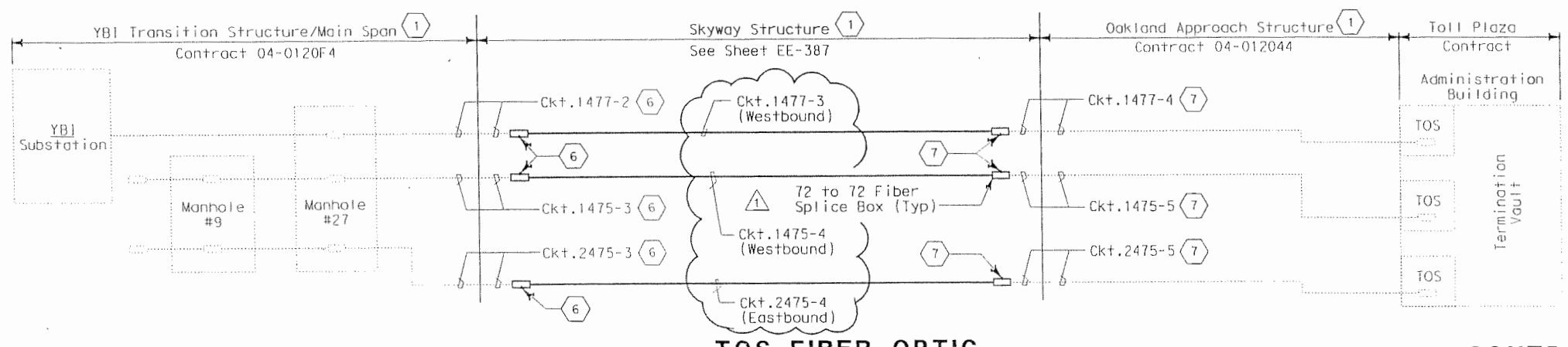

TOS FIBER OPTIC CABLE BLOCK DIAGRAM

SHEET NOTES:

(1) YBI Transition Structures / Main Span, Skyway Structures and Oakland Approach Structures contracts are referred to as Contractor A, Contractor B and Contractor C respectively.

(2) ~~Dimensions shown are approximate and shall be verified by respective Contractors.~~

(2)(1) Cable/circuit 1473-10 is provided by Contractor A. Cable routing and termination to TEL-9W inside the Skyway Structure Westbound shall be Contractor A.

(3)(1) Cable/circuit 1473-24 is provided by Contractor C. Cable routing and termination to TEL-21W inside the Skyway Structure Westbound shall be Contractor C.

(4)(1) Cable/circuit 2473-10 is provided by Contractor A. Cable routing and termination to TEL-9E inside the Skyway Structure Eastbound shall be Contractor A.

(5)(1) Cable/circuit 2473-24 is provided by Contractor A. Cable routing and termination to TEL-21E inside the Skyway Structure Eastbound shall be Contractor C.

(6)(1) Cable/circuits 1477-2, 1475-3 and 2475-3 are provided by Contractor A. Routing and termination to splice closure inside the Skyway Structure respectively shall be Contractor A. Splice closure provided by Contractor B.

(7)(1) Cable/circuits 1477-4, 1475-5 and 2475-5 are provided by Contractor C. Routing and termination to splice closure inside the Skyway Structure respectively shall be Contractor C. Splice closure provided by Contractor B.

NOTES:

1- This drawing is for information only and shall not be used for the purpose of bid items.

MARK	DATE	DESCRIPTIONS	REV	CK	
(2)	7/5/05	Revised sheet note 1	MH	KT	CCO NO.48
(1)	2/20/04	Revised sheet notes 2,3,4,5,6 and 7	JE	EJL	CCO NO.48

REVISIONS

CONTRACT CHANGE ORDER NO. 48 S1
SHEET 11 OF 67

DETAILS
CONTRACT INTERFACE BLOCK DIAGRAMS
NO SCALE

EE-130

CALCULATED/ DESIGNED BY	JE	DATE 11/99	REVISED BY	EJL
CHECKED BY	EJL	4/00	DATE REVISED	2/20/04

DESIGN OVERSIGHT
BEHZAD GOLEMOHAMMADI

STATE OF CALIFORNIA - DEPARTMENT OF TRANSPORTATION
Caltrans

LAST REVISION 00-00-00 | DATE PLOTTED => 01-AUG-2005 | TIME PLOTTED => 07:56

FOR REDUCED PLANS ORIGINAL SCALE IS IN MILLIMETERS 0 20 40 60 80

DGN FILE =>04-012024_0225R2.dgn
USERNAME =>mhossain

CU 04251 | EA 012021

DIST	COUNTY	ROUTE	KILOMETER POST TOTAL PROJECT	SHEET No	TOTAL SHEETS
04	SF, Ala	80	13.9 / 14.3, 0.0 / 1.6	250R1	978

Jens Erlingsson 02/20/04
REGISTERED ELECTRICAL ENGINEER DATE

6-4-01
PLANS APPROVAL DATE

REGISTERED PROFESSIONAL ENGINEER JENS ERLINGSSON No. 8249 Exp. 9/30/06 ELECTRICAL STATE OF CALIFORNIA

PB POWER, Inc.
A Parsons Brinckerhoff Company
303 Second St., Suite 700N
San Francisco, CA 94107-1317

The State of California or its officers or agents shall not be responsible for the accuracy or completeness of electronic copies of this plan sheet.

Caltrans Metric

MARK	DATE	DESCRIPTIONS	REV	CK	
2	2/20/04	Added sheet notes 5 for CKT UP143-8.	CYF	EJL	CCO NO.48
1	2/20/04	Revised Table B of CKT UP131-8 and added sheet notes 4.	CYF	EJL	CCO NO.48

REVISIONS

CONTRACT CHANGE ORDER NO. 48 S1
SHEET 12 OF 67

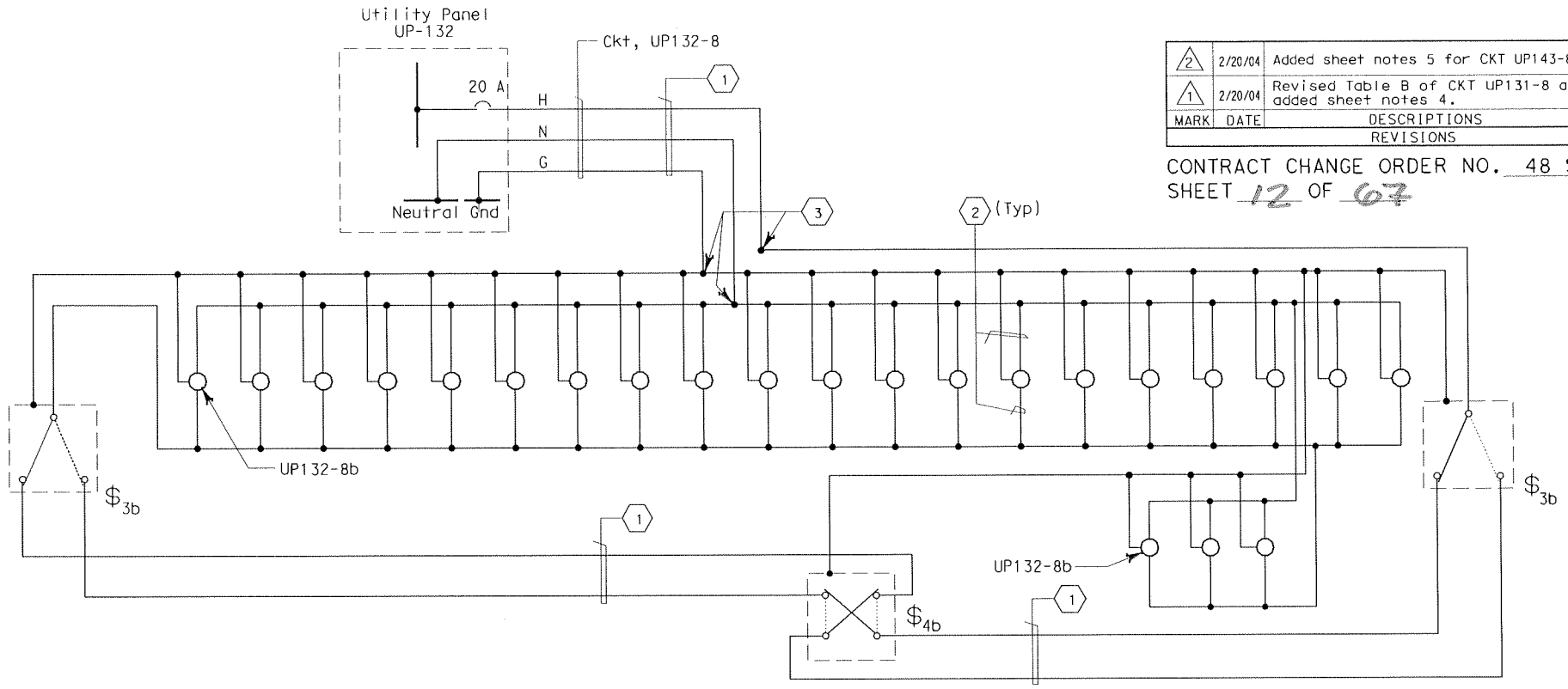

120 V GIRDER LIGHTING
(SHOWN FOR CIRCUIT UP132-8,
SEE TABLE A FOR OTHER CIRCUITS)

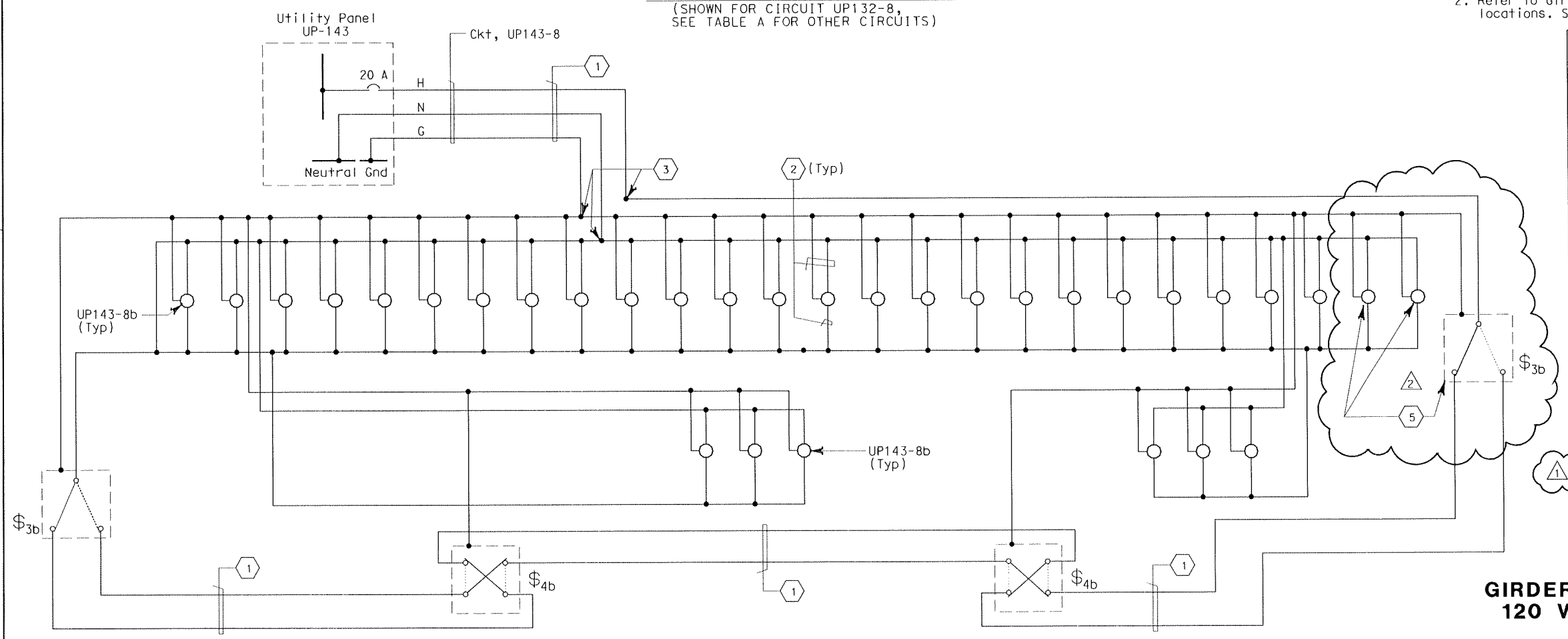

120 V GIRDER LIGHTING
(SHOWN FOR CIRCUIT UP143-8,
SEE TABLE B FOR OTHER CIRCUITS)

SHEET NOTES:

1. Use #8 AWG single conductors for circuits UP131-8, UP137-8, and UP143-8. Use #10 AWG single conductors for all other circuits.
2. #10 AWG single conductors
3. Conductors spliced inside PB-2A located inside girder.
4. (1) Seven (7) lighting fixtures are located at SAS Superstructure connected to this circuit UP131-8.
5. (2) Applicable for circuit UP143-8 only. Two (2) lighting fixtures and switch shall be installed by Oakland Approach Structure.

NOTES:

1. References:
   - For Utility Panel Schedules, see Sheets EE-203 through EE-211.
   - For Circuit, Conduit and Cable Tray Schedules, see Sheets EE-324 and EE-325.
2. Refer to Girder Level Plans for Lighting switch locations. See sheets EE-61 through EE-80.

TABLE A

Utility Panel No.	Circuit Number	Number of Ltg Fixtures
UP-132	UP132-8	23
UP-133	UP133-8	23
UP-134	UP134-8	21
UP-136	UP136-8	22
UP-137	UP137-8	23
UP-138	UP138-8	21
UP-139	UP139-8	27
UP-140	UP140-8	23
UP-141	UP141-8	22
UP-142	UP142-8	16

TABLE B

Utility Panel No.	Circuit Number	Number of Ltg Fixtures
(1) UP-131	UP131-8	38 (4)
UP-135	UP135-8	26
UP-143	UP143-8	33

DETAILS
GIRDER LEVEL WESTBOUND 120 V WIRING DIAGRAMS
NO SCALE

EE-171

CALCULATED/ DESIGNED BY	IAH	DATE 11/99	REVISED BY EJL
CHECKED BY	TW	5/00	DATE REVISED 2/20/04

DESIGN OVERSIGHT
BEHZAD GOLEMOHAMMADI

STATE OF CALIFORNIA - DEPARTMENT OF TRANSPORTATION
Caltrans

LAST REVISION 00-00-00
DATE PLOTTED => 08-AUG-2006
TIME PLOTTED => 09:18

FOR REDUCED PLANS ORIGINAL SCALE IS IN MILLIMETERS 0 20 40 60 80

DGN FILE =>04-012024_0250R1.dgn
USERNAME =>mhossain

CU 04251 EA 012021

MARK	DATE	DESCRIPTIONS	REV	CK	
2	2/20/04	Added sheet notes 5 for CKT UP243-8.	CYF	EJL	CCO NO.48
1	2/20/04	Revised Table B of CKT UP231-8 and added sheet notes 4.	EJL	EJL	CCO NO.48

REVISIONS

CONTRACT CHANGE ORDER NO. 48 S1
SHEET 13 OF 67

DIST	COUNTY	ROUTE	KILOMETER POST TOTAL PROJECT	SHEET No	TOTAL SHEETS
04	SF, Ala	80	13.9 / 14.3, 0.0 / 1.6	262R1	978

REGISTERED ELECTRICAL ENGINEER 02/20/04 DATE

6-4-01
PLANS APPROVAL DATE

REGISTERED PROFESSIONAL ENGINEER JENS ERLINGSSON No. 8249 Exp. 9/30/06 ELECTRICAL STATE OF CALIFORNIA

PB POWER, Inc.
A Parsons Brinckerhoff Company
303 Second St., Suite 700N
San Francisco, CA 94107-1317

The State of California or its officers or agents shall not be responsible for the accuracy or completeness of electronic copies of this plan sheet.

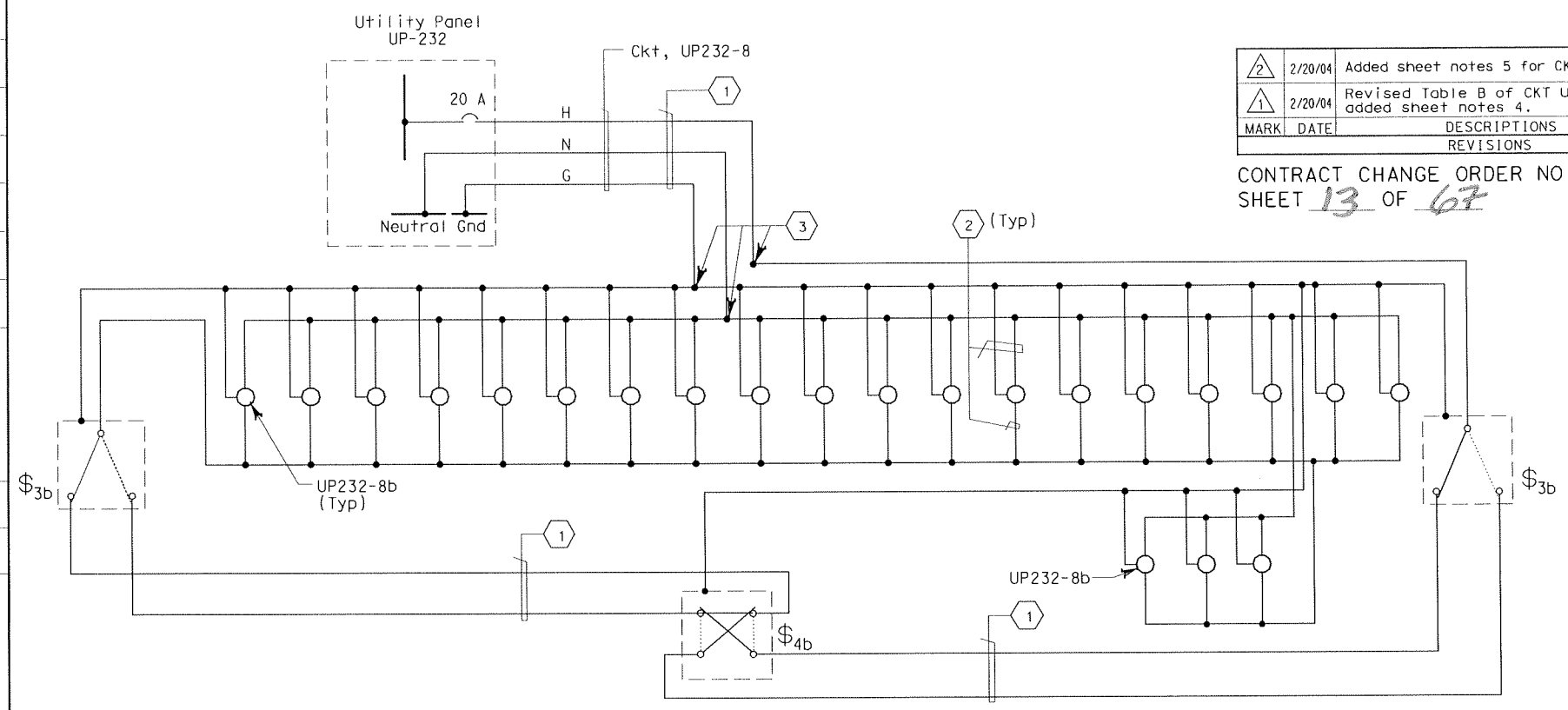

120 V GIRDER LIGHTING

(SHOWN FOR CIRCUIT UP232-8,
SEE TABLE A FOR OTHER CIRCUITS)

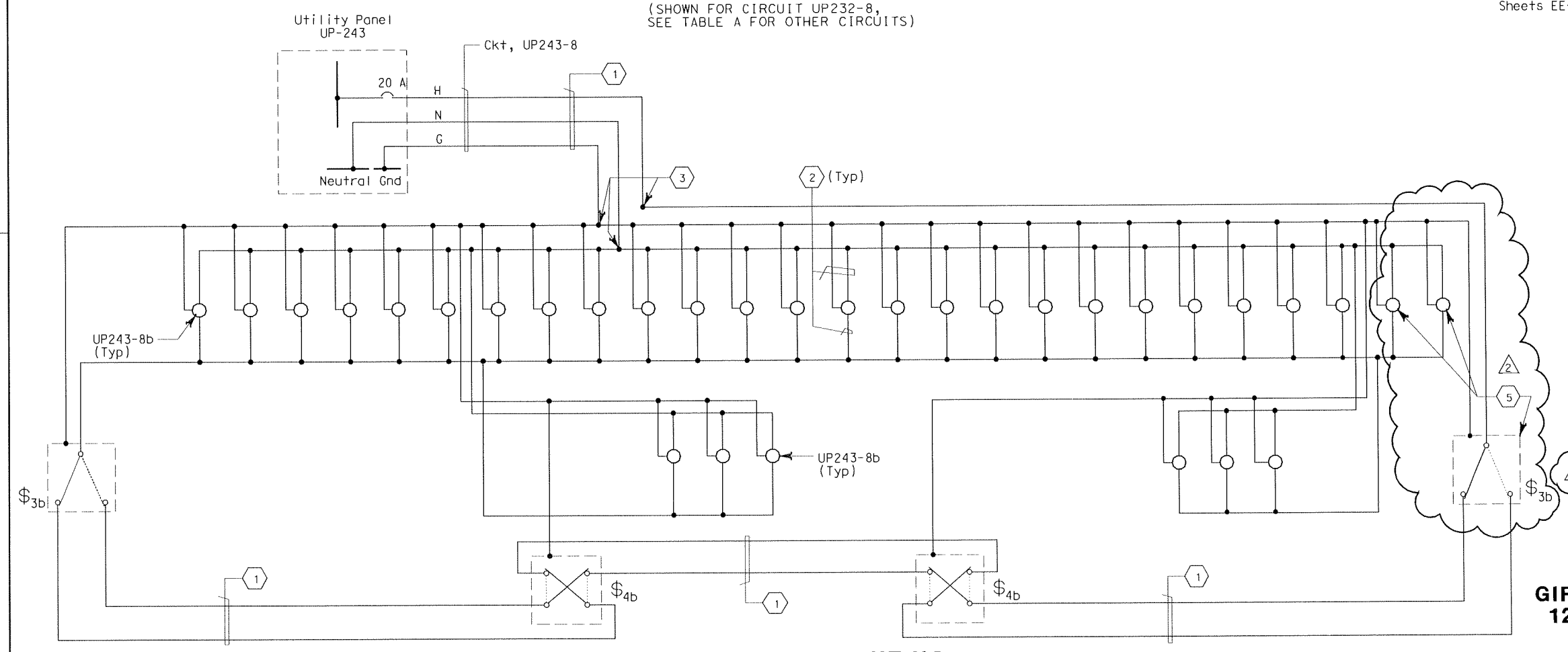

120 V GIRDER LIGHTING

(SHOWN FOR CIRCUIT UP243-8,
SEE TABLE B FOR OTHER CIRCUITS)

SHEET NOTES:

1. Use #8 AWG single conductors for circuits UP231-8, UP237-8, and UP243-8. Use #10 AWG single conductors for all other circuits.
2. #10 AWG single conductors
3. Conductors spliced inside PB-2A located inside girder.
4. (1) Seven (7) lighting fixtures are located at SAS Superstructure connected to this circuit UP131-8.
5. (2) Applicable for circuit UP243-8 only. Two (2) lighting fixtures and switch shall be installed by Oakland Approach Structure.

NOTES:

1. References:
   - For Utility Panel Schedules, see Sheets EE-217 through EE-224
   - For Circuit, Conduit and Cable Tray Schedules, see Sheets EE-327 and EE-328.
2. Refer to Girder Level Plans for switch locations. See Sheets EE-81 through EE-100.

TABLE A

Utility Panel No.	Circuit Number	Number of Ltg Fixtures
UP-232	UP232-8	22
UP-233	UP233-8	23
UP-234	UP234-8	21
UP-236	UP236-8	22
UP-237	UP237-8	23
UP-238	UP238-8	21
UP-239	UP239-8	24
UP-240	UP240-8	26
UP-241	UP241-8	21
UP-242	UP242-8	17

TABLE B

Utility Panel No.	Circuit Number	Number of Ltg Fixtures
UP-231	UP231-8	37
UP-235	UP235-8	26
UP-243	UP243-8	33

DETAILS
GIRDER LEVEL EASTBOUND 120 V WIRING DIAGRAMS

NO SCALE

EE-184

CALCULATED/DESIGNED BY	BP	DATE 11/99	REVISED BY	EJL
CHECKED BY	TW	5/00	DATE REVISED	2/20/04

DESIGN OVERSIGHT
BEHZAD GOLEMOHAMMADI

STATE OF CALIFORNIA - DEPARTMENT OF TRANSPORTATION
Caltrans

LAST REVISION 00-00-00
DATE PLOTTED => 08-AUG-2006
TIME PLOTTED => 09:19

FOR REDUCED PLANS ORIGINAL SCALE IS IN MILLIMETERS 0 20 40 60 80

DGN FILE =>04-012024_0262R1.dgn
USERNAME =>mhossain

CU 04251 | EA 012021

DIST	COUNTY	ROUTE	KILOMETER POST TOTAL PROJECT	SHEET No	TOTAL SHEETS
04	SF, Ala	80	13.9/14.3, 0.0/1.6	313R1	978

Caltrans Metric

REGISTERED ELECTRICAL ENGINEER 03/02/01 DATE

6-4-01
PLANS APPROVAL DATE

REGISTERED PROFESSIONAL ENGINEER No. 8249 Exp. 9/30/02 ELECTRICAL STATE OF CALIFORNIA

PB POWER, Inc.
A Parsons Brinckerhoff Company
303 Second St., Suite 700N
San Francisco, CA 94107-1317

The State of California or its officers or agents shall not be responsible for the accuracy or completeness of electronic copies of this plan sheet.

Caltrans now has a web site! To get to the web site, go to: http://www.dot.ca.gov

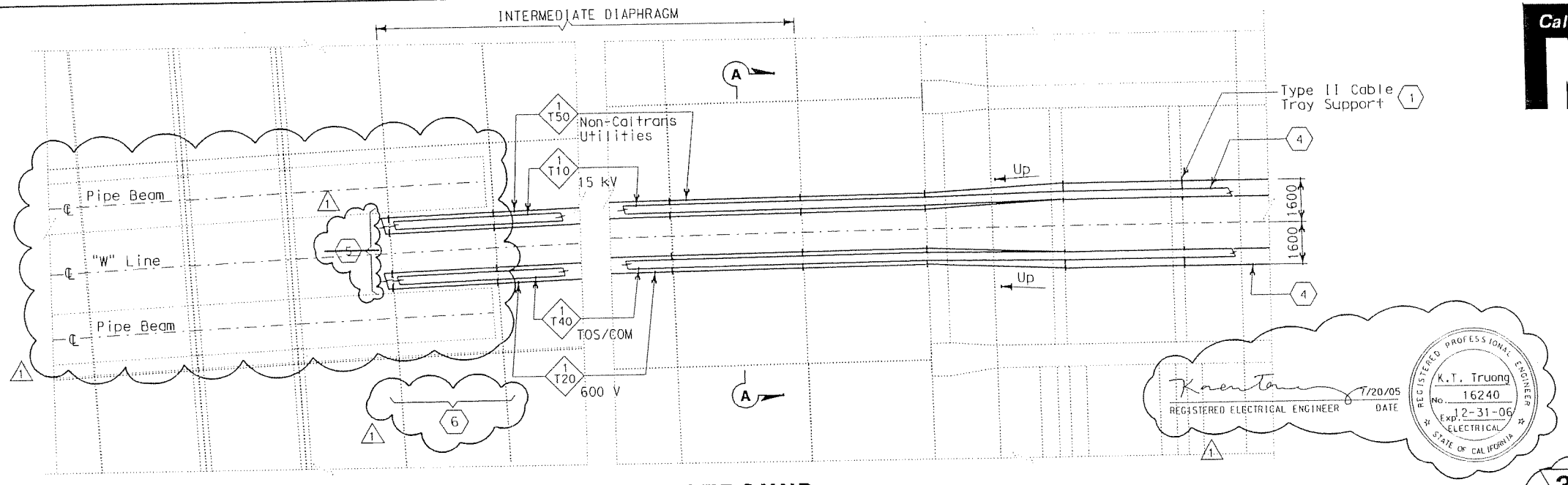

CABLE TRAY PLAN - WESTBOUND

EASTBOUND - OPPOSITE HAND
SCALE: 1:100

SHEET NOTES:

1. For Type II cable tray support, see Structure drawing Shee AS-24.
2. For Embed plate detail connections to cable tray support, see Sheet AS-13 and AS-24.
3. Field weld cable tray support to end plate of steel box girder.
4. Cable trays, Continued on Sheet EE-61 for Westbound and Sheet EE-81 for Eastbound.
5. ~~Continued to Hinge A, for details see Sheet EE-295 for Westbound and EE-300 for Eastbound.~~
6. Do not install cable tray in this area, 750 mm beyond edge of pipe beam. Store this cable tray inside segment.

3

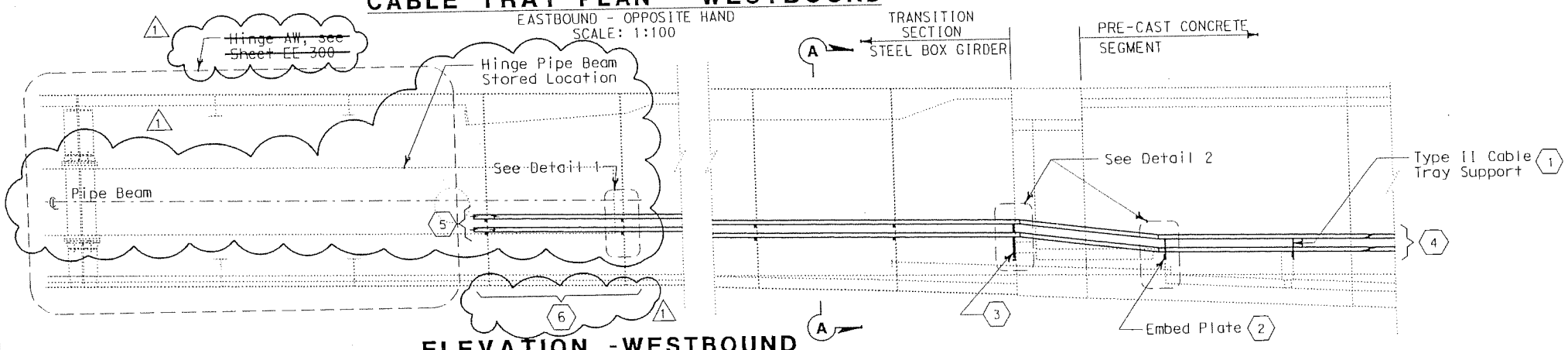

ELEVATION -WESTBOUND

EASTBOUND - OPPOSITE HAND
SCALE: 1:100

MATERIAL LIST

Item No.	Description
A	Strut channel, 41 mm x 41 mm
B	Strut channel angle fitting
C	Hex bolt, nuts and lockwashers
D	Strut channel spring nut, lockwasher and hex bolt
E	Cable tray clamp with hardwares

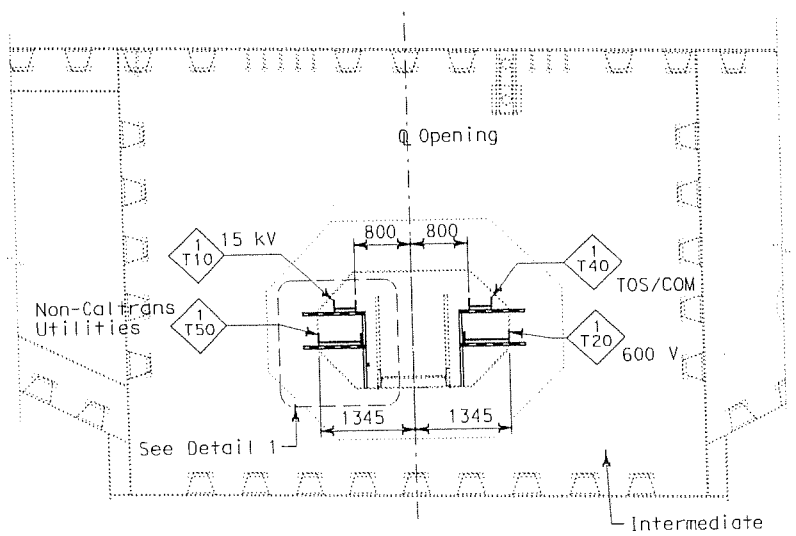

SECTION A-A

SHOWN FOR WESTBOUND
EASTBOUND - OPPOSITE HAND
SCALE: 1:50

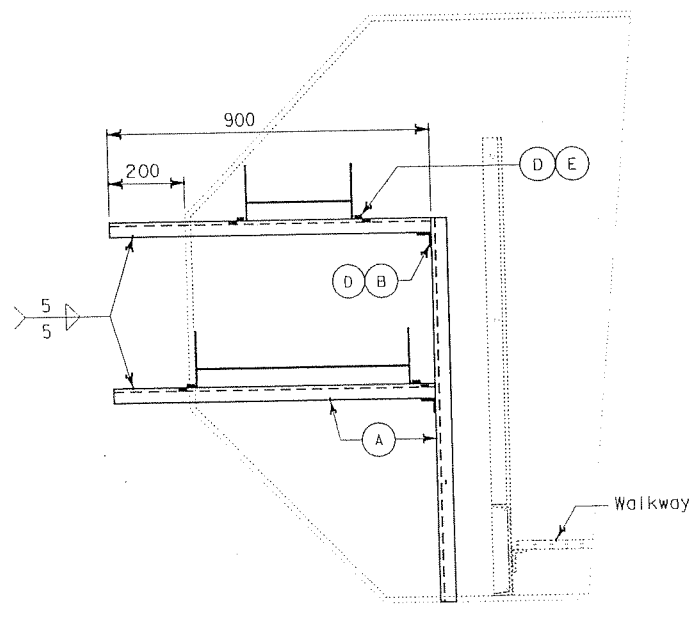

DETAIL 1

SCALE: 1:10

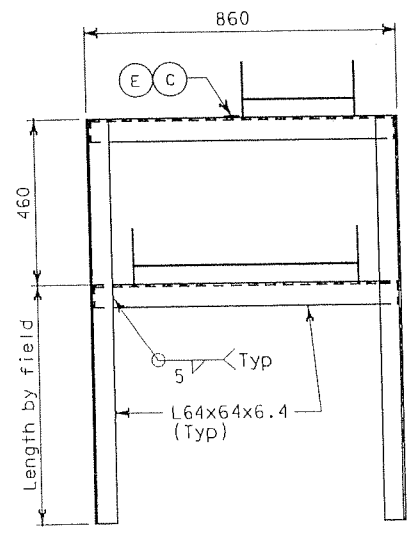

DETAIL 2

CABLE TRAY SUPPORT
SCALE: 1:10

MARK	DATE	DESCRIPTIONS	REV	CK	
1	07/20/05	Shown hinge pipe beam stored location. Deleted sheet note 5 and added sheet note 6.	MH	KT	CCO NO.48

REVISIONS

CONTRACT CHANGE ORDER NO. 48 S1
SHEET 14 OF 67

DETAILS
TYPICAL GIRDER CABLE TRAY AT TRANSITION SECTION

SCALE AS NOTED

3 ADDED PER ADDENDUM NO. 3 DATED OCTOBER 2, 2001

EE-264

DATE	REVISED BY	DATE	REVISED
1/01	IAH	2/01	EJL

CALCULATED/DESIGNED BY IAH
CHECKED BY EJL

DESIGN OVERSIGHT
BEHZAD GOLEMOHAMMADI

STATE OF CALIFORNIA - DEPARTMENT OF TRANSPORTATION
Caltrans

FOR REDUCED PLANS ORIGINAL SCALE IS IN MILLIMETERS 0 20 40 60 80

DGN FILE =>04-012024_0313R1.dgn
USERNAME =>mhossain

CU 04251 EA 012021

LAST REVISION 00-00-00
DATE PLOTTED => 29-JUL-2005
TIME PLOTTED => 08:54

DIST	COUNTY	ROUTE	KILOMETER POST TOTAL PROJECT	SHEET No	TOTAL SHEETS
04	SF, Ala	80	0.0 / 1.6	340A R1	978

Caltrans Metric

Jens Erlingsson 04/18/03
REGISTERED ELECTRICAL ENGINEER DATE

6-4-01
PLANS APPROVAL DATE

REGISTERED PROFESSIONAL ENGINEER JENS ERLINGSSON No. 8249 Exp. 9/30/06 ELECTRICAL STATE OF CALIFORNIA

PB POWER, Inc.
A Parsons Brinckerhoff Company
303 Second St., Suite 700N
San Francisco, CA 94107-1317

The State of California or its officers or agents shall not be responsible for the accuracy or completeness of electronic copies of this plan sheet.

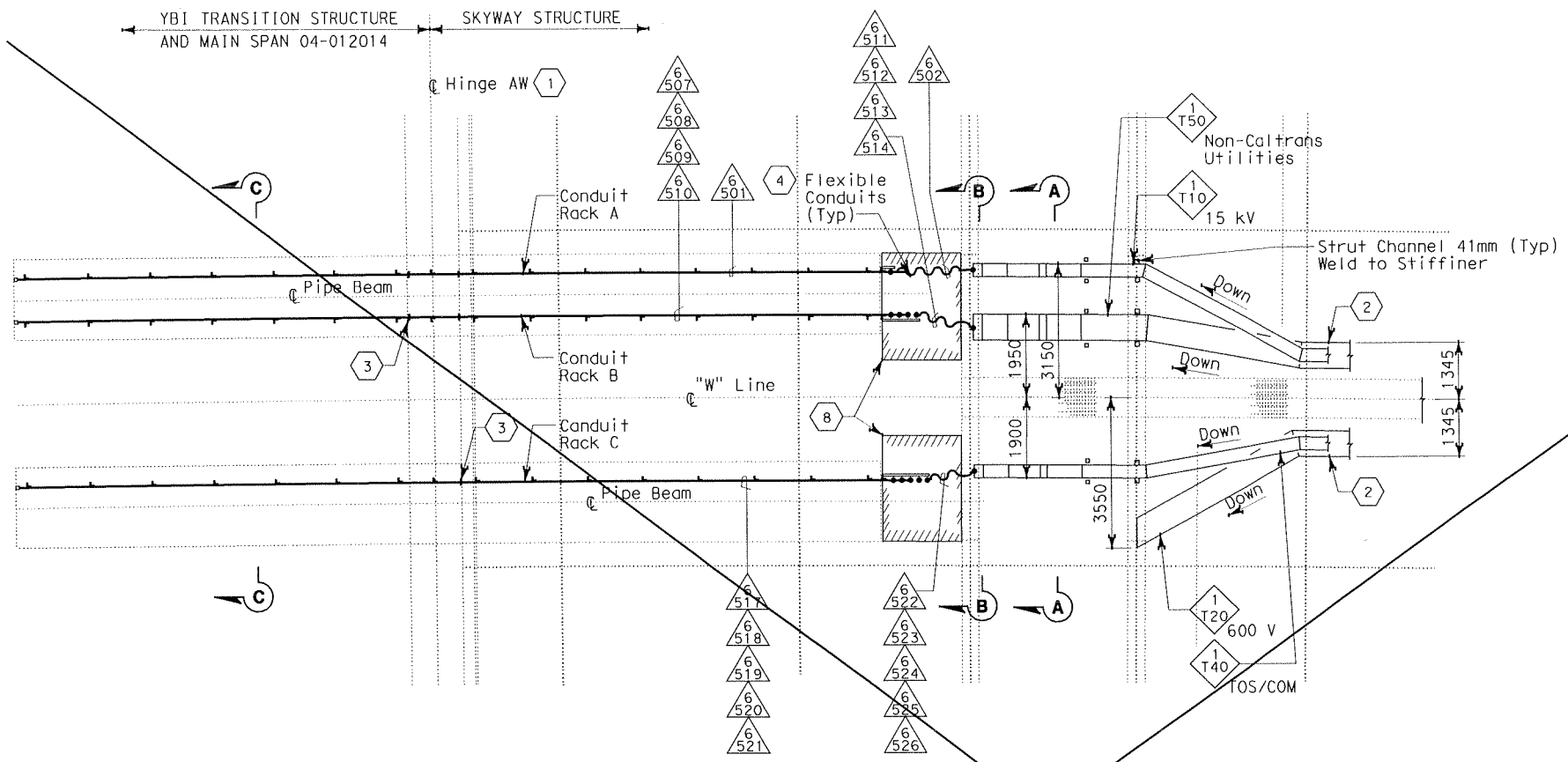

PLAN - HINGE AW

SCALE: 1:75

DELETED

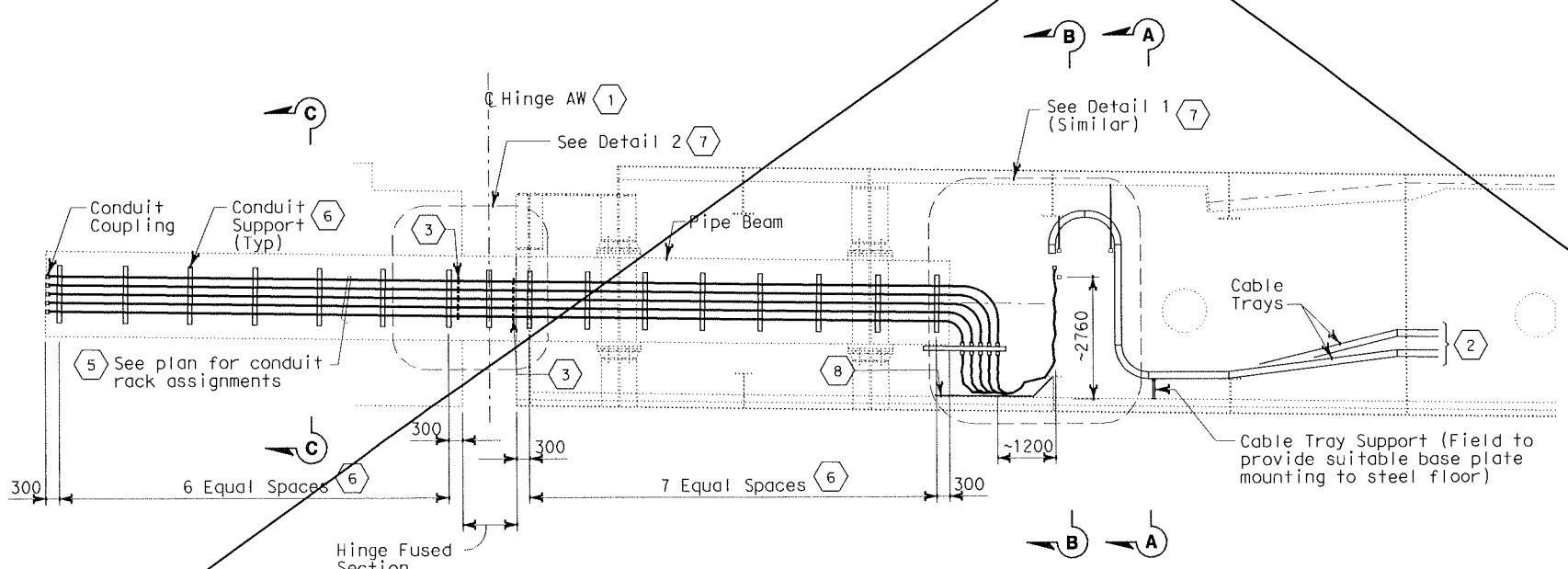

ELEVATION - HINGE AW

AT CENTERLINE OF PIPE BEAM
SCALE: 1:75

SHEET NOTES:

(1) Hinge AW electrical design is based on the maximum expansion joint movement opening of 1243 mm.

(2) Continued on Sheet EE-61. For details at transition section, see Sheet EE-264.

(3) Provide expansion/deflection couplings at each end of the hinge fused area.

(4) Arrange and group the flexible 103 mm conduits to maintain a minimum voltage level separation of 460 mm.

(5) Conduits through Pipe Beam
Rack A - (1) 103 mm for 15 kV and (1) conduit for 120 V circuit-size varies.
Rack B - (4) 103 mm for Non-Caltrans Utilities.
Rack C - (5) 103 mm for TOS/COM.

(6) Conduit support not to exceed 1500 mm apart.

(7) For Details 1 and 2, see Sheet EE-305. Field to provide suitable hanger rod attachment to steel.

(8) Field to provide a level floor area where flexible conduits are located. Required size shall be determined and approved by the Resident Engineer.

NOTES:

1. Minimum radius of cable tray fittings shall be 610 mm.
2. Minimum conduit radius of 103 mm conduits shall be 610 mm.
3. Cables/circuits passing through the hinge locations shall be provided with cable identification tag at both ends of Hinge. See Circuit Schedules EE-324.
4. For additional work related not shown on this drawing, see Electrical Special Provisions.
5. References:
   - For Girder Level Westbound plans, see Sheets EE-61 to EE-77.
   - For Typical Girder Embed plans and sections, see EE-313 and EE-314.
   - For Typical Girder Cable Tray at Transition section, see Sheet EE-264.
6. Sections A-A and B-B cable tray supports are similar except attachment to structure is steel. For details of section C-C conduit support inside the pipe beam, see Sheet EE-306.

MARK	DATE	DESCRIPTIONS	REV	CK	
1	04/18/03	Drawing deleted. Superceded by dwg. EE-295A and EE-295B.	EJL	CYF	CCO NO.48

REVISIONS

CONTRACT CHANGE ORDER NO. 48 S1
SHEET 15 OF 67

DETAILS
HINGE AW

SCALE AS NOTED

EE-295

CALCULATED/ DESIGNED BY	JE	DATE 5/00	REVISED BY	CYF	EJL
CHECKED BY	TW	5/00	DATE REVISED	10/01	4/18/03

DESIGN OVERSIGHT
BEHZAD GOLEMOHAMMADI

STATE OF CALIFORNIA - DEPARTMENT OF TRANSPORTATION
Caltrans

LAST REVISION 00-00-00
DATE PLOTTED => 08-AUG-2006
TIME PLOTTED => 09:21

FOR REDUCED PLANS ORIGINAL SCALE IS IN MILLIMETERS 0 20 40 60 80

DGN FILE =>04-012024_0340AR1.dgn
USERNAME =>mhossain

CU 04251 EA 012021

DIST	COUNTY	ROUTE	KILOMETER POST TOTAL PROJECT	SHEET No	TOTAL SHEETS
04	SF,Ala	80	13.9 / 14.3, 0.0 / 1.6	340A0 R2	978

REGISTERED ELECTRICAL ENGINEER — DATE 05/16/01

6-4-01
PLANS APPROVAL DATE

PB POWER, Inc.
A Parsons Brinckerhoff Company
303 Second St., Suite 700N
San Francisco, CA 94107-1317

REGISTERED PROFESSIONAL ENGINEER — JENS ERLINGSSON — No. 8249 — Exp. 9/30/06 — ELECTRICAL — STATE OF CALIFORNIA

The State of California or its officers or agents shall not be responsible for the accuracy or completeness of electronic copies of this plan sheet.

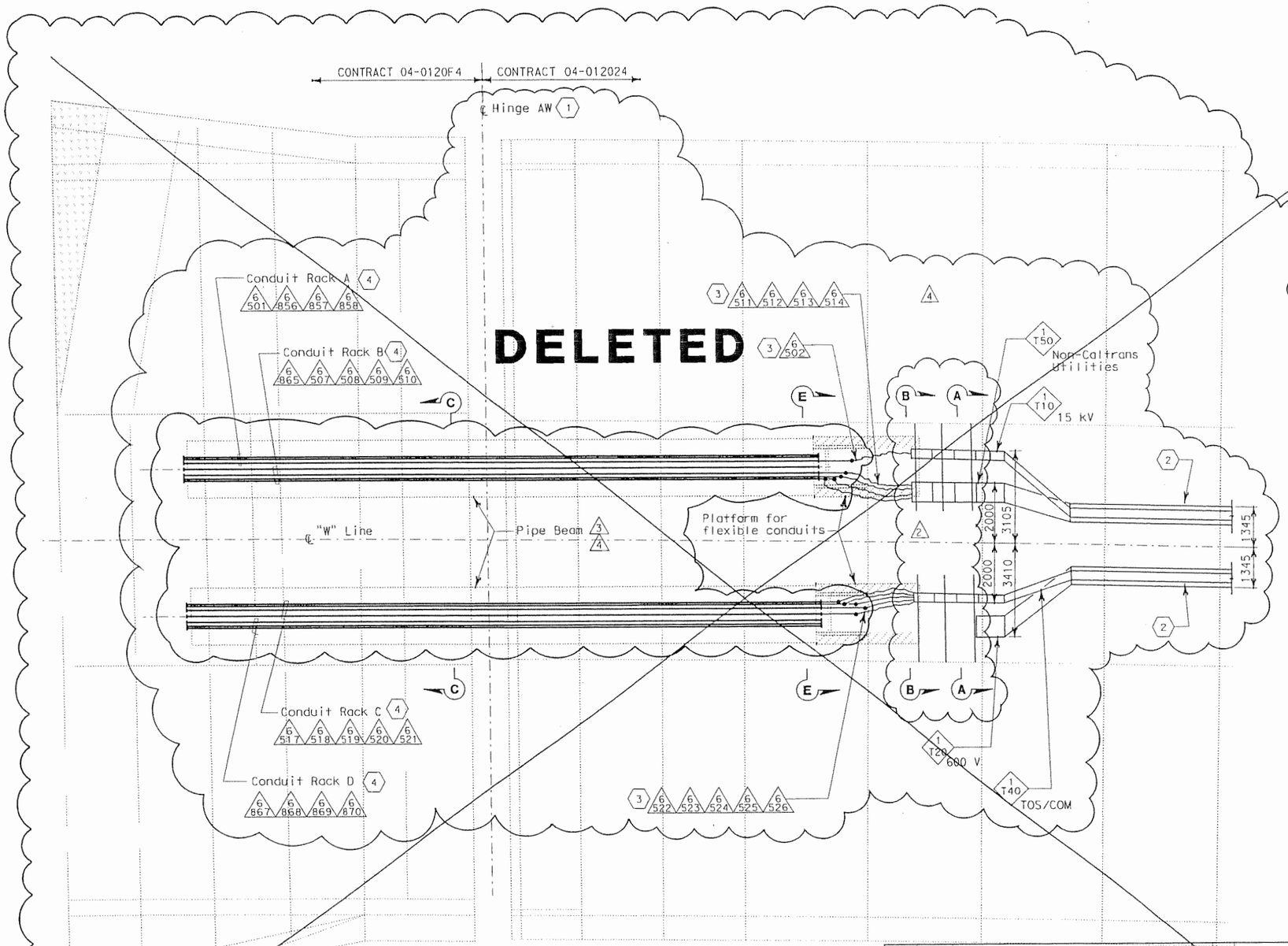

PLAN - HINGE AW

SCALE: 1:75

SHEET NOTES:

(4) (1) ~~Hinge AW electrical design is based on the maximum expansion joint movement opening of 1243 mm.~~

(4) (2) ~~Continued on Sheet EE-61. For details at transition section, see sheet EE-264.~~

(3) Arrange and group the flexible 103 mm conduits to maintain a minimum voltage level separation of 460 mm between systems.

(4) Conduits through pipe beam shall be part of the pipe beam assembly. Conduit shall be welded together to form a continuous conduit inside the pipe beam, length as specifiied. The weld shall be smooth on the outside and free of burrs inside the conduit. Conduit fittings, like coupling, etc. to form a continuous conduit shall not be permitted as alternative.

(4) Pipe Beam and conduits shown in final position. For Electrical Girder Interface, see sheet EE-61.

The intent of this conduit design is to be able to remove the entire length of conduit inside the pipe beam, in case maintenance is required inside the pipe beam assembly.

Rack A - (1) 103 mm for 15 kV
(2) 103 mm for spares
(1) 53 mm for 120 V circuit
Rack B - (1) 103 mm for spare
(4) 103 mm for Non-Caltrans Utilities
Rack C - (5) 103 mm for TOS/COM
Rack D - (4) 103 mm for spares

NOTES:

1. Minimum radius of cable tray fittings shall be 610 mm.
2. Minimum radius of 103 mm conduit bends shall be 610 mm.
3. Cables/circuits passing through the hinge locations shall be provided with cable identification tag at both ends of Hinge. See Circuit Schedules EE-324.
4. For additional work related not shown on this drawing, see Electrical Special Provisions.
5. References:
   - For Girder Level Westbound plans, see sheets EE-61 to EE-77.
   - For Typical Girder Cable Tray at Transition section, see sheet EE-264.

(2) ~~6. Section A-A and B-B see sheet EE-306E.~~ (4)

(2) 7. Section C-C is applicable only for conduit arrangement, see sheet EE-306B.

(2) ~~8. Section E-E is applicable only for conduit arrangement, see Plan Detail 1 and Section E-E of sheet EE-306C.~~ (4)

MARK	DATE	DESCRIPTIONS	REV	CK	
5	07/05/05	Deleted sheet	MH	KT	CCO NO.48
4	2/20/04	Deleted cable trays and conduits. Removed sheet notes 1,2, notes 6 and 8. Revised sheet notes 4.	CYF	EJL	CCO NO.48
3	09/05/03	Revised Pipe Beam.	EJL	CYF	CCO NO.92
2	09/05/03	Revised tray supports and notes 6,7,8.	EJL	CYF	CCO NO.48
1	4/18/03	New Drawing Revised Conduit Design	EJL	CYF	CCO NO.48

REVISIONS

CONTRACT CHANGE ORDER NO. 48 S1
SHEET 16 OF 67

DETAILS
HINGE AW
AS NOTED

(1) EE-295A

CALCULATED/ DESIGNED BY	EJL	DATE 2/03	REVISED BY	EJL	EJL	EJL
CHECKED BY	CYF	2/03	DATE REVISED	4/18/03	9/5/03	2/20/04

DESIGN OVERSIGHT
BEHZAD GOLEMOHAMMADI

STATE OF CALIFORNIA - DEPARTMENT OF TRANSPORTATION
Caltrans

LAST REVISION 00-00-00
DATE PLOTTED => 14-JUL-2005
TIME PLOTTED => 16:34

FOR REDUCED PLANS ORIGINAL SCALE IS IN MILLIMETERS 0 20 40 60 80

DGN FILE =>04-012024_0340A0R2.dgn
USERNAME =>mnassain

CU 04251 | EA 012021

DIST	COUNTY	ROUTE	KILOMETER POST TOTAL	KILOMETER POST PROJECT	SHEET No	TOTAL SHEETS
04	SF, Ala	80	13.9 / 14.3, 0.0 / 1.6		340A1 R4	978

Caltrans Metric

REGISTERED ELECTRICAL ENGINEER — DATE 05/16/01

6-4-01
PLANS APPROVAL DATE

REGISTERED PROFESSIONAL ENGINEER — JENS ERLINGSSON — No. 8249 — Exp. 9/30/06 — ELECTRICAL — STATE OF CALIFORNIA

PB POWER, Inc.
A Parsons Brinckerhoff Company
303 Second St., Suite 700N
San Francisco, CA 94107-1317

The State of California or its officers or agents shall not be responsible for the accuracy or completeness of electronic copies of this plan sheet.

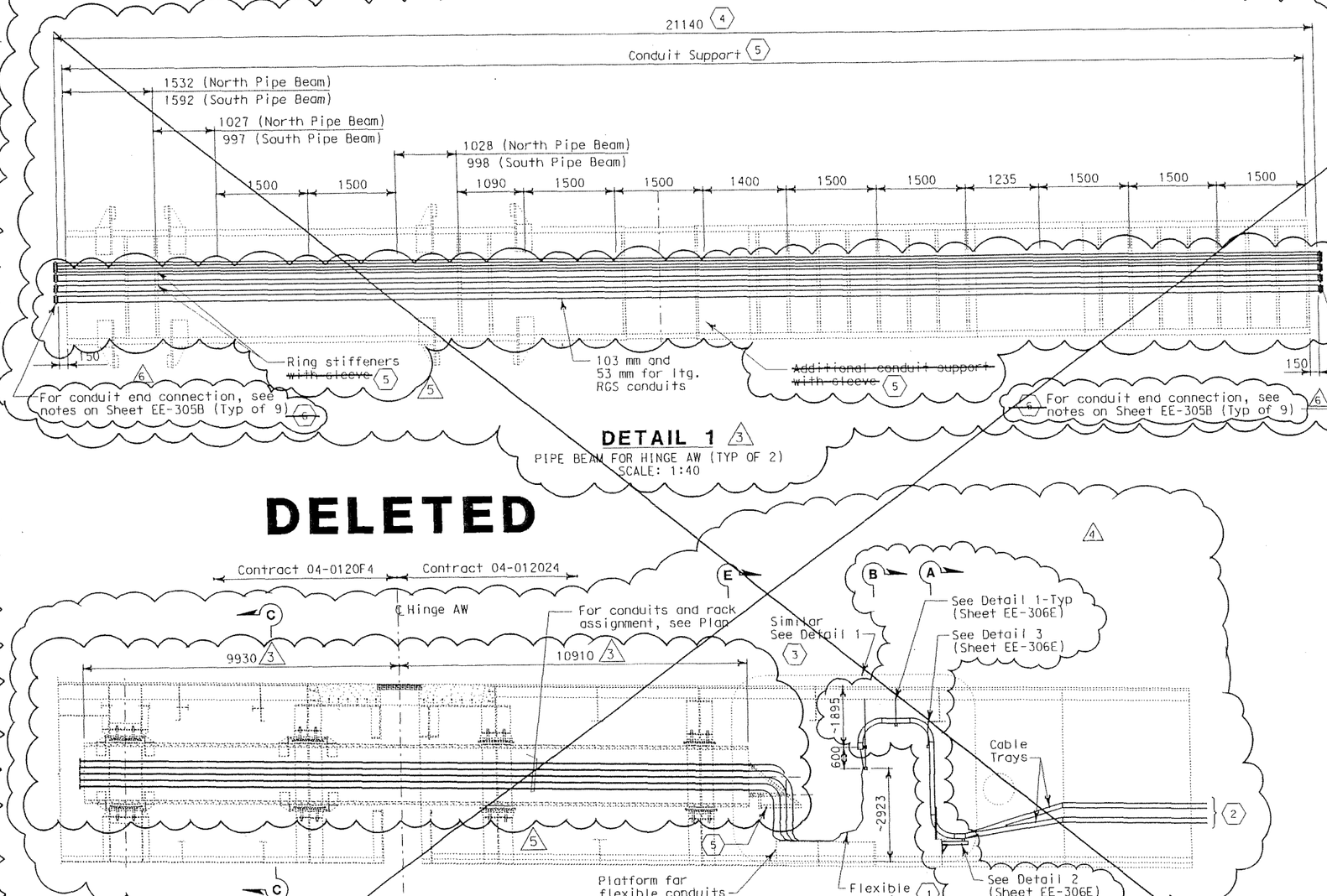

ELEVATION - HINGE AW

AT CENTERLINE OF PIPE BEAM
SCALE: 1:75

REGISTERED ELECTRICAL ENGINEER — DATE 5/31/05 — K.T. Truong — No. 16240 — Exp. 12-31-06 — ELECTRICAL — STATE OF CALIFORNIA

ORIGINAL SIGNED — REGISTERED ELECTRICAL ENGINEER — DATE 10/1/04 — NABEEL F. ABDELRAHMAN — No. 17162 — Exp. 9/30/05 — ELECTRICAL — STATE OF CALIFORNIA

MARK	DATE	DESCRIPTIONS	REV	CK	
6	5/31/05	Revised notes and deleted sheet note 6.	MH	KT	CCO NO.48

REVISIONS

MARK	DATE	DESCRIPTIONS	REV	CK	
6	1/5/05	Deleted sheet.	MH	KT	CCO NO.48
5	7/19/04	Revised pipe beam conduit layout.	VHP		CCO NO.48
4	2/20/04	Deleted cable trays and conduits. Removed sheet notes 1,2,3, notes 6, 8 and 9. Revised sheet notes 4.	CYF	EJL	CCO NO.48
3	09/05/03	Revised Pipe Beam dimensions.	EJL	CYF	CCO NO.92
2	09/05/03	Revised tray supports and notes 6,7,8 & 9.	EJL	CYF	CCO NO.48
1	4/18/03	New Drawing Revised Conduit Design	EJL	CYF	CCO NO.48

REVISIONS

CONTRACT CHANGE ORDER NO. 48 S1
SHEET 17 OF 67

SHEET NOTES:

(4) ~~(1) Hinge AW electrical design is based on the maximum expansion joint movement opening of 1243 mm.~~

(4) ~~(2) Continued on sheet EE-61. For details of transition section, see sheet EE-264.~~

(4) ~~(3) For Detail 1, see sheet EE-305A. Similar for materials only.~~

(4) Conduits through pipe beam shall be part of the pipe beam assembly. Conduit shall be welded together to form a continuous conduit inside the pipe beam, length as specifiied. The weld shall be smooth on the outside and free of burrs inside the conduit. Conduit fittings, like coupling, etc. to form a continuous conduit shall not be permitted as alternative.

(4) Pipe Beam and conduits shown in final position. For Electrical Girder Interface, see sheet EE-61.

The intent of this conduit design is to be able to remove the entire length of conduit inside the pipe beam, in case maintenance is required inside the pipe beam assembly.

(5) For conduit supports at pipe beam, see Structure sheets AS-31, AS-32 and AS-33.

(6) ~~(6) For Detail 8, see sheet EE-305B.~~

NOTES:

1. Minimum radius of cable tray fittings shall be 610 mm.
2. Minimum radius of 103 mm conduit bends shall be 610 mm.
3. Cables/circuits passing through the hinge locations shall be provided with cable identification tag at both ends of Hinge. See Circuit Schedules EE-324.
4. For additional work related not shown on this drawing, see Electrical Special Provisions.
5. References:
   - For Girder Level Westbound plans, see sheets EE-61 to EE-77.
   - For Typical Girder Cable Tray at Transition section, see sheet EE-264.

(2) ~~6. For Section A-A and B-B sheet EE-306E.~~ (4)

(2) 7. Section C-C is applicable only for conduit arrangement, see sheet EE-306B.

(2) ~~8. Section E-E is applicable only for conduit arrangement, see Plan Detail 1 and Section E-E of sheet EE-306C.~~

(2) ~~9. For location of welded strut channels, see sheet EE-306E.~~

DETAILS
HINGE AW
SCALE: 1:200

(1) EE-295B

STATE OF CALIFORNIA - DEPARTMENT OF TRANSPORTATION — Caltrans

DESIGN OVERSIGHT — BEHZAD GOLEMOHAMMADI

CALCULATED/DESIGNED BY	DATE 2/03	REVISED BY	DATE REVISED
EJL	2/03	EJL	4/18/03
CHECKED BY	CYF	EJL	9/5/03
		EJL	2/20/04

LAST REVISION 00-00-00 — DATE PLOTTED => 14-JUL-2005 — TIME PLOTTED => 16:34

FOR REDUCED PLANS ORIGINAL SCALE IS IN MILLIMETERS 0 20 40 60 80

DGN FILE =>04-012024_034DA1R4.dgn
USERNAME =>mnossain

CU 04251 — EA 012021

DIST	COUNTY	ROUTE	KILOMETER POST TOTAL PROJECT	SHEET No.	TOTAL SHEETS
04	SF, Alo	80	13.9 / 14.3, 0.0 / 1.6	340A2	978

REGISTERED ELECTRICAL ENGINEER DATE

1-18-06
PLANS APPROVAL DATE

REGISTERED PROFESSIONAL ENGINEER JENS ERLINGSSON No. 8249 Exp. 9/30/06 ELECTRICAL STATE OF CALIFORNIA

PB POWER, Inc.
A Parsons Brinckerhoff Company
303 Second St., Suite 700N
San Francisco, CA 94107-1317

The State of California or its officers or agents shall not be responsible for the accuracy or completeness of electronic copies of this plan sheet.

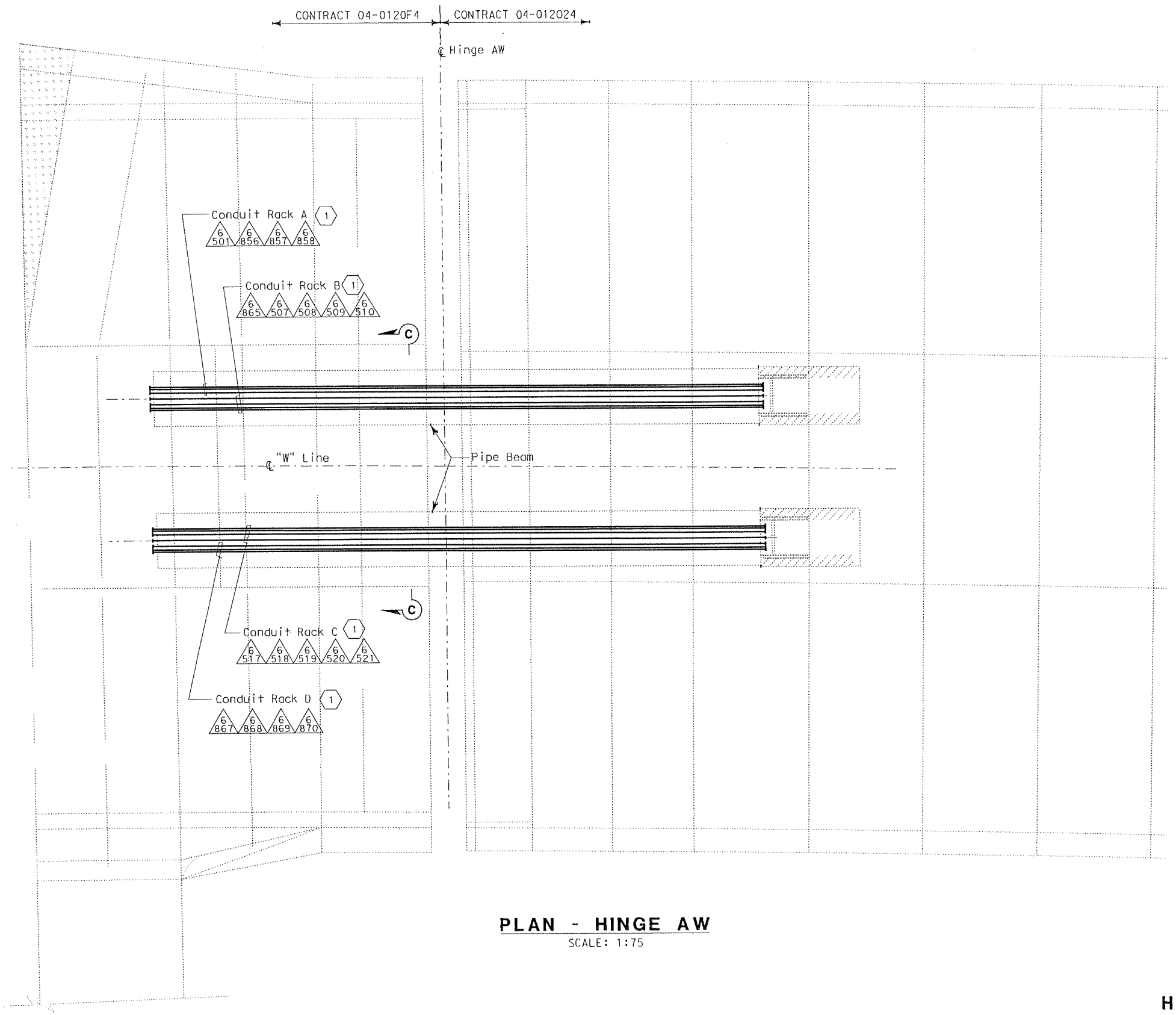

PLAN - HINGE AW

SCALE: 1:75

THIS PLAN ACCURATE FOR CONDUIT AND TRAY SCHEDULE ONLY

SHEET NOTES:

(1) Conduits through pipe beam shall be part of the pipe beam assembly. Conduit shall be welded together to form a continuous conduit inside the pipe beam, length as specifiied. The weld shall be smooth on the outside and free of burrs inside the conduit. Conduit fittings, like coupling, etc. to form a continuous conduit shall not be permitted as alternative. Pipe Beam and conduits shown in final position. For stored location, see sheet EE-264

The intent of this conduit design is to be able to remove the entire length of conduit inside the pipe beam, in case maintenance is required inside the pipe beam assembly.

Rack A - (1) 103 mm for 15 kV
(2) 103 mm for spares
(1) 53 mm for 120 V circuit
Rack B - (1) 103 mm for spare
(4) 103 mm for Non-Caltrans Utilities
Rack C - (5) 103 mm for TOS/COM
Rack D - (4) 103 mm for spares

NOTES:

1. Section C-C is applicable only for conduit arrangement, see sheet EE-306B.

MARK	DATE	DESCRIPTIONS	REV	CK	
1	1/4/06	New Drawing Provided Conduit Schedule	MH	WBH	CCO NO.48

REVISIONS

CONTRACT CHANGE ORDER NO. 48 S1
SHEET 18 OF 67

DETAILS
HINGE AW CONDUIT AND TRAY SCHEDULE

SCALE AS NOTED

EE-295C

CALCULATED/DESIGNED BY	EJL	DATE 2/03	REVISED BY	EJL	EJL	EJL
CHECKED BY	CYF	2/03	DATE REVISED	4/18/03	9/5/03	2/20/04

DESIGN OVERSIGHT
BEHZAD GOLEMOHAMMADI

STATE OF CALIFORNIA - DEPARTMENT OF TRANSPORTATION
Caltrans

LAST REVISION 00-00-00
DATE PLOTTED => 14-MAR-2006
TIME PLOTTED => 13:17

FOR REDUCED PLANS ORIGINAL SCALE IS IN MILLIMETERS 0 20 40 60 80

DGN FILE =>04-012024_034042.dgn
USERNAME =>mhossain

CU 04251 EA 012021

DIST	COUNTY	ROUTE	KILOMETER POST TOTAL PROJECT	SHEET No	TOTAL SHEETS
04	SF, Ala	80	13.9 / 14.3, 0.0 / 1.6	340B R1	978

Jens Erlingsson 04/18/03
REGISTERED ELECTRICAL ENGINEER DATE

6-4-01
PLANS APPROVAL DATE

REGISTERED PROFESSIONAL ENGINEER JENS ERLINGSSON No. 8249 Exp. 9/30/06 ELECTRICAL STATE OF CALIFORNIA

PB POWER, Inc.
A Parsons Brinckerhoff Company
303 Second St., Suite 700N
San Francisco, CA 94107-1317

The State of California or its officers or agents shall not be responsible for the accuracy or completeness of electronic copies of this plan sheet.

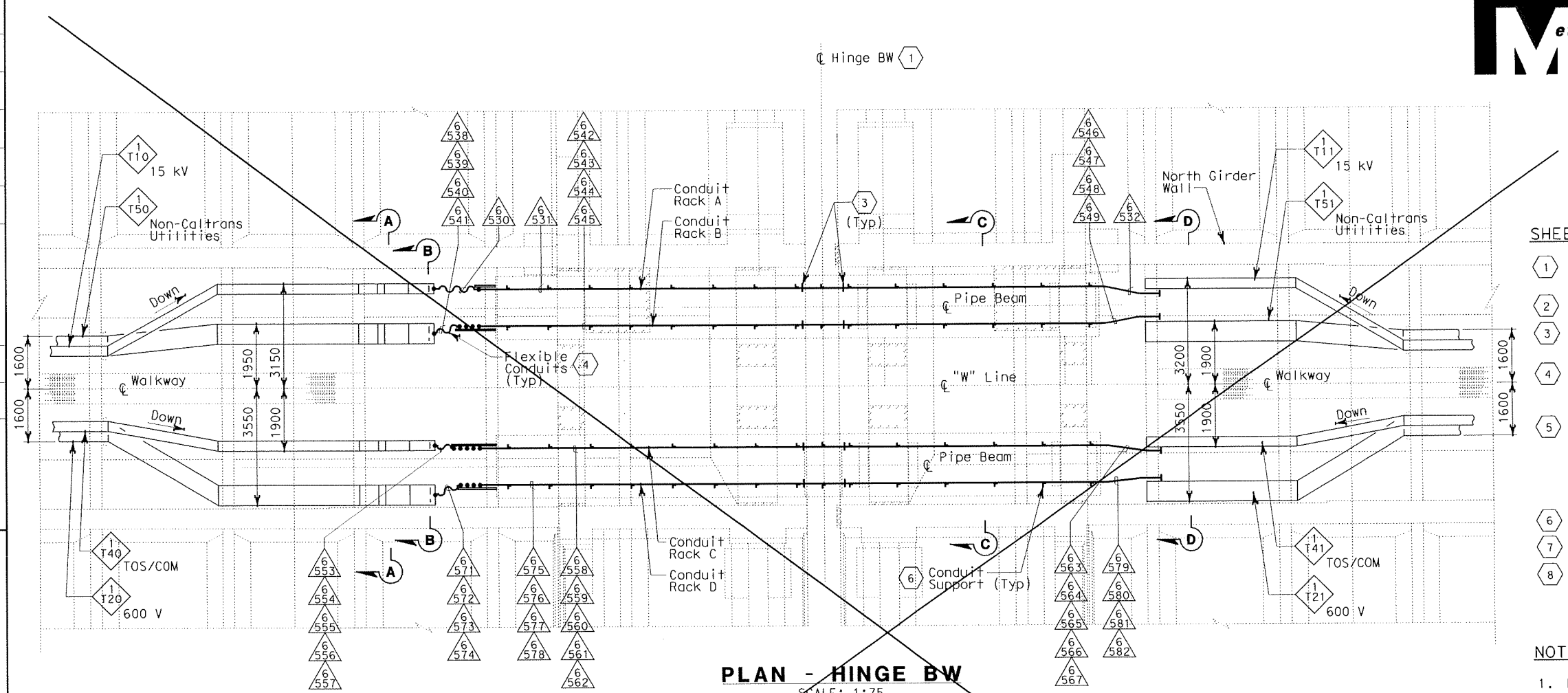

PLAN - HINGE BW

SCALE: 1:75

DELETED

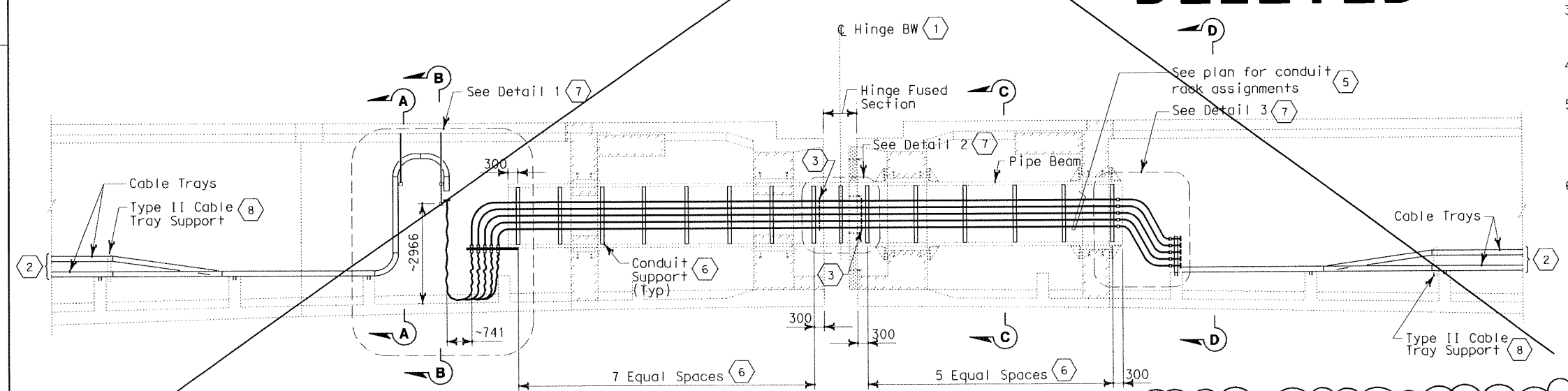

ELEVATION - HINGE BW

AT CENTERLINE OF PIPE BEAM
SCALE: 1:75

SHEET NOTES:

(1) Hinge BW electrical design is based on the maximum expansion joint movement opening of 959 mm.

(2) Continued on Sheet EE-66.

(3) Provide expansion/deflection couplings at each end of the hinge fused area.

(4) Arrange and group the flexible 103 mm conduits to maintain a minimum voltage level separation of 460 mm.

(5) Conduits through Pipe Beam
Rack A - (1) 103 mm for 15 kV and (1) conduit for 120 V circuit-size varies
Rack B - (4) 103 mm for Non-Caltrans Utilities.
Rack C - (5) 103 mm for TOS/COM.
Rack D - (4) 103 mm for 600 V.

(6) Conduit support not to exceed 1500 mm apart.

(7) For Details 1, 2 and 3 see Sheet EE-305.

(8) For details of Type II cable tray support, see Structure Sheet AS-24.

NOTES:

1. Minimum radius of cable tray fittings shall be 610 mm.
2. Minimum conduit radius of 103 mm conduits shall be 610 mm.
3. Cables/circuits passing through the hinge locations shall be provided with cable identification tag at both ends of Hinge. See Circuit Schedules EE-324.
4. For additional work related not shown on this drawing, see Electrical Special Provisions.
5. References:
   - For Girder Level Westbound plans, see Sheets EE-61 to EE-77.
   - For Typical Girder Embed plans and sections, see EE-313 and EE-314.
6. For Sections A-A, B-B, C-C and D-D, see Sheet EE-306.

MARK	DATE	DESCRIPTIONS	REV	CK	
1	04/18/03	Drawing deleted. Superceded by dwg. EE-296A and EE-296B.	EJL	CYF	CCO NO.48

REVISIONS

CONTRACT CHANGE ORDER NO. 48 S1
SHEET 19 OF 67

1 **DETAILS**
HINGE BW
SCALE AS NOTED

EE-296

CALCULATED/DESIGNED BY	JE	DATE 5/00	REVISED BY	CYF	EJL
CHECKED BY	TW	5/00	DATE REVISED	10/01	4/18/03

DESIGN OVERSIGHT
BEHZAD GOLEMOHAMMADI

STATE OF CALIFORNIA - DEPARTMENT OF TRANSPORTATION
Caltrans

LAST REVISION 00-00-00
DATE PLOTTED => 08-AUG-2006
TIME PLOTTED => 10:26

FOR REDUCED PLANS ORIGINAL SCALE IS IN MILLIMETERS 0 20 40 60 80

DGN FILE =>04-012024_0340BR1.dgn
USERNAME =>mhossain

CU 04251 | EA 012021

DIST	COUNTY	ROUTE	KILOMETER POST TOTAL PROJECT	SHEET No	TOTAL SHEETS
04	SF, Ala	80	13.9 / 14.3, 0.0 / 1.6	340B0	978

Caltrans Metro

REGISTERED ELECTRICAL ENGINEER — 04/18/03 DATE

6-4-01
PLANS APPROVAL DATE

REGISTERED PROFESSIONAL ENGINEER — JENS ERLINGSSON No. 8249 Exp. 9/30/06 ELECTRICAL — STATE OF CALIFORNIA

PB POWER, Inc.
A Parsons Brinckerhoff Company
303 Second St., Suite 700N
San Francisco, CA 94107-1317

The State of California or its officers or agents shall not be responsible for the accuracy or completeness of electronic copies of this plan sheet.

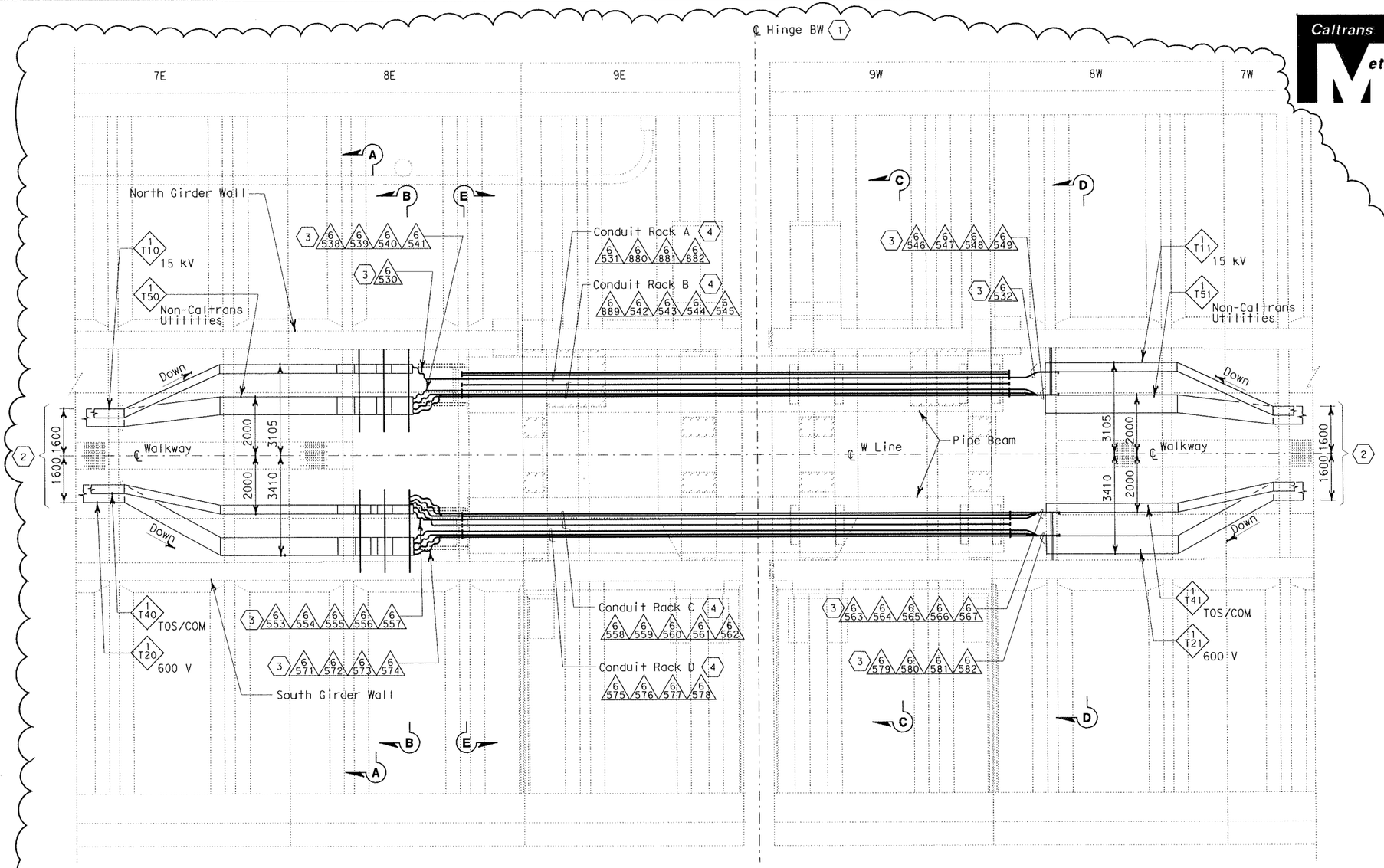

PLAN - HINGE BW

SCALE: 1:75

NOTES:

1. Minimum radius of cable tray fittings shall be 610 mm.
2. Minimum radius of 103 mm conduit bends shall be 610 mm.
3. Cables/circuits passing through the hinge locations shall be provided with cable identification tag at both ends of Hinge. See Circuit Schedules EE-324.
4. For additional work related not shown on this drawing, see Electrical Special Provisions.
5. References:
   - For Girder Level Westbound plans, see sheets EE-61 to EE-77.
   - For Typical Girder Embed plans and sections, see EE-313 and EE-314A.
6. For Sections A-A and B-B, see sheet EE-306A.
7. For Sections C-C and D-D, see sheet EE-306B.
8. For Section E-E, see sheet EE-306C.

SHEET NOTES:

(1) Hinge BW electrical design is based on the maximum expansion joint movement opening of 959 mm.

(2) Continued on Sheet EE-66.

(3) Arrange and group the flexible 103 mm conduits to maintain a minimum voltage level separation of 460 mm between systems.

(4) Conduits through pipe beam shall be part of the pipe beam assembly. Conduit shall be welded together to form a continuous conduit inside the pipe beam, length as specified. The weld shall be smooth from outside and free of burrs inside the conduit. Conduit fittings, like coupling, etc. to form a continuous conduit shall not be permitted as alternative.

The intent of this conduit design is to be able to remove the entire length of conduit inside the pipe beam, in case maintenance is required inside the pipe beam assembly.

Rack A - (1) 103 mm for 15 kV
(2) 103 mm for spares
(1) 53 mm for 120 V circuit
Rack B - (1) 103 mm for spore
(4) 103 mm for Non-Caltrans Utilities
Rack C - (5) 103 mm for TOS/COM
Rack D - (4) 103 mm for 600 V

MARK	DATE	DESCRIPTIONS	REV	CK	
1	04/18/03	New Drawing. Revise conduit design	EJL	CYF	CCO NO.48

REVISIONS

CONTRACT CHANGE ORDER NO. 48 S1
SHEET 20 OF 67

DETAILS
HINGE BW
SCALE AS NOTED

EE-296A

EJL	4/18/03	EJL	REVISED BY
2/03	2/03	CYF	DATE REVISED

CALCULATED/DESIGNED BY EJL
CHECKED BY CYF

DESIGN OVERSIGHT
BEHZAD GOLEMOHAMMADI

STATE OF CALIFORNIA - DEPARTMENT OF TRANSPORTATION
Caltrans

LAST REVISION 00-00-00
DATE PLOTTED => 08-AUG-2006
TIME PLOTTED => 10:28

FOR REDUCED PLANS ORIGINAL SCALE IS IN MILLIMETERS 0 20 40 60 80

DGN FILE =>04-012024_0340B0.dgn
USERNAME =>mhossain

CU 04251 EA 012021

DIST	COUNTY	ROUTE	KILOMETER POST TOTAL PROJECT	SHEET NO	TOTAL SHEETS
04	SF, Ala	80	13.9 / 14.3, 0.0 / 1.6	340B1 R2	978

Caltrans Metric

REGISTERED ELECTRICAL ENGINEER 05/16/01 DATE

6-4-01
PLANS APPROVAL DATE

REGISTERED PROFESSIONAL ENGINEER JENS ERLINGSSON No. 8249 Exp. 9/30/06 ELECTRICAL STATE OF CALIFORNIA

PB POWER, Inc.
A Parsons Brinckerhoff Company
303 Second St., Suite 700N
San Francisco, CA 94107-1317

The State of California or its officers or agents shall not be responsible for the accuracy or completeness of electronic copies of this plan sheet.

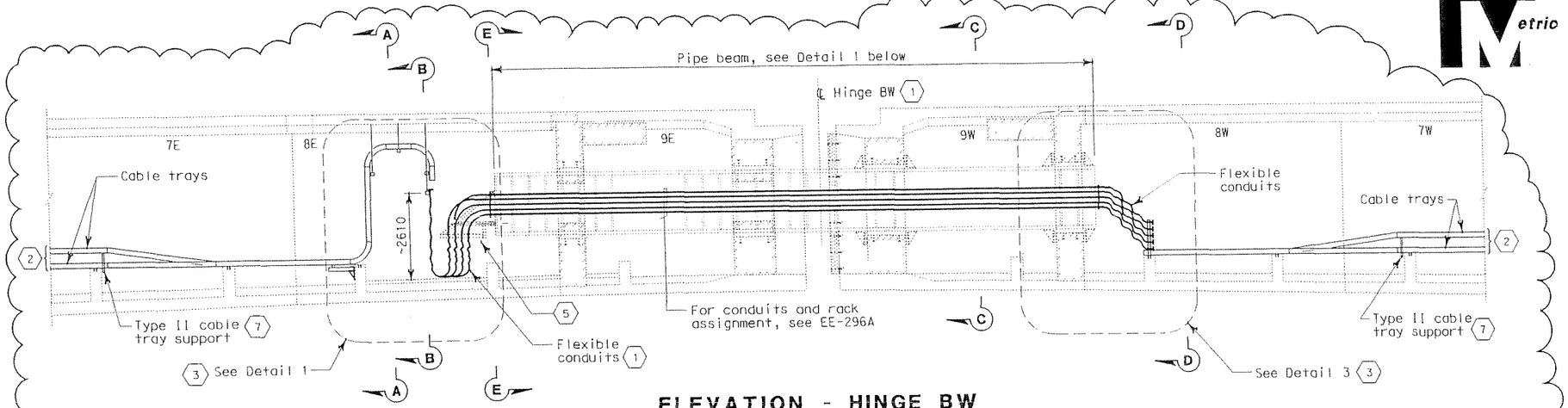

ELEVATION - HINGE BW

AT CENTERLINE OF PIPE BEAM
SCALE: 1:75

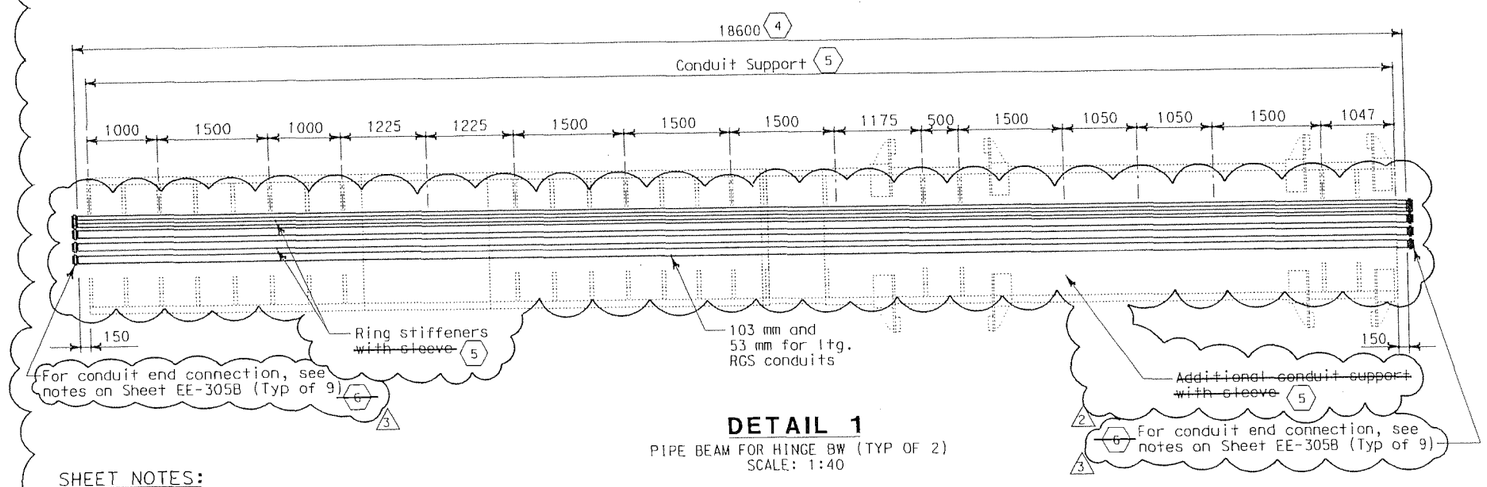

DETAIL 1

PIPE BEAM FOR HINGE BW (TYP OF 2)
SCALE: 1:40

NOTES:

1. Minimum radius of cable tray fittings shall be 610 mm.
2. Minimum radius of 103 mm conduit bends shall be 610 mm.
3. Cables/circuits passing through the hinge locations shall be provided with cable identification tag at both ends of Hinge. See Circuit Schedules EE-324.
4. For additional work related not shown on this drawing, see Electrical Special Provisions.
5. References:
   - For Girder Level Westbound plans, see Sheets EE-61 to EE-77.
   - For Typical Girder Embed plans and sections, see EE-313 and EE-314A.
6. For Sections A-A and B-B, see sheet EE-306A.
7. For Sections C-C and D-D, see sheet EE-306B.
8. For Section E-E, see sheet EE-306C.

SHEET NOTES:

(1) Hinge BW electrical design is based on the maximum expansion joint movement opening of 959 mm.

(2) Continued on Sheet EE-66.

(3) For Details 1 and 3, see sheet EE-305A.

(4) Conduit through pipe beam shall be part of the pipe beam assembly. Conduit shall be welded together to form a continuous conduit inside the pipe beam, length as specified. The weld shall be smooth from outside and free of burrs inside the conduit. Conduit fittings, like coupling, etc. to form a continuous conduit shall not be permitted as alternative. The intent of this conduit design is to be able to remove the entire length of conduit inside the pipe beam, in case maintenance is required inside the pipe beam assembly.

(5) For conduit supports at pipe beam, see Structure Sheets AS-31, AS-32 and AS-33.

~~(6) For Detail 8, see sheet EE-305B.~~ (3)

(7) For Detail of Type II cable tray support, see Structure Sheet AS-24.

ORIGINAL SIGNED 10/1/04
REGISTERED ELECTRICAL ENGINEER DATE

REGISTERED PROFESSIONAL ENGINEER NABEEL F. ABDELRAHMAN No. 17162 Exp. 9/30/05 ELECTRICAL STATE OF CALIFORNIA

(2)

5/31/05
REGISTERED ELECTRICAL ENGINEER DATE

REGISTERED PROFESSIONAL ENGINEER K.T. Truong No. 16240 Exp. 12-31-06 ELECTRICAL STATE OF CALIFORNIA

(3)

MARK	DATE	DESCRIPTIONS	REV	CK	
3	5/31/05	Revised notes and deleted sheet note 6.	MH	KT	CCO NO.48
2	07/19/04	Revised pipe beam conduit layout	VHP		CCO NO.48
1	04/18/03	New Drawing. Revise conduit design	EJL	CYF	CCO NO.48

REVISIONS

CONTRACT CHANGE ORDER NO. 48 S1
SHEET 21 OF 67

(1) **DETAILS**
HINGE BW
SCALE AS NOTED

EE-296B

DESIGN OVERSIGHT
BEHZAD GOLEMOHAMMADI

CALCULATED/DESIGNED BY EJL
CHECKED BY CYF
DATE 2/03
REVISED BY EJL
DATE REVISED 4/18/03

STATE OF CALIFORNIA - DEPARTMENT OF TRANSPORTATION
Caltrans

FILE: I:\13103\WS\pse\electrical\ecn2\13103es1726.dgn
DATE: 10-Jul-01 14:44

LAST REVISION 00-00-00
DATE PLOTTED => 01-AUG-2005
TIME PLOTTED => 11:04

FOR REDUCED PLANS ORIGINAL SCALE IS IN MILLIMETERS 0 20 40 60 80

DGN FILE =>04-012024_0340B1R2.dgn
USERNAME =>mhossain

CU 04251 | EA 012021

DIST	COUNTY	ROUTE	KILOMETER POST TOTAL PROJECT	SHEET No	TOTAL SHEETS
04	SF, Ala	80	13.9 / 14.3, 0.0 / 1.6	340C R1	978

Jens Erlingsson 04/18/03
REGISTERED ELECTRICAL ENGINEER DATE

6-4-01
PLANS APPROVAL DATE

REGISTERED PROFESSIONAL ENGINEER JENS ERLINGSSON No. 8249 Exp. 9/30/06 ELECTRICAL STATE OF CALIFORNIA

PB POWER, Inc.
A Parsons Brinckerhoff Company
303 Second St., Suite 700N
San Francisco, CA 94107-1317

The State of California or its officers or agents shall not be responsible for the accuracy or completeness of electronic copies of this plan sheet.

Caltrans Metric

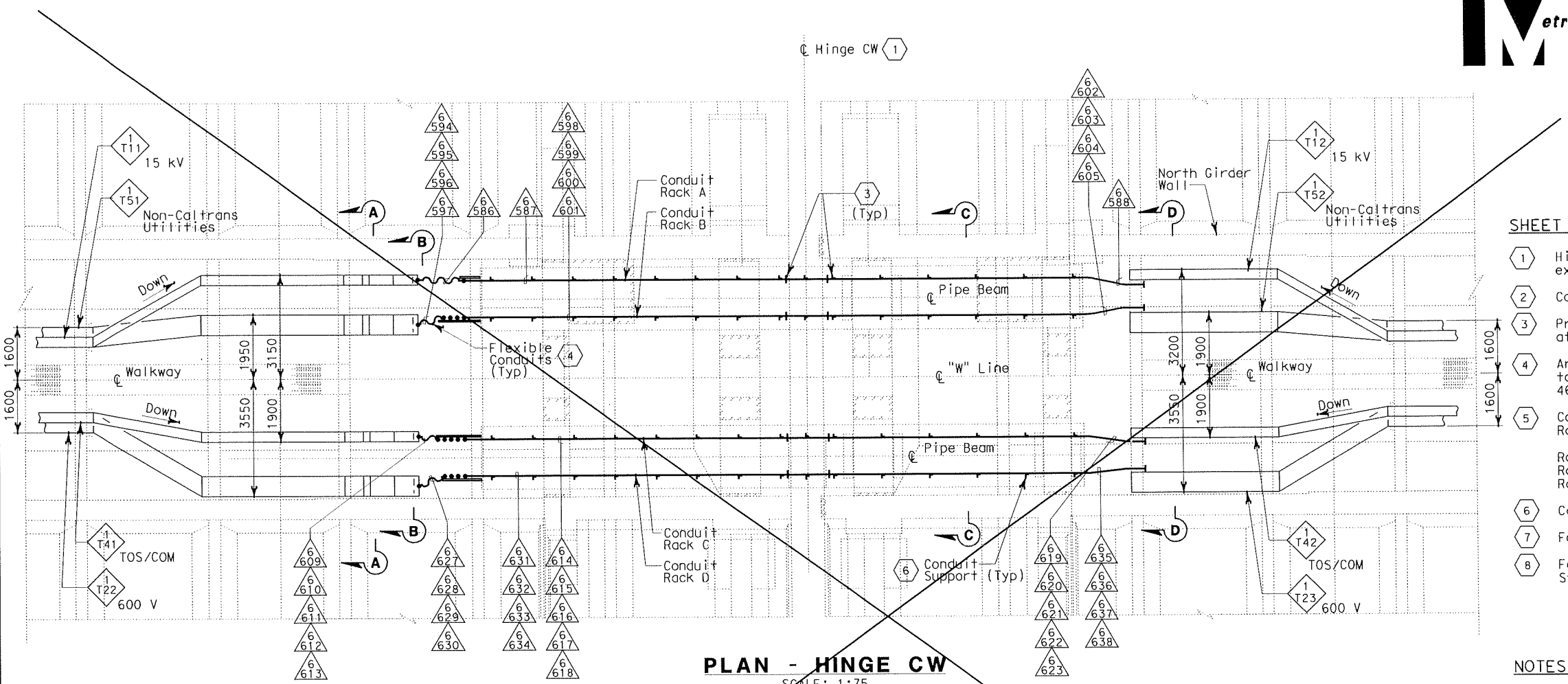

PLAN - HINGE CW

SCALE: 1:75

DELETED

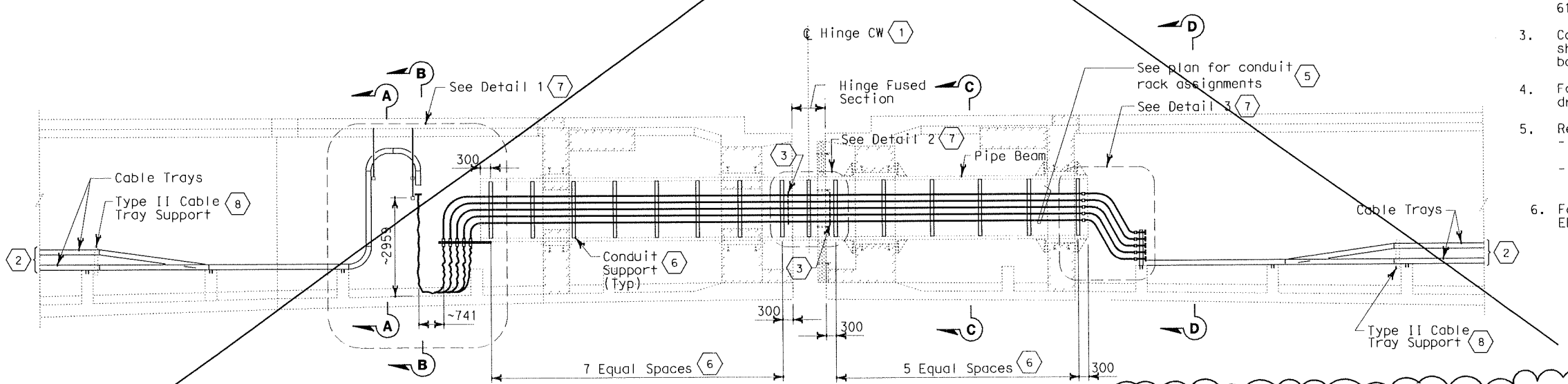

ELEVATION - HINGE CW

AT CENTERLINE OF PIPE BEAM
SCALE: 1:75

SHEET NOTES:

(1) Hinge CW electrical design is based on the maximum expansion joint movement opening of 925 mm.

(2) Continued on Sheet EE-71.

(3) Provide expansion/deflection couplings at each end of the hinge fused area.

(4) Arrange and group the flexible 103 mm conduits to maintain a minimum voltage level separation of 460 mm.

(5) Conduits through Pipe Beam
Rack A - (1) 103 mm for 15 kV and (1) conduit for 120 V circuit-size varies.
Rack B - (4) 103 mm for Non-Caltrans Utilities.
Rack C - (5) 103 mm for TOS/COM.
Rack D - (4) 103 mm for 600 V.

(6) Conduit support not to exceed 1500 mm apart.

(7) For Details 1, 2 and 3 see Sheet EE-305.

(8) For details of Type II cable tray support, see Structure Sheet AS-24.

NOTES:

1. Minimum radius of cable tray fittings shall be 610 mm.
2. Minimum conduit radius of 103 mm conduits shall be 610 mm.
3. Cables/circuits passing through the hinge locations shall be provided with cable identification tag at both ends of Hinge. See Circuit Schedules EE-324.
4. For additional work related not shown on this drawing, see Electrical Special Provisions.
5. References:
   - For Girder Level Westbound plans, see Sheets EE-61 to EE-77.
   - For Typical Girder Embed plans and sections, see EE-313 and EE-314.
6. For Sections A-A, B-B, C-C and D-D, see Sheet EE-306.

MARK	DATE	DESCRIPTIONS	REV	CK	
1	04/18/03	Drawing deleted. Superceded by dwg. EE-297A and EE-297B.	EJL	CYF	CCO NO.48

REVISIONS

CONTRACT CHANGE ORDER NO. 48 S1
SHEET 22 OF 67

1 **DETAILS HINGE CW**
SCALE AS NOTED

EE-297

CALCULATED/DESIGNED BY	JE	DATE 5/00	REVISED BY	CYF	EJL
CHECKED BY	TW	5/00	DATE REVISED	10/01	4/18/03

DESIGN OVERSIGHT
BEHZAD GOLEMOHAMMADI

STATE OF CALIFORNIA - DEPARTMENT OF TRANSPORTATION
Caltrans

LAST REVISION 00-00-00
DATE PLOTTED => 08-AUG-2006
TIME PLOTTED => 10:31

FOR REDUCED PLANS ORIGINAL SCALE IS IN MILLIMETERS 0 20 40 60 80

DGN FILE =>04-012024_0340CR1.dgn
USERNAME =>mhossain

CU 04251 EA 012021

DIST	COUNTY	ROUTE	KILOMETER POST TOTAL PROJECT	SHEET No	TOTAL SHEETS
04	SF, Ala	80	13.9 / 14.3, 0.0 / 1.6	340C0	978

Jens Erlingsson 04/18/03
REGISTERED ELECTRICAL ENGINEER DATE

6-4-01
PLANS APPROVAL DATE

REGISTERED PROFESSIONAL ENGINEER JENS ERLINGSSON No. 8249 Exp. 9/30/06 ELECTRICAL STATE OF CALIFORNIA

PB POWER, Inc.
A Parsons Brinckerhoff Company
303 Second St., Suite 700N
San Francisco, CA 94107-1317

The State of California or its officers or agents shall not be responsible for the accuracy or completeness of electronic copies of this plan sheet.

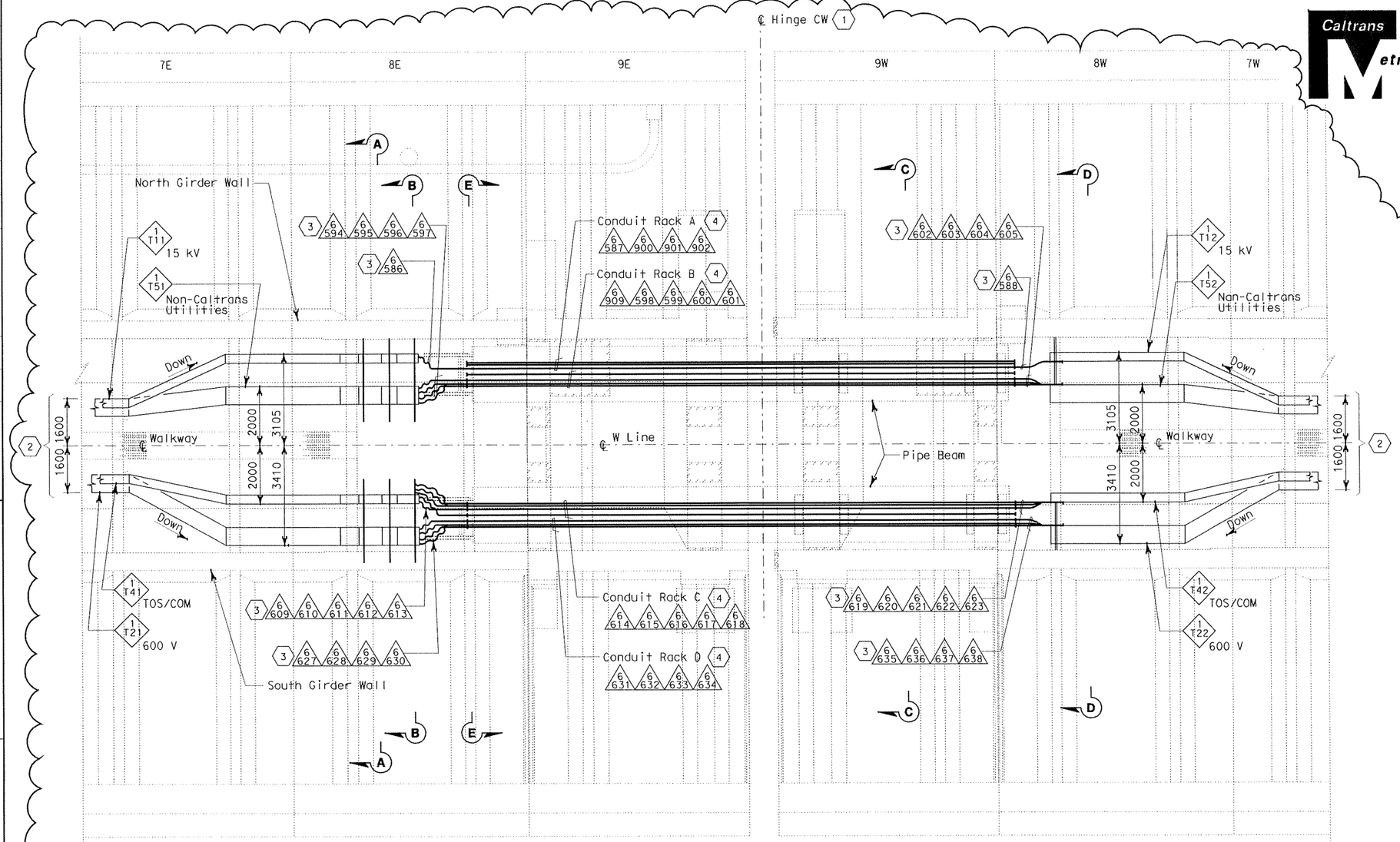

PLAN - HINGE CW

SCALE: 1:75

NOTES:

1. Minimum radius of cable tray fittings shall be 610 mm.
2. Minimum radius of 103 mm conduit bends shall be 610 mm.
3. Cables/circuits passing through the hinge locations shall be provided with cable identification tag at both ends of Hinge. See Circuit Schedules EE-324.
4. For additional work related not shown on this drawing, see Electrical Special Provisions.
5. References:
   - For Girder Level Westbound plans, see sheets EE-61 to EE-77.
   - For Typical Girder Embed plans and sections, see EE-313 and EE-314A.
6. For Sections A-A and B-B see sheet EE-306A.
7. For Sections C-C and D-D, see sheet EE-306B.
8. For Section E-E, see sheet EE-306C.

SHEET NOTES:

(1) Hinge CW electrical design is based on the maximum expansion joint movement opening of 925 mm.

(2) Continued on sheet EE-71.

(3) Arrange and group the flexible 103 mm conduits to maintain a minimum voltage level separation of 460 mm between systems.

(4) Conduits through pipe beam shall be part of the pipe beam assembly. Conduit shall be welded together to form a continuous conduit inside the pipe beam, length as specified. The weld shall be smooth on the outside and free of burrs inside the conduit. Conduit fittings, like coupling, etc. to form a continuous conduit shall not be permitted as alternative.

The intent of this conduit design is to be able to remove the entire length of conduit inside the pipe beam, in case maintenance is required inside the pipe beam assembly.

Rack A - (1) 103 mm for 15 kV
(2) 103 mm for spares
(1) 53 mm for 120 V circuit
Rack B - (1) 103 mm for spare
(4) 103 mm for Non-Caltrans Utilities
Rack C - (5) 103 mm for TOS/COM
Rack D - (4) 103 mm for 600 V

MARK	DATE	DESCRIPTIONS	REV	CK	
1	04/18/03	New Drawing. Revise conduit design	EJL	CYF	CCO NO.48

REVISIONS

CONTRACT CHANGE ORDER NO. 48 S1
SHEET 23 OF 67

1 **DETAILS**
HINGE CW
SCALE AS NOTED

EE-297A

CALCULATED/DESIGNED BY	EJL	DATE 2/03	REVISED BY	EJL
CHECKED BY	CYF	2/03	DATE REVISED	4/18/03

DESIGN OVERSIGHT
BEHZAD GOLEMOHAMMADI

STATE OF CALIFORNIA - DEPARTMENT OF TRANSPORTATION
Caltrans

FILE: T:\3103\WS\pse\electrical\con2\3103es1727.dgn
DATE: 10-Jul-01 14:47

LAST REVISION 00-00-00
DATE PLOTTED => 08-AUG-2006
TIME PLOTTED => 10:34

FOR REDUCED PLANS ORIGINAL SCALE IS IN MILLIMETERS 0 20 40 60 80

DGN FILE =>04-012024_0340C0.dgn
USERNAME =>mhossain

CU 04251 EA 012021

DIST	COUNTY	ROUTE	KILOMETER POST TOTAL PROJECT	SHEET No	TOTAL SHEETS
04	SF, Ala	80	13.9 / 14.3, 0.0 / 1.6	34001 R2	978

REGISTERED ELECTRICAL ENGINEER — DATE 05/16/01

6-4-01
PLANS APPROVAL DATE

REGISTERED PROFESSIONAL ENGINEER — JENS ERLINGSSON No. 8249 Exp. 9/30/06 ELECTRICAL — STATE OF CALIFORNIA

PB POWER, Inc.
A Parsons Brinckerhoff Company
303 Second St., Suite 700N
San Francisco, CA 94107-1317

The State of California or its officers or agents shall not be responsible for the accuracy or completeness of electronic copies of this plan sheet.

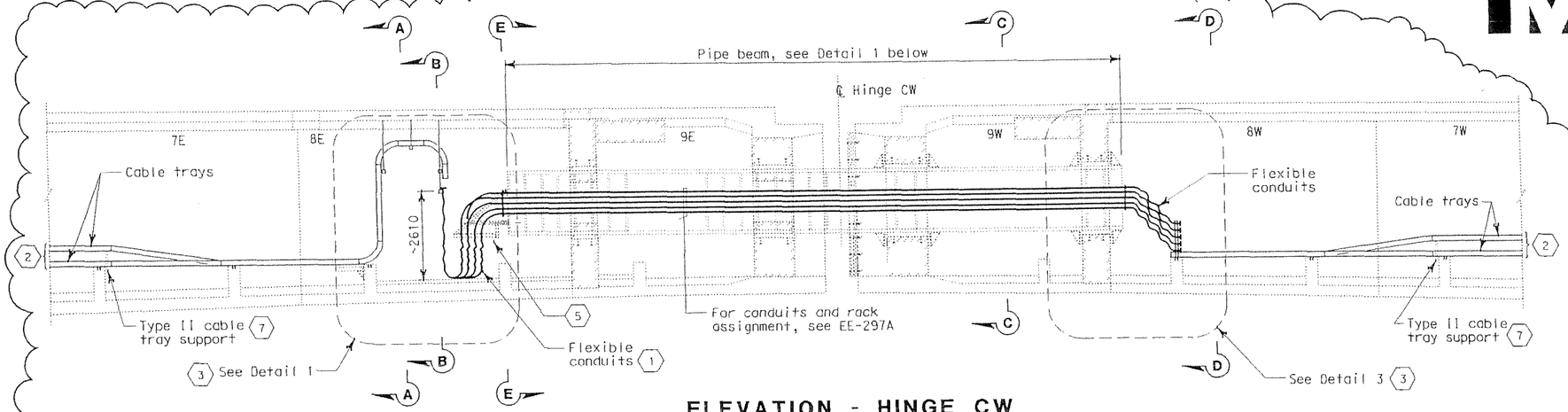

ELEVATION - HINGE CW

AT CENTERLINE OF PIPE BEAM
SCALE: 1:75

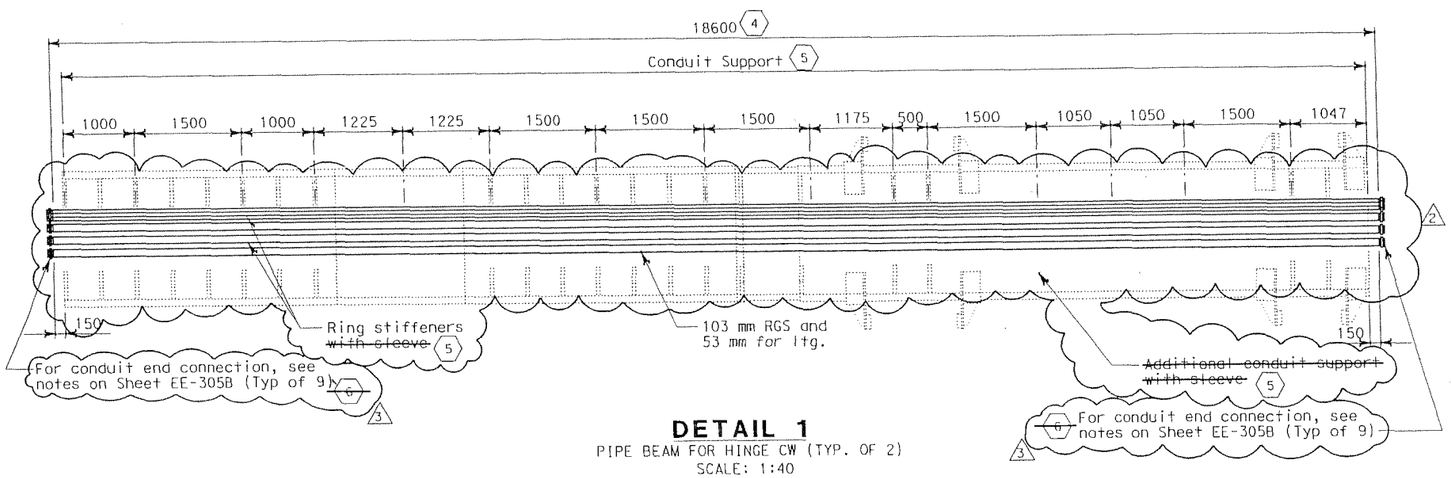

DETAIL 1

PIPE BEAM FOR HINGE CW (TYP. OF 2)
SCALE: 1:40

NOTES:

1. Minimum radius of cable tray fittings shall be 610 mm.
2. Minimum radius of 103 mm conduit bends shall be 610 mm.
3. Cables/circuits passing through the hinge locations shall be provided with cable identification tag at both ends of Hinge. See Circuit Schedules EE-324.
4. For additional work related not shown on this drawing, see Electrical Special Provisions.
5. References:
   - For Girder Level Westbound plans, see sheets EE-61 to EE-77.
   - For Typical Girder Embed plans and sections, see EE-313 and EE-314A.
6. For Sections A-A and B-B, see sheet EE-306A.
7. For Sections C-C and D-D, see sheet EE-306B.
8. For Section E-E, see sheet EE-306C.

SHEET NOTES:

1. Hinge CW electrical design is based on the maximum expansion joint movement opening of 925 mm.
2. Continued on Sheet EE-71.
3. For Details 1 and 3, see sheet EE-305A.
4. Conduit through pipe beam shall be part of the pipe beam assembly. Conduit shall be welded together to form a continuous conduit inside the pipe beam, length as specified. The weld shall be smooth on the outside and free of burrs inside the conduit. Conduit fittings, like coupling, etc. to form a continuous conduit shall not be permitted as alternative.

   The intent of this conduit design is to be able to remove the entire length of conduit inside the pipe beam, in case maintenance is required inside the pipe beam assembly.
5. For conduit supports at pipe beam, see Structure Sheets AS-31, AS-32 and AS-33.
6. ~~For Detail 8, see sheet EE-305B.~~ 3
7. For Detail of Type II cable tray support, see Structure Sheet AS-24.

REGISTERED ELECTRICAL ENGINEER — 5/31/05 DATE — REGISTERED PROFESSIONAL ENGINEER K.T. Truong No. 16240 Exp. 12-31-06 ELECTRICAL STATE OF CALIFORNIA 3

ORIGINAL SIGNED 10/1/04
REGISTERED ELECTRICAL ENGINEER — DATE — REGISTERED PROFESSIONAL ENGINEER NABEEL F. ABDELRAHMAN No. 17162 Exp. 9/30/05 ELECTRICAL STATE OF CALIFORNIA
2

MARK	DATE	DESCRIPTIONS	REV	CK	
3	5/31/05	Revised notes and deleted sheet note 6.	MH	KT	CCO NO.48
2	07/20/04	Revised pipe beam conduit layout.	VHP		CCO NO.48
1	04/18/03	New Drawing. Revise conduit design	EJL	CYF	CCO NO.48

REVISIONS

CONTRACT CHANGE ORDER NO. 48 S1
SHEET 24 OF 67

1 **DETAILS HINGE CW**
SCALE AS NOTED

EE-297B

STATE OF CALIFORNIA - DEPARTMENT OF TRANSPORTATION — Caltrans

DESIGN OVERSIGHT: BEHZAD GOLEMOHAMMADI

CALCULATED/DESIGNED BY	EJL	DATE 2/03	REVISED BY	EJL
CHECKED BY	CYF	2/03	DATE REVISED	4/18/03

LAST REVISION 00-00-00 — DATE PLOTTED => 01-AUG-2005 TIME PLOTTED => 12:55

FOR REDUCED PLANS ORIGINAL SCALE IS IN MILLIMETERS 0 20 40 60 80

DGN FILE =>04-012024_0340C1R2.dgn
USERNAME =>mhossain

CU 04251 | EA 012021

DIST	COUNTY	ROUTE	KILOMETER POST TOTAL PROJECT	SHEET No	TOTAL SHEETS
04	SF, Ala	80	13.9 / 14.3, 0.0 / 1.6	340D R1	978

Jens Erlingsson 04/18/03
REGISTERED ELECTRICAL ENGINEER DATE

6-4-01
PLANS APPROVAL DATE

REGISTERED PROFESSIONAL ENGINEER JENS ERLINGSSON No. 8249 Exp. 9/30/06 ELECTRICAL STATE OF CALIFORNIA

PB POWER, Inc.
A Parsons Brinckerhoff Company
303 Second St., Suite 700N
San Francisco, CA 94107-1317

The State of California or its officers or agents shall not be responsible for the accuracy or completeness of electronic copies of this plan sheet.

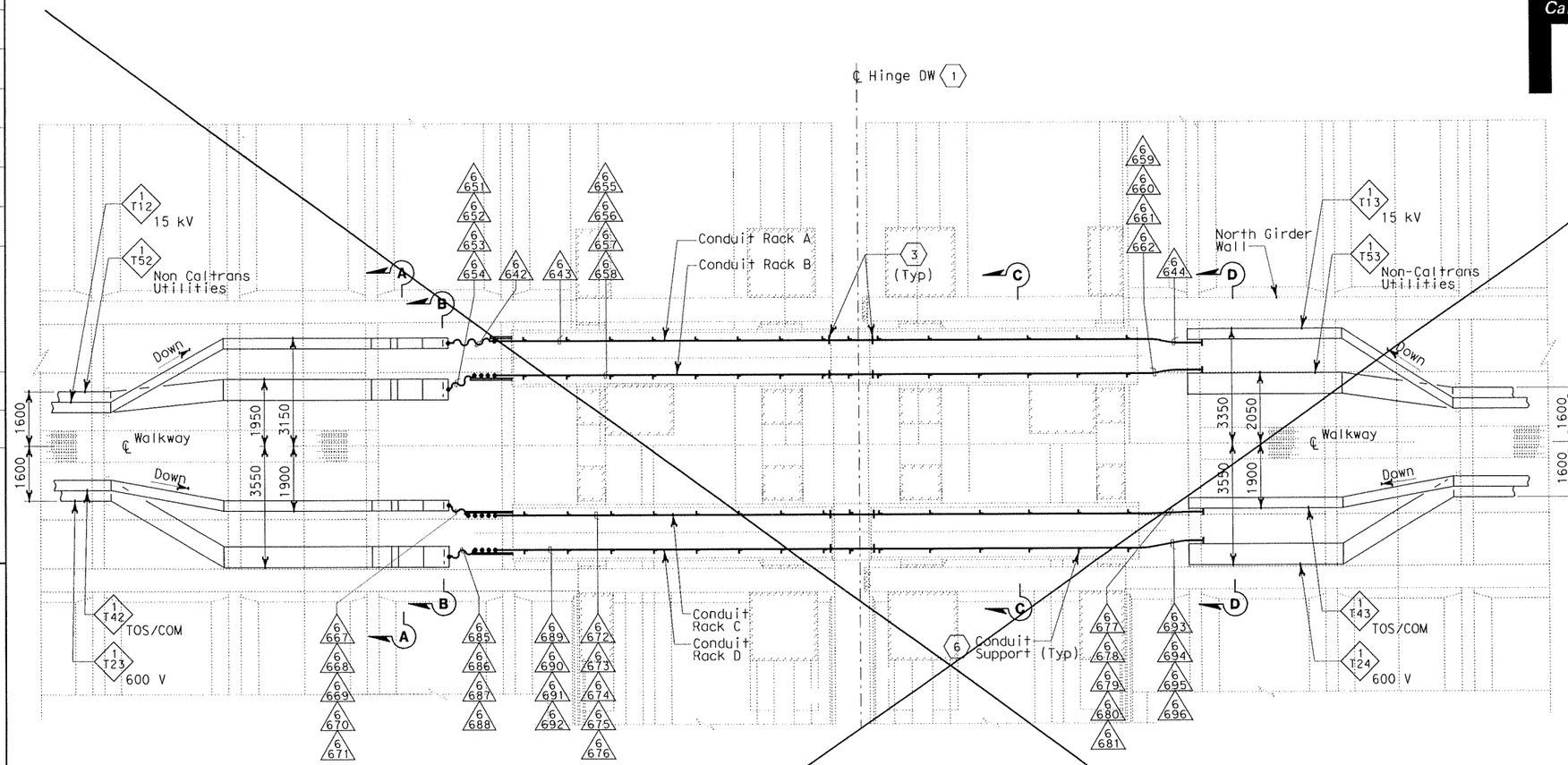

PLAN - HINGE DW

SCALE: 1:75

DELETED

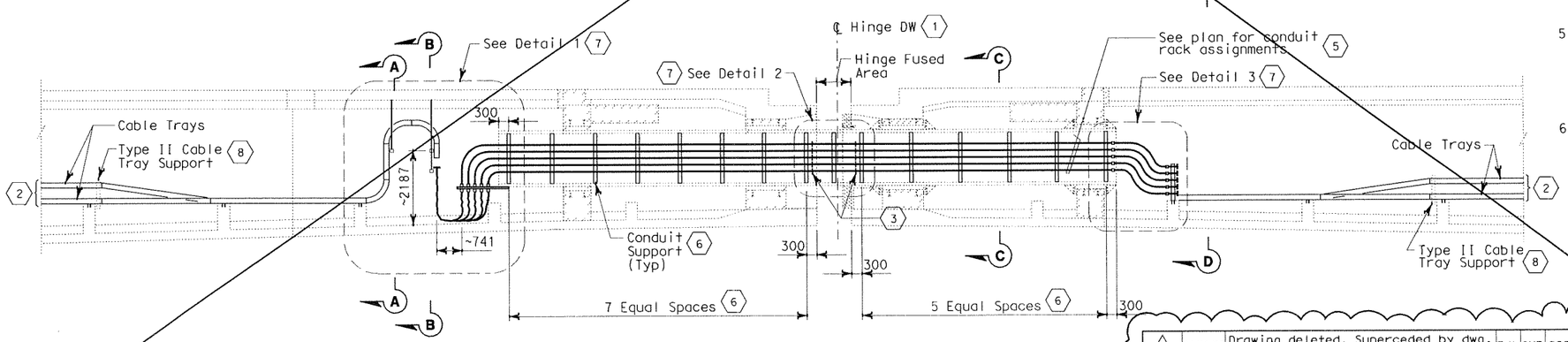

ELEVATION - HINGES DW

AT CENTERLINE OF PIPE BEAM
SCALE: 1:75

SHEET NOTES:

1. Hinge DW electrical design is based on the maximum expansion joint movement opening of 561 mm.
2. Continued on Sheets EE-75 and EE-76.
3. Provide expansion/deflection couplings at each end of the hinge fused area.
4. Arrange and group the flexible 103 mm conduits to maintain a minimum voltage level separation of 460 mm.
5. Conduits through Pipe Beam
   Rack A - (1) 103 mm for 15 kV and (1) conduit for 120 V circuit-size varies.
   Rack B - (4) 103 mm for Non-Caltrans Utilities.
   Rack C - (5) 103 mm for TOS/COM.
   Rack D - (4) 103 mm for 600 V.
6. Conduit suppart not to exceed 1500 mm apart.
7. For Details 1, 2 and 3, see Sheet EE-305.
8. For details of Type II cable tray support, see Structure Sheet AS-24.

NOTES:

1. Minimum radius of cable tray fittings shall be 610 mm.
2. Minimum conduit radius of 103 mm conduits shall be 610 mm.
3. Cables/circuits passing through the hinge locations shall be provided with cable identification tag at both ends of Hinge. See Circuit Schedules EE-324.
4. For odditional work related not shown on this drawing, see Electrical Special Provisions.
5. References:
   - For Girder Level Westbound plans, see Sheets EE-61 to EE-77.
   - For Typical Girder Embed plans and sections, see EE-313 and EE-314.
6. For Sections A-A, B-B, C-C and D-D, see Sheet EE-306.

MARK	DATE	DESCRIPTIONS	REV	CK
1	04/18/03	Drawing deleted. Superceded by dwg. EE-298A and EE-298B.	EJL	CYF
		REVISIONS		

CCO NO.48

CONTRACT CHANGE ORDER NO. 48 S1
SHEET 25 OF 67

DETAILS
HINGE DW
SCALE AS NOTED

EE-298

CALCULATED/DESIGNED BY	EJL	CYF	10/01 14/18/03
CHECKED BY	TW	5/00	DATE REVISED
	JE	DATE 5/00	REVISED BY

DESIGN OVERSIGHT
BEHZAD GOLEMOHAMMADI

STATE OF CALIFORNIA - DEPARTMENT OF TRANSPORTATION
Caltrans

LAST REVISION 00-00-00
DATE PLOTTED => 08-AUG-2006
TIME PLOTTED => 10:39

FOR REDUCED PLANS ORIGINAL SCALE IS IN MILLIMETERS 0 20 40 60 80

DGN FILE =>04-012024_0340DR1.dgn
USERNAME =>mhossain

CU 04251 EA 012021

DIST	COUNTY	ROUTE	KILOMETER POST TOTAL PROJECT	SHEET No	TOTAL SHEETS
04	SF, Ala	80	13.9 / 14.3, 0.0 / 1.6	34000	978

REGISTERED ELECTRICAL ENGINEER 04/18/03 DATE

6-4-01
PLANS APPROVAL DATE

REGISTERED PROFESSIONAL ENGINEER JENS ERLINGSSON No. 8249 Exp. 9/30/06 ELECTRICAL STATE OF CALIFORNIA

PB POWER, Inc.
A Parsons Brinckerhoff Company
303 Second St., Suite 700N
San Francisco, CA 94107-1317

The State of California or its officers or agents shall not be responsible for the accuracy or completeness of electronic copies of this plan sheet.

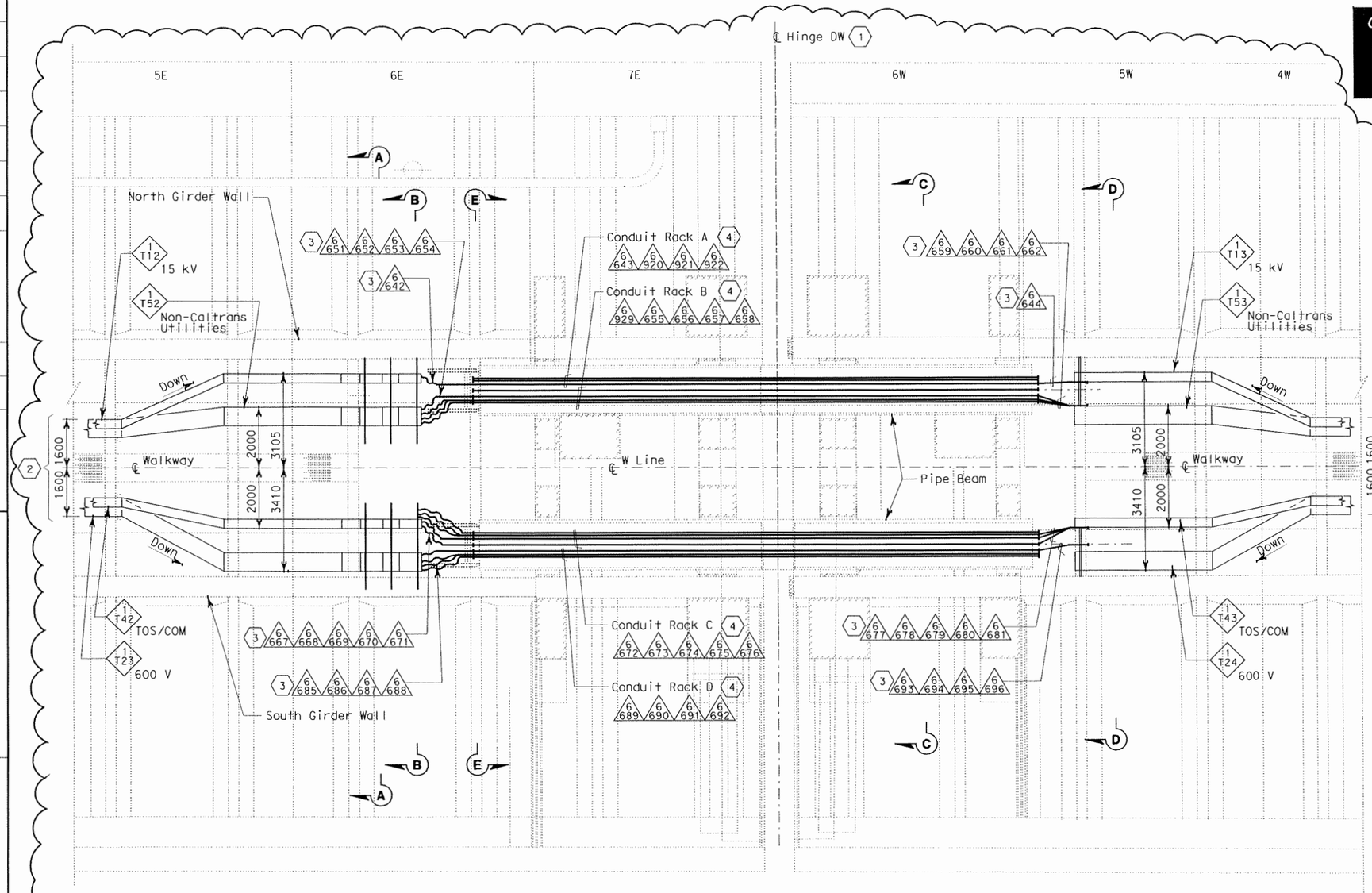

PLAN - HINGE DW

SCALE: 1:75

SHEET NOTES:

(1) Hinge DW electrical design is based on the maximum expansion joint movement opening of 561 mm.

(2) Continued on Sheets EE-75 and EE-76.

(3) Arrange and group the flexible 103 mm conduits to maintain a minimum voltage level separation of 460 mm between systems.

(4) Conduits through pipe beam shall be part of the pipe beam assembly. Conduit shall be welded together to form a continuous conduit inside the pipe beam, length as specified. The weld shall be smooth on the outside and free of burrs inside the conduit. Conduit fittings, like coupling, etc. to form a continuous conduit shall not be permitted as alternative.

The intent of this conduit design is to be able to remove the entire length of conduit inside the pipe beam, in case maintenance is required inside the pipe beam assembly.

Rack A - (1) 103 mm for 15 kV
(2) 103 mm for spares
(1) 53 mm for 120 V circuit
Rack B - (1) 103 mm for spare
(4) 103 mm for Non-Caltrans Utilities
Rack C - (5) 103 mm for TOS/COM
Rack D - (4) 103 mm for 600 V

NOTES:

1. Minimum radius of cable tray fittings shall be 610 mm.
2. Minimum radius of 103 mm conduit bends shall be 610 mm.
3. Cables/circuits passing through the hinge locations shall be provided with cable identification tag at both ends of Hinge. See Circuit Schedules EE-324.
4. For additional work related not shown on this drawing, see Electrical Special Provisions.
5. References:
   - For Girder Level Westbound plans, see Sheets EE-61 to EE-77.
   - For Typical Girder Embed plans and sections, see EE-313 and EE-314A.
6. For Sections A-A and B-B, see sheet EE-306A.
7. For Sections C-C and D-D, see sheet EE-306B.
88. For Section E-E, see sheet EE-306C.

MARK	DATE	DESCRIPTIONS	REV	CK	
1	04/18/03	New Drawing. Revise conduit design	EJL	CYF	CCO NO.48

REVISIONS

CONTRACT CHANGE ORDER NO. 48 S1
SHEET 26 OF 67

1 **DETAILS**
HINGE DW
SCALE AS NOTED

EE-298A

CALCULATED/DESIGNED BY	DATE 2/03	REVISED BY	EJL
CHECKED BY	CYF 2/03	DATE REVISED	4/18/03

DESIGN OVERSIGHT
BEHZAD GOLEMOHAMMADI

STATE OF CALIFORNIA - DEPARTMENT OF TRANSPORTATION
Caltrans

LAST REVISION 00-00-00
DATE PLOTTED => 08-AUG-2006
TIME PLOTTED => 10:41

FOR REDUCED PLANS ORIGINAL SCALE IS IN MILLIMETERS 0 20 40 60 80

DGN FILE =>04-012024_034000.dgn
USERNAME =>mhossain

CU 04251 EA 012021

DIST	COUNTY	ROUTE	KILOMETER POST TOTAL PROJECT	SHEET No	TOTAL SHEETS
04	SF, Ala	80	13.9 / 14.3, 0.0 / 1.6	340D1 R2	978

Caltrans Metric

REGISTERED ELECTRICAL ENGINEER 05/16/01 DATE

6-4-01
PLANS APPROVAL DATE

REGISTERED PROFESSIONAL ENGINEER JENS ERLINGSSON No. 8249 Exp. 9/30/06 ELECTRICAL STATE OF CALIFORNIA

PB POWER, Inc.
A Parsons Brinckerhoff Company
303 Second St., Suite 700N
San Francisco, CA 94107-1317

The State of California or its officers or agents shall not be responsible for the accuracy or completeness of electronic copies of this plan sheet.

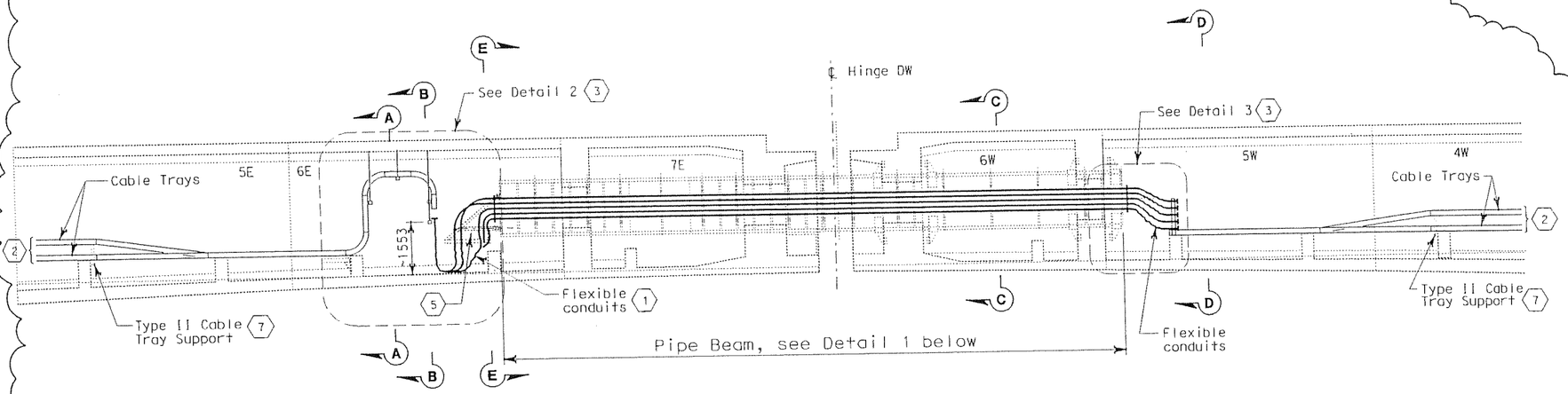

ELEVATION - HINGE DW

AT CENTERLINE OF PIPE BEAM
SCALE: 1:75

REGISTERED ELECTRICAL ENGINEER 5/31/05 DATE

REGISTERED PROFESSIONAL ENGINEER K.T. Truong No. 16240 Exp. 12-31-06 ELECTRICAL STATE OF CALIFORNIA

(3)

ORIGINAL SIGNED 10/16/04
REGISTERED ELECTRICAL ENGINEER DATE

REGISTERED PROFESSIONAL ENGINEER NABEEL F. ABDELRAHMAN No. 17162 Exp. 9/30/05 ELECTRICAL STATE OF CALIFORNIA

(2)

SHEET NOTES:

(1) Hinge DW electrical design is based on the maximum expansion joint movement opening of 561 mm.

(2) Continued on sheets EE-75 and EE-76..

(3) For Details 2 and 3, see sheet EE-305A.

(4) Conduit through pipe beam shall be part of the pipe beam assembly. Conduit shall be welded together to form a continuous conduit inside the pipe beam, length as specified. The weld shall be smooth on the outside and free of burrs inside the conduit. Conduit fittings, like coupling, etc. to form a continuous conduit shall not be permitted as alternative.

The intent of this conduit design is to be able to remove the entire length of conduit inside the pipe beam, in case maintenance is required inside the pipe beam assembly.

(5) For conduit supports at pipe beam, see Structure Sheets AS-31, AS-32 and AS-33.

(3) ~~(6) For Detail 8, see sheet EE-305B.~~

(7) For detail of Type II cable tray support, see Structure Sheet AS-24.

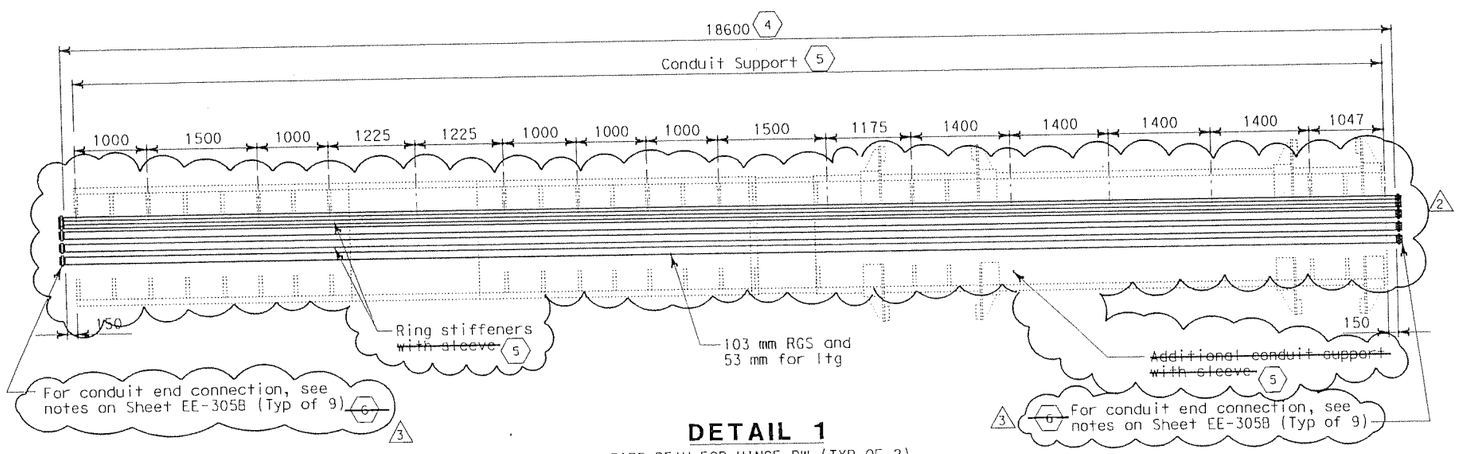

DETAIL 1

PIPE BEAM FOR HINGE DW (TYP OF 2)
SCALE: 1:40

NOTES:

1. Minimum radius of cable tray fittings shall be 610 mm.
2. Minimum radius of 103 mm conduit bends shall be 610 mm.
3. Cables/circuits passing through the hinge locations shall be provided with cable identification tag at both ends of Hinge. See Circuit Schedules EE-324.
4. For additional work related not shown on this drawing, see Electrical Special Provisions.
5. References:
   - For Girder Level Westbound plans, see Sheets EE-61 to EE-77.
   - For Typical Girder Embed plans and sections, see EE-313 and EE-314A.
6. For Sections A-A and B-B, see sheet EE-306A.
7. For Sections C-C and D-D, see sheet EE-306B.
8. For Section E-E, see sheet EE-306C.

MARK	DATE	DESCRIPTIONS	REV	CK	
3	5/31/05	Revised notes and deleted sheet note 6	MH	KT	CCO NO.48
2	07/20/04	Revised pipe beam conduit layout.	VHP		CCO NO.48
1	04/18/03	New Drawing. Revise conduit design	EJL	CYF	CCO NO.48

REVISIONS

(1)

DETAILS
HINGE DW

SCALE AS NOTED

CONTRACT CHANGE ORDER NO. 48 S1
SHEET 27 OF 67

EE-298B

CALCULATED/ DESIGNED BY	EJL	DATE 2/03	REVISED BY	EJL	DATE 4/18/03
CHECKED BY	CYF	2/03	DATE REVISED		

DESIGN OVERSIGHT
BEHZAD GOLEMOHAMMADI

STATE OF CALIFORNIA - DEPARTMENT OF TRANSPORTATION
Caltrans

FOR REDUCED PLANS ORIGINAL SCALE IS IN MILLIMETERS 0 20 40 60 80

DGN FILE =>04-012024_0340D1R2.dgn
USERNAME =>mhossain

CU 04251 | EA 012021

LAST REVISION 00-00-00 | DATE PLOTTED => 01-AUG-2005 | TIME PLOTTED => 13:01

DIST	COUNTY	ROUTE	KILOMETER POST TOTAL PROJECT	SHEET No	TOTAL SHEETS
04	SF, Ala	80	13.9 / 14.3, 0.0 / 1.6	340E R2	978

Jens Erlingsson 04/18/03
REGISTERED ELECTRICAL ENGINEER DATE

6-4-01
PLANS APPROVAL DATE

REGISTERED PROFESSIONAL ENGINEER JENS ERLINGSSON No. 8249 Exp. 9/30/06 ELECTRICAL STATE OF CALIFORNIA

PB POWER, Inc.
A Parsons Brinckerhoff Company
303 Second St., Suite 700N
San Francisco, CA 94107-1317

The State of California or its officers or agents shall not be responsible for the accuracy or completeness of electronic copies of this plan sheet.

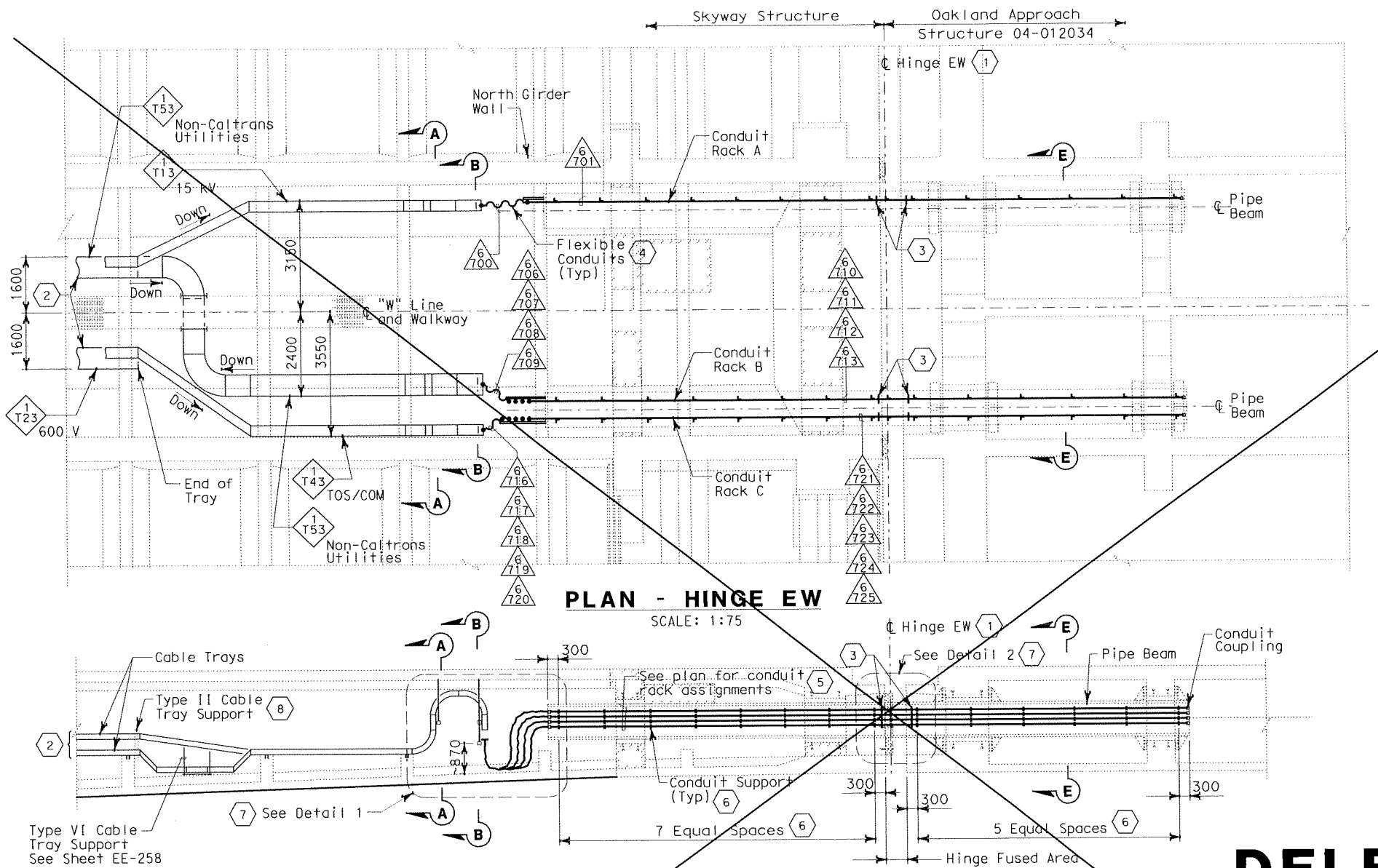

PLAN - HINGE EW

SCALE: 1:75

ELEVATION - HINGE EW

AT CENTERLINE OF PIPE BEAM
SCALE: 1:75

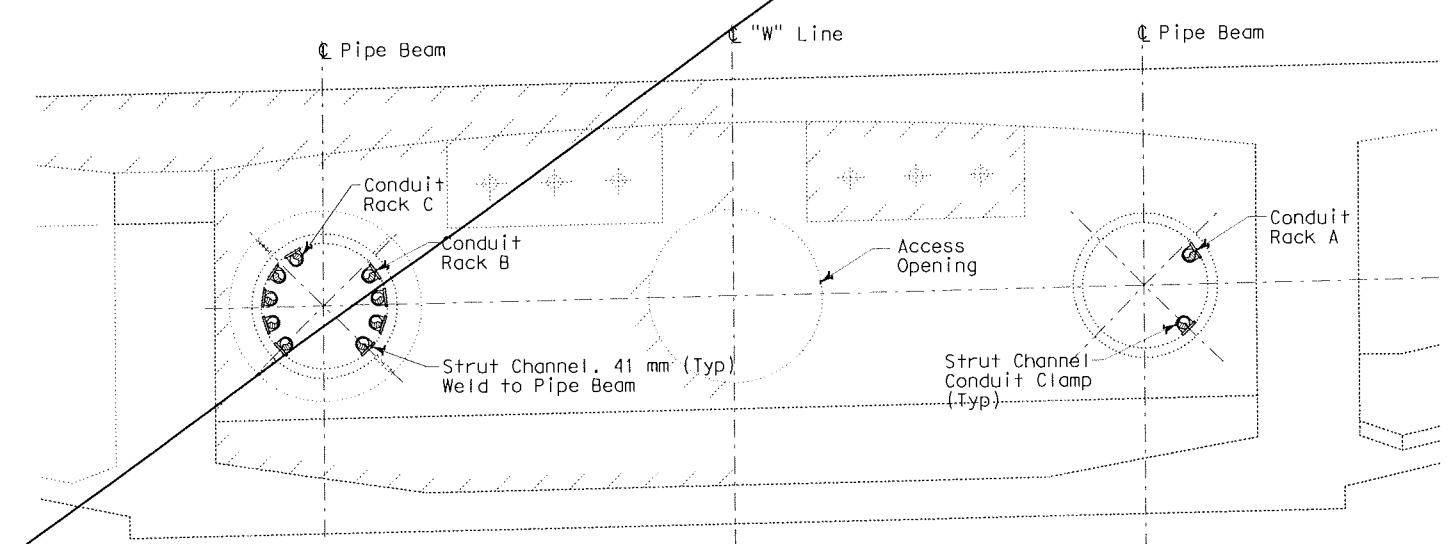

SECTION E-E

SCALE: 1:25

DELETED

SHEET NOTES:

1. Hinge EW electrical design is based on the maximum expansion joint movement opening of 317 mm.
2. Continued on Sheet EE-77.
3. Provide expansion/deflection couplings at each end of the hinge fused area.
4. Arrange and group the flexible 103 mm conduits to maintain a minimum voltage level separation of 460 mm.
5. Conduits through Pipe Beam
   Rack A - (1) 103 mm for 15 kV and (1) conduit for 120 V circuit-size varies.
   Rack B - (4) 103 mm for Non-Caltrans Utilities.
   Rack C - (5) 103 mm for TOS/COM.
6. Conduit support not to exceed 1500 mm apart.
7. For Details 1 and 2, see Sheet EE-305.
8. For Details of Type II Cable Tray Support, see Structure Sheet AS-24.

NOTES:

1. Minimum radius of cable tray fittings shall be 610 mm.
2. Minimum conduit radius of 103 mm conduits shall be 610 mm.
3. Cables/circuits passing through the hinge locations shall be provided with cable identification tag at both ends of Hinge. See Circuit Schedules EE-324.
4. For additional work related not shown on this drawing, see Electrical Special Provisions.
5. References:
   - For Girder Level Westbound plans, see Sheets EE-61 to EE-77.
   - For Typical Girder Embed plans and sections, see EE-313 and EE-314.
6. Section A-A and B-B, see Sheet EE-306.

MARK	DATE	DESCRIPTIONS	REV	CK	
1	04/18/03	Drawing deleted. Superceded by dwg. EE-299A and EE-299B.	EJL	CYF	CCO NO.48

REVISIONS

CONTRACT CHANGE ORDER NO. 48 S1
SHEET 28 OF 67

1 **DETAILS**
HINGE EW
SCALE AS NOTED

EE-299

CALCULATED/DESIGNED BY	JE	DATE 5/00	REVISED BY	CYF	EJL
CHECKED BY	TW	5/00	DATE REVISED	10/01	4/18/03

DESIGN OVERSIGHT
BEHZAD GOLEMOHAMMADI

STATE OF CALIFORNIA - DEPARTMENT OF TRANSPORTATION
Caltrans

LAST REVISION 00-00-00
DATE PLOTTED => 08-AUG-2006
TIME PLOTTED => 10:42

FOR REDUCED PLANS ORIGINAL SCALE IS IN MILLIMETERS 0 20 40 60 80

DGN FILE =>04-012024_0340ER2.dgn
USERNAME =>mhossain

CU 04251 EA 012021

DIST	COUNTY	ROUTE	KILOMETER POST TOTAL PROJECT	SHEET No.	TOTAL SHEETS
04	SF, Ala	80	13.9 / 14.3, 0.0 / 1.6	340E0 R1	978

Jens Erlingsson 02/20/04
REGISTERED ELECTRICAL ENGINEER DATE

6-4-01
PLANS APPROVAL DATE

REGISTERED PROFESSIONAL ENGINEER JENS ERLINGSSON No. 8249 Exp. 9/30/06 ELECTRICAL STATE OF CALIFORNIA

PB POWER, Inc.
A Parsons Brinckerhoff Company
303 Second St., Suite 700N
San Francisco, CA 94107-1317

The State of California or its officers or agents shall not be responsible for the accuracy or completeness of electronic copies of this plan sheet.

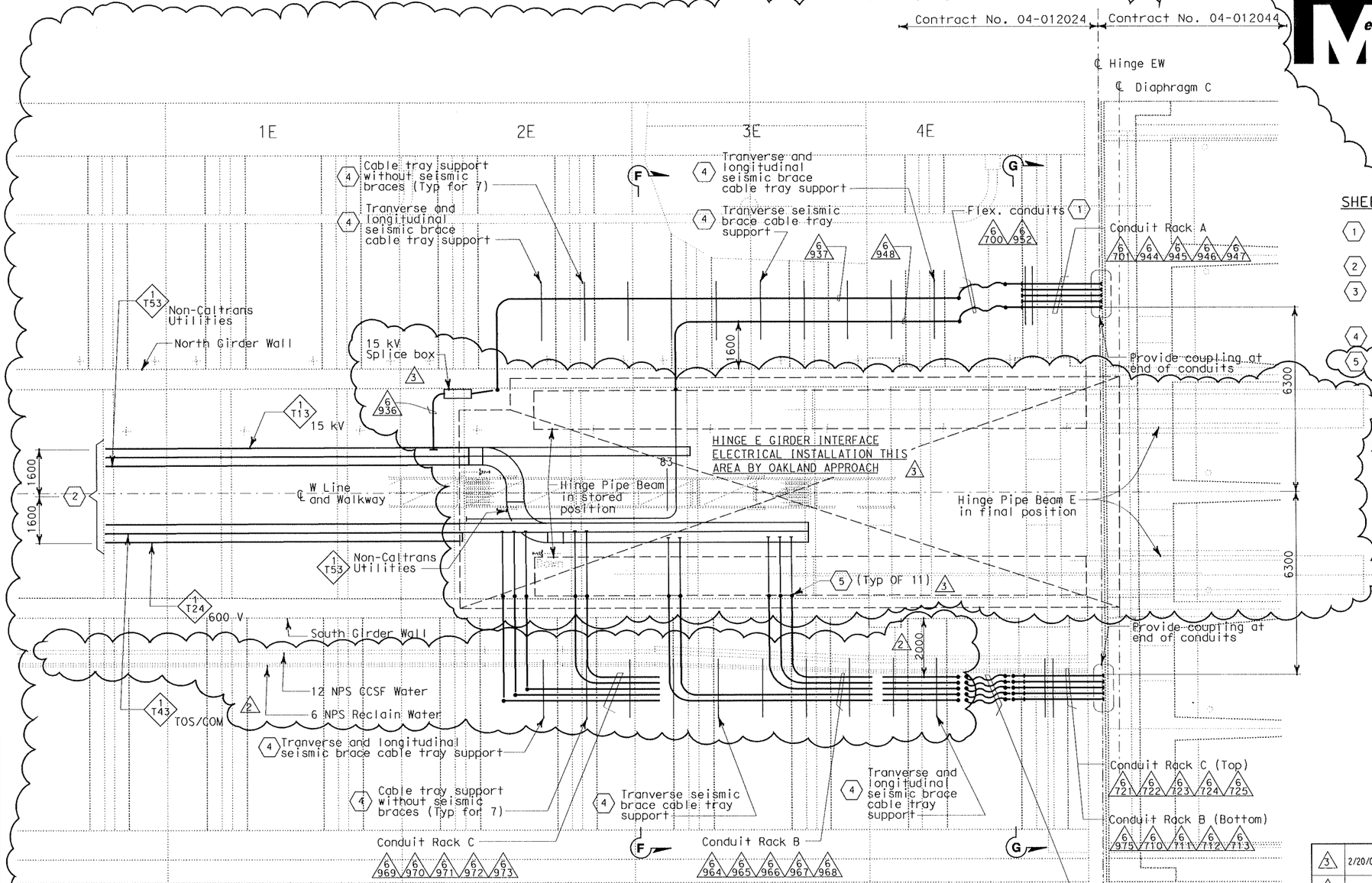

PLAN - HINGE EW

SCALE: 1:75

SHEET NOTES:

1. Hinge EW electrical design is based on the maximum expansion joint movement opening of 400 mm.
2. Continued on Sheet EE-77.
3. Arrange and group the flexible 103 mm conduits to maintain a minimum voltage level separation of 460 mm between systems.
4. For conduit supports, see sheet EE-306D.
5. Terminate conduits at inside face of the girder walls.

NOTES:

1. Minimum radius of cable tray fittings shall be 610 mm.
2. Minimum radius of 103 mm conduit bends shall be 610 mm.
3. Cables/circuits passing through the hinge locations shall be provided with cable identification tag at both ends of Hinge. See Circuit Schedules EE-324.
4. For additional work related not shown on this drawing, see Electrical Special Provisions.
5. References:
   - For Girder Level plans, see sheets EE-61 to EE-77.
   - For Typical Girder Embed plans and sections, see sheet EE-314B.
6. For Sections F-F and G-G, see sheet EE-306D.

MARK	DATE	DESCRIPTIONS	REV	CK	
3	2/20/04	Added Hinge E girder interface, sheet notes 5. Removed conduits and cable trays.	CYF	EJL	CCO NO.48
2	12/15/03	Changed location of conduit rack, Locate mechanical pipes.	EJL	CYF	CCO NO.48
1	04/18/03	New Drawing. Relocate conduits to triangular area of the bridge	EJL	CYF	CCO NO.48

REVISIONS

CONTRACT CHANGE ORDER NO. 48 S1
SHEET 29 OF 67

1 **DETAILS**
HINGE EW
SCALE AS NOTED

EE-299A

CALCULATED/DESIGNED BY	EJL	REVISED BY	EJL
CHECKED BY	CYF	DATE REVISED	2/20/04
DATE	2/03	DATE	2/03

DESIGN OVERSIGHT
BEHZAD GOLEMOHAMMADI

STATE OF CALIFORNIA - DEPARTMENT OF TRANSPORTATION
Caltrans

LAST REVISION 00-00-00
DATE PLOTTED => 08-AUG-2006
TIME PLOTTED => 10:44

FOR REDUCED PLANS ORIGINAL SCALE IS IN MILLIMETERS 0 20 40 60 80

DGN FILE =>04-012024_0340E0R1.dgn
USERNAME =>mhossain

CU 04251 EA 012021

DIST	COUNTY	ROUTE	KILOMETER POST TOTAL	KILOMETER POST PROJECT	SHEET No	TOTAL SHEETS
04	SF, Ala	80	13.9 / 14.3,	0.0 / 1.6	340E1 R2	978

Caltrans Metric

REGISTERED ELECTRICAL ENGINEER — DATE 05/16/01

6-4-01
PLANS APPROVAL DATE

REGISTERED PROFESSIONAL ENGINEER — JENS ERLINGSSON — No. 8249 — Exp. 9/30/06 ELECTRICAL — STATE OF CALIFORNIA

PB POWER, Inc.
A Parsons Brinckerhoff Company
303 Second St., Suite 700N
San Francisco, CA 94107-1317

The State of California or its officers or agents shall not be responsible for the accuracy or completeness of electronic copies of this plan sheet.

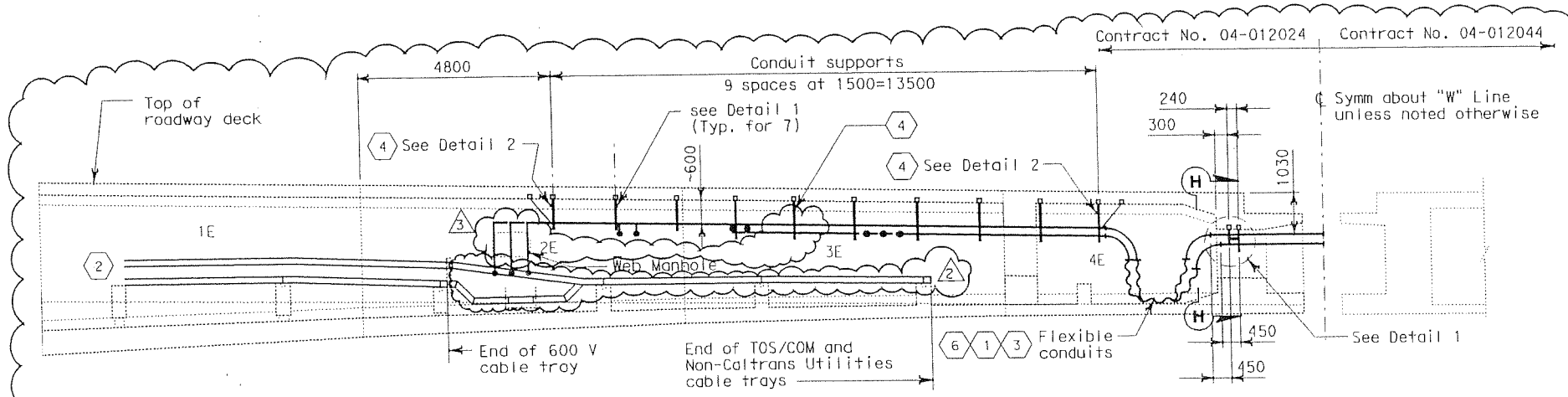

ELEVATION - SOUTH GIRDER WALL

SCALE: 1:75

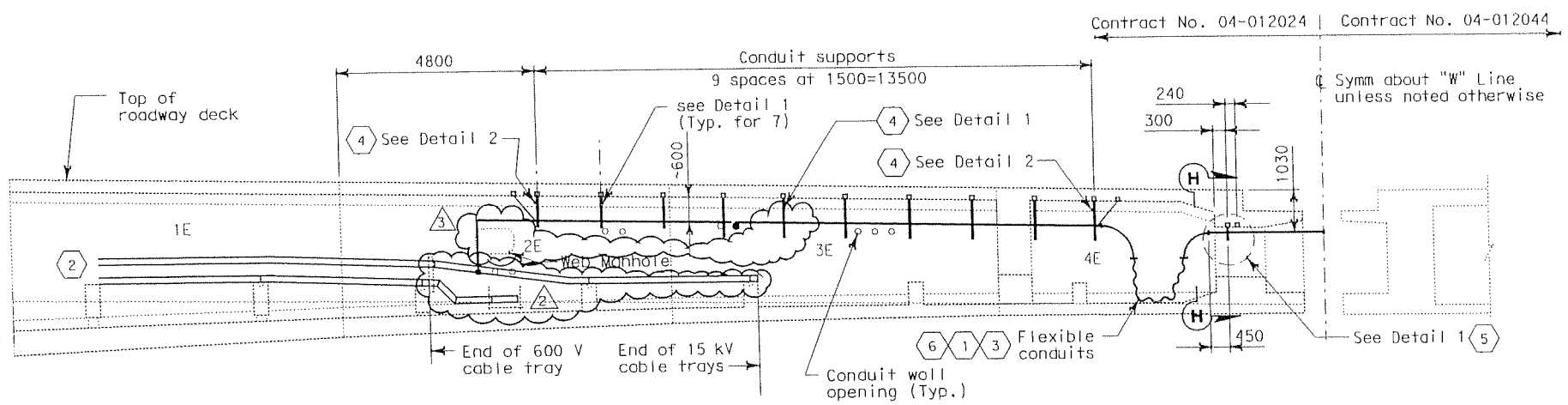

ELEVATION - NORTH GIRDER WALL

SCALE: 1:75

REGISTERED ELECTRICAL ENGINEER — DATE 4/13/05

REGISTERED PROFESSIONAL ENGINEER — K.T. Truong — No. 16240 — Exp. 12-31-06 ELECTRICAL — STATE OF CALIFORNIA

3

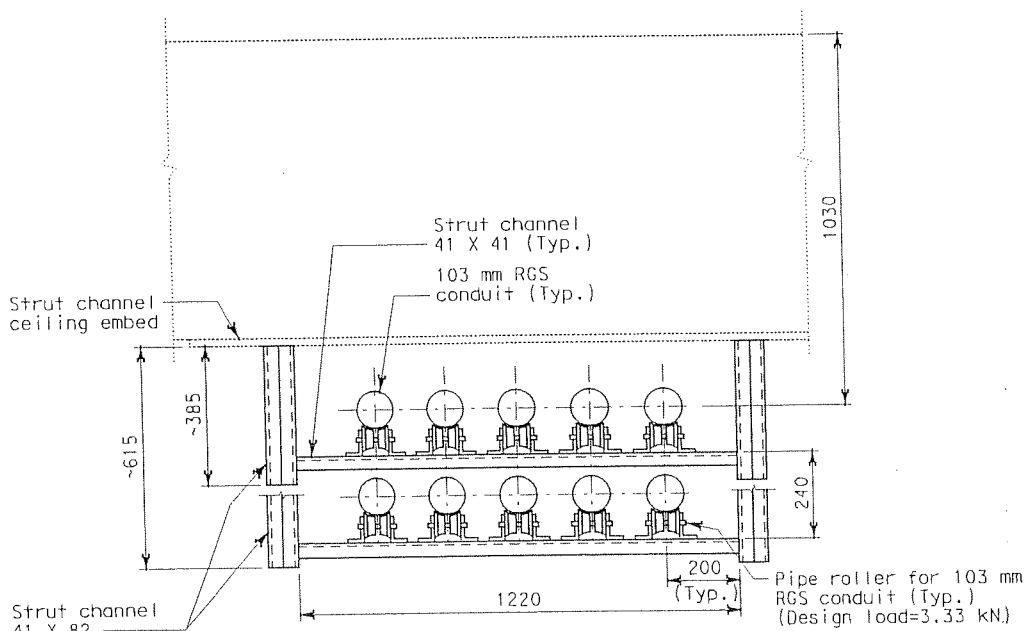

SECTION H-H

SCALE: 1:10

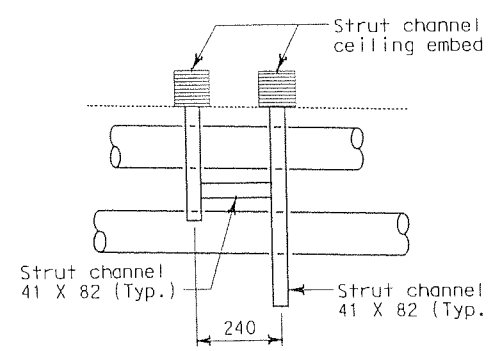

DETAIL 1

SCALE: 1:10

SHEET NOTES:

1. Hinge EW electrical design is based on the maximum expansion joint movement opening of 400 mm.
2. Continued on sheet EE-77.
3. Arrange and group the flexible 103 mm conduits to maintain a minimum voltage level separation of 460 mm between systems.
4. For conduit supports, Details 1 and 2, see sheet EE-306D.
5. For Rack A on north girder wall, only one layer of conduits.
6. Flexible conduit connections to conduit racks similar to Detail 5 sheet EE-305A.

NOTES:

1. Minimum radius of cable tray fittings shall be 610 mm.
2. Minimum radius of 103 mm conduit bends shall be 610 mm.
3. Cables/circuits passing through the hinge locations shall be provided with cable identification tag at both ends of Hinge. See Circuit Schedules EE-324.
4. For additional work related not shown on this drawing, see Electrical Special Provisions.
5. References:
   - For Girder Level Westbound plans, see sheets EE-61 to EE-77.
   - For Typical Girder Embed plans and sections, see EE-314B.
6. Sections F-F and G-G, see Sheet EE-306D.

MARK	DATE	DESCRIPTIONS	REV	CK	
3	4/8/05	Moved web manhole.	EA	KT	CCO NO.48
2	2/20/04	Removed cable trays	CYF	EJL	CCO NO.48
1	4/18/03	New Drawing. Relocate conduits to triangular area of the bridge	EJL	CYF	CCO NO.48

REVISIONS

CONTRACT CHANGE ORDER NO. 48 S1
SHEET 30 OF 67

1

DETAILS
HINGE EW

SCALE AS NOTED

EE-299B

CALCULATED/DESIGNED BY	DATE 2/03	REVISED BY	DATE REVISED
EJL	2/03	EJL	4/18/03
CHECKED BY	CYF	EJL	2/20/04

DESIGN OVERSIGHT
BEHZAD GOLEMOHAMMADI

STATE OF CALIFORNIA - DEPARTMENT OF TRANSPORTATION
Caltrans

FILE: z:\13103\ms\0329\electrical\cont2\13103es1655.dgn
DATE: 01-7-05 09:22

LAST REVISION 00-00-00
DATE PLOTTED => 01-AUG-2005
TIME PLOTTED => 16:17

FOR REDUCED PLANS ORIGINAL SCALE IS IN MILLIMETERS 0 20 40 60 80

DGN FILE =>04-012024_0340E1R2.dgn
USERNAME =>mhossain

CU 04251 | EA 012021

DIST	COUNTY	ROUTE	KILOMETER POST TOTAL PROJECT	SHEET No.	TOTAL SHEETS
04	SF, Ala	80	13.9 / 14.3, 0.0 / 1.6	341 R1	978

Jens Erlingsson 04/18/03
REGISTERED ELECTRICAL ENGINEER DATE

6-4-01
PLANS APPROVAL DATE

REGISTERED PROFESSIONAL ENGINEER JENS ERLINGSSON No. 8249 Exp. 9/30/06 ELECTRICAL STATE OF CALIFORNIA

PB POWER, Inc.
A Parsons Brinckerhoff Company
303 Second St., Suite 700N
San Francisco, CA 94107-1317

The State of California or its officers or agents shall not be responsible for the accuracy or completeness of electronic copies of this plan sheet.

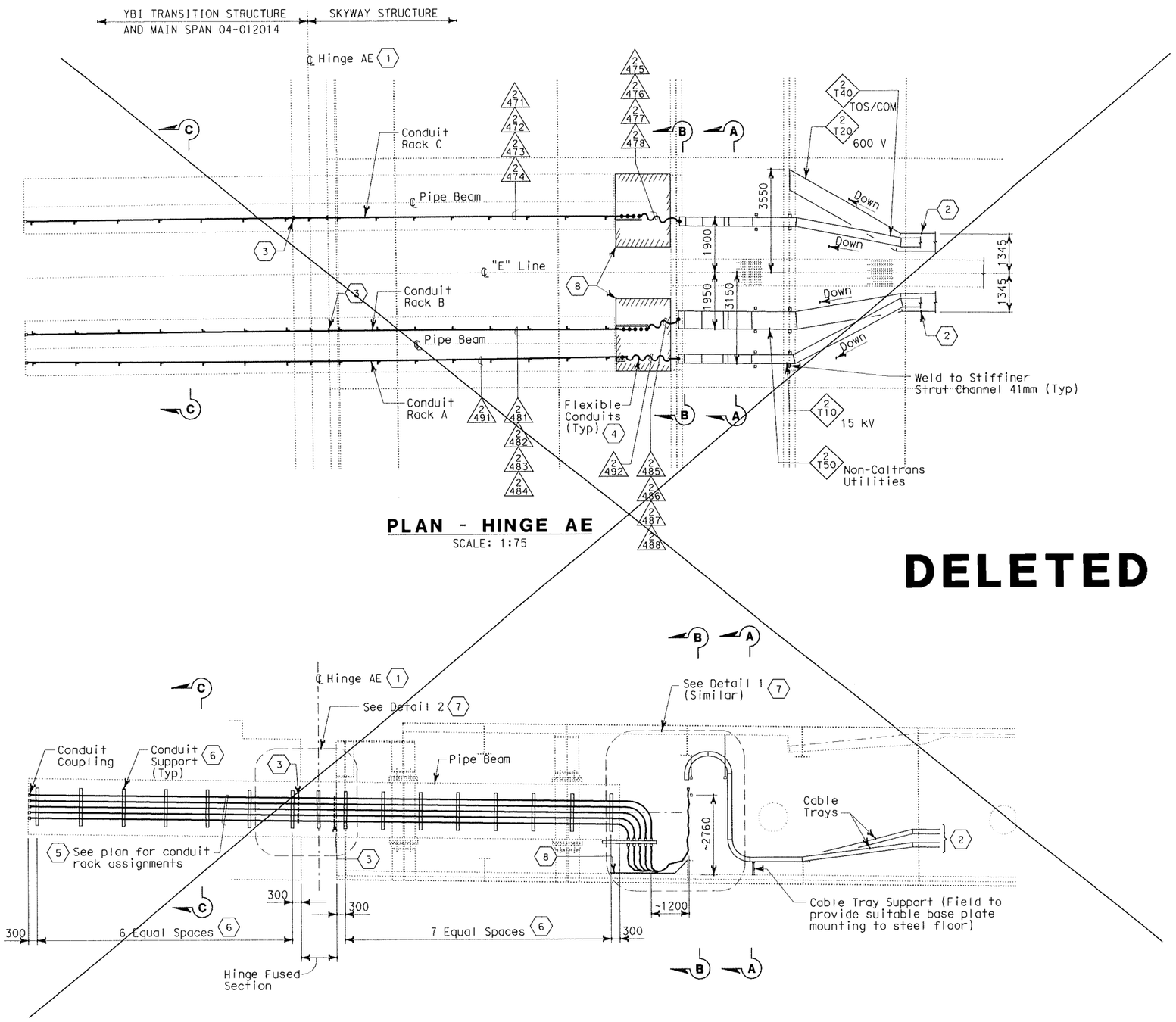

PLAN - HINGE AE

SCALE: 1:75

ELEVATION - HINGE AE

AT CENTERLINE OF PIPE BEAM
SCALE: 1:75

SHEET NOTES:

(1) Hinge AE electrical design is based on the maximum expansion joint movement opening of 1243 mm.

(2) Continued on Sheet EE-81. For details at transition section, see Sheet EE-264.

(3) Provide expansion/deflection couplings at each end of the hinge fused area.

(4) Arrange and group the flexible 103 mm conduits to maintain a minimum voltage level separation of 460 mm.

(5) Conduits through Pipe Beam
Rack A - (1) 103 mm for 15 kV and (1) conduit for 120 V circuit-size varies
Rack B - (4) 103 mm for Non-Caltrans Utilities
Rack C - (4) 103 mm for TOS/COM

(6) Conduit support not to exceed 1500 mm apart.

(7) For Details 1 and 2, see Sheet EE-305. Field to provide suitable hanger rod attachment to steel.

(8) Field to provide a level floor area where flexible conduits are located. Required size shall be determined and approved by the Resident Engineer.

NOTES:

1. Minimum radius of cable tray fittings shall be 610 mm.
2. Minimum conduit radius of 103 mm conduits shall be 610 mm.
3. Cables/circuits passing through the hinge locations shall be provided with cable identification tag at both ends of Hinge. See Circuit Schedules EE-327.
4. For additional work related not shown on this drawing, see Electrical Special Provisions.
5. References:
   - For Girder Level Eastbound plans, see Sheets EE-81 to EE-97.
   - For Typical Girder Embed plans and sections, see EE-313 and EE-314.
   - For Typical Girder Cable Tray at Transition section, see Sheet EE-264.
6. Sections A-A and B-B cable tray supports are similar except attachment to structure is steel. For details of section C-C conduit support inside the pipe beam, see Sheet EE-306.

MARK	DATE	DESCRIPTIONS	REV	CK
1	04/18/03	Drawing deleted. Superceded by dwg. EE-300A and EE-300B.	EJL	CYF
		REVISIONS		

CCO NO.48

CONTRACT CHANGE ORDER NO. 48 S1
SHEET 31 OF 67

DETAILS
HINGE AE
SCALE AS NOTED

EE-300

CALCULATED/ DESIGNED BY	JE	DATE 5/00	REVISED BY	CYF	EJL
CHECKED BY	TW	5/00	DATE REVISED	10/01	4/18/03

DESIGN OVERSIGHT
BEHZAD GOLEMOHAMMADI

STATE OF CALIFORNIA - DEPARTMENT OF TRANSPORTATION
Caltrans

Caltrans Metric

08-AUG-2006
DATE PLOTTED =>
TIME PLOTTED => 10:50
LAST REVISION 00-00-00

FOR REDUCED PLANS ORIGINAL SCALE IS IN MILLIMETERS 0 20 40 60 80

DGN FILE =>04-012024_0341R1.dgn
USERNAME =>mhossain

CU 04251 EA 012021

DIST	COUNTY	ROUTE	KILOMETER POST TOTAL PROJECT	SHEET No	TOTAL SHEETS
04	SF, Ala	80	13.9 / 14.3, 0.0 / 1.6	341A	978

Caltrans Metric

Jens Erlingsson 04/18/03
REGISTERED ELECTRICAL ENGINEER DATE

6-4-01
PLANS APPROVAL DATE

REGISTERED PROFESSIONAL ENGINEER JENS ERLINGSSON No. 8249 Exp. 9/30/06 ELECTRICAL STATE OF CALIFORNIA

PB POWER, Inc.
A Parsons Brinckerhoff Company
303 Second St., Suite 700N
San Francisco, CA 94107-1317

The State of California or its officers or agents shall not be responsible for the accuracy or completeness of electronic copies of this plan sheet.

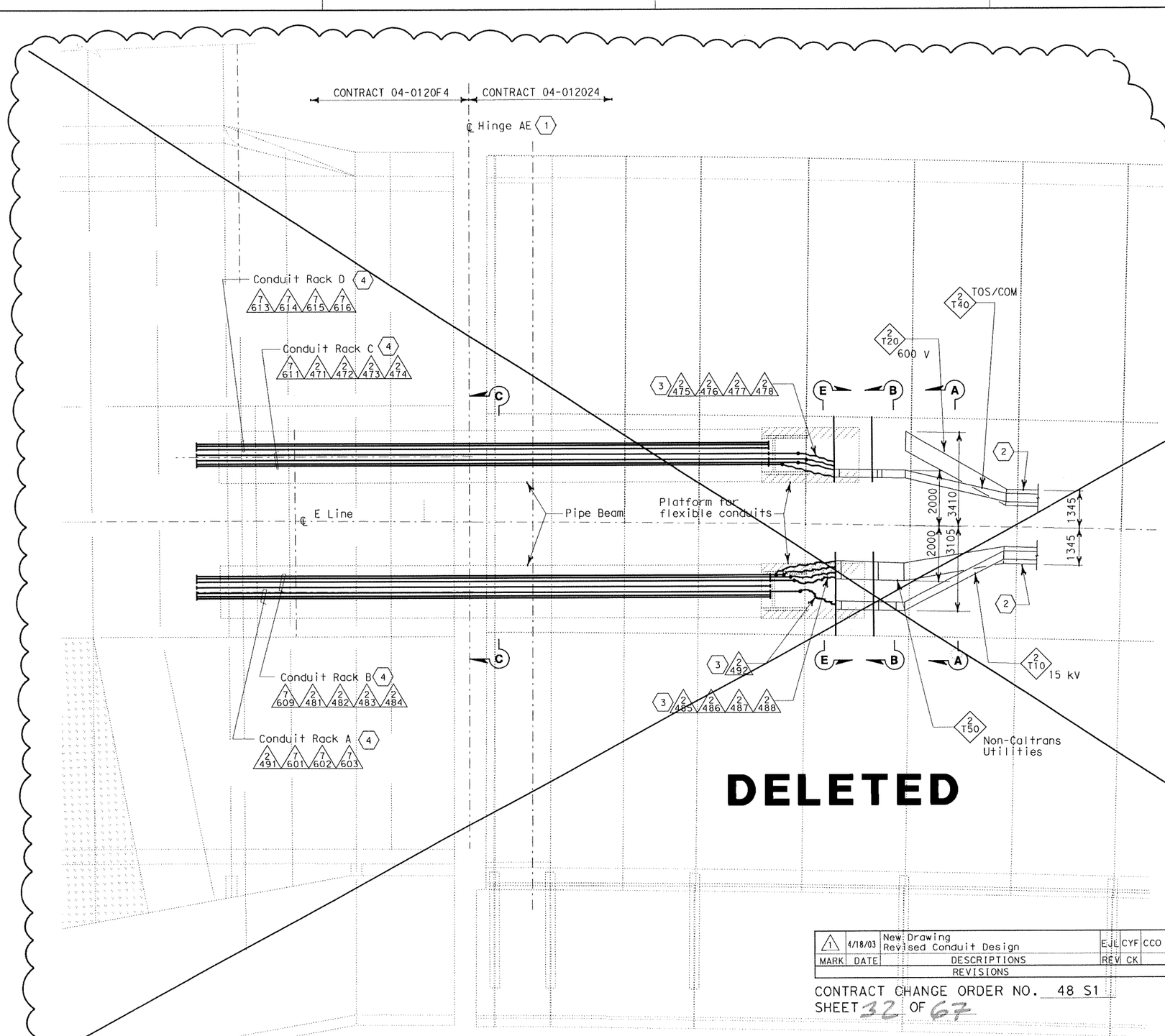

SHEET NOTES:

1. Hinge AE electrical design is based on the maximum expansion joint movement opening of 1243 mm.
2. Continued on sheet EE-81. For details at transition section, see Sheet EE-264.
3. Arrange and group the flexible 103 mm conduits to maintain a minimum voltage level separation of 460 mm between systems.
4. Conduits through pipe beam shaal part of the pipe beam assembly. Conduit shall be welded together to from a continuous conduit inside the pipe beam, length as specifiied. the weld shall be smooth on the outside and free of burrs inside the conduit. Conduit fittings, like coupling, etc. to from a continuous conduit shall not be permitted as alternative.

   The intent of this conduit design is to be able to remove the entire length of conduit inside the pipe beam, in case maintenance is required inside the pipe beam assembly.

   Rack A - (1) 103 mm for 15 kV
   (2) 103 mm for spares
   (1) 53 mm for 120 V circuit
   Rack B - (1) 103 mm for spare
   (4) 103 mm for Non-Caltrans Utilities
   Rack C - (1) 103 mm for spare
   (4) 103 mm for TOS/COM
   Rack D - (4) 103 mm for spares

NOTES:

1. Minimum radius of cable tray fittings shall be 610 mm.
2. Minimum radius of 103 mm conduits bends shall be 610 mm.
3. Cables/circuits passing through the hinge locations shall be provided with cable identification tag at both ends of Hinge. See Circuit Schedules EE-327.
4. For additional work related not shown on this drawing, see Electrical Special Provisions.
5. References:
   - For Girder Level Eastbound plans, see Sheets EE-81 to EE-97.
   - For Typical Girder Cable Tray at Transition section see Sheet EE-264.
6. Sections A-A and B-B similar to sheet EE-306A except cable tray attachments is metal structure.
7. For Section C-C, see sheet EE-306B except structure is metal. Conduit arrangement is similar.
8. For Section E-E, see sheet EE-306C except structure is metal. Conduit arrangement is similar to Plan-Detail 1 and Section E-E of hinges BW and CW.

MARK	DATE	DESCRIPTIONS	REV	CK
1	4/18/03	New Drawing Revised Conduit Design	EJL	CYF
		REVISIONS		CCO NO.48

CONTRACT CHANGE ORDER NO. 48 S1
SHEET 32 OF 67

PLAN - HINGE AE
SCALE: 1:75

DETAILS
HINGE AE
AS NOTED

EE-300A

	DATE	REVISED BY
CALCULATED/DESIGNED BY	EJL 11/03	
CHECKED BY	CYF 11/03	DATE REVISED

DESIGN OVERSIGHT
BEHZAD GOLEMOHAMMADI

STATE OF CALIFORNIA - DEPARTMENT OF TRANSPORTATION
Caltrans

LAST REVISION 00-00-00
DATE PLOTTED => 08-AUG-2006
TIME PLOTTED => 10:51

FOR REDUCED PLANS ORIGINAL SCALE IS IN MILLIMETERS 0 20 40 60 80

DGN FILE =>04-012024_0341A.dgn
USERNAME =>mhossain

CU 04251 | EA 012021

DIST	COUNTY	ROUTE	KILOMETER POST TOTAL PROJECT	SHEET No	TOTAL SHEETS
04	SF, Ala	80	13.9 / 14.3, 0.0 / 1.6	341A0 R2	978

Caltrans Metric

REGISTERED ELECTRICAL ENGINEER 05/16/01 DATE

6-4-01
PLANS APPROVAL DATE

REGISTERED PROFESSIONAL ENGINEER JENS ERLINGSSON No. 8249 Exp. 9/30/06 ELECTRICAL STATE OF CALIFORNIA

PB POWER, Inc.
A Parsons Brinckerhoff Company
303 Second St., Suite 700N
San Francisco, CA 94107-1317

The State of California or its officers or agents shall not be responsible for the accuracy or completeness of electronic copies of this plan sheet.

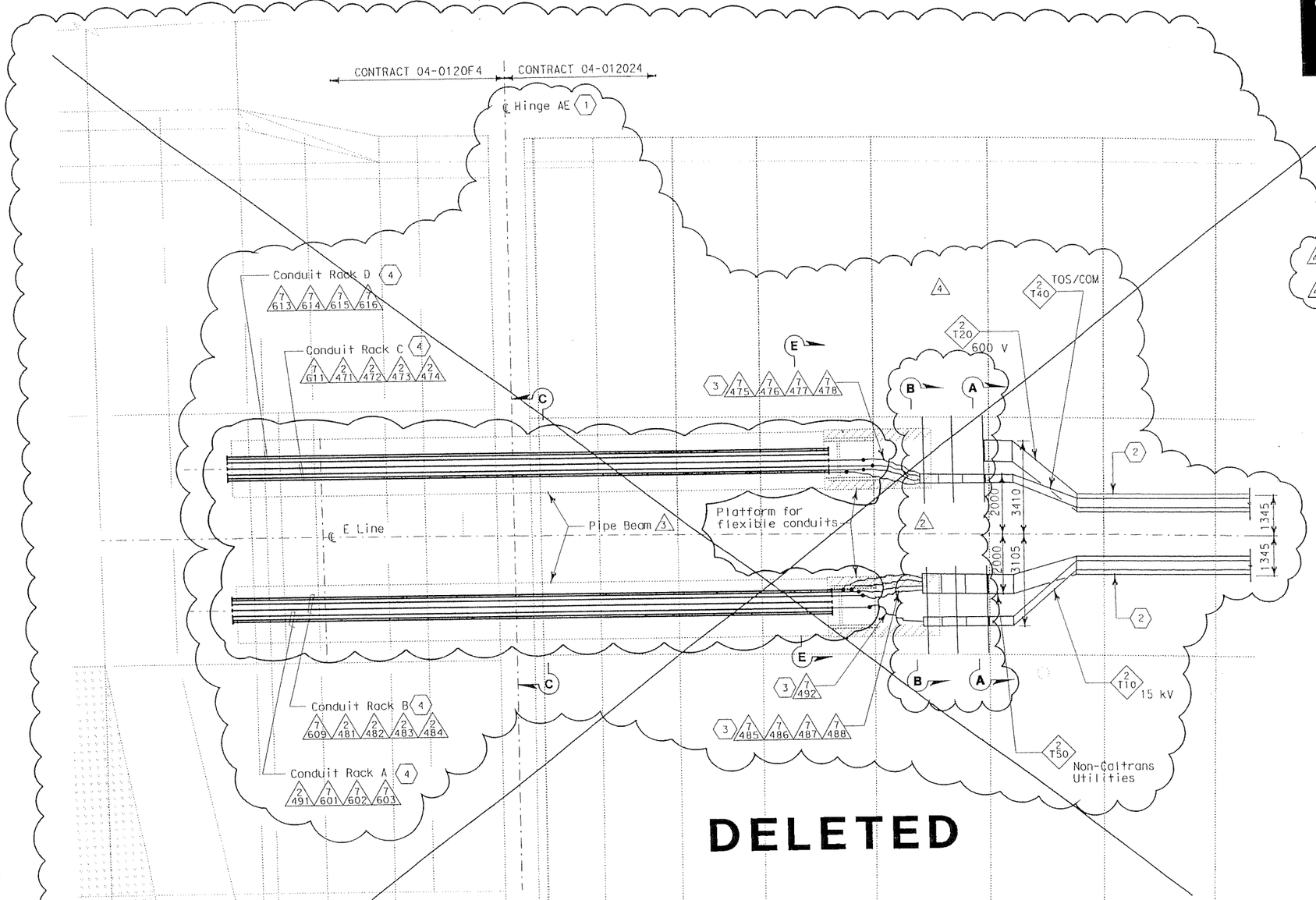

PLAN - HINGE AE

SCALE: 1:75

SHEET NOTES:

(4) (1) ~~Hinge AE electrical design is based on the maximum expansion joint movement opening of 1243 mm.~~

(4) (2) ~~Continued on Sheet EE-61. For details at transition section, see sheet EE-264.~~

(3) Arrange and group the flexible 103 mm conduits to maintain a minimum voltage level separation of 460 mm between systems.

(4) Conduits through pipe beam shall part of the pipe beam assembly. Conduit shall be welded together to from a continuous conduit inside the pipe beam, length as specifiied. the weld shall be smooth on the outside and free of burrs inside the conduit. Conduit fittings, like coupling, etc. to from a continuous conduit shall not be permitted as alternative.

(4) ~~Pipe Beam and conduits shown in final position. For Electrical Girder Interface, see sheet EE-77.~~

The intent of this conduit design is to be able to remove the entire length of conduit inside the pipe beam, in case maintenance is required inside the pipe beam assembly.

Rack A - (1) 103 mm for 15 kV
(2) 103 mm for spares
(1) 53 mm for 120 V circuit
Rack B - (1) 103 mm for spare
(4) 103 mm for Non-Caltrans Utilities
Rack C - (1) 103 mm for spare
(4) 103 mm for TOS/COM
Rack D - (4) 103 mm for spares

NOTES:

1. Minimum radius of cable tray fittings shall be 610 mm.
2. Minimum radius of 103 mm conduits bends shall be 610 mm.
3. Cables/circuits passing through the hinge locations shall be provided with cable identification tag at both ends of Hinge. See Circuit Schedules EE-327.
4. For additional work related not shown on this drawing, see Electrical Special Provisions.
5. References:
   - For Girder Level Eastbound plans, see Sheets EE-81 to EE-97.
   - For Typical Girder Cable Tray at Transition section, see Sheet EE-264.

(2) (4) ~~6. Section A-A and B-B see sheet EE-306E.~~

(2) 7. Section C-C is applicable only for conduit arrangement, see sheet EE-306B.

(2) (4) ~~8. Section E-E is applicable only for conduit arrangement, see Plan Detail 1 and Section E-E of sheet EE-306C.~~

MARK	DATE	DESCRIPTIONS	REV	CK	
5	07/05/05	Deleted sheet.	MH	KT	CCO NO.48
4	2/20/04	Deleted cable trays and conduits. Removed sheet notes 1,2, notes 6 and 8. Revised sheet notes 4.	CYF	EJL	CCO NO.48
3	09/05/03	Revised Pipe Beam.	EJL	CYF	CCO NO.92
2	09/05/03	Revised tray supports and notes 6,7 and 8.	EJL	CYF	CCO NO.48
1	4/18/03	New Drawing Revised Conduit Design	EJL	CYF	CCO NO.48

REVISIONS

CONTRACT CHANGE ORDER NO. 48 S1
SHEET 33 OF 67

DETAILS
HINGE AE
AS NOTED

(1) EE-300A

CALCULATED/ DESIGNED BY	EJL	DATE 2/03	REVISED BY	EJL	EJL	EJL
CHECKED BY	CYF	2/03	DATE REVISED	4/18/03	9/5/03	2/20/04

DESIGN OVERSIGHT
BEHZAD GOLEMOHAMMADI

STATE OF CALIFORNIA - DEPARTMENT OF TRANSPORTATION
Caltrans

LAST REVISION 00-00-00
DATE PLOTTED => 15-JUL-2005
TIME PLOTTED => 08:47

FOR REDUCED PLANS ORIGINAL SCALE IS IN MILLIMETERS 0 20 40 60 80

DGN FILE =>04-012024_0341A0R2.dgn
USERNAME =>mhossain

CU 04251 EA 012021

DIST	COUNTY	ROUTE	KILOMETER POST TOTAL PROJECT	SHEET No	TOTAL SHEETS
04	SF, Ala	80	13.9 / 14.3, 0.0 / 1.6	341B	978

Caltrans Metric

Jens Erlingsson 05/16/01
REGISTERED ELECTRICAL ENGINEER DATE

6-4-01
PLANS APPROVAL DATE

REGISTERED PROFESSIONAL ENGINEER JENS ERLINGSSON No. 8249 Exp. 9/30/06 ELECTRICAL STATE OF CALIFORNIA

PB POWER, Inc.
A Parsons Brinckerhoff Company
303 Second St., Suite 700N
San Francisco, CA 94107-1317

The State of California or its officers or agents shall not be responsible for the accuracy or completeness of electronic copies of this plan sheet.

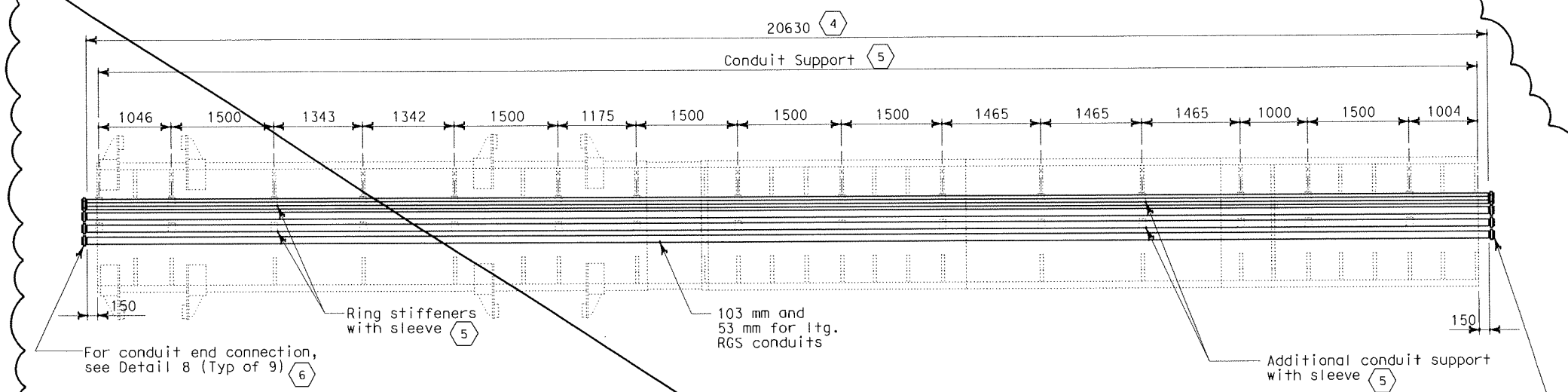

DETAIL

PIPE BEAM FOR HINGE AE (TYP OF 2)
SCALE: 1:40

DELETED

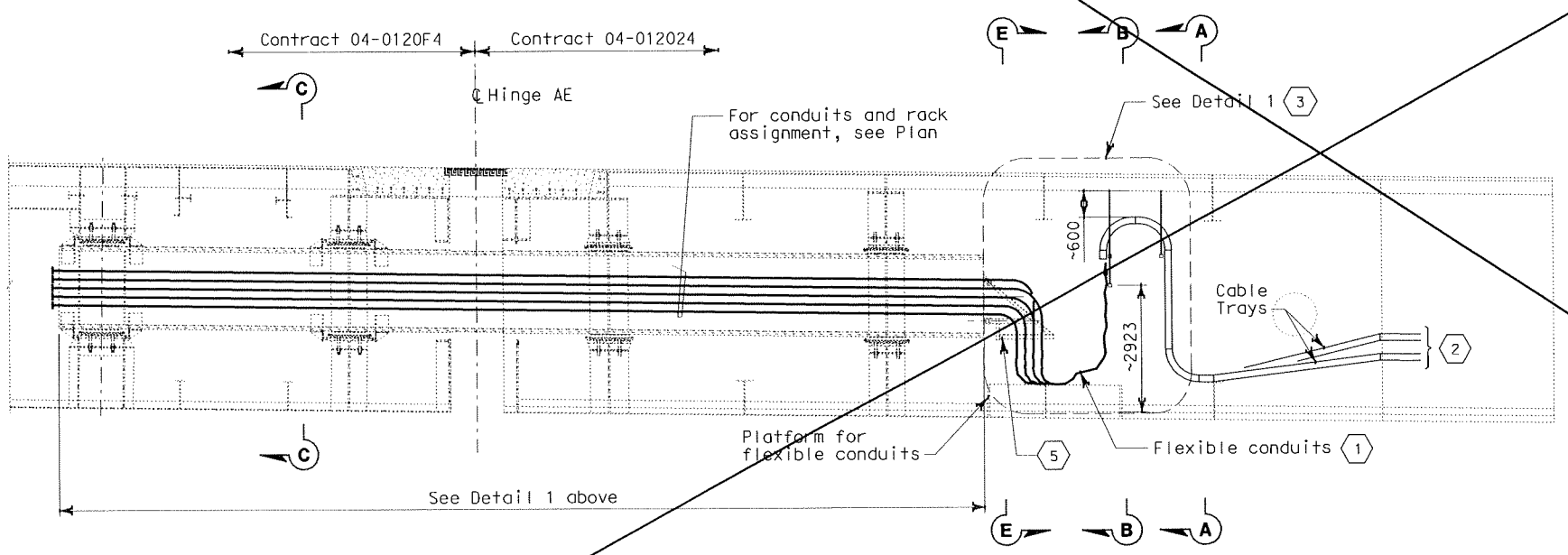

ELEVATION - HINGE AE

AT CENTERLINE OF PIPE BEAM
SCALE: 1:75

SHEET NOTES:

(1) Hinge AE electrical design is based on the maximum expansion joint movement opening of 1243 mm.

(2) Continued on sheet EE-81. For details at transition section, see sheet EE-264.

(3) For Detail 1, see sheet EE-305A.

(4) Conduits through pipe beam shall part of the pipe beam assembly. Conduit shall be welded together to form a continuous conduit inside the pipe beam, length as specifiied. The weld shall be smooth on the outside and free of burrs inside the conduit. Conduit fittings, like coupling, etc. to form a continuous conduit shall not be permitted as alternative.

The intent of this conduit design is to be able to remove the entire length of conduit inside the pipe beam, in case maintenance is required inside the pipe beam assembly.

(5) For conduit supports at pipe beam, see Structure sheets AS-27, AS-28 and AS-29.

(6) For Detail 8, see sheet EE-305B.

NOTES:

1. Minimum radius of cable tray fittings shall be 610 mm.
2. Minimum radius of 103 mm conduit bends shall be 610 mm.
3. Cables/circuits passing through the hinge locations shall be provided with cable identification tag at both ends of Hinge. See Circuit Schedules EE-327.
4. For additional work related not shown on this drawing, see Electrical Special Provisions.
5. References:
   - For Girder Level Eastbound plans, see sheets EE-81 to EE-97.
   - For Typical Girder Cable Tray at Transition section, see sheet EE-264.
6. Sections A-A and B-B cable tray supports are similar except attachment to structure is steel.
7. For Section C-C, see sheet EE-306B.
8. For Section E-E, see sheet EE-306C.

MARK	DATE	DESCRIPTIONS	REV	CK	
2	7/5/05	Deleted sheet.	MH	KT	CCO NO.48
1	04/18/03	New Drawing. Revise conduit design	EJL	CYF	CCO NO.48

REVISIONS

CONTRACT CHANGE ORDER NO. 48 S1
SHEET 34 OF 67

DETAILS HINGE AE

(1)
SCALE: 1:200

EE-300B

DATE	REVISED BY	DATE	REVISED
11/03	EJL	11/03	CYF

CALCULATED/DESIGNED BY EJL
CHECKED BY CYF

DESIGN OVERSIGHT
BEHZAD GOLEMOHAMMADI

STATE OF CALIFORNIA - DEPARTMENT OF TRANSPORTATION
Caltrans

LAST REVISION 00-00-00
DATE PLOTTED => 08-AUG-2006
TIME PLOTTED => 11:02

FOR REDUCED PLANS ORIGINAL SCALE IS IN MILLIMETERS 0 20 40 60 80

DGN FILE =>04-012024_0341B.dgn
USERNAME =>mhossain

CU 04251 EA 012021

DIST	COUNTY	ROUTE	KILOMETER POST TOTAL PROJECT	SHEET NO	TOTAL SHEETS
04	SF, Ala	80	13.9 / 14.3, 0.0 / 1.6	341A2	978

REGISTERED ELECTRICAL ENGINEER DATE

1-18-06
PLANS APPROVAL DATE

REGISTERED PROFESSIONAL ENGINEER
JENS ERLINGSSON
No. 8249
Exp. 9/30/06
ELECTRICAL
STATE OF CALIFORNIA

PB POWER, Inc.
A Parsons Brinckerhoff Company
303 Second St., Suite 700N
San Francisco, CA 94107-1317

The State of California or its officers or agents shall not be responsible for the accuracy or completeness of electronic copies of this plan sheet.

THIS PLAN ACCURATE FOR CONDUIT AND TRAY SCHEDULE ONLY

PLAN - HINGE AE

SCALE: 1:75

SHEET NOTES:

(1) Conduits through pipe beam shall be part of the pipe beam assembly. Conduit shall be welded together to form a continuous conduit inside the pipe beam, length as specifiied. The weld shall be smooth on the outside and free of burrs inside the conduit. Conduit fittings, like coupling, etc. to form a continuous conduit shall not be permitted as alternative. Pipe Beam and conduits shown in final position. For stored location, see sheet EE-264

The intent of this conduit design is to be able to remove the entire length of conduit inside the pipe beam, in case maintenance is required inside the pipe beam assembly.

Rack A - (1) 103 mm for 15 kV
(2) 103 mm for spares
(1) 53 mm for 120 V circuit
Rack B - (1) 103 mm for spare
(4) 103 mm for Non-Caltrans Utilities
Rack C - (5) 103 mm for TOS/COM
Rack D - (4) 103 mm for spares

NOTES:

1. Section C-C is applicable only for conduit arrangement, see sheet EE-306B.

MARK	DATE	DESCRIPTIONS	REV	CK	
1	1/4/06	New Drawing Provided Conduit Schedule	MH	WBH	CCO NO.48

REVISIONS

CONTRACT CHANGE ORDER NO. 48 S1
SHEET 35 OF 67

DETAILS
HINGE AE CONDUIT AND TRAY SCHEDULE

SCALE AS NOTED

EE-300C

CALCULATED/ DESIGNED BY	EJL	DATE 11/03	REVISED BY
CHECKED BY	CYF	11/03	DATE REVISED

DESIGN OVERSIGHT
BEHZAD GOLEMOHAMMADI

STATE OF CALIFORNIA - DEPARTMENT OF TRANSPORTATION
Caltrans

LAST REVISION 00-00-00
DATE PLOTTED => 14-MAR-2006
TIME PLOTTED => 13:15

FOR REDUCED PLANS ORIGINAL SCALE IS IN MILLIMETERS 0 20 40 60 80

DGN FILE =>04-012024_0341A2.dgn
USERNAME =>mhossain

CU 04251 | EA 012021

DIST	COUNTY	ROUTE	KILOMETER POST TOTAL PROJECT	SHEET No	TOTAL SHEETS
04	SF,Ala	80	13.9 / 14.3, 0.0 / 1.6	341B	978

REGISTERED ELECTRICAL ENGINEER — DATE 05/16/01

6-4-01
PLANS APPROVAL DATE

REGISTERED PROFESSIONAL ENGINEER — JENS ERLINGSSON No. 8249 Exp. 9/30/06 ELECTRICAL — STATE OF CALIFORNIA

PB POWER, Inc.
A Parsons Brinckerhoff Company
303 Second St., Suite 700N
San Francisco, CA 94107-1317

The State of California or its officers or agents shall not be responsible for the accuracy or completeness of electronic copies of this plan sheet.

Caltrans Metric

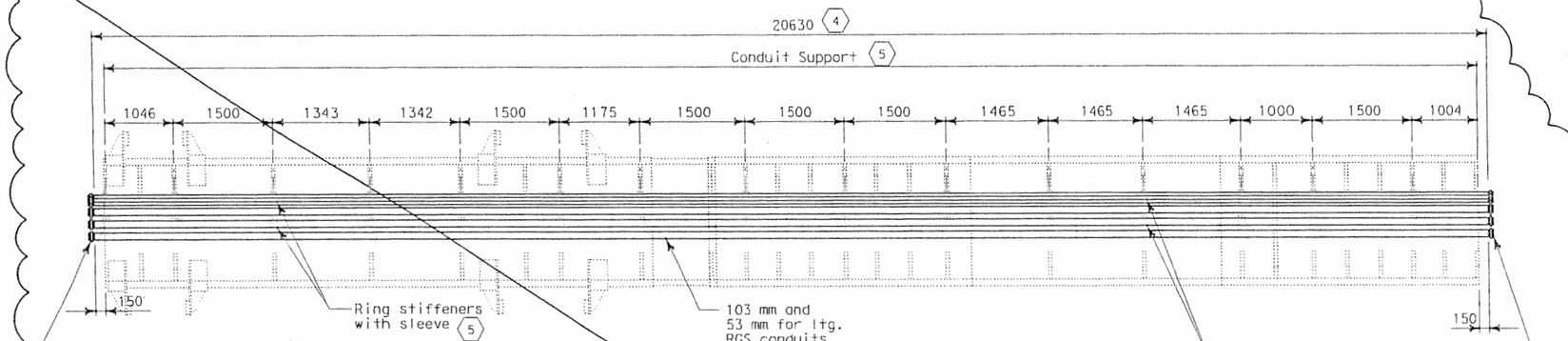

DETAIL
PIPE BEAM FOR HINGE AE (TYP OF 2)
SCALE: 1:40

DELETED

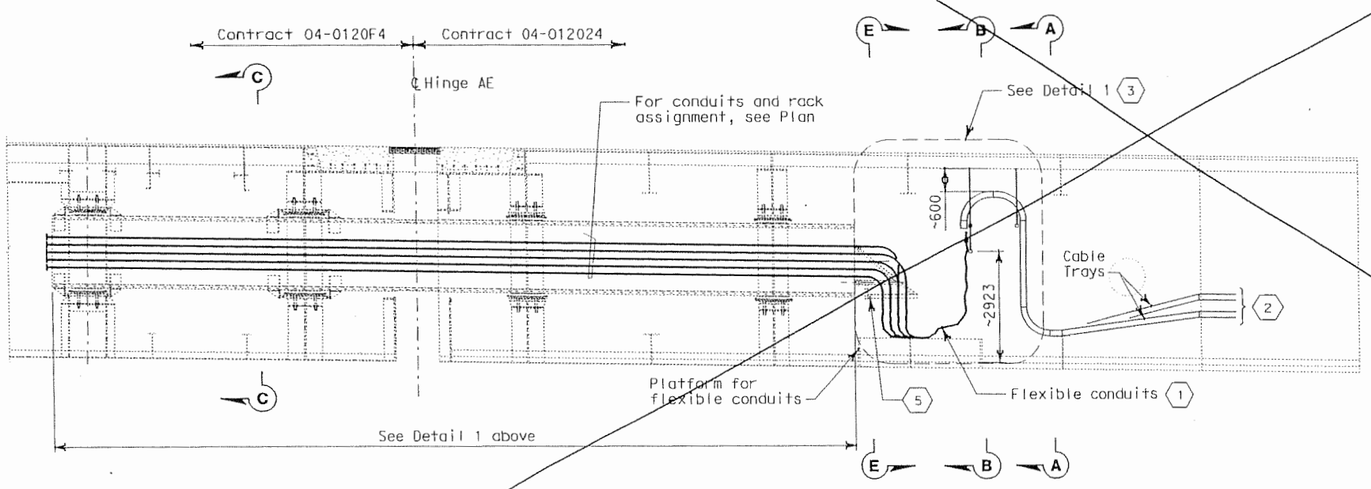

ELEVATION - HINGE AE
AT CENTERLINE OF PIPE BEAM
SCALE: 1:75

SHEET NOTES:

(1) Hinge AE electrical design is based on the maximum expansion joint movement opening of 1243 mm.

(2) Continued on sheet EE-81. For details at transition section, see sheet EE-264.

(3) For Detail 1, see sheet EE-305A.

(4) Conduits through pipe beam shall part of the pipe beam assembly. Conduit shall be welded together to form a continuous conduit inside the pipe beam, length as specifiied. The weld shall be smoath on the outside and free of burrs inside the conduit. Conduit fittings, like coupling, etc. to form a continuous conduit shall not be permitted as alternative.

The intent of this conduit design is to be able to remove the entire length of conduit inside the pipe beam, in case maintenance is required inside the pipe beam assembly.

(5) For conduit supports at pipe beam, see Structure sheets AS-27, AS-28 and AS-29.

(6) For Detail 8, see sheet EE-305B.

NOTES:

1. Minimum radius of cable tray fittings shall be 610 mm.
2. Minimum radius of 103 mm conduit bends shall be 610 mm.
3. Cables/circuits passing through the hinge locations shall be provided with cable identification tag at both ends of Hinge. See Circuit Schedules EE-327.
4. For additional work related not shown on this drawing, see Electrical Special Provisions.
5. References:
   - For Girder Level Eastbound plans, see sheets EE-81 to EE-97.
   - For Typical Girder Cable Tray at Transition section, see sheet EE-264.
6. Sections A-A and B-B cable tray supports are similar except attachment to structure is steel.
7. For Section C-C, see sheet EE-306B.
8. For Section E-E, see sheet EE-306C.

MARK	DATE	DESCRIPTIONS	REV	CK	
1	04/18/03	New Drawing. Revise conduit design	EJL	CYF	CCO NO.48

REVISIONS

CONTRACT CHANGE ORDER NO. 48 S1
SHEET 36 OF 67

(1) **DETAILS**
HINGE AE
SCALE: 1:200

EE-300B

CALCULATED/DESIGNED BY	EJL	DATE 11/03	REVISED BY	
CHECKED BY	CYF	11/03	DATE REVISED	

DESIGN OVERSIGHT
BEHZAD GOLEMOHAMMADI

STATE OF CALIFORNIA - DEPARTMENT OF TRANSPORTATION
Caltrans

LAST REVISION 00-00-00
DATE PLOTTED => 01-AUG-2005
TIME PLOTTED => 16:35

FOR REDUCED PLANS ORIGINAL SCALE IS IN MILLIMETERS 0 20 40 60 80

DGN FILE =>04-012024_0341B.dgn
USERNAME =>mhossain

CU 04251 | EA 012021

DIST	COUNTY	ROUTE	KILOMETER POST TOTAL PROJECT	SHEET No	TOTAL SHEETS
04	SF, Ala	80	13.9 / 14.3, 0.0 / 1.6	342R2	978

Jens Erlingsson 04/18/03
REGISTERED ELECTRICAL ENGINEER DATE

6-4-01
PLANS APPROVAL DATE

REGISTERED PROFESSIONAL ENGINEER JENS ERLINGSSON No. 8249 Exp. 9/30/06 ELECTRICAL STATE OF CALIFORNIA

PB POWER, Inc.
A Parsons Brinckerhoff Company
303 Second St., Suite 700N
San Francisco, CA 94107-1317

The State of California or its officers or agents shall not be responsible for the accuracy or completeness of electronic copies of this plan sheet.

Caltrans Metric

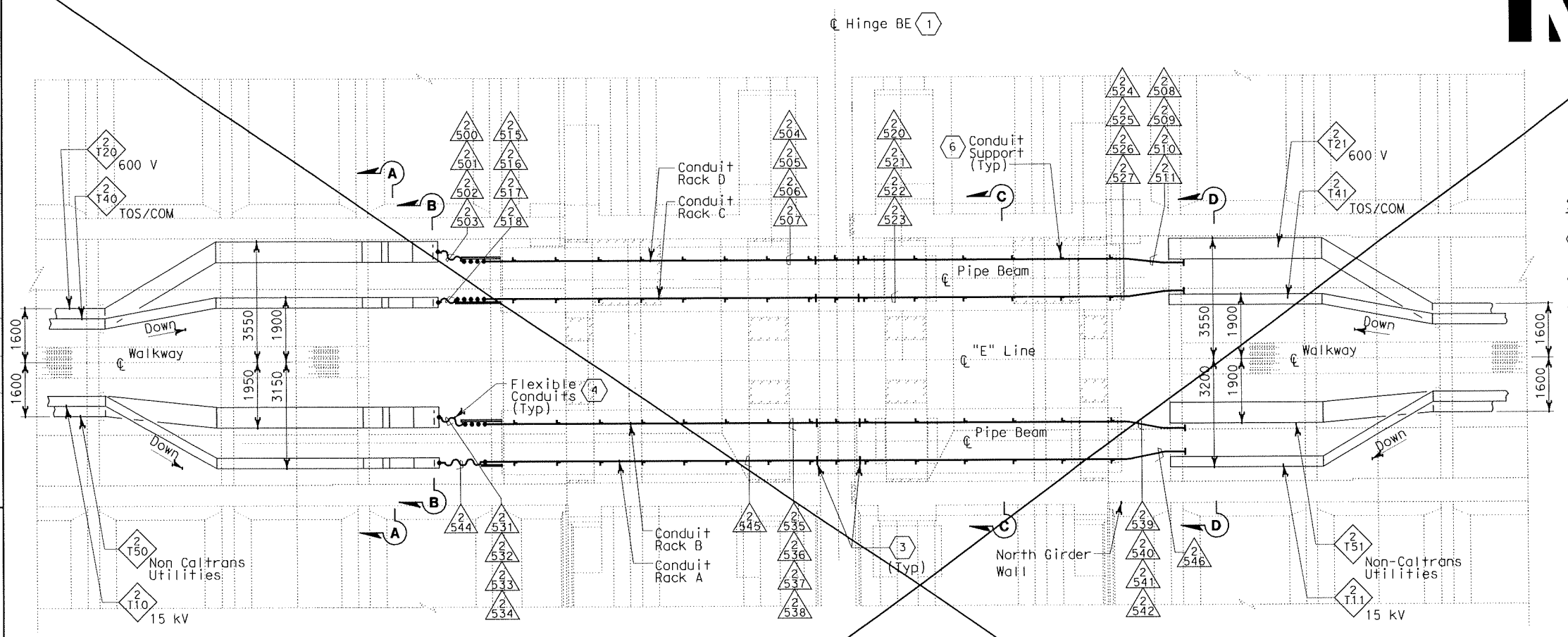

PLAN - HINGE BE

SCALE: 1:75

DELETED

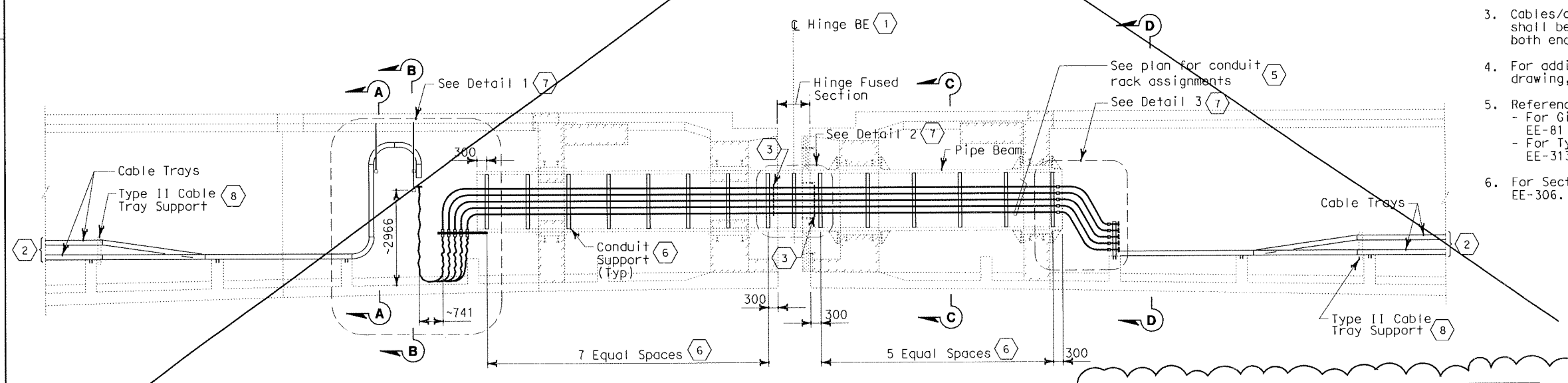

ELEVATION - HINGE BE

AT CENTERLINE OF PIPE BEAM
SCALE: 1:75

SHEET NOTES:

(1) Hinge BE electrical design is based on the maximum expansion joint movement opening of 959 mm.

(2) Continued on Sheet EE-86.

(3) Provide expansion/deflection couplings at each end of the hinge fused area.

(4) Arrange and group the flexible 103 mm conduits to maintain a minimum voltage level separation of 460 mm.

(5) Conduits through Pipe Beam
Rack A - (1) 103 mm for 15 kV and (1) conduit for 120 V circuit-size varies.
Rack B - (4) 103 mm for Non-Caltrans Utilities
Rack C - (4) 103 mm for TOS/COM
Rack D - (4) 103 mm for 600 V

(6) Conduit support not to exceed 1500 mm apart.

(7) For Details 1, 2 and 3 see Sheet EE-305.

(8) For details of Type II cable tray support, see Structure Sheet AS-24.

NOTES:

1. Minimum radius of cable tray fittings shall be 610 mm.
2. Minimum conduit radius of 103 mm conduits shall be 610 mm.
3. Cables/circuits passing through the hinge locations shall be provided with cable identification tag at both ends of Hinge. See Circuit Schedules EE-327.
4. For additional work related not shown on this drawing, see Electrical Special Provisions.
5. References:
   - For Girder Level Eastbound plans, see Sheets EE-81 to EE-97.
   - For Typical Girder Embed plans and sections, see EE-313 and EE-314.
6. For Sections A-A, B-B, C-C and D-D, see Sheet EE-306.

MARK	DATE	DESCRIPTIONS	REV	CK	
1	04/18/03	Drawing deleted. Superceded by dwg. EE-301A and EE-301B.	EJL	CYF	CCO NO.48

REVISIONS

CONTRACT CHANGE ORDER NO. 48 S1
SHEET 37 OF 67

1

DETAILS
HINGE BE
SCALE AS NOTED

EE-301

DATE	JE	CALCULATED/ DESIGNED BY	CHECKED BY	REVISED BY	DATE REVISED	CYF	EJL
5/00	TW					10/01	4/18/03

DESIGN OVERSIGHT
BEHZAD GOLEMOHAMMADI

STATE OF CALIFORNIA - DEPARTMENT OF TRANSPORTATION
Caltrans

LAST REVISION 00-00-00
DATE PLOTTED => 08-AUG-2006
TIME PLOTTED => 11:04

FOR REDUCED PLANS ORIGINAL SCALE IS IN MILLIMETERS 0 20 40 60 80

DGN FILE =>04-012024_0342R2.dgn
USERNAME =>mhossain

CU 04251 EA 012021

DIST	COUNTY	ROUTE	KILOMETER POST TOTAL PROJECT	SHEET No	TOTAL SHEETS
04	SF, Ala	80	13.9 / 14.3, 0.0 / 1.6	342A	978

Caltrans Metric

REGISTERED ELECTRICAL ENGINEER 04/18/03 DATE

6-4-01
PLANS APPROVAL DATE

REGISTERED PROFESSIONAL ENGINEER JENS ERLINGSSON No. 8249 Exp. 9/30/06 ELECTRICAL STATE OF CALIFORNIA

PB POWER, Inc.
A Parsons Brinckerhoff Company
303 Second St., Suite 700N
San Francisco, CA 94107-1317

The State of California or its officers or agents shall not be responsible for the accuracy or completeness of electronic copies of this plan sheet.

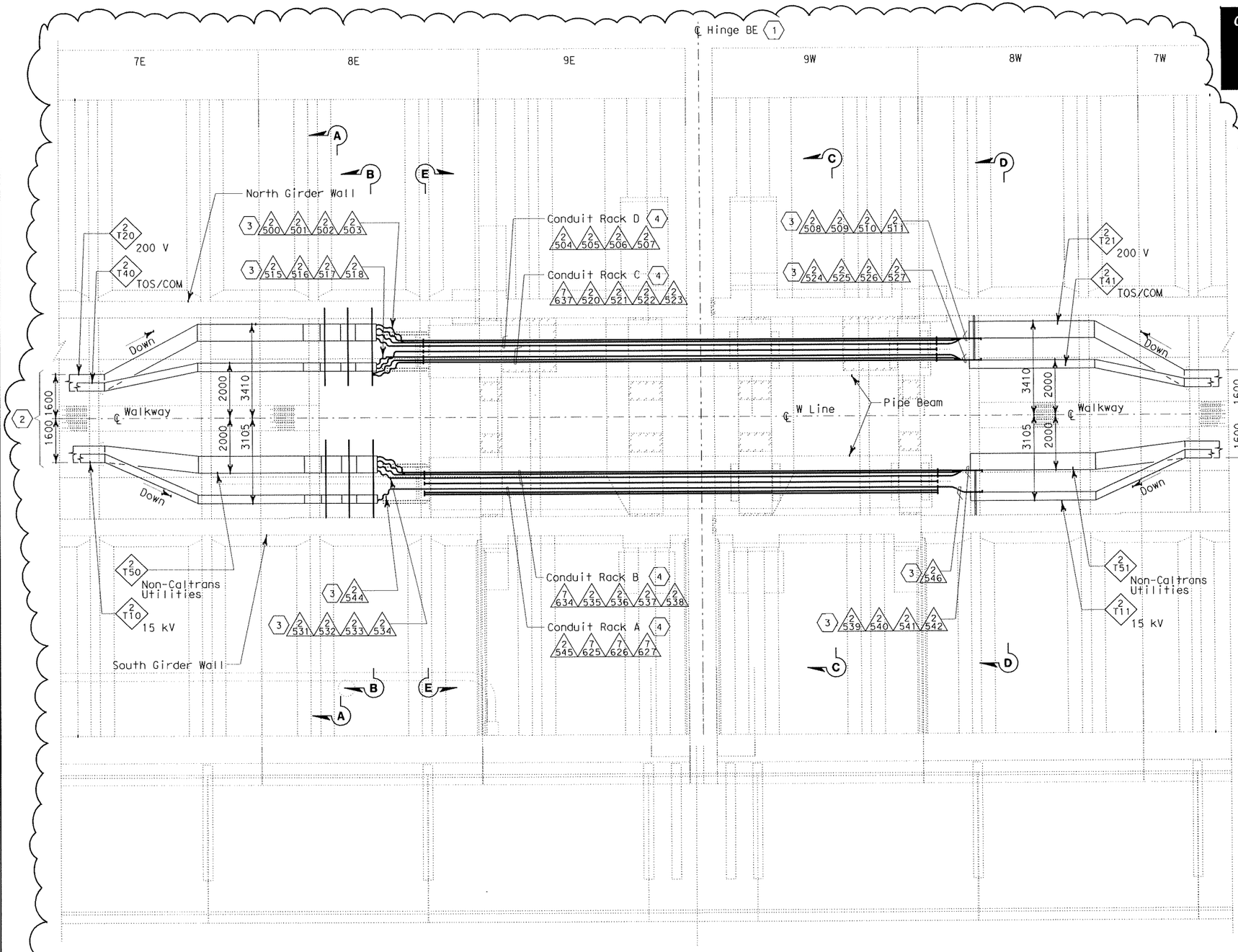

PLAN - HINGE BE

SCALE: 1:75

SHEET NOTES:

(1) Hinge BE electrical design is based on the maximum expansion joint movement opening of 959 mm.

(2) Continued on sheet EE-86.

(3) Arrange and group the flexible 103 mm conduits to maintain a minimum voltage level separation of 460 mm between systems.

(4) Conduits through pipe beam shall be part of the pipe beam assembly. Conduit shall be welded together to form a continuous conduit inside the pipe beam, length as specified. The weld shall be smooth on the outside and free of burrs inside the conduit. Conduit fittings, like coupling, etc. to form a continuous conduit shall not be permitted as alternative.

The intent of this conduit design is to be able to remove the entire length of conduit inside the pipe beam, in case maintenance is required inside the pipe beam assembly.

Rack A - (1) 103 mm for 15 kV
(2) 103 mm for spares
(1) 53 mm for 120 V circuit
Rack B - (1) 103 mm for spare
(4) 103 mm for Non-Caltrans Utilities
Rack C- (1) 103 mm for spare
(4) 103 mm for TOS/COM
Rack D - (4) 103 mm for 600 V

NOTES:

1. Minimum radius of cable tray fittings shall be 610 mm.
2. Minimum radius of 103 mm conduit bends shall be 610 mm.
3. Cables/circuits passing through the hinge locations shall be provided with cable identification tag at both ends of Hinge. See Circuit Schedules EE-327.
4. For additional work related not shown on this drawing, see Electrical Special Provisions.
5. References:
   - For Girder Level Eastbound plans, see sheets EE-81 to EE-97.
   - For Typical Girder Embed plans and sections, see EE-313 and EE-314A.
6. For Sections A-A and B-B, see EE-306A.
7. For Sections C-C and D-D, see sheet EE-306B.
8. For Section E-E, see sheet EE-306C.

MARK	DATE	DESCRIPTIONS	REV	CK	
1	04/18/03	New Drawing. Revise conduit design	EJL	CYF	CCO NO.48

REVISIONS

CONTRACT CHANGE ORDER NO. 48 S1
SHEET 38 OF 67

1 **DETAILS**
HINGE BE
SCALE AS NOTED

EE-301A

CALCULATED/DESIGNED BY	EJL	DATE 2/03	REVISED BY EJL
CHECKED BY	CYF	2/03	DATE REVISED 4/18/03

DESIGN OVERSIGHT
BEHZAD GOLEMOHAMMADI

STATE OF CALIFORNIA - DEPARTMENT OF TRANSPORTATION
Caltrans

FILE: T:\31023WS\pse\electrical\con2\31039es1222.dgn
DATE: 10-Jul-01 15:05

LAST REVISION 00-00-00
DATE PLOTTED => 08-AUG-2006
TIME PLOTTED => 11:05

FOR REDUCED PLANS ORIGINAL SCALE IS IN MILLIMETERS 0 20 40 60 80

DGN FILE =>04-012024_0342A.dgn
USERNAME =>mhossain

CU 04251 EA 012021

DIST	COUNTY	ROUTE	KILOMETER POST TOTAL PROJECT	SHEET No.	TOTAL SHEETS
04	SF, Ala	80	13.9 / 14.3, 0.0 / 1.6	342B R2	978

REGISTERED ELECTRICAL ENGINEER — DATE 05/16/01

6-4-01
PLANS APPROVAL DATE

REGISTERED PROFESSIONAL ENGINEER — JENS ERLINGSSON — No. 8249 — Exp. 9/30/06 — ELECTRICAL — STATE OF CALIFORNIA

PB POWER, inc.
A Parsons Brinckerhoff Company
303 Second St., Suite 700N
San Francisco, CA 94107-1317

The State of California or its officers or agents shall not be responsible for the accuracy or completeness of electronic copies of this plan sheet.

Caltrans Metric

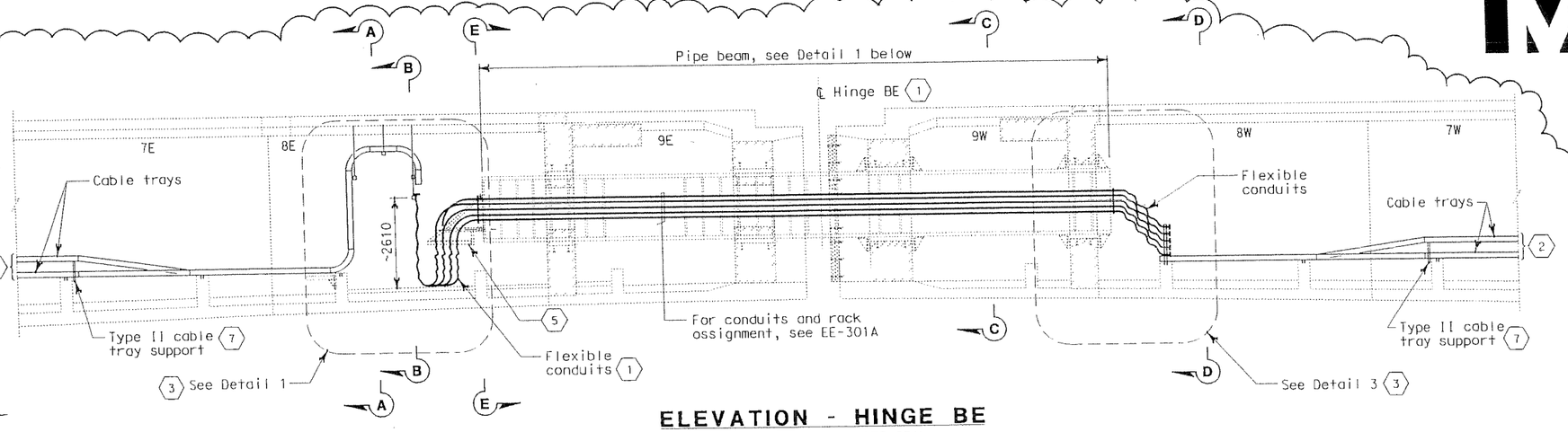

ELEVATION - HINGE BE

AT CENTERLINE OF PIPE BEAM
SCALE: 1:75

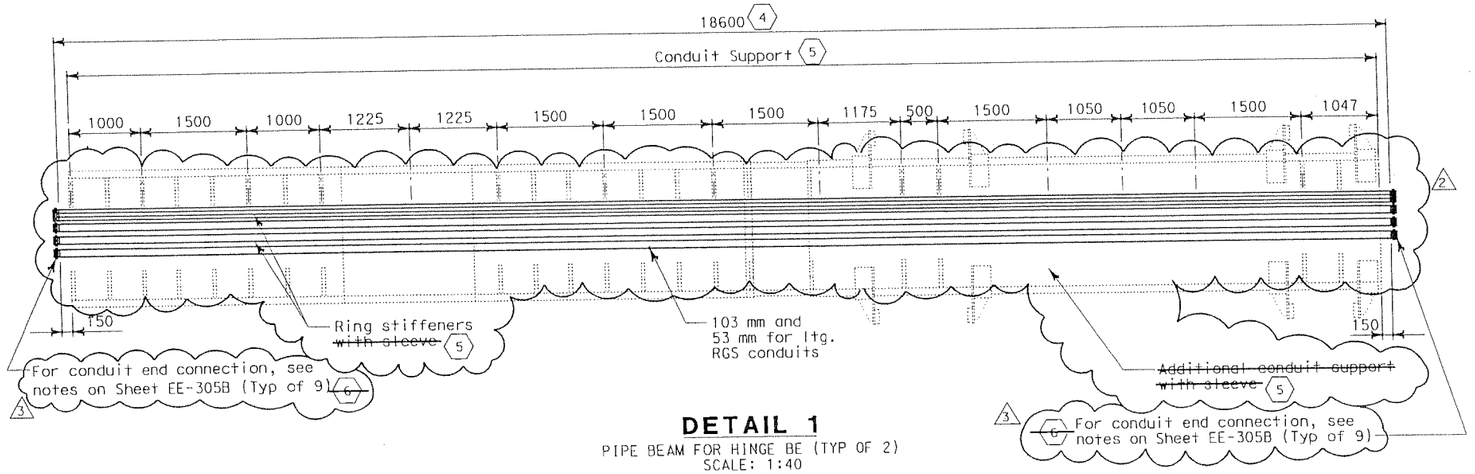

DETAIL 1

PIPE BEAM FOR HINGE BE (TYP OF 2)
SCALE: 1:40

SHEET NOTES:

(1) Hinge BE electrical design is based on the maximum expansion joint movement opening of 959 mm.

(2) Continued on sheet EE-86.

(3) For Detail 1 and 3, see sheet EE-305A.

(4) Conduits through pipe beam shall part of the pipe beam assembly. Conduit shall be welded together to form a continuous conduit inside the pipe beam, length as specifiied. The weld shall be smooth on the outside and free of burrs inside the conduit. Conduit fittings, like coupling, etc. to form a continuous conduit shall not be permitted as alternative.

The intent of this conduit design is to be able to remove the entire length of conduit inside the pipe beam, in case maintenance is required inside the pipe beam assembly.

(5) For conduit supports at pipe beam, see Structure sheets AS-35, AS-36 and AS-37.

(3) ~~(6) For Detail 8, see sheet EE-305B.~~

(7) For Detail of Type II cable tray support, see Structure sheet AS-24.

NOTES:

1. Minimum radius of cable tray fittings shall be 610 mm.
2. Minimum radius of 103 mm conduit bends shall be 610 mm.
3. Cables/circuits passing through the hinge locations shall be provided with cable identification tag at both ends of Hinge. See Circuit Schedules EE-327.
4. For additional work related not shown on this drawing, see Electrical Special Provisions.
5. References:
   - For Girder Level Eastbound plans, see sheets EE-81 to EE-97.
   - For Typical Girder Embed plans and sections, see EE-313 and EE-314A.
6. For Sections A-A and B-B, see sheet EE-306A.
7. For Sections C-C and D-D, see sheet EE-306B.
8. For Section E-E, see sheet EE-306C.

REGISTERED ELECTRICAL ENGINEER — DATE 5/31/05
REGISTERED PROFESSIONAL ENGINEER — K.T. Truong — No. 16240 — Exp. 12-31-06 — ELECTRICAL — STATE OF CALIFORNIA (3)

ORIGINAL SIGNED — REGISTERED ELECTRICAL ENGINEER — DATE 10/1/04
REGISTERED PROFESSIONAL ENGINEER — NABEEL F. ABDELRAHMAN — No. 17162 — Exp. 9/30/05 — ELECTRICAL — STATE OF CALIFORNIA (2)

MARK	DATE	DESCRIPTIONS	REV	CK	
3	5/31/05	Revised notes and deleted sheet note 6.	MH	KT	CCO NO.48
2	07/21/04	Revised pipe beam conduit layout.	VHP		CCO NO.48
1	04/18/03	New Drawing. Revise conduit design	EJL	CYF	CCO NO.48

REVISIONS

CONTRACT CHANGE ORDER NO. 48 S1
SHEET 39 OF 67

(1) **DETAILS**
HINGE BE
SCALE AS NOTED

EE-301B

CALCULATED/DESIGNED BY	EJL	DATE 2/03	REVISED BY	EJL	4/18/03
CHECKED BY	CYF	2/03	DATE REVISED		

DESIGN OVERSIGHT: BEHZAD GOLEMOHAMMADI

STATE OF CALIFORNIA - DEPARTMENT OF TRANSPORTATION — Caltrans

FILE: I:\3103\US\gse\electrical\con21\3103es1662.dgn
DATE: 10-02-2001 08:58

LAST REVISION 00-00-00 — DATE PLOTTED => 01-AUG-2005 — TIME PLOTTED => 16:39

FOR REDUCED PLANS ORIGINAL SCALE IS IN MILLIMETERS 0 20 40 60 80

DGN FILE =>04-012024_0342BR2.dgn
USERNAME =>mhossain

CU 04251 | EA 012021

DIST	COUNTY	ROUTE	KILOMETER POST TOTAL PROJECT	SHEET NO.	TOTAL SHEETS
04	SF, Ala	80	13.9 / 14.3, 0.0 / 1.6	343 R2	978

Jens Erlingsson 04/18/03
REGISTERED ELECTRICAL ENGINEER DATE

6-4-01
PLANS APPROVAL DATE

REGISTERED PROFESSIONAL ENGINEER JENS ERLINGSSON No. 8249 Exp. 9/30/06 ELECTRICAL STATE OF CALIFORNIA

PB POWER, Inc.
A Parsons Brinckerhoff Company
303 Second St., Suite 700N
San Francisco, CA 94107-1317

The State of California or its officers or agents shall not be responsible for the accuracy or completeness of electronic copies of this plan sheet.

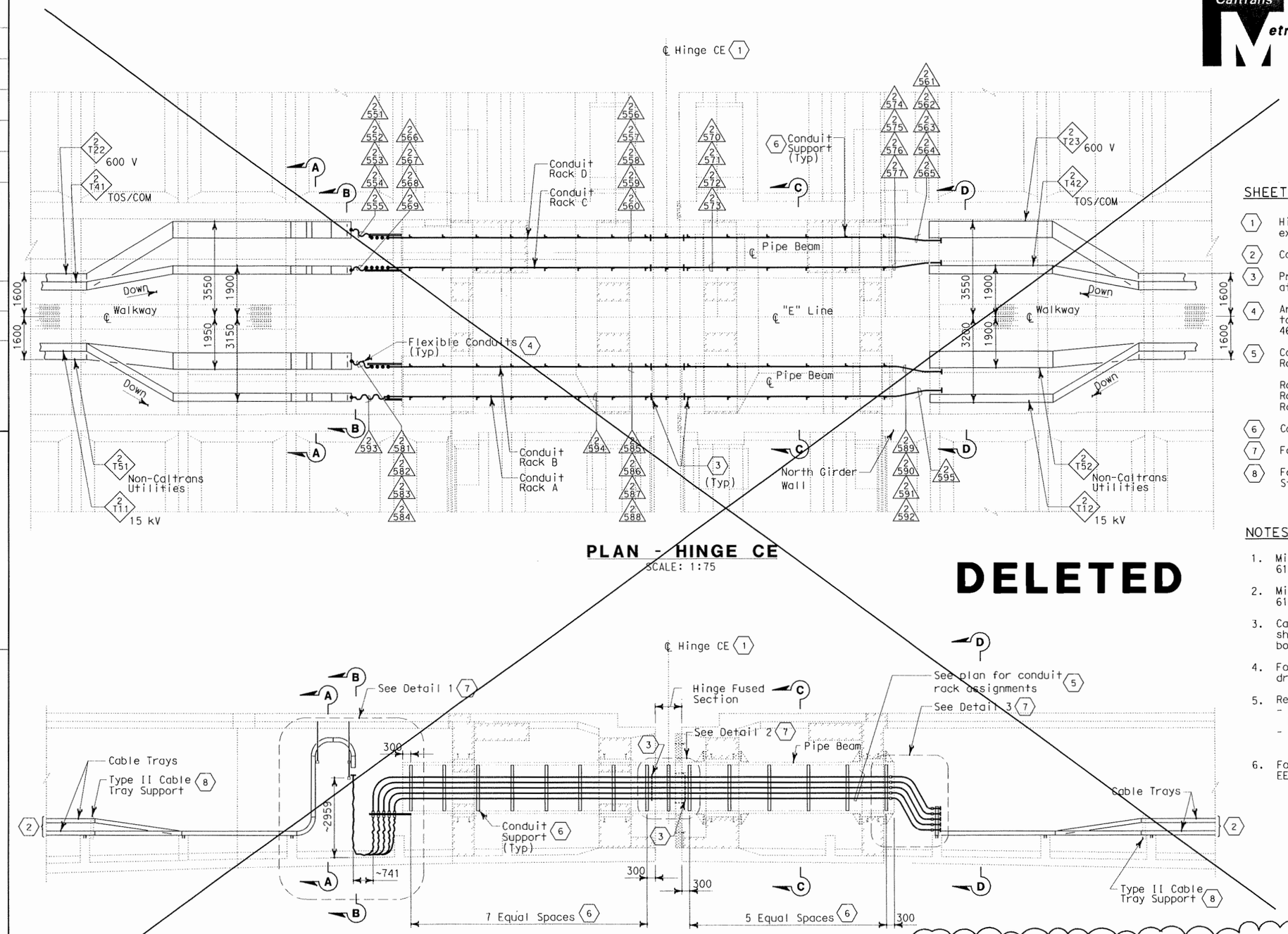

PLAN - HINGE CE
SCALE: 1:75

ELEVATION - HINGES CE
AT CENTERLINE OF PIPE BEAM
SCALE: 1:75

SHEET NOTES:

1. Hinge CE electrical design is based on the maximum expansion joint movement opening of 925 mm.
2. Continued on Sheet EE-91.
3. Provide expansion/deflection couplings at each end of the hinge fused area.
4. Arrange and group the flexible 103 mm conduits to maintain a minimum voltage level separation of 460 mm.
5. Conduits through Pipe Beam
   Rack A - (1) 103 for 15 kV and (1) conduit for 120 V circuit-size varies.
   Rack B - (4) 103 mm for Non-Caltrans Utilities.
   Rack C - (4) 103 mm for TOS/COM
   Rack D - (5) 103 mm for 600 V
6. Conduit support not to exceed 1500 mm apart.
7. For Details 1, 2 and 3 see Sheet EE-305.
8. For details of Type II cable tray support, see Structure Sheet AS-24.

NOTES:

1. Minimum radius of cable tray fittings shall be 610 mm.
2. Minimum conduit radius of 103 mm conduits shall be 610 mm.
3. Cables/circuits passing through the hinge locations shall be provided with cable identification tag at both ends of Hinge. See Circuit Schedules EE-327.
4. For additional work related not shown on this drawing, see Electrical Special Provisions.
5. References:
   - For Girder Level Eastbound plans, see Sheets EE-81 to EE-97.
   - For Typical Girder Embed plans and sections, see EE-313 and EE-314.
6. For Sections A-A, B-B, C-C and D-D, see Sheet EE-306.

MARK	DATE	DESCRIPTIONS	REV	CK	
1	04/18/03	Drawing deleted. Superceded by dwg. EE-302A and EE-302B.	EJL	CYF	CCO NO.48

REVISIONS

CONTRACT CHANGE ORDER NO. 48 S1
SHEET 40 OF 67

DETAILS
HINGE CE
SCALE AS NOTED

EE-302

CALCULATED/DESIGNED BY	JE	DATE 5/00	REVISED BY	CYF	EJL
CHECKED BY	TW	5/00	DATE REVISED	10/01	4/18/03

DESIGN OVERSIGHT
BEHZAD GOLEMOHAMMADI

STATE OF CALIFORNIA - DEPARTMENT OF TRANSPORTATION
Caltrans

LAST REVISION 00-00-00
DATE PLOTTED => 08-AUG-2006
TIME PLOTTED => 12:22

FOR REDUCED PLANS ORIGINAL SCALE IS IN MILLIMETERS 0 20 40 60 80

DGN FILE =>04-012024_0343R2.dgn
USERNAME =>mhossain

CU 04251 | EA 012021

DIST	COUNTY	ROUTE	KILOMETER POST TOTAL PROJECT	SHEET No	TOTAL SHEETS
04	SF, Ala	80	13.9 / 14.3, 0.0 / 1.6	343A	978

Jens Erlingsson 04/18/03
REGISTERED ELECTRICAL ENGINEER DATE

6-4-01
PLANS APPROVAL DATE

REGISTERED PROFESSIONAL ENGINEER JENS ERLINGSSON No. 8249 Exp. 9/30/06 ELECTRICAL STATE OF CALIFORNIA

PB POWER, Inc.
A Parsons Brinckerhoff Company
303 Second St., Suite 700N
San Francisco, CA 94107-1317

The State of California or its officers or agents shall not be responsible for the accuracy or completeness of electronic copies of this plan sheet.

Caltrans Metric

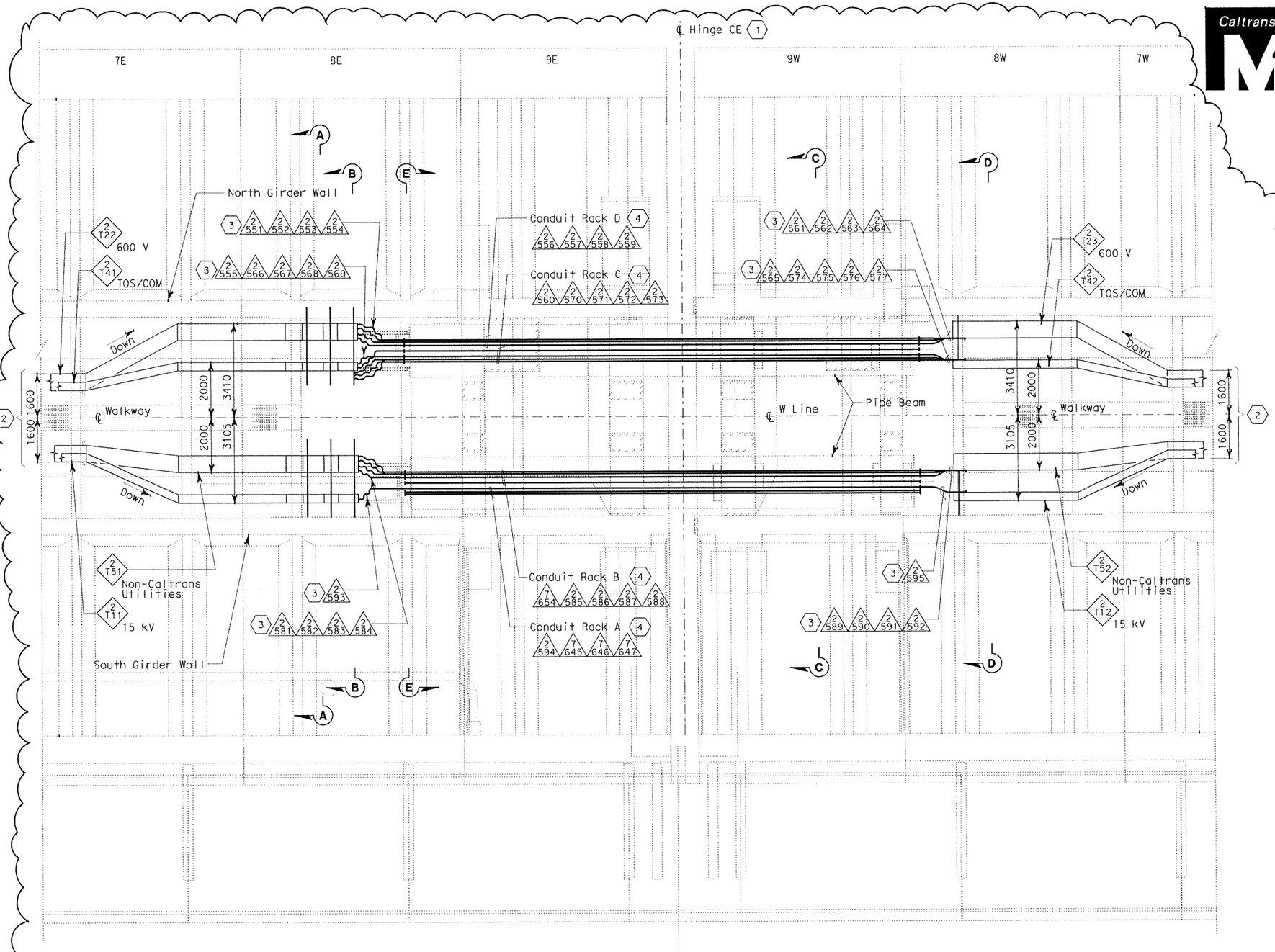

PLAN - HINGE CE

SCALE: 1:75

SHEET NOTES:

(1) Hinge CE electrical design is based on the maximum expansion joint movement opening of 925 mm.

(2) Continued on sheet EE-91.

(3) Arrange and group the flexible 103 mm conduits to maintain a minimum voltage level separation of 460 mm.

(4) Conduits through pipe beam shall be part of the pipe beam assembly. Conduit shall be welded together to form a continuous conduit inside the pipe beam, length as specified. The weld shall be smooth on the outside and free of burrs inside the conduit. Conduit fittings, like coupling, etc. to form a continuous conduit shall not be permitted as alternative.

(5) The intent of this conduit design is to be able to remove the entire length of conduit inside the pipe beam, in case maintenance is required inside the pipe beam assembly.

Rack A - (1) 103 mm for 15 kV
(2) 103 mm for spares
(1) 53 mm for 120 V circuit
Rack B - (1) 103 mm for spare
(4) 103 mm for Non-Caltrans Utilities
Rack C- (1) 103 mm for 600 V
(4) 103 mm for TOS/COM
Rack D - (4) 103 mm for 600 V

NOTES:

1. Minimum radius of cable tray fittings shall be 610 mm.
2. Minimum radius of 103 mm conduit bends shall be 610 mm.
3. Cables/circuits passing through the hinge locations shall be provided with cable identification tag at both ends of Hinge. See Circuit Schedules EE-327.
4. For additional work related not shown on this drawing, see Electrical Special Provisions.
5. References:
   - For Girder Level Eastbound plans, see sheets EE-81 to EE-97.
   - For Typical Girder Embed plans and sections, see EE-313 and EE-314A.
6. For Sections A-A and B-B, see EE-306A.
7. For Sections C-C and D-D, see sheet EE-306B.
8. For Section E-E, see sheet EE-306C.

MARK	DATE	DESCRIPTIONS	REV	CK	
1	04/18/03	New Drawing. Revise conduit design	EJL	CYF	CCO NO.48

REVISIONS

CONTRACT CHANGE ORDER NO. 48 S1
SHEET 41 OF 67

1 **DETAILS**
HINGE CE
SCALE AS NOTED

EE-302A

CALCULATED/DESIGNED BY	EJL	DATE 2/03	REVISED BY	EJL
CHECKED BY	CYF	2/03	DATE REVISED	4/18/03

DESIGN OVERSIGHT
BEHZAD GOLEMOHAMMADI

STATE OF CALIFORNIA - DEPARTMENT OF TRANSPORTATION
Caltrans

FILE: T:\3103\MS\gae\electrical\con2\3103es1662.dgn
DATE: 10-JUL-01 15:05

LAST REVISION 00-00-00
DATE PLOTTED => 08-AUG-2006
TIME PLOTTED => 12:26

FOR REDUCED PLANS ORIGINAL SCALE IS IN MILLIMETERS 0 20 40 60 80

DGN FILE =>04-012024_0343A.dgn
USERNAME =>mhossain

CU 04251 EA 012021

DIST	COUNTY	ROUTE	KILOMETER POST TOTAL PROJECT	SHEET No	TOTAL SHEETS
04	SF, Ala	80	13.9 / 14.3, 0.0 / 1.6	343B R2	978

Jens Erlingsson 05/16/01
REGISTERED ELECTRICAL ENGINEER DATE

6-4-01
PLANS APPROVAL DATE

REGISTERED PROFESSIONAL ENGINEER JENS ERLINGSSON No. 8249 Exp. 9/30/06 ELECTRICAL STATE OF CALIFORNIA

PB POWER, Inc.
A Parsons Brinckerhoff Company
303 Second St., Suite 700N
San Francisco, CA 94107-1317

The State of California or its officers or agents shall not be responsible for the accuracy or completeness of electronic copies of this plan sheet.

Caltrans Metric

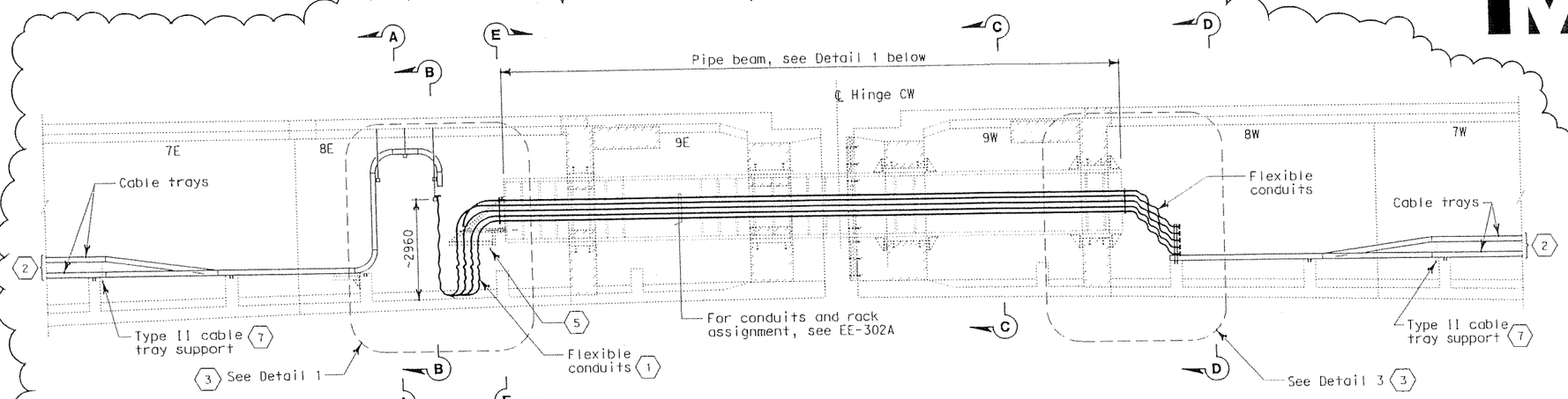

ELEVATION - HINGE CE

AT CENTERLINE OF PIPE BEAM
SCALE: 1:75

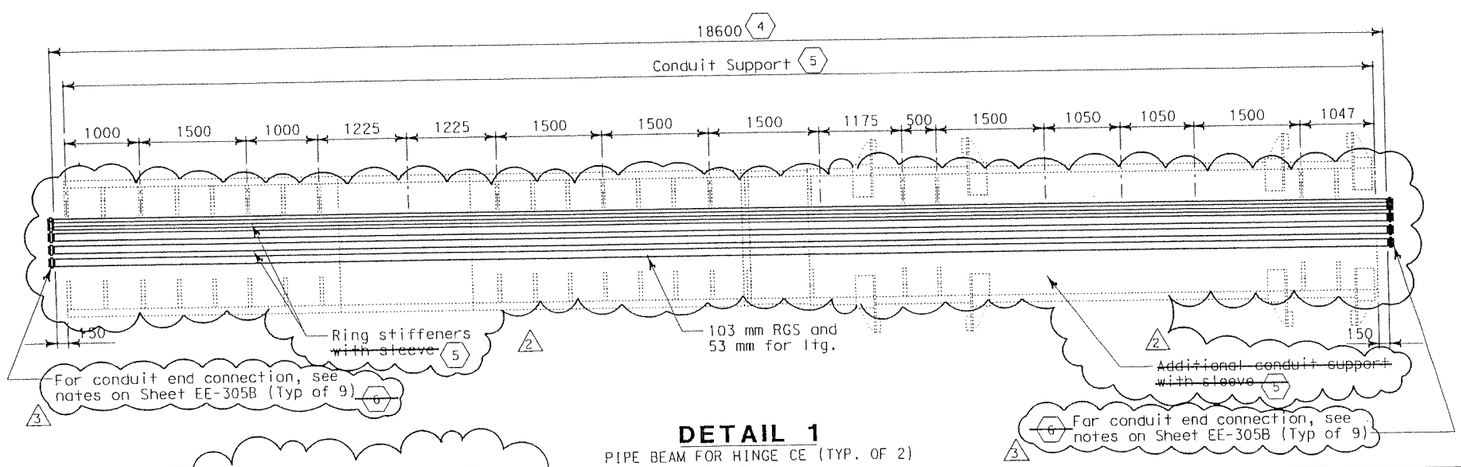

DETAIL 1

PIPE BEAM FOR HINGE CE (TYP. OF 2)
SCALE: 1:40

ORIGINAL SIGNED 10/1/04
REGISTERED ELECTRICAL ENGINEER DATE

REGISTERED PROFESSIONAL ENGINEER NABEEL F. ABDELRAHMAN No. 17162 Exp. 9/30/05 ELECTRICAL STATE OF CALIFORNIA

2

K.T. Truong 5/31/05
REGISTERED ELECTRICAL ENGINEER DATE

REGISTERED PROFESSIONAL ENGINEER K.T. Truong No. 16240 Exp. 12-31-06 ELECTRICAL STATE OF CALIFORNIA

3

MARK	DATE	DESCRIPTIONS	REV	CK	
3	5/31/05	Revised notes and deleted sheet note 6.	MH	KT	CCO NO.48
2	07/21/04	Revised pipe beam conduit layout.	VHP		CCO NO.48
1	04/18/03	New Drawing. Revise conduit design	EJL	CYF	CCO NO.48

REVISIONS

CONTRACT CHANGE ORDER NO. 48 S1
SHEET 42 OF 67

SHEET NOTES:

1. Hinge CE electrical design is based on the maximum expansion joint movement opening of 925 mm.
2. Continued on sheet EE-91.
3. For Details 1 and 3, see sheet EE-305A.
4. Conduit through pipe beam shall be part of the pipe beam assembly. Conduit shall be welded together to form a continuous conduit inside the pipe beam, length as specified. The weld shall be smooth on the outside and free of burrs inside the conduit. Conduit fittings, like coupling, etc. to form a continuous conduit shall not be permitted as alternative.

   The intent of this conduit design is to be able to remove the entire length of conduit inside the pipe beam, in case maintenance is required inside the pipe beam assembly.
5. For conduit supports at pipe beam, see Structure sheets AS-35, AS-36 and AS-37.
6. ~~For Detail 8, see sheet EE-305B.~~ 3
7. For Detail of Type II cable tray suppart, see Structure Sheet AS-24.

NOTES:

1. Minimum radius of cable tray fittings shall be 610 mm.
2. Minimum radius of 103 mm conduit bends shall be 610 mm.
3. Cables/circuits passing through the hinge locations shall be provided with cable identification tag at both ends of Hinge. See Circuit Schedules EE-327.
4. For additional work related not shown on this drawing, see Electrical Special Provisions.
5. References:
   - For Girder Level Eastbound plans, see sheets EE-81 to EE-97.
   - For Typical Girder Embed plans and sections, see EE-313 and EE-314A.
6. For Sections A-A and B-B, see sheet EE-306A.
7. For Sections C-C and D-D, see sheet EE-306B.
8. For Section E-E, see sheet EE-306C.

1 **DETAILS**
HINGE CE
SCALE AS NOTED

EE-302B

DESIGN OVERSIGHT
BEHZAD GOLEMOHAMMADI

CALCULATED/DESIGNED BY EJL DATE 2/03
CHECKED BY CYF 2/03
REVISED BY EJL DATE REVISED 4/18/03

STATE OF CALIFORNIA - DEPARTMENT OF TRANSPORTATION
Caltrans

FILE: T:\13193\MS\pse\electrical\con21\13103es1727.dgn
DATE: 16-JUL-01 14:47

LAST REVISION 00-00-00
DATE PLOTTED => 01-AUG-2005
TIME PLOTTED => 16:54

FOR REDUCED PLANS ORIGINAL SCALE IS IN MILLIMETERS 0 20 40 60 80

DGN FILE =>04-012024_0343BR2.dgn
USERNAME =>mnossain

CU 04251 EA 012021

DIST	COUNTY	ROUTE	KILOMETER POST TOTAL PROJECT	SHEET No	TOTAL SHEETS
04	SF, Ala	80	13.9 / 14.3, 0.0 / 1.6	343 R2	978

Caltrans Metric

Jens Erlingsson 04/18/03
REGISTERED ELECTRICAL ENGINEER DATE

6-4-01
PLANS APPROVAL DATE

REGISTERED PROFESSIONAL ENGINEER JENS ERLINGSSON No. 8249 Exp. 9/30/06 ELECTRICAL STATE OF CALIFORNIA

PB POWER, Inc.
A Parsons Brinckerhoff Company
303 Second St., Suite 700N
San Francisco, CA 94107-1317

The State of California or its officers or agents shall not be responsible for the accuracy or completeness of electronic copies of this plan sheet.

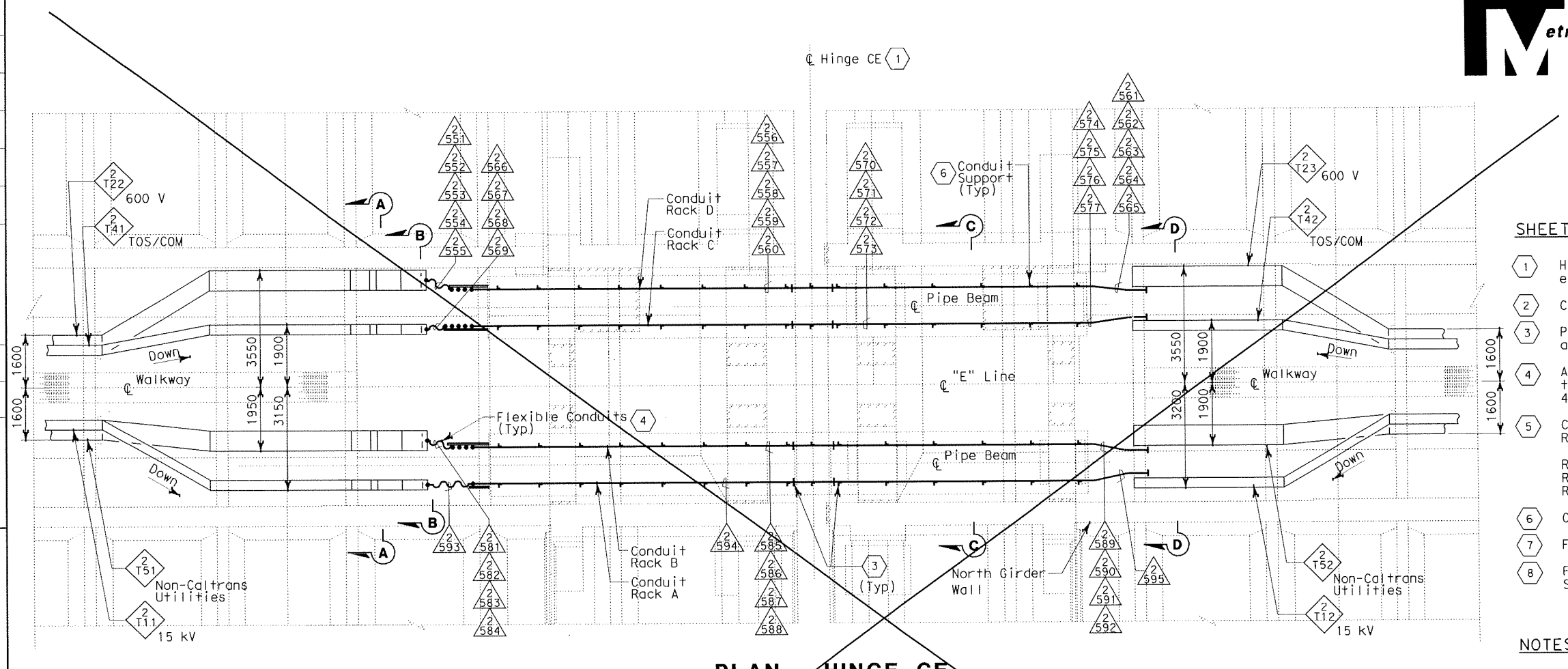

PLAN - HINGE CE

SCALE: 1:75

DELETED

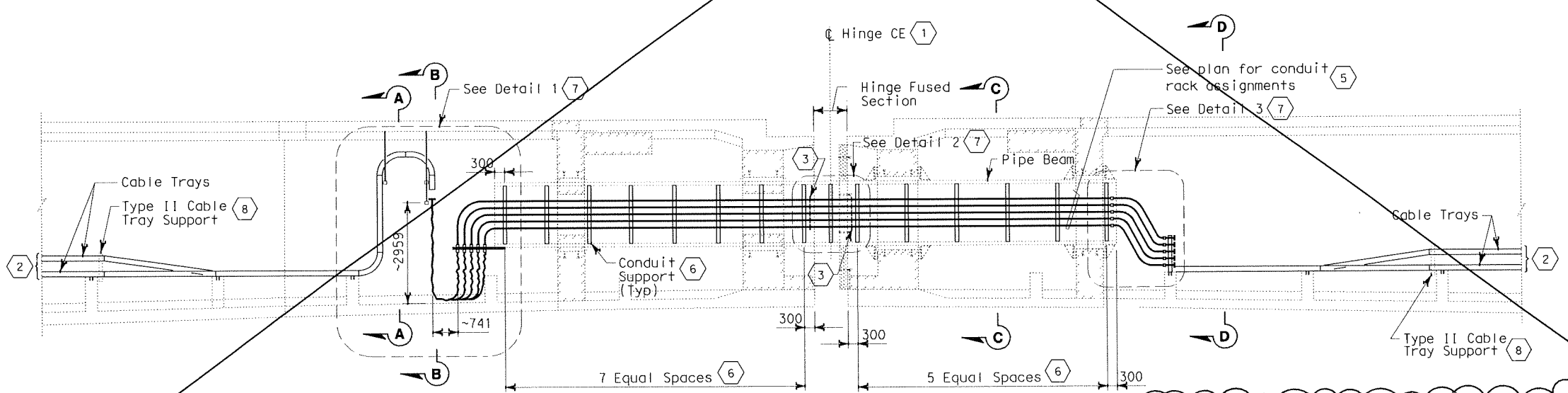

ELEVATION - HINGES CE

AT CENTERLINE OF PIPE BEAM
SCALE: 1:75

SHEET NOTES:

1. Hinge CE electrical design is based on the maximum expansion joint movement opening of 925 mm.
2. Continued on Sheet EE-91.
3. Provide expansion/deflection couplings at each end of the hinge fused area.
4. Arrange and group the flexible 103 mm conduits to maintain a minimum voltage level separation of 460 mm.
5. Conduits through Pipe Beam
   Rack A - (1) 103 for 15 kV and (1) conduit for 120 V circuit-size varies.
   Rack B - (4) 103 mm for Non-Caltrans Utilities.
   Rack C - (4) 103 mm for TOS/COM
   Rack D - (5) 103 mm for 600 V
6. Conduit support not to exceed 1500 mm apart.
7. For Details 1, 2 and 3 see Sheet EE-305.
8. For details of Type II cable tray support, see Structure Sheet AS-24.

NOTES:

1. Minimum radius of cable tray fittings shall be 610 mm.
2. Minimum conduit radius of 103 mm conduits shall be 610 mm.
3. Cables/circuits passing through the hinge locations shall be provided with cable identification tag at both ends of Hinge. See Circuit Schedules EE-327.
4. For additional work related not shown on this drawing, see Electrical Special Provisions.
5. References:
   - For Girder Level Eastbound plans, see Sheets EE-81 to EE-97.
   - For Typical Girder Embed plans and sections, see EE-313 and EE-314.
6. For Sections A-A, B-B, C-C and D-D, see Sheet EE-306.

MARK	DATE	DESCRIPTIONS	REV	CK
1	04/18/03	Drawing deleted. Superceded by dwg. EE-302A and EE-302B.	EJL	CYF
		REVISIONS		

CCO NO.48

CONTRACT CHANGE ORDER NO. 48 S1
SHEET ____ OF ____

DETAILS
HINGE CE
SCALE AS NOTED

EE-302

STATE OF CALIFORNIA - DEPARTMENT OF TRANSPORTATION
Caltrans

DESIGN OVERSIGHT: BEHZAD GOLEMOHAMMADI

CALCULATED/DESIGNED BY	JE	DATE 5/00	REVISED BY	DATE REVISED	CYF	EJL
CHECKED BY	TW	5/00			10/01	4/18/03

LAST REVISION 00-00-00
DATE PLOTTED => 08-AUG-2006
TIME PLOTTED => 11:11

FOR REDUCED PLANS ORIGINAL SCALE IS IN MILLIMETERS 0 20 40 60 80

DGN FILE =>04-012024_0343R2.dgn
USERNAME =>mhossain

CU 04251 | EA 012021

DIST	COUNTY	ROUTE	KILOMETER POST TOTAL PROJECT	SHEET No	TOTAL SHEETS
04	SF, Ala	80	13.9 / 14.3, 0.0 / 1.6	343A	978

Caltrans Metric

REGISTERED ELECTRICAL ENGINEER 04/18/03 DATE

6-4-01
PLANS APPROVAL DATE

REGISTERED PROFESSIONAL ENGINEER JENS ERLINGSSON No. 8249 Exp. 9/30/06 ELECTRICAL STATE OF CALIFORNIA

PB POWER, Inc.
A Parsons Brinckerhoff Company
303 Second St., Suite 700N
San Francisco, CA 94107-1317

The State of California or its officers or agents shall not be responsible for the accuracy or completeness of electronic copies of this plan sheet.

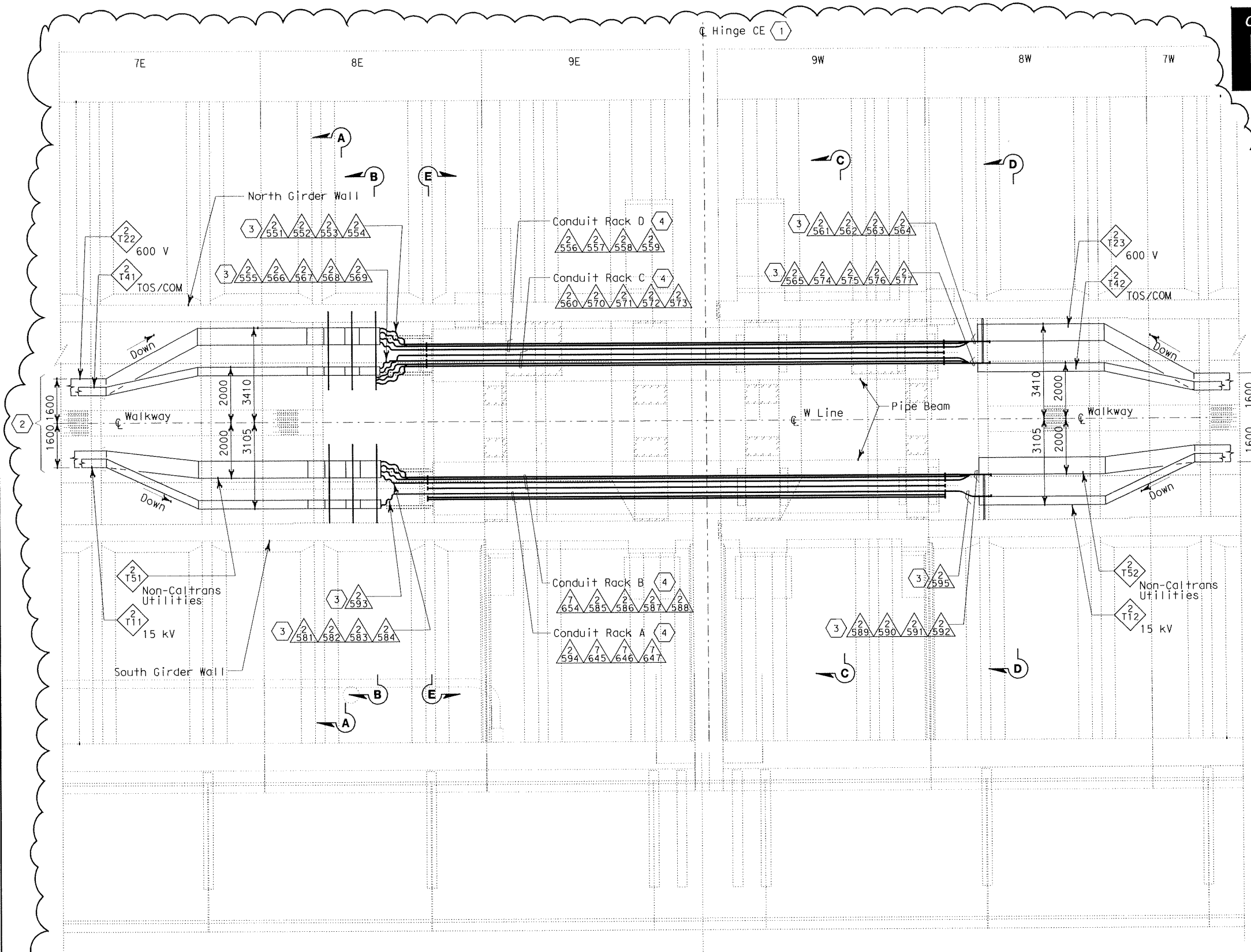

PLAN - HINGE CE

SCALE: 1:75

SHEET NOTES:

(1) Hinge CE electrical design is based on the maximum expansion joint movement opening of 925 mm.

(2) Continued on sheet EE-91.

(3) Arrange and group the flexible 103 mm conduits to maintain a minimum voltage level separation of 460 mm.

(4) Conduits through pipe beam shall be part of the pipe beam assembly. Conduit shall be welded together to form a continuous conduit inside the pipe beam, length as specified. The weld shall be smooth on the outside and free of burrs inside the conduit. Conduit fittings, like coupling, etc. to form a continuous conduit shall not be permitted as alternative.

(5) The intent of this conduit design is to be able to remove the entire length of conduit inside the pipe beam, in case maintenance is required inside the pipe beam assembly.

Rack A - (1) 103 mm for 15 kV
(2) 103 mm for spares
(1) 53 mm for 120 V circuit
Rack B - (1) 103 mm for spare
(4) 103 mm for Non-Caltrans Utilities
Rack C- (1) 103 mm for 600 V
(4) 103 mm for TOS/COM
Rack D - (4) 103 mm for 600 V

NOTES:

1. Minimum radius of cable tray fittings shall be 610 mm.
2. Minimum radius of 103 mm conduit bends shall be 610 mm.
3. Cables/circuits passing through the hinge locations shall be provided with cable identification tag at both ends of Hinge. See Circuit Schedules EE-327.
4. For additional work related not shown on this drawing, see Electrical Special Provisions.
5. References:
   - For Girder Level Eastbound plans, see sheets EE-81 to EE-97.
   - For Typical Girder Embed plans and sections, see EE-313 and EE-314A.
6. For Sections A-A and B-B, see EE-306A.
7. For Sections C-C and D-D, see sheet EE-306B.
8. For Section E-E, see sheet EE-306C.

MARK	DATE	DESCRIPTIONS	REV	CK	
1	04/18/03	New Drawing. Revise conduit design	EJL	CYF	CCO NO.48

REVISIONS

CONTRACT CHANGE ORDER NO. 48 S1
SHEET ____ OF ____

DETAILS
HINGE CE
SCALE AS NOTED

EE-302A

CALCULATED/ DESIGNED BY	EJL	DATE 2/03	REVISED BY	EJL
CHECKED BY	CYF	2/03	DATE REVISED	4/18/03

DESIGN OVERSIGHT
BEHZAD GOLEMOHAMMADI

STATE OF CALIFORNIA - DEPARTMENT OF TRANSPORTATION
Caltrans

FILE: T:\13103\WS\pse\electrical\con2\13103es1662.dgn
DATE: 10-JUL-01 15:05

LAST REVISION 00-00-00
DATE PLOTTED => 08-AUG-2006
TIME PLOTTED => 11:07

FOR REDUCED PLANS ORIGINAL SCALE IS IN MILLIMETERS 0 20 40 60 80

DGN FILE =>04-012024_0343A.dgn
USERNAME =>mhossain

CU 04251 EA 012021

DIST	COUNTY	ROUTE	KILOMETER POST TOTAL PROJECT	SHEET No	TOTAL SHEETS
04	SF, Ala	80	13.9 / 14.3, 0.0 / 1.6	344R2	978

Jens Erlingsson 04/18/03
REGISTERED ELECTRICAL ENGINEER DATE

6-4-01
PLANS APPROVAL DATE

REGISTERED PROFESSIONAL ENGINEER JENS ERLINGSSON No. 8249 Exp. 9/30/06 ELECTRICAL STATE OF CALIFORNIA

PB POWER, Inc.
A Parsons Brinckerhoff Company
303 Second St., Suite 700N
San Francisco, CA 94107-1317

The State of California or its officers or agents shall not be responsible for the accuracy or completeness of electronic copies of this plan sheet.

Caltrans Metric

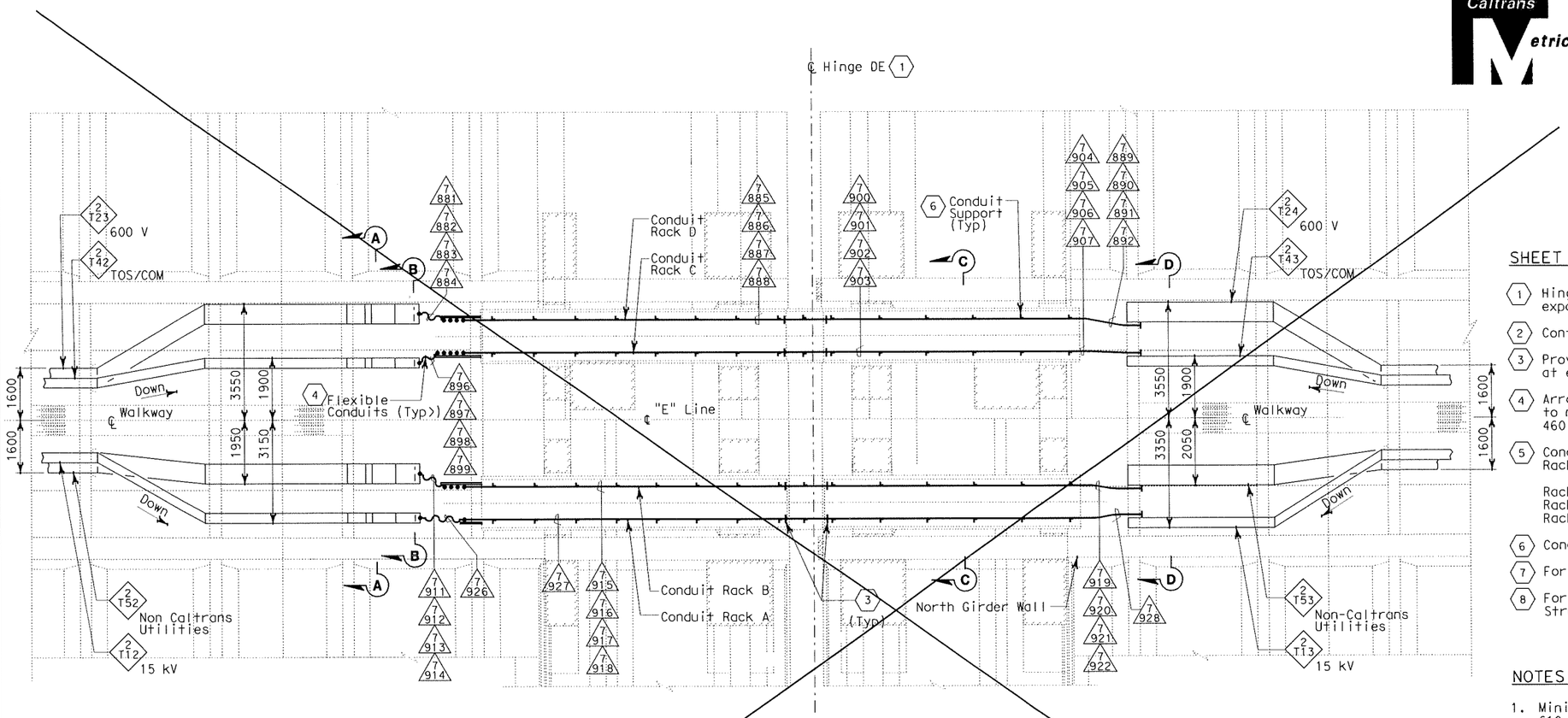

PLAN - HINGE DE

SCALE: 1:75

DELETED

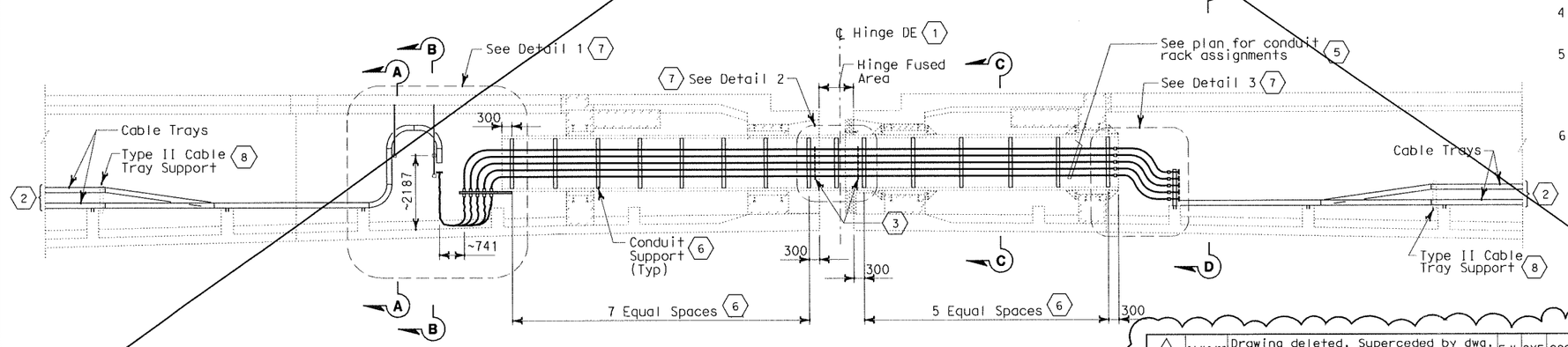

ELEVATION - HINGES DE

AT CENTERLINE OF PIPE BEAM
SCALE: 1:75

SHEET NOTES:

(1) Hinge DE electrical design is based on the maximum expansion joint movement opening of 561 mm.

(2) Continued on Sheets EE-95 and EE-96.

(3) Provide expansion/deflection couplings at each end of the hinge fused area.

(4) Arrange and group the flexible 103 mm conduits to maintain a minimum voltage level separation of 460 mm.

(5) Conduits through Pipe Beam
Rack A - (1) 103 mm for 15 kV and (1) conduit for 120 V circuit-size varies.
Rack B - (4) 103 mm for Non-Caltrans Utilities.
Rack C - (4) 103 mm for TOS/COM.
Rack D - (4) 103 mm for 600 V.

(6) Conduit support not to exceed 1500 mm apart.

(7) For Details 1, 2 and 3, see Sheet EE-305.

(8) For details of Type II cable tray support, see Structure Sheet AS-24.

NOTES:

1. Minimum radius of cable tray fittings shall be 610 mm.
2. Minimum conduit radius of 103 mm conduits shall be 610 mm.
3. Cables/circuits passing through the hinge locations shall be provided with cable identification tag at both ends of Hinge. See Circuit Schedules EE-327.
4. For additional work related not shown on this drawing, see Electrical Special Provisions.
5. References:
   - For Girder Level Eastbound plans, see Sheets EE-81 to EE-97.
   - For Typical Girder Embed plans and sections, see EE-313 and EE-314.
6. For Sections A-A, B-B, C-C and D-D, see Sheet EE-306.

MARK	DATE	DESCRIPTIONS	REV	CK	
1	04/18/03	Drawing deleted. Superceded by dwg. EE-303A and EE-303B.	EJL	CYF	CCO NO.48

REVISIONS

CONTRACT CHANGE ORDER NO. 48 S1
SHEET 43 OF 67

1

DETAILS
HINGE DE
SCALE AS NOTED

EE-303

	DATE	REVISED BY	DATE	REVISED BY
CALCULATED/DESIGNED BY	JE	CYF	10/01	EJL
CHECKED BY	TW	5/00	4/18/03	

DESIGN OVERSIGHT
BEHZAD GOLEMOHAMMADI

STATE OF CALIFORNIA - DEPARTMENT OF TRANSPORTATION
Caltrans

LAST REVISION 00-00-00
DATE PLOTTED => 08-AUG-2006
TIME PLOTTED => 11:14

FOR REDUCED PLANS ORIGINAL SCALE IS IN MILLIMETERS 0 20 40 60 80

DGN FILE =>04-012024_0344R2.dgn
USERNAME =>mhossain

CU 04251 | EA 012021

DIST	COUNTY	ROUTE	KILOMETER POST TOTAL PROJECT	SHEET NO	TOTAL SHEETS
04	SF, Ala	80	13.9 / 14.3, 0.0 / 1.6	344A	978

Jens Erlingsson 04/18/03
REGISTERED ELECTRICAL ENGINEER DATE

6-4-01
PLANS APPROVAL DATE

REGISTERED PROFESSIONAL ENGINEER
JENS ERLINGSSON
No. 8249
Exp. 9/30/06
ELECTRICAL
STATE OF CALIFORNIA

PB POWER, Inc.
A Parsons Brinckerhoff Company
303 Second St., Suite 700N
San Francisco, CA 94107-1317

The State of California or its officers or agents shall not be responsible for the accuracy or completeness of electronic copies of this plan sheet.

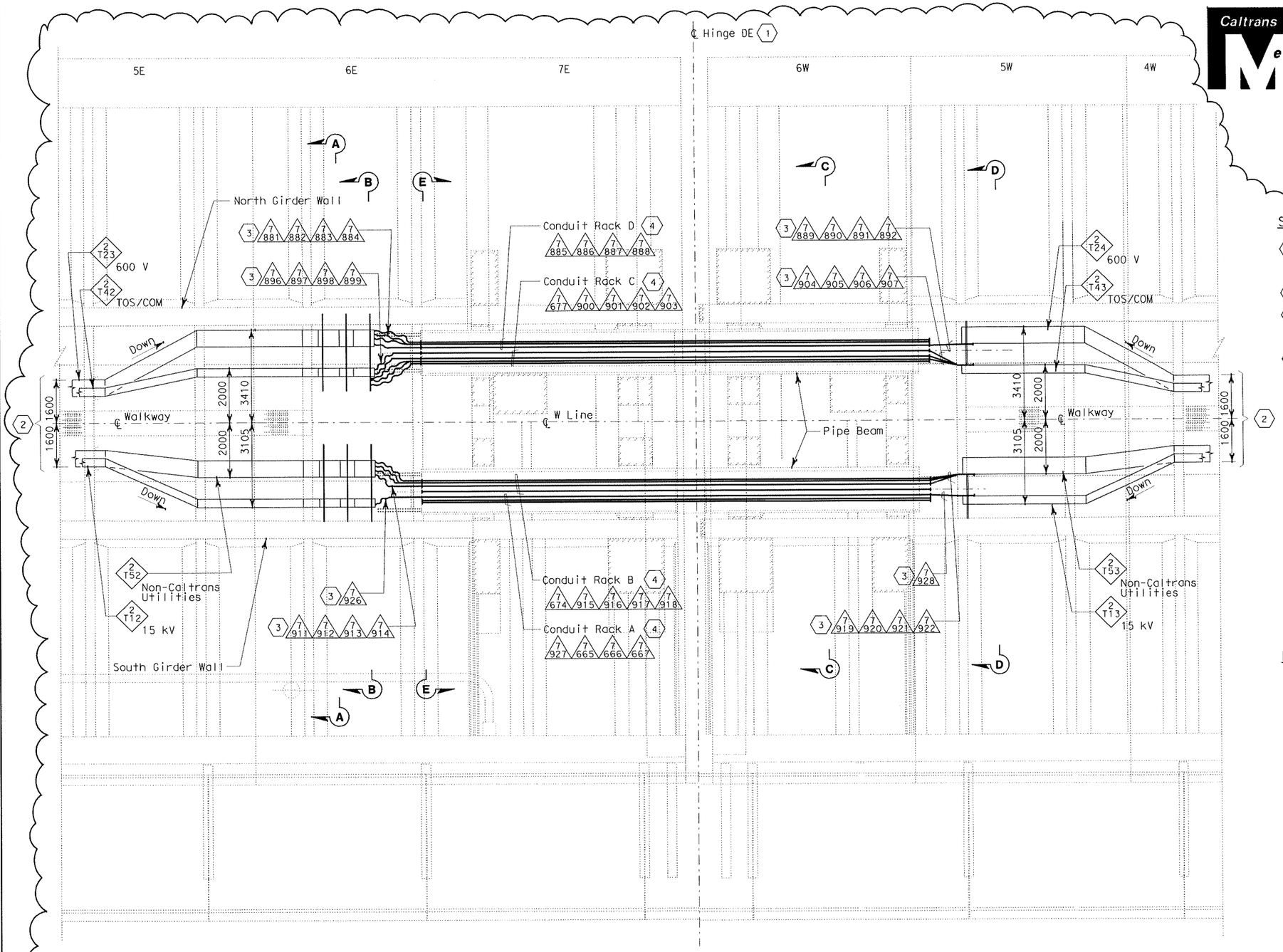

PLAN - HINGE DE

SCALE: 1:75

SHEET NOTES:

(1) Hinge DE electrical design is based on the maximum expansion joint movement opening of 561 mm.

(2) Continued on sheets EE-95 and EE-96.

(3) Arrange and group the flexible 103 mm conduits to maintain a minimum voltage level separation of 460 mm between systems.

(4) Conduits through pipe beam shall be part of the pipe beam assembly. Conduit shall be welded together to form a continuous conduit inside the pipe beam, length as specified. The weld shall be smooth on the outside and free of burrs inside the conduit. Conduit fittings, like coupling, etc. to form a continuous conduit shall not be permitted as alternative.

The intent of this conduit design is to be able to remove the entire length of conduit inside the pipe beam, in case maintenance is required inside the pipe beam assembly.

Rack A - (1) 103 mm for 15 kV
(2) 103 mm for spares
(1) 53 mm for 120 V circuit
Rack B - (1) 103 mm for spare
(4) 103 mm for Non-Caltrans Utilities
Rack C - (1) 103 mm for spare
(4) 103 mm for TOS/COM
Rack D - (4) 103 mm for 600 V

NOTES:

1. Minimum radius of cable tray fittings shall be 610 mm.
2. Minimum radius of 103 mm conduit bends shall be 610 mm.
3. Cables/circuits passing through the hinge locations shall be provided with cable identification tag at both ends of Hinge. See Circuit Schedules EE-327.
4. For additional work related not shown on this drawing, see Electrical Special Provisions.
5. References:
   - For Girder Level Eastbound plans, see Sheets EE-81 to EE-97.
   - For Typical Girder Embed plans and sections, see EE-313 and EE-314A.
6. For Sections A-A and B-B, see sheet EE-306A.
7. For Sections C-C and D-D, see sheet EE-306B.
8. For Section E-E, see sheet EE-306C.

MARK	DATE	DESCRIPTIONS	REV	CK	
1	04/18/03	New Drawing. Revise conduit design	EJL	CYF	CCO NO.48

REVISIONS

CONTRACT CHANGE ORDER NO. 48 S1
SHEET 44 OF 67

1

DETAILS
HINGE DE
SCALE AS NOTED

EE-303A

CALCULATED/DESIGNED BY	EJL	DATE 2/03	REVISED BY EJL
CHECKED BY	CYF	2/03	DATE REVISED 4/18/03

DESIGN OVERSIGHT
BEHZAD GOLEMOHAMMADI

STATE OF CALIFORNIA - DEPARTMENT OF TRANSPORTATION
Caltrans

FILE: t:\13103\ms\pse\electrical\con2\13103ei664.dgn
DATE: 01-Sep-00 11:25

LAST REVISION 00-00-00
DATE PLOTTED => 08-AUG-2006
TIME PLOTTED => 11:15

FOR REDUCED PLANS ORIGINAL SCALE IS IN MILLIMETERS 0 20 40 60 80

DGN FILE =>04-012024_0344A.dgn
USERNAME =>mhossain

CU 04251 | EA 012021

DIST	COUNTY	ROUTE	KILOMETER POST TOTAL PROJECT	SHEET No	TOTAL SHEETS
04	SF, Ala	80	13.9 / 14.3, 0.0 / 1.6	344B R2	978

Jens Erlingsson 05/16/01
REGISTERED ELECTRICAL ENGINEER DATE

6-4-01
PLANS APPROVAL DATE

REGISTERED PROFESSIONAL ENGINEER JENS ERLINGSSON No. 8249 Exp. 9/30/06 ELECTRICAL STATE OF CALIFORNIA

PB POWER, Inc.
A Parsons Brinckerhoff Company
303 Second St., Suite 700N
San Francisco, CA 94107-1317

The State of California or its officers or agents shall not be responsible for the accuracy or completeness of electronic copies of this plan sheet.

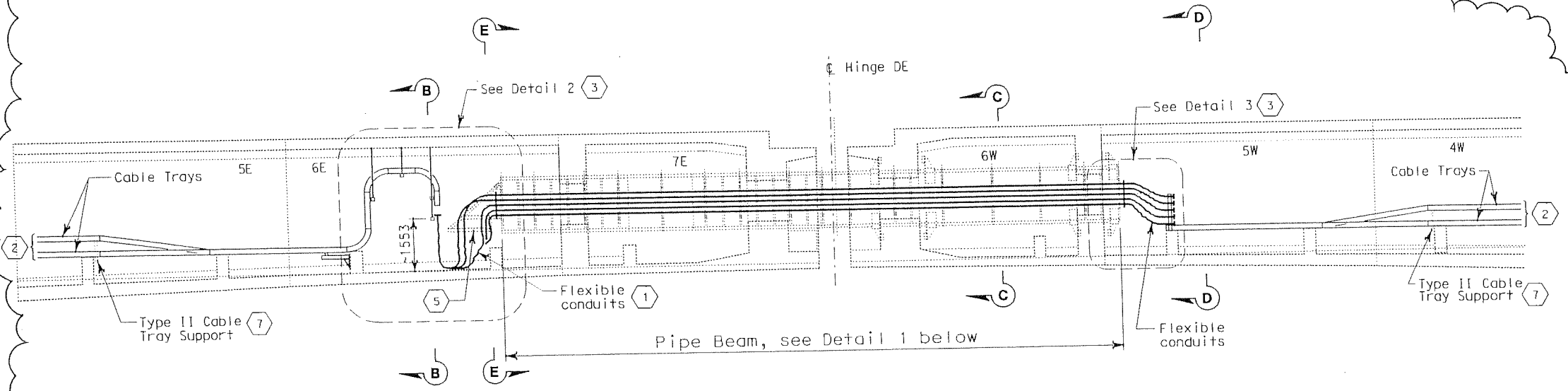

ELEVATION - HINGE DE

AT CENTERLINE OF PIPE BEAM
SCALE: 1:75

ORIGINAL SIGNED 10/1/04
REGISTERED ELECTRICAL ENGINEER DATE

REGISTERED PROFESSIONAL ENGINEER NABEEL F. ABDELRAHMAN No. 17162 Exp. 9/30/05 ELECTRICAL STATE OF CALIFORNIA

(2)

Karen Tam 5/31/05
REGISTERED ELECTRICAL ENGINEER DATE

REGISTERED PROFESSIONAL ENGINEER K.T. Truong No. 16240 Exp. 12-31-06 ELECTRICAL STATE OF CALIFORNIA

(3)

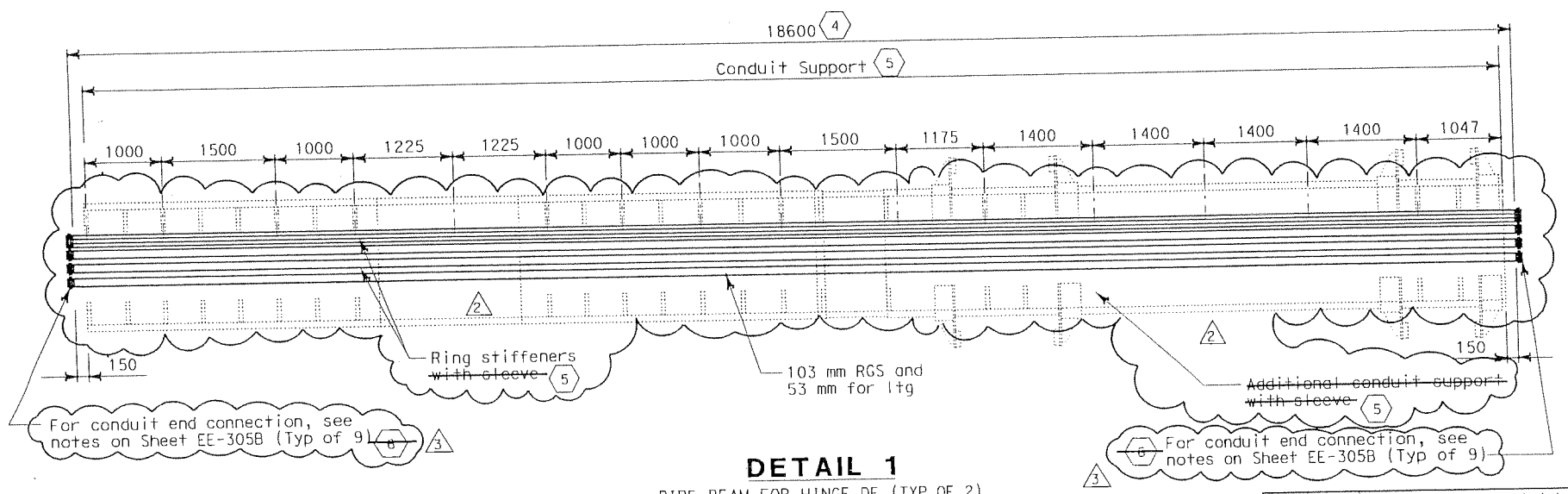

DETAIL 1

PIPE BEAM FOR HINGE DE (TYP OF 2)
SCALE: 1:40

SHEET NOTES:

(1) Hinge DE electrical design is based on the maximum expansion joint movement opening of 561 mm.

(2) Continued on sheets EE-95 and EE-96..

(3) For Details 2 and 3, see sheet EE-305A.

(4) Conduit through pipe beam shall be part of the pipe beam assembly. Conduit shall be welded together to form a continuous conduit inside the pipe beam, length as specified. The weld shall be smooth on the outside and free of burrs inside the conduit. Conduit fittings, like coupling, etc. to form a continuous conduit shall not be permitted as alternative.

The intent of this conduit design is to be able to remove the entire length of conduit inside the pipe beam, in case maintenance is required inside the pipe beam assembly.

(5) For conduit supports at pipe beam, see Structure Sheets AS-35, AS-36 and AS-37.

(3) ~~(6) For Detail 8, see sheet EE-305B.~~

(7) For detail of Type II cable tray support, see Structure Sheet AS-24.

NOTES:

1. Minimum radius of cable tray fittings shall be 610 mm.
2. Minimum radius of 103 mm conduit bends shall be 610 mm.
3. Cables/circuits passing through the hinge locations shall be provided with cable identification tag at both ends of Hinge. See Circuit Schedules EE-327.
4. For additional work related not shown on this drawing, see Electrical Special Provisions.
5. References:
   - For Girder Level Eastbound plans, see Sheets EE-81 to EE-97.
   - For Typical Girder Embed plans and sections, see EE-313 and EE-314A.
6. For Sections A-A and B-B, see sheet EE-306A.
7. For Sections C-C and D-D, see sheet EE-306B.
8. For Section E-E, see sheet EE-306C.

MARK	DATE	DESCRIPTIONS	REV	CK	
(3)	5/31/05	Revised notes and deleted sheet note 6.	MH	KT	CCO NO.48
(2)	01/21/04	Revised pipe beam conduit layout.	VHP		CCO NO.48
(1)	04/18/03	New Drawing. Revise conduit design	EJL	CYF	CCO NO.48

REVISIONS

CONTRACT CHANGE ORDER NO. 48 S1
SHEET 45 OF 47

(1)

DETAILS
HINGE DE
SCALE AS NOTED

EE-303B

DESIGN OVERSIGHT: BEHZAD GOLEMOHAMMADI
CALCULATED/DESIGNED BY: EJL | DATE 2/03
CHECKED BY: CYF | 2/03
REVISED BY: EJL | 4/18/03
DATE REVISED

STATE OF CALIFORNIA - DEPARTMENT OF TRANSPORTATION
Caltrans

FILE: t:\13103ws\pgs\electrical\con2\13103es1664.dgn
DATE: 01-Sep-00 11:35

LAST REVISION 00-00-00
DATE PLOTTED => 01-AUG-2005
TIME PLOTTED => 16:58

FOR REDUCED PLANS ORIGINAL SCALE IS IN MILLIMETERS 0 20 40 60 80

DGN FILE =>04-012024_0344BR2.dgn
USERNAME =>mhossain

CU 04251 | EA 012021

DIST	COUNTY	ROUTE	KILOMETER POST TOTAL PROJECT	SHEET No	TOTAL SHEETS
04	SF, Ala	80	13.9 / 14.3, 0.0 / 1.6	345 R2	978

REGISTERED ELECTRICAL ENGINEER 04/18/03 DATE

6-4-01
PLANS APPROVAL DATE

REGISTERED PROFESSIONAL ENGINEER JENS ERLINGSSON No. 8249 Exp. 9/30/06 ELECTRICAL STATE OF CALIFORNIA

PB POWER, Inc.
A Parsons Brinckerhoff Company
303 Second St., Suite 700N
San Francisco, CA 94107-1317

The State of California or its officers or agents shall not be responsible for the accuracy or completeness of electronic copies of this plan sheet.

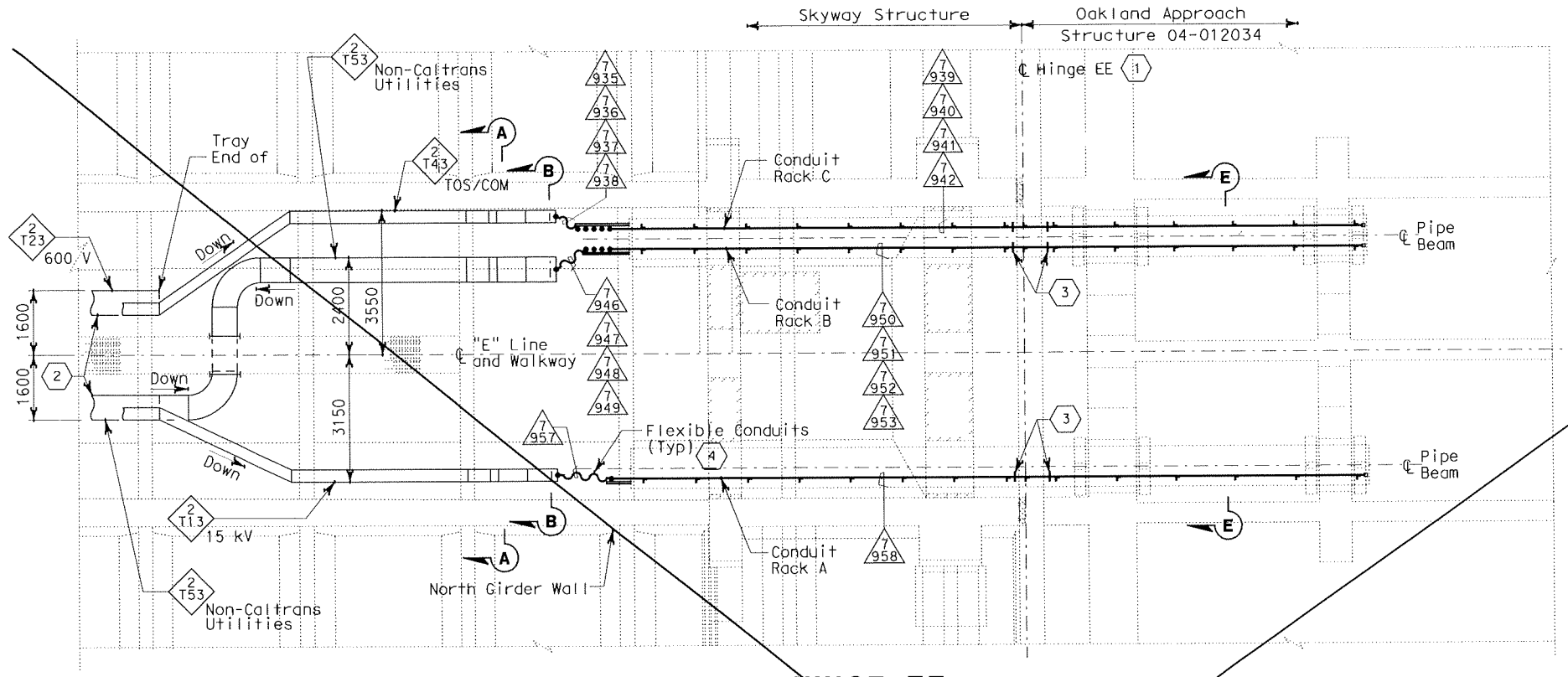

PLAN - HINGE EE

SCALE: 1:75

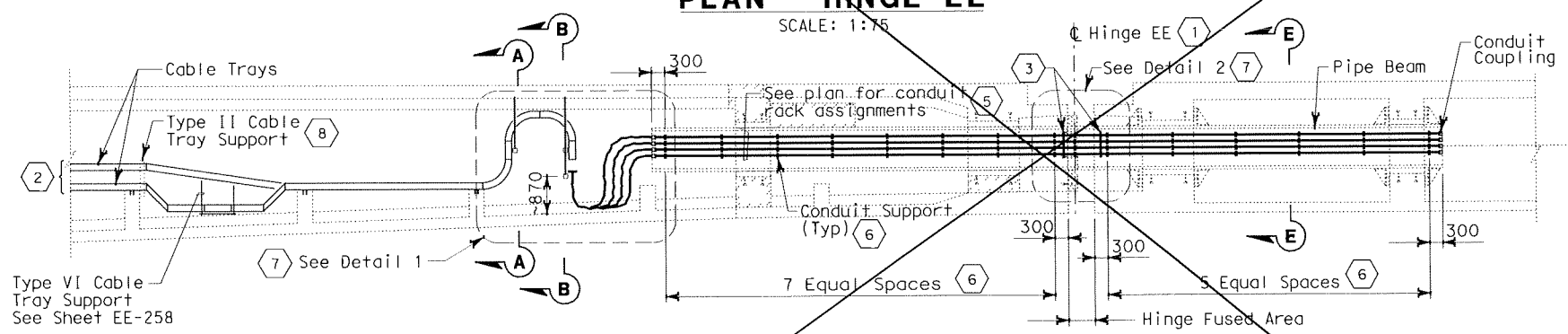

ELEVATION - HINGE EE

AT CENTERLINE OF PIPE BEAM
SCALE: 1:75

DELETED

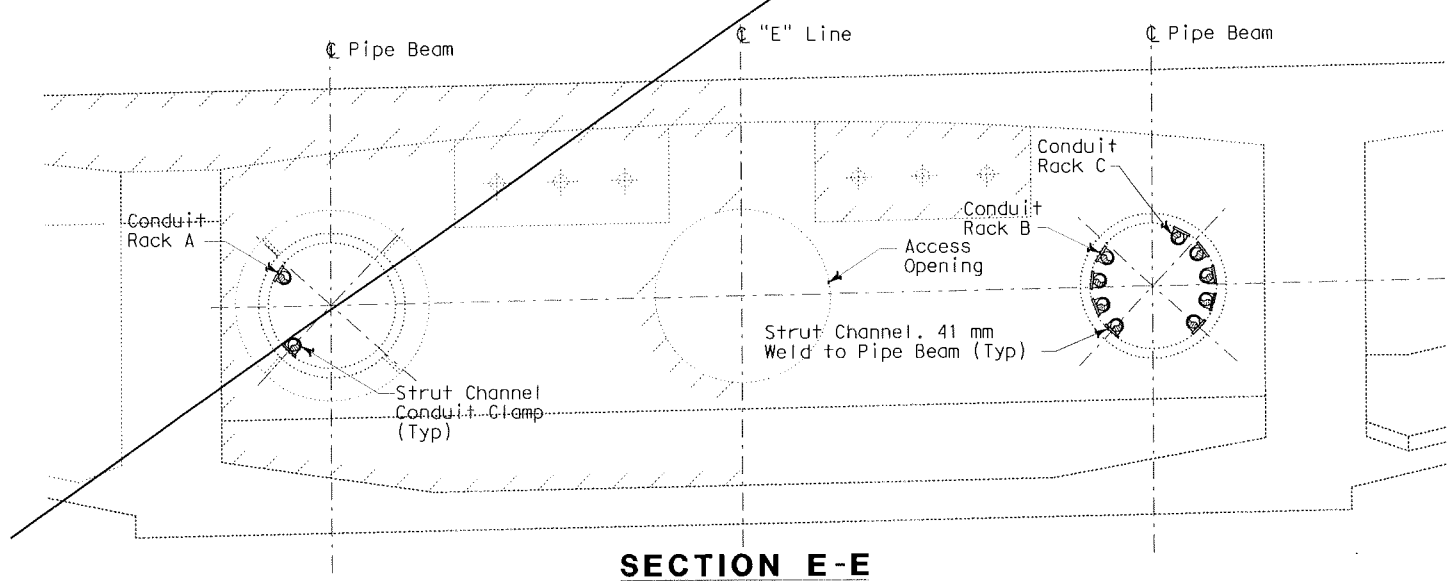

SECTION E-E

SCALE: 1:25

SHEET NOTES:

1. Hinge EE electrical design is based on the maximum expansion joint movement opening of 317 mm.
2. Continued on Sheet EE-97.
3. Provide expansion/deflection couplings at each end of the hinge fused area.
4. Arrange and group the flexible 103 mm conduits to maintain a minimum voltage level separation of 460 mm.
5. Conduits through Pipe Beam
   Rack A - (1) 103 mm for 15 kV and (1) conduit for 120 V circuit-size varies.
   Rack B - (4) 103 mm for Non-Caltrans Utilities.
   Rack C - (4) 103 mm for TOS/COM.
6. Conduit support not to exceed 1500 mm apart.
7. For Details 1 and 2, see Sheet EE-305.
8. For Details of Type II Cable Tray Support, see Structure Sheet AS-24.

NOTES:

1. Minimum radius of cable tray fittings shall be 610 mm.
2. Minimum conduit radius of 103 mm conduits shall be 610 mm.
3. Cables/circuits passing through the hinge locations shall be provided with cable identification tag at both ends of Hinge. See Circuit Schedules EE-327.
4. For additional work related not shown on this drawing, see Electrical Special Provisions.
5. References:
   - For Girder Level Eastbound plans, see Sheets EE-81 to EE-97.
   - For Typical Girder Embed plans and sections, see EE-313 and EE-314.
6. Section A-A and B-B, see Sheet EE-306.

MARK	DATE	DESCRIPTIONS	REV	CK	
1	04/18/03	Drawing deleted. Superceded by dwg. EE-304A and EE-304B.	EJL	CYF	CCO NO.48

REVISIONS

CONTRACT CHANGE ORDER NO. 48 S1
SHEET 46 OF 67

1 **DETAILS**
HINGE EE
SCALE AS NOTED

EE-304

CALCULATED/DESIGNED BY	JE	DATE 5/00	REVISED BY	CYF	EJL
CHECKED BY	TW	5/00	DATE REVISED	10/01	4/18/03

DESIGN OVERSIGHT
BEHZAD GOLEMOHAMMADI

STATE OF CALIFORNIA - DEPARTMENT OF TRANSPORTATION
Caltrans

LAST REVISION 00-00-00
DATE PLOTTED => 08-AUG-2006
TIME PLOTTED => 11:16

FOR REDUCED PLANS ORIGINAL SCALE IS IN MILLIMETERS 0 20 40 60 80

DGN FILE =>04-012024_0345R2.dgn
USERNAME =>mhossain

CU 04251 EA 012021

DIST	COUNTY	ROUTE	KILOMETER POST TOTAL PROJECT	SHEET No	TOTAL SHEETS
04	SF, Ala	80	13.9 / 14.3, 0.0 / 1.6	345A R2	978

REGISTERED ELECTRICAL ENGINEER 02/20/04 DATE

6-4-01
PLANS APPROVAL DATE

REGISTERED PROFESSIONAL ENGINEER JENS ERLINGSSON No. 8249 Exp. 9/30/06 ELECTRICAL STATE OF CALIFORNIA

PB POWER, Inc.
A Parsons Brinckerhoff Company
303 Second St., Suite 700N
San Francisco, CA 94107-1317

The State of California or its officers or agents shall not be responsible for the accuracy or completeness of electronic copies of this plan sheet.

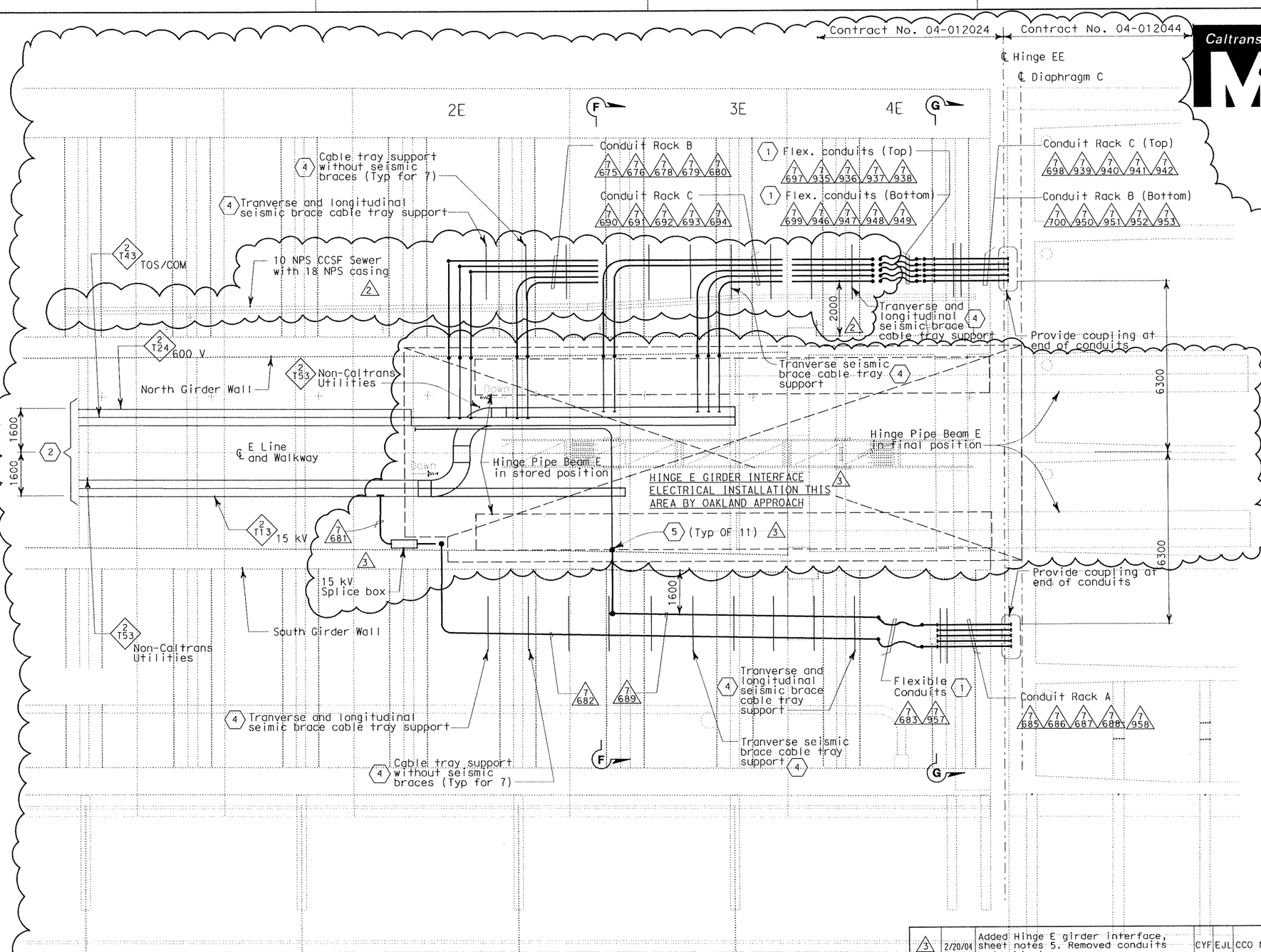

PLAN - HINGE EE

SCALE: 1:75

SHEET NOTES:

1. Hinge EE electrical design is based on the maximum expansion joint movement opening of 400 mm.
2. Continued on Sheet EE-97.
3. Arrange and group the flexible 103 mm conduits to maintain a minimum voltage level separation of 460 mm between systems.
4. For conduit supports, see sheet EE-306D.
5. Terminate conduits at inside face of the girder walls. 3

NOTES:

1. Minimum radius of cable tray fittings shall be 610 mm.
2. Minimum radius of 103 mm conduit bends shall be 610 mm.
3. Cables/circuits passing through the hinge locations shall be provided with cable identification tag at both ends of Hinge. See Circuit Schedules EE-327.
4. For additional work related not shown on this drawing, see Electrical Special Provisions.
5. References:
   - For Girder Level Eastbound plans, see sheets EE-81 to EE-97.
   - For Typical Girder Embed plans and sections, see sheet EE-314B.
6. For Sections F-F and G-G, see sheet EE-306D.

MARK	DATE	DESCRIPTIONS	REV	CK	
3	2/20/04	Added Hinge E girder interface, sheet notes 5. Removed conduits and cable trays.	CYF	EJL	CCO NO.48
2	12/15/03	Changed location of conduit rock, Locate mechanical pipe.	EJL	CYF	CCO NO.48
1	04/18/03	New Drawing.Relocate conduits to triangular area of the bridge.	EJL	CYF	CCO NO.48

REVISIONS

CONTRACT CHANGE ORDER NO. 48 S1
SHEET 47 OF 67

1 **DETAILS**
HINGE EE
SCALE AS NOTED

EE-304A

CALCULATED/DESIGNED BY	EJL	DATE 2/03	REVISED BY	EJL	4/18/03	EJL	12/15/03	EJL	2/20/04
CHECKED BY	CYF	2/03	DATE REVISED						

DESIGN OVERSIGHT
BEHZAD GOLEMOHAMMADI

STATE OF CALIFORNIA - DEPARTMENT OF TRANSPORTATION
Caltrans

FILE: t:\3103\ms\gse\electrical\con2\3103ei665.dgn
DATE: 01-FEB-01 09:22

LAST REVISION 00-00-00
DATE PLOTTED => 08-AUG-2006
TIME PLOTTED => 11:18

FOR REDUCED PLANS ORIGINAL SCALE IS IN MILLIMETERS 0 20 40 60 80

DGN FILE =>04-012024_0345AR2.dgn
USERNAME =>mhossain

CU 04251 EA 012021

DIST	COUNTY	ROUTE	KILOMETER POST TOTAL PROJECT	SHEET No	TOTAL SHEETS
04	SF, Ala	80	13.9 / 14.3, 0.0 / 1.6	345B R2	978

Caltrans Metric

REGISTERED ELECTRICAL ENGINEER — DATE 05/16/01

6-4-01
PLANS APPROVAL DATE

REGISTERED PROFESSIONAL ENGINEER JENS ERLINGSSON No. 8249 Exp. 9/30/06 ELECTRICAL STATE OF CALIFORNIA

PB POWER, Inc.
A Parsons Brinckerhoff Company
303 Second St., Suite 700N
San Francisco, CA 94107-1317

The State of California or its officers or agents shall not be responsible for the accuracy or completeness of electronic copies of this plan sheet.

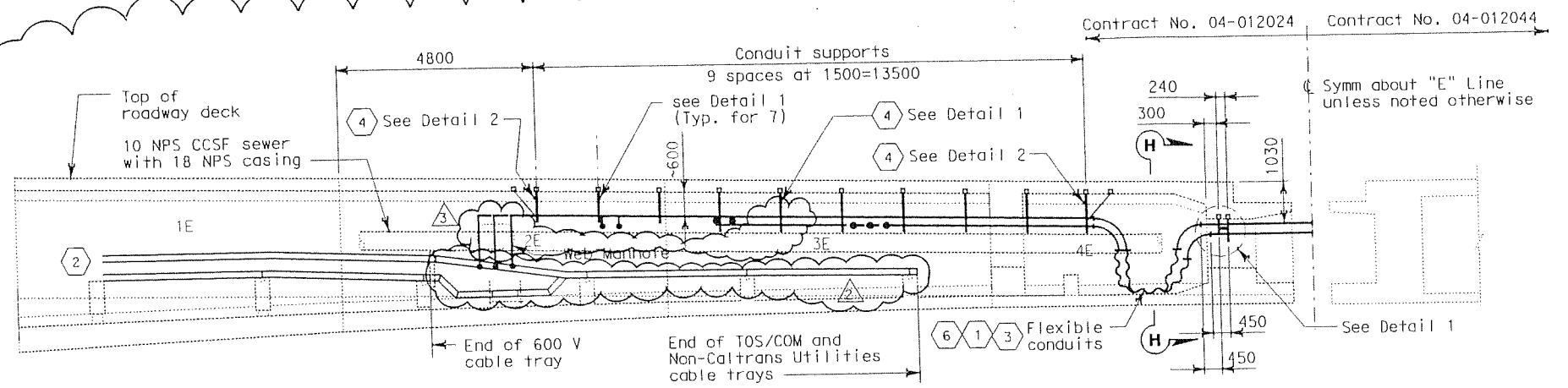

ELEVATION - NORTH GIRDER WALL

SCALE: 1:75

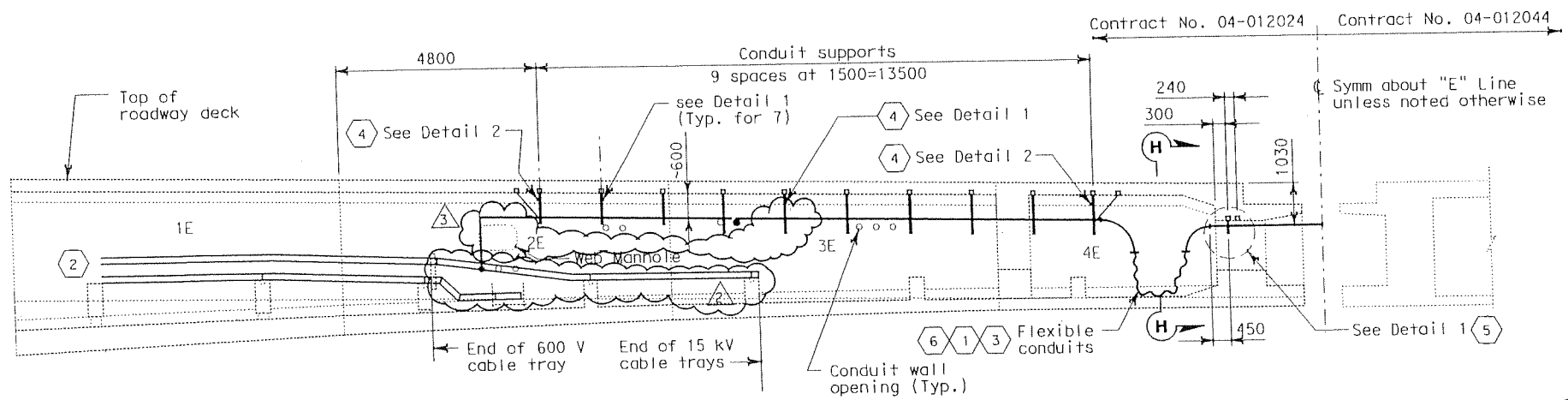

ELEVATION - SOUTH GIRDER WALL

SCALE: 1:75

REGISTERED ELECTRICAL ENGINEER — DATE 4/13/05

REGISTERED PROFESSIONAL ENGINEER K.T. Truong No. 16240 Exp. 12-31-06 ELECTRICAL STATE OF CALIFORNIA

3

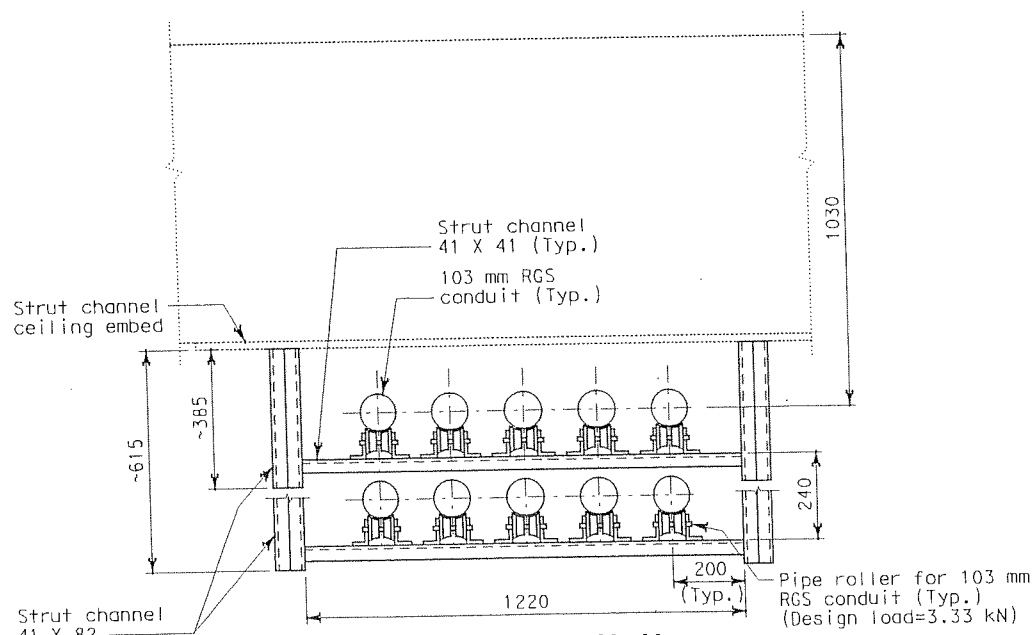

SECTION H-H

SCALE: 1:10

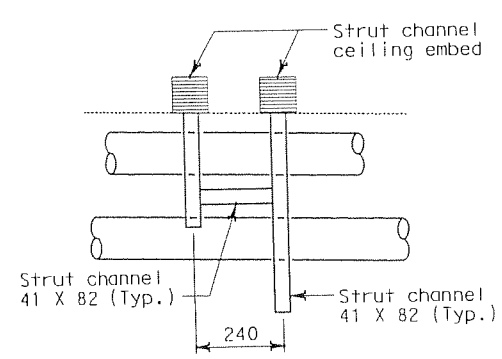

DETAIL 1

SCALE: 1:10

SHEET NOTES:

1. Hinge EE electrical design is based on the maximum expansion joint movement opening of 400 mm.
2. Continued on Sheet EE-97.
3. Arrange and group the flexible 103 mm conduits to maintain a minimum voltage level separation of 460 mm between systems.
4. For conduit supports, Details 1 and 2, see Sheet EE-306D.
5. For Rack A on south girder wall, only one layer of conduits.
6. Flexible conduit connections to conduit racks similar to details, sheet EE-305A.

NOTES:

1. Minimum radius of cable tray fittings shall be 610 mm.
2. Minimum radius of 103 mm conduit bends shall be 610 mm.
3. Cables/circuits passing through the hinge locations shall be provided with cable identification tag at both ends of Hinge. See Circuit Schedules EE-327.
4. For additional work related not shown on this drawing, see Electrical Special Provisions.
5. References:
   - For Girder Level Eastbound plans, see Sheets EE-81 to EE-97.
   - For Typical Girder Embed plans and sections, see EE-314B.
6. Sections F-F and G-G, see Sheet EE-306D.

MARK	DATE	DESCRIPTIONS	REV	CK	
3	4/8/05	Moved web manhole.	EA	KT	CCO NO.48
2	2/20/04	Deleted cable trays	CYF	EJL	CCO NO.48
1	4/18/03	New Drawing. Relocate conduits to triangular area of the bridge.	EJL	CYF	CCO NO.48

REVISIONS

CONTRACT CHANGE ORDER NO. 48 S1
SHEET 48 OF 67

1

DETAILS
HINGE EE

SCALE AS NOTED

EE-304B

	DATE	REVISED BY	DATE REVISED
	EJL	EJL	4/18/03 2/20/04

	DATE	
CALCULATED/DESIGNED BY	EJL	2/03
CHECKED BY	CYF	2/03

DESIGN OVERSIGHT: BEHZAD GOLEMOHAMMADI

STATE OF CALIFORNIA - DEPARTMENT OF TRANSPORTATION

Caltrans

FILE: p:\13103es\dgn\electrical\con2\13103es1665.dgn
DATE: 01-Feb-01 08:32

FOR REDUCED PLANS ORIGINAL SCALE IS IN MILLIMETERS: 0 20 40 60 80

DGN FILE => 04-012024_0345BR2.dgn
USERNAME => mhossain

CU 04251 | EA 012021

LAST REVISION 00-00-00 | DATE PLOTTED => 01-AUG-2005 | TIME PLOTTED => 17:01

DIST	COUNTY	ROUTE	KILOMETER POST TOTAL PROJECT	SHEET No	TOTAL SHEETS
04	SF, Ala	80	13.9 / 14.3, 0.0 / 1.6	346R2	978

Caltrans Metric

Jens Erlingsson 04/18/03
REGISTERED ELECTRICAL ENGINEER DATE

6-4-01
PLANS APPROVAL DATE

REGISTERED PROFESSIONAL ENGINEER JENS ERLINGSSON No. 8249 Exp. 9/30/06 ELECTRICAL STATE OF CALIFORNIA

PB POWER, Inc.
A Parsons Brinckerhoff Company
303 Second St., Suite 700N
San Francisco, CA 94107-1317

The State of California or its officers or agents shall not be responsible for the accuracy or completeness of electronic copies of this plan sheet.

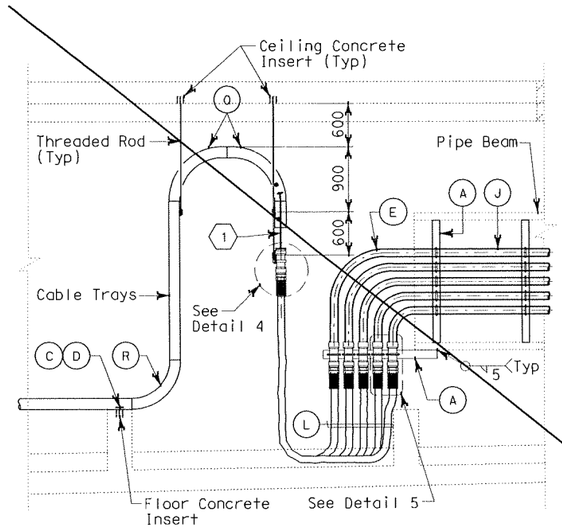

DETAIL 1
SCALE: 1:40

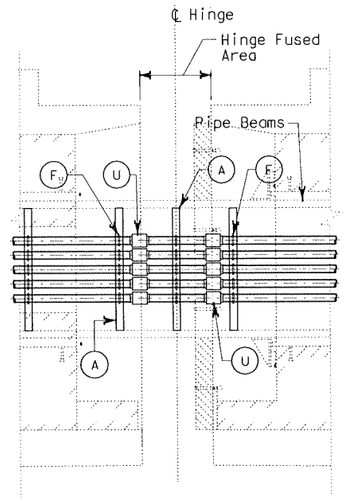

DETAIL 2
SCALE: 1:40

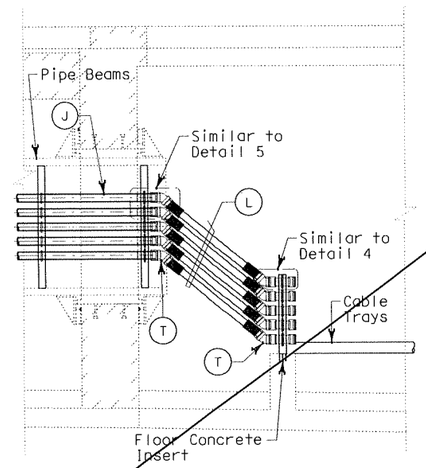

DETAIL 3
SCALE: 1:40

DELETED

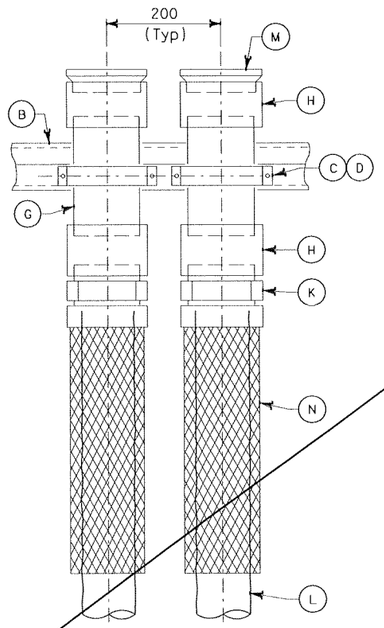

DETAIL 4
SCALE: 1:5

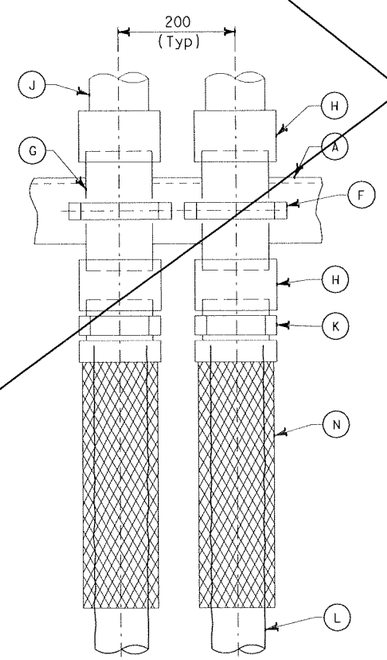

DETAIL 5
SCALE: 1:5

MATERIAL LIST

Item No.	Description	Remarks
A	Structural angle, 102 x 102 x 9.5	Length as required
B	Strut channel combination 41 mm x 82 mm	Length as required
C	Strut channel spring nut, lockwasher and hex bolt	
D	Strut channel conduit clamp for 103 mm	
E	Conduit elbow for 103 mm	
F	U-Bolt, conduit clamp for 103 mm	
G	Conduit nipple, 103 mm	
H	Conduit coupling, 103 mm	
J	Galvanized rigid conduit, 103 mm	Length as required
K	Connector, straight liquidtight flexible conduit for 103 mm	
L	Liquidtight flexible conduit, 103 mm	Length as required
M	Insulated bushed nipple for 103 mm conduit	
N	Strain relief grips for flexible conduit, 103 mm	
Q	Cable tray vertical outside bend	See plan for size
R	Cable tray vertical inside bend	See plan for size
T	Connector, 45 degrees liquidtight flexible conduit for 103 mm	
U	Expansion/deflection coupling for 103 mm conduit	

SHEET NOTES:

(1) All cable/cables entering the liquidtight conduits from the cable trays shall be provided with strain relief cable/cables grips attached from the vertical cable tray rungs.

NOTES:

1. Materials, hardwares and fittings shall be galvanized or stainless steel. For additional requirements, see Electrical Special Provisions.
2. References:
   For Westbound plans and sections:
   - For Hinge AW, see Sheet EE-295.
   - For Hinge BW, see Sheet EE-296.
   - For Hinge CW, see Sheet EE-297.
   - For Hinge DW, see Sheet EE-298.
   - For Hinge EW, see Sheet EE-299.

   For Eastbound plans and sections:
   - For Hinge AE, see Sheet EE-300.
   - For Hinge BE, see Sheet EE-301.
   - For Hinge CE, see Sheet EE-302.
   - For Hinge DE, see Sheet EE-303.
   - For Hinge EE, see Sheet EE-304.

MARK	DATE	DESCRIPTIONS	REV	CK	
1	04/18/03	Drawing deleted. Superceded by dwg. EE-305A and EE-305B.	EJL	CYF	CCO NO.48

REVISIONS

CONTRACT CHANGE ORDER NO. 48 S1
SHEET 49 OF 67

(1) **DETAILS**
TYPICAL HINGE DETAILS
SCALE AS NOTED

EE-305

CALCULATED/DESIGNED BY	JE	DATE 5/00	REVISED BY	CYF	EJL
CHECKED BY	TW	5/00	DATE REVISED	10/01	4/18/03

DESIGN OVERSIGHT
BEHZAD GOLEMOHAMMADI

STATE OF CALIFORNIA - DEPARTMENT OF TRANSPORTATION
Caltrans

LAST REVISION 00-00-00
DATE PLOTTED => 08-AUG-2006
TIME PLOTTED => 11:20

FOR REDUCED PLANS ORIGINAL SCALE IS IN MILLIMETERS 0 20 40 60 80
DGN FILE =>04-012024_0346R2.dgn
USERNAME =>mhossain
CU 04251
EA 012021

DIST	COUNTY	ROUTE	KILOMETER POST TOTAL PROJECT	SHEET No	TOTAL SHEETS
04	SF, Ala	80	13.9 / 14.3, 0.0 / 1.6	346A R2	978

Caltrans Metric

REGISTERED ELECTRICAL ENGINEER — DATE 05/16/01

6-4-01
PLANS APPROVAL DATE

REGISTERED PROFESSIONAL ENGINEER JENS ERLINGSSON No. 8249 Exp. 9/30/06 ELECTRICAL STATE OF CALIFORNIA

PB POWER, Inc.
A Parsons Brinckerhoff Company
303 Second St., Suite 700N
San Francisco, CA 94107-1317

The State of California or its officers or agents shall not be responsible for the accuracy or completeness of electronic copies of this plan sheet.

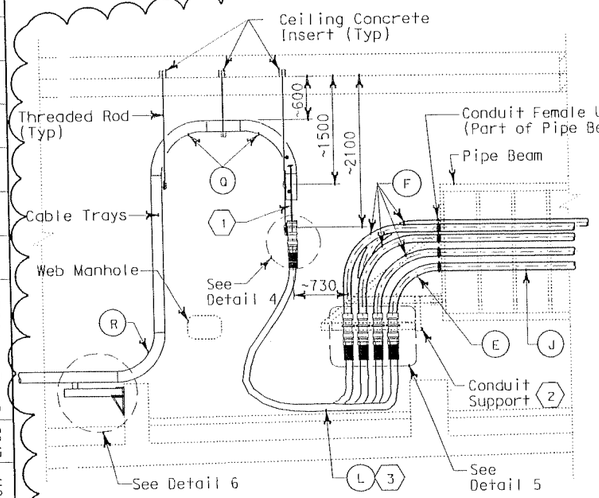

DETAIL 1
TYPICAL FOR HINGES B AND C
SCALE: 1:40

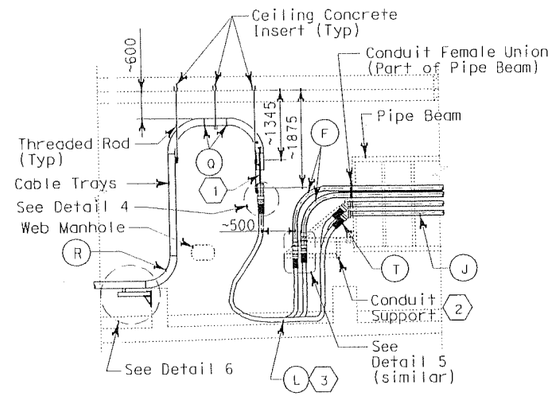

DETAIL 2
TYPICAL FOR HINGE D
SCALE: 1:40

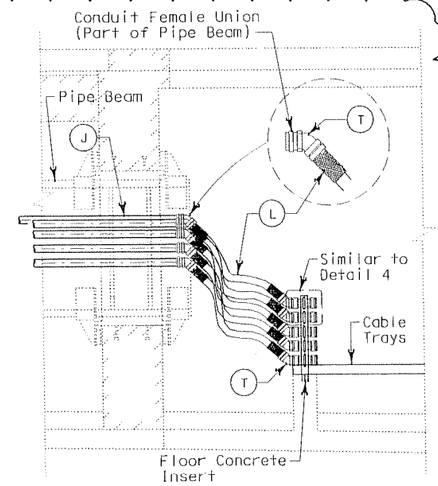

DETAIL 3
TYPICAL FOR HINGES B, C and D
SCALE: 1:40

SHEET NOTES:

1. All cable/cables entering the liquidtight conduits from the cable trays shall be provided with strain relief cable/cables grips attached from the vertical cable tray rungs.
2. For conduit support detail, see structure Sheet AS-33 and AS-37.
3. Length of flexible conduit required shall be based on the maximum joint movement of each hinge. Refer to Hinge Plan drawings.

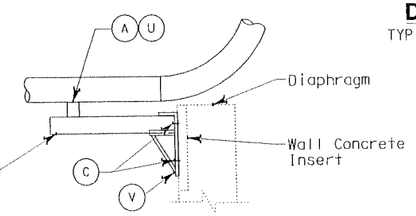

DETAIL 6
NO SCALE

REGISTERED ELECTRICAL ENGINEER — DATE 8/3/05

REGISTERED PROFESSIONAL ENGINEER K.T. Truong No. 16240 Exp. 12-31-06 ELECTRICAL STATE OF CALIFORNIA

MATERIAL LIST

Item No.	Description
A	Strut channel 41 mm x 41 mm
B	Strut channel combination 41 mm x 82 mm
C	Strut channel spring nut, lockwasher and hex bolt
D	Strut channel conduit clamp for 103 mm
E	Conduit elbow for 103 mm (Radius= 610 mm)
F	Conduit elbow for 103 mm (Radius= 752 mm)
G	Conduit nipple, 103 mm
H	Conduit coupling, 103 mm
J	Rigid Galvanized Conduit (Part of pipe beam)
K	Connector, straight liquidtight flexible conduit for 103 mm
L	Liquidtight flexible conduit, 103 mm
M	Insulated bushed nipple for 103 mm conduit
N	Strain relief grips for flexible conduit, 103 mm
Q	Cable tray vertical outside bend
R	Cable tray vertical inside bend
T	Connector, 45 degrees liquidtight flexible conduit for 103 mm
U	Strut channel cable tray clamp for ladder or solid bottom tray
V	Bracket for 82 mm X 82 mm Strut Channel

NOTES:

1. Materials, hardwares and fittings shall be galvanized or stainless steel. For additional requirements, see Electrical Special Provisions.
2. Dimensions with (~) are approximate. Field to verify and adjust dimensions to actual installation.
3. References:
   For Westbound plans and sections:
   ~~- For Hinge AW, see Sheets EE-295A and EE-295B.~~
   - For Hinge BW, see Sheets EE-296A and EE-296B.
   - For Hinge CW, see Sheets EE-297A and EE-297B.
   - For Hinge DW, see Sheets EE-298A and EE-298B.

   For Eastbound plans and sections:
   ~~- For Hinge AE, see Sheets EE-300A and EE-300B.~~
   - For Hinge BE, see Sheets EE-301A and EE-301B.
   - For Hinge CE, see Sheets EE-302A and EE-302B.
   - For Hinge DE, see Sheets EE-303A and EE-303B.

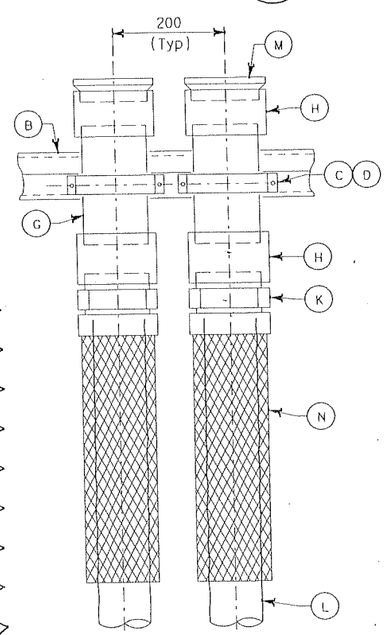

DETAIL 4
SCALE: 1:5

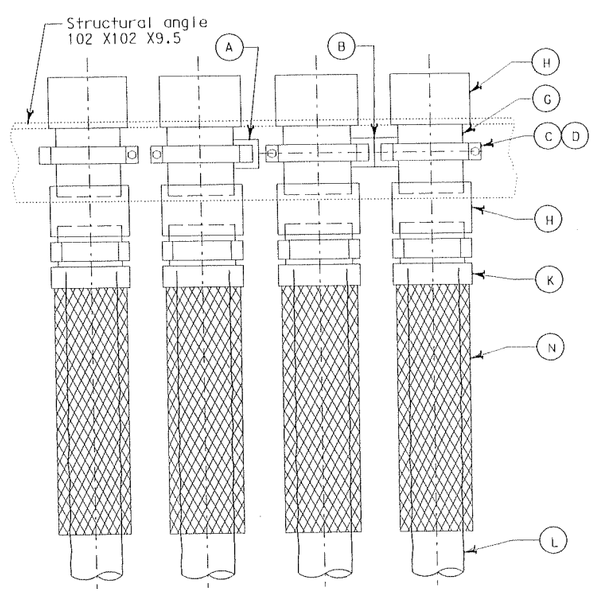

DETAIL 5
SCALE: 1:5

MARK	DATE	DESCRIPTIONS	REV	CK	
2	08/03/05	Revised note 3.	MH	KT	CCO NO.48
1	04/18/03	New Drawing. Change details.	EJL	CYF	CCO NO.48

REVISIONS

CONTRACT CHANGE ORDER NO. 48 S1
SHEET 50 OF 67

DETAILS
TYPICAL HINGE DETAILS
SCALE AS NOTED

EE-305A

CALCULATED/ DESIGNED BY	DATE 2/03	REVISED BY	DATE REVISED
CHECKED BY	CYF 2/03	EJL	4/18/03

DESIGN OVERSIGHT — BEHZAD GOLEMOHAMMADI

STATE OF CALIFORNIA - DEPARTMENT OF TRANSPORTATION
Caltrans

LAST REVISION 00-00-00 — DATE PLOTTED => 03-AUG-2005 TIME PLOTTED => 09:41

FOR REDUCED PLANS ORIGINAL SCALE IS IN MILLIMETERS 0 20 40 60 80

DGN FILE =>04-012024_0346AR2.dgn
USERNAME =>mhossain

CU 04251 EA 012021

DIST	COUNTY	ROUTE	KILOMETER POST TOTAL PROJECT	SHEET No	TOTAL SHEETS
04	SF, Ala	80	13.9 / 14.3, 0.0 / 1.6	346B R3	978

Jens Erlingsson 05/16/01
REGISTERED ELECTRICAL ENGINEER DATE

6-4-01
PLANS APPROVAL DATE

REGISTERED PROFESSIONAL ENGINEER JENS ERLINGSSON No. 8249 Exp. 9/30/06 ELECTRICAL STATE OF CALIFORNIA

PB POWER, Inc.
A Parsons Brinckerhoff Company
303 Second St., Suite 700N
San Francisco, CA 94107-1317

The State of California or its officers or agents shall not be responsible for the accuracy or completeness of electronic copies of this plan sheet.

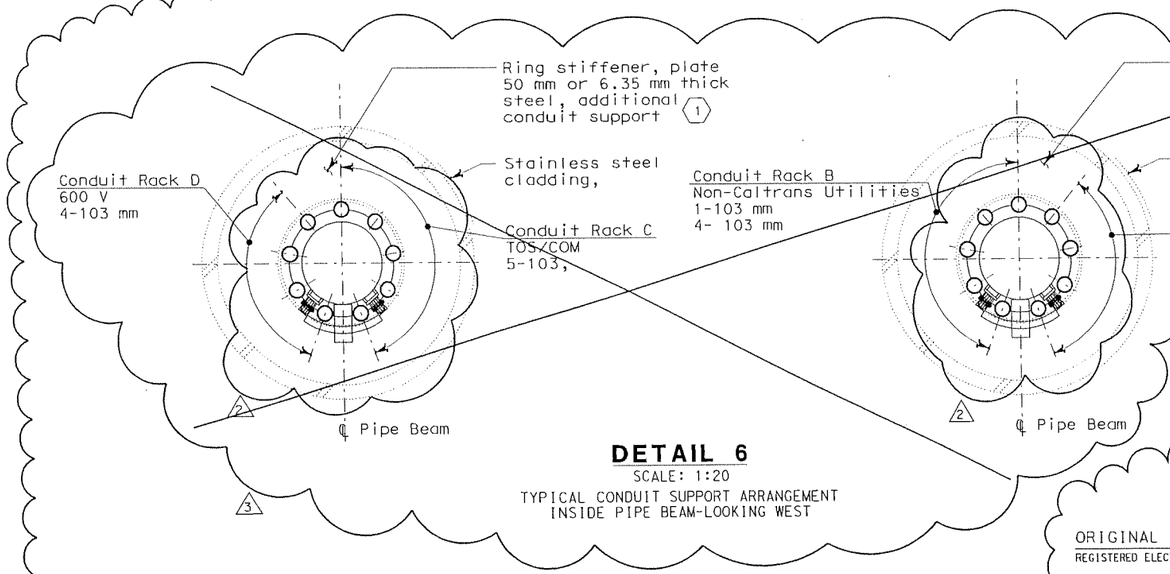

DETAIL 6
SCALE: 1:20
TYPICAL CONDUIT SUPPORT ARRANGEMENT INSIDE PIPE BEAM-LOOKING WEST

K.T. Truong 8/3/05
REGISTERED ELECTRICAL ENGINEER DATE

REGISTERED PROFESSIONAL ENGINEER K.T. Truong No. 16240 Exp. 12-31-06 ELECTRICAL STATE OF CALIFORNIA

ORIGINAL SIGNED 10/1/04
REGISTERED ELECTRICAL ENGINEER DATE

REGISTERED PROFESSIONAL ENGINEER NABEEL F. ABDELRAHMAN No. 17162 Exp. 9/30/05 ELECTRICAL STATE OF CALIFORNIA

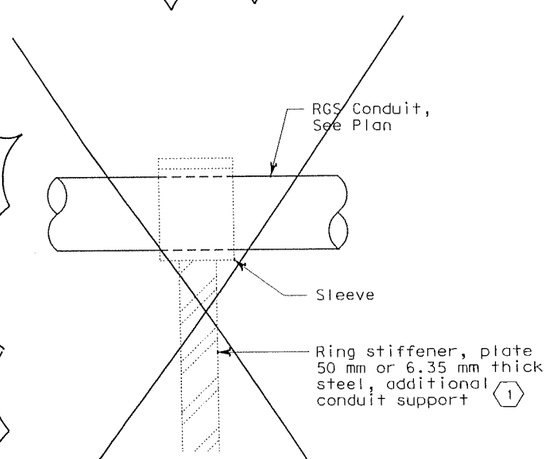

DETAIL 7
NO SCALE
TYPICAL CONDUIT SUPPORT INSIDE PIPE BEAM

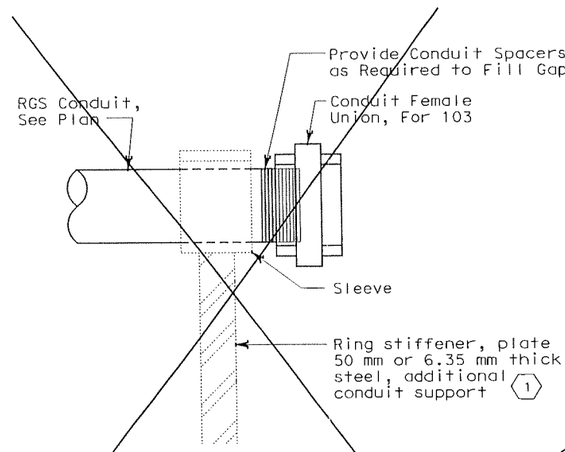

DETAIL 8
NO SCALE
TYPICAL CONDUIT END SUPPORT AT PIPE BEAM

REGISTERED PROFESSIONAL ENGINEER WILLIAM BRADFORD HOWE No. 53321 Exp. 6/30/07 CIVIL STATE OF CALIFORNIA

William Howe 3-14-06
REGISTERED CIVIL ENGINEER DATE

SHEET NOTES:
~~(1) For conduit support detail, see structure sheet AS 31, AS 32, AS 35 and AS 36.~~

NOTES:
1. Materials, hardwares and fittings shall be galvanized or stainless steel. For additional requirements, see Electrical Special Provisions.
2. References:
   For Westbound plans and sections:
   ~~- For Hinge AW, see Sheets EE-295A and EE-295B.~~
   ~~- For Hinge AE, see Sheets EE-300A and EE-300B.~~
   - For Hinge BW, see Sheets EE-296A and EE-296B.
   - For Hinge BE, see Sheets EE-301A and EE-301B.
   - For Hinge CW, see Sheets EE-297A and EE-297B.
   - For Hinge CE, see Sheets EE-302A and EE-302B.
   - For Hinge DW, see Sheets EE-298A and EE-298B.
   - For Hinge DE, see Sheets EE-303A and EE-303B .

NOTES FOR CONDUIT CONNECTION AT HING PIPE BEAMS:
FOR CONDUIT ASSEMBLIES ALREADY FABRICATED (NOTE THAT THIS ASSEMBLY WILL BE INSTALLED IN THE FIELD):

1. Components needed for cantilevered end:
   - 4 inch half coupling welded to end of conduit. Half coupling will allow flexible conduit to be threaded into the end of the conduit assembly.
   - Fillet weld, 6 mm all around.
2. Components needed for flush end:
   - Scallop ring, 50 mm A36 plate. See dimensions on Sheet AS-32A.
   - 6 inch stub welded to scallop ring. Fillet weld, 6 mm one side.
   - 4 inch half coupling shall be welded to the end of the stub, 6 mm all the way around.
   - Install shim plate to offset retainer, 12.7 mm.
   - Install 12.7 mm longer bolts for retainer plate.
   - Drill 8 12.7 mm holes for through bolts to mount second scallop ring to scallop ring on conduit assembly.

FOR ALL FUTURE CONDUIT ASSEMBLIES:

1. All conduit ends shall be threaded with a male NPT.
2. At the flush end the conduit shall extend 152.4 mm beyond the scallop ring and be finished with a male NPT.
3. Use 6 mm fillet weld, 30 mm intermittant on 60 mm centers to shop weld half coupling to the end of the conduit.

MARK	DATE	DESCRIPTIONS	REV	CK	
4	03/14/06	Added note	MH	WBH	CCO NO.48
3	08/03/05	Deleted detail 6. Deleted sheet note 1. Revised note 2. Added notes for conduit connection at hing pipe beams.	MH	KT	CCO NO.48
2	07/20/04	Revised pipe beam conduit layout. Deleted Details 7 and 8.	LR		CCO NO.48
1	04/18/03	New Drawing. Add details.	EJL	CYF	CCO NO.48

REVISIONS

CONTRACT CHANGE ORDER NO. 48 S1
SHEET 51 OF 67

DETAILS
TYPICAL HINGE DETAILS
SCALE AS NOTED

EE-305B

CALCULATED/ DESIGNED BY	EJL	DATE 2/03	REVISED BY	EJL
CHECKED BY	CYF	2/03	DATE REVISED	4/18/03

DESIGN OVERSIGHT
BEHZAD GOLEMOHAMMADI

STATE OF CALIFORNIA - DEPARTMENT OF TRANSPORTATION
Caltrans

LAST REVISION 00-00-00
DATE PLOTTED => 14-MAR-2006
TIME PLOTTED => 12:25

FOR REDUCED PLANS ORIGINAL SCALE IS IN MILLIMETERS 0 20 40 60 80
DGN FILE =>04-012024_0346BR3.dgn
USERNAME =>mhossain
CU 04251
EA 012021

DIST	COUNTY	ROUTE	KILOMETER POST TOTAL PROJECT	SHEET No	TOTAL SHEETS
04	SF, Ala	80	13.9 / 14.3, 0.0 / 1.6	347 R2	978

REGISTERED ELECTRICAL ENGINEER — DATE 04/18/03

6-4-01
PLANS APPROVAL DATE

REGISTERED PROFESSIONAL ENGINEER — JENS ERLINGSSON No. 8249 Exp. 9/30/06 ELECTRICAL — STATE OF CALIFORNIA

PB POWER, Inc.
A Parsons Brinckerhoff Company
303 Second St., Suite 700N
San Francisco, CA 94107-1317

The State of California or its officers or agents shall not be responsible for the accuracy or completeness of electronic copies of this plan sheet.

Caltrans Metric

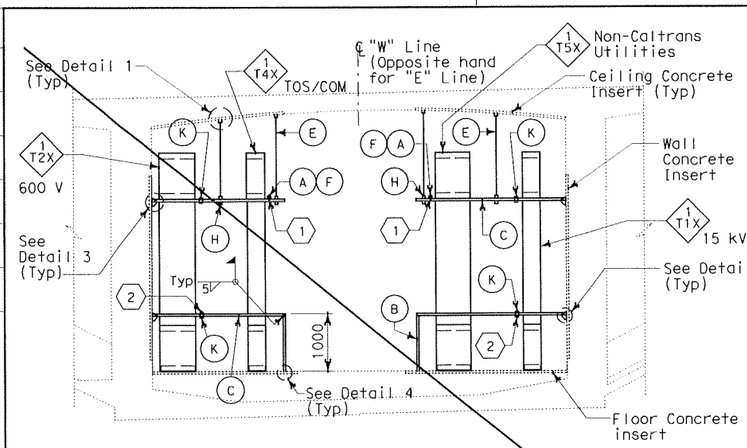

SECTION A-A
SCALE 1:50

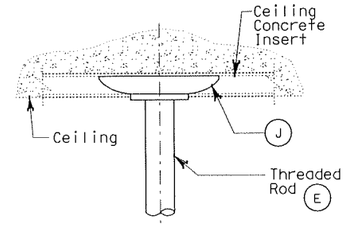

DETAIL 1
(TYPICAL HANGER SUPPORT)
SCALE 1:5

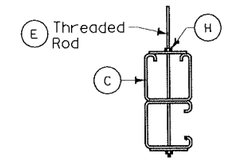

DETAIL 2
(TYPICAL HANGER TRAY SUPPORT)
SCALE: 1:2.5

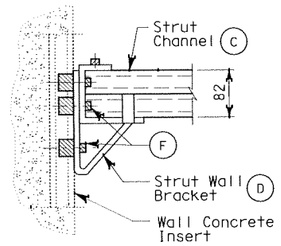

DETAIL 3
(TYPICAL WALL BRACKET TRAY SUPPORT)
SCALE 1:5

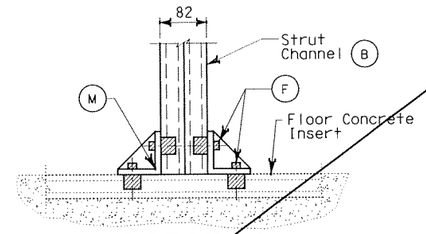

DETAIL 4
(TYPICAL FLOOR BRACKET SUPPORT)
SCALE 1:5

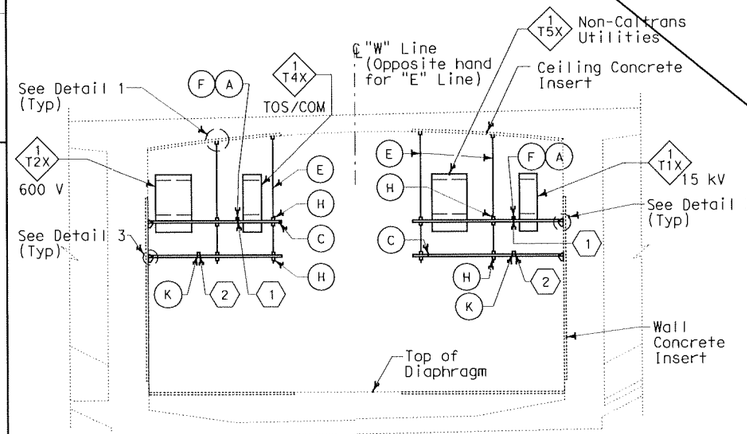

SECTION B-B
SCALE 1:50

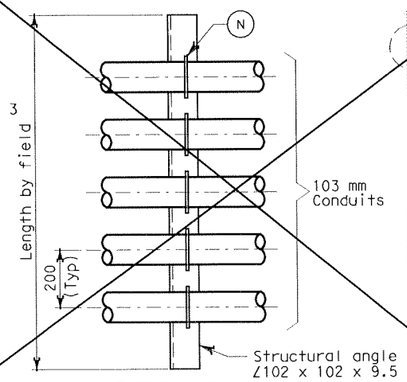

DETAIL 5
(TYPICAL CONDUIT SUPPORT)
SCALE 1:10

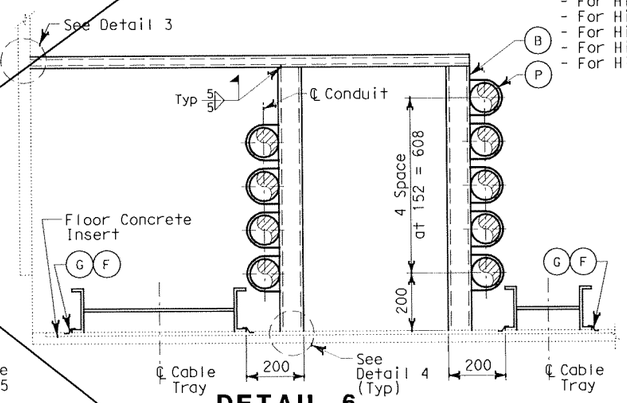

DETAIL 6
(TYPICAL CONDUIT RACK SUPPORT)
SCALE 1:10

DELETED

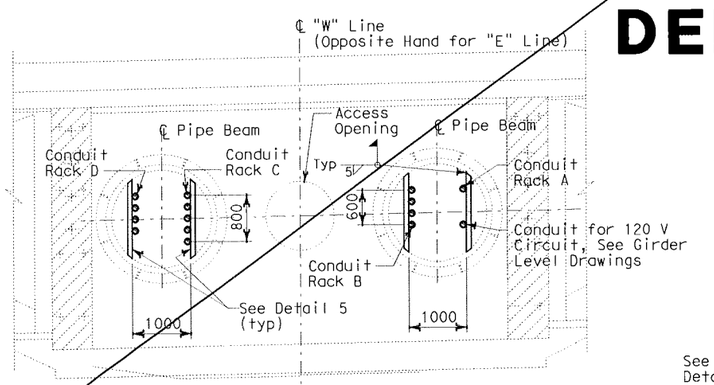

SECTION C-C
SCALE 1:50

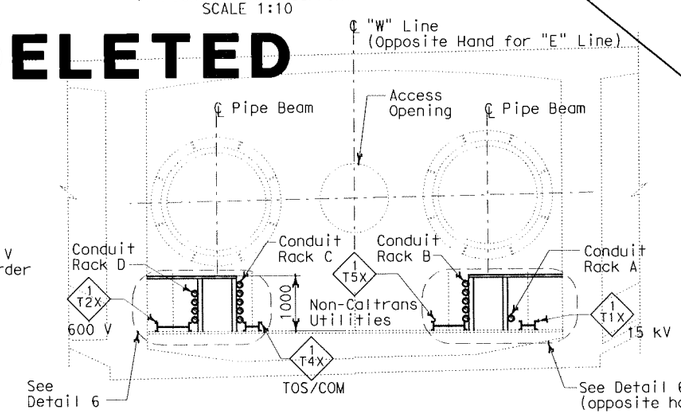

SECTION D-D
SCALE 1:50

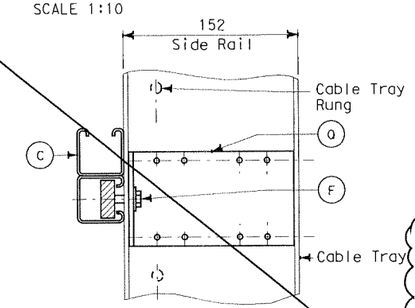

DETAIL 7
(TYPICAL VERTICAL CABLE TRAY SUPPORT)
SCALE: 1:2.5

SHEET NOTES:

(1) For seismic bracing, use strut channel installed diagonally to connect horizontal member of one hanger to horizontal member of adjacent hanger. See Sections A-A and B-B for connecting points.

(2) For seismic bracing, use strut channel installed diagonally to connect horizontal member of tray support to wall using concrete fastener, 6.35 dia, 40 mm depth embedment and allowable 40 mm depth embedment and allowable working load of tension 1.223 kN and shear 2.91 kN.

NOTES:

1. Materials, hardware and fittings shall be galvanized or stainless steel. For additional requirements, see Electrical Special Provisions.

References:
For Westbound plans and sections:
- For Hinge AW, see Sheet EE-295.
- For Hinge BW, see Sheet EE-296.
- For Hinge CW, see Sheet EE-297.
- For Hinge DW, see Sheet EE-298.
- For Hinge EW, see Sheet EE-299.

For Eastbound plans and sections:
- For Hinge AE, see Sheet EE-300.
- For Hinge BE, see Sheet EE-301.
- For Hinge CE, see Sheet EE-302.
- For Hinge DE, see Sheet EE-303.
- For Hinge EE, see Sheet EE-304.

MATERIAL LIST

Item No.	Description	Remarks
(A)	Strut channel, 41 mm x 41 mm	Length as required
(B)	Strut channel, 41 mm x 82 mm	Length as required
(C)	Strut channel combination, 41 mm x 82 mm	Length as required
(D)	Strut wall bracket	
(E)	Threaded steel hanger rod, 12 mm diameter	Length as required
(F)	Strut channel spring nut, lockwasher and hex bolt	
(G)	Cable tray clamp with hardwares	
(H)	Strut channel hanger trapeze hardware kit	
(J)	Strut channel spring nut, lockwasher (for concrete insert)	
(K)	Strut channel brace fittings for horizontal seismic support	Length as required
(M)	Strut channel wing shape fitting	
(N)	U-Bolt clamp for 103 mm conduit	
(P)	Strut channel conduit clamp for 103 mm	
(Q)	Vertical tray hanger with splice plate hardwares	Bolted to side rail of cable tray

MARK	DATE	DESCRIPTIONS	REV	CK	
1	04/18/03	Drawing deleted. Superceded by dwg. EE-306A, 306B, 306C, 306D & EE-306E	EJL	CYF	CCO NO.48

REVISIONS

CONTRACT CHANGE ORDER NO. 48 S1
SHEET 52 OF 67

DETAILS
TYPICAL HINGE TRAY SUPPORT
SCALE AS NOTED

EE-306

DATE	REVISED BY	DATE REVISED
5/00	EJL	4/18/03
	CYF	10/01
	EJL	5/01

CALCULATED/DESIGNED BY	JE	DATE 5/00
CHECKED BY	TW	5/00

DESIGN OVERSIGHT — BEHZAD GOLEMOHAMMADI

STATE OF CALIFORNIA - DEPARTMENT OF TRANSPORTATION — Caltrans

LAST REVISION 00-00-00 — DATE PLOTTED => 08-AUG-2006 — TIME PLOTTED => 11:22

FOR REDUCED PLANS ORIGINAL SCALE IS IN MILLIMETERS 0 20 40 60 80

DGN FILE =>04-012024_0347R2.dgn
USERNAME =>mhossain

CU 04251 — EA 012021

DIST	COUNTY	ROUTE	KILOMETER POST TOTAL PROJECT	SHEET NO	TOTAL SHEETS
04	SF, Ala	80	13.9 / 14.3, 0.0 / 1.6	347A R1	978

Jens Erlingsson 04/18/03
REGISTERED ELECTRICAL ENGINEER DATE

6-4-01
PLANS APPROVAL DATE

REGISTERED PROFESSIONAL ENGINEER JENS ERLINGSSON No. 8249 Exp. 9/30/06 ELECTRICAL STATE OF CALIFORNIA

PB POWER, Inc.
A Parsons Brinckerhoff Company
303 Second St., Suite 700N
San Francisco, CA 94107-1317

The State of California or its officers or agents shall not be responsible for the accuracy or completeness of electronic copies of this plan sheet.

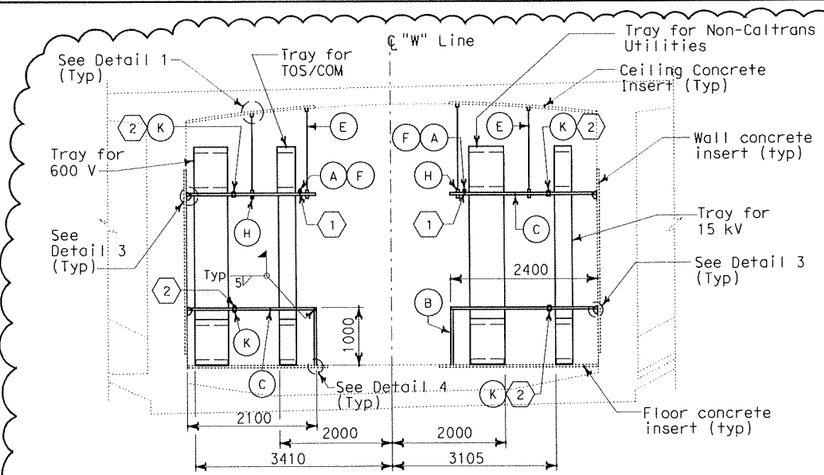

SECTION A-A
(OPPOSITE HAND FOR "E" LINE)
SCALE 1:50

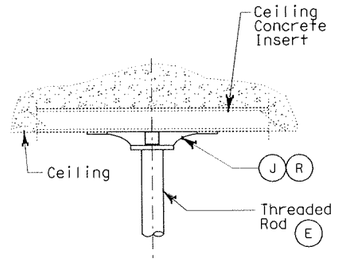

DETAIL 1
(TYPICAL HANGER SUPPORT)
SCALE 1:5

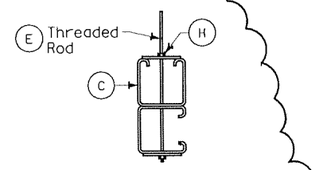

DETAIL 2
(TYPICAL HANGER TRAY SUPPORT)
SCALE: 1:2.5

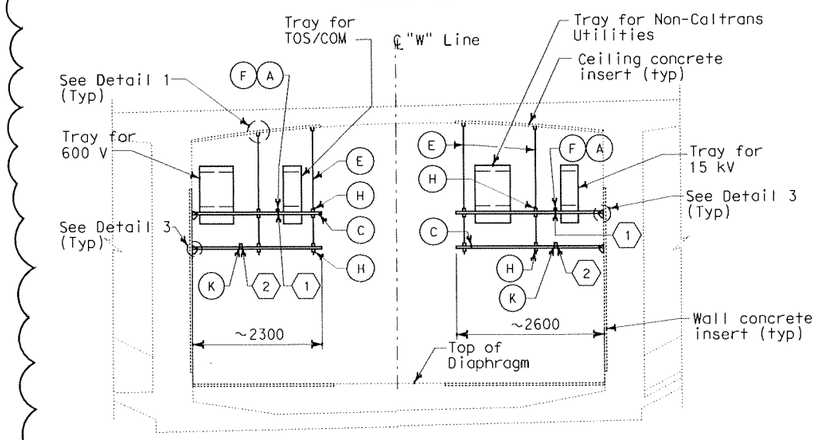

SECTION B-B
(OPPOSITE HAND FOR "E" LINE)
SCALE 1:50

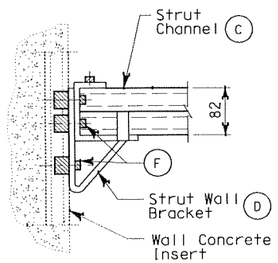

DETAIL 3
(TYPICAL WALL BRACKET TRAY SUPPORT)
SCALE 1:5

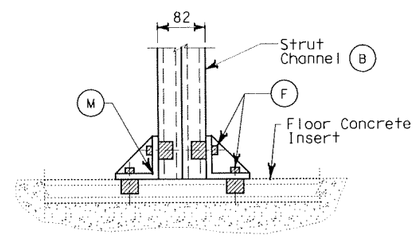

DETAIL 4
(TYPICAL FLOOR BRACKET SUPPORT)
SCALE 1:5

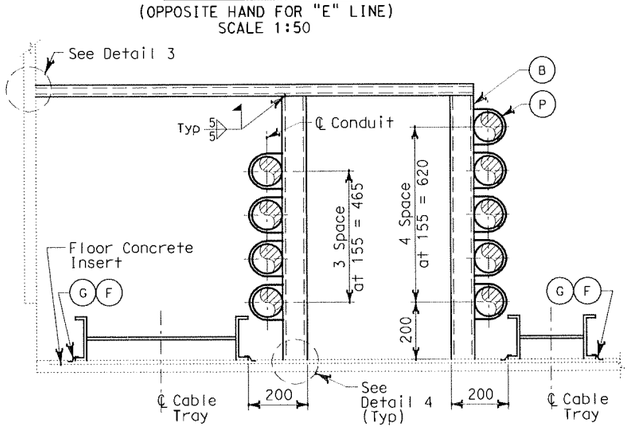

DETAIL 6
(TYPICAL CONDUIT RACK SUPPORT)
SCALE 1:10

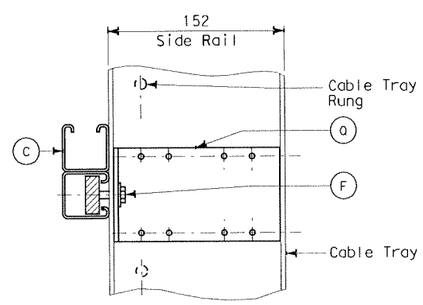

DETAIL 7
(TYPICAL VERTICAL CABLE TRAY SUPPORT)
SCALE: 1:2.5

SHEET NOTES:

(1) For seismic bracing, use strut channel installed diagonally to connect horizontal member of one hanger to horizontal member of adjacent hanger. See Sections A-A and B-B for connecting points.

(2) For seismic bracing, use strut channel installed diagonally to connect horizontal member of tray support to wall using concrete fastener, 6.35 dia, 40 mm depth embedment and allowable 40 mm depth embedment and allowable working load of tension 1.223 kN and shear 2.91 kN.

NOTES:

1. Materials, hardware and fittings shall be galvanized or stainless steel. For additional requirements, see Electrical Special Provisions.
2. References:
   For Westbound plans and sections:
   - For Hinge BW, see Sheets EE-296A and 296B.
   - For Hinge CW, see Sheets EE-297A and 297B.
   - For Hinge DW, see Sheets EE-298A and 298B.

   For Eastbound plans and sections:
   - For Hinge BE, see Sheets EE-301A and 301B
   - For Hinge CE, see Sheets EE-302A and 302B.
   - For Hinge DE, see Sheets EE-303A and 303B.

MATERIAL LIST

Item No.	Description	Remarks
A	Strut channel, 41 mm x 41 mm	Length as required
B	Strut channel, 41 mm x 82 mm	Length as required
C	Strut channel combination, 41 mm x 82 mm	Length as required
D	Strut wall bracket	
E	Threaded steel hanger rod, 12 mm diameter	Length as required
F	Strut channel spring nut, lockwasher and hex bolt	
G	Cable tray clamp with hardwares	
H	Strut channel hanger trapeze hardware kit	
J	Strut channel spring nut, Tee-head bolt	
K	Strut channel brace fittings for horizontal seismic support	Length as required
M	Strut channel wing shape fitting	
N	U-Bolt clamp for 103 mm conduit	
P	Strut channel conduit clamp for 103 mm	
Q	Vertical tray hanger with splice plate hardwares	Bolted to side rail of cable tray
R	Swivel ceiling flange	
S	Vertical tray hanger with splice plate hardware (bolted to side rail)	

MARK	DATE	DESCRIPTIONS	REV	CK	
1	04/18/03	New Drawing. Change sections and details.	EJL	CYF	CCO NO.48

REVISIONS

CONTRACT CHANGE ORDER NO. 48 S1
SHEET 53 OF 67

DETAILS
(1) TYPICAL HINGE TRAY SUPPORT
SCALE AS NOTED

EE-306A

CALCULATED/DESIGNED BY	EJL	DATE 2/03	REVISED BY EJL
CHECKED BY	CYF	2/03	DATE REVISED 4/18/03

DESIGN OVERSIGHT: BEHZAD GOLEMOHAMMADI

STATE OF CALIFORNIA - DEPARTMENT OF TRANSPORTATION

Caltrans

LAST REVISION 00-00-00 | DATE PLOTTED => 08-AUG-2006 | TIME PLOTTED => 11:23

FOR REDUCED PLANS ORIGINAL SCALE IS IN MILLIMETERS 0 20 40 60 80

DGN FILE =>04-012024_0347AR1.dgn
USERNAME =>mhossain

CU 04251 | EA 012021

DIST	COUNTY	ROUTE	KILOMETER POST TOTAL PROJECT	SHEET No	TOTAL SHEETS
04	SF, Ala	80	13.9 / 14.3, 0.0 / 1.6	347B R2	978

Caltrans Metric

REGISTERED ELECTRICAL ENGINEER 05/16/01 DATE

REGISTERED PROFESSIONAL ENGINEER JENS ERLINGSSON No. 8249 Exp. 9/30/06 ELECTRICAL STATE OF CALIFORNIA

6-4-01
PLANS APPROVAL DATE

PB POWER, Inc.
A Parsons Brinckerhoff Company
303 Second St., Suite 700N
San Francisco, CA 94107-1317

The State of California or its officers or agents shall not be responsible for the accuracy or completeness of electronic copies of this plan sheet.

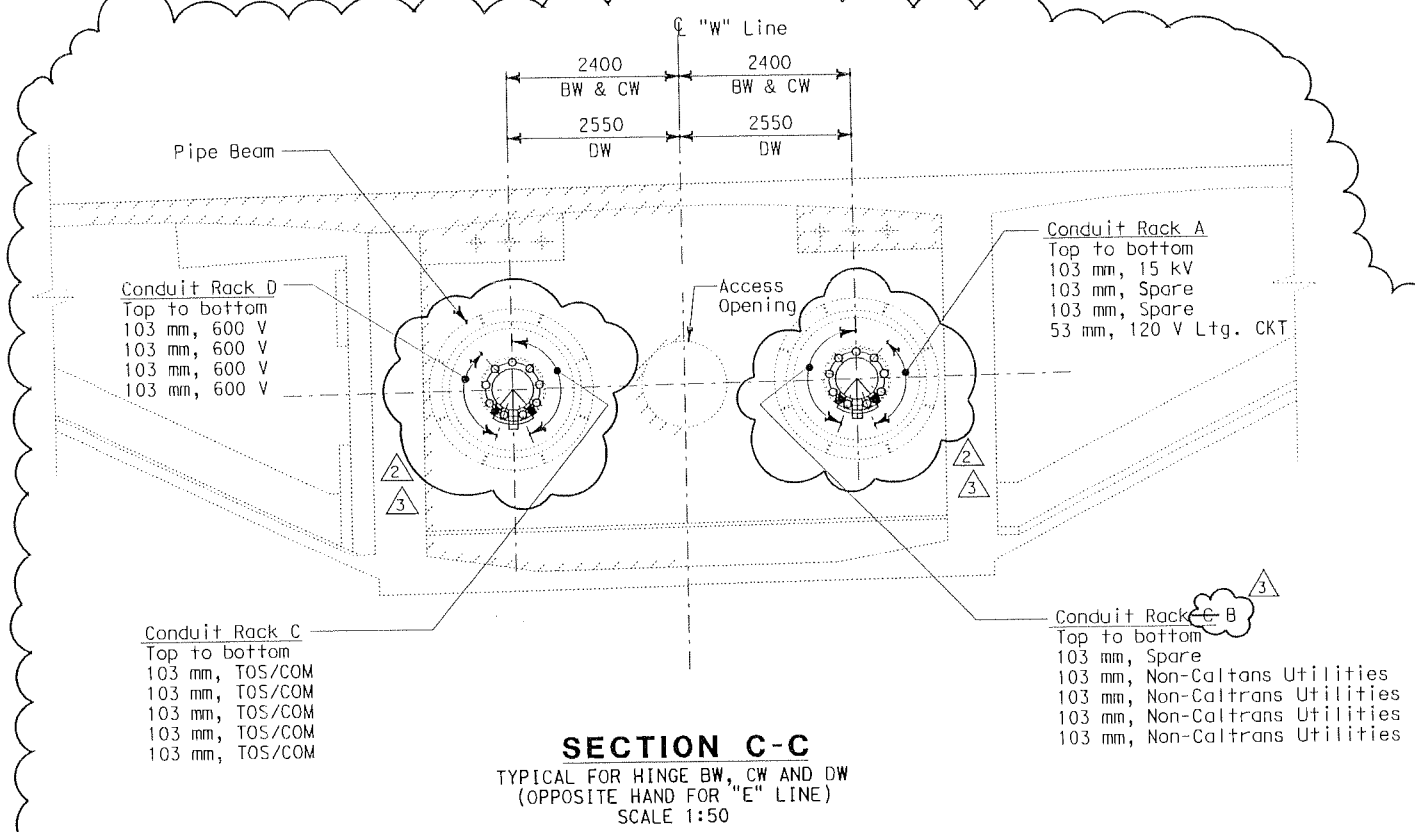

SECTION C-C

TYPICAL FOR HINGE BW, CW AND DW
(OPPOSITE HAND FOR "E" LINE)
SCALE 1:50

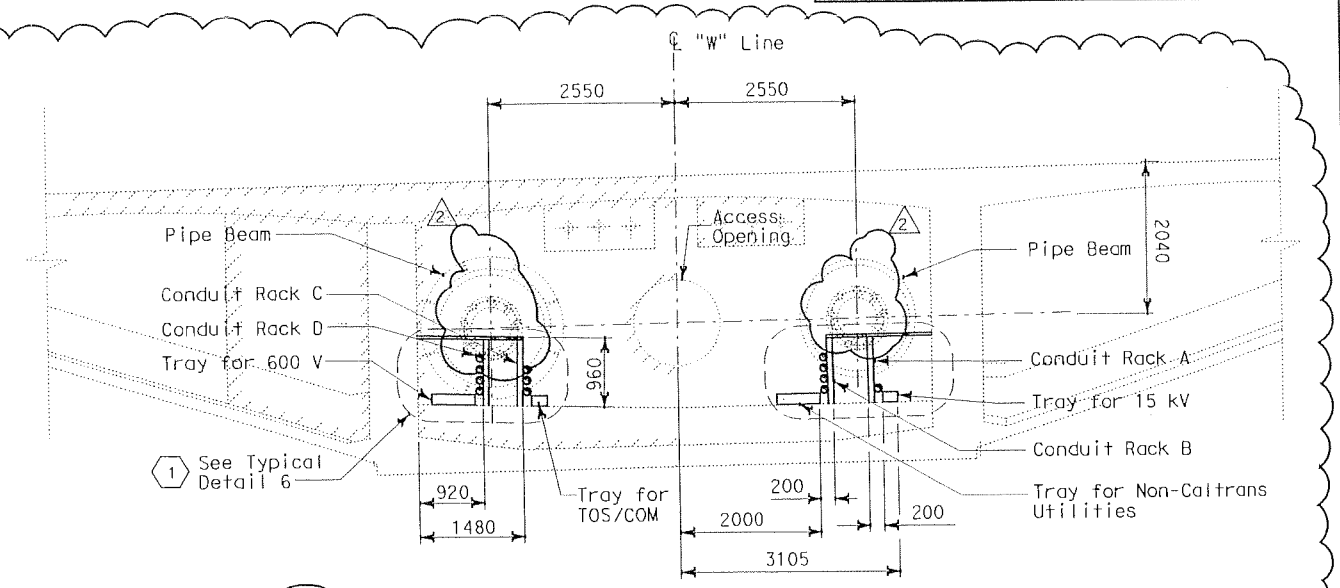

SECTION D-D

FOR HINGE DW
(OPPOSITE HAND FOR "E" LINE)
SCALE 1:50

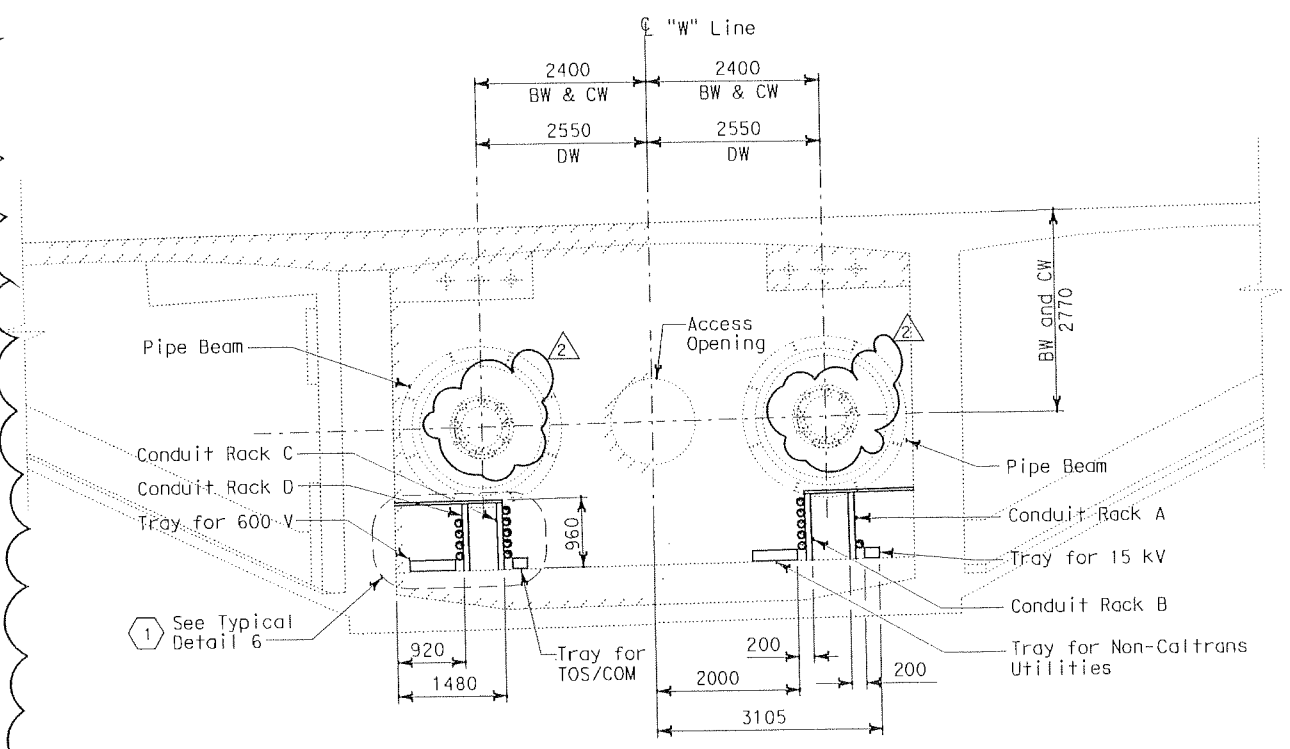

SECTION D-D

TYPICAL FOR HINGE BW and CW
(OPPOSITE HAND FOR "E" LINE)
SCALE 1:50

REGISTERED ELECTRICAL ENGINEER 7/20/05 DATE

REGISTERED PROFESSIONAL ENGINEER K.T. Truong No. 16240 Exp. 12-31-06 ELECTRICAL STATE OF CALIFORNIA

ORIGINAL SIGNED 10/1/04
REGISTERED ELECTRICAL ENGINEER DATE

REGISTERED PROFESSIONAL ENGINEER NABEEL F. ABDELRAHMAN No. 17162 Exp. 9/30/05 ELECTRICAL STATE OF CALIFORNIA

MARK	DATE	DESCRIPTIONS	REV	CK	
3	7/20/05	Revised pipe beam conduit layout, conduit rack callout, and note 2.	MH	KT	CCO NO.48
2	08/20/04	Revised pipe beam conduit layout.	LR		CCO NO.48
1	04/18/03	New Drawing. Change sections.	EJL	CYF	CCO NO.48

REVISIONS

CONTRACT CHANGE ORDER NO. 48 S1
SHEET 54 OF 67

SHEET NOTES:

(1) For conduit support Details, see Sheet EE-306A.

NOTES:

1. Materials, hardware and fittings shall be galvanized or stainless steel. For additional requirements, see Electrical Special Provisions. (3)
2. References:
   For Westbound plans and sections:
   - ~~For Hinge AW, see Sheets EE-295A and EE-295B..~~
   - For Hinge BW, see Sheets EE-296A and EE-296B..
   - For Hinge CW, see Sheets EE-297A and EE-297B..
   - For Hinge DW, see Sheets EE-298A and EE-298B..
   - For Hinge EW, see SheetsEE-299A and EE-299B.

   For Eastbound plans and sections:
   - ~~For Hinge AE, see Sheets EE-300A and EE-300B..~~
   - For Hinge BE, see Sheets EE-301A and EE-301b..
   - For Hinge CE, see Sheets EE-302A and EE-302B..
   - For Hinge DE, see Sheets EE-303A and EE-303B..
   - For Hinge EE, see Sheets EE-304A and EE-304B..

(1) **DETAILS**
TYPICAL CONDUIT SUPPORT
SCALE AS NOTED

EE-306B

CALCULATED/ DESIGNED BY	DATE 2/03	REVISED BY	DATE REVISED
CHECKED BY	CYF 2/03	EJL	4/18/03

DESIGN OVERSIGHT
BEHZAD GOLEMOHAMMADI

STATE OF CALIFORNIA - DEPARTMENT OF TRANSPORTATION
Caltrans

LAST REVISION 00-00-00
DATE PLOTTED => 04-AUG-2005
TIME PLOTTED => 10:28

FOR REDUCED PLANS ORIGINAL SCALE IS IN MILLIMETERS 0 20 40 60 80

DGN FILE =>04-012024_0347BR2.dgn
USERNAME =>mhossain

CU 04251 | EA 012021

DIST	COUNTY	ROUTE	KILOMETER POST TOTAL PROJECT	SHEET No	TOTAL SHEETS
04	SF, Ala	80	13.9 / 14.3, 0.0 / 1.6	347C R2	978

Caltrans Metric

REGISTERED ELECTRICAL ENGINEER 05/16/01 DATE

6-4-01
PLANS APPROVAL DATE

REGISTERED PROFESSIONAL ENGINEER JENS ERLINGSSON No. 8249 Exp. 9/30/06 ELECTRICAL STATE OF CALIFORNIA

PB POWER, Inc.
A Parsons Brinckerhoff Company
303 Second St., Suite 700N
San Francisco, CA 94107-1317

The State of California or its officers or agents shall not be responsible for the accuracy or completeness of electronic copies of this plan sheet.

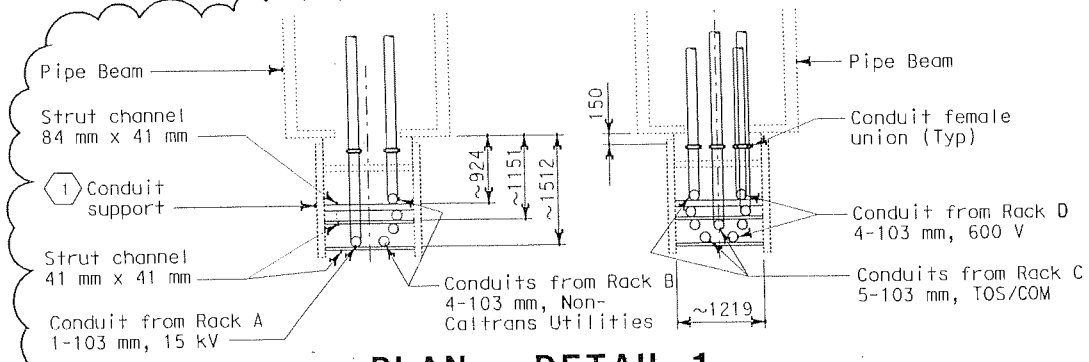

PLAN - DETAIL 1

TYPICAL FOR HINGE BW, CW
(OPPOSITE HAND FOR HINGE BE AND CE)
SCALE 1:50

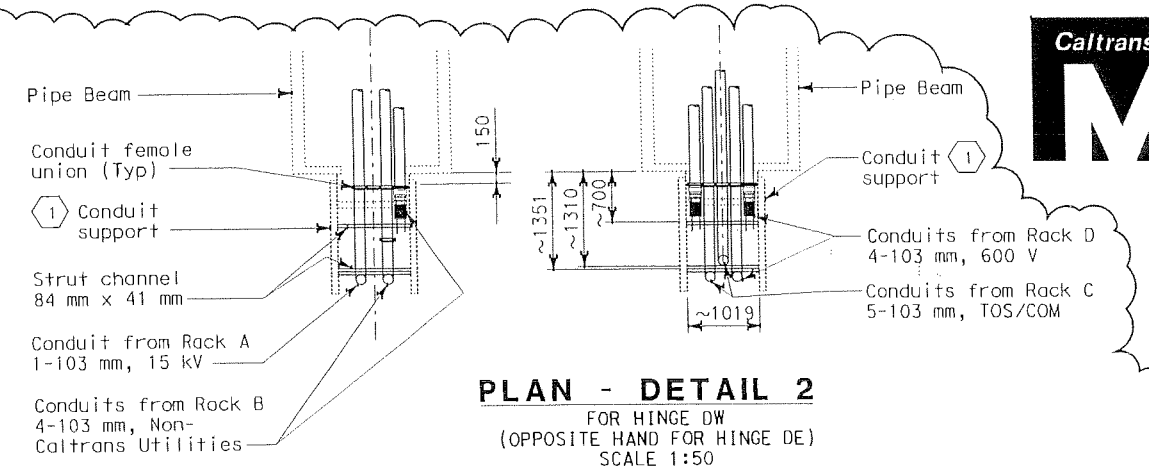

PLAN - DETAIL 2

FOR HINGE DW
(OPPOSITE HAND FOR HINGE DE)
SCALE 1:50

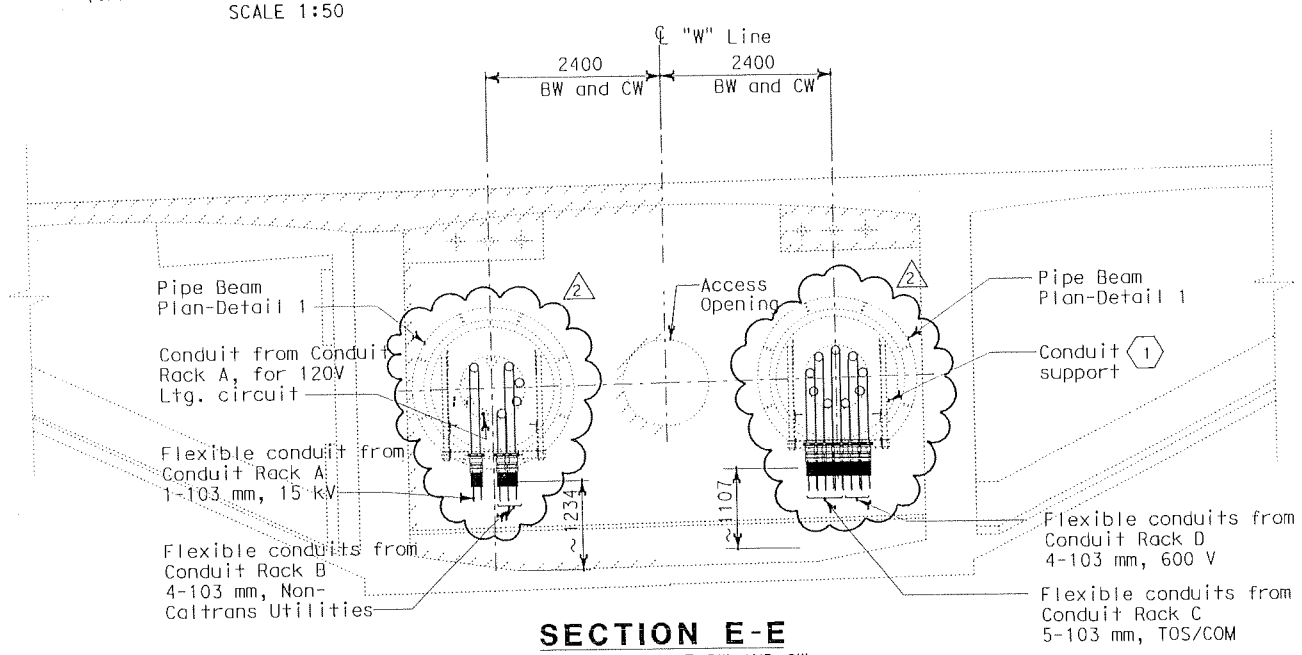

SECTION E-E

TYPICAL FOR HINGE BW AND CW
(OPPOSITE HAND FOR "E" LINE)
SCALE 1:50

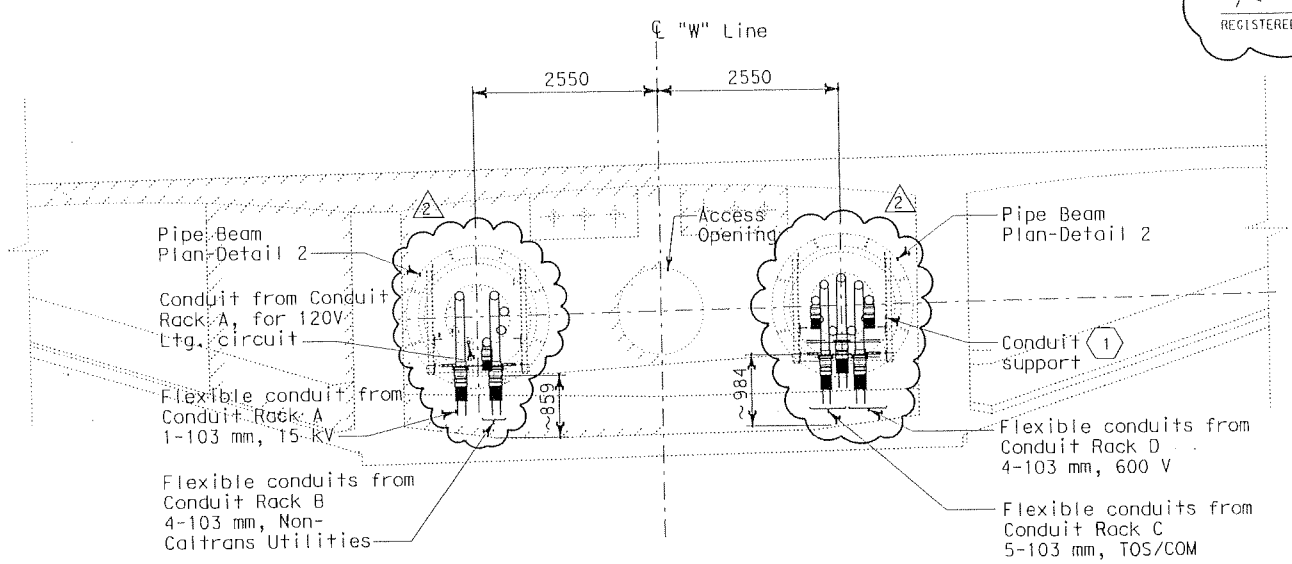

SECTION E-E

FOR HINGE DW
(OPPOSITE HAND FOR "E" LINE)
SCALE 1:50

REGISTERED ELECTRICAL ENGINEER 7/20/05 DATE

REGISTERED PROFESSIONAL ENGINEER K.T. Truong No. 16240 Exp. 12-31-06 ELECTRICAL STATE OF CALIFORNIA

SHEET NOTES:

1 For conduit support Details, see Structure Sheet AS-33 and AS-37.

NOTES:

1. Materials, hardware and fittings shall be galvanized or stainless steel. For additional requirements, see Electrical Special Provisions.
2. Dimensions with (~) are approximate. Field to verifiy and adjust dimensions to actual installation.
3. References:

2 For Westbound plans and sections:
- ~~For Hinge AW, see Sheets EE-295A and EE-295B.~~
- For Hinge BW, see Sheets EE-296A and EE-296B.
- For Hinge CW, see Sheets EE-297A and EE-297B.
- For Hinge DW, see Sheets EE-298A and EE-298B.
- For Hinge EW, see Sheets EE-299A and EE-299B.

For Eastbound plans and sections:
- ~~For Hinge AE, see Sheets EE-300A and EE-300B.~~
- For Hinge BE, see Sheets EE-301A and EE-301B.
- For Hinge CE, see Sheets EE-302A and EE-302B.
- For Hinge DE, see Sheets EE-303A and EE-303B.
- For Hinge EE, see Sheets EE-304A and EE-304B.

MARK	DATE	DESCRIPTIONS	REV	CK	
2	07/20/05	Revised pipe beam conduit layout. Revised note 3.	MH	KT	CCO NO.48
1	04/18/03	New Drawing. Add details and sections	EJL	CYF	CCO NO.48

REVISIONS

CONTRACT CHANGE ORDER NO. 48 S1
SHEET 55 OF 07

1

DETAILS
TYPICAL CONDUIT SUPPORT

SCALE AS NOTED

EE-306C

CALCULATED/DESIGNED BY	EJL	DATE 2/03	REVISED BY EJL
CHECKED BY	CYF	2/03	DATE REVISED 4/18/03

DESIGN OVERSIGHT
BEHZAD GOLEMOHAMMADI

STATE OF CALIFORNIA - DEPARTMENT OF TRANSPORTATION
Caltrans

LAST REVISION 00-00-00
DATE PLOTTED => 03-AUG-2005
TIME PLOTTED => 10:37

FOR REDUCED PLANS ORIGINAL SCALE IS IN MILLIMETERS 0 20 40 60 80

DGN FILE =>04-012024_0347CR2.dgn
USERNAME =>mhossain

CU 04251 | EA 012021

DIST	COUNTY	ROUTE	KILOMETER POST TOTAL PROJECT	SHEET No	TOTAL SHEETS
04	SF, Ala	80	13.9 / 14.3, 0.0 / 1.6	347D R2	978

REGISTERED ELECTRICAL ENGINEER 02/20/04 DATE

6-4-01
PLANS APPROVAL DATE

REGISTERED PROFESSIONAL ENGINEER JENS ERLINGSSON No. 8249 Exp. 9/30/06 ELECTRICAL STATE OF CALIFORNIA

PB POWER, Inc.
A Parsons Brinckerhoff Company
303 Second St., Suite 700N
San Francisco, CA 94107-1317

The State of California or its officers or agents shall not be responsible for the accuracy or completeness of electronic copies of this plan sheet.

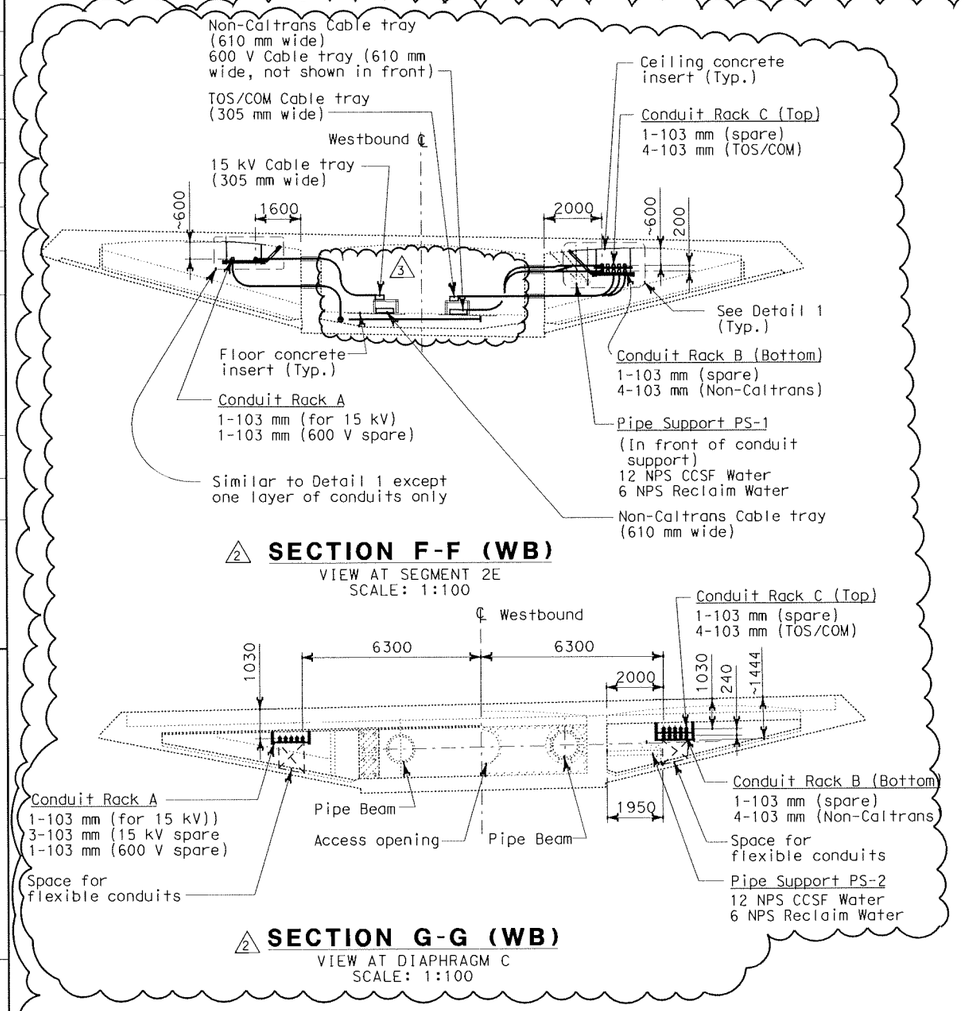

2 SECTION F-F (WB)

VIEW AT SEGMENT 2E
SCALE: 1:100

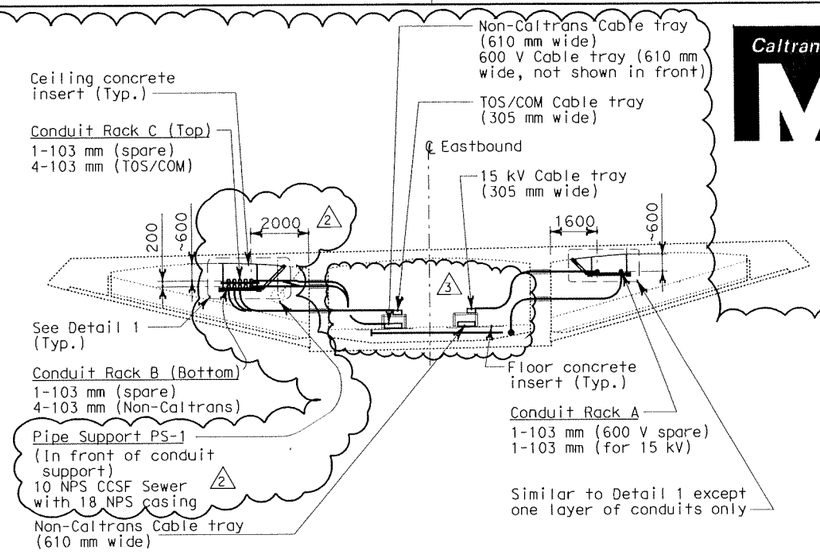

SECTION F-F (EB)

VIEW AT SEGMENT 2E
SCALE: 1:100

2 SECTION G-G (WB)

VIEW AT DIAPHRAGM C
SCALE: 1:100

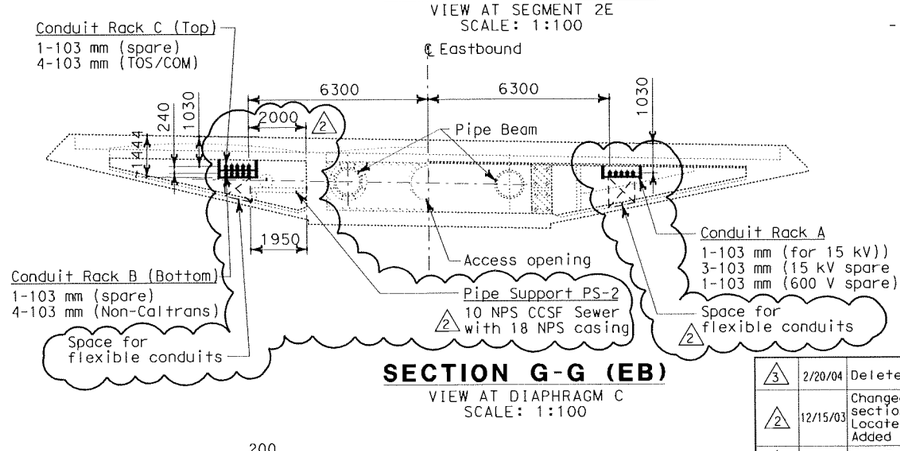

SECTION G-G (EB)

VIEW AT DIAPHRAGM C
SCALE: 1:100

NOTES:

1. Minimum radius of cable tray fittings shall be 610 mm.
2. Minimum radius of 103 mm conduit bends shall be 610 mm.
3. For locations of conduit hanger supports, see plan sheets EE-304A and EE-304B.
4. For additional work related not shown on this sheet, see Electrical Special Provisions.
5. References:
   - For Girder Level Eastbound plans, see sheets EE-81to EE-97.
   - For Typical Girder Embed plans and sections, see sheet EE-314B.

MARK	DATE	DESCRIPTIONS	REV	CK	
3	2/20/04	Deleted cable trays and conduits	CYF	EJL	CCO NO.48
2	12/15/03	Changed location of conduit rack at section F-F and G-G. Locate mechanical pipes. Added Westbound Section F-F and G-G.	EJL	CYF	CCO NO.48
1	04/18/03	New Drawing. Add details and sections	EJL	CYF	CCO NO.48

REVISIONS

CONTRACT CHANGE ORDER NO. 48 S1
SHEET 56 OF 67

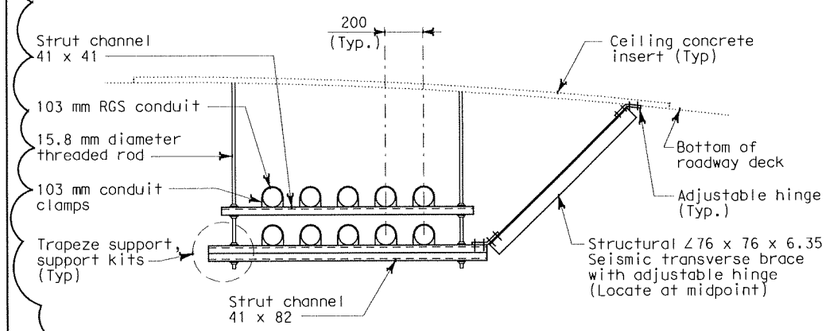

DETAIL 1

(TYPICAL CONDUIT SUPPORT)
SCALE: 1:15

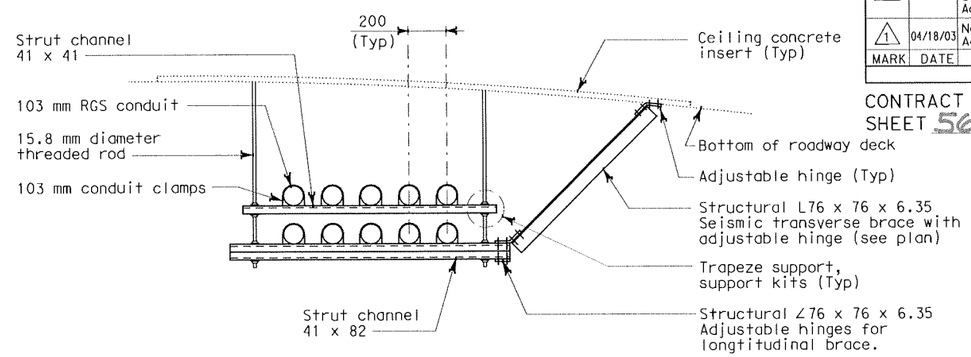

DETAIL 2

(TYPICAL CONDUIT SUPPORT WITH SEISMIC BRACES)
SCALE: 1:15

DETAILS
HINGE DETAILS

1

SCALE AS NOTED

EE-306D

STATE OF CALIFORNIA - DEPARTMENT OF TRANSPORTATION
Caltrans

DESIGN OVERSIGHT
BEHZAD GOLEMOHAMMADI

CALCULATED/DESIGNED BY	EJL	EJL	EJL	EJL	EJL
CHECKED BY	CYF	CYF	EJL	EJL	EJL
DATE	2/03	2/03	4/18/03	12/15/03	2/20/04
REVISED BY					
DATE REVISED					

LAST REVISION 00-00-00
DATE PLOTTED => 08-AUG-2006
TIME PLOTTED => 11:24

FOR REDUCED PLANS ORIGINAL SCALE IS IN MILLIMETERS 0 20 40 60 80

DGN FILE =>04-012024_0347DR2.dgn
USERNAME =>mhossain

CU 04251 EA 012021

DIST	COUNTY	ROUTE	KILOMETER POST TOTAL PROJECT	SHEET No.	TOTAL SHEETS
04	SF, Ala	80	13.9 / 14.3, 0.0 / 1.6	347E R2	978

Caltrans Metric

REGISTERED ELECTRICAL ENGINEER — DATE 05/16/01

6-4-01
PLANS APPROVAL DATE

REGISTERED PROFESSIONAL ENGINEER — JENS ERLINGSSON — No. 8249 — Exp. 9/30/06 — ELECTRICAL — STATE OF CALIFORNIA

PB POWER, Inc.
A Parsons Brinckerhoff Company
303 Second St., Suite 700N
San Francisco, CA 94107-1317

The State of California or its officers or agents shall not be responsible for the accuracy or completeness of electronic copies of this plan sheet.

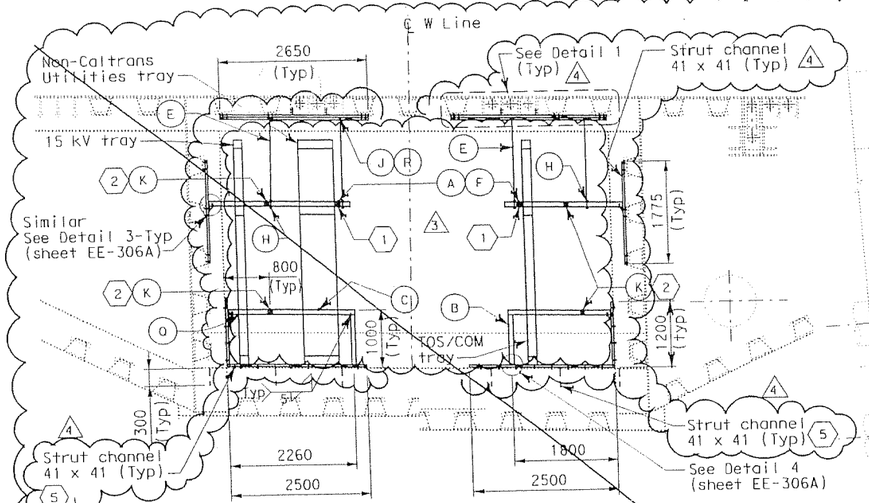

SECTION A-A

(OPPOSITE HAND FOR "E" LINE)
WB-FOR PLAN, SEE EE-295A
EB-FOR PLAN, SEE SEE-300A
SCALE 1:50

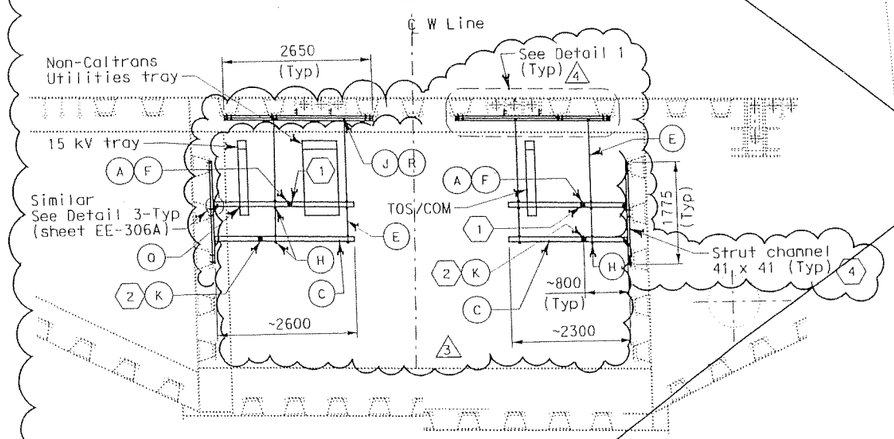

SECTION B-B

(OPPOSITE HAND FOR "E" LINE)
WB-FOR PLAN, SEE EE-295A
EB-FOR PLAN, SEE SEE-300A
SCALE 1:50

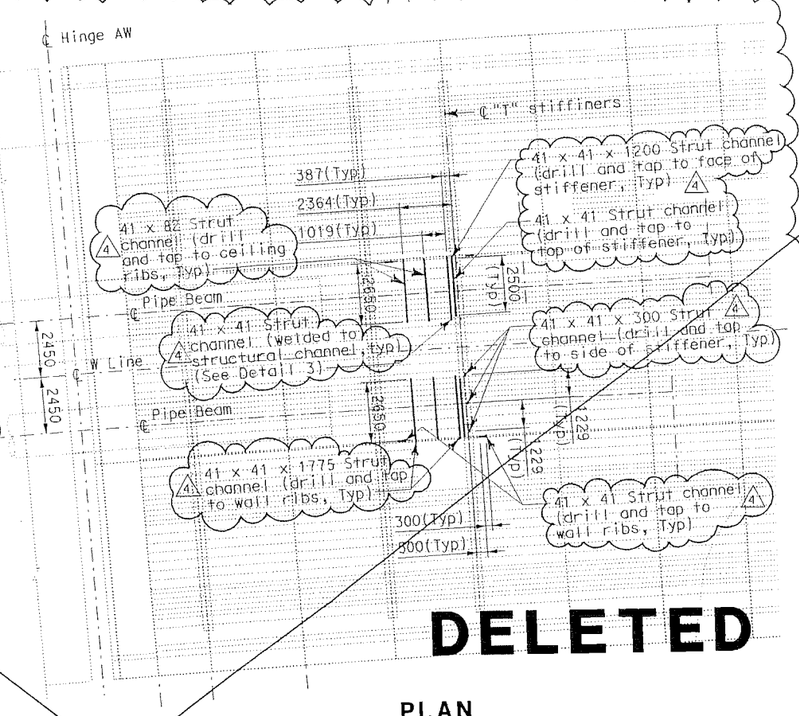

DELETED

PLAN
LOCATION OF TRAY SUPPORT STRUT

OPPOSITE HAND FOR "E" LINE
SCALE: 1:125

MARK	DATE	DESCRIPTIONS	REV	CK	
5	7/20/05	Deleted sheet	MH	KT	CCO NO.48
4	4/16/04	Revised connections to drill and tap from welded to metal structures. Changed Detail 1. Added sheet notes 4 and 5 and note 3.	EJL	MSO	CCO NO.48
3	2/20/04	Deleted cable trays, supports and hangers. Removed sheet notes 3.	CYF	EJL	CCO NO.48
2	12/19/03	Add Detail 2, 3 and note 3.	EJL	CYF	CCO NO.48
1	04/18/03	New Drawing.	EJL	CYF	CCO NO.48

REVISIONS

CONTRACT CHANGE ORDER NO. 48 SI
SHEET 57 OF 67

SHEET NOTES:

1. For seismic bracing, use strut channel installed diagonally to connect horizontal member of one hanger to horizontal member of adjacent hanger. See Sections A-A and B-B for connecting points.
2. For seismic bracing, use strut channel installed diagonally to connect horizontal member of tray support to wall.
3. ~~Cable tray hangers shall be located to provide working space in front of Cantilever tendon anchorage. Field to adjust location accordingly, additional supports as required.~~
4. Drill and tap connection to close rib, typical 3 places. See similar Detail 1.
5. Drill and tap connection to stiffener, minimum 300 mm at centers.

NOTES:

1. Materials, hardware and fittings shall be galvanized or stainless steel. For additional requirements, see Electrical Special Provisions.
2. References:
   For Westbound plans and sections:
   - For Hinge AW, see Sheets EE-295A and 295B.
   For Eastbound plans and sections:
   - For Hinge AE, see Sheets EE-300A and 300B
3. For material list, see sheet EE-306A.

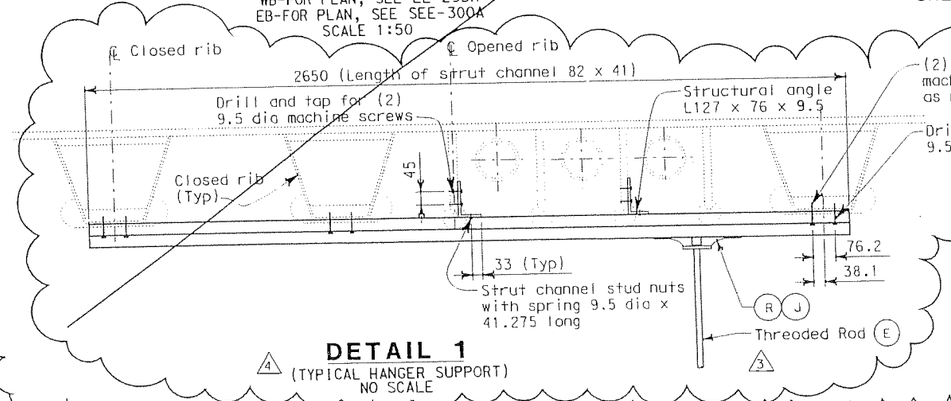

DETAIL 1
(TYPICAL HANGER SUPPORT)
NO SCALE

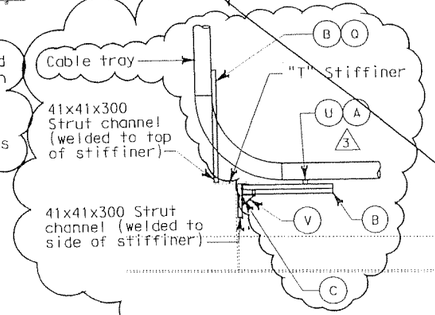

DETAIL 2
NO SCALE

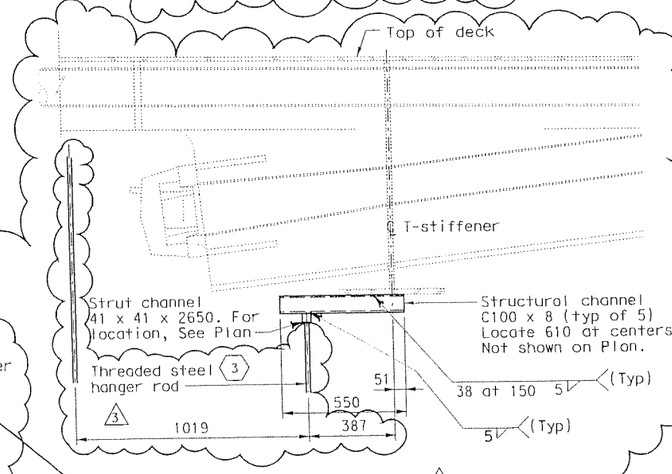

DETAIL 3
VIEW AT CANTILEVER TENDON ANCHORAGE
NO SCALE

DETAILS
HINGE A TRAY SUPPORT
SCALE AS NOTED

EE-306E

STATE OF CALIFORNIA - DEPARTMENT OF TRANSPORTATION
Caltrans

DESIGN OVERSIGHT: BEHZAD GOLEMOHAMMADI

CALCULATED/DESIGNED BY	EJL	DATE 2/03	REVISED BY	EJL	12/19/03	EJL
CHECKED BY	CYF	2/03	DATE REVISED		2/20/04	

LAST REVISION 00-00-00 — DATE PLOTTED => 26-JUL-2005 — TIME PLOTTED => 11:04

FOR REDUCED PLANS ORIGINAL SCALE IS IN MILLIMETERS — 0 20 40 60 80

DGN FILE =>04-012024_0347ER2.dgn
USERNAME =>mhossain

CU 04251 — EA 012021

DIST	COUNTY	ROUTE	KILOMETER POST TOTAL PROJECT	SHEET No	TOTAL SHEETS
04	SF, Ala	80	13.9 / 14.3, 0.0 / 1.6	355 R2	978

Caltrans Metric

REGISTERED ELECTRICAL ENGINEER 04/18/03 DATE

6-4-01
PLANS APPROVAL DATE

REGISTERED PROFESSIONAL ENGINEER JENS ERLINGSSON No. 8249 Exp. 9/30/06 ELECTRICAL STATE OF CALIFORNIA

PB POWER, Inc.
A Parsons Brinckerhoff Company
303 Second St., Suite 700N
San Francisco, CA 94107-1317

The State of California or its officers or agents shall not be responsible for the accuracy or completeness of electronic copies of this plan sheet.

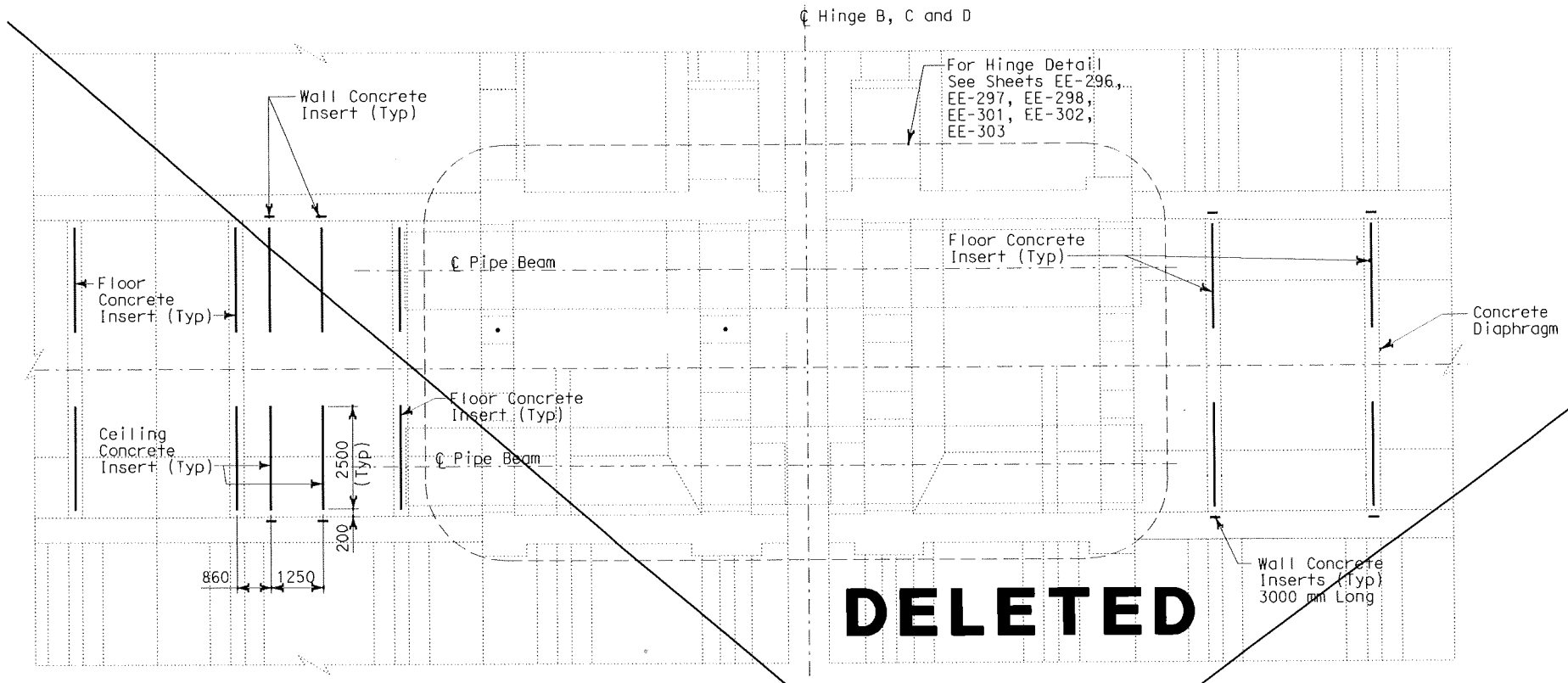

EMBED STRUT CHANNEL PLAN - HINGES

TYPICAL FOR HINGES BE, CE AND DE
(OPPOSITE HAND HINGES BW, CW AND DW)
SCALE: 1:75

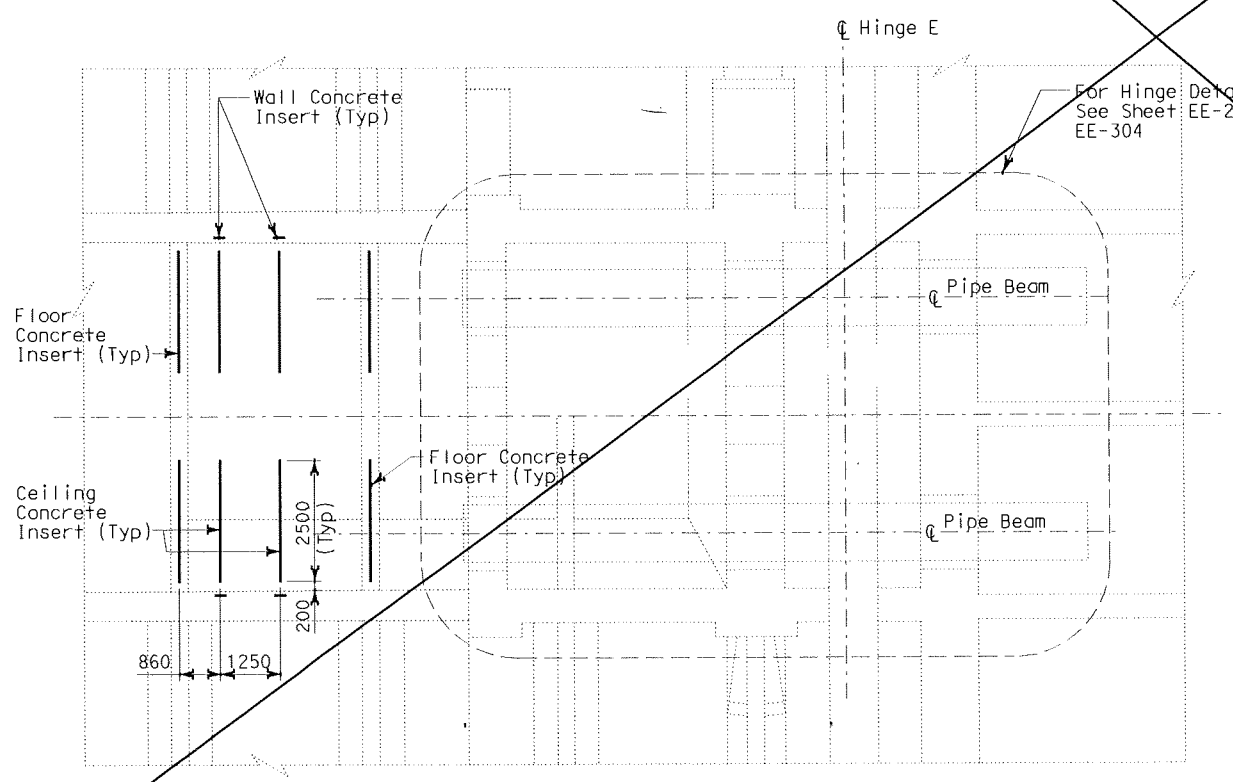

EMBED STRUT CHANNEL PLAN - HINGE EE

OPPOSITE HAND - HINGE EW
SCALE: 1:75

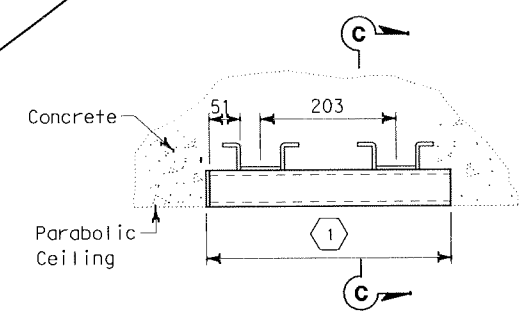

CEILING MOUNT

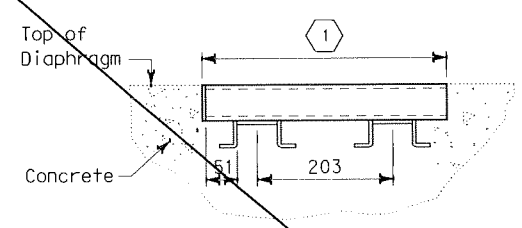

FLOOR MOUNT

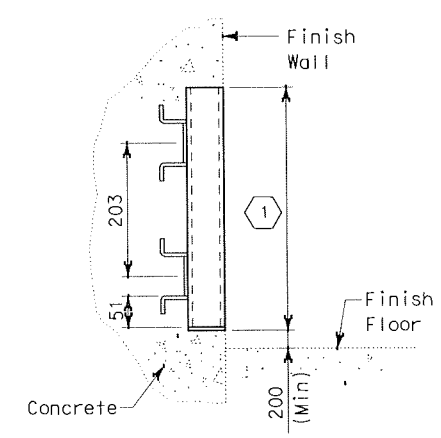

WALL MOUNT

DETAIL 1

STRUT CHANNEL CONCRETE INSERTS
SCALE: 1:40

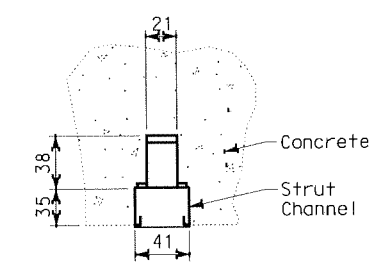

SECTION C-C

SCALE: 1:10

SHEET NOTES:

(1) For length of strut channel concrete inserts, see typical embed plans, Sheet EE-313.

NOTE:

1. Contractor to field adjust location of concrete insert to avoid interference with bridge reinforcement.

MARK	DATE	DESCRIPTIONS	REV	CK	
1	04/18/03	Drawing deleted Superceded by Dwg. EE-314A and EE-314B	EJL	CYF	CCO NO.48

REVISIONS

CONTRACT CHANGE ORDER NO. 48 S1
SHEET 58 OF 67

1

DETAILS
TYPICAL GIRDER EMBED PLANS AND SECTIONS

SCALE AS NOTED

EE-314

CALCULATED/ DESIGNED BY	EJL	DATE 10/00	REVISED BY	EJL	EJL
CHECKED BY	CYF	11/00	DATE REVISED	5/16/01	4/18/03

DESIGN OVERSIGHT
BEHZAD GOLEMOHAMMADI

STATE OF CALIFORNIA - DEPARTMENT OF TRANSPORTATION
Caltrans

LAST REVISION 00-00-00
DATE PLOTTED => 08-AUG-2006
TIME PLOTTED => 11:25

FOR REDUCED PLANS ORIGINAL SCALE IS IN MILLIMETERS 0 20 40 60 80

DGN FILE =>04-012024_0355R2.dgn
USERNAME =>mhassain

CU 04251 EA 012021

DIST	COUNTY	ROUTE	KILOMETER POST TOTAL PROJECT	SHEET No.	TOTAL SHEETS
04	SF, Ala	80	13.9 / 14.3, 0.0 / 1.6	355A	978

REGISTERED ELECTRICAL ENGINEER 04/18/03 DATE

6-4-01
PLANS APPROVAL DATE

REGISTERED PROFESSIONAL ENGINEER JENS ERLINGSSON No. 8249 Exp. 9/30/06 ELECTRICAL STATE OF CALIFORNIA

PB POWER, Inc.
A Parsons Brinckerhoff Company
303 Second St., Suite 700N
San Francisco, CA 94107-1317

The State of California or its officers or agents shall not be responsible for the accuracy or completeness of electronic copies of this plan sheet.

Caltrans Metro

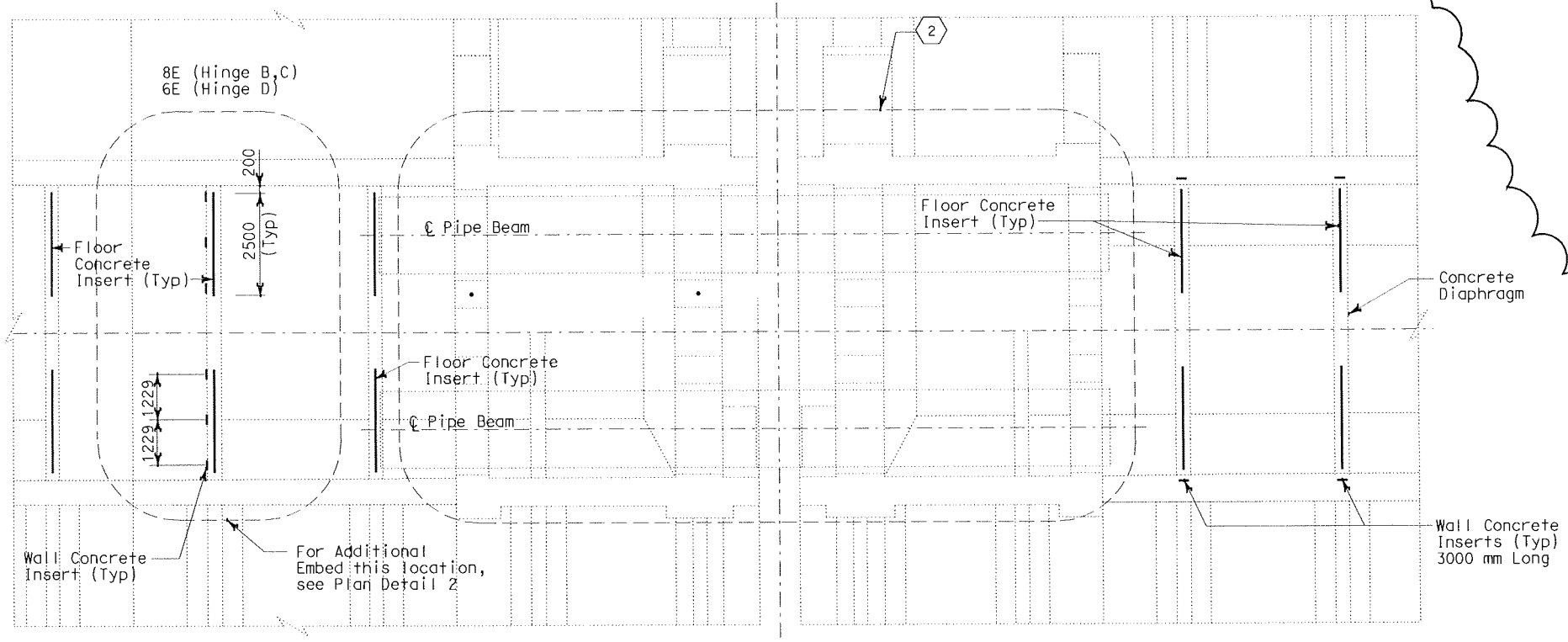

EMBED STRUT CHANNEL PLAN - HINGES

TYPICAL FOR HINGES BE, CE AND DE
(OPPOSITE HAND HINGES BW, CW AND DW)
SCALE: 1:75

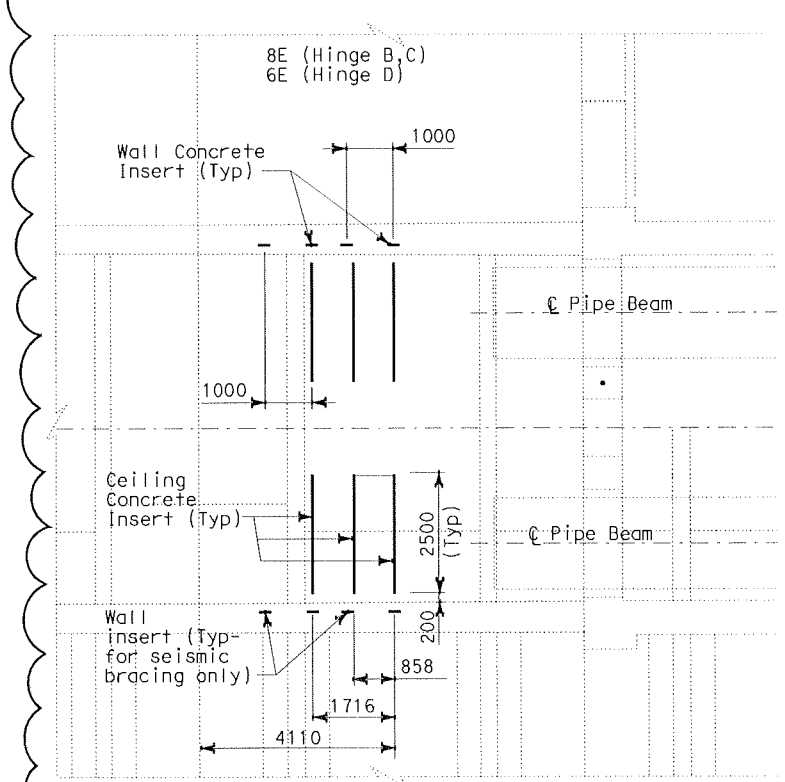

PLAN - DETAIL 2

SCALE: 1:75

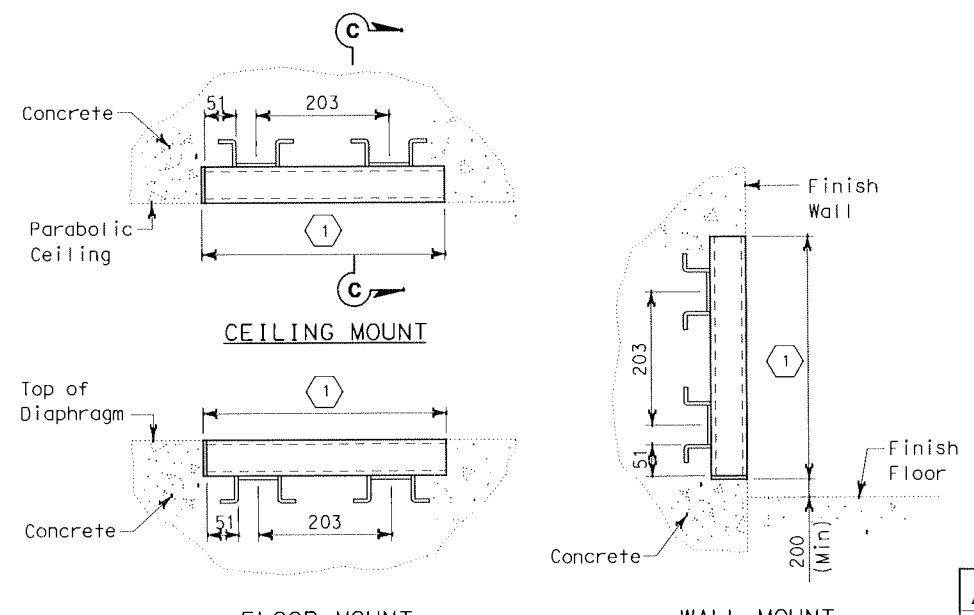

DETAIL 1

STRUT CHANNEL CONCRETE INSERTS
SCALE: 1:40

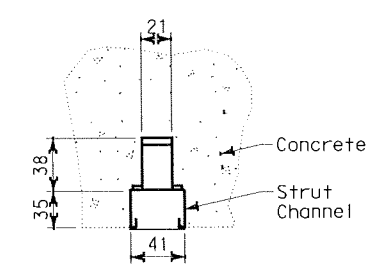

SECTION C-C

SCALE: 1:10

SHEET NOTES:

(1) For length of strut channel concrete inserts, see typical embed plans, Sheet EE-313.

(2) For Hinge Details, See plans and sections:
- For Hinge AW, see Sheets EE-295A and EE-295B.
- For Hinge AE, see Sheets EE-300A and EE-300B.
- For Hinge BW, see Sheets EE-296A and EE-296B.
- For Hinge BE, see Sheets EE-301A and EE-301B.
- For Hinge CW, see Sheets EE-297A and EE-297B.
- For Hinge CE, see Sheets EE-302A and EE-302B.
- For Hinge DW, see Sheets EE-298A and EE-298B.
- For Hinge DE, see Sheets EE-303A and EE-303B.

NOTE:

1. Contractor to field adjust location of concrete insert to avoid interference with bridge reinforcement.

MARK	DATE	DESCRIPTIONS	REV	CK	
1	04/18/03	New Drawing. Add details and sections	EJL	CYF	CCO NO.48

REVISIONS

CONTRACT CHANGE ORDER NO. 48 S1
SHEET 59 OF 67

1

DETAILS
TYPICAL GIRDER EMBED PLANS AND SECTIONS

SCALE AS NOTED

EE-314A

CALCULATED/ DESIGNED BY	EJL	DATE 2/03	REVISED BY	EJL	
CHECKED BY	CYF	2/03	DATE REVISED	4/18/03	

DESIGN OVERSIGHT
BEHZAD GOLEMOHAMMADI

STATE OF CALIFORNIA - DEPARTMENT OF TRANSPORTATION
Caltrans

LAST REVISION 00-00-00
DATE PLOTTED => 08-AUG-2006
TIME PLOTTED => 11:31

FOR REDUCED PLANS ORIGINAL SCALE IS IN MILLIMETERS 0 20 40 60 80

DGN FILE =>04-012024_0355A.dgn
USERNAME =>mnassain

CU 04251 EA 012021

DIST	COUNTY	ROUTE	KILOMETER POST TOTAL PROJECT	SHEET No	TOTAL SHEETS
04	SF, Ala	80	13.9 / 14.3, 0.0 / 1.6	355B	978

Jens Erlingsson 04/18/03
REGISTERED ELECTRICAL ENGINEER DATE

6-4-01
PLANS APPROVAL DATE

REGISTERED PROFESSIONAL ENGINEER JENS ERLINGSSON No. 8249 Exp. 9/30/06 ELECTRICAL STATE OF CALIFORNIA

PB POWER, Inc.
A Parsons Brinckerhoff Company
303 Second St., Suite 700N
San Francisco, CA 94107-1317

The State of California or its officers or agents shall not be responsible for the accuracy or completeness of electronic copies of this plan sheet.

Caltrans Metric

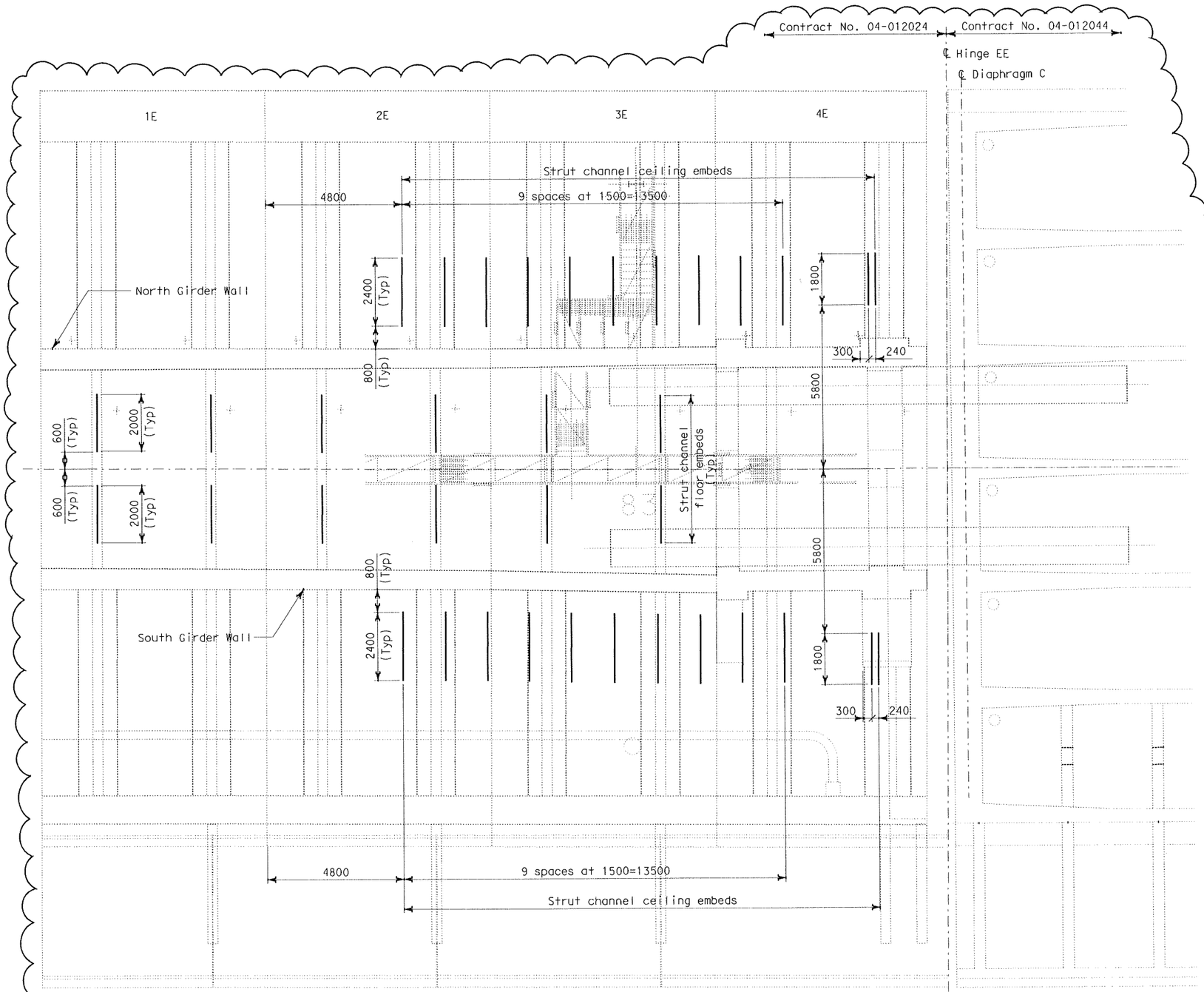

PLAN - HINGE EE

OPPOSITE HAND-HINGE EW
SCALE: 1:75

NOTES:

1. Contractor to field adjust location of concrete inserts to avoid interference with bridge reinforcements.

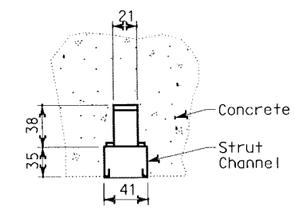

SECTION C-C

SCALE: 1:10

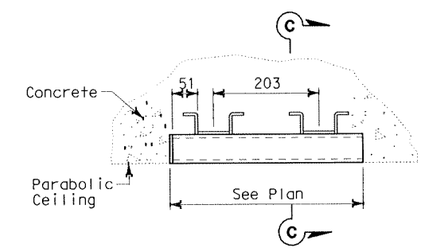

CEILING MOUNT

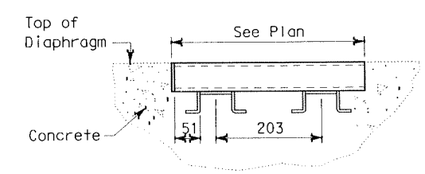

FLOOR MOUNT

DETAIL 1

STRUT CHANNEL CONCRETE INSERTS
NO SCALE

MARK	DATE	DESCRIPTIONS	REV	CK	
1	04/18/03	New Drawing. Add details and sections	EJL	CYF	CCO NO.48

REVISIONS

CONTRACT CHANGE ORDER NO. 48 S1
SHEET 60 OF 67

DETAILS
1 TYPICAL GIRDER EMBED PLAN

SCALE AS NOTED

EE-314B

CALCULATED/DESIGNED BY	EJL	DATE 2/03	REVISED BY EJL
CHECKED BY	CYF	2/03	DATE REVISED 4/18/03

DESIGN OVERSIGHT
BEHZAD GOLEMOHAMMADI

STATE OF CALIFORNIA - DEPARTMENT OF TRANSPORTATION
Caltrans

FILE: t:\3103\mas\electrical\con2\13103el665.dgn
DATE: 01-Feb-01 09:22

LAST REVISION 00-00-00
DATE PLOTTED => 08-AUG-2006
TIME PLOTTED => 11:27

FOR REDUCED PLANS ORIGINAL SCALE IS IN MILLIMETERS 0 20 40 60 80

DGN FILE =>04-012024_0355B.dgn
USERNAME =>mhossain

CU 04251 EA 012021

DIST	COUNTY	ROUTE	KILOMETER POST TOTAL PROJECT	SHEET No.	TOTAL SHEETS
04	SF, Ala	80	13.9 / 14.3, 0.0 / 1.6	388 R3	978

REGISTERED ELECTRICAL ENGINEER — DATE 05/16/01

6-4-01
PLANS APPROVAL DATE

REGISTERED PROFESSIONAL ENGINEER — JENS ERLINGSSON — No. 8249 — Exp. 9/30/06 — ELECTRICAL — STATE OF CALIFORNIA

PB POWER, Inc.
A Parsons Brinckerhoff Company
303 Second St., Suite 700N
San Francisco, CA 94107-1317

The State of California or its officers or agents shall not be responsible for the accuracy or completeness of electronic copies of this plan sheet.

Caltrans Metric

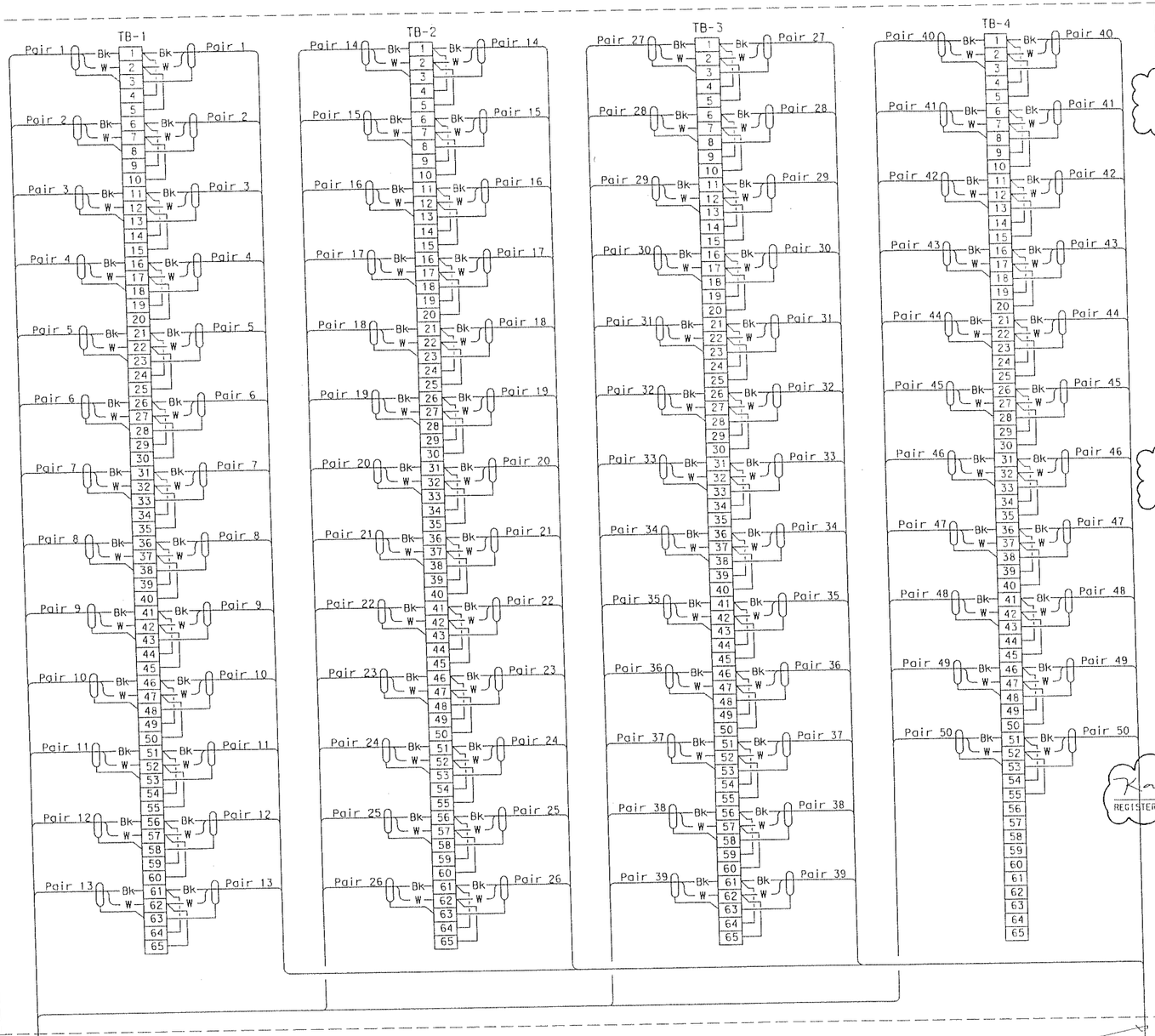

COMMUNICATION TERMINAL BOX

SHOWN FOR COM-09W, See Table A

CONTRACT CHANGE ORDER NO. 48 S1
SHEET 61 OF 67

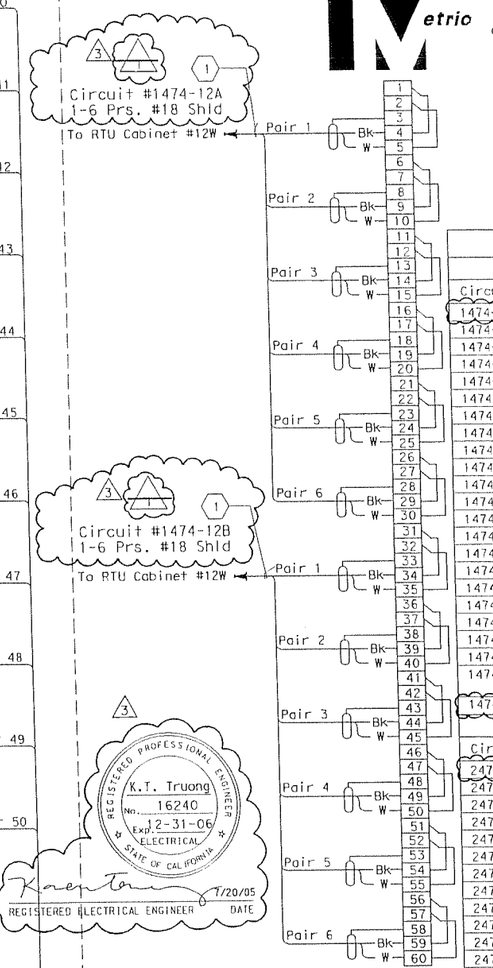

REGISTERED PROFESSIONAL ENGINEER — K.T. Truong — No. 16240 — Exp. 12-31-06 — ELECTRICAL — STATE OF CALIFORNIA

REGISTERED ELECTRICAL ENGINEER — 7/20/05 DATE

TYPICAL WIRING WITH CONNECTION TO SCADA RTU CABINET

SHOWN FOR RTU-12W
(SEE TABLE A)

TABLE A

Westbound

Circuit No.	Termination To
1474-10	Scada Communication Term. Box Com-09W (2)
1474-11	Scada Communication Term. Box Com-10W
1474-12	Scada Communication Term. Box Com-11W (2)
1474-12A	RTU Cabinet #12W
1474-12B	RTU Cabinet #12W
1474-13	Scada Communication Term. Box Com-12W
1474-14	Scada Communication Term. Box Com-13W
1474-14A	RTU Cabinet #13W
1474-14B	RTU Cabinet #13W
1474-15	Scada Communication Term. Box Com-14W
1474-16	Scada Communication Term. Box Com-15W
1474-17	Scada Communication Term. Box Com-16W
1474-17A	RTU Cabinet #14W
1474-17B	RTU Cabinet #14W
1474-18	Scada Communication Term. Box Com-17W
1474-19	Scada Communication Term. Box Com-18W
1474-20	Scada Communication Term. Box Com-19W
1474-21	Scada Communication Term. Box Com-20W
1474-21A	RTU Cabinet #15W
1474-21B	RTU Cabinet #15W
1474-22	Scada Communication Term. Box Com-21W (2)
1474-23	Scada Communication Term. Box COM-Substation Westbound (2)
1474-24	Scada Communication Term. Box Com-22W (2)

Eastbound

Circuit No.	Termination To
2474-10	Scada Communication Term. Box Com-09E (2)
2474-11	Scada Communication Term. Box Com-10E
2474-12	Scada Communication Term. Box Com-11E (2)
2474-12A	RTU Cabinet #12E
2474-12B	RTU Cabinet #12E
2474-13	Scada Communication Term. Box Com-12E
2474-14	Scada Communication Term. Box Com-13E
2474-14A	RTU Cabinet #13E
2474-14B	RTU Cabinet #13E
2474-15	Scada Communication Term. Box Com-14E
2474-16	Scada Communication Term. Box Com-15E
2474-17	Scada Communication Term. Box Com-16E
2474-17A	RTU Cabinet #14E
2474-17B	RTU Cabinet #14E
2474-18	Scada Communication Term. Box Com-17E
2474-19	Scada Communication Term. Box Com-18E
2474-20	Scada Communication Term. Box Com-19E
2474-21	Scada Communication Term. Box Com-20E
2474-21A	RTU Cabinet #15E
2474-21B	RTU Cabinet #15E
2474-22	Scada Communication Term. Box Com-21E
2474-23	Scada Communication Term. Box COM-Substation Eastbound (2)
2474-24	Scada Communication Term. Box Com-22E (2)

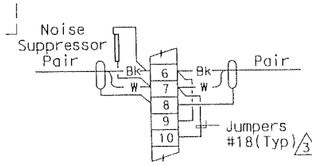

TYPICAL WIRING - EACH PAIR

MARK	DATE	DESCRIPTIONS	REV	CK	
3	7/20/05	Removed revision 1	MH	KT	CCO NO.48
2	2/20/04	Revised Table A. Added sheet notes 2	CYF	EJL	CCO NO.48
1	9/12/03	Revised cable type	EJL	JP	CCO NO.39

REVISIONS

NOTES:

1. References:
   - For circuit, and conduit / cable tray schedules, see Sheet EE-324, EE-325 for Westbound and Sheet EE-327, EE-328 for Eastbound.
   - For Scada cable block diagram, see sheet EE-373.
   - ~~For CCO No. 60 revised Circuit & Conduit/Cable Schedules, see Sheets EE-324B & EE-325C for Westbound and EE-327B & EE-328C for Eastbound.~~

SHEET NOTES:

1. For cable/circuit number, see Table A.
2. For cable/circuit interface, see sheet EE-130.

DETAILS
SCADA REMOTE TERMINAL UNIT SYSTEM COMMUNICATION TERMINAL BOX WIRING DIAGRAM

NO SCALE

EE-372

DESIGN OVERSIGHT: BEHZAD GOLEMOHAMMADI

CALCULATED/DESIGNED BY: EJL — DATE 2/03 — REVISED BY: EJL — DATE REVISED: 2/20/04
CHECKED BY: CYF — 2/03 — DATE REVISED: 2/20/04

STATE OF CALIFORNIA - DEPARTMENT OF TRANSPORTATION
Caltrans

FILE: f:\13103\me\pbe\electrical\con2\13103es1259.dgn
DATE: 21-apr-00 12:02

DATE PLOTTED => 01-AUG-2005
TIME PLOTTED => 15:37

LAST REVISION 00-00-00

FOR REDUCED PLANS ORIGINAL SCALE IS IN MILLIMETERS — 0 20 40 60 80

DGN FILE => 04-012024_0388R2.dgn
USERNAME => mhossain

CU 04251 — EA 012021

DIST	COUNTY	ROUTE	KILOMETER POST TOTAL PROJECT	SHEET No	TOTAL SHEETS
04	SF,Ala	80	13.9 / 14.3, 0.0 / 1.6	389 R3	978

Caltrans Metric

REGISTERED ELECTRICAL ENGINEER 05/16/01 DATE

6-4-01
PLANS APPROVAL DATE

PB POWER, Inc.
A Parsons Brinckerhoff Company
303 Second St., Suite 700N
San Francisco, CA 94107-1317

The State of California or its officers or agents shall not be responsible for the accuracy or completeness of electronic copies of this plan sheet.

REGISTERED ELECTRICAL ENGINEER 7/20/05 DATE

K.T. Truong No. 16240 Exp. 12-31-06 ELECTRICAL STATE OF CALIFORNIA

SHEET NOTES:

1. Located inside bridge Girder Box.
2. Located at Service Platform.
3. For cable/circuit contract interface, see sheet EE-129.
4. For cable/circuit contract interface, see sheet EE-130.

NOTES:

1. References:
   - For overall construction contract interface responsibilities of Scada Communication and Telephone System, see Sheet EE-130.
   - For circuit, and conduit/cable tray schedules, see Sheets EE-324, EE-325 for Westbound and Sheets EE-327, EE-328 for Eastbound.
   - ~~For ECO No 39 revised Circuit & Conduit/Cable Tray Schedules, see sheets EE-324B & EE-325C for Westbound and EE-327B & EE-328C for Eastbound.~~

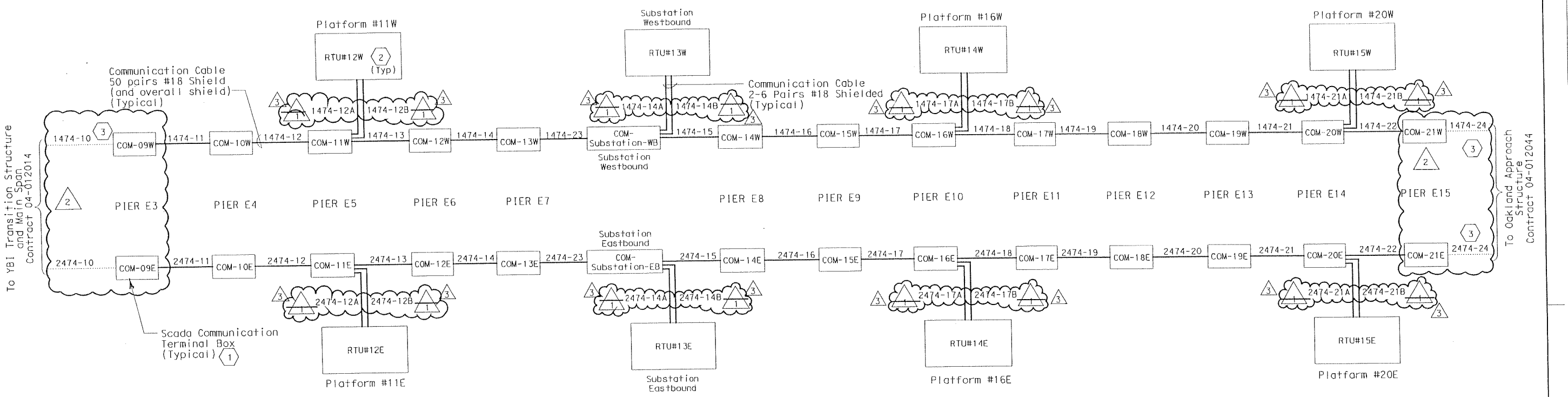

SCADA COMMUNICATION SYSTEM

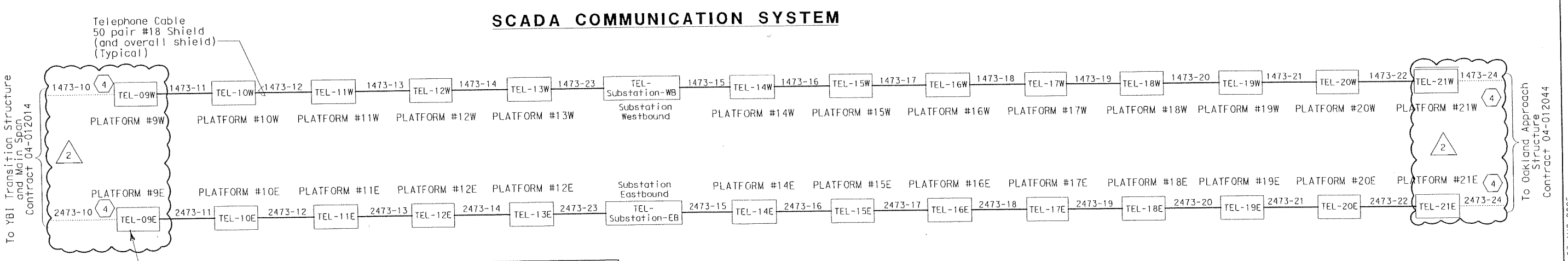

MARK	DATE	DESCRIPTIONS	REV	CK	
3	7/20/05	Removed revision 1	MH	KT	CCO NO.48
2	2/20/04	Added sheet notes 3 and 4.	CYF	EJL	CCO NO.48
1	9/12/03	Revised cable type and add reference dwg.	EJL	JP	~~CCO NO.39~~

REVISIONS

CONTRACT CHANGE ORDER NO. 48 S1
SHEET 62 OF 63

TELEPHONE SYSTEM

DETAILS
SCADA REMOTE TERMINAL UNIT SYSTEM
SCADA AND TELEPHONE CABLE BLOCK DIAGRAMS
NO SCALE

EE-373

CALCULATED/ DESIGNED BY	EJL	DATE 2/03	REVISED BY	EJL	DATE REVISED 9/12/03 2/20/04
CHECKED BY	CYF	2/03			

DESIGN OVERSIGHT
BEHZAD GOLEMOHAMMADI

STATE OF CALIFORNIA - DEPARTMENT OF TRANSPORTATION
Caltrans

FILE: t:\13103\es\ns\electrical\scan2\13103es1416.dgn
DATE: 06-Sep-00 11:34

LAST REVISION 00-00-00
DATE PLOTTED => 03-AUG-2005
TIME PLOTTED => 10:42

FOR REDUCED PLANS ORIGINAL SCALE IS IN MILLIMETERS 0 20 40 60 80

DGN FILE =>04-012024_0389R3.dgn
USERNAME =>mhossain

CU 04251 | EA 012021

DIST	COUNTY	ROUTE	KILOMETER POST TOTAL PROJECT	SHEET No	TOTAL SHEETS
04	SF, Ala	80	13.9 / 14.3, 0.0 / 1.6	405R1	978

Caltrans Metric

Jens Erlingsson 02/20/04
REGISTERED ELECTRICAL ENGINEER DATE

6-4-01
PLANS APPROVAL DATE

REGISTERED PROFESSIONAL ENGINEER JENS ERLINGSSON No. 8249 Exp. 9/30/06 ELECTRICAL STATE OF CALIFORNIA

PB POWER, Inc.
A Parsons Brinckerhoff Company
303 Second St., Suite 700N
San Francisco, CA 94107-1317

The State of California or its officers or agents shall not be responsible for the accuracy or completeness of electronic copies of this plan sheet.

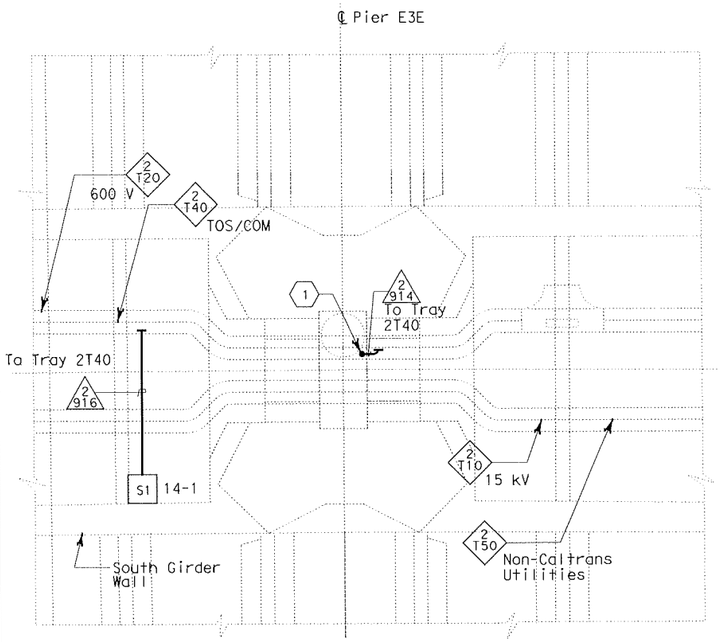

CONDUIT PLAN
AT PIER TABLE E3E

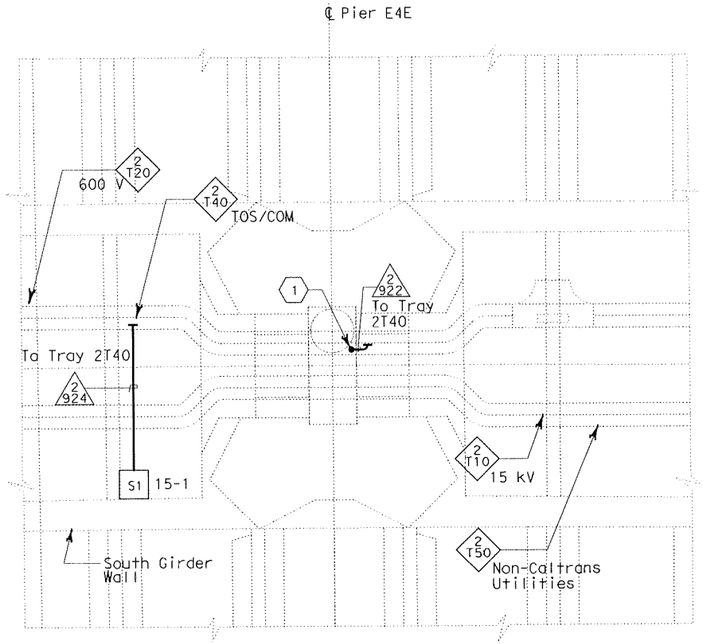

CONDUIT PLAN
AT PIER TABLE E4E

SHEET NOTES

(1) Conduit Down to Pier Footing, See Sheet EE-401.

NOTES:

1. For other related work not shown on this drawing, see Electrical Special Provisions.
2. References:
   - For Sensor and Recorder Schedule, see Sheet EE-412.
   - For typical Pier Sections, see Sheet EE-406.
   - For Cable Block Diagram, See Sheets EE-410 and EE-411.
   - For Circuit and Conduit/ Cable Tray Schedules, See Sheets EE-327 and EE-328 respectively.
   - For general notes of the Strong Motion Detection System, see Sheet EE-396.

MARK	DATE	DESCRIPTIONS	REV	CK	
1	2/20/04	Moved conduits outside girder interface.	CYF	EJL	CCO NO.48
		REVISIONS			

CONTRACT CHANGE ORDER NO. 48 S1
SHEET 63 OF 67

SAS Superstructure Contract 04-0120F4 | Skyway Structure Contract 04-012024

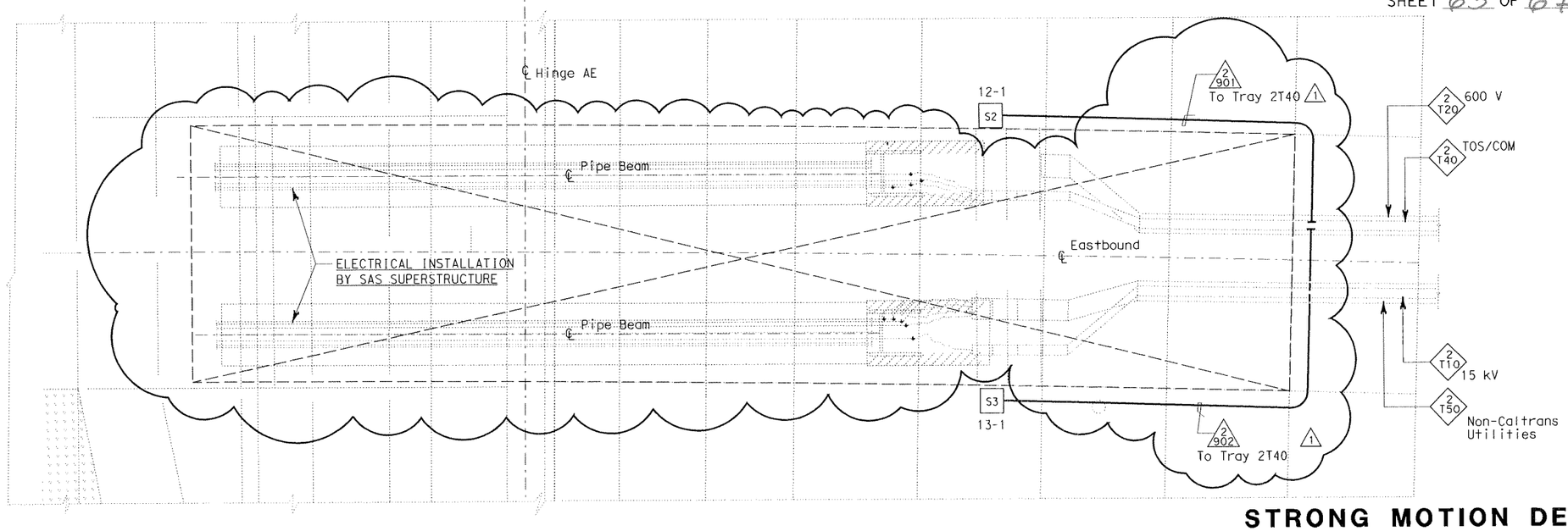

CONDUIT PLAN
AT HINGE AE

STRONG MOTION DETECTION SYSTEM
GIRDER LEVEL
SCALE: 1:75

EE-397

STATE OF CALIFORNIA - DEPARTMENT OF TRANSPORTATION
Caltrans

DESIGN OVERSIGHT: BEHZAD GOLEMOHAMMADI

CALCULATED/ DESIGNED BY	EJL	DATE 10/00	REVISED BY	EJL
CHECKED BY	CYF	11/00	DATE REVISED	2/20/04

LAST REVISION 00-00-00 | DATE PLOTTED => 08-AUG-2006 | TIME PLOTTED => 11:29

FOR REDUCED PLANS ORIGINAL SCALE IS IN MILLIMETERS 0 20 40 60 80

DGN FILE =>04-012024_0405R1.dgn
USERNAME =>mhossain

CU 04251 | EA 012021

DIST	COUNTY	ROUTE	KILOMETER POST TOTAL PROJECT	SHEET No	TOTAL SHEETS
04	SF, Ala	80	13.9 / 14.3, 0.0 / 1.6		

07/07/06
REGISTERED ELECTRICAL ENGINEER DATE

6-4-01
PLANS APPROVAL DATE

REGISTERED PROFESSIONAL ENGINEER
JENS ERLINGSSON
No. 8249
Exp. 9/30/06
ELECTRICAL
STATE OF CALIFORNIA

PB POWER, Inc.
A Parsons Brinckerhoff Company
303 Second St., Suite 700N
San Francisco, CA 94107-1317

The State of California or its officers or agents shall not be responsible for the accuracy or completeness of electronic copies of this plan sheet.

Caltrans Metric

San Francisco - Oakland Bay Bridge East Span Seismic Safety Project

04-012024
04-SF-80KP 12.2/KP 14.3
04-ALA-80 KP 0.0/KP 2.1

SUPPLEMENT TO THE SPECIAL PROVISIONS AND PLANS

Binder 1 of 2 - Westbound

MARK	DATE	DESCRIPTIONS	REV	CK	
1	7/07/06	For description of changes, see Directives for Circuit Schedule EE-324E dated July 7, 2006. Supersedes Directives for Circuit Schedules EE-324A dated 2/20/04 and EE-324 dated 2/20/04.	PB	EJL	CCO NO. 48 S1

REVISIONS

CONTRACT CHANGE ORDER NO. 48 S1
SHEET 64 OF 67

DETAILS
CIRCUIT SCHEDULE WESTBOUND

EE-324E

CALCULATED/DESIGNED BY	PB	DATE 11/99	REVISED BY	EJL	EJL
CHECKED BY	EJL	6/00	DATE REVISED	2/20/04	7/7/06

DESIGN OVERSIGHT
BEHZAD GOLEMOHAMMADI

STATE OF CALIFORNIA - DEPARTMENT OF TRANSPORTATION
Caltrans

LAST REVISION 00-00-00
DATE PLOTTED => 08-AUG-2006
TIME PLOTTED => 08:49

USERNAME => mhossain
DGN FILE => cover-conduit and circuit sched.dgn

CU 04251 | EA 012021

CCO No. 48 S1- ADDED HINGE A GIIRDER INTERFACE dated February 20, 2004
CCO No. 48 S1 - ADDED HINGE E GIRDER INTERFACE dated February 20, 2004

Directives for Circuit Schedule Westbound EE-324E - For CCO 48 S1

Changes to the Supplement to the Special Provisions and Plans, EE-324 Binder 1 of 2-Westbound
Changes to the EE-324A Binder 1 of 2 - Westbound of Addendum No. 6 dated October 30, 2001 for circuits listed below.

Item No.	Cable/ Ckt. No.	Notation under Notes CCO No. 48 S1 Added Hinge A and E Girder Interface Feb. 20, 2004			Description of changes to the Cable/Ckt. No. Westbound
		Mark 1	**Mark 2**	**Mark 3**	
1	1391	X			Revised circuit/ cable interface between SAS Superstructure and Skyway Structure. - Conductor splice connections by SAS Superstructure. - Added conduit #6504 (route 07) to circuit/ cable routing. **- Circuit deleted on CCO No. 170. See Directives for Circuit Schedule Westbound EE-324D dated 1/20/06.**
2	1392	X			Revised circuit/ cable interface between Okland Approach Structure and Skyway Structure. - Conductor splice connections by SAS Superstructure. - Added conduit #6936 (route 11) to circuit/ cable routing. **- Circuit deleted on CCO No. 170. See Directives for Circuit Schedule Westbound EE-324D dated 1/20/06.**
3	1473-11		X		Updated for Girder Interface between SAS Superstructure and Skyway Structure
4	1473-22		X		Updated for Girder Interface between Skyway Strycture and Oakland Approach Structure
5	1474- 11		X		Updated for Girder Interface between SAS Superstructure and Skyway Structure
6	1474-22		X		Updated for Girder Interface between Skyway Strycture and Oakland Approach Structure
7	1475-4			X	Revised for Girder Interface between SAS Superstructure and Skyway Structure and Oakland Approach Structure - Removed interface (route 01) - Removed conduit #6517 (route 02) - Removed conduit #6522 (route 03) - Removed conduit #6716 (route 17) - Removed conduit #6721 (route 18) - Removed interface (route 19) **- Circuit deleted on CCO No. 170. See Directives for Circuit Schedule Westbound EE-324D dated 1/20/06.**
8	1477-3			X	Revised for Girder Interface between SAS Superstructure and Skyway Structure and Oakland Approach Structure - Removed interface (route 01) - Removed conduit #6517 (route 02) - Removed conduit #6522 (route 03) - Removed conduit #6716 (route 17) - Removed conduit #6721 (route 18) - Removed interface (route 19) **- Circuit deleted on CCO No. 170. See Directives for Circuit Schedule Westbound EE-324D dated 1/20/06.**
9	End				

CIRCUIT SCHEDULE WESTBOUND

CCO No. 48 S1 DATED, July 7, 2006

Cable/Ckt. No.	Function	Conductor Type	From	To	Ref. Drawing(s)	Route		Notes
1391	12.47 kV Power	3-1/C #4/0, 15 kV, EPR Insulation	12.47 kV Swgr (Bkr 52-11N) Substation - WB	15 kV Splice Box	EE-132, EE-186, EE-129	01	4681	Note: See Mark 1
						02	1T11	
						03	6532	
						04	6531	
						05	6530	
						06	1T10	
						07	6504	
1392	12.47 kV Power	3-1/C #4/0, 15 kV, EPR Insulation	12.47 kV Swgr (Bkr 52-12N) Substation - WB	15 kV Splice Box	EE-132, EE-186, EE-129	01	4682	Note: See Mark 1
						02	1T11	
						03	6586	
						04	6587	
						05	6588	
						06	1T12	
						07	6642	
						08	6643	
						09	6644	
						10	1T13	
						11	6936	
1473-11	Telephone	50 pair #18, shielded pairs, IS/OS shield 600 V, XLPE insul., PVC jacket	TEL-09W	TEL-10W	EE-373	01	4859	Note: See Mark 2
						02	1T40	
						03	4868	

CIRCUIT SCHEDULE WESTBOUND

Cable/Ckt. No.	Function	Conductor Type	From	To	Ref. Drawing(s)	Route		Notes
1473-22	Telephone	50 pair #18, shielded pairs, IS/OS shield 600 V, XLPE insul., PVC jacket	TEL-20W	TEL-21W	EE-373	01	4969	Note: See Mark 2
						02	1T42	
						03	6667	
						04	6672	
						05	6677	
						06	1T43	
						07	4978	
1474-11	Scada data com.	50 pair #18, shielded pairs, IS/OS shield 600 V, XLPE insul., PVC jacket	COM-09W	COM-10W	EE-372, EE-373	01	FIELD	Note: See Mark 2
						02	1T40	
						03	FIELD	
1474-22	Scada data com.	50 pair #18, shielded pairs, IS/OS shield 600 V, XLPE insul., PVC jacket	COM-20W	COM-21W	EE-372, EE-373	01	FIELD	Note: See Mark 2
						02	1T42	
						03	6667	
						04	6672	
						05	6677	
						06	1T43	
						07	FIELD	

CIRCUIT SCHEDULE WESTBOUND

CCO No. 48 S1 DATED, July 7, 2006

Cable/Ckt. No.	Function	Conductor Type	From	To	Ref. Drawing(s)	Route		Notes
1475-4	TOS data com.	72 Fiber, single mode fiberoptic riser cable	72 to 72 Fiberoptic splice box	72 to 72 Fiberoptic splice box	EE-387	01	1T40	Note: See Mark 3
						02	6554	
						03	6559	
						04	6564	
						05	1T41	
						06	6610	
						07	6615	
						08	6620	
						09	1T42	
						10	6668	
						11	6673	
						12	6678	
						13	1T43	

CIRCUIT SCHEDULE WESTBOUND

Cable/Ckt. No.	Function	Conductor Type	From	To	Ref. Drawing(s)	Route		Notes
1477-3	TOS data com.	72 Fiber, single mode fiberoptic riser cable	72 to 72 Fiberoptic splice box	72 to 72 Fiberoptic splice box	EE-387	01	1T40	Note: See Mark 3
						02	6554	
						03	6559	
						04	6564	
						05	1T41	
						06	6610	
						07	6615	
						08	6620	
						09	1T42	
						10	6668	
						11	6673	
						12	6678	
						13	1T43	

DIST	COUNTY	ROUTE	KILOMETER POST TOTAL PROJECT	SHEET No	TOTAL SHEETS
04	SF, Ala	80	13.9 / 14.3, 0.0 / 1.6		

Jens Erlingsson 07/07/06
REGISTERED ELECTRICAL ENGINEER DATE

6-4-01
PLANS APPROVAL DATE

REGISTERED PROFESSIONAL ENGINEER
JENS ERLINGSSON
No. 8249
Exp. 9/30/06
ELECTRICAL
STATE OF CALIFORNIA

PB POWER, Inc.
A Parsons Brinckerhoff Company
303 Second St., Suite 700N
San Francisco, CA 94107-1317

The State of California or its officers or agents shall not be responsible for the accuracy or completeness of electronic copies of this plan sheet.

Caltrans Metric

San Francisco - Oakland Bay Bridge East Span Seismic Safety Project

04-012024
04-SF-80KP 12.2/KP 14.3
04-ALA-80 KP 0.0/KP 2.1

SUPPLEMENT TO THE SPECIAL PROVISIONS AND PLANS

Binder 2 of 2 - Eastbound

MARK	DATE	DESCRIPTIONS	REV	CK	
1	7/7/06	For description of changes, see Directives for Circuit Schedule EE-327E dated July 7, 2006. Supersedes Directives for Circuit Schedules EE-327A dated 2/20/04 and EE-327 dated 2/20/04.	PB	EJL	CCO NO. 48 S1

REVISIONS

CONTRACT CHANGE ORDER NO. 48 S1
SHEET 65 OF 67

DETAILS
CIRCUIT SCHEDULE EASTBOUND

EE-327E

CALCULATED/ DESIGNED BY	PB	DATE 11/99	REVISED BY	EJL	EJL
CHECKED BY	EJL	6/00	DATE REVISED	2/20/04	7/7/06

DESIGN OVERSIGHT
BEHZAD GOLEMOHAMMADI

STATE OF CALIFORNIA - DEPARTMENT OF TRANSPORTATION
Caltrans

LAST REVISION 00-00-00
DATE PLOTTED => 08-AUG-2006
TIME PLOTTED => 08:53

USERNAME => mhossain
DGN FILE => cover-conduit and circuit sched.dgn

CU 04251 | EA 012021

CCO No. 48 S1- ADDED HINGE A GIIRDER INTERFACE dated February 20, 2004
CCO No. 48 S1 - ADDED HINGE E GIRDER INTERFACE dated February 20, 2004

Directives for Circuit Schedule Eastbound EE-327E - For CCO 48 S1

Changes to the Supplement to the Special Provisions and Plans, EE-327 Binder 2 of 2-Eastbound
Changes to the EE-327A Binder 2 of 2-Eastbound of Addendum No. 6 dated October 30, 2001 for circuits listed below.

Item No.	Cable/ Ckt. No.	Notation under Notes CCO No. 48 S1 Added Hinge A and E Girder Interface Feb. 20, 2004			Description of changes to the Cable/Ckt. No. Westbound
		Mark 1	**Mark 2**	**Mark 3**	
1	2391	X			Revised circuit/ cable interface between SAS Superstructure and Skyway Structure. - Conductor splice connections by SAS Superstructure. - Added conduit #2494 (route 07) to circuit/ cable routing. **- Circuit deleted on CCO No. 170. See Directives for Circuit Schedule Eastbound EE-327D dated 1/20/06.**
2	2392	X			Revised circuit/ cable interface between Okland Approach Structure and Skyway Structure. - Conductor splice connections by SAS Superstructure. - Added conduit #7681 (route 11) to circuit/ cable routing. **- Circuit deleted on CCO No. 170. See Directives for Circuit Schedule Eastbound EE-327D dated 1/20/06.**
3	2473-11		X		Updated for Girder Interface between SAS Superstructure and Skyway Structure
4	2473-22		X		Updated for Girder Interface between Skyway Structure and Oakland Approach Structure
5	2474- 11		X		Updated for Girder Interface between SAS Superstructure and Skyway Structure
6	2474-22		X		Updated for Girder Interface between Skyway Structure and Oakland Approach Structure
7	2475-4			X	Revised for Girder Interface between SAS Superstructure and Skyway Structure and Oakland Approach Structure - Removed interface (route 01) - Removed conduit #2471 (route 02) - Removed conduit #2475 (route 03) - Removed conduit #7935 (route 17) - Removed conduit #7939 (route 18) - Removed interface (route 19) **- Circuit deleted on CCO No. 170. See Directives for Circuit Schedule Eastbound EE-327D dated 1/20/06.**
8	End				

CIRCUIT SCHEDULE EASTBOUND

CCO No. 48 S1 dated July 7, 2006

Cable/Ckt. No.	Function	Conductor Type	From	To	Ref. Drawing(s)	Route		Notes
2391	12.47 kV Power	3-1/C #4/0, 15 kV, EPR Insulation	12.47 kV Swgr (Bkr 52-14N) Substation - EB	15 kV Splice Box	EE-143, EE-191, EE-129	01	5681	Note: See Mark 1
						02	2T11	
						03	2546	
						04	2545	
						05	2544	
						06	2T10	
						07	2494	
2392	12.47 kV Power	3-1/C #4/0, 15 kV, EPR Insulation	12.47 kV Swgr (Bkr 52-15N) Substation - EB	15 kV Splice Box	EE-143, EE-191, EE-129	01	5682	Note: See Mark 1
						02	2T11	
						03	2593	
						04	2594	
						05	2595	
						06	2T12	
						07	7926	
						08	7927	
						09	7928	
						10	2T13	
						11	7681	
2473-11	Telephone	50 pair #18, shielded pairs, IS/OS shield 600 V, XLPE insul., PVC jacket	TEL-09E	TEL-10E	EE-373	01	5859	Note: See Mark 2
						02	2T40	
						03	5868	

Cable/Ckt. No.	Function	Conductor Type	From	To	Ref. Drawing(s)	Route		Notes
2473-22	Telephone	50 pair #18, shielded pairs, IS/OS shield 600 V, XLPE insul., PVC jacket	TEL-20E	TEL-21E	EE-373	01	5969	Note: See Mark 2
						02	2T42	
						03	7896	
						04	7900	
						05	7904	
						06	2T43	
						07	5978	
2474-11	Scada data com.	50 pair #18, shielded pairs, IS/OS shield 600 V, XLPE insul., PVC jacket	COM-09E	COM-10E	EE-372, EE-373	01	FIELD	Note: See Mark 2
						02	2T40	
						03	FIELD	
2474-22	Scada data com.	50 pair #18, shielded pairs, IS/OS shield 600 V, XLPE insul., PVC jacket	COM-20E	COM-21E	EE-372, EE-373	01	FIELD	Note: See Mark 2
						02	2T42	
						03	7896	
						04	7900	
						05	7904	
						06	2T43	
						07	FIELD	

CIRCUIT SCHEDULE EASTBOUND

CCO No. 48 S1 dated July 7, 2006

Cable/Ckt. No.	Function	Conductor Type	From	To	Ref. Drawing(s)	Route		Notes
2475-4	TOS data	72 Fiber, single mode fiberoptic riser cable	72 to 72 Fiberoptic splice box	72 to 72 Fiberoptic splice box	EE-387	01	2T40	Note: See Mark 3
						02	2516	
						03	2521	
						04	2525	
						05	2T41	
						06	2567	
						07	2571	
						08	2575	
						09	2T42	
						10	7897	
						11	7901	
						12	7905	
						13	2T43	

DIST	COUNTY	ROUTE	KILOMETER POST TOTAL PROJECT	SHEET No	TOTAL SHEETS
04	SF, Ala	80	13.9 / 14.3, 0.0 / 1.6		

REGISTERED ELECTRICAL ENGINEER — DATE 07/07/06

6-4-01
PLANS APPROVAL DATE

REGISTERED PROFESSIONAL ENGINEER — JENS ERLINGSSON No. 8249 Exp. 9/30/06 ELECTRICAL — STATE OF CALIFORNIA

PB POWER, Inc.
A Parsons Brinckerhoff Company
303 Second St., Suite 700N
San Francisco, CA 94107-1317

The State of California or its officers or agents shall not be responsible for the accuracy or completeness of electronic copies of this plan sheet.

Caltrans Metric

San Francisco - Oakland Bay Bridge East Span Seismic Safety Project

04-012024
04-SF-80KP 12.2/KP 14.3
04-ALA-80 KP 0.0/KP 2.1

SUPPLEMENT TO THE SPECIAL PROVISIONS AND PLANS

Binder 1 of 2 - Westbound

MARK	DATE	DESCRIPTIONS	REV	CK	
1	7/7/06	For description of changes, see Directives for Conduit and Tray Schedules Westbound EE-325G dated July 7, 2006. Supersedes Directives for conduit and Tray Schedules EE-325E dated 1/6/06 and EE-325B dated 2/20/04.	PB	EJL	CCO NO. 48 S1

REVISIONS

CONTRACT CHANGE ORDER NO. 48 S1
SHEET 66 OF 67

DETAILS
CONDUIT AND TRAY SCHEDULE WESTBOUND

EE-325G

DATE	REVISED BY	DATE REVISED
11/99	CYF	10/01
6/00	EJL	9/12/03
	EJL	4/2/04
	EJL	7/7/06

CALCULATED/DESIGNED BY: PB — CHECKED BY: EJL

DESIGN OVERSIGHT: BEHZAD GOLEMOHAMMADI

STATE OF CALIFORNIA - DEPARTMENT OF TRANSPORTATION — Caltrans

LAST REVISION 00-00-00 — DATE PLOTTED => 08-AUG-2006 — TIME PLOTTED => 08:54

USERNAME => mhossain
DGN FILE => cover-conduit and circuit sched.dgn

CU 04251 — EA 012021

Directives for Conduit/Tray Schedule Westbound EE-325G - For CCO 48 S1

Addition to the Supplement to the Special Provisions and Plans, EE-325 Binder 1 of 2-Westbound.
Mark 1- Raceways shown on EE-325A Binder 1 of 2-Westbound of Addendum No. 6 dated October 30, 2001 is superceded by this EE-325G, dated July 7, 2006

Item No.	Conduit/ Tray No.	Notation under Notes CCO No. 48 S1								Description of changes to the Conduit and Tray Schedule Westbound
		Mark 1	**Mark 2**	**Mark 3**	**Mark 4**	**Mark 5**	**Mark 6**	**Mark 7**	**Mark 8**	
			Revised Hinges A thru E April 18, 2004	Added Hinge A Girder Interface Feb. 20, 2004		Added Hinge E Girder Interface Feb. 20, 2004		Hinge Pipe A Jan. 4, 2006		
		(Revise)	(Add)	(Add)	(Delete)	(Add)	(Delete)	(Revise)	(Delete)	
1	6856		X							Added conduit inside Pipe Beam AW
2	6857		X							Added conduit inside Pipe Beam AW
3	6858		X							Added conduit inside Pipe Beam AW
4	6865		X							Added conduit inside Pipe Beam AW
5	6867		X							Added conduit inside Pipe Beam AW
6	6868		X							Added conduit inside Pipe Beam AW
7	6869		X							Added conduit inside Pipe Beam AW
8	6870		X							Added conduit inside Pipe Beam AW
9	6503			X						Added conduit to 15 kV splice box Circuit/ cable #1391 routed by SAS Superstructure
10	6504			X						Added conduit to 15 kV splice box
11	6501	X								Revised reference drawing. Conduit inside Pipe Beam AW.
12	6507	X								Revised reference drawing. Conduit inside Pipe Beam AW.
13	6508	X								Revised reference drawing. Conduit inside Pipe Beam AW.
14	6509	X								Revised reference drawing. Conduit inside Pipe Beam AW.
15	6510	X								Revised reference drawing. Conduit inside Pipe Beam AW.
16	6517	X								Revised reference drawing. Conduit inside Pipe Beam AW. Circuit/ cable #1475-4 and 1477-3 routed by SAS Superstructure
17	6518	X								Revised reference drawing. Conduit inside Pipe Beam AW.
18	6519	X								Revised reference drawing. Conduit inside Pipe Beam AW.
19	6520	X								Revised reference drawing. Conduit inside Pipe Beam AW.
20	6521	X								Revised reference drawing. Conduit inside Pipe Beam AW.
21	6502				X					Deleted conduit. Part of SAS Superstructure bid package
22	6511				X					Deleted conduit. Part of SAS Superstructure bid package
23	6512				X					Deleted conduit. Part of SAS Superstructure bid package
24	6513				X					Deleted conduit. Part of SAS Superstructure bid package
25	6514				X					Deleted conduit. Part of SAS Superstructure bid package

Directives for Conduit/Tray Schedule Westbound EE-325G - For CCO 48 S1

Addition to the Supplement to the Special Provisions and Plans, EE-325 Binder 1 of 2-Westbound.
Mark 1- Raceways shown on EE-325A Binder 1 of 2-Westbound of Addendum No. 6 dated October 30, 2001 is superceded by this EE-325G, dated July 7, 2006

Item No.	Conduit/ Tray No.	Notation under Notes CCO No. 48 S1								Description of changes to the Conduit and Tray Schedule Westbound
		Mark 1	**Mark 2**	**Mark 3**	**Mark 4**	**Mark 5**	**Mark 6**	**Mark 7**	**Mark 8**	
			Revised Hinges A thru E April 18, 2004	Added Hinge A Girder Interface Feb. 20, 2004		Added Hinge E Girder Interface Feb. 20, 2004		Hinge Pipe A Jan. 4, 2006		
		(Revise)	(Add)	(Add)	(Delete)	(Add)	(Delete)	(Revise)	(Delete)	
26	6522				X					Deleted conduit. Part of SAS Superstructure bid package Circuit/ cable #1475-4 and 1477-3 routed by SAS Superstructure
27	6523				X					Deleted conduit. Part of SAS Superstructure bid package
28	6524				X					Deleted conduit. Part of SAS Superstructure bid package
29	6525				X					Deleted conduit. Part of SAS Superstructure bid package
30	6526				X					Deleted conduit. Part of SAS Superstructure bid package
31	1T10				X					Deleted tray from conduit rack A to Hinge A-SAS Superstructure and Skyway Structure girder interface. No circuits/ cable deleted.
32	1T50				X					Deleted tray from conduit rack B to Hinge A- SAS Superstructure and Skyway Structure girder interface.
33	1T40				X					Deleted tray from conduit rack C to Hinge A-SAS Superstructure and Skyway Structure girder interface. No circuits/ cable deleted.
34	1T20				X					Deleted tray from to "T" stiffiner to Hinge A-SAS Superstructure and Skyway Structure girder interface. No circuits/ cable deleted.
35	6880		X							Added conduit inside Pipe Beam BW
36	6881		X							Added conduit inside Pipe Beam BW
37	6882		X							Added conduit inside Pipe Beam BW
38	6889		X							Added conduit inside Pipe Beam BW
39	6530	X								Revised reference drawing.
40	6531	X								Revised reference drawing. Conduit inside Pipe Beam BW.
41	6532	X								Revised reference drawing.
42	6538	X								Revised reference drawing.
43	6539	X								Revised reference drawing.
44	6540	X								Revised reference drawing.
45	6541	X								Revised reference drawing.
46	6542	X								Revised reference drawing. Conduit inside Pipe Beam BW.

ejl

Directives for Conduit/Tray Schedule Westbound EE-325G - For CCO 48 S1

Addition to the Supplement to the Special Provisions and Plans, EE-325 Binder 1 of 2-Westbound.
Mark 1- Raceways shown on EE-325A Binder 1 of 2-Westbound of Addendum No. 6 dated October 30, 2001 is superceded by this EE-325G, dated July 7, 2006

Item No.	Conduit/ Tray No.	Notation under Notes CCO No. 48 S1								Description of changes to the Conduit and Tray Schedule Westbound
		Mark 1	**Mark 2**	**Mark 3**	**Mark 4**	**Mark 5**	**Mark 6**	**Mark 7**	**Mark 8**	
			Revised Hinges A thru E April 18, 2004	Added Hinge A Girder Interface Feb. 20, 2004		Added Hinge E Girder Interface Feb. 20, 2004		Hinge Pipe A Jan. 4, 2006		
		(Revise)	(Add)	(Add)	(Delete)	(Add)	(Delete)	(Revise)	(Delete)	
47	6543	X								Revised reference drawing. Conduit inside Pipe Beam BW.
48	6544	X								Revised reference drawing. Conduit inside Pipe Beam BW.
49	6545	X								Revised reference drawing. Conduit inside Pipe Beam BW.
50	6546	X								Revised reference drawing.
51	6547	X								Revised reference drawing.
52	6548	X								Revised reference drawing.
53	6549	X								Revised reference drawing.
54	6553	X								Revised reference drawing.
55	6554	X								Revised reference drawing.
56	6555	X								Revised reference drawing.
57	6556	X								Revised reference drawing.
58	6557	X								Revised reference drawing.
59	6558	X								Revised reference drawing. Conduit inside Pipe Beam BW.
60	6559	X								Revised reference drawing. Conduit inside Pipe Beam BW.
61	6560	X								Revised reference drawing. Conduit inside Pipe Beam BW.
62	6561	X								Revised reference drawing. Conduit inside Pipe Beam BW.
63	6562	X								Revised reference drawing. Conduit inside Pipe Beam BW.
64	6563	X								Revised reference drawing.
65	6564	X								Revised reference drawing.
66	6565	X								Revised reference drawing.
67	6566	X								Revised reference drawing.
68	6567	X								Revised reference drawing.
69	6571	X								Revised reference drawing.
70	6572	X								Revised reference drawing.
71	6573	X								Revised reference drawing.
72	6574	X								Revised reference drawing.
73	6575	X								Revised reference drawing. Conduit inside Pipe Beam BW.

Directives for Conduit/Tray Schedule Westbound EE-325G - For CCO 48 S1

Addition to the Supplement to the Special Provisions and Plans, EE-325 Binder 1 of 2-Westbound.
Mark 1- Raceways shown on EE-325A Binder 1 of 2-Westbound of Addendum No. 6 dated October 30, 2001 is superceded by this EE-325G, dated July 7, 2006

Item No.	Conduit/ Tray No.	Notation under Notes CCO No. 48 S1								Description of changes to the Conduit and Tray Schedule Westbound
		Mark 1	**Mark 2**	**Mark 3**	**Mark 4**	**Mark 5**	**Mark 6**	**Mark 7**	**Mark 8**	
			Revised Hinges A thru E April 18, 2004	Added Hinge A Girder Interface Feb. 20, 2004		Added Hinge E Girder Interface Feb. 20, 2004		Hinge Pipe A Jan. 4, 2006		
		(Revise)	(Add)	(Add)	(Delete)	(Add)	(Delete)	(Revise)	(Delete)	
74	6576	X								Revised reference drawing. Conduit inside Pipe Beam BW.
75	6577	X								Revised reference drawing. Conduit inside Pipe Beam BW.
76	6578	X								Revised reference drawing. Conduit inside Pipe Beam BW.
77	6579	X								Revised reference drawing.
78	6580	X								Revised reference drawing.
79	6581	X								Revised reference drawing.
80	6582	X								Revised reference drawing.
81	6900		X							Added conduit inside Pipe Beam CW
82	6901		X							Added conduit inside Pipe Beam CW
83	6902		X							Added conduit inside Pipe Beam CW
84	6909		X							Added conduit inside Pipe Beam CW
85	6586	X								Revised reference drawing.
86	6587	X								Revised reference drawing. Conduit inside Pipe Beam CW.
87	6588	X								Revised reference drawing.
88	6594	X								Revised reference drawing.
89	6595	X								Revised reference drawing.
90	6596	X								Revised reference drawing.
91	6597	X								Revised reference drawing.
92	6598	X								Revised reference drawing. Conduit inside Pipe Beam CW.
93	6599	X								Revised reference drawing. Conduit inside Pipe Beam CW.
94	6600	X								Revised reference drawing. Conduit inside Pipe Beam CW.
95	6601	X								Revised reference drawing. Conduit inside Pipe Beam CW.
96	6602	X								Revised reference drawing.
97	6603	X								Revised reference drawing.
98	6604	X								Revised reference drawing.
99	6605	X								Revised reference drawing.
100	6609	X								Revised reference drawing.

Directives for Conduit/Tray Schedule Westbound EE-325G - For CCO 48 S1

Addition to the Supplement to the Special Provisions and Plans, EE-325 Binder 1 of 2-Westbound.
Mark 1- Raceways shown on EE-325A Binder 1 of 2-Westbound of Addendum No. 6 dated October 30, 2001 is superceded by this EE-325G, dated July 7, 2006

Item No.	Conduit/ Tray No.	Notation under Notes CCO No. 48 S1								Description of changes to the Conduit and Tray Schedule Westbound
		Mark 1	**Mark 2**	**Mark 3**	**Mark 4**	**Mark 5**	**Mark 6**	**Mark 7**	**Mark 8**	
			Revised Hinges A thru E April 18, 2004	Added Hinge A Girder Interface Feb. 20, 2004		Added Hinge E Girder Interface Feb. 20, 2004		Hinge Pipe A Jan. 4, 2006		
		(Revise)	(Add)	(Add)	(Delete)	(Add)	(Delete)	(Revise)	(Delete)	
101	6610	X								Revised reference drawing.
102	6611	X								Revised reference drawing.
103	6612	X								Revised reference drawing.
104	6613	X								Revised reference drawing.
105	6614	X								Revised reference drawing. Conduit inside Pipe Beam CW.
106	6615	X								Revised reference drawing. Conduit inside Pipe Beam CW.
107	6616	X								Revised reference drawing. Conduit inside Pipe Beam CW.
108	6617	X								Revised reference drawing. Conduit inside Pipe Beam CW.
109	6618	X								Revised reference drawing. Conduit inside Pipe Beam CW.
110	6619	X								Revised reference drawing.
111	6620	X								Revised reference drawing.
112	6621	X								Revised reference drawing.
113	6622	X								Revised reference drawing.
114	6627	X								Revised reference drawing.
115	6628	X								Revised reference drawing.
116	6629	X								Revised reference drawing.
117	6630	X								Revised reference drawing.
118	6631	X								Revised reference drawing. Conduit inside Pipe Beam CW.
119	6632	X								Revised reference drawing. Conduit inside Pipe Beam CW.
120	6633	X								Revised reference drawing. Conduit inside Pipe Beam CW.
121	6634	X								Revised reference drawing. Conduit inside Pipe Beam CW.
122	6635	X								Revised reference drawing.
123	6636	X								Revised reference drawing.
124	6637	X								Revised reference drawing.
125	6638	X								Revised reference drawing.
126	6920		X							Added conduit inside Pipe Beam DW
127	6921		X							Added conduit inside Pipe Beam DW

Directives for Conduit/Tray Schedule Westbound EE-325G - For CCO 48 S1

Addition to the Supplement to the Special Provisions and Plans, EE-325 Binder 1 of 2-Westbound.
Mark 1- Raceways shown on EE-325A Binder 1 of 2-Westbound of Addendum No. 6 dated October 30, 2001 is superceded by this EE-325G, dated July 7, 2006

Item No.	Conduit/ Tray No.	Notation under Notes CCO No. 48 S1								Description of changes to the Conduit and Tray Schedule Westbound
		Mark 1	**Mark 2**	**Mark 3**	**Mark 4**	**Mark 5**	**Mark 6**	**Mark 7**	**Mark 8**	
			Revised Hinges A thru E April 18, 2004	Added Hinge A Girder Interface Feb. 20, 2004		Added Hinge E Girder Interface Feb. 20, 2004		Hinge Pipe A Jan. 4, 2006		
		(Revise)	(Add)	(Add)	(Delete)	(Add)	(Delete)	(Revise)	(Delete)	
128	6922		X							Added conduit inside Pipe Beam DW
129	6929		X							Added conduit inside Pipe Beam DW
130	6642	X								Revised reference drawing.
131	6643	X								Revised reference drawing. Conduit inside Pipe Beam DW.
132	6644	X								Revised reference drawing.
133	6651	X								Revised reference drawing.
134	6652	X								Revised reference drawing.
135	6653	X								Revised reference drawing.
136	6654	X								Revised reference drawing.
137	6655	X								Revised reference drawing. Conduit inside Pipe Beam DW.
138	6656	X								Revised reference drawing. Conduit inside Pipe Beam DW.
139	6657	X								Revised reference drawing. Conduit inside Pipe Beam DW.
140	6658	X								Revised reference drawing. Conduit inside Pipe Beam DW.
141	6659	X								Revised reference drawing.
142	6660	X								Revised reference drawing.
143	6661	X								Revised reference drawing.
144	6662	X								Revised reference drawing.
145	6667	X								Revised reference drawing.
146	6668	X								Revised reference drawing.
147	6669	X								Revised reference drawing.
148	6670	X								Revised reference drawing.
149	6671	X								Revised reference drawing.
150	6672	X								Revised reference drawing. Conduit inside Pipe Beam DW.
151	6673	X								Revised reference drawing. Conduit inside Pipe Beam DW.
152	6674	X								Revised reference drawing. Conduit inside Pipe Beam DW.
153	6675	X								Revised reference drawing. Conduit inside Pipe Beam DW.
154	6676	X								Revised reference drawing. Conduit inside Pipe Beam DW.

Directives for Conduit/Tray Schedule Westbound EE-325G - For CCO 48 S1

Addition to the Supplement to the Special Provisions and Plans, EE-325 Binder 1 of 2-Westbound.
Mark 1- Raceways shown on EE-325A Binder 1 of 2-Westbound of Addendum No. 6 dated October 30, 2001 is superceded by this EE-325G, dated July 7, 2006

Item No.	Conduit/ Tray No.	Notation under Notes CCO No. 48 S1								Description of changes to the Conduit and Tray Schedule Westbound
		Mark 1	**Mark 2**	**Mark 3**	**Mark 4**	**Mark 5**	**Mark 6**	**Mark 7**	**Mark 8**	
			Revised Hinges A thru E April 18, 2004	Added Hinge A Girder Interface Feb. 20, 2004		Added Hinge E Girder Interface Feb. 20, 2004		Hinge Pipe A Jan. 4, 2006		
		(Revise)	(Add)	(Add)	(Delete)	(Add)	(Delete)	(Revise)	(Delete)	
155	6677	X								Revised reference drawing.
156	6678	X								Revised reference drawing.
157	6679	X								Revised reference drawing.
158	6680	X								Revised reference drawing.
159	6681	X								Revised reference drawing.
160	6685	X								Revised reference drawing.
161	6686	X								Revised reference drawing.
162	6687	X								Revised reference drawing.
163	6688	X								Revised reference drawing.
164	6689	X								Revised reference drawing. Conduit inside Pipe Beam DW.
165	6690	X								Revised reference drawing. Conduit inside Pipe Beam DW.
166	6691	X								Revised reference drawing. Conduit inside Pipe Beam DW.
167	6692	X								Revised reference drawing. Conduit inside Pipe Beam DW.
168	6693	X								Revised reference drawing.
169	6694	X								Revised reference drawing.
170	6695	X								Revised reference drawing.
171	6696	X								Revised reference drawing.
172	6936					X				Added conduit to 15 kV splice box
173	6937					X				Conduit to 15 kV splice box Circuit/ cable #1392 routed by Oakland Approach Structure
174	6944		X							Added conduit
175	6945		X							Added conduit
176	6946		X							Added conduit
177	6947		X							Added conduit
178	6952		X							Added conduit
179	6948		X				X			Added conduit Deleted conduit from north girder wall to tray 1T24
180	6964		X				X			Added conduit Deleted conduit from south girder wall to tray 1T53

Directives for Conduit/Tray Schedule Westbound EE-325G - For CCO 48 S1

Addition to the Supplement to the Special Provisions and Plans, EE-325 Binder 1 of 2-Westbound.
Mark 1- Raceways shown on EE-325A Binder 1 of 2-Westbound of Addendum No. 6 dated October 30, 2001 is superceded by this EE-325G, dated July 7, 2006

Item No.	Conduit/ Tray No.	Notation under Notes CCO No. 48 S1								Description of changes to the Conduit and Tray Schedule Westbound
		Mark 1	**Mark 2**	**Mark 3**	**Mark 4**	**Mark 5**	**Mark 6**	**Mark 7**	**Mark 8**	
			Revised Hinges A thru E April 18, 2004	Added Hinge A Girder Interface Feb. 20, 2004		Added Hinge E Girder Interface Feb. 20, 2004		Hinge Pipe A Jan. 4, 2006		
		(Revise)	(Add)	(Add)	(Delete)	(Add)	(Delete)	(Revise)	(Delete)	
181	6965		X				X			Added conduit Deleted conduit from south girder wall to tray 1T53
182	6966		X				X			Added conduit Deleted conduit from south girder wall to tray 1T53
183	6967		X				X			Added conduit Deleted conduit from south girder wall to tray 1T53
184	6968		X				X			Added conduit Deleted conduit from south girder wall to tray 1T53
185	6969		X				X			Added conduit Deleted conduit from south girder wall to tray 1T43 Circuit/ cable #1475-4 and 1477-3 routed by Oakland Approach Structure
186	6970		X				X			Added conduit Deleted conduit from south girder wall to tray 1T43
187	6971		X				X			Added conduit Deleted conduit from south girder wall to tray 1T43
188	6972		X				X			Added conduit Deleted conduit from south girder wall to tray 1T43
189	6973		X				X			Added conduit Deleted conduit from south girder wall to tray 1T43
190	6974		X							Added conduit
191	6975		X							Added conduit
192	6700	X								Revised reference drawing.
193	6701	X								Revised reference drawing.
194	6706	X								Revised reference drawing.
195	6707	X								Revised reference drawing.
196	6708	X								Revised reference drawing.
197	6709	X								Revised reference drawing.
198	6710	X								Revised reference drawing.
199	6711	X								Revised reference drawing.
200	6712	X								Revised reference drawing.
201	6713	X								Revised reference drawing.

Directives for Conduit/Tray Schedule Westbound EE-325G - For CCO 48 S1

Addition to the Supplement to the Special Provisions and Plans, EE-325 Binder 1 of 2-Westbound.
Mark 1- Raceways shown on EE-325A Binder 1 of 2-Westbound of Addendum No. 6 dated October 30, 2001 is superceded by this EE-325G, dated July 7, 2006

Item No.	Conduit/ Tray No.	Notation under Notes CCO No. 48 S1								Description of changes to the Conduit and Tray Schedule Westbound
		Mark 1	**Mark 2**	**Mark 3**	**Mark 4**	**Mark 5**	**Mark 6**	**Mark 7**	**Mark 8**	
			Revised Hinges A thru E April 18, 2004	Added Hinge A Girder Interface Feb. 20, 2004		Added Hinge E Girder Interface Feb. 20, 2004		Hinge Pipe A Jan. 4, 2006		
		(Revise)	(Add)	(Add)	(Delete)	(Add)	(Delete)	(Revise)	(Delete)	
202	6716	X								Revised reference drawing. Circuit/ cable #1475-4 and 1477-3 routed by Oakland Approach Structure
203	6717	X								Revised reference drawing.
204	6718	X								Revised reference drawing.
205	6719	X								Revised reference drawing.
206	6720	X								Revised reference drawing.
207	6721	X								Revised reference drawing. Circuit/ cable #1475-4 and 1477-3 routed by Oakland Approach Structure
208	6722	X								Revised reference drawing.
209	6723	X								Revised reference drawing.
210	6724	X								Revised reference drawing.
211	6725	X								Revised reference drawing.
212	1T13						X			Deleted tray from E16W-2E to end of tray. No circuits/ cables deleted.
213	1T24						X			Deleted tray from E16W-2E to end of tray No circuits/ cables deleted.
214	1T43						X			Deleted tray from E16W-2E to end of tray No circuits/ cables deleted.
215	1T53						X			Deleted tray from E16W-2E to end of tray
216	6501							X		Revised reference sheet EE-295A to EE-295C.
217	6502							X	X	Revised reference sheet EE-295A to EE-295C. Deleted conduit.
218	6507							X		Revised reference sheet EE-295A to EE-295C.
219	6508							X		Revised reference sheet EE-295A to EE-295C.
220	6509							X		Revised reference sheet EE-295A to EE-295C.
221	6510							X		Revised reference sheet EE-295A to EE-295C.
222	6511							X	X	Revised reference sheet EE-295A to EE-295C. Deleted conduit.
223	6512							X	X	Revised reference sheet EE-295A to EE-295C. Deleted conduit.

Directives for Conduit/Tray Schedule Westbound EE-325G - For CCO 48 S1

Addition to the Supplement to the Special Provisions and Plans, EE-325 Binder 1 of 2-Westbound.
Mark 1- Raceways shown on EE-325A Binder 1 of 2-Westbound of Addendum No. 6 dated October 30, 2001 is superceded by this EE-325G, dated July 7, 2006

Item No.	Conduit/ Tray No.	Notation under Notes CCO No. 48 S1								Description of changes to the Conduit and Tray Schedule Westbound
		Mark 1	**Mark 2**	**Mark 3**	**Mark 4**	**Mark 5**	**Mark 6**	**Mark 7**	**Mark 8**	
			Revised Hinges A thru E April 18, 2004	Added Hinge A Girder Interface Feb. 20, 2004		Added Hinge E Girder Interface Feb. 20, 2004		Hinge Pipe A Jan. 4, 2006		
		(Revise)	(Add)	(Add)	(Delete)	(Add)	(Delete)	(Revise)	(Delete)	
224	6513							X	X	Revised reference sheet EE-295A to EE-295C. Deleted conduit.
225	6514							X	X	Revised reference sheet EE-295A to EE-295C. Deleted conduit.
226	6517							X		Revised reference sheet EE-295A to EE-295C.
227	6518							X		Revised reference sheet EE-295A to EE-295C.
228	6519							X		Revised reference sheet EE-295A to EE-295C.
229	6520							X		Revised reference sheet EE-295A to EE-295C.
230	6521							X		Revised reference sheet EE-295A to EE-295C.
231	6522							X	X	Revised reference sheet EE-295A to EE-295C. Deleted conduit.
232	6523							X	X	Revised reference sheet EE-295A to EE-295C. Deleted conduit.
233	6524							X	X	Revised reference sheet EE-295A to EE-295C. Deleted conduit.
234	6525							X	X	Revised reference sheet EE-295A to EE-295C. Deleted conduit.
235	6526							X	X	Revised reference sheet EE-295A to EE-295C. Deleted conduit.
236	6856							X		Revised reference sheet EE-295A to EE-295C.
237	6857							X		Revised reference sheet EE-295A to EE-295C.
238	6858							X		Revised reference sheet EE-295A to EE-295C.
239	6865							X		Revised reference sheet EE-295A to EE-295C.
240	6867							X		Revised reference sheet EE-295A to EE-295C.
241	6868							X		Revised reference sheet EE-295A to EE-295C.
242	6869							X		Revised reference sheet EE-295A to EE-295C.
243	6870							X		Revised reference sheet EE-295A to EE-295C.
END										

Conduit/Tray No: 1T10 **Ref Dwg(s):** EE-61 thru EE-66

Conduit/Tray Type: 305 mm 6" siderail ladder tray

Total Fill: 2628.48 mm2

Allowable Fill: 8387.08 mm2 Note: See Mark 4

Cable/Ckt. No.:	Type:	Cable Area:
1391	3-1/C #4/0, 15 kV, EPR Insulation	2628.4mm2

Conduit/Tray No: 1T13 **Ref Dwg(s):** EE-76, EE-77

Conduit/Tray Type: 305 mm 6" siderail ladder tray

Total Fill: 2628.48 mm2

Allowable Fill: 8387.08 mm2 Note: See Mark 6

Cable/Ckt. No.:	Type:	Cable Area:
1392	3-1/C #4/0, 15 kV, EPR Insulation	2628.4mm2

CONDUIT AND TRAY SCHEDULE WESTBOUND

CCO No. 48 S1 dated July. 7, 2006

Conduit/Tray No: 1T20 **Ref Dwg(s):** EE-61 thru EE-66

Conduit/Tray Type: 610 mm 6" siderail ladder tray

Total Fill: 11204.04 mm2

Allowable Fill: 18064.48 mm2 Note: See Mark 4

Cable/Ckt. No.:	Type:	Cable Area:
A-1352	1-3/C+gnd #2, 600 V, EPR insulation	527.18mm2
1452	1-2/C #14, 600 V, EPR insulation	77.07 mm2
1335	1-3/C+gnd #2, 600 V, EPR insulation	527.18mm2
1454	1-7/C #16, 600 V, EPR insulation	102.61mm2
1461	1-2/C #14, 600 V, EPR insulation	77.07 mm2
UP131-6	1-4/C #10, 600 V, EPR insulation	170.46mm2
UP132-6	1-4/C #10, 600 V, EPR insulation	170.46mm2
UP133-6	1-4/C #10, 600 V, EPR insulation	170.46mm2
UP134-6	1-4/C #10, 600 V, EPR insulation	170.46mm2
1465-1	1-3/C #16, 600 V, EPR insulation	62.07 mm2
1465-2	1-3/C #16, 600 V, EPR insulation	62.07 mm2
1451	1-7/C #16, 600 V, EPR insulation	102.61mm2
A-1351	1-3/C+gnd #2, 600 V, EPR insulation	527.18mm2
1453	1-2/C #14, 600 V, EPR insulation	77.07 mm2
A-1353	1-3/C+gnd #4, 600 V, EPR insulation	366.1 mm2
A-1354	1-3/C+gnd #4, 600 V, EPR insulation	366.1 mm2
S-1301A	1-3/C+gnd #2, 600 V, EPR insulation	527.18mm2
S-1302A	1-3/C+gnd #4, 600 V, EPR insulation	366.1 mm2
UP131-2	1-2/C+gnd #10, 600 V, EPR insulation	126.88mm2

UP132-2	1-2/C+gnd #10, 600 V, EPR insulation	126.88mm2
UP133-14	1-2/C+gnd #10, 600 V, EPR insulation	126.88mm2
UP134-2	1-2/C+gnd #10, 600 V, EPR insulation	126.88mm2
1466-1	1-3/C #16, 600 V, EPR insulation	62.07 mm2
UP134-8	1-2/C+gnd #10, 600 V, EPR insulation	126.88mm2
1321	1-3/C+gnd #1/0, 600 V, EPR insulation	754.18mm2
1322	1-3/C+gnd #2, 600 V, EPR insulation	527.18mm2
1323	1-3/C+gnd #2, 600 V, EPR insulation	527.18mm2
1332	1-3/C+gnd #2/0, 600 V, EPR insulation	882.89mm2
UP132-8	1-2/C+gnd #10, 600 V, EPR insulation	126.88mm2
UP133-1A	1-2/C+gnd #8, 600 V, EPR insulation	227.46mm2

UP133-2A	1-2/C+gnd #8, 600 V, EPR insulation	227.46mm2
UP133-7	1-2/C+gnd #8, 600 V, EPR insulation	227.46mm2
UP133-8	1-2/C+gnd #10, 600 V, EPR insulation	126.88mm2
1460	1-2/C #14, 600 V, EPR insulation	77.07 mm2
UP134-7	1-2/C+gnd #8, 600 V, EPR insulation	227.46mm2
1365	1-3/C #10, 600 V, EPR insulation	126.88mm2
1362	1-3/C #10, 600 V, EPR insulation	126.88mm2
UP132-7	1-2/C+gnd #8, 600 V, EPR insulation	227.46mm2
UP131-7	1-2/C+gnd #8, 600 V, EPR insulation	227.46mm2
UP131-8	1-2/C+gnd #8, 600 V, EPR insulation	227.46mm2
UP131-1A	1-2/C+gnd #8, 600 V, EPR insulation	227.46mm2

UP132-1A	1-2/C+gnd #8, 600 V, EPR insulation	227.46mm2
1361	1-3/C #10, 600 V, EPR insulation	126.88mm2
1360	1-3/C #10, 600 V, EPR insulation	126.88mm2
UP134-1A	1-2/C+gnd #8, 600 V, EPR insulation	227.46mm2
1363	1-3/C #10, 600 V, EPR insulation	126.88mm2
1364	1-3/C #10, 600 V, EPR insulation	126.88mm2

Conduit/Tray No: 1T24 **Ref Dwg(s):** EE-76, EE-77

Conduit/Tray Type: 610 mm 6" siderail ladder tray

Total Fill: 3731.30 mm2

Allowable Fill: 18064.48 mm2 Note: See Mark 6

Cable/Ckt. No.:	Type:	Cable Area:
1468-3	1-3/C #16, 600 V, EPR insulation	62.07 mm2
A-1362	1-3/C+gnd #2, 600 V, EPR insulation	527.18mm2
S-1307A	1-3/C+gnd #2, 600 V, EPR insulation	527.18mm2
UP143-11	1-2/C+gnd #10, 600 V, EPR insulation	126.88mm2
UP142-4A.	1-2/C+gnd #8, 600 V, EPR insulation	227.46mm2
UP143-12	1-2/C+gnd #10, 600 V, EPR insulation	126.88mm2
UP143-6	1-4/C #10, 600 V, EPR insulation	170.46mm2
UP143-1A	1-2/C+gnd #8, 600 V, EPR insulation	227.46mm2
UP143-4	1-4/C #10, 600 V, EPR insulation	170.46mm2
1331	1-3/C+gnd #2/0, 600 V, EPR insulation	882.89mm2
UP143-7	1-2/C+gnd #8, 600 V, EPR insulation	227.46mm2
UP143-8	1-2/C+gnd #8, 600 V, EPR insulation	227.46mm2
UP142-2A	1-2/C+gnd #8, 600 V, EPR insulation	227.46mm2

CONDUIT AND TRAY SCHEDULE WESTBOUND

CCO No. 48 S1 dated July. 7, 2006

Conduit/Tray No: 1T40 **Ref Dwg(s):** EE-61 thru EE-66

Conduit/Tray Type: 305 mm 6" siderail ladder tray

Total Fill: 10925.93 mm2

Allowable Fill: 19354.80 mm2 Note: See Mark 4

Cable/Ckt. No.:	Type:	Cable Area:
1475-4	72 Fiber, single mode fiberoptic riser cable	323.65mm2
1477-3	72 Fiber, single mode fiberoptic riser cable	323.65mm2
1475-4D	12 Fiber, single mode fiberoptic cable	30.19 mm2
1473-13	50 pair #18, shielded pairs, IS/OS shield 600 V, XLPE insul., PVC jacket	1201.7mm2
1475-4B	12 Fiber, single mode fiberoptic cable	30.19 mm2
1475-4A	12 Fiber, single mode fiberoptic cable	30.19 mm2
1406	1 - 2 pair, shielded #18 with IS/OA , 600 V, PVC jacket	98.1 mm2
1402	1 - 2 pair, shielded #18 with IS/OA , 600 V, PVC jacket	98.1 mm2
1473-14	50 pair #18, shielded pairs, IS/OS shield 600 V, XLPE insul., PVC jacket	1201.7mm2
1475-4C1	12 Fiber, single mode fiberoptic cable	30.19 mm2
1474-12B	1 - 6 pair, shielded #18 with overall shield , 600 V, PVC jacket	158.9 mm2
1474-14	50 pair #18, shielded pairs, IS/OS shield 600 V, XLPE insul., PVC jacket	1201.7mm2
1474-12A	1 - 6 pair, shielded #18 with overall shield , 600 V, PVC jacket	158.9 mm2
1474-12	50 pair #18, shielded pairs, IS/OS shield 600 V, XLPE insul., PVC jacket	1201.7mm2
1474-11	50 pair #18, shielded pairs, IS/OS shield 600 V, XLPE insul., PVC jacket	1201.7mm2
1473-12	50 pair #18, shielded pairs, IS/OS shield 600 V, XLPE insul., PVC jacket	1201.7mm2
1473-11	50 pair #18, shielded pairs, IS/OS shield 600 V, XLPE insul., PVC jacket	1201.7mm2
1475-4C2	12 Fiber, single mode fiberoptic cable	30.19 mm2
1474-13	50 pair #18, shielded pairs, IS/OS shield 600 V, XLPE insul., PVC jacket	1201.7mm2

Conduit/Tray No: 1T43 **Ref Dwg(s):** EE-76, EE-77
Conduit/Tray Type: 305 mm 6" siderail ladder tray
Total Fill: 3277.11 mm2
Allowable Fill: 19354.80 mm2 Note: See Mark 6

Cable/Ckt. No.:	Type:	Cable Area:
1473-22	50 pair #18, shielded pairs, IS/OS shield 600 V, XLPE insul., PVC jacket	1201.7 mm2
1422	1 - 2 pair, shielded #18 with IS/OA , 600 V, PVC jacket	98.1 mm2
1477-3	72 Fiber, single mode fiberoptic riser cable	323.65 mm2
1475-4K	12 Fiber, single mode fiberoptic cable	30.19 mm2
1474-22	50 pair #18, shielded pairs, IS/OS shield 600 V, XLPE insul., PVC jacket	1201.7 mm2
1419	1 - 2 pair, shielded #18 with IS/OA , 600 V, PVC jacket	98.1 mm2
1475-4	72 Fiber, single mode fiberoptic riser cable	323.65 mm2

Conduit/Tray No: 1T50 **Ref Dwg(s):** EE-61 thru EE-66
Conduit/Tray Type: 610 mm 6" siderail ladder tray
Total Fill: .00 mm2
Allowable Fill: 38709.60 mm2 Note: See Mark 4

Cable/Ckt. No.:	Type:	Cable Area:
Non-Caltrans		0.00 mm2

Conduit/Tray No: 1T53 **Ref Dwg(s):** EE-76, EE-77
Conduit/Tray Type: 610 mm 6" siderail ladder tray
Total Fill: .00 mm2
Allowable Fill: 38709.60 mm2 Note: See Mark 6

Cable/Ckt. No.:	Type:	Cable Area:
Non-Caltrans		0.00 mm2

Conduit/Tray No: 6501 **Ref Dwg(s):** EE-295C
Conduit/Tray Type: 103 mm GRS conduit
Total Fill: .00 mm2
Allowable Fill: 3324.51 mm2 Note: See Mark 1 and Mark 7

Cable/Ckt. No.:	Type:	Cable Area:
Pull rope	Soft-fiber polyester	0.00 mm2

Conduit/Tray No: 6502 **Ref Dwg(s):** EE-295C
Conduit/Tray Type: 103 mm Liquidtight flex metal conduit
Total Fill: .00 mm2
Allowable Fill: 3275.44 mm2 Note: See Mark 4, Mark 7 and Mark 8

Cable/Ckt. No.:	Type:	Cable Area:
Pull rope	Soft-fiber polyester	0.00 mm2

Conduit/Tray No: 6503 **Ref Dwg(s):** EE-61
Conduit/Tray Type: 103 mm GRS conduit
Total Fill: .00 mm2
Allowable Fill: 3324.51 mm2 Note: See Mark 3

Cable/Ckt. No.:	Type:	Cable Area:
Pull rope	Soft-fiber polyester	0.00 mm2

Conduit/Tray No: 6504 **Ref Dwg(s):** EE-61
Conduit/Tray Type: 103 mm GRS conduit
Total Fill: 2628.48 mm2
Allowable Fill: 3324.51 mm2 Note: See Mark 3

Cable/Ckt. No.:	Type:	Cable Area:
1391	3-1/C #4/0, 15 kV, EPR Insulation	2628.4mm2

Conduit/Tray No: 6507 **Ref Dwg(s):** EE-295C
Conduit/Tray Type: 103 mm GRS conduit
Total Fill: .00 mm2
Allowable Fill: 3324.51 mm2 Note: See Mark 1 and Mark 7

Cable/Ckt. No.:	Type:	Cable Area:
Pull rope	Soft-fiber polyester	0.00 mm2

Conduit/Tray No: 6508 **Ref Dwg(s):** EE-295C
Conduit/Tray Type: 103 mm GRS conduit
Total Fill: .00 mm2
Allowable Fill: 3324.51 mm2 Note: See Mark 1 and Mark 7

Cable/Ckt. No.:	Type:	Cable Area:
Pull rope	Soft-fiber polyester	0.00 mm2

Conduit/Tray No: 6509 **Ref Dwg(s):** EE-295C
Conduit/Tray Type: 103 mm GRS conduit
Total Fill: .00 mm2
Allowable Fill: 3324.51 mm2 Note: See Mark 1 and Mark 7

Cable/Ckt. No.:	Type:	Cable Area:
Pull rope	Soft-fiber polyester	0.00 mm2

Conduit/Tray No: 6510 **Ref Dwg(s):** EE-295C
Conduit/Tray Type: 103 mm GRS conduit
Total Fill: .00 mm2
Allowable Fill: 3324.51 mm2 Note: See Mark 1 and Mark 7

Cable/Ckt. No.:	Type:	Cable Area:
Pull rope	Soft-fiber polyester	0.00 mm2

Conduit/Tray No: 6511 **Ref Dwg(s):** EE-295C
Conduit/Tray Type: 103 mm Liquidtight flex metal conduit
Total Fill: .00 mm2
Allowable Fill: 3275.44 mm2 Note: See Mark 4, Mark 7 and Mark 8

Cable/Ckt. No.:	Type:	Cable Area:
Pull rope	Soft-fiber polyester	0.00 mm2

Conduit/Tray No: 6512 **Ref Dwg(s):** EE-295C
Conduit/Tray Type: 103 mm Liquidtight flex metal conduit
Total Fill: .00 mm2
Allowable Fill: 3275.44 mm2 Note: See Mark 4, Mark 7 and Mark 8

Cable/Ckt. No.:	Type:	Cable Area:
Pull rope	Soft-fiber polyester	0.00 mm2

Conduit/Tray No: 6513 **Ref Dwg(s):** EE-295C
Conduit/Tray Type: 103 mm Liquidtight flex metal conduit
Total Fill: .00 mm2
Allowable Fill: 3275.44 mm2 Note: See Mark 4, Mark 7 and Mark 8

Cable/Ckt. No.:	Type:	Cable Area:
Pull rope	Soft-fiber polyester	0.00 mm2

Conduit/Tray No: 6514 **Ref Dwg(s):** EE-295C
Conduit/Tray Type: 103 mm Liquidtight flex metal conduit
Total Fill: .00 mm2
Allowable Fill: 3275.44 mm2 Note: See Mark 4, Mark 7 and Mark 8

Cable/Ckt. No.:	Type:	Cable Area:
Pull rope	Soft-fiber polyester	0.00 mm2

Conduit/Tray No: 6517 **Ref Dwg(s):** EE-295C
Conduit/Tray Type: 103 mm GRS conduit
Total Fill: .00 mm2
Allowable Fill: 3324.51 mm2 Note: See Mark 1 and Mark 7

Cable/Ckt. No.:	Type:	Cable Area:
Pull rope	Soft-fiber polyester	0.00 mm2

Conduit/Tray No: 6518 **Ref Dwg(s):** EE-295C
Conduit/Tray Type: 103 mm GRS conduit
Total Fill: .00 mm2
Allowable Fill: 3324.51 mm2 Note: See Mark 1 and Mark 7

Cable/Ckt. No.:	Type:	Cable Area:
Pull rope	Soft-fiber polyester	0.00 mm2

Conduit/Tray No: 6519 **Ref Dwg(s):** EE-295C
Conduit/Tray Type: 103 mm GRS conduit
Total Fill: .00 mm2
Allowable Fill: 3324.51 mm2 Note: See Mark 1 and Mark 7

Cable/Ckt. No.:	Type:	Cable Area:
Pull rope	Soft-fiber polyester	0.00 mm2

Conduit/Tray No: 6520 **Ref Dwg(s):** EE-295C
Conduit/Tray Type: 103 mm GRS conduit
Total Fill: .00 mm2
Allowable Fill: 3324.51 mm2 Note: See Mark 1 and Mark 7

Cable/Ckt. No.:	Type:	Cable Area:
Pull rope	Soft-fiber polyester	0.00 mm2

Conduit/Tray No: 6521 **Ref Dwg(s):** EE-295C
Conduit/Tray Type: 103 mm GRS conduit
Total Fill: .00 mm2
Allowable Fill: 3324.51 mm2 Note: See Mark 1 and Mark 7

Cable/Ckt. No.:	Type:	Cable Area:
Pull rope	Soft-fiber polyester	0.00 mm2

Conduit/Tray No: 6522 **Ref Dwg(s):** EE-295C
Conduit/Tray Type: 103 mm Liquidtight flex metal conduit
Total Fill: .00 mm2
Allowable Fill: 3275.44 mm2 Note: See Mark 4, Mark 7 and Mark 8

Cable/Ckt. No.:	Type:	Cable Area:
Pull rope	Soft-fiber polyester	0.00 mm2

Conduit/Tray No: 6523 **Ref Dwg(s):** EE-295C
Conduit/Tray Type: 103 mm Liquidtight flex metal conduit
Total Fill: .00 mm2
Allowable Fill: 3275.44 mm2 Note: See Mark 4, Mark 7 and Mark 8

Cable/Ckt. No.:	Type:	Cable Area:
Pull rope	Soft-fiber polyester	0.00 mm2

Conduit/Tray No: 6524 **Ref Dwg(s):** EE-295C
Conduit/Tray Type: 103 mm Liquidtight flex metal conduit
Total Fill: .00 mm2
Allowable Fill: 3275.44 mm2 Note: See Mark 4, Mark 7 and Mark 8

Cable/Ckt. No.:	Type:	Cable Area:
Pull rope	Soft-fiber polyester	0.00 mm2

Conduit/Tray No: 6525 **Ref Dwg(s):** EE-295C
Conduit/Tray Type: 103 mm Liquidtight flex metal conduit
Total Fill: .00 mm2
Allowable Fill: 3275.44 mm2 Note: See Mark 4, Mark 7 and Mark 8

Cable/Ckt. No.:	Type:	Cable Area:
Pull rope	Soft-fiber polyester	0.00 mm2

Conduit/Tray No: 6526 **Ref Dwg(s):** EE-295C
Conduit/Tray Type: 103 mm Liquidtight flex metal conduit
Total Fill: .00 mm2
Allowable Fill: 3275.44 mm2 Note: See Mark 4, Mark 7 and Mark 8

Cable/Ckt. No.:	Type:	Cable Area:
Pull rope	Soft-fiber polyester	0.00 mm2

Conduit/Tray No: 6530 **Ref Dwg(s):** EE-296A
Conduit/Tray Type: 103 mm Liquidtight flex metal conduit
Total Fill: 2628.48 mm2
Allowable Fill: 3275.44 mm2 Note: See Mark 1

Cable/Ckt. No.:	Type:	Cable Area:
1391	3-1/C #4/0, 15 kV, EPR Insulation	2628.4mm2

Conduit/Tray No: 6531 **Ref Dwg(s):** EE-296A
Conduit/Tray Type: 103 mm GRS conduit
Total Fill: 2628.48 mm2
Allowable Fill: 3324.51 mm2 Note: See Mark 1

Cable/Ckt. No.:	Type:	Cable Area:
1391	3-1/C #4/0, 15 kV, EPR Insulation	2628.4mm2

Conduit/Tray No: 6532 **Ref Dwg(s):** EE-296A
Conduit/Tray Type: 103 mm Liquidtight flex metal conduit
Total Fill: 2628.48 mm2
Allowable Fill: 3275.44 mm2 Note: See Mark 1

Cable/Ckt. No.:	Type:	Cable Area:
1391	3-1/C #4/0, 15 kV, EPR Insulation	2628.4mm2

Conduit/Tray No: 6538 **Ref Dwg(s):** EE-296A
Conduit/Tray Type: 103 mm Liquidtight flex metal conduit
Total Fill: .00 mm2
Allowable Fill: 3275.44 mm2 Note: See Mark 1

Cable/Ckt. No.:	Type:	Cable Area:
Pull rope	Soft-fiber polyester	0.00 mm2

Conduit/Tray No: 6539 **Ref Dwg(s):** EE-296A
Conduit/Tray Type: 103 mm Liquidtight flex metal conduit
Total Fill: .00 mm2
Allowable Fill: 3275.44 mm2 Note: See Mark 1

Cable/Ckt. No.:	Type:	Cable Area:
Pull rope	Soft-fiber polyester	0.00 mm2

Conduit/Tray No: 6540 **Ref Dwg(s):** EE-296A
Conduit/Tray Type: 103 mm Liquidtight flex metal conduit
Total Fill: .00 mm2
Allowable Fill: 3275.44 mm2 Note: See Mark 1

Cable/Ckt. No.:	Type:	Cable Area:
Pull rope	Soft-fiber polyester	0.00 mm2

Conduit/Tray No: 6541 **Ref Dwg(s):** EE-296A
Conduit/Tray Type: 103 mm Liquidtight flex metal conduit
Total Fill: .00 mm2
Allowable Fill: 3275.44 mm2 Note: See Mark 1

Cable/Ckt. No.:	Type:	Cable Area:
Pull rope	Soft-fiber polyester	0.00 mm2

Conduit/Tray No: 6542 **Ref Dwg(s):** EE-296A
Conduit/Tray Type: 103 mm GRS conduit
Total Fill: .00 mm2
Allowable Fill: 3324.51 mm2 Note: See Mark 1

Cable/Ckt. No.:	Type:	Cable Area:
Pull rope	Soft-fiber polyester	0.00 mm2

Conduit/Tray No: 6543 **Ref Dwg(s):** EE-296A
Conduit/Tray Type: 103 mm GRS conduit
Total Fill: .00 mm2
Allowable Fill: 3324.51 mm2 Note: See Note 1

Cable/Ckt. No.:	Type:	Cable Area:
Pull rope	Soft-fiber polyester	0.00 mm2

Conduit/Tray No: 6544 **Ref Dwg(s):** EE-296A
Conduit/Tray Type: 103 mm GRS conduit
Total Fill: .00 mm2
Allowable Fill: 3324.51 mm2 Note: See Mark 1

Cable/Ckt. No.:	Type:	Cable Area:
Pull rope	Soft-fiber polyester	0.00 mm2

Conduit/Tray No: 6545 **Ref Dwg(s):** EE-296A
Conduit/Tray Type: 103 mm GRS conduit
Total Fill: .00 mm2
Allowable Fill: 3324.51 mm2 Note: See Mark 1

Cable/Ckt. No.:	Type:	Cable Area:
Pull rope	Soft-fiber polyester	0.00 mm2

Conduit/Tray No: 6546 **Ref Dwg(s):** EE-296A
Conduit/Tray Type: 103 mm Liquidtight flex metal conduit
Total Fill: .00 mm2
Allowable Fill: 3275.44 mm2 Note: See Mark 1

Cable/Ckt. No.:	Type:	Cable Area:
Pull rope	Soft-fiber polyester	0.00 mm2

Conduit/Tray No: 6547 **Ref Dwg(s):** EE-296A
Conduit/Tray Type: 103 mm Liquidtight flex metal conduit
Total Fill: .00 mm2
Allowable Fill: 3275.44 mm2 Note: See Mark 1

Cable/Ckt. No.:	Type:	Cable Area:
Pull rope	Soft-fiber polyester	0.00 mm2

Conduit/Tray No: 6548 **Ref Dwg(s):** EE-296A
Conduit/Tray Type: 103 mm Liquidtight flex metal conduit
Total Fill: .00 mm2
Allowable Fill: 3275.44 mm2 Note: See Mark 1

Cable/Ckt. No.:	Type:	Cable Area:
Pull rope	Soft-fiber polyester	0.00 mm2

Conduit/Tray No: 6549 **Ref Dwg(s):** EE-296A
Conduit/Tray Type: 103 mm Liquidtight flex metal conduit
Total Fill: .00 mm2
Allowable Fill: 3275.44 mm2 Note: See Mark 1

Cable/Ckt. No.:	Type:	Cable Area:
Pull rope	Soft-fiber polyester	0.00 mm2

Conduit/Tray No: 6553 **Ref Dwg(s):** EE-296A
Conduit/Tray Type: 103 mm Liquidtight flex metal conduit
Total Fill: 2403.42 mm2
Allowable Fill: 3275.44 mm2 Note: See Mark 1

Cable/Ckt. No.:	Type:	Cable Area:
1474-14	50 pair #18, shielded pairs, IS/OS shield 600 V, XLPE insul., PVC jacket	1201.7mm2
1473-14	50 pair #18, shielded pairs, IS/OS shield 600 V, XLPE insul., PVC jacket	1201.7mm2

Conduit/Tray No: 6554 **Ref Dwg(s):** EE-296A
Conduit/Tray Type: 103 mm Liquidtight flex metal conduit
Total Fill: 647.30 mm2
Allowable Fill: 3275.44 mm2 Note: See Mark 1

Cable/Ckt. No.:	Type:	Cable Area:
1475-4	72 Fiber, single mode fiberoptic riser cable	323.65mm2
1477-3	72 Fiber, single mode fiberoptic riser cable	323.65mm2

Conduit/Tray No: 6555 **Ref Dwg(s):** EE-296A
Conduit/Tray Type: 103 mm Liquidtight flex metal conduit
Total Fill: .00 mm2
Allowable Fill: 3275.44 mm2 Note: See Mark 1

Cable/Ckt. No.:	Type:	Cable Area:
Pull rope	Soft-fiber polyester	0.00 mm2

Conduit/Tray No: 6556 **Ref Dwg(s):** EE-296A
Conduit/Tray Type: 103 mm Liquidtight flex metal conduit
Total Fill: .00 mm2
Allowable Fill: 3275.44 mm2 Note: See Mark 1

Cable/Ckt. No.:	Type:	Cable Area:
Pull rope	Soft-fiber polyester	0.00 mm2

Conduit/Tray No: 6557 **Ref Dwg(s):** EE-296A
Conduit/Tray Type: 103 mm Liquidtight flex metal conduit
Total Fill: .00 mm2
Allowable Fill: 3275.44 mm2 Note: See Mark 1

Cable/Ckt. No.:	Type:	Cable Area:
Pull rope	Soft-fiber polyester	0.00 mm2

Conduit/Tray No: 6558 **Ref Dwg(s):** EE-296A
Conduit/Tray Type: 103 mm GRS conduit
Total Fill: 2403.42 mm2
Allowable Fill: 3324.51 mm2 Note: See Mark 1

Cable/Ckt. No.:	Type:	Cable Area:
1473-14	50 pair #18, shielded pairs, IS/OS shield 600 V, XLPE insul., PVC jacket	1201.7mm2
1474-14	50 pair #18, shielded pairs, IS/OS shield 600 V, XLPE insul., PVC jacket	1201.7mm2

Conduit/Tray No: 6559 **Ref Dwg(s):** EE-296A
Conduit/Tray Type: 103 mm GRS conduit
Total Fill: 647.30 mm2
Allowable Fill: 3324.51 mm2 Note: See Mark 1

Cable/Ckt. No.:	Type:	Cable Area:
1475-4	72 Fiber, single mode fiberoptic riser cable	323.65mm2
1477-3	72 Fiber, single mode fiberoptic riser cable	323.65mm2

Conduit/Tray No: 6560 **Ref Dwg(s):** EE-296A
Conduit/Tray Type: 103 mm GRS conduit
Total Fill: .00 mm2
Allowable Fill: 3324.51 mm2 Note: See Mark 1

Cable/Ckt. No.:	Type:	Cable Area:
Pull rope	Soft-fiber polyester	0.00 mm2

Conduit/Tray No: 6561 **Ref Dwg(s):** EE-296A
Conduit/Tray Type: 103 mm GRS conduit
Total Fill: .00 mm2
Allowable Fill: 3324.51 mm2 Note: See Mark 1

Cable/Ckt. No.:	Type:	Cable Area:
Pull rope	Soft-fiber polyester	0.00 mm2

Conduit/Tray No: 6562 **Ref Dwg(s):** EE-296A
Conduit/Tray Type: 103 mm GRS conduit
Total Fill: .00 mm2
Allowable Fill: 3324.51 mm2 Note: See Mark 1

Cable/Ckt. No.:	Type:	Cable Area:
Pull rope	Soft-fiber polyester	0.00 mm2

Conduit/Tray No: 6563 **Ref Dwg(s):** EE-296A
Conduit/Tray Type: 103 mm Liquidtight flex metal conduit
Total Fill: 2403.42 mm2
Allowable Fill: 3275.44 mm2 Note: See Mark 1

Cable/Ckt. No.:	Type:	Cable Area:
1474-14	50 pair #18, shielded pairs, IS/OS shield 600 V, XLPE insul., PVC jacket	1201.7mm2
1473-14	50 pair #18, shielded pairs, IS/OS shield 600 V, XLPE insul., PVC jacket	1201.7mm2

Conduit/Tray No: 6564 **Ref Dwg(s):** EE-296A
Conduit/Tray Type: 103 mm Liquidtight flex metal conduit
Total Fill: 647.30 mm2
Allowable Fill: 3275.44 mm2 Note: See Mark 1

Cable/Ckt. No.:	Type:	Cable Area:
1475-4	72 Fiber, single mode fiberoptic riser cable	323.65mm2
1477-3	72 Fiber, single mode fiberoptic riser cable	323.65mm2

Conduit/Tray No: 6565 **Ref Dwg(s):** EE-296A
Conduit/Tray Type: 103 mm Liquidtight flex metal conduit
Total Fill: .00 mm2
Allowable Fill: 3275.44 mm2 Note: See Mark 1

Cable/Ckt. No.:	Type:	Cable Area:
Pull rope	Soft-fiber polyester	0.00 mm2

Conduit/Tray No: 6566 **Ref Dwg(s):** EE-296A
Conduit/Tray Type: 103 mm Liquidtight flex metal conduit
Total Fill: .00 mm2
Allowable Fill: 3275.44 mm2 Note: See Mark 1

Cable/Ckt. No.:	Type:	Cable Area:
Pull rope	Soft-fiber polyester	0.00 mm2

Conduit/Tray No: 6567 **Ref Dwg(s):** EE-296A
Conduit/Tray Type: 103 mm Liquidtight flex metal conduit
Total Fill: .00 mm2
Allowable Fill: 3275.44 mm2 Note: See Mark 1

Cable/Ckt. No.:	Type:	Cable Area:
Pull rope	Soft-fiber polyester	0.00 mm2

Conduit/Tray No: 6571 **Ref Dwg(s):** EE-296A

Conduit/Tray Type: 103 mm Liquidtight flex metal conduit

Total Fill: 2797.44 mm2

Allowable Fill: 3275.44 mm2 Note: See Mark 1

Cable/Ckt. No.:	Type:	Cable Area:
1332	1-3/C+gnd #2/0, 600 V, EPR insulation	882.89mm2
1466-1	1-3/C #16, 600 V, EPR insulation	62.07 mm2
A-1353	1-3/C+gnd #4, 600 V, EPR insulation	366.1 mm2
A-1354	1-3/C+gnd #4, 600 V, EPR insulation	366.1 mm2
S-1302A	1-3/C+gnd #4, 600 V, EPR insulation	366.1 mm2
1321	1-3/C+gnd #1/0, 600 V, EPR insulation	754.18mm2

Conduit/Tray No: 6572 **Ref Dwg(s):** EE-296A

Conduit/Tray Type: 103 mm Liquidtight flex metal conduit

Total Fill: 3163.08 mm2

Allowable Fill: 3275.44 mm2 Note: See Mark 1

Cable/Ckt. No.:	Type:	Cable Area:
1323	1-3/C+gnd #2, 600 V, EPR insulation	527.18mm2
1322	1-3/C+gnd #2, 600 V, EPR insulation	527.18mm2
S-1301A	1-3/C+gnd #2, 600 V, EPR insulation	527.18mm2
1335	1-3/C+gnd #2, 600 V, EPR insulation	527.18mm2
A-1351	1-3/C+gnd #2, 600 V, EPR insulation	527.18mm2
A-1352	1-3/C+gnd #2, 600 V, EPR insulation	527.18mm2

Conduit/Tray No: 6573 **Ref Dwg(s):** EE-296A

Conduit/Tray Type: 103 mm Liquidtight flex metal conduit

Total Fill: .00 mm2

Allowable Fill: 3275.44 mm2 Note: See Mark 1

Cable/Ckt. No.:	Type:	Cable Area:
Pull rope	Soft-fiber polyester	0.00 mm2

Conduit/Tray No: 6574 **Ref Dwg(s):** EE-296A

Conduit/Tray Type: 103 mm Liquidtight flex metal conduit

Total Fill: .00 mm2

Allowable Fill: 3275.44 mm2 Note: See Mark 1

Cable/Ckt. No.:	Type:	Cable Area:
Pull rope	Soft-fiber polyester	0.00 mm2

Conduit/Tray No: 6575 **Ref Dwg(s):** EE-296A

Conduit/Tray Type: 103 mm GRS conduit

Total Fill: 2797.44 mm2

Allowable Fill: 3324.51 mm2 Note: See Mark 1

Cable/Ckt. No.:	Type:	Cable Area:
1332	1-3/C+gnd #2/0, 600 V, EPR insulation	882.89mm2
1466-1	1-3/C #16, 600 V, EPR insulation	62.07 mm2
A-1353	1-3/C+gnd #4, 600 V, EPR insulation	366.1 mm2
A-1354	1-3/C+gnd #4, 600 V, EPR insulation	366.1 mm2
S-1302A	1-3/C+gnd #4, 600 V, EPR insulation	366.1 mm2
1321	1-3/C+gnd #1/0, 600 V, EPR insulation	754.18mm2

Conduit/Tray No: 6576 **Ref Dwg(s):** EE-296A

Conduit/Tray Type: 103 mm GRS conduit

Total Fill: 3163.08 mm2

Allowable Fill: 3324.51 mm2 Note: See Mark 1

Cable/Ckt. No.:	Type:	Cable Area:
A-1351	1-3/C+gnd #2, 600 V, EPR insulation	527.18mm2
1322	1-3/C+gnd #2, 600 V, EPR insulation	527.18mm2
A-1352	1-3/C+gnd #2, 600 V, EPR insulation	527.18mm2
1335	1-3/C+gnd #2, 600 V, EPR insulation	527.18mm2
1323	1-3/C+gnd #2, 600 V, EPR insulation	527.18mm2
S-1301A	1-3/C+gnd #2, 600 V, EPR insulation	527.18mm2

Conduit/Tray No: 6577 **Ref Dwg(s):** EE-296A
Conduit/Tray Type: 103 mm GRS conduit
Total Fill: .00 mm2
Allowable Fill: 3324.51 mm2 Note: See Mark 1

Cable/Ckt. No.:	Type:	Cable Area:
Pull rope	Soft-fiber polyester	0.00 mm2

Conduit/Tray No: 6578 **Ref Dwg(s):** EE-296A
Conduit/Tray Type: 103 mm Liquidtight flex metal conduit
Total Fill: .00 mm2
Allowable Fill: 3275.44 mm2 Note: See Mark 1

Cable/Ckt. No.:	Type:	Cable Area:
Pull rope	Soft-fiber polyester	0.00 mm2

Conduit/Tray No: 6579 **Ref Dwg(s):** EE-296A
Conduit/Tray Type: 103 mm Liquidtight flex metal conduit
Total Fill: 2797.44 mm2
Allowable Fill: 3275.44 mm2 Note: See Mark 1

Cable/Ckt. No.:	Type:	Cable Area:
S-1302A	1-3/C+gnd #4, 600 V, EPR insulation	366.1 mm2
1321	1-3/C+gnd #1/0, 600 V, EPR insulation	754.18mm2
1332	1-3/C+gnd #2/0, 600 V, EPR insulation	882.89mm2
1466-1	1-3/C #16, 600 V, EPR insulation	62.07 mm2
A-1353	1-3/C+gnd #4, 600 V, EPR insulation	366.1 mm2
A-1354	1-3/C+gnd #4, 600 V, EPR insulation	366.1 mm2

Conduit/Tray No: 6580 **Ref Dwg(s):** EE-296A
Conduit/Tray Type: 103 mm Liquidtight flex metal conduit
Total Fill: 3163.08 mm2
Allowable Fill: 3275.44 mm2 Note: See Mark 1

Cable/Ckt. No.:	Type:	Cable Area:
A-1352	1-3/C+gnd #2, 600 V, EPR insulation	527.18mm2
S-1301A	1-3/C+gnd #2, 600 V, EPR insulation	527.18mm2
1335	1-3/C+gnd #2, 600 V, EPR insulation	527.18mm2
1322	1-3/C+gnd #2, 600 V, EPR insulation	527.18mm2
1323	1-3/C+gnd #2, 600 V, EPR insulation	527.18mm2
A-1351	1-3/C+gnd #2, 600 V, EPR insulation	527.18mm2

Conduit/Tray No: 6581 **Ref Dwg(s):** EE-296A
Conduit/Tray Type: 103 mm Liquidtight flex metal conduit
Total Fill: .00 mm2
Allowable Fill: 3275.44 mm2 Note: See Mark 1

Cable/Ckt. No.:	Type:	Cable Area:
Pull rope	Soft-fiber polyester	0.00 mm2

Conduit/Tray No: 6582 **Ref Dwg(s):** EE-296A
Conduit/Tray Type: 103 mm Liquidtight flex metal conduit
Total Fill: .00 mm2
Allowable Fill: 3275.44 mm2 Note: See Mark 1

Cable/Ckt. No.:	Type:	Cable Area:
Pull rope	Soft-fiber polyester	0.00 mm2

Conduit/Tray No: 6586 **Ref Dwg(s):** EE-297A
Conduit/Tray Type: 103 mm Liquidtight flex metal conduit
Total Fill: 2628.48 mm2
Allowable Fill: 3275.44 mm2 Note: See Mark 1

Cable/Ckt. No.:	Type:	Cable Area:
1392	3-1/C #4/0, 15 kV, EPR Insulation	2628.4mm2

Conduit/Tray No: 6587 **Ref Dwg(s):** EE-297A
Conduit/Tray Type: 103 mm GRS conduit
Total Fill: 2628.48 mm2
Allowable Fill: 3324.51 mm2 Note: See Mark 1

Cable/Ckt. No.:	Type:	Cable Area:
1392	3-1/C #4/0, 15 kV, EPR Insulation	2628.4mm2

Conduit/Tray No: 6588 **Ref Dwg(s):** EE-297A
Conduit/Tray Type: 103 mm Liquidtight flex metal conduit
Total Fill: 2628.48 mm2
Allowable Fill: 3275.44 mm2 Note: See Mark 1

Cable/Ckt. No.:	Type:	Cable Area:
1392	3-1/C #4/0, 15 kV, EPR Insulation	2628.4mm2

Conduit/Tray No: 6594 **Ref Dwg(s):** EE-297A
Conduit/Tray Type: 103 mm Liquidtight flex metal conduit
Total Fill: .00 mm2
Allowable Fill: 3275.44 mm2 Note: See Mark 1

Cable/Ckt. No.:	Type:	Cable Area:
Pull rope	Soft-fiber polyester	0.00 mm2

Conduit/Tray No: 6595 **Ref Dwg(s):** EE-297A
Conduit/Tray Type: 103 mm Liquidtight flex metal conduit
Total Fill: .00 mm2
Allowable Fill: 3275.44 mm2 Note: See Mark 1

Cable/Ckt. No.:	Type:	Cable Area:
Pull rope	Soft-fiber polyester	0.00 mm2

Conduit/Tray No: 6596 **Ref Dwg(s):** EE-297A
Conduit/Tray Type: 103 mm Liquidtight flex metal conduit
Total Fill: .00 mm2
Allowable Fill: 3275.44 mm2 Note: See Mark 1

Cable/Ckt. No.:	Type:	Cable Area:
Pull rope	Soft-fiber polyester	0.00 mm2

Conduit/Tray No: 6597 **Ref Dwg(s):** EE-297A
Conduit/Tray Type: 103 mm Liquidtight flex metal conduit
Total Fill: .00 mm2
Allowable Fill: 3275.44 mm2 Note: See Mark 1

Cable/Ckt. No.:	Type:	Cable Area:
Pull rope	Soft-fiber polyester	0.00 mm2

Conduit/Tray No: 6598 **Ref Dwg(s):** EE-297A
Conduit/Tray Type: 103 mm GRS conduit
Total Fill: .00 mm2
Allowable Fill: 3324.51 mm2 Note: See Mark 1

Cable/Ckt. No.:	Type:	Cable Area:
Pull rope	Soft-fiber polyester	0.00 mm2

Conduit/Tray No: 6599 **Ref Dwg(s):** EE-297A
Conduit/Tray Type: 103 mm GRS conduit
Total Fill: .00 mm2
Allowable Fill: 3324.51 mm2 Note: See Mark 1

Cable/Ckt. No.:	Type:	Cable Area:
Pull rope	Soft-fiber polyester	0.00 mm2

Conduit/Tray No: 6600 **Ref Dwg(s):** EE-297A
Conduit/Tray Type: 103 mm GRS conduit
Total Fill: .00 mm2
Allowable Fill: 3324.51 mm2 Note: See Mark 1

Cable/Ckt. No.:	Type:	Cable Area:
Pull rope	Soft-fiber polyester	0.00 mm2

Conduit/Tray No: 6601 **Ref Dwg(s):** EE-297A
Conduit/Tray Type: 103 mm GRS conduit
Total Fill: .00 mm2
Allowable Fill: 3324.51 mm2 Note: See Mark 1

Cable/Ckt. No.:	Type:	Cable Area:
Pull rope	Soft-fiber polyester	0.00 mm2

Conduit/Tray No: 6602 **Ref Dwg(s):** EE-297A
Conduit/Tray Type: 103 mm Liquidtight flex metal conduit
Total Fill: .00 mm2
Allowable Fill: 3275.44 mm2 Note: See Mark 1

Cable/Ckt. No.:	Type:	Cable Area:
Pull rope	Soft-fiber polyester	0.00 mm2

Conduit/Tray No: 6603 **Ref Dwg(s):** EE-297A
Conduit/Tray Type: 103 mm Liquidtight flex metal conduit
Total Fill: .00 mm2
Allowable Fill: 3275.44 mm2 Note: See Mark 1

Cable/Ckt. No.:	Type:	Cable Area:
Pull rope	Soft-fiber polyester	0.00 mm2

Conduit/Tray No: 6604 **Ref Dwg(s):** EE-297A
Conduit/Tray Type: 103 mm Liquidtight flex metal conduit
Total Fill: .00 mm2
Allowable Fill: 3275.44 mm2 Note: See Mark 1

Cable/Ckt. No.:	Type:	Cable Area:
Pull rope	Soft-fiber polyester	0.00 mm2

Conduit/Tray No: 6605 **Ref Dwg(s):** EE-297A
Conduit/Tray Type: 103 mm Liquidtight flex metal conduit
Total Fill: .00 mm2
Allowable Fill: 3275.44 mm2 Note: See Mark 1

Cable/Ckt. No.:	Type:	Cable Area:
Pull rope	Soft-fiber polyester	0.00 mm2

Conduit/Tray No: 6609 **Ref Dwg(s):** EE-297A
Conduit/Tray Type: 103 mm Liquidtight flex metal conduit
Total Fill: 2599.62 mm2
Allowable Fill: 3275.44 mm2 Note: See Mark 1

Cable/Ckt. No.:	Type:	Cable Area:
1416	1 - 2 pair, shielded #18 with IS/OA , 600 V, PVC jacket	98.1 mm2
1474-18	50 pair #18, shielded pairs, IS/OS shield 600 V, XLPE insul., PVC jacket	1201.7mm2
1473-18	50 pair #18, shielded pairs, IS/OS shield 600 V, XLPE insul., PVC jacket	1201.7mm2
1412	1 - 2 pair, shielded #18 with IS/OA , 600 V, PVC jacket	98.1 mm2

Conduit/Tray No: 6610 **Ref Dwg(s):** EE-297A
Conduit/Tray Type: 103 mm Liquidtight flex metal conduit
Total Fill: 647.30 mm2
Allowable Fill: 3275.44 mm2 Note: See Mark 1

Cable/Ckt. No.:	Type:	Cable Area:
1475-4	72 Fiber, single mode fiberoptic riser cable	323.65mm2
1477-3	72 Fiber, single mode fiberoptic riser cable	323.65mm2

Conduit/Tray No: 6611 **Ref Dwg(s):** EE-297A
Conduit/Tray Type: 103 mm Liquidtight flex metal conduit
Total Fill: .00 mm2
Allowable Fill: 3275.44 mm2 Note: See Mark 1

Cable/Ckt. No.:	Type:	Cable Area:
Pull rope	Soft-fiber polyester	0.00 mm2

Conduit/Tray No: 6612 **Ref Dwg(s):** EE-297A
Conduit/Tray Type: 103 mm Liquidtight flex metal conduit
Total Fill: .00 mm2
Allowable Fill: 3275.44 mm2 Note: See Mark 1

Cable/Ckt. No.:	Type:	Cable Area:
Pull rope	Soft-fiber polyester	0.00 mm2

Conduit/Tray No: 6613 **Ref Dwg(s):** EE-297A
Conduit/Tray Type: 103 mm Liquidtight flex metal conduit
Total Fill: .00 mm2
Allowable Fill: 3275.44 mm2 Note: See Mark 1

Cable/Ckt. No.:	Type:	Cable Area:
Pull rope	Soft-fiber polyester	0.00 mm2

Conduit/Tray No: 6614 **Ref Dwg(s):** EE-297A
Conduit/Tray Type: 103 mm GRS conduit
Total Fill: 2599.62 mm2
Allowable Fill: 3324.51 mm2 Note: See Mark 1

Cable/Ckt. No.:	Type:	Cable Area:
1412	1 - 2 pair, shielded #18 with IS/OA , 600 V, PVC jacket	98.1 mm2
1416	1 - 2 pair, shielded #18 with IS/OA , 600 V, PVC jacket	98.1 mm2
1473-18	50 pair #18, shielded pairs, IS/OS shield 600 V, XLPE insul., PVC jacket	1201.7mm2
1474-18	50 pair #18, shielded pairs, IS/OS shield 600 V, XLPE insul., PVC jacket	1201.7mm2

Conduit/Tray No: 6615 **Ref Dwg(s):** EE-297A
Conduit/Tray Type: 103 mm GRS conduit
Total Fill: 647.30 mm2
Allowable Fill: 3324.51 mm2 Note: See Mark 1

Cable/Ckt. No.:	Type:	Cable Area:
1477-3	72 Fiber, single mode fiberoptic riser cable	323.65mm2
1475-4	72 Fiber, single mode fiberoptic riser cable	323.65mm2

Conduit/Tray No: 6616 **Ref Dwg(s):** EE-297A
Conduit/Tray Type: 103 mm GRS conduit
Total Fill: .00 mm2
Allowable Fill: 3324.51 mm2 Note: See Mark 1

Cable/Ckt. No.:	Type:	Cable Area:
Pull rope	Soft-fiber polyester	0.00 mm2

Conduit/Tray No: 6617 **Ref Dwg(s):** EE-297A
Conduit/Tray Type: 103 mm GRS conduit
Total Fill: .00 mm2
Allowable Fill: 3324.51 mm2 Note: See Mark 1

Cable/Ckt. No.:	Type:	Cable Area:
Pull rope	Soft-fiber polyester	0.00 mm2

Conduit/Tray No: 6618 **Ref Dwg(s):** EE-297A
Conduit/Tray Type: 103 mm GRS conduit
Total Fill: .00 mm2
Allowable Fill: 3324.51 mm2 Note: See Mark 1

Cable/Ckt. No.:	Type:	Cable Area:
Pull rope	Soft-fiber polyester	0.00 mm2

Conduit/Tray No: 6619 **Ref Dwg(s):** EE-297A
Conduit/Tray Type: 103 mm Liquidtight flex metal conduit
Total Fill: 2599.62 mm2
Allowable Fill: 3275.44 mm2 Note: See Mark 1

Cable/Ckt. No.:	Type:	Cable Area:
1412	1 - 2 pair, shielded #18 with IS/OA , 600 V, PVC jacket	98.1 mm2
1416	1 - 2 pair, shielded #18 with IS/OA , 600 V, PVC jacket	98.1 mm2
1473-18	50 pair #18, shielded pairs, IS/OS shield 600 V, XLPE insul., PVC jacket	1201.7mm2
1474-18	50 pair #18, shielded pairs, IS/OS shield 600 V, XLPE insul., PVC jacket	1201.7mm2

Conduit/Tray No: 6620 **Ref Dwg(s):** EE-297A
Conduit/Tray Type: 103 mm Liquidtight flex metal conduit
Total Fill: 647.30 mm2
Allowable Fill: 3275.44 mm2 Note: See Mark 1

Cable/Ckt. No.:	Type:	Cable Area:
1475-4	72 Fiber, single mode fiberoptic riser cable	323.65mm2
1477-3	72 Fiber, single mode fiberoptic riser cable	323.65mm2

Conduit/Tray No: 6622 **Ref Dwg(s):** EE-297A
Conduit/Tray Type: 103 mm Liquidtight flex metal conduit
Total Fill: .00 mm2
Allowable Fill: 3275.44 mm2 Note: See Mark 1

Cable/Ckt. No.:	Type:	Cable Area:
Pull rope	Soft-fiber polyester	0.00 mm2

Conduit/Tray No: 6623 **Ref Dwg(s):** EE-297A
Conduit/Tray Type: 103 mm Liquidtight flex metal conduit
Total Fill: .00 mm2
Allowable Fill: 3275.44 mm2 Note: See Mark 1

Cable/Ckt. No.:	Type:	Cable Area:
Pull rope	Soft-fiber polyester	0.00 mm2

Conduit/Tray No: 6627 **Ref Dwg(s):** EE-297A
Conduit/Tray Type: 103 mm Liquidtight flex metal conduit
Total Fill: 3145.43 mm2
Allowable Fill: 3275.44 mm2 Note: See Mark 1

Cable/Ckt. No.:	Type:	Cable Area:
1330	1-3/C+gnd #1/0, 600 V, EPR insulation	754.18mm2
1331	1-3/C+gnd #2/0, 600 V, EPR insulation	882.89mm2
1328	1-3/C+gnd #1/0, 600 V, EPR insulation	754.18mm2
1329	1-3/C+gnd #1/0, 600 V, EPR insulation	754.18mm2

Conduit/Tray No: 6628 **Ref Dwg(s):** EE-297A

Conduit/Tray Type: 103 mm Liquidtight flex metal conduit

Total Fill: 3163.08 mm2

Allowable Fill: 3275.44 mm2 Note: See Mark 1

Cable/Ckt. No.:	Type:	Cable Area:
1327	1-3/C+gnd #2, 600 V, EPR insulation	527.18mm2
A-1358	1-3/C+gnd #2, 600 V, EPR insulation	527.18mm2
A-1359	1-3/C+gnd #2, 600 V, EPR insulation	527.18mm2
A-1360	1-3/C+gnd #2, 600 V, EPR insulation	527.18mm2
A-1361	1-3/C+gnd #2, 600 V, EPR insulation	527.18mm2
A-1362	1-3/C+gnd #2, 600 V, EPR insulation	527.18mm2

Conduit/Tray No: 6629 **Ref Dwg(s):** EE-297A

Conduit/Tray Type: 103 mm Liquidtight flex metal conduit

Total Fill: 2098.53 mm2

Allowable Fill: 3275.44 mm2 Note: See Mark 1

Cable/Ckt. No.:	Type:	Cable Area:
S-1305A	1-3/C+gnd #2, 600 V, EPR insulation	527.18mm2
UP138-4A.	1-2/C+gnd #8, 600 V, EPR insulation	227.46mm2
S-1306A	1-3/C+gnd #2, 600 V, EPR insulation	527.18mm2
1467-2	1-3/C #16, 600 V, EPR insulation	62.07 mm2
UP138-2A	1-2/C+gnd #8, 600 V, EPR insulation	227.46mm2
S-1307A	1-3/C+gnd #2, 600 V, EPR insulation	527.18mm2

Conduit/Tray No: 6630 **Ref Dwg(s):** EE-297A

Conduit/Tray Type: 103 mm Liquidtight flex metal conduit

Total Fill: .00 mm2

Allowable Fill: 3275.44 mm2 Note: See Mark 1

Cable/Ckt. No.:	Type:	Cable Area:
Pull rope	Soft-fiber polyester	0.00 mm2

Conduit/Tray No: 6631 **Ref Dwg(s):** EE-297A

Conduit/Tray Type: 103 mm GRS conduit

Total Fill: 3145.43 mm2

Allowable Fill: 3324.51 mm2 Note: See Mark 1

Cable/Ckt. No.:	Type:	Cable Area:
1328	1-3/C+gnd #1/0, 600 V, EPR insulation	754.18mm2
1329	1-3/C+gnd #1/0, 600 V, EPR insulation	754.18mm2
1330	1-3/C+gnd #1/0, 600 V, EPR insulation	754.18mm2
1331	1-3/C+gnd #2/0, 600 V, EPR insulation	882.89mm2

Conduit/Tray No: 6632 **Ref Dwg(s):** EE-297A

Conduit/Tray Type: 103 mm GRS conduit

Total Fill: 3163.08 mm2

Allowable Fill: 3324.51 mm2 Note: See Mark 1

Cable/Ckt. No.:	Type:	Cable Area:
A-1360	1-3/C+gnd #2, 600 V, EPR insulation	527.18mm2
A-1361	1-3/C+gnd #2, 600 V, EPR insulation	527.18mm2
A-1362	1-3/C+gnd #2, 600 V, EPR insulation	527.18mm2
A-1358	1-3/C+gnd #2, 600 V, EPR insulation	527.18mm2
1327	1-3/C+gnd #2, 600 V, EPR insulation	527.18mm2
A-1359	1-3/C+gnd #2, 600 V, EPR insulation	527.18mm2

Conduit/Tray No: 6633 **Ref Dwg(s):** EE-297A

Conduit/Tray Type: 103 mm GRS conduit

Total Fill: 2098.53 mm2

Allowable Fill: 3324.51 mm2 Note: See Mark 1

Cable/Ckt. No.:	Type:	Cable Area:
1467-2	1-3/C #16, 600 V, EPR insulation	62.07 mm2
S-1305A	1-3/C+gnd #2, 600 V, EPR insulation	527.18mm2
S-1306A	1-3/C+gnd #2, 600 V, EPR insulation	527.18mm2
S-1307A	1-3/C+gnd #2, 600 V, EPR insulation	527.18mm2
UP138-2A	1-2/C+gnd #8, 600 V, EPR insulation	227.46mm2
UP138-4A.	1-2/C+gnd #8, 600 V, EPR insulation	227.46mm2

Conduit/Tray No: 6634 **Ref Dwg(s):** EE-297A

Conduit/Tray Type: 103 mm GRS conduit

Total Fill: .00 mm2

Allowable Fill: 3324.51 mm2 Note: See Mark 1

Cable/Ckt. No.:	Type:	Cable Area:
Pull rope	Soft-fiber polyester	0.00 mm2

Conduit/Tray No: 6635 **Ref Dwg(s):** EE-297A

Conduit/Tray Type: 103 mm Liquidtight flex metal conduit

Total Fill: 3145.43 mm2

Allowable Fill: 3275.44 mm2 Note: See Mark 1

Cable/Ckt. No.:	Type:	Cable Area:
1330	1-3/C+gnd #1/0, 600 V, EPR insulation	754.18mm2
1331	1-3/C+gnd #2/0, 600 V, EPR insulation	882.89mm2
1329	1-3/C+gnd #1/0, 600 V, EPR insulation	754.18mm2
1328	1-3/C+gnd #1/0, 600 V, EPR insulation	754.18mm2

Conduit/Tray No: 6636 **Ref Dwg(s):** EE-297A

Conduit/Tray Type: 103 mm Liquidtight flex metal conduit

Total Fill: 3163.08 mm2

Allowable Fill: 3275.44 mm2 Note: See Mark 1

Cable/Ckt. No.:	Type:	Cable Area:
A-1358	1-3/C+gnd #2, 600 V, EPR insulation	527.18mm2
A-1359	1-3/C+gnd #2, 600 V, EPR insulation	527.18mm2
A-1360	1-3/C+gnd #2, 600 V, EPR insulation	527.18mm2
A-1361	1-3/C+gnd #2, 600 V, EPR insulation	527.18mm2
A-1362	1-3/C+gnd #2, 600 V, EPR insulation	527.18mm2
1327	1-3/C+gnd #2, 600 V, EPR insulation	527.18mm2

Conduit/Tray No: 6637 **Ref Dwg(s):** EE-297A

Conduit/Tray Type: 103 mm Liquidtight flex metal conduit

Total Fill: 2098.53 mm2

Allowable Fill: 3275.44 mm2 Note: See Mark 1

Cable/Ckt. No.:	Type:	Cable Area:
UP138-4A.	1-2/C+gnd #8, 600 V, EPR insulation	227.46mm2
1467-2	1-3/C #16, 600 V, EPR insulation	62.07 mm2
S-1305A	1-3/C+gnd #2, 600 V, EPR insulation	527.18mm2
S-1306A	1-3/C+gnd #2, 600 V, EPR insulation	527.18mm2
S-1307A	1-3/C+gnd #2, 600 V, EPR insulation	527.18mm2
UP138-2A	1-2/C+gnd #8, 600 V, EPR insulation	227.46mm2

Conduit/Tray No: 6638 **Ref Dwg(s):** EE-297A

Conduit/Tray Type: 103 mm Liquidtight flex metal conduit

Total Fill: .00 mm2

Allowable Fill: 3275.44 mm2 Note: See Mark 1

Cable/Ckt. No.:	Type:	Cable Area:
Pull rope	Soft-fiber polyester	0.00 mm2

Conduit/Tray No: 6642 **Ref Dwg(s):** EE-298A
Conduit/Tray Type: 103 mm Liquidtight flex metal conduit
Total Fill: 2628.48 mm2
Allowable Fill: 3275.44 mm2 Note: See Mark 1

Cable/Ckt. No.:	Type:	Cable Area:
1392	3-1/C #4/0, 15 kV, EPR Insulation	2628.4mm2

Conduit/Tray No: 6643 **Ref Dwg(s):** EE-298A
Conduit/Tray Type: 103 mm GRS conduit
Total Fill: 2628.48 mm2
Allowable Fill: 3324.51 mm2 Note: See Mark 1

Cable/Ckt. No.:	Type:	Cable Area:
1392	3-1/C #4/0, 15 kV, EPR Insulation	2628.4mm2

Conduit/Tray No: 6644 **Ref Dwg(s):** EE-298A
Conduit/Tray Type: 103 mm Liquidtight flex metal conduit
Total Fill: 2628.48 mm2
Allowable Fill: 3275.44 mm2 Note: See Mark 1

Cable/Ckt. No.:	Type:	Cable Area:
1392	3-1/C #4/0, 15 kV, EPR Insulation	2628.4mm2

Conduit/Tray No: 6651 **Ref Dwg(s):** EE-298A
Conduit/Tray Type: 103 mm Liquidtight flex metal conduit
Total Fill: .00 mm2
Allowable Fill: 3275.44 mm2 Note: See Mark 1

Cable/Ckt. No.:	Type:	Cable Area:
Pull rope	Soft-fiber polyester	0.00 mm2

Conduit/Tray No: 6652 **Ref Dwg(s):** EE-298A
Conduit/Tray Type: 103 mm Liquidtight flex metal conduit
Total Fill: .00 mm2
Allowable Fill: 3275.44 mm2 Note: See Mark 1

Cable/Ckt. No.:	Type:	Cable Area:
Pull rope	Soft-fiber polyester	0.00 mm2

Conduit/Tray No: 6653 **Ref Dwg(s):** EE-298A
Conduit/Tray Type: 103 mm Liquidtight flex metal conduit
Total Fill: .00 mm2
Allowable Fill: 3275.44 mm2 Note: See Mark 1

Cable/Ckt. No.:	Type:	Cable Area:
Pull rope	Soft-fiber polyester	0.00 mm2

Conduit/Tray No: 6654 **Ref Dwg(s):** EE-298A
Conduit/Tray Type: 103 mm Liquidtight flex metal conduit
Total Fill: .00 mm2
Allowable Fill: 3275.44 mm2 Note: See Mark 1

Cable/Ckt. No.:	Type:	Cable Area:
Pull rope	Soft-fiber polyester	0.00 mm2

Conduit/Tray No: 6655 **Ref Dwg(s):** EE-298A
Conduit/Tray Type: 103 mm GRS conduit
Total Fill: .00 mm2
Allowable Fill: 3324.51 mm2 Note: See Mark 1

Cable/Ckt. No.:	Type:	Cable Area:
Pull rope	Soft-fiber polyester	0.00 mm2

Conduit/Tray No: 6656 **Ref Dwg(s):** EE-298A
Conduit/Tray Type: 103 mm GRS conduit
Total Fill: .00 mm2
Allowable Fill: 3324.51 mm2 Note: See Mark 1

Cable/Ckt. No.:	Type:	Cable Area:
Pull rope	Soft-fiber polyester	0.00 mm2

Conduit/Tray No: 6657 **Ref Dwg(s):** EE-298A
Conduit/Tray Type: 103 mm GRS conduit
Total Fill: .00 mm2
Allowable Fill: 3324.51 mm2 Note: See Mark 1

Cable/Ckt. No.:	Type:	Cable Area:
Pull rope	Soft-fiber polyester	0.00 mm2

Conduit/Tray No: 6658 **Ref Dwg(s):** EE-298A
Conduit/Tray Type: 103 mm GRS conduit
Total Fill: .00 mm2
Allowable Fill: 3324.51 mm2 Note: See Mark 1

Cable/Ckt. No.:	Type:	Cable Area:
Pull rope	Soft-fiber polyester	0.00 mm2

Conduit/Tray No: 6659 **Ref Dwg(s):** EE-298A
Conduit/Tray Type: 103 mm Liquidtight flex metal conduit
Total Fill: .00 mm2
Allowable Fill: 3275.44 mm2 Note: See Mark 1

Cable/Ckt. No.:	Type:	Cable Area:
Pull rope	Soft-fiber polyester	0.00 mm2

Conduit/Tray No: 6660 **Ref Dwg(s):** EE-298A
Conduit/Tray Type: 103 mm Liquidtight flex metal conduit
Total Fill: .00 mm2
Allowable Fill: 3275.44 mm2 Note: See Mark 1

Cable/Ckt. No.:	Type:	Cable Area:
Pull rope	Soft-fiber polyester	0.00 mm2

Conduit/Tray No: 6661 **Ref Dwg(s):** EE-298A
Conduit/Tray Type: 103 mm Liquidtight flex metal conduit
Total Fill: .00 mm2
Allowable Fill: 3275.44 mm2 Note: See Mark 1

Cable/Ckt. No.:	Type:	Cable Area:
Pull rope	Soft-fiber polyester	0.00 mm2

Conduit/Tray No: 6662 **Ref Dwg(s):** EE-298A
Conduit/Tray Type: 103 mm Liquidtight flex metal conduit
Total Fill: .00 mm2
Allowable Fill: 3275.44 mm2 Note: See Mark 1

Cable/Ckt. No.:	Type:	Cable Area:
Pull rope	Soft-fiber polyester	0.00 mm2

Conduit/Tray No: 6667 **Ref Dwg(s):** EE-298A
Conduit/Tray Type: 103 mm Liquidtight flex metal conduit
Total Fill: 2599.62 mm2
Allowable Fill: 3275.44 mm2 Note: See Mark 1

Cable/Ckt. No.:	Type:	Cable Area:
1474-22	50 pair #18, shielded pairs, IS/OS shield 600 V, XLPE insul., PVC jacket	1201.7mm2
1473-22	50 pair #18, shielded pairs, IS/OS shield 600 V, XLPE insul., PVC jacket	1201.7mm2
1419	1 - 2 pair, shielded #18 with IS/OA , 600 V, PVC jacket	98.1 mm2
1422	1 - 2 pair, shielded #18 with IS/OA , 600 V, PVC jacket	98.1 mm2

Conduit/Tray No: 6668 **Ref Dwg(s):** EE-298A
Conduit/Tray Type: 103 mm Liquidtight flex metal conduit
Total Fill: 647.30 mm2
Allowable Fill: 3275.44 mm2 Note: See Mark 1

Cable/Ckt. No.:	Type:	Cable Area:
1475-4	72 Fiber, single mode fiberoptic riser cable	323.65mm2
1477-3	72 Fiber, single mode fiberoptic riser cable	323.65mm2

Conduit/Tray No: 6669 **Ref Dwg(s):** EE-298A
Conduit/Tray Type: 103 mm Liquidtight flex metal conduit
Total Fill: .00 mm2
Allowable Fill: 3275.44 mm2 Note: See Mark 1

Cable/Ckt. No.:	Type:	Cable Area:
Pull rope	Soft-fiber polyester	0.00 mm2

Conduit/Tray No: 6670 **Ref Dwg(s):** EE-298A
Conduit/Tray Type: 103 mm Liquidtight flex metal conduit
Total Fill: .00 mm2
Allowable Fill: 3275.44 mm2 Note: See Mark 1

Cable/Ckt. No.:	Type:	Cable Area:
Pull rope	Soft-fiber polyester	0.00 mm2

Conduit/Tray No: 6671 **Ref Dwg(s):** EE-298A
Conduit/Tray Type: 103 mm Liquidtight flex metal conduit
Total Fill: .00 mm2
Allowable Fill: 3275.44 mm2 Note: See Mark 1

Cable/Ckt. No.:	Type:	Cable Area:
Pull rope	Soft-fiber polyester	0.00 mm2

Conduit/Tray No: 6672 **Ref Dwg(s):** EE-298A
Conduit/Tray Type: 103 mm GRS conduit
Total Fill: 2599.62 mm2
Allowable Fill: 3324.51 mm2 Note: See Mark 1

Cable/Ckt. No.:	Type:	Cable Area:
1473-22	50 pair #18, shielded pairs, IS/OS shield 600 V, XLPE insul., PVC jacket	1201.7mm2
1474-22	50 pair #18, shielded pairs, IS/OS shield 600 V, XLPE insul., PVC jacket	1201.7mm2
1419	1 - 2 pair, shielded #18 with IS/OA , 600 V, PVC jacket	98.1 mm2
1422	1 - 2 pair, shielded #18 with IS/OA , 600 V, PVC jacket	98.1 mm2

Conduit/Tray No: 6673 **Ref Dwg(s):** EE-298A
Conduit/Tray Type: 103 mm GRS conduit
Total Fill: 647.30 mm2
Allowable Fill: 3324.51 mm2 Note: See Mark 1

Cable/Ckt. No.:	Type:	Cable Area:
1475-4	72 Fiber, single mode fiberoptic riser cable	323.65mm2
1477-3	72 Fiber, single mode fiberoptic riser cable	323.65mm2

Conduit/Tray No: 6674 **Ref Dwg(s):** EE-298A
Conduit/Tray Type: 103 mm GRS conduit
Total Fill: .00 mm2
Allowable Fill: 3324.51 mm2 Note: See Mark 1

Cable/Ckt. No.:	Type:	Cable Area:
Pull rope	Soft-fiber polyester	0.00 mm2

Conduit/Tray No: 6675 **Ref Dwg(s):** EE-298A
Conduit/Tray Type: 103 mm GRS conduit
Total Fill: .00 mm2
Allowable Fill: 3324.51 mm2 Note: See Mark 1

Cable/Ckt. No.:	Type:	Cable Area:
Pull rope	Soft-fiber polyester	0.00 mm2

Conduit/Tray No: 6676 **Ref Dwg(s):** EE-298A
Conduit/Tray Type: 103 mm GRS conduit
Total Fill: .00 mm2
Allowable Fill: 3324.51 mm2 Note: See Mark 1

Cable/Ckt. No.:	Type:	Cable Area:
Pull rope	Soft-fiber polyester	0.00 mm2

Conduit/Tray No: 6677 **Ref Dwg(s):** EE-298A
Conduit/Tray Type: 103 mm Liquidtight flex metal conduit
Total Fill: 2599.62 mm2
Allowable Fill: 3275.44 mm2 Note: See Mark 1

Cable/Ckt. No.:	Type:	Cable Area:
1419	1 - 2 pair, shielded #18 with IS/OA , 600 V, PVC jacket	98.1 mm2
1422	1 - 2 pair, shielded #18 with IS/OA , 600 V, PVC jacket	98.1 mm2
1473-22	50 pair #18, shielded pairs, IS/OS shield 600 V, XLPE insul., PVC jacket	1201.7mm2
1474-22	50 pair #18, shielded pairs, IS/OS shield 600 V, XLPE insul., PVC jacket	1201.7mm2

Conduit/Tray No: 6678 **Ref Dwg(s):** EE-298A
Conduit/Tray Type: 103 mm Liquidtight flex metal conduit
Total Fill: 647.30 mm2
Allowable Fill: 3275.44 mm2 Note: See Mark 1

Cable/Ckt. No.:	Type:	Cable Area:
1475-4	72 Fiber, single mode fiberoptic riser cable	323.65mm2
1477-3	72 Fiber, single mode fiberoptic riser cable	323.65mm2

Conduit/Tray No: 6679 **Ref Dwg(s):** EE-298A
Conduit/Tray Type: 103 mm Liquidtight flex metal conduit
Total Fill: .00 mm2
Allowable Fill: 3275.44 mm2 Note: See Mark 1

Cable/Ckt. No.:	Type:	Cable Area:
Pull rope	Soft-fiber polyester	0.00 mm2

Conduit/Tray No: 6680 **Ref Dwg(s):** EE-298A
Conduit/Tray Type: 103 mm Liquidtight flex metal conduit
Total Fill: .00 mm2
Allowable Fill: 3275.44 mm2 Note: See Mark 1

Cable/Ckt. No.:	Type:	Cable Area:
Pull rope	Soft-fiber polyester	0.00 mm2

Conduit/Tray No: 6681 **Ref Dwg(s):** EE-298A
Conduit/Tray Type: 103 mm Liquidtight flex metal conduit
Total Fill: .00 mm2
Allowable Fill: 3275.44 mm2 Note: See Mark 1

Cable/Ckt. No.:	Type:	Cable Area:
Pull rope	Soft-fiber polyester	0.00 mm2

Conduit/Tray No: 6685 **Ref Dwg(s):** EE-298A
Conduit/Tray Type: 103 mm Liquidtight flex metal conduit
Total Fill: 2454.24 mm2
Allowable Fill: 3275.44 mm2 Note: See Mark 1

Cable/Ckt. No.:	Type:	Cable Area:
1331	1-3/C+gnd #2/0, 600 V, EPR insulation	882.89mm2
UP142-2A	1-2/C+gnd #8, 600 V, EPR insulation	227.46mm2
1468-3	1-3/C #16, 600 V, EPR insulation	62.07 mm2
A-1362	1-3/C+gnd #2, 600 V, EPR insulation	527.18mm2
S-1307A	1-3/C+gnd #2, 600 V, EPR insulation	527.18mm2
UP142-4A.	1-2/C+gnd #8, 600 V, EPR insulation	227.46mm2

Conduit/Tray No: 6686 **Ref Dwg(s):** EE-298A
Conduit/Tray Type: 103 mm Liquidtight flex metal conduit
Total Fill: .00 mm2
Allowable Fill: 3275.44 mm2 Note: See Mark 1

Cable/Ckt. No.:	Type:	Cable Area:
Pull rope	Soft-fiber polyester	0.00 mm2

Conduit/Tray No: 6687 **Ref Dwg(s):** EE-298A
Conduit/Tray Type: 103 mm Liquidtight flex metal conduit
Total Fill: .00 mm2
Allowable Fill: 3275.44 mm2 Note: See Mark 1

Cable/Ckt. No.:	Type:	Cable Area:
Pull rope	Soft-fiber polyester	0.00 mm2

Conduit/Tray No: 6688 **Ref Dwg(s):** EE-298A
Conduit/Tray Type: 103 mm Liquidtight flex metal conduit
Total Fill: .00 mm2
Allowable Fill: 3275.44 mm2 Note: See Mark 1

Cable/Ckt. No.:	Type:	Cable Area:
Pull rope	Soft-fiber polyester	0.00 mm2

Conduit/Tray No: 6689 **Ref Dwg(s):** EE-298A
Conduit/Tray Type: 103 mm GRS conduit
Total Fill: 2454.24 mm2
Allowable Fill: 3324.51 mm2 Note: See Mark 1

Cable/Ckt. No.:	Type:	Cable Area:
S-1307A	1-3/C+gnd #2, 600 V, EPR insulation	527.18mm2
UP142-4A.	1-2/C+gnd #8, 600 V, EPR insulation	227.46mm2
UP142-2A	1-2/C+gnd #8, 600 V, EPR insulation	227.46mm2
1331	1-3/C+gnd #2/0, 600 V, EPR insulation	882.89mm2
1468-3	1-3/C #16, 600 V, EPR insulation	62.07 mm2
A-1362	1-3/C+gnd #2, 600 V, EPR insulation	527.18mm2

Conduit/Tray No: 6690 **Ref Dwg(s):** EE-298A
Conduit/Tray Type: 103 mm GRS conduit
Total Fill: .00 mm2
Allowable Fill: 3324.51 mm2 Note: See Mark 1

Cable/Ckt. No.:	Type:	Cable Area:
Pull rope	Soft-fiber polyester	0.00 mm2

Conduit/Tray No: 6691 **Ref Dwg(s):** EE-298A
Conduit/Tray Type: 103 mm GRS conduit
Total Fill: .00 mm2
Allowable Fill: 3324.51 mm2 Note: See Mark 1

Cable/Ckt. No.:	Type:	Cable Area:
Pull rope	Soft-fiber polyester	0.00 mm2

Conduit/Tray No: 6692 **Ref Dwg(s):** EE-298A
Conduit/Tray Type: 103 mm GRS conduit
Total Fill: .00 mm2
Allowable Fill: 3324.51 mm2 Note: See Mark 1

Cable/Ckt. No.:	Type:	Cable Area:
Pull rope	Soft-fiber polyester	0.00 mm2

Conduit/Tray No: 6693 **Ref Dwg(s):** EE-298A
Conduit/Tray Type: 103 mm Liquidtight flex metal conduit
Total Fill: 2454.24 mm2
Allowable Fill: 3275.44 mm2 Note: See Mark 1

Cable/Ckt. No.:	Type:	Cable Area:
UP142-2A	1-2/C+gnd #8, 600 V, EPR insulation	227.46mm2
UP142-4A.	1-2/C+gnd #8, 600 V, EPR insulation	227.46mm2
S-1307A	1-3/C+gnd #2, 600 V, EPR insulation	527.18mm2
A-1362	1-3/C+gnd #2, 600 V, EPR insulation	527.18mm2
1468-3	1-3/C #16, 600 V, EPR insulation	62.07 mm2
1331	1-3/C+gnd #2/0, 600 V, EPR insulation	882.89mm2

Conduit/Tray No: 6694 **Ref Dwg(s):** EE-298A
Conduit/Tray Type: 103 mm Liquidtight flex metal conduit
Total Fill: .00 mm2
Allowable Fill: 3275.44 mm2 Note: See Mark 1

Cable/Ckt. No.:	Type:	Cable Area:
Pull rope	Soft-fiber polyester	0.00 mm2

Conduit/Tray No: 6695 **Ref Dwg(s):** EE-298A
Conduit/Tray Type: 103 mm Liquidtight flex metal conduit
Total Fill: .00 mm2
Allowable Fill: 3275.44 mm2 Note: See Mark 1

Cable/Ckt. No.:	Type:	Cable Area:
Pull rope	Soft-fiber polyester	0.00 mm2

Conduit/Tray No: 6696 **Ref Dwg(s):** EE-298A
Conduit/Tray Type: 103 mm Liquidtight flex metal conduit
Total Fill: .00 mm2
Allowable Fill: 3275.44 mm2 Note: See Mark 1

Cable/Ckt. No.:	Type:	Cable Area:
Pull rope	Soft-fiber polyester	0.00 mm2

Conduit/Tray No: 6700 **Ref Dwg(s):** EE-299A
Conduit/Tray Type: 103 mm Liquidtight flex metal conduit
Total Fill: .00 mm2
Allowable Fill: 3275.44 mm2 Note: See Mark 1

Cable/Ckt. No.:	Type:	Cable Area:
Pull rope	Soft-fiber polyester	0.00 mm2

Conduit/Tray No: 6701 **Ref Dwg(s):** EE-299A
Conduit/Tray Type: 103 mm GRS conduit
Total Fill: .00 mm2
Allowable Fill: 3324.51 mm2 Note: See Mark 1

Cable/Ckt. No.:	Type:	Cable Area:
Pull rope	Soft-fiber polyester	0.00 mm2

Conduit/Tray No: 6706 **Ref Dwg(s):** EE-299A
Conduit/Tray Type: 103 mm Liquidtight flex metal conduit
Total Fill: .00 mm2
Allowable Fill: 3275.44 mm2 Note: See Mark 1

Cable/Ckt. No.:	Type:	Cable Area:
Pull rope	Soft-fiber polyester	0.00 mm2

Conduit/Tray No: 6707 **Ref Dwg(s):** EE-299A
Conduit/Tray Type: 103 mm Liquidtight flex metal conduit
Total Fill: .00 mm2
Allowable Fill: 3275.44 mm2 Note: See Mark 1

Cable/Ckt. No.:	Type:	Cable Area:
Pull rope	Soft-fiber polyester	0.00 mm2

Conduit/Tray No: 6708 **Ref Dwg(s):** EE-299A
Conduit/Tray Type: 103 mm Liquidtight flex metal conduit
Total Fill: .00 mm2
Allowable Fill: 3275.44 mm2 Note: See Mark 1

Cable/Ckt. No.:	Type:	Cable Area:
Pull rope	Soft-fiber polyester	0.00 mm2

Conduit/Tray No: 6709 **Ref Dwg(s):** EE-299A
Conduit/Tray Type: 103 mm Liquidtight flex metal conduit
Total Fill: .00 mm2
Allowable Fill: 3275.44 mm2 Note: See Mark 1

Cable/Ckt. No.:	Type:	Cable Area:
Pull rope	Soft-fiber polyester	0.00 mm2

Conduit/Tray No: 6710 **Ref Dwg(s):** EE-299A
Conduit/Tray Type: 103 mm GRS conduit
Total Fill: .00 mm2
Allowable Fill: 3324.51 mm2 Note: See Mark 1

Cable/Ckt. No.:	Type:	Cable Area:
Pull rope	Soft-fiber polyester	0.00 mm2

Conduit/Tray No: 6711 **Ref Dwg(s):** EE-299A
Conduit/Tray Type: 103 mm GRS conduit
Total Fill: .00 mm2
Allowable Fill: 3324.51 mm2 Note: See Mark 1

Cable/Ckt. No.:	Type:	Cable Area:
Pull rope	Soft-fiber polyester	0.00 mm2

Conduit/Tray No: 6712 **Ref Dwg(s):** EE-299A
Conduit/Tray Type: 103 mm GRS conduit
Total Fill: .00 mm2
Allowable Fill: 3324.51 mm2 Note: See Mark 1

Cable/Ckt. No.:	Type:	Cable Area:
Pull rope	Soft-fiber polyester	0.00 mm2

Conduit/Tray No: 6713 **Ref Dwg(s):** EE-299A
Conduit/Tray Type: 103 mm GRS conduit
Total Fill: .00 mm2
Allowable Fill: 3324.51 mm2 Note: See Mark 1

Cable/Ckt. No.:	Type:	Cable Area:
Pull rope	Soft-fiber polyester	0.00 mm2

Conduit/Tray No: 6716 **Ref Dwg(s):** EE-299A
Conduit/Tray Type: 103 mm Liquidtight flex metal conduit
Total Fill: .00 mm2
Allowable Fill: 3275.44 mm2 Note: See Mark 1

Cable/Ckt. No.:	Type:	Cable Area:
Pull rope	Soft-fiber polyester	0.00 mm2

Conduit/Tray No: 6717 **Ref Dwg(s):** EE-299A
Conduit/Tray Type: 103 mm Liquidtight flex metal conduit
Total Fill: .00 mm2
Allowable Fill: 3275.44 mm2 Note: See Mark 1

Cable/Ckt. No.:	Type:	Cable Area:
Pull rope	Soft-fiber polyester	0.00 mm2

Conduit/Tray No: 6718 **Ref Dwg(s):** EE-299A
Conduit/Tray Type: 103 mm Liquidtight flex metal conduit
Total Fill: .00 mm2
Allowable Fill: 3275.44 mm2 Note: See Mark 1

Cable/Ckt. No.:	Type:	Cable Area:
Pull rope	Soft-fiber polyester	0.00 mm2

Conduit/Tray No: 6719 **Ref Dwg(s):** EE-299A
Conduit/Tray Type: 103 mm Liquidtight flex metal conduit
Total Fill: .00 mm2
Allowable Fill: 3275.44 mm2 Note: See Mark 1

Cable/Ckt. No.:	Type:	Cable Area:
Pull rope	Soft-fiber polyester	0.00 mm2

Conduit/Tray No: 6720 **Ref Dwg(s):** EE-299A
Conduit/Tray Type: 103 mm Liquidtight flex metal conduit
Total Fill: .00 mm2
Allowable Fill: 3275.44 mm2 Note: See Mark 1

Cable/Ckt. No.:	Type:	Cable Area:
Pull rope	Soft-fiber polyester	0.00 mm2

Conduit/Tray No: 6721 **Ref Dwg(s):** EE-299A
Conduit/Tray Type: 103 mm GRS conduit
Total Fill: .00 mm2
Allowable Fill: 3324.51 mm2 Note: See Mark 1

Cable/Ckt. No.:	Type:	Cable Area:
Pull rope	Soft-fiber polyester	0.00 mm2

Conduit/Tray No: 6722 **Ref Dwg(s):** EE-299A
Conduit/Tray Type: 103 mm GRS conduit
Total Fill: .00 mm2
Allowable Fill: 3324.51 mm2 Note: See Mark 1

Cable/Ckt. No.:	Type:	Cable Area:
Pull rope	Soft-fiber polyester	0.00 mm2

Conduit/Tray No: 6723 **Ref Dwg(s):** EE-299A
Conduit/Tray Type: 103 mm GRS conduit
Total Fill: .00 mm2
Allowable Fill: 3324.51 mm2 Note: See Mark 1

Cable/Ckt. No.:	Type:	Cable Area:
Pull rope	Soft-fiber polyester	0.00 mm2

Conduit/Tray No: 6724 **Ref Dwg(s):** EE-299A
Conduit/Tray Type: 103 mm GRS conduit
Total Fill: .00 mm2
Allowable Fill: 3324.51 mm2 Note: See Mark 1

Cable/Ckt. No.:	Type:	Cable Area:
Pull rope	Soft-fiber polyester	0.00 mm2

Conduit/Tray No: 6725 **Ref Dwg(s):** EE-299A
Conduit/Tray Type: 103 mm GRS conduit
Total Fill: .00 mm2
Allowable Fill: 3324.51 mm2 Note: See Mark 1

Cable/Ckt. No.:	Type:	Cable Area:
Pull rope	Soft-fiber polyester	0.00 mm2

Conduit/Tray No: 6856 **Ref Dwg(s):** EE-295C
Conduit/Tray Type: 103 mm GRS conduit
Total Fill: .00 mm2
Allowable Fill: 2576.49 mm2 Note: See Mark 2 and Mark 7

Cable/Ckt. No.:	Type:	Cable Area:
Pull rope	Soft-fiber polyester	0.00 mm2

Conduit/Tray No: 6857 **Ref Dwg(s):** EE-295C
Conduit/Tray Type: 103 mm GRS conduit
Total Fill: .00 mm2
Allowable Fill: 2576.49 mm2 Note: See Mark 2 and Mark 7

Cable/Ckt. No.:	Type:	Cable Area:
Pull rope	Soft-fiber polyester	0.00 mm2

Conduit/Tray No: 6858 **Ref Dwg(s):** EE-295C
Conduit/Tray Type: 53 mm GRS conduit
Total Fill: .00 mm2
Allowable Fill: 879.42 mm2 Note: See Mark 2 and Mark 7

Cable/Ckt. No.:	Type:	Cable Area:
Pull rope	Soft-fiber polyester	0.00 mm2

Conduit/Tray No: 6865 **Ref Dwg(s):** EE-295C
Conduit/Tray Type: 103 mm GRS conduit
Total Fill: .00 mm2
Allowable Fill: 3324.51 mm2 Note: See Mark 2 and Mark 7

Cable/Ckt. No.:	Type:	Cable Area:
Pull rope	Soft-fiber polyester	0.00 mm2

Conduit/Tray No: 6867 **Ref Dwg(s):** EE-295C
Conduit/Tray Type: 103 mm GRS conduit
Total Fill: .00 mm2
Allowable Fill: 3324.51 mm2 Note: See Mark 1 and Mark 7

Cable/Ckt. No.:	Type:	Cable Area:
Pull rope	Soft-fiber polyester	0.00 mm2

Conduit/Tray No: 6868 **Ref Dwg(s):** EE-295C
Conduit/Tray Type: 103 mm GRS conduit
Total Fill: .00 mm2
Allowable Fill: 3324.51 mm2 Note: See Mark 2 and Mark 7

Cable/Ckt. No.:	Type:	Cable Area:
Pull rope	Soft-fiber polyester	0.00 mm2

Conduit/Tray No: 6869 **Ref Dwg(s):** EE-295C
Conduit/Tray Type: 103 mm GRS conduit
Total Fill: .00 mm2
Allowable Fill: 3324.51 mm2 Note: See Mark 2 and Mark 7

Cable/Ckt. No.:	Type:	Cable Area:
Pull rope	Soft-fiber polyester	0.00 mm2

Conduit/Tray No: 6870 **Ref Dwg(s):** EE-295C
Conduit/Tray Type: 103 mm GRS conduit
Total Fill: .00 mm2
Allowable Fill: 3324.51 mm2 Note: See Mark 2 and Mark 7

Cable/Ckt. No.:	Type:	Cable Area:
Pull rope	Soft-fiber polyester	0.00 mm2

Conduit/Tray No: 6880 **Ref Dwg(s):** EE-296A
Conduit/Tray Type: 103 mm GRS conduit
Total Fill: .00 mm2
Allowable Fill: 2576.49 mm2 Note: See Mark 2

Cable/Ckt. No.:	Type:	Cable Area:
Pull rope	Soft-fiber polyester	0.00 mm2

Conduit/Tray No: 6881 **Ref Dwg(s):** EE-296A
Conduit/Tray Type: 103 mm GRS conduit
Total Fill: .00 mm2
Allowable Fill: 2576.49 mm2 Note: See Mark 2

Cable/Ckt. No.:	Type:	Cable Area:
Pull rope	Soft-fiber polyester	0.00 mm2

Conduit/Tray No: 6882 **Ref Dwg(s):** EE-296A
Conduit/Tray Type: 53 mm GRS conduit
Total Fill: .00 mm2
Allowable Fill: 879.42 mm2 Note: See Mark 2

Cable/Ckt. No.:	Type:	Cable Area:
Pull rope	Soft-fiber polyester	0.00 mm2

Conduit/Tray No: 6889 **Ref Dwg(s):** EE-296A
Conduit/Tray Type: 103 mm GRS conduit
Total Fill: .00 mm2
Allowable Fill: 2576.49 mm2 Note: See Mark 2

Cable/Ckt. No.:	Type:	Cable Area:
Pull rope	Soft-fiber polyester	0.00 mm2

Conduit/Tray No: 6900 **Ref Dwg(s):** EE-297A
Conduit/Tray Type: 103 mm GRS conduit
Total Fill: .00 mm2
Allowable Fill: 2576.49 mm2 Note: See Mark 2

Cable/Ckt. No.:	Type:	Cable Area:
Pull rope	Soft-fiber polyester	0.00 mm2

Conduit/Tray No: 6901 **Ref Dwg(s):** EE-297A
Conduit/Tray Type: 103 mm GRS conduit
Total Fill: .00 mm2
Allowable Fill: 2576.49 mm2 Note: See Mark 2

Cable/Ckt. No.:	Type:	Cable Area:
Pull rope	Soft-fiber polyester	0.00 mm2

Conduit/Tray No: 6902 **Ref Dwg(s):** EE-297A
Conduit/Tray Type: 53 mm GRS conduit
Total Fill: .00 mm2
Allowable Fill: 879.42 mm2 Note: See Mark 2

Cable/Ckt. No.:	Type:	Cable Area:
Pull rope	Soft-fiber polyester	0.00 mm2

Conduit/Tray No: 6909 **Ref Dwg(s):** EE-297A
Conduit/Tray Type: 103 mm GRS conduit
Total Fill: .00 mm2
Allowable Fill: 2576.49 mm2 Note: See Mark 2

Cable/Ckt. No.:	Type:	Cable Area:
Pull rope	Soft-fiber polyester	0.00 mm2

Conduit/Tray No: 6920 **Ref Dwg(s):** EE-298A
Conduit/Tray Type: 103 mm GRS conduit
Total Fill: .00 mm2
Allowable Fill: 2576.49 mm2 Note: See Mark 2

Cable/Ckt. No.:	Type:	Cable Area:
Pull rope	Soft-fiber polyester	0.00 mm2

Conduit/Tray No: 6921 **Ref Dwg(s):** EE-298A
Conduit/Tray Type: 103 mm GRS conduit
Total Fill: .00 mm2
Allowable Fill: 2576.49 mm2 Note: See Mark 2

Cable/Ckt. No.:	Type:	Cable Area:
Pull rope	Soft-fiber polyester	0.00 mm2

Conduit/Tray No: 6922 **Ref Dwg(s):** EE-298A
Conduit/Tray Type: 53 mm GRS conduit
Total Fill: .00 mm2
Allowable Fill: 879.42 mm2 Note: See Mark 2

Cable/Ckt. No.:	Type:	Cable Area:
Pull rope	Soft-fiber polyester	0.00 mm2

Conduit/Tray No: 6929 **Ref Dwg(s):** EE-298A
Conduit/Tray Type: 103 mm GRS conduit
Total Fill: .00 mm2
Allowable Fill: 2576.49 mm2 Note: See Mark 2

Cable/Ckt. No.:	Type:	Cable Area:
Pull rope	Soft-fiber polyester	0.00 mm2

Conduit/Tray No: 6936 **Ref Dwg(s):** EE-299A
Conduit/Tray Type: 103 mm GRS conduit
Total Fill: 2628.48 mm2
Allowable Fill: 3324.51 mm2 Note: See Mark 5

Cable/Ckt. No.:	Type:	Cable Area:
1392	3-1/C #4/0, 15 kV, EPR Insulation	2628.4mm2

Conduit/Tray No: 6937 **Ref Dwg(s):** EE-299A
Conduit/Tray Type: 103 mm GRS conduit
Total Fill: .00 mm2
Allowable Fill: 3324.51 mm2 Note: See Mark 5

Cable/Ckt. No.:	Type:	Cable Area:
Pull rope	Soft-fiber polyester	0.00 mm2

Conduit/Tray No: 6944 **Ref Dwg(s):** EE-299A
Conduit/Tray Type: 103 mm GRS conduit
Total Fill: .00 mm2
Allowable Fill: 3324.51 mm2 Note: See Mark 2

Cable/Ckt. No.:	Type:	Cable Area:
Pull rope	Soft-fiber polyester	0.00 mm2

Conduit/Tray No: 6945 **Ref Dwg(s):** EE-299A
Conduit/Tray Type: 103 mm GRS conduit
Total Fill: .00 mm2
Allowable Fill: 3324.51 mm2 Note: See Mark 2

Cable/Ckt. No.:	Type:	Cable Area:
Pull rope	Soft-fiber polyester	0.00 mm2

Conduit/Tray No: 6946 **Ref Dwg(s):** EE-299A
Conduit/Tray Type: 103 mm GRS conduit
Total Fill: .00 mm2
Allowable Fill: 3324.51 mm2 Note: See Mark 2

Cable/Ckt. No.:	Type:	Cable Area:
Pull rope	Soft-fiber polyester	0.00 mm2

Conduit/Tray No: 6947 **Ref Dwg(s):** EE-299A
Conduit/Tray Type: 103 mm GRS conduit
Total Fill: .00 mm2
Allowable Fill: 3324.51 mm2 Note: See Mark 2

Cable/Ckt. No.:	Type:	Cable Area:
Pull rope	Soft-fiber polyester	0.00 mm2

Conduit/Tray No: 6948 **Ref Dwg(s):** EE-299A
Conduit/Tray Type: 103 mm GRS conduit
Total Fill: .00 mm2
Allowable Fill: 2576.49 mm2 Note: See Mark 2 & Mark 6

Cable/Ckt. No.:	Type:	Cable Area:
Pull rope	Soft-fiber polyester	0.00 mm2

Conduit/Tray No: 6952 **Ref Dwg(s):** EE-299A
Conduit/Tray Type: 103 mm Liquidtight flex metal conduit
Total Fill: .00 mm2
Allowable Fill: 3275.44 mm2 Note: See Mark 2

Cable/Ckt. No.:	Type:	Cable Area:
Pull rope	Soft-fiber polyester	0.00 mm2

Conduit/Tray No: 6964 **Ref Dwg(s):** EE-299A
Conduit/Tray Type: 103 mm GRS conduit
Total Fill: .00 mm2
Allowable Fill: 3324.51 mm2 Note: See Mark 2 & Mark 6

Cable/Ckt. No.:	Type:	Cable Area:
Pull rope	Soft-fiber polyester	0.00 mm2

Conduit/Tray No: 6965 **Ref Dwg(s):** EE-299A
Conduit/Tray Type: 103 mm GRS conduit
Total Fill: .00 mm2
Allowable Fill: 3324.51 mm2 Note: See Mark 2 & Mark 6

Cable/Ckt. No.:	Type:	Cable Area:
Pull rope	Soft-fiber polyester	0.00 mm2

Conduit/Tray No: 6966 **Ref Dwg(s):** EE-299A
Conduit/Tray Type: 103 mm GRS conduit
Total Fill: .00 mm2
Allowable Fill: 3324.51 mm2 Note: See Mark 2 & Mark 6

Cable/Ckt. No.:	Type:	Cable Area:
Pull rope	Soft-fiber polyester	0.00 mm2

Conduit/Tray No: 6967 **Ref Dwg(s):** EE-299A
Conduit/Tray Type: 103 mm GRS conduit
Total Fill: .00 mm2
Allowable Fill: 3324.51 mm2 Note: See Mark 2 & Mark 6

Cable/Ckt. No.:	Type:	Cable Area:
Pull rope	Soft-fiber polyester	0.00 mm2

Conduit/Tray No: 6968 **Ref Dwg(s):** EE-299A
Conduit/Tray Type: 103 mm GRS conduit
Total Fill: .00 mm2
Allowable Fill: 3324.51 mm2 Note: See Mark 2 & Mark 6

Cable/Ckt. No.:	Type:	Cable Area:
Pull rope	Soft-fiber polyester	0.00 mm2

Conduit/Tray No: 6969 **Ref Dwg(s):** EE-299A
Conduit/Tray Type: 103 mm GRS conduit
Total Fill: .00 mm2
Allowable Fill: 3324.51 mm2 Note: See Mark 2 & Mark 6

Cable/Ckt. No.:	Type:	Cable Area:
Pull rope	Soft-fiber polyester	0.00 mm2

Conduit/Tray No: 6970 **Ref Dwg(s):** EE-299A
Conduit/Tray Type: 103 mm GRS conduit
Total Fill: .00 mm2
Allowable Fill: 3324.51 mm2 Note: See Mark 2 & Mark 6

Cable/Ckt. No.:	Type:	Cable Area:
Pull rope	Soft-fiber polyester	0.00 mm2

Conduit/Tray No: 6971 **Ref Dwg(s):** EE-299A
Conduit/Tray Type: 103 mm GRS conduit
Total Fill: .00 mm2
Allowable Fill: 3324.51 mm2 Note: See Mark 2 & Mark 6

Cable/Ckt. No.:	Type:	Cable Area:
Pull rope	Soft-fiber polyester	0.00 mm2

Conduit/Tray No: 6972 **Ref Dwg(s):** EE-299A
Conduit/Tray Type: 103 mm GRS conduit
Total Fill: .00 mm2
Allowable Fill: 3324.51 mm2 Note: See Mark 2 & Mark 6

Cable/Ckt. No.:	Type:	Cable Area:
Pull rope	Soft-fiber polyester	0.00 mm2

Conduit/Tray No: 6973 **Ref Dwg(s):** EE-299A
Conduit/Tray Type: 103 mm GRS conduit
Total Fill: .00 mm2
Allowable Fill: 3324.51 mm2 Note: See Mark 2 & Mark 6

Cable/Ckt. No.:	Type:	Cable Area:
Pull rope	Soft-fiber polyester	0.00 mm2

Conduit/Tray No: 6974 **Ref Dwg(s):** EE-299A
Conduit/Tray Type: 103 mm Liquidtight flex metal conduit
Total Fill: .00 mm2
Allowable Fill: 3275.44 mm2 Note: See Mark 2

Cable/Ckt. No.:	Type:	Cable Area:
Pull rope	Soft-fiber polyester	0.00 mm2

Conduit/Tray No: 6975 **Ref Dwg(s):** EE-299A
Conduit/Tray Type: 103 mm GRS conduit
Total Fill: .00 mm2
Allowable Fill: 3324.51 mm2 Note: See Mark 2

Cable/Ckt. No.:	Type:	Cable Area:
Pull rope	Soft-fiber polyester	0.00 mm2

DIST	COUNTY	ROUTE	KILOMETER POST TOTAL PROJECT	SHEET No	TOTAL SHEETS
04	SF, Ala	80	13.9 / 14.3, 0.0 / 1.6		

Jens Erlingsson 07/07/06
REGISTERED ELECTRICAL ENGINEER DATE

6-4-01
PLANS APPROVAL DATE

REGISTERED PROFESSIONAL ENGINEER JENS ERLINGSSON No. 8249 Exp. 9/30/06 ELECTRICAL STATE OF CALIFORNIA

PB POWER, Inc.
A Parsons Brinckerhoff Company
303 Second St., Suite 700N
San Francisco, CA 94107-1317

The State of California or its officers or agents shall not be responsible for the accuracy or completeness of electronic copies of this plan sheet.

Caltrans Metric

San Francisco - Oakland Bay Bridge East Span Seismic Safety Project

04-012024
04-SF-80KP 12.2/KP 14.3
04-ALA-80 KP 0.0/KP 2.1

SUPPLEMENT TO THE SPECIAL PROVISIONS AND PLANS

Binder 2 of 2 - Eastbound

MARK	DATE	DESCRIPTIONS	REV	CK	
1	7/7/06	For description of changes, see Directives for Conduit and Tray Schedules Westbound EE-328G dated July 7, 2006. Supersedes Directives for Conduit and Cable Tray Schedules EE-328E dated 1/6/06 and EE-328B dated 2/20/04.	PB	EJL	CCO NO. 48 S1

REVISIONS

CONTRACT CHANGE ORDER NO. 48 S1
SHEET 67 OF 67

DETAILS
CONDUIT AND TRAY SCHEDULE EASTBOUND

EE-328G

CALCULATED/DESIGNED BY	PB	DATE 11/99	REVISED BY	CYF	EJL	EJL	EJL
CHECKED BY	EJL	6/00	DATE REVISED	10/01	9/12/03	4/2/04	7/7/06

DESIGN OVERSIGHT
BEHZAD GOLEMOHAMMADI

STATE OF CALIFORNIA - DEPARTMENT OF TRANSPORTATION
Caltrans

LAST REVISION 00-00-00
DATE PLOTTED => 08-AUG-2006
TIME PLOTTED => 08:54

USERNAME => mhossain
DGN FILE => cover-conduit and circuit sched.dgn

CU 04251 EA 012021

REVISED HINGE A THRU E dated Apr 18, 2003
ADDED HINGE A GIRDER INTERFACE dated Feb 20, 2004
ADDED HINGE E GIRDER INTERFACE dated Feb 20, 2004
HINGE PIPE A dated Jan 4, 2006

Directives for Conduit/Tray Schedule Eastbound EE-328G - For CCO 48 S1

Addition to the Supplement to the Special Provisions and Plans, EE-328 Binder 2 of 2-Eastbound.
Mark 1- Raceways shown on EE-328A Binder 2 of 2-Eastbound of Addendum No. 6 dated October 30, 2001 is superceded by this EE-328G, dated July 7, 2006

Item No.	Conduit/ Tray No.	Notation under Notes CCO No. 48 S1								Description of changes to the Conduit and Tray Schedule Eastbound
		Mark 1	**Mark 2**	**Mark 3**	**Mark 4**	**Mark 5**	**Mark 6**	**Mark 7**	**Mark 8**	
			Revised Hinges A thru E April 18, 2004	Added Hinge A Girder Interface Feb. 20, 2004		Added Hinge E Girder Interface Feb. 20, 2004		Hinge Pipe A Jan. 4, 2006		
		(Revise)	(Add)	(Add)	(Delete or Change)	(Add)	(Delete)	(Revise)	(Delete)	
1	7601		X							Added conduit inside Pipe Beam AE
2	7602		X							Added conduit inside Pipe Beam AE
3	7603		X							Added conduit inside Pipe Beam AE
4	7609		X							Added conduit inside Pipe Beam AE
5	7611		X							Added conduit inside Pipe Beam AE
6	7613		X							Added conduit inside Pipe Beam AE
7	7614		X							Added conduit inside Pipe Beam AE
8	7615		X							Added conduit inside Pipe Beam AE
9	7616		X							Added conduit inside Pipe Beam AE
10	2493			X						Added conduit to 15 kV splice box Circuit/ cable #2391 routed by SAS Superstructure
11	2494			X						Added conduit to 15 kV splice box
12	2471	X								Revised reference drawing. Conduit inside Pipe Beam AE. Circuit/ cable #2475-4 routed by SAS Superstructure
13	2472	X								Revised reference drawing. Conduit inside Pipe Beam AE.
14	2473	X								Revised reference drawing. Conduit inside Pipe Beam AE.
15	2474	X								Revised reference drawing. Conduit inside Pipe Beam AE.
16	2481	X								Revised reference drawing. Conduit inside Pipe Beam AE.
17	2482	X								Revised reference drawing. Conduit inside Pipe Beam AE.
18	2483	X								Revised reference drawing. Conduit inside Pipe Beam AE.
19	2484	X								Revised reference drawing. Conduit inside Pipe Beam AE.
20	2491	X								Revised reference drawing. Conduit inside Pipe Beam AE.
21	2475				X					Conduit number changed to #7475 Circuit/ cable #2475-4 routed by SAS Superstructure
22	2476				X					Conduit number changed to #7476
23	2477				X					Conduit number changed to #7477
24	2478				X					Conduit number changed to #7478
25	2485				X					Conduit number changed to #7485
26	2486				X					Conduit number changed to #7486
27	2487				X					Conduit number changed to #7487

REVISED HINGE A THRU E dated Apr 18, 2003
ADDED HINGE A GIRDER INTERFACE dated Feb 20, 2004
ADDED HINGE E GIRDER INTERFACE dated Feb 20, 2004
HINGE PIPE A dated Jan 4, 2006

Directives for Conduit/Tray Schedule Eastbound EE-328G - For CCO 48 S1

Addition to the Supplement to the Special Provisions and Plans, EE-328 Binder 2 of 2-Eastbound.
Mark 1- Raceways shown on EE-328A Binder 2 of 2-Eastbound of Addendum No. 6 dated October 30, 2001 is superceded by this EE-328G, dated July 7, 2006

Item No.	Conduit/ Tray No.	Notation under Notes CCO No. 48 S1								Description of changes to the Conduit and Tray Schedule Eastbound
		Mark 1	**Mark 2**	**Mark 3**	**Mark 4**	**Mark 5**	**Mark 6**	**Mark 7**	**Mark 8**	
			Revised Hinges A thru E April 18, 2004	Added Hinge A Girder Interface Feb. 20, 2004		Added Hinge E Girder Interface Feb. 20, 2004		Hinge Pipe A Jan. 4, 2006		
		(Revise)	(Add)	(Add)	(Delete or Change)	(Add)	(Delete)	(Revise)	(Delete)	
28	2488				X					Conduit number changed to #7488
29	2492				X					Conduit number changed to #7492
30	7475				X					Deleted conduit. Part of SAS Superstructure bid package
31	7476				X					Deleted conduit. Part of SAS Superstructure bid package
32	7477				X					Deleted conduit. Part of SAS Superstructure bid package
33	7478				X					Deleted conduit. Part of SAS Superstructure bid package
34	7485				X					Deleted conduit. Part of SAS Superstructure bid package
35	7486				X					Deleted conduit. Part of SAS Superstructure bid package
36	7487				X					Deleted conduit. Part of SAS Superstructure bid package
37	7488				X					Deleted conduit. Part of SAS Superstructure bid package
38	7492				X					Deleted conduit. Part of SAS Superstructure bid package
39	2T10				X					Deleted tray from conduit rack A to Hinge A-SAS Superstructure and Skyway Structure girder interface. No circuits/ cable deleted.
40	2T50				X					Deleted tray from conduit rack B to Hinge A- SAS Superstructure and Skyway Structure girder interface.
41	2T40				X					Deleted tray from conduit rack C to Hinge A-SAS Superstructure and Skyway Structure girder interface. No circuits/ cable deleted.
42	2T20				X					Deleted tray from to "T" stiffiner to Hinge A-SAS Superstructure and Skyway Structure girder interface. No circuits/ cable deleted.
43	7625		X							Added conduit inside Pipe Beam BE
45	7626		X							Added conduit inside Pipe Beam BE
46	7627		X							Added conduit inside Pipe Beam BE
47	7634		X							Added conduit inside Pipe Beam BE
48	7637		X							Added conduit inside Pipe Beam BE
49	2500	X								Revised reference drawing.
50	2501	X								Revised reference drawing.
51	2502	X								Revised reference drawing.
52	2503	X								Revised reference drawing.
53	2504	X								Revised reference drawing. Conduit inside Pipe Beam BE
54	2505	X								Revised reference drawing. Conduit inside Pipe Beam BE

REVISED HINGE A THRU E dated Apr 18, 2003
ADDED HINGE A GIRDER INTERFACE dated Feb 20, 2004
ADDED HINGE E GIRDER INTERFACE dated Feb 20, 2004
HINGE PIPE A dated Jan 4, 2006

Directives for Conduit/Tray Schedule Eastbound EE-328G - For CCO 48 S1

Addition to the Supplement to the Special Provisions and Plans, EE-328 Binder 2 of 2-Eastbound.
Mark 1- Raceways shown on EE-328A Binder 2 of 2-Eastbound of Addendum No. 6 dated October 30, 2001 is superceded by this EE-328G, dated July 7, 2006

Item No.	Conduit/ Tray No.	Notation under Notes CCO No. 48 S1								Description of changes to the Conduit and Tray Schedule Eastbound
		Mark 1	**Mark 2**	**Mark 3**	**Mark 4**	**Mark 5**	**Mark 6**	**Mark 7**	**Mark 8**	
			Revised Hinges A thru E April 18, 2004	Added Hinge A Girder Interface Feb. 20, 2004		Added Hinge E Girder Interface Feb. 20, 2004		Hinge Pipe A Jan. 4, 2006		
		(Revise)	(Add)	(Add)	(Delete or Change)	(Add)	(Delete)	(Revise)	(Delete)	
55	2506	X								Revised reference drawing. Conduit inside Pipe Beam BE
56	2507	X								Revised reference drawing. Conduit inside Pipe Beam BE
57	2508	X								Revised reference drawing.
58	2509	X								Revised reference drawing.
59	2510	X								Revised reference drawing.
60	2511	X								Revised reference drawing.
61	2515	X								Revised reference drawing.
62	2516	X								Revised reference drawing.
63	2517	X								Revised reference drawing.
64	2518	X								Revised reference drawing.
65	2520	X								Revised reference drawing. Conduit inside Pipe Beam BE
66	2521	X								Revised reference drawing. Conduit inside Pipe Beam BE
67	2522	X								Revised reference drawing. Conduit inside Pipe Beam BE
68	2523	X								Revised reference drawing. Conduit inside Pipe Beam BE
69	2524	X								Revised reference drawing.
70	2525	X								Revised reference drawing.
71	2526	X								Revised reference drawing.
72	2527	X								Revised reference drawing.
73	2531	X								Revised reference drawing.
74	2532	X								Revised reference drawing.
75	2533	X								Revised reference drawing.
76	2534	X								Revised reference drawing.
77	2535	X								Revised reference drawing. Conduit inside Pipe Beam BE
78	2536	X								Revised reference drawing. Conduit inside Pipe Beam BE
79	2537	X								Revised reference drawing. Conduit inside Pipe Beam BE
80	2538	X								Revised reference drawing. Conduit inside Pipe Beam BE
81	2539	X								Revised reference drawing.
82	2540	X								Revised reference drawing.

REVISED HINGE A THRU E dated Apr 18, 2003
ADDED HINGE A GIRDER INTERFACE dated Feb 20, 2004
ADDED HINGE E GIRDER INTERFACE dated Feb 20, 2004
HINGE PIPE A dated Jan 4, 2006

Directives for Conduit/Tray Schedule Eastbound EE-328G - For CCO 48 S1

Addition to the Supplement to the Special Provisions and Plans, EE-328 Binder 2 of 2-Eastbound.
Mark 1- Raceways shown on EE-328A Binder 2 of 2-Eastbound of Addendum No. 6 dated October 30, 2001 is superceded by this EE-328G, dated July 7, 2006

Item No.	Conduit/ Tray No.	Notation under Notes CCO No. 48 S1								Description of changes to the Conduit and Tray Schedule Eastbound
		Mark 1	**Mark 2**	**Mark 3**	**Mark 4**	**Mark 5**	**Mark 6**	**Mark 7**	**Mark 8**	
			Revised Hinges A thru E April 18, 2004	Added Hinge A Girder Interface Feb. 20, 2004		Added Hinge E Girder Interface Feb. 20, 2004		Hinge Pipe A Jan. 4, 2006		
		(Revise)	(Add)	(Add)	(Delete or Change)	(Add)	(Delete)	(Revise)	(Delete)	
83	2541	X								Revised reference drawing.
84	2542	X								Revised reference drawing.
85	2544	X								Revised reference drawing.
86	2545	X								Revised reference drawing.
87	2546	X								Revised reference drawing.
88	7645		X							Added conduit inside Pipe Beam CE
89	7646		X							Added conduit inside Pipe Beam CE
90	7647		X							Added conduit inside Pipe Beam CE
91	7654		X							Added conduit inside Pipe Beam CE
92	2551	X								Revised reference drawing.
93	2552	X								Revised reference drawing.
94	2553	X								Revised reference drawing.
95	2554	X								Revised reference drawing.
96	2555	X								Revised reference drawing.
97	2556	X								Revised reference drawing. Conduit inside Pipe Beam CE
98	2557	X								Revised reference drawing. Conduit inside Pipe Beam CE
99	2558	X								Revised reference drawing. Conduit inside Pipe Beam CE
100	2559	X								Revised reference drawing. Conduit inside Pipe Beam CE
101	2560	X								Revised reference drawing. Conduit inside Pipe Beam CE
102	2561	X								Revised reference drawing. Conduit inside Pipe Beam CW.
103	2562	X								Revised reference drawing.
104	2563	X								Revised reference drawing.
105	2564	X								Revised reference drawing.
106	2565	X								Revised reference drawing.
107	2566	X								Revised reference drawing.
108	2567	X								Revised reference drawing.
109	2568	X								Revised reference drawing.
110	2569	X								Revised reference drawing.

REVISED HINGE A THRU E dated Apr 18, 2003
ADDED HINGE A GIRDER INTERFACE dated Feb 20, 2004
ADDED HINGE E GIRDER INTERFACE dated Feb 20, 2004
HINGE PIPE A dated Jan 4, 2006

Directives for Conduit/Tray Schedule Eastbound EE-328G - For CCO 48 S1

Addition to the Supplement to the Special Provisions and Plans, EE-328 Binder 2 of 2-Eastbound.
Mark 1- Raceways shown on EE-328A Binder 2 of 2-Eastbound of Addendum No. 6 dated October 30, 2001 is superceded by this EE-328G, dated July 7, 2006

Item No.	Conduit/ Tray No.	Notation under Notes CCO No. 48 S1								Description of changes to the Conduit and Tray Schedule Eastbound
		Mark 1	**Mark 2**	**Mark 3**	**Mark 4**	**Mark 5**	**Mark 6**	**Mark 7**	**Mark 8**	
			Revised Hinges A thru E April 18, 2004	Added Hinge A Girder Interface Feb. 20, 2004		Added Hinge E Girder Interface Feb. 20, 2004		Hinge Pipe A Jan. 4, 2006		
		(Revise)	(Add)	(Add)	(Delete or Change)	(Add)	(Delete)	(Revise)	(Delete)	
111	2570	X								Revised reference drawing. Conduit inside Pipe Beam CE
112	2571	X								Revised reference drawing. Conduit inside Pipe Beam CE
113	2572	X								Revised reference drawing. Conduit inside Pipe Beam CE
114	2573	X								Revised reference drawing. Conduit inside Pipe Beam CE
116	2574	X								Revised reference drawing.
117	2575	X								Revised reference drawing.
118	2576	X								Revised reference drawing.
119	2577	X								Revised reference drawing.
110	2581	X								Revised reference drawing.
111	2582	X								Revised reference drawing.
112	2583	X								Revised reference drawing.
113	2584	X								Revised reference drawing.
114	2585	X								Revised reference drawing. Conduit inside Pipe Beam CE
115	2586	X								Revised reference drawing. Conduit inside Pipe Beam CE
116	2587	X								Revised reference drawing. Conduit inside Pipe Beam CE
117	2588	X								Revised reference drawing. Conduit inside Pipe Beam CE
118	2589	X								Revised reference drawing.
119	2590	X								Revised reference drawing.
120	2591	X								Revised reference drawing.
121	2592	X								Revised reference drawing.
122	2593	X								Revised reference drawing.
123	2594	X								Revised reference drawing. Conduit inside Pipe Beam CE
124	2595	X								Revised reference drawing.
125	7665		X							Added conduit inside Pipe Beam DE
126	7666		X							Added conduit inside Pipe Beam DE
127	7667		X							Added conduit inside Pipe Beam DE
128	7674		X							Added conduit inside Pipe Beam DE
129	7677		X							Added conduit inside Pipe Beam DE

REVISED HINGE A THRU E dated Apr 18, 2003
ADDED HINGE A GIRDER INTERFACE dated Feb 20, 2004
ADDED HINGE E GIRDER INTERFACE dated Feb 20, 2004
HINGE PIPE A dated Jan 4, 2006

Directives for Conduit/Tray Schedule Eastbound EE-328G - For CCO 48 S1

Addition to the Supplement to the Special Provisions and Plans, EE-328 Binder 2 of 2-Eastbound.
Mark 1- Raceways shown on EE-328A Binder 2 of 2-Eastbound of Addendum No. 6 dated October 30, 2001 is superceded by this EE-328G, dated July 7, 2006

Item No.	Conduit/ Tray No.	Notation under Notes CCO No. 48 S1								Description of changes to the Conduit and Tray Schedule Eastbound
		Mark 1	**Mark 2**	**Mark 3**	**Mark 4**	**Mark 5**	**Mark 6**	**Mark 7**	**Mark 8**	
			Revised Hinges A thru E April 18, 2004	Added Hinge A Girder Interface Feb. 20, 2004		Added Hinge E Girder Interface Feb. 20, 2004		Hinge Pipe A Jan. 4, 2006		
		(Revise)	(Add)	(Add)	(Delete or Change)	(Add)	(Delete)	(Revise)	(Delete)	
130	7881	X								Revised reference drawing.
131	7882	X								Revised reference drawing.
132	7883	X								Revised reference drawing.
133	7884	X								Revised reference drawing.
134	7885	X								Revised reference drawing. Conduit inside Pipe Beam DE
135	7886	X								Revised reference drawing. Conduit inside Pipe Beam DE
136	7887	X								Revised reference drawing. Conduit inside Pipe Beam DE
137	7888	X								Revised reference drawing. Conduit inside Pipe Beam DE
138	7889	X								Revised reference drawing.
139	7890	X								Revised reference drawing.
140	7891	X								Revised reference drawing.
141	7892	X								Revised reference drawing.
142	7896	X								Revised reference drawing.
143	7897	X								Revised reference drawing.
144	7898	X								Revised reference drawing.
145	7899	X								Revised reference drawing.
146	7900	X								Revised reference drawing. Conduit inside Pipe Beam DE
147	7901	X								Revised reference drawing. Conduit inside Pipe Beam DE
148	7902	X								Revised reference drawing. Conduit inside Pipe Beam DE
149	7903	X								Revised reference drawing. Conduit inside Pipe Beam DE
150	7904	X								Revised reference drawing.
151	7905	X								Revised reference drawing.
152	7906	X								Revised reference drawing.
153	7907	X								Revised reference drawing.
154	7911	X								Revised reference drawing.
155	7912	X								Revised reference drawing.
156	7913	X								Revised reference drawing.
157	7914	X								Revised reference drawing.

REVISED HINGE A THRU E dated Apr 18, 2003
ADDED HINGE A GIRDER INTERFACE dated Feb 20, 2004
ADDED HINGE E GIRDER INTERFACE dated Feb 20, 2004
HINGE PIPE A dated Jan 4, 2006

Directives for Conduit/Tray Schedule Eastbound EE-328G - For CCO 48 S1

Addition to the Supplement to the Special Provisions and Plans, EE-328 Binder 2 of 2-Eastbound.
Mark 1- Raceways shown on EE-328A Binder 2 of 2-Eastbound of Addendum No. 6 dated October 30, 2001 is superceded by this EE-328G, dated July 7, 2006

Item No.	Conduit/ Tray No.	Notation under Notes CCO No. 48 S1								Description of changes to the Conduit and Tray Schedule Eastbound
		Mark 1	**Mark 2**	**Mark 3**	**Mark 4**	**Mark 5**	**Mark 6**	**Mark 7**	**Mark 8**	
			Revised Hinges A thru E April 18, 2004	Added Hinge A Girder Interface Feb. 20, 2004		Added Hinge E Girder Interface Feb. 20, 2004		Hinge Pipe A Jan. 4, 2006		
		(Revise)	(Add)	(Add)	(Delete or Change)	(Add)	(Delete)	(Revise)	(Delete)	
158	7915	X								Revised reference drawing. Conduit inside Pipe Beam DE
159	7916	X								Revised reference drawing. Conduit inside Pipe Beam DE
160	7917	X								Revised reference drawing. Conduit inside Pipe Beam DE
161	7918	X								Revised reference drawing. Conduit inside Pipe Beam DE
162	7919	X								Revised reference drawing.
163	7920	X								Revised reference drawing.
164	7921	X								Revised reference drawing.
165	7922	X								Revised reference drawing.
166	7926	X								Revised reference drawing.
167	7927	X								Revised reference drawing. Conduit inside Pipe Beam DE
168	7928	X								Revised reference drawing.
169	7675		X				X			Mark 2-Added conduit Mark 6-Deleted conduit from north girder wall to tray 2T43
170	7676		X				X			Mark 2-Added conduit Mark 6-Deleted conduit from north girder wall to tray 2T43
171	7678		X				X			Mark 2-Added conduit Mark 6-Deleted conduit from north girder wall to tray 2T43
172	7679		X				X			Mark 2-Added conduit Mark 6-Deleted conduit from north girder wall to tray 2T43
173	7680		X				X			Mark 2-Added conduit Mark 6-Deleted conduit from north girder wall to tray 2T43
174	7681					X				Added conduit to 15 kV splice box
175	7682		X			X				Re-route added conduit to 15 kV splice box. Circuit/ cable #2392 routed by Oakland Approach Structure
176	7683		X				X			Mark 2-Added conduit Mark 6-Deleted conduit from south girder wall to tray 2T24
177	7685		X							Added conduit
178	7686		X							Added conduit
179	7687		X							Added conduit
180	7688		X							Added conduit
181	7689		X				X			Added conduit Deleted conduit from south girder wall to tray 2T24

REVISED HINGE A THRU E dated Apr 18, 2003
ADDED HINGE A GIRDER INTERFACE dated Feb 20, 2004
ADDED HINGE E GIRDER INTERFACE dated Feb 20, 2004
HINGE PIPE A dated Jan 4, 2006

Directives for Conduit/Tray Schedule Eastbound EE-328G - For CCO 48 S1

Addition to the Supplement to the Special Provisions and Plans, EE-328 Binder 2 of 2-Eastbound.
Mark 1- Raceways shown on EE-328A Binder 2 of 2-Eastbound of Addendum No. 6 dated October 30, 2001 is superceded by this EE-328G, dated July 7, 2006

Item No.	Conduit/ Tray No.	Notation under Notes CCO No. 48 S1								Description of changes to the Conduit and Tray Schedule Eastbound
		Mark 1	**Mark 2**	**Mark 3**	**Mark 4**	**Mark 5**	**Mark 6**	**Mark 7**	**Mark 8**	
			Revised Hinges A thru E April 18, 2004	Added Hinge A Girder Interface Feb. 20, 2004		Added Hinge E Girder Interface Feb. 20, 2004		Hinge Pipe A Jan. 4, 2006		
		(Revise)	(Add)	(Add)	(Delete or Change)	(Add)	(Delete)	(Revise)	(Delete)	
182	7690		X				X			Mark 2-Added conduit Mark 6-Deleted conduit from north girder wall to tray 2T53
183	7691		X				X			Mark 2-Added conduit Mark 6-Deleted conduit from north girder wall to tray 2T53 Circuit/ cable #2475-4 routed by Oakland Approach Structure
184	7692		X				X			Mark 2-Added conduit Mark 6-Deleted conduit from north girder wall to tray 2T53
185	7693		X				X			Mark 2-Added conduit Mark 6-Deleted conduit from north girder wall to tray 2T53
186	7694		X				X			Mark 2-Added conduit Mark 6-Deleted conduit from north girder wall to tray 2T53
187	7697		X							Added conduit
188	7698		X							Added conduit
189	7699		X							Added conduit
190	7700		X							Added conduit
191	7935	X								Revised reference drawing. Circuit/ cable #2475-4 routed by Oakland Approach Structure
192	7936	X								Revised reference drawing.
193	7937	X								Revised reference drawing.
194	7938	X								Revised reference drawing.
195	7939	X								Revised reference drawing. Circuit/ cable #2475-4 routed by Oakland Approach Structure
196	7940	X								Revised reference drawing.
197	7941	X								Revised reference drawing.
198	7942	X								Revised reference drawing.
199	7946	X								Revised reference drawing.
200	7947	X								Revised reference drawing.
201	7948	X								Revised reference drawing.
202	7949	X								Revised reference drawing.
203	7950	X								Revised reference drawing.
204	7951	X								Revised reference drawing.
205	7952	X								Revised reference drawing.

REVISED HINGE A THRU E dated Apr 18, 2003
ADDED HINGE A GIRDER INTERFACE dated Feb 20, 2004
ADDED HINGE E GIRDER INTERFACE dated Feb 20, 2004
HINGE PIPE A dated Jan 4, 2006

Directives for Conduit/Tray Schedule Eastbound EE-328G - For CCO 48 S1

Addition to the Supplement to the Special Provisions and Plans, EE-328 Binder 2 of 2-Eastbound.
Mark 1- Raceways shown on EE-328A Binder 2 of 2-Eastbound of Addendum No. 6 dated October 30, 2001 is superceded by this EE-328G, dated July 7, 2006

Item No.	Conduit/ Tray No.	Notation under Notes CCO No. 48 S1								Description of changes to the Conduit and Tray Schedule Eastbound
		Mark 1	**Mark 2**	**Mark 3**	**Mark 4**	**Mark 5**	**Mark 6**	**Mark 7**	**Mark 8**	
			Revised Hinges A thru E April 18, 2004	Added Hinge A Girder Interface Feb. 20, 2004		Added Hinge E Girder Interface Feb. 20, 2004		Hinge Pipe A Jan. 4, 2006		
		(Revise)	(Add)	(Add)	(Delete or Change)	(Add)	(Delete)	(Revise)	(Delete)	
206	7953	X								Revised reference drawing.
207	7957	X								Revised reference drawing.
208	7958	X								Revised reference drawing.
209	2T13						X			Deleted tray from E16E-2E to end of tray. No circuits/ cables deleted.
210	2T24						X			Deleted tray from E16E-2E to end of tray No circuits/ cables deleted.
211	2T43						X			Deleted tray from E16E-2E to end of tray No circuits/ cables deleted.
212	2T53						X			Deleted tray from E16E-2E to end of tray
213	2471							X		Revised reference sheet EE-300A to EE-300C.
214	2472							X		Revised reference sheet EE-300A to EE-300C.
215	2473							X		Revised reference sheet EE-300A to EE-300C.
216	2474							X		Revised reference sheet EE-300A to EE-300C.
217	2481							X		Revised reference sheet EE-300A to EE-300C.
218	2482							X		Revised reference sheet EE-300A to EE-300C.
219	2483							X		Revised reference sheet EE-300A to EE-300C.
220	2484							X		Revised reference sheet EE-300A to EE-300C.
221	2491							X		Revised reference sheet EE-300A to EE-300C.
222	7475							X	X	Revised reference sheet EE-300A to EE-300C. Deleted conduit.
223	7476							X	X	Revised reference sheet EE-300A to EE-300C. Deleted conduit.
224	7477							X	X	Revised reference sheet EE-300A to EE-300C. Deleted conduit.
225	7478							X	X	Revised reference sheet EE-300A to EE-300C. Deleted conduit.
226	7485							X	X	Revised reference sheet EE-300A to EE-300C. Deleted conduit.
227	7486							X	X	Revised reference sheet EE-300A to EE-300C. Deleted conduit.
228	7487							X	X	Revised reference sheet EE-300A to EE-300C. Deleted conduit.

REVISED HINGE A THRU E dated Apr 18, 2003
ADDED HINGE A GIRDER INTERFACE dated Feb 20, 2004
ADDED HINGE E GIRDER INTERFACE dated Feb 20, 2004
HINGE PIPE A dated Jan 4, 2006

Directives for Conduit/Tray Schedule Eastbound EE-328G - For CCO 48 S1

Addition to the Supplement to the Special Provisions and Plans, EE-328 Binder 2 of 2-Eastbound.
Mark 1- Raceways shown on EE-328A Binder 2 of 2-Eastbound of Addendum No. 6 dated October 30, 2001 is superceded by this EE-328G, dated July 7, 2006

Item No.	Conduit/ Tray No.	Notation under Notes CCO No. 48 S1								Description of changes to the Conduit and Tray Schedule Eastbound
		Mark 1	**Mark 2**	**Mark 3**	**Mark 4**	**Mark 5**	**Mark 6**	**Mark 7**	**Mark 8**	
			Revised Hinges A thru E April 18, 2004	Added Hinge A Girder Interface Feb. 20, 2004		Added Hinge E Girder Interface Feb. 20, 2004		Hinge Pipe A Jan. 4, 2006		
		(Revise)	(Add)	(Add)	(Delete or Change)	(Add)	(Delete)	(Revise)	(Delete)	
229	7488							X	X	Revised reference sheet EE-300A to EE-300C. Deleted conduit.
230	7492							X	X	Revised reference sheet EE-300A to EE-300C. Deleted conduit.
231	7601							X		Revised reference sheet EE-300A to EE-300C.
232	7602							X		Revised reference sheet EE-300A to EE-300C.
233	7603							X		Revised reference sheet EE-300A to EE-300C.
234	7609							X		Revised reference sheet EE-300A to EE-300C.
235	7611							X		Revised reference sheet EE-300A to EE-300C.
236	7613							X		Revised reference sheet EE-300A to EE-300C.
237	7614							X		Revised reference sheet EE-300A to EE-300C.
238	7615							X		Revised reference sheet EE-300A to EE-300C.
239	7616							X		Revised reference sheet EE-300A to EE-300C.
END										

Conduit/Tray No: 2471 **Ref Dwg(s):** EE-300C
Conduit/Tray Type: 103 mm GRS conduit
Total Fill: .00 mm2
Allowable Fill: 3324.51 mm2 Note: See Mark 1 and Mark 7

Cable/Ckt. No.:	Type:	Cable Area:
Pull rope	Soft-fiber polyester	0.00 mm

Conduit/Tray No: 2472 **Ref Dwg(s):** EE-300C
Conduit/Tray Type: 103 mm GRS conduit
Total Fill: .00 mm2
Allowable Fill: 3324.51 mm2 Note: See Mark 1 and Mark 7

Cable/Ckt. No.:	Type:	Cable Area:
Pull rope	Soft-fiber polyester	0.00 mm

Conduit/Tray No: 2473 **Ref Dwg(s):** EE-300C
Conduit/Tray Type: 103 mm GRS conduit
Total Fill: .00 mm2
Allowable Fill: 3324.51 mm2 Note: See Mark 1 and Mark 7

Cable/Ckt. No.:	Type:	Cable Area:
Pull rope	Soft-fiber polyester	0.00 mm

Conduit/Tray No: 2474 **Ref Dwg(s):** EE-300C
Conduit/Tray Type: 103 mm GRS conduit
Total Fill: .00 mm2
Allowable Fill: 3324.51 mm2 Note: See Mark 1 and Mark 7

Cable/Ckt. No.:	Type:	Cable Area:
Pull rope	Soft-fiber polyester	0.00 mm

Conduit/Tray No: 2475 **Ref Dwg(s):** EE-300A
Conduit/Tray Type: 103 mm Liquidtight flex metal conduit
Total Fill: .00 mm2
Allowable Fill: 3275.44 mm2 Note: See Mark 4

Cable/Ckt. No.:	Type:	Cable Area:
Pull rope	Soft-fiber polyester	0.00 mm

Conduit/Tray No: 2476 **Ref Dwg(s):** EE-300A
Conduit/Tray Type: 103 mm Liquidtight flex metal conduit
Total Fill: .00 mm2
Allowable Fill: 3275.44 mm2 Note: See Mark 4

Cable/Ckt. No.:	Type:	Cable Area:
Pull rope	Soft-fiber polyester	0.00 mm

Conduit/Tray No: 2477 **Ref Dwg(s):** EE-300A
Conduit/Tray Type: 103 mm Liquidtight flex metal conduit
Total Fill: .00 mm2
Allowable Fill: 3275.44 mm2 Note: See Mark 4

Cable/Ckt. No.:	Type:	Cable Area:
Pull rope	Soft-fiber polyester	0.00 mm

Conduit/Tray No: 2478 **Ref Dwg(s):** EE-300A
Conduit/Tray Type: 103 mm Liquidtight flex metal conduit
Total Fill: .00 mm2
Allowable Fill: 3275.44 mm2 Note: See Mark 4

Cable/Ckt. No.:	Type:	Cable Area:
Pull rope	Soft-fiber polyester	0.00 mm

Conduit/Tray No: 2481 **Ref Dwg(s):** EE-300C
Conduit/Tray Type: 103 mm GRS conduit
Total Fill: .00 mm2
Allowable Fill: 3324.51 mm2 Note: See Mark 1 and Mark 7

Cable/Ckt. No.:	Type:	Cable Area:
Pull rope	Soft-fiber polyester	0.00 mm

Conduit/Tray No: 2482 **Ref Dwg(s):** EE-300C
Conduit/Tray Type: 103 mm GRS conduit
Total Fill: .00 mm2
Allowable Fill: 3324.51 mm2 Note: See Mark 1 and Mark 7

Cable/Ckt. No.:	Type:	Cable Area:
Pull rope	Soft-fiber polyester	0.00 mm

Conduit/Tray No: 2483 **Ref Dwg(s):** EE-300C
Conduit/Tray Type: 103 mm GRS conduit
Total Fill: .00 mm2
Allowable Fill: 3324.51 mm2 Note: See Mark 1 and Mark 7

Cable/Ckt. No.:	Type:	Cable Area:
Pull rope	Soft-fiber polyester	0.00 mm

Conduit/Tray No: 2484 **Ref Dwg(s):** EE-300C
Conduit/Tray Type: 103 mm GRS conduit
Total Fill: .00 mm2
Allowable Fill: 3324.51 mm2 Note: See Mark 1 and Mark 7

Cable/Ckt. No.:	Type:	Cable Area:
Pull rope	Soft-fiber polyester	0.00 mm

Conduit/Tray No: 2485 **Ref Dwg(s):** EE-300A
Conduit/Tray Type: 103 mm Liquidtight flex metal conduit
Total Fill: .00 mm2
Allowable Fill: 3275.44 mm2 Note: See Mark 4

Cable/Ckt. No.:	Type:	Cable Area:
Pull rope	Soft-fiber polyester	0.00 mm

Conduit/Tray No: 2486 **Ref Dwg(s):** EE-300A
Conduit/Tray Type: 103 mm Liquidtight flex metal conduit
Total Fill: .00 mm2
Allowable Fill: 3275.44 mm2 Note: See Mark 4

Cable/Ckt. No.:	Type:	Cable Area:
Pull rope	Soft-fiber polyester	0.00 mm

Conduit/Tray No: 2487 **Ref Dwg(s):** EE-300A
Conduit/Tray Type: 103 mm Liquidtight flex metal conduit
Total Fill: .00 mm2
Allowable Fill: 3275.44 mm2 Note: See Mark 4

Cable/Ckt. No.:	Type:	Cable Area:
Pull rope	Soft-fiber polyester	0.00 mm

Conduit/Tray No: 2488 **Ref Dwg(s):** EE-300A
Conduit/Tray Type: 103 mm Liquidtight flex metal conduit
Total Fill: .00 mm2
Allowable Fill: 3275.44 mm2 Note: See Mark 4

Cable/Ckt. No.:	Type:	Cable Area:
Pull rope	Soft-fiber polyester	0.00 mm

Conduit/Tray No: 2491 **Ref Dwg(s):** EE-300C
Conduit/Tray Type: 103 mm GRS conduit
Total Fill: .00 mm2
Allowable Fill: 3324.51 mm2 Note: See Mark 1 and Mark 7

Cable/Ckt. No.:	Type:	Cable Area:
Pull rope	Soft-fiber polyester	0.00 mm

Conduit/Tray No: 2492 **Ref Dwg(s):** EE-300A
Conduit/Tray Type: 103 mm Liquidtight flex metal conduit
Total Fill: .00 mm2
Allowable Fill: 3275.44 mm2 Note: See Mark 4

Cable/Ckt. No.:	Type:	Cable Area:
Pull rope	Soft-fiber polyester	0.00 mm

Conduit/Tray No: 2493 **Ref Dwg(s):** EE-81

Conduit/Tray Type: 103 mm GRS conduit

Total Fill: .00 mm2

Allowable Fill: 2576.49 mm2 Note: See Mark 3

Cable/Ckt. No.:	Type:	Cable Area:
Pull rope	Soft-fiber polyester	0.00 mm

Conduit/Tray No: 2494 **Ref Dwg(s):** EE-81

Conduit/Tray Type: 103 mm GRS conduit

Total Fill: 2628.48mm2

Allowable Fill: 2576.49 mm2 Note: See Mark 3

Cable/Ckt. No.:	Type:	Cable Area:
2391	3-1/C #4/0, 15 kV, EPR Insulation	2628.48 mm

Conduit/Tray No: 2500 **Ref Dwg(s):** EE-301A

Conduit/Tray Type: 103 mm Liquidtight flex metal conduit

Total Fill: 3089.90mm2

Allowable Fill: 3275.44 mm2 Note: See Mark 1

Cable/Ckt. No.:	Type:	Cable Area:
2337	1-3/C+gnd #2, 600 V, EPR insulation	527.18 mm
2321	1-3/C+gnd #1/0, 600 V, EPR insulation	754.18 mm
2336	1-3/C+gnd #1/0, 600 V, EPR insulation	754.18 mm
2323	1-3/C+gnd #2, 600 V, EPR insulation	527.18 mm
2322	1-3/C+gnd #2, 600 V, EPR insulation	527.18 mm

Conduit/Tray No: 2501 **Ref Dwg(s):** EE-301A
Conduit/Tray Type: 103 mm Liquidtight flex metal conduit
Total Fill: 3163.08mm2
Allowable Fill: 3275.44 mm2 Note: See Mark 1

Cable/Ckt. No.:	Type:	Cable Area:
A-2351	1-3/C+gnd #2, 600 V, EPR insulation	527.18 mm
A-2352	1-3/C+gnd #2, 600 V, EPR insulation	527.18 mm
S-2301A	1-3/C+gnd #2, 600 V, EPR insulation	527.18 mm
2338	1-3/C+gnd #2, 600 V, EPR insulation	527.18 mm
2339	1-3/C+gnd #2, 600 V, EPR insulation	527.18 mm
2347	1-3/C+gnd #2, 600 V, EPR insulation	527.18 mm

Conduit/Tray No: 2502 **Ref Dwg(s):** EE-301A
Conduit/Tray Type: 103 mm Liquidtight flex metal conduit
Total Fill: 1534.97mm2
Allowable Fill: 3275.44 mm2 Note: See Mark 1

Cable/Ckt. No.:	Type:	Cable Area:
UP233-6A	1-2/C+gnd #8, 600 V, EPR insulation	227.46 mm
2466-1	1-3/C #16, 600 V, EPR insulation	62.07 mm
UP244-9	1-3/C #10, 600 V, EPR insulation	126.88 mm
S-2302A	1-3/C+gnd #4, 600 V, EPR insulation	366.1 mm
A-2354	1-3/C+gnd #6, 600 V, EPR insulation	324.29 mm
2466-7	1-3/C #16, 600 V, EPR insulation	62.07 mm
A-2353	1-3/C+gnd #4, 600 V, EPR insulation	366.1 mm

Conduit/Tray No: 2503 **Ref Dwg(s):** EE-301A
Conduit/Tray Type: 103 mm Liquidtight flex metal conduit
Total Fill: .00 mm2
Allowable Fill: 3275.44 mm2 Note: See Mark 1

Cable/Ckt. No.:	Type:	Cable Area:
Pull rope	Soft-fiber polyester	0.00 mm

Conduit/Tray No: 2504 **Ref Dwg(s):** EE-301A

Conduit/Tray Type: 103 mm GRS conduit

Total Fill: 3089.90mm2

Allowable Fill: 3324.51 mm2 Note: See Mark 1

Cable/Ckt. No.:	Type:	Cable Area:
2323	1-3/C+gnd #2, 600 V, EPR insulation	527.18 mm
2336	1-3/C+gnd #1/0, 600 V, EPR insulation	754.18 mm
2337	1-3/C+gnd #2, 600 V, EPR insulation	527.18 mm
2321	1-3/C+gnd #1/0, 600 V, EPR insulation	754.18 mm
2322	1-3/C+gnd #2, 600 V, EPR insulation	527.18 mm

Conduit/Tray No: 2505 **Ref Dwg(s):** EE-301A

Conduit/Tray Type: 103 mm GRS conduit

Total Fill: 3163.08mm2

Allowable Fill: 3324.51 mm2 Note: See Mark 1

Cable/Ckt. No.:	Type:	Cable Area:
A-2351	1-3/C+gnd #2, 600 V, EPR insulation	527.18 mm
A-2352	1-3/C+gnd #2, 600 V, EPR insulation	527.18 mm
S-2301A	1-3/C+gnd #2, 600 V, EPR insulation	527.18 mm
2338	1-3/C+gnd #2, 600 V, EPR insulation	527.18 mm
2339	1-3/C+gnd #2, 600 V, EPR insulation	527.18 mm
2347	1-3/C+gnd #2, 600 V, EPR insulation	527.18 mm

Conduit/Tray No: 2506 **Ref Dwg(s):** EE-301A
Conduit/Tray Type: 103 mm GRS conduit
Total Fill: 1534.97mm2
Allowable Fill: 3324.51 mm2 Note: See Mark 1

Cable/Ckt. No.:	Type:	Cable Area:
2466-1	1-3/C #16, 600 V, EPR insulation	62.07 mm
UP244-9	1-3/C #10, 600 V, EPR insulation	126.88 mm
2466-7	1-3/C #16, 600 V, EPR insulation	62.07 mm
S-2302A	1-3/C+gnd #4, 600 V, EPR insulation	366.1 mm
A-2354	1-3/C+gnd #6, 600 V, EPR insulation	324.29 mm
A-2353	1-3/C+gnd #4, 600 V, EPR insulation	366.1 mm
UP233-6A	1-2/C+gnd #8, 600 V, EPR insulation	227.46 mm

Conduit/Tray No: 2507 **Ref Dwg(s):** EE-301A
Conduit/Tray Type: 103 mm GRS conduit
Total Fill: .00 mm2
Allowable Fill: 3324.51 mm2 Note: See Mark 1

Cable/Ckt. No.:	Type:	Cable Area:
Pull rope	Soft-fiber polyester	0.00 mm

Conduit/Tray No: 2508 **Ref Dwg(s):** EE-301A
Conduit/Tray Type: 103 mm Liquidtight flex metal conduit
Total Fill: 3089.90mm2
Allowable Fill: 3275.44 mm2 Note: See Mark 1

Cable/Ckt. No.:	Type:	Cable Area:
2336	1-3/C+gnd #1/0, 600 V, EPR insulation	754.18 mm
2337	1-3/C+gnd #2, 600 V, EPR insulation	527.18 mm
2323	1-3/C+gnd #2, 600 V, EPR insulation	527.18 mm
2322	1-3/C+gnd #2, 600 V, EPR insulation	527.18 mm
2321	1-3/C+gnd #1/0, 600 V, EPR insulation	754.18 mm

Conduit/Tray No: 2509 **Ref Dwg(s):** EE-301A

Conduit/Tray Type: 103 mm Liquidtight flex metal conduit

Total Fill: 3163.08mm2

Allowable Fill: 3275.44 mm2 Note: See Mark 1

Cable/Ckt. No.:	Type:	Cable Area:
A-2351	1-3/C+gnd #2, 600 V, EPR insulation	527.18 mm
A-2352	1-3/C+gnd #2, 600 V, EPR insulation	527.18 mm
S-2301A	1-3/C+gnd #2, 600 V, EPR insulation	527.18 mm
2347	1-3/C+gnd #2, 600 V, EPR insulation	527.18 mm
2339	1-3/C+gnd #2, 600 V, EPR insulation	527.18 mm
2338	1-3/C+gnd #2, 600 V, EPR insulation	527.18 mm

Conduit/Tray No: 2510 **Ref Dwg(s):** EE-301A

Conduit/Tray Type: 103 mm Liquidtight flex metal conduit

Total Fill: 1534.97mm2

Allowable Fill: 3275.44 mm2 Note: See Mark 1

Cable/Ckt. No.:	Type:	Cable Area:
A-2354	1-3/C+gnd #6, 600 V, EPR insulation	324.29 mm
S-2302A	1-3/C+gnd #4, 600 V, EPR insulation	366.1 mm
UP233-6A	1-2/C+gnd #8, 600 V, EPR insulation	227.46 mm
2466-7	1-3/C #16, 600 V, EPR insulation	62.07 mm
2466-1	1-3/C #16, 600 V, EPR insulation	62.07 mm
UP244-9	1-3/C #10, 600 V, EPR insulation	126.88 mm
A-2353	1-3/C+gnd #4, 600 V, EPR insulation	366.1 mm

Conduit/Tray No: 2511 **Ref Dwg(s):** EE-301A

Conduit/Tray Type: 103 mm Liquidtight flex metal conduit

Total Fill: .00 mm2

Allowable Fill: 3275.44 mm2 Note: See Mark 1

Cable/Ckt. No.:	Type:	Cable Area:
Pull rope	Soft-fiber polyester	0.00 mm

Conduit/Tray No: 2515 **Ref Dwg(s):** EE-301A
Conduit/Tray Type: 103 mm Liquidtight flex metal conduit
Total Fill: 2403.42mm2
Allowable Fill: 3275.44 mm2 Note: See Mark 1

Cable/Ckt. No.:	Type:	Cable Area:
2473-14	50 pair #18, shielded pairs, IS/OS shield 600 V, XLPE insul., PVC jacket	1201.71 mm
2474-14	50 pair #18, shielded pairs, IS/OS shield 600 V, XLPE insul., PVC jacket	1201.71 mm

Conduit/Tray No: 2516 **Ref Dwg(s):** EE-301A
Conduit/Tray Type: 103 mm Liquidtight flex metal conduit
Total Fill: 323.65 mm2
Allowable Fill: 3275.44 mm2 Note: See Mark 1

Cable/Ckt. No.:	Type:	Cable Area:
2475-4	72 Fiber, single mode fiberoptic riser cable	323.65 mm

Conduit/Tray No: 2517 **Ref Dwg(s):** EE-301A
Conduit/Tray Type: 103 mm Liquidtight flex metal conduit
Total Fill: 361.65 mm2
Allowable Fill: 3275.44 mm2 Note: See Mark 1

Cable/Ckt. No.:	Type:	Cable Area:
2506-241A	SSC	47.42 mm
2506-251C	SSC	47.42 mm
2506-251B	SSC	47.42 mm
2506-241B	SSC	47.42 mm
2506-4	SSC	47.42 mm
2506-1	IC	77.13 mm
2506-251A	SSC	47.42 mm

Conduit/Tray No: 2518 **Ref Dwg(s):** EE-301A
Conduit/Tray Type: 103 mm Liquidtight flex metal conduit
Total Fill: .00 mm2
Allowable Fill: 3275.44 mm2 Note: See Mark 1

Cable/Ckt. No.:	Type:	Cable Area:
Pull rope	Soft-fiber polyester	0.00 mm

Conduit/Tray No: 2520 **Ref Dwg(s):** EE-301A
Conduit/Tray Type: 103 mm GRS conduit
Total Fill: 2403.42mm2
Allowable Fill: 3324.51 mm2 Note: See Mark 1

Cable/Ckt. No.:	Type:	Cable Area:
2473-14	50 pair #18, shielded pairs, IS/OS shield 600 V, XLPE insul., PVC jacket	1201.71 mm
2474-14	50 pair #18, shielded pairs, IS/OS shield 600 V, XLPE insul., PVC jacket	1201.71 mm

Conduit/Tray No: 2521 **Ref Dwg(s):** EE-301A
Conduit/Tray Type: 103 mm GRS conduit
Total Fill: 323.65 mm2
Allowable Fill: 3324.51 mm2 Note: See Mark 1

Cable/Ckt. No.:	Type:	Cable Area:
2475-4	72 Fiber, single mode fiberoptic riser cable	323.65 mm

Conduit/Tray No: 2522 **Ref Dwg(s):** EE-301A
Conduit/Tray Type: 103 mm GRS conduit
Total Fill: 361.65 mm2
Allowable Fill: 3324.51 mm2 Note: See Mark 1

Cable/Ckt. No.:	Type:	Cable Area:
2506-251B	SSC	47.42 mm
2506-4	SSC	47.42 mm
2506-251C	SSC	47.42 mm
2506-241B	SSC	47.42 mm
2506-241A	SSC	47.42 mm
2506-251A	SSC	47.42 mm
2506-1	IC	77.13 mm

Conduit/Tray No: 2523 **Ref Dwg(s):** EE-301A
Conduit/Tray Type: 103 mm GRS conduit
Total Fill: .00 mm2
Allowable Fill: 3324.51 mm2 Note: See Mark 1

Cable/Ckt. No.:	Type:	Cable Area:
Pull rope	Soft-fiber polyester	0.00 mm

Conduit/Tray No: 2524 **Ref Dwg(s):** EE-301A
Conduit/Tray Type: 103 mm Liquidtight flex metal conduit
Total Fill: 2403.42mm2
Allowable Fill: 3275.44 mm2 Note: See Mark 1

Cable/Ckt. No.:	Type:	Cable Area:
2473-14	50 pair #18, shielded pairs, IS/OS shield 600 V, XLPE insul., PVC jacket	1201.71 mm
2474-14	50 pair #18, shielded pairs, IS/OS shield 600 V, XLPE insul., PVC jacket	1201.71 mm

Conduit/Tray No: 2525 **Ref Dwg(s):** EE-301A
Conduit/Tray Type: 103 mm Liquidtight flex metal conduit
Total Fill: 323.65 mm2
Allowable Fill: 3275.44 mm2 Note: See Mark 1

Cable/Ckt. No.:	Type:	Cable Area:
2475-4	72 Fiber, single mode fiberoptic riser cable	323.65 mm

Conduit/Tray No: 2526 **Ref Dwg(s):** EE-301A
Conduit/Tray Type: 103 mm Liquidtight flex metal conduit
Total Fill: 361.65 mm2
Allowable Fill: 3275.44 mm2 Note: See Mark 1

Cable/Ckt. No.:	Type:	Cable Area:
2506-4	SSC	47.42 mm
2506-1	IC	77.13 mm
2506-241B	SSC	47.42 mm
2506-241A	SSC	47.42 mm
2506-251C	SSC	47.42 mm
2506-251A	SSC	47.42 mm
2506-251B	SSC	47.42 mm

Conduit/Tray No: 2527 **Ref Dwg(s):** EE-301A
Conduit/Tray Type: 103 mm Liquidtight flex metal conduit
Total Fill: .00 mm2
Allowable Fill: 3275.44 mm2 Note: See Mark 1

Cable/Ckt. No.:	Type:	Cable Area:
Pull rope	Soft-fiber polyester	0.00 mm

Conduit/Tray No: 2531 **Ref Dwg(s):** EE-301A
Conduit/Tray Type: 103 mm Liquidtight flex metal conduit
Total Fill: .00 mm2
Allowable Fill: 3275.44 mm2 Note: See Mark 1

Cable/Ckt. No.:	Type:	Cable Area:
Pull rope	Soft-fiber polyester	0.00 mm

Conduit/Tray No: 2532 **Ref Dwg(s):** EE-301A
Conduit/Tray Type: 103 mm Liquidtight flex metal conduit
Total Fill: .00 mm2
Allowable Fill: 3275.44 mm2 Note: See Mark 1

Cable/Ckt. No.:	Type:	Cable Area:
Pull rope	Soft-fiber polyester	0.00 mm

Conduit/Tray No: 2533 **Ref Dwg(s):** EE-301A
Conduit/Tray Type: 103 mm Liquidtight flex metal conduit
Total Fill: .00 mm2
Allowable Fill: 3275.44 mm2 Note: See Mark 1

Cable/Ckt. No.:	Type:	Cable Area:
Pull rope	Soft-fiber polyester	0.00 mm

Conduit/Tray No: 2534 **Ref Dwg(s):** EE-301A
Conduit/Tray Type: 103 mm Liquidtight flex metal conduit
Total Fill: .00 mm2
Allowable Fill: 3275.44 mm2 Note: See Mark 1

Cable/Ckt. No.:	Type:	Cable Area:
Pull rope	Soft-fiber polyester	0.00 mm

Conduit/Tray No: 2535 **Ref Dwg(s):** EE-301A
Conduit/Tray Type: 103 mm GRS conduit
Total Fill: .00 mm2
Allowable Fill: 3324.51 mm2 Note: See Mark 1

Cable/Ckt. No.:	Type:	Cable Area:
Pull rope	Soft-fiber polyester	0.00 mm

Conduit/Tray No: 2536 **Ref Dwg(s):** EE-301A
Conduit/Tray Type: 103 mm GRS conduit
Total Fill: .00 mm2
Allowable Fill: 3324.51 mm2 Note: See Mark 1

Cable/Ckt. No.:	Type:	Cable Area:
Pull rope	Soft-fiber polyester	0.00 mm

Conduit/Tray No: 2537 **Ref Dwg(s):** EE-301A
Conduit/Tray Type: 103 mm GRS conduit
Total Fill: .00 mm2
Allowable Fill: 3324.51 mm2 Note: See Mark 1

Cable/Ckt. No.:	Type:	Cable Area:
Pull rope	Soft-fiber polyester	0.00 mm

Conduit/Tray No: 2538 **Ref Dwg(s):** EE-301A
Conduit/Tray Type: 103 mm GRS conduit
Total Fill: .00 mm2
Allowable Fill: 3324.51 mm2 Note: See Mark 1

Cable/Ckt. No.:	Type:	Cable Area:
Pull rope	Soft-fiber polyester	0.00 mm

Conduit/Tray No: 2539 **Ref Dwg(s):** EE-301A
Conduit/Tray Type: 103 mm Liquidtight flex metal conduit
Total Fill: .00 mm2
Allowable Fill: 3275.44 mm2 Note: See Mark 1

Cable/Ckt. No.:	Type:	Cable Area:
Pull rope	Soft-fiber polyester	0.00 mm

Conduit/Tray No: 2540 **Ref Dwg(s):** EE-301A
Conduit/Tray Type: 103 mm Liquidtight flex metal conduit
Total Fill: .00 mm2
Allowable Fill: 3275.44 mm2 Note: See Mark 1

Cable/Ckt. No.:	Type:	Cable Area:
Pull rope	Soft-fiber polyester	0.00 mm

Conduit/Tray No: 2541 **Ref Dwg(s):** EE-301A
Conduit/Tray Type: 103 mm Liquidtight flex metal conduit
Total Fill: .00 mm2
Allowable Fill: 3275.44 mm2 Note: See Mark 1

Cable/Ckt. No.:	Type:	Cable Area:
Pull rope	Soft-fiber polyester	0.00 mm

Conduit/Tray No: 2542 **Ref Dwg(s):** EE-301A
Conduit/Tray Type: 103 mm Liquidtight flex metal conduit
Total Fill: .00 mm2
Allowable Fill: 3275.44 mm2 Note: See Mark 1

Cable/Ckt. No.:	Type:	Cable Area:
Pull rope	Soft-fiber polyester	0.00 mm

Conduit/Tray No: 2544 **Ref Dwg(s):** EE-301A
Conduit/Tray Type: 103 mm Liquidtight flex metal conduit
Total Fill: 2628.48mm2
Allowable Fill: 3275.44 mm2 Note: See Mark 1

Cable/Ckt. No.:	Type:	Cable Area:
2391	3-1/C #4/0, 15 kV, EPR Insulation	2628.48 mm

Conduit/Tray No: 2545 **Ref Dwg(s):** EE-301A
Conduit/Tray Type: 103 mm GRS conduit
Total Fill: 2628.48mm2
Allowable Fill: 3324.51 mm2 Note: See Mark 1

Cable/Ckt. No.:	Type:	Cable Area:
2391	3-1/C #4/0, 15 kV, EPR Insulation	2628.48 mm

Conduit/Tray No: 2546 **Ref Dwg(s):** EE-301A
Conduit/Tray Type: 103 mm Liquidtight flex metal conduit
Total Fill: 2628.48mm2
Allowable Fill: 3275.44 mm2 Note: See Mark 1

Cable/Ckt. No.:	Type:	Cable Area:
2391	3-1/C #4/0, 15 kV, EPR Insulation	2628.48 mm

Conduit/Tray No: 2551 **Ref Dwg(s):** EE-302A
Conduit/Tray Type: 103 mm Liquidtight flex metal conduit
Total Fill: 3274.14mm2
Allowable Fill: 3275.44 mm2 Note: See Mark 1

Cable/Ckt. No.:	Type:	Cable Area:
2330	1-3/C+gnd #2/0, 600 V, EPR insulation	882.89 mm
2329	1-3/C+gnd #1/0, 600 V, EPR insulation	754.18 mm
2331	1-3/C+gnd #2/0, 600 V, EPR insulation	882.89 mm
2328	1-3/C+gnd #1/0, 600 V, EPR insulation	754.18 mm

Conduit/Tray No: 2552 **Ref Dwg(s):** EE-302A

Conduit/Tray Type: 103 mm Liquidtight flex metal conduit

Total Fill: 3274.14mm2

Allowable Fill: 3275.44 mm2 Note: See Mark 1

Cable/Ckt. No.:	Type:	Cable Area:
2346	1-3/C+gnd #2/0, 600 V, EPR insulation	882.89 mm
2345	1-3/C+gnd #2/0, 600 V, EPR insulation	882.89 mm
2344	1-3/C+gnd #1/0, 600 V, EPR insulation	754.18 mm
2343	1-3/C+gnd #1/0, 600 V, EPR insulation	754.18 mm

Conduit/Tray No: 2553 **Ref Dwg(s):** EE-302A

Conduit/Tray Type: 103 mm Liquidtight flex metal conduit

Total Fill: 2635.90mm2

Allowable Fill: 3275.44 mm2 Note: See Mark 1

Cable/Ckt. No.:	Type:	Cable Area:
2327	1-3/C+gnd #2, 600 V, EPR insulation	527.18 mm
2342	1-3/C+gnd #2, 600 V, EPR insulation	527.18 mm
A-2358	1-3/C+gnd #2, 600 V, EPR insulation	527.18 mm
A-2359	1-3/C+gnd #2, 600 V, EPR insulation	527.18 mm
A-2360	1-3/C+gnd #2, 600 V, EPR insulation	527.18 mm

Conduit/Tray No: 2554 **Ref Dwg(s):** EE-302A

Conduit/Tray Type: 103 mm Liquidtight flex metal conduit

Total Fill: 2635.90mm2

Allowable Fill: 3275.44 mm2 Note: See Mark 1

Cable/Ckt. No.:	Type:	Cable Area:
A-2362	1-3/C+gnd #2, 600 V, EPR insulation	527.18 mm
S-2307A	1-3/C+gnd #2, 600 V, EPR insulation	527.18 mm
S-2305A	1-3/C+gnd #2, 600 V, EPR insulation	527.18 mm
A-2361	1-3/C+gnd #2, 600 V, EPR insulation	527.18 mm
S-2306A	1-3/C+gnd #2, 600 V, EPR insulation	527.18 mm

Conduit/Tray No: 2555 **Ref Dwg(s):** EE-302A
Conduit/Tray Type: 103 mm GRS conduit
Total Fill: 744.45 mm2
Allowable Fill: 3324.51 mm2 Note: See Mark 1

Cable/Ckt. No.:	Type:	Cable Area:
UP238-2A.	1-2/C+gnd #8, 600 V, EPR insulation	227.46 mm
UP238-4A	1-2/C+gnd #8, 600 V, EPR insulation	227.46 mm
2467-2	1-3/C #16, 600 V, EPR insulation	62.07 mm
UP238-6A	1-2/C+gnd #8, 600 V, EPR insulation	227.46 mm

Conduit/Tray No: 2556 **Ref Dwg(s):** EE-302A
Conduit/Tray Type: 103 mm GRS conduit
Total Fill: 3274.14mm2
Allowable Fill: 3324.51 mm2 Note: See Mark 1

Cable/Ckt. No.:	Type:	Cable Area:
2331	1-3/C+gnd #2/0, 600 V, EPR insulation	882.89 mm
2330	1-3/C+gnd #2/0, 600 V, EPR insulation	882.89 mm
2328	1-3/C+gnd #1/0, 600 V, EPR insulation	754.18 mm
2329	1-3/C+gnd #1/0, 600 V, EPR insulation	754.18 mm

Conduit/Tray No: 2557 **Ref Dwg(s):** EE-302A
Conduit/Tray Type: 103 mm GRS conduit
Total Fill: 3274.14mm2
Allowable Fill: 3324.51 mm2 Note: See Mark 1

Cable/Ckt. No.:	Type:	Cable Area:
2343	1-3/C+gnd #1/0, 600 V, EPR insulation	754.18 mm
2344	1-3/C+gnd #1/0, 600 V, EPR insulation	754.18 mm
2345	1-3/C+gnd #2/0, 600 V, EPR insulation	882.89 mm
2346	1-3/C+gnd #2/0, 600 V, EPR insulation	882.89 mm

Conduit/Tray No: 2558 **Ref Dwg(s):** EE-302A
Conduit/Tray Type: 103 mm GRS conduit
Total Fill: 2635.90mm2
Allowable Fill: 3324.51 mm2 Note: See Mark 1

Cable/Ckt. No.:	Type:	Cable Area:
A-2360	1-3/C+gnd #2, 600 V, EPR insulation	527.18 mm
2327	1-3/C+gnd #2, 600 V, EPR insulation	527.18 mm
A-2359	1-3/C+gnd #2, 600 V, EPR insulation	527.18 mm
A-2358	1-3/C+gnd #2, 600 V, EPR insulation	527.18 mm
2342	1-3/C+gnd #2, 600 V, EPR insulation	527.18 mm

Conduit/Tray No: 2559 **Ref Dwg(s):** EE-302A
Conduit/Tray Type: 103 mm Liquidtight flex metal conduit
Total Fill: 2635.90mm2
Allowable Fill: 3275.44 mm2 Note: See Mark 1

Cable/Ckt. No.:	Type:	Cable Area:
A-2361	1-3/C+gnd #2, 600 V, EPR insulation	527.18 mm
A-2362	1-3/C+gnd #2, 600 V, EPR insulation	527.18 mm
S-2305A	1-3/C+gnd #2, 600 V, EPR insulation	527.18 mm
S-2306A	1-3/C+gnd #2, 600 V, EPR insulation	527.18 mm
S-2307A	1-3/C+gnd #2, 600 V, EPR insulation	527.18 mm

Conduit/Tray No: 2560 **Ref Dwg(s):** EE-302A
Conduit/Tray Type: 103 mm Liquidtight flex metal conduit
Total Fill: 744.45 mm2
Allowable Fill: 3275.44 mm2 Note: See Mark 1

Cable/Ckt. No.:	Type:	Cable Area:
UP238-2A.	1-2/C+gnd #8, 600 V, EPR insulation	227.46 mm
2467-2	1-3/C #16, 600 V, EPR insulation	62.07 mm
UP238-4A	1-2/C+gnd #8, 600 V, EPR insulation	227.46 mm
UP238-6A	1-2/C+gnd #8, 600 V, EPR insulation	227.46 mm

Conduit/Tray No: 2561 **Ref Dwg(s):** EE-302A

Conduit/Tray Type: 103 mm Liquidtight flex metal conduit

Total Fill: 3274.14mm2

Allowable Fill: 3275.44 mm2 Note: See Mark 1

Cable/Ckt. No.:	Type:	Cable Area:
2328	1-3/C+gnd #1/0, 600 V, EPR insulation	754.18 mm
2329	1-3/C+gnd #1/0, 600 V, EPR insulation	754.18 mm
2330	1-3/C+gnd #2/0, 600 V, EPR insulation	882.89 mm
2331	1-3/C+gnd #2/0, 600 V, EPR insulation	882.89 mm

Conduit/Tray No: 2562 **Ref Dwg(s):** EE-302A

Conduit/Tray Type: 103 mm Liquidtight flex metal conduit

Total Fill: 3274.14mm2

Allowable Fill: 3275.44 mm2 Note: See Mark 1

Cable/Ckt. No.:	Type:	Cable Area:
2344	1-3/C+gnd #1/0, 600 V, EPR insulation	754.18 mm
2345	1-3/C+gnd #2/0, 600 V, EPR insulation	882.89 mm
2343	1-3/C+gnd #1/0, 600 V, EPR insulation	754.18 mm
2346	1-3/C+gnd #2/0, 600 V, EPR insulation	882.89 mm

Conduit/Tray No: 2563 **Ref Dwg(s):** EE-302A

Conduit/Tray Type: 103 mm Liquidtight flex metal conduit

Total Fill: 2635.90mm2

Allowable Fill: 3275.44 mm2 Note: See Mark 1

Cable/Ckt. No.:	Type:	Cable Area:
A-2358	1-3/C+gnd #2, 600 V, EPR insulation	527.18 mm
A-2359	1-3/C+gnd #2, 600 V, EPR insulation	527.18 mm
A-2360	1-3/C+gnd #2, 600 V, EPR insulation	527.18 mm
2327	1-3/C+gnd #2, 600 V, EPR insulation	527.18 mm
2342	1-3/C+gnd #2, 600 V, EPR insulation	527.18 mm

Conduit/Tray No: 2564 **Ref Dwg(s):** EE-302A

Conduit/Tray Type: 103 mm Liquidtight flex metal conduit

Total Fill: 2635.90mm2

Allowable Fill: 3275.44 mm2 Note: See Mark 1

Cable/Ckt. No.:	Type:	Cable Area:
S-2307A	1-3/C+gnd #2, 600 V, EPR insulation	527.18 mm
S-2306A	1-3/C+gnd #2, 600 V, EPR insulation	527.18 mm
S-2305A	1-3/C+gnd #2, 600 V, EPR insulation	527.18 mm
A-2362	1-3/C+gnd #2, 600 V, EPR insulation	527.18 mm
A-2361	1-3/C+gnd #2, 600 V, EPR insulation	527.18 mm

Conduit/Tray No: 2565 **Ref Dwg(s):** EE-302A

Conduit/Tray Type: 103 mm Liquidtight flex metal conduit

Total Fill: 744.45 mm2

Allowable Fill: 3275.44 mm2 Note: See Mark 1

Cable/Ckt. No.:	Type:	Cable Area:
UP238-4A	1-2/C+gnd #8, 600 V, EPR insulation	227.46 mm
UP238-6A	1-2/C+gnd #8, 600 V, EPR insulation	227.46 mm
2467-2	1-3/C #16, 600 V, EPR insulation	62.07 mm
UP238-2A.	1-2/C+gnd #8, 600 V, EPR insulation	227.46 mm

Conduit/Tray No: 2566 **Ref Dwg(s):** EE-302A

Conduit/Tray Type: 103 mm Liquidtight flex metal conduit

Total Fill: 2697.72mm2

Allowable Fill: 3275.44 mm2 Note: See Mark 1

Cable/Ckt. No.:	Type:	Cable Area:
2417	1 - 2 pair, shielded #18 with IS/OA , 600 V, PVC jacket	98.1 mm
2421	1 - 2 pair, shielded #18 with IS/OA , 600 V, PVC jacket	98.1 mm
2474-18	50 pair #18, shielded pairs, IS/OS shield 600 V, XLPE insul., PVC jacket	1201.71 mm
2473-18	50 pair #18, shielded pairs, IS/OS shield 600 V, XLPE insul., PVC jacket	1201.71 mm
2425	1 - 2 pair, shielded #18 with IS/OA , 600 V, PVC jacket	98.1 mm

Conduit/Tray No: 2567 **Ref Dwg(s):** EE-302A
Conduit/Tray Type: 103 mm GRS conduit
Total Fill: 323.65 mm2
Allowable Fill: 3324.51 mm2 Note: See Mark 1

Cable/Ckt. No.:	Type:	Cable Area:
2475-4	72 Fiber, single mode fiberoptic riser cable	323.65 mm

Conduit/Tray No: 2568 **Ref Dwg(s):** EE-302A
Conduit/Tray Type: 103 mm GRS conduit
Total Fill: 266.81 mm2
Allowable Fill: 3324.51 mm2 Note: See Mark 1

Cable/Ckt. No.:	Type:	Cable Area:
2506-1	IC	77.13 mm
2507-262A	SSC	47.42 mm
2507-262B	SSC	47.42 mm
2507-262C	SSC	47.42 mm
2506-4	SSC	47.42 mm

Conduit/Tray No: 2569 **Ref Dwg(s):** EE-302A
Conduit/Tray Type: 103 mm GRS conduit
Total Fill: .00 mm2
Allowable Fill: 3324.51 mm2 Note: See Mark 1

Cable/Ckt. No.:	Type:	Cable Area:
Pull rope	Soft-fiber polyester	0.00 mm

Conduit/Tray No: 2570 **Ref Dwg(s):** EE-302A
Conduit/Tray Type: 103 mm GRS conduit
Total Fill: 2697.72mm2
Allowable Fill: 3324.51 mm2 Note: See Mark 1

Cable/Ckt. No.:	Type:	Cable Area:
2474-18	50 pair #18, shielded pairs, IS/OS shield 600 V, XLPE insul., PVC jacket	1201.71 mm
2473-18	50 pair #18, shielded pairs, IS/OS shield 600 V, XLPE insul., PVC jacket	1201.71 mm
2417	1 - 2 pair, shielded #18 with IS/OA , 600 V, PVC jacket	98.1 mm
2421	1 - 2 pair, shielded #18 with IS/OA , 600 V, PVC jacket	98.1 mm
2425	1 - 2 pair, shielded #18 with IS/OA , 600 V, PVC jacket	98.1 mm

Conduit/Tray No: 2571 **Ref Dwg(s):** EE-302A
Conduit/Tray Type: 103 mm Liquidtight flex metal conduit
Total Fill: 323.65 mm2
Allowable Fill: 3275.44 mm2 Note: See Mark 1

Cable/Ckt. No.:	Type:	Cable Area:
2475-4	72 Fiber, single mode fiberoptic riser cable	323.65 mm

Conduit/Tray No: 2572 **Ref Dwg(s):** EE-302A
Conduit/Tray Type: 103 mm Liquidtight flex metal conduit
Total Fill: 266.81 mm2
Allowable Fill: 3275.44 mm2 Note: See Mark 1

Cable/Ckt. No.:	Type:	Cable Area:
2507-262B	SSC	47.42 mm
2507-262C	SSC	47.42 mm
2506-1	IC	77.13 mm
2506-4	SSC	47.42 mm
2507-262A	SSC	47.42 mm

Conduit/Tray No: 2573 **Ref Dwg(s):** EE-302A
Conduit/Tray Type: 103 mm Liquidtight flex metal conduit
Total Fill: .00 mm2
Allowable Fill: 3275.44 mm2 Note: See Mark 1

Cable/Ckt. No.:	Type:	Cable Area:
Pull rope	Soft-fiber polyester	0.00 mm

Conduit/Tray No: 2574 **Ref Dwg(s):** EE-302A
Conduit/Tray Type: 103 mm Liquidtight flex metal conduit
Total Fill: 2697.72mm2
Allowable Fill: 3275.44 mm2 Note: See Mark 1

Cable/Ckt. No.:	Type:	Cable Area:
2421	1 - 2 pair, shielded #18 with IS/OA , 600 V, PVC jacket	98.1 mm
2425	1 - 2 pair, shielded #18 with IS/OA , 600 V, PVC jacket	98.1 mm
2473-18	50 pair #18, shielded pairs, IS/OS shield 600 V, XLPE insul., PVC jacket	1201.71 mm
2474-18	50 pair #18, shielded pairs, IS/OS shield 600 V, XLPE insul., PVC jacket	1201.71 mm
2417	1 - 2 pair, shielded #18 with IS/OA , 600 V, PVC jacket	98.1 mm

Conduit/Tray No: 2575 **Ref Dwg(s):** EE-302A
Conduit/Tray Type: 103 mm Liquidtight flex metal conduit
Total Fill: 323.65 mm2
Allowable Fill: 3275.44 mm2 Note: See Mark 1

Cable/Ckt. No.:	Type:	Cable Area:
2475-4	72 Fiber, single mode fiberoptic riser cable	323.65 mm

Conduit/Tray No: 2576 **Ref Dwg(s):** EE-302A
Conduit/Tray Type: 103 mm Liquidtight flex metal conduit
Total Fill: 266.81 mm2
Allowable Fill: 3275.44 mm2 Note: See Mark 1

Cable/Ckt. No.:	Type:	Cable Area:
2507-262B	SSC	47.42 mm
2507-262A	SSC	47.42 mm
2507-262C	SSC	47.42 mm
2506-4	SSC	47.42 mm
2506-1	IC	77.13 mm

Conduit/Tray No: 2577 **Ref Dwg(s):** EE-302A
Conduit/Tray Type: 103 mm Liquidtight flex metal conduit
Total Fill: .00 mm2
Allowable Fill: 3275.44 mm2 Note: See Mark 1

Cable/Ckt. No.:	Type:	Cable Area:
Pull rope	Soft-fiber polyester	0.00 mm

Conduit/Tray No: 2581 **Ref Dwg(s):** EE-302A
Conduit/Tray Type: 103 mm Liquidtight flex metal conduit
Total Fill: .00 mm2
Allowable Fill: 3275.44 mm2 Note: See Mark 1

Cable/Ckt. No.:	Type:	Cable Area:
Pull rope	Soft-fiber polyester	0.00 mm

Conduit/Tray No: 2582 **Ref Dwg(s):** EE-302A
Conduit/Tray Type: 103 mm Liquidtight flex metal conduit
Total Fill: .00 mm2
Allowable Fill: 3275.44 mm2 Note: See Mark 1

Cable/Ckt. No.:	Type:	Cable Area:
Pull rope	Soft-fiber polyester	0.00 mm

Conduit/Tray No: 2583 **Ref Dwg(s):** EE-302A
Conduit/Tray Type: 103 mm Liquidtight flex metal conduit
Total Fill: .00 mm2
Allowable Fill: 3275.44 mm2 Note: See Mark 1

Cable/Ckt. No.:	Type:	Cable Area:
Pull rope	Soft-fiber polyester	0.00 mm

Conduit/Tray No: 2584 **Ref Dwg(s):** EE-302A
Conduit/Tray Type: 103 mm Liquidtight flex metal conduit
Total Fill: .00 mm2
Allowable Fill: 3275.44 mm2 Note: See Mark 1

Cable/Ckt. No.:	Type:	Cable Area:
Pull rope	Soft-fiber polyester	0.00 mm

Conduit/Tray No: 2585 **Ref Dwg(s):** EE-302A
Conduit/Tray Type: 103 mm GRS conduit
Total Fill: .00 mm2
Allowable Fill: 3324.51 mm2 Note: See Mark 1

Cable/Ckt. No.:	Type:	Cable Area:
Pull rope	Soft-fiber polyester	0.00 mm

Conduit/Tray No: 2586 **Ref Dwg(s):** EE-302A
Conduit/Tray Type: 103 mm GRS conduit
Total Fill: .00 mm2
Allowable Fill: 3324.51 mm2 Note: See Mark 1

Cable/Ckt. No.:	Type:	Cable Area:
Pull rope	Soft-fiber polyester	0.00 mm

Conduit/Tray No: 2587 **Ref Dwg(s):** EE-302A
Conduit/Tray Type: 103 mm GRS conduit
Total Fill: .00 mm2
Allowable Fill: 3324.51 mm2 Note: See Mark 1

Cable/Ckt. No.:	Type:	Cable Area:
Pull rope	Soft-fiber polyester	0.00 mm

Conduit/Tray No: 2588 **Ref Dwg(s):** EE-302A
Conduit/Tray Type: 103 mm GRS conduit
Total Fill: .00 mm2
Allowable Fill: 3324.51 mm2 Note: See Mark 1

Cable/Ckt. No.:	Type:	Cable Area:
Pull rope	Soft-fiber polyester	0.00 mm

Conduit/Tray No: 2589 **Ref Dwg(s):** EE-302A
Conduit/Tray Type: 103 mm Liquidtight flex metal conduit
Total Fill: .00 mm2
Allowable Fill: 3275.44 mm2 Note: See Mark 1

Cable/Ckt. No.:	Type:	Cable Area:
Pull rope	Soft-fiber polyester	0.00 mm

Conduit/Tray No: 2590 **Ref Dwg(s):** EE-302A
Conduit/Tray Type: 103 mm Liquidtight flex metal conduit
Total Fill: .00 mm2
Allowable Fill: 3275.44 mm2 Note: See Mark 1

Cable/Ckt. No.:	Type:	Cable Area:
Pull rope	Soft-fiber polyester	0.00 mm

Conduit/Tray No: 2591 **Ref Dwg(s):** EE-302A
Conduit/Tray Type: 103 mm Liquidtight flex metal conduit
Total Fill: .00 mm2
Allowable Fill: 3275.44 mm2 Note: See Mark 1

Cable/Ckt. No.:	Type:	Cable Area:
Pull rope	Soft-fiber polyester	0.00 mm

Conduit/Tray No: 2592 **Ref Dwg(s):** EE-302A
Conduit/Tray Type: 103 mm Liquidtight flex metal conduit
Total Fill: .00 mm2
Allowable Fill: 3275.44 mm2 Note: See Mark 1

Cable/Ckt. No.:	Type:	Cable Area:
Pull rope	Soft-fiber polyester	0.00 mm

Conduit/Tray No: 2593 **Ref Dwg(s):** EE-302A
Conduit/Tray Type: 103 mm Liquidtight flex metal conduit
Total Fill: 2628.48mm2
Allowable Fill: 3275.44 mm2 Note: See Mark 1

Cable/Ckt. No.:	Type:	Cable Area:
2392	3-1/C #4/0, 15 kV, EPR Insulation	2628.48 mm

Conduit/Tray No: 2594 **Ref Dwg(s):** EE-302A
Conduit/Tray Type: 103 mm GRS conduit
Total Fill: 2628.48mm2
Allowable Fill: 3324.51 mm2 Note: See Mark 1

Cable/Ckt. No.:	Type:	Cable Area:
2392	3-1/C #4/0, 15 kV, EPR Insulation	2628.48 mm

Conduit/Tray No: 2595 **Ref Dwg(s):** EE-302A

Conduit/Tray Type: 103 mm Liquidtight flex metal conduit

Total Fill: 2628.48mm2

Allowable Fill: 3275.44 mm2 Note: See Mark 1

Cable/Ckt. No.:	Type:	Cable Area:
2392	3-1/C #4/0, 15 kV, EPR Insulation	2628.48 mm

Conduit/Tray No: 2T10 **Ref Dwg(s):** EE-81 thru EE-86

Conduit/Tray Type: 305 mm 6" siderail ladder tray

Total Fill: 2628.48mm2

Allowable Fill: 8387.08 mm2 Note: See Mark 4

Cable/Ckt. No.:	Type:	Cable Area:
2391	3-1/C #4/0, 15 kV, EPR Insulation	2628.48 mm

Conduit/Tray No: 2T13 **Ref Dwg(s):** EE-96, EE-97, EE-30

Conduit/Tray Type: 305 mm 6" siderail ladder tray

Total Fill: 2628.48mm2

Allowable Fill: 8387.08 mm2 Note: See Mark 6

Cable/Ckt. No.:	Type:	Cable Area:
2392	3-1/C #4/0, 15 kV, EPR Insulation	2628.48 mm

Conduit/Tray No: 2T20 **Ref Dwg(s):** EE-81 thru EE-86

Conduit/Tray Type: 610 mm 6" siderail ladder tray

Total Fill: 15668.4mm2

Allowable Fill: 18064.48 mm2 Note: See Mark 4

Cable/Ckt. No.:	Type:	Cable Area:
UP233-4A	1-2/C+gnd #8, 600 V, EPR insulation	227.46 mm
2336	1-3/C+gnd #1/0, 600 V, EPR insulation	754.18 mm
2364	1-3/C #10, 600 V, EPR insulation	126.88 mm
A-2351	1-3/C+gnd #2, 600 V, EPR insulation	527.18 mm
2363	1-3/C #10, 600 V, EPR insulation	126.88 mm
2362	1-3/C #10, 600 V, EPR insulation	126.88 mm
2360	1-3/C #10, 600 V, EPR insulation	126.88 mm
2338	1-3/C+gnd #2, 600 V, EPR insulation	527.18 mm
2337	1-3/C+gnd #2, 600 V, EPR insulation	527.18 mm
2365	1-3/C #10, 600 V, EPR insulation	126.88 mm
2361	1-3/C #10, 600 V, EPR insulation	126.88 mm
2451	1-7/C #16, 600 V, EPR insulation	102.61 mm
2452	1-2/C #14, 600 V, EPR insulation	77.07 mm
2453	1-2/C #14, 600 V, EPR insulation	77.07 mm
2454	1-7/C #16, 600 V, EPR insulation	102.61 mm
2460	1-2/C #14, 600 V, EPR insulation	77.07 mm
2461	1-2/C #14, 600 V, EPR insulation	77.07 mm
UP244-9	1-3/C #10, 600 V, EPR insulation	126.88 mm
2465-1	1-3/C #16, 600 V, EPR insulation	62.07 mm

2323	1-3/C+gnd #2, 600 V, EPR insulation	527.18	mm
2466-1	1-3/C #16, 600 V, EPR insulation	62.07	mm
UP231-8	1-2/C+gnd #8, 600 V, EPR insulation	227.46	mm
A-2352	1-3/C+gnd #2, 600 V, EPR insulation	527.18	mm
A-2353	1-3/C+gnd #4, 600 V, EPR insulation	366.1	mm
2465-2	1-3/C #16, 600 V, EPR insulation	62.07	mm
UP231-3A	1-2/C+gnd #8, 600 V, EPR insulation	227.46	mm
S-2302A	1-3/C+gnd #4, 600 V, EPR insulation	366.1	mm
UP233-6A	1-2/C+gnd #8, 600 V, EPR insulation	227.46	mm
UP231-6	1-4/C #10, 600 V, EPR insulation	170.46	mm
UP232-6	1-4/C #10, 600 V, EPR insulation	170.46	mm

UP233-12	1-4/C #10, 600 V, EPR insulation	170.46	mm
UP234-6	1-4/C #10, 600 V, EPR insulation	170.46	mm
LP252-2/4	1-3/C+gnd #6, 600 V, EPR insulation	324.29	mm
LP252-6/8	1-3/C+gnd #8, 600 V, EPR insulation	262.68	mm
LP253-2/4	1-3/C+gnd #8, 600 V, EPR insulation	262.68	mm
LP253-6/8	1-3/C+gnd #8, 600 V, EPR insulation	262.68	mm
UP232-7	1-2/C+gnd #8, 600 V, EPR insulation	227.46	mm
LP254-6/8	1-3/C+gnd #6, 600 V, EPR insulation	324.29	mm
2322	1-3/C+gnd #2, 600 V, EPR insulation	527.18	mm
UP231-7	1-2/C+gnd #8, 600 V, EPR insulation	227.46	mm
UP232-3A	1-2/C+gnd #8, 600 V, EPR insulation	227.46	mm

UP232-8	1-2/C+gnd #10, 600 V, EPR insulation	126.88	mm
UP233-3A	1-2/C+gnd #8, 600 V, EPR insulation	227.46	mm
UP233-7	1-2/C+gnd #8, 600 V, EPR insulation	227.46	mm
UP233-8	1-2/C+gnd #10, 600 V, EPR insulation	126.88	mm
UP234-3A	1-2/C+gnd #8, 600 V, EPR insulation	227.46	mm
UP234-7	1-2/C+gnd #8, 600 V, EPR insulation	227.46	mm
UP234-8	1-2/C+gnd #10, 600 V, EPR insulation	126.88	mm
2321	1-3/C+gnd #1/0, 600 V, EPR insulation	754.18	mm
LP254-2/4	1-3/C+gnd #6, 600 V, EPR insulation	324.29	mm
2339	1-3/C+gnd #2, 600 V, EPR insulation	527.18	mm
S-2301A	1-3/C+gnd #2, 600 V, EPR insulation	527.18	mm

LP251-2/4	1-3/C+gnd #6, 600 V, EPR insulation	324.29	mm
2347	1-3/C+gnd #2, 600 V, EPR insulation	527.18	mm
2466-7	1-3/C #16, 600 V, EPR insulation	62.07	mm
UP234-2	1-2/C+gnd #10, 600 V, EPR insulation	126.88	mm
UP233-14	1-2/C+gnd #10, 600 V, EPR insulation	126.88	mm
UP232-2	1-2/C+gnd #10, 600 V, EPR insulation	126.88	mm
UP231-2	1-2/C+gnd #10, 600 V, EPR insulation	126.88	mm
UP233-6A	1-2/C+gnd #8, 600 V, EPR insulation	227.46	mm
A-2354	1-3/C+gnd #6, 600 V, EPR insulation	324.29	mm
LP251-6/8	1-3/C+gnd #6, 600 V, EPR insulation	324.29	mm

Conduit/Tray No: 2T24 **Ref Dwg(s):** EE-96, EE-97, EE-304

Conduit/Tray Type: 610 mm 6" siderail ladder tray

Total Fill: 5490.23mm2

Allowable Fill: 18064.48 mm2 Note: See Mark 6

Cable/Ckt. No.:	Type:	Cable Area:
S-2307A	1-3/C+gnd #2, 600 V, EPR insulation	527.18 mm
UP243-4	1-4/C #10, 600 V, EPR insulation	170.46 mm
UP242-2A.	1-2/C+gnd #8, 600 V, EPR insulation	227.46 mm
UP243-12	1-2/C+gnd #10, 600 V, EPR insulation	126.88 mm
UP242-6A	1-2/C+gnd #8, 600 V, EPR insulation	227.46 mm
A-2362	1-3/C+gnd #2, 600 V, EPR insulation	527.18 mm
2468-3	1-3/C #16, 600 V, EPR insulation	62.07 mm
UP243-6	1-4/C #10, 600 V, EPR insulation	170.46 mm
LP263-6/8	1-3/C+gnd #6, 600 V, EPR insulation	324.29 mm
UP243-11	1-2/C+gnd #10, 600 V, EPR insulation	126.88 mm
UP242-4A	1-2/C+gnd #8, 600 V, EPR insulation	227.46 mm
LP263-2/4	1-3/C+gnd #6, 600 V, EPR insulation	324.29 mm
UP243-3A	1-2/C+gnd #8, 600 V, EPR insulation	227.46 mm
UP243-7	1-2/C+gnd #8, 600 V, EPR insulation	227.46 mm
UP243-8	1-2/C+gnd #8, 600 V, EPR insulation	227.46 mm
2331	1-3/C+gnd #2/0, 600 V, EPR insulation	882.89 mm
2346	1-3/C+gnd #2/0, 600 V, EPR insulation	882.89 mm

Conduit/Tray No: 2T40 **Ref Dwg(s):** EE-81 thru EE-86

Conduit/Tray Type: 305 mm 6" siderail ladder tray

Total Fill: 14251.7mm2

Allowable Fill: 19354.80 mm2 Note: See Mark 4

Cable/Ckt. No.:	Type:	Cable Area:
2506-111D	SSC	47.42 mm
2506-111E	SSC	47.42 mm
2506-191A	SSC	47.42 mm
2506-91B	SSC	47.42 mm
2506-111B	SSC	47.42 mm
2506-111A	SSC	47.42 mm
2506-101B	SSC	47.42 mm
2506-101A	SSC	47.42 mm
2506-91C	SSC	47.42 mm
2506-111C	SSC	47.42 mm
2506-91A	SSC	47.42 mm
2506-81A	SSC	47.42 mm
2506-1	IC	77.13 mm
2506-201A	SSC	47.42 mm
2506-71B	SSC	47.42 mm
2506-71A	SSC	47.42 mm
2506-61C	SSC	47.42 mm
2506-61B	SSC	47.42 mm
2506-111F	SSC	47.42 mm

2506-251C	SSC	47.42	mm
2506-201B	SSC	47.42	mm
2506-221A	SSC	47.42	mm
2409	1 - 2 pair, shielded #18 with IS/OA , 600 V, PVC jacket	98.1	mm
2506-4	SSC	47.42	mm
2506-121C	SSC	47.42	mm
2506-241B	SSC	47.42	mm
2506-241A	SSC	47.42	mm
2506-111K	SSC	47.42	mm
2506-251B	SSC	47.42	mm
2506-61A	SSC	47.42	mm

2506-251A	SSC	47.42	mm
2506-221B	SSC	47.42	mm
2506-111G	SSC	47.42	mm
2506-231A	SSC	47.42	mm
2506-211B	SSC	47.42	mm
2506-211A	SSC	47.42	mm
2506-111Q	SSC	47.42	mm
2506-111P	SSC	47.42	mm
2506-111N	SSC	47.42	mm
2506-111L	SSC	47.42	mm
2506-111J	SSC	47.42	mm

2506-111H	SSC	47.42	mm
2506-221C	SSC	47.42	mm
2475-4A	12 Fiber, single mode fiberoptic cable	30.19	mm
2473-11	50 pair #18, shielded pairs, IS/OS shield 600 V, XLPE insul., PVC jacket	1201.71	mm
2506-111M	SSC	47.42	mm
2410	1 - 2 pair, shielded #18 with IS/OA , 600 V, PVC jacket	98.1	mm
2474-14	50 pair #18, shielded pairs, IS/OS shield 600 V, XLPE insul., PVC jacket	1201.71	mm
2474-12B	1 - 6 pair, shielded #18 with overall shield , 600 V, PVC jacket	158.9	mm
2474-12A	1 - 6 pair, shielded #18 with overall shield , 600 V, PVC jacket	158.9	mm
2474-12	50 pair #18, shielded pairs, IS/OS shield 600 V, XLPE insul., PVC jacket	1201.71	mm
2475-4D	12 Fiber, single mode fiberoptic cable	30.19	mm

2411	1 - 2 pair, shielded #18 with IS/OA , 600 V, PVC jacket	98.1	mm
2475-4B	12 Fiber, single mode fiberoptic cable	30.19	mm
2413	1 - 2 pair, shielded #18 with IS/OA , 600 V, PVC jacket	98.1	mm
2475-4	72 Fiber, single mode fiberoptic riser cable	323.65	mm
2408	1 - 2 pair, shielded #18 with IS/OA , 600 V, PVC jacket	98.1	mm
2406	1 - 2 pair, shielded #18 with IS/OA , 600 V, PVC jacket	98.1	mm
2474-13	50 pair #18, shielded pairs, IS/OS shield 600 V, XLPE insul., PVC jacket	1201.71	mm
2474-11	50 pair #18, shielded pairs, IS/OS shield 600 V, XLPE insul., PVC jacket	1201.71	mm
2473-14	50 pair #18, shielded pairs, IS/OS shield 600 V, XLPE insul., PVC jacket	1201.71	mm
2473-13	50 pair #18, shielded pairs, IS/OS shield 600 V, XLPE insul., PVC jacket	1201.71	mm
2473-12	50 pair #18, shielded pairs, IS/OS shield 600 V, XLPE insul., PVC jacket	1201.71	mm

2506-51B	SSC	47.42	mm
2475-4C	12 Fiber, single mode fiberoptic cable	30.19	mm
2506-181B	SSC	47.42	mm
2506-51A	SSC	47.42	mm
2506-41C	SSC	47.42	mm
2506-41B	SSC	47.42	mm
2506-41A	SSC	47.42	mm
2506-31B	SSC	47.42	mm
2506-31A	SSC	47.42	mm
2506-21C	SSC	47.42	mm
2506-21B	SSC	47.42	mm

2412	1 - 2 pair, shielded #18 with IS/OA , 600 V, PVC jacket	98.1	mm
2506-2	IC	77.13	mm
2506-11A	SSC	47.42	mm
2506-131A	SSC	47.42	mm
2506-121A	SSC	47.42	mm
2506-21A	SSC	47.42	mm
2506-121B	SSC	47.42	mm
2506-181A	SSC	47.42	mm
2506-131B	SSC	47.42	mm
2506-131C	SSC	47.42	mm
2506-141A	SSC	47.42	mm

2506-151A	SSC	47.42	mm
2506-161A	SSC	47.42	mm
2506-171A	SSC	47.42	mm

Conduit/Tray No: 2T43 **Ref Dwg(s):** EE-96, EE-97, EE-304

Conduit/Tray Type: 305 mm 6" siderail ladder tray

Total Fill: 3413.21mm2

Allowable Fill: 19354.80 mm2 Note: See Mark 6

Cable/Ckt. No.:	Type:	Cable Area:	
2507-292B	SSC	47.42	mm
2507-292C	SSC	47.42	mm
2507-282B	SSC	47.42	mm
2507-282A	SSC	47.42	mm
2507-1	IC	77.13	mm
2507-292A	SSC	47.42	mm
2475-4L	12 Fiber, single mode fiberoptic cable	30.19	mm
2475-4	72 Fiber, single mode fiberoptic riser cable	323.65	mm
2431	1 - 2 pair, shielded #18 with IS/OA , 600 V, PVC jacket	98.1	mm
2428	1 - 2 pair, shielded #18 with IS/OA , 600 V, PVC jacket	98.1	mm
2434	1 - 2 pair, shielded #18 with IS/OA , 600 V, PVC jacket	98.1	mm
2474-22	50 pair #18, shielded pairs, IS/OS shield 600 V, XLPE insul., PVC jacket	1201.71	mm
2507-292D	SSC	47.42	mm
2473-22	50 pair #18, shielded pairs, IS/OS shield 600 V, XLPE insul., PVC jacket	1201.71	mm

Conduit/Tray No: 2T50 **Ref Dwg(s):** EE-81 thru EE-86
Conduit/Tray Type: 610 mm 6" siderail ladder tray
Total Fill: .00 mm2
Allowable Fill: 38709.60 mm2 Note: See Mark 4

Cable/Ckt. No.:	Type:	Cable Area:
Non-Caltrans		0.00 mm

Conduit/Tray No: 2T53 **Ref Dwg(s):** EE-96, EE-97, EE-304
Conduit/Tray Type: 610 mm 6" siderail ladder tray
Total Fill: .00 mm2
Allowable Fill: 38709.60 mm2 Note: See Mark 6

Cable/Ckt. No.:	Type:	Cable Area:
Non-Caltrans		0.00 mm

Conduit/Tray No: 7475 **Ref Dwg(s):** EE-300C
Conduit/Tray Type: 103 mm Liquidtight flex metal conduit
Total Fill: .00 mm2
Allowable Fill: 3275.44 mm2 Note: See Mark 4, Mark7 and Mark 8

Cable/Ckt. No.:	Type:	Cable Area:
Pull rope	Soft-fiber polyester	0.00 mm

Conduit/Tray No: 7476 **Ref Dwg(s):** EE-300C
Conduit/Tray Type: 103 mm Liquidtight flex metal conduit
Total Fill: .00 mm2
Allowable Fill: 3275.44 mm2 Note: See Mark 4, Mark7 and Mark 8

Cable/Ckt. No.:	Type:	Cable Area:
Pull rope	Soft-fiber polyester	0.00 mm

Conduit/Tray No: 7477 **Ref Dwg(s):** EE-300C
Conduit/Tray Type: 103 mm Liquidtight flex metal conduit
Total Fill: .00 mm2
Allowable Fill: 3275.44 mm2 Note: See Mark 4, Mark7 and Mark 8

Cable/Ckt. No.:	Type:	Cable Area:
Pull rope	Soft-fiber polyester	0.00 mm

Conduit/Tray No: 7478 **Ref Dwg(s):** EE-300C
Conduit/Tray Type: 103 mm Liquidtight flex metal conduit
Total Fill: .00 mm2
Allowable Fill: 3275.44 mm2 Note: See Mark 4, Mark7 and Mark 8

Cable/Ckt. No.:	Type:	Cable Area:
Pull rope	Soft-fiber polyester	0.00 mm

Conduit/Tray No: 7485 **Ref Dwg(s):** EE-300C
Conduit/Tray Type: 103 mm Liquidtight flex metal conduit
Total Fill: .00 mm2
Allowable Fill: 3275.44 mm2 Note: See Mark 4, Mark7 and Mark 8

Cable/Ckt. No.:	Type:	Cable Area:
Pull rope	Soft-fiber polyester	0.00 mm

Conduit/Tray No: 7486 **Ref Dwg(s):** EE-300C
Conduit/Tray Type: 103 mm Liquidtight flex metal conduit
Total Fill: .00 mm2
Allowable Fill: 3275.44 mm2 Note: See Mark 4, Mark7 and Mark 8

Cable/Ckt. No.:	Type:	Cable Area:
Pull rope	Soft-fiber polyester	0.00 mm

Conduit/Tray No: 7487 **Ref Dwg(s):** EE-300C
Conduit/Tray Type: 103 mm Liquidtight flex metal conduit
Total Fill: .00 mm2
Allowable Fill: 3275.44 mm2 Note: See Mark 4, Mark7 and Mark 8

Cable/Ckt. No.:	Type:	Cable Area:
Pull rope	Soft-fiber polyester	0.00 mm

Conduit/Tray No: 7488 **Ref Dwg(s):** EE-300C
Conduit/Tray Type: 103 mm Liquidtight flex metal conduit
Total Fill: .00 mm2
Allowable Fill: 3275.44 mm2 Note: See Mark 4, Mark7 and Mark 8

Cable/Ckt. No.:	Type:	Cable Area:
Pull rope	Soft-fiber polyester	0.00 mm

Conduit/Tray No: 7492 **Ref Dwg(s):** EE-300C
Conduit/Tray Type: 103 mm Liquidtight flex metal conduit
Total Fill: .00 mm2
Allowable Fill: 3275.44 mm2 Note: See Mark 4, Mark7 and Mark 8

Cable/Ckt. No.:	Type:	Cable Area:
Pull rope	Soft-fiber polyester	0.00 mm

Conduit/Tray No: 7601 **Ref Dwg(s):** EE-300C
Conduit/Tray Type: 103 mm GRS conduit
Total Fill: .00 mm2
Allowable Fill: 2576.49 mm2 Note: See Mark 2 and Mark 7

Cable/Ckt. No.:	Type:	Cable Area:
Pull rope	Soft-fiber polyester	0.00 mm

Conduit/Tray No: 7602 **Ref Dwg(s):** EE-300C
Conduit/Tray Type: 103 mm GRS conduit
Total Fill: .00 mm2
Allowable Fill: 2576.49 mm2 Note: See Mark 2 and Mark 7

Cable/Ckt. No.:	Type:	Cable Area:
Pull rope	Soft-fiber polyester	0.00 mm

Conduit/Tray No: 7603 **Ref Dwg(s):** EE-300C
Conduit/Tray Type: 53 mm GRS conduit
Total Fill: .00 mm2
Allowable Fill: 879.42 mm2 Note: See Mark 2 and Mark 7

Cable/Ckt. No.:	Type:	Cable Area:
Pull rope	Soft-fiber polyester	0.00 mm

Conduit/Tray No: 7609 **Ref Dwg(s):** EE-300C
Conduit/Tray Type: 103 mm GRS conduit
Total Fill: .00 mm2
Allowable Fill: 2576.49 mm2 Note: See Mark 2 and Mark 7

Cable/Ckt. No.:	Type:	Cable Area:
Pull rope	Soft-fiber polyester	0.00 mm

Conduit/Tray No: 7611 **Ref Dwg(s):** EE-300C
Conduit/Tray Type: 103 mm GRS conduit
Total Fill: .00 mm2
Allowable Fill: 2576.49 mm2 Note: See Mark 2 and Mark 7

Cable/Ckt. No.:	Type:	Cable Area:
Pull rope	Soft-fiber polyester	0.00 mm

Conduit/Tray No: 7613 **Ref Dwg(s):** EE-300C
Conduit/Tray Type: 103 mm GRS conduit
Total Fill: .00 mm2
Allowable Fill: 2576.49 mm2 Note: See Mark 2 and Mark 7

Cable/Ckt. No.:	Type:	Cable Area:
Pull rope	Soft-fiber polyester	0.00 mm

Conduit/Tray No: 7614 **Ref Dwg(s):** EE-300C
Conduit/Tray Type: 103 mm GRS conduit
Total Fill: .00 mm2
Allowable Fill: 2576.49 mm2 Note: See Mark 2 and Mark 7

Cable/Ckt. No.:	Type:	Cable Area:
Pull rope	Soft-fiber polyester	0.00 mm

Conduit/Tray No: 7615 **Ref Dwg(s):** EE-300C
Conduit/Tray Type: 103 mm GRS conduit
Total Fill: .00 mm2
Allowable Fill: 2576.49 mm2 Note: See Mark 2 and Mark 7

Cable/Ckt. No.:	Type:	Cable Area:
Pull rope	Soft-fiber polyester	0.00 mm

Conduit/Tray No: 7616 **Ref Dwg(s):** EE-300C
Conduit/Tray Type: 103 mm GRS conduit
Total Fill: .00 mm2
Allowable Fill: 2576.49 mm2 Note: See Mark 2 and Mark 7

Cable/Ckt. No.:	Type:	Cable Area:
Pull rope	Soft-fiber polyester	0.00 mm

Conduit/Tray No: 7625 **Ref Dwg(s):** EE-301A
Conduit/Tray Type: 103 mm GRS conduit
Total Fill: .00 mm2
Allowable Fill: 2576.49 mm2 Note: See Mark 2

Cable/Ckt. No.:	Type:	Cable Area:
Pull rope	Soft-fiber polyester	0.00 mm

Conduit/Tray No: 7626 **Ref Dwg(s):** EE-301A
Conduit/Tray Type: 103 mm GRS conduit
Total Fill: .00 mm2
Allowable Fill: 2576.49 mm2 Note: See Mark 2

Cable/Ckt. No.:	Type:	Cable Area:
Pull rope	Soft-fiber polyester	0.00 mm

Conduit/Tray No: 7627 **Ref Dwg(s):** EE-301A, EE-86
Conduit/Tray Type: 53 mm GRS conduit
Total Fill: .00 mm2
Allowable Fill: 879.42 mm2 Note: See Mark 2

Cable/Ckt. No.:	Type:	Cable Area:
Pull rope	Soft-fiber polyester	0.00 mm

Conduit/Tray No: 7634 **Ref Dwg(s):** EE-301A
Conduit/Tray Type: 103 mm GRS conduit
Total Fill: .00 mm2
Allowable Fill: 2576.49 mm2 Note: See Mark 2

Cable/Ckt. No.:	Type:	Cable Area:
Pull rope	Soft-fiber polyester	0.00 mm

Conduit/Tray No: 7637 **Ref Dwg(s):** EE-301A
Conduit/Tray Type: 103 mm GRS conduit
Total Fill: .00 mm2
Allowable Fill: 2576.49 mm2 Note: See Mark 2

Cable/Ckt. No.:	Type:	Cable Area:
Pull rope	Soft-fiber polyester	0.00 mm

Conduit/Tray No: 7645 **Ref Dwg(s):** EE-302A
Conduit/Tray Type: 103 mm GRS conduit
Total Fill: .00 mm2
Allowable Fill: 2576.49 mm2 Note: See Mark 2

Cable/Ckt. No.:	Type:	Cable Area:
Pull rope	Soft-fiber polyester	0.00 mm

Conduit/Tray No: 7646 **Ref Dwg(s):** EE-302A
Conduit/Tray Type: 103 mm GRS conduit
Total Fill: .00 mm2
Allowable Fill: 2576.49 mm2 Note: See Mark 2

Cable/Ckt. No.:	Type:	Cable Area:
Pull rope	Soft-fiber polyester	0.00 mm

Conduit/Tray No: 7647 **Ref Dwg(s):** EE-302A
Conduit/Tray Type: 53 mm GRS conduit
Total Fill: .00 mm2
Allowable Fill: 879.42 mm2 Note: See Mark 2

Cable/Ckt. No.:	Type:	Cable Area:
Pull rope	Soft-fiber polyester	0.00 mm

Conduit/Tray No: 7654 **Ref Dwg(s):** EE-302A
Conduit/Tray Type: 103 mm GRS conduit
Total Fill: .00 mm2
Allowable Fill: 2576.49 mm2 Note: See Mark 2

Cable/Ckt. No.:	Type:	Cable Area:
Pull rope	Soft-fiber polyester	0.00 mm

Conduit/Tray No: 7665 **Ref Dwg(s):** EE-303A
Conduit/Tray Type: 103 mm GRS conduit
Total Fill: .00 mm2
Allowable Fill: 2576.49 mm2 Note: See Mark 2

Cable/Ckt. No.:	Type:	Cable Area:
Pull rope	Soft-fiber polyester	0.00 mm

Conduit/Tray No: 7666 **Ref Dwg(s):** EE-303A
Conduit/Tray Type: 103 mm GRS conduit
Total Fill: .00 mm2
Allowable Fill: 2576.49 mm2 Note: See Mark 2

Cable/Ckt. No.:	Type:	Cable Area:
Pull rope	Soft-fiber polyester	0.00 mm

Conduit/Tray No: 7667 **Ref Dwg(s):** EE-303A
Conduit/Tray Type: 103 mm GRS conduit
Total Fill: .00 mm2
Allowable Fill: 2576.49 mm2 Note: See Mark 2

Cable/Ckt. No.:	Type:	Cable Area:
Pull rope	Soft-fiber polyester	0.00 mm

Conduit/Tray No: 7674 **Ref Dwg(s):** EE-303A
Conduit/Tray Type: 103 mm GRS conduit
Total Fill: .00 mm2
Allowable Fill: 2576.49 mm2 Note: See Mark 2

Cable/Ckt. No.:	Type:	Cable Area:
Pull rope	Soft-fiber polyester	0.00 mm

Conduit/Tray No: 7675 **Ref Dwg(s):** EE-304A
Conduit/Tray Type: 103 mm GRS conduit
Total Fill: .00 mm2
Allowable Fill: 3324.51 mm2 Note: See Mark 2 & 6

Cable/Ckt. No.:	Type:	Cable Area:
Pull rope	Soft-fiber polyester	0.00 mm

Conduit/Tray No: 7676 **Ref Dwg(s):** EE-304A
Conduit/Tray Type: 103 mm GRS conduit
Total Fill: .00 mm2
Allowable Fill: 3324.51 mm2 Note: See Mark 2 & 6

Cable/Ckt. No.:	Type:	Cable Area:
Pull rope	Soft-fiber polyester	0.00 mm

Conduit/Tray No: 7677 **Ref Dwg(s):** EE-303A
Conduit/Tray Type: 103 mm GRS conduit
Total Fill: .00 mm2
Allowable Fill: 2576.49 mm2 Note: See Mark 2

Cable/Ckt. No.:	Type:	Cable Area:
Pull rope	Soft-fiber polyester	0.00 mm

Conduit/Tray No: 7678 **Ref Dwg(s):** EE-304A
Conduit/Tray Type: 103 mm GRS conduit
Total Fill: .00 mm2
Allowable Fill: 3324.51 mm2 Note: See Mark 2 & 6

Cable/Ckt. No.:	Type:	Cable Area:
Pull rope	Soft-fiber polyester	0.00 mm

Conduit/Tray No: 7679 **Ref Dwg(s):** EE-304A
Conduit/Tray Type: 103 mm GRS conduit
Total Fill: .00 mm2
Allowable Fill: 3324.51 mm2 Note: See Mark 2 & 6

Cable/Ckt. No.:	Type:	Cable Area:
Pull rope	Soft-fiber polyester	0.00 mm

Conduit/Tray No: 7680 **Ref Dwg(s):** EE-304A
Conduit/Tray Type: 103 mm GRS conduit
Total Fill: .00 mm2
Allowable Fill: 3324.51 mm2 Note: See Mark 2 & 6

Cable/Ckt. No.:	Type:	Cable Area:
Pull rope	Soft-fiber polyester	0.00 mm

Conduit/Tray No: 7681 **Ref Dwg(s):** EE-304A
Conduit/Tray Type: 103 mm GRS conduit
Total Fill: 2628.48mm2
Allowable Fill: 3324.51 mm2 Note: See Mark 5

Cable/Ckt. No.:	Type:	Cable Area:
2392	3-1/C #4/0, 15 kV, EPR Insulation	2628.48 mm

Conduit/Tray No: 7682 **Ref Dwg(s):** EE-304A
Conduit/Tray Type: 103 mm GRS conduit
Total Fill: .00 mm2
Allowable Fill: 3324.51 mm2 Note: See Mark 2 & 5

Cable/Ckt. No.:	Type:	Cable Area:
Pull rope	Soft-fiber polyester	0.00 mm

Conduit/Tray No: 7683 **Ref Dwg(s):** EE-304A
Conduit/Tray Type: 103 mm Liquidtight flex metal conduit
Total Fill: .00 mm2
Allowable Fill: 3275.44 mm2 Note: See Mark 2 & 6

Cable/Ckt. No.:	Type:	Cable Area:
Pull rope	Soft-fiber polyester	0.00 mm

Conduit/Tray No: 7685 **Ref Dwg(s):** EE-304A
Conduit/Tray Type: 103 mm GRS conduit
Total Fill: .00 mm2
Allowable Fill: 2576.49 mm2 Note: See Mark 2

Cable/Ckt. No.:	Type:	Cable Area:
Pull rope	Soft-fiber polyester	0.00 mm

Conduit/Tray No: 7686 **Ref Dwg(s):** EE-304A
Conduit/Tray Type: 103 mm GRS conduit
Total Fill: .00 mm2
Allowable Fill: 3324.51 mm2 Note: See Mark 2

Cable/Ckt. No.:	Type:	Cable Area:
Pull rope	Soft-fiber polyester	0.00 mm

Conduit/Tray No: 7687 **Ref Dwg(s):** EE-304A
Conduit/Tray Type: 103 mm GRS conduit
Total Fill: .00 mm2
Allowable Fill: 2576.49 mm2 Note: See Mark 2

Cable/Ckt. No.:	Type:	Cable Area:
Pull rope	Soft-fiber polyester	0.00 mm

Conduit/Tray No: 7689 **Ref Dwg(s):** EE-304A
Conduit/Tray Type: 103 mm GRS conduit
Total Fill: .00 mm2
Allowable Fill: 2576.49 mm2 Note: See Mark 2 & 6

Cable/Ckt. No.:	Type:	Cable Area:
Pull rope	Soft-fiber polyester	0.00 mm

Conduit/Tray No: 7690 **Ref Dwg(s):** EE-304A
Conduit/Tray Type: 103 mm GRS conduit
Total Fill: .00 mm2
Allowable Fill: 3324.51 mm2 Note: See Mark 2 & 6

Cable/Ckt. No.:	Type:	Cable Area:
Pull rope	Soft-fiber polyester	0.00 mm

Conduit/Tray No: 7691 **Ref Dwg(s):** EE-304A
Conduit/Tray Type: 103 mm GRS conduit
Total Fill: .00 mm2
Allowable Fill: 3324.51 mm2 Note: See Mark 2 & 6

Cable/Ckt. No.:	Type:	Cable Area:
Pull rope	Soft-fiber polyester	0.00 mm

Conduit/Tray No: 7692 **Ref Dwg(s):** EE-304A
Conduit/Tray Type: 103 mm GRS conduit
Total Fill: .00 mm2
Allowable Fill: 3324.51 mm2 Note: See Mark 2 & 6

Cable/Ckt. No.:	Type:	Cable Area:
Pull rope	Soft-fiber polyester	0.00 mm

Conduit/Tray No: 7693 **Ref Dwg(s):** EE-304A
Conduit/Tray Type: 103 mm GRS conduit
Total Fill: .00 mm2
Allowable Fill: 3324.51 mm2 Note: See Mark 2 & 6

Cable/Ckt. No.:	Type:	Cable Area:
Pull rope	Soft-fiber polyester	0.00 mm

Conduit/Tray No: 7694 **Ref Dwg(s):** EE-304A
Conduit/Tray Type: 103 mm GRS conduit
Total Fill: .00 mm2
Allowable Fill: 3324.51 mm2 Note: See Mark 2 & 6

Cable/Ckt. No.:	Type:	Cable Area:
Pull rope	Soft-fiber polyester	0.00 mm

Conduit/Tray No: 7697 **Ref Dwg(s):** EE-304A
Conduit/Tray Type: 103 mm GRS conduit
Total Fill: .00 mm2
Allowable Fill: 3324.51 mm2 Note: See Mark 2

Cable/Ckt. No.:	Type:	Cable Area:
Pull rope	Soft-fiber polyester	0.00 mm

Conduit/Tray No: 7698 **Ref Dwg(s):** EE-304A
Conduit/Tray Type: 103 mm GRS conduit
Total Fill: .00 mm2
Allowable Fill: 2576.49 mm2 Note: See Mark 2

Cable/Ckt. No.:	Type:	Cable Area:
Pull rope	Soft-fiber polyester	0.00 mm

Conduit/Tray No: 7699 **Ref Dwg(s):** EE-304A
Conduit/Tray Type: 103 mm GRS conduit
Total Fill: .00 mm2
Allowable Fill: 3324.51 mm2 Note: See Mark 2

Cable/Ckt. No.:	Type:	Cable Area:
Pull rope	Soft-fiber polyester	0.00 mm

Conduit/Tray No: 7700 **Ref Dwg(s):** EE-304A
Conduit/Tray Type: 103 mm GRS conduit
Total Fill: .00 mm2
Allowable Fill: 2576.49 mm2 Note: See Mark 2

Cable/Ckt. No.:	Type:	Cable Area:
Pull rope	Soft-fiber polyester	0.00 mm

Conduit/Tray No: 7881 **Ref Dwg(s):** EE-303A
Conduit/Tray Type: 103 mm Liquidtight flex metal conduit
Total Fill: 2820.14mm2
Allowable Fill: 3275.44 mm2 Note: See Mark 1

Cable/Ckt. No.:	Type:	Cable Area:
2331	1-3/C+gnd #2/0, 600 V, EPR insulation	882.89 mm
S-2307A	1-3/C+gnd #2, 600 V, EPR insulation	527.18 mm
2346	1-3/C+gnd #2/0, 600 V, EPR insulation	882.89 mm
A-2362	1-3/C+gnd #2, 600 V, EPR insulation	527.18 mm

Conduit/Tray No: 7882 **Ref Dwg(s):** EE-303A
Conduit/Tray Type: 103 mm Liquidtight flex metal conduit
Total Fill: 744.45 mm2
Allowable Fill: 3275.44 mm2 Note: See Mark 1

Cable/Ckt. No.:	Type:	Cable Area:
UP242-2A.	1-2/C+gnd #8, 600 V, EPR insulation	227.46 mm
UP242-6A	1-2/C+gnd #8, 600 V, EPR insulation	227.46 mm
2468-3	1-3/C #16, 600 V, EPR insulation	62.07 mm
UP242-4A	1-2/C+gnd #8, 600 V, EPR insulation	227.46 mm

Conduit/Tray No: 7883 **Ref Dwg(s):** EE-303A
Conduit/Tray Type: 103 mm Liquidtight flex metal conduit
Total Fill: .00 mm2
Allowable Fill: 3275.44 mm2 Note: See Mark 1

Cable/Ckt. No.:	Type:	Cable Area:
Pull rope	Soft-fiber polyester	0.00 mm

Conduit/Tray No: 7884 **Ref Dwg(s):** EE-303A
Conduit/Tray Type: 103 mm Liquidtight flex metal conduit
Total Fill: .00 mm2
Allowable Fill: 3275.44 mm2 Note: See Mark 1

Cable/Ckt. No.:	Type:	Cable Area:
Pull rope	Soft-fiber polyester	0.00 mm

Conduit/Tray No: 7885 **Ref Dwg(s):** EE-303A
Conduit/Tray Type: 103 mm GRS conduit
Total Fill: 2820.14mm2
Allowable Fill: 3324.51 mm2 Note: See Mark 1

Cable/Ckt. No.:	Type:	Cable Area:
S-2307A	1-3/C+gnd #2, 600 V, EPR insulation	527.18 mm
A-2362	1-3/C+gnd #2, 600 V, EPR insulation	527.18 mm
2331	1-3/C+gnd #2/0, 600 V, EPR insulation	882.89 mm
2346	1-3/C+gnd #2/0, 600 V, EPR insulation	882.89 mm

Conduit/Tray No: 7886 **Ref Dwg(s):** EE-303A
Conduit/Tray Type: 103 mm GRS conduit
Total Fill: 744.45 mm2
Allowable Fill: 3324.51 mm2 Note: See Mark 1

Cable/Ckt. No.:	Type:	Cable Area:
UP242-2A.	1-2/C+gnd #8, 600 V, EPR insulation	227.46 mm
UP242-4A	1-2/C+gnd #8, 600 V, EPR insulation	227.46 mm
UP242-6A	1-2/C+gnd #8, 600 V, EPR insulation	227.46 mm
2468-3	1-3/C #16, 600 V, EPR insulation	62.07 mm

Conduit/Tray No: 7887 **Ref Dwg(s):** EE-303A
Conduit/Tray Type: 103 mm GRS conduit
Total Fill: .00 mm2
Allowable Fill: 3324.51 mm2 *Note: See Mark 1*

Cable/Ckt. No.:	Type:	Cable Area:
Pull rope	Soft-fiber polyester	0.00 mm

Conduit/Tray No: 7888 **Ref Dwg(s):** EE-303A
Conduit/Tray Type: 103 mm GRS conduit
Total Fill: .00 mm2
Allowable Fill: 3324.51 mm2 Note: See Mark 1

Cable/Ckt. No.:	Type:	Cable Area:
Pull rope	Soft-fiber polyester	0.00 mm

Conduit/Tray No: 7889 **Ref Dwg(s):** EE-303A
Conduit/Tray Type: 103 mm Liquidtight flex metal conduit
Total Fill: 2820.14mm2
Allowable Fill: 3275.44 mm2 Note: See Mark 1

Cable/Ckt. No.:	Type:	Cable Area:
A-2362	1-3/C+gnd #2, 600 V, EPR insulation	527.18 mm
2346	1-3/C+gnd #2/0, 600 V, EPR insulation	882.89 mm
S-2307A	1-3/C+gnd #2, 600 V, EPR insulation	527.18 mm
2331	1-3/C+gnd #2/0, 600 V, EPR insulation	882.89 mm

Conduit/Tray No: 7890 **Ref Dwg(s):** EE-303A
Conduit/Tray Type: 103 mm Liquidtight flex metal conduit
Total Fill: 744.45 mm2
Allowable Fill: 3275.44 mm2 Note: See Mark 1

Cable/Ckt. No.:	Type:	Cable Area:
UP242-2A.	1-2/C+gnd #8, 600 V, EPR insulation	227.46 mm
UP242-4A	1-2/C+gnd #8, 600 V, EPR insulation	227.46 mm
UP242-6A	1-2/C+gnd #8, 600 V, EPR insulation	227.46 mm
2468-3	1-3/C #16, 600 V, EPR insulation	62.07 mm

Conduit/Tray No: 7891 **Ref Dwg(s):** EE-303A
Conduit/Tray Type: 103 mm Liquidtight flex metal conduit
Total Fill: .00 mm2
Allowable Fill: 3275.44 mm2 Note: See Mark 1

Cable/Ckt. No.:	Type:	Cable Area:
Pull rope	Soft-fiber polyester	0.00 mm

Conduit/Tray No: 7892 **Ref Dwg(s):** EE-303A
Conduit/Tray Type: 103 mm Liquidtight flex metal conduit
Total Fill: .00 mm2
Allowable Fill: 3275.44 mm2 Note: See Mark 1

Cable/Ckt. No.:	Type:	Cable Area:
Pull rope	Soft-fiber polyester	0.00 mm

Conduit/Tray No: 7896 **Ref Dwg(s):** EE-303A
Conduit/Tray Type: 103 mm Liquidtight flex metal conduit
Total Fill: 2697.72mm2
Allowable Fill: 3275.44 mm2 Note: See Mark 1

Cable/Ckt. No.:	Type:	Cable Area:
2434	1 - 2 pair, shielded #18 with IS/OA , 600 V, PVC jacket	98.1 mm
2431	1 - 2 pair, shielded #18 with IS/OA , 600 V, PVC jacket	98.1 mm
2473-22	50 pair #18, shielded pairs, IS/OS shield 600 V, XLPE insul., PVC jacket	1201.71 mm
2474-22	50 pair #18, shielded pairs, IS/OS shield 600 V, XLPE insul., PVC jacket	1201.71 mm
2428	1 - 2 pair, shielded #18 with IS/OA , 600 V, PVC jacket	98.1 mm

Conduit/Tray No: 7897 **Ref Dwg(s):** EE-303A
Conduit/Tray Type: 103 mm Liquidtight flex metal conduit
Total Fill: 323.65 mm2
Allowable Fill: 3275.44 mm2 Note: See Mark 1

Cable/Ckt. No.:	Type:	Cable Area:
2475-4	72 Fiber, single mode fiberoptic riser cable	323.65 mm

Conduit/Tray No: 7898 **Ref Dwg(s):** EE-303A
Conduit/Tray Type: 103 mm Liquidtight flex metal conduit
Total Fill: 361.65 mm2
Allowable Fill: 3275.44 mm2 Note: See Mark 1

Cable/Ckt. No.:	Type:	Cable Area:
2507-282A	SSC	47.42 mm
2507-282B	SSC	47.42 mm
2507-292A	SSC	47.42 mm
2507-292B	SSC	47.42 mm
2507-292C	SSC	47.42 mm
2507-292D	SSC	47.42 mm
2507-1	IC	77.13 mm

Conduit/Tray No: 7899 **Ref Dwg(s):** EE-303A
Conduit/Tray Type: 103 mm Liquidtight flex metal conduit
Total Fill: .00 mm2
Allowable Fill: 3275.44 mm2 Note: See Mark 1

Cable/Ckt. No.:	Type:	Cable Area:
Pull rope	Soft-fiber polyester	0.00 mm

Conduit/Tray No: 7900 **Ref Dwg(s):** EE-303A
Conduit/Tray Type: 103 mm GRS conduit
Total Fill: 2697.72mm2
Allowable Fill: 3324.51 mm2 Note; See Mark 1

Cable/Ckt. No.:	Type:	Cable Area:
2428	1 - 2 pair, shielded #18 with IS/OA , 600 V, PVC jacket	98.1 mm
2474-22	50 pair #18, shielded pairs, IS/OS shield 600 V, XLPE insul., PVC jacket	1201.71 mm
2473-22	50 pair #18, shielded pairs, IS/OS shield 600 V, XLPE insul., PVC jacket	1201.71 mm
2431	1 - 2 pair, shielded #18 with IS/OA , 600 V, PVC jacket	98.1 mm
2434	1 - 2 pair, shielded #18 with IS/OA , 600 V, PVC jacket	98.1 mm

Conduit/Tray No: 7901 **Ref Dwg(s):** EE-303A
Conduit/Tray Type: 103 mm GRS conduit
Total Fill: 323.65 mm2
Allowable Fill: 3324.51 mm2 Note: See Mark 1

Cable/Ckt. No.:	Type:	Cable Area:
2475-4	72 Fiber, single mode fiberoptic riser cable	323.65 mm

Conduit/Tray No: 7902 **Ref Dwg(s):** EE-303A
Conduit/Tray Type: 103 mm GRS conduit
Total Fill: 361.65 mm2
Allowable Fill: 3324.51 mm2 Note: See Mark 1

Cable/Ckt. No.:	Type:	Cable Area:
2507-282A	SSC	47.42 mm
2507-282B	SSC	47.42 mm
2507-292A	SSC	47.42 mm
2507-292B	SSC	47.42 mm
2507-292C	SSC	47.42 mm
2507-292D	SSC	47.42 mm
2507-1	IC	77.13 mm

Conduit/Tray No: 7903 **Ref Dwg(s):** EE-303A
Conduit/Tray Type: 103 mm GRS conduit
Total Fill: .00 mm2
Allowable Fill: 3324.51 mm2 Note: See Mark 1

Cable/Ckt. No.:	Type:	Cable Area:
Pull rope	Soft-fiber polyester	0.00 mm

Conduit/Tray No: 7904 **Ref Dwg(s):** EE-303A

Conduit/Tray Type: 103 mm Liquidtight flex metal conduit

Total Fill: 2697.72mm2

Allowable Fill: 3275.44 mm2 Note: See Mark 1

Cable/Ckt. No.:	Type:	Cable Area:
2431	1 - 2 pair, shielded #18 with IS/OA , 600 V, PVC jacket	98.1 mm
2434	1 - 2 pair, shielded #18 with IS/OA , 600 V, PVC jacket	98.1 mm
2473-22	50 pair #18, shielded pairs, IS/OS shield 600 V, XLPE insul., PVC jacket	1201.71 mm
2474-22	50 pair #18, shielded pairs, IS/OS shield 600 V, XLPE insul., PVC jacket	1201.71 mm
2428	1 - 2 pair, shielded #18 with IS/OA , 600 V, PVC jacket	98.1 mm

Conduit/Tray No: 7905 **Ref Dwg(s):** EE-303A

Conduit/Tray Type: 103 mm Liquidtight flex metal conduit

Total Fill: 323.65 mm2

Allowable Fill: 3275.44 mm2 Note: See Mark 1

Cable/Ckt. No.:	Type:	Cable Area:
2475-4	72 Fiber, single mode fiberoptic riser cable	323.65 mm

Conduit/Tray No: 7906 **Ref Dwg(s):** EE-303A

Conduit/Tray Type: 103 mm Liquidtight flex metal conduit

Total Fill: 361.65 mm2

Allowable Fill: 3275.44 mm2 Note: See Mark 1

Cable/Ckt. No.:	Type:	Cable Area:
2507-1	IC	77.13 mm
2507-282A	SSC	47.42 mm
2507-282B	SSC	47.42 mm
2507-292B	SSC	47.42 mm
2507-292C	SSC	47.42 mm
2507-292D	SSC	47.42 mm
2507-292A	SSC	47.42 mm

Conduit/Tray No: 7907 **Ref Dwg(s):** EE-303A
Conduit/Tray Type: 103 mm Liquidtight flex metal conduit
Total Fill: .00 mm2
Allowable Fill: 3275.44 mm2 Note: See Mark 1

Cable/Ckt. No.:	Type:	Cable Area:
Pull rope	Soft-fiber polyester	0.00 mm

Conduit/Tray No: 7911 **Ref Dwg(s):** EE-303A
Conduit/Tray Type: 103 mm Liquidtight flex metal conduit
Total Fill: .00 mm2
Allowable Fill: 3275.44 mm2 Note: See Mark 1

Cable/Ckt. No.:	Type:	Cable Area:
Pull rope	Soft-fiber polyester	0.00 mm

Conduit/Tray No: 7912 **Ref Dwg(s):** EE-303A
Conduit/Tray Type: 103 mm Liquidtight flex metal conduit
Total Fill: .00 mm2
Allowable Fill: 3275.44 mm2 Note: See Mark 1

Cable/Ckt. No.:	Type:	Cable Area:
Pull rope	Soft-fiber polyester	0.00 mm

Conduit/Tray No: 7913 **Ref Dwg(s):** EE-303A
Conduit/Tray Type: 103 mm Liquidtight flex metal conduit
Total Fill: .00 mm2
Allowable Fill: 3275.44 mm2 Note: See Mark 1

Cable/Ckt. No.:	Type:	Cable Area:
Pull rope	Soft-fiber polyester	0.00 mm

Conduit/Tray No: 7914 **Ref Dwg(s):** EE-303A
Conduit/Tray Type: 103 mm Liquidtight flex metal conduit
Total Fill: .00 mm2
Allowable Fill: 3275.44 mm2 Note: See Mark 1

Cable/Ckt. No.:	Type:	Cable Area:
Pull rope	Soft-fiber polyester	0.00 mm

Conduit/Tray No: 7915 **Ref Dwg(s):** EE-303A
Conduit/Tray Type: 103 mm GRS conduit
Total Fill: .00 mm2
Allowable Fill: 3324.51 mm2 Note: See Mark 1

Cable/Ckt. No.:	Type:	Cable Area:
Pull rope	Soft-fiber polyester	0.00 mm

Conduit/Tray No: 7916 **Ref Dwg(s):** EE-303A
Conduit/Tray Type: 103 mm GRS conduit
Total Fill: .00 mm2
Allowable Fill: 3324.51 mm2 Note: See Mark 1

Cable/Ckt. No.:	Type:	Cable Area:
Pull rope	Soft-fiber polyester	0.00 mm

Conduit/Tray No: 7917 **Ref Dwg(s):** EE-303A
Conduit/Tray Type: 103 mm GRS conduit
Total Fill: .00 mm2
Allowable Fill: 3324.51 mm2 Note: See Mark 1

Cable/Ckt. No.:	Type:	Cable Area:
Pull rope	Soft-fiber polyester	0.00 mm

Conduit/Tray No: 7918 **Ref Dwg(s):** EE-303A
Conduit/Tray Type: 103 mm GRS conduit
Total Fill: .00 mm2
Allowable Fill: 3324.51 mm2 Note: See Mark 1

Cable/Ckt. No.:	Type:	Cable Area:
Pull rope	Soft-fiber polyester	0.00 mm

Conduit/Tray No: 7919 **Ref Dwg(s):** EE-303A
Conduit/Tray Type: 103 mm Liquidtight flex metal conduit
Total Fill: .00 mm2
Allowable Fill: 3275.44 mm2 Note: See Mark 1

Cable/Ckt. No.:	Type:	Cable Area:
Pull rope	Soft-fiber polyester	0.00 mm

Conduit/Tray No: 7920 **Ref Dwg(s):** EE-303A
Conduit/Tray Type: 103 mm Liquidtight flex metal conduit
Total Fill: .00 mm2
Allowable Fill: 3275.44 mm2 Note: See Mark 1

Cable/Ckt. No.:	Type:	Cable Area:
Pull rope	Soft-fiber polyester	0.00 mm

Conduit/Tray No: 7921 **Ref Dwg(s):** EE-303A
Conduit/Tray Type: 103 mm Liquidtight flex metal conduit
Total Fill: .00 mm2
Allowable Fill: 3275.44 mm2 Note: See Mark 1

Cable/Ckt. No.:	Type:	Cable Area:
Pull rope	Soft-fiber polyester	0.00 mm

Conduit/Tray No: 7922 **Ref Dwg(s):** EE-303A
Conduit/Tray Type: 103 mm Liquidtight flex metal conduit
Total Fill: .00 mm2
Allowable Fill: 3275.44 mm2 Note: See Mark 1

Cable/Ckt. No.:	Type:	Cable Area:
Pull rope	Soft-fiber polyester	0.00 mm

Conduit/Tray No: 7926 **Ref Dwg(s):** EE-303A
Conduit/Tray Type: 103 mm Liquidtight flex metal conduit
Total Fill: 2628.48mm2
Allowable Fill: 3275.44 mm2 Note: See Mark 1

Cable/Ckt. No.:	Type:	Cable Area:
2392	3-1/C #4/0, 15 kV, EPR Insulation	2628.48 mm

Conduit/Tray No: 7927 **Ref Dwg(s):** EE-303A
Conduit/Tray Type: 103 mm GRS conduit
Total Fill: 2628.48mm2
Allowable Fill: 3324.51 mm2 Note: See Mark 1

Cable/Ckt. No.:	Type:	Cable Area:
2392	3-1/C #4/0, 15 kV, EPR Insulation	2628.48 mm

Conduit/Tray No: 7928 **Ref Dwg(s):** EE-303A
Conduit/Tray Type: 103 mm Liquidtight flex metal conduit
Total Fill: 2628.48mm2
Allowable Fill: 3275.44 mm2 Note: See Mark 1

Cable/Ckt. No.:	Type:	Cable Area:
2392	3-1/C #4/0, 15 kV, EPR Insulation	2628.48 mm

Conduit/Tray No: 7935 **Ref Dwg(s):** EE-304A
Conduit/Tray Type: 103 mm Liquidtight flex metal conduit
Total Fill: .00 mm2
Allowable Fill: 3275.44 mm2 Note: See Mark 1

Cable/Ckt. No.:	Type:	Cable Area:
Pull rope	Soft-fiber polyester	0.00 mm

Conduit/Tray No: 7936 **Ref Dwg(s):** EE-304A
Conduit/Tray Type: 103 mm Liquidtight flex metal conduit
Total Fill: .00 mm2
Allowable Fill: 3275.44 mm2 Note: See Mark 1

Cable/Ckt. No.:	Type:	Cable Area:
Pull rope	Soft-fiber polyester	0.00 mm

Conduit/Tray No: 7937 **Ref Dwg(s):** EE-304A
Conduit/Tray Type: 103 mm Liquidtight flex metal conduit
Total Fill: .00 mm2
Allowable Fill: 3275.44 mm2 Note: See Mark 1

Cable/Ckt. No.:	Type:	Cable Area:
Pull rope	Soft-fiber polyester	0.00 mm

Conduit/Tray No: 7938 **Ref Dwg(s):** EE-304A
Conduit/Tray Type: 103 mm Liquidtight flex metal conduit
Total Fill: .00 mm2
Allowable Fill: 3275.44 mm2 Note: See Mark 1

Cable/Ckt. No.:	Type:	Cable Area:
Pull rope	Soft-fiber polyester	0.00 mm

Conduit/Tray No: 7939 **Ref Dwg(s):** EE-304A
Conduit/Tray Type: 103 mm GRS conduit
Total Fill: .00 mm2
Allowable Fill: 2576.49 mm2 Note: See Mark 1

Cable/Ckt. No.:	Type:	Cable Area:
Pull rope	Soft-fiber polyester	0.00 mm

Conduit/Tray No: 7940 **Ref Dwg(s):** EE-304A
Conduit/Tray Type: 103 mm GRS conduit
Total Fill: .00 mm2
Allowable Fill: 3324.51 mm2 Note: See Mark 1

Cable/Ckt. No.:	Type:	Cable Area:
Pull rope	Soft-fiber polyester	0.00 mm

Conduit/Tray No: 7941 **Ref Dwg(s):** EE-304A
Conduit/Tray Type: 103 mm GRS conduit
Total Fill: .00 mm2
Allowable Fill: 3324.51 mm2 Note: See Mark 1

Cable/Ckt. No.:	Type:	Cable Area:
Pull rope	Soft-fiber polyester	0.00 mm

Conduit/Tray No: 7942 **Ref Dwg(s):** EE-304A
Conduit/Tray Type: 103 mm GRS conduit
Total Fill: .00 mm2
Allowable Fill: 3324.51 mm2 Note: See Mark 1

Cable/Ckt. No.:	Type:	Cable Area:
Pull rope	Soft-fiber polyester	0.00 mm

Conduit/Tray No: 7946 **Ref Dwg(s):** EE-304A
Conduit/Tray Type: 103 mm Liquidtight flex metal conduit
Total Fill: .00 mm2
Allowable Fill: 3275.44 mm2 Note: See Mark 1

Cable/Ckt. No.:	Type:	Cable Area:
Pull rope	Soft-fiber polyester	0.00 mm

Conduit/Tray No: 7947 **Ref Dwg(s):** EE-304A
Conduit/Tray Type: 103 mm Liquidtight flex metal conduit
Total Fill: .00 mm2
Allowable Fill: 3275.44 mm2 Note: See Mark 1

Cable/Ckt. No.:	Type:	Cable Area:
Pull rope	Soft-fiber polyester	0.00 mm

Conduit/Tray No: 7948 **Ref Dwg(s):** EE-304A
Conduit/Tray Type: 103 mm Liquidtight flex metal conduit
Total Fill: .00 mm2
Allowable Fill: 3275.44 mm2 Note: See Mark 1

Cable/Ckt. No.:	Type:	Cable Area:
Pull rope	Soft-fiber polyester	0.00 mm

Conduit/Tray No: 7949 **Ref Dwg(s):** EE-304A
Conduit/Tray Type: 103 mm Liquidtight flex metal conduit
Total Fill: .00 mm2
Allowable Fill: 3275.44 mm2 Note: See Mark 1

Cable/Ckt. No.:	Type:	Cable Area:
Pull rope	Soft-fiber polyester	0.00 mm

Conduit/Tray No: 7950 **Ref Dwg(s):** EE-304A
Conduit/Tray Type: 103 mm GRS conduit
Total Fill: .00 mm2
Allowable Fill: 3324.51 mm2 Note: See Mark 1

Cable/Ckt. No.:	Type:	Cable Area:
Pull rope	Soft-fiber polyester	0.00 mm

Conduit/Tray No: 7951 **Ref Dwg(s):** EE-304A
Conduit/Tray Type: 103 mm GRS conduit
Total Fill: .00 mm2
Allowable Fill: 3324.51 mm2 Note: See Mark 1

Cable/Ckt. No.:	Type:	Cable Area:
Pull rope	Soft-fiber polyester	0.00 mm

Conduit/Tray No: 7952 **Ref Dwg(s):** EE-304A
Conduit/Tray Type: 103 mm GRS conduit
Total Fill: .00 mm2
Allowable Fill: 3324.51 mm2 Note: See Mark 1

Cable/Ckt. No.:	Type:	Cable Area:
Pull rope	Soft-fiber polyester	0.00 mm

Conduit/Tray No: 7953 **Ref Dwg(s):** EE-304A
Conduit/Tray Type: 103 mm GRS conduit
Total Fill: .00 mm2
Allowable Fill: 3324.51 mm2 Note: See Mark 1

Cable/Ckt. No.:	Type:	Cable Area:
Pull rope	Soft-fiber polyester	0.00 mm

Conduit/Tray No: 7957 **Ref Dwg(s):** EE-304A
Conduit/Tray Type: 103 mm Liquidtight flex metal conduit
Total Fill: .00 mm2
Allowable Fill: 3275.44 mm2 Note: See Mark 1

Cable/Ckt. No.:	Type:	Cable Area:
Pull rope	Soft-fiber polyester	0.00 mm

Conduit/Tray No: 7958 **Ref Dwg(s):** EE-304A
Conduit/Tray Type: 103 mm GRS conduit
Total Fill: .00 mm2
Allowable Fill: 3324.51 mm2 Note: See Mark 1

Cable/Ckt. No.:	Type:	Cable Area:
Pull rope	Soft-fiber polyester	0.00 mm

STATE OF CALIFORNIA - DEPARTMENT OF TRANSPORTATION

CONTRACT CHANGE ORDER MEMORANDUM

TO: PETER SIEGENTHALER / DOUG COE, Supervising Br. Eng.	FILE: E.A. 04 - 012024
FROM: DOUG COE, Supervising Br. Eng.	CO-RTE-PM 04-SF,Ala-80-13.9/14.3,0.0/1.6 FED. NO. ACIM-080-1(085)8N
CCO# 48 SUPPLEMENT#: 1 Category Cod CBPC	CONTINGENCY BALANCE (Incl. this change
COST: INCREASE ☑ DECREASE ☐	HEADQUARTERS APPROVAL REQUIRED? ☑ YES ☐ NO
SUPPLEMENTAL FUNDS PROVIDED: $0.00	IS THIS REQUEST IN ACCORDANCE WITH ENVIRONMENTAL DOCUMENTS? ☑ YES ☐ NO
CCO DESCRIPTION: Conduit Routing at Hinges(Electrical)	**PROJECT DESCRIPTION:** REPLACE SFOBB EAST SPAN

LOCATION: IN SAN FRANCISCO AND ALAMEDA COUNTIES IN SAN FRANCISCO AND OAKLAND FROM 1.3 KM EAST OF THE YERBA BUENA ISL

THIS CHANGE ORDER PROVIDES FOR:

1) Adding a face plate between the pipe beam conduit supports and the ring stiffeners.
2) Eliminating the flex conduit connections at Hinge A.
3) Revising electrical conduit system between the hinge pipe beams and the cable trays at Hinges B, C, and D, in accordance with the revised drawings.
4) Re-routing the conduits through the wing sections at Hinge E.
5) A payment method for cable tray support changes in the steel transition span, made as part of CCO No. 48 Supplement 0 for the SFOBB East Span Skyway, Bridge Nos. 34-0006L/R.

The revised contract plans reflecting these changes are 109GR3, 109YR1, 171R2, 187R2, 188R1, 191R2, 207R1, 208R1, 224R2, 225R2, 250R1, 262R1, 313R1, 340AR1, 340A0R2, 340A1R4, 340A2, 340BR1, 340B0, 340B1R2, 340CR1, 340C0, 340C1R2, 340DR1, 340D0, 340D1R2, 340ER2, 340E0R1, 340E1R2, 341R1, 341A, 341A0R2, 341A1R4, 341A2, 341B, 342R2, 342A, 342BR2, 343R2, 343A, 343BR2, 344R2, 344A, 344BR2, 345R2, 345AR2, 345BR2, 346R2, 346AR2, 346BR3, 347R2, 347AR1, 347BR2, 347CR2, 347DR2, 347ER2, 355R2, 355A, 355B, 388R3, 389R3, and 405R1 (sheets 2 through 63 of 67 of the change order).

The original design for routing conduit through the hinge pipe beams required redesign due to the ring stiffener plates that were added late in the design process, decreasing the available space within the pipe beams Stiffener plates were added prior to bid time; however, this information was not communicated to the electrical designer prior to bid time. This decrease in space, rendered the original design for stacked conduit routing unconstructible.

CCO 48 Supplement 0, implemented modifications to the conduit support system through the pipe beams at Hinges A, B, C, and D and deleted the conduit support system through Hinge E. This supplement change order provides for the changes to the electrical conduit connections between the cable trays and the hinge conduits at Hinges A, B, C, and D and for re-routing of the electrical conduit through the segment wings instead of the hinge pipe beams at Hinge E.

The designer required the addition of a steel face plate between the ring stiffener and the conduit support bracket at the hinge pipe beam which can be bolted to the ring stiffener through existing holes. This will prevent welding directly to the fracture critical hinge pipe beam as shown on the revised contract plan sheets submitted with CCO 48 Supplement 0. Hinge pipe beams at hinge A cannot be placed in their final position due to the delay of the SAS contract thereby preventing the installation of the flex conduit connections and cable trays. The Engineer eliminated this portion of the work from the contract, the agreed amount of the change order reflects the credit for this change. The revisions to the hinge pipe beam conduit at hinges B, C, and D required changing the routing and connections of the flex conduit transition between the cable trays and the hinge pipe beam conduits. At hinge E, the already smaller diameter of the pipe beam did not leave enough room for the conduits after installation of the ring stiffeners, requiring the conduits to be re-routed through the web walls into the wing sections at the hinge. Cable tray support revisions Revisions to the cable tray supports in the steel transition spans at hinge A were included in contract change order 48 supplement 0, although compensation was not.

The agreed compensation for this contract change order is included in the lump sum compensation portion of resolution CCO No. 200. For this work, the Contractor will receive an agreed lump sum amount of $602,194.00.

A detailed force account analysis prepared by the Engineer for the cost of this change order is on file in the project records.

Pete Siegenthaler, Construction Manager, SFOBB Toll Bridge, provided concurrence on May 5, 2006. A copy of the concurrence provided by Mr. Siegenthaler is attached.

Ken Terpstra, SFOBB Toll Bridge Project Manager, provided concurrence on July 6, 2006. A copy of the concurrence provided by Mr. Terpstra is attached.

Prior Approval was obtained from Ms. Nancy Bobb, FHWA Bay Bridge Project Manager, via electronic message on July 13, 2006. A printed copy of the prior approval provided by Ms. Bobb is attached.

Concurrence from Maintenance was received on July 7, 2006 from Mr. Ken Brown. A copy of the concurrence provided by Mr. Brown is attached.

Design concurrence was obtained from Mr. Parviz Boozarpour, Project Engineer, District 4 Electrical Design, via electronic message on April 12, 2005. A copy of the concurrence provided by Mr. Boozarpour is attached.

No adjustment of contract time is warranted, as this change does not affect the controlling operation.

CONCURRED BY:		
Construction Engineer:	Douglas Coe	Date 8-24-06
Bridge Engineer:	Douglas Coe	Date 8-24-06
FHWA Representative:	Nancy Bobb	Date7/13/2006
Project Engineer:		Date
Other (specify): Ken Terpstra, SFOBB Project Manager		Date 7/6/2006
		Date
		Date
District Prior Approval By:		Date
HQ (Issue Approve) By:	Ken Darby	Date
Resident Engineer's Signature:		Date 8-24-06

ESTIMATE OF COST

	THIS REQUEST	TOTAL TO DATE
ITEMS	$0.00	$0.00
FORCE ACCOUNT	$0.00	$0.00
AGREED PRICE	$0.00	$0.00
ADJUSTMENT		
TOTAL		

FEDERAL PARTICIPATION

☑ PARTICIPATING ☐ PARTICIPATING IN PART ☐ NONE
☐ NON-PARTICIPATING (MAINTENANCE) ☐ NON-PARTICIPATING

FEDERAL SEGREGATION (if more than one Funding Source or P.I.P. type)
☑ CCO FUNDED PER CONTRACT ☐ CCO FUNDED AS FOLLOWS

FEDERAL FUNDING SOURCE	PERCENT

CONTRACT CHANGE ORDER

Change Requested by: Engineer

CCO: 49	Suppl. No. 0	Contract No. 04 - 012024	Road 04-SF,Ala-80-13.9/14.3,0.0/1.6	FED. AID LOC.: ACIM-080-1(085)8N

To: **KIEWIT / FCI / MANSON a JV**

You are directed to make the following changes from the plans and specifications or do the following described work not included in the plans and specifications for this contract. ***NOTE: This change order is not effective until approved by the Engineer.***

Description of work to be done, estimate of quantities and prices to be paid. (Segregate between additional work at contract price, agreed price and force account.) Unless otherwise stated, rates for rental of equipment cover only such time as equipment is actually used and no allowance will be made for idle time. This last percentage shown is the net accumulated increase or decrease from the original quantity in the Engineer's Estimate.

Furnish and install free standing pier stair towers and pier to pier table access openings for Piers E3E to E16E and E3W to E16W, and furnish and install pier access casing ladders for Piers E7E to E16E and E7W to E16W, of the SFOBB East Span Skyway, Bridge Nos. 34-0006L/R. Revisions to the contract plans are to be in accordance with sheet 3 of 72 of this change. The drawings reflecting this change are sheets 5 through 72 of this change.

For furnishing and installing revised access opening cover plates and free standing pier stair towers and access casing ladders:

Estimate of Increase in Contract Item at Contract Price:

Item No. 86: MISCELLANEOUS METAL (BRIDGE)
64482 KG (+24.80%) @ $9.40 /KG = +$606,130.80 (+24.80%)

Total cost for Increase in Contract Item.....$606,130.80

The quantity increases shown here for Contract Item No. 86, "Miscellaneous Metal (Bridge)," when combined with quantities shown in the engineer's estimate, and as modified by any previous change orders, will be the final quantities for which payment will be made for each contract item.

The provisions of Section 4-1.03B(1), "Increases of More Than 25 Percent," of the Standard Specifications shall not apply to Item 86, "Miscellaneous Metal (Bridge)" as a result of this change order

Extra Work at Lump Sum:

For revising the pier stair tower and access casing ladder design, and for modifications to the pier to pier table access openings (including the hydraulically operated hatch opening device), the Contractor shall receive a lump sum amount of $121,497.80. This amount constitutes full compensation, including all markups, for all direct and indirect costs, all overhead expenses, and all project impacts.

Cost of Extra Work at Lump Sum $121,497.80

Adjustment of Compensation at Lump Sum:

For allowing the use of free standing pier stair towers and access casing ladders in lieu of requiring concrete embedded anchorages, the State shall receive a credit for the lump sum amount of $615,628.60. This lump sum constitutes full compensation, including markups, for all direct and indirect costs, including all overhead expenses, and all associated project impacts.

Cost of Adjustment of Compensation at Lump Sum .....($615,628.60)

The work associated with the design modifications and the use of the free standing pier ladders and stair towers results in a credit to the State for the amount of $494,130.80 ($615,628.60 - $121,497.80). The appropriate credit shall be taken in accordance with Table 2, "Credit Adjustment Schedule," as each item of work involving the pier stair tower and the pier access casing ladders is paid at each location. Table 2 is provided herein as sheet 4 of 72 of this change order.

Total cost this change order $112,000.00

CONTRACT CHANGE ORDER

Change Requested by: Engineer

CCO: 49	Suppl. No. 0	Contract No. 04 - 012024	Road 04-SF,Ala-80-13.9/14.3,0.0/1.6	FED. AID LOC.: ACIM-080-1(085)8N

Estimated Cost: Increase ☑ Decrease ☐ $112,000.00

By reason of this order the time of completion will be adjusted as follows: 0 days

Submitted by

Signature	Resident Engineer: COE D.	Date 6-23-04

Approval Recommended by

Signature	Construction Engineer: COE D.	Date 6-23-04

Engineer Approval by

Signature	(Print name and title) PETER SIEGENTHALER - Chief	Date

We the undersigned contractor, have given careful consideration to the change proposed and agree, if this proposal is approved, that we will provide all equipment, furnish the materials, except as may otherwise be noted above, and perform all services necessary for the work above specified, and will accept as full payment therefor the prices shown above.

NOTE: If you, the contractor, do not sign acceptance of this order, your attention is directed to the requirements of the specifications as to proceeding with the ordered work and filing a written protest within the time therein specified.

Contractor Acceptance by

Signature	(Print name and title) A.T. Skoro, Project Director	Date 7-12-04

TABLE 1: DRAWING SCHEDULE

- **PIER STAIR TOWERS**

Contract Plan Sheet(s)	Detail(s)		Contractor Submittal No.	Sheet(s)
506	Pier Stair Tower Details	replaced by	765 R00	E1 through E28, 1m through 5m, 5ma, 5mb, 51m, 51ma, 51mb, 52m, 52ma, 52mb, 53m, 53ma, 53mb, 54m, 54ma, 54mb, 6m, 6ma, 6mb, 61m, 61ma, 61mb, 62, 62ma, 62mb, 63, 63ma, 63mb, 7m, 71m, 72m
			765 R01	8m

- **BOTTOM SLAB ACCESS OPENINGS TO PIER TABLES**

Contract Plan Sheet(s)	Detail(s)		Contractor Submittal No.	Sheet(s)
746	Section K-K	replaced by	765 R01	8m, 9m
899	Access Opening Frame and Cover Detail			

- **PIER ACCESS CASING LADDERS**

Contract Plan Sheet(s)	Detail(s)		Contractor Submittal No.	Sheet(s)
496R2	Ladder Rung Detail	replaced by	921 R01	S-1, S-2, S-3

TABLE 2: CREDIT ADJUSTMENT SCHEDULE

Pier Location	% Payment For Pier Stair Tower (%)	% Payment For Access Casing Ladders (%)
E3E	3.70	---
E4E	1.20	---
E5E	3.20	---
E6E	3.00	---
E7E	2.80	1.50
E8E	2.40	1.60
E9E	2.10	1.50
E10E	2.70	1.90
E11E	2.10	2.20
E12E	2.10	2.20
E13E	2.10	2.20
E14E	2.10	2.10
E15E	0.70	1.50
E16E	1.30	1.80

Pier Location	% Payment For Pier Stair Tower (%)	% Payment For Access Casing Ladders (%)
E3E	3.70	---
E4E	1.20	---
E5E	3.20	---
E6E	3.00	---
E7E	2.80	1.50
E8E	2.40	1.60
E9E	2.10	1.50
E10E	2.70	1.90
E11E	2.10	2.20
E12E	2.10	2.20
E13E	2.10	2.20
E14E	2.10	2.10
E15E	0.70	1.50
E16E	1.30	1.80

☒ APPROVED
☐ APPROVED AS NOTED
☐ NOT APPROVED

Pursuant to Section 5-1.02 of the Standard Specifications State of California DEPARTMENT OF TRANSPORTATION Division of Structures Office of Structure Construction

Signed: James Fan
Structure Representative
Date: 4/13/03

MAR - 6 2003
005376
DEPARTMENT OF TRANSPORTATION
FOLSOM, CALIFORNIA

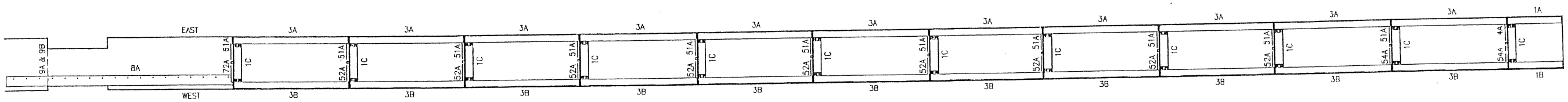

E3E STAIR TOWER SOUTH VIEW
SCALE 1 : 50

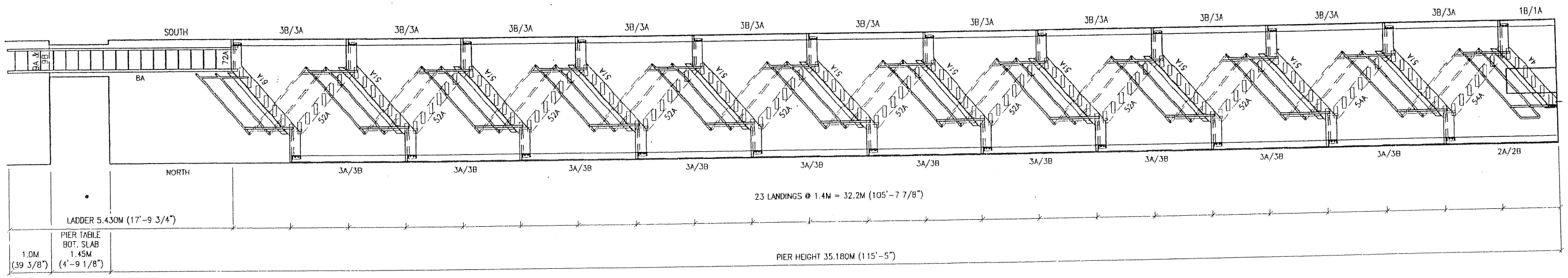

E3E STAIR TOWER WEST VIEW
SCALE 1 : 50

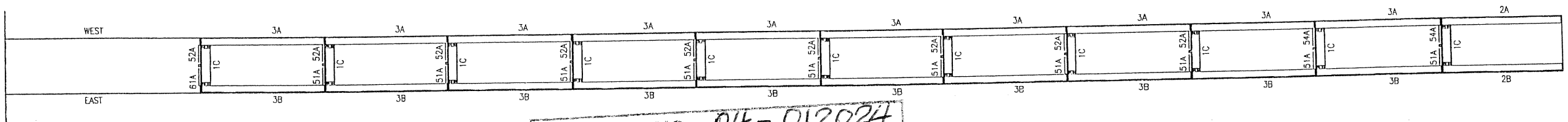

E3E STAIR TOWER NORTH VIEW
SCALE 1 : 50

CONTRACT NO. 04-012024
CCO NO. 49
PAGE 5 OF 72

RECEIVED
MAR 14 2003
GLOBAL FABRICATORS

SAN FRANCISCO OAKLAND BAY BRIDGE
SKYWAY CONTRACT No. 04-012024
SFOBB EAST SPAN SEISMIC SAFETY PROJECT
POST KM 04-SF-80-13.9-14.3/R.A-80-0.0-1.6
BRIDGE No. 34-0006

DO NOT DUPLICATE WITHOUT PERMISSION

THIS PROJECT SHALL BE ERECTED PER THE AISC CODE OF STANDARD PRACTICE SPECIFICALLY PARAGRAPH 7.12 AS FOLLOWS:
7.12 CORRECTION OF ERRORS
THE CORRECTION OF MINOR MISFITS BY MODERATE AMOUNTS OF REAMING, GRINDING, WELDING OR CUTTING, AND THE DRAWING OF ELEMENTS INTO LINE WITH DRIFT PINS, SHALL BE CONSIDERED TO BE NORMAL ERECTION OPERATIONS. ERRORS THAT CANNOT BE CORRECTED USING FOREGOING MEANS, OR THAT REQUIRE MAJOR CHANGES IN MEMBER OR CONNECTION CONFIGURATION, SHALL BE PROMPTLY REPORTED TO THE OWNER'S DESIGNATED REPRESENTATIVES FOR DESIGN AND CONSTRUCTION AND THE FABRICATOR BY THE ERECTOR, TO ENABLE THE RESPONSIBLE ENTITY TO EITHER CORRECT THE ERROR OR APPROVE THE MOST EFFICIENT AND ECONOMICAL METHOD OF CORRECTION TO BE USED BY OTHERS. NO BACK CHARGES WILL BE ACCEPTED UNLESS APPROVED IN WRITING BY THIS OFFICE.

GLOBAL FABRICATORS
METRIC
CUSTOM EQUIPMENT MANUFACTURING
METAL FABRICATION–MACHINE SHOP
8929 ROSEDALE HWY. BAKERSFIELD CA. 93312
PHONE: (661) 589-2774 FAX: (661) 589-7504
E-MAIL engineering@globalfab.com

H.F. MAGER INC.
STRUCTURAL ENGINEERS
COMMERCIAL & INDUSTRIAL
STRUCTURAL DESIGN AND
CONSTRUCTION DOCUMENTS
1149 MARSI STREET
SAN LUIS OBISPO, CA 93401
PH# (805)541-2193 FAX# (805)541-5348
EMAIL hfme@magerstruc.com

SEAL: REGISTERED PROFESSIONAL ENGINEER HANS FRIED MAGER C 23378 STRUCTURAL ENGINEER STATE OF CALIFORNIA
Mar. 11, 2003
Expires Mar. 31, 2006

DWN. BY:	DATE:	REV.		DATE
IDG	3-11-03			
CHK'D. BY:	DATE:			
APRV'D. BY:	DATE:			
FINISH:				
SCALE: AS NOTED				

PROJECT/DWG. TITLE: SKYWAY STAIR TOWER

JOB NO.:	FILE NO.:	DWG. NO.:
02D02	ER1	S1

☒ APPROVED
☐ APPROVED AS NOTED
☐ NOT APPROVED

Pursuant to Section 5-1.02
of the Standard Specifications
State of California
DEPARTMENT OF TRANSPORTATION
Division of Structures
Office of Structure Construction

Signed: James Fan
Structure Representative

Date: 4/13/03

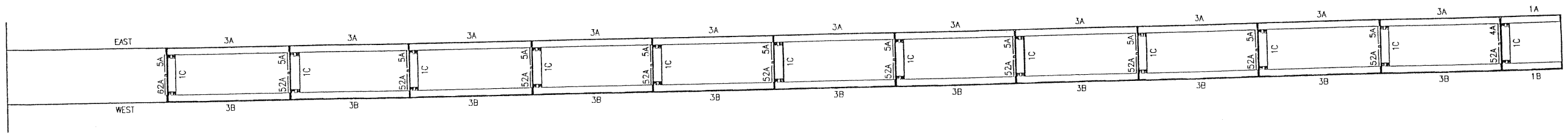

E3W STAIR TOWER SOUTH VIEW
SCALE 1:50

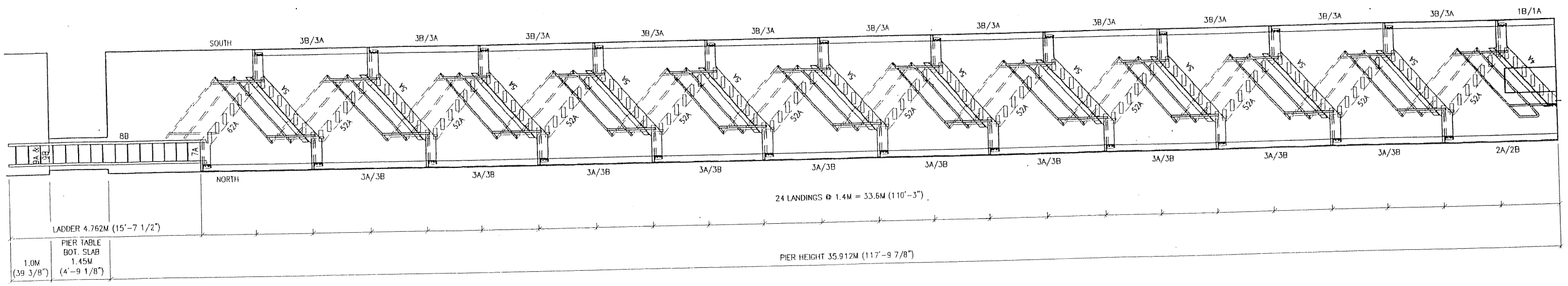

E3W STAIR TOWER WEST VIEW
SCALE 1:50

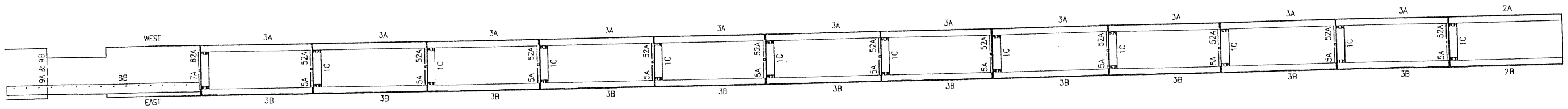

E3W STAIR TOWER NORTH VIEW
SCALE 1:50

CONTRACT NO. 04-012024
CCO NO. 49
PAGE 6 OF 72

SAN FRANCISCO OAKLAND BAY BRIDGE
SKYWAY CONTRACT No. 04-012024
SFOBB EAST SPAN SEISMIC SAFETY PROJECT
POST KM 04-SF-80-13.9-14.3/ALA-80-0.0-1.6
BRIDGE No. 34-0006

DO NOT DUPLICATE WITHOUT PERMISSION

THIS PROJECT SHALL BE ERECTED PER THE AISC CODE OF STANDARD PRACTICE SPECIFICALLY PARAGRAPH 7.12 AS FOLLOWS:
7.12 CORRECTION OF ERRORS
THE CORRECTION OF MINOR MISFITS BY MODERATE AMOUNTS OF REAMING, GRINDING, WELDING OR CUTTING, AND THE DRAWING OF ELEMENTS INTO LINE WITH DRIFT PINS, SHALL BE CONSIDERED TO BE NORMAL ERECTION OPERATIONS. ERRORS THAT CANNOT BE CORRECTED USING FOREGOING MEANS, OR THAT REQUIRE MAJOR CHANGES IN MEMBER OR CONNECTION CONFIGURATION, SHALL BE PROMPTLY REPORTED TO THE OWNER'S DESIGNATED REPRESENTATIVES FOR DESIGN AND CONSTRUCTION AND THE FABRICATOR. BY THE ERECTOR, TO ENABLE THE RESPONSIBLE ENTITY TO EITHER CORRECT THE ERROR OR APPROVE THE MOST EFFICIENT AND ECONOMICAL METHOD OF CORRECTION TO BE USED BY OTHERS. NO BACK CHARGES WILL BE ACCEPTED UNLESS APPROVED IN WRITING BY THIS OFFICE.

GLOBAL FABRICATORS
METRIC
CUSTOM EQUIPMENT MANUFACTURING
METAL FABRICATION-MACHINE SHOP
8929 ROSEDALE HWY. BAKERSFIELD CA. 93312
PHONE: (661) 589-2774 FAX: (661) 589-7504
E-MAIL engineering@globalfab.com

H.F. MAGER INC.
STRUCTURAL ENGINEERS
COMMERCIAL & INDUSTRIAL
STRUCTURAL DESIGN AND
CONSTRUCTION DOCUMENTS
1149 MARSH STREET
SAN LUIS OBISPO, CA 93401
PH# (805)541-2193 FAX# (805)541-5348
EMAIL hfm@magerstruc.com

SEAL: REGISTERED PROFESSIONAL ENGINEER HANS FRED MAGER C 23716 STRUCTURAL ENGINEER STATE OF CALIFORNIA
Expires Mar. 31, 2006

DWN. BY: IDG	DATE: 3-11-03	REV.		DATE
CHK'D. BY:	DATE:			
APRV'D. BY:	DATE:			
FINISH:				
SCALE: AS NOTED				

PROJECT/DWG. TITLE:

JOB NO.:	FILE NO.:	DWG. NO.:
02D02	ER2	E2

☒ APPROVED
☐ APPROVED AS NOTED
☐ NOT APPROVED

Pursuant to Section 5-1.02 of the Standard Specifications State of California
DEPARTMENT OF TRANSPORTATION
Division of Structures
Office of Structure Construction
Signed: James Ferri
Structure Representative
Date: 4/18/03

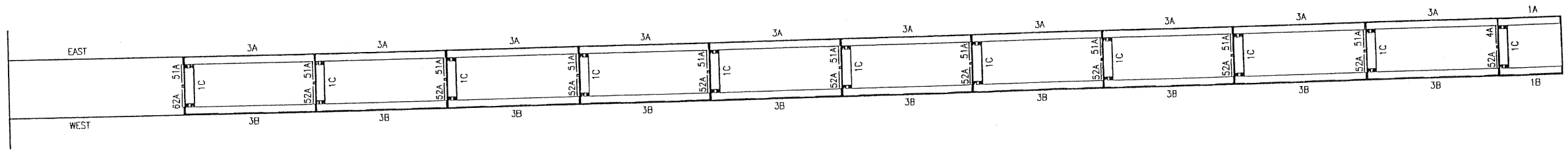

E4E STAIR TOWER SOUTH VIEW
SCALE 1 : 50

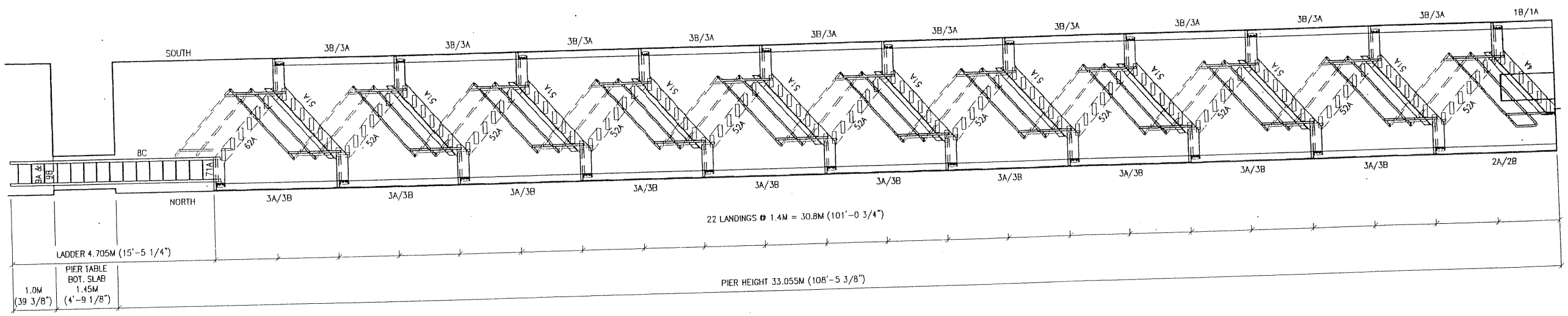

E4E STAIR TOWER WEST VIEW
SCALE 1 : 50

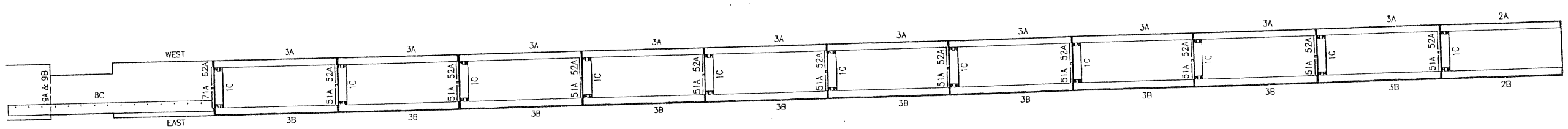

E4E STAIR TOWER NORTH VIEW
SCALE 1 : 50

CONTRACT NO. 04-012024
CCO NO. 49
PAGE 7 OF 72

SAN FRANCISCO OAKLAND BAY BRIDGE
SKYWAY CONTRACT No. 04-012024
SFOBB EAST SPAN SEISMIC SAFETY PROJECT
POST KM 04-SF-80-13.9-14.3/ALA-80-0.0-1.6
BRIDGE No. 34-0006

PROJECT/DWG. TITLE:

DO NOT DUPLICATE WITHOUT PERMISSION

THIS PROJECT SHALL BE ERECTED PER THE AISC CODE OF STANDARD PRACTICE SPECIFICALLY PARAGRAPH 7.12 AS FOLLOWS:
7.12 CORRECTION OF ERRORS
THE CORRECTION OF MINOR MISFITS BY MODERATE AMOUNTS OF REAMING, GRINDING, WELDING OR CUTTING, AND THE DRAWING OF ELEMENTS INTO LINE WITH DRIFT PINS, SHALL BE CONSIDERED TO BE NORMAL ERECTION OPERATIONS. ERRORS THAT CANNOT BE CORRECTED USING FOREGOING MEANS, OR THAT REQUIRE MAJOR CHANGES IN MEMBER OR CONNECTION CONFIGURATION, SHALL BE PROMPTLY REPORTED TO THE OWNER'S DESIGNATED REPRESENTATIVES FOR DESIGN AND CONSTRUCTION AND THE FABRICATOR BY THE ERECTOR, TO ENABLE THE RESPONSIBLE ENTITY TO EITHER CORRECT THE ERROR OR APPROVE THE MOST EFFICIENT AND ECONOMICAL METHOD OF CORRECTION TO BE USED BY OTHERS. NO BACK CHARGES WILL BE ACCEPTED UNLESS APPROVED IN WRITING BY THIS OFFICE.

GLOBAL FABRICATORS
METRIC
CUSTOM EQUIPMENT MANUFACTURING
METAL FABRICATION-MACHINE SHOP
8929 ROSEDALE HWY. BAKERSFIELD CA. 93312
PHONE: (661) 589-2774 FAX: (661) 589-7504
E-MAIL engineering@globalfab.com

H.F. MAGER INC.
STRUCTURAL ENGINEERS
COMMERCIAL & INDUSTRIAL
STRUCTURAL DESIGN AND
CONSTRUCTION DOCUMENTS
1149 MARSH STREET
SAN LUIS OBISPO, CA. 93401
PH# (805)541-2193 FAX# (805)541-5346
EMAIL hfmc@magerstruc.com

SEAL: REGISTERED PROFESSIONAL ENGINEER HANS FRED MAGER C 23760 CIVIL STATE OF CALIFORNIA
Expires Mar. 31, 2006

DWN. BY: IDG	DATE: 3-11-03	REV.		DATE
CHK'D. BY: HFM	DATE:			
APRV'D. BY:	DATE:			
FINISH:				
SCALE: AS NOTED				

JOB NO.:	FILE NO.:	DWG. NO.:
02D02	ER3	E3

☒ APPROVED
☐ APPROVED AS NOTED
☐ NOT APPROVED

Pursuant to Section 5-1.02 of the Standard Specifications State of California DEPARTMENT OF TRANSPORTATION Division of Structures Office of Structure Construction

Signed James Fari
Structure Representative

Date 4/18/03

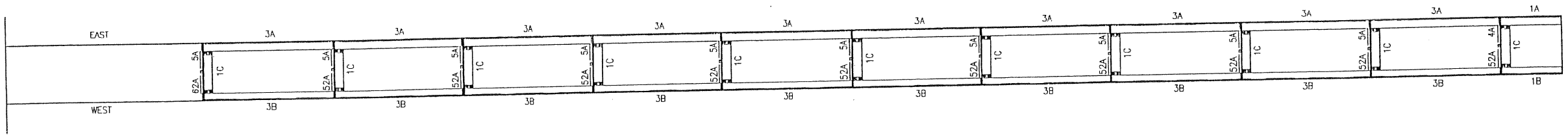

E4W STAIR TOWER SOUTH VIEW
SCALE 1 : 50

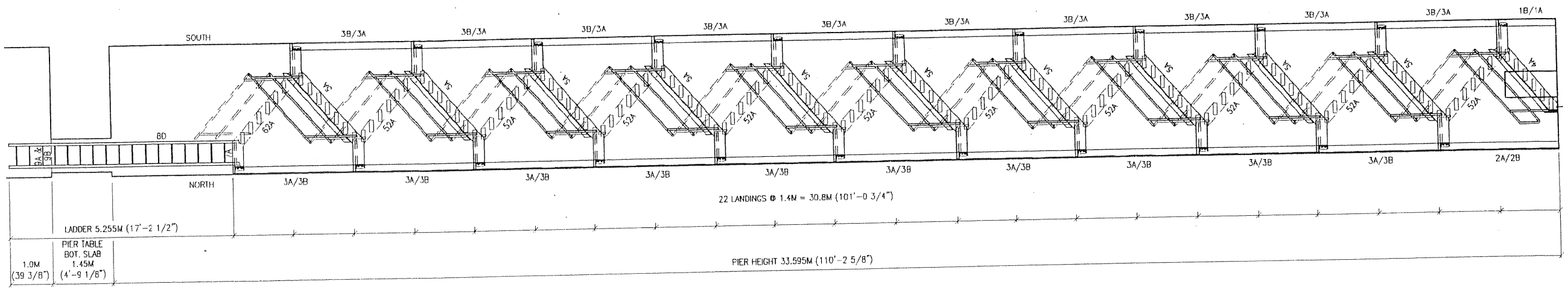

E4W STAIR TOWER WEST VIEW
SCALE 1 : 50

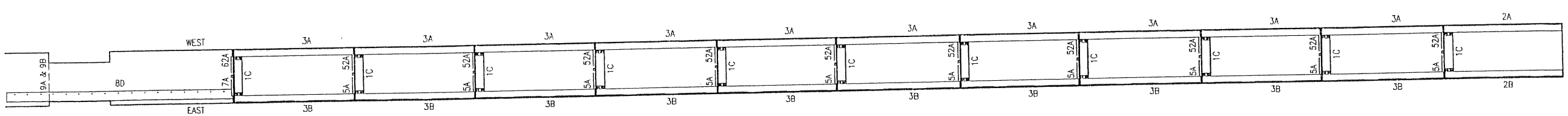

E4W STAIR TOWER NORTH VIEW
SCALE 1 : 50

CONTRACT NO. 04-012024
CCO NO. 49
PAGE 8 OF 72

SAN FRANCISCO OAKLAND BAY BRIDGE
SKYWAY CONTRACT No. 04-012024
SFOBB EAST SPAN SEISMIC SAFETY PROJECT
POST KM 04-SF-80-13.9-14.3/ALA-80-0.0-1.6
BRIDGE No. 34-0006

DO NOT DUPLICATE WITHOUT PERMISSION

THIS PROJECT SHALL BE ERECTED PER THE AISC CODE OF STANDARD PRACTICE SPECIFICALLY PARAGRAPH 7.12 AS FOLLOWS:
7.12 CORRECTION OF ERRORS
THE CORRECTION OF MINOR MISFITS BY MODERATE AMOUNTS OF REAMING, GRINDING, WELDING OR CUTTING, AND THE DRAWING OF ELEMENTS INTO LINE WITH DRIFT PINS, SHALL BE CONSIDERED TO BE NORMAL ERECTION OPERATIONS. ERRORS THAT CANNOT BE CORRECTED USING FOREGOING MEANS, OR THAT REQUIRE MAJOR CHANGES IN MEMBER OR CONNECTION CONFIGURATION, SHALL BE PROMPTLY REPORTED TO THE OWNER'S DESIGNATED REPRESENTATIVES FOR DESIGN AND CONSTRUCTION AND THE FABRICATOR BY THE ERECTOR, TO ENABLE THE RESPONSIBLE ENTITY TO EITHER CORRECT THE ERROR OR APPROVE THE MOST EFFICIENT AND ECONOMICAL METHOD OF CORRECTION TO BE USED BY OTHERS. NO BACK CHARGES WILL BE ACCEPTED UNLESS APPROVED IN WRITING BY THIS OFFICE.

GLOBAL FABRICATORS
METRIC
CUSTOM EQUIPMENT MANUFACTURING
METAL FABRICATION-MACHINE SHOP
8929 ROSEDALE HWY. BAKERSFIELD CA. 93312
PHONE: (661) 589-2774 FAX: (661) 589-7504
E-MAIL engineering@globalfab.com

H.F. MAGER INC.
STRUCTURAL ENGINEERS
COMMERCIAL & INDUSTRIAL
STRUCTURAL DESIGN AND
CONSTRUCTION DOCUMENTS
1149 MARSH STREET
SAN LUIS OBISPO, CA 93401
PH# (805)541-2193 FAX# (805)541-5348
EMAIL hans@magerstruc.com

SEAL: REGISTERED PROFESSIONAL ENGINEER HANS FRED MAGER S 2576 STRUCTURAL ENGINEER STATE OF CALIFORNIA
Expires Mar. 31, 2006

DWN. BY:	DATE:	REV.		DATE
IDG	3-11-03			
CHK'D. BY:	DATE:			
APRV'D. BY:	DATE:			
FINISH:				
SCALE: AS NOTED				

PROJECT/DWG. TITLE:

JOB NO.:	FILE NO.:	DWG. NO.:
02D02	ER4	E4

☒ APPROVED
☐ APPROVED AS NOTED
☐ NOT APPROVED

Pursuant to Section 5-1.02
of the Standard Specifications
State of California
DEPARTMENT OF TRANSPORTATION
Division of Structures
Office of Structure Construction

Signed James Ferrer
Structure Representative

Date 4/13/03

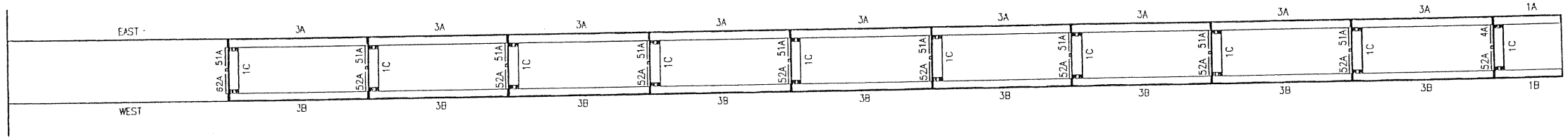

E5E STAIR TOWER SOUTH VIEW
SCALE 1 : 50

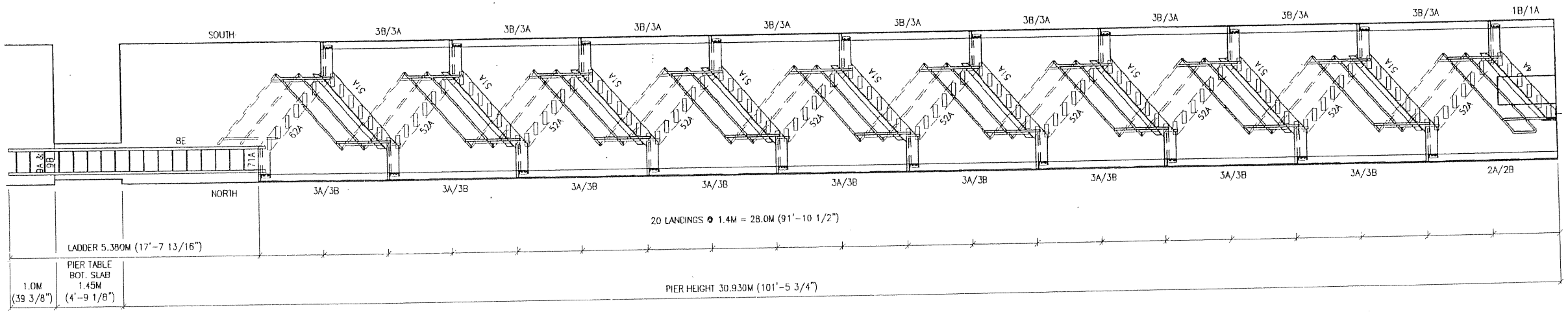

E5E STAIR TOWER WEST VIEW
SCALE 1 : 50

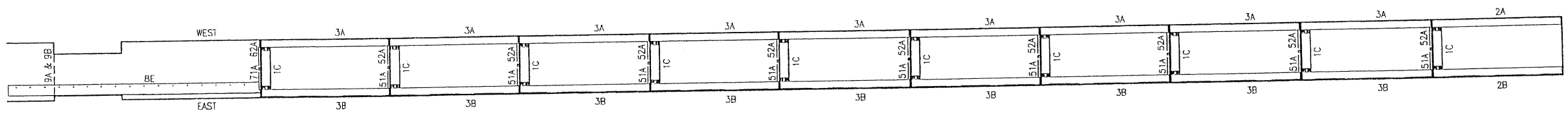

E5E STAIR TOWER NORTH VIEW
SCALE 1 : 50

CONTRACT NO. 04-01204
CCO NO. 49
PAGE 9 OF 72

SAN FRANCISCO OAKLAND BAY BRIDGE
SKYWAY CONTRACT No. 04-012024
SFOBB EAST SPAN SEISMIC SAFETY PROJECT
POST KM 04-SF-80-13.9-14.3/ALA-80-0.0-1.6
BRIDGE No. 34-0006

DO NOT DUPLICATE WITHOUT PERMISSION

THIS PROJECT SHALL BE ERECTED PER THE AISC CODE OF STANDARD PRACTICE SPECIFICALLY PARAGRAPH 7.12 AS FOLLOWS:
7.12 CORRECTION OF ERRORS
THE CORRECTION OF MINOR MISFITS BY MODERATE AMOUNTS OF REAMING, GRINDING, WELDING OR CUTTING, AND THE DRAWING OF ELEMENTS INTO LINE WITH DRIFT PINS, SHALL BE CONSIDERED TO BE NORMAL ERECTION OPERATIONS. ERRORS THAT CANNOT BE CORRECTED USING FOREGOING MEANS, OR THAT REQUIRE MAJOR CHANGES IN MEMBER OR CONNECTION CONFIGURATION, SHALL BE PROMPTLY REPORTED TO THE OWNER'S DESIGNATED REPRESENTATIVES FOR DESIGN AND CONSTRUCTION AND THE FABRICATOR BY THE ERECTOR, TO ENABLE THE RESPONSIBLE ENTITY TO EITHER CORRECT THE ERROR OR APPROVE THE MOST EFFICIENT AND ECONOMICAL METHOD OF CORRECTION TO BE USED BY OTHERS. NO BACK CHARGES WILL BE ACCEPTED UNLESS APPROVED IN WRITING BY THIS OFFICE.

GLOBAL FABRICATORS
METRIC
CUSTOM EQUIPMENT MANUFACTURING
METAL FABRICATION-MACHINE SHOP
8929 ROSEDALE HWY. BAKERSFIELD CA. 93312
PHONE: (661) 589-2774 FAX: (661) 589-7504
E-MAIL engineering@globalfab.com

H.F. MAGER INC.
STRUCTURAL ENGINEERS
COMMERCIAL & INDUSTRIAL
STRUCTURAL DESIGN AND
CONSTRUCTION DOCUMENTS
1149 MARSH STREET
SAN LUIS OBISPO, CA 93401
PH# (805)541-2193 FAX# (805)541-5348
EMAIL hsma@magerstruc.com

SEAL: REGISTERED PROFESSIONAL ENGINEER HANS FRED MAGER C 2376 STRUCTURAL ENGINEERING CALIFORNIA
Mar. 11, 2003
Expires Mar. 31, 2006

DWN. BY: IDG	DATE: 3-11-03	REV.		DATE
CHK'D. BY: HFM	DATE:			
APRV'D. BY:	DATE:			
FINISH:				
SCALE: AS NOTED				

PROJECT/DWG. TITLE:

JOB NO.:	FILE NO.:	DWG. NO.:
02D02	ER5	E5

☒ APPROVED
☐ APPROVED AS NOTED
☐ NOT APPROVED

Pursuant to Section 5-1.02
of the Standard Specifications
State of California
DEPARTMENT OF TRANSPORTATION
Division of Structures
Office of Structure Construction
Signed James Ferre
Structure Representative
Date 4/13/03

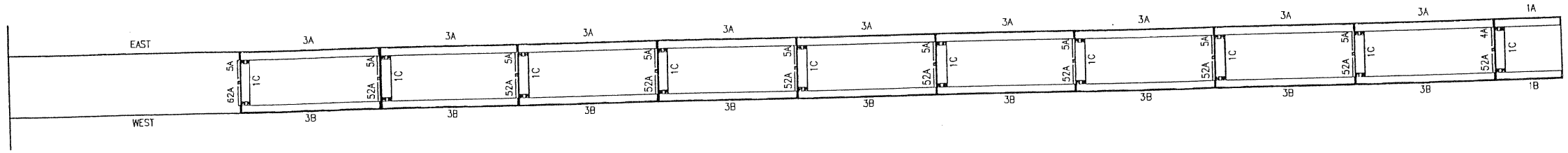

E5W STAIR TOWER SOUTH VIEW
SCALE 1 : 50

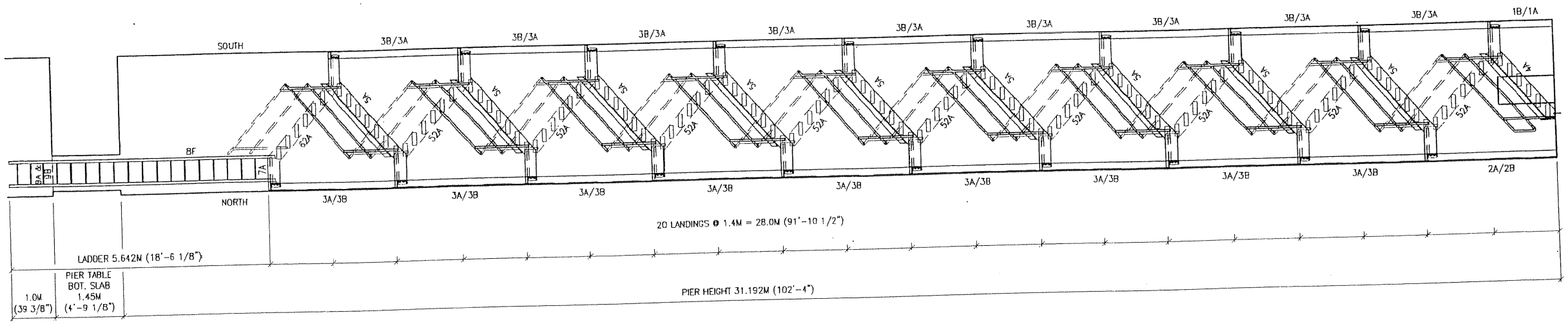

E5W STAIR TOWER WEST VIEW
SCALE 1 : 50

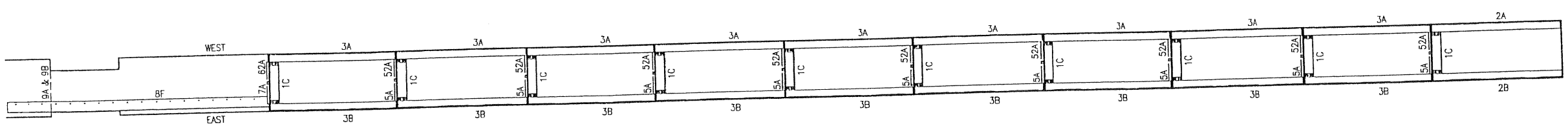

E5W STAIR TOWER NORTH VIEW
SCALE 1 : 50

CONTRACT NO. 04-012024
CCO NO. 49
PAGE 10 OF 72

SAN FRANCISCO OAKLAND BAY BRIDGE
SKYWAY CONTRACT No. 04-012024
SFOBB EAST SPAN SEISMIC SAFETY PROJECT
POST KW 04-SF-80-13.9-14.3/KA-80-0.0-1.6
BRIDGE No. 34-0006

DO NOT DUPLICATE WITHOUT PERMISSION

THIS PROJECT SHALL BE ERECTED PER THE AISC CODE OF STANDARD PRACTICE SPECIFICALLY PARAGRAPH 7.12 AS FOLLOWS:
7.12 CORRECTION OF ERRORS
THE CORRECTION OF MINOR MISFITS BY MODERATE AMOUNTS OF REAMING, GRINDING, WELDING OR CUTTING, AND THE DRAWING OF ELEMENTS INTO LINE WITH DRIFT PINS, SHALL BE CONSIDERED TO BE NORMAL ERECTION OPERATIONS. ERRORS THAT CANNOT BE CORRECTED USING FOREGOING MEANS, OR THAT REQUIRE MAJOR CHANGES IN MEMBER OR CONNECTION CONFIGURATION, SHALL BE PROMPTLY REPORTED TO THE OWNER'S DESIGNATED REPRESENTATIVES FOR DESIGN AND CONSTRUCTION AND THE FABRICATOR BY THE ERECTOR, TO ENABLE THE RESPONSIBLE ENTITY TO EITHER CORRECT THE ERROR OR APPROVE THE MOST EFFICIENT AND ECONOMICAL METHOD OF CORRECTION TO BE USED BY OTHERS. NO BACK CHARGES WILL BE ACCEPTED UNLESS APPROVED IN WRITING BY THIS OFFICE.

GLOBAL FABRICATORS
METRIC
CUSTOM EQUIPMENT MANUFACTURING
METAL FABRICATION-MACHINE SHOP
8929 ROSEDALE HWY. BAKERSFIELD CA. 93312
PHONE: (661) 589-2774 FAX: (661) 589-7504
E-MAIL engineering@globalfab.com

H.F. MAGER INC.
STRUCTURAL ENGINEERS
COMMERCIAL & INDUSTRIAL
STRUCTURAL DESIGN AND
CONSTRUCTION DOCUMENTS
1149 MARSH STREET
SAN LUIS OBISPO, CA 93401
PH# (805)541-2193 FAX# (805)541-5348
EMAIL hone@magerstruc.com

SEAL: REGISTERED PROFESSIONAL ENGINEER HANS FRIEDO MAGER S 2376 STRUCTURAL ENGINEER STATE OF CALIFORNIA
Expires Mar. 31, 2006

DWN. BY: IDG	DATE: 3-11-03	REV.		DATE
CHK'D. BY: H.F.M.	DATE:			
APRV'D. BY:	DATE:			
FINISH:				
SCALE: AS NOTED				

PROJECT/DWG. TITLE:

JOB NO.:	FILE NO.:	DWG. NO.:
02D02	ER6	E6

☒ APPROVED
☐ APPROVED AS NOTED
☐ NOT APPROVED

Pursuant to Section 5-1.02
of the Standard Specifications
State of California
DEPARTMENT OF TRANSPORTATION
Division of Structures
Office of Structure Construction

Signed James Ferrer
Structure Representative

Date 4/18/03

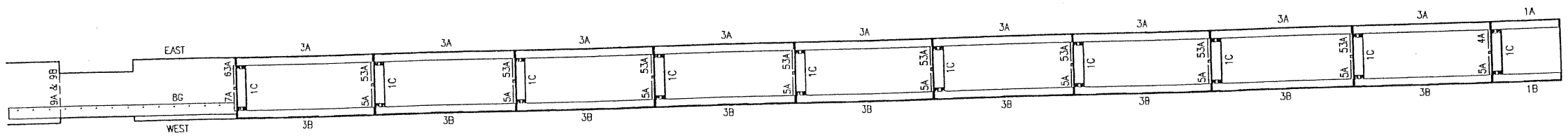

E6E STAIR TOWER SOUTH VIEW
SCALE 1 : 50

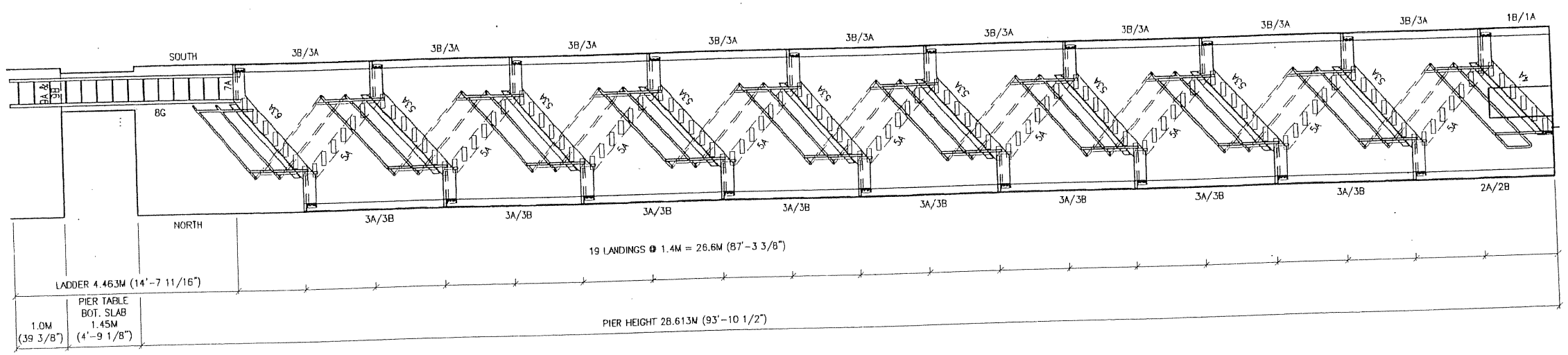

E6E STAIR TOWER WEST VIEW
SCALE 1 : 50

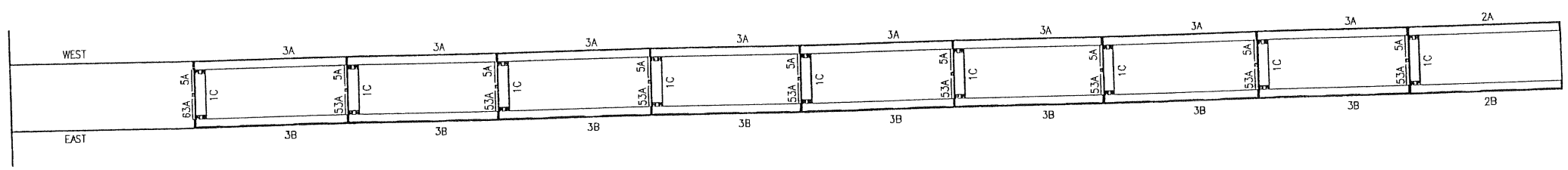

E6E STAIR TOWER NORTH VIEW
SCALE 1 : 50

CONTRACT NO. 04-012024
CCO NO. 49
PAGE 11 OF 72

SAN FRANCISCO OAKLAND BAY BRIDGE
SKYWAY CONTRACT No. 04-012024
SFOBB EAST SPAN SEISMIC SAFETY PROJECT
POST KM 04-SF-80-13.9-14.3/NA-80-0.0-1.6
BRIDGE No. 34-0006

PROJECT/DWG. TITLE:

DWN. BY:	DATE:	REV.		DATE
IDG	3-11-03			
CHK'D. BY:	DATE:			
APRV'D. BY:	DATE:			
FINISH:				
SCALE: AS NOTED				

JOB NO.:	FILE NO.:	DWG. NO.:
02D02	ER7	E7

DO NOT DUPLICATE WITHOUT PERMISSION

THIS PROJECT SHALL BE ERECTED PER THE AISC CODE OF STANDARD PRACTICE SPECIFICALLY PARAGRAPH 7.12 AS FOLLOWS:
7.12 CORRECTION OF ERRORS
THE CORRECTION OF MINOR MISFITS BY MODERATE AMOUNTS OF REAMING, GRINDING, WELDING OR CUTTING, AND THE DRAWING OF ELEMENTS INTO LINE WITH DRIFT PINS, SHALL BE CONSIDERED TO BE NORMAL ERECTION OPERATIONS. ERRORS THAT CANNOT BE CORRECTED USING FOREGOING MEANS, OR THAT REQUIRE MAJOR CHANGES IN MEMBER OR CONNECTION CONFIGURATION, SHALL BE PROMPTLY REPORTED TO THE OWNER'S DESIGNATED REPRESENTATIVES FOR DESIGN AND CONSTRUCTION AND THE FABRICATOR BY THE ERECTOR, TO ENABLE THE RESPONSIBLE ENTITY TO EITHER CORRECT THE ERROR OR APPROVE THE MOST EFFICIENT AND ECONOMICAL METHOD OF CORRECTION TO BE USED BY OTHERS. NO BACK CHARGES WILL BE ACCEPTED UNLESS APPROVED IN WRITING BY THIS OFFICE.

GLOBAL FABRICATORS
METRIC
CUSTOM EQUIPMENT MANUFACTURING
METAL FABRICATION-MACHINE SHOP
8929 ROSEDALE HWY. BAKERSFIELD CA. 93312
PHONE: (661) 589-2774 FAX: (661) 589-7504
E-MAIL engineering@globalfab.com

H.F. MAGER INC.
STRUCTURAL ENGINEERS
COMMERCIAL & INDUSTRIAL
STRUCTURAL DESIGN AND
CONSTRUCTION DOCUMENTS
1149 MARSH STREET
SAN LUIS OBISPO, CA 93401
PH# (805)541-2193 FAX# (805)541-5348
EMAIL hans@magerstruc.com

SEAL: REGISTERED PROFESSIONAL ENGINEER HANS FRED MAGER C 23786 STRUCTURAL ENGINEER STATE OF CALIFORNIA
Expires: Mar. 31, 2006

☒ APPROVED
☐ APPROVED AS NOTED
☐ NOT APPROVED

Pursuant to Section 5-1.02
of the Standard Specifications
State of California
DEPARTMENT OF TRANSPORTATION
Division of Structures
Office of Structure Construction

Signed James Fern
Structure Representative

Date 4/18/03

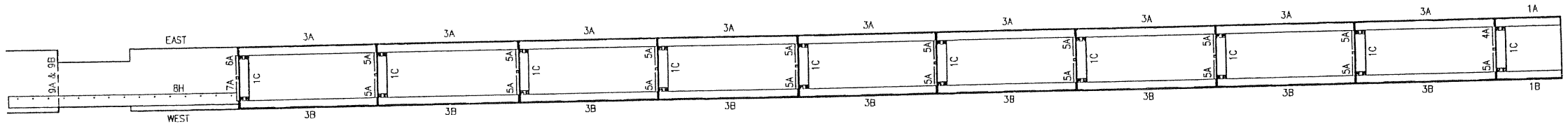

E&W STAIR TOWER SOUTH VIEW
SCALE 1 : 50

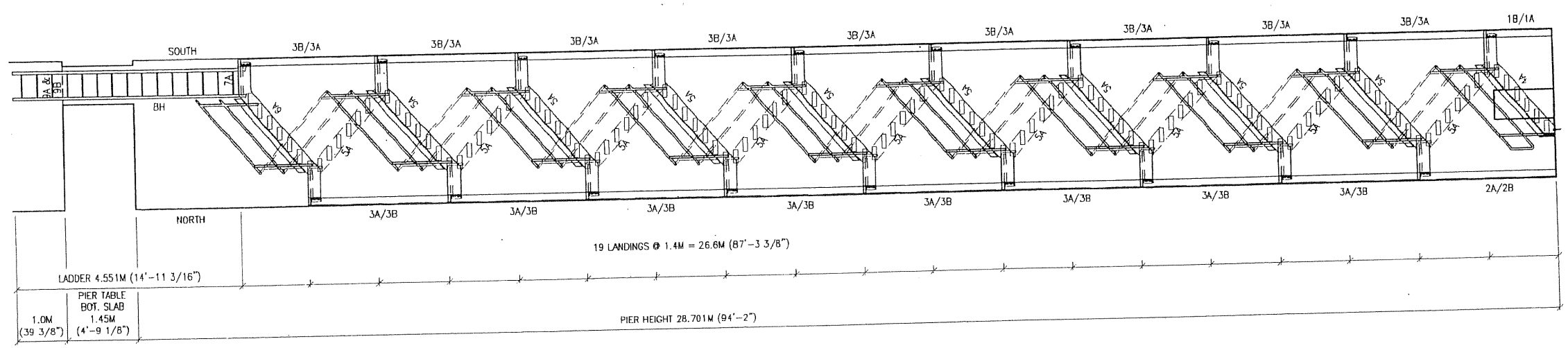

E&W STAIR TOWER WEST VIEW
SCALE 1 : 50

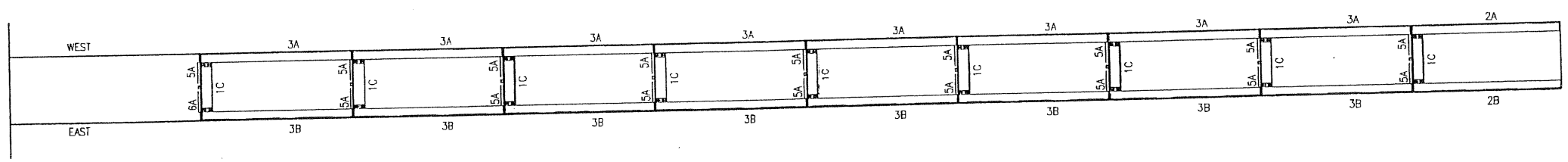

E&W STAIR TOWER NORTH VIEW
SCALE 1 : 50

CONTRACT NO. 04-012024
CCO NO. 49
PAGE 12 OF 72

SAN FRANCISCO OAKLAND BAY BRIDGE
SKYWAY CONTRACT No. 04-012024
SFOBB EAST SPAN SEISMIC SAFETY PROJECT
POST KM 04-SF-80-13.9-14.3/KA-80-0.0-1.6
BRIDGE No. 34-0006

DO NOT DUPLICATE WITHOUT PERMISSION

THIS PROJECT SHALL BE ERECTED PER THE AISC CODE OF STANDARD PRACTICE SPECIFICALLY PARAGRAPH 7.12 AS FOLLOWS:
7.12 CORRECTION OF ERRORS
THE CORRECTION OF MINOR MISFITS BY MODERATE AMOUNTS OF REAMING, GRINDING, WELDING OR CUTTING, AND THE DRAWING OF ELEMENTS INTO LINE WITH DRIFT PINS, SHALL BE CONSIDERED TO BE NORMAL ERECTION OPERATIONS. ERRORS THAT CANNOT BE CORRECTED USING FOREGOING MEANS, OR THAT REQUIRE MAJOR CHANGES IN MEMBER OR CONNECTION CONFIGURATION, SHALL BE PROMPTLY REPORTED TO THE OWNER'S DESIGNATED REPRESENTATIVES FOR DESIGN AND CONSTRUCTION AND THE FABRICATOR BY THE ERECTOR, TO ENABLE THE RESPONSIBLE ENTITY TO EITHER CORRECT THE ERROR OR APPROVE THE MOST EFFICIENT AND ECONOMICAL METHOD OF CORRECTION TO BE USED BY OTHERS. NO BACK CHARGES WILL BE ACCEPTED UNLESS APPROVED IN WRITING BY THIS OFFICE.

GLOBAL FABRICATORS
METRIC
CUSTOM EQUIPMENT MANUFACTURING
METAL FABRICATION-MACHINE SHOP
8929 ROSEDALE HWY. BAKERSFIELD CA. 93312
PHONE: (661) 589-2774 FAX: (661) 589-7504
E-MAIL engineering@globalfab.com

H.F. MAGER INC.
STRUCTURAL ENGINEERS
COMMERCIAL & INDUSTRIAL
STRUCTURAL DESIGN AND
CONSTRUCTION DOCUMENTS
1149 MARSH STREET
SAN LUIS OBISPO, CA 93401
PH# (805)541-2183 FAX# (805)541-5346
EMAIL hans@magerstruc.com

SEAL: REGISTERED PROFESSIONAL ENGINEER HANS FRED MAGER C 2376 STRUCTURAL ENGINEER STATE OF CALIFORNIA
Expires Mon. 3/1/2006

DWN. BY:	DATE:	REV.		DATE
IDG	3-11-03			
CHK'D. BY:	DATE:			
APRV'D. BY:	DATE:			
FINISH:				
SCALE: AS NOTED				

PROJECT/DWG. TITLE:

JOB NO.:	FILE NO.:	DWG. NO.:
02D02	ER8	E8

☒ APPROVED
☐ APPROVED AS NOTED
☐ NOT APPROVED

Pursuant to Section 5-1.02 of the Standard Specifications
State of California
DEPARTMENT OF TRANSPORTATION
Division of Structures
Office of Structure Construction
Signed James Ferro
Structure Representative
Date 4/18/03

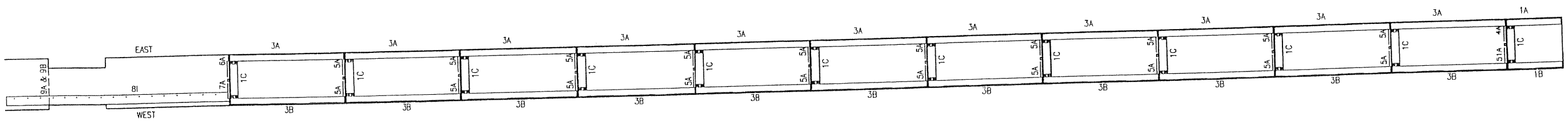

E7E STAIR TOWER SOUTH VIEW
SCALE 1 : 50

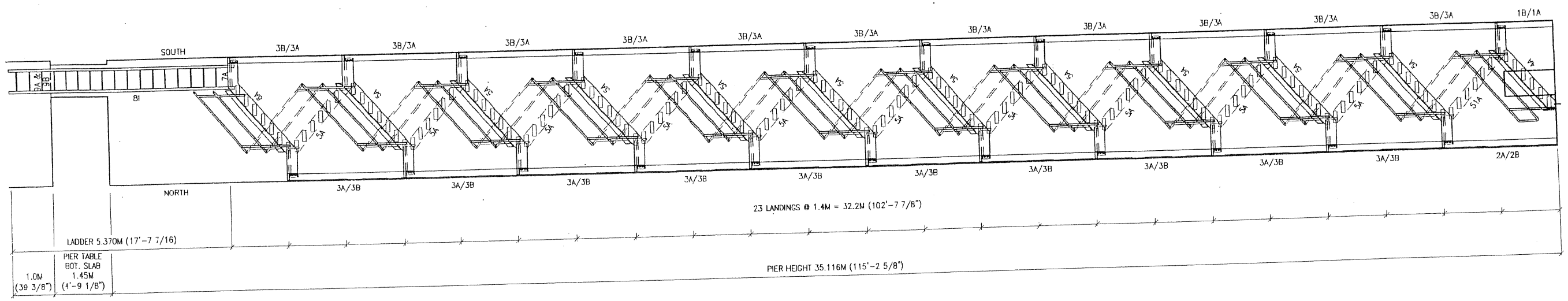

E7E STAIR TOWER WEST VIEW
SCALE 1 : 50

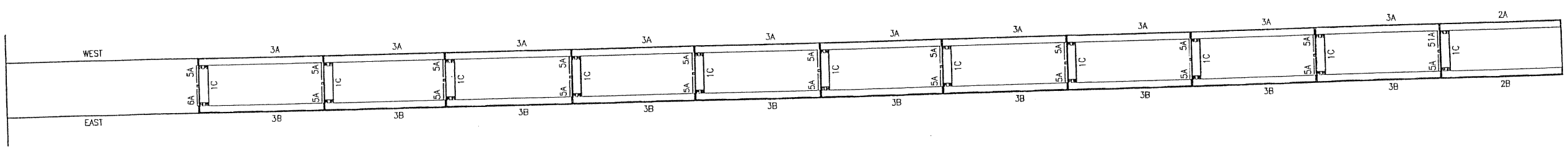

E7E STAIR TOWER NORTH VIEW
SCALE 1 : 50

CONTRACT NO. 04-012024
CCO NO. 49
PAGE 13 OF 72

SAN FRANCISCO OAKLAND BAY BRIDGE
SKYWAY CONTRACT No. 04-012024
SFOBB EAST SPAN SEISMIC SAFETY PROJECT
POST KM 04-SF-80-13.9-14.3/ALA-80-0.0-1.6
BRIDGE No. 34-0006

DO NOT DUPLICATE WITHOUT PERMISSION

THIS PROJECT SHALL BE ERECTED PER THE AISC CODE OF STANDARD PRACTICE SPECIFICALLY PARAGRAPH 7.12 AS FOLLOWS:
7.12 CORRECTION OF ERRORS
THE CORRECTION OF MINOR MISFITS BY MODERATE AMOUNTS OF REAMING, GRINDING, WELDING OR CUTTING, AND THE DRAWING OF ELEMENTS INTO LINE WITH DRIFT PINS, SHALL BE CONSIDERED TO BE NORMAL ERECTION OPERATIONS. ERRORS THAT CANNOT BE CORRECTED USING FOREGOING MEANS, OR THAT REQUIRE MAJOR CHANGES IN MEMBER OR CONNECTION CONFIGURATION, SHALL BE PROMPTLY REPORTED TO THE OWNER'S DESIGNATED REPRESENTATIVES FOR DESIGN AND CONSTRUCTION AND THE FABRICATOR BY THE ERECTOR, TO ENABLE THE RESPONSIBLE ENTITY TO EITHER CORRECT THE ERROR OR APPROVE THE MOST EFFICIENT AND ECONOMICAL METHOD OF CORRECTION TO BE USED BY OTHERS. NO BACK CHARGES WILL BE ACCEPTED UNLESS APPROVED IN WRITING BY THIS OFFICE.

GLOBAL FABRICATORS
METRIC
CUSTOM EQUIPMENT MANUFACTURING
METAL FABRICATION-MACHINE SHOP
8929 ROSEDALE HWY. BAKERSFIELD CA. 93312
PHONE: (661) 589-2774 FAX: (661) 589-7504
E-MAIL engineering@globalfab.com

H.F. MAGER INC.
STRUCTURAL ENGINEERS
COMMERCIAL & INDUSTRIAL
STRUCTURAL DESIGN AND
CONSTRUCTION DOCUMENTS
1149 MARSH STREET
SAN LUIS OBISPO, CA 93401
PH# (805)541-2193 FAX# (805)541-5346
EMAIL hmm@magerstruc.com

SEAL: REGISTERED PROFESSIONAL ENGINEER HANS FRED MAGER S 2376 STRUCTURAL ENGINEER STATE OF CALIFORNIA
Mar. 11, 2002
Expires Mar. 31, 2006

DWN. BY: IDG	DATE: 3-11-03	REV.		DATE
CHK'D. BY:	DATE:			
APRV'D. BY:	DATE:			
FINISH:				
SCALE: AS NOTED				

PROJECT/DWG. TITLE:

JOB NO.:	FILE NO.:	DWG. NO.:
02D02	ER9	E9

☒ APPROVED
☐ APPROVED AS NOTED
☐ NOT APPROVED

Pursuant to Section 5-1.02
of the Standard Specifications
State of California
DEPARTMENT OF TRANSPORTATION
Division of Structures
Office of Structure Construction

Signed James Fen
Structure Representative

Date 4/13/03

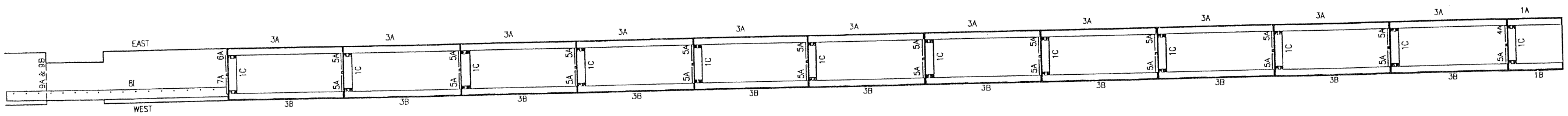

E7W STAIR TOWER SOUTH VIEW
SCALE 1 : 50

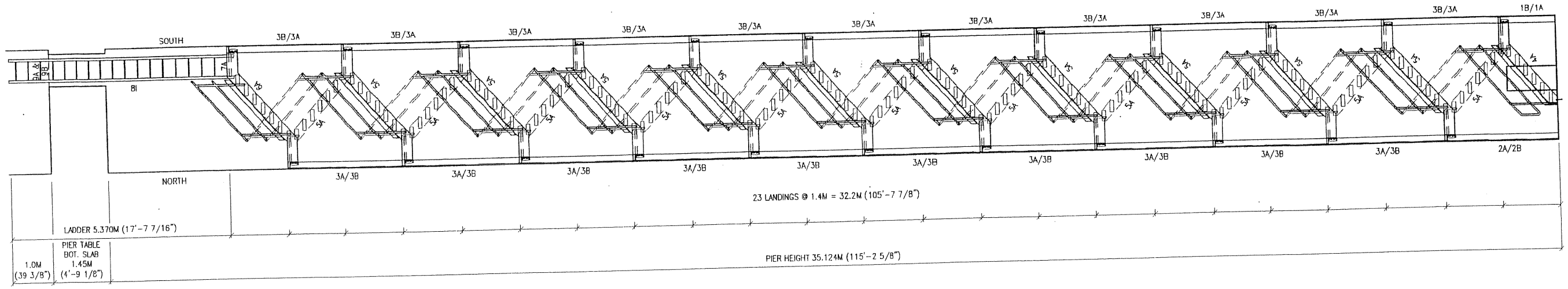

E7W STAIR TOWER WEST VIEW
SCALE 1 : 50

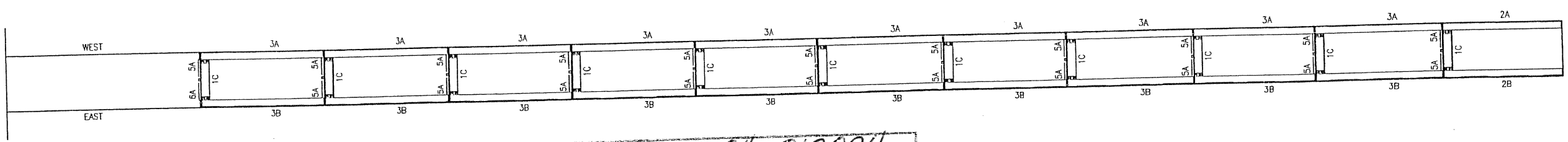

E7W STAIR TOWER NORTH VIEW
SCALE 1 : 50

CONTRACT NO. 04-012024
CCO NO. 49
PAGE 14 OF 72

SAN FRANCISCO OAKLAND BAY BRIDGE
SKYWAY CONTRACT No. 04-012024
SFOBB EAST SPAN SEISMIC SAFETY PROJECT
POST KM 04-SF-80-13.9-14.3/ALA-80-0.0-1.6
BRIDGE No. 34-0006

DO NOT DUPLICATE WITHOUT PERMISSION

THIS PROJECT SHALL BE ERECTED PER THE AISC CODE OF STANDARD PRACTICE SPECIFICALLY PARAGRAPH 7.12 AS FOLLOWS:
7.12 CORRECTION OF ERRORS
THE CORRECTION OF MINOR MISFITS BY MODERATE AMOUNTS OF REAMING, GRINDING, WELDING OR CUTTING, AND THE DRAWING OF ELEMENTS INTO LINE WITH DRIFT PINS, SHALL BE CONSIDERED TO BE NORMAL ERECTION OPERATIONS. ERRORS THAT CANNOT BE CORRECTED USING FOREGOING MEANS, OR THAT REQUIRE MAJOR CHANGES IN MEMBER OR CONNECTION CONFIGURATION, SHALL BE PROMPTLY REPORTED TO THE OWNER'S DESIGNATED REPRESENTATIVES FOR DESIGN AND CONSTRUCTION AND THE FABRICATOR BY THE ERECTOR, TO ENABLE THE RESPONSIBLE ENTITY TO EITHER CORRECT THE ERROR OR APPROVE THE MOST EFFICIENT AND ECONOMICAL METHOD OF CORRECTION TO BE USED BY OTHERS. NO BACK CHARGES WILL BE ACCEPTED UNLESS APPROVED IN WRITING BY THIS OFFICE.

GLOBAL FABRICATORS
METRIC
CUSTOM EQUIPMENT MANUFACTURING
METAL FABRICATION-MACHINE SHOP
8929 ROSEDALE HWY. BAKERSFIELD CA. 93312
PHONE: (661) 589-2774 FAX: (661) 589-7504
E-MAIL engineering@globalfab.com

H.F. MAGER INC.
STRUCTURAL ENGINEERS
COMMERCIAL & INDUSTRIAL
STRUCTURAL DESIGN AND
CONSTRUCTION DOCUMENTS
1149 MARSH STREET
SAN LUIS OBISPO, CA 93401
PH# (805)541-2193 FAX# (805)541-5348
EMAIL hfme@magerstruc.com

SEAL: REGISTERED PROFESSIONAL ENGINEER H.F. MAGER S 2376 Mar. 11, 2003 STRUCTURAL ENGINEER STATE OF CALIFORNIA
Expires Mar. 31, 2006

DWN. BY: IDG	DATE: 3-11-03	REV.	DATE
CHK'D. BY: H.F.M.	DATE:		
APRV'D. BY:	DATE:		
FINISH:			
SCALE: AS NOTED			

PROJECT/DWG. TITLE:

JOB NO.:	FILE NO.:	DWG. NO.:
02D02	ER10	E10

☒ APPROVED
☐ APPROVED AS NOTED
☐ NOT APPROVED
Pursuant to Section 5-1.02 of the Standard Specifications State of California DEPARTMENT OF TRANSPORTATION Division of Structures Office of Structure Construction
Signed James Fan
Structure Representative
Date 4/18/03

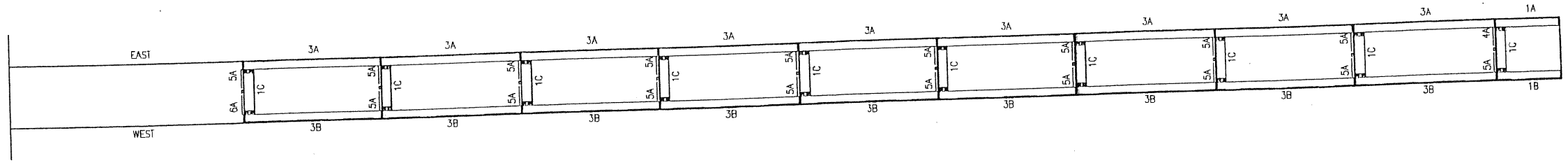

E&E STAIR TOWER SOUTH VIEW
SCALE 1:50

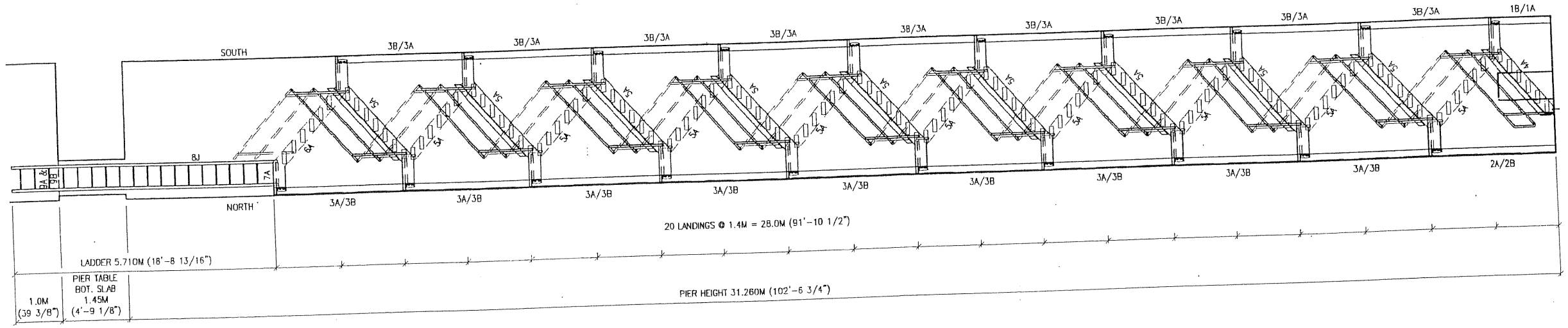

E&E STAIR TOWER WEST VIEW
SCALE 1:50

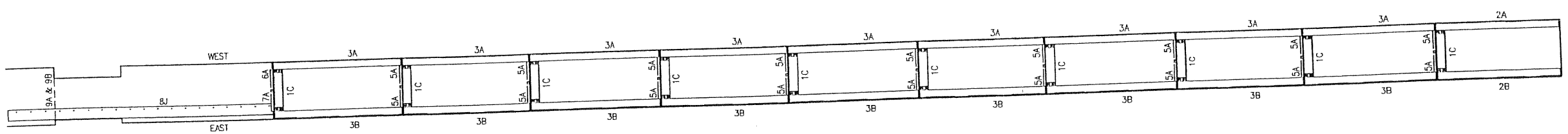

E&E STAIR TOWER NORTH VIEW
SCALE 1:50

CONTRACT NO. 04-012024
CCO NO. 49
PAGE 15 OF 72

SAN FRANCISCO OAKLAND BAY BRIDGE
SKYWAY CONTRACT No. 04-012024
SFOBB EAST SPAN SEISMIC SAFETY PROJECT
POST K& 04-SF-80-13.9-14.3/ALA-80-0.0-1.6
BRIDGE No. 34-0006.

PROJECT/DWG. TITLE:

DWN. BY:	DATE:	REV.		DATE
IDG	3-11-03			
CHK'D. BY:	DATE:			
APRV'D. BY:	DATE:			
FINISH:				
SCALE: AS NOTED				

JOB NO.:	FILE NO.:	DWG. NO.:
02D02	ER11	E11

DO NOT DUPLICATE WITHOUT PERMISSION

THIS PROJECT SHALL BE ERECTED PER THE AISC CODE OF STANDARD PRACTICE SPECIFICALLY PARAGRAPH 7.12 AS FOLLOWS:
7.12 CORRECTION OF ERRORS
THE CORRECTION OF MINOR MISFITS BY MODERATE AMOUNTS OF REAMING, GRINDING, WELDING OR CUTTING, AND THE DRAWING OF ELEMENTS INTO LINE WITH DRIFT PINS, SHALL BE CONSIDERED TO BE NORMAL ERECTION OPERATIONS. ERRORS THAT CANNOT BE CORRECTED USING FOREGOING MEANS, OR THAT REQUIRE MAJOR CHANGES IN MEMBER OR CONNECTION CONFIGURATION, SHALL BE PROMPTLY REPORTED TO THE OWNER'S DESIGNATED REPRESENTATIVES FOR DESIGN AND CONSTRUCTION AND THE FABRICATOR BY THE ERECTOR, TO ENABLE THE RESPONSIBLE ENTITY TO EITHER CORRECT THE ERROR OR APPROVE THE MOST EFFICIENT AND ECONOMICAL METHOD OF CORRECTION TO BE USED BY OTHERS. NO BACK CHARGES WILL BE ACCEPTED UNLESS APPROVED IN WRITING BY THIS OFFICE.

GLOBAL FABRICATORS METRIC
CUSTOM EQUIPMENT MANUFACTURING
METAL FABRICATION-MACHINE SHOP
8929 ROSEDALE HWY. BAKERSFIELD CA. 93312
PHONE: (661) 589-2774 FAX: (661) 589-7504
E-MAIL engineering@globalfab.com

H.F. MAGER INC.
STRUCTURAL ENGINEERS
COMMERCIAL & INDUSTRIAL
STRUCTURAL DESIGN AND
CONSTRUCTION DOCUMENTS
1149 MARSH STREET
SAN LUIS OBISPO, CA 93401
PH# (805)541-2193 FAX# (805)541-5346
EMAIL hfm@magerstruc.com

SEAL: REGISTERED PROFESSIONAL ENGINEER HANS FRIED MAGER S 9378 STRUCTURAL ENGINEER CALIFORNIA
Mar. 11 2003
Expires Mar. 31, 2006

☒ APPROVED
☐ APPROVED AS NOTED
☐ NOT APPROVED

Pursuant to Section 5-1.02
of the Standard Specifications
State of California
DEPARTMENT OF TRANSPORTATION
Division of Structures
Office of Structure Construction
Signed James Fern
Structure Representative
Date 4/15/03

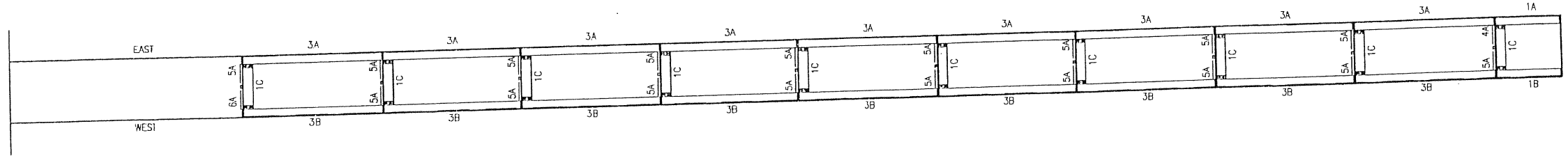

EBW STAIR TOWER SOUTH VIEW
SCALE 1 : 50

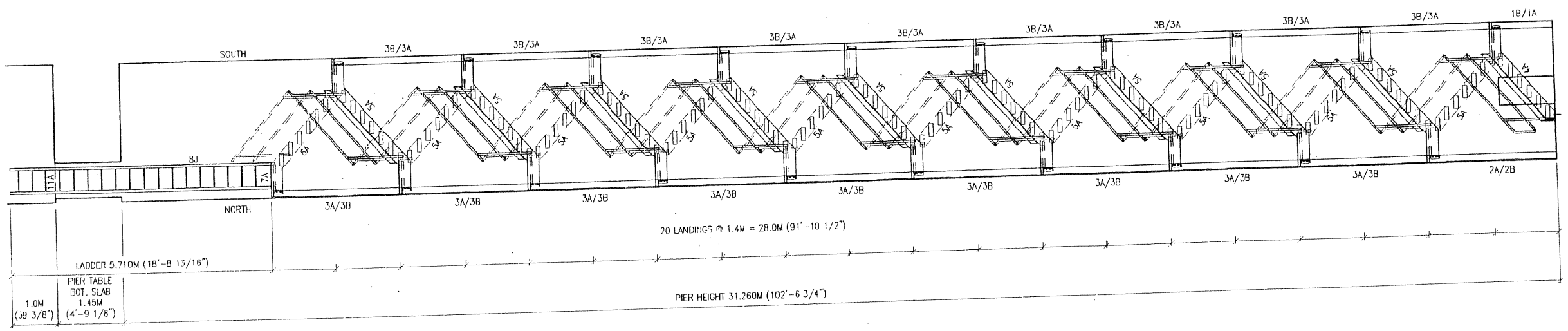

EBW STAIR TOWER WEST VIEW
SCALE 1 : 50

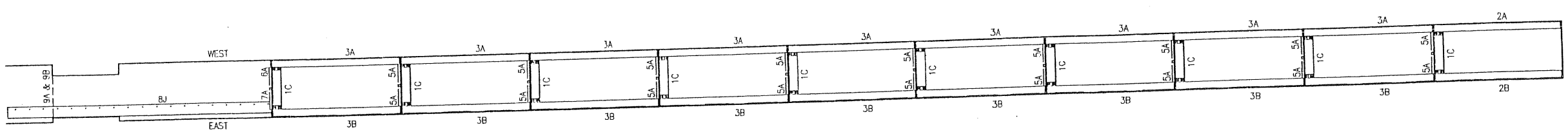

EBW STAIR TOWER NORTH VIEW
SCALE 1 : 50

CONTRACT NO. 04-012024
CCO NO. 49
PAGE 16 OF 72

SAN FRANCISCO OAKLAND BAY BRIDGE
SKYWAY CONTRACT No. 04-012024
SFOBB EAST SPAN SEISMIC SAFETY PROJECT
POST KM 04-SF-80-13.9-14.3/ALA-80-0.0-1.6
BRIDGE No. 34-0006

DO NOT DUPLICATE WITHOUT PERMISSION

THIS PROJECT SHALL BE ERECTED PER THE AISC CODE OF STANDARD PRACTICE SPECIFICALLY PARAGRAPH 7.12 AS FOLLOWS:
7.12 CORRECTION OF ERRORS
THE CORRECTION OF MINOR MISFITS BY MODERATE AMOUNTS OF REAMING, GRINDING, WELDING OR CUTTING, AND THE DRAWING OF ELEMENTS INTO LINE WITH DRIFT PINS, SHALL BE CONSIDERED TO BE NORMAL ERECTION OPERATIONS. ERRORS THAT CANNOT BE CORRECTED USING FOREGOING MEANS, OR THAT REQUIRE MAJOR CHANGES IN MEMBER OR CONNECTION CONFIGURATION, SHALL BE PROMPTLY REPORTED TO THE OWNER'S DESIGNATED REPRESENTATIVES FOR DESIGN AND CONSTRUCTION AND THE FABRICATOR BY THE ERECTOR, TO ENABLE THE RESPONSIBLE ENTITY TO EITHER CORRECT THE ERROR OR APPROVE THE MOST EFFICIENT AND ECONOMICAL METHOD OF CORRECTION TO BE USED BY OTHERS. NO BACK CHARGES WILL BE ACCEPTED UNLESS APPROVED IN WRITING BY THIS OFFICE.

GLOBAL FABRICATORS
METRIC
CUSTOM EQUIPMENT MANUFACTURING
METAL FABRICATION-MACHINE SHOP
8929 ROSEDALE HWY. BAKERSFIELD CA. 93312
PHONE: (661) 589-2774 FAX: (661) 589-7504
E-MAIL engineering@globalfab.com

H.F. MAGER INC.
STRUCTURAL ENGINEERS
COMMERCIAL & INDUSTRIAL
STRUCTURAL DESIGN AND
CONSTRUCTION DOCUMENTS
1149 MARSH STREET
SAN LUIS OBISPO, CA 93401
PH# (805)541-2193 FAX# (805)541-5346
EMAIL hans@magerstruc.com

SEAL: REGISTERED PROFESSIONAL ENGINEER HANS FRIED MAGER S 2376 STRUCTURAL ENGINEER STATE OF CALIFORNIA
Mar. 11, 2004
Expires Mar. 31, 2006

DWN. BY: IDG	DATE: 3-11-03	REV.		DATE
CHK'D. BY: HFM	DATE: 7/1/03			
APRV'D. BY:	DATE:			
FINISH:				
SCALE: AS NOTED				

PROJECT/DWG. TITLE:

JOB NO.:	FILE NO.:	DWG. NO.:
02D02	ER12	E12

☒ APPROVED
☐ APPROVED AS NOTED
☐ NOT APPROVED

Pursuant to Section 5-1.02 of the Standard Specifications
State of California
DEPARTMENT OF TRANSPORTATION
Division of Structures
Office of Structure Construction
Signed James Fer
Structure Representative
Date 4/18/03

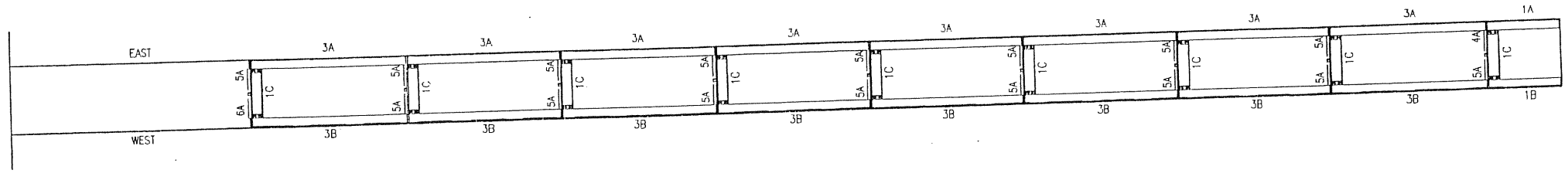

E9E STAIR TOWER SOUTH VIEW
SCALE 1:50

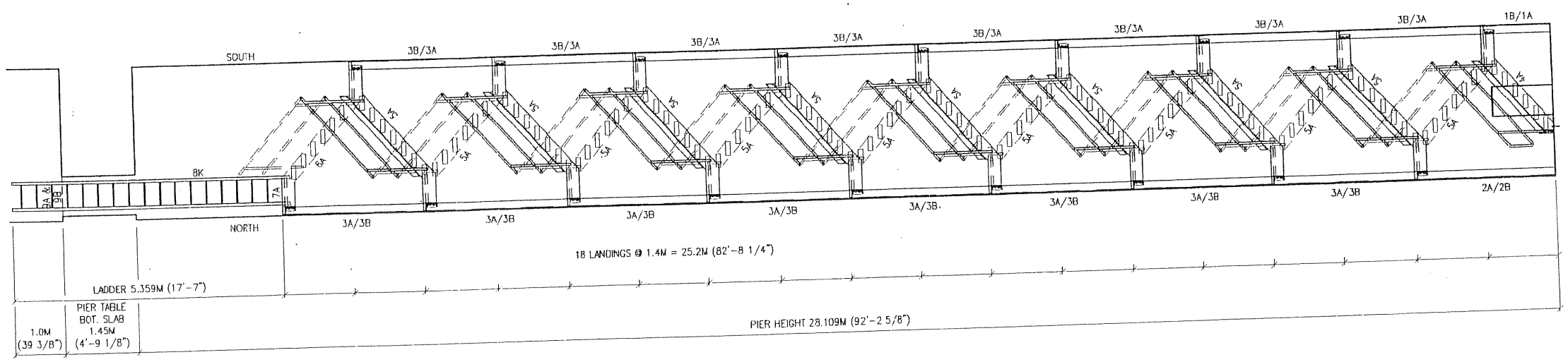

E9E STAIR TOWER WEST VIEW
SCALE 1:50

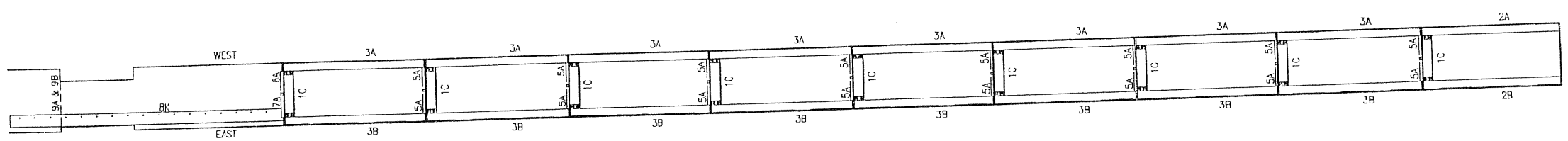

E9E STAIR TOWER NORTH VIEW
SCALE 1:50

CONTRACT NO. 04-012024
CCO NO. 49
PAGE 17 OF 72

SAN FRANCISCO OAKLAND BAY BRIDGE
SKYWAY CONTRACT No. 04-012024
SFOBB EAST SPAN SEISMIC SAFETY PROJECT
POST KM 04-SF-80-13.9-14.3/ALA-80-0.0-1.6
BRIDGE No. 34-0006

PROJECT/DWG. TITLE:

DO NOT DUPLICATE WITHOUT PERMISSION

THIS PROJECT SHALL BE ERECTED PER THE AISC CODE OF STANDARD PRACTICE SPECIFICALLY PARAGRAPH 7.12 AS FOLLOWS:
7.12 CORRECTION OF ERRORS
THE CORRECTION OF MINOR MISFITS BY MODERATE AMOUNTS OF REAMING, GRINDING, WELDING OR CUTTING, AND THE DRAWING OF ELEMENTS INTO LINE WITH DRIFT PINS, SHALL BE CONSIDERED TO BE NORMAL ERECTION OPERATIONS. ERRORS THAT CANNOT BE CORRECTED USING FOREGOING MEANS, OR THAT REQUIRE MAJOR CHANGES IN MEMBER OR CONNECTION CONFIGURATION, SHALL BE PROMPTLY REPORTED TO THE OWNER'S DESIGNATED REPRESENTATIVES FOR DESIGN AND CONSTRUCTION AND THE FABRICATOR BY THE ERECTOR, TO ENABLE THE RESPONSIBLE ENTITY TO EITHER CORRECT THE ERROR OR APPROVE THE MOST EFFICIENT AND ECONOMICAL METHOD OF CORRECTION TO BE USED BY OTHERS. NO BACK CHARGES WILL BE ACCEPTED UNLESS APPROVED IN WRITING BY THIS OFFICE.

GLOBAL FABRICATORS
METRIC
CUSTOM EQUIPMENT MANUFACTURING
METAL FABRICATION-MACHINE SHOP
11929 ROSEDALE HWY. BAKERSFIELD CA. 93312
PHONE: (661) 589-2774 FAX: (661) 589-7504
E-MAIL engineering@globalfab.com

H.F. MAGER INC.
STRUCTURAL ENGINEERS
COMMERCIAL & INDUSTRIAL
STRUCTURAL DESIGN AND
CONSTRUCTION DOCUMENTS
1149 MARSH STREET
SAN LUIS OBISPO, CA 93401
PH# (805)541-2193 FAX# (805)541-5346
EMAIL hme@magerstruc.com

SEAL: REGISTERED PROFESSIONAL ENGINEER HAND FRED MAGER C 2376 Mar. 31, 2003 STRUCTURAL ENGINEER STATE OF CALIFORNIA
Expires Mar. 31, 2006

DWN. BY:	DATE:	REV.		DATE
IDG	3-11-03			
CHK'D. BY:	DATE:			
APRV'D. BY:	DATE:			
FINISH:				
SCALE: AS NOTED				

JOB NO.:	FILE NO.:	DWG. NO.:
02D02	ER13	E13

☒ APPROVED
☐ APPROVED AS NOTED
☐ NOT APPROVED

Pursuant to Section 5-1.02
of the Standard Specifications
State of California
DEPARTMENT OF TRANSPORTATION
Division of Structures
Office of Structure Construction
Signed James Fern
Structure Representative
Date 4/15/03

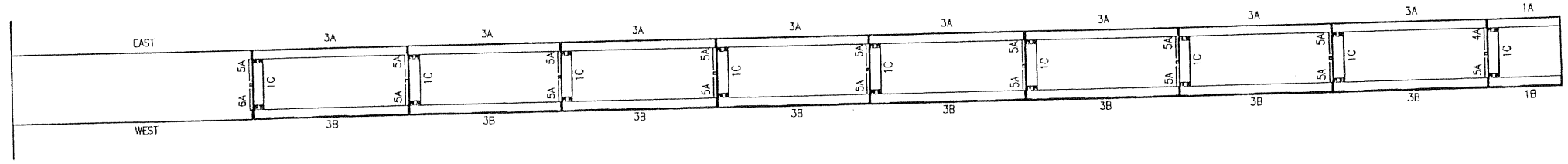

E9W STAIR TOWER SOUTH VIEW
SCALE 1 : 50

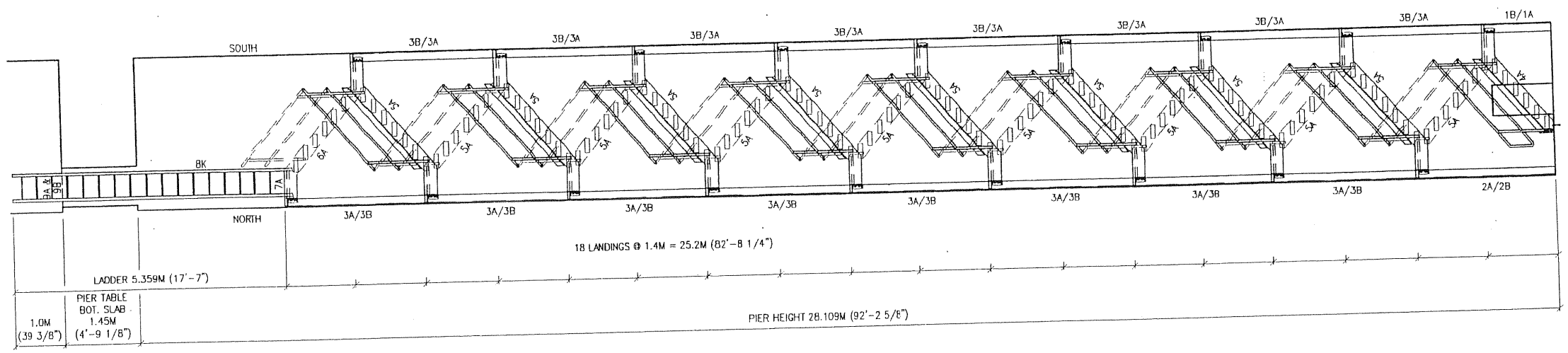

E9W STAIR TOWER WEST VIEW
SCALE 1 : 50

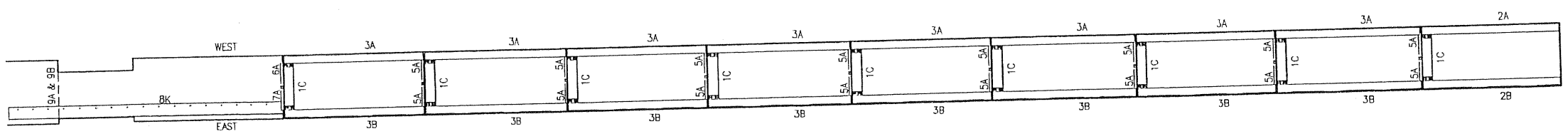

E9W STAIR TOWER NORTH VIEW
SCALE 1 : 50

CONTRACT NO. 04-012024
CCO NO. 49
PAGE 18 OF 72

SAN FRANCISCO OAKLAND BAY BRIDGE
SKYWAY CONTRACT No. 04-012024
SFOBB EAST SPAN SEISMIC SAFETY PROJECT
POST KM 04-SF-80-13.9-14.3/ALA-80-0.0-1.6
BRIDGE No. 34-0006

DO NOT DUPLICATE WITHOUT PERMISSION

THIS PROJECT SHALL BE ERECTED PER THE AISC CODE OF STANDARD PRACTICE SPECIFICALLY PARAGRAPH 7.12 AS FOLLOWS:
7.12 CORRECTION OF ERRORS
THE CORRECTION OF MINOR MISFITS BY MODERATE AMOUNTS OF REAMING, GRINDING, WELDING OR CUTTING, AND THE DRAWING OF ELEMENTS INTO LINE WITH DRIFT PINS, SHALL BE CONSIDERED TO BE NORMAL ERECTION OPERATIONS. ERRORS THAT CANNOT BE CORRECTED USING FOREGOING MEANS, OR THAT REQUIRE MAJOR CHANGES IN MEMBER OR CONNECTION CONFIGURATION, SHALL BE PROMPTLY REPORTED TO THE OWNER'S DESIGNATED REPRESENTATIVES FOR DESIGN AND CONSTRUCTION AND THE FABRICATOR BY THE ERECTOR, TO ENABLE THE RESPONSIBLE ENTITY TO EITHER CORRECT THE ERROR OR APPROVE THE MOST EFFICIENT AND ECONOMICAL METHOD OF CORRECTION TO BE USED BY OTHERS. NO BACK CHARGES WILL BE ACCEPTED UNLESS APPROVED IN WRITING BY THIS OFFICE.

GLOBAL FABRICATORS
METRIC

CUSTOM EQUIPMENT MANUFACTURING
METAL FABRICATION-MACHINE SHOP

8929 ROSEDALE HWY. BAKERSFIELD CA. 93312
PHONE: (661) 589-2774 FAX: (661) 589-7504
E-MAIL engineering@globalfab.com

H.F. MAGER INC.
STRUCTURAL ENGINEERS
COMMERCIAL & INDUSTRIAL
STRUCTURAL DESIGN AND
CONSTRUCTION DOCUMENTS
1149 MARSH STREET
SAN LUIS OBISPO, CA 93401
PH# (805)541-2193 FAX# (805)541-5348
EMAIL hans@magerstruc.com

SEAL: REGISTERED PROFESSIONAL ENGINEER HANS FRED MAGER S 2376 Mar 11, 2002 STRUCTURAL ENGINEER STATE OF CALIFORNIA
Expires Mar. 31, 2006

DWN. BY:	DATE:	REV.		DATE
IDG	3-11-03			
CHK'D. BY: HFM	DATE:			
APRV'D. BY:	DATE:			
FINISH:				
SCALE: AS NOTED				

PROJECT/DWG. TITLE:

JOB NO.:	FILE NO.:	DWG. NO.:
02D02	ER14	E14

☒ APPROVED
☐ APPROVED AS NOTED
☐ NOT APPROVED

Pursuant to Section 5-1.02
of the Standard Specifications
State of California
DEPARTMENT OF TRANSPORTATION
Division of Structures
Office of Structure Construction
Signed James Ferrer
Structure Representative
Date 4/13/03

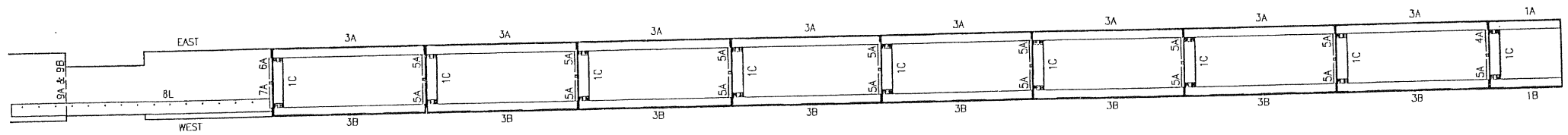

E1OE STAIR TOWER SOUTH VIEW
SCALE 1 : 50

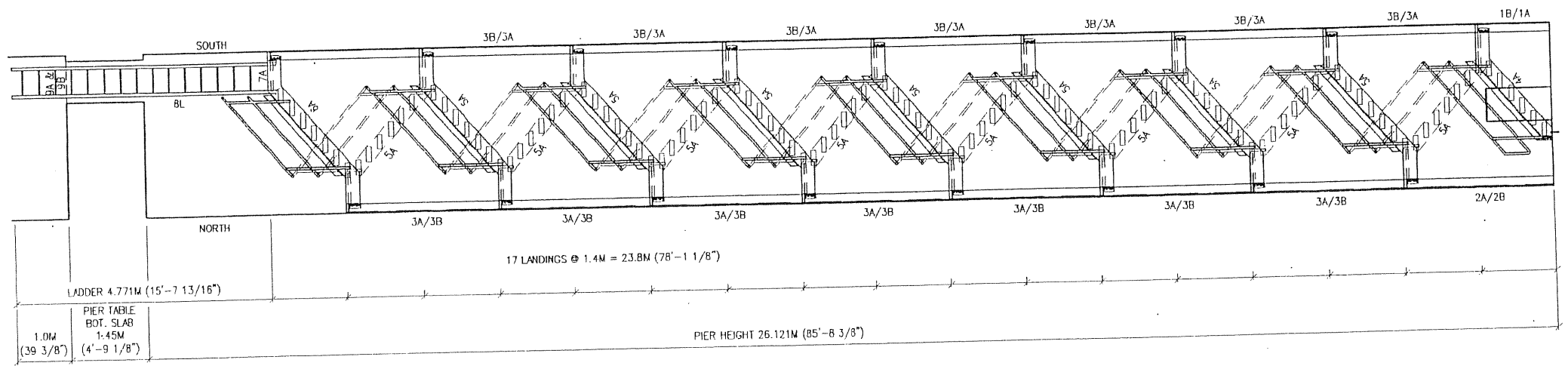

E1OE STAIR TOWER WEST VIEW
SCALE 1 : 50

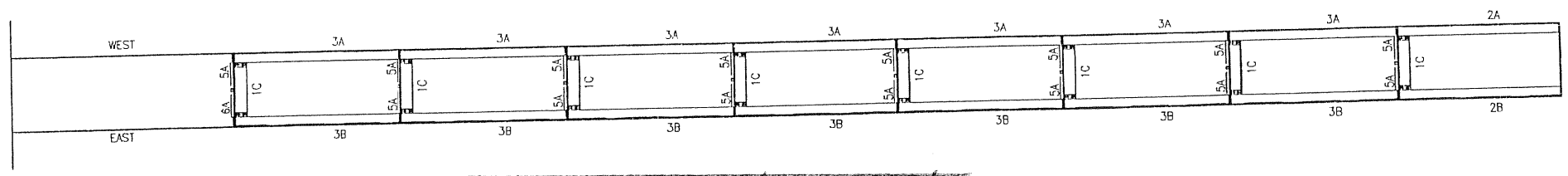

E1OE STAIR TOWER NORTH VIEW
SCALE 1 : 50

CONTRACT NO. 04-012024
CCO NO. 49
PAGE 19 OF 72

SAN FRANCISCO OAKLAND BAY BRIDGE
SKYWAY CONTRACT No. 04-012024
SFOBB EAST SPAN SEISMIC SAFETY PROJECT
POST KM 04-SF-80-13.9-14.3/ALA-80-0.0-1.6
BRIDGE No. 34-0006

DO NOT DUPLICATE WITHOUT PERMISSION

THIS PROJECT SHALL BE ERECTED PER THE AISC CODE OF STANDARD PRACTICE SPECIFICALLY PARAGRAPH 7.12 AS FOLLOWS:
7.12 CORRECTION OF ERRORS
THE CORRECTION OF MINOR MISFITS BY MODERATE AMOUNTS OF REAMING, GRINDING, WELDING OR CUTTING, AND THE DRAWING OF ELEMENTS INTO LINE WITH DRIFT PINS, SHALL BE CONSIDERED TO BE NORMAL ERECTION OPERATIONS. ERRORS THAT CANNOT BE CORRECTED USING FOREGOING MEANS, OR THAT REQUIRE MAJOR CHANGES IN MEMBER OR CONNECTION CONFIGURATION, SHALL BE PROMPTLY REPORTED TO THE OWNER'S DESIGNATED REPRESENTATIVES FOR DESIGN AND CONSTRUCTION AND THE FABRICATOR BY THE ERECTOR, TO ENABLE THE RESPONSIBLE ENTITY TO EITHER CORRECT THE ERROR OR APPROVE THE MOST EFFICIENT AND ECONOMICAL METHOD OF CORRECTION TO BE USED BY OTHERS. NO BACK CHARGES WILL BE ACCEPTED UNLESS APPROVED IN WRITING BY THIS OFFICE.

GLOBAL FABRICATORS
METRIC
CUSTOM EQUIPMENT MANUFACTURING
METAL FABRICATION-MACHINE SHOP
8929 ROSEDALE HWY. BAKERSFIELD CA. 93312
PHONE: (661) 589-2774 FAX: (661) 589-7504
E-MAIL engineering@globalfab.com

H.F. MAGER INC.
STRUCTURAL ENGINEERS
COMMERCIAL & INDUSTRIAL
STRUCTURAL DESIGN AND
CONSTRUCTION DOCUMENTS
1149 MARSH STREET
SAN LUIS OBISPO, CA 93401
PH (805)541-2193 FAX# (805)541-5348
EMAIL hans@magerstruc.com

SEAL: REGISTERED STRUCTURAL ENGINEER HANS FRIED MAGER H. F. Mager S 2376 Mar. 11, 2003 STATE OF CALIFORNIA PROFESSIONAL ENGINEER
Expires Mar. 31, 2006

DWN. BY: IDG	DATE: 3-11-03	REV.		DATE
CHK'D. BY: HFM	DATE:			
APRV'D. BY:	DATE:			
FINISH:				
SCALE: AS NOTED				

PROJECT/DWG. TITLE:

JOB NO.:	FILE NO.:	DWG. NO.:
02D02	ER15	E15

APPROVED
APPROVED AS NOTED
NOT APPROVED
Pursuant to Section 5-1.02 of the Standard Specifications State of California DEPARTMENT OF TRANSPORTATION Division of Structures Office of Structure Construction
Signed James Fern
Structure Representative
Date 4/13/03

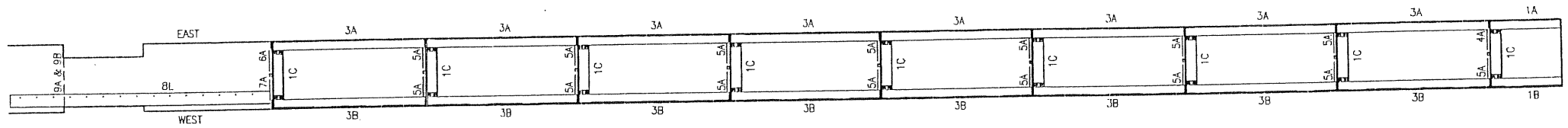

E10W STAIR TOWER SOUTH VIEW
SCALE 1 : 50

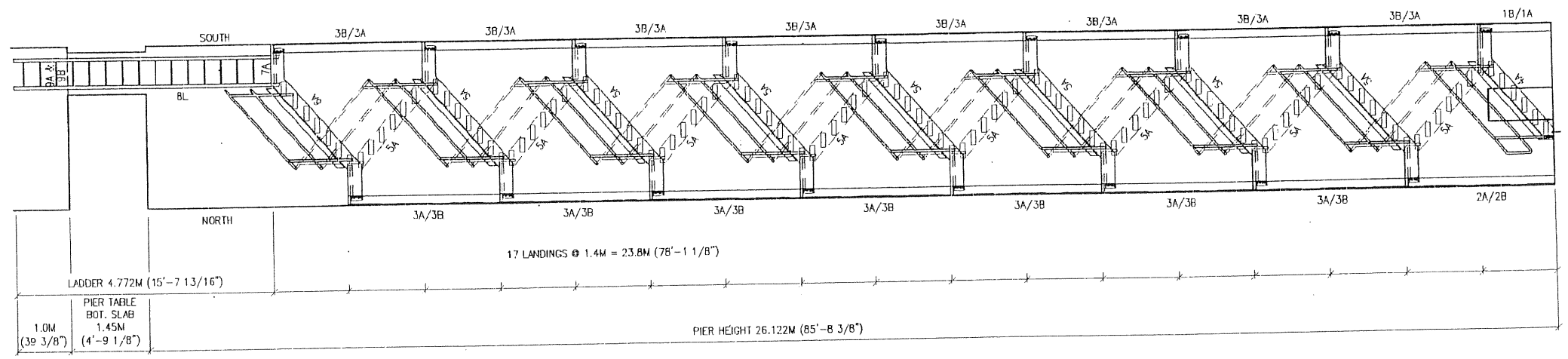

E10W STAIR TOWER WEST VIEW
SCALE 1 : 50

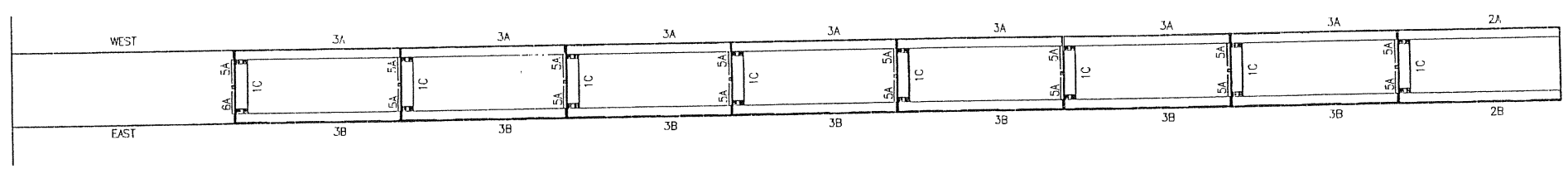

E10W STAIR TOWER NORTH VIEW
SCALE 1 : 50

CONTRACT NO. 04-012024
CCO NO. 49
PAGE 20 OF 72

SAN FRANCISCO OAKLAND BAY BRIDGE
SKYWAY CONTRACT No. 04-012024
SFOBB EAST SPAN SEISMIC SAFETY PROJECT
POST KM 04-SF-80-13.9-14.3/ALA-80-0.0-1.6
BRIDGE No. 34-0006

DO NOT DUPLICATE WITHOUT PERMISSION

THIS PROJECT SHALL BE ERECTED PER THE AISC CODE OF STANDARD PRACTICE SPECIFICALLY PARAGRAPH 7.12 AS FOLLOWS:
7.12 CORRECTION OF ERRORS
THE CORRECTION OF MINOR MISFITS BY MODERATE AMOUNTS OF REAMING, GRINDING, WELDING OR CUTTING, AND THE DRAWING OF ELEMENTS INTO LINE WITH DRIFT PINS, SHALL BE CONSIDERED TO BE NORMAL ERECTION OPERATIONS. ERRORS THAT CANNOT BE CORRECTED USING FOREGOING MEANS, OR THAT REQUIRE MAJOR CHANGES IN MEMBER OR CONNECTION CONFIGURATION, SHALL BE PROMPTLY REPORTED TO THE OWNER'S DESIGNATED REPRESENTATIVES FOR DESIGN AND CONSTRUCTION AND THE FABRICATOR BY THE ERECTOR, TO ENABLE THE RESPONSIBLE ENTITY TO EITHER CORRECT THE ERROR OR APPROVE THE MOST EFFICIENT AND ECONOMICAL METHOD OF CORRECTION TO BE USED BY OTHERS. NO BACK CHARGES WILL BE ACCEPTED UNLESS APPROVED IN WRITING BY THIS OFFICE.

GLOBAL FABRICATORS
METRIC
CUSTOM EQUIPMENT MANUFACTURING
METAL FABRICATION-MACHINE SHOP
8929 ROSEDALE HWY. BAKERSFIELD CA. 93312
PHONE: (661) 589-2774 FAX: (661) 589-7504
E-MAIL engineering@globalfab.com

H.F. MAGER INC.
STRUCTURAL ENGINEERS
COMMERCIAL & INDUSTRIAL
STRUCTURAL DESIGN AND
CONSTRUCTION DOCUMENTS
1149 MARSH STREET
SAN LUIS OBISPO, CA 93401
PH# (805)541-2193 FAX# (805)541-5345
EMAIL hfmc@magerstruc.com

SEAL: REGISTERED PROFESSIONAL ENGINEER HANS FRED MAGER C 2376 STRUCTURAL ENGINEER STATE OF CALIFORNIA
Expires Mar. 31, 2006

DWN. BY: IDG	DATE: 3-11-03	REV.	DATE
CHK'D. BY: HFM	DATE:		
APRV'D. BY:	DATE:		
FINISH:			
SCALE: AS NOTED			

PROJECT/DWG. TITLE:

JOB NO.:	FILE NO.:	DWG. NO.:
02D02	ER16	E16

☒ APPROVED
☐ APPROVED AS NOTED
☐ NOT APPROVED

Pursuant to Section 5-1.02
of the Standard Specifications
State of California
DEPARTMENT OF TRANSPORTATION
Division of Structures
Office of Structure Construction
Signed James Fan
Structure Representative
Date 4/13/03

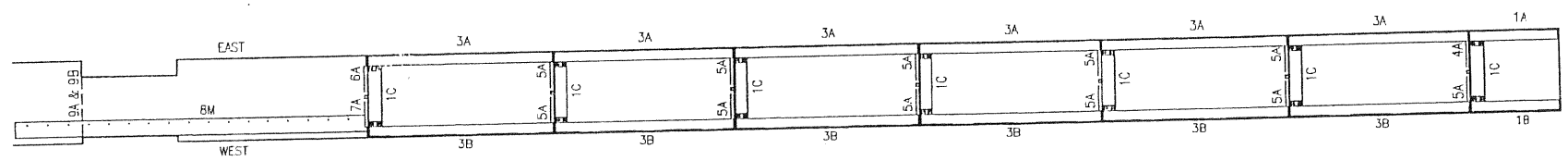

E11E STAIR TOWER SOUTH VIEW
SCALE 1 : 50

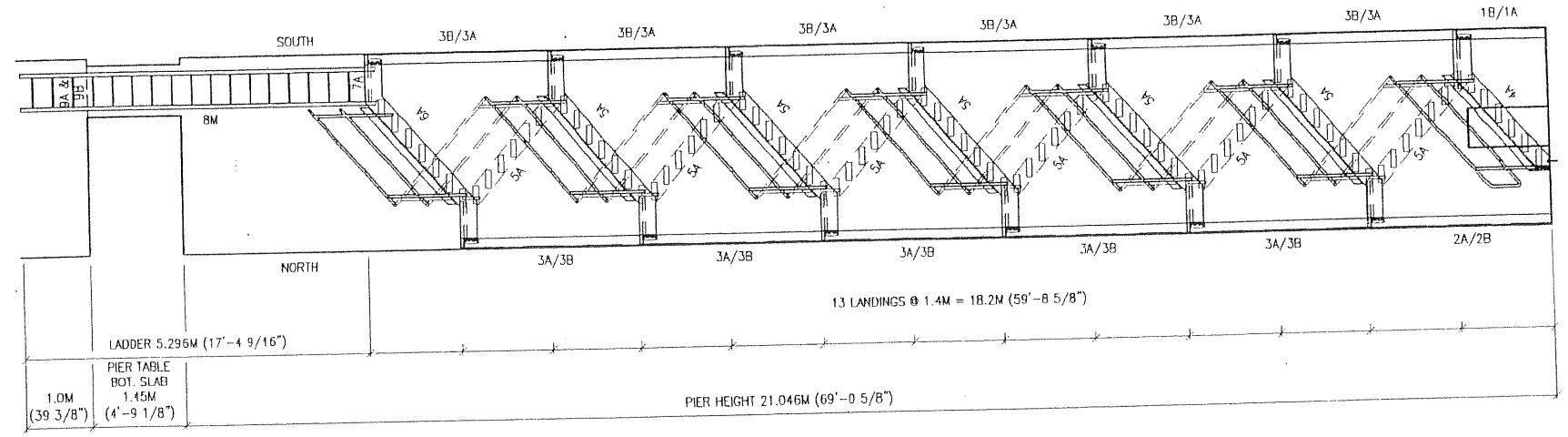

E11E STAIR TOWER WEST VIEW
SCALE 1 : 50

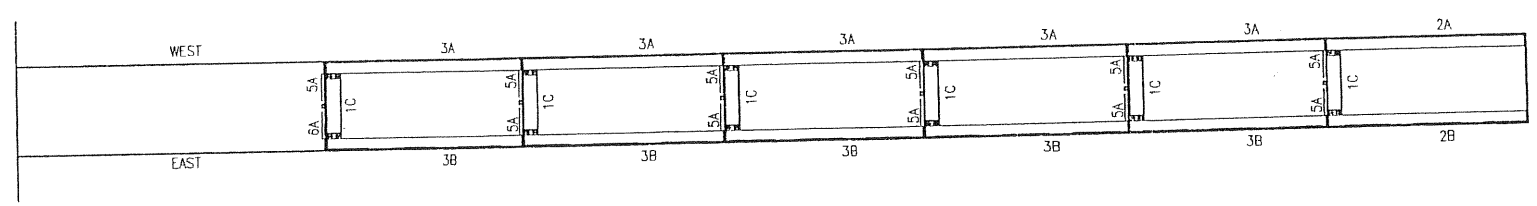

E11E STAIR TOWER NORTH VIEW
SCALE 1 : 50

CONTRACT NO. 04-012024
CCO NO. 49
PAGE 21 OF 72

SAN FRANCISCO OAKLAND BAY BRIDGE
SKYWAY CONTRACT No. 04-012024
SFOBB EAST SPAN SEISMIC SAFETY PROJECT
POST KM 04-SF-80-13.9-14.3/ALA-80-0.0-1.6
BRIDGE No. 34-0006

DO NOT DUPLICATE WITHOUT PERMISSION

THIS PROJECT SHALL BE ERECTED PER THE AISC CODE OF STANDARD PRACTICE SPECIFICALLY PARAGRAPH 7.12 AS FOLLOWS:
7.12 CORRECTION OF ERRORS
THE CORRECTION OF MINOR MISFITS BY MODERATE AMOUNTS OF REAMING, GRINDING, WELDING OR CUTTING, AND THE DRAWING OF ELEMENTS INTO LINE WITH DRIFT PINS, SHALL BE CONSIDERED TO BE NORMAL ERECTION OPERATIONS. ERRORS THAT CANNOT BE CORRECTED USING FOREGOING MEANS, OR THAT REQUIRE MAJOR CHANGES IN MEMBER OR CONNECTION CONFIGURATION, SHALL BE PROMPTLY REPORTED TO THE OWNER'S DESIGNATED REPRESENTATIVES FOR DESIGN AND CONSTRUCTION AND THE FABRICATOR BY THE ERECTOR, TO ENABLE THE RESPONSIBLE ENTITY TO EITHER CORRECT THE ERROR OR APPROVE THE MOST EFFICIENT AND ECONOMICAL METHOD OF CORRECTION TO BE USED BY OTHERS. NO BACK CHARGES WILL BE ACCEPTED UNLESS APPROVED IN WRITING BY THIS OFFICE.

GLOBAL FABRICATORS
METRIC
CUSTOM EQUIPMENT MANUFACTURING
METAL FABRICATION-MACHINE SHOP
8929 ROSEDALE HWY. BAKERSFIELD CA. 93312
PHONE: (661) 589-2774 FAX: (661) 589-7504
E-MAIL engineering@globalfab.com

H.F. MAGER INC.
STRUCTURAL ENGINEERS
COMMERCIAL & INDUSTRIAL
STRUCTURAL DESIGN AND
CONSTRUCTION DOCUMENTS
1149 MARSH STREET
SAN LUIS OBISPO, CA 93401
PH# (805)541-2192 FAX# (805)541-5348
EM# hmm@magerstruc.com

SEAL: REGISTERED PROFESSIONAL ENGINEER HANS FRED MAGER S 2276 Mar. 11, 2003 STRUCTURAL ENGINEER STATE OF CALIFORNIA
Expires Mar 31, 2006

DWN. BY:	DATE:	REV.		DATE
IDG	3-11-03			
CHK'D. BY:	DATE:			
APRV'D. BY:	DATE:			
FINISH:				
SCALE: AS NOTED				

PROJECT/DWG. TITLE:

JOB NO.:	FILE NO.:	DWG. NO.:
02D02	ER17	E17

☒ APPROVED
☐ APPROVED AS NOTED
☐ NOT APPROVED

Pursuant to Section 5-1.02
of the Standard Specifications
State of California
DEPARTMENT OF TRANSPORTATION
Division of Structures
Office of Structure Construction
Signed James Ferre
Structure Representative
Date 4/15/03

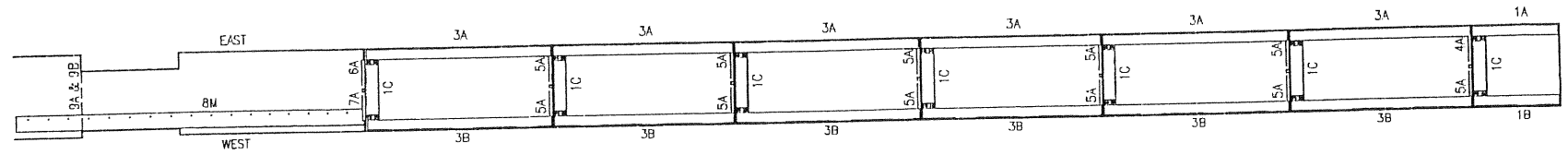

E11W STAIR TOWER SOUTH VIEW
SCALE 1 : 50

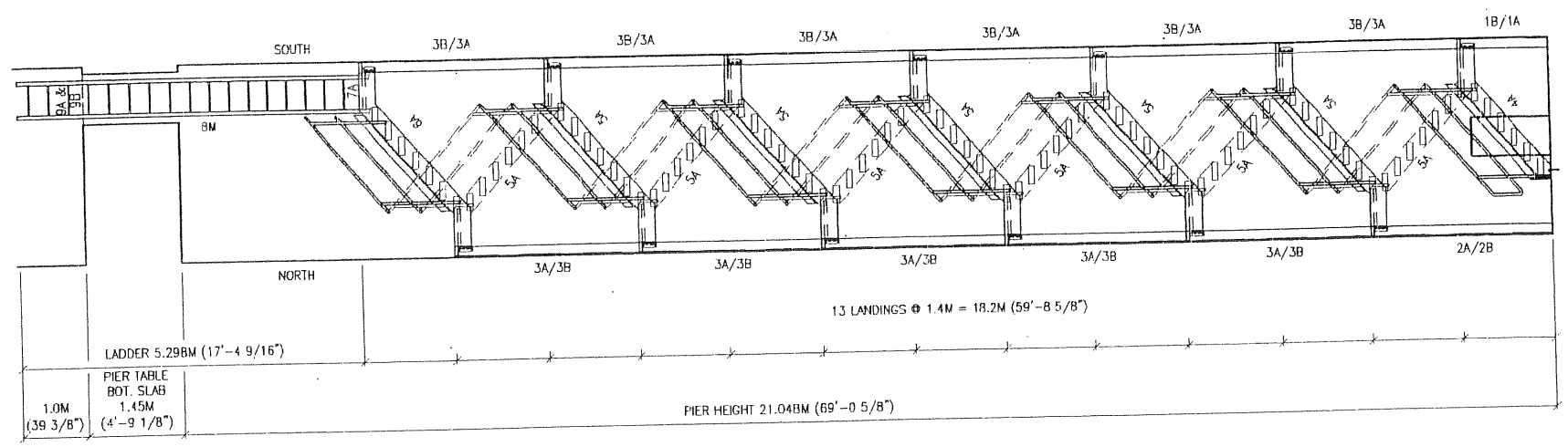

E11W STAIR TOWER WEST VIEW
SCALE 1 : 50

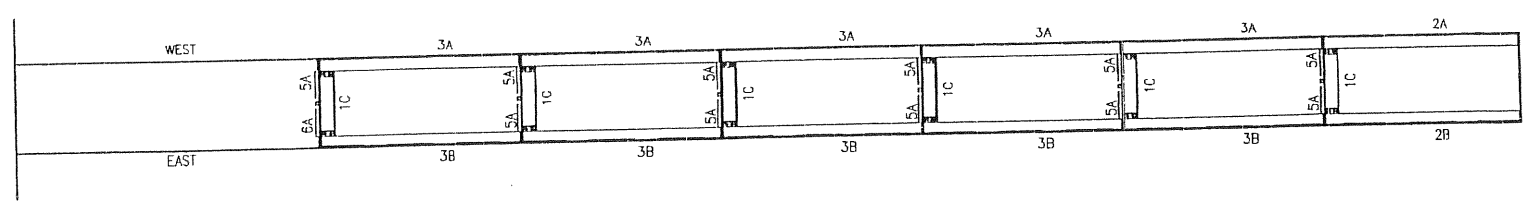

E11W STAIR TOWER NORTH VIEW
SCALE 1 : 50

CONTRACT NO. 04-012024
CCO NO. 49
PAGE 22 OF 72

SAN FRANCISCO OAKLAND BAY BRIDGE
SKYWAY CONTRACT No. 04-012024
SFOBB EAST SPAN SEISMIC SAFETY PROJECT
POST KW 04-SF-80-13.9-14.3/KA-80-0.0-1.6
BRIDGE No. 34-0006

DO NOT DUPLICATE WITHOUT PERMISSION

THIS PROJECT SHALL BE ERECTED PER THE AISC CODE OF STANDARD PRACTICE SPECIFICALLY PARAGRAPH 7.12 AS FOLLOWS:
7.12 CORRECTION OF ERRORS
THE CORRECTION OF MINOR MISFITS BY MODERATE AMOUNTS OF REAMING, GRINDING, WELDING OR CUTTING, AND THE DRAWING OF ELEMENTS INTO LINE WITH DRIFT PINS, SHALL BE CONSIDERED TO BE NORMAL ERECTION OPERATIONS. ERRORS THAT CANNOT BE CORRECTED USING FOREGOING MEANS, OR THAT REQUIRE MAJOR CHANGES IN MEMBER OR CONNECTION CONFIGURATION, SHALL BE PROMPTLY REPORTED TO THE OWNER'S DESIGNATED REPRESENTATIVES FOR DESIGN AND CONSTRUCTION AND THE FABRICATOR BY THE ERECTOR, TO ENABLE THE RESPONSIBLE ENTITY TO EITHER CORRECT THE ERROR OR APPROVE THE MOST EFFICIENT AND ECONOMICAL METHOD OF CORRECTION TO BE USED BY OTHERS. NO BACK CHARGES WILL BE ACCEPTED UNLESS APPROVED IN WRITING BY THIS OFFICE.

GLOBAL FABRICATORS
METRIC
CUSTOM EQUIPMENT MANUFACTURING
METAL FABRICATION-MACHINE SHOP
8929 ROSEDALE HWY. BAKERSFIELD CA. 93312
PHONE: (661) 589-2774 FAX: (661) 589-7504
E-MAIL engineering@globalfab.com

H.F. MAGER INC.
STRUCTURAL ENGINEERS
COMMERCIAL & INDUSTRIAL
STRUCTURAL DESIGN AND
CONSTRUCTION DOCUMENTS
1149 MARSH STREET
SAN LUIS OBISPO, CA 93401
PH# (805)541-2193 FAX# (805)541-5346
EMAIL hans@magerstruc.com

SEAL
REGISTERED PROFESSIONAL ENGINEER
HANS FRED MAGER
C 2378
Mar. 11 2003
STRUCTURAL ENGINEER
STATE OF CALIFORNIA
Expires Mar. 31, 2006

DWN. BY:	DATE:	REV.		DATE
IDG	3-11-03			
CHK'D. BY:	DATE:			
APRV'D. BY:	DATE:			
FINISH:				
SCALE: AS NOTED				

PROJECT/DWG. TITLE:

JOB NO.:	FILE NO.:	DWG. NO.:
02D02	ER18	E18

☒ APPROVED
☐ APPROVED AS NOTED
☐ NOT APPROVED

Pursuant to Section 5-1.02
of the Standard Specifications
State of California
DEPARTMENT OF TRANSPORTATION
Division of Structures
Office of Structure Construction
Signed James Fen
Structure Representative
Date 4/13/03

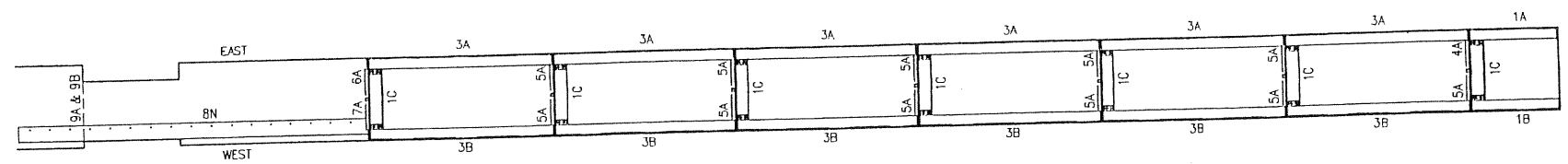

E12E STAIR TOWER SOUTH VIEW
SCALE 1:50

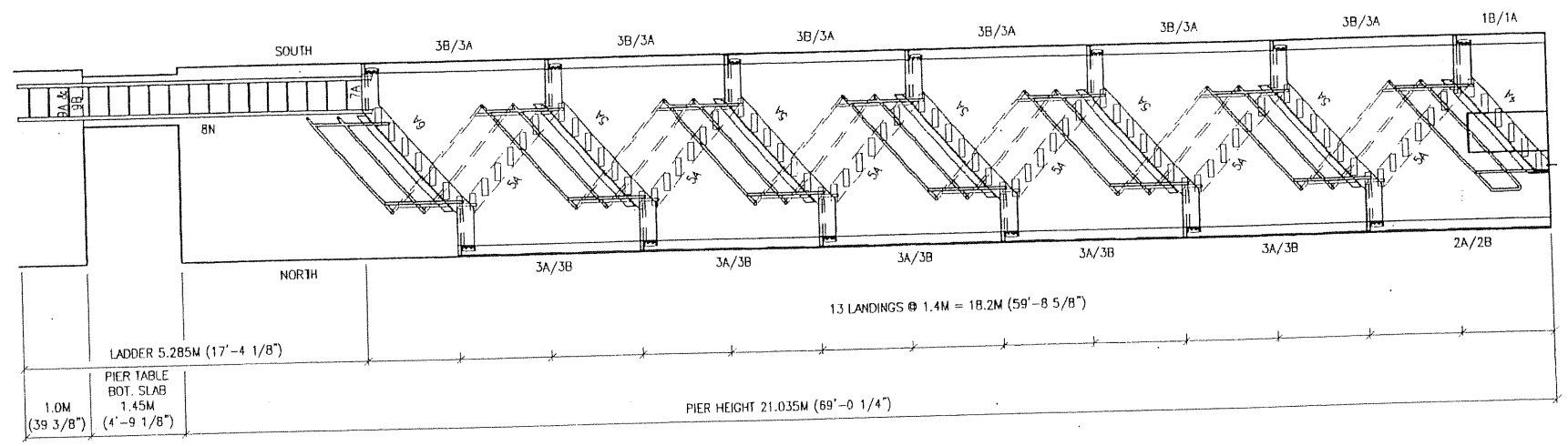

E12E STAIR TOWER WEST VIEW
SCALE 1:50

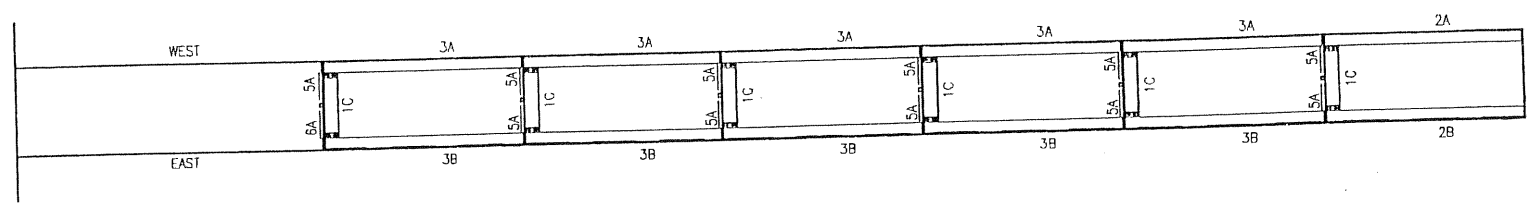

E12E STAIR TOWER NORTH VIEW
SCALE 1:50

CONTRACT NO. 04-012024
CCO NO. 49
PAGE 23 OF 72

SAN FRANCISCO OAKLAND BAY BRIDGE
SKYWAY CONTRACT No. 04-012024
SFOBB EAST SPAN SEISMIC SAFETY PROJECT
POST KM 04-SF-80-13.9-14.3/ALA-80-0.0-1.6
BRIDGE No. 34-0006

PROJECT/DWG. TITLE:

DWN. BY:	DATE:	REV.		DATE
IDG	3-11-03			
CHK'D. BY:	DATE:			
APRV'D. BY:	DATE:			
FINISH:				
SCALE: AS NOTED				

JOB NO.: 02D02 | FILE NO.: ER19 | DWG. NO.: E19

DO NOT DUPLICATE WITHOUT PERMISSION

THIS PROJECT SHALL BE ERECTED PER THE AISC CODE OF STANDARD PRACTICE SPECIFICALLY PARAGRAPH 7.12 AS FOLLOWS:
7.12 CORRECTION OF ERRORS
THE CORRECTION OF MINOR MISFITS BY MODERATE AMOUNTS OF REAMING, GRINDING, WELDING OR CUTTING, AND THE DRAWING OF ELEMENTS INTO LINE WITH DRIFT PINS, SHALL BE CONSIDERED TO BE NORMAL ERECTION OPERATIONS. ERRORS THAT CANNOT BE CORRECTED USING FOREGOING MEANS, OR THAT REQUIRE MAJOR CHANGES IN MEMBER OR CONNECTION CONFIGURATION, SHALL BE PROMPTLY REPORTED TO THE OWNER'S DESIGNATED REPRESENTATIVES FOR DESIGN AND CONSTRUCTION AND THE FABRICATOR BY THE ERECTOR, TO ENABLE THE RESPONSIBLE ENTITY TO EITHER CORRECT THE ERROR OR APPROVE THE MOST EFFICIENT AND ECONOMICAL METHOD OF CORRECTION TO BE USED BY OTHERS. NO BACK CHARGES WILL BE ACCEPTED UNLESS APPROVED IN WRITING BY THIS OFFICE.

GLOBAL FABRICATORS
METRIC
CUSTOM EQUIPMENT MANUFACTURING
METAL FABRICATION-MACHINE SHOP
8929 ROSEDALE HWY. BAKERSFIELD CA. 93312
PHONE: (661) 589-2774 FAX: (661) 589-7504
E-MAIL engineering@globalfab.com

H.F. MAGER INC.
STRUCTURAL ENGINEERS
COMMERCIAL & INDUSTRIAL
STRUCTURAL DESIGN AND
CONSTRUCTION DOCUMENTS
1149 MARSH STREET
SAN LUIS OBISPO, CA 93401
PH/ (805)541-2193 FAX/ (805)541-5346
EMAIL hans@magerstruc.com

SEAL: REGISTERED PROFESSIONAL ENGINEER HANS FRED MAGER S 2375 STRUCTURAL ENGINEER STATE OF CALIFORNIA
Mar. 11, 2003
Expires Mar. 31, 2006

☒ APPROVED
☐ APPROVED AS NOTED
☐ NOT APPROVED

Pursuant to Section 5-1.02
of the Standard Specifications
State of California
DEPARTMENT OF TRANSPORTATION
Division of Structures
Office of Structure Construction

Signed James Fan
Structure Representative

Date 4/13/03

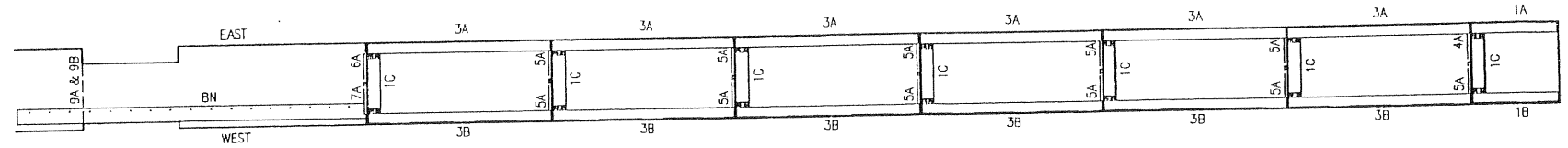

E12W STAIR TOWER SOUTH VIEW
SCALE 1 : 50

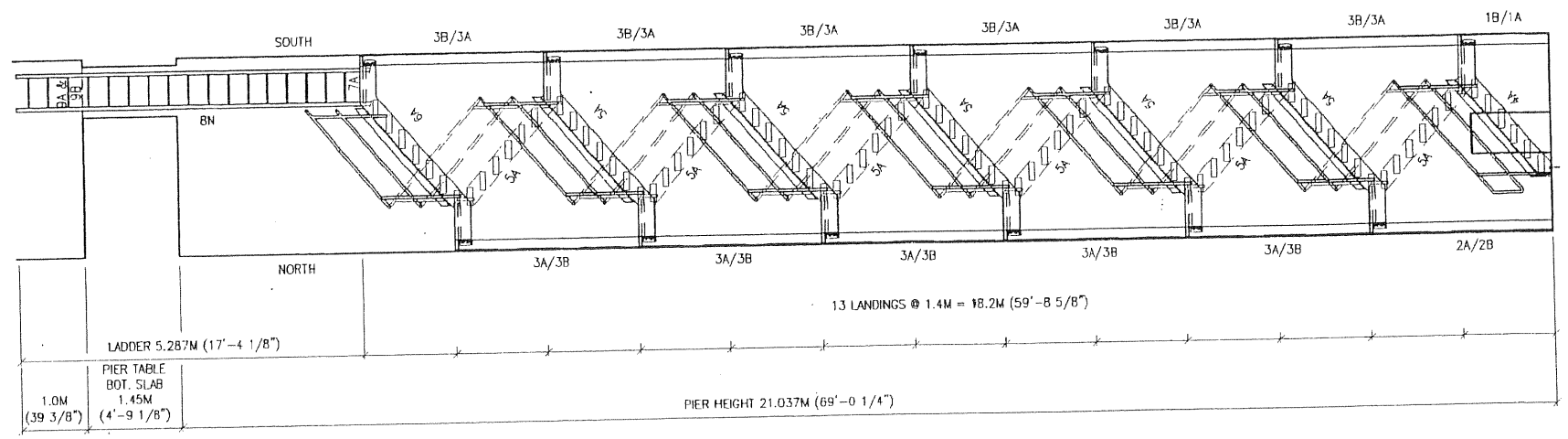

E12W STAIR TOWER WEST VIEW
SCALE 1 : 50

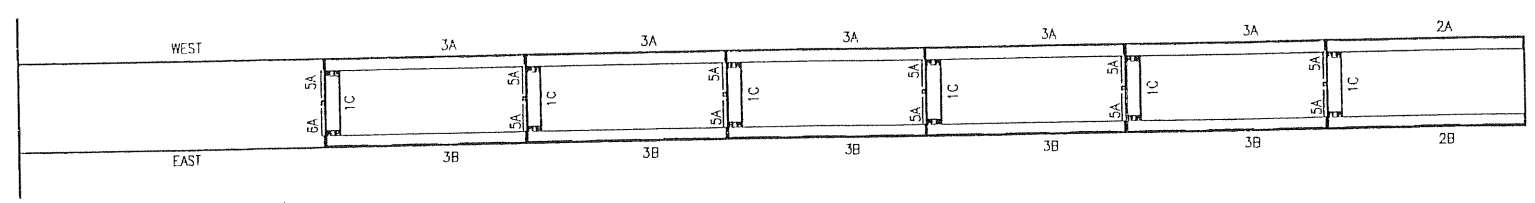

E12W STAIR TOWER NORTH VIEW
SCALE 1 : 50

CONTRACT NO. 04-012024
CCO NO. 49
PAGE 24 OF 72

SAN FRANCISCO OAKLAND BAY BRIDGE
SKYWAY CONTRACT No. 04-012024
SFOBB EAST SPAN SEISMIC SAFETY PROJECT
POST KM 04-SF-80-13.9-14.3/ALA-80-0.0-1.6
BRIDGE No. 34-0006

DO NOT DUPLICATE WITHOUT PERMISSION

THIS PROJECT SHALL BE ERECTED PER THE AISC CODE OF STANDARD PRACTICE SPECIFICALLY PARAGRAPH 7.12 AS FOLLOWS:
7.12 CORRECTION OF ERRORS
THE CORRECTION OF MINOR MISFITS BY MODERATE AMOUNTS OF REAMING, GRINDING, WELDING OR CUTTING, AND THE DRAWING OF ELEMENTS INTO LINE WITH DRIFT PINS, SHALL BE CONSIDERED TO BE NORMAL ERECTION OPERATIONS. ERRORS THAT CANNOT BE CORRECTED USING FOREGOING MEANS, OR THAT REQUIRE MAJOR CHANGES IN MEMBER OR CONNECTION CONFIGURATION, SHALL BE PROMPTLY REPORTED TO THE OWNER'S DESIGNATED REPRESENTATIVES FOR DESIGN AND CONSTRUCTION AND THE FABRICATOR BY THE ERECTOR, TO ENABLE THE RESPONSIBLE ENTITY TO EITHER CORRECT THE ERROR OR APPROVE THE MOST EFFICIENT AND ECONOMICAL METHOD OF CORRECTION TO BE USED BY OTHERS. NO BACK CHARGES WILL BE ACCEPTED UNLESS APPROVED IN WRITING BY THIS OFFICE.

GLOBAL FABRICATORS
METRIC
CUSTOM EQUIPMENT MANUFACTURING
METAL FABRICATION–MACHINE SHOP
8929 ROSEDALE HWY. BAKERSFIELD CA. 93312
PHONE: (661) 589-2774 FAX: (661) 589-7504
E-MAIL engineering@globalfab.com

H.F. MAGER INC.
STRUCTURAL ENGINEERS
COMMERCIAL & INDUSTRIAL
STRUCTURAL DESIGN AND
CONSTRUCTION DOCUMENTS
1149 MARSH STREET
SAN LUIS OBISPO, CA 93401
PH# (805)541-2193 FAX# (805)541-5346
EMAIL hfm@magerinc.com

SEAL: H. F. MAGER, S 2370, STRUCTURAL ENGINEER, STATE OF CALIFORNIA — Mar. 13 2003 — Expires Mar. 31, 2006

DWN. BY:	DATE:	REV.		DATE
IDG	3-11-03			
CHK'D. BY:	DATE:			
APRV'D. BY:	DATE:			
FINISH:				
SCALE: AS NOTED				

PROJECT/DWG. TITLE:

JOB NO.:	FILE NO.:	DWG. NO.:
02D02	ER20	E20

☒ APPROVED
☐ APPROVED AS NOTED
☐ NOT APPROVED

Pursuant to Section 5-1.02
of the Standard Specifications
State of California
DEPARTMENT OF TRANSPORTATION
Division of Structures
Office of Structure Construction

Signed James Fen
Structure Representative

Date 4/15/03

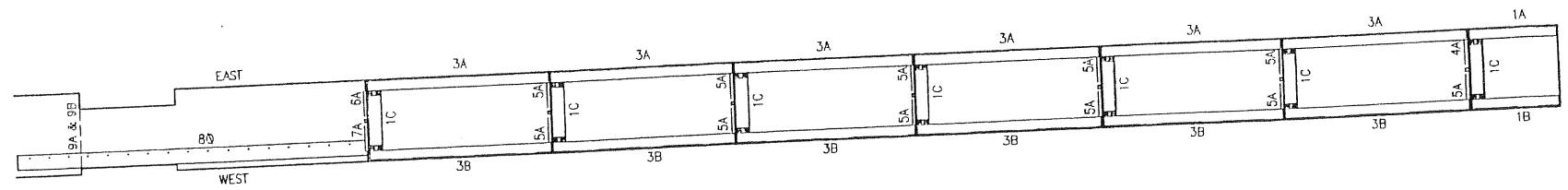

E13E STAIR TOWER SOUTH VIEW
SCALE 1 : 50

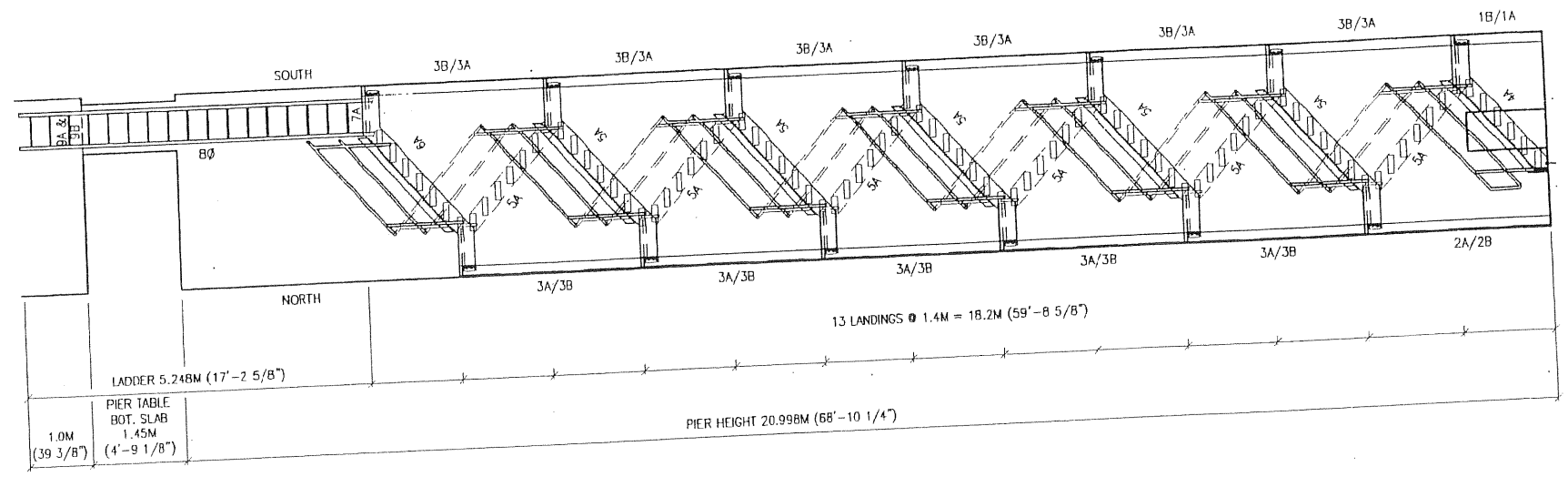

E13E STAIR TOWER WEST VIEW
SCALE 1 : 50

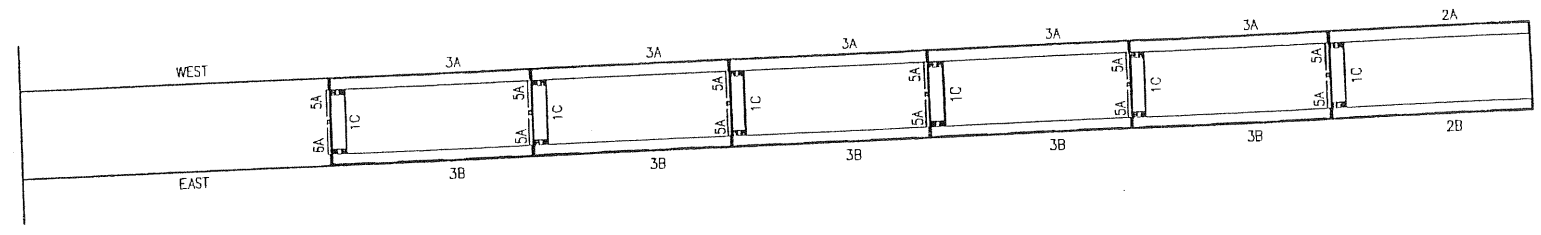

E13E STAIR TOWER NORTH VIEW
SCALE 1 : 50

CONTRACT NO. 04-012024
CCO NO. 49
PAGE 25 OF 72

SAN FRANCISCO OAKLAND BAY BRIDGE
SKYWAY CONTRACT No. 04-012024
SFOBB EAST SPAN SEISMIC SAFETY PROJECT
POST KM 04-SF-80-13.9-14.3/N.A-80-0.0-1.6
BRIDGE No. 34-0006

PROJECT/DWG. TITLE:

DWN. BY: IDG	DATE: 3-11-03	REV.		DATE
CHK'D. BY:	DATE:			
APRV'D. BY:	DATE:			
FINISH:				
SCALE: AS NOTED				

JOB NO.:	FILE NO.:	DWG. NO.:
02D02	ER21	E21

SEAL: H.F. Mager, No. 22760, Mar. 11, 2003, Registered Professional Engineer, Structural Engineering, State of California. Expires Mar. 31, 2006

H.F. MAGER INC.
STRUCTURAL ENGINEERS
COMMERCIAL & INDUSTRIAL
STRUCTURAL DESIGN AND
CONSTRUCTION DOCUMENTS
1149 MARSH STREET
SAN LUIS OBISPO, CA 93401
PH# (805)541-2193 FAX# (805)541-5346
EMAIL hone@mogerstruc.com

GLOBAL FABRICATORS
METRIC
CUSTOM EQUIPMENT MANUFACTURING
METAL FABRICATION-MACHINE SHOP
8929 ROSEDALE HWY. BAKERSFIELD CA. 93312
PHONE: (661) 589-2774 FAX: (661) 589-7504
E-MAIL engineering@globalfab.com

DO NOT DUPLICATE WITHOUT PERMISSION

THIS PROJECT SHALL BE ERECTED PER THE AISC CODE OF STANDARD FRACTICE SPECIFICALLY PARAGRAPH 7.12 AS FOLLOWS:
7.12 CORRECTION OF ERRORS
THE CORRECTION OF MINOR MISFITS BY MODERATE AMOUNTS OF REAMING, GRINDING, WELDING OR CUTTING, AND THE DRAWING OF ELEMENTS INTO LINE WITH DRIFT PINS, SHALL BE CONSIDERED TO BE NORMAL ERECTION OPERATIONS. ERRORS THAT CANNOT BE CORRECTED USING FOREGOING MEANS, OR THAT REQUIRE MAJOR CHANGES IN MEMBER OR CONNECTION CONFIGURATION, SHALL BE PROMPTLY REPORTED TO THE OWNER'S DESIGNATED REPRESENTATIVES FOR DESIGN AND CONSTRUCTION AND THE FABRICATOR BY THE ERECTOR, TO ENABLE THE RESPONSIBLE ENTITY TO EITHER CORRECT THE ERROR OR APPROVE THE MOST EFFICIENT AND ECONOMICAL METHOD OF CORRECTION TO BE USED BY OTHERS. NO BACK CHARGES WILL BE ACCEPTED UNLESS APPROVED IN WRITING BY THIS OFFICE.

☒ APPROVED
☐ APPROVED AS NOTED
☐ NOT APPROVED

Pursuant to Section 5-1.02
of the Standard Specifications
State of California
DEPARTMENT OF TRANSPORTATION
Division of Structures
Office of Structure Construction

Signed James Fern
Structure Representative

Date 4/18/03

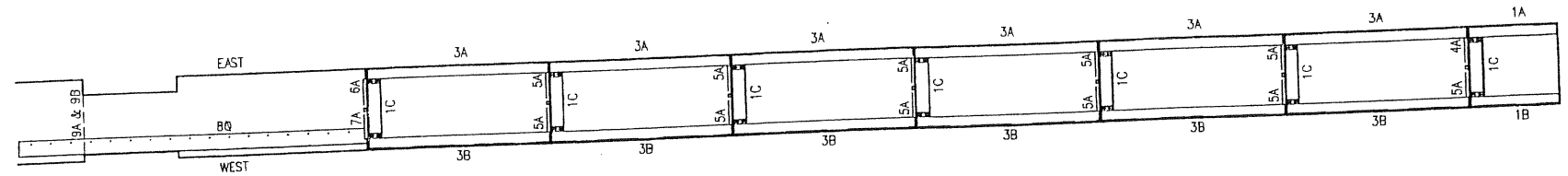

E13W STAIR TOWER SOUTH VIEW
SCALE 1 : 50

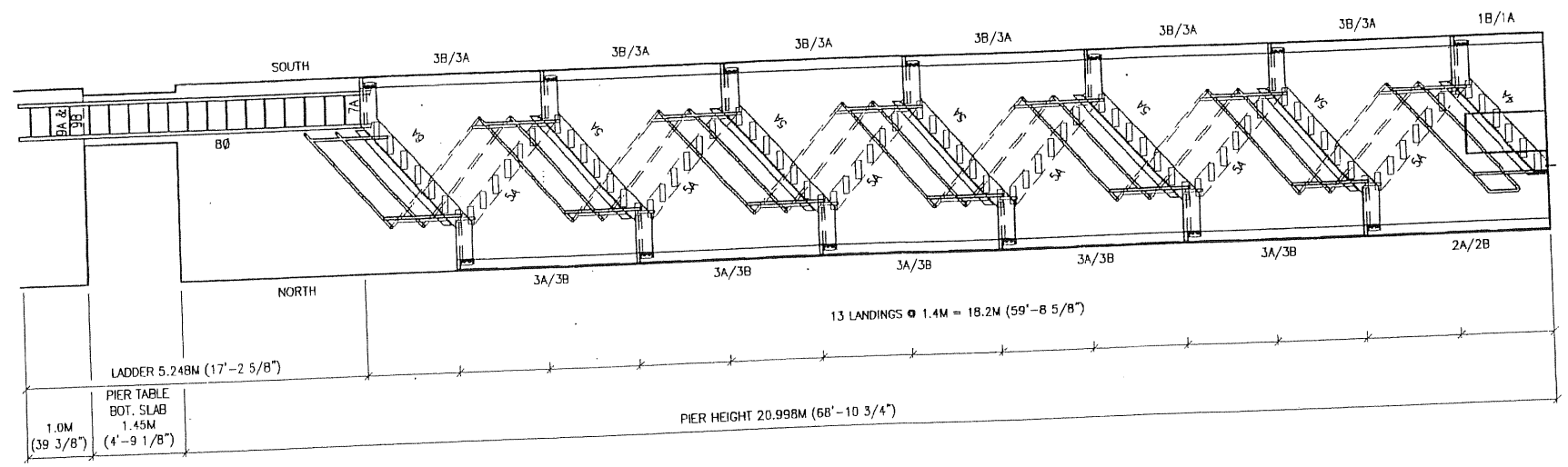

E13W STAIR TOWER WEST VIEW
SCALE 1 : 50

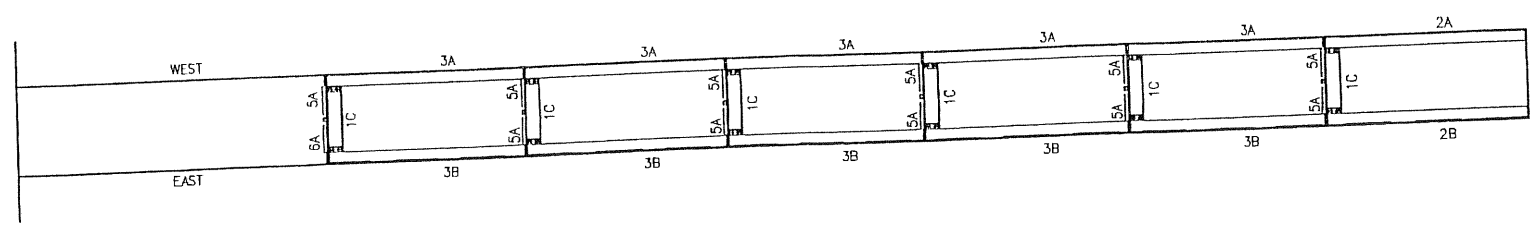

E13W STAIR TOWER NORTH VIEW
SCALE 1 : 50

CONTRACT NO. 04-012024
CCO NO. 49
PAGE 26 OF 72

SAN FRANCISCO OAKLAND BAY BRIDGE
SKYWAY CONTRACT No. 04-012024
SFOEB EAST SPAN SEISMIC SAFETY PROJECT
POST KM 04-SF-80-13.9-14.3/NA-80-0.0-1.6
BRIDGE No. 34-0006

PROJECT/DWG. TITLE:

DWN. BY:	DATE:	REV.		DATE
IDG	3-11-03			
CHK'D. BY:	DATE:			
APRV'D. BY:	DATE:			
FINISH:				
SCALE: AS NOTED				

JOB NO.:	FILE NO.:	DWG. NO.:
02D02	ER22	E22

SEAL: REGISTERED PROFESSIONAL ENGINEER H. F. MAGER C 23161 STRUCTURAL ENGINEER STATE OF CALIFORNIA
Mar. 11, 2003
Expires: Mar. 31, 2006

H.F. MAGER INC.
STRUCTURAL ENGINEERS
COMMERCIAL & INDUSTRIAL
STRUCTURAL DESIGN AND
CONSTRUCTION DOCUMENTS
1149 MARSH STREET
SAN LUIS OBISPO, CA 93401
PH# (805)541-2193 FAX# (805)541-5346
EMAIL hmm@magerinc.com

GLOBAL FABRICATORS
METRIC
CUSTOM EQUIPMENT MANUFACTURING
METAL FABRICATION-MACHINE SHOP
8929 ROSEDALE HWY. BAKERSFIELD CA. 93312
PHONE: (661) 589-2774 FAX: (661) 589-7504
E-MAIL engineering@globalfab.com

DO NOT DUPLICATE WITHOUT PERMISSION

THIS PROJECT SHALL BE ERECTED PER THE AISC CODE OF STANDARD PRACTICE SPECIFICALLY PARAGRAPH 7.12 AS FOLLOWS:
7.12 CORRECTION OF ERRORS
THE CORRECTION OF MINOR MISFITS BY MODERATE AMOUNTS OF REAMING, GRINDING, WELDING OR CUTTING, AND THE DRAWING OF ELEMENTS INTO LINE WITH DRIFT PINS, SHALL BE CONSIDERED TO BE NORMAL ERECTION OPERATIONS. ERRORS THAT CANNOT BE CORRECTED USING FOREGOING MEANS, OR THAT REQUIRE MAJOR CHANGES IN MEMBER OR CONNECTION CONFIGURATION, SHALL BE PROMPTLY REPORTED TO THE OWNER'S DESIGNATED REPRESENTATIVES FOR DESIGN AND CONSTRUCTION AND THE FABRICATOR BY THE ERECTOR, TO ENABLE THE RESPONSIBLE ENTITY TO EITHER CORRECT THE ERROR OR APPROVE THE MOST EFFICIENT AND ECONOMICAL METHOD OF CORRECTION TO BE USED BY OTHERS. NO BACK CHARGES WILL BE ACCEPTED UNLESS APPROVED IN WRITING BY THIS OFFICE.

☒ APPROVED
☐ APPROVED AS NOTED
☐ NOT APPROVED

Pursuant to Section 5-1.02
of the Standard Specifications
State of California
DEPARTMENT OF TRANSPORTATION
Division of Structures
Office of Structure Construction
Signed James Fazi
Structure Representative
Date 4/13/03

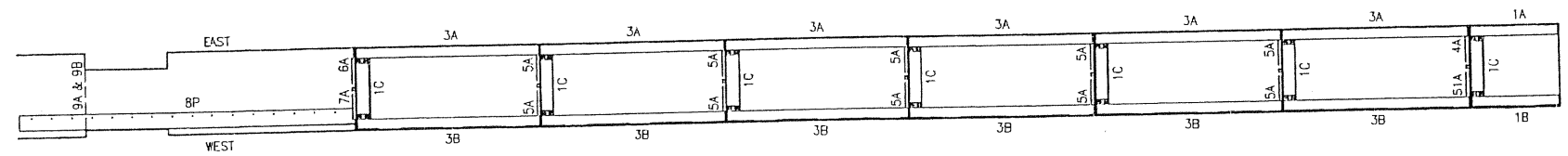

E14E STAIR TOWER SOUTH VIEW
SCALE 1 : 50

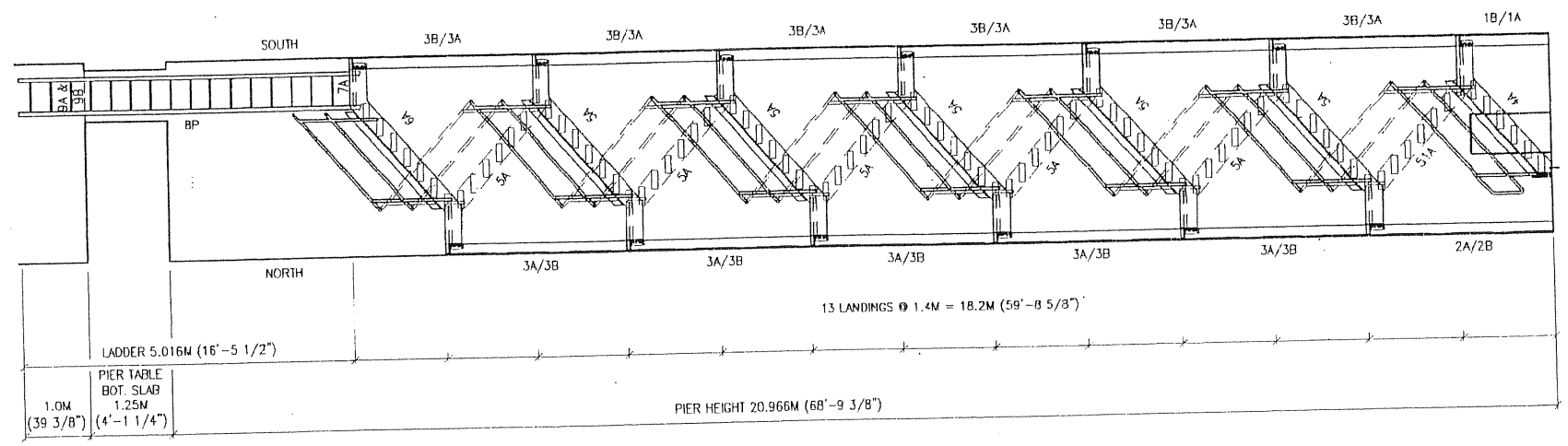

E14E STAIR TOWER WEST VIEW
SCALE 1 : 50

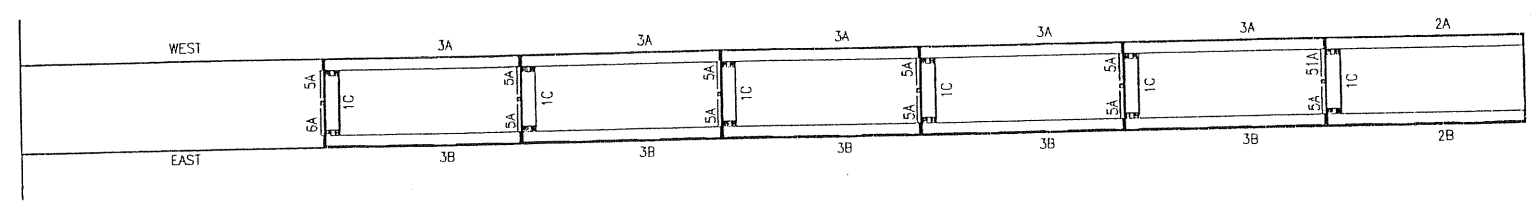

E14E STAIR TOWER NORTH VIEW
SCALE 1 : 50

CONTRACT NO. 04-012024
EA NO. 49
PAGE 27 OF 72

SAN FRANCISCO OAKLAND BAY BRIDGE
SKYWAY CONTRACT No. 04-012024
SFOBB EAST SPAN SEISMIC SAFETY PROJECT
POST KM 04-SF-80-13.9-14.3/ALA-80-0.0-1.6
BRIDGE No. 34-0006

DO NOT DUPLICATE WITHOUT PERMISSION

THIS PROJECT SHALL BE ERECTED PER THE AISC CODE OF STANDARD PRACTICE SPECIFICALLY PARAGRAPH 7.12 AS FOLLOWS:
7.12 CORRECTION OF ERRORS
THE CORRECTION OF MINOR MISFITS BY MODERATE AMOUNTS OF REAMING, GRINDING, WELDING OR CUTTING, AND THE DRAWING OF ELEMENTS INTO LINE WITH DRIFT PINS, SHALL BE CONSIDERED TO BE NORMAL ERECTION OPERATIONS. ERRORS THAT CANNOT BE CORRECTED USING FOREGOING MEANS, OR THAT REQUIRE MAJOR CHANGES IN MEMBER OR CONNECTION CONFIGURATION, SHALL BE PROMPTLY REPORTED TO THE OWNER'S DESIGNATED REPRESENTATIVES FOR DESIGN AND CONSTRUCTION AND THE FABRICATOR BY THE ERECTOR, TO ENABLE THE RESPONSIBLE ENTITY TO EITHER CORRECT THE ERROR OR APPROVE THE MOST EFFICIENT AND ECONOMICAL METHOD OF CORRECTION TO BE USED BY OTHERS. NO BACK CHARGES WILL BE ACCEPTED UNLESS APPROVED IN WRITING BY THIS OFFICE.

GLOBAL FABRICATORS
METRIC

CUSTOM EQUIPMENT MANUFACTURING
METAL FABRICATION-MACHINE SHOP
8929 ROSEDALE HWY. BAKERSFIELD CA. 93312
PHONE: (661) 589-2774 FAX: (661) 589-7504
E-MAIL engineering@globalfab.com

H.F. MAGER INC.
STRUCTURAL ENGINEERS
COMMERCIAL & INDUSTRIAL
STRUCTURAL DESIGN AND
CONSTRUCTION DOCUMENTS
1140 MARSH STREET
SAN LUIS OBISPO, CA 93401
PH# (805)541-2103 FAX# (805)541-5346
EMAIL hmm@magerstruc.com

SEAL: REGISTERED PROFESSIONAL ENGINEER — HARLAN F. MAGER — Mar. 11, 2003 — STRUCTURAL ENGINEER — STATE OF CALIFORNIA
Expires Mar. 31, 2006

DWN. BY: IDG	DATE: 3-11-03	REV.	DATE
CHK'D. BY: HMM	DATE:		
APRV'D. BY:	DATE:		
FINISH:			
SCALE: AS NOTED			

PROJECT/DWG. TITLE:

JOB NO.:	FILE NO.:	DWG. NO.:
02D02	ER23	E23

☒ APPROVED
☐ APPROVED AS NOTED
☐ NOT APPROVED

Pursuant to Section 5-1.02 of the Standard Specifications
State of California
DEPARTMENT OF TRANSPORTATION
Division of Structures
Office of Structure Construction

Signed James Fer
Structure Representative

Date 4/18/03

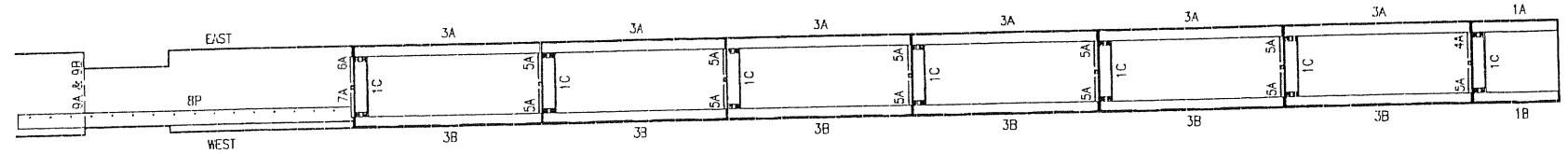

E14W STAIR TOWER SOUTH VIEW
SCALE 1 : 50

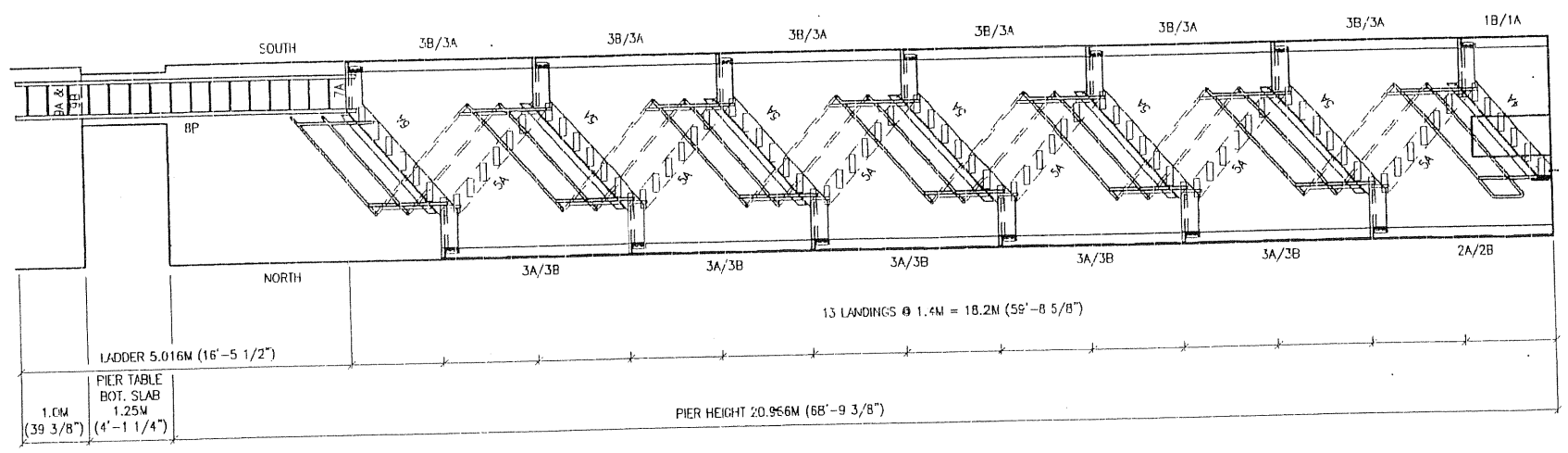

E14W STAIR TOWER WEST VIEW
SCALE 1 : 50

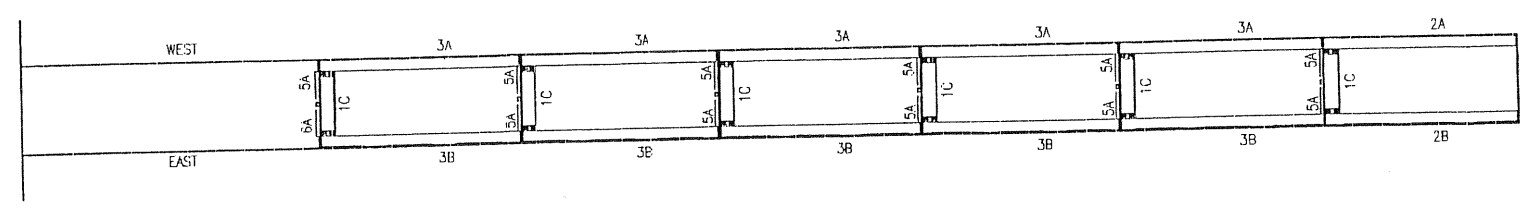

E14W STAIR TOWER NORTH VIEW
SCALE 1 : 50

CONTRACT NO. 04-012024
CCO NO. 49
PAGE 28 OF 72

SAN FRANCISCO OAKLAND BAY BRIDGE
SKYWAY CONTRACT No. 04-012024
SFOBB EAST SPAN SEISMIC SAFETY PROJECT
POST KM 04-SF-80-13.9-14.3/ALA-80-0.0-1.6
BRIDGE No. 34-0006

DO NOT DUPLICATE WITHOUT PERMISSION

THIS PROJECT SHALL BE ERECTED PER THE AISC CODE OF STANDARD PRACTICE SPECIFICALLY PARAGRAPH 7.12 AS FOLLOWS:
7.12 CORRECTION OF ERRORS
THE CORRECTION OF MINOR MISFITS BY MODERATE AMOUNTS OF REAMING, GRINDING, WELDING OR CUTTING, AND THE DRAWING OF ELEMENTS INTO LINE WITH DRIFT PINS, SHALL BE CONSIDERED TO BE NORMAL ERECTION OPERATIONS. ERRORS THAT CANNOT BE CORRECTED USING FOREGOING MEANS, OR THAT REQUIRE MAJOR CHANGES IN MEMBER OR CONNECTION CONFIGURATION, SHALL BE PROMPTLY REPORTED TO THE OWNER'S DESIGNATED REPRESENTATIVES FOR DESIGN AND CONSTRUCTION AND THE FABRICATOR BY THE ERECTOR, TO ENABLE THE RESPONSIBLE ENTITY TO EITHER CORRECT THE ERROR OR APPROVE THE MOST EFFICIENT AND ECONOMICAL METHOD OF CORRECTION TO BE USED BY OTHERS. NO BACK CHARGES WILL BE ACCEPTED UNLESS APPROVED IN WRITING BY THIS OFFICE.

GLOBAL FABRICATORS
METRIC
CUSTOM EQUIPMENT MANUFACTURING
METAL FABRICATION-MACHINE SHOP
8929 ROSEDALE HWY. BAKERSFIELD CA. 93312
PHONE: (661) 589-2774 FAX: (661) 589-7504
E-MAIL engineering@globalfab.com

H.F. MAGER INC.
STRUCTURAL ENGINEERS
COMMERCIAL & INDUSTRIAL
STRUCTURAL DESIGN AND
CONSTRUCTION DOCUMENTS
1149 MARSH STREET
SAN LUIS OBISPO, CA 93401
PH# (805)541-2193 FAX# (805)541-5348
EMAIL hmm@mopnetmail.com

SEAL: REGISTERED PROFESSIONAL ENGINEER HAROLD FRED MAGER S 2376 STRUCTURAL ENGINEER STATE OF CALIFORNIA
Mar. 11, 2003
Expires Mar. 31, 2006

DWN. BY:	DATE:	REV.		DATE
IDG	3-11-03			
CHK'D. BY:	DATE:			
APRV'D. BY:	DATE:			
FINISH:				
SCALE: AS NOTED				

PROJECT/DWG. TITLE:

JOB NO.:	FILE NO.:	DWG. NO.:
02D02	ER24	E24

APPROVED
APPROVED AS NOTED
NOT APPROVED

Pursuant to Section 5-1.402 of the Standard Specifications State of California DEPARTMENT OF TRANSPORTATION Division of Structures Office of Structure Construction

Signed James Fear
Structure Representative

Date 4/13/03

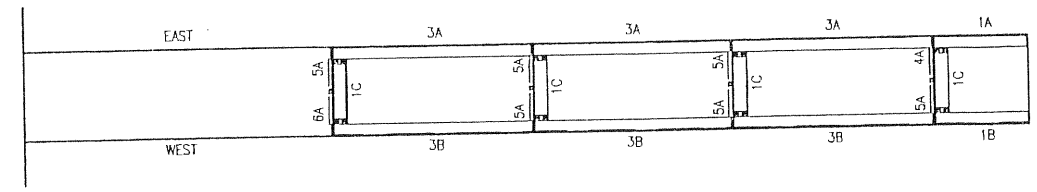

E15E STAIR TOWER SOUTH VIEW
SCALE 1 : 50

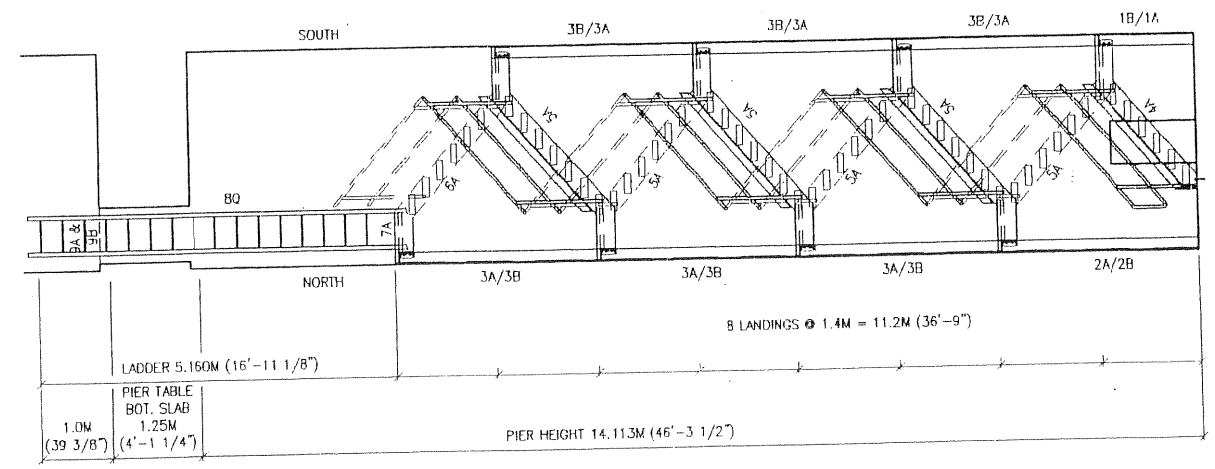

E15E STAIR TOWER WEST VIEW
SCALE 1 : 50

CONTRACT NO. 04-012024
CCO NO. 49
PAGE 29 OF 72

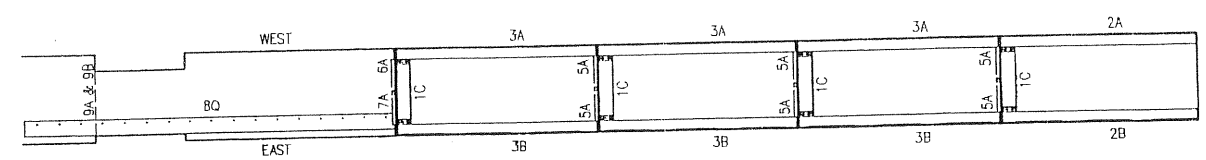

E15E STAIR TOWER NORTH VIEW
SCALE 1 : 50

SAN FRANCISCO OAKLAND BAY BRIDGE
SKYWAY CONTRACT No. 04-012024
SFOBB EAST SPAN SEISMIC SAFETY PROJECT
POST KM 04-SF-80-13.9-14.3/ALA-80-0.0-1.6
BRIDGE No. 34-0006

DO NOT DUPLICATE WITHOUT PERMISSION

THIS PROJECT SHALL BE ERECTED PER THE AISC CODE OF STANDARD PRACTICE SPECIFICALLY PARAGRAPH 7.12 AS FOLLOWS:
7.12 CORRECTION OF ERRORS
THE CORRECTION OF MINOR MISFITS BY MODERATE AMOUNTS OF REAMING, GRINDING, WELDING OR CUTTING, AND THE DRAWING OF ELEMENTS INTO LINE WITH DRIFT PINS, SHALL BE CONSIDERED TO BE NORMAL ERECTION OPERATIONS. ERRORS THAT CANNOT BE CORRECTED USING FOREGOING MEANS, OR THAT REQUIRE MAJOR CHANGES IN MEMBER OR CONNECTION CONFIGURATION, SHALL BE PROMPTLY REPORTED TO THE OWNER'S DESIGNATED REPRESENTATIVES FOR DESIGN AND CONSTRUCTION AND THE FABRICATOR BY THE ERECTOR, TO ENABLE THE RESPONSIBLE ENTITY TO EITHER CORRECT THE ERROR OR APPROVE THE MOST EFFICIENT AND ECONOMICAL METHOD OF CORRECTION TO BE USED BY OTHERS. NO BACK CHARGES WILL BE ACCEPTED UNLESS APPROVED IN WRITING BY THIS OFFICE.

GLOBAL FABRICATORS
METRIC
CUSTOM EQUIPMENT MANUFACTURING
METAL FABRICATION-MACHINE SHOP
8929 ROSEDALE HWY. BAKERSFIELD CA. 93312
PHONE: (661) 589-2774 FAX: (661) 589-7504
E-MAIL engineering@globalfab.com

H.F. MAGER INC.
STRUCTURAL ENGINEERS
COMMERCIAL & INDUSTRIAL
STRUCTURAL DESIGN AND
CONSTRUCTION DOCUMENTS
1149 MARSH STREET
SAN LUIS OBISPO, CA 93401
PH# (805)541-2193 FAX# (805)541-5346
EMAIL hofm@magerstruc.com

SEAL: REGISTERED PROFESSIONAL ENGINEER HARD FRED MAGER No. 28287 STRUCTURAL ENGINEER STATE OF CALIFORNIA
Expires Mar. 31, 2006

DWN. BY: IDG	DATE: 3-11-03	REV.		DATE
CHK'D. BY: HFM	DATE:			
APRV'D. BY:	DATE:			
FINISH:				
SCALE: AS NOTED				

PROJECT/DWG. TITLE:

JOB NO.:	FILE NO.:	DWG. NO.:
02D02	ER25	E25

☒ APPROVED
☐ APPROVED AS NOTED
☐ NOT APPROVED

Pursuant to Section 5-1.02
of the Standard Specifications
State of California
DEPARTMENT OF TRANSPORTATION
Division of Structures
Office of Structure Construction

Signed James Ferrer
Structure Representative

Date 4/15/03

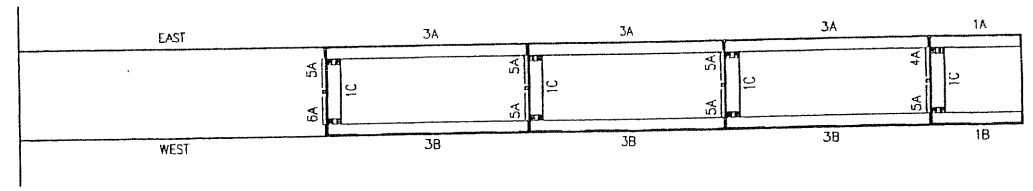

E15W STAIR TOWER SOUTH VIEW
SCALE 1:50

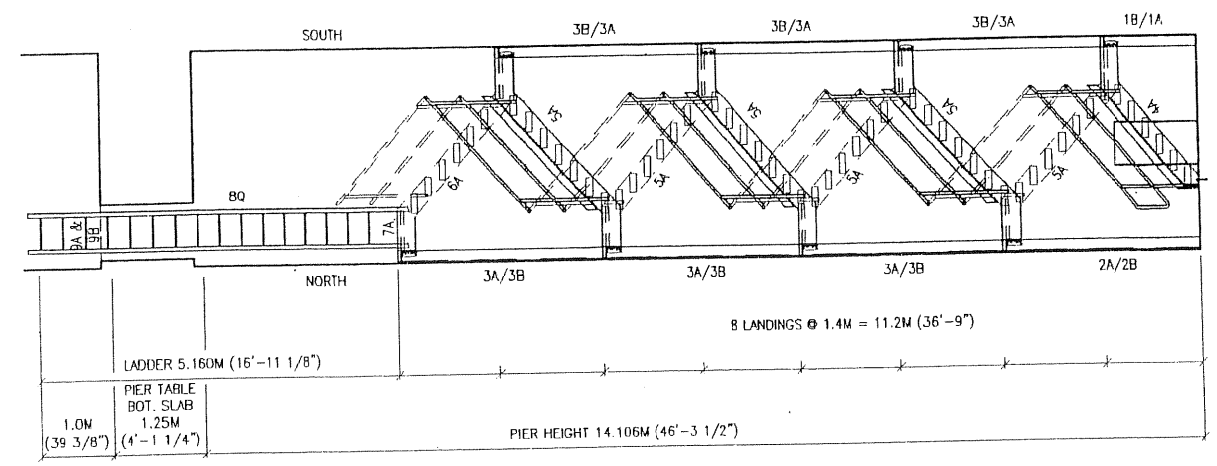

E15W STAIR TOWER WEST VIEW
SCALE 1:50

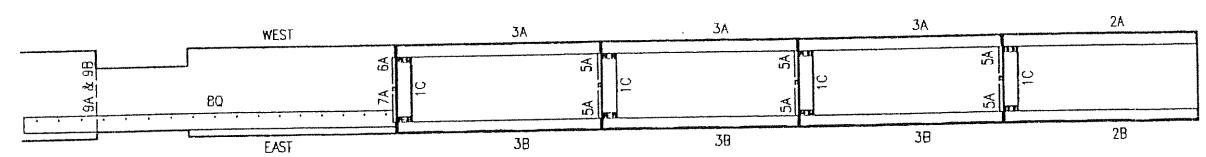

E15W STAIR TOWER NORTH VIEW
SCALE 1:50

CONTRACT NO. 04-012024
CCO NO. 49
PAGE 30 OF 72

SAN FRANCISCO OAKLAND BAY BRIDGE
SKYWAY CONTRACT No. 04-012024
SFOBB EAST SPAN SEISMIC SAFETY PROJECT
POST KM 04-SF-80-13.9-14.3/KLA-80-0.0-1.6
BRIDGE No. 34-0006

DO NOT DUPLICATE WITHOUT PERMISSION

THIS PROJECT SHALL BE ERECTED PER THE AISC CODE OF STANDARD PRACTICE SPECIFICALLY PARAGRAPH 7.12 AS FOLLOWS:
7.12 CORRECTION OF ERRORS
THE CORRECTION OF MINOR MISFITS BY MODERATE AMOUNTS OF REAMING, GRINDING, WELDING OR CUTTING, AND THE DRAWING OF ELEMENTS INTO LINE WITH DRIFT PINS, SHALL BE CONSIDERED TO BE NORMAL ERECTION OPERATIONS. ERRORS THAT CANNOT BE CORRECTED USING FOREGOING MEANS, OR THAT REQUIRE MAJOR CHANGES IN MEMBER OR CONNECTION CONFIGURATION, SHALL BE PROMPTLY REPORTED TO THE OWNER'S DESIGNATED REPRESENTATIVES FOR DESIGN AND CONSTRUCTION AND THE FABRICATOR BY THE ERECTOR, TO ENABLE THE RESPONSIBLE ENTITY TO EITHER CORRECT THE ERROR OR APPROVE THE MOST EFFICIENT AND ECONOMICAL METHOD OF CORRECTION TO BE USED BY OTHERS. NO BACK CHARGES WILL BE ACCEPTED UNLESS APPROVED IN WRITING BY THIS OFFICE.

GLOBAL FABRICATORS
METRIC
CUSTOM EQUIPMENT MANUFACTURING
METAL FABRICATION-MACHINE SHOP
8929 ROSEDALE HWY. BAKERSFIELD CA. 93312
PHONE: (661) 589-2774 FAX: (661) 589-7504
E-MAIL engineering@globalfab.com

H.F. MAGER INC.
STRUCTURAL ENGINEERS
COMMERCIAL & INDUSTRIAL
STRUCTURAL DESIGN AND
CONSTRUCTION DOCUMENTS
1140 MARSH STREET
SAN LUIS OBISPO, CA 93401
PH# (805)541-2193 FAX# (805)541-5346
EMAIL hmm@magerstruc.com

SEAL: REGISTERED PROFESSIONAL ENGINEER — HAROLD F. MAGER — C 2376 — STRUCTURAL ENGINEER — CALIFORNIA — Mar. 11, 2003 — Expires Mar. 31, 2006

DWN. BY: IDG	DATE: 3-11-03	REV.		DATE
CHK'D. BY: HFM	DATE:			
APRV'D. BY:	DATE:			
FINISH:				
SCALE: AS NOTED				

PROJECT/DWG. TITLE:

JOB NO.:	FILE NO.:	DWG. NO.:
02D02	ER26	E26

☐ APPROVED
☒ APPROVED AS NOTED
☐ NOT APPROVED

Pursuant to Section 5-1.02
of the Standard Specifications
State of California
DEPARTMENT OF TRANSPORTATION
Division of Structures
Office of Structure Construction

Signed James Fen
Structure Representative

Date 4/18/03

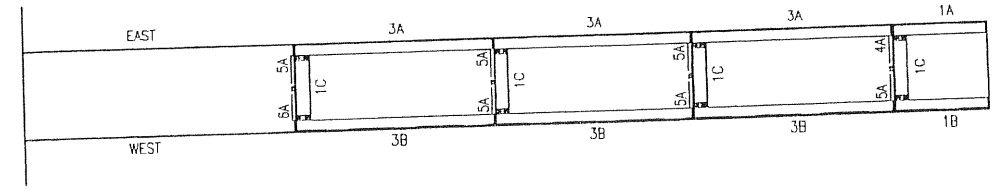

E16E STAIR TOWER SOUTH VIEW
SCALE 1 : 50

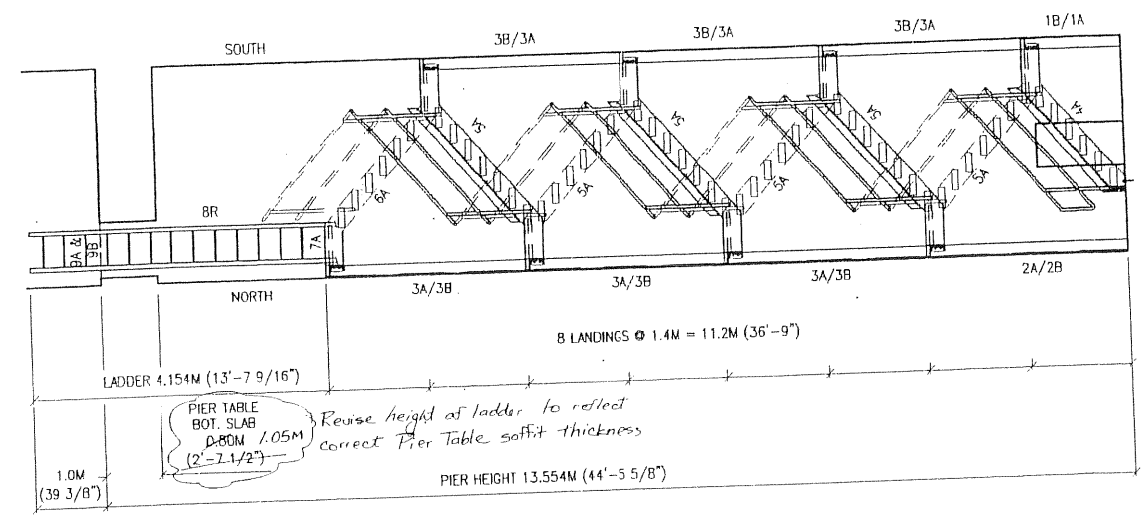

E16E STAIR TOWER WEST VIEW
SCALE 1 : 50

CONTRACT NO. 04-012024
CCO NO. 49
PAGE 31 OF 72

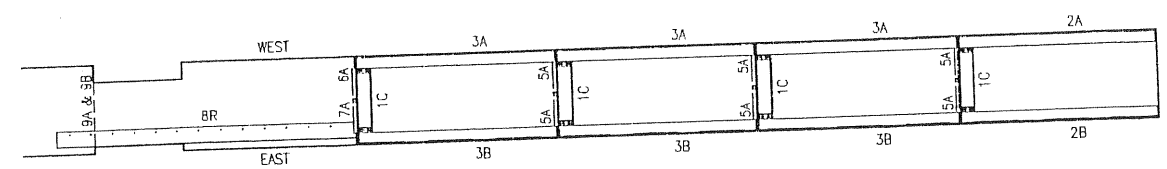

E16E STAIR TOWER NORTH VIEW
SCALE 1 : 50

SAN FRANCISCO OAKLAND BAY BRIDGE
SKYWAY CONTRACT No. 04-012024
SFOBB EAST SPAN SEISMIC SAFETY PROJECT
POST KM 04-SF-80-13.9-14.3/ALA-80-0.0-1.6
BRIDGE No. 34-0006

DO NOT DUPLICATE WITHOUT PERMISSION

THIS PROJECT SHALL BE ERECTED PER THE AISC CODE OF STANDARD PRACTICE SPECIFICALLY PARAGRAPH 7.12 AS FOLLOWS:
7.12 CORRECTION OF ERRORS
THE CORRECTION OF MINOR MISFITS BY MODERATE AMOUNTS OF REAMING, GRINDING, WELDING OR CUTTING, AND THE DRAWING OF ELEMENTS INTO LINE WITH DRIFT PINS, SHALL BE CONSIDERED TO BE NORMAL ERECTION OPERATIONS. ERRORS THAT CANNOT BE CORRECTED USING FOREGOING MEANS, OR THAT REQUIRE MAJOR CHANGES IN MEMBER OR CONNECTION CONFIGURATION, SHALL BE PROMPTLY REPORTED TO THE OWNER'S DESIGNATED REPRESENTATIVES FOR DESIGN AND CONSTRUCTION AND THE FABRICATOR BY THE ERECTOR, TO ENABLE THE RESPONSIBLE ENTITY TO EITHER CORRECT THE ERROR OR APPROVE THE MOST EFFICIENT AND ECONOMICAL METHOD OF CORRECTION TO BE USED BY OTHERS. NO BACK CHARGES WILL BE ACCEPTED UNLESS APPROVED IN WRITING BY THIS OFFICE.

GLOBAL FABRICATORS
METRIC
CUSTOM EQUIPMENT MANUFACTURING
METAL FABRICATION-MACHINE SHOP
8929 ROSEDALE HWY. BAKERSFIELD CA. 93312
PHONE: (661) 589-2774 FAX: (661) 589-7504
E-MAIL engineering@globalfab.com

H.F. MAGER INC.
STRUCTURAL ENGINEERS
COMMERCIAL & INDUSTRIAL
STRUCTURAL DESIGN AND
CONSTRUCTION DOCUMENTS
1149 MARSH STREET
SAN LUIS OBISPO, CA 93401
PH# (805)541-2103 FAX# (805)541-5348
EMAIL hmm@magerstruc.com

SEAL: REGISTERED PROFESSIONAL ENGINEER HAROLD FRED MAGER S 2379 Mar. 11, 2003 STRUCTURAL ENGINEER
Expires Mar. 31, 2006

DWN. BY:	DATE:	REV.		DATE
IDG	3-11-03			
CHK'D. BY: HFM	DATE:			
APRV'D. BY:	DATE:			
FINISH:				
SCALE: AS NOTED				

PROJECT/DWG. TITLE:

JOB NO.:	FILE NO.:	DWG. NO.:
02D02	ER27	E27

☐ APPROVED
☒ APPROVED AS NOTED
☐ NOT APPROVED

Pursuant to Section 5-1.02
of the Standard Specifications
State of California
DEPARTMENT OF TRANSPORTATION
Division of Structures
Office of Structure Construction

Signed _____
Structure Representative

Date 4/13/03

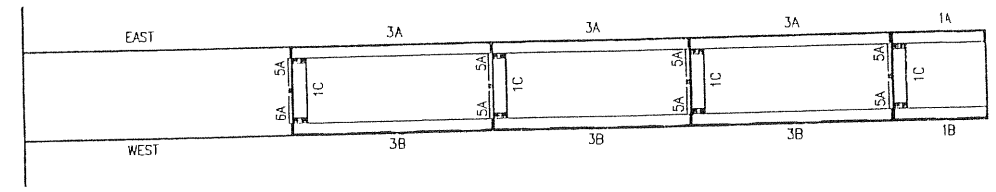

E16W STAIR TOWER SOUTH VIEW
SCALE 1 : 50

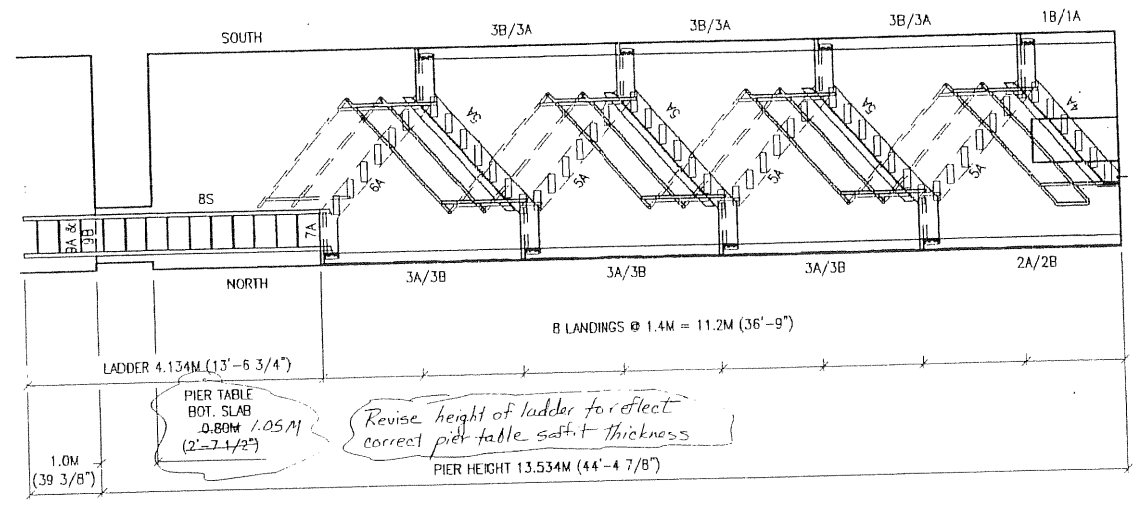

E16W STAIR TOWER WEST VIEW
SCALE 1 : 50

CONTRACT NO. 04-012024
CCO NO. 49
PAGE 32 OF 72

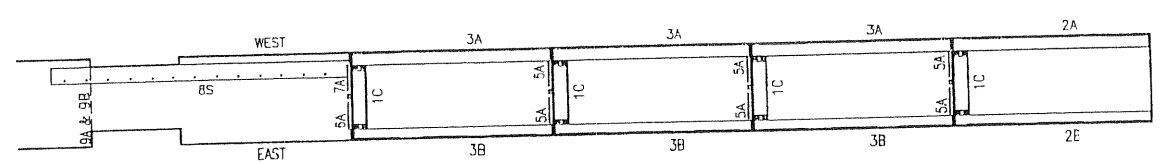

E16W STAIR TOWER NORTH VIEW
SCALE 1 : 50

SAN FRANCISCO OAKLAND BAY BRIDGE
SKYWAY CONTRACT No. 04-012024
SFOBB EAST SPAN SEISMIC SAFETY PROJECT
POST KM 04-SF-80-13.9-14.3/ALA-80-0.0-1.6
BRIDGE No. 34-0006

DO NOT DUPLICATE WITHOUT PERMISSION

THIS PROJECT SHALL BE ERECTED PER THE AISC CODE OF STANDARD PRACTICE SPECIFICALLY PARAGRAPH 7.12 AS FOLLOWS:
7.12 CORRECTION OF ERRORS
THE CORRECTION OF MINOR MISFITS BY MODERATE AMOUNTS OF REAMING, GRINDING, WELDING OR CUTTING, AND THE DRAWING OF ELEMENTS INTO LINE WITH DRIFT PINS, SHALL BE CONSIDERED TO BE NORMAL ERECTION OPERATIONS. ERRORS THAT CANNOT BE CORRECTED USING FOREGOING MEANS, OR THAT REQUIRE MAJOR CHANGES IN MEMBER OR CONNECTION CONFIGURATION, SHALL BE PROMPTLY REPORTED TO THE OWNER'S DESIGNATED REPRESENTATIVES FOR DESIGN AND CONSTRUCTION AND THE FABRICATOR BY THE ERECTOR, TO ENABLE THE RESPONSIBLE ENTITY TO EITHER CORRECT THE ERROR OR APPROVE THE MOST EFFICIENT AND ECONOMICAL METHOD OF CORRECTION TO BE USED BY OTHERS. NO BACK CHARGES WILL BE ACCEPTED UNLESS APPROVED IN WRITING BY THIS OFFICE.

GLOBAL FABRICATORS
METRIC
CUSTOM EQUIPMENT MANUFACTURING
METAL FABRICATION-MACHINE SHOP
6929 ROSEDALE HWY. BAKERSFIELD CA. 93312
PHONE: (661) 589-2774 FAX: (661) 589-7504
E-MAIL engineering@globalfab.com

H.F. MAGER INC.
STRUCTURAL ENGINEERS
COMMERCIAL & INDUSTRIAL
STRUCTURAL DESIGN AND
CONSTRUCTION DOCUMENTS
1149 MARSH STREET
SAN LUIS OBISPO, CA 93401
PH# (805)541-2193 FAX# (805)541-5348
EMAIL hme@magerstruc.com

SEAL: Expires Mar. 31, 2006

DWN. BY:	DATE:	REV.		DATE
IDG	3-10-03			
CHK'D. BY:	DATE:			
APRV'D. BY:	DATE:			
FINISH:				
SCALE: AS NOTED				

PROJECT/DWG. TITLE:

JOB NO.:	FILE NO.:	DWG. NO.:
02D02	ER28	E28

CONTRACT NO. 04-012024
CCO NO. 49
PAGE 33 OF 72

☒ APPROVED
☐ APPROVED AS NOTED
☐ NOT APPROVED

Pursuant to Section 5-1.02 of the Standard Specifications
State of California
DEPARTMENT OF TRANSPORTATION
Division of Structures
Office of Structure Construction
Signed James Fer
Structure Representative
Date 4/18/03

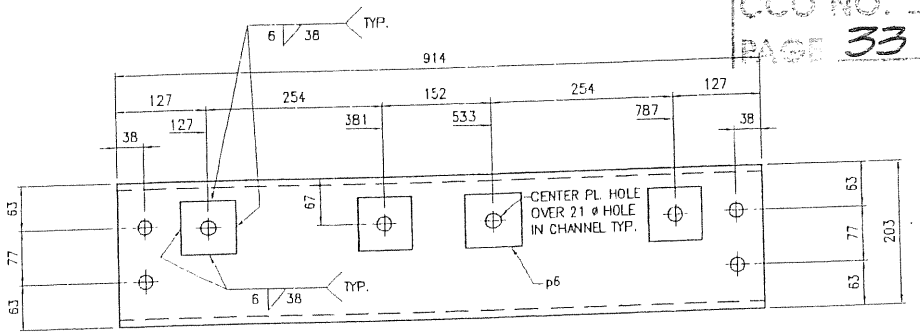

ONE CHANNEL – 1C
SCALE 1:5

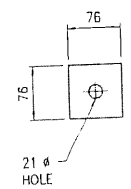

ONE SPACER PLATE – p6
SCALE 1:5

METRIC SIZE	IMPERIAL SIZE
TS 127 x 127 x 10	TS 5x5x3/8
∠89 x 63 x 6	∠3 1/2 x 2 1/2 x 1/4
₽ 13 x 305	₽ 1/2 x 12
₽ 19 x 152	₽ 3/4 x 6
₽ 13 x 140	₽ 1/2 x 5 1/2
BOLT 19ø (A307)	BOLT 3/4"ø (A307)
C203 x 17	C8 x 11.5
₽ 13 x 76	₽ 1/2 x 3
BOLT 19ø (A325)	BOLT 3/4"ø (A325)
THREADED ROD 19ø (B7)	THREADED ROD 3/4"ø (B7)

BILL OF MATERIALS

SHIP MK.	PIECE MARK	QTY.	DESCRIPTION (Imperial Size)	CUT LENGTH (mm.)	COMMENT
1A		28	SHORT BOTTOM COLUMN ASSEMBLY		
	m1	28	TS 5x5x3/8	191	
	a1	28	∠3 1/2 x 2 1/2 x 1/4	152	
	p1L	28	₽ 1/2 x 12	1308	
	p4	28	₽ 3/4 x 6	152	
	p5	28	₽ 1/2 x 5 1/2	149	
	z1	56	BOLT 3/4"ø (A307)	95	w/ n
1B		28	SHORT BOTTOM COLUMN ASSEMBLY		
	m1	28	TS 5x5x3/8	191	
	a1	28	∠3 1/2 x 2 1/2 x 1/4	152	
	p1R	28	₽ 1/2 x 12	1308	
	p4	28	₽ 3/4 x 6	152	
	p5	28	₽ 1/2 x 5 1/2	149	
	z1	56	BOLT 3/4"ø (A307)	95	w/ n
1C		461	C8 x 11.5	914	
	p6	1844	₽ 1/2 x 3	76	
	z2	1844	BOLT 3/4"ø (A325)	45	w/ n & w
			FIELD BOLTS		
123		56	THREADED ROD 3/4"ø (B7)	191	w/ n & w

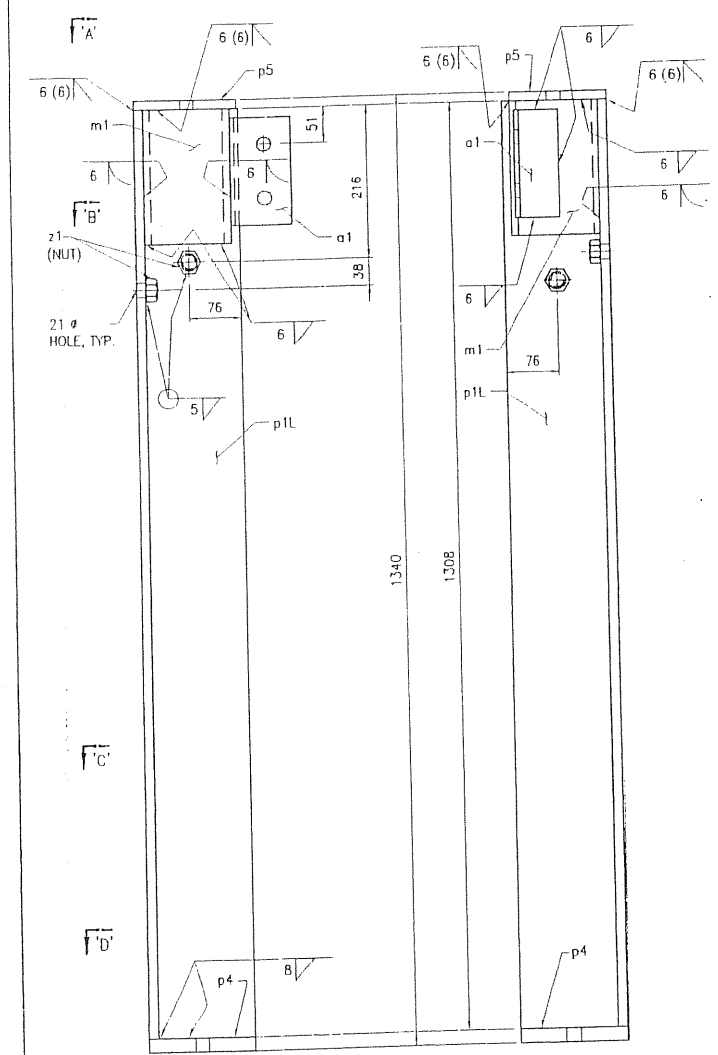

ONE SHORT BOTTOM COLUMN ASSEMBLY – 1A
SCALE 1:5

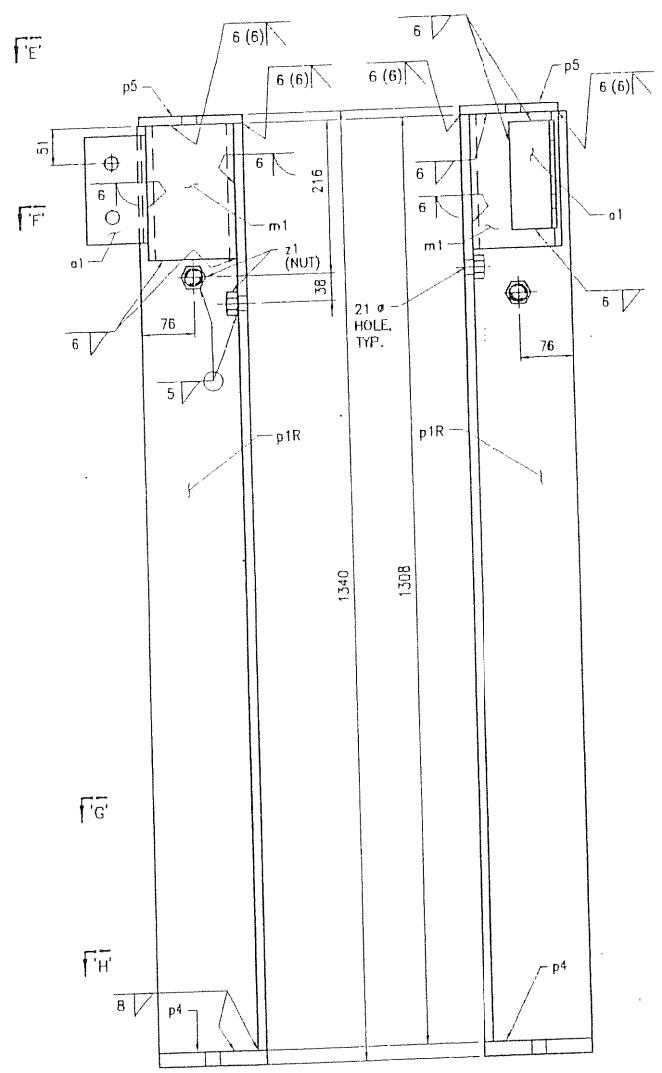

ONE SHORT BOTTOM COLUMN ASSEMBLY – 1B
SCALE 1:5

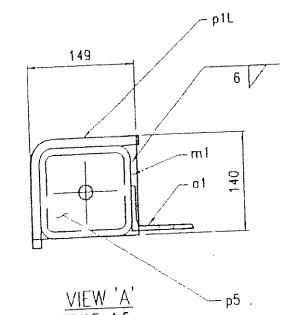

VIEW 'A'
SCALE 1:5

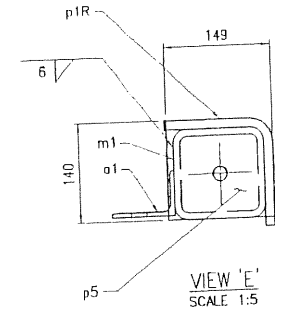

VIEW 'E'
SCALE 1:5

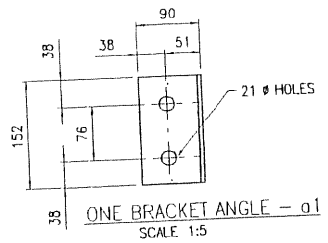

ONE BRACKET ANGLE – a1
SCALE 1:5

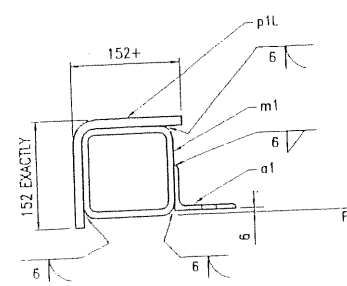

SECTION 'B'
SCALE 1:5

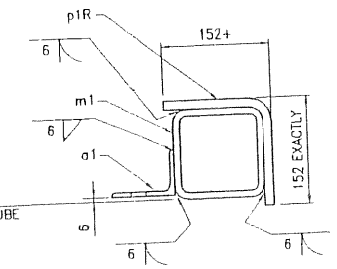

SECTION 'F'
SCALE 1:5

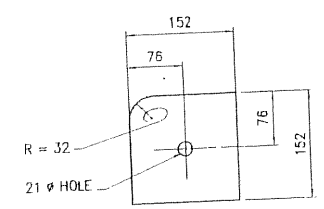

ONE BASE PLATE – p4
SCALE 1:5

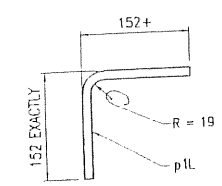

SECTION 'C'
SCALE 1:5

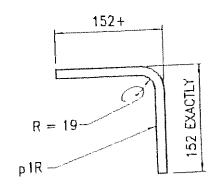

SECTION 'G'
SCALE 1:5

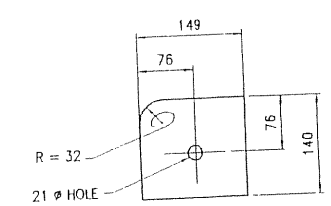

ONE TOP PLATE – p5
SCALE 1:5

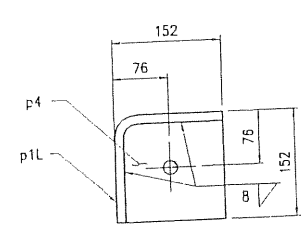

SECTION 'D'
SCALE 1:5

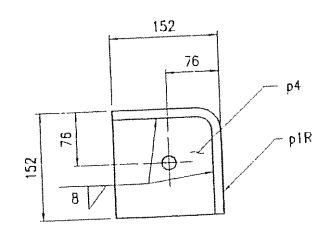

SECTION 'H'
SCALE 1:5

SAN FRANCISCO OAKLAND BAY BRIDGE
SKYWAY CONTRACT No. 04-012024
SFOBB EAST SPAN SEISMIC SAFETY PROJECT
POST KM 04-SF-80-13.9-14.3/ALA-80-0.0-1.6
BRIDGE No. 34-0006

PROJECT/DWG. TITLE:

DWN. BY: E MAGER	DATE: 02-26-03	REV.	DATE
CHK'D. BY:	DATE:		
APRV'D. BY:	DATE:		
FINISH:			
SCALE:			

JOB NO.: | FILE NO.: DWG1m | DWG. NO.: 1m

DO NOT DUPLICATE WITHOUT PERMISSION

THIS PROJECT SHALL BE ERECTED PER THE AISC CODE OF STANDARD PRACTICE SPECIFICALLY PARAGRAPH 7.12 AS FOLLOWS:
7.12 CORRECTION OF ERRORS
THE CORRECTION OF MINOR MISFITS BY MODERATE AMOUNTS OF REAMING, GRINDING, WELDING OR CUTTING, AND THE DRAWING OF ELEMENTS INTO LINE WITH DRIFT PINS, SHALL BE CONSIDERED TO BE NORMAL ERECTION OPERATIONS. ERRORS THAT CANNOT BE CORRECTED USING FOREGOING MEANS, OR THAT REQUIRE MAJOR CHANGES IN MEMBER OR CONNECTION CONFIGURATION, SHALL BE PROMPTLY REPORTED TO THE OWNER'S DESIGNATED REPRESENTATIVES FOR DESIGN AND CONSTRUCTION AND THE FABRICATOR BY THE ERECTOR, TO ENABLE THE RESPONSIBLE ENTITY TO EITHER CORRECT THE ERROR OR APPROVE THE MOST EFFICIENT AND ECONOMICAL METHOD OF CORRECTION TO BE USED BY OTHERS. NO BACK CHARGES WILL BE ACCEPTED UNLESS APPROVED IN WRITING BY THIS OFFICE.

GLOBAL FABRICATORS
METRIC
CUSTOM EQUIPMENT MANUFACTURING
METAL FABRICATION–MACHINE SHOP
8929 ROSEDALE HWY. BAKERSFIELD CA. 93312
PHONE: (661) 585-2774 FAX: (661) 589-7504
E-MAIL engineering@globalfab.com

H.F. MAGER INC.
STRUCTURAL ENGINEERS
COMMERCIAL & INDUSTRIAL
STRUCTURAL DESIGN AND
CONSTRUCTION DOCUMENTS
1149 MARSH STREET
SAN LUIS OBISPO, CA 93401
PH# (805)541-2193 FAX# (805)541-5348
EMAIL hone@magerstruc.com

SEAL: REGISTERED PROFESSIONAL ENGINEER HANS FRED MAGER No. S 2376 STRUCTURAL ENGINEER STATE OF CALIFORNIA
Mar. 11, 2003
Expires Mar. 31, 2006

CONTRACT NO. 04-012024
CCO NO. 49
PAGE 34 OF 72

☒ APPROVED
☐ APPROVED AS NOTED
☐ NOT APPROVED

Pursuant to Section 5.1.02 of the Standard Specifications State of California DEPARTMENT OF TRANSPORTATION Division of Structures Office of Structure Construction

Signed James Fan
Structure Representative

Date 4/18/03

METRIC SIZE	IMPERIAL SIZE
TS 127 x 127 x 10	TS 5x5x3/8
∠89 x 63 x 6	∠3 1/2 x 2 1/2 x 1/4
ℙ 13 x 305	ℙ 1/2 x 12
ℙ 19 x 152	ℙ 3/4 x 6
ℙ 13 x 140	ℙ 1/2 x 5 1/2
BOLT 19ø (A307)	BOLT 3/4"ø (A307)
THREADED ROD 19ø (B7)	THREADED ROD 3/4"ø (B7)

BILL OF MATERIALS

SHIP MK.	PIECE MARK	QTY.	DESCRIPTION (Imperial Size)	CUT LENGTH (mm.)	COMMENT
2A		2B	LONG BOTTOM COLUMN ASSEMBLY		
	m1	2B	TS 5x5x3/8	191	
	a1	2B	∠3 1/2 x 2 1/2 x 1/4	152	
	p2L	2B	ℙ 1/2 x 12	2708	
	p4	2B	ℙ 3/4 x 6	152	
	p5	2B	ℙ 1/2 x 5 1/2	149	
	z1	56	BOLT 3/4"ø (A307)	95	w/ n
2B		2B	LONG BOTTOM COLUMN ASSEMBLY		
	m1	2B	TS 5x5x3/8	191	
	a1	2B	∠3 1/2 x 2 1/2 x 1/4	152	
	p2R	2B	ℙ 1/2 x 12	2708	
	p4	2B	ℙ 3/4 x 6	152	
	p5	2B	ℙ 1/2 x 5 1/2	149	
	z1	56	BOLT 3/4"ø (A307)	95	w/ n
			FIELD BOLTS		
2Z3		56	THREADED ROD 3/4"ø (B7)	191	w/ n & w

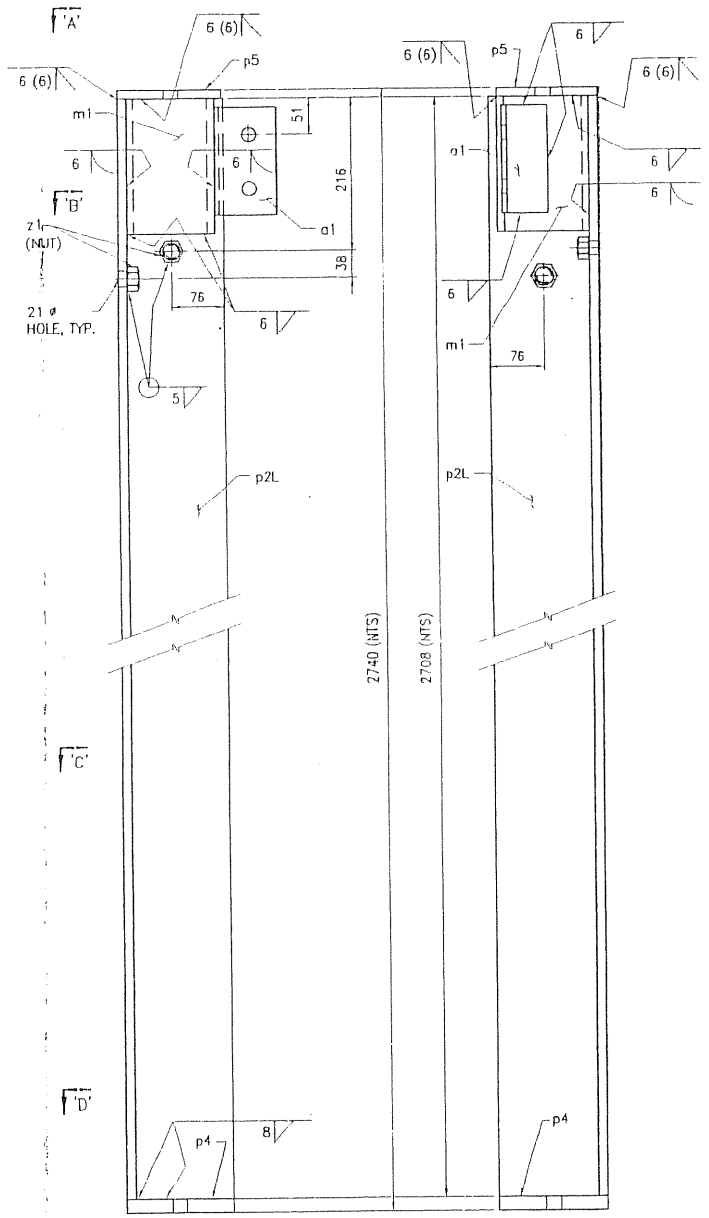

ONE LONG BOTTOM COLUMN ASSEMBLY – 2A
SCALE 1:5

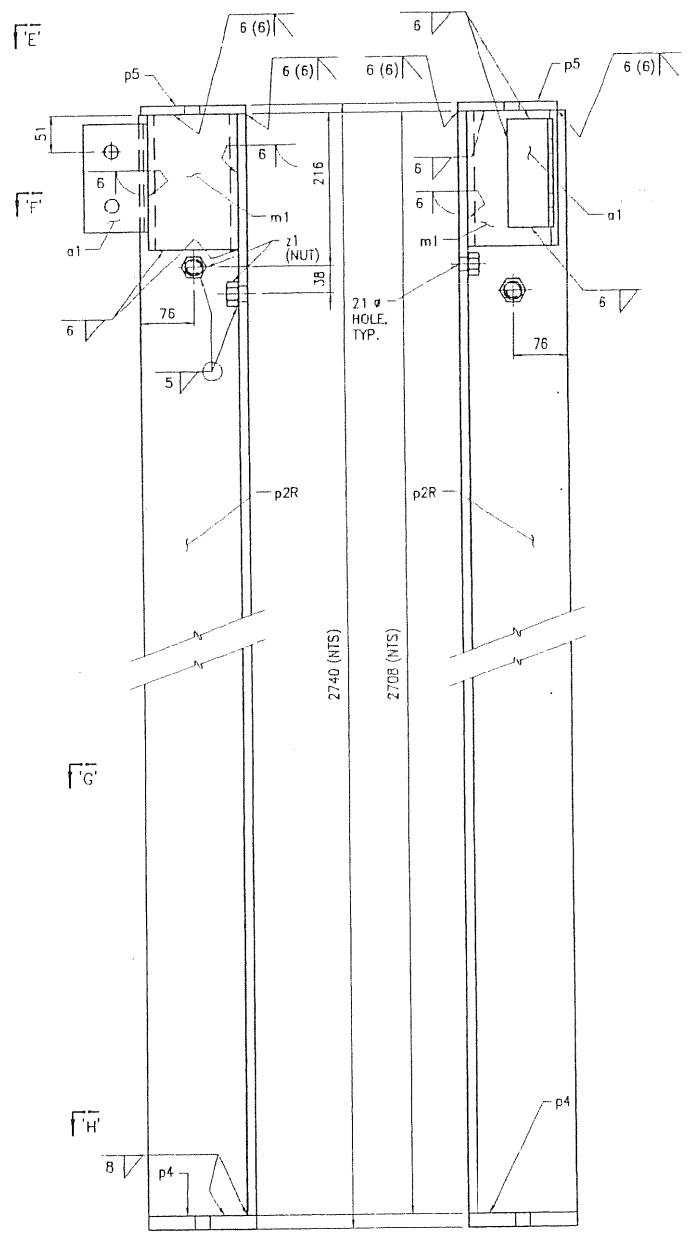

ONE LONG BOTTOM COLUMN ASSEMBLY – 2B
SCALE 1:5

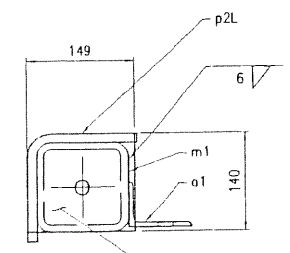

VIEW 'A'
SCALE 1:5

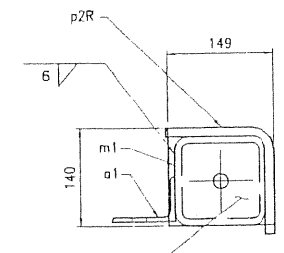

VIEW 'E'
SCALE 1:5

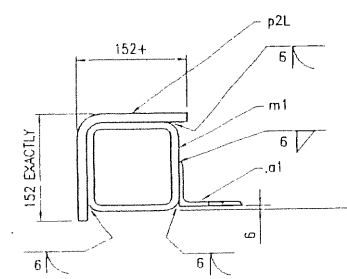

SECTION 'B'
SCALE 1:5

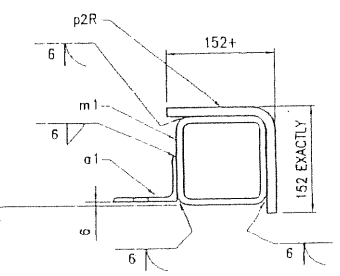

SECTION 'F'
SCALE 1:5

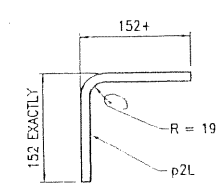

SECTION 'C'
SCALE 1:5

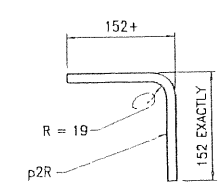

SECTION 'G'
SCALE 1:5

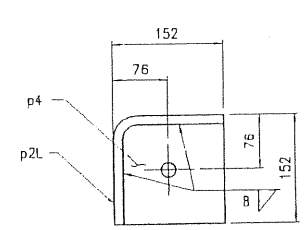

SECTION 'D'
SCALE 1:5

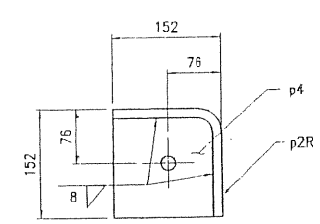

SECTION 'H'
SCALE 1:5

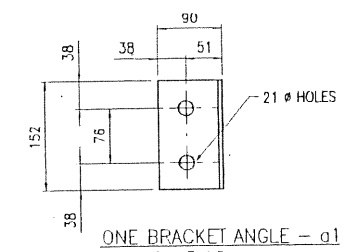

ONE BRACKET ANGLE – a1
SCALE 1:5

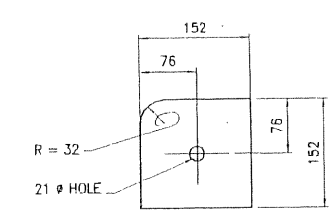

ONE BASE PLATE – p4
SCALE 1:5

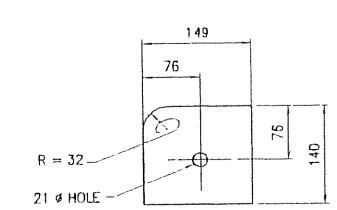

ONE TOP PLATE – p5
SCALE 1:5

SAN FRANCISCO OAKLAND BAY BRIDGE
SKYWAY CONTRACT No. 04-012024
SFOBB EAST SPAN SEISMIC SAFETY PROJECT
POST KM 04-SF-80-13.9-14.3/N.A-80-0.0-1.6
BRIDGE No. 34-0006

DO NOT DUPLICATE WITHOUT PERMISSION

THIS PROJECT SHALL BE ERECTED PER THE AISC CODE OF STANDARD PRACTICE SPECIFICALLY PARAGRAPH 7.12 AS FOLLOWS:
7.12 CORRECTION OF ERRORS
THE CORRECTION OF MINOR MISFITS BY MODERATE AMOUNTS OF REAMING, GRINDING, WELDING OR CUTTING, AND THE DRAWING OF ELEMENTS INTO LINE WITH DRIFT PINS, SHALL BE CONSIDERED TO BE NORMAL ERECTION OPERATIONS. ERRORS THAT CANNOT BE CORRECTED USING FOREGOING MEANS, OR THAT REQUIRE MAJOR CHANGES IN MEMBER OR CONNECTION CONFIGURATION, SHALL BE PROMPTLY REPORTED TO THE OWNER'S DESIGNATED REPRESENTATIVES FOR DESIGN AND CONSTRUCTION AND THE FABRICATOR BY THE ERECTOR, TO ENABLE THE RESPONSIBLE ENTITY TO EITHER CORRECT THE ERROR OR APPROVE THE MOST EFFICIENT AND ECONOMICAL METHOD OF CORRECTION TO BE USED BY OTHERS. NO BACK CHARGES WILL BE ACCEPTED UNLESS APPROVED IN WRITING BY THIS OFFICE.

GLOBAL FABRICATORS
METRIC
CUSTOM EQUIPMENT MANUFACTURING
METAL FABRICATION–MACHINE SHOP
8929 ROSEDALE HWY. BAKERSFIELD CA. 93312
PHONE: (661) 589-2774 FAX: (661) 589-7504
E-MAIL engineering@globalfab.com

H.F. MAGER INC.
STRUCTURAL ENGINEERS
COMMERCIAL & INDUSTRIAL
STRUCTURAL DESIGN AND
CONSTRUCTION DOCUMENTS
1149 MARSH STREET
SAN LUIS OBISPO, CA 93401
PH# (805)541-2193 FAX# (805)541-5346
EMAIL hfm@magerstruc.com

SEAL: H.F. Mager, No. 2379, Structural Engineer, State of California, Expires Mar. 31, 2006

DWN. BY: E MAGER	DATE: 3-11-03
CHK'D. BY:	DATE:
APRV'D. BY:	DATE:
FINISH:	
SCALE:	

REV.		DATE

PROJECT/DWG. TITLE:

JOB NO.:	FILE NO.: DWG2m	DWG. NO.: 2m

CONTRACT NO. 04-012024
CCO NO. 49
PAGE 35 OF 72

☒ APPROVED
☐ APPROVED AS NOTED
☐ NOT APPROVED

Pursuant to Section 5-1.02 of the Standard Specifications State of California
DEPARTMENT OF TRANSPORTATION
Division of Structures
Office of Structure Construction
Signed James Fan
Structure Representative
Date 4/18/03

METRIC SIZE	IMPERIAL SIZE
TS 127 x 127 x 10	TS 5x5x3/8
∠89 x 63 x 6	∠3 1/2 x 2 1/2 x 1/4
₽ 13 x 305	₽ 1/2 x 12
₽ 19 x 152	₽ 3/4 x 6
₽ 13 x 140	₽ 1/2 x 5 1/2
BOLT 19ø (A307)	BOLT 3/4"ø (A307)
BOLT 19ø (A325)	BOLT 3/4"ø (A325)

BILL OF MATERIALS

SHIP MK.	PIECE MARK	QTY.	DESCRIPTION (Imperial Size)	CUT LENGTH (mm.)	COMMENT
3A		405	REPETITIVE COLUMN ASSEMBLY		
	m1	405	TS 5x5x3/8	191	
	a1	405	∠3 1/2 x 2 1/2 x 1/4	152	
	p3L	405	₽ 1/2 x 12	2759	
	p4	405	₽ 3/4 x 6	152	
	p5	405	₽ 1/2 x 5 1/2	149	
	z1	810	BOLT 3/4"ø (A307)	95	w/ n
3B		405	REPETITIVE COLUMN ASSEMBLY		
	m1	405	TS 5x5x3/8	191	
	a1	405	∠3 1/2 x 2 1/2 x 1/4	152	
	p3R	405	₽ 1/2 x 12	2759	
	p4	405	₽ 3/4 x 6	152	
	p5	405	₽ 1/2 x 5 1/2	149	
	z1	810	BOLT 3/4"ø (A307)	95	w/ n
			FIELD BOLTS		
3Z4		810	BOLT 3/4"ø (A325)	70	w/ n & w

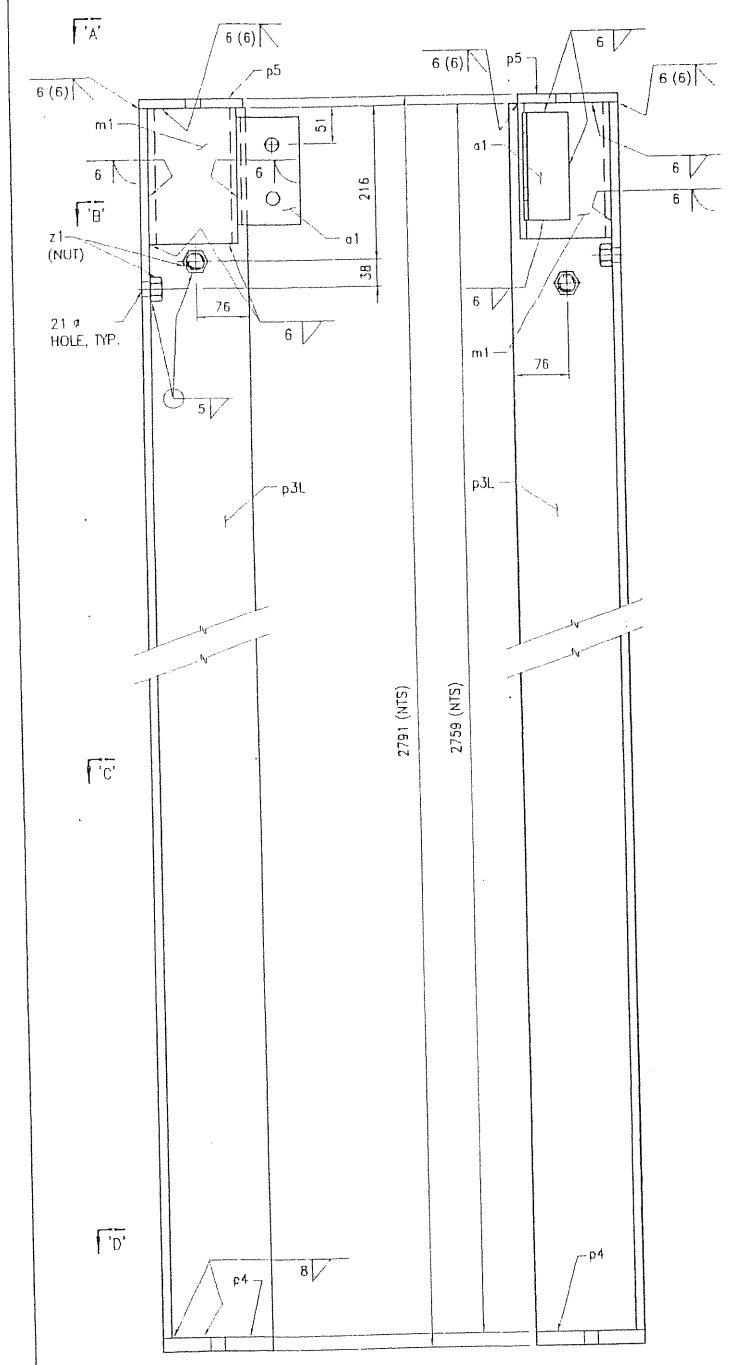

ONE REPETITIVE COLUMN ASSEMBLY – 3A
SCALE 1:5

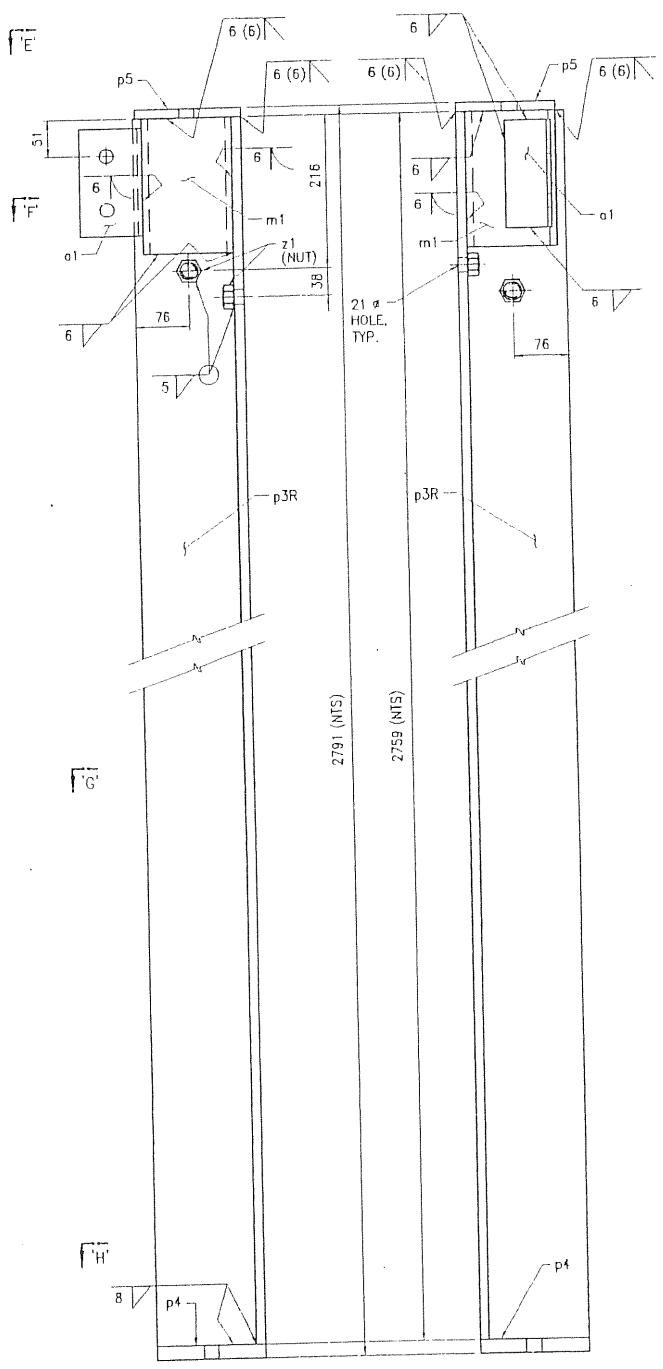

ONE REPETITIVE COLUMN ASSEMBLY – 3B
SCALE 1:5

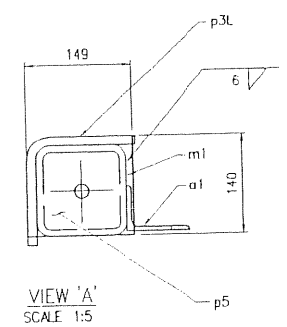

VIEW 'A'
SCALE 1:5

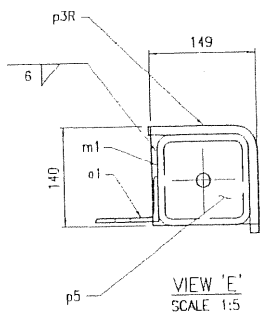

VIEW 'E'
SCALE 1:5

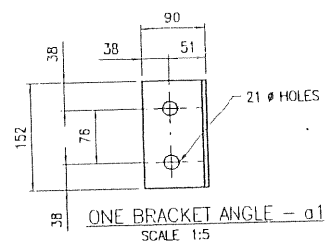

ONE BRACKET ANGLE – a1
SCALE 1:5

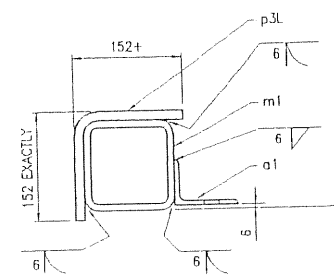

SECTION 'B'
SCALE 1:5

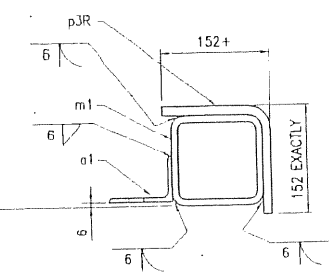

SECTION 'F'
SCALE 1:5

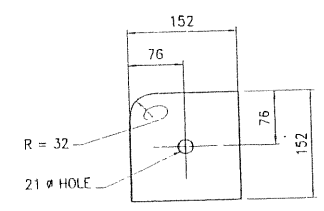

ONE BASE PLATE – p4
SCALE 1:5

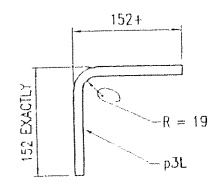

SECTION 'C'
SCALE 1:5

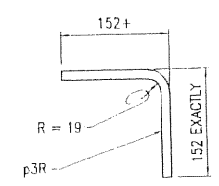

SECTION 'G'
SCALE 1:5

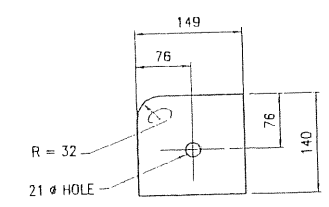

ONE TOP PLATE – p5
SCALE 1:5

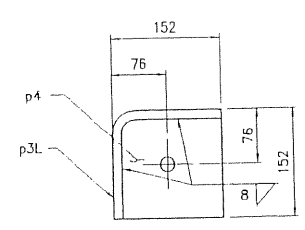

SECTION 'D'
SCALE 1:5

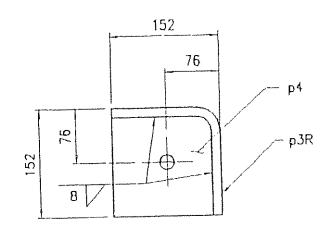

SECTION 'H'
SCALE 1:5

SAN FRANCISCO OAKLAND BAY BRIDGE
SKYWAY CONTRACT No. 04-012024
SFOBB EAST SPAN SEISMIC SAFETY PROJECT
POST KW 04-SF-80-13.9-14.3/ALA-80-0.0-1.6
BRIDGE No. 34-0006

DO NOT DUPLICATE WITHOUT PERMISSION

THIS PROJECT SHALL BE ERECTED PER THE AISC CODE OF STANDARD PRACTICE SPECIFICALLY PARAGRAPH 7.12 AS FOLLOWS:
7.12 CORRECTION OF ERRORS
THE CORRECTION OF MINOR MISFITS BY MODERATE AMOUNTS OF REAMING, GRINDING, WELDING OR CUTTING, AND THE DRAWING OF ELEMENTS INTO LINE WITH DRIFT PINS, SHALL BE CONSIDERED TO BE NORMAL ERECTION OPERATIONS. ERRORS THAT CANNOT BE CORRECTED USING FOREGOING MEANS, OR THAT REQUIRE MAJOR CHANGES IN MEMBER OR CONNECTION CONFIGURATION, SHALL BE PROMPTLY REPORTED TO THE OWNER'S DESIGNATED REPRESENTATIVES FOR DESIGN AND CONSTRUCTION AND THE FABRICATOR BY THE ERECTOR, TO ENABLE THE RESPONSIBLE ENTITY TO EITHER CORRECT THE ERROR OR APPROVE THE MOST EFFICIENT AND ECONOMICAL METHOD OF CORRECTION TO BE USED BY OTHERS. NO BACK CHARGES WILL BE ACCEPTED UNLESS APPROVED IN WRITING BY THIS OFFICE.

GLOBAL FABRICATORS
METRIC

CUSTOM EQUIPMENT MANUFACTURING
METAL FABRICATION–MACHINE SHOP

8929 ROSEDALE HWY. BAKERSFIELD CA. 93312
PHONE: (661) 589-2774 FAX: (661) 589-7504
E-MAIL engineering@globalfab.com

H.F. MAGER INC.
STRUCTURAL ENGINEERS
COMMERCIAL & INDUSTRIAL
STRUCTURAL DESIGN AND
CONSTRUCTION DOCUMENTS
1149 MARSH STREET
SAN LUIS OBISPO, CA 93401
PH# (805)541-2193 FAX# (805)541-5348
EMAIL hmm@magerinc.com

SEAL: REGISTERED PROFESSIONAL ENGINEER HANS FRED MAGER No. 23318 STRUCTURAL ENGINEERING STATE OF CALIFORNIA
Mar. 11, 2003
Expires 31 Mar. 2006

DWN. BY:	DATE:
E. MAGER	3-11-03
CHK'D. BY:	DATE:
APRV'D. BY:	DATE:
FINISH:	
SCALE:	

REV.		DATE

PROJECT/DWG. TITLE:

JOB NO.:	FILE NO.:	DWG. NO.:
	DWG3m	3m

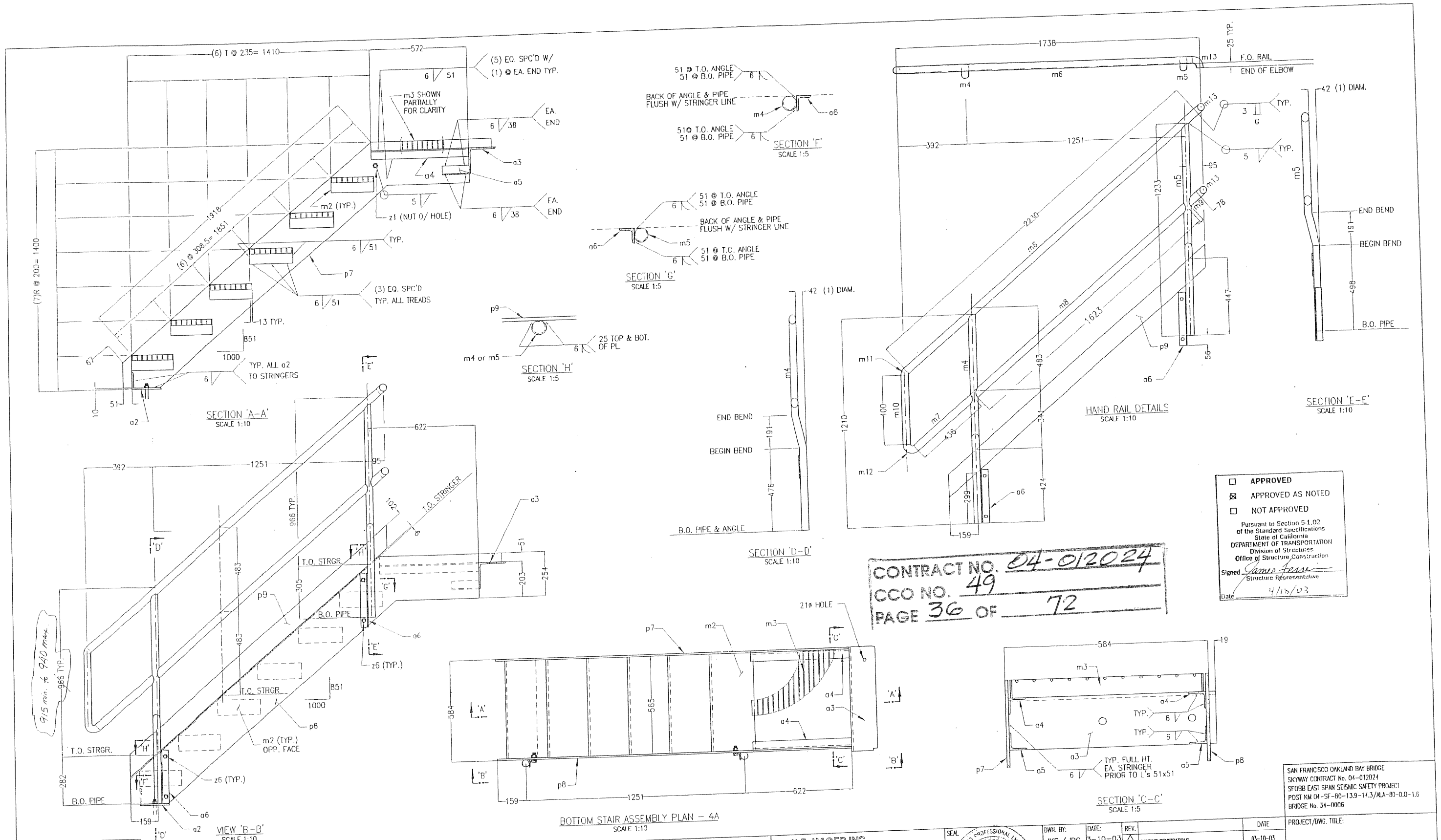

CONTRACT NO. 04-012024
CCO NO. 49
PAGE 36 OF 72

☐ APPROVED
☒ APPROVED AS NOTED
☐ NOT APPROVED

Pursuant to Section 5-1.02 of the Standard Specifications
State of California
DEPARTMENT OF TRANSPORTATION
Division of Structures
Office of Structure Construction
Signed: James Fraser
Structure Representative
Date: 4/10/03

SAN FRANCISCO OAKLAND BAY BRIDGE
SKYWAY CONTRACT No. 04-012024
SFOBB EAST SPAN SEISMIC SAFETY PROJECT
POST KM 04-SF-80-13.9-14.3/ALA-80-0.0-1.6
BRIDGE No. 34-0006

PROJECT/DWG. TITLE:

DWN. BY:	DATE:	REV.		DATE
JKS / IDG	3-10-03	1	CONDUIT PENETRATIONS	03-10-03
CHK'D. BY:	DATE:			
APRV'D. BY:	DATE:			
FINISH:				
SCALE: AS NOTED				

JOB NO.: 02D02 | FILE NO.: DWG4m | DWG. NO.: 4m

DO NOT DUPLICATE WITHOUT PERMISSION

THIS PROJECT SHALL BE ERECTED PER THE AISC CODE OF STANDARD PRACTICE SPECIFICALLY PARAGRAPH 7.12 AS FOLLOWS:
7.12 CORRECTION OF ERRORS
THE CORRECTION OF MINOR MISFITS BY MODERATE AMOUNTS OF REAMING, GRINDING, WELDING OR CUTTING, AND THE DRAWING OF ELEMENTS INTO LINE WITH DRIFT PINS, SHALL BE CONSIDERED TO BE NORMAL ERECTION OPERATIONS. ERRORS THAT CANNOT BE CORRECTED USING FOREGOING MEANS, OR THAT REQUIRE MAJOR CHANGES IN MEMBER OR CONNECTION CONFIGURATION, SHALL BE PROMPTLY REPORTED TO THE OWNER'S DESIGNATED REPRESENTATIVES FOR DESIGN AND CONSTRUCTION AND THE FABRICATOR BY THE ERECTOR, TO ENABLE THE RESPONSIBLE ENTITY TO EITHER CORRECT THE ERROR OR APPROVE THE MOST EFFICIENT AND ECONOMICAL METHOD OF CORRECTION TO BE USED BY OTHERS. NO BACK CHARGES WILL BE ACCEPTED UNLESS APPROVED IN WRITING BY THIS OFFICE.

GLOBAL FABRICATORS METRIC
CUSTOM EQUIPMENT MANUFACTURING
METAL FABRICATION–MACHINE SHOP
8929 ROSEDALE HWY. BAKERSFIELD CA. 93312
PHONE: (661) 589-2774 FAX: (661) 589-7504
E-MAIL engineering@globalfab.com

H.F. HAGER INC.
STRUCTURAL ENGINEERS
COMMERCIAL & INDUSTRIAL
STRUCTURAL DESIGN AND
CONSTRUCTION DOCUMENTS
1149 MARSH STREET
SAN LUIS OBISPO, CA 93401
PH# (805)541-2193 FAX# (805)541-5348
EMAIL hfhager@magnetric.com

SEAL: REGISTERED PROFESSIONAL ENGINEER HANS FRIED HAGER No. 2270 STRUCTURAL ENGINEER STATE OF CALIFORNIA
Expires 11/Nov./31/2006

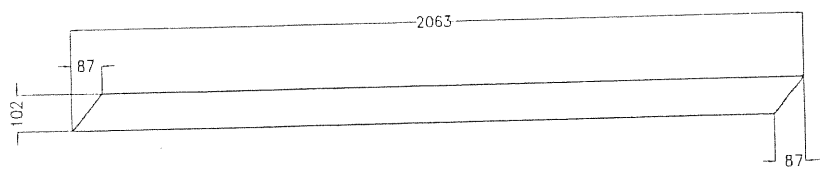

ONE TOE PLATE– p9
SCALE 1:10

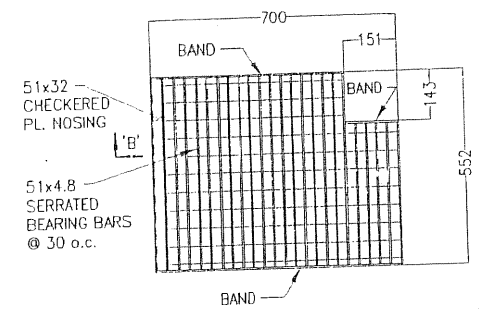

ONE UPPER LANDING GRATE– m3
SCALE 1:10

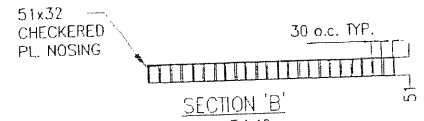

SECTION 'B'
SCALE 1:10

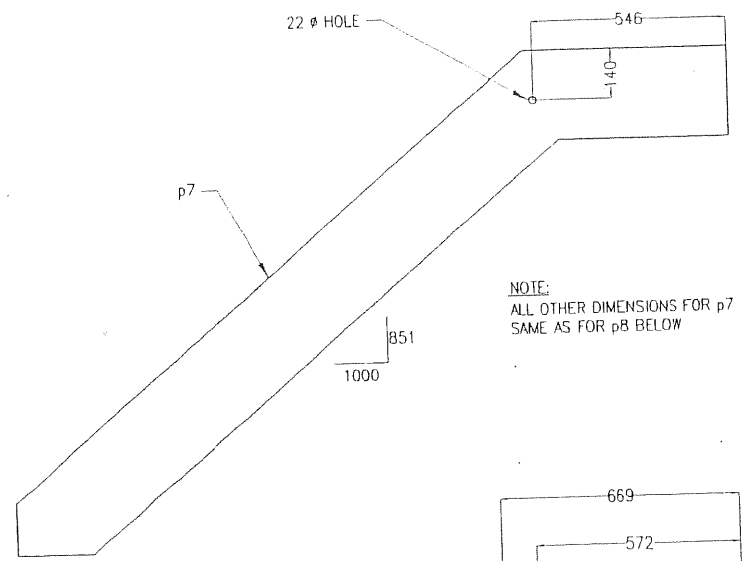

NOTE:
ALL OTHER DIMENSIONS FOR p7
SAME AS FOR p8 BELOW

ONE WALLSIDE BASE STRINGER PLATE – p7
SCALE 1:10

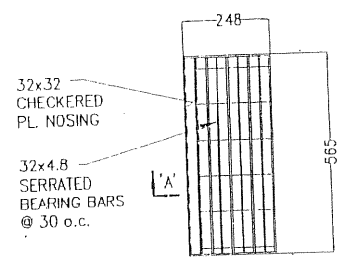

ONE STAIR TREAD– m2
SCALE 1:10

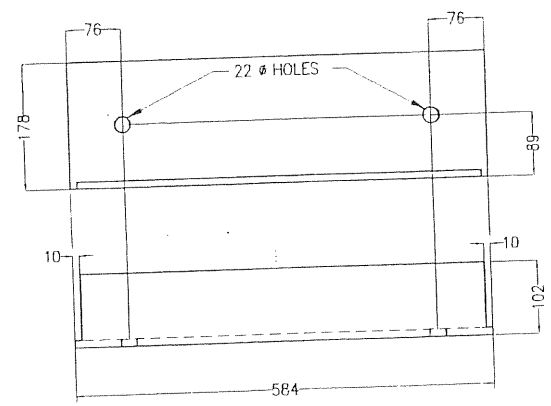

ONE BASE ANGLE – a2
SCALE 1:5

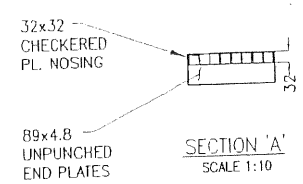

SECTION 'A'
SCALE 1:10

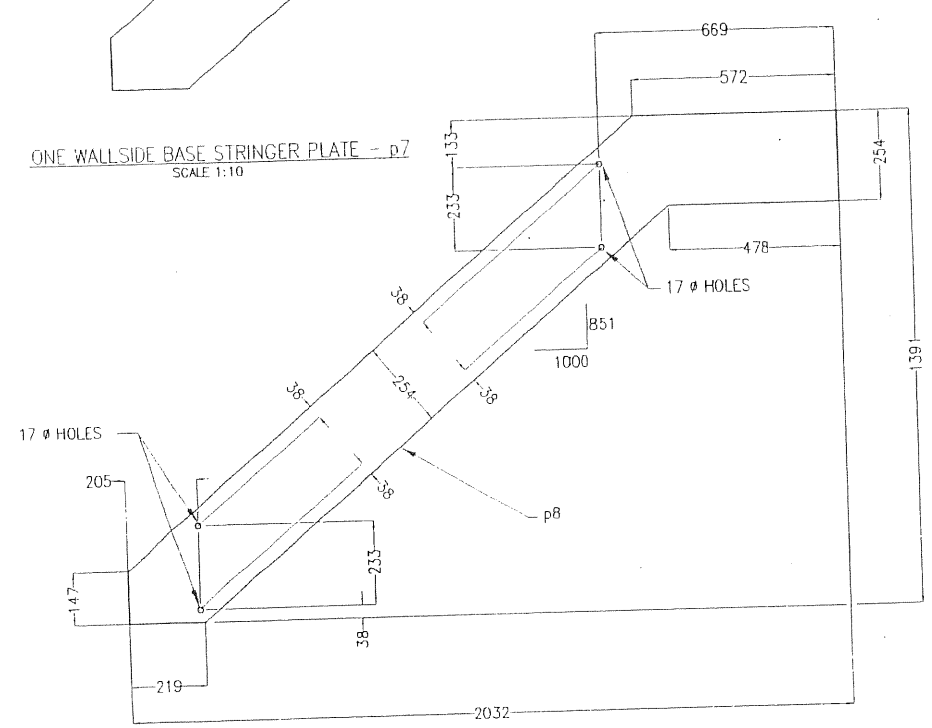

ONE CENTRAL BASE STRINGER PLATE – p8
SCALE 1:10

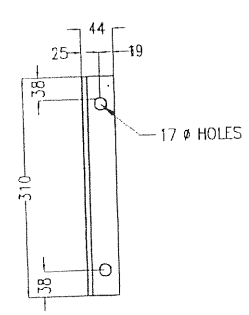

ONE ANGLE – a6
SCALE 1:5

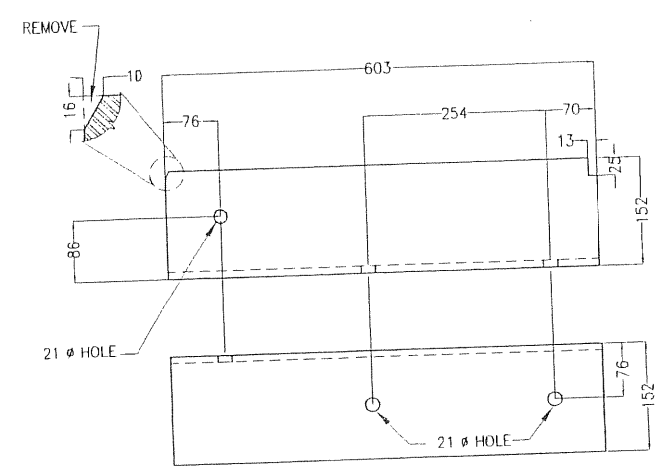

ONE UPPER SHELF ANGLE – a3
SCALE 1:5

METRIC SIZE	IMPERIAL SIZE
TREAD 32x248	TREAD 1 1/4x9 3/4
GRATING 51x4.8x700	GRATING 2x3/16x27 9/16
PIPE 38 ø Sch. 40	PIPE 1 1/2ø Sch. 40
CUT FROM 38 ø 90° ELBOW	CUT FROM 1 1/2ø 90° ELBOW
CUT FROM 38 ø 180° RETURN	CUT FROM 1 1/2ø 180° RETURN
L 178x102x9.5	L 7x4x3/8
L 152x152x9.5	L 6x6x3/8
L 51x51x6.4	L 2x2x1/4
L 44x44x6.4	L 1 3/4x1 3/4x1/4
PL. 9.5x1391	PL. 3/8x54 3/4
PL. 6.4x102	PL. 1/4x4
BOLT 19 ø (A307)	BOLT 3/4" ø (A307)
BOLT 19 ø (A325)	BOLT 3/4" ø (A325)
BOLT 16 ø (A325)	BOLT 5/8" ø (A325)
THREADED ROD 19 ø (B7)	THREADED ROD 3/4"ø (B7)

BILL OF MATERIALS

SHIP MK.	PIECE MARK	QTY.	DESCRIPTION (Imperial Size)	CUT LENGTH (mm.)	COMMENT
4A		28	BOTTOM STAIR ASSEMBLY		
	m2	168	TREAD 1 1/4x9 3/4	565	IKG WB-6
	m3	28	GRATING 2x3/16x27 9/16	552	IKG WF-10
	m4	28	PIPE 1 1/2ø Sch. 40	1210	
	m5	28	PIPE 1 1/2ø Sch. 40	1233	
	m6	28	PIPE 1 1/2ø Sch. 40	2230	
	m7	28	PIPE 1 1/2ø Sch. 40	436	
	m8	28	PIPE 1 1/2ø Sch. 40	1623	
	m9	28	PIPE 1 1/2ø Sch. 40	78	
	m10	28	PIPE 1 1/2ø Sch. 40	400	
	m11	28	CUT FROM 1 1/2ø 90° ELBOW		
	m12	28	CUT FROM 1 1/2ø 180° RETURN		
	m13	56	CUT FROM 1 1/2ø 90° ELBOW		
	a2	28	L 7x4x3/8	584	
	a3	28	L 6x6x3/8	603	
	a4	56	L 2x2x1/4	572	
	a5	56	L 2x2x1/4	152	
	a6	56	L 1 3/4x1 3/4x1/4	310	
	p7	28	PL. 3/8x54 3/4	2032	
	p8	28	PL. 3/8x54 3/4	2032	
	p9	28	PL. 1/4x4	2063	
	z1	28	BOLT 3/4" ø (A307)	95	w/n
	z5	56	BOLT 3/4" ø (A325)	57	w/n & w
	z6	112	BOLT 5/8" ø (A325)	45	w/n & w
			FIELD BOLTS		
4Z3		56	THREADED ROD 3/4"ø (B7)	191	w/n & w

☒ APPROVED
☐ APPROVED AS NOTED
☐ NOT APPROVED

Pursuant to Section 5-1.02
of the Standard Specifications
State of California
DEPARTMENT OF TRANSPORTATION
Division of Structures
Office of Structure Construction
Signed James Fern
Structure Representative
Date 4/13/03

CONTRACT NO. 04-012024
CCO NO. 49
PAGE 37 OF 72

SAN FRANCISCO OAKLAND BAY BRIDGE
SKYWAY CONTRACT No. 04-012024
SFOBB EAST SPAN SEISMIC SAFETY PROJECT
POST KM 04-SF-80-13.9-14.3/ALA-80-0.0-1.6
BRIDGE No. 34-0006

DO NOT DUPLICATE WITHOUT PERMISSION

THIS PROJECT SHALL BE ERECTED PER THE AISC CODE OF STANDARD PRACTICE SPECIFICALLY PARAGRAPH 7.12 AS FOLLOWS:
7.12 CORRECTION OF ERRORS
THE CORRECTION OF MINOR MISFITS BY MODERATE AMOUNTS OF REAMING, GRINDING, WELDING OR CUTTING, AND THE DRAWING OF ELEMENTS INTO LINE WITH DRIFT PINS, SHALL BE CONSIDERED TO BE NORMAL ERECTION OPERATIONS. ERRORS THAT CANNOT BE CORRECTED USING FOREGOING MEANS, OR THAT REQUIRE MAJOR CHANGES IN MEMBER OR CONNECTION CONFIGURATION, SHALL BE PROMPTLY REPORTED TO THE OWNER'S DESIGNATED REPRESENTATIVES FOR DESIGN AND CONSTRUCTION AND THE FABRICATOR BY THE ERECTOR, TO ENABLE THE RESPONSIBLE ENTITY TO EITHER CORRECT THE ERROR OR APPROVE THE MOST EFFICIENT AND ECONOMICAL METHOD OF CORRECTION TO BE USED BY OTHERS. NO BACK CHARGES WILL BE ACCEPTED UNLESS APPROVED IN WRITING BY THIS OFFICE.

GLOBAL FABRICATORS
METRIC
CUSTOM EQUIPMENT MANUFACTURING
METAL FABRICATION–MACHINE SHOP
8929 ROSEDALE HWY. BAKERSFIELD CA. 93312
PHONE: (661) 589-2774 FAX: (661) 589-7504
E-MAIL engineering@globalfab.com

H.F. MAGER INC.
STRUCTURAL ENGINEERS
COMMERCIAL & INDUSTRIAL
STRUCTURAL DESIGN AND
CONSTRUCTION DOCUMENTS
1149 MARSH STREET
SAN LUIS OBISPO, CA 93401
PH# (805)541-2193 FAX# (805)541-5346
EMAIL hans@magerstruc.com

SEAL: REGISTERED PROFESSIONAL ENGINEER HANS FREDERICK MAGER No. 2570 STRUCTURAL ENGINEERING STATE OF CALIFORNIA
Mar. 10, 2003
Expires Mar. 31, 2006

DWN. BY: JKS / IDG	DATE: 3-10-03	REV.		DATE
CHK'D. BY: HFM	DATE:	1	CONDUIT PENETRATIONS	03-10-03
APRV'D. BY:	DATE:			
FINISH:				
SCALE: AS NOTED				

PROJECT/DWG. TITLE:

JOB NO.:	FILE NO.:	DWG. NO.:
02D02	DWG4ma	4ma

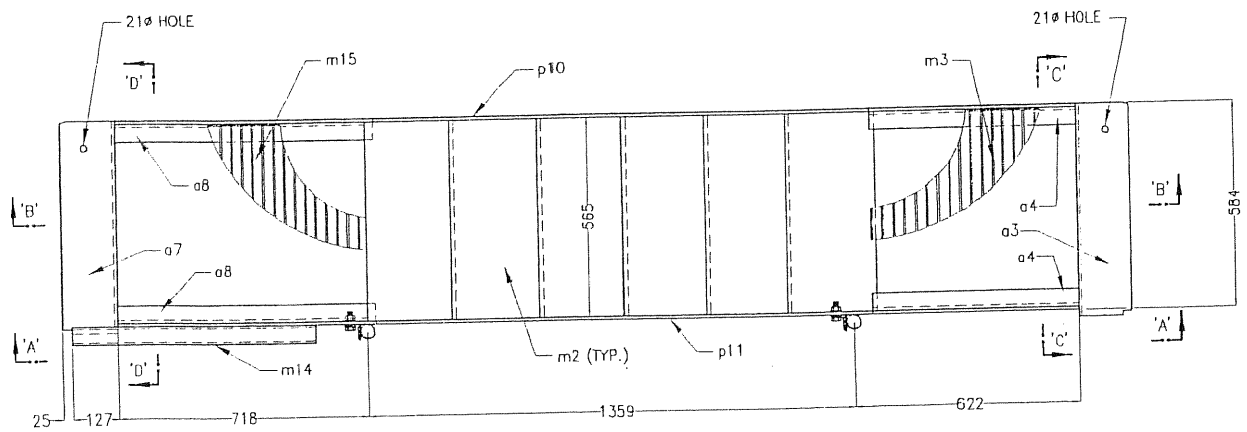

REPETITIVE STAIR ASSEMBLY PLAN – 5A
SCALE 1:10

METRIC SIZE	IMPERIAL SIZE
TREAD 32x248	TREAD 1 1/4x9 3/4
GRATING 51x4.8x700	GRATING 2x3/16x27 9/16
GRATING 51x4.8x879	GRATING 2x3/16x34 5/8"
PIPE 38 ø Sch. 40	PIPE 1 1/2ø Sch. 40
CUT FROM 38 ø 90° ELBOW	CUT FROM 1 1/2ø 90° ELBOW
TS 51x51x4.8	TS 2x2x3/16
L 152x152x9.5	L 6x6x3/8
L 51x51x6.4	L 2x2x1/4
L 44x44x6.4	L 1 3/4x1 3/4x1/4
PL 9.5x1654	PL 3/8x65 1/8
PL 6.4x102	PL 1/4x4
BOLT 19 ø (A307)	BOLT 3/4" ø (A307)
BOLT 19 ø (A325)	BOLT 3/4" ø (A325)
BOLT 16 ø (A325)	BOLT 5/8" ø (A325)

☒ APPROVED
☐ APPROVED AS NOTED
☐ NOT APPROVED

Pursuant to Section fi-1.02 of the Standard Specifications State of California DEPARTMENT OF TRANSPORTATION Division of Structures Office of Structure Construction
Signed: James Fan
Structure Representative
Date: 4/13/04

BILL OF MATERIALS

SHIP MK.	PIECE MARK	QTY.	DESCRIPTION (Imperial Size)	CUT LENGTH (mm.)	COMMENT
5A		306	REPET. STAIR ASSMEMBLY		
	m2	1836	TREAD 1 1/4x9 3/4	565	IKG WB-6
	m3	306	GRATING 2x3/16x27 9/16"	552	IKG WF-10
	p6	612	PIPE 1 1/2ø Sch. 40	1233	
	p8	306	PIPE 1 1/2ø Sch. 40	78	
	m13	1224	CUT FROM 1 1/2ø 90° ELBOW		
	m14	306	TS 2x2x3/16	673	
	m15	306	GRATING 2x3/16x34 5/8"	552	IKG WF-10
	m16	306	PIPE 1 1/2ø Sch. 40	724	
	m17	306	PIPE 1 1/2ø Sch. 40	203	
	m18	306	PIPE 1 1/2ø Sch. 40	1765	
	a3	306	L 6x6x3/8	603	
	a4	612	L 2x2x1/4	572	
	a5	1224	L 2x2x1/4	152	
	a6	612	L 1-3/4x1-3/4x-1/4	310	
	a7	306	L 6x6x3/8	603	
	a8	612	L 2x2x1/4	740	
	p10	306	PL. 3/8x65 1/8	2699	
	p11	306	PL. 3/8x65 1/8	2699	
	p12	306	PL. 1/4x4	2246	
	z1	612	BOLT 3/4" ø (A307)	95	w/n
	z5	1224	BOLT 3/4" ø (A325)	57	w/n & w
	z6	1224	BOLT 5/8" ø (A325)	45	w/n & w

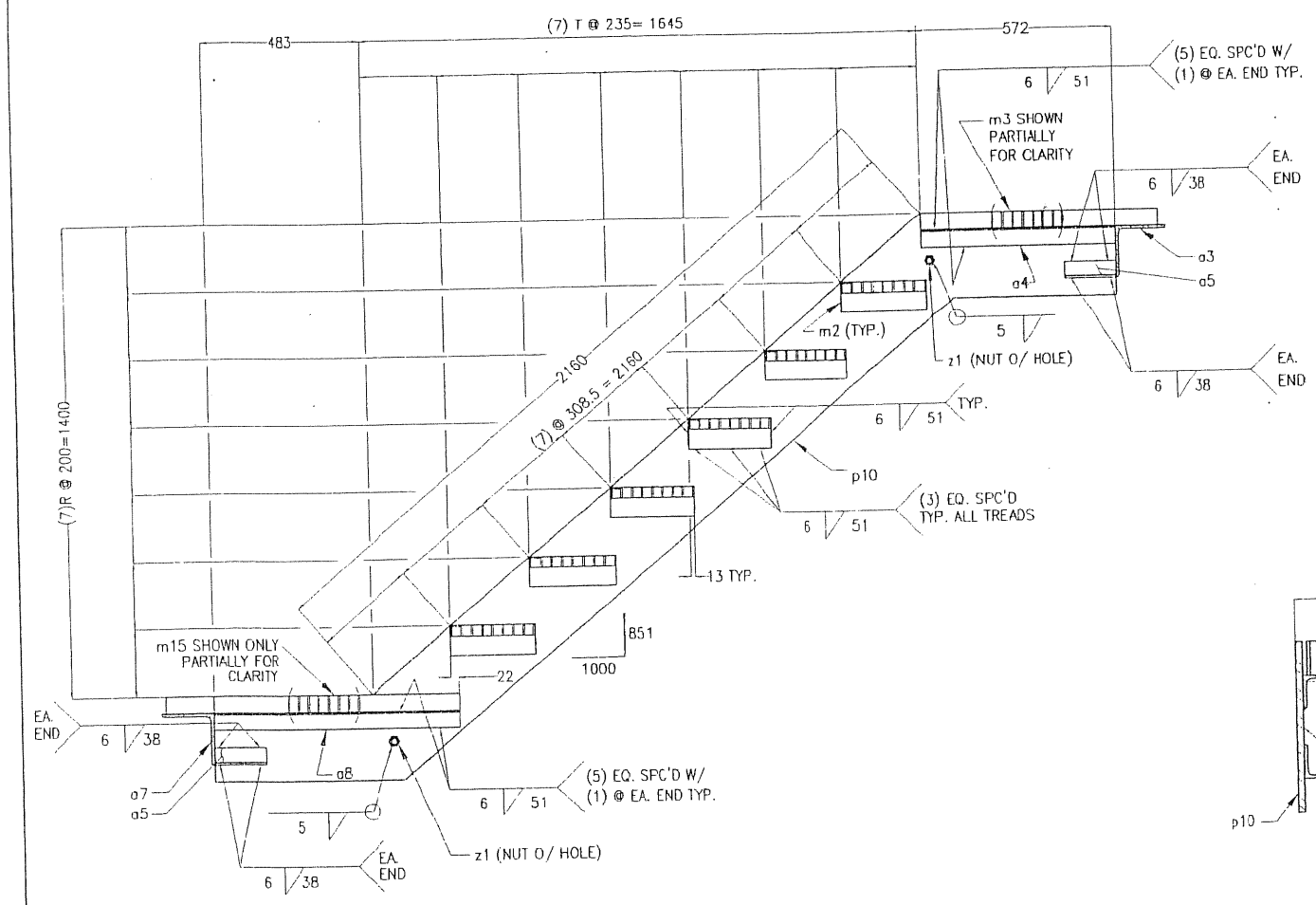

SECTION 'B-B'
SCALE 1:10

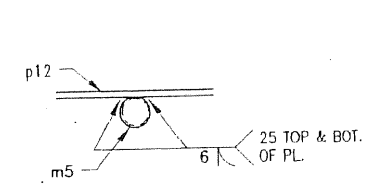

SECTION 'H'
SCALE 1:5

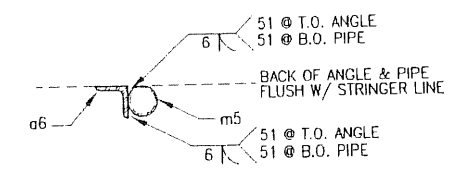

SECTION 'G'
SCALE 1:5

CONTRACT NO. 04-012024
CCO NO. 49
PAGE 38 OF 72

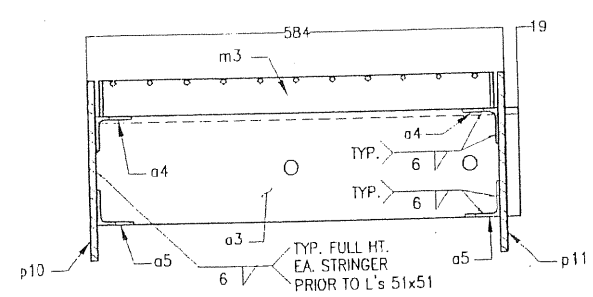

SECTION 'C-C'
SCALE 1:5

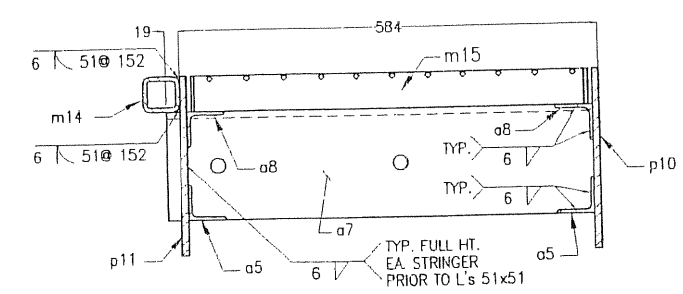

SECTION 'D-D'
SCALE 1:5

SAN FRANCISCO OAKLAND BAY BRIDGE
SKYWAY CONTRACT No. 04-012024
SF09B EAS" SPAN SEISMIC SAFETY PROJECT
POST KM D4-SF-80-13.9-14.3/ALA-80-0.0-1.6
BRIDGE No. 34-0006

DO NOT DUPLICATE WITHOUT PERMISSION

THIS PROJECT SHALL BE ERECTED PER THE AISC CODE OF STANDARD PRACTICE SPECIFICALLY PARAGRAPH 7.12 AS FOLLOWS:
7.12 CORRECTION OF ERRORS
THE CORRECTION OF MINOR MISFITS BY MODERATE AMOUNTS OF REAMING, GRINDING, WELDING OR CUTTING, AND THE DRAWING OF ELEMENTS INTO LINE WITH DRIFT PINS, SHALL BE CONSIDERED TO BE NORMAL ERECTION OPERATIONS. ERRORS THAT CANNOT BE CORRECTED USING FOREGOING MEANS, OR THAT REQUIRE MAJOR CHANGES IN MEMBER OR CONNECTION CONFIGURATION, SHALL BE PROMPTLY REPORTED TO THE OWNER'S DESIGNATED REPRESENTATIVES FOR DESIGN AND CONSTRUCTION AND THE FABRICATOR BY THE ERECTOR, TO ENABLE THE RESPONSIBLE ENTITY TO EITHER CORRECT THE ERROR OR APPROVE THE MOST EFFICIENT AND ECONOMICAL METHOD OF CORRECTION TO BE USED BY OTHERS. NO BACK CHARGES WILL BE ACCEPTED UNLESS APPROVED IN WRITING BY THIS OFFICE.

GLOBAL FABRICATORS
METRIC
CUSTOM EQUIPMENT MANUFACTURING
METAL FABRICATION-MACHINE SHOP
8929 ROSEDALE HWY. BAKERSFIELD CA. 93312
PHONE: (661) 589-2774 FAX: (661) 589-7504
E-MAIL engineering@globalfab.com

H.F. HAGER INC.
STRUCTURAL ENGINEERS
COMMERCIAL & INDUSTRIAL
STRUCTURAL DESIGN AND
CONSTRUCTION DOCUMENTS
1149 MARSH STREET
SAN LUIS OBISPO, CA 93401
PH# (805)541-2193 FAX# (805)541-5348
EMAIL hfhe@hagerstinc.com

SEAL: REGISTERED PROFESSIONAL ENGINEER HANS FRED HAGER S 2376 STRUCTURAL ENGINEER STATE OF CALIFORNIA
Expires 31 Mar. 2006

DWN. BY:	DATE:	REV.		DATE
JKS	3-11-03	1	CONDUIT PENETRATIONS	03-11-03
CHK'D. BY: HHH	DATE:			
APRV'D. BY:	DATE:			
FINISH:				
SCALE: AS NOTED				

PROJECT/DWG. TITLE:

JOB NO.:	FILE NO.:	DWG. NO.:
02D02	DWG5m	5m

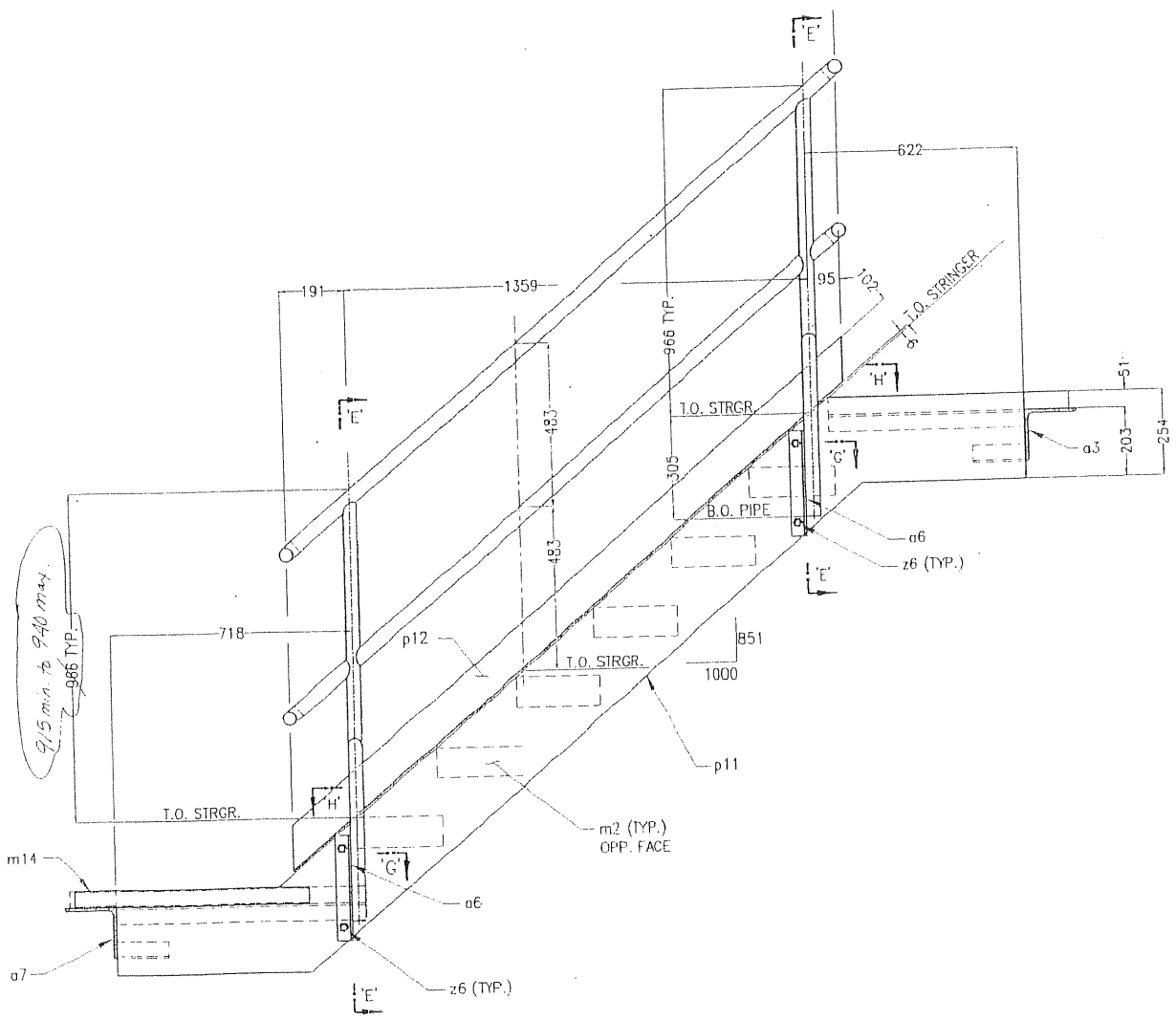

VIEW 'A-A'
SCALE 1:10

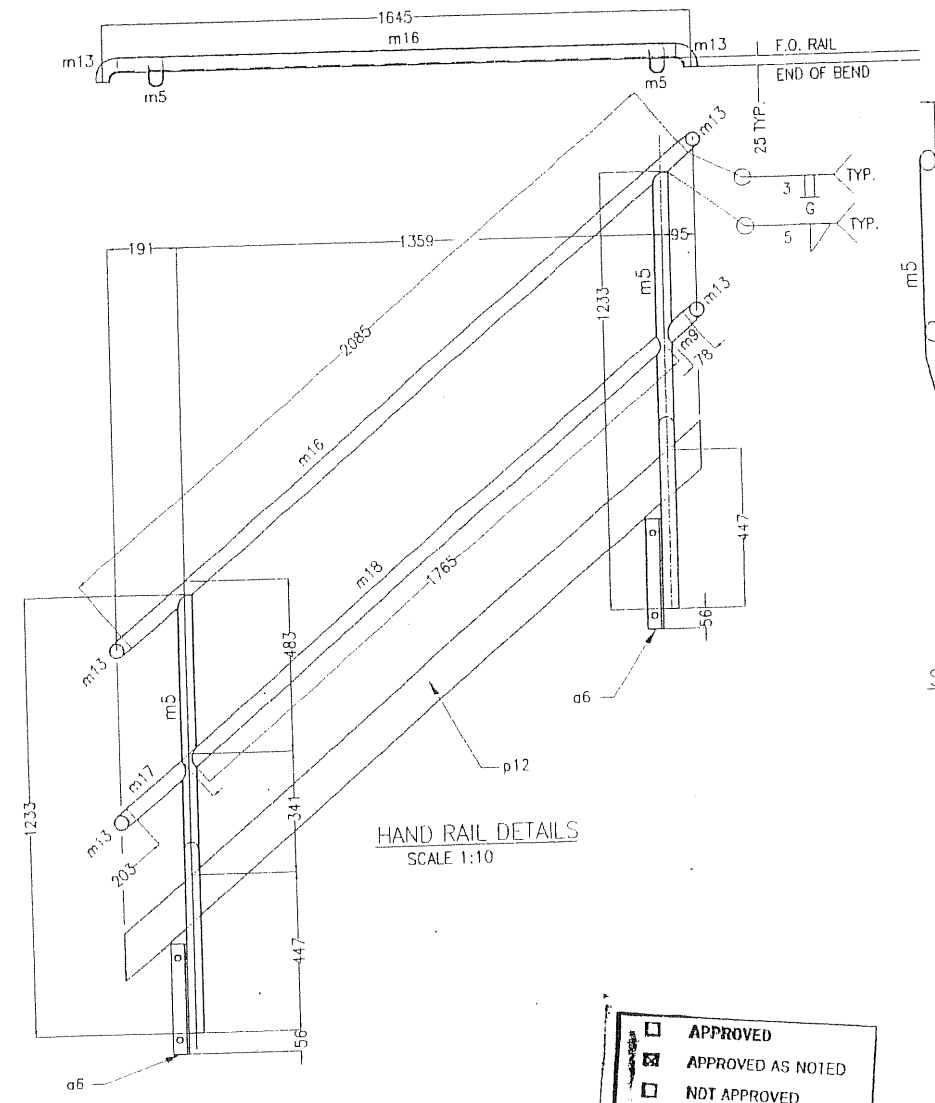

HAND RAIL DETAILS
SCALE 1:10

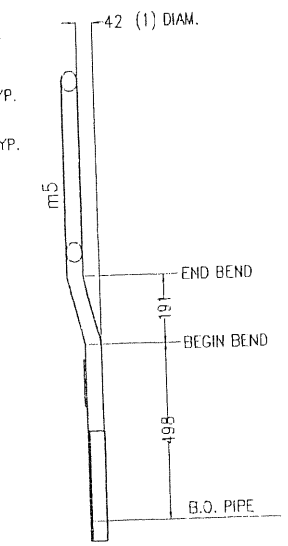

SECTION 'E-E'
SCALE 1:10

☐ APPROVED
☒ APPROVED AS NOTED
☐ NOT APPROVED

Pursuant to Section 5-1.02 of the Standard Specifications
State of California
DEPARTMENT OF TRANSPORTATION
Division of Structures
Office of Structure Construction

Signed James Fuse
Structure Representative

Date 4/18/03

CONTRACT NO. 04-012024
CCO NO. 49
PAGE 39 OF 72

SAN FRANCISCO OAKLAND BAY BRIDGE
SKYWAY CONTRACT No. 04-012024
SFOBB EAST SPAN SEISMIC SAFETY PROJECT
POST KM 04-SF-80-13.9-14.3/ALA-80-0.0-1.6
BRIDGE No. 34-0005

DO NOT DUPLICATE WITHOUT PERMISSION

THIS PROJECT SHALL BE ERECTED PER THE AISC CODE OF STANDARD PRACTICE SPECIFICALLY PARAGRAPH 7.12 AS FOLLOWS:
7.12 CORRECTION OF ERRORS
THE CORRECTION OF MINOR MISFITS BY MODERATE AMOUNTS OF REAMING, GRINDING, WELDING OR CUTTING, AND THE DRAWING OF ELEMENTS INTO LINE WITH DRIFT PINS, SHALL BE CONSIDERED TO BE NORMAL ERECTION OPERATIONS. ERRORS THAT CANNOT BE CORRECTED USING FOREGOING MEANS, OR THAT REQUIRE MAJOR CHANGES IN MEMBER OR CONNECTION CONFIGURATION, SHALL BE PROMPTLY REPORTED TO THE OWNER'S DESIGNATED REPRESENTATIVES FOR DESIGN AND CONSTRUCTION AND THE FABRICATOR BY THE ERECTOR, TO ENABLE THE RESPONSIBLE ENTITY TO EITHER CORRECT THE ERROR OR APPROVE THE MOST EFFICIENT AND ECONOMICAL METHOD OF CORRECTION TO BE USED BY OTHERS. NO BACK CHARGES WILL BE ACCEPTED UNLESS APPROVED IN WRITING BY THIS OFFICE.

GLOBAL FABRICATORS
METRIC
CUSTOM EQUIPMENT MANUFACTURING
METAL FABRICATION—MACHINE SHOP
8929 ROSEDALE HWY. BAKERSFIELD CA. 93312
PHONE: (661) 589-2774 FAX: (661) 589-7504
E-MAIL engineering@globalfab.com

H.F. NAGER INC.
STRUCTURAL ENGINEERS
COMMERCIAL & INDUSTRIAL
STRUCTURAL DESIGN AND
CONSTRUCTION DOCUMENTS
1149 MARSH STREET
SAN LUIS OBISPO, CA 93401
PH# (805)541-2183 FAX# (805)541-5346
EMAIL hanager@magernetric.com

SEAL: H.F. Nager, S 2376, Mar. 11, 2002, Structural Engineer, State of California
Expiration Date: 31, 2006

DWN. BY:	DATE:	REV.		DATE
JKS	3-11-03	1	CONDUIT PENETRATIONS	03-11-03
CHK'D. BY: HM	DATE:			
APRV'D. BY:	DATE:			
FINISH:				
SCALE: AS NOTED				

PROJECT/DWG. TITLE:

JOB NO.:	FILE NO.:	DWG. NO.:
02D02	DWG5ma	5ma

CONTRACT NO. 04-012024
CCO NO. 49
PAGE 40 OF 72

☒ APPROVED
☐ APPROVED AS NOTED
☐ NOT APPROVED

Pursuant to Section 5-1.02 of the Standard Specifications State of California
DEPARTMENT OF TRANSPORTATION
Division of Structures
Office of Structure Construction
Signed James Fern
Structure Representative
Date 4/13/03

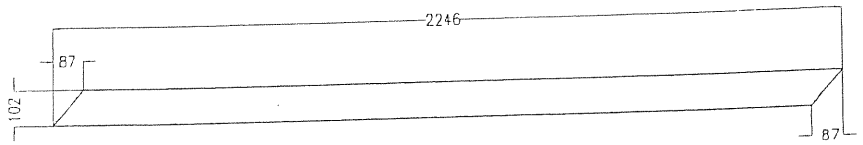

ONE TOE PLATE – p12
SCALE 1:10

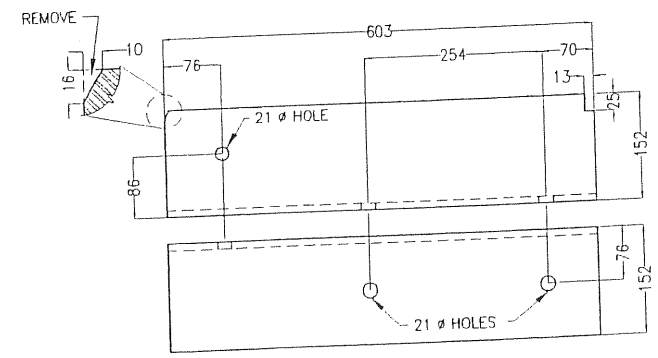

ONE UPPER SHELF ANGLE – a3
SCALE 1:5

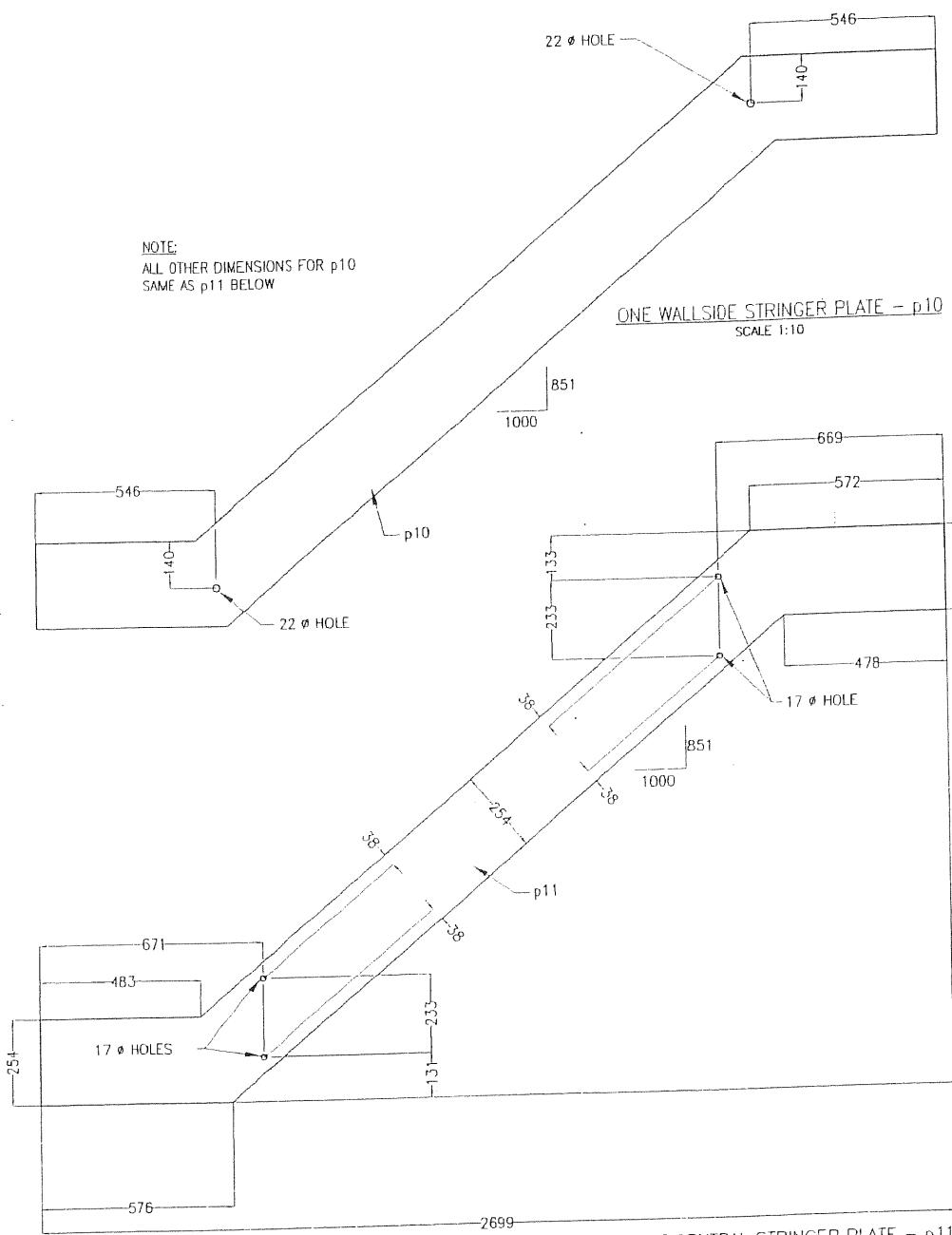

NOTE:
ALL OTHER DIMENSIONS FOR p10 SAME AS p11 BELOW

ONE WALLSIDE STRINGER PLATE – p10
SCALE 1:10

ONE CENTRAL STRINGER PLATE – p11
SCALE 1:10

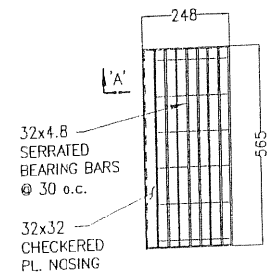

ONE STAIR TREAD – m2
SCALE 1:10

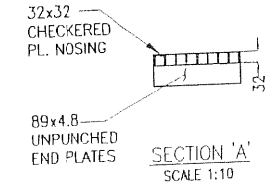

SECTION 'A'
SCALE 1:10

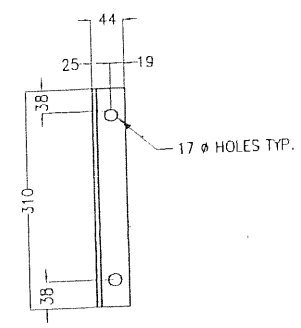

ONE ANGLE – a6
SCALE 1:5

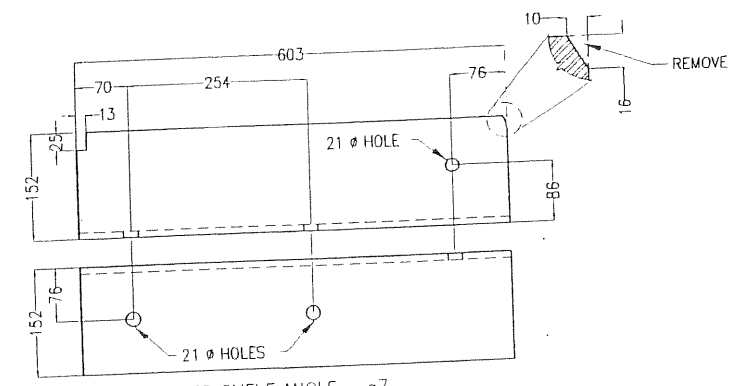

ONE LOWER SHELF ANGLE – a7
SCALE 1:5

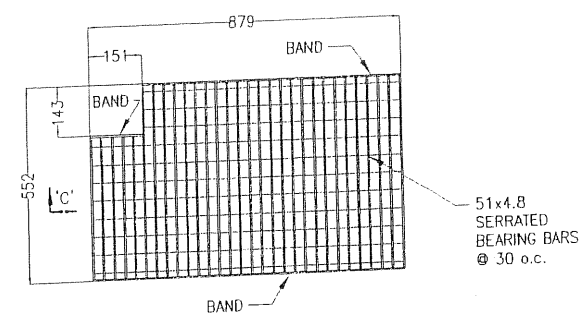

ONE LOWER LANDING GRATE – m15
SCALE 1:10

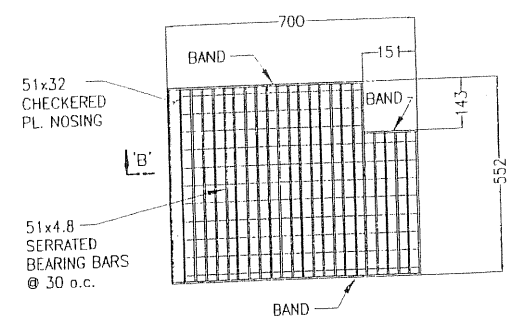

ONE UPPER LANDING GRATE – m3
SCALE 1:10

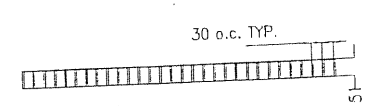

SECTION 'C'
SCALE 1:10

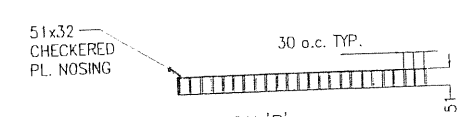

SECTION 'B'
SCALE 1:10

SAN FRANCISCO OAKLAND BAY BRIDGE
SKYWAY CONTRACT No. 04-012024
SFOBB EAST SPAN SEISMIC SAFETY PROJECT
POST KN 04-SF-80-13.9-14.3/KLA-80-0.0-1.6
BRIDGE No. 34-0006

DO NOT DUPLICATE WITHOUT PERMISSION

THIS PROJECT SHALL BE ERECTED PER THE AISC CODE OF STANDARD PRACTICE SPECIFICALLY PARAGRAPH 7.12 AS FOLLOWS:
7.12 CORRECTION OF ERRORS
THE CORRECTION OF MINOR MISFITS BY MODERATE AMOUNTS OF REAMING, GRINDING, WELDING OR CUTTING, AND THE DRAWING OF ELEMENTS INTO LINE WITH DRIFT PINS, SHALL BE CONSIDERED TO BE NORMAL ERECTION OPERATIONS. ERRORS THAT CANNOT BE CORRECTED USING FOREGOING MEANS, OR THAT REQUIRE MAJOR CHANGES IN MEMBER OR CONNECTION CONFIGURATION, SHALL BE PROMPTLY REPORTED TO THE OWNER'S DESIGNATED REPRESENTATIVES FOR DESIGN AND CONSTRUCTION AND THE FABRICATOR BY THE ERECTOR, TO ENABLE THE RESPONSIBLE ENTITY TO EITHER CORRECT THE ERROR OR APPROVE THE MOST EFFICIENT AND ECONOMICAL METHOD OF CORRECTION TO BE USED BY OTHERS. NO BACK CHARGES WILL BE ACCEPTED UNLESS APPROVED IN WRITING BY THIS OFFICE.

GLOBAL FABRICATORS
METRIC
CUSTOM EQUIPMENT MANUFACTURING
METAL FABRICATION–MACHINE SHOP
8929 ROSEDALE HWY. BAKERSFIELD CA. 93312
PHONE: (661) 589-2774 FAX: (661) 589-7504
E-MAIL engineering@globalfab.com

H.F. MAGER INC.
STRUCTURAL ENGINEERS
COMMERCIAL & INDUSTRIAL
STRUCTURAL DESIGN AND
CONSTRUCTION DOCUMENTS
1149 MARSH STREET
SAN LUIS OBISPO, CA 93401
PH/ (805)541-2193 FAX/ (805)541-5346
EMAIL hmager@magerstric.com

SEAL: REGISTERED PROFESSIONAL ENGINEER — HOWARD F. MAGER — No. 23760 — STRUCTURAL ENGINEER — STATE OF CALIFORNIA
Expiring Mar. 31, 2006

DWN. BY: JKS	DATE: 3-10-03	REV.		DATE
CHK'D. BY:	DATE:	1	CONDUIT PENETRATIONS	03-10-03
APRV'D. BY:	DATE:			
FINISH:				
SCALE: AS NOTED				

PROJECT/DWG. TITLE:

JOB NO.:	FILE NO.:	DWG. NO.:
02D02	DWG5mb	5mb

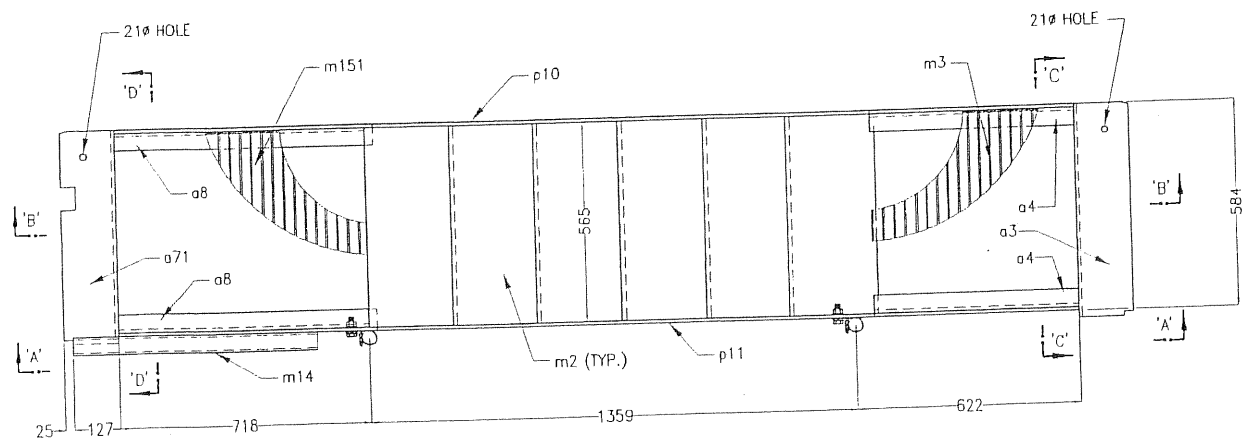

REPETITIVE STAIR ASSEMBLY PLAN – 51A
SCALE 1:10

METRIC SIZE	IMPERIAL SIZE
TREAD 32x248	TREAD 1 1/4x9 3/4
GRATING 51x4.8x700	GRATING 2x3/16x27 9/16
GRATING 51x4.8x879	GRATING 2x3/16x34 5/8"
PIPE 38 ø Sch. 40	PIPE 1 1/2ø Sch. 40
CUT FROM 38 ø 90° ELBOW	CUT FROM 1 1/2ø 90° ELBOW
TS 51x51x4.8	TS 2x2x3/16
L 152x152x9.5	L 6x6x3/8
L 51x51x6.4	L 2x2x1/4
L 44x44x6.4	L 1 3/4x1 3/4x1/4
PL. 9.5x1654	PL. 3/8x65 1/8
PL. 6.4x102	PL. 1/4x4
BOLT 19 ø (A307)	BOLT 3/4" ø (A307)
BOLT 19 ø (A325)	BOLT 3/4" ø (A325)
BOLT 16 ø (A325)	BOLT 5/8" ø (A325)

☒ APPROVED
☐ APPROVED AS NOTED
☐ NOT APPROVED

Pursuant to Section 5-1.02 of the Standard Specifications State of California DEPARTMENT OF TRANSPORTATION Division of Structures Office of Structure Construction

Signed James Jen
Structures Representative
Date 4/18/03

BILL OF MATERIALS

SHIP MK.	PIECE MARK	QTY.	DESCRIPTION (Imperial Size)	CUT LENGTH (mm.)	COMMENT
~~51A~~		31	REPET. STAIR ASSMEMBLY		
	~~m2~~	186	TREAD 1 1/4x9 3/4	565	IKG WB-6
	~~m3~~	31	GRATING 2x3/16x27 9/16"	552	IKG WF-10
	~~m6~~	62	PIPE 1 1/2ø Sch. 40	1233	
	~~m9~~	31	PIPE 1 1/2ø Sch. 40	78	
	~~m13~~	124	CUT FROM 1 1/2ø 90° ELBOW		
	~~m14~~	31	TS 2x2x3/16	673	
	~~m15~~	31	GRATING 2x3/16x34 5/8"	552	IKG WF-10
	~~m16~~	31	PIPE 1 1/2ø Sch. 40	724	
	~~m17~~	31	PIPE 1 1/2ø Sch. 40	203	
	~~m18~~	31	PIPE 1 1/2ø Sch. 40	1765	
	~~a3~~	31	L 6x6x3/8	603	
	~~a4~~	62	L 2x2x1/4	572	
	~~a5~~	124	L 2x2x1/4	152	
	~~a6~~	62	L 1-3/4x1-3/4x-1/4	310	
	~~a71~~	31	L 6x6x3/8	603	
	~~a8~~	62	L 2x2x1/4	740	
	~~p10~~	31	PL. 3/8x65 1/8	2699	
	~~p11~~	31	PL. 3/8x65 1/8	2699	
	~~p12~~	31	PL. 1/4x4	2246	
	~~z1~~	62	BOLT 3/4" ø (A307)	95	w/n
	z5	124	BOLT 3/4" ø (A325)	57	w/n & w
	~~z6~~	124	BOLT 5/8" ø (A325)	45	w/n & w

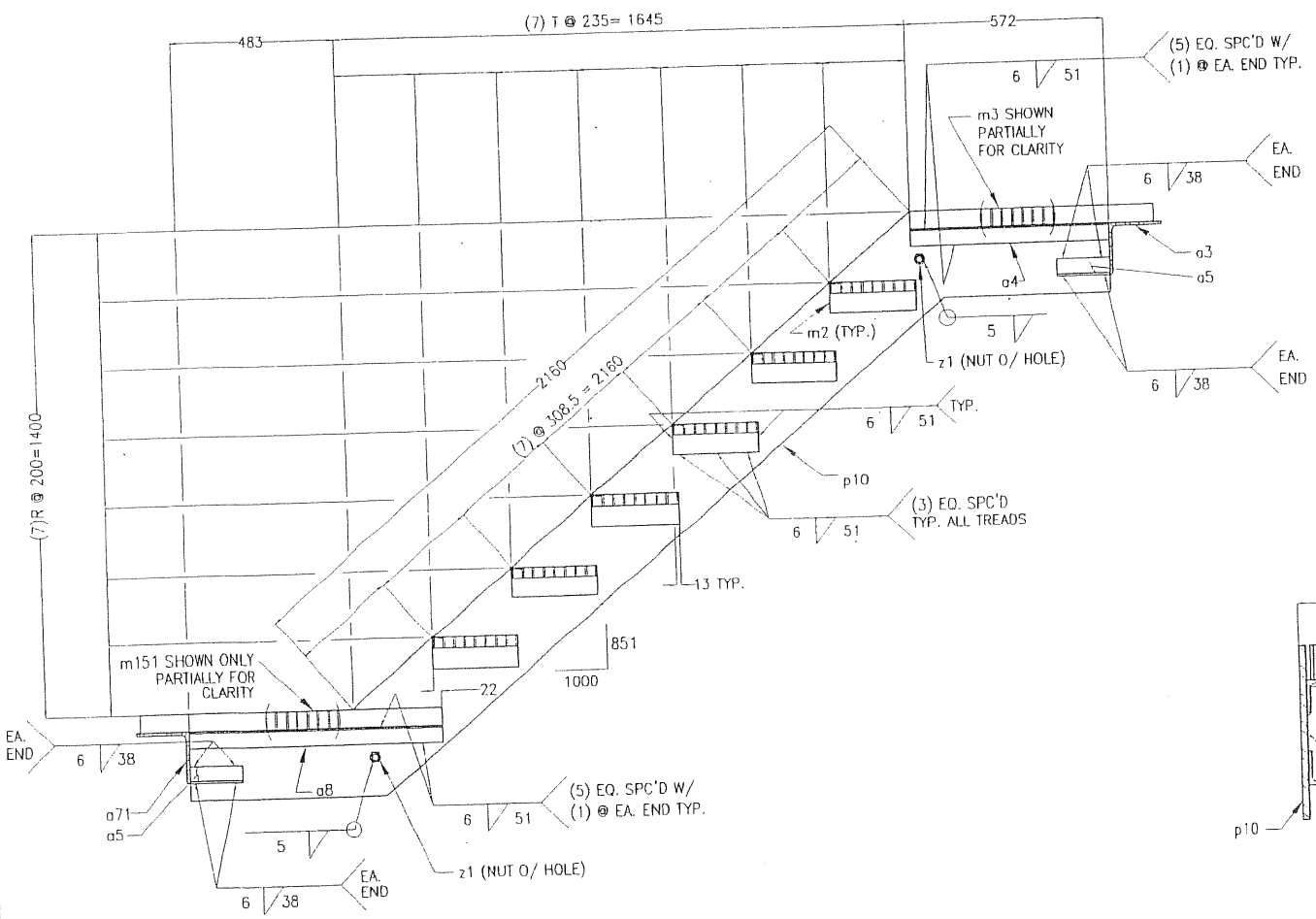

SECTION 'B-B'
SCALE 1:10

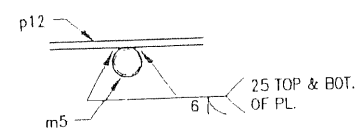

SECTION 'H'
SCALE 1:5

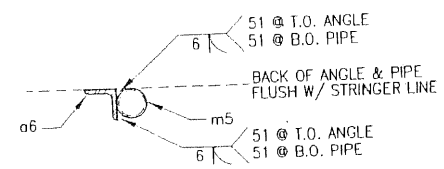

SECTION 'G'
SCALE 1:5

CONTRACT NO. 04-012024
CCO NO. 49
PAGE 41 OF 72

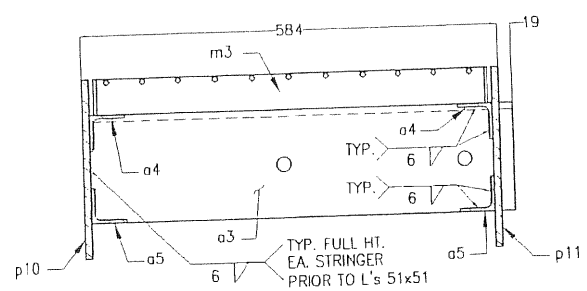

SECTION 'C-C'
SCALE 1:5

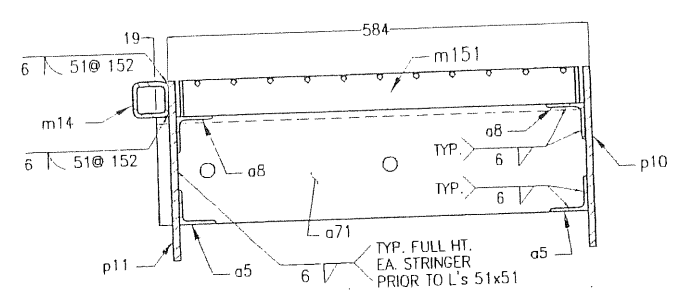

SECTION 'D-D'
SCALE 1:5

SAN FRANCISCO OAKLAND BAY BRIDGE
SKYWAY CONTRACT No. 04-012024
SFOBB EAST SPAN SEISMIC SAFETY PROJECT
POST KM 04-SF-80-13.9-14.3/ALA-80-0.0-1.6
BRIDGE No. 34-0006

PROJECT/DWG. TITLE:

DWN. BY:	DATE:	REV.		DATE
JKS	3-11-03	1	CONDUIT PENETRATIONS	03-11-03
CHK'D. BY:	DATE:			
APR'VD. BY:	DATE:			
FINISH:				
SCALE: AS NOTED				

JOB NO.: 02D02 | FILE NO.: DWG51m | DWG. NO.: 51m

DO NOT DUPLICATE WITHOUT PERMISSION

THIS PROJECT SHALL BE ERECTED PER THE AISC CODE OF STANDARD PRACTICE SPECIFICALLY PARAGRAPH 7.12 AS FOLLOWS:
7.12 CORRECTION OF ERRORS
THE CORRECTION OF MINOR MISFITS BY MODERATE AMOUNTS OF REAMING, GRINDING, WELDING OR CUTTING, AND THE DRAWING OF ELEMENTS INTO LINE WITH DRIFT PINS, SHALL BE CONSIDERED TO BE NORMAL ERECTION OPERATIONS. ERRORS THAT CANNOT BE CORRECTED USING FOREGOING MEANS, OR THAT REQUIRE MAJOR CHANGES IN MEMBER OR CONNECTION CONFIGURATION, SHALL BE PROMPTLY REPORTED TO THE OWNER'S DESIGNATED REPRESENTATIVES FOR DESIGN AND CONSTRUCTION AND THE FABRICATOR BY THE ERECTOR, TO ENABLE THE RESPONSIBLE ENTITY TO EITHER CORRECT THE ERROR OR APPROVE THE MOST EFFICIENT AND ECONOMICAL METHOD OF CORRECTION TO BE USED BY OTHERS. NO BACK CHARGES WILL BE ACCEPTED UNLESS APPROVED IN WRITING BY THIS OFFICE.

GLOBAL FABRICATORS
METRIC
CUSTOM EQUIPMENT MANUFACTURING
METAL FABRICATION-MACHINE SHOP
8829 ROSEDALE HWY. BAKERSFIELD CA. 93312
PHONE: (661) 589-2774 FAX: (661) 589-7504
E-MAIL engineering@globalfab.com

H.F. MAGER INC.
STRUCTURAL ENGINEERS
COMMERCIAL & INDUSTRIAL
STRUCTURAL DESIGN AND
CONSTRUCTION DOCUMENTS
1149 MARSH STREET
SAN LUIS OBISPO, CA 93401
PH# (805)541-2193 FAX# (805)541-5348
EMAIL hmm@magerstruc.com

SEAL
Expires Mar. 31, 2006

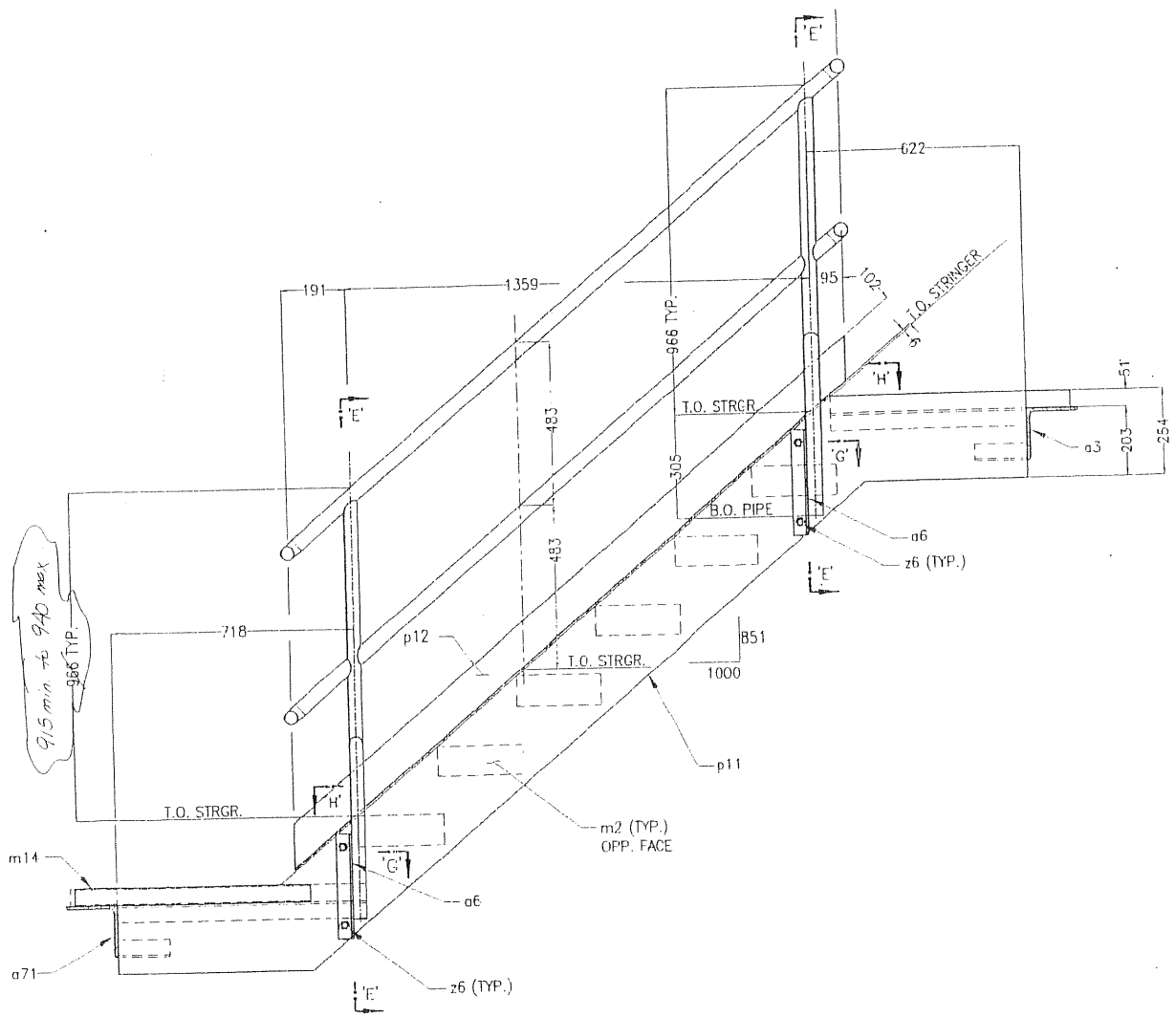

VIEW 'A-A'
SCALE 1:10

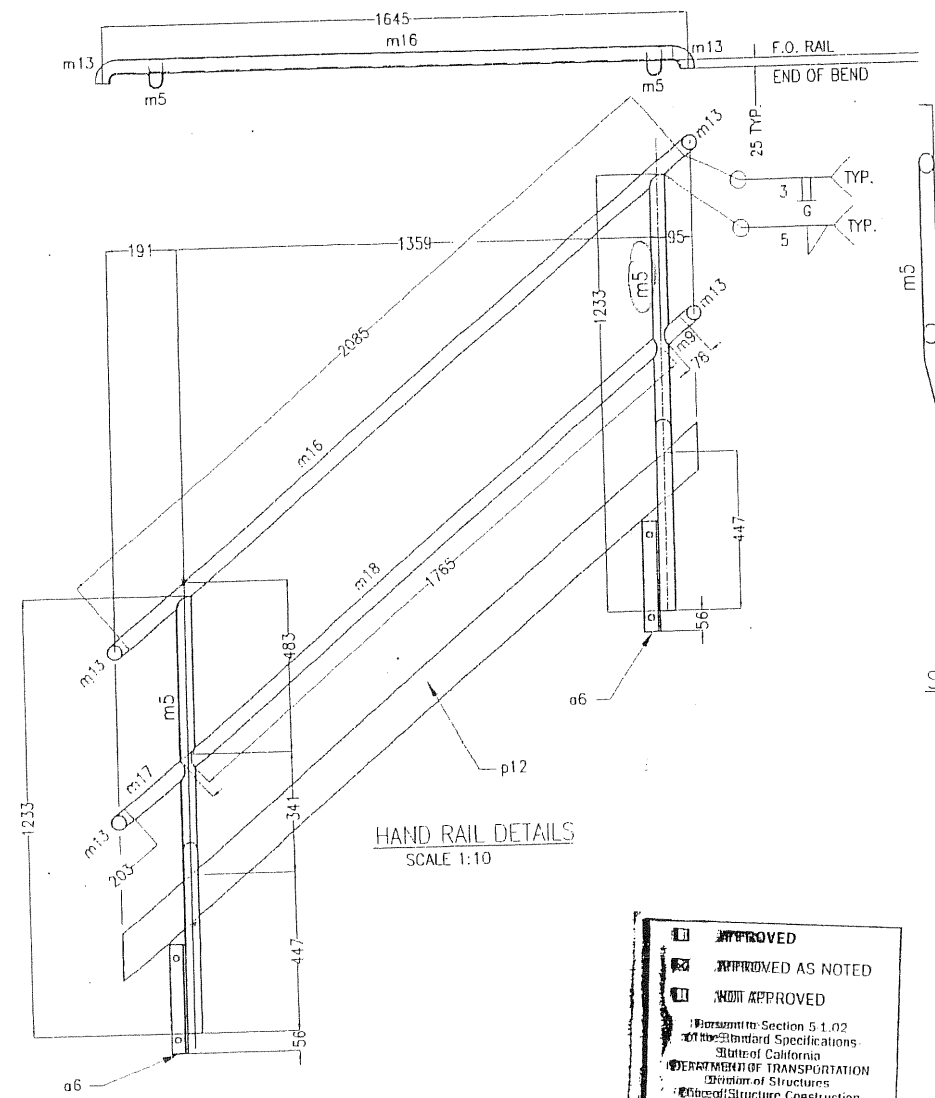

HAND RAIL DETAILS
SCALE 1:10

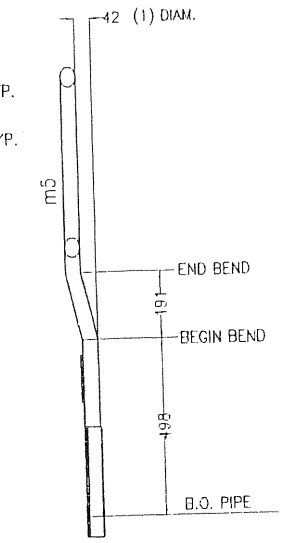

SECTION 'E-E'
SCALE 1:10

☐ APPROVED
☒ APPROVED AS NOTED
☐ NOT APPROVED
Pursuant to Section 5.1.02 of the Standard Specifications
State of California
DEPARTMENT OF TRANSPORTATION
Division of Structures
Office of Structure Construction
Signature: James Fei
Structure Representative
Date: 4/18/03

CONTRACT NO. 04-012024
CCO NO. 49
PAGE 42 OF 72

SAN FRANCISCO OAKLAND BAY BRIDGE
SKYWAY CONTRACT No. 04-012024
SFOBB EAST SPAN SEISMIC SAFETY PROJECT
POST KM 04-SF-80-13.9-14.3/ALA-80-0.0-1.6
BRIDGE No. 34-0006

PROJECT/DWG. TITLE:

DWN. BY:	DATE:	REV.		DATE
JKS	3-11-03	1	CONDUIT PENETRATIONS	03-11-03
CHK'D. BY:	DATE:			
APRV'D. BY:	DATE:			
FINISH:				
SCALE: AS NOTED				

JOB NO.: 02002 | FILE NO.: DWG51mod | DWG. NO.: 51mo

DO NOT DUPLICATE WITHOUT PERMISSION

THIS PROJECT SHALL BE ERECTED PER THE AISC CODE OF STANDARD PRACTICE SPECIFICALLY PARAGRAPH 7.12 AS FOLLOWS:
7.12 CORRECTION OF ERRORS
THE CORRECTION OF MINOR MISFITS BY MODERATE AMOUNTS OF REAMING, GRINDING, WELDING OR CUTTING, AND THE DRAWING OF ELEMENTS INTO LINE WITH DRIFT PINS, SHALL BE CONSIDERED TO BE NORMAL ERECTION OPERATIONS. ERRORS THAT CANNOT BE CORRECTED USING FOREGOING MEANS, OR THAT REQUIRE MAJOR CHANGES IN MEMBER OR CONNECTION CONFIGURATION, SHALL BE PROMPTLY REPORTED TO THE OWNER'S DESIGNATED REPRESENTATIVES FOR DESIGN AND CONSTRUCTION AND THE FABRICATOR BY THE ERECTOR TO ENABLE THE RESPONSIBLE ENTITY TO EITHER CORRECT THE ERROR OR APPROVE THE MOST EFFICIENT AND ECONOMICAL METHOD OF CORRECTION TO BE USED BY OTHERS. NO ERRORS SHALL BE ACCEPTED UNLESS APPROVED IN WRITING BY THIS OFFICE.

GLOBAL FABRICATORS
METRIC
CUSTOM EQUIPMENT MANUFACTURING
METAL FABRICATION--MACHINE SHOP
8929 ROSEDALE HWY, BAKERSFIELD CA. 93312
PHONE: (661) 589-2774 FAX: (661) 589-7504
E-MAIL engineering@globalfab.com

H.F. MAGER INC.
STRUCTURAL ENGINEERS
COMMERCIAL & INDUSTRIAL
STRUCTURAL DESIGN AND
CONSTRUCTION DOCUMENTS
1149 MARSH STREET
SAN LUIS OBISPO, CA 93401
PH# (805)541-2193 FAX# (805)541-5346
EMAIL hmg@magerstruc.com

SEAL: Expires Mar. 31, 2005

CONTRACT NO. 04-012024
CCO NO. 49
PAGE 43 OF 72

☐ APPROVED
☒ APPROVED AS NOTED
☐ NOT APPROVED

Pursuant to Section 5-1.02 of the Standard Specifications
State of California
DEPARTMENT OF TRANSPORTATION
Division of Structures
Office of Structure Construction
Signed James Fern
Structure Representative
Date 4/18/03

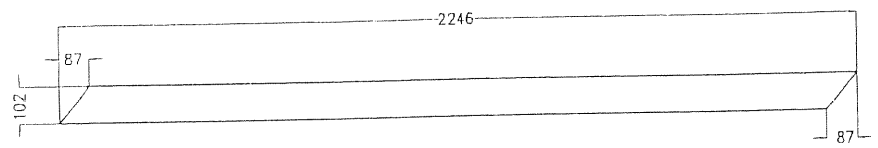

ONE TOE PLATE – p12
SCALE 1:10

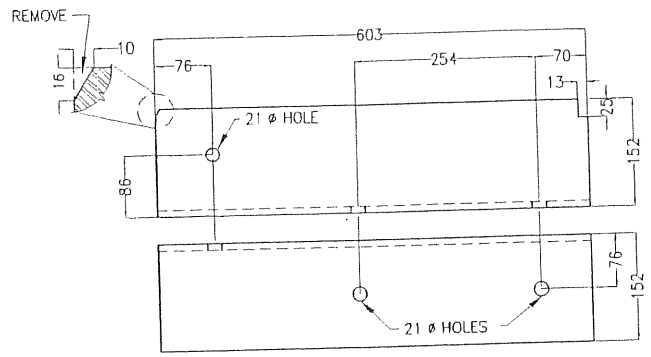

ONE UPPER SHELF ANGLE – a3
SCALE 1:5

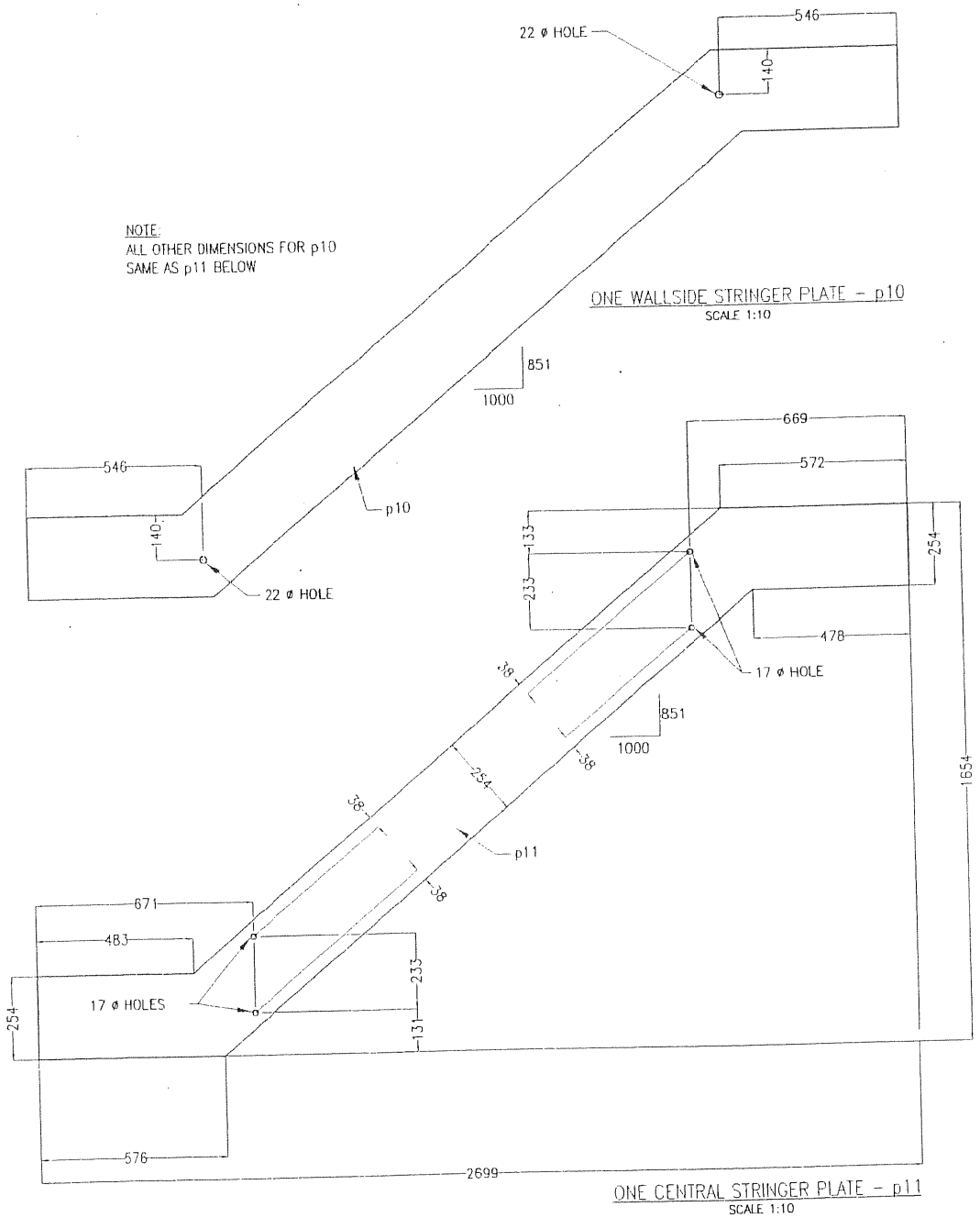

NOTE:
ALL OTHER DIMENSIONS FOR p10
SAME AS p11 BELOW

ONE WALLSIDE STRINGER PLATE – p10
SCALE 1:10

ONE CENTRAL STRINGER PLATE – p11
SCALE 1:10

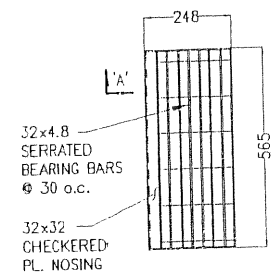

ONE STAIR TREAD – m2
SCALE 1:10

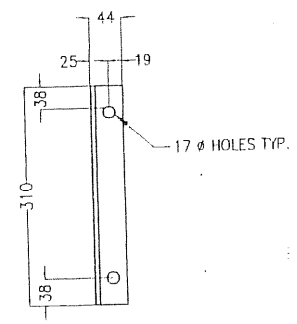

ONE ANGLE – a6
SCALE 1:5

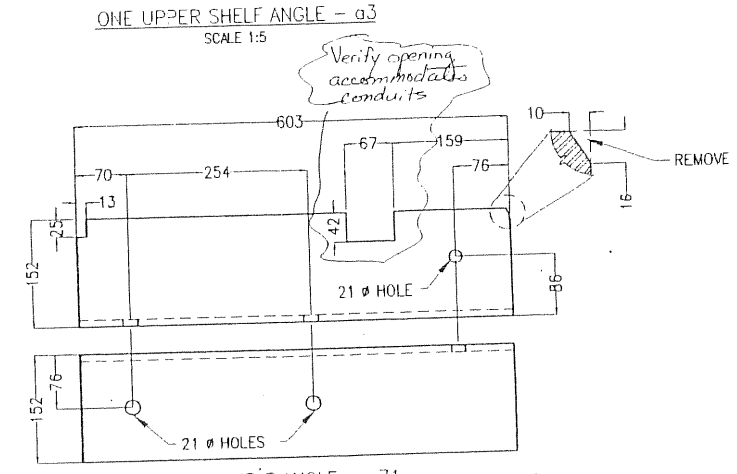

ONE LOWER SHELF ANGLE – a71
SCALE 1:5

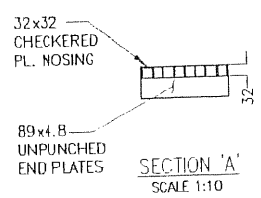

SECTION 'A'
SCALE 1:10

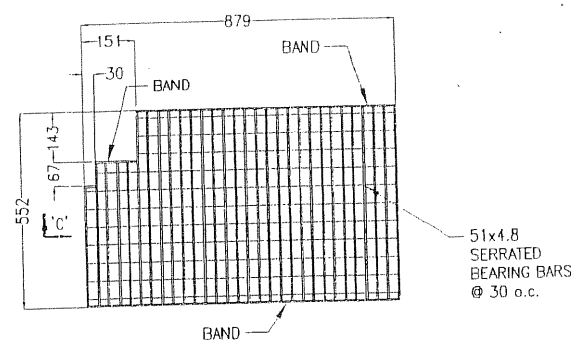

ONE LOWER LANDING GRATE – m151
SCALE 1:10

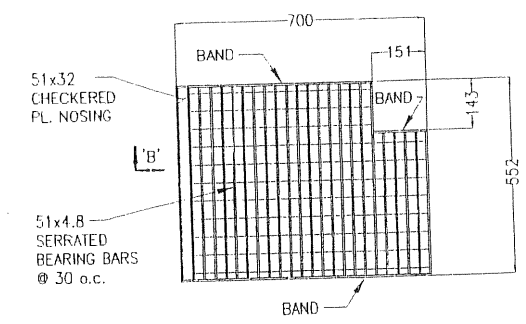

ONE UPPER LANDING GRATE – m3
SCALE 1:10

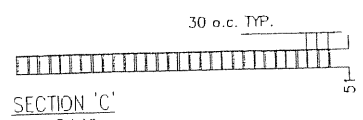

SECTION 'C'
SCALE 1:10

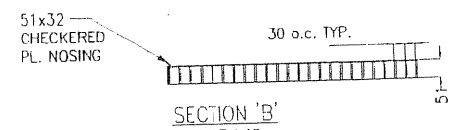

SECTION 'B'
SCALE 1:10

SAN FRANCISCO OAKLAND BAY BRIDGE
SKYWAY CONTRACT No. 04-012024
SFOBB EAST SPAN SEISMIC SAFETY PROJECT
POST KM 04-SF-80-13.9-14.3/ALA-80-0.0-1.6
BRIDGE No. 34-0006

DO NOT DUPLICATE WITHOUT PERMISSION

THIS PROJECT SHALL BE ERECTED PER THE AISC CODE OF STANDARD PRACTICE SPECIFICALLY PARAGRAPH 7.12 AS FOLLOWS:
7.12 CORRECTION OF ERRORS
THE CORRECTION OF MINOR MISFITS BY MODERATE AMOUNTS OF REAMING, GRINDING, WELDING OR CUTTING, AND THE DRAWING OF ELEMENTS INTO LINE WITH DRIFT PINS, SHALL BE CONSIDERED TO BE NORMAL ERECTION OPERATIONS. ERRORS THAT CANNOT BE CORRECTED USING FOREGOING MEANS, OR THAT REQUIRE MAJOR CHANGES IN MEMBER OR CONNECTION CONFIGURATION, SHALL BE PROMPTLY REPORTED TO THE OWNER'S DESIGNATED REPRESENTATIVES FOR DESIGN AND CONSTRUCTION AND THE FABRICATOR BY THE ERECTOR, TO ENABLE THE RESPONSIBLE ENTITY TO EITHER CORRECT THE ERROR OR APPROVE THE MOST EFFICIENT AND ECONOMICAL METHOD OF CORRECTION TO BE USED BY OTHERS. NO BACK CHARGES WILL BE ACCEPTED UNLESS APPROVED IN WRITING BY THIS OFFICE.

GLOBAL FABRICATORS
METRIC
CUSTOM EQUIPMENT MANUFACTURING
METAL FABRICATION-MACHINE SHOP
8929 ROSEDALE HWY. BAKERSFIELD CA. 93312
PHONE: (661) 589-2774 FAX: (661) 589-7504
E-MAIL engineering@globalfab.com

H.F. MAGER INC.
STRUCTURAL ENGINEERS
COMMERCIAL & INDUSTRIAL
STRUCTURAL DESIGN AND
CONSTRUCTION DOCUMENTS
1149 MARSH STREET
SAN LUIS OBISPO, CA. 93401
PH# (805)541-2193 FAX# (805)541-5348
EMAIL hfm@magerstruc.com

SEAL
Expires Mar. 31, 2006

DWN. BY:	DATE:	REV.		DATE
JKS/BRM	3-11-03	1	CONDUIT PENETRATIONS	03-11-03
CHK'D. BY:	DATE:			
APRV'D. BY:	DATE:			
FINISH:				
SCALE: AS NOTED				

PROJECT/DWG. TITLE:

JOB NO.:	FILE NO.:	DWG. NO.:
02D02	DWG51mb	51mb

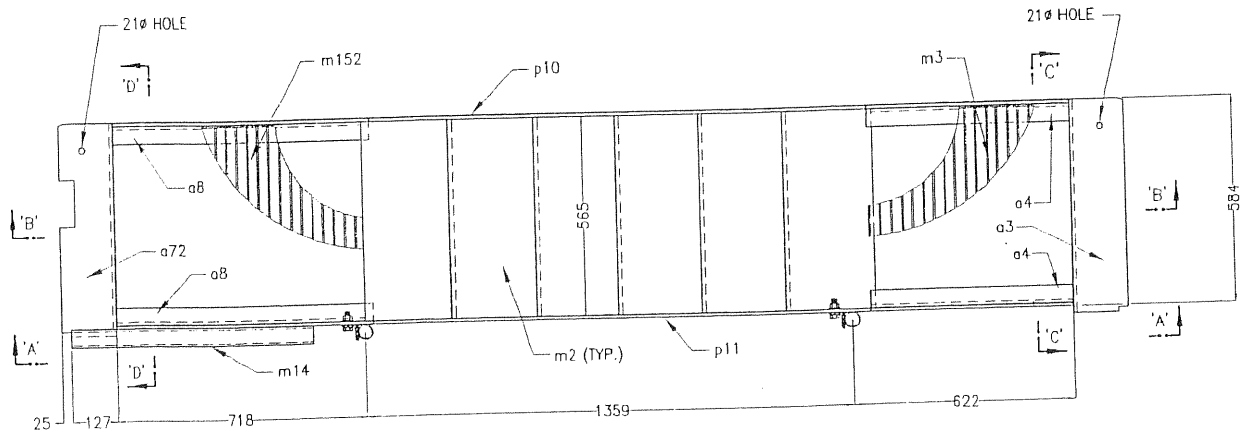

REPETITIVE STAIR ASSEMBLY PLAN – 52A
SCALE 1:10

METRIC SIZE	IMPERIAL SIZE
TREAD 32x248	TREAD 1 1/4x9 3/4
GRATING 51x4.8x700	GRATING 2x3/16x27 9/16
GRATING 51x4.8x879	GRATING 2x3/16x34 5/8"
PIPE 38 ø Sch. 40	PIPE 1 1/2ø Sch. 40
CUT FROM 38 ø 90° ELBOW	CUT FROM 1 1/2ø 90° ELBOW
TS 51x51x4.8	TS 2x2x3/16
L 152x152x9.5	L 6x6x3/8
L 51x51x6.4	L 2x2x1/4
L 44x44x6.4	L 1 3/4x1 3/4x1/4
PL. 9.5x1654	PL. 3/8x65 1/8
PL. 6.4x102	PL. 1/4x4
BOLT 19 ø (A307)	BOLT 3/4" ø (A307)
BOLT 19 ø (A325)	BOLT 3/4" ø (A325)
BOLT 16 ø (A325)	BOLT 5/8" ø (A325)

BILL OF MATERIALS

SHP MK.	PIECE MARK	QTY.	DESCRIPTION (Imperial Size)	CUT LENGTH (mm.)	COMMENT
~~52A~~		58	REPET. STAIR ASSMEMBLY		
	~~p12~~	348	TREAD 1 1/4x9 3/4	565	IKG WB-6
	~~m3~~	58	GRATING 2x3/16x27 9/16"	552	IKG WF-10
	~~m5~~	116	PIPE 1 1/2ø Sch. 40	1233	
	~~m9~~	58	PIPE 1 1/2ø Sch. 40	78	
	~~m13~~	232	CUT FROM 1 1/2ø 90° ELBOW		
	~~m14~~	58	TS 2x2x3/16	673	
	~~m152~~	58	GRATING 2x3/16x34 5/8"	552	IKG WF-10
	~~m16~~	58	PIPE 1 1/2ø Sch. 40	724	
	~~m17~~	58	PIPE 1 1/2ø Sch. 40	203	
	~~m18~~	58	PIPE 1 1/2ø Sch. 40	1765	
	~~a3~~	58	L 6x6x3/8	603	
	~~a4~~	116	L 2x2x1/4	572	
	~~a5~~	232	L 2x2x1/4	152	
	~~a6~~	116	L 1-3/4x1-3/4x-1/4	310	
	~~a72~~	58	L 6x6x3/8	603	
	~~a8~~	116	L 2x2x1/4	740	
	~~p10~~	58	PL. 3/8x65 1/8	2699	
	~~p11~~	58	PL. 3/8x65 1/8	2699	
	~~p12~~	58	PL. 1/4x4	2246	
	~~z1~~	116	BOLT 3/4" ø (A307)	95	w/n
	z5	232	BOLT 3/4" ø (A325)	57	w/n & w
	~~z6~~	232	BOLT 5/8" ø (A325)	45	w/n & w

☒ APPROVED
☐ APPROVED AS NOTED
☐ NOT APPROVED

Pursuant to Section 5-1.02 of the Standard Specifications State of California DEPARTMENT OF TRANSPORTATION Division of Structures Office of Structure Construction

Signed James Fern
Structure Representative
Date 4/15/03

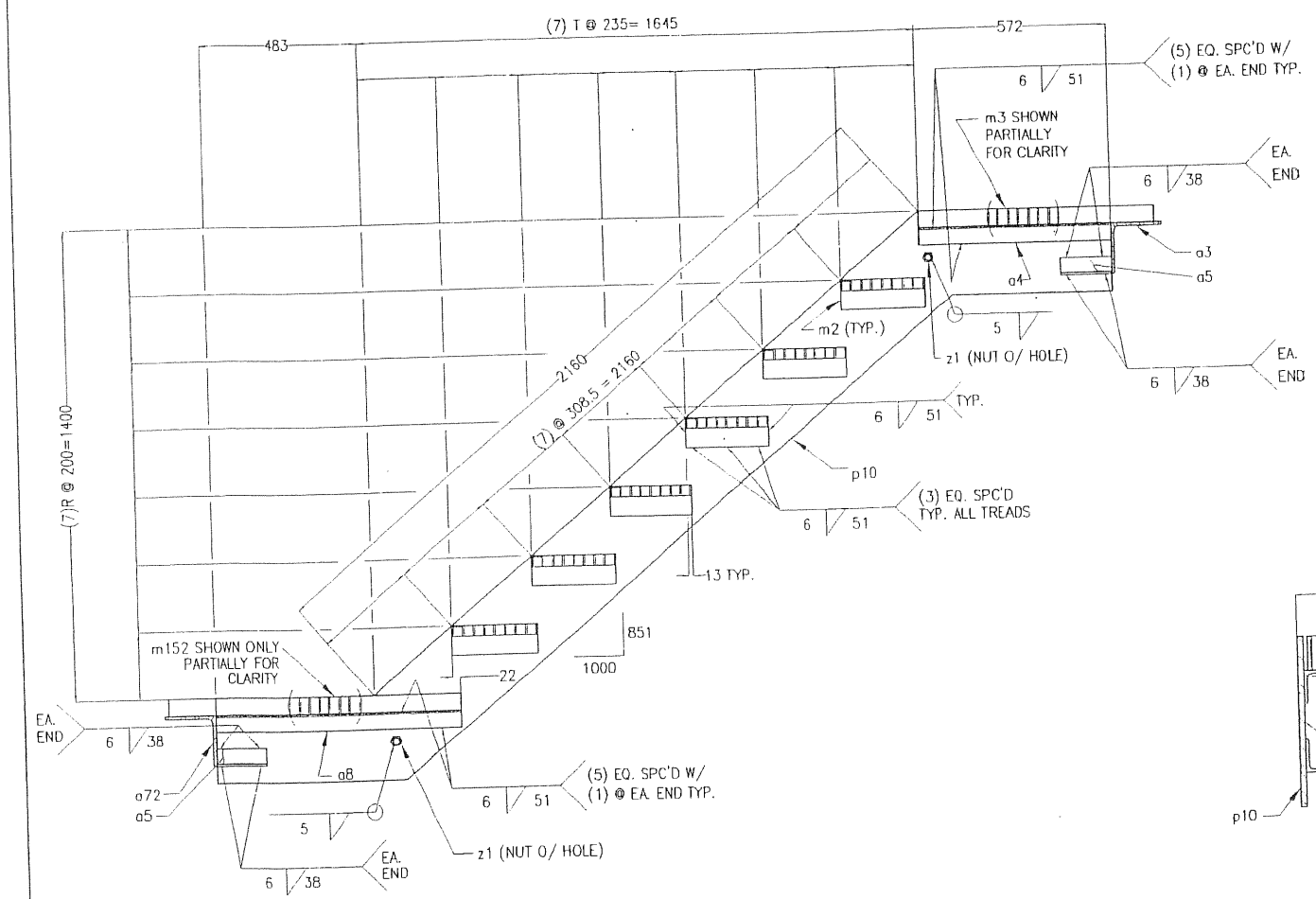

SECTION 'B-B'
SCALE 1:10

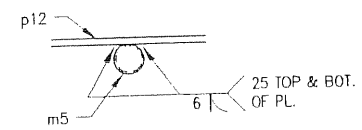

SECTION 'H'
SCALE 1:5

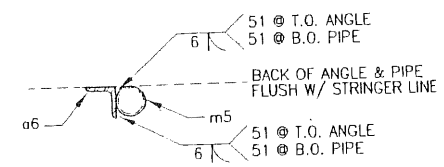

SECTION 'G'
SCALE 1:5

CONTRACT NO. 04-012024
CCO NO. 49
PAGE 44 OF 72

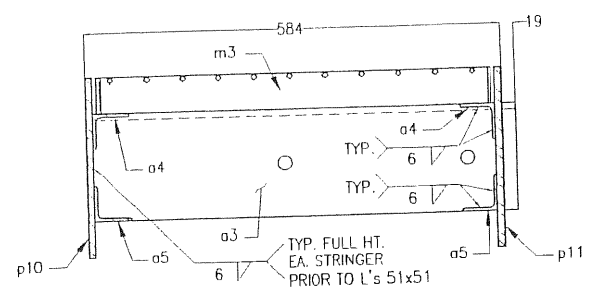

SECTION 'C-C'
SCALE 1:5

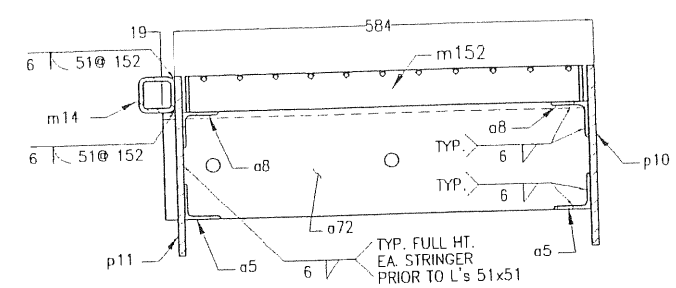

SECTION 'D-D'
SCALE 1:5

SAN FRANCISCO OAKLAND BAY BRIDGE
SKYWAY CONTRACT No. 04-012024
SFOBB EAST SPAN SEISMIC SAFETY PROJECT
POST KM 04-SF-80-13.9-14.3/NA-80-0.0-1.6
BRIDGE No. 34-0006

DO NOT DUPLICATE WITHOUT PERMISSION

THIS PROJECT SHALL BE ERECTED PER THE AISC CODE OF STANDARD PRACTICE SPECIFICALLY PARAGRAPH 7.12 AS FOLLOWS:
7.12 CORRECTION OF ERRORS
THE CORRECTION OF MINOR MISFITS BY MODERATE AMOUNTS OF REAMING, GRINDING, WELDING OR CUTTING, AND THE DRAWING OF ELEMENTS INTO LINE WITH DRIFT PINS, SHALL BE CONSIDERED TO BE NORMAL ERECTION OPERATIONS. ERRORS THAT CANNOT BE CORRECTED USING FORECOING MEANS, OR THAT REQUIRE MAJOR CHANGES IN MEMBER OR CONNECTION CONFIGURATION, SHALL BE PROMPTLY REPORTED TO THE OWNER'S DESIGNATED REPRESENTATIVES FOR DESIGN AND CONSTRUCTION AND THE FABRICATOR BY THE ERECTOR, TO ENABLE THE RESPONSIBLE ENTITY TO EITHER CORRECT THE ERROR OR APPROVE THE MOST EFFICIENT AND ECONOMICAL METHOD OF CORRECTION TO BE USED BY OTHERS. NO BACK CHARGES WILL BE ACCEPTED UNLESS APPROVED IN WRITING BY THIS OFFICE.

GLOBAL FABRICATORS
METRIC
CUSTOM EQUIPMENT MANUFACTURING
METAL FABRICATION-MACHINE SHOP
8929 ROSEDALE HWY. BAKERSFIELD CA. 93312
PHONE: (661) 589-2774 FAX: (661) 589-7504
E-MAIL engineering@globalfab.com

H.F. MAGER INC.
STRUCTURAL ENGINEERS
COMMERCIAL & INDUSTRIAL
STRUCTURAL DESIGN AND
CONSTRUCTION DOCUMENTS
1149 MARSH STREET
SAN LUIS OBISPO, CA 93401
PH# (805)541-2193 FAX# (805)541-5346
EMAIL hfm@magerinc.com

SEAL: REGISTERED PROFESSIONAL ENGINEER HANS FRED MAGER C 23796 STRUCTURAL ENGINEERING STATE OF CALIFORNIA
Expires March 31, 2006

DWN. BY:	DATE:	REV.		DATE
JKS	3-11-03	1	CONDUIT PENETRATIONS	03-11-03
CHK'D. BY:	DATE:			
APRV'D. BY:	DATE:			
FINISH:				
SCALE: AS NOTED				

PROJECT/DWG. TITLE:

JOB NO.:	FILE NO.:	DWG. NO.:
02D02	DWG52m	52m

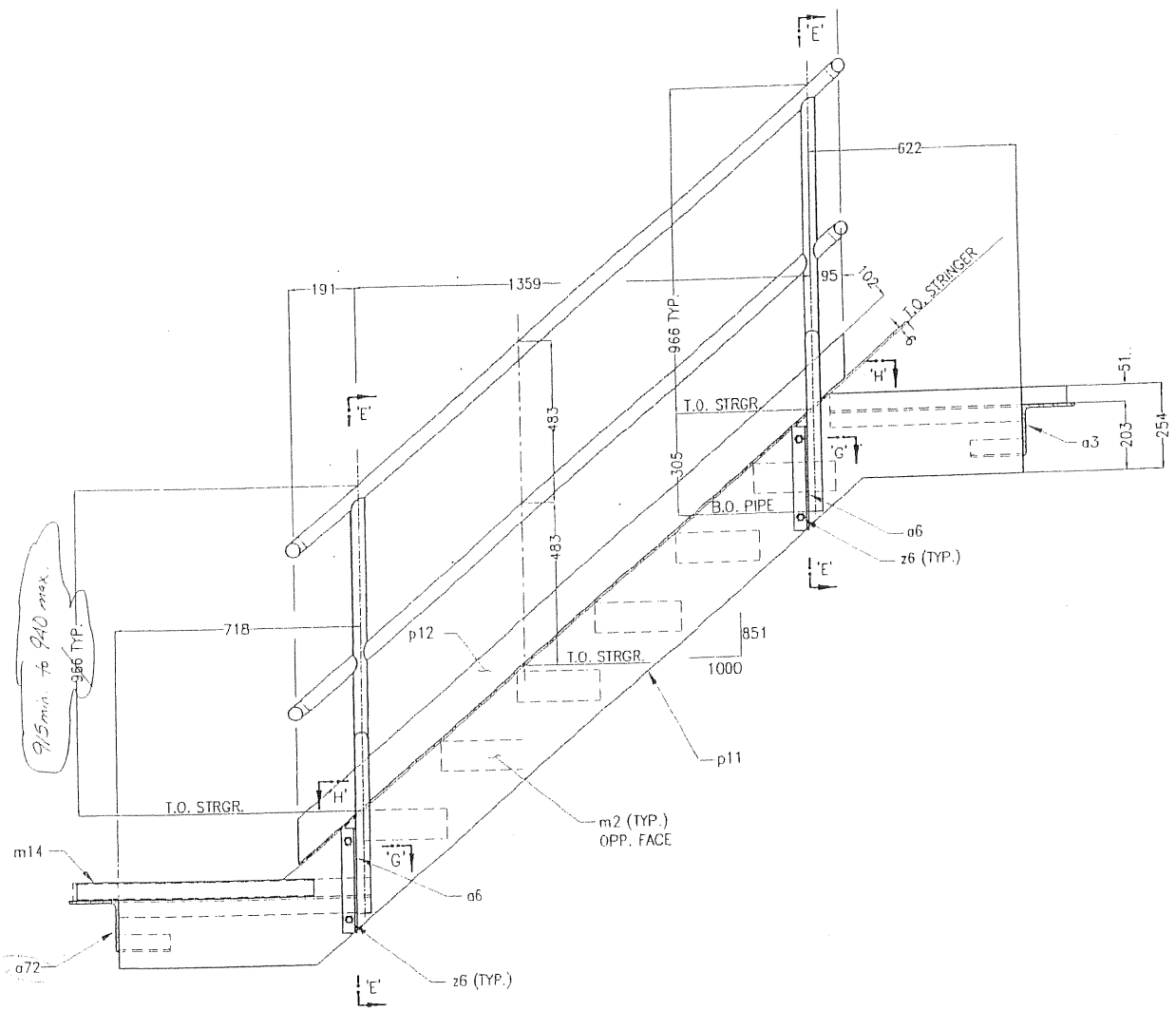

VIEW 'A-A'
SCALE 1:10

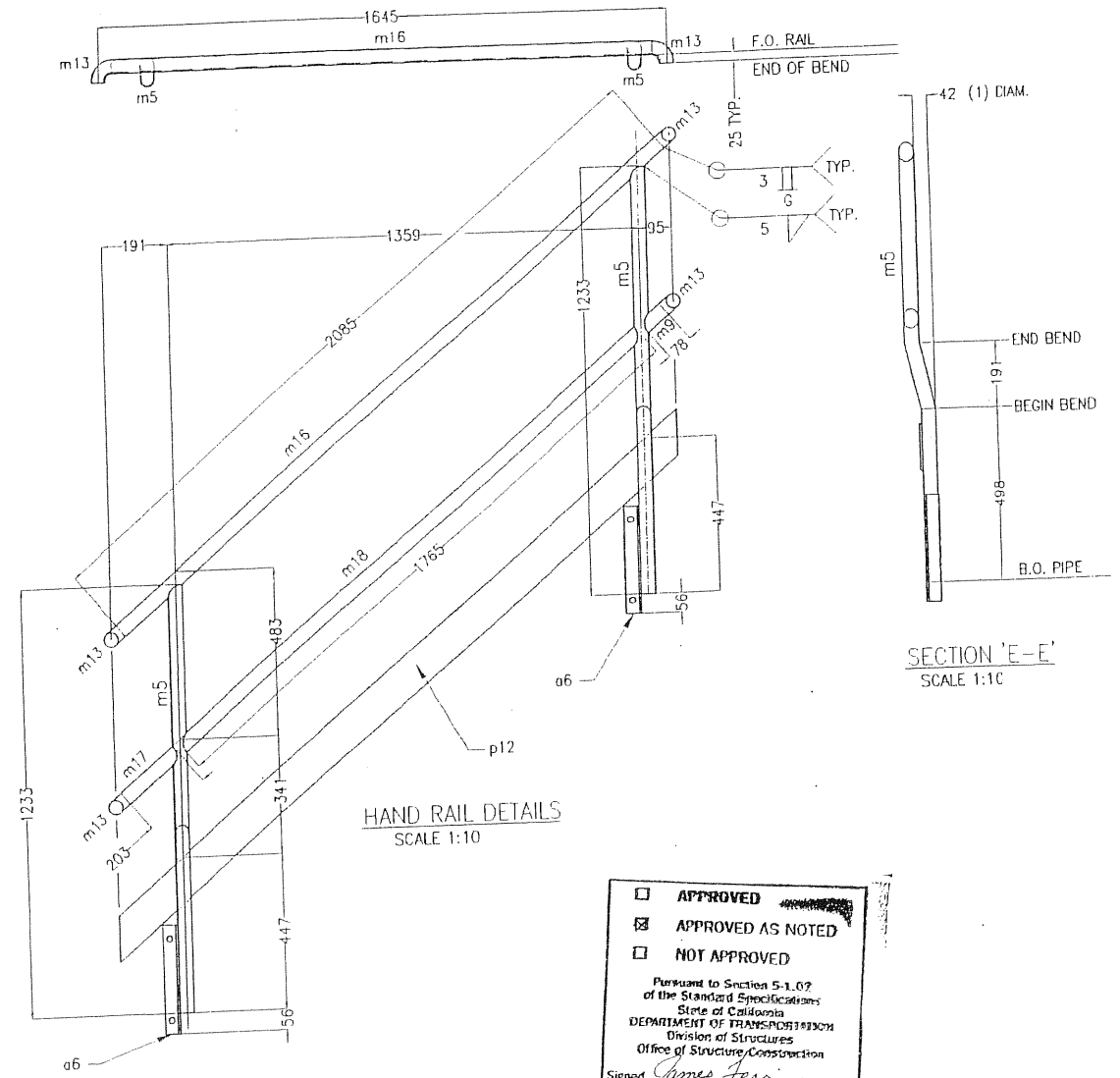

SECTION 'E-E'
SCALE 1:10

HAND RAIL DETAILS
SCALE 1:10

☐ APPROVED
☒ APPROVED AS NOTED
☐ NOT APPROVED

Pursuant to Section 5-1.07 of the Standard Specifications State of California DEPARTMENT OF TRANSPORTATION Division of Structures Office of Structure Construction

Signed James Fer
Structure Representative
Date 4/18/03

CONTRACT NO. 04-012024
CCO NO. 49
PAGE 45 OF 72

SAN FRANCISCO OAKLAND BAY BRIDGE
SKYWAY CONTRACT No. 04-012024
SFOBB EAST SPAN SEISMIC SAFETY PROJECT
POST KM 04-SF-80-13.9-14.3/ALA-80-0.0-1.6
BRIDGE No. 34-0006

PROJECT/DWG. TITLE:

DWN. BY:	DATE:	REV.		DATE
JKS	3-11-03	1	CONDUIT PENETRATIONS	03-11-03
CHK'D. BY:	DATE:			
APRV'D. BY:	DATE:			
FINISH:				
SCALE: AS NOTED				

JOB NO.: 02D02 | FILE NO.: DWG52ma | DWG. NO.: 52ma

DO NOT DUPLICATE WITHOUT PERMISSION

THIS PROJECT SHALL BE ERECTED PER THE AISC CODE OF STANDARD PRACTICE SPECIFICALLY PARAGRAPH 7.12 AS FOLLOWS:
7.12 CORRECTION OF ERRORS
THE CORRECTION OF MINOR MISFITS BY MODERATE AMOUNTS OF REAMING, GRINDING, WELDING OR CUTTING, AND THE DRAWING OF ELEMENTS INTO LINE WITH DRIFT PINS, SHALL BE CONSIDERED TO BE NORMAL ERECTION OPERATIONS. ERRORS THAT CANNOT BE CORRECTED USING FOREGOING MEANS, OR THAT REQUIRE MAJOR CHANGES IN MEMBER OR CONNECTION CONFIGURATION, SHALL BE PROMPTLY REPORTED TO THE OWNER'S DESIGNATED REPRESENTATIVES FOR DESIGN AND CONSTRUCTION AND THE FABRICATOR BY THE ERECTOR, TO ENABLE THE RESPONSIBLE ENTITY TO EITHER CORRECT THE ERROR OR APPROVE THE MOST EFFICIENT AND ECONOMICAL METHOD OF CORRECTION TO BE USED BY OTHERS. NO BACK CHARGES WILL BE ACCEPTED UNLESS APPROVED IN WRITING BY THIS OFFICE.

GLOBAL FABRICATORS
METRIC
CUSTOM EQUIPMENT MANUFACTURING
METAL FABRICATION-MACHINE SHOP
8929 ROSEDALE HWY. BAKERSFIELD CA. 93312
PHONE: (661) 589-2774 FAX: (661) 589-7504
E-MAIL engineering@globalfab.com

H.F. MAGER INC.
STRUCTURAL ENGINEERS
COMMERCIAL & INDUSTRIAL
STRUCTURAL DESIGN AND
CONSTRUCTION DOCUMENTS
1149 MARSH STREET
SAN LUIS OBISPO, CA 93401
PH# (805)541-2103 FAX# (805)541-5346
EMAIL hfma@magerstruc.com

SEAL: REGISTERED PROFESSIONAL ENGINEER HANS FRIED MAGER C 23270 STRUCTURAL ENGINEER STATE OF CALIFORNIA — Expires Mar. 31, 2006

CONTRACT NO. 04-012024
CCO NO. 49
PAGE 46 OF 72

APPROVED
APPROVED AS NOTED
NOT APPROVED
Pursuant to Section 5-1.02 of the Standard Specifications
State of California
DEPARTMENT OF TRANSPORTATION
Division of Structures
Office of Structure Construction
Signed James Ferrer
Structure Representative
Date 4/15/03

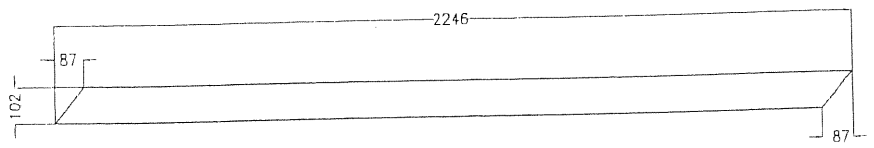

ONE TOE PLATE– p12
SCALE 1:10

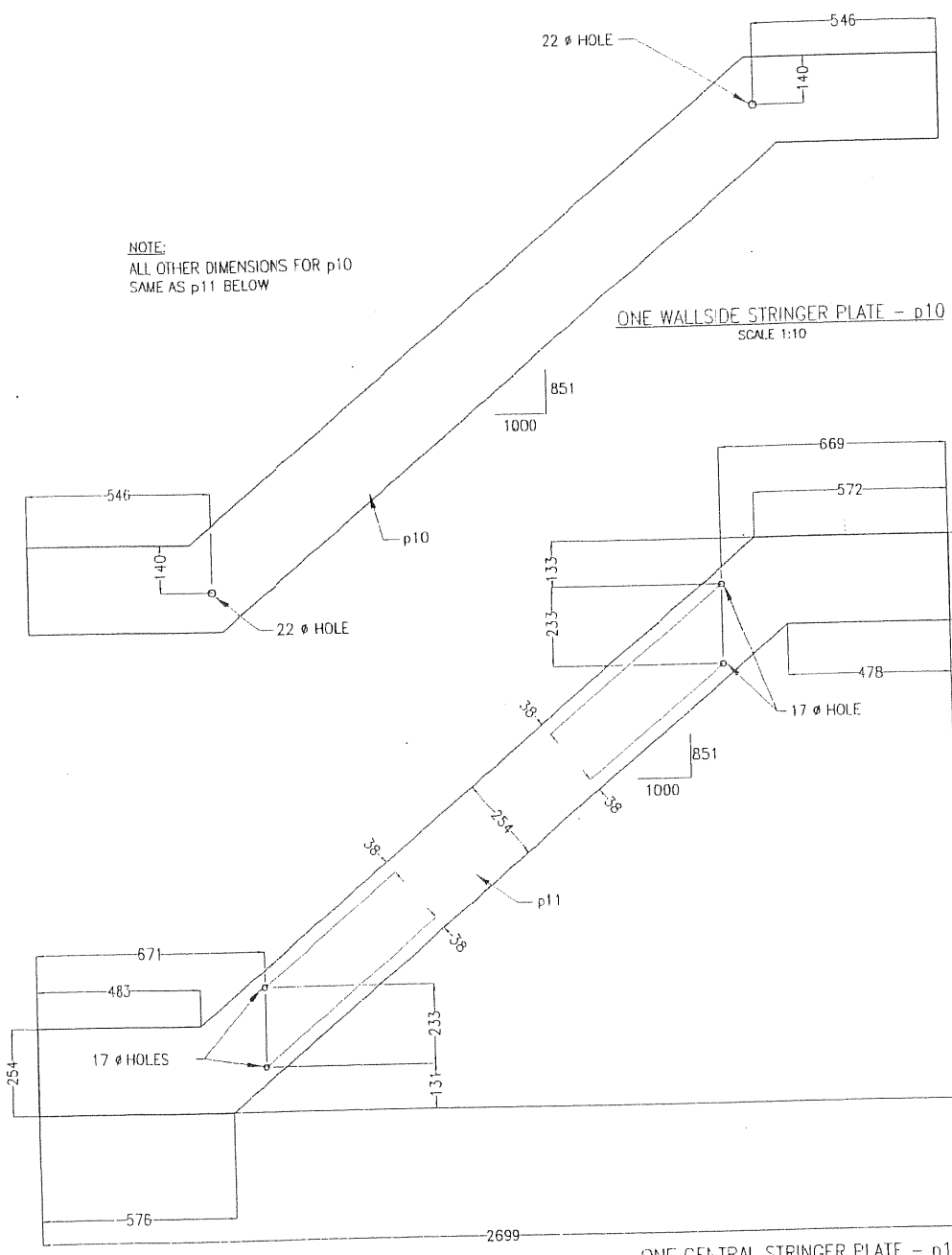

NOTE:
ALL OTHER DIMENSIONS FOR p10
SAME AS p11 BELOW

ONE WALLSIDE STRINGER PLATE – p10
SCALE 1:10

ONE CENTRAL STRINGER PLATE – p11
SCALE 1:10

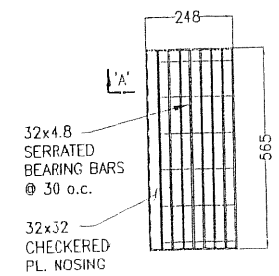

ONE STAIR TREAD– m2
SCALE 1:10

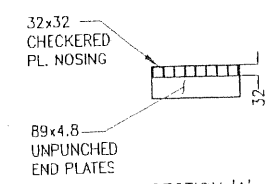

SECTION 'A'
SCALE 1:10

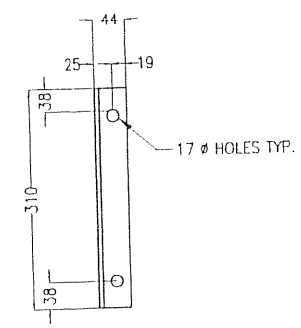

ONE ANGLE – a6
SCALE 1:5

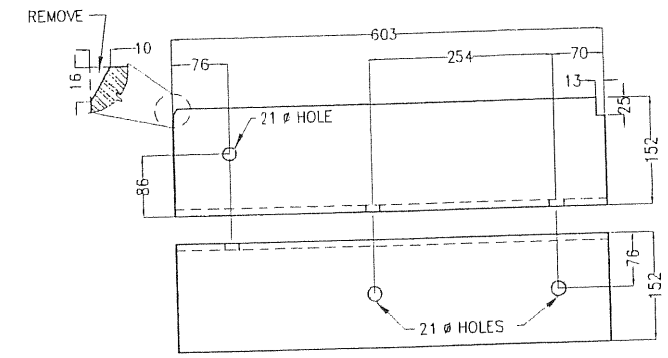

ONE UPPER SHELF ANGLE – a3
SCALE 1:5

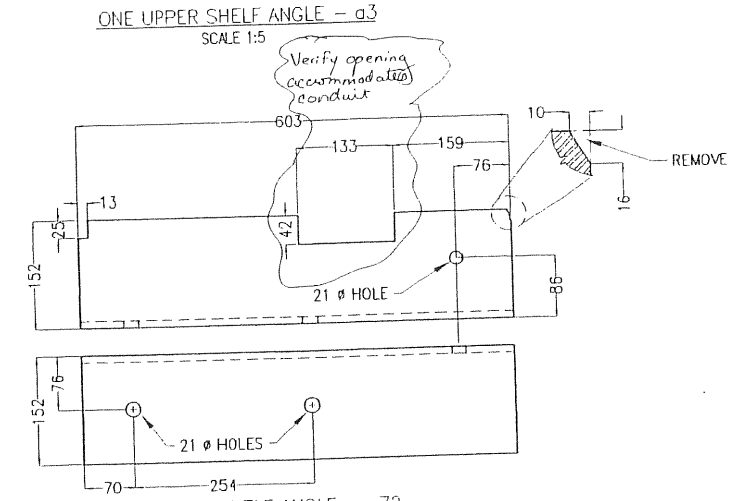

ONE LOWER SHELF ANGLE – a72
SCALE 1:5

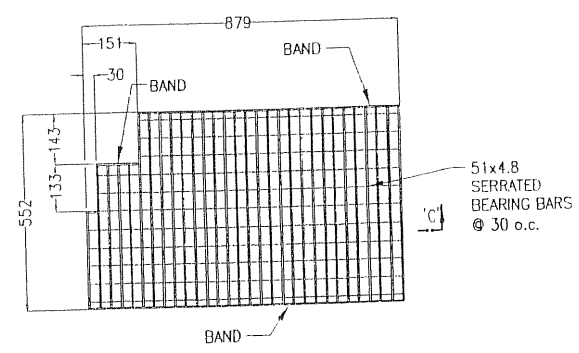

ONE LOWER LANDING GRATE– m152
SCALE 1:10

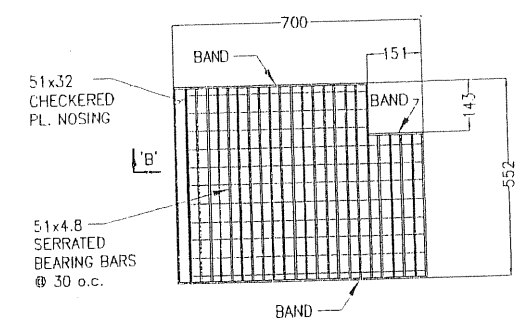

ONE UPPER LANDING GRATE– m3
SCALE 1:10

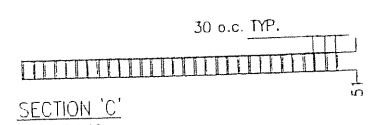

SECTION 'C'
SCALE 1:10

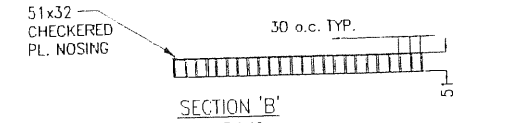

SECTION 'B'
SCALE 1:10

SAN FRANCISCO OAKLAND BAY BRIDGE
SKYWAY CONTRACT No. 04-012024
SFOBB EAST SPAN SEISMIC SAFETY PROJECT
POST KM 04-SF-80-13.9-14.3/ALA-80-0.0-1.6
BRIDGE No. 34-0006

DO NOT DUPLICATE WITHOUT PERMISSION

THIS PROJECT SHALL BE ERECTED PER THE AISC CODE OF STANDARD PRACTICE SPECIFICALLY PARAGRAPH 7.12 AS FOLLOWS:
7.12 CORRECTION OF ERRORS
THE CORRECTION OF MINOR MISFITS BY MODERATE AMOUNTS OF REAMING, GRINDING, WELDING OR CUTTING, AND THE DRAWING OF ELEMENTS INTO LINE WITH DRIFT PINS, SHALL BE CONSIDERED TO BE NORMAL ERECTION OPERATIONS. ERRORS THAT CANNOT BE CORRECTED USING FOREGOING MEANS, OR THAT REQUIRE MAJOR CHANGES IN MEMBER OR CONNECTION CONFIGURATION, SHALL BE PROMPTLY REPORTED TO THE OWNER'S DESIGNATED REPRESENTATIVES FOR DESIGN AND CONSTRUCTION AND THE FABRICATOR BY THE ERECTOR, TO ENABLE THE RESPONSIBLE ENTITY TO EITHER CORRECT THE ERROR OR APPROVE THE MOST EFFICIENT AND ECONOMICAL METHOD OF CORRECTION TO BE USED BY OTHERS. NO BACK CHARGES WILL BE ACCEPTED UNLESS APPROVED IN WRITING BY THIS OFFICE.

GLOBAL FABRICATORS
METRIC
CUSTOM EQUIPMENT MANUFACTURING
METAL FABRICATION–MACHINE SHOP
8929 ROSEDALE HWY. BAKERSFIELD CA. 93312
PHONE: (661) 589-2774 FAX: (661) 589-7504
E-MAIL engineering@globalfab.com

H.F. MAGER INC.
STRUCTURAL ENGINEERS
COMMERCIAL & INDUSTRIAL
STRUCTURAL DESIGN AND
CONSTRUCTION DOCUMENTS
1149 MARSH STREET
SAN LUIS OBISPO, CA 93401
PH# (805)541-2193 FAX# (805)541-5348
EMAIL hans@magerstruc.com

SEAL: PROFESSIONAL ENGINEER, FRED J. MAGER, C 23776, CIVIL, STATE OF CALIFORNIA, Mar. 11, 2003, Expires Mar. 31, 2004

DWN. BY:	DATE:	REV.		DATE
JKS/BRM	3-11-03	1	CONDUIT PENETRATIONS	03-11-03
CHK'D. BY:	DATE:			
APRV'D. BY:	DATE:			
FINISH:				
SCALE: AS NOTED				

PROJECT/DWG. TITLE:

JOB NO.:	FILE NO.:	DWG NO.:
02D02	IDWG52mbl	52mb

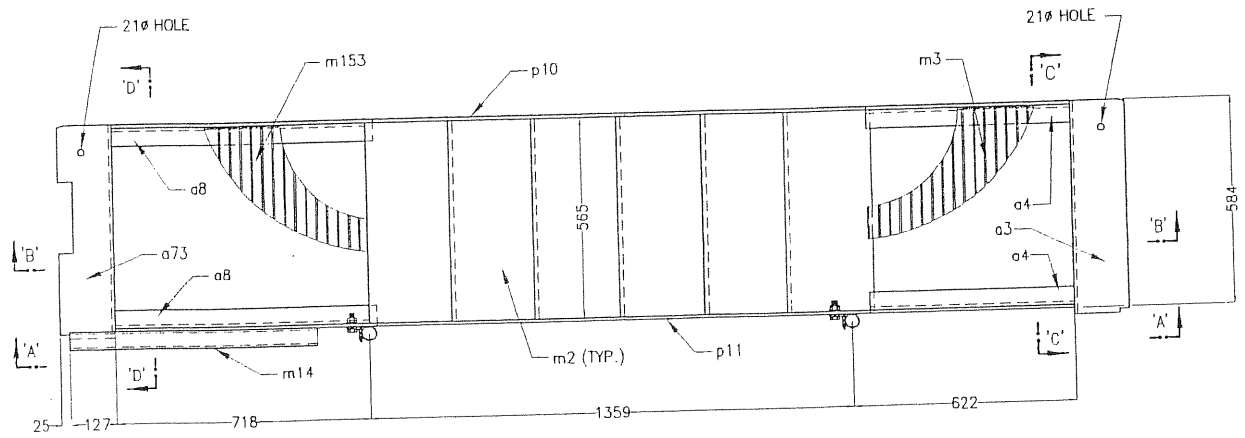

REPETITIVE STAIR ASSEMBLY PLAN – 53A
SCALE 1:10

METRIC SIZE	IMPERIAL SIZE
TREAD 32x248	TREAD 1 1/4x9 3/4
GRATING 51x4.8x700	GRATING 2x3/16x27 9/16
GRATING 51x4.8x879	GRATING 2x3/16x34 5/8"
PIPE 38 ø Sch. 40	PIPE 1 1/2ø Sch. 40
CUT FROM 38 ø 90° ELBOW	CUT FROM 1 1/2ø 90° ELBOW
TS 51x51x4.8	TS 2x2x3/16
L 152x152x9.5	L 6x6x3/8
L 51x51x6.4	L 2x2x1/4
L 44x44x6.4	L 1 3/4x1 3/4x1/4
PL. 9.5x1654	PL. 3/8x65 1/8
PL. 6.4x102	PL. 1/4x4
BOLT 19 ø (A307)	BOLT 3/4" ø (A307)
BOLT 19 ø (A325)	BOLT 3/4" ø (A325)
BOLT 16 ø (A325)	BOLT 5/8" ø (A325)

☒ APPROVED
☐ APPROVED AS NOTED
☐ NOT APPROVED
Pursuant to Section 5-1.02 of the Standard Specifications State of California
DEPARTMENT OF TRANSPORTATION
Division of Structures
Office of Structure Construction
Signed
Structure Representative
Date 4/18/03

BILL OF MATERIALS

SHIP MK.	PIECE MARK	QTY.	DESCRIPTION (Imperiol Size)	CUT LENGTH (mm.)	COMMENT
53A		8	REPET. STAIR ASSMEMBLY		
	m2	48	TREAD 1 1/4x9 3/4	565	IKG WB-6
	m3	8	GRATING 2x3/16x27 9/16"	552	IKG WF-10
	m8	16	PIPE 1 1/2ø Sch. 40	1233	
	m9	8	PIPE 1 1/2ø Sch. 40	78	
	m13	32	CUT FROM 1 1/2ø 90° ELBOW		
	m14	8	TS 2x2x3/16	673	
	m153	8	GRATING 2x3/16x34 5/8"	552	IKG WF-10
	m16	8	PIPE 1 1/2ø Sch. 40	724	
	m17	8	PIPE 1 1/2ø Sch. 40	203	
	m18	8	PIPE 1 1/2ø Sch. 40	1765	
	a3	8	L 6x6x3/8	603	
	a4	16	L 2x2x1/4	572	
	a5	32	L 2x2x1/4	152	
	a8	16	L 1-3/4x1-3/4x-1/4	310	
	a73	8	L 6x6x3/8	603	
	a8	16	L 2x2x1/4	740	
	p10	8	PL. 3/8x65 1/8	2699	
	p11	8	PL. 3/8x65 1/8	2699	
	p12	8	PL. 1/4x4	2246	
	z1	16	BOLT 3/4" ø (A307)	95	w/n
	z5	32	BOLT 3/4" ø (A325)	57	w/n & w
	z6	32	BOLT 5/8" ø (A325)	45	w/n & w

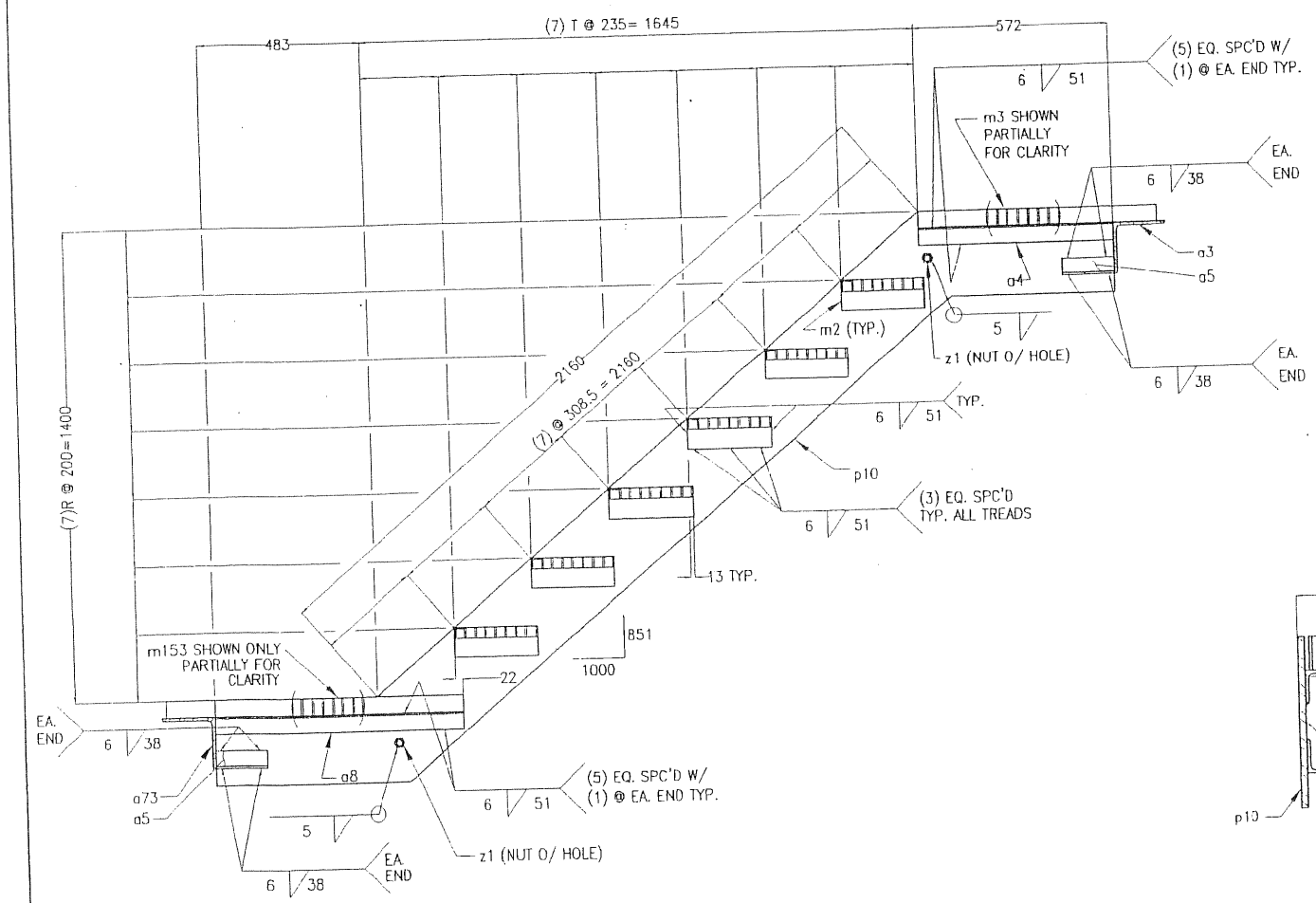

SECTION 'B-B'
SCALE 1:10

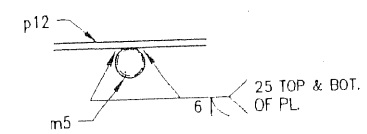

SECTION 'H'
SCALE 1:5

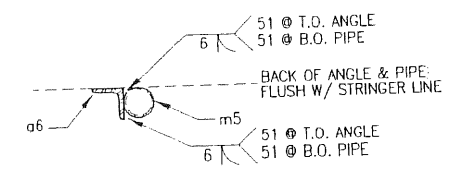

SECTION 'G'
SCALE 1:5

CONTRACT NO. 04-012024
CCO NO. 49
PAGE 47 OF 72

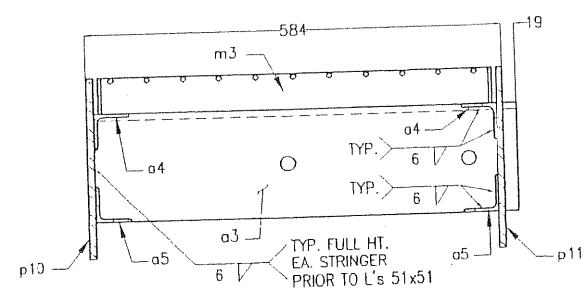

SECTION 'C-C'
SCALE 1:5

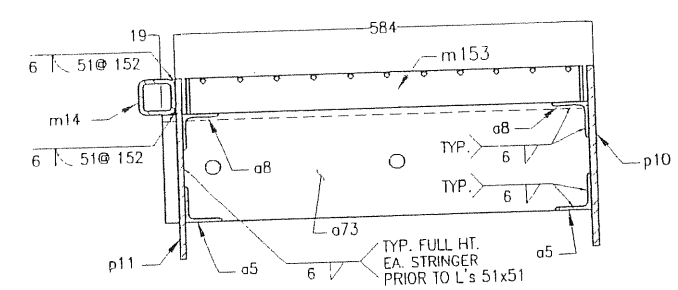

SECTION 'D-D'
SCALE 1:5

SAN FRANCISCO OAKLAND BAY BRIDGE
SKYWAY CONTRACT No. 04-012024
SFOBB EAST SPAN SEISMIC SAFETY PROJECT
POST KM 04-SF-80-13.9-14.3/ALA-80-0.0-1.6
BRIDGE No. 34-0006

PROJECT/DWG. TITLE:

DWN. BY:	DATE:	REV.		DATE
JKS	3-11-03	1	CONDUIT PENETRATIONS	03-11-03
CHK'D. BY:	DATE:			
APRV'D. BY:	DATE:			
FINISH:				
SCALE: AS NOTED				

JOB NO.:	FILE NO.:	DWG. NO.:
02D02	DWG53m	53m

DO NOT DUPLICATE WITHOUT PERMISSION

THIS PROJECT SHALL BE ERECTED PER THE AISC CODE OF STANDARD PRACTICE SPECIFICALLY PARAGRAPH 7.12 AS FOLLOWS:
7.12 CORRECTION OF ERRORS
THE CORRECTION OF MINOR MISFITS BY MODERATE AMOUNTS OF REAMING, GRINDING, WELDING OR CUTTING, AND THE DRAWING OF ELEMENTS INTO LINE WITH DRIFT PINS, SHALL BE CONSIDERED TO BE NORMAL ERECTION OPERATIONS. ERRORS THAT CANNOT BE CORRECTED USING FOREGOING MEANS, OR THAT REQUIRE MAJOR CHANGES IN MEMBER OR CONNECTION CONFIGURATION, SHALL BE PROMPTLY REPORTED TO THE OWNER'S DESIGNATED REPRESENTATIVES FOR DESIGN AND CONSTRUCTION AND THE FABRICATOR BY THE ERECTOR, TO ENABLE THE RESPONSIBLE ENTITY TO EITHER CORRECT THE ERROR OR APPROVE THE MOST EFFICIENT AND ECONOMICAL METHOD OF CORRECTION TO BE USED BY OTHERS. NO BACK CHARGES WILL BE ACCEPTED UNLESS APPROVED IN WRITING BY THIS OFFICE.

GLOBAL FABRICATORS
METRIC
CUSTOM EQUIPMENT MANUFACTURING
METAL FABRICATION–MACHINE SHOP
8929 ROSEDALE HWY. BAKERSFIELD CA. 93312
PHONE: (661) 589-2774 FAX: (661) 589-7504
E-MAIL engineering@globalfab.com

H.F. MAGER INC.
STRUCTURAL ENGINEERS
COMMERCIAL & INDUSTRIAL
STRUCTURAL DESIGN AND
CONSTRUCTION DOCUMENTS
1149 MARSH STREET
SAN LUIS OBISPO, CA 93401
PH# (805)541-2193 FAX# (805)541-5346
EMAIL home@magerstruc.com

SEAL: REGISTERED PROFESSIONAL ENGINEER — HARVEY F. MAGER — No. S 2276 — Mar. 11 2003 — STRUCTURAL — STATE OF CALIFORNIA
Expires March 31, 2006

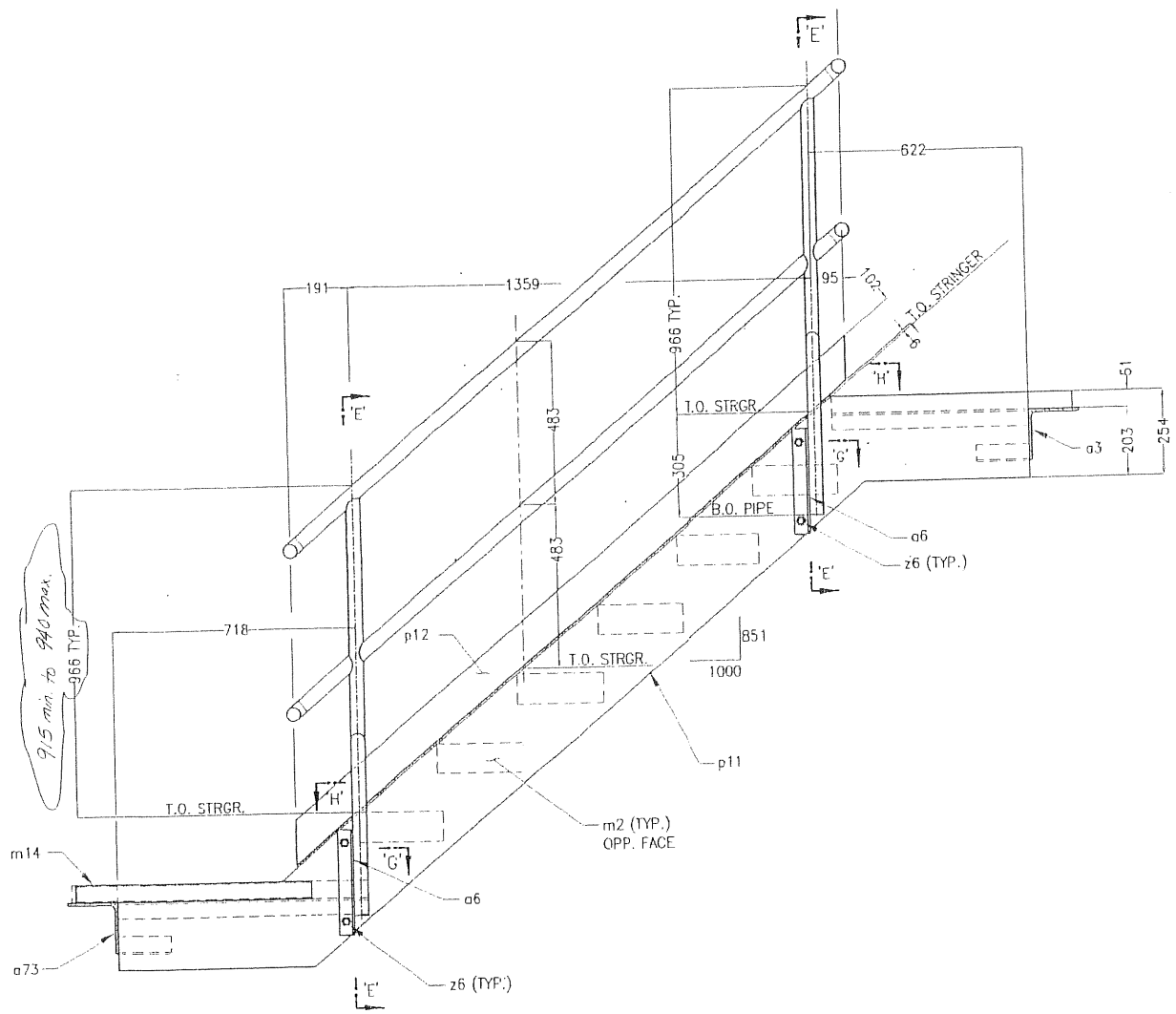

VIEW 'A-A'
SCALE 1:10

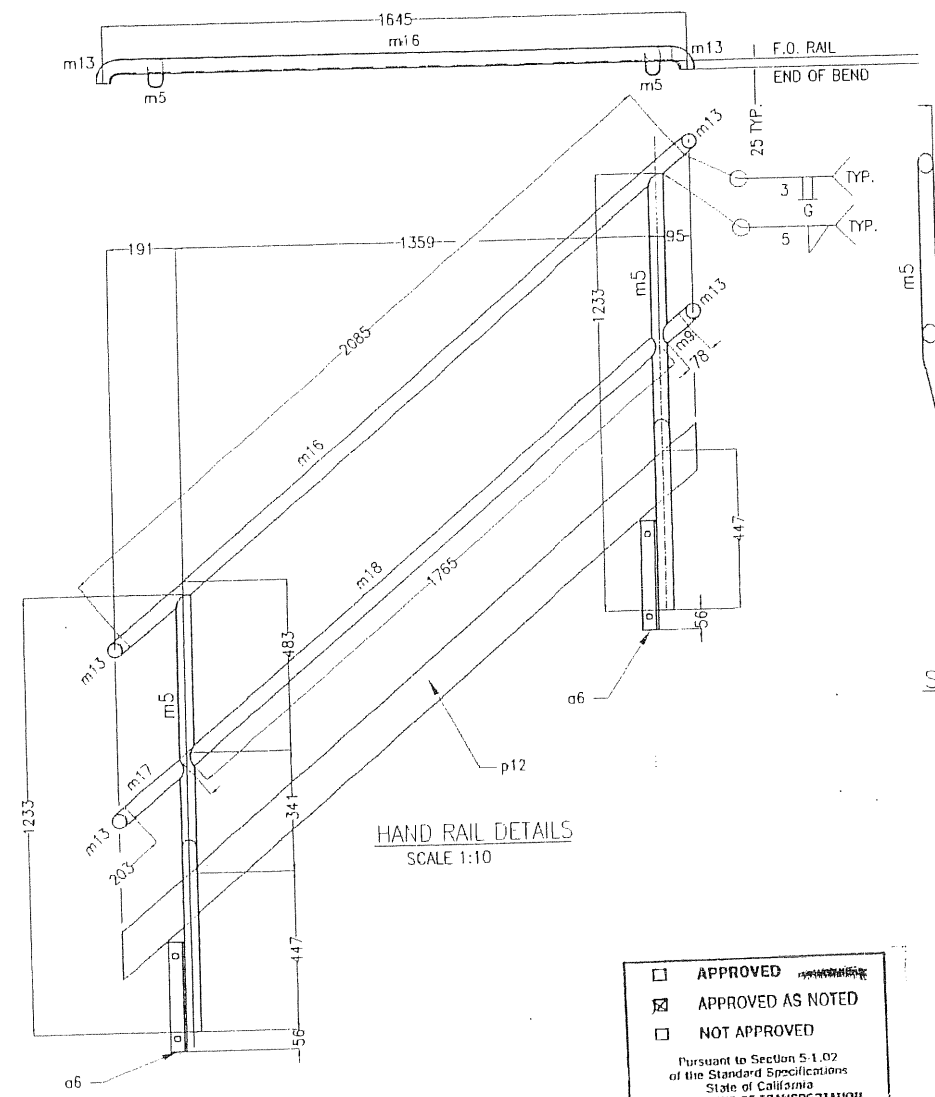

HAND RAIL DETAILS
SCALE 1:10

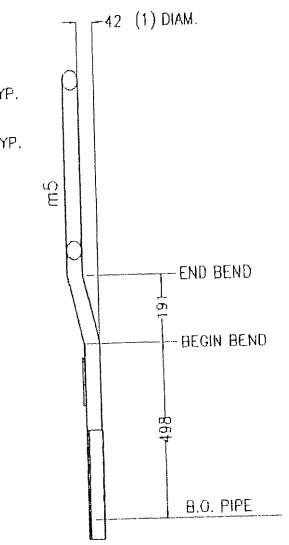

SECTION 'E-E'
SCALE 1:10

☐ APPROVED
☒ APPROVED AS NOTED
☐ NOT APPROVED

Pursuant to Section 5-1.02
of the Standard Specifications
State of California
DEPARTMENT OF TRANSPORTATION
Division of Structures
Office of Structure Construction
Signed James Fan
Structure Representative
Date 4/13/03

CONTRACT NO. 04-012024
CCO NO. 49
PAGE 48 OF 72

SAN FRANCISCO OAKLAND BAY BRIDGE
SKYWAY CONTRACT No. 04-012024
SF08B EAST SPAN SEISMIC SAFETY PROJECT
POST KM 04-SF-80-13.9-14.3/ALA-80-0.0-1.6
BRIDGE No. 34-0006

DO NOT DUPLICATE WITHOUT PERMISSION

THIS PROJECT SHALL BE ERECTED PER THE AISC CODE OF STANDARD PRACTICE SPECIFICALLY PARAGRAPH 7.12 AS FOLLOWS:
7.12 CORRECTION OF ERRORS
THE CORRECTION OF MINOR MISFITS BY MODERATE AMOUNTS OF REAMING, GRINDING, WELDING OR CUTTING, AND THE DRAWING OF ELEMENTS INTO LINE WITH DRIFT PINS, SHALL BE CONSIDERED TO BE NORMAL ERECTION OPERATIONS. ERRORS THAT CANNOT BE CORRECTED USING FOREGOING MEANS, OR THAT REQUIRE MAJOR CHANGES IN MEMBER OR CONNECTION CONFIGURATION, SHALL BE PROMPTLY REPORTED TO THE OWNER'S DESIGNATED REPRESENTATIVES FOR DESIGN AND CONSTRUCTION AND THE FABRICATOR BY THE ERECTOR, TO ENABLE THE RESPONSIBLE ENTITY TO EITHER CORRECT THE ERROR OR APPROVE THE MOST EFFICIENT AND ECONOMICAL METHOD OF CORRECTION TO BE USED BY OTHERS. NO BACK CHARGES WILL BE ACCEPTED UNLESS APPROVED IN WRITING BY THIS OFFICE.

GLOBAL FABRICATORS
METRIC
CUSTOM EQUIPMENT MANUFACTURING
METAL FABRICATION-MACHINE SHOP
8929 ROSEDALE HWY. BAKERSFIELD CA. 93312
PHONE: (661) 589-2774 FAX: (661) 589-7504
E-MAIL engineering@globalfab.com

H.F. MAGER INC.
STRUCTURAL ENGINEERS
COMMERCIAL & INDUSTRIAL
STRUCTURAL DESIGN AND
CONSTRUCTION DOCUMENTS
1146 MARSH STREET
SAN LUIS OBISPO, CA. 93401
PH# (805)541-2193 FAX# (805)541-5346
EMAIL hfme@magnetic.net

SEAL: REGISTERED PROFESSIONAL ENGINEER HANS FRED MAGER No. 2370 STRUCTURAL ENGINEER STATE OF CALIFORNIA — Mar. 11, 2003 — Expires Mar. 31, 2006

DWN. BY:	DATE:	REV.		DATE
JKS	3-11-03	1	CONDUIT PENETRATIONS	03-11-03
CHK'D. BY: HFM	DATE:			
APRV'D. BY:	DATE:			
FINISH:				
SCALE: AS NOTED				

PROJECT/DWG. TITLE:

JOB NO.:	FILE NO.:	DWG. NO.:
02D02	DWG53ma1	53ma

CONTRACT NO. 04-012024
CCO NO. 49
PAGE 49 OF 72

APPROVED
☒ APPROVED AS NOTED
NOT APPROVED
Pursuant to Section 5-1.02 of the Standard Specifications State of California DEPARTMENT OF TRANSPORTATION Division of Structures Office of Structure Construction
Signed James Fan
Structure Representative
Date 4/13/03

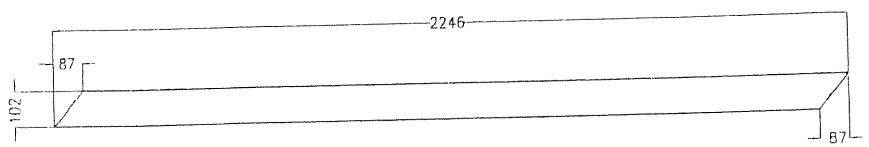

ONE TOE PLATE – p12
SCALE 1:10

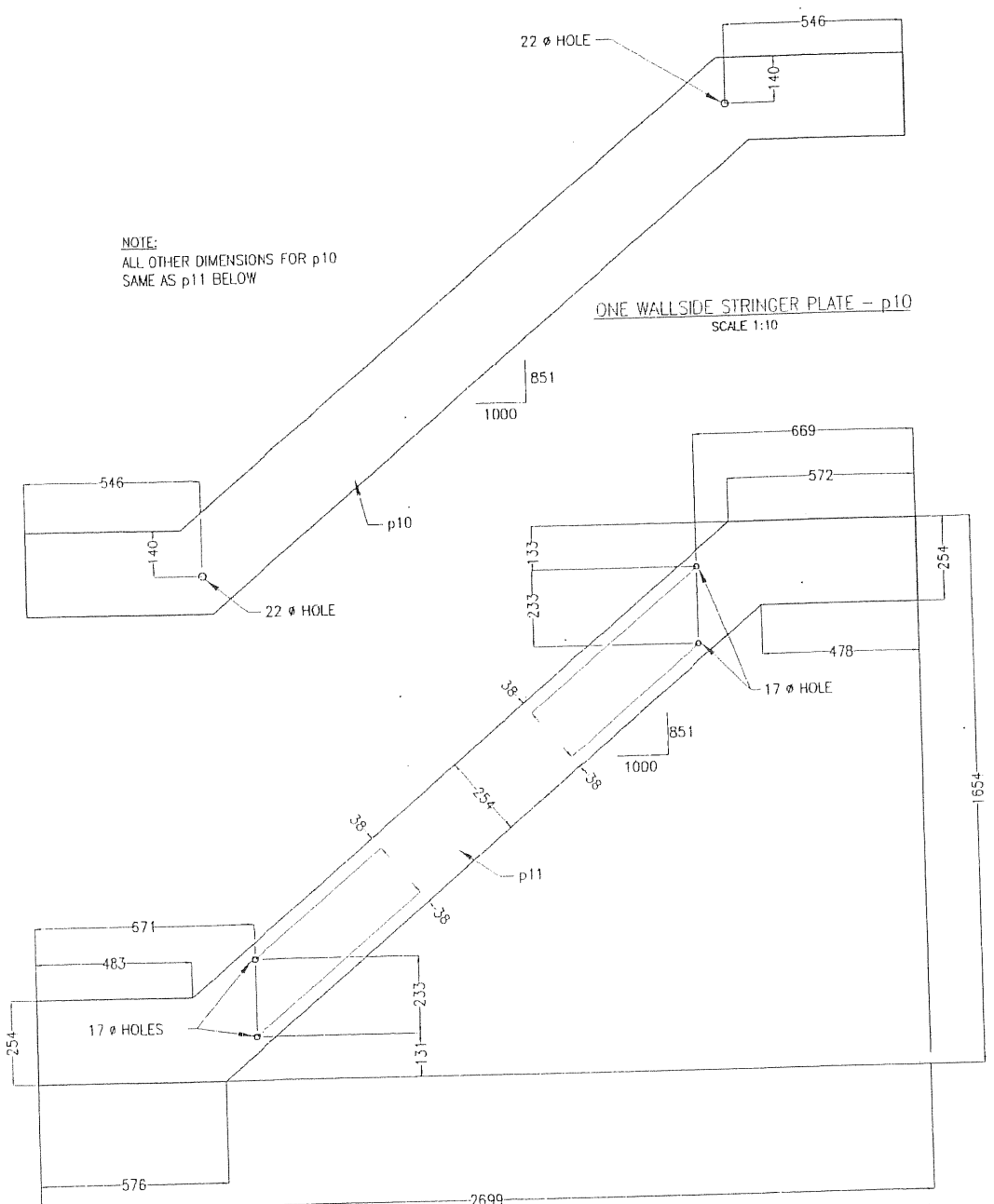

NOTE:
ALL OTHER DIMENSIONS FOR p10
SAME AS p11 BELOW

ONE WALLSIDE STRINGER PLATE – p10
SCALE 1:10

ONE CENTRAL STRINGER PLATE – p11
SCALE 1:10

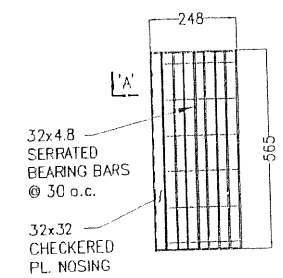

ONE STAIR TREAD – m2
SCALE 1:10

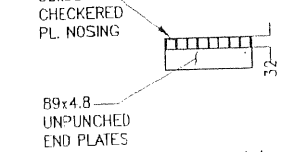

SECTION 'A'
SCALE 1:10

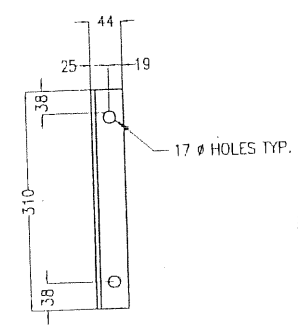

ONE ANGLE – a6
SCALE 1:5

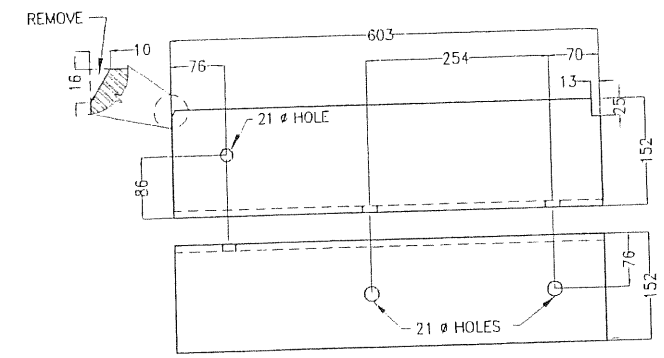

ONE UPPER SHELF ANGLE – a3
SCALE 1:5

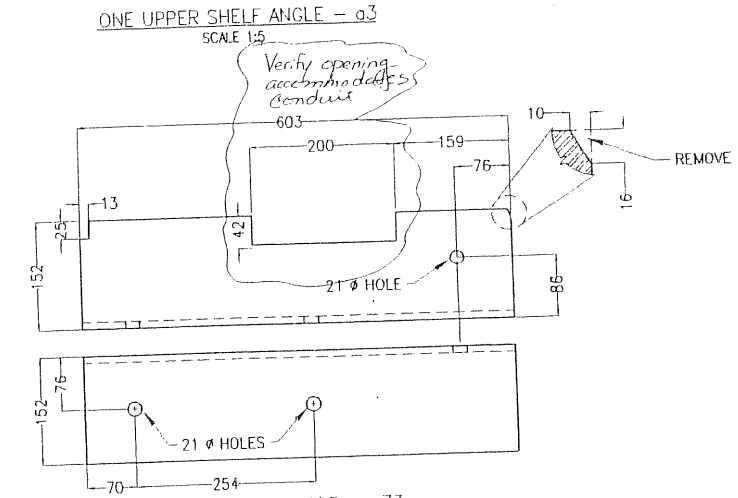

ONE LOWER SHELF ANGLE – a73
SCALE 1:5

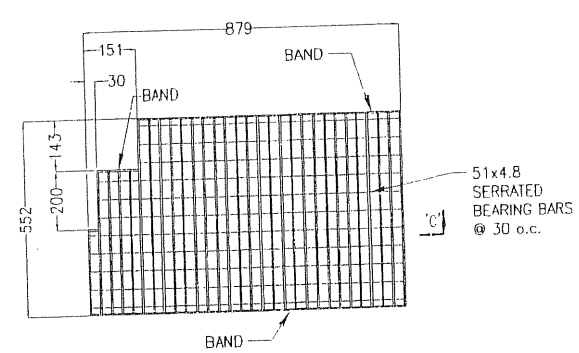

ONE LOWER LANDING GRATE – m153
SCALE 1:10

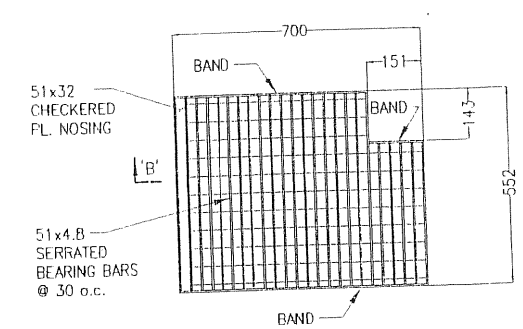

ONE UPPER LANDING GRATE – m3
SCALE 1:10

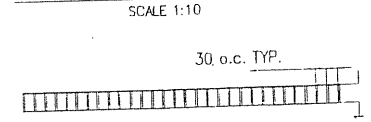

SECTION 'C'
SCALE 1:10

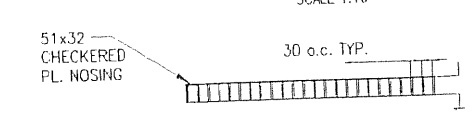

SECTION 'B'
SCALE 1:10

SAN FRANCISCO OAKLAND BAY BRIDGE
SKYWAY CONTRACT No. 04-012024
SFOBB EAST SPAN SEISMIC SAFETY PROJECT
POST KM 04-SF-80-13.9-14.3/NA-80-0.0-1.6
BRIDGE No. 34-0006

PROJECT/DWG. TITLE:

DWN. BY:	DATE:	REV.		DATE
JKS/BRM	3-11-03	1	CONDUIT PENETRATIONS	03-11-03
CHK'D. BY:	DATE:			
APRV'D. BY:	DATE:			
FINISH:				
SCALE: AS NOTED				

JOB NO.: 02D02 | FILE NO.: DWG53mb | DWG. NO.: 53mb

DO NOT DUPLICATE WITHOUT PERMISSION

THIS PROJECT SHALL BE ERECTED PER THE AISC CODE OF STANDARD PRACTICE SPECIFICALLY PARAGRAPH 7.12 AS FOLLOWS:
7.12 CORRECTION OF ERRORS
THE CORRECTION OF MINOR MISFITS BY MODERATE AMOUNTS OF REAMING, GRINDING, WELDING OR CUTTING, AND THE DRAWING OF ELEMENTS INTO LINE WITH DRIFT PINS, SHALL BE CONSIDERED TO BE NORMAL ERECTION OPERATIONS. ERRORS THAT CANNOT BE CORRECTED USING FOREGOING MEANS, OR THAT REQUIRE MAJOR CHANGES IN MEMBER OR CONNECTION CONFIGURATION, SHALL BE PROMPTLY REPORTED TO THE OWNER'S DESIGNATED REPRESENTATIVES FOR DESIGN AND CONSTRUCTION AND THE FABRICATOR BY THE ERECTOR, TO ENABLE THE RESPONSIBLE ENTITY TO EITHER CORRECT THE ERROR OR APPROVE THE MOST EFFICIENT AND ECONOMICAL METHOD OF CORRECTION TO BE USED BY OTHERS. NO BACK CHARGES WILL BE ACCEPTED UNLESS APPROVED IN WRITING BY THIS OFFICE.

GLOBAL FABRICATORS
METRIC
CUSTOM EQUIPMENT MANUFACTURING
METAL FABRICATION–MACHINE SHOP
8929 ROSEDALE HWY. BAKERSFIELD CA. 93312
PHONE: (661) 589-2774 FAX: (661) 589-7504
E-MAIL engineering@globalfab.com

H.F. MAGER INC.
STRUCTURAL ENGINEERS
COMMERCIAL & INDUSTRIAL
STRUCTURAL DESIGN AND
CONSTRUCTION DOCUMENTS
1149 MARSH STREET
SAN LUIS OBISPO, CA. 93401
PH# (805)541-2193 FAX# (805)541-5346
EMAIL hone@magerinc.com

SEAL
REGISTERED PROFESSIONAL ENGINEER HANS FRED MAGER S 2376 Mar. 11, 2003 STRUCTURAL ENGINEER STATE OF CALIFORNIA
Expires Mar. 31, 2006

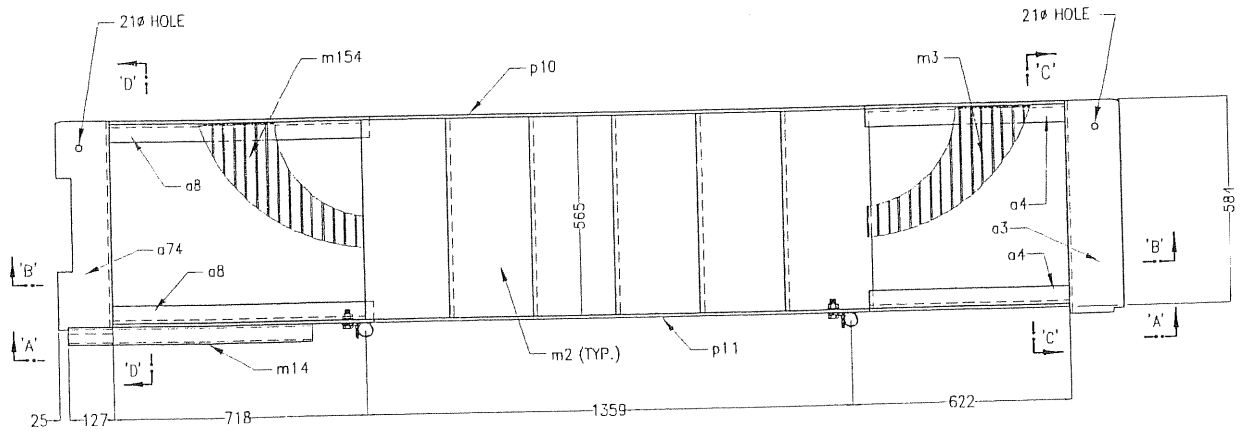

REPETITIVE STAIR ASSEMBLY PLAN – 54A
SCALE 1:10

METRIC SIZE	IMPERIAL SIZE
TREAD 32x246	TREAD 1 1/4x9 3/4
GRATING 51x4.8x700	GRATING 2x3/16x27 9/16
GRATING 51x4.8x879	GRATING 2x3/16x34 5/8"
PIPE 38 ø Sch. 40	PIPE 1 1/2ø Sch. 40
CUT FROM 38 ø 90° ELBOW	CUT FROM 1 1/2ø 90° ELBOW
TS 51x51x4.8	TS 2x2x3/16
L 152x152x9.5	L 6x6x3/8
L 51x51x6.4	L 2x2x1/4
L 44x44x6.4	L 1 3/4x1 3/4x1/4
PL. 9.5x1654	PL. 3/8x65 1/8
PL. 6.4x102	PL. 1/4x4
BOLT 19 ø (A307)	BOLT 3/4" ø (A307)
BOLT 19 ø (A325)	BOLT 3/4" ø (A325)
BOLT 16 ø (A325)	BOLT 5/8" ø (A325)

BILL OF MATERIALS

SHIP MK.	PIECE MARK	QTY.	DESCRIPTION (Imperial Size)	CUT LENGTH (mm.)	COMMENT
L54A		2	REPET. STAIR ASSMEMBLY		
	~~L m2~~	12	TREAD 1 1/4x9 3/4	565	IKG WB-6
	~~L m3~~	2	GRATING 2x3/16x27 9/16"	552	IKG WF-10
	~~L m8~~	4	PIPE 1 1/2ø Sch. 40	1233	
	~~p9~~	2	PIPE 1 1/2ø Sch. 40	78	
	~~p13~~	8	CUT FROM 1 1/2ø 90° ELBOW		
	~~L m14~~	2	TS 2x2x3/16	673	
	~~L m154~~	2	GRATING 2x3/16x34 5/8"	552	IKG WF-10
	~~p16~~	2	PIPE 1 1/2ø Sch. 40	724	
	~~p17~~	2	PIPE 1 1/2ø Sch. 40	203	
	~~p18~~	2	PIPE 1 1/2ø Sch. 40	1765	
	~~a3~~	2	L 6x6x3/8	603	
	~~a4~~	4	L 2x2x1/4	572	
	~~a5~~	8	L 2x2x1/4	152	
	~~a6~~	4	L 1-3/4x1-3/4x-1/4	310	
	~~a74~~	2	L 6x6x3/8	603	
	~~a8~~	4	L 2x2x1/4	740	
	~~p10~~	2	PL. 3/8x65 1/8	2699	
	~~p11~~	2	PL. 3/8x65 1/8	2699	
	~~p12~~	2	PL. 1/4x4	2246	
	~~z1~~	4	BOLT 3/4" ø (A307)	95	w/n
	z5	8	BOLT 3/4" ø (A325)	57	w/n & w
	~~z6~~	8	BOLT 5/8" ø (A325)	45	w/n & w

APPROVED
APPROVED AS NOTED
NOT APPROVED
Pursuant to Section 5.1.02 of the Standard Specifications State of California DEPARTMENT OF TRANSPORTATION Division of Structures Office of Structure Construction
Signed James Fan
Structure Representative
Date 4/18/03

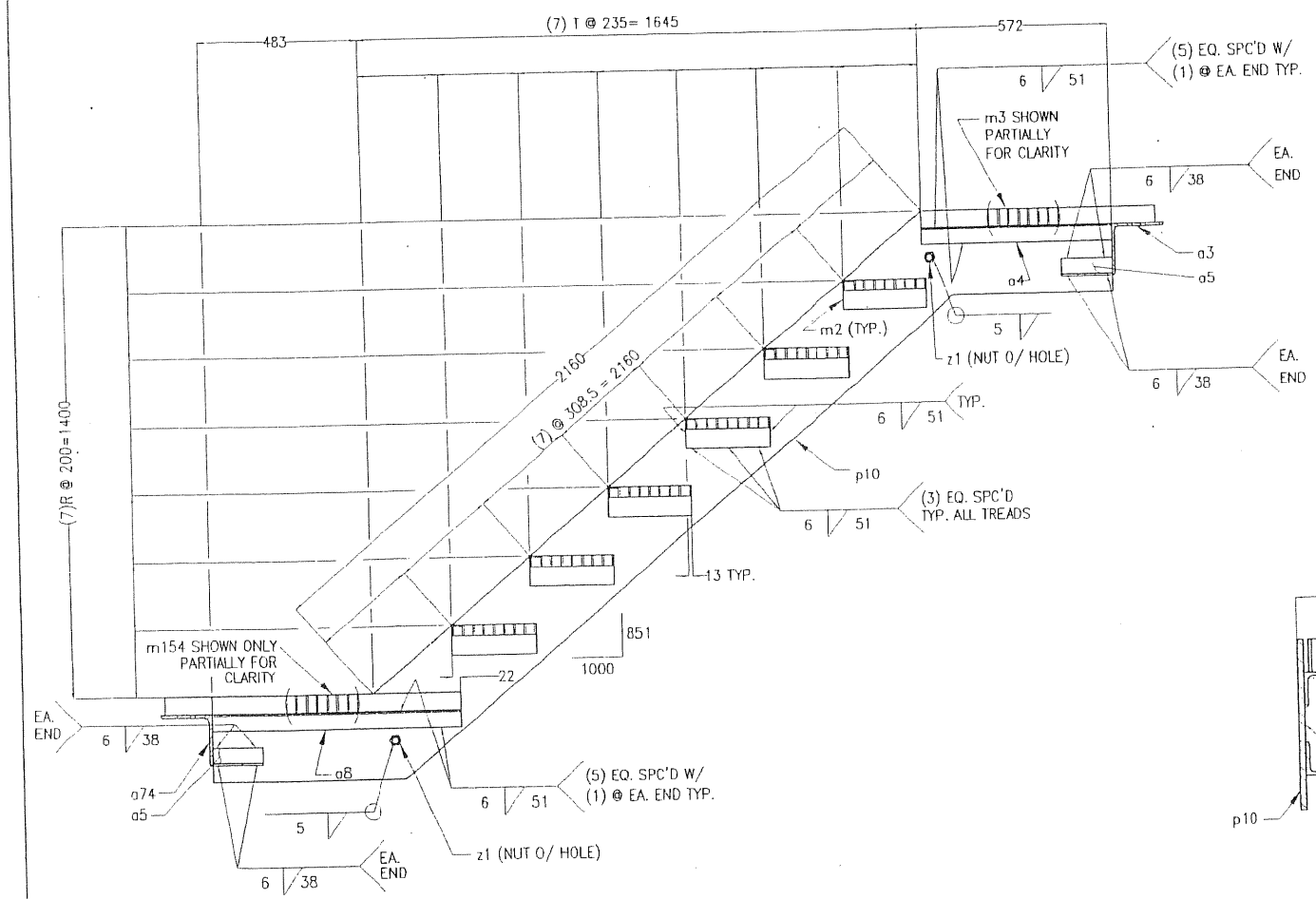

SECTION 'B-B'
SCALE 1:10

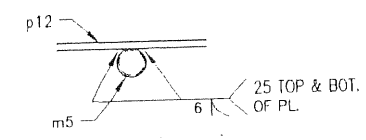

SECTION 'H'
SCALE 1:5

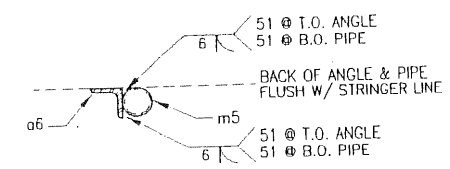

SECTION 'G'
SCALE 1:5

CONTRACT NO. 04-012024
CCO NO. 49
PAGE 50 OF 72

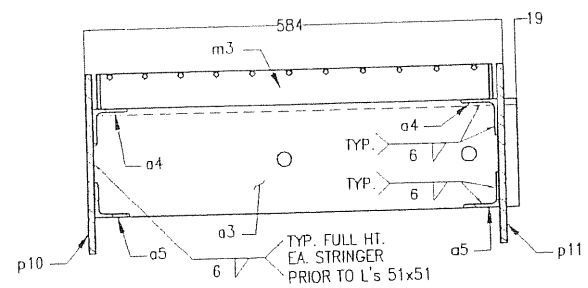

SECTION 'C-C'
SCALE 1:5

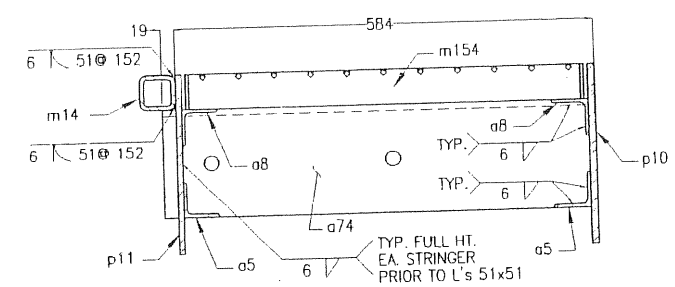

SECTION 'D-D'
SCALE 1:5

SAN FRANCISCO OAKLAND BAY BRIDGE
SKYWAY CONTRACT No. 04-012024
SFOBB EAST SPAN SEISMIC SAFETY PROJECT
POST KM 04-SF-80-13.9-14.3/ALA-80-0.0-1.6
BRIDGE No. 34-0006

DO NOT DUPLICATE WITHOUT PERMISSION

THIS PROJECT SHALL BE ERECTED PER THE AISC CODE OF STANDARD PRACTICE SPECIFICALLY PARAGRAPH 7.12 AS FOLLOWS:
7.12 CORRECTION OF ERRORS
THE CORRECTION OF MINOR MISFITS BY MODERATE AMOUNTS OF REAMING, GRINDING, WELDING OR CUTTING, AND THE DRAWING OF ELEMENTS INTO LINE WITH DRIFT PINS, SHALL BE CONSIDERED TO BE NORMAL ERECTION OPERATIONS. ERRORS THAT CANNOT BE CORRECTED USING FOREGOING MEANS, OR THAT REQUIRE MAJOR CHANGES IN MEMBER OR CONNECTION CONFIGURATION, SHALL BE PROMPTLY REPORTED TO THE OWNER'S DESIGNATED REPRESENTATIVES FOR DESIGN AND CONSTRUCTION AND THE FABRICATOR BY THE ERECTOR, TO ENABLE THE RESPONSIBLE ENTITY TO EITHER CORRECT THE ERROR OR APPROVE THE MOST EFFICIENT AND ECONOMICAL METHOD OF CORRECTION TO BE USED BY OTHERS. NO BACK CHARGES WILL BE ACCEPTED UNLESS APPROVED IN WRITING BY THIS OFFICE.

GLOBAL FABRICATORS
METRIC

CUSTOM EQUIPMENT MANUFACTURING
METAL FABRICATION–MACHINE SHOP
8929 ROSEDALE HWY. BAKERSFIELD CA. 93312
PHONE: (661) 589-2774 FAX: (661) 589-7504
E-MAIL engineering@globalfab.com

H.F. MAGER INC.
STRUCTURAL ENGINEERS
COMMERCIAL & INDUSTRIAL
STRUCTURAL DESIGN AND
CONSTRUCTION DOCUMENTS
1149 MARSH STREET
SAN LUIS OBISPO, CA 93401
PH# (805)541-2193 FAX# (805)541-5348
EMAIL hmm@magerstruc.com

SEAL: Mar. 11, 2003 — Expires 3/31/2006

DWN. BY: JKS	DATE: 3-11-03	REV. 1	CONDUIT PENETRATIONS	DATE 03-11-03
CHK'D. BY:	DATE:			
APRV'D. BY:	DATE:			
FINISH:				
SCALE: AS NOTED				

PROJECT/DWG. TITLE:

JOB NO.:	FILE NO.:	DWG. NO.:
02D02	DWG54m	54m

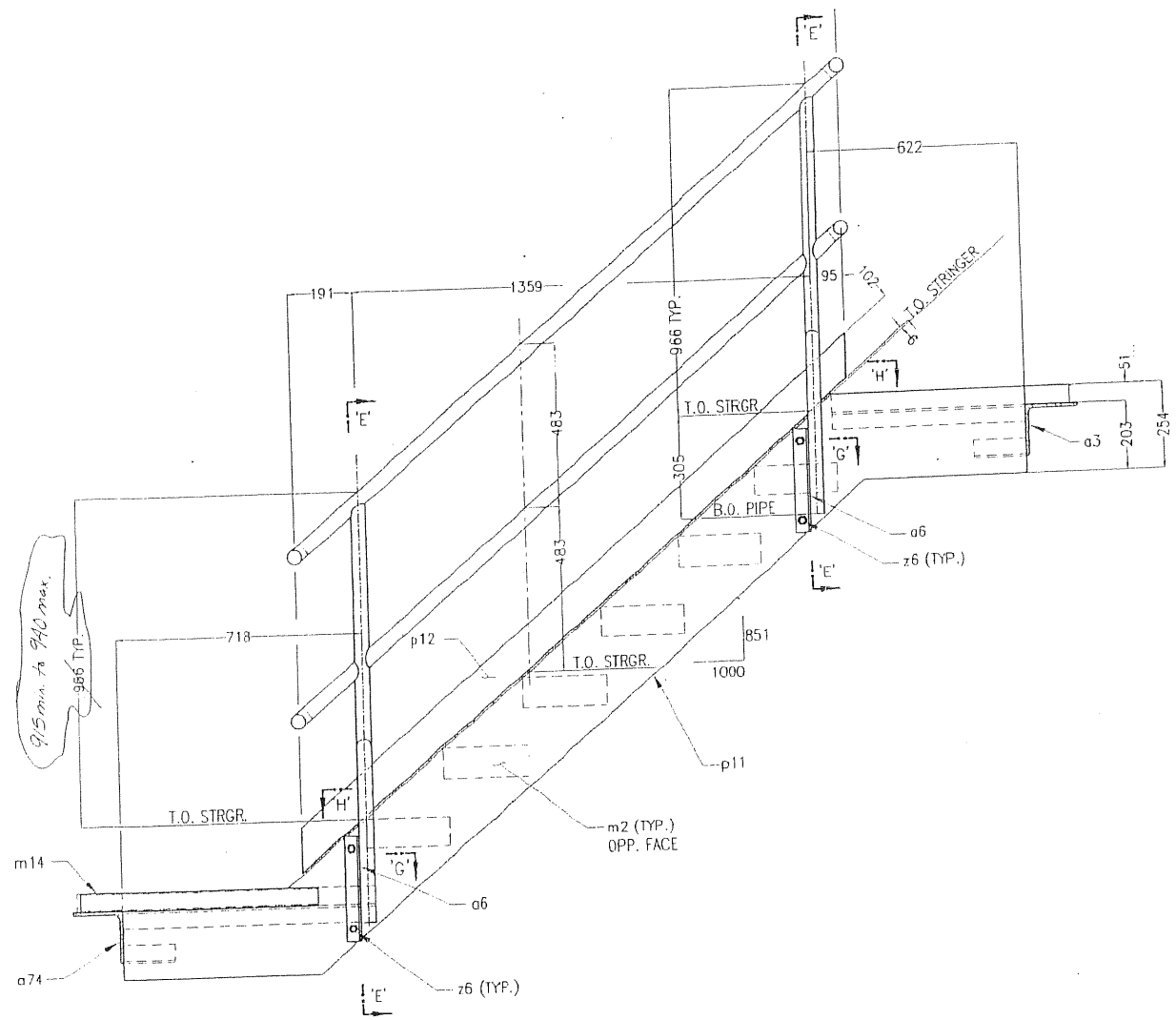

VIEW 'A–A'
SCALE 1:10

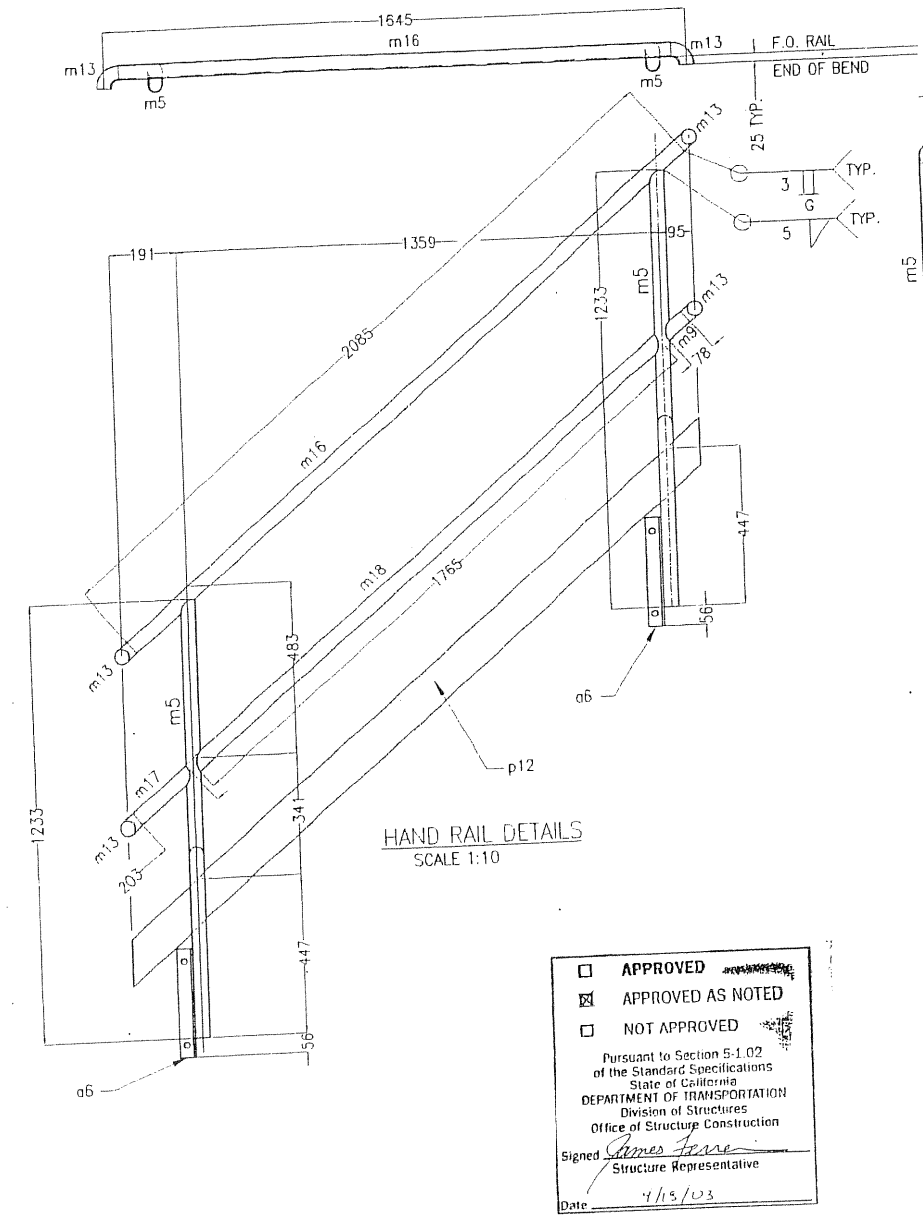

HAND RAIL DETAILS
SCALE 1:10

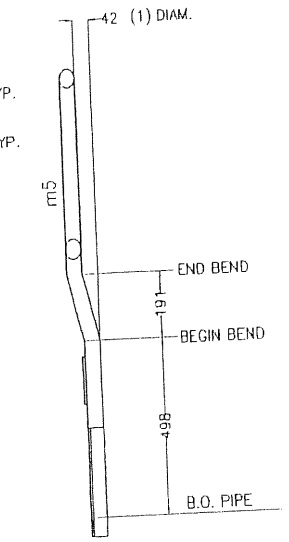

SECTION 'E–E'
SCALE 1:10

☐ APPROVED
☒ APPROVED AS NOTED
☐ NOT APPROVED

Pursuant to Section 5-1.02 of the Standard Specifications
State of California
DEPARTMENT OF TRANSPORTATION
Division of Structures
Office of Structure Construction

Signed James Fore
Structure Representative
Date 4/19/03

CONTRACT NO. 04-012024
CCO NO. 49
PAGE 51 OF 72

SAN FRANCISCO OAKLAND BAY BRIDGE
SKYWAY CONTRACT No. 04-012024
SFOBB EAST SPAN SEISMIC SAFETY PROJECT
POST KM 04-SF-80-13.9-14.3/ALA-80-0.0-1.6
BRIDGE No. 34-0006

PROJECT/DWG. TITLE:

DWN. BY:	DATE:	REV.		DATE
JKS	3-11-03	1	CONDUIT PENETRATIONS	03-11-03
CHK'D. BY:	DATE:			
APRV'D. BY:	DATE:			
FINISH:				
SCALE: AS NOTED				

JOB NO.: 02D02 | FILE NO.: DWG54ma | DWG. NO.: 54ma

SEAL: REGISTERED PROFESSIONAL ENGINEER — JAMES FRED MAGER — C 23760 — Mar. 11, 2003 — STATE OF CALIFORNIA — Expires Mar. 31, 2006

H.F. MAGER INC.
STRUCTURAL ENGINEERS
COMMERCIAL & INDUSTRIAL
STRUCTURAL DESIGN AND
CONSTRUCTION DOCUMENTS
1149 MARSH STREET
SAN LUIS OBISPO, CA. 93401
PH# (805)541-2193 FAX# (805)541-5346
EMAIL hmr@magerstruc.com

GLOBAL FABRICATORS
METRIC
CUSTOM EQUIPMENT MANUFACTURING
METAL FABRICATION–MACHINE SHOP
8929 ROSEDALE HWY. BAKERSFIELD CA. 93312
PHONE: (661) 589-2774 FAX: (661) 589-7504
E-MAIL engineering@globalfab.com

THIS PROJECT SHALL BE ERECTED PER THE AISC CODE OF STANDARD PRACTICE SPECIFICALLY PARAGRAPH 7.12 AS FOLLOWS:
7.12 CORRECTION OF ERRORS
THE CORRECTION OF MINOR MISFITS BY MODERATE AMOUNTS OF REAMING, GRINDING, WELDING OR CUTTING, AND THE DRAWING OF ELEMENTS INTO LINE WITH DRIFT PINS, SHALL BE CONSIDERED TO BE NORMAL ERECTION OPERATIONS. ERRORS THAT CANNOT BE CORRECTED USING FOREGOING MEANS, OR THAT REQUIRE MAJOR CHANGES IN MEMBER OR CONNECTION CONFIGURATION, SHALL BE PROMPTLY REPORTED TO THE OWNER'S DESIGNATED REPRESENTATIVES FOR DESIGN AND CONSTRUCTION AND THE FABRICATOR BY THE ERECTOR, TO ENABLE THE RESPONSIBLE ENTITY TO EITHER CORRECT THE ERROR OR APPROVE THE MOST EFFICIENT AND ECONOMICAL METHOD OF CORRECTION TO BE USED BY OTHERS. NO BACK CHARGES WILL BE ACCEPTED UNLESS APPROVED IN WRITING BY THIS OFFICE.

DO NOT DUPLICATE WITHOUT PERMISSION

CONTRACT NO. 04-012024
CCO NO. 49
PAGE 52 OF 72

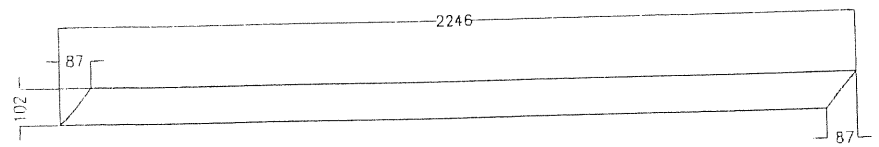

ONE TOE PLATE – p12
SCALE 1:10

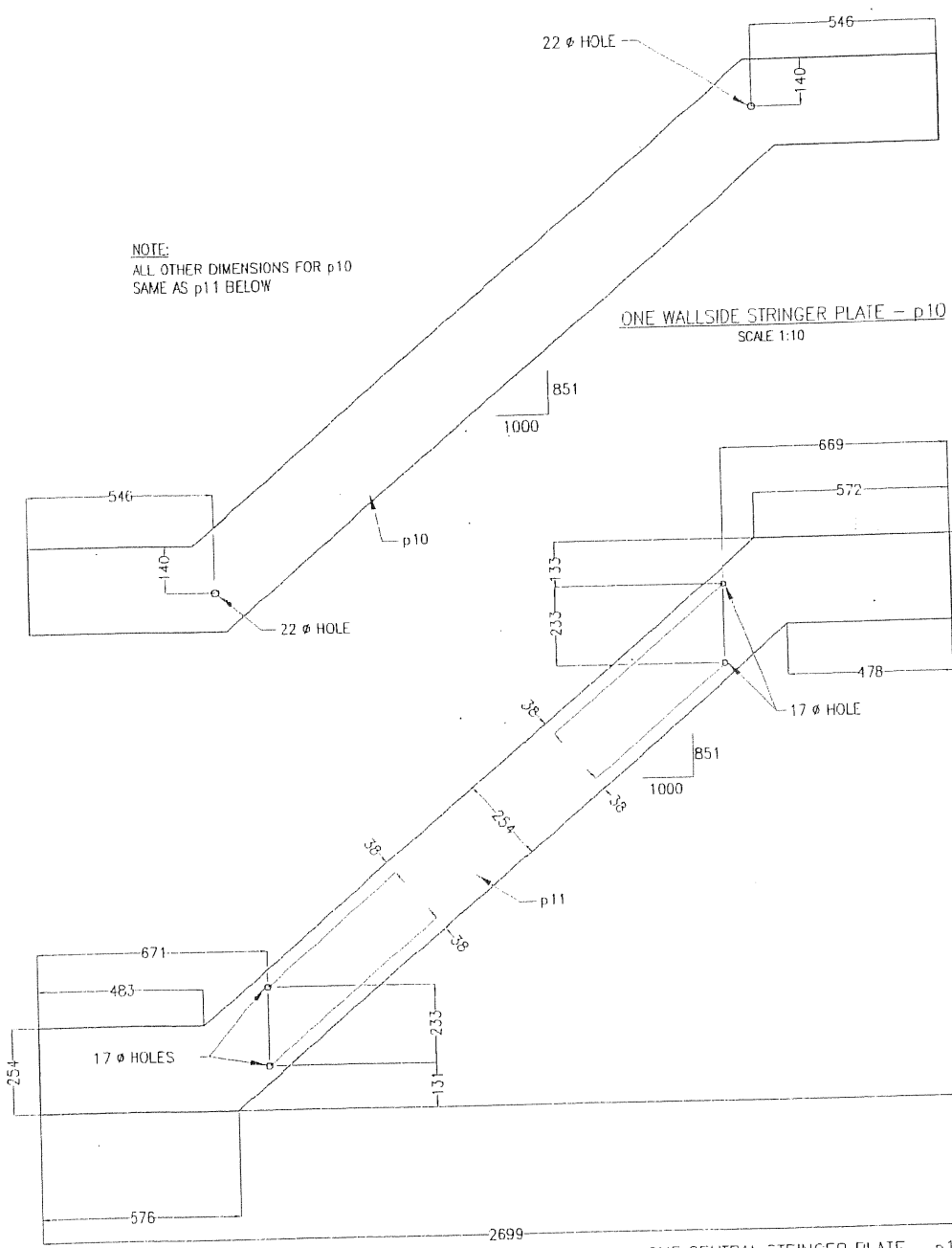

NOTE:
ALL OTHER DIMENSIONS FOR p10
SAME AS p11 BELOW

ONE WALLSIDE STRINGER PLATE – p10
SCALE 1:10

ONE CENTRAL STRINGER PLATE – p11
SCALE 1:10

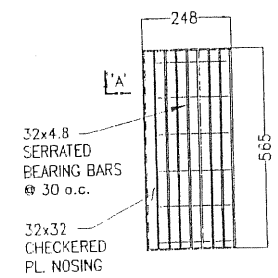

ONE STAIR TREAD – m2
SCALE 1:10

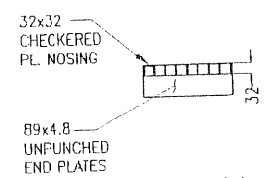

SECTION 'A'
SCALE 1:10

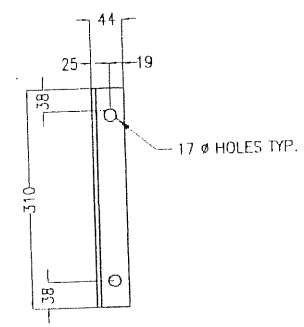

ONE ANGLE – a6
SCALE 1:5

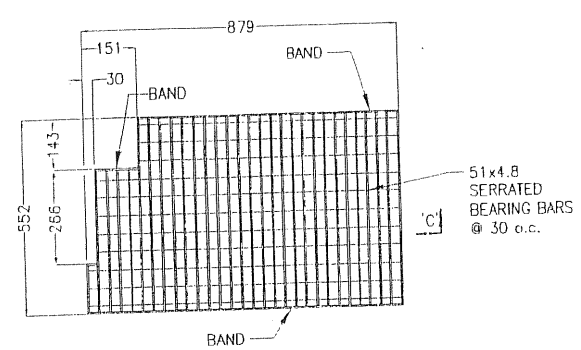

ONE LOWER LANDING GRATE – m154
SCALE 1:10

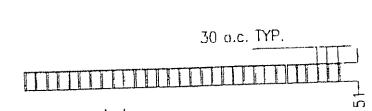

SECTION 'C'
SCALE 1:10

APPROVED
☒ APPROVED AS NOTED
☐ NOT APPROVED
Pursuant to Section 5-1.02 of the Standard Specifications State of California
DEPARTMENT OF TRANSPORTATION
Division of Structures
Office of Structure Construction
Signed James Ferro
Structure Representative
Date 4/18/03

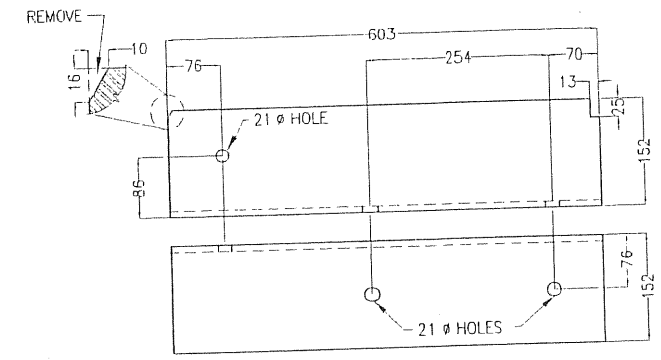

ONE UPPER SHELF ANGLE – a3
SCALE 1:5

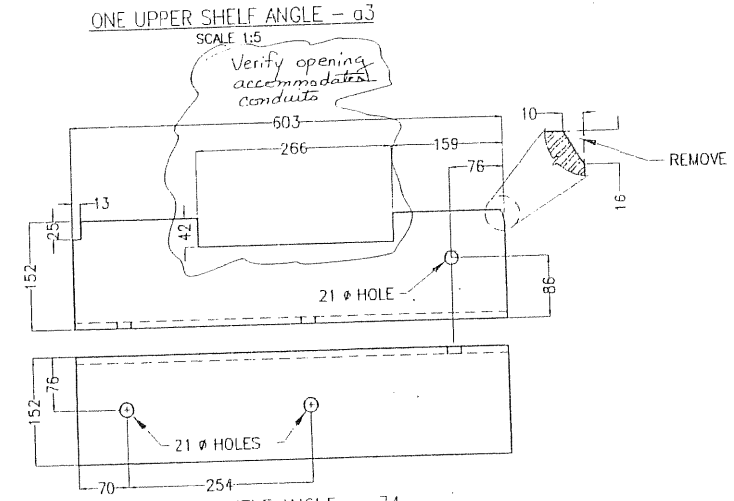

ONE LOWER SHELF ANGLE – a74
SCALE 1:5

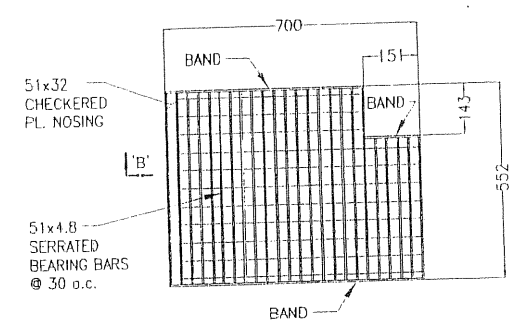

ONE UPPER LANDING GRATE – m3
SCALE 1:10

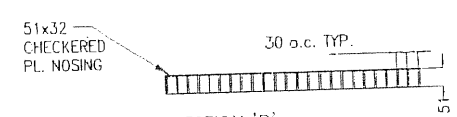

SECTION 'B'
SCALE 1:10

DO NOT DUPLICATE WITHOUT PERMISSION

THIS PROJECT SHALL BE ERECTED PER THE AISC CODE OF STANDARD PRACTICE SPECIFICALLY PARAGRAPH 7.12 AS FOLLOWS:
7.12 CORRECTION OF ERRORS
THE CORRECTION OF MINOR MISFITS BY MODERATE AMOUNTS OF REAMING, GRINDING, WELDING OR CUTTING, AND THE DRAWING OF ELEMENTS INTO LINE WITH DRIFT PINS, SHALL BE CONSIDERED TO BE NORMAL ERECTION OPERATIONS. ERRORS THAT CANNOT BE CORRECTED USING FOREGOING MEANS, OR THAT REQUIRE MAJOR CHANGES IN MEMBER OR CONNECTION CONFIGURATION, SHALL BE PROMPTLY REPORTED TO THE OWNER'S DESIGNATED REPRESENTATIVES FOR DESIGN AND CONSTRUCTION AND THE FABRICATOR BY THE ERECTOR, TO ENABLE THE RESPONSIBLE ENTITY TO EITHER CORRECT THE ERROR OR APPROVE THE MOST EFFICIENT AND ECONOMICAL METHOD OF CORRECTION TO BE USED BY OTHERS. NO BACK CHARGES WILL BE ACCEPTED UNLESS APPROVED IN WRITING BY THIS OFFICE.

GLOBAL FABRICATORS
METRIC
CUSTOM EQUIPMENT MANUFACTURING
METAL FABRICATION–MACHINE SHOP
8829 ROSEDALE HWY. BAKERSFIELD CA. 93312
PHONE: (661) 589-2774 FAX: (661) 589-7594
E-MAIL engineering@globalfab.com

H.F. MAGER INC.
STRUCTURAL ENGINEERS
COMMERCIAL & INDUSTRIAL
STRUCTURAL DESIGN AND
CONSTRUCTION DOCUMENTS
1149 MARSH STREET
SAN LUIS OBISPO, CA 93401
PH# (805)541-2193 FAX# (805)541-5346
EMAIL hfm@magerstruc.com

SEAL: REGISTERED PROFESSIONAL ENGINEER H. J. Mager S 23701 Mar. 11, 2003 STRUCTURAL CALIFORNIA
Expires Mar. 31, 2006

DWN. BY:	DATE:	REV.		DATE
JKS/BRM	3-11-03	1	CONDUIT PENETRATIONS	03-11-03
CHK'D. BY: HJM	DATE:			
APRV'D. BY:	DATE:			
FINISH:				
SCALE: AS NOTED				

SAN FRANCISCO OAKLAND BAY BRIDGE
SKYWAY CONTRACT No. 04-012024
SFOBB EAST SPAN SEISMIC SAFETY PROJECT
POST KM 04-SF-80-13.9-14.3/ALA-80-0.0-1.6
BRIDGE No. 34-0006

PROJECT/DWG. TITLE:

JOB NO.:	FILE NO.:	DWG. NO.:
02D02	DWG54mb	54mb

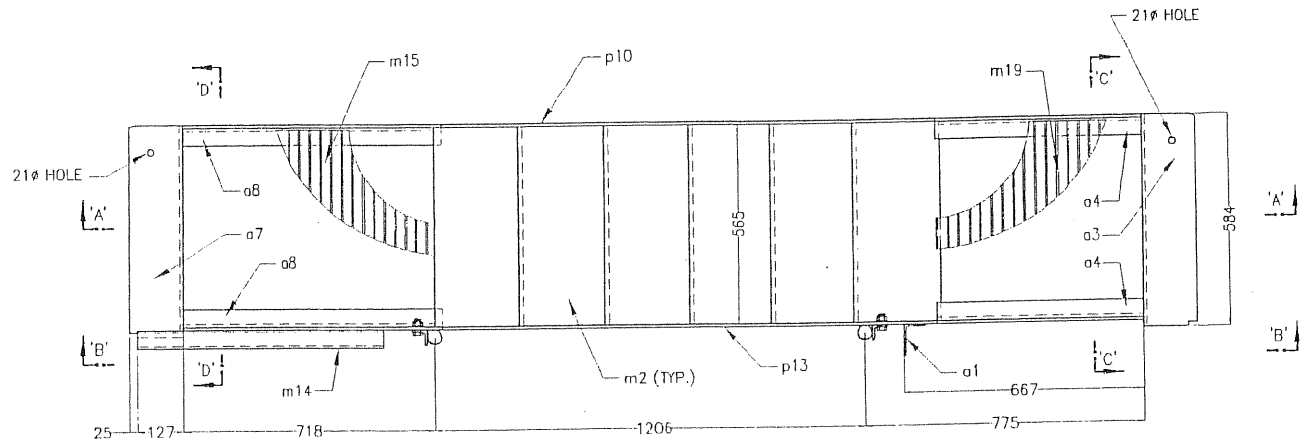

TOP STAIR ASSEMBLY PLAN - 6A
SCALE 1:10

METRIC SIZE	IMPERIAL SIZE
TREAD 32x248	TREAD 1 1/4x9 3/4
PIPE 38 ø Sch. 40	PIPE 1 1/2ø Sch. 40
CUT FROM 38 ø 90° ELBOW	CUT FROM 1 1/2ø 90° ELBOW
TS 51x51x4.8	TS 2x2x3/16
GRATING 51x4.8x879	GRATING 2x3/16x34 5/8
GRATING 51x4.8x700	GRATING 2x3/16x27 9/16
L 89x63x6.4	L 3 1/2x2 1/2x1/4
L 152x152x9.5	L 6x6x3/8
L 51x51x6.4	L 2x2x1/4
L 44x44x6.4	L 1 3/4x1 3/4x1/4
PL. 9.5x1654	PL. 3/8x65 1/8
PL. 6.4x102	PL. 1/4x4
BOLT 19 ø (A307)	BOLT 3/4" ø (A307)
BOLT 19 ø (A325)	BOLT 3/4" ø (A325)
BOLT 16 ø (A325)	BOLT 5/8" ø (A325)

☒ APPROVED
☐ APPROVED AS NOTED
☐ NOT APPROVED

Pursuant to Section 5.1.02 of the Standard Specifications State of California DEPARTMENT OF TRANSPORTATION Division of Structures Office of Structure Construction

Signed James Fraser
Structure Representative
Date 4/13/03

BILL OF MATERIALS

SHIP MK.	PIECE MARK	QTY.	DESCRIPTION (Imperial Size)	CUT LENGTH (mm.)	COMMENT
6A		21	TOP STAIR ASSEMBLY		
	m9	126	TREAD 1 1/4x9 3/4	565	IKG WB-6
	m5	42	PIPE 1 1/2"ø Sch. 40	1233	
	m13	84	CUT FROM 1 1/2"ø 90° ELBOW		
	m14	21	TS 2x2x3/16	673	
	m15	21	GRATING 2x3/16x34 5/8	552	IKG WF-10
	m17	21	PIPE 1 1/2"ø Sch. 40	203	
	m18	21	GRATING 2x3/16x27 9/16	552	IKG WF-10
	m20	21	PIPE 1 1/2"ø Sch. 40	1866	
	m21	21	PIPE 1 1/2"ø Sch. 40	1565	
	m22	21	PIPE 1 1/2"ø Sch. 40	61	
	a1	21	L 3 1/2x2 1/2x1/4	152	
	a2	21	L 6x6x3/8	603	
	a4	42	L 2x2x1/4	572	
	a3	84	L 2x2x1/4	152	
	a6	42	L 1 3/4x1 3/4x1/4	310	
	a7	21	L 6x6x3/8	603	
	a8	42	L 2x2x1/4	740	
	p10	21	PL. 3/8x65 1/8	2699	
	p13	21	PL. 3/8x65 1/8	2699	
	p14	21	PL. 1/4x4	2054	
	z1	42	BOLT 3/4" ø (A307)	95	w/n
	z5	84	BOLT 3/4" ø (A325)	57	w/n & w
	z6	84	BOLT 5/8" ø (A325)	45	w/n & w
	z7	21	BOLT 3/4" ø (A325)	51	w/n & w

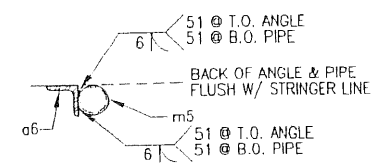

SECTION 'G'
SCALE 1:5

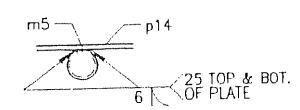

SECTION 'H'
SCALE 1:5

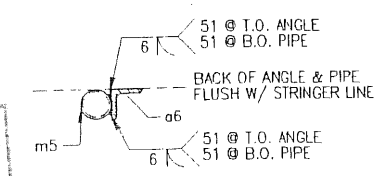

SECTION 'I'
SCALE 1:5

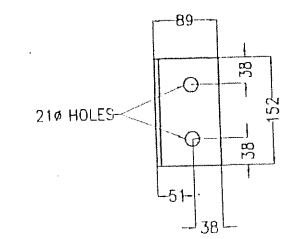

ONE BRACKET ANGLE - a1
SCALE 1:5

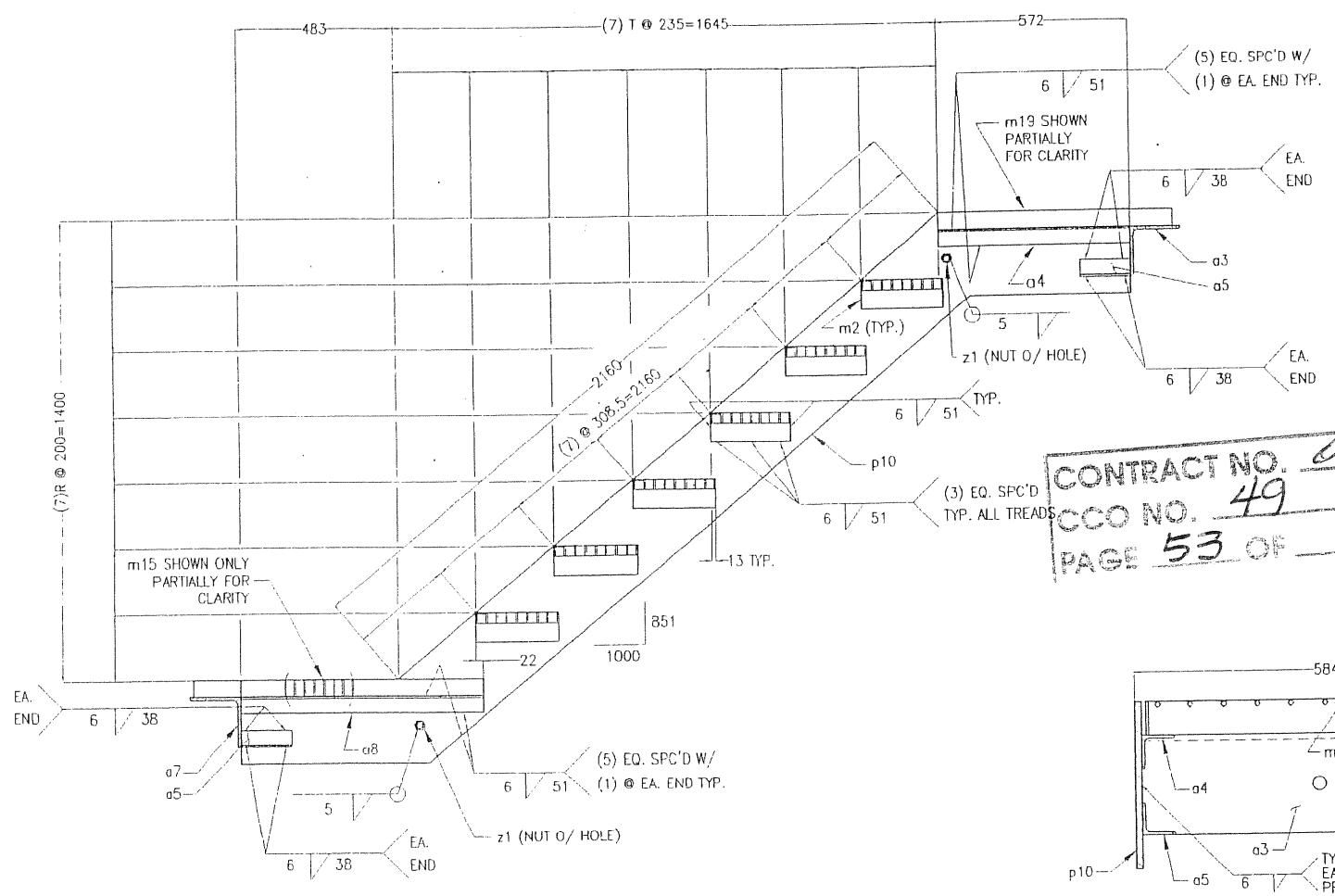

SECTION 'A-A'
SCALE 1:10

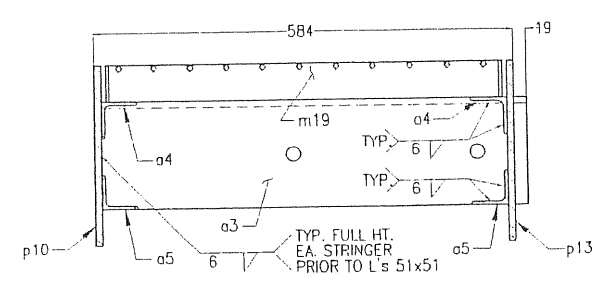

SECTION 'C-C'
SCALE 1:5

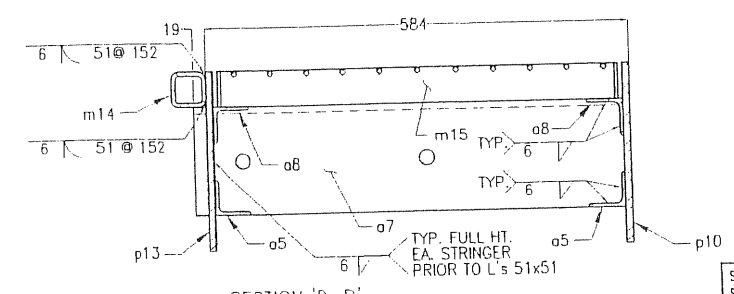

SECTION 'D-D'
SCALE 1:5

CONTRACT NO. 04-012024
CCO NO. 49
PAGE 53 OF 72

SAN FRANCISCO OAKLAND BAY BRIDGE
SKYWAY CONTRACT No. 04-012024
SFOBB EAST SPAN SEISMIC SAFETY PROJECT
POST KM 04-SF-80-13.9-14.3/ALA-80-0.0-1.6
BRIDGE No. 34-0006

DO NOT DUPLICATE WITHOUT PERMISSION

THIS PROJECT SHALL BE ERECTED PER THE AISC CODE OF STANDARD PRACTICE SPECIFICALLY PARAGRAPH 7.12 AS FOLLOWS:
7.12 CORRECTION OF ERRORS
THE CORRECTION OF MINOR MISFITS BY MODERATE AMOUNTS OF REAMING, GRINDING, WELDING OR CUTTING, AND THE DRAWING OF ELEMENTS INTO LINE WITH DRIFT PINS, SHALL BE CONSIDERED TO BE NORMAL ERECTION OPERATIONS. ERRORS THAT CANNOT BE CORRECTED USING FOREGOING MEANS, OR THAT REQUIRE MAJOR CHANGES IN MEMBER OR CONNECTION CONFIGURATION, SHALL BE PROMPTLY REPORTED TO THE OWNER'S DESIGNATED REPRESENTATIVES FOR DESIGN AND CONSTRUCTION AND THE FABRICATOR BY THE ERECTOR, TO ENABLE THE RESPONSIBLE ENTITY TO EITHER CORRECT THE ERROR OR APPROVE THE MOST EFFICIENT AND ECONOMICAL METHOD OF CORRECTION TO BE USED BY OTHERS. NO BACK CHARGES WILL BE ACCEPTED UNLESS APPROVED IN WRITING BY THIS OFFICE.

GLOBAL FABRICATORS
METRIC
CUSTOM EQUIPMENT MANUFACTURING
METAL FABRICATION-MACHINE SHOP
8929 ROSEDALE HWY. BAKERSFIELD CA. 93312
PHONE: (661) 589-2774 FAX: (661) 589-7504
E-MAIL engineering@globallab.com

H.F. MAGER INC.
STRUCTURAL ENGINEERS
COMMERCIAL & INDUSTRIAL
STRUCTURAL DESIGN AND
CONSTRUCTION DOCUMENTS
1149 MARSH STREET
SAN LUIS OBISPO, CA 93401
PH# (805)541-2193 FAX# (805)541-5346
EMAIL hofm@magerstruc.com

SEAL: REGISTERED PROFESSIONAL ENGINEER HANS FRIED MAGER S 2376 STRUCTURAL ENGINEER STATE OF CALIFORNIA
Expires Mar. 31, 2006

DWN. BY:	DATE:	REV.		DATE
IDG	3-11-03	1	CONDUIT PENETRATIONS	03-11-03
CHK'D. BY:	DATE:			
APR'D. BY:	DATE:			
FINISH:				
SCALE: AS NOTED				

PROJECT/DWG. TITLE:

JOB NO.:	FILE NO.:	DWG. NO.:
02D02	DWG6m	6m

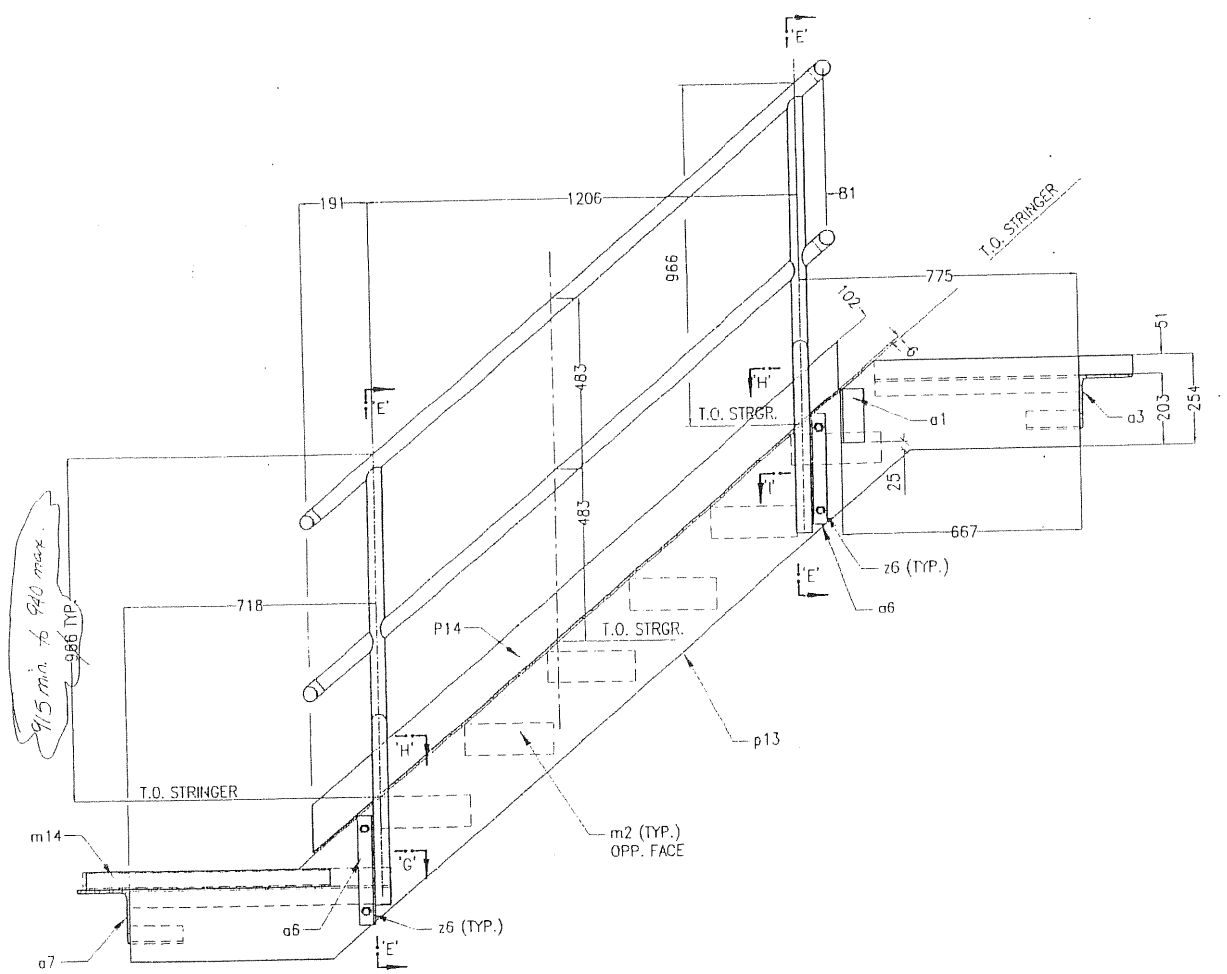

VIEW 'B-B'
SCALE 1:10

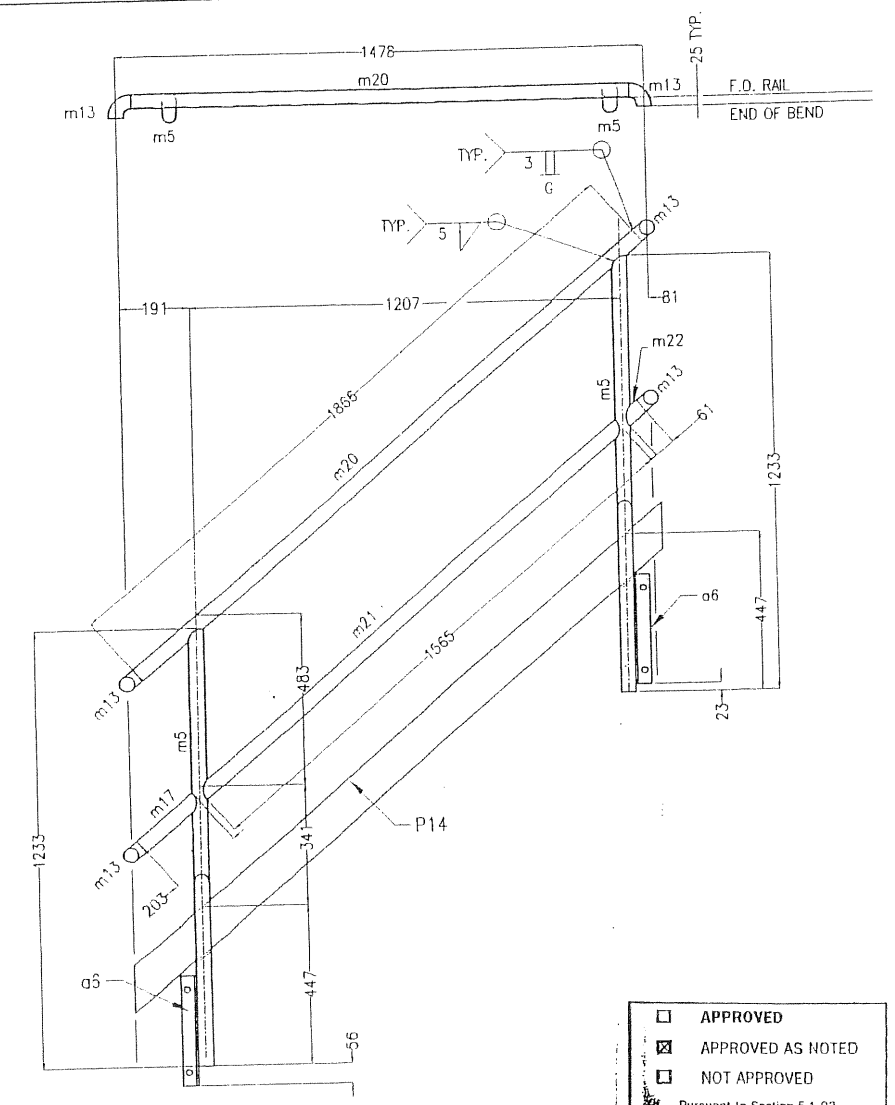

HAND RAIL DETAILS
SCALE 1:10

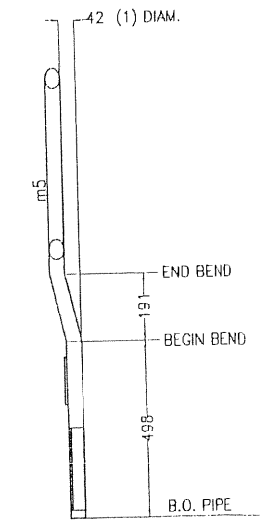

SECTION 'E-E'
SCALE 1:10

☐ APPROVED
☒ APPROVED AS NOTED
☐ NOT APPROVED

Pursuant to Section 5-1.02 of the Standard Specifications
State of California
DEPARTMENT OF TRANSPORTATION
Division of Structures
Office of Structure Construction

Signed James Fan
Structure Representative

Date 4/18/03

CONTRACT NO. 04-012024
CCO NO. 49
PAGE 54 OF 72

SAN FRANCISCO OAKLAND BAY BRIDGE
SKYWAY CONTRACT No. 04-012024
SFOBB EAST SPAN SEISMIC SAFETY PROJECT
POST KM 04-SF-80-13.9-14.3/ALA-80-0.0-1.6
BRIDGE No. 34-0006

DO NOT DUPLICATE WITHOUT PERMISSION

THIS PROJECT SHALL BE ERECTED PER THE AISC CODE OF STANDARD PRACTICE SPECIFICALLY PARAGRAPH 7.12 AS FOLLOWS:
7.12 CORRECTION OF ERRORS
THE CORRECTION OF MINOR MISFITS BY MODERATE AMOUNTS OF REAMING, GRINDING, WELDING OR CUTTING, AND THE DRAWING OF ELEMENTS INTO LINE WITH DRIFT PINS, SHALL BE CONSIDERED TO BE NORMAL ERECTION OPERATIONS. ERRORS THAT CANNOT BE CORRECTED USING FOREGOING MEANS, OR THAT REQUIRE MAJOR CHANGES IN MEMBER OR CONNECTION CONFIGURATION, SHALL BE PROMPTLY REPORTED TO THE OWNER'S DESIGNATED REPRESENTATIVES FOR DESIGN AND CONSTRUCTION AND THE FABRICATOR BY THE ERECTOR, TO ENABLE THE RESPONSIBLE ENTITY TO EITHER CORRECT THE ERROR OR APPROVE THE MOST EFFICIENT AND ECONOMICAL METHOD OF CORRECTION TO BE USED BY OTHERS. NO BACK CHARGES WILL BE ACCEPTED UNLESS APPROVED IN WRITING BY THIS OFFICE.

GLOBAL FABRICATORS
METRIC

CUSTOM EQUIPMENT MANUFACTURING
METAL FABRICATION-MACHINE SHOP

8929 ROSEDALE HWY. BAKERSFIELD CA. 93312
PHONE: (661) 589-2774 FAX: (661) 589-7504
E-MAIL engineering@globalfab.com

H.F. MAGER INC.
STRUCTURAL ENGINEERS
COMMERCIAL & INDUSTRIAL
STRUCTURAL DESIGN AND
CONSTRUCTION DOCUMENTS
1149 MARSH STREET
SAN LUIS OBISPO, CA 93401
PH# (805)541-2193 FAX# (805)541-5348
EMAIL home@magerstruc.com

SEAL
REGISTERED PROFESSIONAL ENGINEER
HEDO MAGER
C 25376
Mar. 11, 2003
STATE OF CALIFORNIA
Expires March 31, 2006

DWN. BY: JKS	DATE: 3-11-03	REV.		DATE
CHK'D. BY: HJM	DATE:	1	CONDUIT PENETRATIONS	03-11-03
APRV'D. BY:	DATE:			
FINISH:				
SCALE: AS NOTED				

PROJECT/DWG. TITLE:

JOB NO.:	FILE NO.:	DWG. NO.:
02D02	DWG6ma	6ma

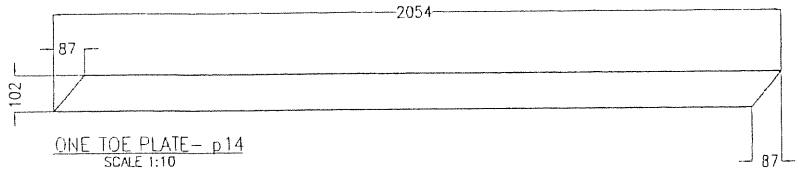

ONE TOE PLATE – p14
SCALE 1:10

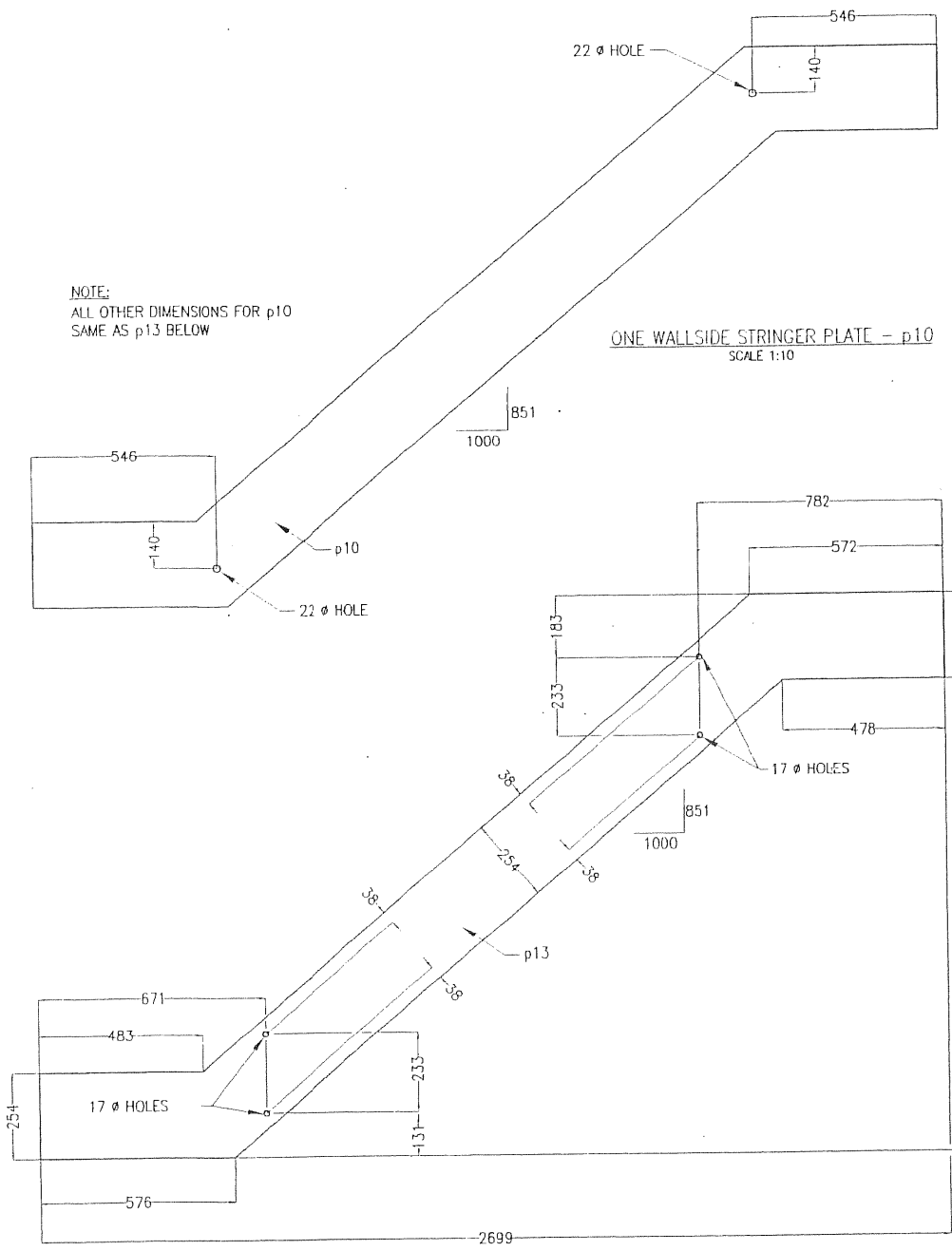

NOTE:
ALL OTHER DIMENSIONS FOR p10
SAME AS p13 BELOW

ONE WALLSIDE STRINGER PLATE – p10
SCALE 1:10

ONE CENTRAL STRINGER PLATE – p13
SCALE 1:10

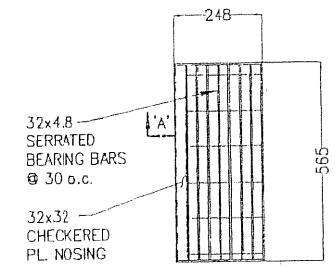

ONE STAIR TREAD – m2
SCALE 1:10

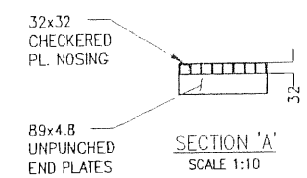

SECTION 'A'
SCALE 1:10

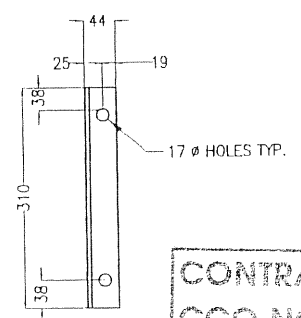

ONE ANGLE – a6
SCALE 1:5

APPROVED
APPROVED AS NOTED
NOT APPROVED
Pursuant to Section 5-1.02 of the Standard Specifications State of California
DEPARTMENT OF TRANSPORTATION
Division of Structures
Office of Structure Construction
Signed James Ferro
Structure Representative
Date 4/15/03

CONTRACT NO. 04-012024
CCO NO. 49
PAGE 55 OF 72

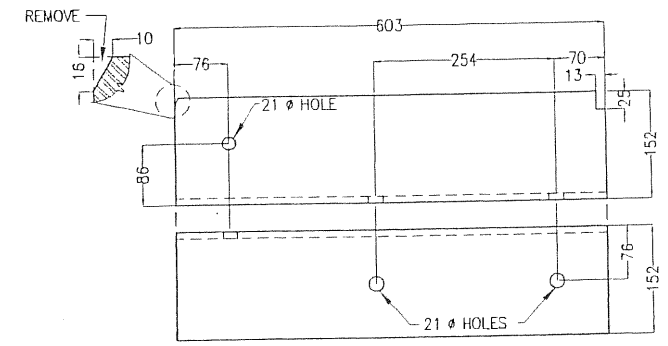

ONE UPPER SHELF ANGLE – a3
SCALE 1:5

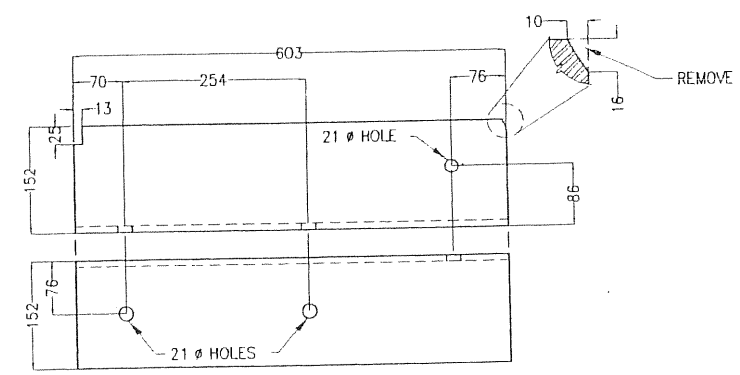

ONE LOWER SHELF ANGLE – a7
SCALE 1:5

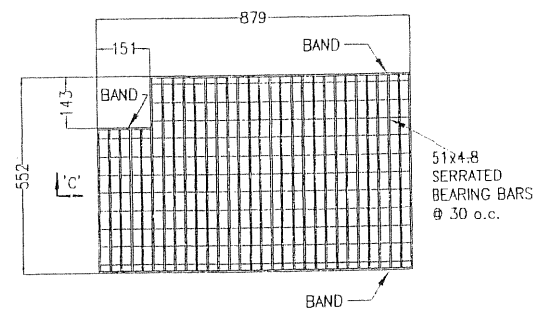

ONE LOWER LANDING GRATE – m15
SCALE 1:10

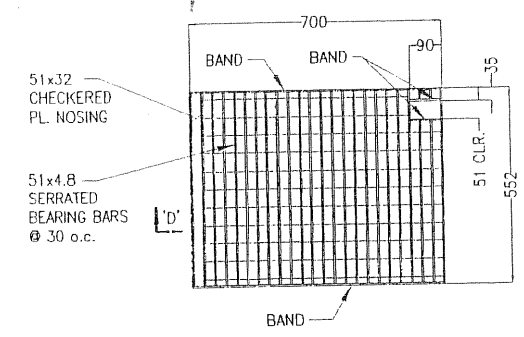

ONE TOP LANDING GRATE – m19
SCALE 1:10

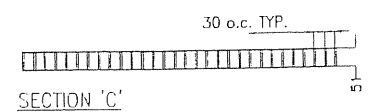

SECTION 'C'
SCALE 1:10

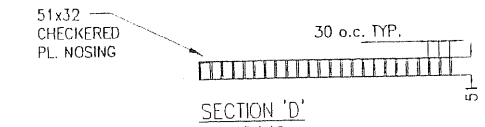

SECTION 'D'
SCALE 1:10

SAN FRANCISCO OAKLAND BAY BRIDGE
SKYWAY CONTRACT No. 04-012024
SFOBB EAST SPAN SEISMIC SAFETY PROJECT
POST KM 04-SF-80-13.9-14.3/ALA-80-0.0-1.6
BRIDGE No. 34-0006

DO NOT DUPLICATE WITHOUT PERMISSION

THIS PROJECT SHALL BE ERECTED PER THE AISC CODE OF STANDARD PRACTICE SPECIFICALLY PARAGRAPH 7.12 AS FOLLOWS:
7.12 CORRECTION OF ERRORS
THE CORRECTION OF MINOR MISFITS BY MODERATE AMOUNTS OF REAMING, GRINDING, WELDING OR CUTTING, AND THE DRAWING OF ELEMENTS INTO LINE WITH DRIFT PINS, SHALL BE CONSIDERED TO BE NORMAL ERECTION OPERATIONS. ERRORS THAT CANNOT BE CORRECTED USING FOREGOING MEANS, OR THAT REQUIRE MAJOR CHANGES IN MEMBER OR CONNECTION CONFIGURATION, SHALL BE PROMPTLY REPORTED TO THE OWNER'S DESIGNATED REPRESENTATIVES FOR DESIGN AND CONSTRUCTION AND THE FABRICATOR BY THE ERECTOR, TO ENABLE THE RESPONSIBLE ENTITY TO EITHER CORRECT THE ERROR OR APPROVE THE MOST EFFICIENT AND ECONOMICAL METHOD OF CORRECTION TO BE USED BY OTHERS. NO BACK CHARGES WILL BE ACCEPTED UNLESS APPROVED IN WRITING BY THIS OFFICE.

GLOBAL FABRICATORS
METRIC
CUSTOM EQUIPMENT MANUFACTURING
METAL FABRICATION–MACHINE SHOP
8929 ROSEDALE HWY. BAKERSFIELD CA. 93312
PHONE: (661) 589-2774 FAX: (661) 589-7504
E-MAIL engineering@globalfab.com

H.F. MAGER INC.
STRUCTURAL ENGINEERS
COMMERCIAL & INDUSTRIAL
STRUCTURAL DESIGN AND
CONSTRUCTION DOCUMENTS
1149 MARSH STREET
SAN LUIS OBISPO, CA 93401
PH# (805)541-2193 FAX# (805)541-5348
EMAIL hane@magerstruc.com

SEAL: REGISTERED PROFESSIONAL ENGINEER HANS FRED MAGER No. S 2376 Mar. 10, 2003 STRUCTURAL ENGINEER STATE OF CALIFORNIA
Expires Mar. 31, 2006

DWN. BY: JKS	DATE: 3-10-03	REV.		DATE
CHK'D. BY: HJM	DATE:	1	CONDUIT PENETRATIONS	03-10-03
APRV'D. BY:	DATE:			
FINISH:				
SCALE: AS NOTED				

PROJECT/DWG. TITLE:

JOB NO.:	FILE NO.:	DWG. NO.:
02D02	DWG6mb	6mb

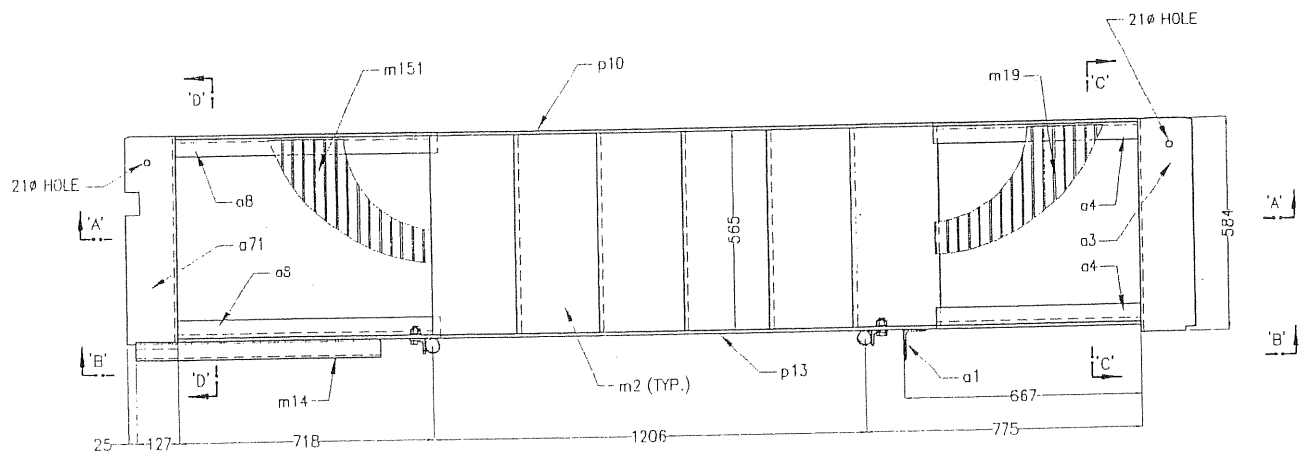

TOP STAIR ASSEMBLY PLAN – 61A
SCALE 1:10

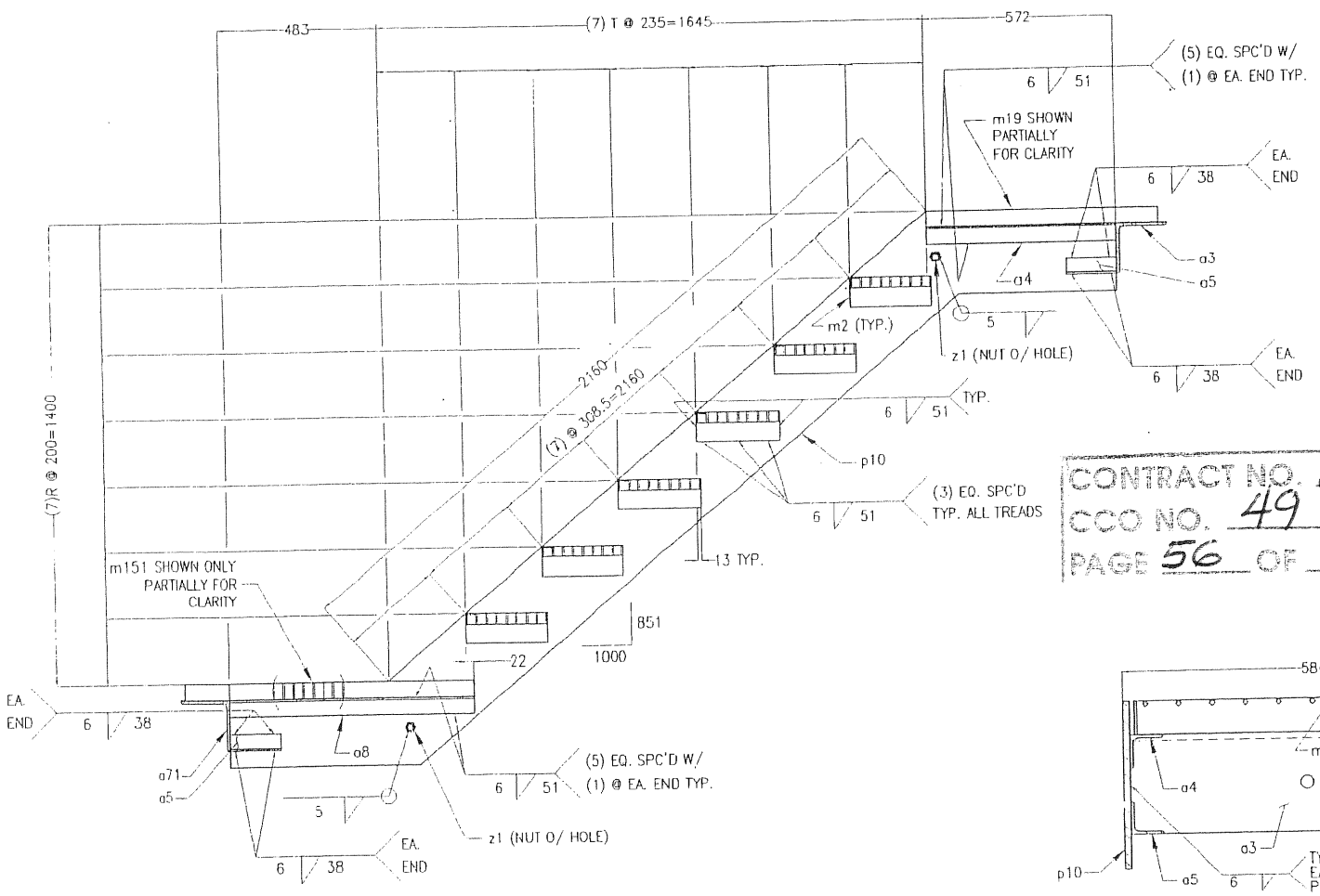

SECTION 'A–A'
SCALE 1:10

METRIC SIZE	IMPERIAL SIZE
TREAD 32x248	TREAD 1 1/4x9 3/4
PIPE 38 ø Sch. 40	PIPE 1 1/2ø Sch. 40
CUT FROM 38 ø 90° ELBOW	CUT FROM 1 1/2ø 90° ELBOW
TS 51x51x4.8	TS 2x2x3/16
GRATING 51x4.8x879	GRATING 2x3/16x34 5/8
GRATING 51x4.8x700	GRATING 2x3/16x27 9/16
L 89x63x6.4	L 3 1/2x2 1/2x1/4
L 152x152x9.5	L 6x6x3/8
L 51x51x6.4	L 2x2x1/4
L 44x44x6.4	L 1 3/4x1 3/4x1/4
PL. 9.5x1654	PL. 3/8x65 1/8
PL. 6.4x102	PL. 1/4x4
BOLT 19 ø (A307)	BOLT 3/4" ø (A307)
BOLT 19 ø (A325)	BOLT 3/4" ø (A325)
BOLT 16 ø (A325)	BOLT 5/8" ø (A325)

BILL OF MATERIALS

SHIP MK.	PIECE MARK	QTY.	DESCRIPTION (Imperial Size)	CUT LENGTH (mm.)	COMMENT
~~61A~~		1	TOP STAIR ASSEMBLY		
	~~m12~~	6	TREAD 1 1/4x9 3/4	565	IKG WB-6
	~~p13~~	2	PIPE 1 1/2"ø Sch. 40	1233	
	~~p14~~	4	CUT FROM 1 1/2"ø 90° ELBOW		
	~~p14~~	1	TS 2x2x3/16	673	
	~~p15~~	1	GRATING 2x3/16x34 5/8	552	IKG WF-10
	~~p17~~	1	PIPE 1 1/2"ø Sch. 40	203	
	~~p19~~	1	GRATING 2x3/16x27 9/16	552	IKG WF-10
	~~p20~~	1	PIPE 1 1/2"ø Sch. 40	1866	
	~~p21~~	1	PIPE 1 1/2"ø Sch. 40	1565	
	~~p22~~	1	PIPE 1 1/2"ø Sch. 40	61	
	~~a1~~	1	L 3 1/2x2 1/2x1/4	152	
	~~a3~~	1	L 6x6x3/8	603	
	~~a4~~	2	L 2x2x1/4	572	
	~~a5~~	4	L 2x2x1/4	152	
	~~a6~~	2	L 1 3/4x1 3/4x1/4	310	
	~~a7~~	1	L 6x6x3/8	603	
	~~a8~~	2	L 2x2x1/4	740	
	~~p10~~	1	PL. 3/8x65 1/8	2699	
	~~p13~~	1	PL. 3/8x65 1/8	2699	
	~~p14~~	1	PL. 1/4x4	2054	
	~~z1~~	2	BOLT 3/4" ø (A307)	95	w/n
	z5	4	BOLT 3/4" ø (A325)	57	w/n & w
	~~z6~~	4	BOLT 5/8" ø (A325)	45	w/n & w
	z7	1	BOLT 3/4" ø (A325)	51	w/n & w

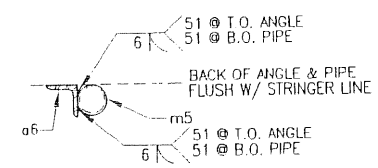

SECTION 'G'
SCALE 1:5

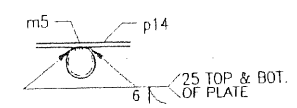

SECTION 'H'
SCALE 1:5

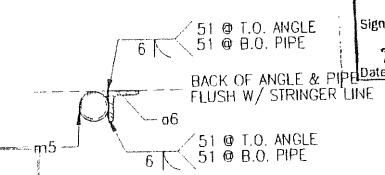

SECTION 'I'
SCALE 1:5

☒ APPROVED
☐ APPROVED AS NOTED
☐ NOT APPROVED

Pursuant to Section 5-1.02 of the Standard Specifications
State of California
DEPARTMENT OF TRANSPORTATION
Division of Structures
Office of Structure Construction
Signed James Ferro
Structure Representative
Date 4/13/03

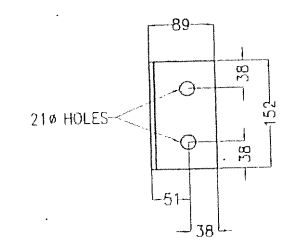

ONE BRACKET ANGLE – a1
SCALE 1:5

CONTRACT NO. 04-012024
CCO NO. 49
PAGE 56 OF 72

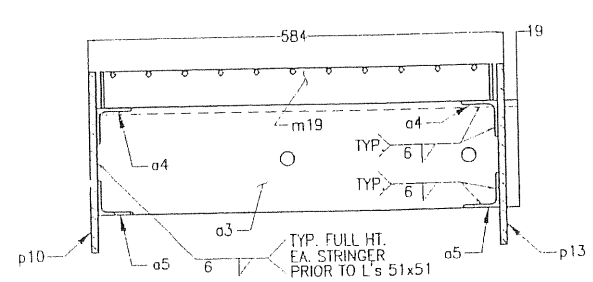

SECTION 'C–C'
SCALE 1:5

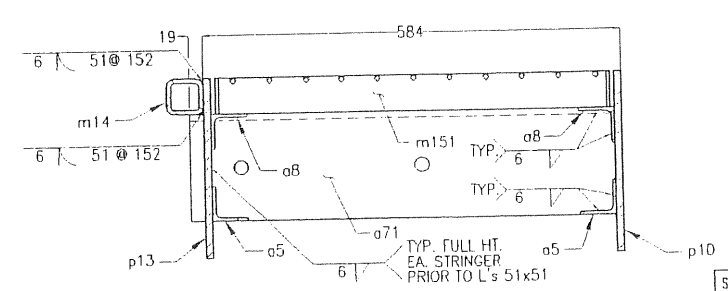

SECTION 'D–D'
SCALE 1:5

SAN FRANCISCO OAKLAND BAY BRIDGE
SKYWAY CONTRACT No. 04-012024
SFOBB EAST SPAN SEISMIC SAFETY PROJECT
POST KM 04-SF-80-13.9-14.3/ALA-80-0.0-1.6
BRIDGE No. 34-0006

DO NOT DUPLICATE WITHOUT PERMISSION

THIS PROJECT SHALL BE ERECTED PER THE AISC CODE OF STANDARD PRACTICE SPECIFICALLY PARAGRAPH 7.12 AS FOLLOWS:
7.12 CORRECTION OF ERRORS
THE CORRECTION OF MINOR MISFITS BY MODERATE AMOUNTS OF REAMING, GRINDING, WELDING OR CUTTING, AND THE DRAWING OF ELEMENTS INTO LINE WITH DRIFT PINS, SHALL BE CONSIDERED TO BE NORMAL ERECTION OPERATIONS. ERRORS THAT CANNOT BE CORRECTED USING FOREGOING MEANS, OR THAT REQUIRE MAJOR CHANGES IN MEMBER OR CONNECTION CONFIGURATION, SHALL BE PROMPTLY REPORTED TO THE OWNER'S DESIGNATED REPRESENTATIVES FOR DESIGN AND CONSTRUCTION AND THE FABRICATOR BY THE ERECTOR, TO ENABLE THE RESPONSIBLE ENTITY TO EITHER CORRECT THE ERROR OR APPROVE THE MOST EFFICIENT AND ECONOMICAL METHOD OF CORRECTION TO BE USED BY OTHERS. NO BACK CHARGES WILL BE ACCEPTED UNLESS APPROVED IN WRITING BY THIS OFFICE.

GLOBAL FABRICATORS
METRIC
CUSTOM EQUIPMENT MANUFACTURING
METAL FABRICATION–MACHINE SHOP
8929 ROSEDALE HWY. BAKERSFIELD CA. 93312
PHONE: (661) 589-2774 FAX: (661) 589-7504
E-MAIL engineering@globallab.com

H.F. MAGER INC.
STRUCTURAL ENGINEERS
COMMERCIAL & INDUSTRIAL
STRUCTURAL DESIGN AND
CONSTRUCTION DOCUMENTS
1149 MARSH STREET
SAN LUIS OBISPO, CA 93401
PH# (805)541-2193 FAX# (805)541-5346
EMAIL hmc@magerinc.com

SEAL: REGISTERED PROFESSIONAL ENGINEER HANS FRED MAGER C 23760 STRUCTURAL CIVIL STATE OF CALIFORNIA
Mar. 11, 2003
Expires Mar. 31, 2006

DWN. BY:	DATE:	REV.		DATE
IDG	3-11-03	1	CONDUIT PENETRATIONS	03-11-03
CHK'D. BY: HFM	DATE:			
APRV'D. BY:	DATE:			
FINISH:				
SCALE: AS NOTED				

PROJECT/DWG. TITLE:

JOB NO.:	FILE NO.:	DWG. NO.:
02002	DWG61m	61m

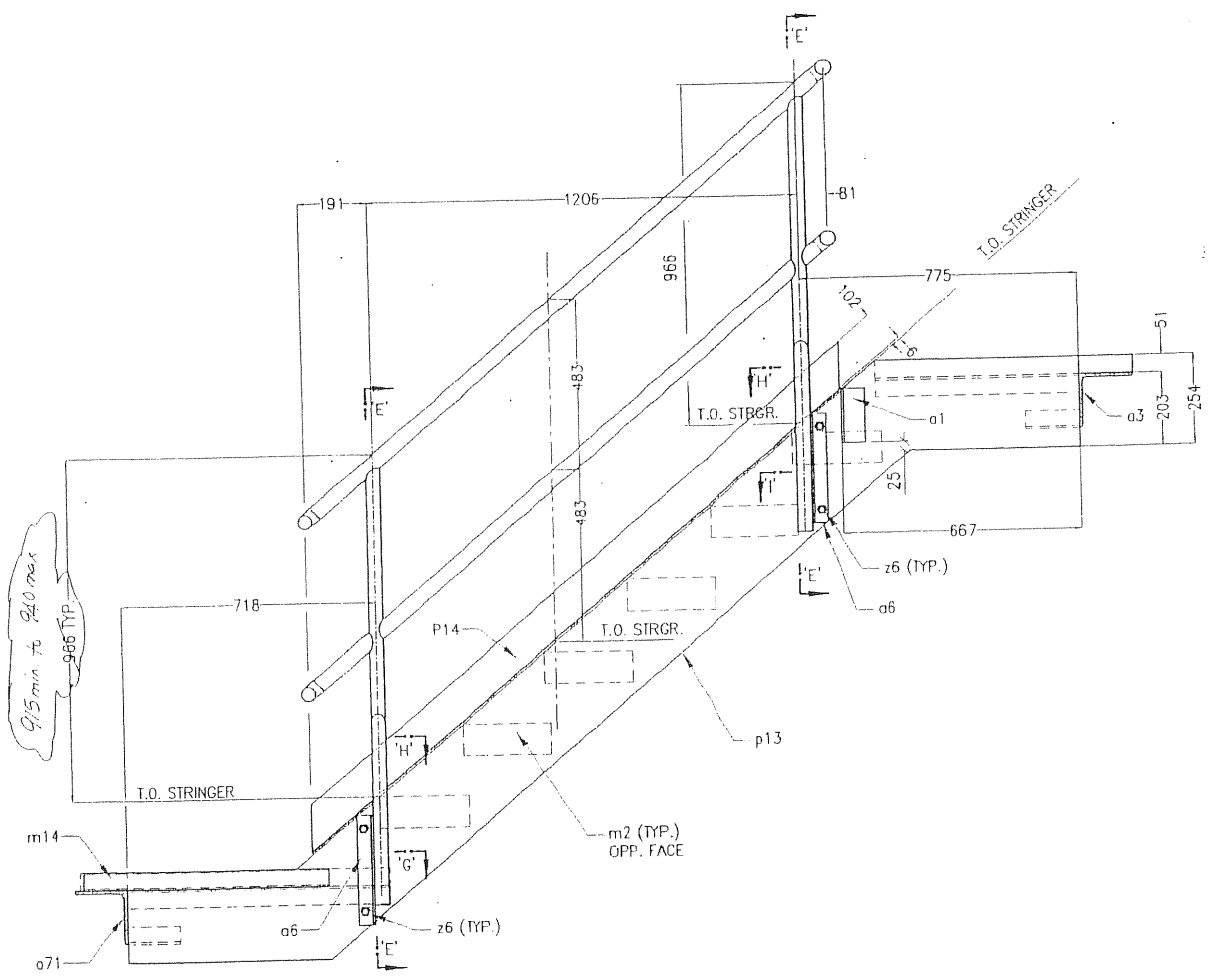

VIEW 'B-B'
SCALE 1:10

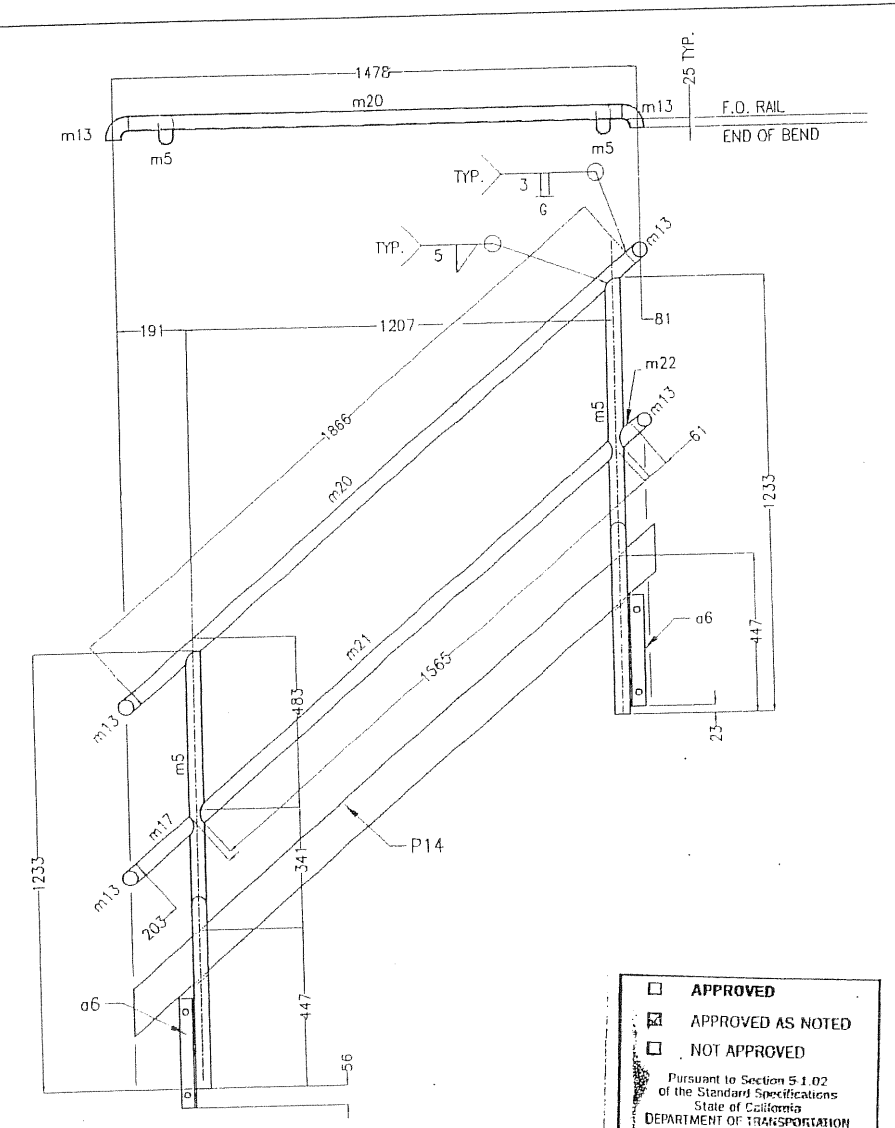

HAND RAIL DETAILS
SCALE 1:10

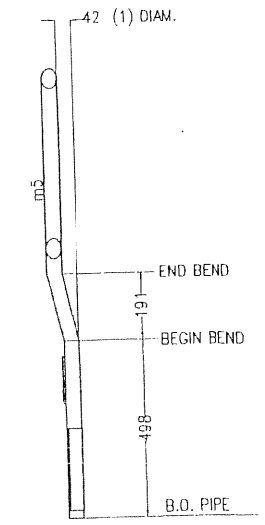

SECTION 'E-E'
SCALE 1:10

☐ APPROVED
☒ APPROVED AS NOTED
☐ NOT APPROVED

Pursuant to Section 5.1.02 of the Standard Specifications
State of California
DEPARTMENT OF TRANSPORTATION
Division of Structures
Office of Structure Construction

Signed James Fan
Structure Representative
Date 7/13/03

CONTRACT NO. 04-012024
CCO NO. 49
PAGE 57 OF 72

SAN FRANCISCO OAKLAND BAY BRIDGE
SKYWAY CONTRACT No. 04-012024
SFOBB EAST SPAN SEISMIC SAFETY PROJECT
POST KM 04-SF-80-13.9-14.3/RLA-80-0.0-1.6
BRIDGE No. 34-0006

PROJECT/DWG. TITLE:

DO NOT DUPLICATE WITHOUT PERMISSION

THIS PROJECT SHALL BE ERECTED PER THE AISC CODE OF STANDARD PRACTICE SPECIFICALLY PARAGRAPH 7.12 AS FOLLOWS:
7.12 CORRECTION OF ERRORS
THE CORRECTION OF MINOR MISFITS BY MODERATE AMOUNTS OF REAMING, GRINDING, WELDING OR CUTTING, AND THE DRAWING OF ELEMENTS INTO LINE WITH DRIFT PINS, SHALL BE CONSIDERED TO BE NORMAL ERECTION OPERATIONS. ERRORS THAT CANNOT BE CORRECTED USING FOREGOING MEANS, OR THAT REQUIRE MAJOR CHANGES IN MEMBER OR CONNECTION CONFIGURATION, SHALL BE PROMPTLY REPORTED TO THE OWNER'S DESIGNATED REPRESENTATIVES FOR DESIGN AND CONSTRUCTION AND THE FABRICATOR BY THE ERECTOR, TO ENABLE THE RESPONSIBLE ENTITY TO EITHER CORRECT THE ERROR OR APPROVE THE MOST EFFICIENT AND ECONOMICAL METHOD OF CORRECTION TO BE USED BY OTHERS. NO BACK CHARGES WILL BE ACCEPTED UNLESS APPROVED IN WRITING BY THIS OFFICE.

GLOBAL FABRICATORS
METRIC
CUSTOM EQUIPMENT MANUFACTURING
METAL FABRICATION—MACHINE SHOP
8929 ROSEDALE HWY. BAKERSFIELD CA. 93312
PHONE: (661) 589-2774 FAX: (661) 589-7504
E-MAIL engineering@globalfab.com

H.F. MAGER INC.
STRUCTURAL ENGINEERS
COMMERCIAL & INDUSTRIAL
STRUCTURAL DESIGN AND
CONSTRUCTION DOCUMENTS
1149 MARSH STREET
SAN LUIS OBISPO, CA 93401
PH# (805)541-2193 FAX# (805)541-5346
EMAIL hfm@magerstruc.com

SEAL: REGISTERED PROFESSIONAL ENGINEER H. F. MAGER C 23776 Mar. 11, 2003 STRUCTURAL ENGINEER STATE OF CALIFORNIA
Expires Mar. 31, 2006

DWN. BY:	DATE:	REV.		DATE
JKS	3-11-03	1	CONDUIT PENETRATIONS	05-11-03
CHK'D. BY: HFM	DATE:			
APRV'D. BY:	DATE:			
FINISH:				
SCALE: AS NOTED				

JOB NO.:	FILE NO.:	DWG. NO.:
02D02	DWG61ma	61ma

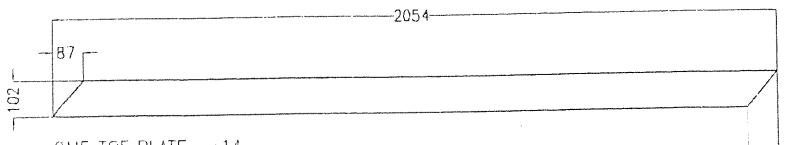

ONE TOE PLATE– p14
SCALE 1:10

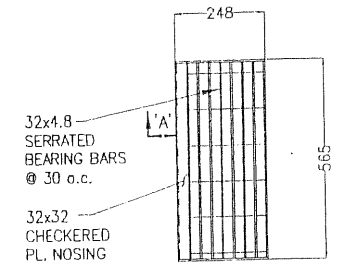

ONE STAIR TREAD– m2
SCALE 1:10

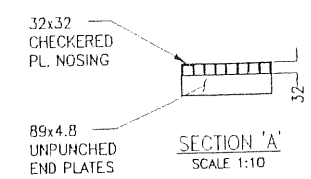

SECTION 'A'
SCALE 1:10

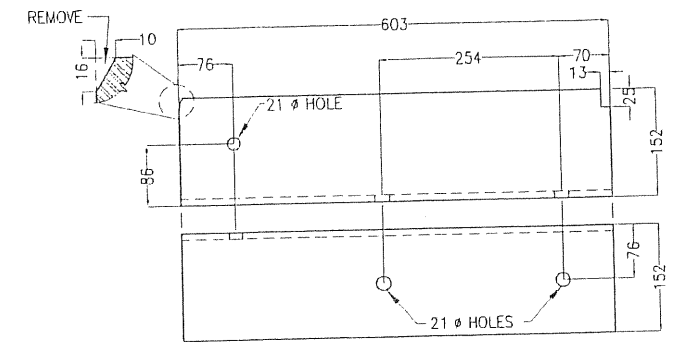

ONE UPPER SHELF ANGLE – a3
SCALE 1:5

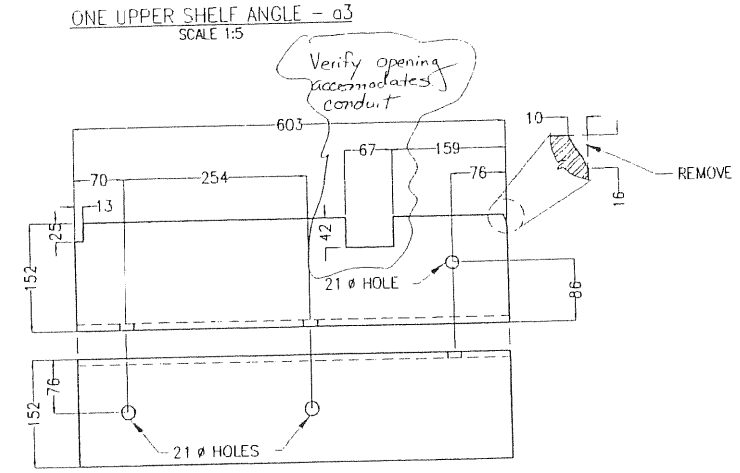

ONE LOWER SHELF ANGLE – a71
SCALE 1:5

APPROVED
☒ APPROVED AS NOTED
☐ NOT APPROVED
Pursuant to Section 5-1.02 of the Standard Specifications
State of California
DEPARTMENT OF TRANSPORTATION
Division of Structures
Office of Structure Construction
Signed James Fen
Structure Representative
Date 4/13/03

NOTE:
ALL OTHER DIMENSIONS FOR p10
SAME AS p13 BELOW

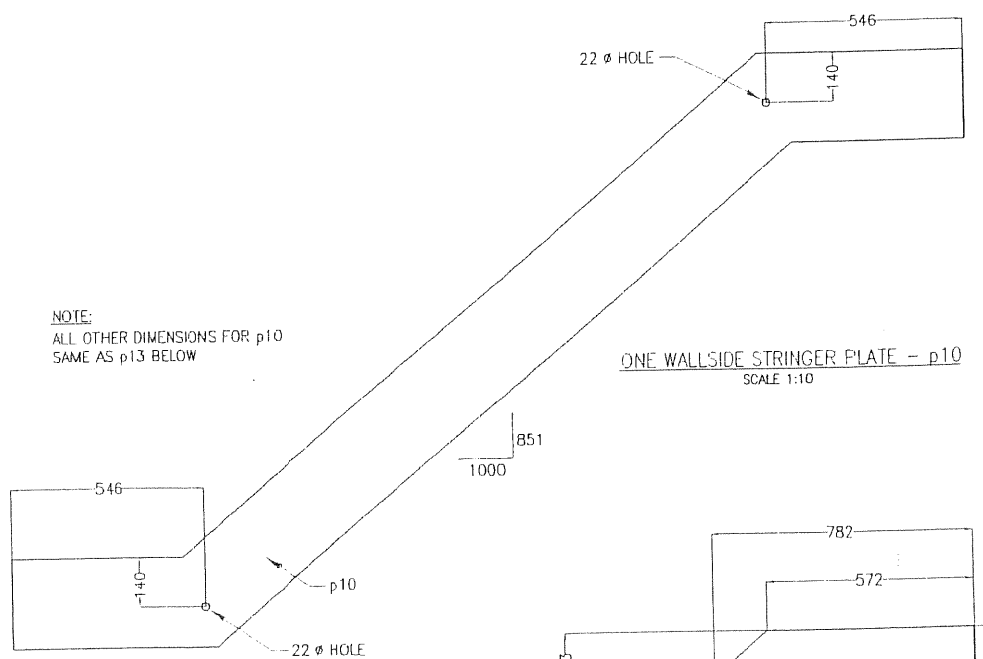

ONE WALLSIDE STRINGER PLATE – p10
SCALE 1:10

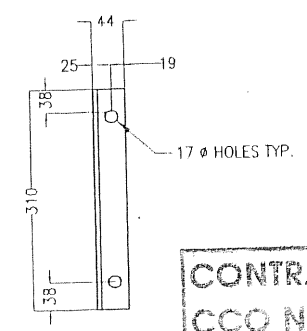

ONE ANGLE – a6
SCALE 1:5

CONTRACT NO. 04-012024
CCO NO. 49
PAGE 58 OF 72

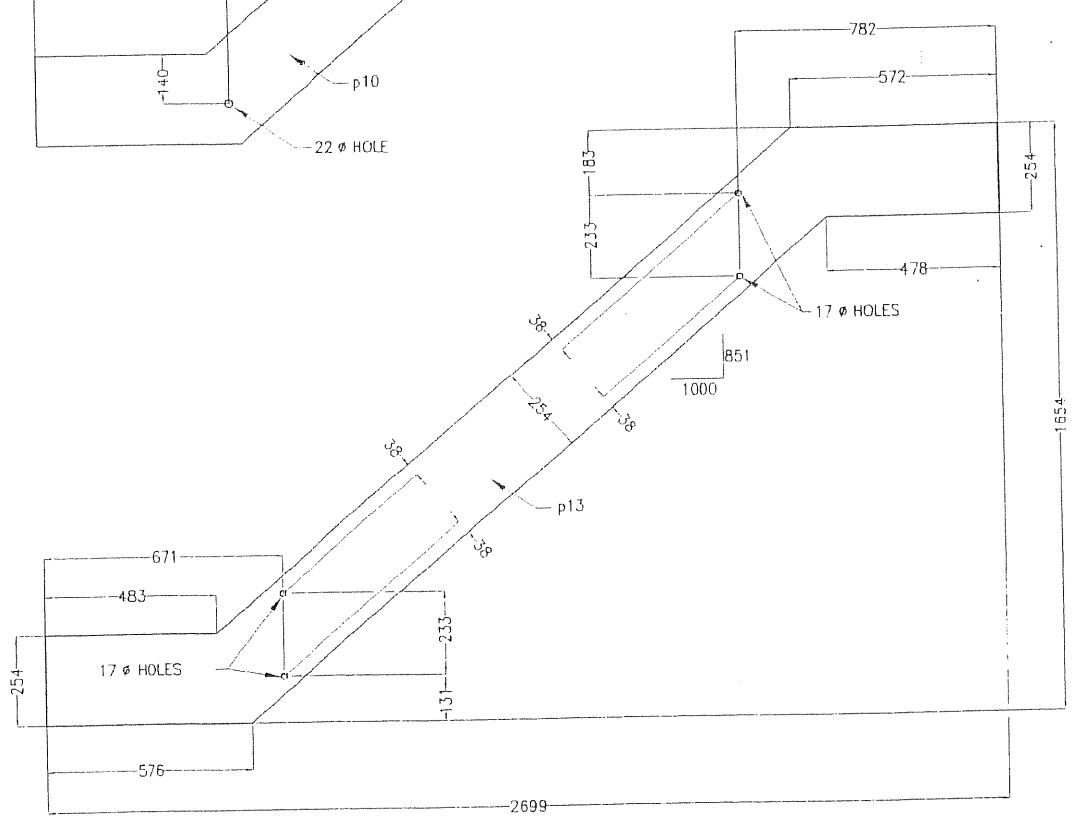

ONE CENTRAL STRINGER PLATE – p13
SCALE 1:10

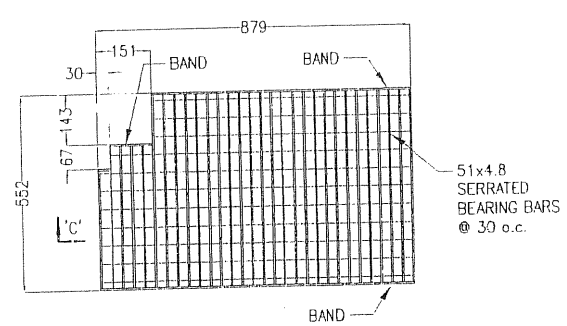

ONE LOWER LANDING GRATE– m151
SCALE 1:10

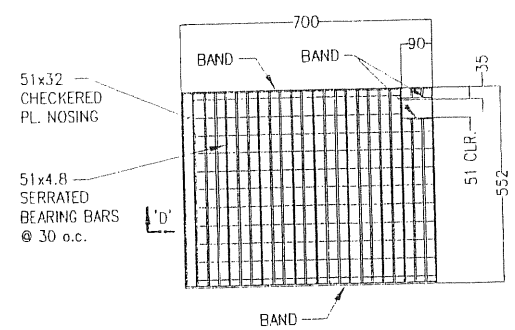

ONE TOP LANDING GRATE– m19
SCALE 1:10

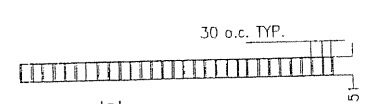

SECTION 'C'
SCALE 1:10

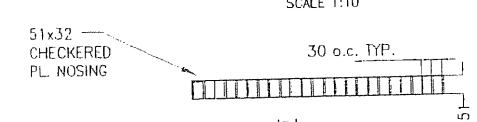

SECTION 'D'
SCALE 1:10

SAN FRANCISCO OAKLAND BAY BRIDGE
SKYWAY CONTRACT No. 04-012024
SFOBB EAST SPAN SEISMIC SAFETY PROJECT
POST KM 04-SF-80-13.9-14.3/ALA-80-0.0-1.6
BRIDGE No. 34-0006

DO NOT DUPLICATE WITHOUT PERMISSION

THIS PROJECT SHALL BE ERECTED PER THE AISC CODE OF STANDARD PRACTICE SPECIFICALLY PARAGRAPH 7.12 AS FOLLOWS:
7.12 CORRECTION OF ERRORS
THE CORRECTION OF MINOR MISFITS BY MODERATE AMOUNTS OF REAMING, GRINDING, WELDING OR CUTTING, AND THE DRAWING OF ELEMENTS INTO LINE WITH DRIFT PINS, SHALL BE CONSIDERED TO BE NORMAL ERECTION OPERATIONS. ERRORS THAT CANNOT BE CORRECTED USING FOREGOING MEANS, OR THAT REQUIRE MAJOR CHANGES IN MEMBER OR CONNECTION CONFIGURATION, SHALL BE PROMPTLY REPORTED TO THE OWNER'S DESIGNATED REPRESENTATIVES FOR DESIGN AND CONSTRUCTION AND THE FABRICATOR BY THE ERECTOR, TO ENABLE THE RESPONSIBLE ENTITY TO EITHER CORRECT THE ERROR OR APPROVE THE MOST EFFICIENT AND ECONOMICAL METHOD OF CORRECTION TO BE USED BY OTHERS. NO BACK CHARGES WILL BE ACCEPTED UNLESS APPROVED IN WRITING BY THIS OFFICE.

GLOBAL FABRICATORS
METRIC

CUSTOM EQUIPMENT MANUFACTURING
METAL FABRICATION–MACHINE SHOP
8929 ROSEDALE HWY. BAKERSFIELD CA. 93312
PHONE: (661) 589-2774 FAX: (661) 589-7504
E-MAIL engineering@globalfab.com

H.F. MAGER INC.
STRUCTURAL ENGINEERS
COMMERCIAL & INDUSTRIAL
STRUCTURAL DESIGN AND
CONSTRUCTION DOCUMENTS
1149 MARSH STREET
SAN LUIS OBISPO, CA. 93401
PH# (805)541-2193 FAX# (805)541-5346
EMAIL hfme@magerstruc.com

SEAL: Expires Mon. 31, 2006

DWN. BY: JKS	DATE: 3-11-03	REV.		DATE
CHK'D. BY:	DATE:	1	CONDUIT PENETRATIONS	03-11-03
APRV'D. BY:	DATE:			
FINISH:				
SCALE: AS NOTED				

PROJECT/DWG. TITLE:

JOB NO.:	FILE NO.:	DWG. NO.:
02D02	DWG61mb	61mb

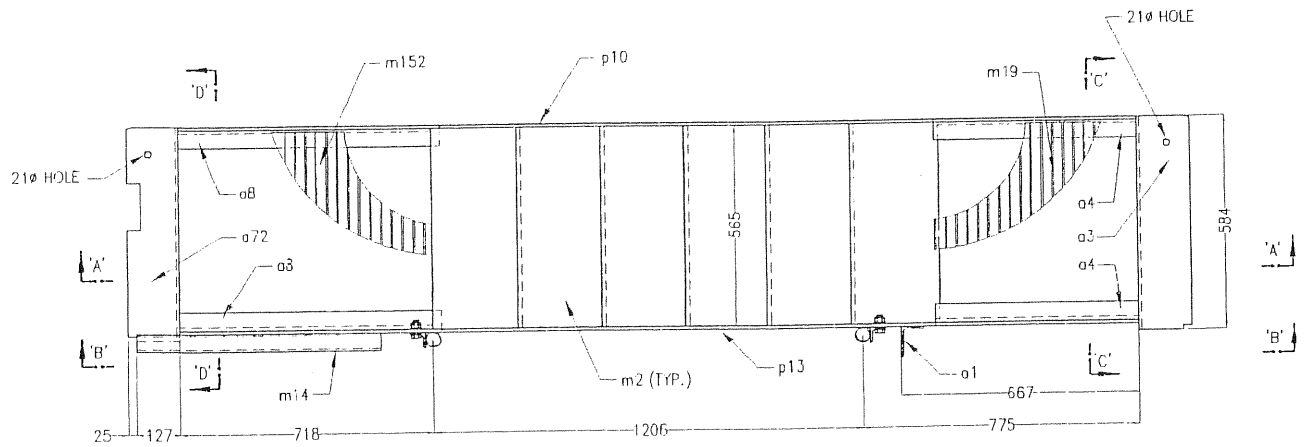

TOP STAIR ASSEMBLY PLAN - 62A
SCALE 1:10

METRIC SIZE	IMPERIAL SIZE
TREAD 32x248	TREAD 1 1/4x9 3/4
PIPE 38 ø Sch. 40	PIPE 1 1/2ø Sch. 40
CUT FROM 38 ø 90° ELBOW	CUT FROM 1 1/2ø 90° ELBOW
TS 51x51x4.8	TS 2x2x3/16
GRATING 51x4.8x879	GRATING 2x3/16x34 5/8
GRATING 51x4.8x700	GRATING 2x3/16x27 9/16
L 89x63x6.4	L 3 1/2x2 1/2x1/4
L 152x152x9.5	L 6x6x3/8
L 51x51x6.4	L 2x2x1/4
L 44x44x6.4	L 1 3/4x1 3/4x1/4
PL. 9.5x1654	PL. 3/8x65 1/8
PL. 6.4x102	PL. 1/4x4
BOLT 19 ø (A307)	BOLT 3/4" ø (A307)
BOLT 19 ø (A325)	BOLT 3/4" ø (A325)
BOLT 16 ø (A325)	BOLT 5/8" ø (A325)

☒ APPROVED
☐ APPROVED AS NOTED
☐ NOT APPROVED

Pursuant to Section 5-1.02 of the Standard Specifications
State of California
DEPARTMENT OF TRANSPORTATION
Division of Structures
Office of Structure Construction
Signed James Ger
Structure Representative
Date 4/18/03

BILL OF MATERIALS

SHIP MK.	PIECE MARK	QTY.	DESCRIPTION (Imperial Size)	CUT LENGTH (mm.)	COMMENT
~~62A~~		5	TOP STAIR ASSEMBLY		
	~~p02~~	30	TREAD 1 1/4x9 3/4	565	IKG WB-6
	~~p05~~	10	PIPE 1 1/2"ø Sch. 40	1233	
	~~p15~~	20	CUT FROM 1 1/2"ø 90° ELBOW		
	~~p11~~	5	TS 2x2x3/16	673	
	~~p162~~	5	GRATING 2x3/16x34 5/8	552	IKG WF-10
	~~p17~~	5	PIPE 1 1/2"ø Sch. 40	203	
	~~p19~~	5	GRATING 2x3/16x27 9/16	552	IKG WF-10
	~~p20~~	5	PIPE 1 1/2"ø Sch. 40	1866	
	~~p21~~	5	PIPE 1 1/2"ø Sch. 40	1565	
	~~p22~~	5	PIPE 1 1/2"ø Sch. 40	61	
	~~a01~~	5	L 3 1/2x2 1/2x1/4	152	
	~~a02~~	5	L 6x6x3/8	603	
	~~a04~~	10	L 2x2x1/4	572	
	~~a05~~	20	L 2x2x1/4	152	
	~~a06~~	10	L 1 3/4x1 3/4x1/4	310	
	~~a072~~	5	L 6x6x3/8	603	
	~~a08~~	10	L 2x2x1/4	740	
	~~p10~~	5	PL. 3/8x65 1/8	2699	
	~~p13~~	5	PL. 3/8x65 1/8	2699	
	~~p14~~	5	PL. 1/4x4	2054	
	~~z1~~	10	BOLT 3/4" ø (A307)	95	w/n
	z5	20	BOLT 3/4" ø (A325)	57	w/n & w
	~~z6~~	20	BOLT 5/8" ø (A325)	45	w/n & w
	z7	5	BOLT 3/4" ø (A325)	51	w/n & w

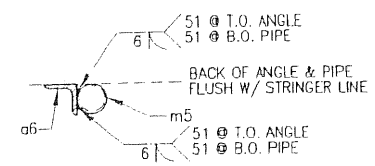

SECTION 'G'
SCALE 1:5

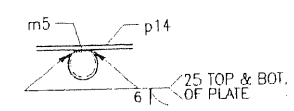

SECTION 'H'
SCALE 1:5

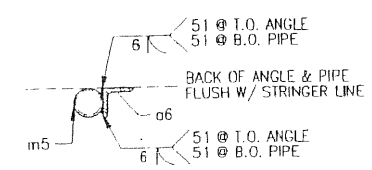

SECTION 'I'
SCALE 1:5

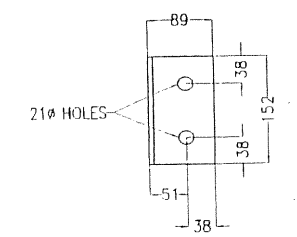

ONE BRACKET ANGLE - a1
SCALE 1:5

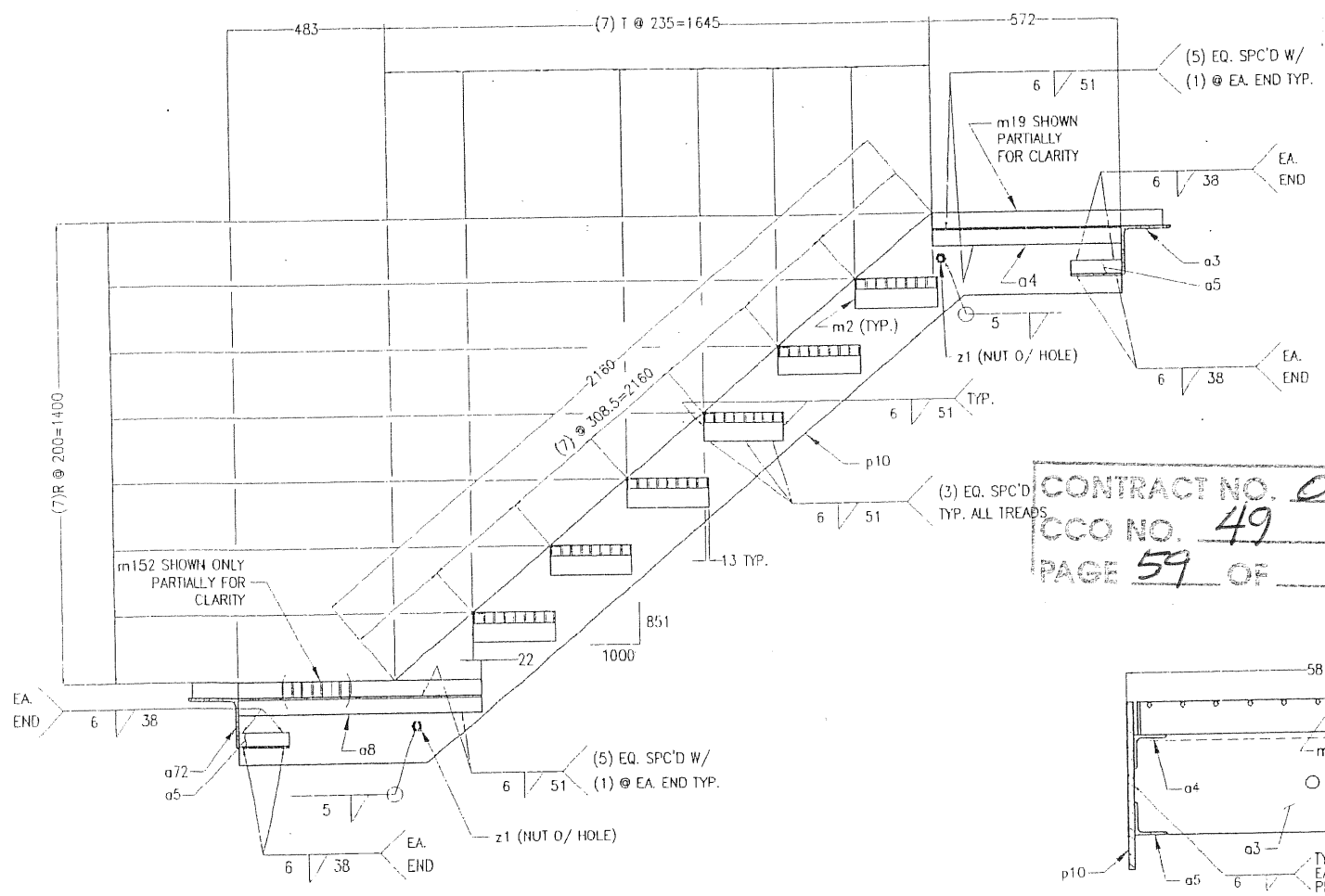

SECTION 'A-A'
SCALE 1:10

CONTRACT NO. 04-012024
CCO NO. 49
PAGE 59 OF 72

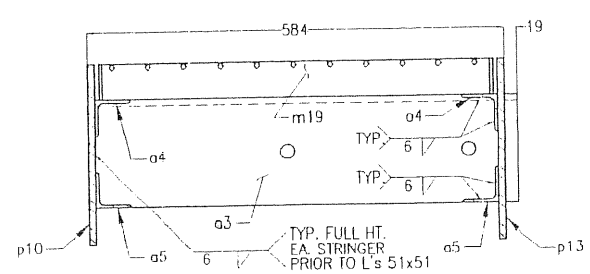

SECTION 'C-C'
SCALE 1:5

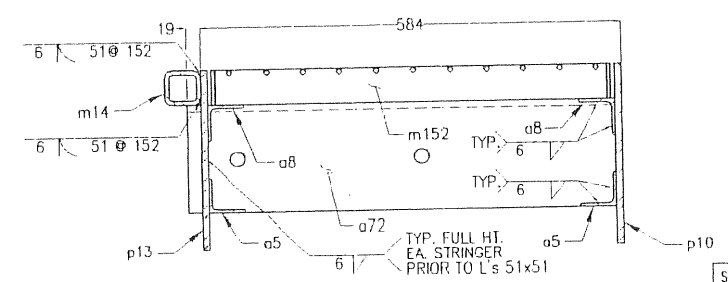

SECTION 'D-D'
SCALE 1:5

SAN FRANCISCO OAKLAND BAY BRIDGE
SKYWAY CONTRACT No. 04-012024
SF/OBB EAST SPAN SEISMIC SAFETY PROJECT
POST KM 04-SF-80-13.9-14.3/ALA-80-0.0-1.6
BRIDGE No. 34-0006

DO NOT DUPLICATE WITHOUT PERMISSION

THIS PROJECT SHALL BE ERECTED PER THE AISC CODE OF STANDARD PRACTICE SPECIFICALLY PARAGRAPH 7.12 AS FOLLOWS:
7.12 CORRECTION OF ERRORS
THE CORRECTION OF MINOR MISFITS BY MODERATE AMOUNTS OF REAMING, GRINDING, WELDING OR CUTTING, AND THE DRAWING OF ELEMENTS INTO LINE WITH DRIFT PINS, SHALL BE CONSIDERED TO BE NORMAL ERECTION OPERATIONS. ERRORS THAT CANNOT BE CORRECTED USING FOREGOING MEANS, OR THAT REQUIRE MAJOR CHANGES IN MEMBER OR CONNECTION CONFIGURATION, SHALL BE PROMPTLY REPORTED TO THE OWNER'S DESIGNATED REPRESENTATIVES FOR DESIGN AND CONSTRUCTION AND THE FABRICATOR BY THE ERECTOR, TO ENABLE THE RESPONSIBLE ENTITY TO EITHER CORRECT THE ERROR OR APPROVE THE MOST EFFICIENT AND ECONOMICAL METHOD OF CORRECTION TO BE USED BY OTHERS. NO BACK CHARGES WILL BE ACCEPTED UNLESS APPROVED IN WRITING BY THIS OFFICE.

GLOBAL FABRICATORS
METRIC
CUSTOM EQUIPMENT MANUFACTURING
METAL FABRICATION-MACHINE SHOP
8929 ROSEDALE HWY. BAKERSFIELD CA. 93312
PHONE: (661) 589-2774 FAX: (661) 589-7504
E-MAIL engineering@globalfab.com

H.F. MAGER INC.
STRUCTURAL ENGINEERS
COMMERCIAL & INDUSTRIAL
STRUCTURAL DESIGN AND
CONSTRUCTION DOCUMENTS
1149 MARSH STREET
SAN LUIS OBISPO, CA 93401
PH# (805)541-2183 FAX# (805)541-5348
EMAIL hans@magerstruc.com

SEAL: REGISTERED PROFESSIONAL ENGINEER — HANS F. MAGER — S 2376 — Mar. 11 2003 — STRUCTURAL — STATE OF CALIFORNIA
Expires Mar. 31, 2006

DWN. BY:	DATE:	REV.		DATE
IDG	3-11-03	1	CONDUIT PENETRATIONS	03-11-03
CHK'D. BY:	DATE:			
APRV'D. BY:	DATE:			
FINISH:				
SCALE: AS NOTED				

PROJECT/DWG. TITLE:

JOB NO.:	FILE NO.:	DWG. NO.:
02D02	DWG62m	62m

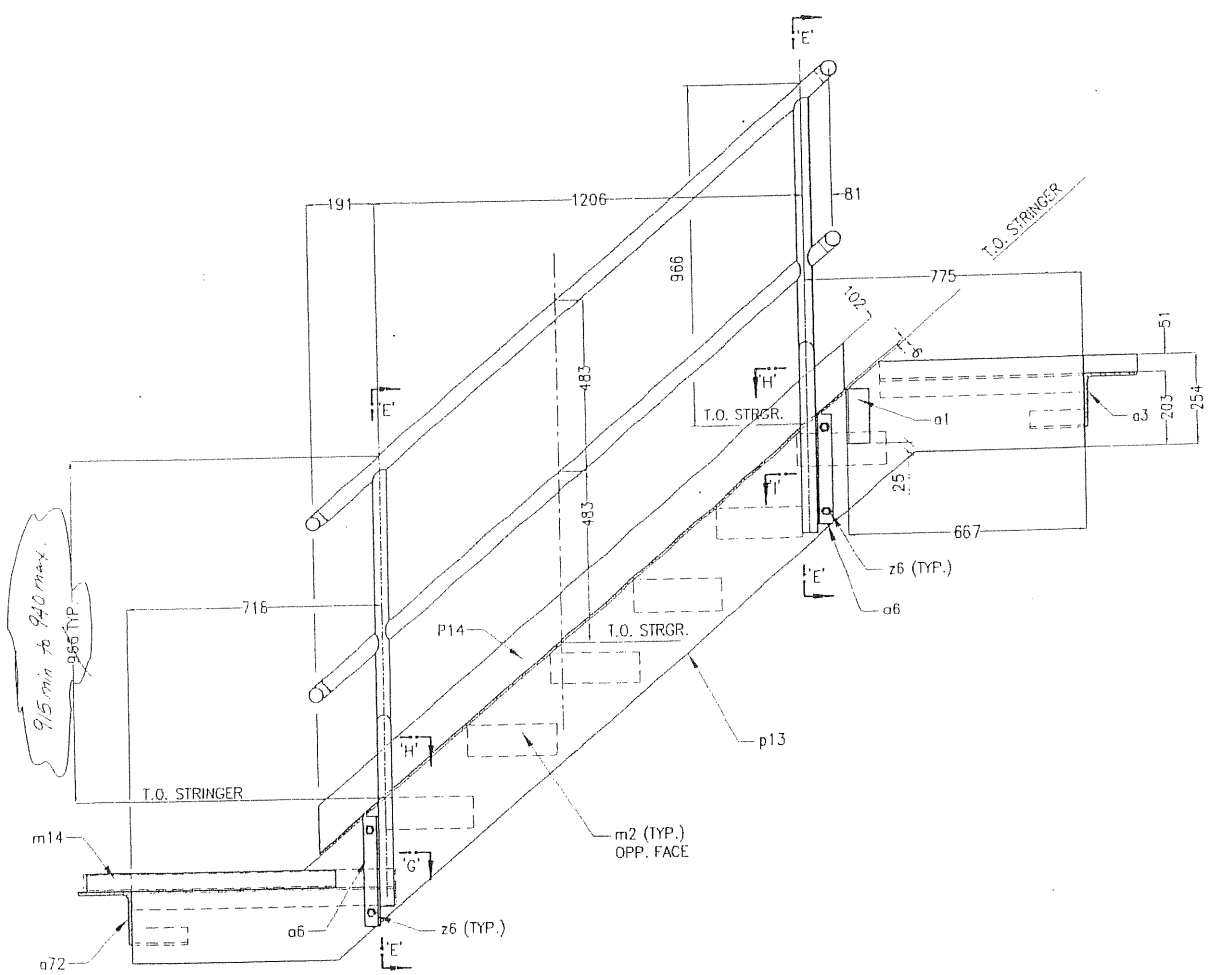

VIEW 'B-B'
SCALE 1:10

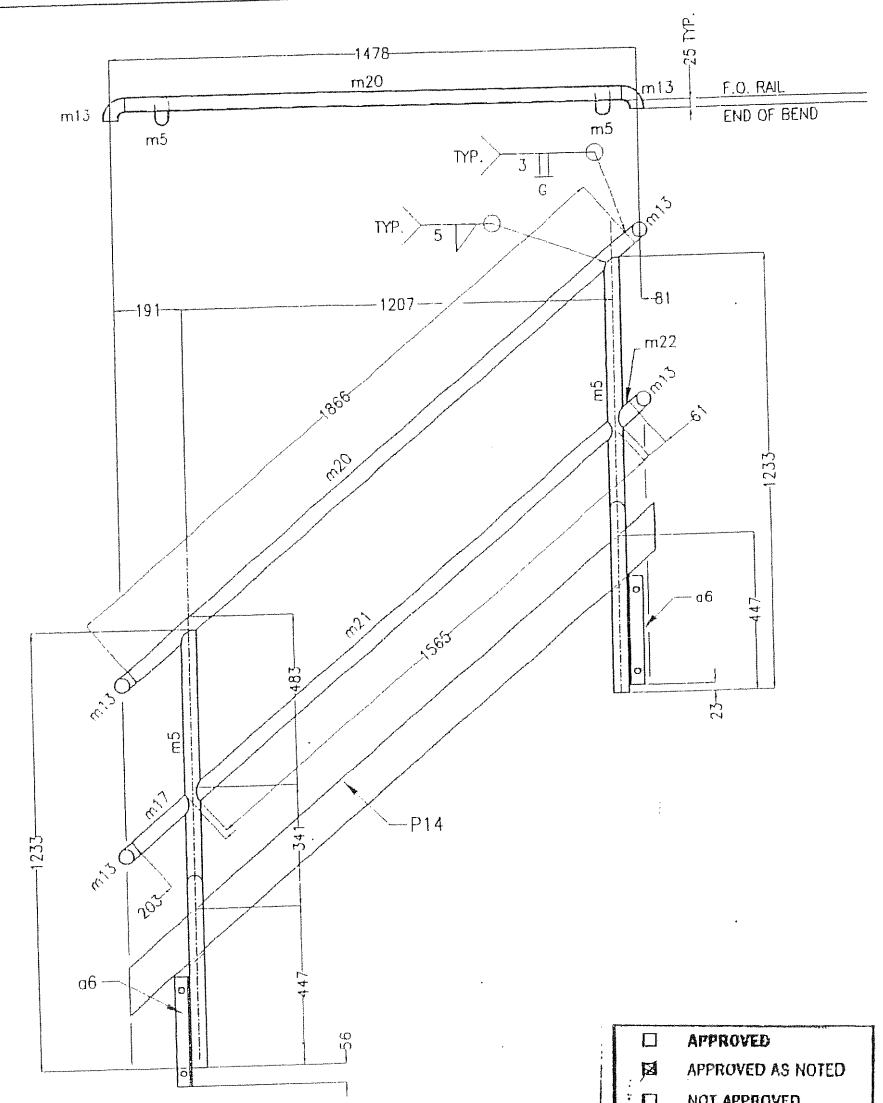

HAND RAIL DETAILS
SCALE 1:10

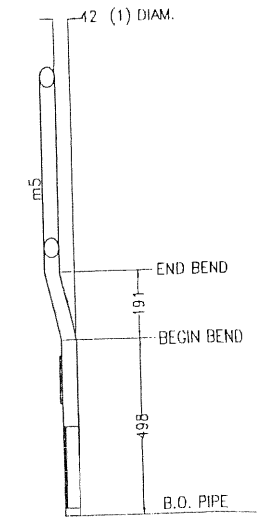

SECTION 'E-E'
SCALE 1:10

☐ APPROVED
☒ APPROVED AS NOTED
☐ NOT APPROVED

Pursuant to Section 5-1.02 of the Standard Specifications
State of California
DEPARTMENT OF TRANSPORTATION
Division of Structures
Office of Structure Construction

Signed James Fu
Structure Representative
Date 4/18/03

CONTRACT NO. 04-012024
CCO NO. 49
PAGE 60 OF 72

SAN FRANCISCO OAKLAND BAY BRIDGE
SKYWAY CONTRACT No. 04-012024
SFOBB EAST SPAN SEISMIC SAFETY PROJECT
POST KM 04-SF-80-13.9-14.3/ALA-80-0.0-1.6
BRIDGE No. 34-0006

PROJECT/DWG. TITLE:

DWN. BY:	DATE:	REV.		DATE
JKS	3-11-03	1	CONDUIT PENETRATIONS	03-11-03
CHK'D. BY:	DATE:			
APRV'D. BY:	DATE:			
FINISH:				
SCALE: AS NOTED				

JOB NO.: 02D02 | FILE NO.: DWG62ma | DWG. NO.: 62ma

DO NOT DUPLICATE WITHOUT PERMISSION

THIS PROJECT SHALL BE ERECTED PER THE AISC CODE OF STANDARD PRACTICE SPECIFICALLY PARAGRAPH 7.12 AS FOLLOWS:
7.12 CORRECTION OF ERRORS
THE CORRECTION OF MINOR MISFITS BY MODERATE AMOUNTS OF REAMING, GRINDING, WELDING OR CUTTING, AND THE DRAWING OF ELEMENTS INTO LINE WITH DRIFT PINS, SHALL BE CONSIDERED TO BE NORMAL ERECTION OPERATIONS. ERRORS THAT CANNOT BE CORRECTED USING FOREGOING MEANS, OR THAT REQUIRE MAJOR CHANGES IN MEMBER OR CONNECTION CONFIGURATION, SHALL BE PROMPTLY REPORTED TO THE OWNER'S DESIGNATED REPRESENTATIVES FOR DESIGN AND CONSTRUCTION AND THE FABRICATOR BY THE ERECTOR, TO ENABLE THE RESPONSIBLE ENTITY TO EITHER CORRECT THE ERROR OR APPROVE THE MOST EFFICIENT AND ECONOMICAL METHOD OF CORRECTION TO BE USED BY OTHERS. NO BACK CHARGES WILL BE ACCEPTED UNLESS APPROVED IN WRITING BY THIS OFFICE.

GLOBAL FABRICATORS
METRIC
CUSTOM EQUIPMENT MANUFACTURING
METAL FABRICATION—MACHINE SHOP
8929 ROSEDALE HWY. BAKERSFIELD CA. 93312
PHONE: (661) 589-2774 FAX: (661) 589-7504
E-MAIL engineering@globalfab.com

H.F. MAGER INC.
STRUCTURAL ENGINEERS
COMMERCIAL & INDUSTRIAL
STRUCTURAL DESIGN AND
CONSTRUCTION DOCUMENTS
1149 MARSH STREET
SAN LUIS OBISPO, CA 93401
PH: (805)541-2191 FAX: (805)541-5346
EMAIL hfm@magerinc.com

SEAL: REGISTERED PROFESSIONAL ENGINEER HAROLD FRED MAGER C 23270 CIVIL STATE OF CALIFORNIA
Expires 12/31/2006

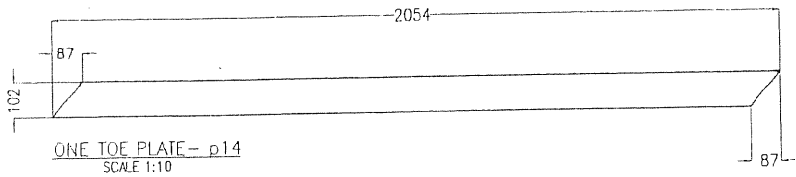

ONE TOE PLATE– p14
SCALE 1:10

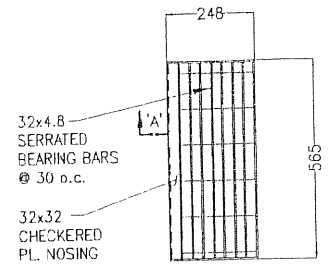

ONE STAIR TREAD– m2
SCALE 1:10

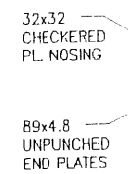

SECTION 'A'
SCALE 1:10

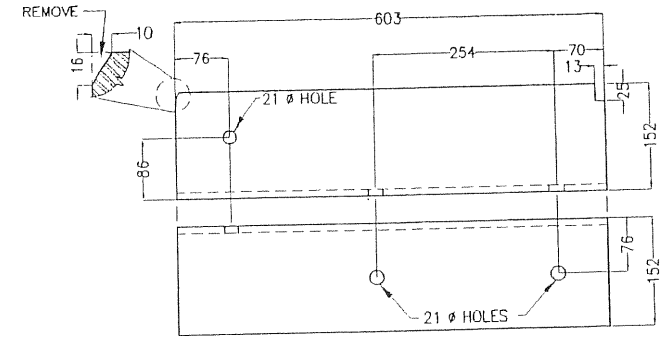

ONE UPPER SHELF ANGLE – a3
SCALE 1:5

APPROVED
APPROVED AS NOTED
NOT APPROVED
Pursuant to Section 5-1.02 of the Standard Specifications State of California
DEPARTMENT OF TRANSPORTATION
Division of Structures
Office of Structure Construction
Signed
Structure Representative
Date 4/18/03

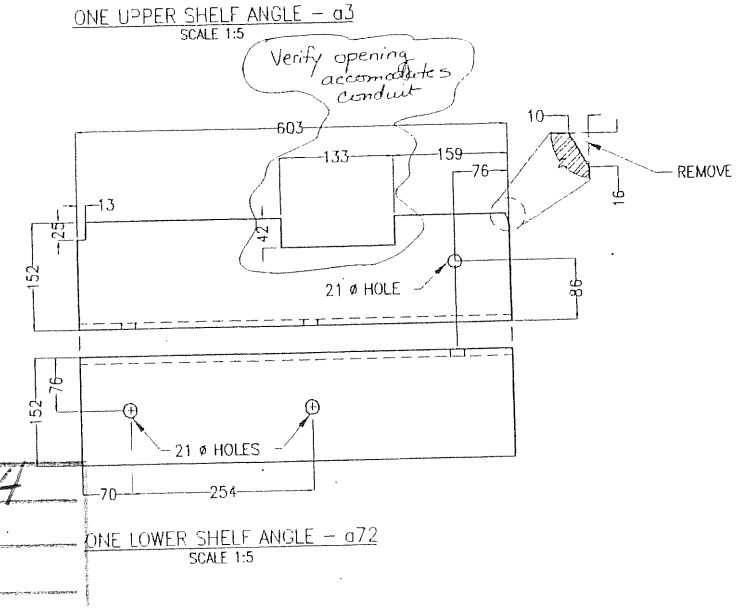

ONE LOWER SHELF ANGLE – a72
SCALE 1:5

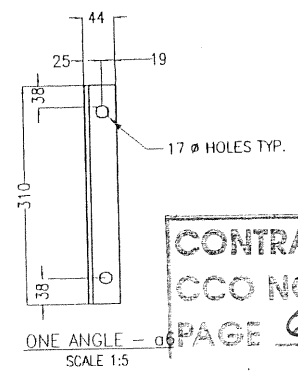

ONE ANGLE – a6
SCALE 1:5

CONTRACT NO. 04-012024
CCO NO. 49
PAGE 61 OF 72

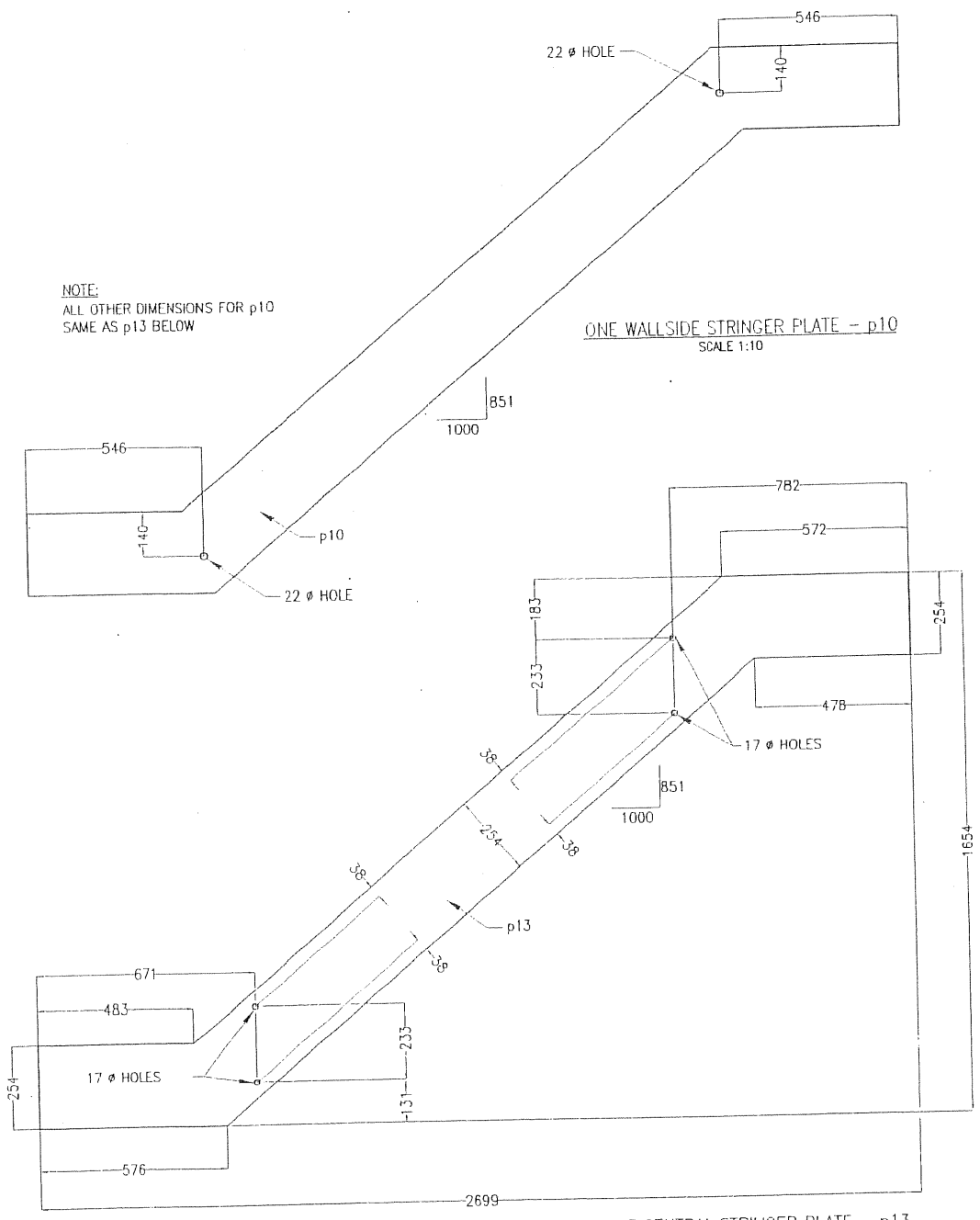

ONE WALLSIDE STRINGER PLATE – p10
SCALE 1:10

ONE CENTRAL STRINGER PLATE – p13
SCALE 1:10

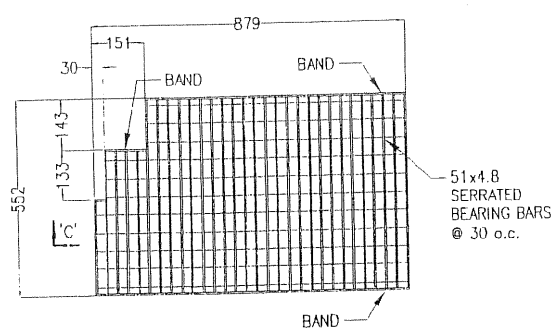

ONE LOWER LANDING GRATE– m152
SCALE 1:10

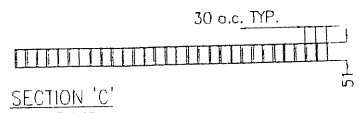

SECTION 'C'
SCALE 1:10

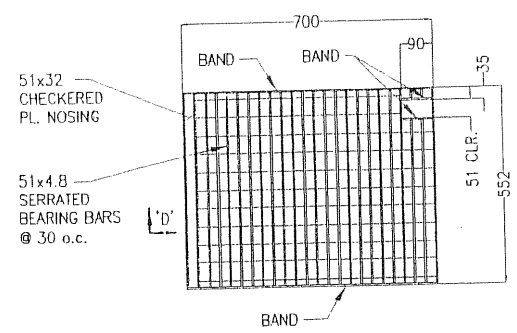

ONE TOP LANDING GRATE– m19
SCALE 1:10

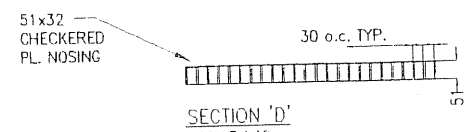

SECTION 'D'
SCALE 1:10

SAN FRANCISCO OAKLAND BAY BRIDGE
SKYWAY CONTRACT No. 04-012024
SFOBB EAST SPAN SEISMIC SAFETY PROJECT
POST KM 04-SF-80-13.9-14.3/ALA-80-0.0-1.6
BRIDGE No. 34-0006

DO NOT DUPLICATE WITHOUT PERMISSION

THIS PROJECT SHALL BE ERECTED PER THE AISC CODE OF STANDARD PRACTICE SPECIFICALLY PARAGRAPH 7.12 AS FOLLOWS:
7.12 CORRECTION OF ERRORS
THE CORRECTION OF MINOR MISFITS BY MODERATE AMOUNTS OF REAMING, GRINDING, WELDING OR CUTTING, AND THE DRAWING OF ELEMENTS INTO LINE WITH DRIFT PINS, SHALL BE CONSIDERED TO BE NORMAL ERECTION OPERATIONS. ERRORS THAT CANNOT BE CORRECTED USING FOREGOING MEANS, OR THAT REQUIRE MAJOR CHANGES IN MEMBER OR CONNECTION CONFIGURATION, SHALL BE PROMPTLY REPORTED TO THE OWNER'S DESIGNATED REPRESENTATIVES FOR DESIGN AND CONSTRUCTION AND THE FABRICATOR BY THE ERECTOR, TO ENABLE THE RESPONSIBLE ENTITY TO EITHER CORRECT THE ERROR OR APPROVE THE MOST EFFICIENT AND ECONOMICAL METHOD OF CORRECTION TO BE USED BY OTHERS. NO BACK CHARGES WILL BE ACCEPTED UNLESS APPROVED IN WRITING BY THIS OFFICE.

GLOBAL FABRICATORS
METRIC
CUSTOM EQUIPMENT MANUFACTURING
METAL FABRICATION–MACHINE SHOP
8929 ROSEDALE HWY. BAKERSFIELD CA. 93312
PHONE: (661) 589-2774 FAX: (661) 589-7504
E-MAIL engineering@globalfab.com

H.F. MAGER INC.
STRUCTURAL ENGINEERS
COMMERCIAL & INDUSTRIAL
STRUCTURAL DESIGN AND
CONSTRUCTION DOCUMENTS
1149 MARSH STREET
SAN LUIS OBISPO, CA 93401
PH# (805)541-2193 FAX# (805)541-5348
EMAIL hmm@magerstruc.com

SEAL: HEINRICH FRIED MAGER, STATE OF CALIFORNIA, STRUCTURAL ENGINEER, C 23178, Mar 11, 2003
Expires Mar. 31, 2006

DWN. BY:	DATE:	REV.		DATE
JKS	3-11-03	1	CONDUIT PENETRATIONS	03-11-03
CHK'D. BY: HMM	DATE:			
APRV'D. BY:	DATE:			
FINISH:				
SCALE: AS NOTED				

PROJECT/DWG. TITLE:

JOB NO.:	FILE NO.:	DWG. NO.:
02D02	DWG62mb	62mb

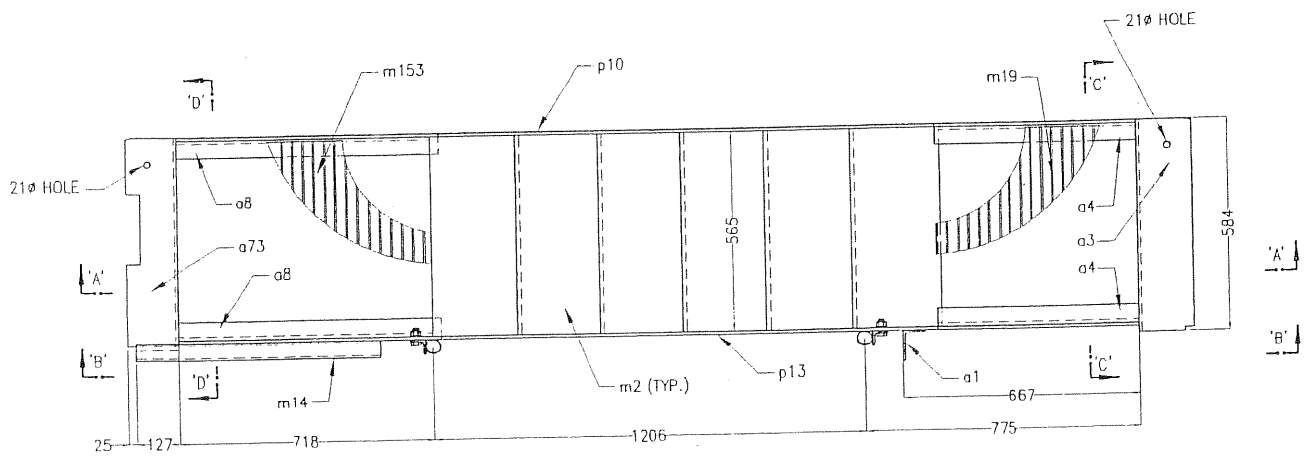

TOP STAIR ASSEMBLY PLAN – 63A
SCALE 1:10

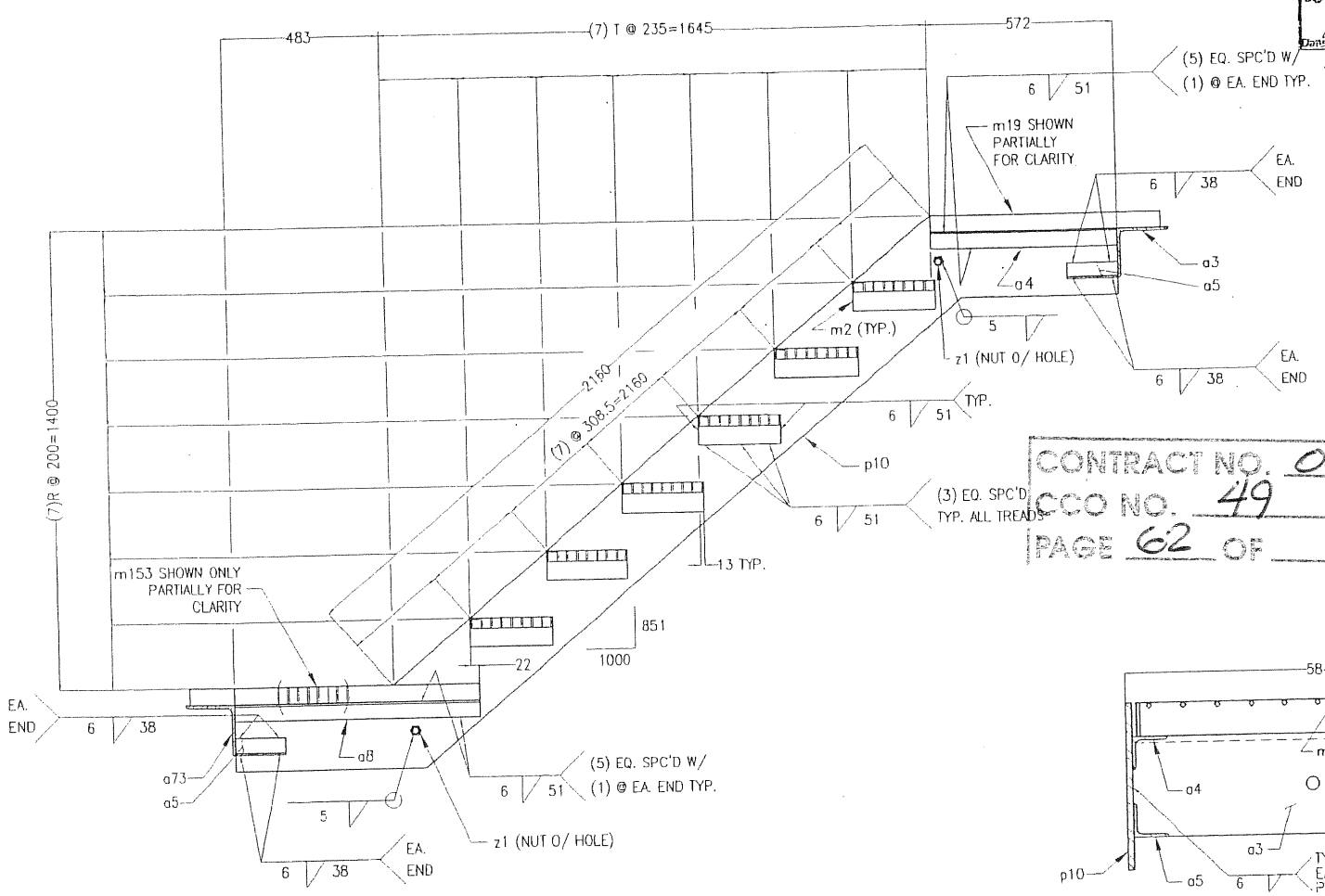

SECTION 'A–A'
SCALE 1:10

METRIC SIZE	IMPERIAL SIZE
TREAD 32x248	TREAD 1 1/4x9 3/4
PIPE 38 ø Sch. 40	PIPE 1 1/2ø Sch. 40
CUT FROM 38 ø 90° ELBOW	CUT FROM 1 1/2ø 90° ELBOW
TS 51x51x4.8	TS 2x2x3/16
GRATING 51x4.8x879	GRATING 2x3/16x34 5/8
GRATING 51x4.8x700	GRATING 2x3/16x27 9/16
L 89x63x6.4	L 3 1/2x2 1/2x1/4
L 152x152x9.5	L 6x6x3/8
L 51x51x6.4	L 2x2x1/4
L 44x44x6.4	L 1 3/4x1 3/4x1/4
PL. 9.5x1654	PL. 3/8x65 1/8
PL. 6.4x102	PL. 1/4x4
BOLT 19 ø (A307)	BOLT 3/4" ø (A307)
BOLT 19 ø (A325)	BOLT 3/4" ø (A325)
BOLT 16 ø (A325)	BOLT 5/8" ø (A325)

BILL OF MATERIALS

SHIP MK.	PIECE MARK	QTY.	DESCRIPTION (Imperial Size)	CUT LENGTH (mm.)	COMMENT
63A		1	TOP STAIR ASSEMBLY		
	~~p2~~	6	TREAD 1 1/4x9 3/4	565	IKG WB–6
	~~p5~~	2	PIPE 1 1/2"ø Sch. 40	1233	
	~~p13~~	4	CUT FROM 1 1/2"ø 90° ELBOW		
	~~p14~~	1	TS 2x2x3/16	673	
	~~p15~~	1	GRATING 2x3/16x34 5/8	552	IKG WF–10
	~~p17~~	1	PIPE 1 1/2"ø Sch. 40	203	
	~~p18~~	1	GRATING 2x3/16x27 9/16	552	IKG WF–10
	~~p20~~	1	PIPE 1 1/2"ø Sch. 40	1866	
	~~p21~~	1	PIPE 1 1/2"ø Sch. 40	1565	
	~~p22~~	1	PIPE 1 1/2"ø Sch. 40	61	
	~~a1~~	1	L 3 1/2x2 1/2x1/4	152	
	~~a3~~	1	L 6x6x3/8	603	
	~~a4~~	2	L 2x2x1/4	572	
	~~a5~~	4	L 2x2x1/4	152	
	~~a6~~	2	L 1 3/4x1 3/4x1/4	310	
	~~a73~~	1	L 6x6x3/8	603	
	~~a8~~	2	L 2x2x1/4	740	
	~~p10~~	1	PL. 3/8x65 1/8	2699	
	~~p13~~	1	PL. 3/8x65 1/8	2699	
	~~p14~~	1	PL. 1/4x4	2054	
	~~z1~~	2	BOLT 3/4" ø (A307)	95	w/n
	z5	4	BOLT 3/4" ø (A325)	57	w/n & w
	~~z6~~	4	BOLT 5/8" ø (A325)	45	w/n & w
	z7	1	BOLT 3/4" ø (A325)	51	w/n & w

☒ APPROVED
☐ APPROVED AS NOTED
☐ NOT APPROVED

Pursuant to Section 5-1.02 of the Standard Specifications State of California DEPARTMENT OF TRANSPORTATION Division of Structures Office of Structure Construction
Signed James Fan
Bridge Representative
Date 7/13/03

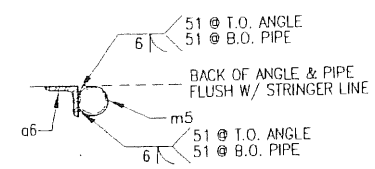

SECTION 'G'
SCALE 1:5

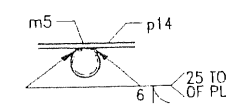

SECTION 'H'
SCALE 1:5

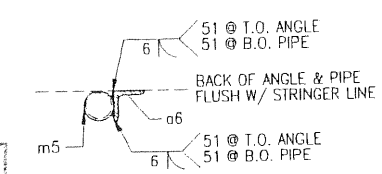

SECTION 'I'
SCALE 1:5

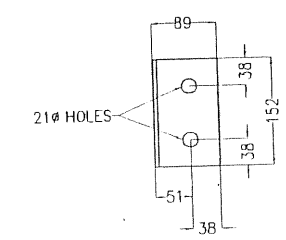

ONE BRACKET ANGLE – a1
SCALE 1:5

CONTRACT NO. 04-012024
CCO NO. 49
PAGE 62 OF 72

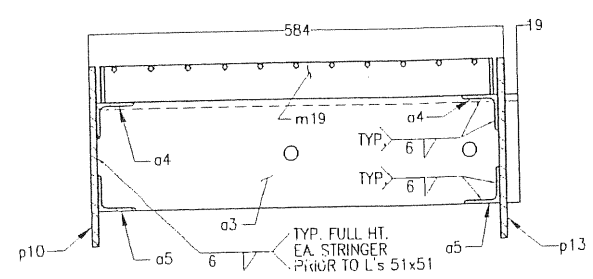

SECTION 'C–C'
SCALE 1:5

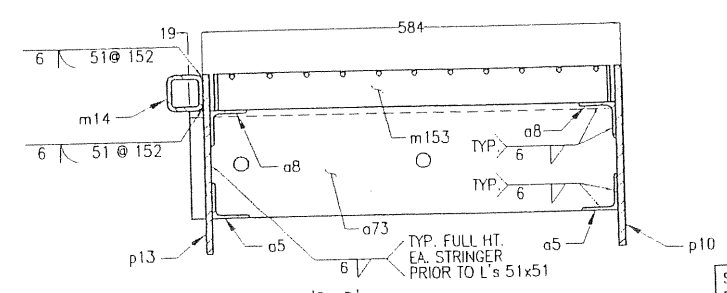

SECTION 'D–D'
SCALE 1:5

SAN FRANCISCO OAKLAND BAY BRIDGE
SKYWAY CONTRACT No. 04-012024
SFOBB EAST SPAN SEISMIC SAFETY PROJECT
POST KM 04-SF-80-13.9-14.3/ALA-80-0.0-1.6
BRIDGE No. 34-0006

DO NOT DUPLICATE WITHOUT PERMISSION

THIS PROJECT SHALL BE ERECTED PER THE AISC CODE OF STANDARD PRACTICE SPECIFICALLY PARAGRAPH 7.12 AS FOLLOWS:
7.12 CORRECTION OF ERRORS
THE CORRECTION OF MINOR MISFITS BY MODERATE AMOUNTS OF REAMING, GRINDING, WELDING OR CUTTING, AND THE DRAWING OF ELEMENTS INTO LINE WITH DRIFT PINS, SHALL BE CONSIDERED TO BE NORMAL ERECTION OPERATIONS. ERRORS THAT CANNOT BE CORRECTED USING FOREGOING MEANS, OR THAT REQUIRE MAJOR CHANGES IN MEMBER OR CONNECTION CONFIGURATION, SHALL BE PROMPTLY REPORTED TO THE OWNER'S DESIGNATED REPRESENTATIVES FOR DESIGN AND CONSTRUCTION AND THE FABRICATOR BY THE ERECTOR, TO ENABLE THE RESPONSIBLE ENTITY TO EITHER CORRECT THE ERROR OR APPROVE THE MOST EFFICIENT AND ECONOMICAL METHOD OF CORRECTION TO BE USED BY OTHERS. NO BACK CHARGES WILL BE ACCEPTED UNLESS APPROVED IN WRITING BY THIS OFFICE.

GLOBAL FABRICATORS
METRIC
CUSTOM EQUIPMENT MANUFACTURING
METAL FABRICATION–MACHINE SHOP
8929 ROSEDALE HWY. BAKERSFIELD CA. 93312
PHONE: (661) 589-2774 FAX: (661) 589-7504
E-MAIL engineering@globalfab.com

H.F. MAGER INC.
STRUCTURAL ENGINEERS
COMMERCIAL & INDUSTRIAL
STRUCTURAL DESIGN AND
CONSTRUCTION DOCUMENTS
1149 MARSH STREET
SAN LUIS OBISPO, CA 93401
PH# (805)541-2193 FAX# (805)541-5348
EMAIL hone@magerstruc.com

SEAL: REGISTERED PROFESSIONAL ENGINEER HANS FRED MAGER S 2376 Mar. 11, 2003 STRUCTURAL ENGINEER STATE OF CALIFORNIA
Expires Mar. 31, 2006

DWN. BY:	DATE:	REV.		DATE
IDG	3-11-03	1	CONDUIT PENETRATIONS	03-11-03
CHK'D. BY: HM	DATE:			
APRV'D. BY:	DATE:			
FINISH:				
SCALE: AS NOTED				

PROJECT/DWG. TITLE:

JOB NO.:	FILE NO.:	DWG. NO.:
02D02	DWG63m	63m

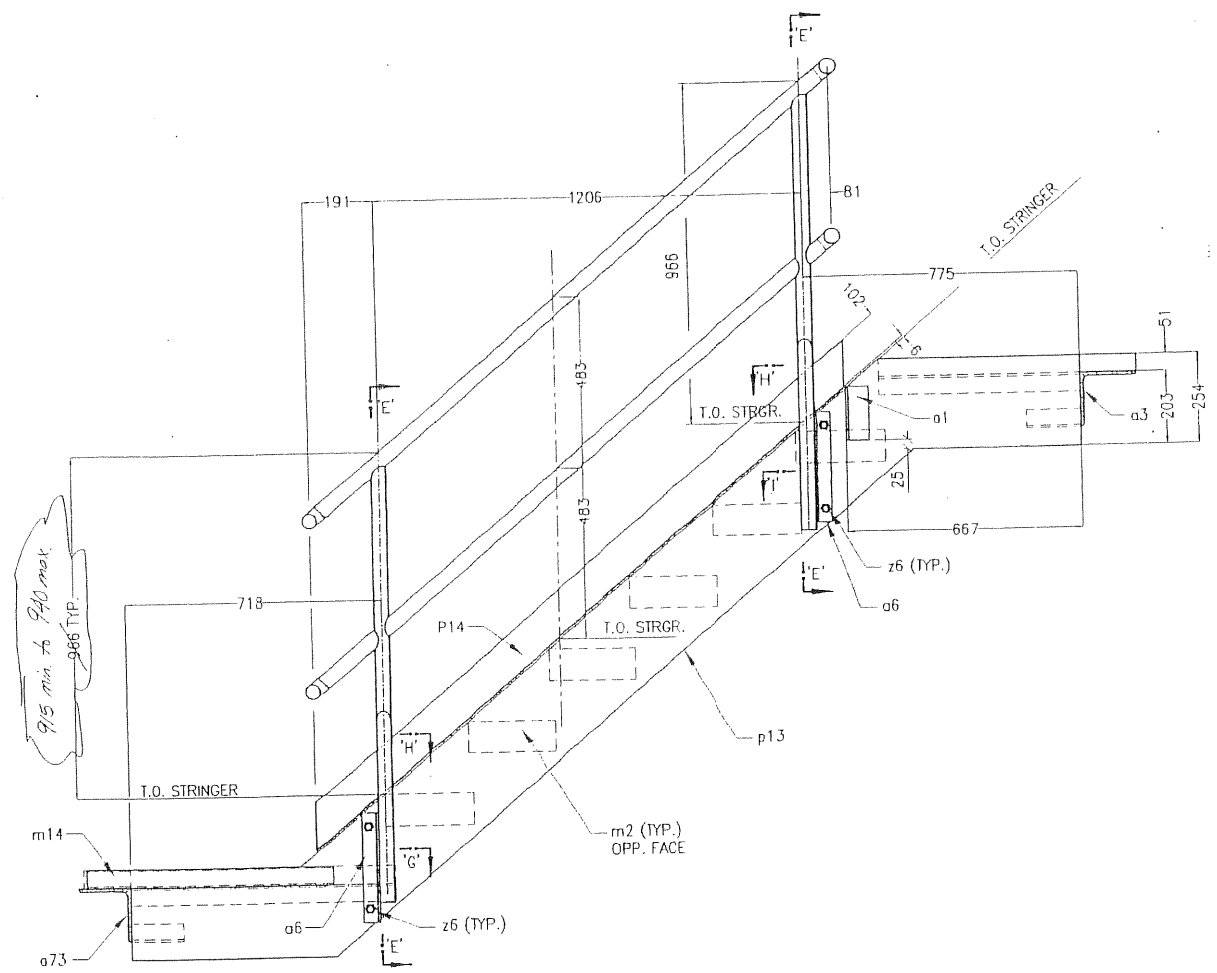

VIEW 'B-B'
SCALE 1:10

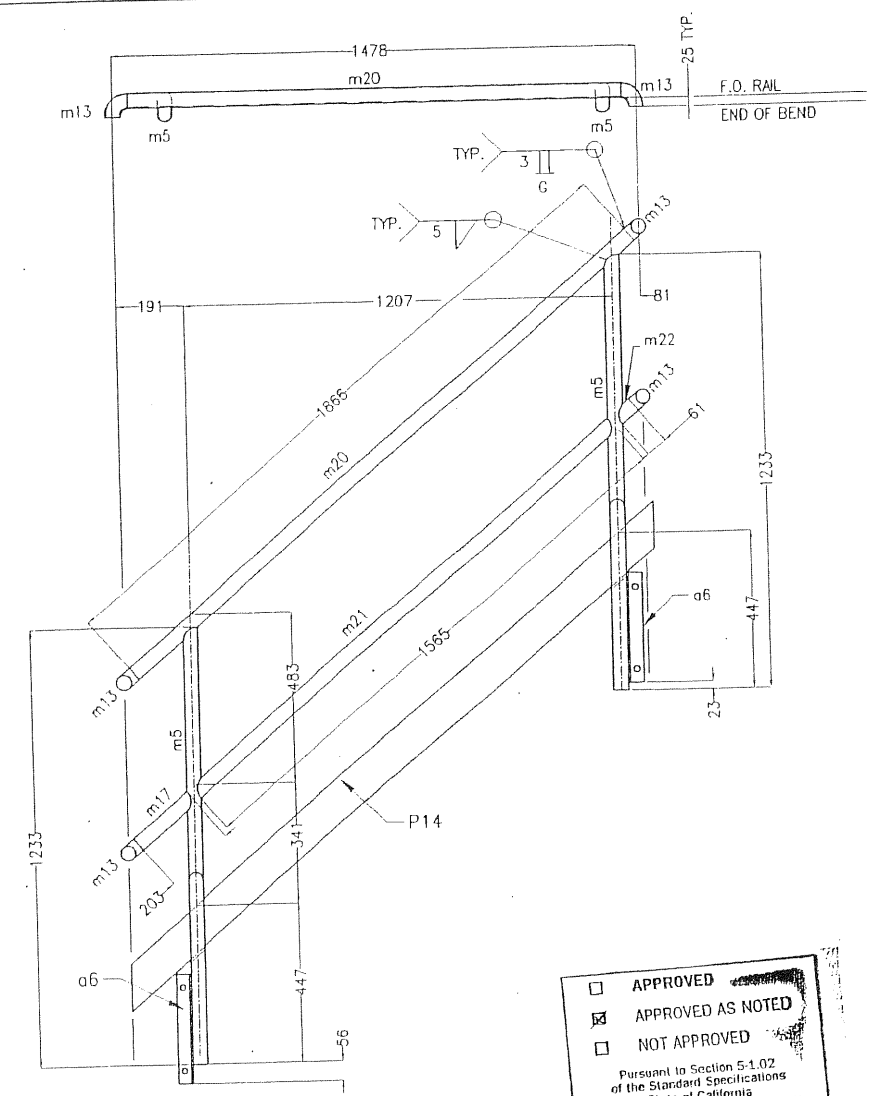

HAND RAIL DETAILS
SCALE 1:10

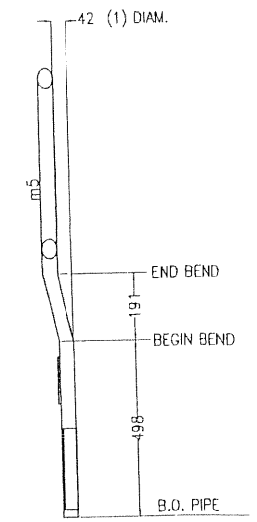

SECTION 'E-E'
SCALE 1:10

☐ APPROVED
☒ APPROVED AS NOTED
☐ NOT APPROVED

Pursuant to Section 5-1.02 of the Standard Specifications
State of California
DEPARTMENT OF TRANSPORTATION
Division of Structures
Office of Structure Construction
Signed James Fan
Structure Representative
Date 4/13/03

CONTRACT NO. 04-012024
CCO NO. 49
PAGE 63 OF 72

SAN FRANCISCO OAKLAND BAY BRIDGE
SKYWAY CONTRACT No. 04-012024
SFOBB EAST SPAN SEISMIC SAFETY PROJECT
POST KM 04-SF-80-13.9-14.3/NLA-80-0.0-1.6
BRIDGE No. 34-0006

PROJECT/DWG. TITLE:

DWN. BY:	DATE:	REV.		DATE
JKS	3-11-03	1	CONDUIT PENETRATIONS	03-11-03
CHK'D. BY:	DATE:			
APRV'D. BY:	DATE:			
FINISH:				
SCALE: AS NOTED				

JOB NO.:	FILE NO.:	DWG. NO.:
02D02	DWG63ma	63ma

DO NOT DUPLICATE WITHOUT PERMISSION

THIS PROJECT SHALL BE ERECTED PER THE AISC CODE OF STANDARD PRACTICE SPECIFICALLY PARAGRAPH 7.12 AS FOLLOWS:
7.12 CORRECTION OF ERRORS
THE CORRECTION OF MINOR MISFITS BY MODERATE AMOUNTS OF REAMING, GRINDING, WELDING OR CUTTING, AND THE DRAWING OF ELEMENTS INTO LINE WITH DRIFT PINS, SHALL BE CONSIDERED TO BE NORMAL ERECTION OPERATIONS. ERRORS THAT CANNOT BE CORRECTED USING FOREGOING MEANS, OR THAT REQUIRE MAJOR CHANGES IN MEMBER OR CONNECTION CONFIGURATION, SHALL BE PROMPTLY REPORTED TO THE OWNER'S DESIGNATED REPRESENTATIVES FOR DESIGN AND CONSTRUCTION AND THE FABRICATOR BY THE ERECTOR, TO ENABLE THE RESPONSIBLE ENTITY TO EITHER CORRECT THE ERROR OR APPROVE THE MOST EFFICIENT AND ECONOMICAL METHOD OF CORRECTION TO BE USED BY OTHERS. NO BACK CHARGES WILL BE ACCEPTED UNLESS APPROVED IN WRITING BY THIS OFFICE.

GLOBAL FABRICATORS
METRIC
CUSTOM EQUIPMENT MANUFACTURING
METAL FABRICATION-MACHINE SHOP
8929 ROSEDALE HWY. BAKERSFIELD CA. 93312
PHONE: (661) 589-2774 FAX: (661) 589-7504
E-MAIL engineering@globalfab.com

H.F. MAGER INC.
STRUCTURAL ENGINEERS
COMMERCIAL & INDUSTRIAL
STRUCTURAL DESIGN AND
CONSTRUCTION DOCUMENTS
1149 MARSH STREET
SAN LUIS OBISPO, CA 93401
PH# (805)541-2193 FAX# (805)541-5346
EMAIL hans@magerstric.com

SEAL: REGISTERED PROFESSIONAL ENGINEER HANS FRED MAGER No. S 2376 Mar. 11, 2003 STRUCTURAL ENGINEER STATE OF CALIFORNIA
Expires Mar. 31, 2006

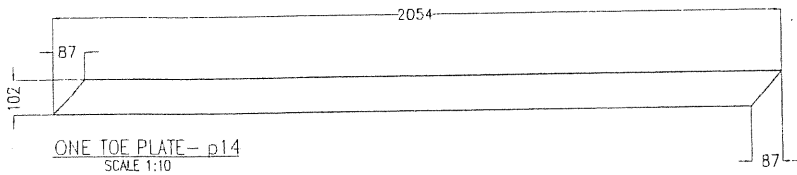

ONE TOE PLATE – p14
SCALE 1:10

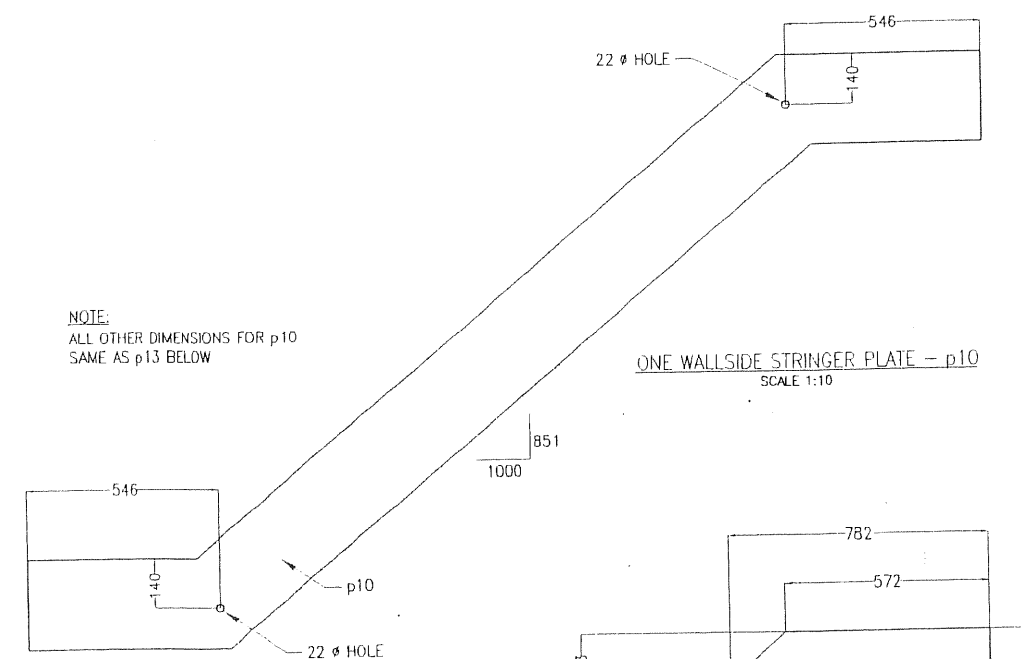

NOTE:
ALL OTHER DIMENSIONS FOR p10
SAME AS p13 BELOW

ONE WALLSIDE STRINGER PLATE – p10
SCALE 1:10

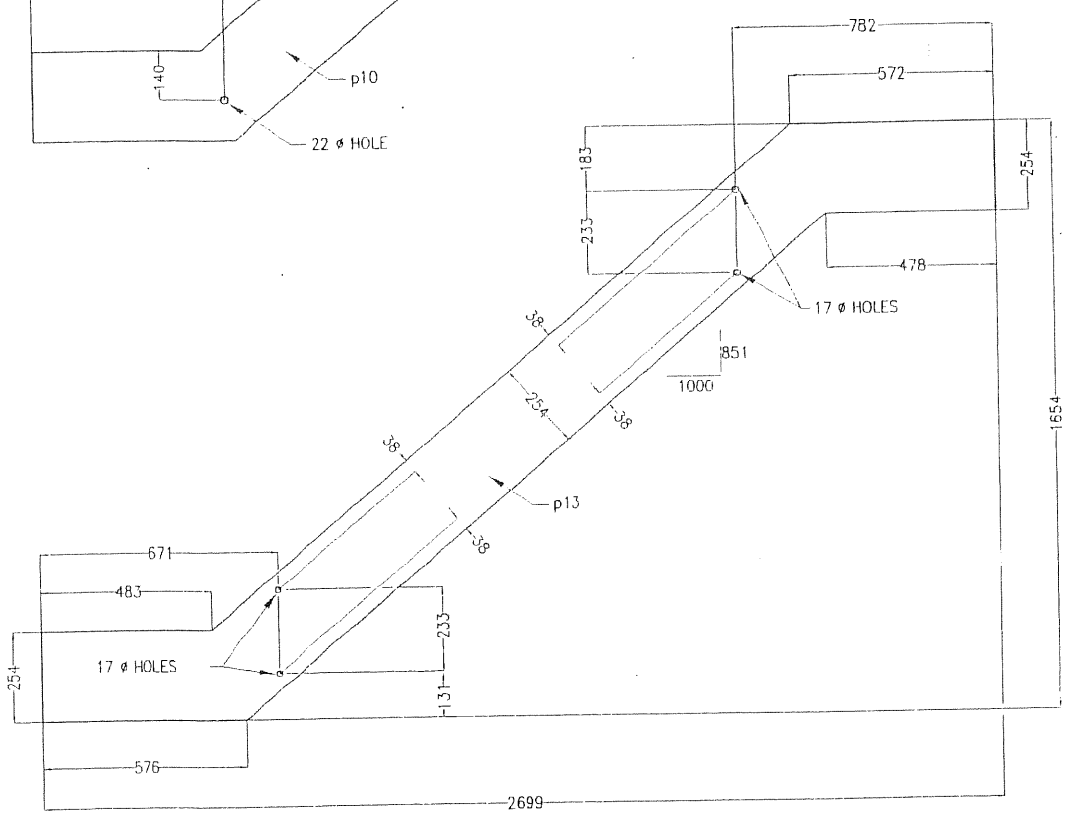

ONE CENTRAL STRINGER PLATE – p13
SCALE 1:10

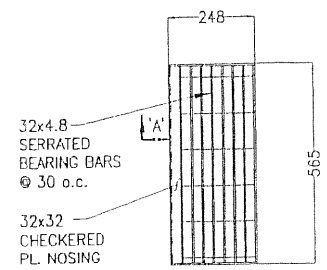

ONE STAIR TREAD – m2
SCALE 1:10

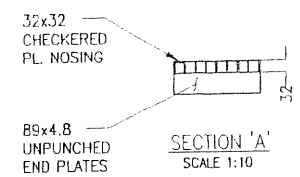

SECTION 'A'
SCALE 1:10

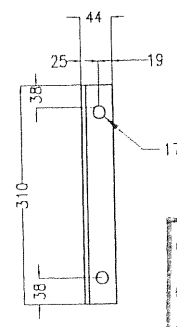

ONE ANGLE – a6
SCALE 1:5

APPROVED
APPROVED AS NOTED
NOT APPROVED
Pursuant to Section 5-1.02 of the Standard Specifications
State of California
DEPARTMENT OF TRANSPORTATION
Division of Structures
Office of Structure Construction
Signed James Fer
Structure Representative
Date 4/18/03

CONTRACT NO. 04-012024
CCO NO. 49
PAGE 64 OF 72

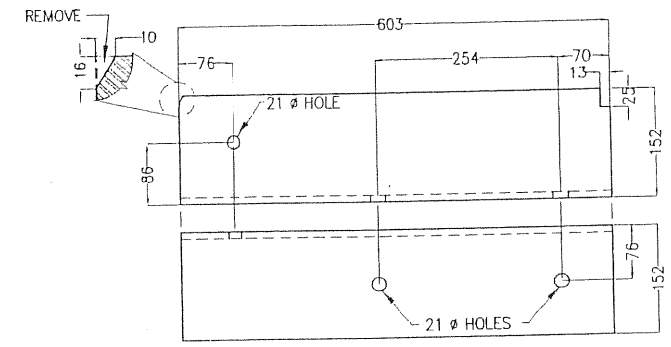

ONE UPPER SHELF ANGLE – a3
SCALE 1:5

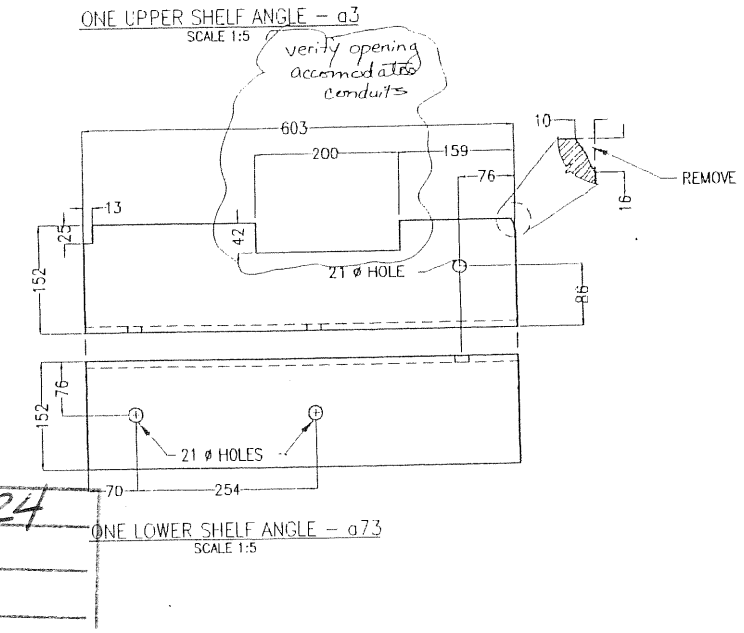

ONE LOWER SHELF ANGLE – a73
SCALE 1:5

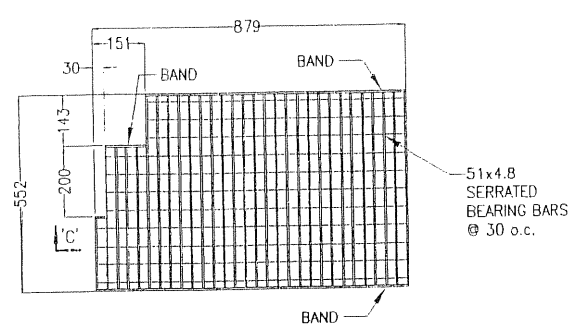

ONE LOWER LANDING GRATE – m153
SCALE 1:10

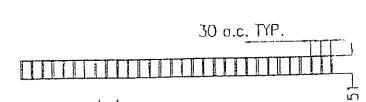

SECTION 'C'
SCALE 1:10

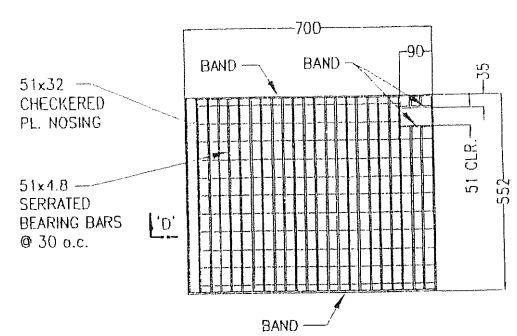

ONE TOP LANDING GRATE – m19
SCALE 1:10

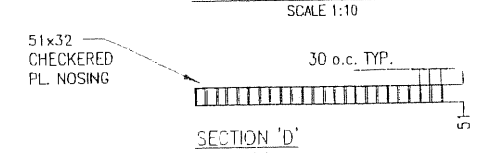

SECTION 'D'
SCALE 1:10

SAN FRANCISCO OAKLAND BAY BRIDGE
SKYWAY CONTRACT No. 04-012024
SFOBB EAST SPAN SEISMIC SAFETY PROJECT
POST KM 04-SF-80-13.9-14.3/ALA-80-0.0-1.6
BRIDGE No. 34-0006

DO NOT DUPLICATE WITHOUT PERMISSION

THIS PROJECT SHALL BE ERECTED PER THE AISC CODE OF STANDARD PRACTICE SPECIFICALLY PARAGRAPH 7.12 AS FOLLOWS:
7.12 CORRECTION OF ERRORS
THE CORRECTION OF MINOR MISFITS BY MODERATE AMOUNTS OF REAMING, GRINDING, WELDING OR CUTTING, AND THE DRAWING OF ELEMENTS INTO LINE WITH DRIFT PINS, SHALL BE CONSIDERED TO BE NORMAL ERECTION OPERATIONS. ERRORS THAT CANNOT BE CORRECTED USING FOREGOING MEANS, OR THAT REQUIRE MAJOR CHANGES IN MEMBER OR CONNECTION CONFIGURATION, SHALL BE PROMPTLY REPORTED TO THE OWNER'S DESIGNATED REPRESENTATIVES FOR DESIGN AND CONSTRUCTION AND THE FABRICATOR BY THE ERECTOR, TO ENABLE THE RESPONSIBLE ENTITY TO EITHER CORRECT THE ERROR OR APPROVE THE MOST EFFICIENT AND ECONOMICAL METHOD OF CORRECTION TO BE USED BY OTHERS. NO BACK CHARGES WILL BE ACCEPTED UNLESS APPROVED IN WRITING BY THIS OFFICE.

GLOBAL FABRICATORS
METRIC
CUSTOM EQUIPMENT MANUFACTURING
METAL FABRICATION–MACHINE SHOP
8929 ROSEDALE HWY. BAKERSFIELD CA. 93312
PHONE: (661) 589-2774 FAX: (661) 589-7504
E-MAIL engineering@globalfab.com

H.F. MAGER INC.
STRUCTURAL ENGINEERS
COMMERCIAL & INDUSTRIAL
STRUCTURAL DESIGN AND
CONSTRUCTION DOCUMENTS
1149 MARSH STREET
SAN LUIS OBISPO, CA 93401
PH# (805)541-2193 FAX# (805)541-5346
EMAIL hmeo@magerstruc.com

SEAL
REGISTERED PROFESSIONAL ENGINEER
H. F. MAGER
C 2376
Mar. 11, 2003
STRUCTURAL ENGINEER
STATE OF CALIFORNIA
Expires Mar. 31, 2006

DWN. BY:	DATE:	REV.		DATE
JKS	3-11-03	1	CONDUIT PENETRATIONS	03-11-03
CHK'D. BY: HFM	DATE:			
APRV'D. BY:	DATE:			
FINISH:				
SCALE: AS NOTED				

PROJECT/DWG. TITLE:

JOB NO.:	FILE NO.:	DWG. NO.:
02D02	DWG63mbl	63mb

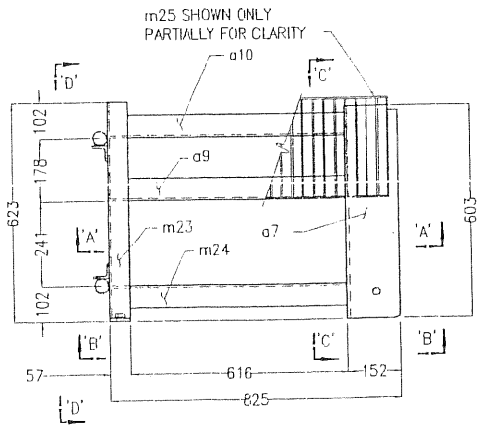

LADDER LANDING ASSEMBLY PLAN– 7A
SCALE 1:10

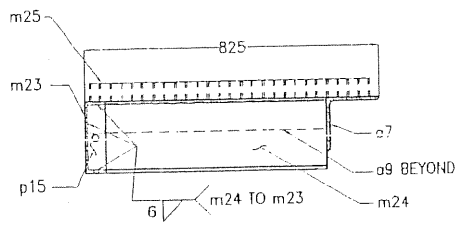

VIEW 'B–B'
SCALE 1:10

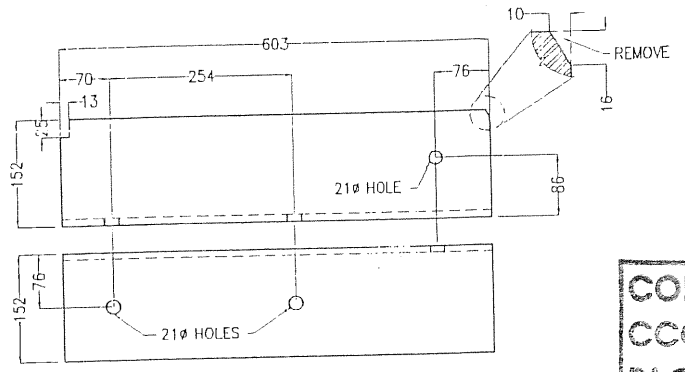

ONE LOWER SHELF ANGLE – a7
SCALE 1:5

METRIC SIZE	IMPERIAL SIZE
C203x17	C8x11.5
GRATING 51x4.8x789	GRATING 2x3/16x31 1/16
PIPE 38 ø Sch. 40	PIPE 1 1/2ø Sch. 40
L 44x44x6.4	L 1 3/4x1 3/4x1/4
L 152x152x9.5	L 6x6x3/8
L 89x63x6.4	L 3–1/2x2–1/2x1/4
PL. 9.5x57	PL. 3/8x 2–1/4
PL. 6.4x102	PL. 1/4x4
BOLT 19 ø (A307)	BOLT 3/4" ø (A307)
BOLT 19 ø (A325)	BOLT 3/4" ø (A325)
BOLT 16 ø (A325)	BOLT 5/8" ø (A325)

CONTRACT NO. 04-012024
CCO NO. 49
PAGE 65 OF 72

BILL OF MATERIALS

SHIP MK.	PIECE MARK	QTY.	DESCRIPTION (Imperial Size)	CUT LENGTH (mm.)	COMMENT
LA		25	LADDER LANDING ASSEMBLY		
	~~p23~~	25	C8x11.5	613	
	~~p24~~	25	C8x11.5	667	
	~~p25~~	25	GRATING 2x3/16x31 1/16	286	IKG WF–10
	~~p26~~	50	PIPE 1 1/2ø Sch. 40	1086	
	~~p27~~	25	PIPE 1 1/2ø Sch. 40	610	
	~~p28~~	25	PIPE 1 1/2ø Sch. 40	89	
	~~p29~~	25	PIPE 1 1/2ø Sch. 40	419	
	~~p30~~	25	PIPE 1 1/2ø Sch. 40	102	
	~~a7~~	25	L 6x6x3/8	603	
	~~a8~~	25	L 3–1/2x2–1/2x1/4	667	
	~~a10~~	25	L 3–1/2x2–1/2x1/4	667	
	~~a11~~	50	L 1 3/4x1 3/4x1/4	178	
	~~p15~~	25	PL. 3/8x 2–1/4	203	
	~~p16~~	25	PL. 1/4x4	635	
	~~z1~~	25	BOLT 3/4" ø (A307)	95	w/n
	z2	50	BOLT 3/4" ø (A325)	45	w/n & w
	z5	50	BOLT 3/4" ø (A325)	57	w/n & w
	z6	100	BOLT 5/8" ø (A325)	45	w/n & w
	z7	25	BOLT 3/4" ø (A325)	51	w/n & w

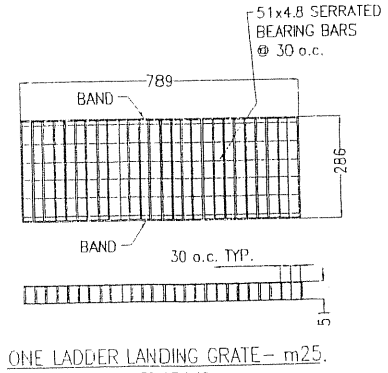

ONE LADDER LANDING GRATE– m25.
SCALE 1:10

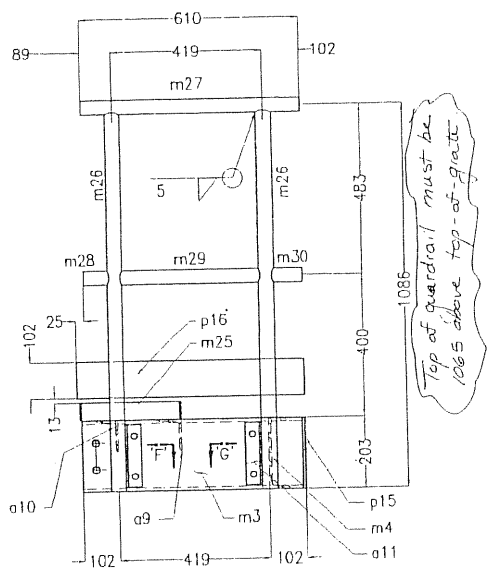

VIEW 'D–D'
SCALE 1:10

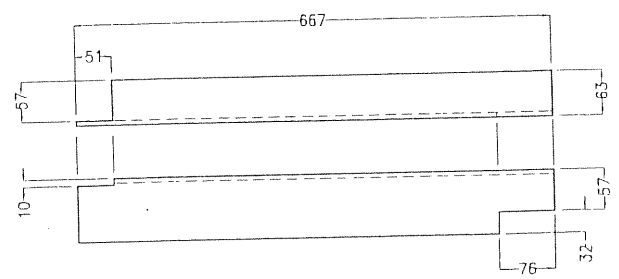

ONE ANGLE – a9
SCALE 1:5

ONE ANGLE – a10
SCALE 1:5

APPROVED
APPROVED AS NOTED
NOT APPROVED

Pursuant to Section 5-1.02 of the Standard Specifications State of California DEPARTMENT OF TRANSPORTATION Division of Structures Office of Structure Construction

Signed James Jesi
Structure Representative
Date 4/18/03

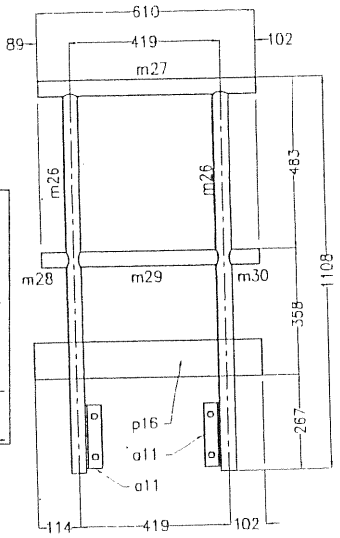

ONE HANDRAIL
SCALE 1:10

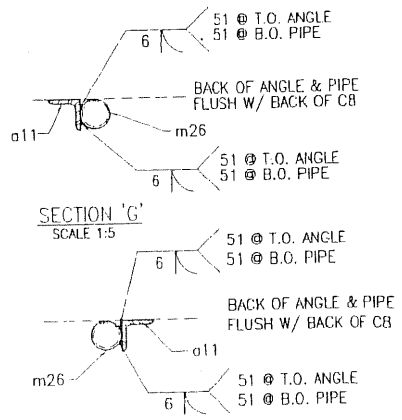

SECTION 'G'
SCALE 1:5

SECTION 'F'
SCALE 1:5

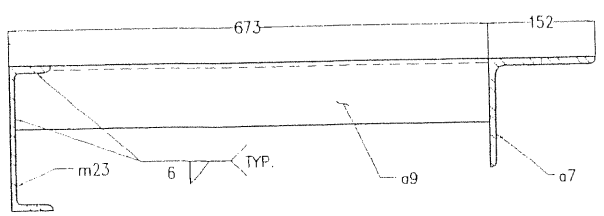

SECTION 'A–A'
SCALE 1:5

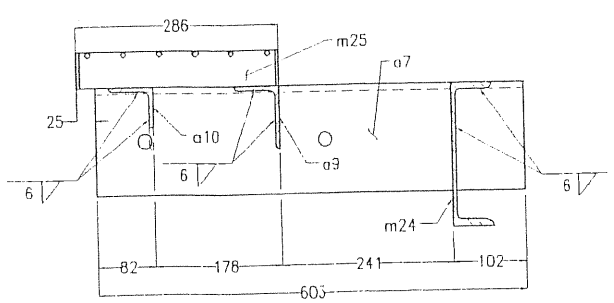

SECTION 'C–C'
SCALE 1:5

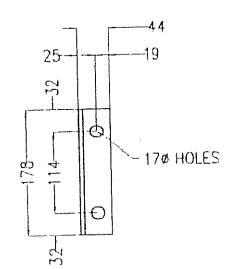

ONE ANGLE – a11
SCALE 1:5

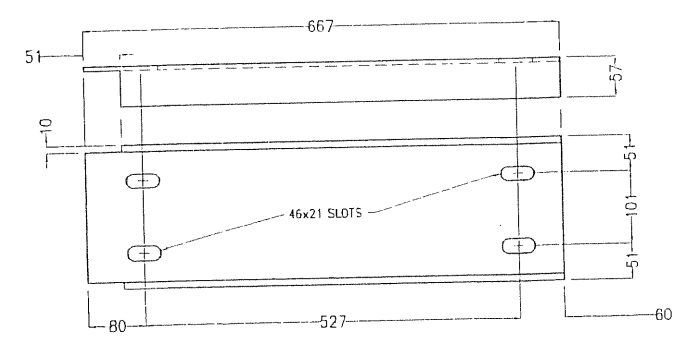

ONE CHANNEL– m24
SCALE 1:5

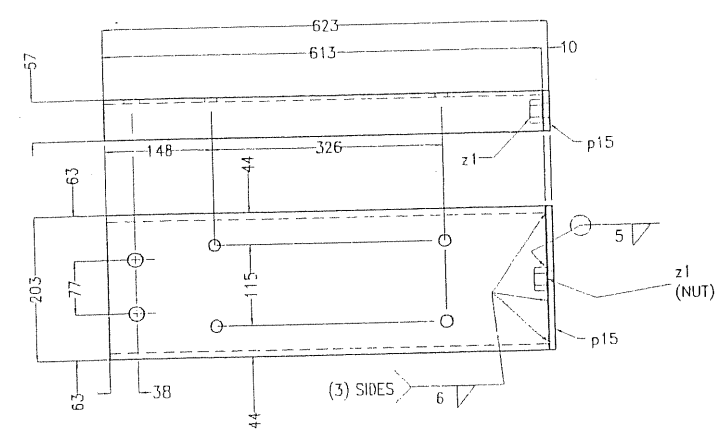

ONE CHANNEL– m23
SCALE 1:5

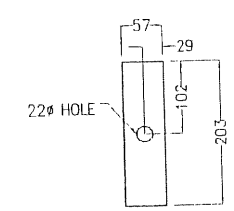

ONE END PLATE – p15
SCALE 1:5

SAN FRANCISCO OAKLAND BAY BRIDGE
SKYWAY CONTRACT No. 04-012024
SFOBB EAST SPAN SEISMIC SAFETY PROJECT
POST KM 04-SF-80-13.9-14.3/ALA-80-0.0-1.6
BRIDGE No. 34-0006

DO NOT DUPLICATE WITHOUT PERMISSION

THIS PROJECT SHALL BE ERECTED PER THE AISC CODE OF STANDARD PRACTICE SPECIFICALLY PARAGRAPH 7.12 AS FOLLOWS:
7.12 CORRECTION OF ERRORS
THE CORRECTION OF MINOR MISFITS BY MODERATE AMOUNTS OF REAMING, GRINDING, WELDING OR CUTTING, AND THE DRAWING OF ELEMENTS INTO LINE WITH DRIFT PINS, SHALL BE CONSIDERED TO BE NORMAL ERECTION OPERATIONS. ERRORS THAT CANNOT BE CORRECTED USING FOREGOING MEANS, OR THAT REQUIRE MAJOR CHANGES IN MEMBER OR CONNECTION CONFIGURATION, SHALL BE PROMPTLY REPORTED TO THE OWNER'S DESIGNATED REPRESENTATIVES FOR DESIGN AND CONSTRUCTION AND THE FABRICATOR BY THE ERECTOR, TO ENABLE THE RESPONSIBLE ENTITY TO EITHER CORRECT THE ERROR OR APPROVE THE MOST EFFICIENT AND ECONOMICAL METHOD OF CORRECTION TO BE USED BY OTHERS. NO BACK CHARGES WILL BE ACCEPTED UNLESS APPROVED IN WRITING BY THIS OFFICE.

GLOBAL FABRICATORS
METRIC
CUSTOM EQUIPMENT MANUFACTURING
METAL FABRICATION–MACHINE SHOP
8929 ROSEDALE HWY. BAKERSFIELD CA. 93312
PHONE: (661) 589-2774 FAX: (661) 589-7504
E-MAIL engineering@globalfab.com

H.F. MAGER INC.
STRUCTURAL ENGINEERS
COMMERCIAL & INDUSTRIAL
STRUCTURAL DESIGN AND
CONSTRUCTION DOCUMENTS
1149 MARSH STREET
SAN LUIS OBISPO, CA 93401
PH# (805)541-2193 FAX# (805)541-5348
E.MAIL hmm@mcgermetric.com

SEAL: REGISTERED PROFESSIONAL ENGINEER — HAROLD F. MAGER — S 2258 — STRUCTURAL — STATE OF CALIFORNIA — Expires: Mar. 31, 2006

DWN. BY: JKS	DATE: 3-10-03	REV			DATE
CHK'D. BY: HFM	DATE:	1	CONDUIT PENETRATIONS		03-10-03
APRV'D. BY:	DATE:				
FINISH:					
SCALE: AS NOTED					

PROJECT/DWG. TITLE:

JOB NO.:	FILE NO.:	DWG. NO.:
02D02	DWG7m	7m

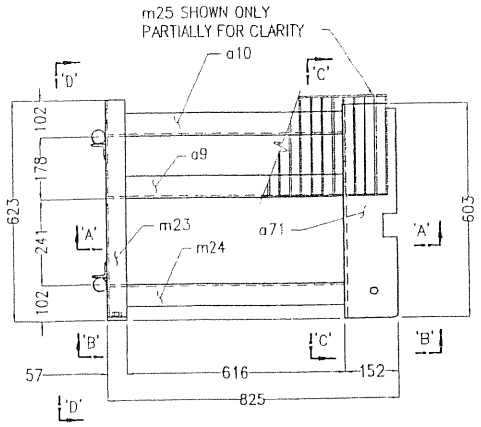

LADDER LANDING ASSEMBLY PLAN– 71A
SCALE 1:10

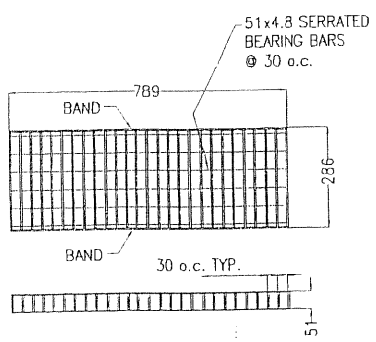

ONE LADDER LANDING GRATE– m25
SCALE 1:10

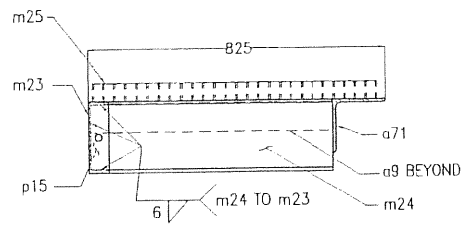

VIEW 'B–B'
SCALE 1:10

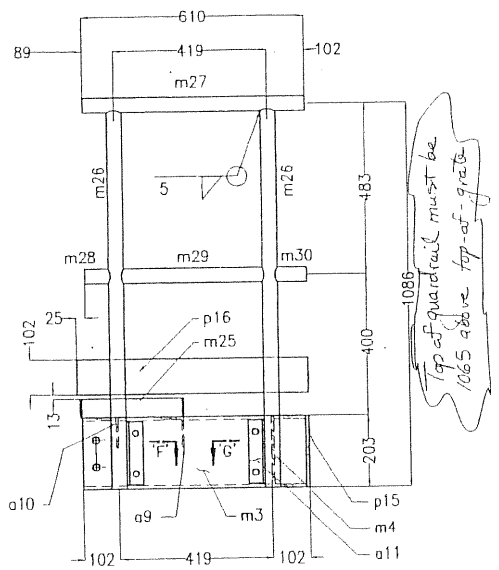

VIEW 'D–D'
SCALE 1:10

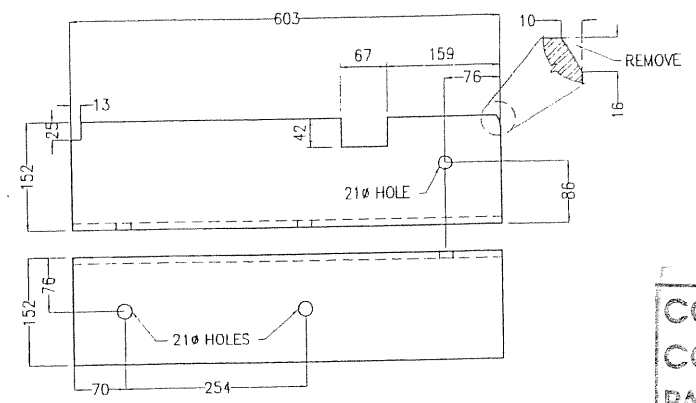

ONE LOWER SHELF ANGLE – a71
SCALE 1:5

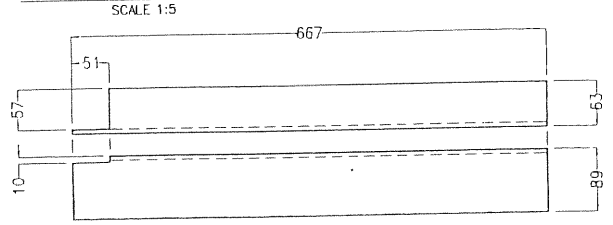

ONE ANGLE – a9
SCALE 1:5

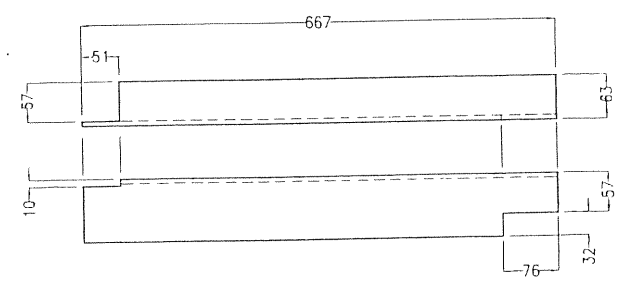

ONE ANGLE – a10
SCALE 1:5

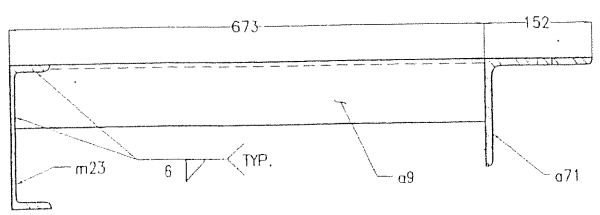

SECTION 'A–A'
SCALE 1:5

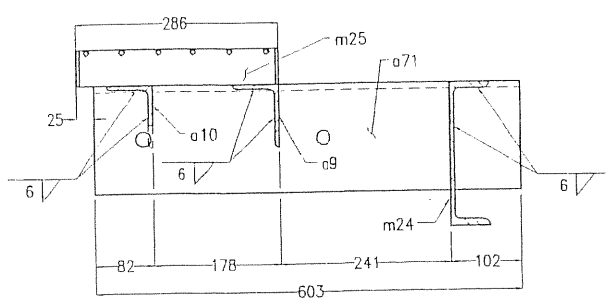

SECTION 'C–C'
SCALE 1:5

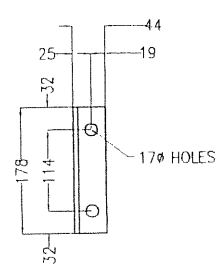

ONE ANGLE – a11
SCALE 1:5

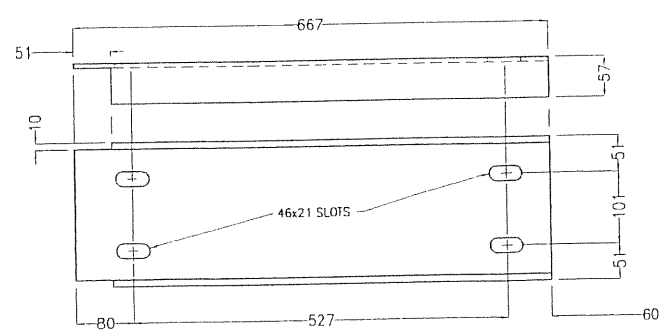

ONE CHANNEL– m24
SCALE 1:5

METRIC SIZE	IMPERIAL SIZE
C203x17	C8x11.5
GRATING 51x4.8x789	GRATING 2x3/16x31 1/16
PIPE 38 ø Sch. 40	PIPE 1 1/2ø Sch. 40
L 44x44x6.4	L 1 3/4x1 3/4x1/4
L 152x152x9.5	L 6x6x3/8
L 89x63x6.4	L 3–1/2x2–1/2x1/4
PL. 9.5x57	PL. 3/8x 2–1/4
PL. 6.4x102	PL. 1/4x4
BOLT 19 ø (A307)	BOLT 3/4" ø (A307)
BOLT 19 ø (A325)	BOLT 3/4" ø (A325)
BOLT 16 ø (A325)	BOLT 5/8" ø (A325)

CONTRACT NO. 04-012024
CCO NO. 49
PAGE 66 OF 72

☐ APPROVED
☒ APPROVED AS NOTED
☐ NOT APPROVED

Pursuant to Section 5.1.02 of the Standard Specifications State of California DEPARTMENT OF TRANSPORTATION Division of Structures Office of Structure Construction
Signed James Fen
Structure Representative
Date 4/18/03

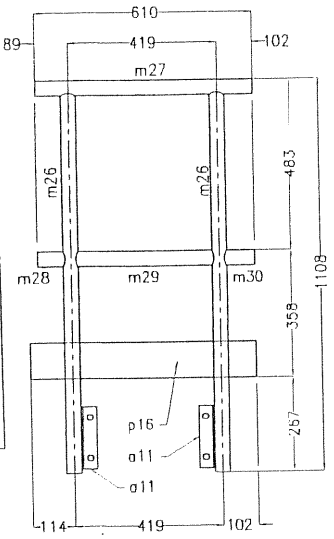

ONE HANDRAIL
SCALE 1:10

BILL OF MATERIALS					
SHIP MK.	PIECE MARK	QTY.	DESCRIPTION (Imperial Size)	CUT LENGTH (mm.)	COMMENT
~~71A~~		2	LADDER LANDING ASSEMBLY		
	~~m23~~	2	C8x11.5	613	
	~~m24~~	2	C8x11.5	667	
	~~m25~~	2	GRATING 2x3/16x31 1/16	286	IKG WF–10
	~~m26~~	4	PIPE 1 1/2ø Sch. 40	1086	
	~~m27~~	2	PIPE 1 1/2ø Sch. 40	610	
	~~m28~~	2	PIPE 1 1/2ø Sch. 40	89	
	~~m29~~	2	PIPE 1 1/2ø Sch. 40	419	
	~~m30~~	2	PIPE 1 1/2ø Sch. 40	102	
	~~a71~~	2	L 6x6x3/8	603	
	~~a9~~	2	L 3–1/2x2–1/2x1/4	667	
	~~a10~~	2	L 3–1/2x2–1/2x1/4	667	
	~~a11~~	4	L 1 3/4x1 3/4x1/4	178	
	~~p15~~	2	PL. 3/8x 2–1/4	203	
	~~p16~~	2	PL. 1/4x4	635	
	~~z1~~	2	BOLT 3/4" ø (A307)	95	w/n
	z2	4	BOLT 3/4" ø (A325)	45	w/n & w
	z5	4	BOLT 3/4" ø (A325)	57	w/n & w
	z6	8	BOLT 5/8" ø (A325)	45	w/n & w
	z7	2	BOLT 3/4" ø (A325)	51	w/n & w

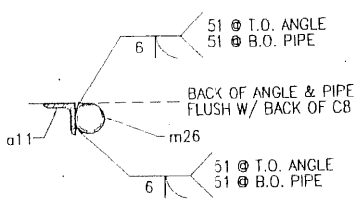

SECTION 'G'
SCALE 1:5

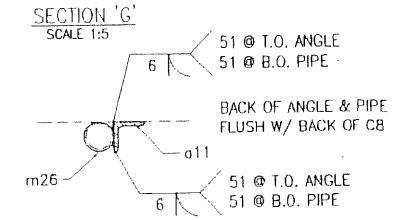

SECTION 'F'
SCALE 1:5

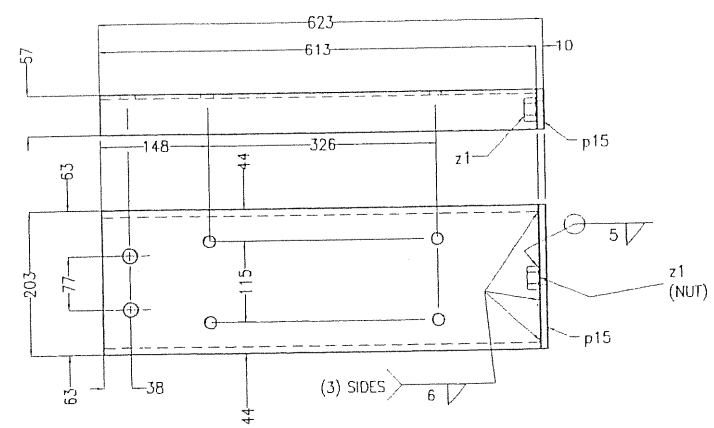

ONE CHANNEL– m23
SCALE 1:5

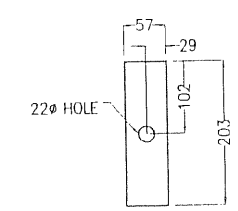

ONE END PLATE – p15
SCALE 1:5

SAN FRANCISCO OAKLAND BAY BRIDGE
SKYWAY CONTRACT No. 04–012024
SFOBB EAST SPAN SEISMIC SAFETY PROJECT
POST KM 04–SF–80–13.9–14.3/ALA–80–0.0–1.6
BRIDGE No. 34–0006

DO NOT DUPLICATE WITHOUT PERMISSION

THIS PROJECT SHALL BE ERECTED PER THE AISC CODE OF STANDARD PRACTICE SPECIFICALLY PARAGRAPH 7.12 AS FOLLOWS:
7.12 CORRECTION OF ERRORS
THE CORRECTION OF MINOR MISFITS BY MODERATE AMOUNTS OF REAMING, GRINDING, WELDING OR CUTTING, AND THE DRAWING OF ELEMENTS INTO LINE WITH DRIFT PINS, SHALL BE CONSIDERED TO BE NORMAL ERECTION OPERATIONS. ERRORS THAT CANNOT BE CORRECTED USING FOREGOING MEANS, OR THAT REQUIRE MAJOR CHANGES IN MEMBER OR CONNECTION CONFIGURATION, SHALL BE PROMPTLY REPORTED TO THE OWNER'S DESIGNATED REPRESENTATIVES FOR DESIGN AND CONSTRUCTION AND THE FABRICATOR BY THE ERECTOR, TO ENABLE THE RESPONSIBLE ENTITY TO EITHER CORRECT THE ERROR OR APPROVE THE MOST EFFICIENT AND ECONOMICAL METHOD OF CORRECTION TO BE USED BY OTHERS. NO BACK CHARGES WILL BE ACCEPTED UNLESS APPROVED IN WRITING BY THIS OFFICE.

GLOBAL FABRICATORS
METRIC
CUSTOM EQUIPMENT MANUFACTURING
METAL FABRICATION–MACHINE SHOP
8929 ROSEDALE HWY. BAKERSFIELD CA. 93312
PHONE: (661) 589–277 FAX: (661) 589–7504
E–MAIL engineering@globalfab.com

H.F. MAGER INC.
STRUCTURAL ENGINEERS
COMMERCIAL & INDUSTRIAL
STRUCTURAL DESIGN AND
CONSTRUCTION DOCUMENTS
1149 MARSH STREET
SAN LUIS OBISPO, CA 93401
PH# (805)541–2193 FAX# (805)541–5348
EMAIL hora@magerstruc.com

SEAL: H.F. Mager 2376 Mar. 11, 2003 Expires Mar. 31, 2006

DWN. BY:	DATE:	REV.		DATE
JKS	3–11–03	1	CONDUIT PENETRATIONS	03–11–03
CHK'D. BY:	DATE:			
APRV'D. BY:	DATE:			
FINISH:				
SCALE: AS NOTED				

PROJECT/DWG. TITLE:

JOB NO.:	FILE NO.:	DWG. NO.:
02D02	DWG71m	71m

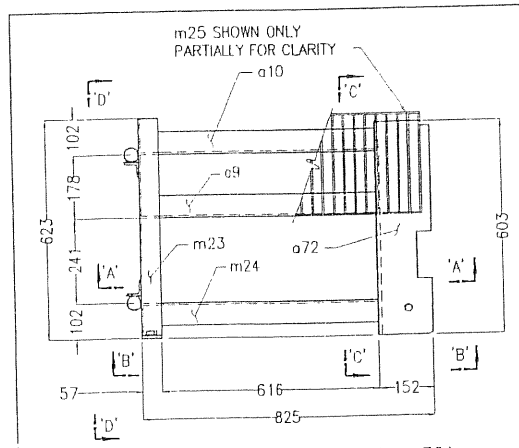

LADDER LANDING ASSEMBLY PLAN-- 72A
SCALE 1:10

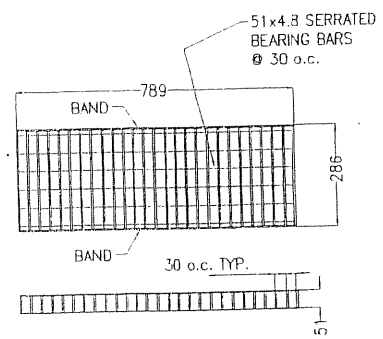

ONE LADDER LANDING GRATE - m25
SCALE 1:10

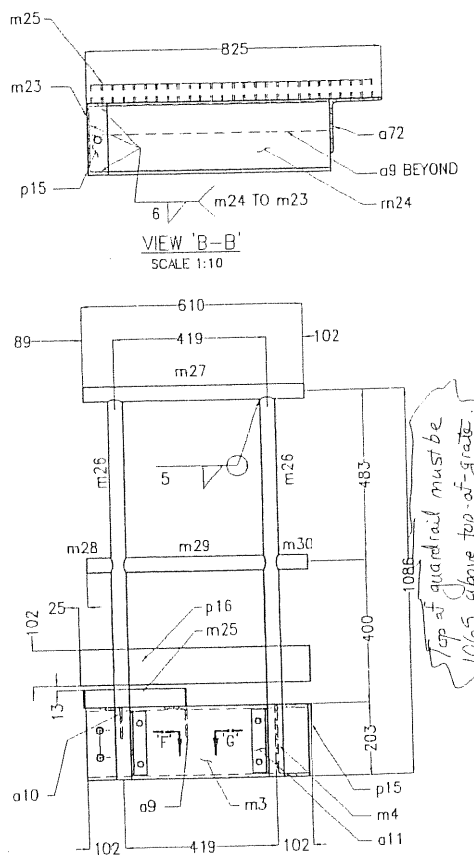

VIEW 'B-B'
SCALE 1:10

VIEW 'D-D'
SCALE 1:10

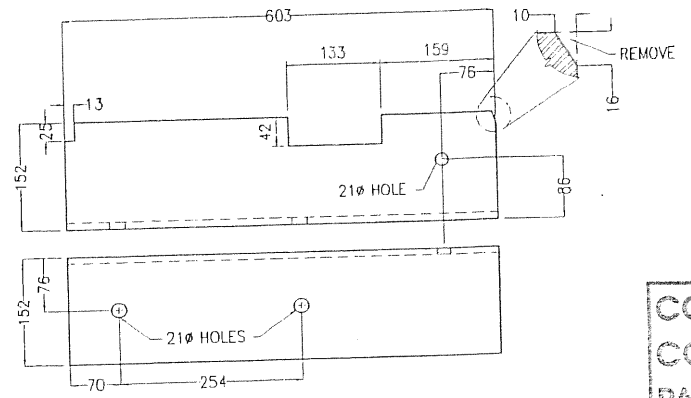

ONE LOWER SHELF ANGLE - a72
SCALE 1:5

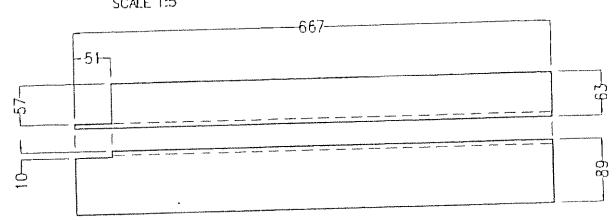

ONE ANGLE - a9
SCALE 1:5

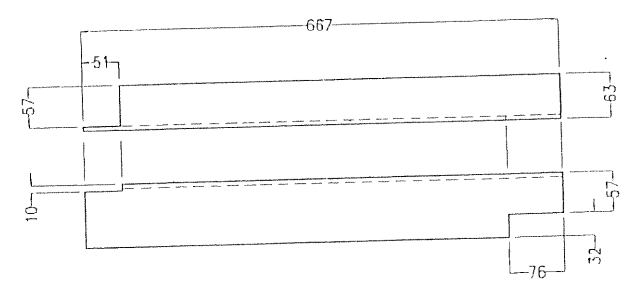

ONE ANGLE - a10
SCALE 1:5

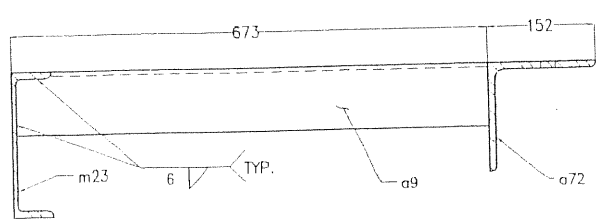

SECTION 'A-A'
SCALE 1:5

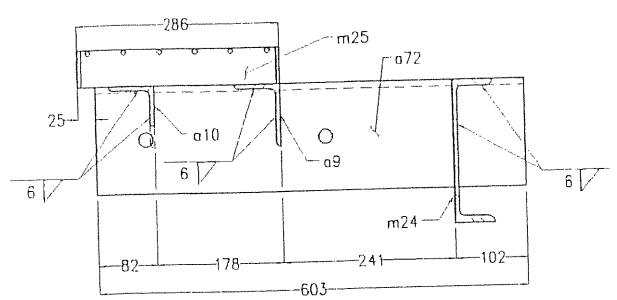

SECTION 'C-C'
SCALE 1:5

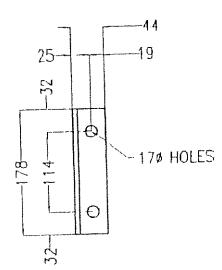

ONE ANGLE - a11
SCALE 1:5

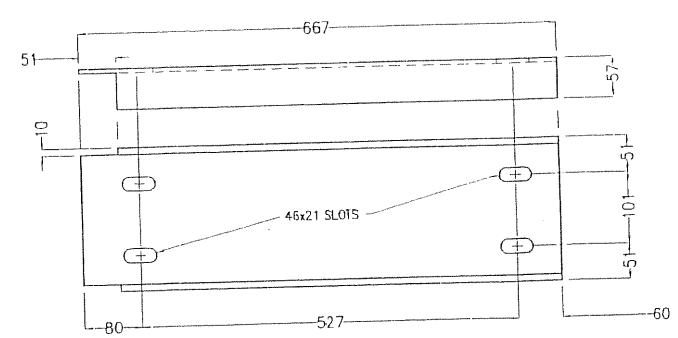

ONE CHANNEL- m24
SCALE 1:5

METRIC SIZE	IMPERIAL SIZE
C203x17	C8x11.5
GRATING 51x4.8x789	GRATING 2x3/16x31 1/16
PIPE 38 ø Sch. 40	PIPE 1 1/2ø Sch. 40
L 44x44x6.4	L 1 3/4x1 3/4x1/4
L 152x152x9.5	L 6x6x3/8
L 89x63x6.4	L 3-1/2x2-1/2x1/4
PL. 9.5x57	PL. 3/8x 2-1/4
PL. 6.4x102	PL. 1/4x4
BOLT 19 ø (A307)	BOLT 3/4" ø (A307)
BOLT 19 ø (A325)	BOLT 3/4" ø (A325)
BOLT 16 ø (A325)	BOLT 5/8" ø (A325)

CONTRACT NO. 04-012024
CCO NO. 49
PAGE 67 OF 72

☐ APPROVED
☒ APPROVED AS NOTED
☐ NOT APPROVED

Pursuant to Section 5-1.02 of the Standard Specifications State of California DEPARTMENT OF TRANSPORTATION Division of Structures Office of Structure Construction

Signed James Fan
Structure Representative
Date 4/13/03

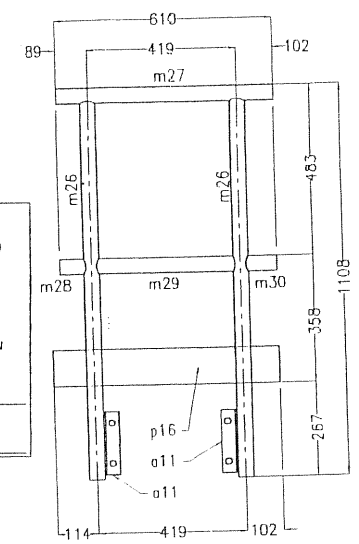

ONE HANDRAIL
SCALE 1:10

BILL OF MATERIALS					
SHIP MK.	PIECE MARK	QTY.	DESCRIPTION (Imperial Size)	CUT LENGTH (mm.)	COMMENT
~~72A~~		1	LADDER LANDING ASSEMBLY		
	~~m23~~	1	C8x11.5	613	
	~~m24~~	1	C8x11.5	667	
	~~m25~~	1	GRATING 2x3/16x31 1/16	286	IKG WF-10
	~~m26~~	2	PIPE 1 1/2ø Sch. 40	1086	
	~~m27~~	1	PIPE 1 1/2ø Sch. 40	610	
	~~m28~~	1	PIPE 1 1/2ø Sch. 40	89	
	~~m29~~	1	PIPE 1 1/2ø Sch. 40	419	
	~~m30~~	1	PIPE 1 1/2ø Sch. 40	102	
	~~a72~~	1	L 6x6x3/8	603	
	~~a9~~	1	L 3-1/2x2-1/2x1/4	667	
	~~a10~~	1	L 3-1/2x2-1/2x1/4	667	
	~~a11~~	2	L 1 3/4x1 3/4x1/4	178	
	~~p15~~	1	PL. 3/8x 2-1/4	203	
	~~p16~~	1	PL. 1/4x4	635	
	~~z1~~	1	BOLT 3/4" ø (A307)	95	w/n
	z2	2	BOLT 3/4" ø (A325)	45	w/n & w
	z5	2	BOLT 3/4" ø (A325)	57	w/n & w
	z6	4	BOLT 5/8" ø (A325)	45	w/n & w
	z7	1	BOLT 3/4" ø (A325)	51	w/n & w

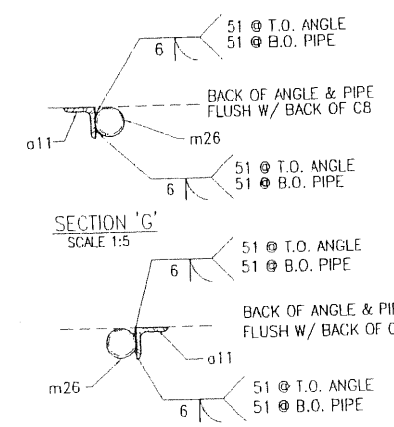

SECTION 'G'
SCALE 1:5

SECTION 'F'
SCALE 1:5

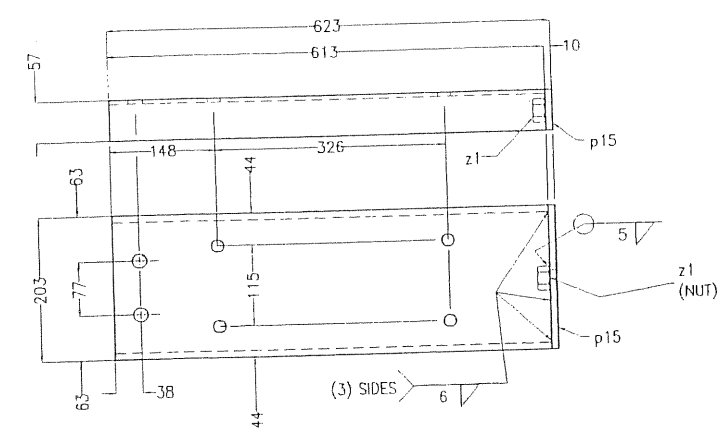

ONE CHANNEL- m23
SCALE 1:5

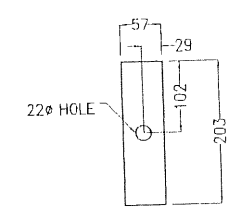

ONE END PLATE -- p15
SCALE 1:5

SAN FRANCISCO OAKLAND BAY BRIDGE
SKYWAY CONTRACT No. 04-012024
SFOBB EAST SPAN SEISMIC SAFETY PROJECT
POST KM 04-SF-80-13.9-14.3/ALA-80-0.0-1.6
BRIDGE No. 34-0006

DO NOT DUPLICATE WITHOUT PERMISSION

THIS PROJECT SHALL BE ERECTED PER THE AISC CODE OF STANDARD PRACTICE SPECIFICALLY PARAGRAPH 7.12 AS FOLLOWS:
7.12 CORRECTION OF ERRORS
THE CORRECTION OF MINOR MISFITS BY MODERATE AMOUNTS OF REAMING, GRINDING, WELDING OR CUTTING, AND THE DRAWING OF ELEMENTS INTO LINE WITH DRIFT PINS, SHALL BE CONSIDERED TO BE NORMAL ERECTION OPERATIONS. ERRORS THAT CANNOT BE CORRECTED USING FOREGOING MEANS, OR THAT REQUIRE MAJOR CHANGES IN MEMBER OR CONNECTION CONFIGURATION, SHALL BE PROMPTLY REPORTED TO THE OWNER'S DESIGNATED REPRESENTATIVES FOR DESIGN AND CONSTRUCTION AND THE FABRICATOR BY THE ERECTOR, TO ENABLE THE RESPONSIBLE ENTITY TO EITHER CORRECT THE ERROR OR APPROVE THE MOST EFFICIENT AND ECONOMICAL METHOD OF CORRECTION TO BE USED BY OTHERS. NO BACK CHARGES WILL BE ACCEPTED UNLESS AUTHORIZED IN WRITING BY THIS OFFICE.

GLOBAL FABRICATORS
METRIC

CUSTOM EQUIPMENT MANUFACTURING
METAL FABRICATION-MACHINE SHOP
8929 ROSEDALE HWY. BAKERSFIELD CA 93312
PHONE: (661) 589-2774 FAX: (661) 589-7504
E-MAIL engineering@globalfab.com

H.F. MAGER INC.
STRUCTURAL ENGINEERS
COMMERCIAL & INDUSTRIAL
STRUCTURAL DESIGN AND
CONSTRUCTION DOCUMENTS
1149 MARSH STREET
SAN LUIS OBISPO, CA 93401
PH# (805)541-2193 FAX# (805)541-5346
E-MAIL hfm@magerstruc.com

SEAL: REGISTERED PROFESSIONAL ENGINEER H. F. Mager CA 8316 Mar. 11 2002 STRUCTURAL
Expires 3 Mar 31, 2006

DWN. BY: JKS	DATE: 3-11-03
CHK'D. BY: HFM	DATE:
APRV'D. BY:	DATE:
FINISH:	
SCALE: AS NOTED	

REV.		DATE
1	CONDUIT PENETRATIONS	03-11-03

PROJECT/DWG. TITLE:

JOB NO.:	FILE NO.:	DWG. NO.:
02D02	DWG72m1	72m

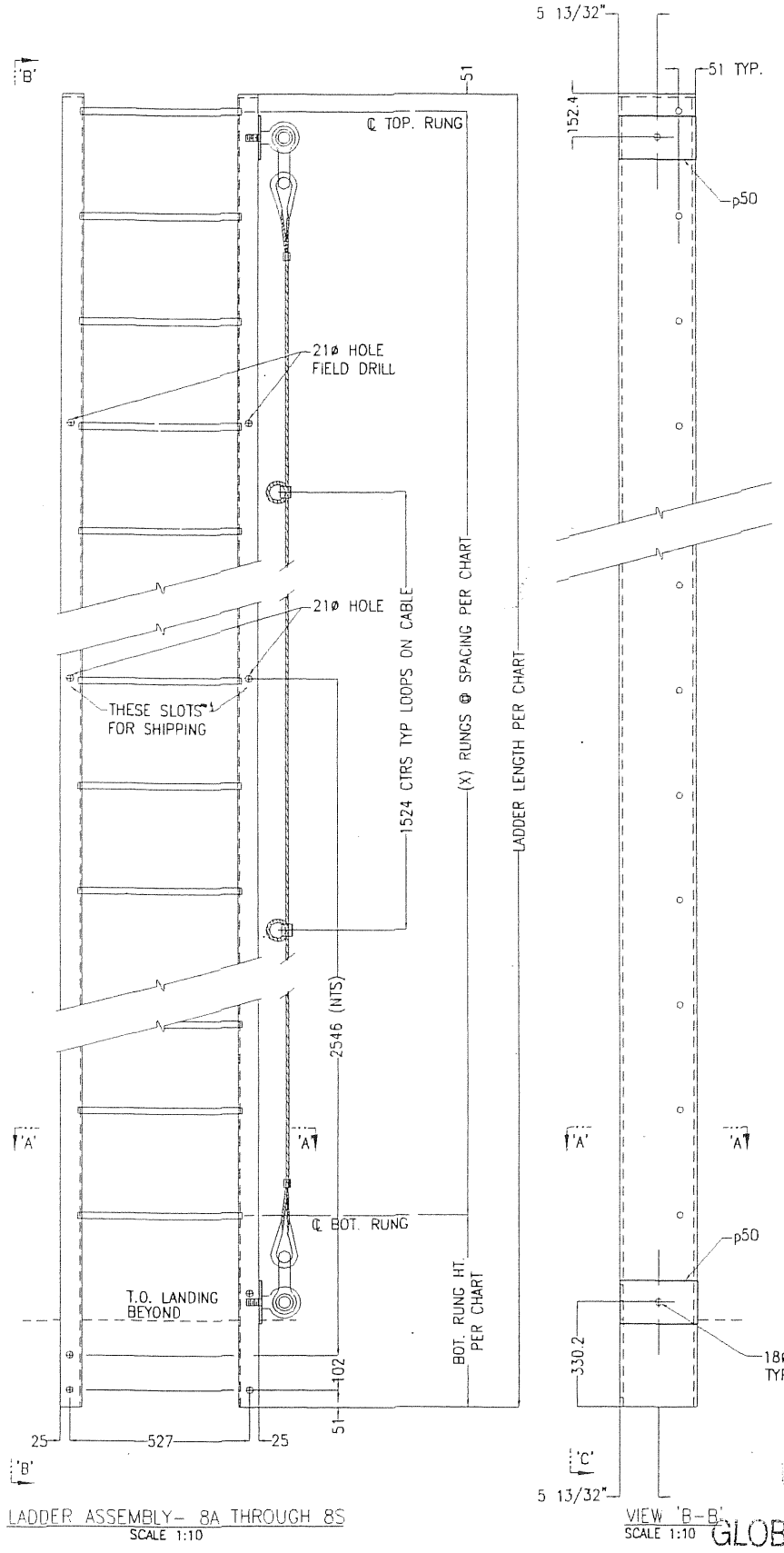

LADDER ASSEMBLY- 8A THROUGH 8S
SCALE 1:10

VIEW 'B-B'
SCALE 1:10

VIEW 'C'
SCALE 1:5

DIMENSION CHART

PIER LOCATIONS	SHIPPING MARK	LADDER LENGTH	BOTTOM RUNG HEIGHT	RUNG SPACING	TOTAL NUMBER OF RUNGS
E3E	8A	5684	550	299	18
E3W	8B	5016	555	294	16
E4E	8C	4959	543	291	16
E4W	8D	5499	535	289	18
E5E	8E	5634	551	296	18
E5W	8F	5896	553	294	19
E6E	8G	4717	550	294	15
E6W	8H	4805	554	300	15
E7E	8T	5624	541	296	18
E7W	8T	5624	541	296	18
E8E	8J	5964	549	298	19
E8W	8J	5964	549	298	19
E9E	8K	5613	547	295	18
E9W	8K	5613	547	295	18
E10E	8U	5025	549	295	16
E10W	8U	5025	549	295	16
E11E	8M	5551	553	291	18
E11W	8M	5551	553	291	18
E12E	8N	5540	542	291	18
E12W	8N	5540	542	291	18
E13E	8V	5502	538	289	18
E13W	8V	5502	538	289	18
E14E	8P	5270	547	292	17
E14W	8P	5270	547	292	17
E15E	8Q	5414	547	301	17
E15W	8Q	5414	547	301	17
E16E	8W	4658	547	290	15
E16W	8S	4638	541	289	15

APPROVED
Pursuant to Section 5-1.02
of the Standard Specifications
State of California
DEPARTMENT OF TRANSPORTATION
Division of Structures
Office of Structure Construction
Signed James M. Ferri
Structure Representative
Reg. Civil Engr. No.
Date 5/19/04

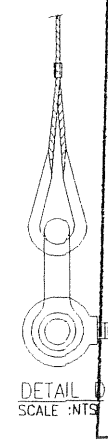

DETAIL D
SCALE :NTS

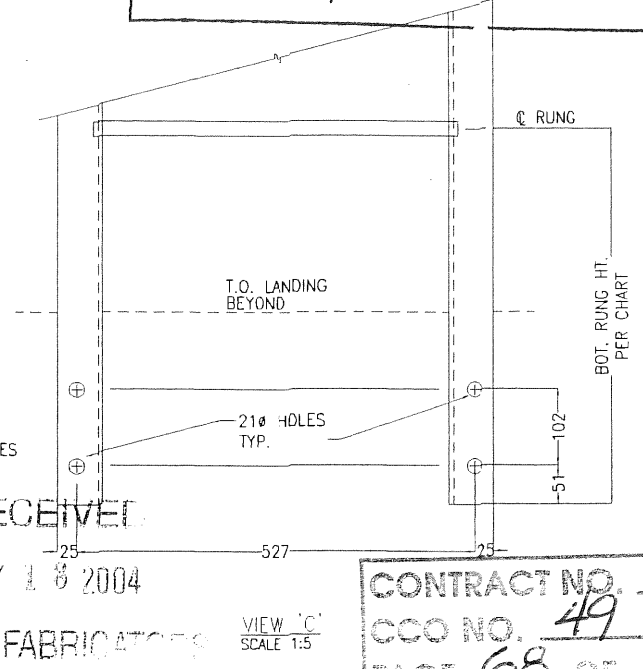

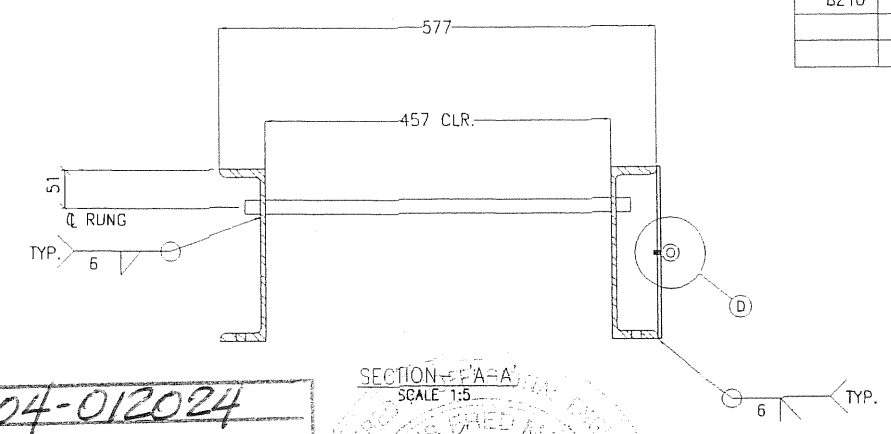

SECTION 'A-A'
SCALE 1:5

BILL OF MATERIALS

SHIP MK.	PIECE MARK	QTY.	DESCRIPTION (Imperial Size)	CUT LENGTH (mm.)	COMMENT
8A		1	LADDER ASSEMBLY		
	m32 R/L	1/1	C9x13.4	5684	
	m31	18	ROD 3/4" ø (A36)	495	
	p50	2	FB 6 x 1/2	228	
8B		1	LADDER ASSEMBLY		
	m33 R/L	1/1	C9x13.4	5016	
	m31	16	ROD 3/4" ø (A36)	495	
	p50	2	FB 6 x 1/2	228	
8C		1	LADDER ASSEMBLY		
	m34 R/L	1/1	C9x13.4	4959	
	m31	16	ROD 3/4" ø (A36)	495	
	p50	2	FB 6 x 1/2	228	
8D		1	LADDER ASSEMBLY		
	m35 R/L	1/1	C9x13.4	5499	
	m31	18	ROD 3/4" ø (A36)	495	
	p50	2	FB 6 x 1/2	228	
8E		1	LADDER ASSEMBLY		
	m36 R/L	1/1	C9x13.4	5634	
	m31	18	ROD 3/4" ø (A36)	495	
	p50	2	FB 6 x 1/2	228	
8F		1	LADDER ASSEMBLY		
	m37 R/L	1/1	C9x13.4	5896	
	m31	19	ROD 3/4" ø (A36)	495	
	p50	2	FB 6 x 1/2	228	
8G		1	LADDER ASSEMBLY		
	m38 R/L	1/1	C9x13.4	4717	
	m31	15	ROD 3/4" ø (A36)	495	
	p50	2	FB 6 x 1/2	228	
8H		1	LADDER ASSEMBLY		
	m39 R/L	1/1	C9x13.4	4805	
	m31	15	ROD 3/4" ø (A36)	495	
	p50	2	FB 6 x 1/2	228	
8T		2	LADDER ASSEMBLY		
	m40 R/L	2/2	C9x13.4	5624	
	m31	36	ROD 3/4" ø (A36)	495	
	p50	2	FB 6 x 1/2	228	
8J		2	LADDER ASSEMBLY		
	m41 R/L	2/2	C9x13.4	5964	
	m31	36	ROD 3/4" ø (A36)	495	
	p50	2	FB 6 x 1/2	228	

BILL OF MATERIALS

SHIP MK.	PIECE MARK	QTY.	DESCRIPTION (Imperial Size)	CUT LENGTH (mm.)	COMMENT
8K		2	LADDER ASSEMBLY		
	m42 R/L	2/2	C9x13.4	5613	
	m31	36	ROD 3/4" ø (A36)	495	
	p50	2	FB 6 x 1/2	228	
8U		2	LADDER ASSEMBLY		
	m43 R/L	2/2	C9x13.4	5025	
	m31	32	ROD 3/4" ø (A36)	495	
	p50	2	FB 6 x 1/2	228	
8M		2	LADDER ASSEMBLY		
	m44 R/L	2/2	C9x13.4	5551	
	m31	36	ROD 3/4" ø (A36)	495	
	p50	2	FB 6 x 1/2	228	
8N		2	LADDER ASSEMBLY		
	m45 R/L	2/2	C9x13.4	5540	
	m31	36	ROD 3/4" ø (A36)	495	
	p50	2	FB 6 x 1/2	228	
8V		2	LADDER ASSEMBLY		
	m46 R/L	2/2	C9x13.4	5502	
	m31	36	ROD 3/4" ø (A36)	495	
	p50	2	FB 6 x 1/2	228	
8P		2	LADDER ASSEMBLY		
	m47 R/L	2/2	C9x13.4	5270	
	m31	34	ROD 3/4" ø (A36)	495	
	p50	2	FB 6 x 1/2	228	
8Q		2	LADDER ASSEMBLY		
	m48 R/L	2/2	C9x13.4	5414	
	m31	34	ROD 3/4" ø (A36)	495	
	p50	2	FB 6 x 1/2	228	
8W		1	LADDER ASSEMBLY		
	m49 R/L	1/1	C9x13.4	4658	
	m31	15	ROD 3/4" ø (A36)	495	
	p50	2	FB 6 x 1/2	228	
8S		1	LADDER ASSEMBLY		
	m50 R/L	1/1	C9x13.4	4638	
	m31	15	ROD 3/4" ø (A36)	495	
	p50	2	FB 6 x 1/2	228	
8T		28	SAFETY LINE ASSEMBLY		
		28	5/16"ø WIRE ROPE	6100	
		28	ROPE THIMBLES		
			FIELD BOLTS		
8Z8		168	BOLT 3/4"ø (A325)	57	w/nut, washer, & wedge washer
8Z9		56	5/8" EYEBOLTS		
8Z10		56	SHACKLES		

METRIC SIZE	IMPERIAL SIZE
C229x19.9	C9x13.4
ROD 19ø (A36)	ROD 3/4"ø (A36)
BOLT 19ø (A325)	BOLT 3/4"ø (A325)

RECEIVED
MAY 1 6 2004
GLOBAL FABRICATORS

CONTRACT NO. 04-012024
CCO NO. 49
PAGE 68 OF 72

H.F. Mager
May 17 2004
Expires Mar. 31, 2006

DO NOT DUPLICATE WITHOUT PERMISSION

THIS PROJECT SHALL BE ERECTED PER THE AISC CODE OF STANDARD PRACTICE SPECIFICALLY PARAGRAPH 7.12 AS FOLLOWS:
7.12 CORRECTION OF ERRORS
THE CORRECTION OF MINOR MISFITS BY MODERATE AMOUNTS OF REAMING, GRINDING, WELDING OR CUTTING, AND THE DRAWING OF ELEMENTS INTO LINE WITH DRIFT PINS, SHALL BE CONSIDERED TO BE NORMAL ERECTION OPERATIONS. ERRORS THAT CANNOT BE CORRECTED USING FOREGOING MEANS, OR THAT REQUIRE MAJOR CHANGES IN MEMBER OR CONNECTION CONFIGURATION, SHALL BE PROMPTLY REPORTED TO THE OWNER'S DESIGNATED REPRESENTATIVES FOR DESIGN AND CONSTRUCTION AND THE FABRICATOR BY THE ERECTOR, TO ENABLE THE RESPONSIBLE ENTITY TO EITHER CORRECT THE ERROR OR APPROVE THE MOST EFFICIENT AND ECONOMICAL METHOD OF CORRECTION TO BE USED BY OTHERS. NO BACK CHARGES WILL BE ACCEPTED UNLESS APPROVED IN WRITING BY THIS OFFICE.

GLOBAL FABRICATORS
METRIC
CUSTOM EQUIPMENT MANUFACTURING
METAL FABRICATION-MACHINE SHOP
8929 ROSEDALE HWY. BAKERSFIELD CA. 93312
PHONE: (661) 589-2774 FAX: (661) 589-7504
E-MAIL engineering@globalfab.com

H.F. MAGER INC.
STRUCTURAL ENGINEERS
COMMERCIAL & INDUSTRIAL
STRUCTURAL DESIGN AND
CONSTRUCTION DOCUMENTS
1149 MARSH STREET
SAN LUIS OBISPO, CA 93401
PH# (805)541-2193 FAX# (805)541-5346
EMAIL hans@magerstruc.com
SEAL

DWN. BY: JKS	DATE: 3-04-03		
CHK'D. BY:	DATE:		
APRV'D. BY:	DATE:		
FINISH:			
SCALE: AS NOTED			

REV.		DATE
1	RAISED ELEV. OF LOWER p50	05/09/03
0	ISSUED FOR FABRICATION	05/09/03

SAN FRANCISCO OAKLAND BAY BRIDGE
SKYWAY CONTRACT No. 04-012024
SFOBB EAST SPAN SEISMIC SAFETY PROJECT
POST KM 04-SF-80-13.9-14.3/ALA-80-0.0-1.6
BRIDGE No. 34-0006

PROJECT/DWG TITLE:
SKYWAY STAIR TOWER

LADDER DETAILS

JOB NO.:	FILE NO.:	DWG. NO.:
S02142	DWG8m	8m

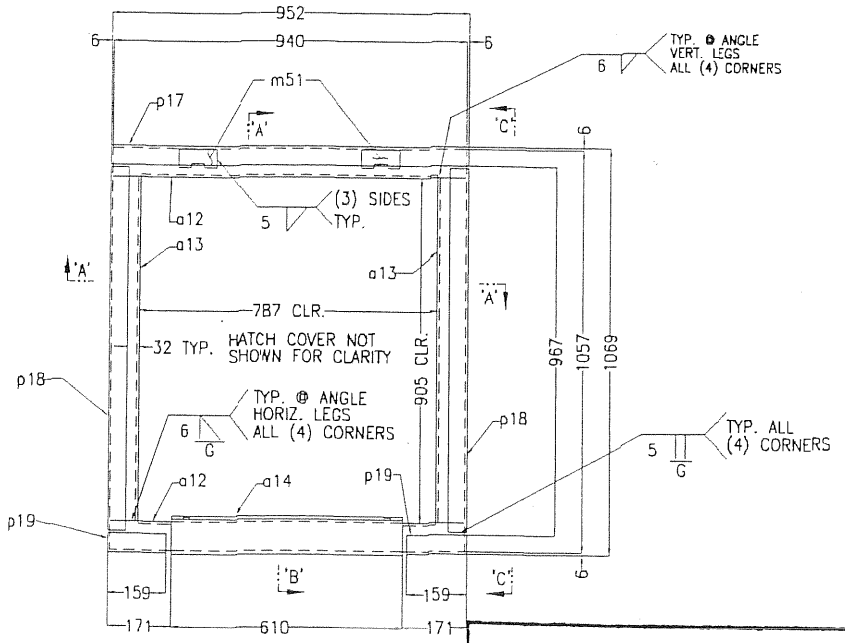

ONE HATCH FRAME ASSEMBLY- 9A
SCALE 1:10

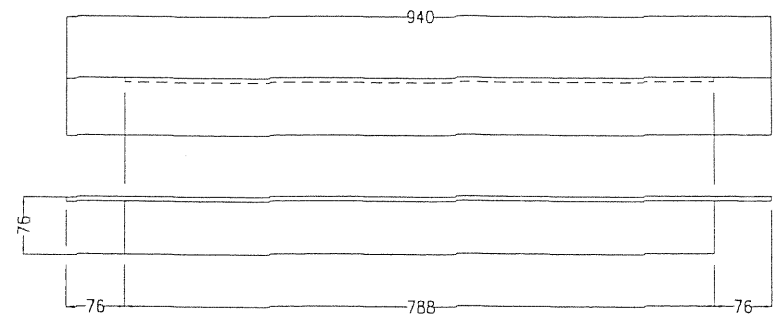

ONE ANGLE - a12
SCALE 1:5

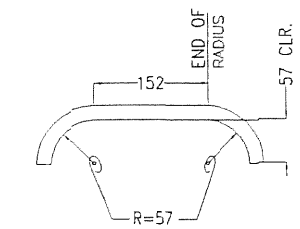

ONE HATCH HANDLE- m53
SCALE 1:5

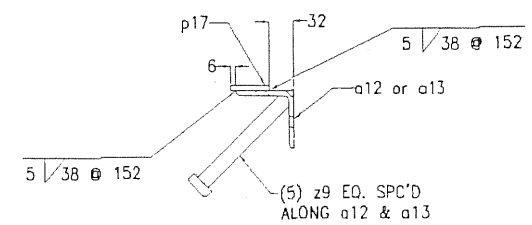

SECTION 'A'
SCALE 1:5

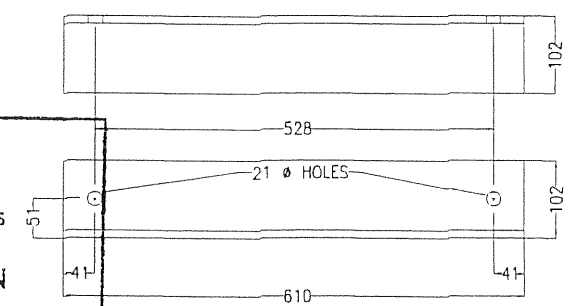

ONE ANGLE - a14
SCALE 1:5

BILL OF MATERIALS					
SHIP MK.	PIECE MARK	QTY.	DESCRIPTION (Imperial Size)	CUT LENGTH (mm.)	COMMENT
9A		28	HATCH FRAME ASSEMBLY		
	a12	56	L 3x3x1/4	940	
	a13	56	L 3x3x1/4	905	
	a14	28	L 4x4x3/8	610	
	p17	28	PL. 1/4x2	952	
	p18	56	PL. 1/4x2	958	
	p19	56	PL. 1/4x2	159	
	m51	56	HINGE BACK HALF		
	z9	560	NELSON STUDS 3/4"ø	152	
	a14b	28	C3 x 4.1	51	
9B		28	HATCH COVER ASSEMBLY		
	p20	28	CHECKERED PL. 1/4"x2'-9"	956	
	m52	56	HINGE FRONT HALF		
	m53	56	ROD 1/2"ø	362	
	a14a	28	L2 x 2 x 1/4	51	
9C		56	GAS SPRINGS #9416K19		

METRIC SIZE	IMPERIAL SIZE
L 76x76x6.4	L 3x3x1/4
L 102x102x9.5	L 4x4x3/8
PL. 6.4x51	PL. 1/4x2
CHECKERED PL. 6x838	CHECKERED PL. 1/4"x2'-9"
NELSON STUDS 19 ø	NELSON STUDS 3/4"ø
ROD 19 ø (A36)	ROD 3/4"ø (A36)

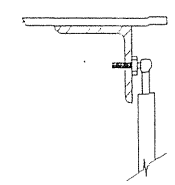

DETAIL 1
SCALE NTS

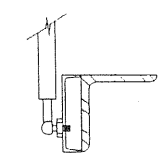

DETAIL 2
SCALE NTS

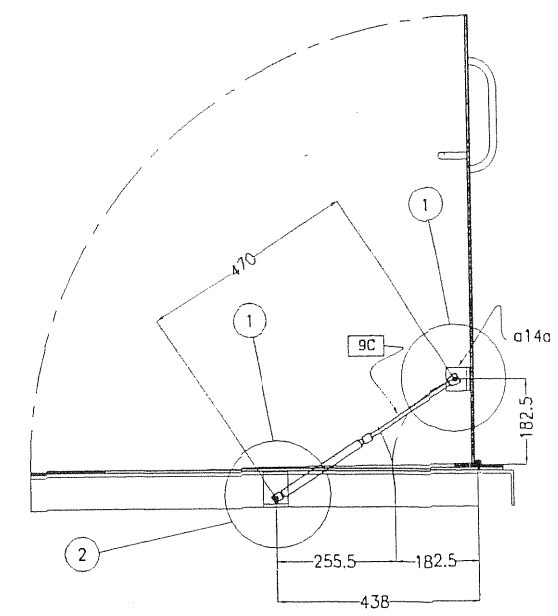

SECTION 'C'
SCALE NTS

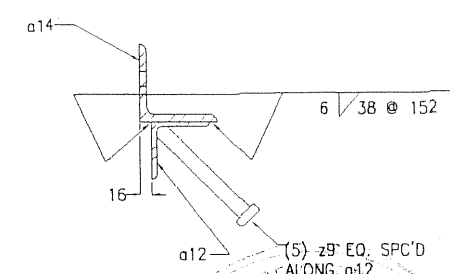

SECTION 'B'
SCALE 1:5

CONTRACT NO. 04-012024
CCO NO. 49
PAGE 69 OF 72

APPROVED
Pursuant to Section 5-1.02
of the Standard Specifications
State of California
DEPARTMENT OF TRANSPORTATION
Division of Structures
Office of Structure Construction
Signed James M. Fer
Structure Representative
Reg. Civil Engr. No.
Date 5/19/04

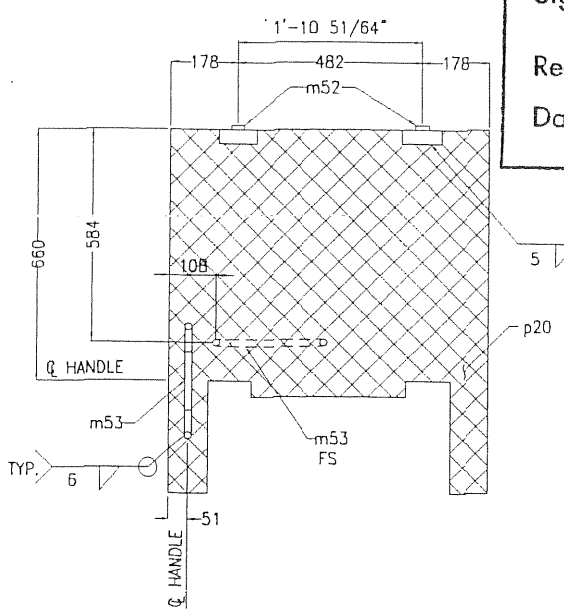

ONE HATCH COVER ASSEMBLY- 9B
SCALE 1:10

RECEIVED
MAY 18 2004
GLOBAL FABRICATORS

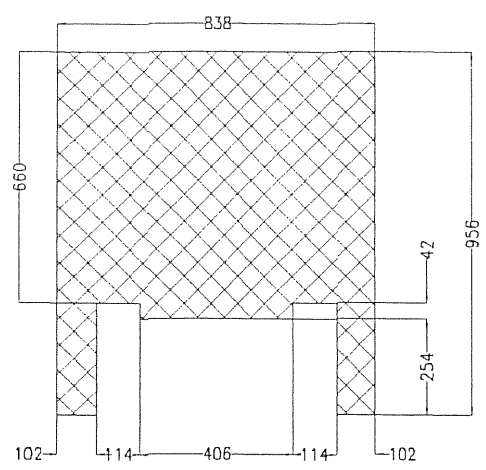

ONE HATCH COVER PLATE- p20
SCALE 1:10

H. F. Mager
May 17, 2004
Expires Mar. 31, 2006

SAN FRANCISCO OAKLAND BAY BRIDGE
SKYWAY CONTRACT No. 04-012024
SFOBB EAST SPAN SEISMIC SAFETY PROJECT
POST KM 04-SF-80-13.9-14.3/ALA-80-0.0-1.6
BRIDGE No. 34-0006

DO NOT DUPLICATE WITHOUT PERMISSION

THIS PROJECT SHALL BE ERECTED PER THE AISC CODE OF STANDARD PRACTICE SPECIFICALLY PARAGRAPH 7.12 AS FOLLOWS:
7.12 CORRECTION OF ERRORS
THE CORRECTION OF MINOR MISFITS BY MODERATE AMOUNTS OF REAMING, GRINDING, WELDING OR CUTTING, AND THE DRAWING OF ELEMENTS INTO LINE WITH DRIFT PINS, SHALL BE CONSIDERED TO BE NORMAL ERECTION OPERATIONS. ERRORS THAT CANNOT BE CORRECTED USING FOREGOING MEANS, OR THAT REQUIRE MAJOR CHANGES IN MEMBER OR CONNECTION CONFIGURATION, SHALL BE PROMPTLY REPORTED TO THE OWNER'S DESIGNATED REPRESENTATIVES FOR DESIGN AND CONSTRUCTION AND THE FABRICATOR BY THE ERECTOR, TO ENABLE THE RESPONSIBLE ENTITY TO EITHER CORRECT THE ERROR OR APPROVE THE MOST EFFICIENT AND ECONOMICAL METHOD OF CORRECTION TO BE USED BY OTHERS. NO BACK CHARGES WILL BE ACCEPTED UNLESS APPROVED IN WRITING BY THIS OFFICE.

GLOBAL FABRICATORS
METRIC
CUSTOM EQUIPMENT MANUFACTURING
METAL FABRICATION-MACHINE SHOP
8929 ROSEDALE HWY. BAKERSFIELD CA. 93312
PHONE: (661) 589-2774 FAX: (661) 589-7504
E-MAIL engineering@globalfab.com

H.F. MAGER INC.
STRUCTURAL ENGINEERS
COMMERCIAL & INDUSTRIAL
STRUCTURAL DESIGN AND
CONSTRUCTION DOCUMENTS
1149 MARSH STREET
SAN LUIS OBISPO, CA 93401
PH# (805)541-2193 FAX# (805)541-5346
EMAIL hans@magerstruc.com

SEAL

DWN. BY:	DATE:	REV.		DATE
JKS	3-06-03			
CHK'D. BY:	DATE:			
APRV'D. BY:	DATE:			
FINISH:				
SCALE: AS NOTED		0	ISSUED FOR FABRICATION	05/09/03

PROJECT/DWG. TITLE:
SKYWAY STAIR TOWER
HATCH DETAILS

JOB NO.:	FILE NO.:	DWG. NO.:
S02142	DWG9m	9m

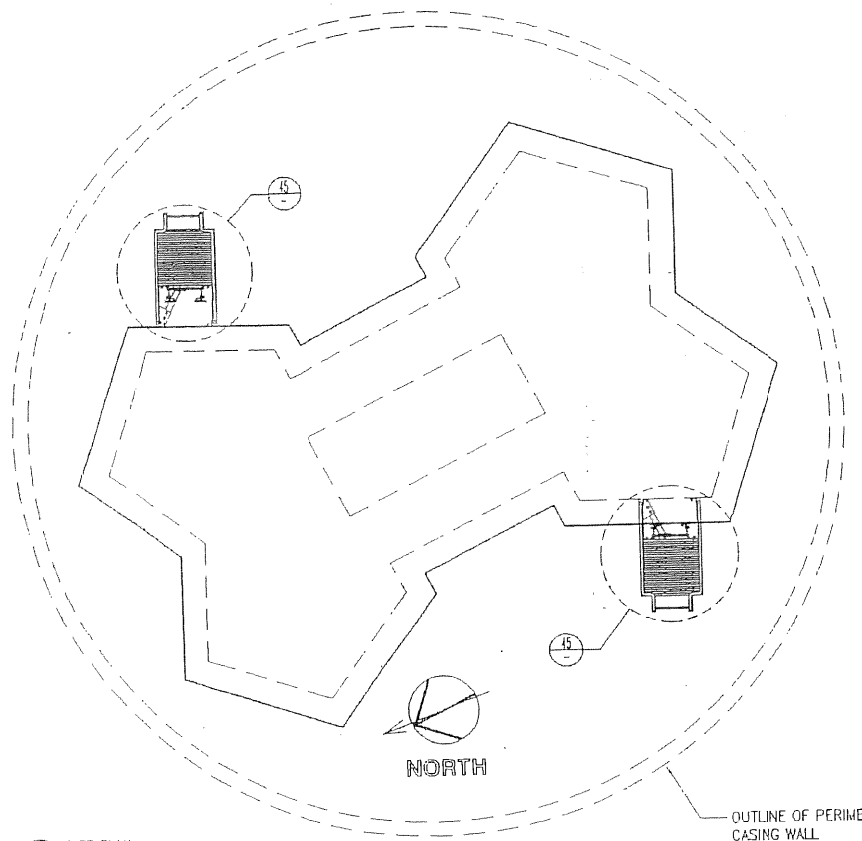

25 PIER PLAN
SCALE: 1/4" = 1'-0"

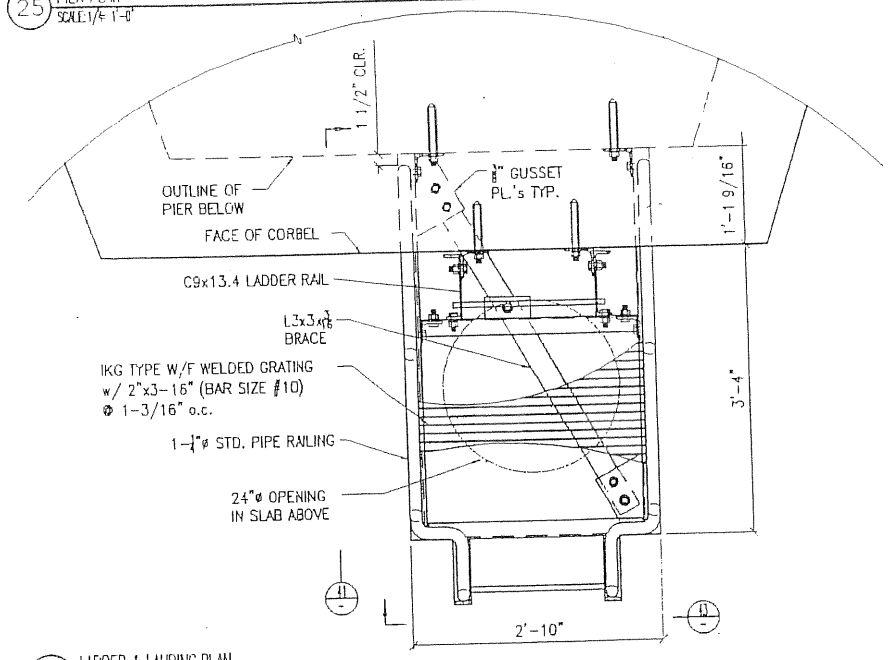

45 LADDER & LANDING PLAN
SCALE: 1" = 1'-0"

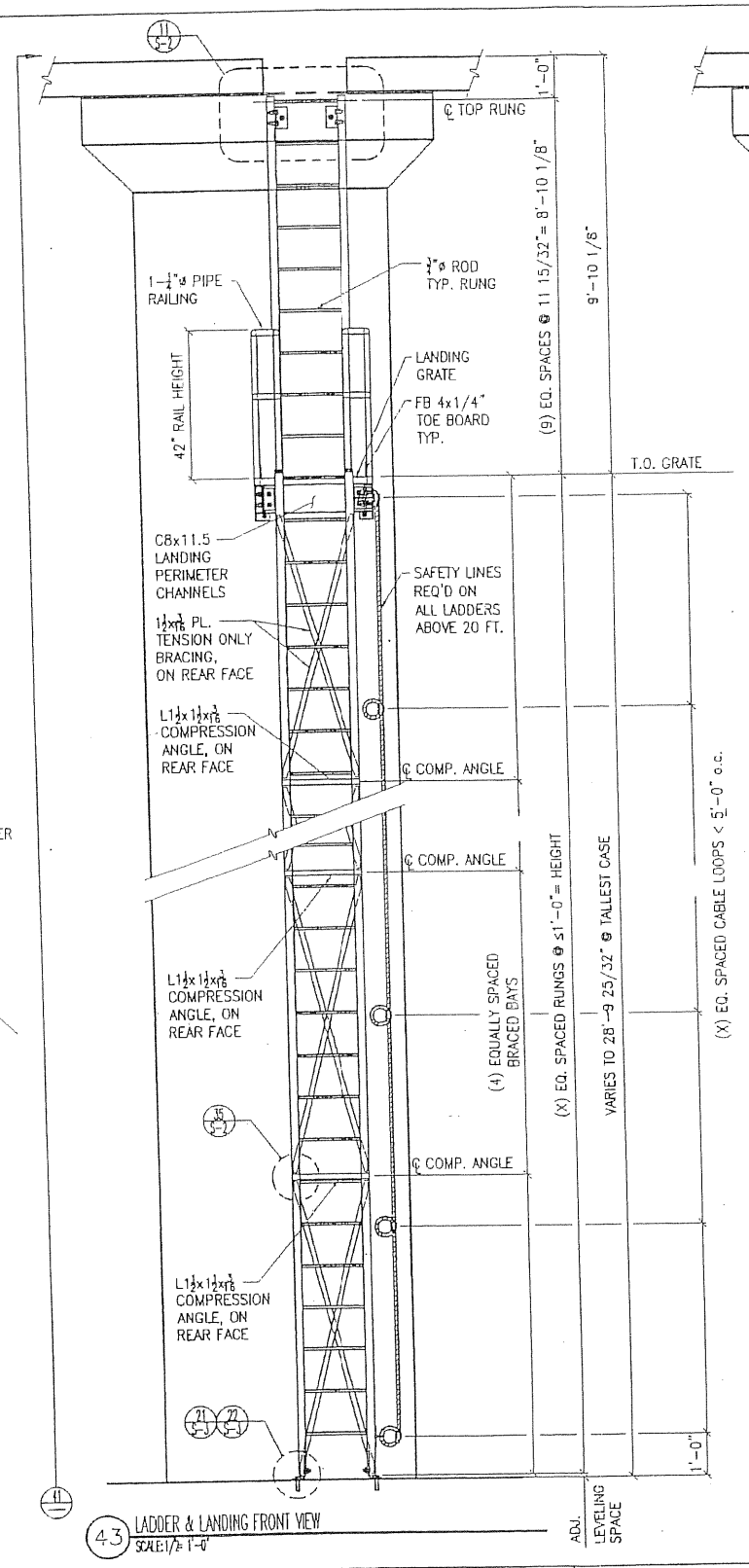

43 LADDER & LANDING FRONT VIEW
SCALE: 1/4" = 1'-0"

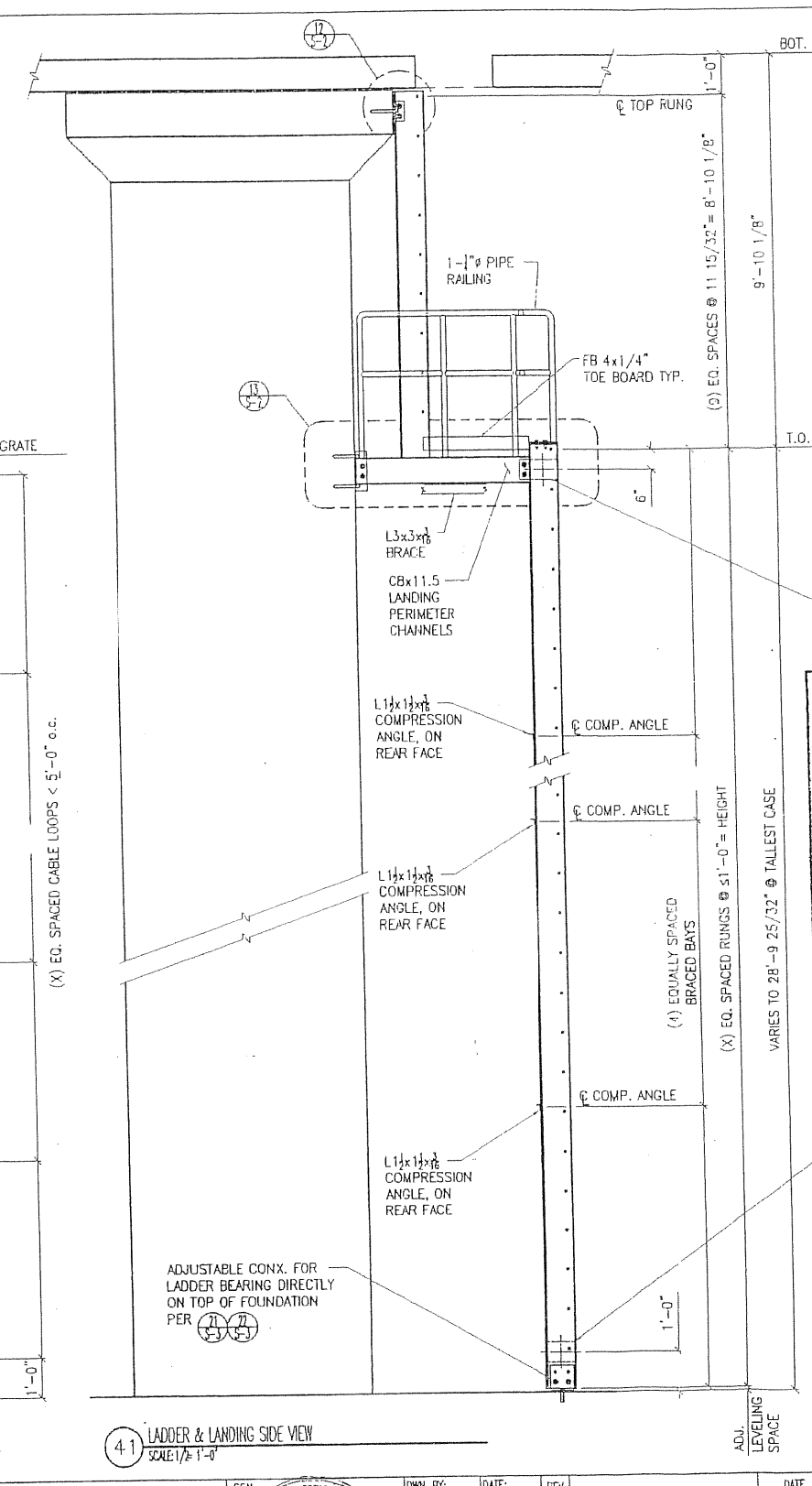

41 LADDER & LANDING SIDE VIEW
SCALE: 1/4" = 1'-0"

CONTRACT NO. 04-012024
CCO NO. 49
PAGE 70 OF 72

APPROVED
Pursuant to Section 5-1.02
of the Standard Specifications
State of California
DEPARTMENT OF TRANSPORTATION
Division of Structures
Office of Structure Construction

Signed James M. Fer
Structure Representative
Reg. Civil Engr. No. 48257
Date 1/5/04

SAN FRANCISCO OAKLAND BAY BRIDGE
SKYWAY CONTRACT No. 04-012024
SFOBB EAST SPAN SEISMIC SAFETY PROJECT
POST KM 04-SF-80-13.5-14.3/ALA-80-0.0-1.6
BRIDGE No. 34-0006

PROJECT/DWG. TITLE:
KFM SFOBB SKYWAY PROJ.

DO NOT DUPLICATE WITHOUT PERMISSION

THIS PROJECT SHALL BE ERECTED PER THE AISC CODE OF STANDARD PRACTICE SPECIFICALLY PARAGRAPH 7.12 AS FOLLOWS:
7.12 CORRECTION OF ERRORS
THE CORRECTION OF MINOR MISFITS BY MODERATE AMOUNTS OF REAMING, GRINDING, WELDING OR CUTTING, AND THE DRAWING OF ELEMENTS INTO LINE WITH DRIFT PINS, SHALL BE CONSIDERED TO BE NORMAL ERECTION OPERATIONS. ERRORS THAT CANNOT BE CORRECTED USING FOREGOING MEANS, OR THAT REQUIRE MAJOR CHANGES IN MEMBER OR CONNECTION CONFIGURATION, SHALL BE PROMPTLY REPORTED TO THE OWNER'S DESIGNATED REPRESENTATIVES FOR DESIGN AND CONSTRUCTION AND THE FABRICATOR BY THE ERECTOR, TO ENABLE THE RESPONSIBLE ENTITY TO EITHER CORRECT THE ERROR OR APPROVE THE MOST EFFICIENT AND ECONOMICAL METHOD OF CORRECTION TO BE USED BY OTHERS. NO BACK CHARGES WILL BE ACCEPTED UNLESS APPROVED IN WRITING BY THIS OFFICE.

GLOBAL FABRICATORS
CUSTOM EQUIPMENT MANUFACTURING
METAL FABRICATION-MACHINE SHOP
8929 ROSEDALE HWY. BAKERSFIELD CA. 93312
PHONE: (661) 589-2774 FAX: (661) 589-7504
E-MAIL engineering@globalfab.com

H.F. MAGER INC.
STRUCTURAL ENGINEERS
COMMERCIAL & INDUSTRIAL
STRUCTURAL DESIGN AND
CONSTRUCTION DOCUMENTS
1140 MARSH STREET
SAN LUIS OBISPO, CA 93401
PH# (805)541-2193 FAX# (805)541-5348
EMAIL hfmse@magerstruc.com

SEAL: REGISTERED PROFESSIONAL ENGINEER HEANS FRED MAGER No. S 2376 STRUCTURAL ENGINEER STATE OF CALIFORNIA
Expires March 31, 2006

DWN. BY: JKS	DATE: 7-16-03	REV.	DATE
CHK'D. BY:	DATE:		
APR'D. BY:	DATE:		
FINISH:			
SCALE: AS NOTED			

PIERS E7E & E7W
THROUGH E16E & E16W
ACCESS CASING
LADDER SYSTEM

JOB NO.:	FILE NO.:	DWG. NO.:
02D02B	DWG3	S-1

NOTES:

1. ALL BOLTS SHALL BE 3/4"ø ASTM-A325, UNLESS OTHERWISE NOTED
2. ALL THREADED RODS SHALL BE 3/4"ø S.S. EMBEDDED 6-5/8" AND SECURED WITH HILTI HY150 ADHESIVE STYSTEM

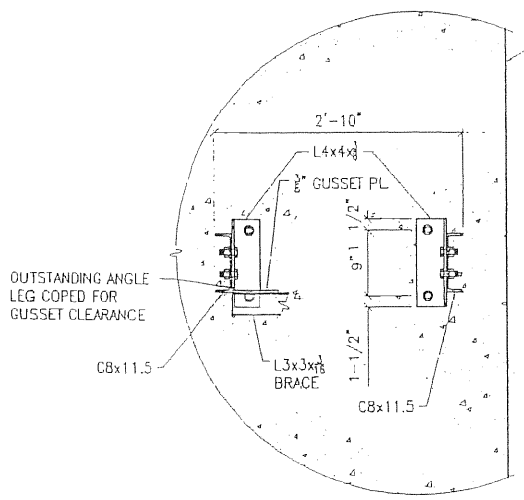

15 PIER ANGLE TO LANDING PERIMETER CHANNEL CONX.
SCALE: 1"=1'-0"

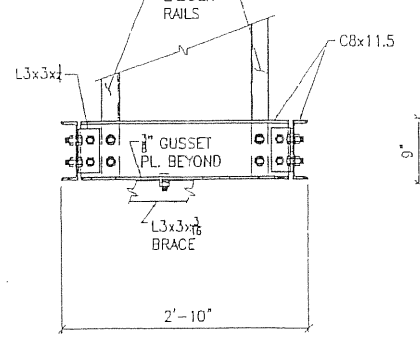

14 LANDING TRANSVERSE SECTION ADJACENT TO LADDER
SCALE: 1"=1'-0"

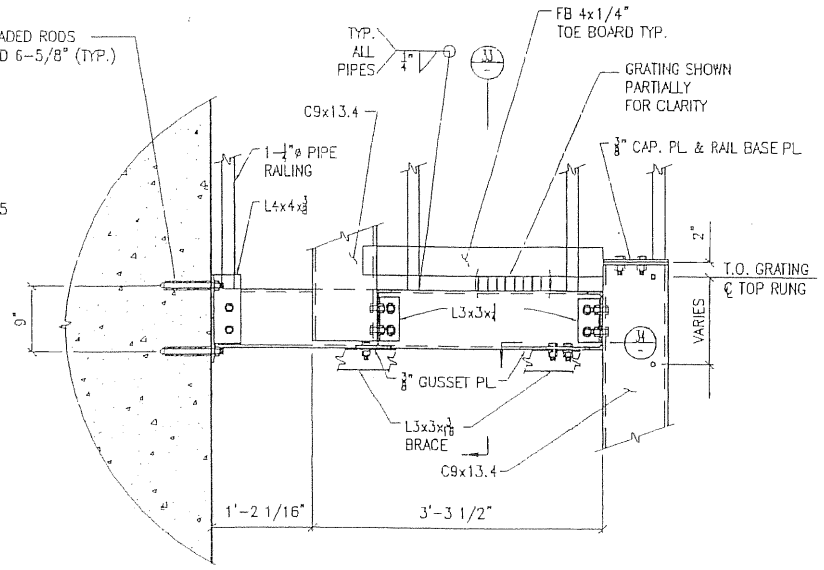

13 LANDING LONGITUDINAL SECTION
SCALE: 1"=1'-0"

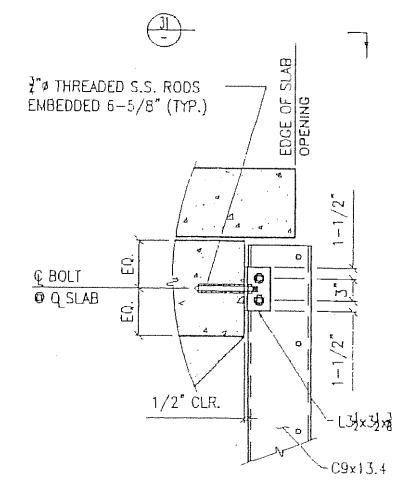

12 LADDER CONX. @ CORBEL, SIDE VIEW
SCALE: 1"=1'-0"

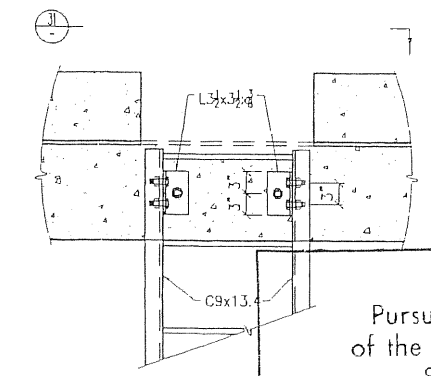

11 LADDER CONX. @ CORBEL, FRONT VIEW
SCALE: 1"=1'-0"

APPROVED
Pursuant to Section 5-1.02
of the Standard Specifications
State of California
DEPARTMENT OF TRANSPORTATION
Division of Structures
Office of Structure Construction
Signed James M. Ferre
Structure Representative
Reg. Civil Engr. No. 48257
Date 1/5/04

CONTRACT NO. 04-012024
CCO NO. 49
PAGE 71 OF 72

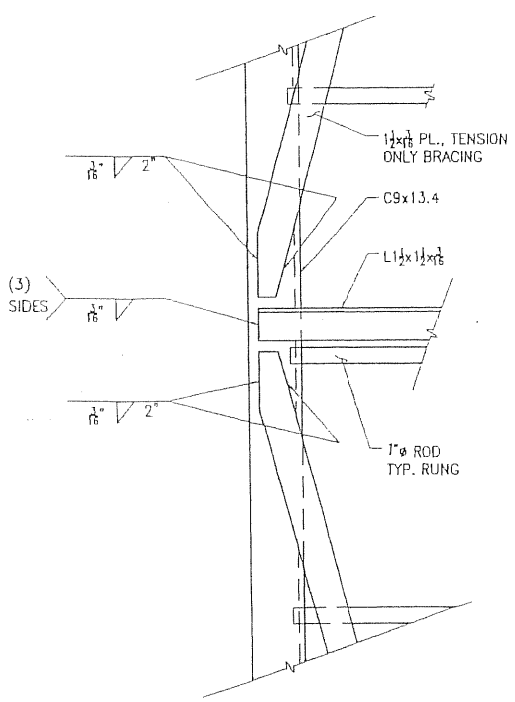

35 LADDER BRACING TYP. CONX.
SCALE: 3"=1'-0"

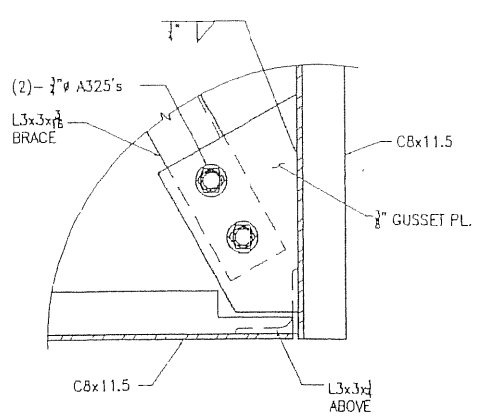

34 ANGLE BRACE CONX. TO LANDING CHANNELS
SCALE: 3"=1'-0"

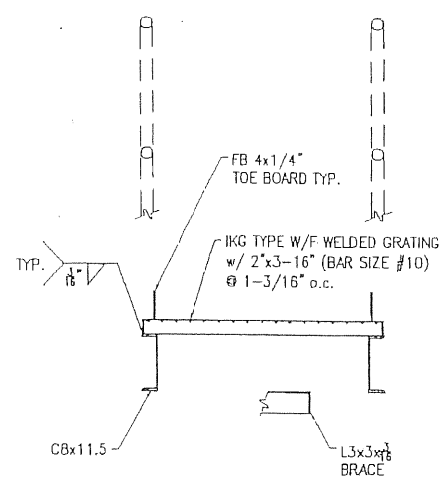

33 MID LANDING TRANSVERSE SECTION
SCALE: 1"=1'-0"

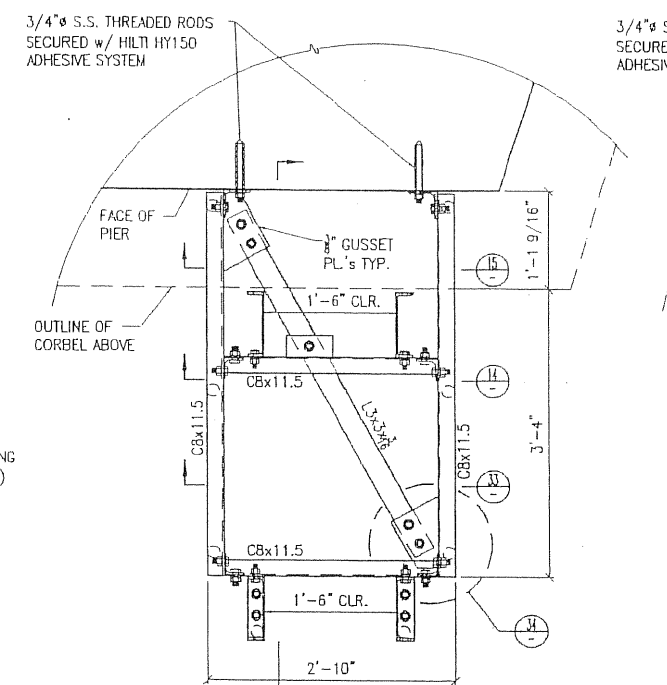

32 LANDING FRAMING PLAN
SCALE: 1"=1'-0"

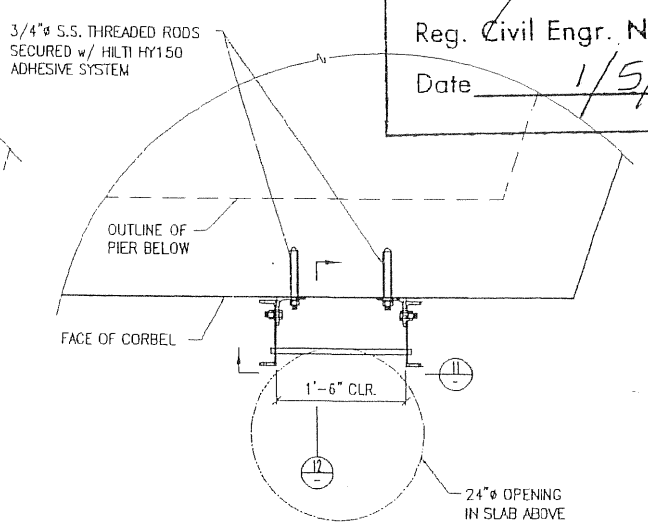

31 LADDER CONX. @ CORBEL, PLAN
SCALE: 1"=1'-0"

SAN FRANCISCO OAKLAND BAY BRIDGE
SKYWAY CONTRACT No. 04-012024
SFOBB EAST SPAN SEISMIC SAFETY PROJECT
POST KN 04-SF-80-13.9-14.3/ALA-80-0.0-1.6
BRIDGE No. 34-0006

PROJECT/DWG. TITLE:
KFM SFOBB SKYWAY PROJ.

E13E,E13W,E14E,E14W
ACCESS CASING
LADDER SYSTEM

DWN. BY:	DATE:	REV.		DATE
JKS	7-16-03			
CHK'D. BY:	DATE:			
APRV'D. BY:	DATE:			
FINISH:				
SCALE: AS NOTED				

JOB NO.:	FILE NO.:	DWG. NO.:
02D02B	DWG3	S-2

DO NOT DUPLICATE WITHOUT PERMISSION

THIS PROJECT SHALL BE ERECTED PER THE AISC CODE OF STANDARD PRACTICE SPECIFICALLY PARAGRAPH 7.12 AS FOLLOWS:
7.12 CORRECTION OF ERRORS
THE CORRECTION OF MINOR MISFITS BY MODERATE AMOUNTS OF REAMING, GRINDING, WELDING OR CUTTING, AND THE DRAWING OF ELEMENTS INTO LINE WITH DRIFT PINS, SHALL BE CONSIDERED TO BE NORMAL ERECTION OPERATIONS. ERRORS THAT CANNOT BE CORRECTED USING FOREGOING MEANS, OR THAT REQUIRE MAJOR CHANGES IN MEMBER OR CONNECTION CONFIGURATION, SHALL BE PROMPTLY REPORTED TO THE OWNER'S DESIGNATED REPRESENTATIVES FOR DESIGN AND CONSTRUCTION AND THE FABRICATOR BY THE ERECTOR, TO ENABLE THE RESPONSIBLE ENTITY TO EITHER CORRECT THE ERROR OR APPROVE THE MOST EFFICIENT AND ECONOMICAL METHOD OF CORRECTION TO BE USED BY OTHERS. NO BACK CHARGES WILL BE ACCEPTED UNLESS APPROVED IN WRITING BY THIS OFFICE.

GLOBAL FABRICATORS
CUSTOM EQUIPMENT MANUFACTURING
METAL FABRICATION-MACHINE SHOP
8929 ROSEDALE HWY. BAKERSFIELD CA. 93312
PHONE: (661) 589-2774 FAX: (661) 589-7504
E-MAIL engineering@globalfab.com

H.F. MAGER INC.
STRUCTURAL ENGINEERS
COMMERCIAL & INDUSTRIAL
STRUCTURAL DESIGN AND
CONSTRUCTION DOCUMENTS
1149 MARSH STREET
SAN LUIS OBISPO, CA 93401
PH# (805)541-2183 FAX# (805)541-5348
EMAIL hmag@magerstruc.com

SEAL: REGISTERED PROFESSIONAL ENGINEER JAMES FRED MAGER S 23761 STRUCTURAL ENGINEER STATE OF CALIFORNIA
July 16, 2003
Expires Mar. 31, 2006

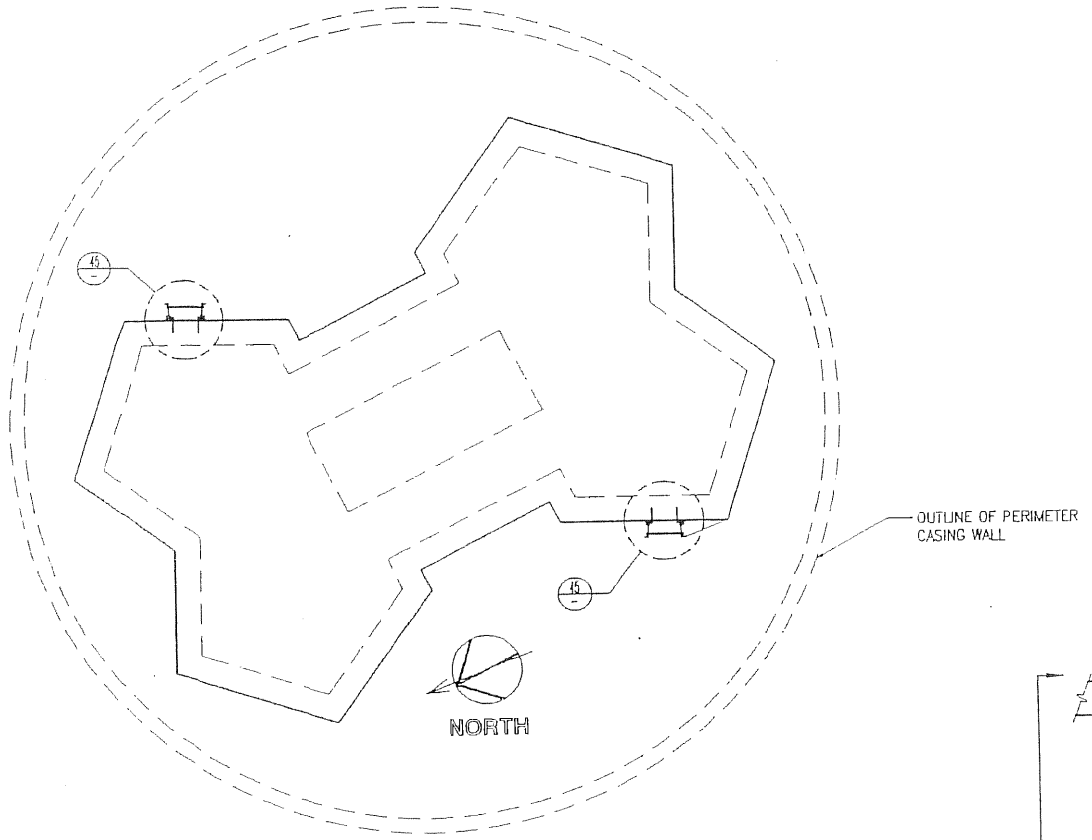

25 PIER PLAN
SCALE: 1/4" = 1'-0"

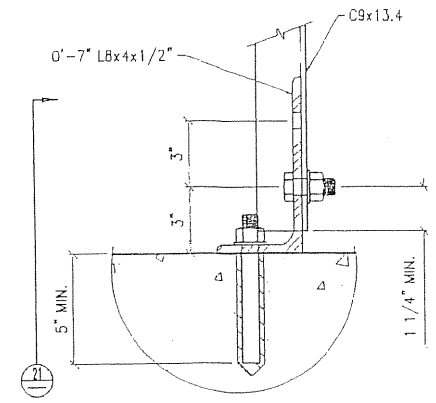

22 BASE CONNECTION SECTION
SCALE: 3" = 1'-0"

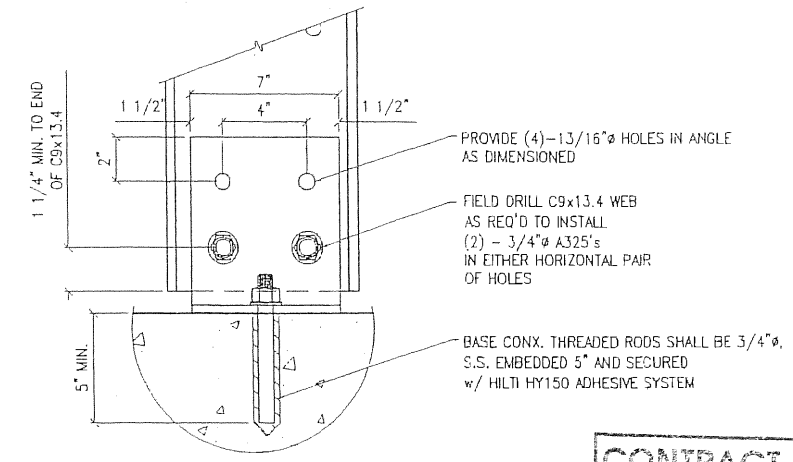

21 BASE CONNECTION ELEVATION
SCALE: 3" = 1'-0"

CONTRACT NO. 04-012024
CCO NO. 49
PAGE 72 OF 72

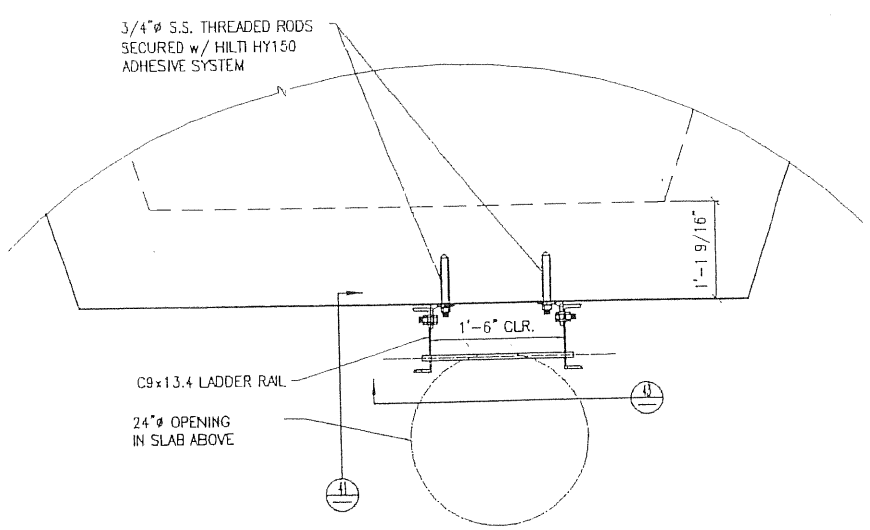

45 LADDER PLAN
SCALE: 1" = 1'-0"

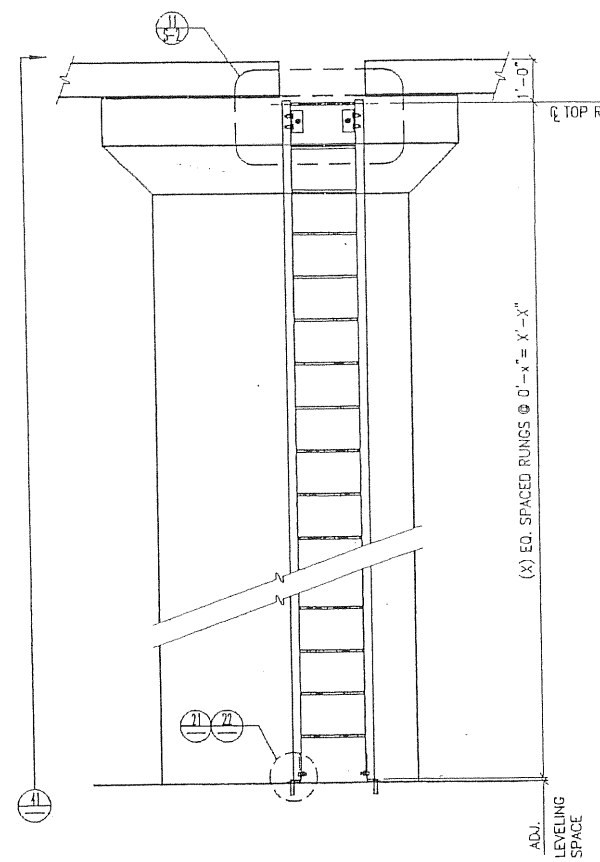

43 LADDER @ CORBEL FRONT VIEW
SCALE: 1/2" = 1'-0"

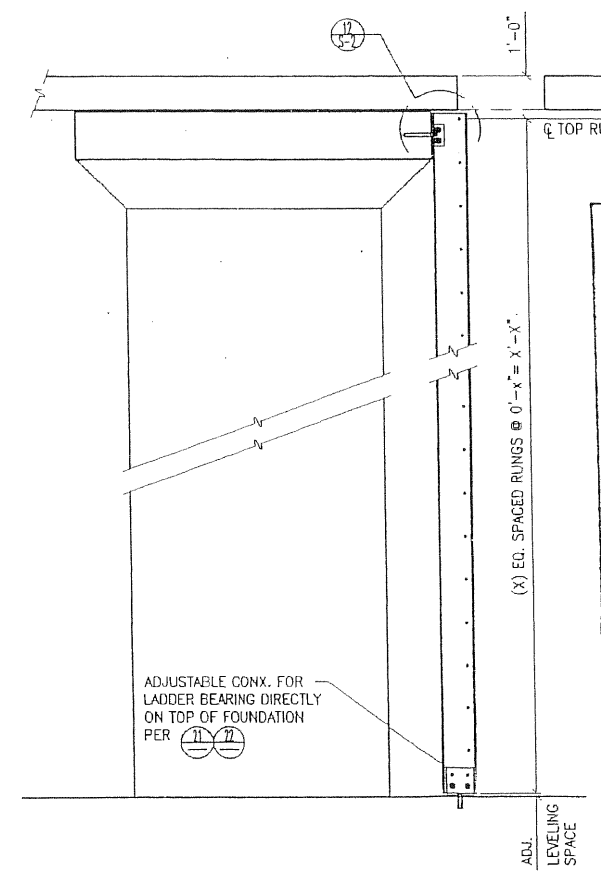

41 LADDER @ CORBEL SIDE VIEW
SCALE: 1/2" = 1'-0"

APPROVED
Pursuant to Section 5-1.02
of the Standard Specifications
State of California
DEPARTMENT OF TRANSPORTATION
Division of Structures
Office of Structure Construction

Signed James M. Fen
Structure Representative

Reg. Civil Engr. No. 48257

Date 1/5/04

SAN FRANCISCO OAKLAND BAY BRIDGE
SKYWAY CONTRACT No. 04-012024
SFOBB EAST SPAN SEISMIC SAFETY PROJECT
POST KM 04-SF-80-13.9-14.3/MA-80-0.0-1.6
BRIDGE No. 34-0006

PROJECT/DWG. TITLE:
KFM SFOBB SKYWAY PROJ.

DO NOT DUPLICATE WITHOUT PERMISSION

THIS PROJECT SHALL BE ERECTED PER THE AISC CODE OF STANDARD PRACTICE SPECIFICALLY PARAGRAPH 7.12 AS FOLLOWS:
7.12 CORRECTION OF ERRORS
THE CORRECTION OF MINOR MISFITS BY MODERATE AMOUNTS OF REAMING, GRINDING, WELDING OR CUTTING, AND THE DRAWING OF ELEMENTS INTO LINE WITH DRIFT PINS, SHALL BE CONSIDERED TO BE NORMAL ERECTION OPERATIONS. ERRORS THAT CANNOT BE CORRECTED USING FOREGOING MEANS, OR THAT REQUIRE MAJOR CHANGES IN MEMBER OR CONNECTION CONFIGURATION, SHALL BE PROMPTLY REPORTED TO THE OWNER'S DESIGNATED REPRESENTATIVES FOR DESIGN AND CONSTRUCTION AND THE FABRICATOR BY THE ERECTOR, TO ENABLE THE RESPONSIBLE ENTITY TO EITHER CORRECT THE ERROR OR APPROVE THE MOST EFFICIENT AND ECONOMICAL METHOD OF CORRECTION TO BE USED BY OTHERS. NO BACK CHARGES WILL BE ACCEPTED UNLESS APPROVED IN WRITING BY THIS OFFICE.

GLOBAL FABRICATORS
CUSTOM EQUIPMENT MANUFACTURING
METAL FABRICATION-MACHINE SHOP
8929 ROSEDALE HWY. BAKERSFIELD CA. 93312
PHONE: (661) 589-2774 FAX: (661) 589-7504
E-MAIL engineering@globalfab.com

H.F. MAGER INC.
STRUCTURAL ENGINEERS
COMMERCIAL & INDUSTRIAL
STRUCTURAL DESIGN AND
CONSTRUCTION DOCUMENTS
1149 MARSH STREET
SAN LUIS OBISPO, CA 93401
PH# (805)541-2193 FAX# (805)541-5348
EMAIL hmm@magerstruc.com

SEAL: REGISTERED PROFESSIONAL ENGINEER H.F. Mager S 2876 CIVIL STATE OF CALIFORNIA
Expires Mar 31, 2006

DWN. BY: JKS	DATE: 7-16-03	REV.		DATE
CHK'D. BY:	DATE:			
APRV'D. BY:	DATE:			
FINISH:				
SCALE: AS NOTED				

E11E, E11W, E15E, E15W
ACCESS CASING
LADDER SYSTEM

JOB NO.:	FILE NO.:	DWG. NO.:
02D02B	DWG3	S-3

STATE OF CALIFORNIA - DEPARTMENT OF TRANSPORTATION

CONTRACT CHANGE ORDER MEMORANDUM

TO: PETER SIEGENTHALER / COE D.	FILE: E.A. 04 - 012024
	CO-RTE-PM 04-SF,Ala-80-13.9/14.3,0.0/1.6
FROM: COE D.	FED. NO. ACIM-080-1(085)8N
CCO#: 49 SUPPLEMENT#: 0 Category Code: CHPA	CONTINGENCY BALANCE (Incl. this change) $6,136,837.17
COST: $112,000.00 INCREASE ☑ DECREASE ☐	HEADQUARTERS APPROVAL REQUIRED? ☐ YES ☑ NO
SUPPLEMENTAL FUNDS PROVIDED: $0.00	IS THIS REQUEST IN ACCORDANCE WITH ENVIRONMENTAL DOCUMENTS? ☑ YES ☐ NO
CCO DESCRIPTION: Free Standing Pier Stair Tower	**PROJECT DESCRIPTION:** REPLACE SFOBB EAST SPAN

LOCATION: IN SAN FRANCISCO AND ALAMEDA COUNTIES IN SAN FRANCISCO AND OAKLAND FROM 1.3 KM EAST OF THE YERBA BUENA ISL

THIS CHANGE ORDER PROVIDES FOR:

modifying the pier stair towers, the pier access casing ladders, and the pier to pier table circular access opening cover plates in accordance with sheet 3 of 72 of this change order.

This change is needed to revise the original contract design for the pier stair towers, the pier casing access ladders, the access opening cover plates, and to resolve constructibility issues associated with installing embedded concrete anchor supports in the pier column wall for the stair and access casing ladders. The embedded anchors conflict with the dense, highly congested bar reinforcing steel pattern in the pier column concrete. The use of free standing stair towers and ladders minimizes the need for embedded concrete anchorage, but requires a more sturdy design for the ladders and stair towers. Also, changing the size and shape of the pier table access opening cover plates increased the weight of each plate. As a result, the total combined weight of the ladders, stair towers, and access opening cover plates is increased, thereby increasing the total quantity for Contract Item No. 86, "Miscellaneous Metal (Bridge)." The revised design also provides for upgrades to the pier access casing ladders.

Also, Maintenance requested revisions to the design of the pier to pier table circular access opening cover plates in order to improve access and functional use. As designed, the circular opening could not be centered over the top landing of the pier stair tower. In order to improve this point of access, Maintenance requested changing the access opening from a circular to a rectangular shape, and adding a mechanically or hydraulically assisted opening and closing mechanism for the hatches.

The Contractor submitted a redesign proposal to replace the stairs, ladders, and access opening cover plates. The redesign proposal resolves constructibility issues and provides improved maintenance access. The Contractor submitted two (2) sets of working drawings for the redesign concept showing complete details of the proposed modifications. The two (2) working drawing submittals were reviewed and approved by the Engineer on April 18, 2003, and May 19, 2004.

This change order increases the quantity of Contract Item No. 86, "Miscellaneous Metal (Bridge)." Also, this change includes an adjustment in compensation at lump sum that provides a credit to the State for allowing the use of free standing pier stair towers and ladders, and provides for compensating the contractor extra work at lump sum for the upgrades to the pier access casing ladders and for the modifications to the pier to pier table access openings with the hydraulically operated hatch.

This change order will result in a net cost increase of $112,000.00, which can be financed from the contingency funds. A detailed cost analysis is on file with the project records.

Concurrence from Mr. Samad Hamoud, Structures Maintenance, was received on January 15, 2004.

This is a minor contract change and does not require prior approval authorization from FHWA.

This contract change order does not affect the overall project schedule; therefore, no additional contract time is required.

RECEIVED
026186 JUL 30 ☐

49.049

CONCURRED BY:		
Construction Engineer:	Douglas Coe	Date 6-23-04
Bridge Engineer:	Douglas Coe	Date 6-23-04
FHWA Representative:		Date
Project Engineer:		Date
Other (specify): Samad Hamoud		Date 1/15/2004
		Date
		Date
District Prior Approval By:		Date
HQ (Issue Approve) By:		Date
Resident Engineer's Signature:		Date 6-23-04

ESTIMATE OF COST

	THIS REQUEST	TOTAL TO DATE
ITEMS	$606,130.80	$606,130.80
FORCE ACCOUNT	$0.00	$0.00
AGREED PRICE	$121,497.80	$121,497.80
ADJUSTMENT	($615,628.60)	($615,628.60)
TOTAL	$112,000.00	$112,000.00

FEDERAL PARTICIPATION

☑ PARTICIPATING ☐ PARTICIPATING IN PART ☐ NONE
☐ NON-PARTICIPATING (MAINTENANCE) ☐ NON-PARTICIPATING

FEDERAL SEGREGATION (if more than one Funding Source or P.I.P. type)
☑ CCO FUNDED PER CONTRACT ☐ CCO FUNDED AS FOLLOWS

FEDERAL FUNDING SOURCE	PERCENT

CONTRACT CHANGE ORDER

Change Requested by: Engineer

CCO: 49	Suppl. No. 1	Contract No. 04 - 012024	Road 04-SF,Ala-80-13.9/14.3,0.0/1.6	FED. AID LOC.: ACIM-080-1(085)8N

To: **KIEWIT / FCI / MANSON a JV**

You are directed to make the following changes from the plans and specifications or do the following described work not included in the plans and specifications for this contract. ***NOTE: This change order is not effective until approved by the Engineer.***

Description of work to be done, estimate of quantities and prices to be paid. (Segregate between additional work at contract price, agreed price and force account.) Unless otherwise stated, rates for rental of equipment cover only such time as equipment is actually used and no allowance will be made for idle time. This last percentage shown is the net accumulated increase or decrease from the original quantity in the Engineer's Estimate.

Adjustment of Compensation at Lump Sum:

Replace "Table 2: Credit Adjustment Schedule" (sheet 4 of 72) of Contract Change Order No. 49 with the revised "Table 2: Credit Adjustment Schedule", as provided on sheet 2 of 2 of this change order.

There shall be no cost or credit to the State by reason of this change.

Estimated Cost: Increase ☐ Decrease ☐ $0.00

By reason of this order the time of completion will be adjusted as follows: 0 days

Submitted by

Signature	Resident Engineer: COE D.	Date 9-7-04

Approval Recommended by

Signature	Construction Engineer: COE D.	Date 9-7-04

Engineer Approval by

Signature	(Print name and title) PETER SIEGENTHALER - Chief	Date

We the undersigned contractor, have given careful consideration to the change proposed and agree, if this proposal is approved, that we will provide all equipment, furnish the materials, except as may otherwise be noted above, and perform all services necessary for the work above specified, and will accept as full payment therefor the prices shown above.

NOTE: If you, the contractor, do not sign acceptance of this order, your attention is directed to the requirements of the specifications as to proceeding with the ordered work and filing a written protest within the time therein specified.

Contractor Acceptance by

Signature	(Print name and title) A.T. Skoro, Project Director	Date 9/22/04

TABLE 2: CREDIT ADJUSTMENT SCHEDULE

Pier Location (Eastbound)	% Payment For Pier Stair Tower (%)	% Payment For Access Casing Ladders (%)
E3E	3.70	---
E4E	1.20	---
E5E	3.20	---
E6E	3.00	---
E7E	2.80	1.50
E8E	2.40	1.60
E9E	2.10	1.50
E10E	2.70	1.90
E11E	2.10	2.20
E12E	2.10	2.20
E13E	2.10	2.20
E14E	2.10	2.10
E15E	0.70	1.50
E16E	1.30	1.80

Pier Location (Westbound)	% Payment For Pier Stair Tower (%)	% Payment For Access Casing Ladders (%)
E3W	3.70	---
E4W	1.20	---
E5W	3.20	---
E6W	3.00	---
E7W	2.80	1.50
E8W	2.40	1.60
E9W	2.10	1.50
E10W	2.70	1.90
E11W	2.10	2.20
E12W	2.10	2.20
E13W	2.10	2.20
E14W	2.10	2.10
E15W	0.70	1.50
E16W	1.30	1.80

STATE OF CALIFORNIA - DEPARTMENT OF TRANSPORTATION

CONTRACT CHANGE ORDER MEMORANDUM

DATE: 9/3/2004

TO: PETER SIEGENTHALER / COE D.	FILE: **E.A.** 04 - 012024
FROM: COE D.	**CO-RTE-PM** 04-SF,Ala-80-13.9/14.3,0.0/1.6
	FED. NO. ACIM-080-1(085)8N
CCO#: **49** SUPPLEMENT#: **1** Category Code: **CHPA**	CONTINGENCY BALANCE (incl. this change) **$2,161,651.15**
COST: **$0.00** INCREASE ☐ DECREASE ☐	HEADQUARTERS APPROVAL REQUIRED? ☐ YES ☑ NO
SUPPLEMENTAL FUNDS PROVIDED: **$0.00**	IS THIS REQUEST IN ACCORDANCE WITH ENVIRONMENTAL DOCUMENTS? ☑ YES ☐ NO
CCO DESCRIPTION: Free Standing Pier Stairs	**PROJECT DESCRIPTION:** REPLACE SFOBB EAST SPAN

LOCATION: IN SAN FRANCISCO AND ALAMEDA COUNTIES IN SAN FRANCISCO AND OAKLAND FROM 1.3 KM EAST OF THE YERBA BUENA ISL

THIS CHANGE ORDER PROVIDES FOR:

revising Table 2: "Credit Adjustment Schedule," issued with Contract Change Order No. 49, to reflect the correct pier locations to apply the credit adjustment for the Pier Stair Towers and the Access Casing Ladders for the SFOBB East Span Skyway Bridge Replacement Project, Bridge Nos. 340006L/R.

Contract Change Order No. 49, Free Standing Pier Stairs, included Table 2: "Credit Adjustment Schedule," (Sheet No. 4 of 72), to determine the appropriate credit to be applied to each pier location for both the eastbound and the westbound piers. The table incorrectly llisted the eastbound pier locations where the westbound locations should have been listed (e.g., E3E is listed twice instead of listing E3E and E3W each).

This change order is needed to issue the revised table that correctly lists both the eastbound and the westbound pier locations.

There is no cost or credit to the State as a result of this change.

This is a minor contract change and does not require prior approval authorization from FHWA.

Maintenance concurrence is not required for this change order.

This contract change order does not affect the overall project schedule; therefore, no additional contract time is required.

CONCURRED BY:

Construction Engineer:	Douglas Coe DSC	Date 9-7-04
Bridge Engineer:	Douglas Coe DSC	Date 9-7-04
FHWA Representative:		Date
Project Engineer:		Date
Other (specify):		Date
		Date
		Date
District Prior Approval By:		Date
HQ (Issue Approve) By:		Date
Resident Engineer's Signature:		Date 9-7-04

ESTIMATE OF COST

	THIS REQUEST	TOTAL TO DATE
ITEMS	$0.00	$606,130.80
FORCE ACCOUNT	$0.00	$0.00
AGREED PRICE	$0.00	$121,497.80
ADJUSTMENT	$0.00	($615,628.60)
TOTAL	$0.00	$112,000.00

FEDERAL PARTICIPATION

☑ PARTICIPATING ☐ PARTICIPATING IN PART ☐ NONE
☐ NON-PARTICIPATING (MAINTENANCE) ☐ NON-PARTICIPATING

FEDERAL SEGREGATION (if more than one Funding Source or P.I.P. type)
☑ CCO FUNDED PER CONTRACT ☐ CCO FUNDED AS FOLLOWS

FEDERAL FUNDING SOURCE	PERCENT

STATE OF CALIFORNIA - DEPARTMENT OF TRANSPORTATION

CONTRACT CHANGE ORDER

Change Requested by: Engineer

CCO: 50	Suppl. No. 0	Contract No, 04- 012024	Road 04-SF,Ala-80-13.9/14.3,0.0/1.6	FED. AID LOC.: ACIM-080-1(085)8N

To: KIEWIT IFCI / MANSON a JV

You are *directed* lo make the following changes *from* the plans and specifications or *do* the *following* described work *not* included in *the plans* and *specifications for this contract.* NOTE: This change order is not effective *until* approved **by** the Engineer.

Description of work to be done. estimate of quantities and prices to be paid. (Segregate *between* additional woik at contract price, agreed price and force account.) Unless otherwise stated, rates lor rental of equipmenl cover oniy such time as equipment is actuaiiy used and no aliowance will be made for idle time, This last percentage shown is the net accumulated increase or decrease from the original quantity in the Engineer's Estimate.

ADJUSTMENT IN COMPENSATION AT AGREED LUMP SUM

Increase the depth of the pile head connection plate weld and change nondestructive test method for that weld as directed by the Engineer.

The depth of preparation of the weld for the pile head connection plates shall be changed from a minimum 31 mm to a minimum 35 mm. The root weld will be inspected visually and Magnetic Particle testing will also be performed on the root of each weld. Ultrasonic testing, as described in the Special Provisions Section 10-1.44 Steel Structures, will not be required for the pile head connection plate weld.

The Contractor agrees to credit the State a lump sum of $ 78,780.00 for this change. This sum constitutes full compensation, including all markups, for this change.

No adjustment in Contract time will be made as this change order does not affect the controlling operations.

Adjustment of Compensation at Lump Sum:

Estimated cost of Adjustment of Compensation at Lump Sum .....($78,780.00)

Estimated Cost Increase Decrease ☑ ($78,780.00)

By reason of this order the time of coinpietlon will be adjusted **as** follows *0* days

Submitted by

Signature	Resident Engineer: COE D.	Date
David W. Wu for		7-24-03

Approval Recommended by

Signature	Construction Engineer: COE D.	Date
David W. Wu for		7-24-03

Engineer Approval by

Signature	(Print name and title)	Date
P. Siegenthaler	PETER SIEGENTHALER - Chief	8/11/03

We the *undersigned contractor,* have given careful consideration to the change proposed and agree, if this proposal is approved, that we will provide all equipment, furnish the materials, except as may otherwise be noted above, and perform all services necessary for the work above specified, and will accept as lull payment therefor the **prices** shown above.

NOTE: **If you,** the contractor, do not sign acceptance of this order, your attention is directed to the requirements of the specifications **as** to proceeding with the ordered work and filing a written protest within the time therein specified.

Contractor Acceptance by

Signature	(Print name and title)	Date
	A.T. Skoro, Project Director	8/6/03

TELECOPY

California Department of Transportation

CONSTRUCTION DIVISION

TO: District 4 CCO Desk

Date: 9/5/2003

Contract No.: 4 - 012024

Road: SF,ALA-80-13.9/14.3,0.0/1.6

FED. No.: ACIM-080-1(085)8N

To: SARTIPI - 04

Attention: 04 - MOLERA

HQ Direction: TO ISSUE AND APPROVE

CCO No. 050 Sup. No. 0 Rev. No. 1 Old CCO Code:

Per Your Submittal Dated 9/5/2003 New CCO Code: C - H - S - A

INCREASE THE DEPTH OF THE PILE HEAD CONNECTION PLATE WELD, AND CHANGE THE WELD TEST PROCESS FOR THAT WELD BY USING MAGNETIC PARTICLE TESTING AND VISUAL INSPECTION IN LIEU OF ULTRASONIC TESTING.:

NOTE:

TOTAL COST OF CHANGE: CREDIT TO STATE OF $78,780.00

Items:	$0.00
Force Account:	$0.00
Agreed Price:	$0.00
Adj. of Comp.	($78,780.00)
Total:	($78,780.00)
Time	(NONE)

ROBERT PIEPLOW, by:
Division Chief

Patrick S. Bockari

Division of Construction
1120 "N" Street, MS-44, Sacramento, CA 95814
Fax Number: (916) 654-5735
To Confirm Transmission, Call: (916) 654-5196

U.S. DEPARTMENT OF TRANSPORTATION FEDERAL HIGHWAY ADMINISTRATION CALIFORNIA DIVISION OFFICE

RECORD OF PRIOR APPROVAL FOR MAJOR CONTRACT CHANGE ORDERS

PROJECT NO.	CCO NO.	CONTRACT NO.	DIST-CO-RTE-PM
ACIM -080-1(085)8N	50	04-012024	04-SF,Ala-80-13.9/14.3,0.0/1.6

REQUESTED BY:	CALTRANS HQ	DATE
Greg Mah-Hing	X RE/DISTRICT	4/22/03

PROPOSED CHANGE:

This change order increases the depth of the pile head connection plate weld and changes the weld test process for that weld.

REASON FOR CHANGE:

This change incorporates Magnetic Particle Testing that is more reliable than Ultrasonic Testing. It also adds field weld material that improves the effective throat of the weld.

AS DISCUSSED IN FIELD (REPORT NO. ____)

TIME EXTENSIONS	ACTIVITY ON CRITICAL PATH AFFECTED BY CCO (IF TIME EXTENSION INVOLVED)
___ NONE ___ DAYS ___ DEFERRED	

ESTIMATE OF COST:	CCO:	METHOD OF PAYMENT
$ ___ INCREASE $ 78,780.00 ___ DECREASE	CONTRACT ITEM AGREED PRICE	ADJUSTMENT OF COMPENSATION EXTRA WORK AT FORCE ACCOUNT

THE WORK COVERED BY THE PROPOSED REVISION AS DESCRIBED ABOVE IS APPROVED SUBJECT TO SUBMISSION OF SUPPORTING DOCUMENTATION INCLUDING COST EVALUATION AND JUSTIFICATION OF TIME EXTENSIONS.

OTHER CONDITIONS:

PRIOR APPROVAL TO PROCEED GRANTED BY:	DATE OF AUTHORIZATION:
Nancy E. Bobb	4/30/03

CCO STATUS FOR 04 - 012024 - 050 NET MONEY CHANGE: -78,780.00
STATUS IS ACTIVE 09-11-03 ANTICIPATED CHANGES: 0.00
EST. FINAL COST: -78,780.00

ELIM UT TESTING ON PILE HEAD CONNECTION

WORK TYPE	AMOUNT AUTHORIZED	** AMOUNTS EXPENDED ** TO-DATE	LAST EST.	SINCE LAST EST.
AC @ LS(-)	-78,780.00	0.00	0.00	0.00

CONTRACT ITEM TOTAL: 0.00 NO ITEM RECORDS FOR THIS CCO

CCO SUPPLEMENTS -- PRESS PF5

NEW NUMBER => USE TOP LINE + ENTER EXIT ==> PRESS PF3

CCO STATUS FOR 04 - 012024 - 050 * * SUPPLEMENT SCREEN * *

SUPPLEMENT	DESCRIPTION	APPROVAL DATE
00	ELIM UT TESTING ON PILE HEAD CONNECTION	09-11-03
	NET SUPPL: $78,780.00 NET ITEM:	$0.00
	TIME EXTENSION DAYS: +000 CATEGORY: CHSA	

END OF SUPPLEMENT RECORDS
CCO MAIN SCREEN - PRESS PF1

EXIT ==> PRESS PF3

TELECOPY

California Department of Transportation

CONSTRUCTION DIVISION

TO: District 4 CCO Desk

Date: 9/5/2003

Contract No.: 4 - 012024

Road: SF,ALA-80-13.9/14.3,0.0/1.6

FED. No.: ACIM-080-1(085)8N

To: SARTIPI - 04

Attention: 04 - MOLERA

HQ Direction: TO ISSUE AND APPROVE

CCO No. 050 Sup. No. 0 Rev. No. 1 Old CCO Code:

Per Your Submittal Dated 9/5/2003 New CCO Code: C - H - S - A

INCREASE THE DEPTH OF THE PILE HEAD CONNECTION PLATE WELD, AND CHANGE THE WELD TEST PROCESS FOR THAT WELD BY USING MAGNETIC PARTICLE TESTING AND VISUAL INSPECTION IN LIEU OF ULTRASONIC TESTING.:

NOTE:

TOTAL COST OF CHANGE: CREDIT TO STATE OF $78,780.00

Items:	$0.00
Force Account:	$0.00
Agreed Price:	$0.00
Adj. of Comp.	($78,780.00)
Total:	($78,780.00)
Time	(NONE)

ROBERT PIEPLOW, by:
Division Chief

Patrick S. Bockari

Division of Construction
1120 "N" Street, MS-44, Sacramento, CA 95814
Fax Number: (916) 654-5735
To Confirm Transmission, Call: (916) 654-5196

U.S. DEPARTMENT OF TRANSPORTATION FEDERAL HIGHWAY ADMINISTRATION CALIFORNIA DIVISION OFFICE

RECORD OF PRIOR APPROVAL FOR MAJOR CONTRACT CHANGE ORDERS

PROJECT NO.	CCO NO.	CONTRACT NO.	DIST-CO-RTE-PM
ACIM -080-1(085)8N	50	04-012024	04-SF,Ala-80-13.9/14.3,0.0/1.6

REQUESTED BY:	CALTRANS HQ	DATE
Greg Mah-Hing	X RE/DISTRICT	4/22/03

PROPOSED CHANGE:

This change order increases the depth of the pile head connection plate weld and changes the weld test process for that weld.

REASON FOR CHANGE:

This change incorporates Magnetic Particle Testing that is more reliable than Ultrasonic Testing. It also adds field weld material that improves the effective throat of the weld.

AS DISCUSSED IN FIELD (REPORT NO. ____)

TIME EXTENSIONS	ACTIVITY ON CRITICAL PATH AFFECTED BY CCO (IF TIME EXTENSION INVOLVED)
___ NONE ___ DAYS ___ DEFERRED	

ESTIMATE OF COST:	CCO:	METHOD OF PAYMENT
$ ___ INCREASE $ 78,780.00 ___ DECREASE	CONTRACT ITEM AGREED PRICE	ADJUSTMENT OF COMPENSATION EXTRA WORK AT FORCE ACCOUNT

THE WORK COVERED BY THE PROPOSED REVISION AS DESCRIBED ABOVE IS APPROVED SUBJECT TO SUBMISSION OF SUPPORTING DOCUMENTATION INCLUDING COST EVALUATION AND JUSTIFICATION OF TIME EXTENSIONS.

OTHER CONDITIONS:

PRIOR APPROVAL TO PROCEED GRANTED BY:	DATE OF AUTHORIZATION:
Nancy E. Bobb	4/30/03

CCO STATUS FOR 04 - 012024 - 050 NET MONEY CHANGE: -78,780.00
STATUS IS ACTIVE 09-11-03 ANTICIPATED CHANGES: 0.00
EST. FINAL COST: -78,780.00

ELIM UT TESTING ON PILE HEAD CONNECTION

WORK TYPE	AMOUNT AUTHORIZED	** AMOUNTS EXPENDED ** TO-DATE	LAST EST.	SINCE LAST EST.
AC @ LS(-)	-78,780.00	0.00	0.00	0.00

CONTRACT ITEM TOTAL: 0.00 NO ITEM RECORDS FOR THIS CCO

CCO SUPPLEMENTS -- PRESS PF5

NEW NUMBER => USE TOP LINE + ENTER EXIT ==> PRESS PF3

CCO STATUS FOR 04 - 012024 - 050 * * SUPPLEMENT SCREEN * *

SUPPLEMENT	DESCRIPTION	APPROVAL DATE
00	ELIM UT TESTING ON PILE HEAD CONNECTION	09-11-03
	NET SUPPL: $78,780.00 NET ITEM:	$0.00
	TIME EXTENSION DAYS: +000 CATEGORY: CHSA	

END OF SUPPLEMENT RECORDS
CCO MAIN SCREEN - PRESS PF1

EXIT ==> PRESS PF3

STATE OF CALIFORNIA - DEPARTMENT OF TRANSPORTATION

CONTRACT CHANGE ORDER MEMORANDUM

DATE: 7/28/2003

TO: PETER SIEGENTHALER / COE D.	FILE: E.A. 04 - 012024
FROM: COE D.	CO-RTE-PM 04-SF,Ala-80-13.9/14.3,0.0/1.6
	FED. NO. ACIM-080-1(085)8N
CCO#: 50 SUPPLEMENT#: 0 Category Code: CHSA	CONTINGENCY BALANCE (incl. this change) $55,580,249.19
COST: ($78,780.00) INCREASE ☐ DECREASE ☑	HEADQUARTERS APPROVAL REQUIRED? ☐ YES ☑ NO
SUPPLEMENTAL FUNDS PROVIDED: $0.00	IS THIS REQUEST IN ACCORDANCE WITH ENVIRONMENTAL DOCUMENTS? ☑ YES ☐ NO
CCO DESCRIPTION: Elim. UT Testing on Pile Head Connection	**PROJECT DESCRIPTION:** REPLACE SFOBB EAST SPAN

LOCATION: IN SAN FRANCISCO AND ALAMEDA COUNTIES IN SAN FRANCISCO AND OAKLAND FROM 1.3 KM EAST OF THE YERBA BUENA ISL

THIS CHANGE ORDER PROVIDES FOR:

increasing the depth of the pile head connection plate weld and changing the nondestructive test method for that weld.

The depth of preparation (bevel) of the weld for the pile head connection plates shall be changed from a minimum depth of 31mm to a minimum depth of 35mm. This will ensure that the required effective throat of 31mm is achieved. The root weld will be inspected visually and Magnetic Particle Testing will also be performed on the root of each weld. Ultrasonic testing, as described in the Special Provisions Section 10-1.44 Steel Structures, will not be required for the pile head connection plate weld.

This change incorporates Magnetic Particle Testing that is more reliable and cheaper than this particular procedure of Ultrasonic Testing.

For the above-mentioned work, the contractor has agreed to credit the State a lump sum payment of $78,780.00. This sum constitutes full compensation, including all markups, for this change. Records and calculations used to determine the adjustment of compensation are on file in the project records.

No adjustment in contract time will be made as this change order does not affect the controlling operations.

This change order has been discussed with and concurred by Madon Sah and Doug Williams of TY Lin and Robert Mertz and Venkatesh Iyer of METS during a February 2003 meeting. Prior concurrence was also obtained from Doug Williams on November 19, 2002.
FHWA concurrence was obtained from Ms. Nancy Bobb on April 30, 2003.
Maintenance concurrence is not required for this change.

CONCURRED BY:	
Construction Engineer: B.N.W. for Douglas Coe	Date 7/28/03
Bridge Engineer:	Date
FHWA Representative: Nancy Bobb	Date 4/30/2003
Project Engineer:	Date
Other (specify): Doug Williams, TY LIN	Date 11/19/2002
Robert Mertz, METS	Date 2/1/2003
Venkatesh Iyer, METS	Date 2/1/2003
District Prior Approval By:	Date
HQ (Issue Approve) By: Patricia Pochari	Date 9/5/03
Resident Engineer's Signature: Dan W. Wu	Date 7-28-03

ESTIMATE OF COST

	THIS REQUEST	TOTAL TO DATE
ITEMS	$0.00	$0.00
FORCE ACCOUNT	$0.00	$0.00
AGREED PRICE	$0.00	$0.00
ADJUSTMENT	($78,780.00)	($78,780.00)
TOTAL	($78,780.00)	($78,780.00)

FEDERAL PARTICIPATION

☑ PARTICIPATING ☐ PARTICIPATING IN PART ☐ NONE
☐ NON-PARTICIPATING (MAINTENANCE) ☐ NON-PARTICIPATING

FEDERAL SEGREGATION (if more than one Funding Source or P.I.P. type)
☑ CCO FUNDED PER CONTRACT ☐ CCO FUNDED AS FOLLOWS

FEDERAL FUNDING SOURCE	PERCENT

CONTRACT CHANGE ORDER

Change Requested by: Engineer

CCO: 51	Suppl. No. 0	Contract No. 04 - 012024	Road 04-SF,Ala-80-13.9/14.3,0.0/1.6	FED. AID LOC.: ACIM-080-1(085)8N

To: **KIEWIT / FCI / MANSON a JV**

You are directed to make the following changes from the plans and specifications or do the following described work not included in the plans and specifications for this contract. ***NOTE: This change order is not effective until approved by the Engineer.***

Description of work to be done, estimate of quantities and prices to be paid. (Segregate between additional work at contract price, agreed price and force account.) Unless otherwise stated, rates for rental of equipment cover only such time as equipment is actually used and no allowance will be made for idle time. This last percentage shown is the net accumulated increase or decrease from the original quantity in the Engineer's Estimate.

Adjustment of Compensation at Lump Sum:

Perform an audit of Westar Marine Services' (Westar) certified payroll records for Westar's crews operating construction area work boats for all applicable work performed on or after March 28, 2002, as a result of the California Department of Industrial Relations' (DIR) March 28, 2002, ruling regarding the General Prevailing Wage Rate (GPWR) for Dredger-Operating Engineer Craft, and submit a summary of the findings to the Engineer for the SFOBB East Span Skyway, Bridge Nos. 34-0006L/R.

The audit summary shall cover the period from March 28, 2002, to July 22, 2004, and shall include but not be limited to the following information:

1.) The number of hours each employee worked in a covered classification;
2.) The actual pay each employee received for that work;
3.) The applicable prevailing wage rate; and
4.) The difference between the actual wage paid and prevailing wage required.

For providing an independent audit of Westar's certified payroll records, the Contractor shall receive an agreed lump sum amount of $53,398.00. This sum constitutes full compensation, including markups, for all administrative and legal costs associated with the audit.

Adjustment of Compensation at Lump Sum $53,398.00

Estimated Cost: Increase ☑ **Decrease** ☐ **$53,398.00**

By reason of this order the time of completion will be adjusted as follows: 0 days

Submitted by		
Signature	**Resident Engineer:** DOUG COE, Supervising Br. Eng.	**Date** 3-7-05
Approval Recommended by		
Signature	**Construction Engineer:** DOUG COE, Supervising Br. Eng.	**Date** 3-7-05
Engineer Approval by		
Signature	**(Print name and title)** PETER SIEGENTHALER - Chief	**Date**

We the undersigned contractor, have given careful consideration to the change proposed and agree, if this proposal is approved, that we will provide all equipment, furnish the materials, except as may otherwise be noted above, and perform all services necessary for the work above specified, and will accept as full payment therefor the prices shown above.

NOTE: If you, the contractor, do not sign acceptance of this order, your attention is directed to the requirements of the specifications as to proceeding with the ordered work and filing a written protest within the time therein specified.

Contractor Acceptance by		
Signature	**(Print name and title)** Lee Zink Project Director	**Date** 12/13/05

STATE OF CALIFORNIA • DEPARTMENT OF TRANSPORTATION

CONTRACT CHANGE ORDER INPUT

CEM-4901 REV 5/1993 CT# 7541-3516-2

ADA Notice

For individuals with sensory disabilities, this document is available in alternate formats. For information call (916) 263-2041 or TDD (916) 263-2044 or write Records and Forms Managment, 1120 N Street, MS-89, Sacramento, CA 95814.

CASOAC

CONTRACT NO. 0 4 0 1 2 0 2 4 (1–8) CCO NO. 0 5 1 (9) SUPPL. 0 0 (13)

CONSTRUCTION DEPT. USE ONLY ☐ FUNCTION (14) ☐ OVERRIDE (15)

CARD TYPE 1 (16)

C. C. O. DESCRIPTION: W E S T A R P R E V A I L I N G W A G E S (17–56)

NET $ CHANGE THIS CCO: + 5 3 3 9 8 . 0 0 (58–66)

APPROVAL DATE (67): - -

TIME EXTENSION DAYS: - 0 (74)

CATEGORY: A X Z Z (77)

CARD TYPE 2 (16)

	PAYMENT METHOD					$ AMOUNT
EW ☐ (17)	AC ☒ (18)	FA ☐ (19)	LS ☒ (20)	UP ☐		+ 5 3 3 9 8 . 0 0 (23–31)
EW ☐	AC ☐	FA ☐	LS ☐	UP ☐		
EW ☐	AC ☐	FA ☐	LS ☐	UP ☐		

CARD TYPE 4 (16)

NET $ AMOUNT BRIDGE WORK THIS CCO (18–26)

CARD TYPE 3 (16)

ITEM NUMBER (17–19)	QUANTITY (21–32)	ITEM NUMBER (17–19)	QUANTITY (21–32)

CARD TYPE 5 (16)

FEDERAL PARTICIPATION: P (17)

P = PARTICIPATING

M = NON-PARTICIPATING (MAINTENANCE)

N = NON-PARTICIPATING (OTHER THAN MAINTENANCE)

R = NON-PARTICIPATING (REIMBURSEMENT BY OTHERS)

S = PARTICIPATING IN PART

IF PARTICIPATING IN PART (S), BREAKDOWN COST AS FOLLOWS: (INPUT TYPE AS P,M,N,R)

TYPE	COST
☐ (18)	(19–27)
☐	
☐	
☐ (18)	(19–27)

FEDERAL SEGREGATION (IF MORE THAN ONE FUNDING SOURCE)

E (28) E = CCO to be funded as per contract ☐ (29) F = CCO to be funded as follows:

FEDERAL FUNDING SOURCE (30–44)	PERCENT (45)

IN CASE OF QUESTIONS CONTACT: *NAME*

Doug Coe / Kannu Balan *{Sent to D04 on12/14/2005 by Bahram Foadi, (510)622-5142}*

BUSINESS PHONE (510) 622-5151

VERIFY

Department of Transportation
EAST SPAN SEISMIC SAFETY PROJECT
CONCURRENCE FOR CHANGE ORDERS (08/04)

CCO#: 51 **S#:** 0
Title: Westar Prevailing Wages
Date: 04/05/05

Contract No. 04-012024
Co. & Rte Ala-80-13.9/14.3, 0.0/1.6

To: DOUGLAS COE, Resident Engineer

Requested By: KANNU BALAN, Senior Engineer (initials KB)

Description of Work:
Requiring the Contractor's subcontractor, Westar Marine Services, to provide certified payroll records of Prevailing Wage payments for crews operating construction area workboats as a result of implementing the General Prevailing Wage Rate (GPWR) for Dredger-Operating Engineer Craft as required by the Department of Industrial Relations (DIR).

Reason for Change:
In a letter dated March 28, 2002, the California DIR determined that the (GPWR) for the Dredger-Operating Engineer shall apply to crews operating construction area workboats. Westar is required to submit certified payrolls for all applicable work performed on or after March 28, 2002. Upon receipt of the certified payrolls, the Department will verify the wage rates and provide compensation for the labor cost differential between the GPWR and the actual wages paid. In order to comply with the request, Westar hired a consulting firm to perform an audit of their certified payroll records. The Department has agreed to compensate the Contractor for the administrative costs incurred that are associated with this issue. This change order provides a method of payment to compensate the Contractor for these auditing costs. Since March 28, 2002, the DIR's determination that the Dredger-Operating Engineer wage rate shall apply to the workboat crews has been challenged, and is currently on hold. Pending resolution by DIR, additional costs for implementing the GPWR, if any, will be addressed in a supplement to this change order.

Approvals Required By:
- [x] Division of Construction, HQ
- [x] FHWA
- [x] District

Concurrence Required By:
- [ ] Design
- [ ] Maintenance
- [ ] _____

Discussed with persons noted below:

FHWA: NANCY BOBB, PRIOR APPROVAL	Date 6/20/03	Br. Design:	Date
District:	Date	Br. Geology:	Date
Other: JON TAPPING, CHIEF, TOLL BRIDGE	Date 9/9/04	Br. Maintenance:	Date

Estimated Cost: $39,410.00

Recommended Method of Payment:
- [ ] Contract Items
- [x] Agreed Price (LS or UP)
- [ ] Extra Work at Force Account
- [ ] Other:

Recommended Time Adjustment: 0 Working Days

Prior Approvals:
- [ ] This represents Prior Approval to proceed with the work.
- [x] This represents an acknowledgement that the individuals below are in concurrence with this change order, which requires Division of Construction approval before proceeding with the work.

Comments:

Douglas Coe, Resident Engineer	4-5-05 Date	Pete Siegenthaler, Principal Construction Engineer	4-12-05 Date
David Salladay, District Representative	4-5-05 Date	Patrick Treacy, Division of Construction	4/12/05 Date

DEPARTMENT OF TRANSPORTATION
DIVISION OF CONSTRUCTION
1120 N STREET
P. O. BOX 942874
SACRAMENTO, CA 94274-0001
PHONE (916) 654-2359
FAX (916) 654-6345
TTY (916) 653-4086

Flex your power!
Be energy efficient!

September 9, 2004

Mr. Marc Roberts
Roberts and Associates
1401 Centrelake Drive, Suite 430
Ontario, CA 91761

Dear Mr. Roberts:

We are in receipt of Westar Marine Services' (Westar) letter dated August 30, 2004 in which Westar requests assurances that the California Department of Transportation (Department) will authorize and execute contract change orders (CCOs) for all work performed by Westar which is ultimately found to be subject to any prevailing wage determinations on the various bridge jobs in the San Francisco Bay Area.

We trust the following response will assuage Westar's concern on this evolving prevailing wage issue. At the outset let me state that the Department has requested Department Industrial Relations (DIR) to review both the determination made on March 28, 2002 and the retroactive nature of that finding (affecting Richmond/San Rafael, Skyway, and the Benicia Bridge projects). As stated in your letter, it now appears that DIR will take longer to review the March 28th finding then was originally contemplated when the CCOs at Skyway and Benicia projects were held in abeyance pending a review. However, the Department believes that the DIR can make an immediate declaration as to the retroactive or non-retroactive application of the March 28, 2002 requirement. The Department has recently conveyed the Department's desire that this decision be made by DIR as soon as is practically possible. Please be advised that if DIR upholds the March 28, 2002 ruling and finds that it applies to retroactive projects, Caltrans is prepared to compensate Westar for all reasonable costs that Westar has and will incur as a result of complying with said determination.

We understand that Westar is a small company and that Westar has incurred added costs for the administrative efforts to implement the DIR ruling. As stated in our letter of June 28, 2004, the Department is prepared to compensate the Contractor for administrative costs incurred to date as a result of this issue.

5.03.1
49.051
5.18.1

RECEIVED
028167 SEP 24

Westar is encouraged to forward information/back-up on the costs sustained to the office of the Resident Engineer for review. We hope that this letter will help allay Westar's concerns on this issue.

Sincerely,

JON TAPPING
Chief
Office of Toll Bridges

cc: Cheryl Pirtle, Deputy Attorney Caltrans
Doug Coe, RE Caltrans
Mr. A. T. Skoro, KFM

49.051

STATE OF CALIFORNIA - DEPARTMENT OF TRANSPORTATION

CONTRACT CHANGE ORDER MEMORANDUM

TO: PETER SIEGENTHALER / DOUG COE, Supervising Br. Eng.	FILE: **E.A.** 04 - 012024
FROM: DOUG COE, Supervising Br. Eng.	**CO-RTE-PM** 04-SF,Ala-80-13.9/14.3,0.0/1.6 **FED. NO.** ACIM-080-1(085)8N
CCO#: **51** SUPPLEMENT#: **0** Category Code: **AXZZ**	CONTINGENCY BALANCE (incl. this change) **$56,914,012.69**
COST: **$53,398.00** INCREASE ☑ DECREASE ☐	HEADQUARTERS APPROVAL REQUIRED? ☐ YES ☑ NO
SUPPLEMENTAL FUNDS PROVIDED: **$0.00**	IS THIS REQUEST IN ACCORDANCE WITH ENVIRONMENTAL DOCUMENTS? ☑ YES ☐ NO
CCO DESCRIPTION: Westar Prevailing Wages	**PROJECT DESCRIPTION:** REPLACE SFOBB EAST SPAN

LOCATION: IN SAN FRANCISCO AND ALAMEDA COUNTIES IN SAN FRANCISCO AND OAKLAND FROM 1.3 KM EAST OF THE YERBA BUENA ISL

THIS CHANGE ORDER PROVIDES FOR:

requiring the Contractor to provide certified payroll records of Prevailing Wage payments for Westar Marine Services' crews operating construction area workboats.

This change order is needed to resolve the administrative costs incurred by the Contractor to audit Westar Marine Services' (Westar) Certified Payroll records as a result of implementing the General Prevailing Wage Rate (GPWR) for Dredger-Operating Engineer Craft as required by the California Department of Industrial Relations (DIR) for the SFOBB East Span Skyway, Bridge Nos. 34-0006L/R.

In a letter dated March 28, 2002, the DIR determined that the GPWR for the Dredger-Operating Engineer Craft shall apply to crews operating construction area workboats. At the time that contractors bid on the Toll Bridge Projects (in the years 1999 and 2001), prevailing wage rates were not required for work boat and tugboat operators.

The Department directed Westar (see below) to submit certified payroll records for all applicable work associated with the GPWR for the Dredger-Operating Engineer Craft performed on or after March 28, 2002. Upon receipt of the certified payrolls, the Department will verify the wage rates and provide compensation for the labor cost differential between the GPWR and the actual wages paid. After reviewing Legal's conclusions and recommendations, the Department determined this work to be extra work and indicated that a contract change order would be issued to compensate the contractor for the labor cost differential associated with the GPWR and the actual wages paid. The certified payroll records are needed by the Department to establish the labor cost differential.

On January 3, 2003, Henry Hon, District 4 Labor Compliance Officer (LCO), sent a letter to KFM requesting Westar's payroll records. Westar responded to the State by requesting permission to perform a self-audit. The Engineer, via STL No. 1373, dated March 24, 2003, denied Westar's request for a self-audit, but agreed to accept a spreadsheet containing the following information which summarizes the restitution amounts assessed for each employee: 1.) The number of hours each employee worked in a covered classification; 2.) The actual pay each employee received for that work; 3.) The applicable prevailing wage rate; and 4.) The difference between the actual wage paid and prevailing wage required. The Department agreed to compensate the Contractor for the administrative costs associated with complying with the DIR's March 28, 2002 GPWR determination.

In order to comply with the Engineer's request, Westar hired a consulting firm to perform an audit of their certified payroll records. The Contractor submitted an invoice with back-up information justifying the administrative costs incurred to audit Westar Marine Services Certified Payroll records for the period beginning April 1, 2003, and ending July 22, 2004. The audit costs include, but are not limited to, consultants' time to calculate the amounts owed to employees, the time to purchase and the cost of new prevailing-wage software, the time to create an interface between the new software and Westar's existing payroll company, and the time to manage the audit. In addition, the Contractor submitted an invoice with back-up information justifying the legal costs that were incurred by Westar as a result of the audit.

Pending resolution by DIR, additional costs for implementing the GPWR, if any, will be addressed in a supplement to this change order. STL No. 4904, dated June 29, 2004, advised the Contractor that the Department received written notification from the DIR indicating that the DIR is currently reviewing its March 28, 2002, ruling.

For providing an independent audit of Westar's certified payroll records, the Contractor agrees to accept the agreed lump sum amount of $39,410.00. This sum constitutes full compensation, including markups, for all administrative and legal costs associated with the audit. The method of payment will be Extra Work at Agreed Lump Sum. The Engineer has reviewed the audit costs submitted by the Contractor and agrees with the costs associated with the work performed. A copy of the costs

submitted by the Contractor and reviewed by the Engineer is on file in the project records.

A letter prepared by Mr. Jon Tapping, Chief, Office of Toll Bridges, dated September 9, 2004, provides concurrence with this change order. A copy of the letter signed by Mr. Tapping is attached.

Mr. Pete Siegenthaler, Principal Bridge Engineer for the SFOBB East Span Replacement, provided Prior Approval for this change order onApril 12, 2005. A copy of the prior approval signed by Mr. Siegenthaler is attached.

Concurrence from Maintenance is not required as this change order does not use Maintenance funds or affect Maintenance facilities or operations.

No time adjustment is warranted for this change as it does not affect the controlling operation.

CONCURRED BY:		
Construction Engineer:	Douglas Coe	Date 9-7-05
Bridge Engineer:	Douglas Coe	Date 9-7-05
FHWA Representative:		Date
Project Engineer:		Date
Other (specify):		Date
		Date
		Date
District Prior Approval By:	Pete Siegenthaler, Chief	Date4/12/2005
HQ (Issue Approve) By:		Date
Resident Engineer's Signature:		Date 9-7-05

ESTIMATE OF COST

	THIS REQUEST	TOTAL TO DATE
ITEMS	$0.00	$0.00
FORCE ACCOUNT	$0.00	$0.00
AGREED PRICE	$0.00	$0.00
ADJUSTMENT	$53,398.00	$53,398.00
TOTAL	$53,398.00	$53,398.00

FEDERAL PARTICIPATION

☑ PARTICIPATING ☐ PARTICIPATING IN PART ☐ NONE
☐ NON-PARTICIPATING (MAINTENANCE) ☐ NON-PARTICIPATING

FEDERAL SEGREGATION (if more than one Funding Source or P.I.P. type)
☑ CCO FUNDED PER CONTRACT ☐ CCO FUNDED AS FOLLOWS

FEDERAL FUNDING SOURCE	PERCENT

STATE OF CALIFORNIA - DEPARTMENT OF TRANSPORTATION

CONTRACT CHANGE ORDER

Change Requested by: Engineer

CCO: 51 | Suppl. No. 1 | Contract No. 04 - 012024 | Road 04-SF,Ala-80-13.9/14.3,0.0/1.6 | FED. AID LOC.: ACIM-080-1(085)8N

To: KIEWIT / FCI / MANSON a JV

You are directed to make the following changes from the plans and specifications or do the following described work not included in the plans and specifications for this contract. ***NOTE: This change order is not effective until approved by the Engineer.***

Description of work to be done, estimate of quantities and prices to be paid. (Segregate between additional work at contract price, agreed price and force account.) Unless otherwise stated, rates for rental of equipment cover only such time as equipment is actually used and no allowance will be made for idle time. This last percentage shown is the net accumulated increase or decrease from the original

Adjustment of Compensation at Lump Sum:

Provide compensation to Westar Marine Services' (Westar) for complying with tugboat prevailing wage determinations from January 1, 2008, until the end of the project, including administrative costs, for the SFOBB East Span Skyway, Bridge Nos. 34-0006L/R.

For the differential wage and additional administrative costs the Contractor agrees to accept an agreed lump sum amount of $2,002.88. This agreed lump sum constitutes full compensation for all costs, including markups, all direct and indirect costs, all associated project impacts, and all overhead costs.

Adjustment of Compensation at Agreed Lump Sum $2,002.88

Estimated Cost: Increase ☑ Decrease ☐ $2,002.88

By reason of this order the time of completion will be adjusted as follows: 0 days

Submitted by

Signature	Resident Engineer	Date
	DOUG COE, Supervising Br. Eng.	2-19-08

Approval Recommended by

Signature	Construction Engineer	Date
	DOUG COE	2-19-08

Engineer Approval by

Signature	Construction Manager	Date
Michael Forner	MIKE FORNER	3-7-08

We the undersigned contractor, have given careful consideration to the change proposed and agree, if this proposal is approved, that we will provide all equipment, furnish the materials, except as may otherwise be noted above, and perform all services necessary for the work above specified, and will accept as full payment therefor the prices shown above.

NOTE: If you, the contractor, do not sign acceptance of this order, your attention is directed to the requirements of the specifications as to proceeding with the ordered work and filing a written protest within the time therein specified.

Contractor Acceptance by

Signature	(Print name and title)	Date
	Lee Fink Project Director	3/5/08

STATE OF CALIFORNIA - DEPARTMENT OF TRANSPORTATION

CONTRACT CHANGE ORDER MEMORANDUM

TO: MICHAEL FORNER / DOUG COE, Supervising Br. Eng.

FROM: DOUG COE, Supervising Br. Eng.

FILE: E.A. 04 - 012024
CO-RTE-PM 04-SF,Ala-80-13.9/14.3,0.0/1.6
FED. NO. ACIM-080-1(085)8N

CCO# 51 SUPPLEMENT#: 1 Category Cod **AXZZ**

CONTINGENCY BALANCE (incl. this change **$2,240,811.95**

COST: **$2,002.88** INCREASE ☑ DECREASE ☐

HEADQUARTERS APPROVAL REQUIRED? ☐ YES ☑ NO

SUPPLEMENTAL FUNDS PROVIDED: **$0.00**

IS THIS REQUEST IN ACCORDANCE WITH ENVIRONMENTAL DOCUMENTS? ☑ YES ☐ NO

CCO DESCRIPTION:
Funds for Westar Prev. Wage Compensation

PROJECT DESCRIPTION:
REPLACE SFOBB EAST SPAN

Original Contract Time:	Time Adj. This Change:	Previously Approved CCO Time Adjustments:	Percentage Time Adjusted: (including this change)	Total # of Unreconciled Deferred Time CCO(s): (including this change)
1000 Day(s)	0 Day(s)	424 Day(s)	42 %	7

THIS CHANGE ORDER PROVIDES FOR:
compensating Westar Marine Services' (Westar) for complying with tugboat prevailing wage determinations from January 1, 2008, until the end of the project, including administrative costs, for the SFOBB East Span Skyway, Bridge Nos. 34-0006L/R.

The Department settled a class action lawsuit in which the marine subcontractor's employees sought compensation for the overtime pay on the Skyway Project. The union pay scale did not provide for the payment of overtime at the legal rate. The settlement covered the period from start of work until December 31, 2007. Additional overtime costs for workboat crews were incurred by Westar Marine Services after December 31, 2007. This Contract Change Order will cover the additional labor costs for overtime and any administrative costs incurred between January 1, 2008 and acceptance of the Skyway Project

For compensating Westar, the Contractor agrees to accept the agreed lump sum amount of $2,002.88. This sum constitutes full compensation, including markups, for all administrative and legal costs associated with this issue. The method of payment will be Adjustment of Compensation at Agreed Lump Sum.

An analysis of the Contractor's proposal is on file with the project records and it has been found to be fair and reasonable based on a force account analysis.

Prior approval was obtained from Mr. Doug Coe, Supervising Bridge Engineer, on February 4, 2008. A copy of the prior approval is attached.

FHWA Prior approval is not required, as this is a minor change order.

Design concurrence is not required as this change does not affect the design.

Concurrence from Maintenance is not required as this change does not use maintenance funds or affect maintenance facilities or operations.

No time adjustment is warranted for this change as it does not affect the controlling operation.

RECEIVED
068028 MAR 24 08

ADA Notice: For individuals with sensory disabilities, this document is available in alternate formats. For information call: (916) 654-6410 or TDD (916) 654-3880 or write Records and Forms Management, 1120 N Street, MS-89, Sacramento, CA 95814.

CONCURRED BY:

Construction Engineer:	Douglas Coe DJC	Date 2-19-08	
Bridge Engineer:	Douglas Coe DJC	Date 2-19-08	
Project Engineer:		Date	
Project Manager:		Date	
FHWA Rep.:		Date	
Environmental:		Date	
Other (specify):		Date	
Other (specify):		Date	
District Prior Approval By:	Douglas Coe	Date	2/4/08
HQ (Issue Approve) By:		Date	
Resident Engineer's Signature:	Douglas Coe 2-19-08	Date	

ESTIMATE OF COST

	THIS REQUEST	TOTAL TO DATE
ITEMS	$0.00	$0.00
FORCE ACCOUNT	$0.00	$0.00
AGREED PRICE	$0.00	$0.00
ADJUSTMENT	$2,002.88	$55,400.88
TOTAL	$2,002.88	$55,400.88

FEDERAL PARTICIPATION

☑ PARTICIPATING ☐ PARTICIPATING IN PART ☐ NONE
☐ NON-PARTICIPATING (MAINTENANCE) ☐ NON-PARTICIPATING

FEDERAL SEGREGATION (if more than one Funding Source or P.I.P. type)
☑ CCO FUNDED PER CONTRACT ☐ CCO FUNDED AS FOLLOWS

FEDERAL FUNDING SOURCE PERCENT

ADA Notice: For individuals with sensory disabilities, this document is available in alternate formats. For information call: (916) 654-6410 or TDD (916) 654-3880 or write Records and Forms Management, 1120 N Street, MS-89, Sacramento, CA 95814.

CONTRACT CHANGE ORDER

Change Requested by: Engineer

CCO: 52	Suppl. No. 0	Contract No. 04 - 012024	Road 04-SF,Ala-80-13.9/14.3,0.0/1.6	FED. AID LOC.: ACIM-080-1(085)8N

To: **KIEWIT / FCI / MANSON a JV**

You are directed to make the following changes from the plans and specifications or do the following described work not included in the plans and specifications for this contract. ***NOTE: This change order is not effective until approved by the Engineer.***

Description of work to be done, estimate of quantities and prices to be paid. (Segregate between additional work at contract price, agreed price and force account.) Unless otherwise stated, rates for rental of equipment cover only such time as equipment is actually used and no allowance will be made for idle time. This last percentage shown is the net accumulated increase or decrease from the original quantity in the Engineer's Estimate.

Adjustment of Compensation at Lump Sum:

Furnish and install additional reinforcement at the bottom span tendons and the revised locations for future tendon deviator blocks for the SFOBB East Span Skyway, Bridge Nos. 34-0006L/R, as shown on revised plan sheets 537R2, 538R2, 539R2, 540R2, 541R3, 542R2, 543R2, 544R2, 545R2, 546R2, 547R2, 548R3, 549R3, 550R3, 551R2, 552R2, 553R2, 554R2, 555R2, 556R2, 557R2, 558R2, 559R2, 560R2, 561R2, 562R3, 563R3, 564R3, 683R2, 684R2, 693R2, 694R2, 709R2 and 710R2 of 978 as shown on pages 2 to 35 of this change order.

Furnish all labor, materials, tools, equipment and incidentals to construct the additional concrete work for the expanded anchor blocks, as shown on revised sheets SK-RFI 377-1, SK-RFI 377-2R1, SK-RFI 377-3R1, SK-RFI 377-4R1, SK-RFI 377-5, SK-RFI 377-6R1, SK-RFI 377-7R1, SK-RFI 377-8R1, SK-RFI 377-9R1, SK-RFI 377-10R1, SK-RFI 377-11,SK-RFI 377-12, SK-RFI 377-13R1 and SK-RFI 377-14 as shown on pages 36 to 49 of this change order.

For this work, the Contractor shall accept the agreed lump sum payment of $92,244.00. This sum constitutes full and complete compensation for providing all labor, material, equipment, tools and incidentals, including markups, for all direct and indirect costs, and all associated project impacts for this work.

No adjustment of contract time is warranted, as this change does not affect the controlling operation.

Estimated cost of Adjustment of Compensation at Lump Sum $92,244.00

Estimated Cost: **Increase** ☑ **Decrease** ☐ **$92,244.00**

By reason of this order the time of completion will be adjusted as follows: 0 days

Submitted by

Signature	Resident Engineer: DOUG COE, Supervising Br. Eng.	Date 3-8-05

Approval Recommended by

Signature	Construction Engineer: DOUG COE, Supervising Br. Eng.	Date 3-9-05

Engineer Approval by

Signature	(Print name and title) for PETER SIEGENTHALER - Chief	Date 3-25-05

We the undersigned contractor, have given careful consideration to the change proposed and agree, if this proposal is approved, that we will provide all equipment, furnish the materials, except as may otherwise be noted above, and perform all services necessary for the work above specified, and will accept as full payment therefor the prices shown above.

NOTE: If you, the contractor, do not sign acceptance of this order, your attention is directed to the requirements of the specifications as to proceeding with the ordered work and filing a written protest within the time therein specified.

Contractor Acceptance by

Signature	(Print name and title) DEPUTY PROJ. DIRECTOR	Date 3-18-05

CONCURRED BY:		
Construction Engineer:	Douglas Coe	Date 3-5-05
Bridge Engineer:	Douglas Coe	Date 3-5-05
FHWA Representative:		Date
Project Engineer:	Structures: Hasan El-Natur	Date 8/6/2003
Other (specify). Senior Bridge Engineer: David Wu		Date 2/15/2005
		Date
		Date
District Prior Approval By		Date
HQ (Issue Approval) By:		Date
Resident Engineer's Signature:		Date 3-5-05

ESTIMATE OF COST

	THIS REQUEST	TOTAL TO DATE
ITEMS	$0.00	$0.00
FORCE ACCOUNT	$0.00	$0.00
AGREED PRICE	$0.00	$0.00
ADJUSTMENT	$92,244.00	$92,244.00
TOTAL	$92,244.00	$92,244.00

FEDERAL PARTICIPATION

☑ PARTICIPATING ☐ PARTICIPATING IN PART ☐ NONE
☐ NON-PARTICIPATING (MAINTENANCE) ☐ NON-PARTICIPATING

FEDERAL SEGREGATION (if more than one Funding Source or P & P type)
☑ CCO FUNDED PER CONTRACT ☐ CCO FUNDED AS FOLLOWS

FEDERAL FUNDING SOURCE	PERCENT

1. For prestressing notes, see "Prestressing Notes" sheet.
2. For cantilever tendon layout, see "Cantilever Tendon Layout" sheets.
3. For top span tendon layout, see "Top Span Tenaon Layout" sheets.
4. For bottom span tendon layout, see "*Bottom* Span Tendon Layout" sheets.
5. For continuity tendon layout, see "Continuity Tendon Layout" sheets.
6. For transverse tendons layout, see "Transverse Tendon Details" sheets.
7. For vertical PT layout, see "Vertical PT Details" sheets.
8. For girder reinforcement, see "Girder RRinforcement" sheets.
9. Key to segment nomenclature: 1 E or W
   Segment No. — East or West
10. For web manhole details, see "Miscellaneous Details" sheets.
11. For deck manhole details, see (87-11).
12. For girder interior walkway layout, see "Road Plans".
13. For Preformed Loop Detector details, see "Road Plans".
14. Orientation of diaphragm and precast panel rib shall be normal to "W" Line.
15. For dimensions not shown, see "Typical Sections" sheets.

MARK	DATE	DESCRIPTIONS	BY	CH'D
4	07/25/03	REVISE WEB MANHOLE LOCATIONS	MR	JC
3	07/25/03	REVISE PIER TABLE BOTTOM SLAB ACCESS OPENING	MR	JC
2	01/20/03	REVISE FUTURE TENDON DEV BLOCK LOCATION	MR	JC
1	01/20/03	REVISE DRAIN LOCATIONS	MR	SS

REVISIONS

CONTRACT CHANGE ORDER NO. 52
SHEET 2 OF 49

			TOTAL PROJECT	NO.	SHEETS
04	SF,Ala	80	13.9/14.3, 0.0/1.6	537R2	978

REGISTERED ENGINEER - CIVIL
6-4-01
PLANS APPROVAL DATE
Scott Hunter No. C 048066 Exp. 12/31/03 CIVIL STATE OF CALIFORNIA
The State of California or its officers or agents shall not be responsible for the accuracy or completeness of electronic copies of this plan sheet.

T.Y. LIN / MOFFATT & NICHOL
825 BATTERY STREET
SAN FRANCISCO, CA 94111

Caltrans now has a web site! To get to the web site, go to: http://www.dot.ca.gov

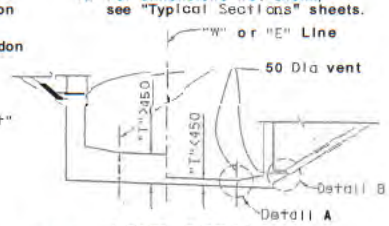

VENT DETAIL
1:100

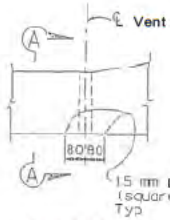

DETAIL A
1:10

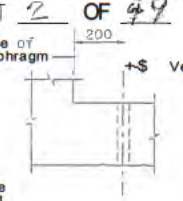

SECTION A-A
1:10

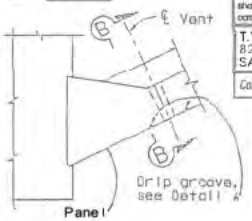

DETAIL B
1:10

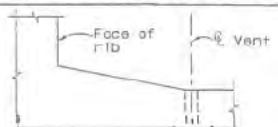

SECTION B-B
1:10

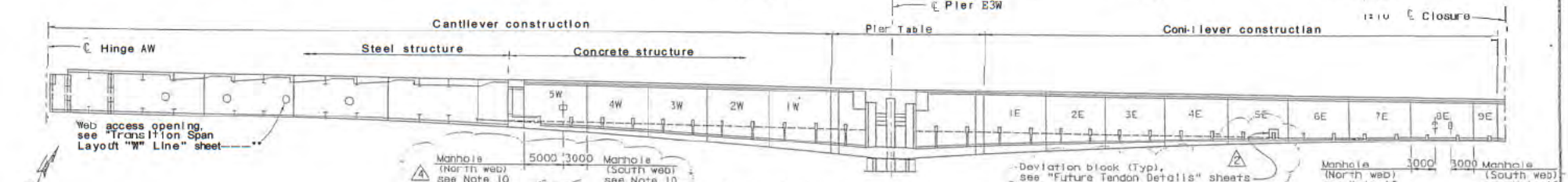

DEVELOPED LONGITUDINAL SECTION
1:250

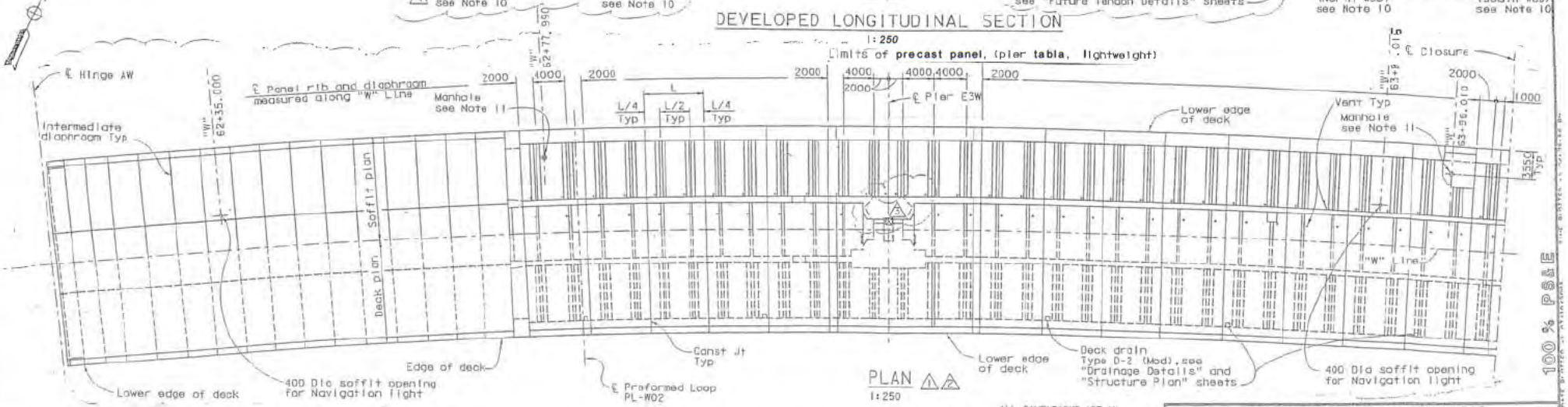

PLAN
1:250

ALL DIMENSIONS ARE IN MILLIMETERS UNLESS OTHERWISE SHOWN

100 % PS&E

DESIGN OVERSIGHT 8/6/2003
SIGN OFF DATE

DESIGN	S. Hunter	CHECKED	M. Lamont
DETAILS	A. Lishansky	CHECKED	M. Lamont
SHEETS	K. Cormier	CHECKED	S. Shi

PREPARED FOR THE STATE OF CALIFORNIA DEPARTMENT OF TRANSPORTATION

Sajid Abbas
PROJECT ENGINEER

BRIDGE NO. 34-0006L/R
KILOMETER POST 13.9/14.3, 0.0/1.6

CU 04
EA 012021

DISREGARD PRINTS BEARING EARLIER REVISION DATES

SAN FRANCISCO OAKLAND BAY BRIDGE
EAST SPAN SEISMIC SAFETY PROJECT

SKYWAY STRUCTURES

GIRDER LAYOUT E3W

ORIGINAL SCALE-MM-MILLIMETERS FOR REDUCED PLANS 0 10 20 30 40 50 60 70 80 90 100

NOTES:

1. For notes, see "Girder Layout E3W" sheet.
2. For vent details, see "Girder Layout E3W" sheet.
3. Key to segment nomenclature: 1 E or W

   Segment No. — East or West

4. For web manhole details, see "Miscellaneous Details" sheets.
5. For deck manhole details, see B7-11.
6. Orientation of diaphragm and precast panel rib shall be normal to "W" Line.

MARK	DATE	DESCRIPTIONS	BY	CH'D	CC =
3	01/25/03	REVISE PIER TABLE BOTTOM SLAB ACCESS OPENING	MR	JC	74
2	01/20/03	REVISE FUTURE TENDON DEV BLOCK LOCATION	MR	JC	52
1	01/20/03	REVISE DRAIN LOCATIONS	MR	SS	28

REVISIONS

CONTRACT CHANGE ORDER NO. It-57

SHEET 3 OF 49

DIST.	COUNTY	ROUTE	KILOMETER POST TOTAL PROJECT	SHEET NO.	TOTAL SHEETS
04	SF, Ala	80	13.9/14.3, 0.0/1.6	538R2	978

Caltrans Metric

REGISTERED ENGINEER - CIVIL

6-4-01

PLANS APPROVAL DATE

The State of California or its officers or agents shall not be responsible for the accuracy or completeness of electronic copies of this plan sheet.

REGISTERED PROFESSIONAL ENGINEER Scott Hunter No. C 048066 Exp. 12/31/03 CIVIL STATE OF CALIFORNIA

T.Y. LIN / MOFFATT & NICHOL
825 BATTERY STREET
SAN FRANCISCO, CA 94111

Caltrans now has a web site! Travel to the web site, go to: http://www.dot.ca.gov

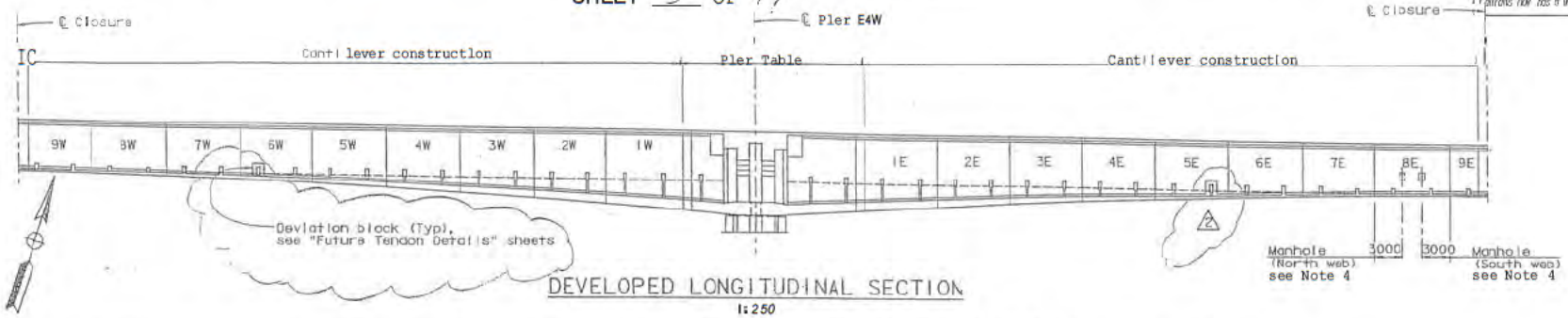

DEVELOPED LONGITUDINAL SECTION

1:250

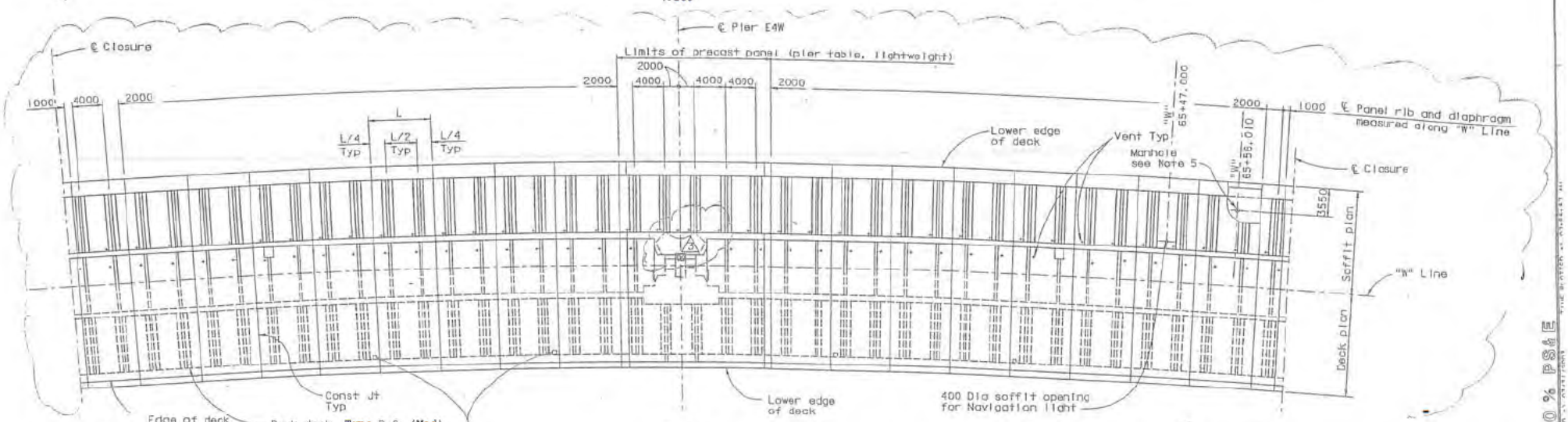

PLAN 1 2

1:250

ALL DIMENSIONS ARE IN MILLIMETERS UNLESS OTHERWISE SHOWN

DESIGN OVERSIGHT — SIGNOFF DATE 8/6/2003

DESIGN	S. Hunter	CHECKED	N. Lanant
DETAILS	A. Lichonsky	CHECKED	N. Lanant
QUANTITIES	K. Cornier	CHECKED	S. Shi

PREPARED FOR THE STATE OF CALIFORNIA DEPARTMENT OF TRANSPORTATION

Sajid Abbas, PROJECT ENGINEER

BRIDGE NO. 34-0006L/R

KILOMETER POST 13.9/14.3, 0.0/1.6

SAN FRANCISCO OAKLAND BAY BRIDGE
EAST SPAN SEISMIC SAFETY PROJECT

SKYWAY STRUCTURES

GIRDER LAYOUT E4W

Rev. Date: 5-19-03

ORIGINAL SCALE IN MILLIMETERS FOR REDUCED PLANS 0 10 20 30 40 50 60 70 80 90 100

CU 04
EA 012021

DISREGARD PRINTS BEARING EARLIER REVISION DATES

REVISION DATES - PRELIMINARY ENGINEERING

SHEET 106

100 % PS&E

DIST.	COUNTY	ROUTE	KILOMETER POST TOTAL PROJECT	SHEET NO.	TOTAL SHEETS
04	SF, Ala	80	13.9/14.3, 0.0/1.6	539R2	978

REGISTERED ENGINEER - CIVIL

6-4-01
PLANS APPROVAL DATE

The State of California or its officers or agents shall not be responsible for the accuracy or completeness of electronic copies of this plan sheet.

T.Y. LIN / MOFFATT & NICHOL
825 BATTERY STREET
SAN FRANCISCO, CA 94111

Caltrans now has a web site! To get to the web site go to: http://www.dot.ca.gov

NOTES:

1. For notes, see "Girder Layout E3W" sheet.
2. For vent details, see "Girder Layout E3W" sheet.
3. Key to segment nomenclature: 1 E or W
   Segment No. — East or West
4. For web manhole details, see "Miscellaneous Details" sheets.
5. For ∅ of manhole ∅ + lls see B7-11.
6. Orientation of diaphragm and precast panel rib shall be normal to "W" Line.

MARK	DATE	DESCRIPTIONS	BY	CH'D
3	07/25/03	REVISE PIER TABLE BOTTOM SLAB ACCESS OPENING	MR	JC
2	01/20/03	REVISE FUTURE TENDON DEV BLOCK LOCATION	MR	JC
1	01/20/03	REVISE DRAIN LOCATIONS	MR	SS

REVISIONS

CONTRACT CHANGE ORDER NO. 53
SHEET 4 OF 49

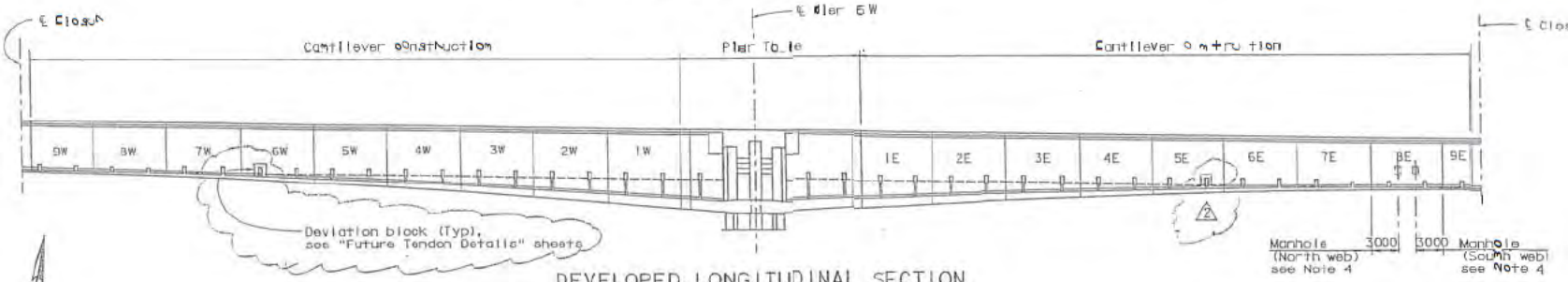

DEVELOPED LONGITUDINAL SECTION
1:250

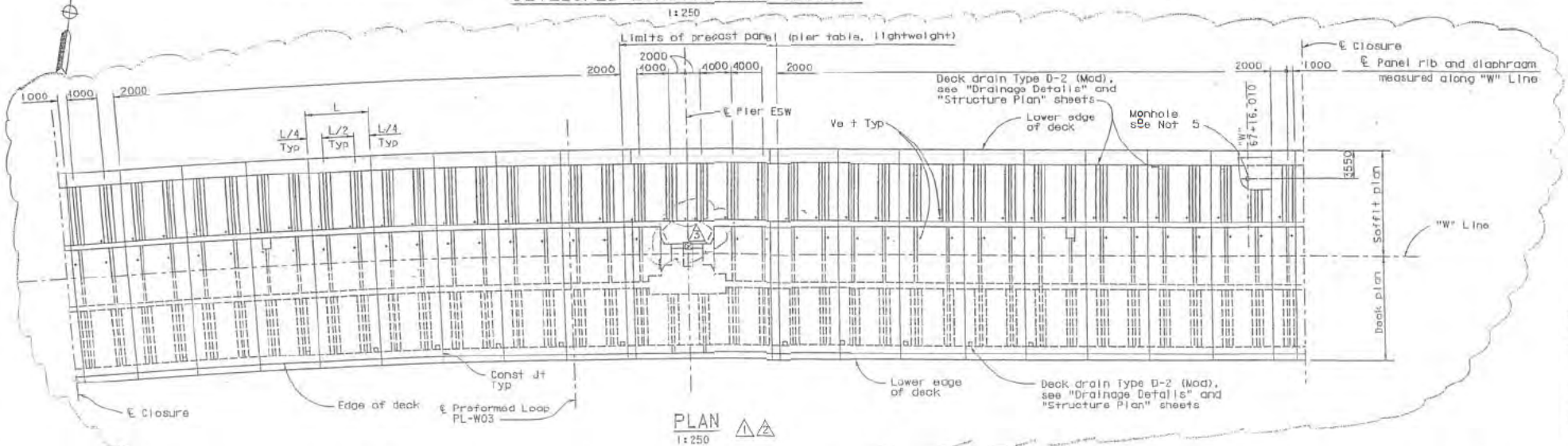

PLAN
1:250

ALL DIMENSIONS ARE IN MILLIMETERS UNLESS OTHERWISE SHOWN

SAN FRANCISCO OAKLAND BAY BRIDGE
EAST SPAN SEISMIC SAFETY PROJECT

SKYWAY STRUCTURES
GIRDER LAYOUT E5W

DESIGN OVERSIGHT 8/6/2003
SIGN OFF DATE

DESIGN	S. Hunter	CHECKED	M. Lamont
DETAILS	A. Lisbonsky	CHECKED	M. Lamont
QUANTITIES	R. Cormier	CHECKED	S. Shi

PREPARED FOR THE STATE OF CALIFORNIA DEPARTMENT OF TRANSPORTATION

Sajid Abbas
PROJECT ENGINEER

BRIDGE NO. 34-0006L/R
KILOMETER POST 13.9/14.3, 0.0/1.6

CU 04

DISCARD PRINTS BEARING EARLIER REVISION DATES

REVISION DATES (PRELIMINARY STAGE ONLY)

Rev. Date: 5-16-00

ORIGINAL SCALE IN MILLIMETERS FOR REDUCED PLANS

100 % PS&E

NOTES:

1. For notes, see "Girder Layout E3W" sheet.
2. For vent details, see "Girder Layout E3W" sheet.
3. Key to segment nomenclature: 1 E or W
   Segment No. — East or West
4. For web manhole details, see "Miscellaneous Details" sheets.
5. For deck manhole details, see 37-11.
6. Orientation of diaphragm and precast panel rib shall be normal to "W" Line.

MARK	DATE	DESCRIPTIONS	BY	CH'D
4	01/25/03	REVISE WEB MANHOLE LOCATIONS	MR	JC
3	01/25/03	REVISE PIER TABLE BOTTOM SLAB ACCESS OPENING	MR	JC
2	01/20/03	REVISE FUTURE TENDON DEV BLOCK LOCATION	MR	JC
1	01/20/03	REVISE DRAIN LOCATIONS	MR	SS

REVISIONS

CONTRACT CHANGE ORDER NO. 52
SHEET 5 OF 49

04	SF, Ala	80	13.9/14.3, 0.0/1.6	540R2 976

REGISTERED ENGINEER - CIVIL
6-4-01
PLANS APPROVAL DATE
Scott Hunter No. C 048066 Exp. 12/31/03 CIVIL STATE OF CALIFORNIA
The State of California or its officers or agents shall not be responsible for the accuracy or completeness of electronic copies of this print sheet.

T.Y. LIN / MOFFATT & NICHOL
825 BATTERY STREET
SAN FRANCISCO, CA 94111

Caltrans now has a web site! To get to the web site, go to: http://www.dot.ca.gov

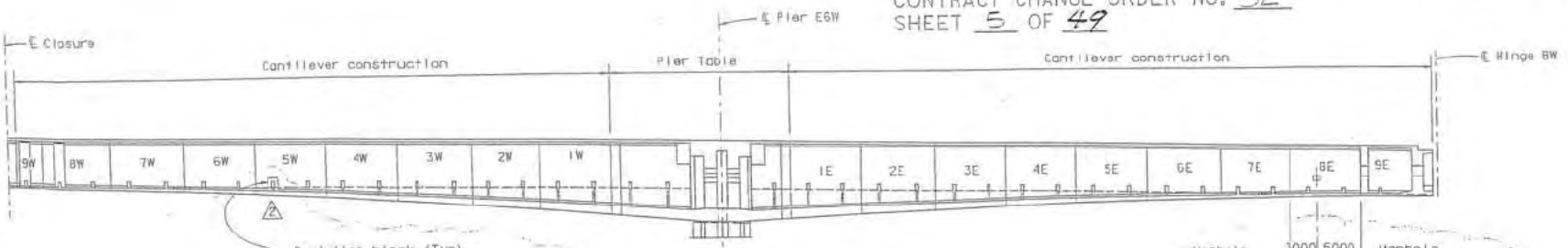

LONGITUDINAL SECTION
1:250

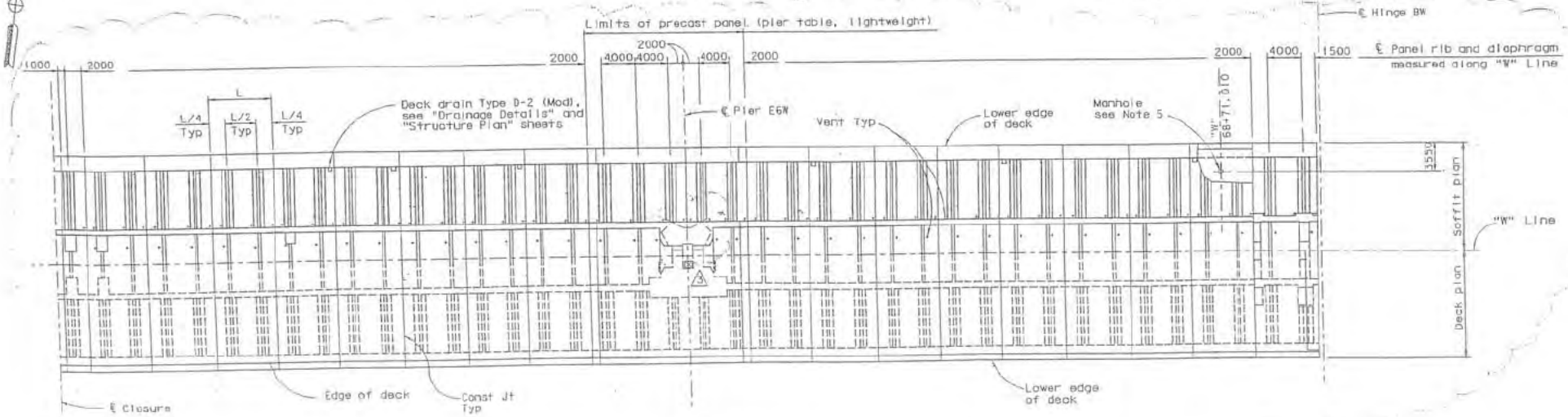

PLAN
1:250

ALL DIMENSIONS ARE IN MILLIMETERS UNLESS OTHERWISE SHOWN

SAN FRANCISCO OAKLAND BAY BRIDGE
EAST SPAN SEISMIC SAFETY PROJECT

SKYWAY STRUCTURES
GIRDER LAYOUT E6W

DESIGN OVERSIGHT 8/6/2003
SIGN OFF DATE

DESIGN	S. Hunter	CHECKED	M. Lamont
DETAILS	A. Lishonsky	CHECKED	M. Lamont
QUANTITIES	X. Cormier	CHECKED	J. Shi

PREPARED FOR THE STATE OF CALIFORNIA DEPARTMENT OF TRANSPORTATION

Salid Abdas
PROJECT ENGINEER

BRIDGE NO. 34-0006L/R
KILOMETER POST 13.9/14.3, 0.0/1.6

CU 04
EA 012021

DISREGARD PRINTS BEARING EARLIER REVISION DATES

SHEET 108

100% PS&E

DIST	COUNTY	ROUTE	KILOMETER POST TOTAL PROJECT	SHEET NO.	TOTAL SHEETS
04	SF/Alc	80	13.9/14.3, 0.0/1.6	541R3	978

REGISTERED ENGINEER - CIVIL

6-4-01

PLANS APPROVAL DATE

PROFESSIONAL ENGINEER Sajid Abbas No. C 055274 Exp. 12/31/04 CIVIL STATE OF CALIFORNIA

The State of California or its officers or agents shall not be responsible for the accuracy or completeness of electronic copies of this plan sheet.

T.Y. LIN / MOFFATT & NICHOL
825 BATTERY STREET
SAN FRANCISCO, CA 94111

Caltrans now has a web site! To get to the web site, go to: http://www.dot.ca.gov

NOTES:

1. For notes, see "Girder Layout E3W" sheet.
2. For vent details, see "Girder Layout E3W" sheet.
3. Key to segment nomenclature: 1 E or W

   Segment No. — East or West

4. For deck manhole details, see (BT-11).
5. Orientation of diaphragm and precast panel rib shall be normal to "W" Line.
6. For steel grating detail, see "Miscellaneous Details" sheets.

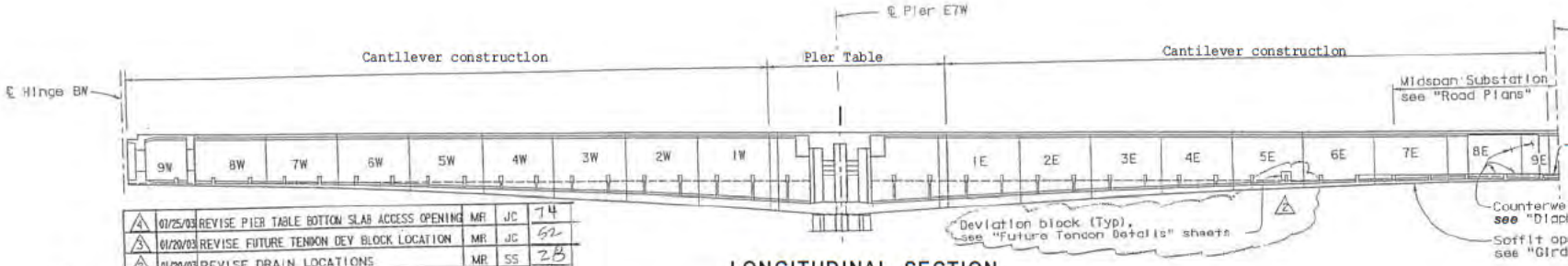

MARK	DATE	DESCRIPTIONS	BY	CH'D	CCB
4	01/25/03	REVISE PIER TABLE BOTTOM SLAB ACCESS OPENING	MR	JC	74
3	01/20/03	REVISE FUTURE TENDON DEV BLOCK LOCATION	MR	JC	62
2	01/20/03	REVISE DRAIN LOCATIONS	MR	SS	28
1	03/04/02	REVISE CALLOUT	TM	SC	9

REVISIONS

CONTRACT CHANGE ORDER NO. 52
SHEET 6 OF 49

LONGITUDINAL SECTION

1:250

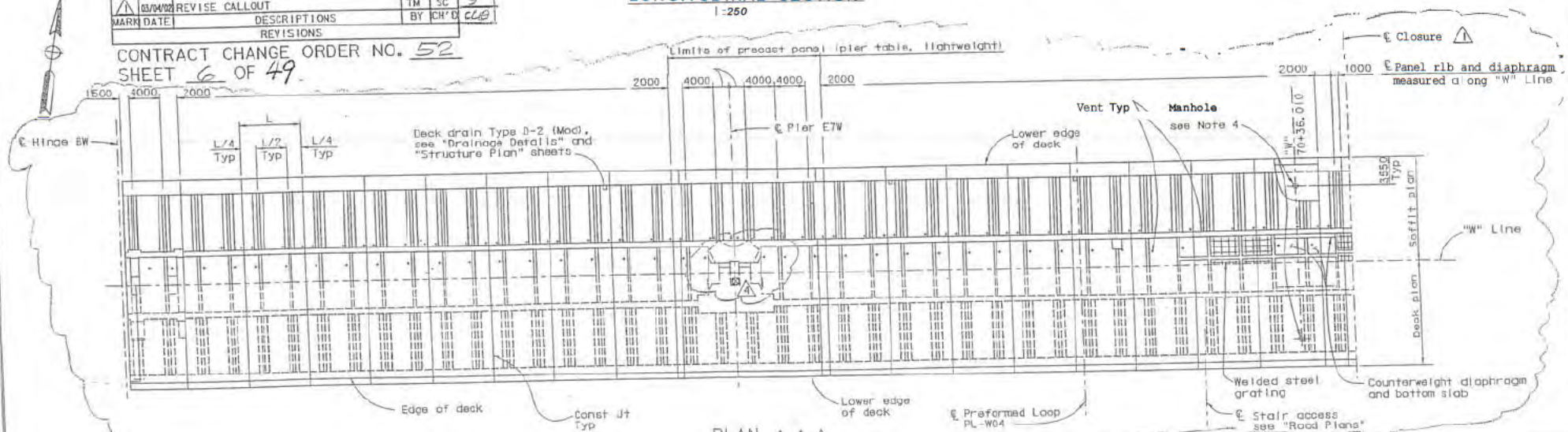

PLAN

1:250

ALL DIMENSIONS ARE IN MILLIMETERS UNLESS OTHERWISE SHOWN

SAN FRANCISCO OAKLAND BAY BRIDGE
EAST SPAN SEISMIC SAFETY PROJECT

SKYWAY STRUCTURES

GIRDER LAYOUT E7W

DESIGN	S. Abbas	W. Lamont	
DETAILS	A. Lisnanski	W. Lamont	
QUANTITIES	E. Corsler	S. Shi	

PREPARED FOR THE STATE OF CALIFORNIA DEPARTMENT OF TRANSPORTATION

Sajid Abbas
PROJECT ENGINEER

BRIDGE NO. 34-0006L/R
KILOMETER POST 13.9/14.3, 0.0/1.6

CU 04
EA 04-012021

DESIGN VERSION 8/6/2003

SIGN OFF DATE

DISREGARD PRINTS BEARING EARLIER REVISION DATES

REVISION DATES (PRELIMINARY STAGE ONLY)

SHEET 109

100 % PS&E

DIST.	COUNTY	ROUTE	KILOMETER POST TOTAL PROJECT	SHEET NO.	TOTAL SHEETS
04	SF, Ala	80	13.9 / 14.3 0.0 / 1.6	642R2	978

REGISTERED ENGINEER - CIVIL

6-4-01

PLANS APPROVAL DATE

CIVIL

The State of California or its officers or agents shall not be responsible for the accuracy or completeness of electronic copies of this print sheet.

T.Y. LIN / MOFFATT & NICHOL
825 BATTERY STREET
SAN FRANCISCO, CA 94111

Caltrans now has a web site! To get to the web site, go to: http://www.dot.ca.gov

NOTES:

1. For notes, see "Girder Layout E3W" sheet.
2. For vent details, see "Girder Layout E3W" sheet.
3. Key to segment nomenclature: E or W — East or West; Segment No.
4. For web manhole details, see "Miscellaneous Details" sheets.
5. For deck manhole details, see (B7-11).
6. Orientation of diaphragm and precast panel rib shall be normal to "W" Line.
7. For steel grating detail, see "Miscellaneous Details" sheets.

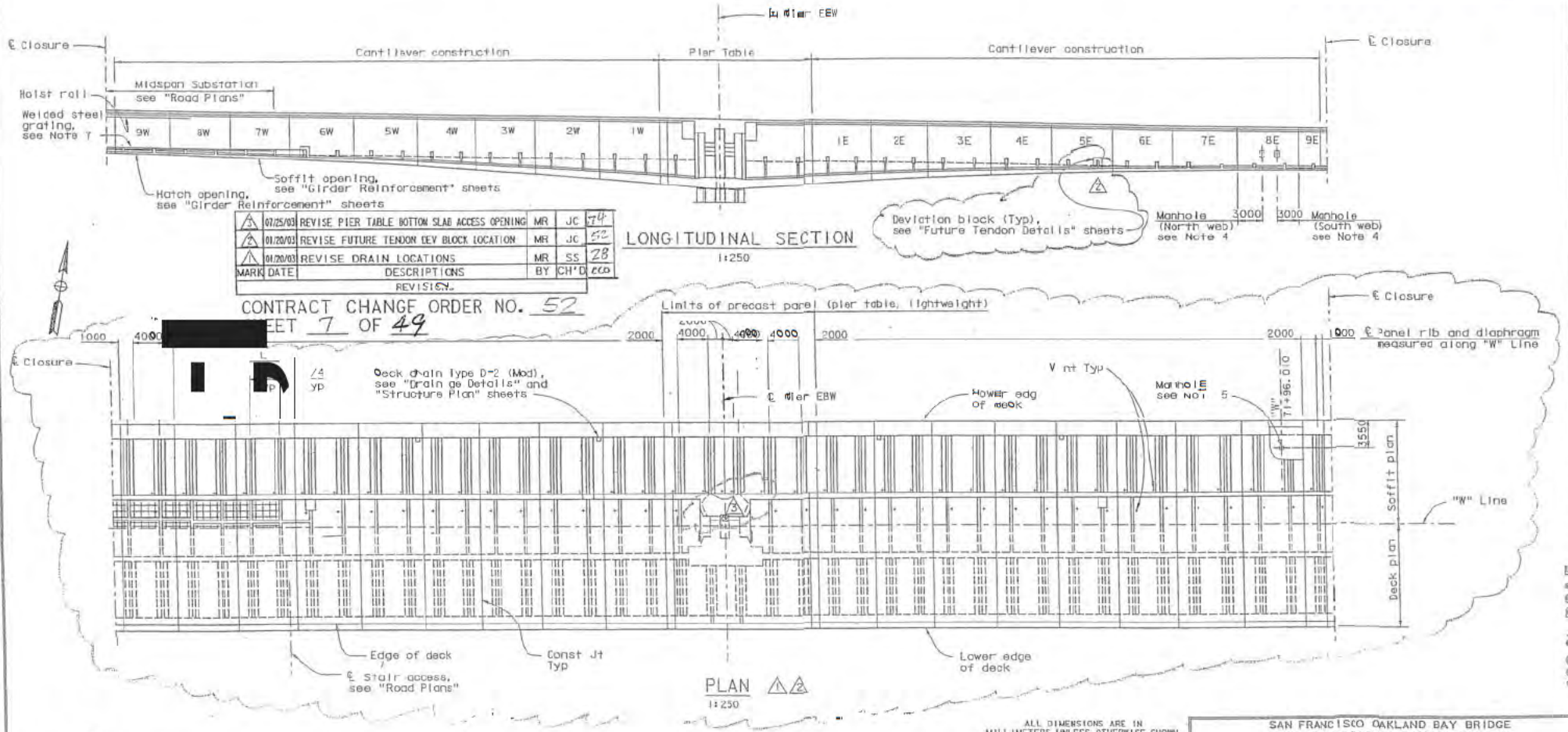

MARK	DATE	DESCRIPTIONS	BY	CH'D	ECO
3	07/25/03	REVISE PIER TABLE BOTTOM SLAB ACCESS OPENING	MR	JC	74
2	01/20/03	REVISE FUTURE TENDON DEV BLOCK LOCATION	MR	JC	52
1	01/20/03	REVISE DRAIN LOCATIONS	MR	SS	28

REVISION

CONTRACT CHANGE ORDER NO. 52

SHEET 7 OF 49

ALL DIMENSIONS ARE IN MILLIMETERS UNLESS OTHERWISE SHOWN

SAN FRANCISCO OAKLAND BAY BRIDGE
EAST SPAN SEISMIC SAFETY PROJECT

SKYWAY STRUCTURES

GIRDER LAYOUT E8W

DESIGN OVERSIGHT — SIGN OFF DATE 8/16/2002

DESIGN	BY S. Hunter	CHECKED M. Lamont	
DETAILS	BY A. Lishansky	CHECKED M. Lamont	
QUANTITIES	BY K. Conzler	CHECKED S. Shi	

PREPARED FOR THE STATE OF CALIFORNIA DEPARTMENT OF TRANSPORTATION

Sajid Abbas
PROJECT ENGINEER

BRIDGE NO. 34-0006L/R

KILOMETER POST 13.9/14.3, 0.0/1.6

CU 04
EA 012021

DISREGARD PRINTS BEARING EARLIER REVISION DATES

REVISION DATE (PRELIMINARY STAGE ONLY)

SHEET 110

ORIGINAL SCALE IN MILLIMETERS FOR REDUCED PLANS 0 10 20 30 40 50 60 70 80 90 100

100% P&E

NOTES:

1. For notes, see "Girder Layout E3W" sheet.
2. For vent details, see "Girder Layout E3W" sheet.
3. Key to segment nomenclature: E or W (East or West); Segment No.
4. For web manhole details, see "Miscellaneous Details" sheets.
5. For deck manhole details, see BT-11.
6. Orientation of diaphragm and precast panel rib shall be normal to "W" Line.

MARK	DATE	DESCRIPTIONS	BY	CH'D
3	01/25/03	REVISE PIER TABLE BOTTOM SLAB ACCESS OPENING	MR	JC
2	01/20/03	REVISE FUTURE TENDON DEV BLOCK LOCATION	MR	JC
1	01/20/03	REVISE DRAIN LOCATIONS	MR	SS

REVISIONS

CONTRACT CHANGE ORDER NO. 52
SHEET 8 OF 49

DIST.	COUNTY	ROUTE	KILOMETER POST TOTAL PROJECT	SHEET NO.	TOTAL SHEETS
04	SF, Ala	80	13.3 / 4.3 / 0.0 / 1.6	543R2	978

REGISTERED ENGINEER - CIVIL
6-4-01
PLANS APPROVAL DATE
Scott Hunter No. C 048056 Exp. 12/31/03 CIVIL STATE OF CALIFORNIA
The State of California or its officers or agents shall not be responsible for the accuracy or completeness of electronic copies of this plan sheet.

T.Y. LIN / MOFFATT & NICHOL
825 BATTERY STREET
SAN FRANCISCO, CA 94111

Caltrans now has a web site! To get to the web site go to: http://www.dot.ca.gov

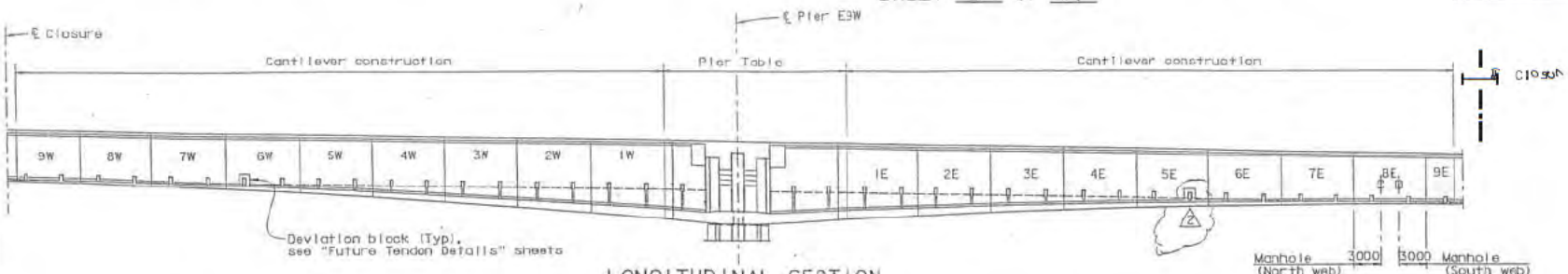

LONGITUDINAL SECTION
1:250

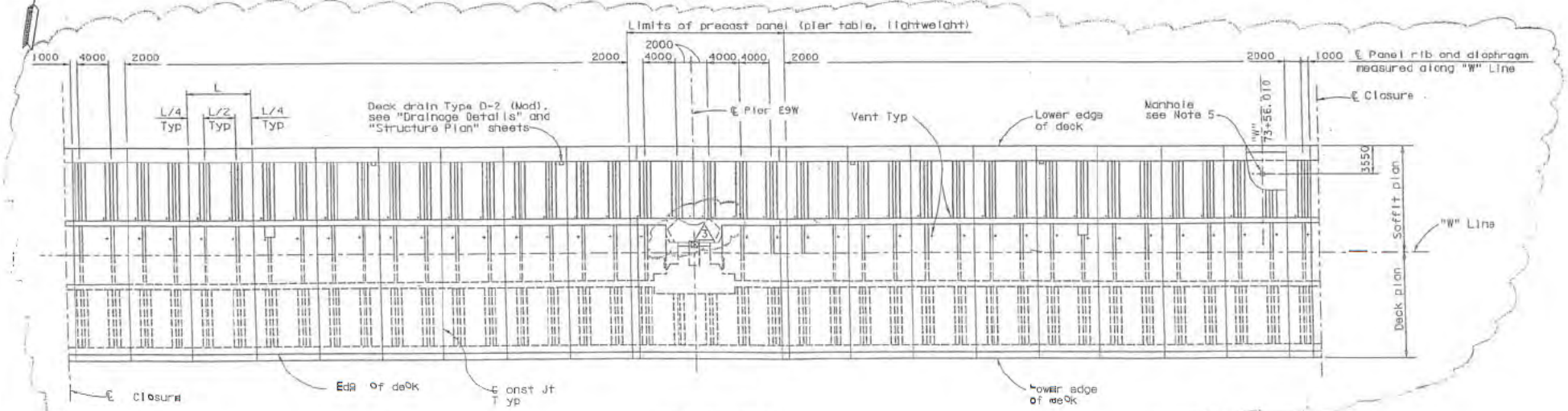

PLAN 1 2
1:250

ALL DIMENSIONS ARE IN MILLIMETERS UNLESS OTHERWISE SHOWN

100 % PS&E

DESIGN OVERSIGHT 8/6/2003
STEM OFF DATE

DESIGN	BY S. Hunter	CHECKED M. Lamont	
DETAILS	BY A. Lishonsky	CHECKED M. Lamont	
QUANTITIES	BY K. Corraler	CHECKED S. Sal	

PREPARED FOR THE STATE OF CALIFORNIA DEPARTMENT OF TRANSPORTATION

Sajid Abbas
PROJECT ENGINEER

BRIDGE NO. 34-0006L/R
KILOMETER POST 3.9/14.3 0.0/1.6

SAN FRANCISCO OAKLAND BAY BRIDGE
EAST SPAN SEISMIC SAFETY PROJECT

SKYWAY STRUCTURES

GIRDER LAYOUT E9W

ORIGINAL SCALE IN MILLIMETERS FOR REDUCED PLANS 0 10 20 30 40 50 60 70 80 90 100

CU
EA

DISREGARD PRINTS BEARING EARLIER REVISION DATES

REVISION DATES (PRELIMINARY STAGE ONLY) 01/25/94 01/26/94 02/02/94 05/20/94 11/29/94 12/06/94 02/07/95 05/04/95 01/20/03 01/25/03

SHEET 111 OF

NOTES:

1. For [illegible] ts, see "Girder Layout E3W" sheet.
2. For [illegible] nt details, see "Girder Layout E3W" sheet.
3. Key [illegible] segment nomenclature: 1 E or W
   Segment No. — East or West
4. For web manhole details, see "Miscellaneous Details" sheets.
5. For deck manhole details, see (87-11).
6. Orientation of diaphragm and precast panel rib shall be normal to "W" Line.

MARK	DATE	DESCRIPTIONS	BY	CH'D
2451	07/25/03	REVISE WEB MANHOLE LOCATIONS	MR	JC
74	07/25/03	REVISE PIER TABLE BOTTOM SLAB ACCESS OPENING	MR	JC
52	01/20/03	REVISE FUTURE TENDON DEV BLOCK LOCATION	MR	JC
28	01/20/03	REVISE DRAIN LOCATIONS	MR	SS

REVISIONS

CONTRACT CHANGE ORDER NO. 52
SHEET 9 OF 49

DIST	COUNTY	ROUTE	KILOMETER POST TOTAL PROJECT	SHEET TOTAL NO. SHEETS
04	SF, Ala	30	13.9 / 14.3 / 0.0 / 5.6	544R2 978

REGISTERED ENGINEER - CIVIL
6-4-01
PLANS APPROVAL DATE

The State of California or its officers or agents shall not be responsible for the accuracy or completeness of electronic copies of this plan/sheet.

T.Y. LIN / MOFFATT & NICHOL
825 BATTERY STREET
SAN FRANCISCO, CA 94111

Caltrans now has a web site! To get to the web site, go to http://www.dot.ca.gov

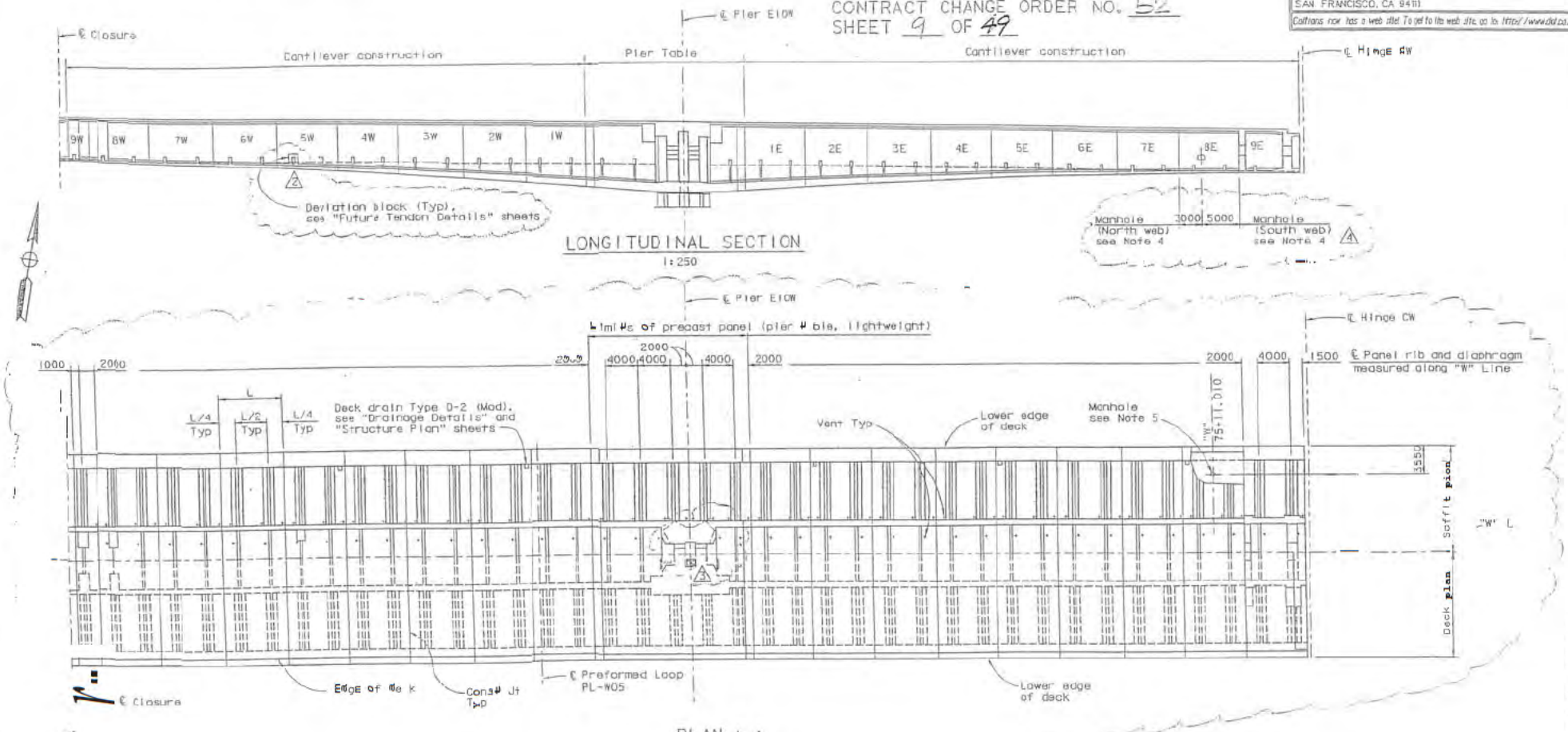

ALL DIMENSIONS ARE IN MILLIMETERS UNLESS OTHERWISE SHOWN

SAN FRANCISCO OAKLAND BAY BRIDGE
EAST SPAN SEISMIC SAFETY PROJECT

SKYWAY STRUCTURES

GIRDER LAYOUT E1OW

DESIGN OVERSIGHT 8/6/2003
SIGN OFF DATE

DESIGN	BY S. Hunter	CHECKED W. Lamont	
DETAILS	BY A. Lishansky	CHECKED W. Lamont	
QUANTITIES	BY K. Corrales	CHECKED S. Shi	

PREPARED FOR THE STATE OF CALIFORNIA DEPARTMENT OF TRANSPORTATION

Salid Abbas
PROJECT ENGINEER

BRIDGE NO. 34-0006L/R
KILOMETER POST 13.9/14.3 0.0/1.6

CU 04
EA 012021

DISREGARD PRINTS BEARING EARLIER REVISION DATES

REVISION DATES (PRELIMINARY STAGE ONLY)

SHEET 112 OF

Rev. Date: 5-12-86

ORIGINAL SCALE IN MILLIMETERS FOR REDUCED PLANS

100 % PS&E

DIST.	COUNTY	ROUTE	KILOMETER POST TOTAL PROJECT	SHEET NO.	TOTAL SHEETS
04	SF, Ala	80	13.9 / 14.3 0.0 / 1.6	545R2	978

REGISTERED ENGINEER - CIVIL

6-4-01

PLANS APPROVAL DATE

Scott Hunter No. C 048066 Exp. 12/31/03 CIVIL STATE OF CALIFORNIA PROFESSIONAL ENGINEER REGISTERED

The State of California or its officers or agents shall not be responsible for the accuracy or completeness of electronic copies of this plan sheet.

T.Y. LIN / MGFFATT & NICHOL
825 BATTERY STREET
SAN FRANCISCO, CA 94111

Caltrans now has a web site! To get to the web site, go to: http://www.dot.ca.gov

NOTES:

1. For notes, see "Girder Layout E3W" sheet.
2. For vent detail Is, see "Girder Layout E3W" sheet.
3. Key to segment nomenclatura: 1 E or W
   Segment No. — East or West
4. For web manhole details, see "Miscellaneous Details" sheets.
5. For deck manhole details, see (87-11).
6. Orientation of diaphragm and precast panel rib shall be normal to "W" Line.

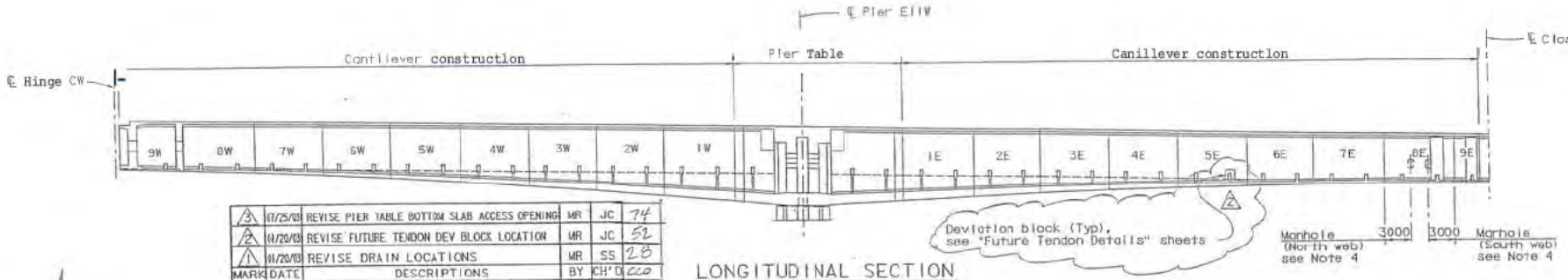

MARK	DATE	DESCRIPTIONS	BY	CH'D
3	07/25/03	REVISE PIER TABLE BOTTOM SLAB ACCESS OPENING	MR	JC
2	01/20/03	REVISE FUTURE TENDON DEV BLOCK LOCATION	MR	JC
1	01/20/03	REVISE DRAIN LOCATIONS	MR	SS

REVISIONS

LONGITUDINAL SECTION
1:250

CONTRACT CHANGE ORDER NO. 52
SHEET 10 OF 49

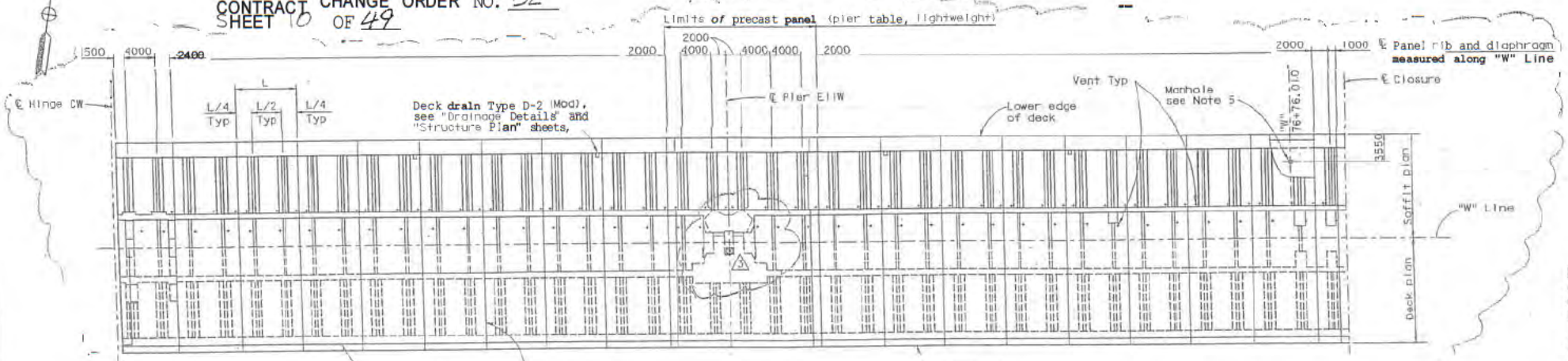

PLAN
1:250

ALL DIMENSIONS ARE IN MILLIMETERS UNLESS OTHERWISE SHOWN

DESIGN OVERSIGHT 8/6/2003
SIGN OFF DATE

DESIGN	BY S. Hunter	CHECKED	M. Lamont
DETAILS	BY A. Lishansky	CHECKED	M. Lamont
QUANTITIES	BY K. Cormier	CHECKED	S. Shi

PREPARED FOR THE STATE OF CALIFORNIA DEPARTMENT OF TRANSPORTATION

Salid Abbas
PROJECT ENGINEER

BRIDGE NO. 34-0006L/R
KILOMETER POST 13.9/14.3, 0.0/1.6

CU 04
EA 012021

SAN FRANCISCO OAKLAND BAY BRIDGE
EAST SPAN SEISMIC SAFETY PROJECT

SKYWAY STRUCTURES

GIRDER LAYOUT E11W

SHEET 113 OF

100 % PS&E

Rev. Date: 3-18-99

ORIGINAL SCALE IN MILLIMETERS FOR REDUCED PLANS 0 10 20 30 40 50 60 70 80 90 100

NOTES:

1. For notes, see "Girder Layout E3W" sheet.
2. For vent details, see "Girder Layout E3W" sheet
3. Key to segment nomenclature: 1 E or W
   Segment No. — East or W st
4. For web manhole details, see "Miscellaneous Details" sheets.
5. For deck manhole details, see (B7-11).
6. Orientation of diaphragm and precast panel rib shall be normal to "W" L

DIST.	COUNTY	ROUTE	KILOMETER POST TOTAL PROJECT	SHEET NO.	TOTAL SHEETS
04	SF, Ala	80	13.9 / 14.3, 0.0 / 1.6	546R2	978

REGISTERED ENGINEER - CIVIL
6-4-01
PLANS APPROVAL DATE
Scott Hunter No. C 048066 Exp. 12/31/03 CIVIL STATE OF CALIFORNIA
The State of California or its officers or agents shall not be responsible for the accuracy or completeness of electronic copies of this plan sheet.

T.Y. LIN / MOFFATT & NICHOL
825 BATTERY STREET
SAN FRANCISCO, CA 94111

Caltrans now has a web site! To get to the web site, go to: http://www.dot.ca.gov

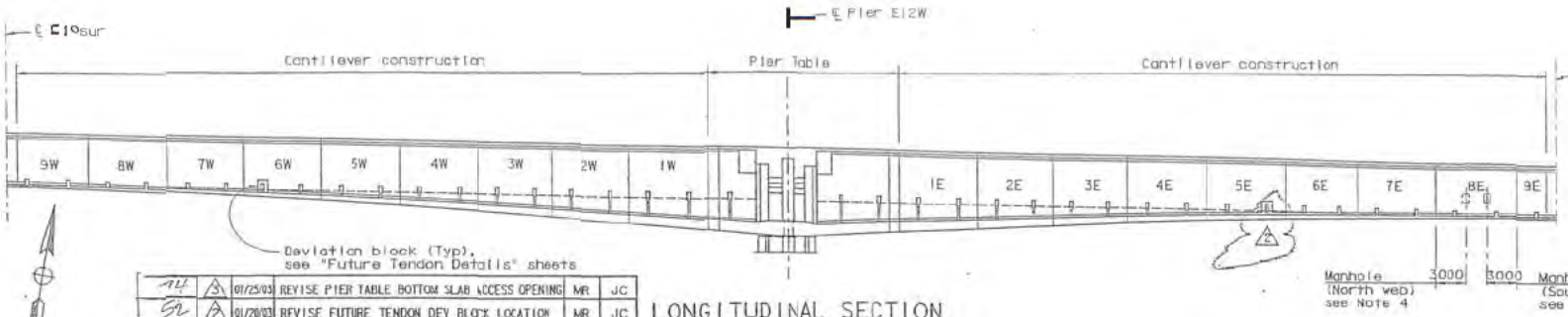

LONGITUDINAL SECTION
1:250

MARK	DATE	DESCRIPTIONS	BY	CH'D
14	01/25/03	REVISE PIER TABLE BOTTOM SLAB ACCESS OPENING	MR	JC
52	01/20/03	REVISE FUTURE TENDON DEV BLOCK LOCATION	MR	JC
28	01/20/03	REVISE DRAIN LOCATIONS	MR	SS

REVISIONS

CONTRACT CHANGE ORDER NO. 52
SHEET 11 OF 49

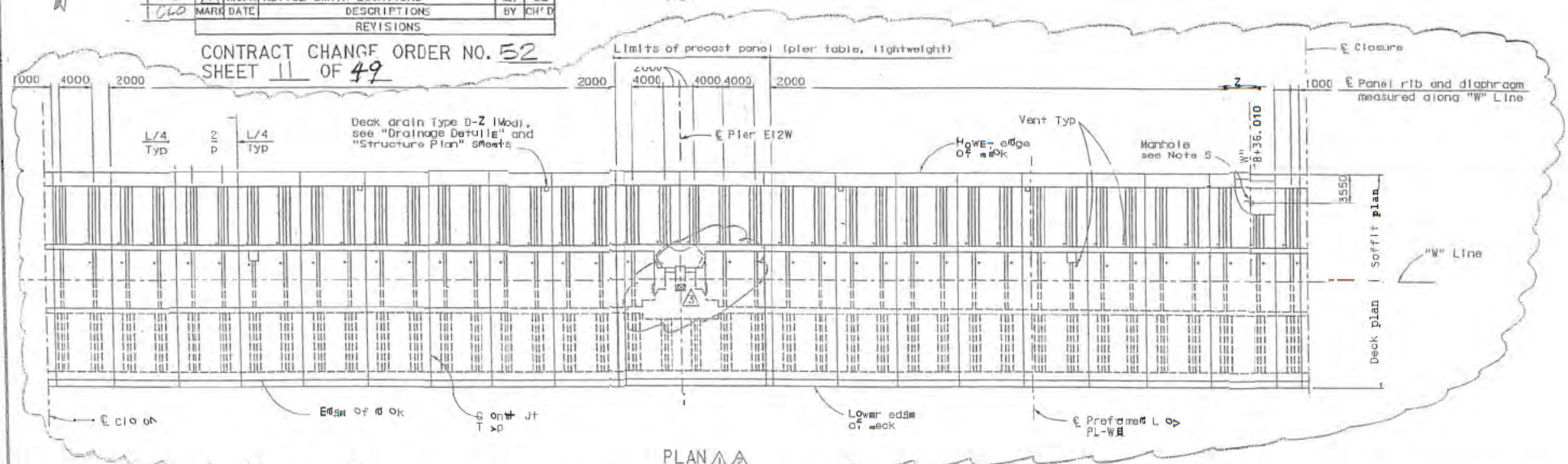

PLAN
1:250

ALL DIMENSIONS ARE IN MILLIMETERS UNLESS OTHERWISE SHOWN

SAN FRANCISCO OAKLAND BAY BRIDGE

DESIGN OVERSIGHT 8/6/2003

DESIGN	S. Hunter	M. Lamont	
DETAILS	A. Lishansky	M. Lamont	
QUANTITIES	K. Corrier	S. Shi	

PREPARED FOR THE STATE OF CALIFORNIA DEPARTMENT OF TRANSPORTATION

Solid Abbas
PROJECT ENGINEER

BRIDGE NO. 34-0006L/R
KILOMETER-POST 3.9/14.3, 0.0/1.6

CU 04
EA

SKYWAY STRUCTURES
GIRDER LAYOUT E12W

SHEET 114 OF

100 % PSAE

NOTES:

1. For notes, see "Girder Layout E3W" sheet.
2. For vent details, see "Girder Layout E3W" sheet.
3. Key to segment nomenclature: | E or W
   Segment No. — East or West
4. For web manhole details, see "Miscellaneous Details" sheets.
5. For deck manhole details, see (B7-11).
6. Orientation of diaphragm and precast panel rib shall be normal to "W" Line.

MARK	DATE	DESCRIPTIONS	BY	CH'D	
3	01/25/03	REVISE PIER TABLE BOTTOM SLAB ACCESS OPENING	MR	JC	74
2	01/20/03	REVISE FUTURE TENDON DEV BLOCK LOCATION	MR	JC	52
1	01/20/03	REVISE DRAIN LOCATIONS	MR	SS	28
		REVISIONS			200

CONTRACT CHANGE ORDE NO 52
SHEET 12 OF 49

DIST.	COUNTY	ROUTE	KILOMETER POST TOTAL PROJECT	SHEET NO.	TOTAL SHEETS
04	SF, Ala	80	13.9 / 14.3 0.0 / 1.6	547R2	978

REGISTERED ENGINEER - CIVIL
6-4-01
PLANS APPROVAL DATE

Registered Professional Engineer Scott Hunter No. C 048066 Exp. 12/31/03 CIVIL STATE OF CALIFORNIA

The State of California or its officers or agents shall not be responsible for the accuracy or completeness of electronic copies of this plan sheet.

T.Y. LIN / MOFFATT & NICHOL
825 BATTERY STREET
SAN FRANCISCO, CA 94111

Caltrans now has a web site! To get to the web site, go to: http://www.dot.ca.gov

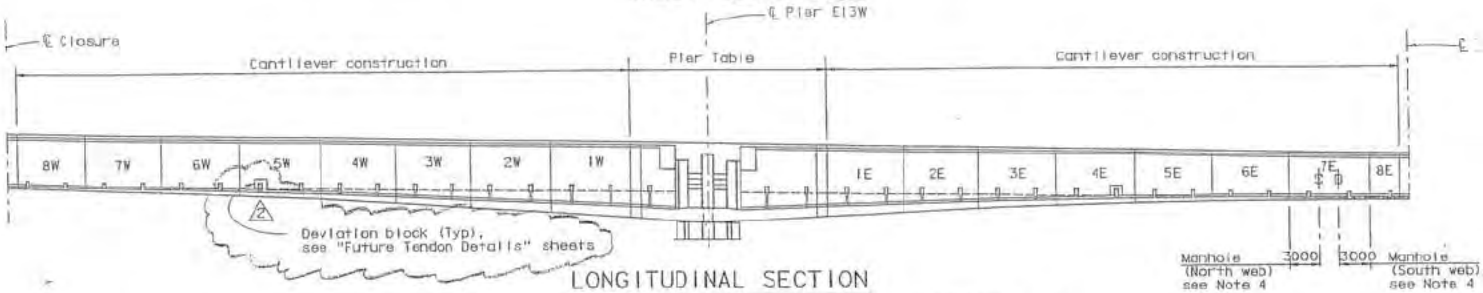

LONGITUDINAL SECTION
1:250

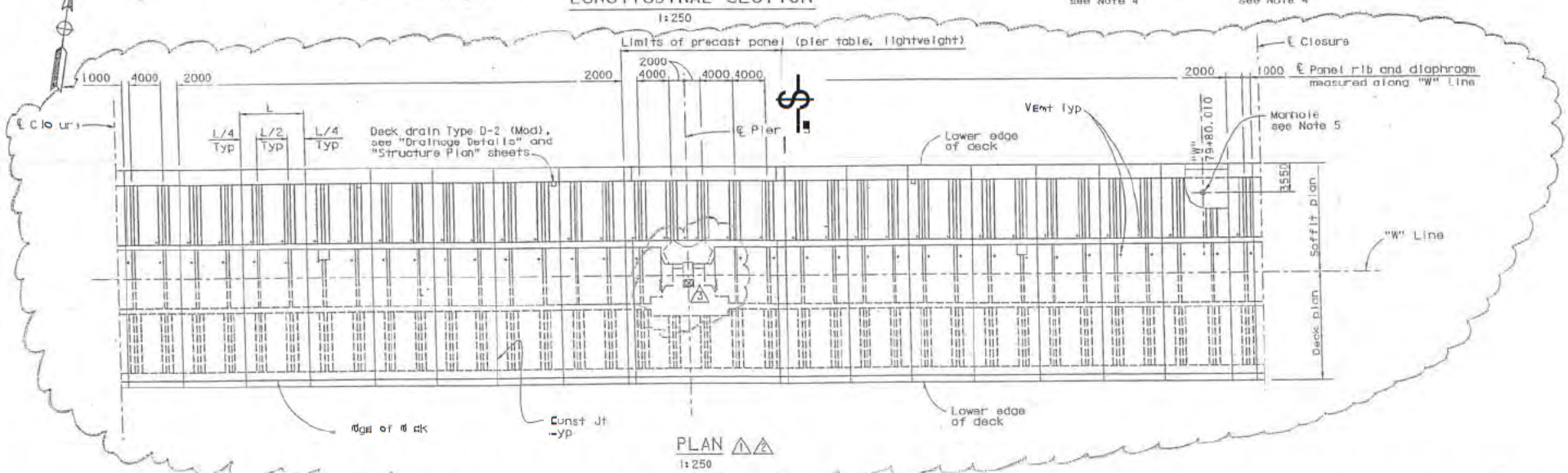

PLAN
1:250

ALL DIMENSIONS ARE IN MILLIMETERS UNLESS OTHERWISE SHOWN

SAN FRANCISCO OAKLAND BAY BRIDGE
EAST SPAN SEISMIC SAFETY PROJECT

SKYWAY STRUCTURES

GIRDER LAYOUT E13W

DESIGN OVERSIGHT 8/6/2003
SIGN OFF DATE

DESIGN	S. Hunter	M. Lamont	
DETAILS	A. Lishansky	M. Lamont	
QUANTITIES	K. Comier	S. Shi	

PREPARED FOR THE STATE OF CALIFORNIA DEPARTMENT OF TRANSPORTATION

Sajid Abbas
PROJECT ENGINEER

BRIDGE NO. 34-0006L/R
KILOMETER POST 13.9/14.3 0.0/1.6

CU 04
EA 012021

DISREGARD PRINTS BEARING EARLIER REVISION DATES

SHEET 115

Rev. Date: 3-18-16

ORIGINAL SCALE IN MILLIMETERS FOR REDUCED PLANS

NOTES:

1. For notes, see "Girder Layout E3W" sheet.
2. For vent detail Is, *see* "Girder Layout E3W" sheet.
3. hey to segment nomenclature: | E or W
   Segment No. — East or West
4. For web manhole details, *see* "Miscellaneous Details" sheets.
5. For deck manhole details, see (B7-11).
6. Orientation of diaphragm and precast panel rib shall be normal to "W" Line.

DIST.	COUNTY	ROUTE	TOTAL PROJECT	NO.	SHEETS
04	SF/Ala	80	13.9/14.5, 0.0/1.6	S48R3	978

REGISTERED ENGINEER - CIVIL
Salid Abbas No. C 055274 Exp. 12/31/04 CIVIL STATE OF CALIFORNIA
6-4-01
PLANS APPROVAL DATE
The State of California or its officers or agents shall not be responsible for the accuracy or completeness of electronic copies of this plan sheet.

T.Y. LIN / MOFFATT & NICHOL
825 BATTERY STREET
SAN FRANCISCO, CA 94111

Caltrans now has a web site! To get to the web site go to: http://www.dot.ca.gov

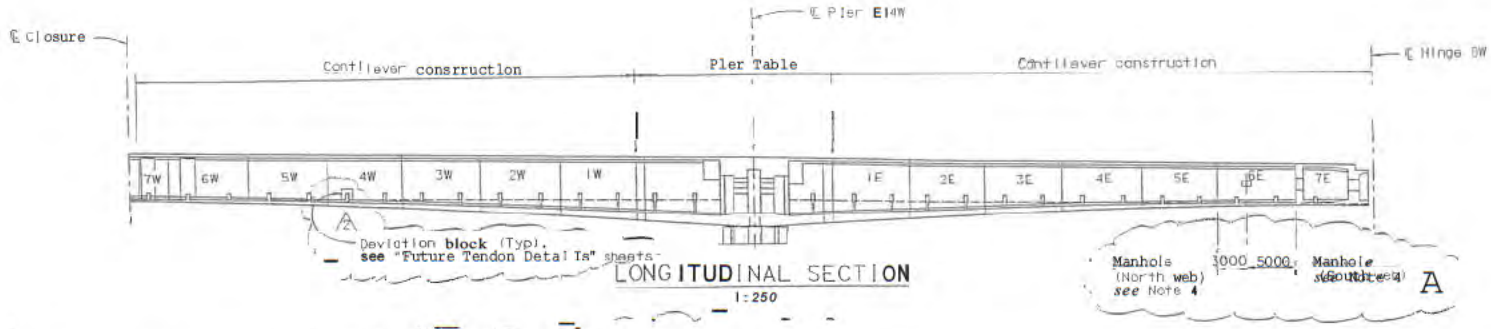

LONGITUDINAL SECTION
1:250

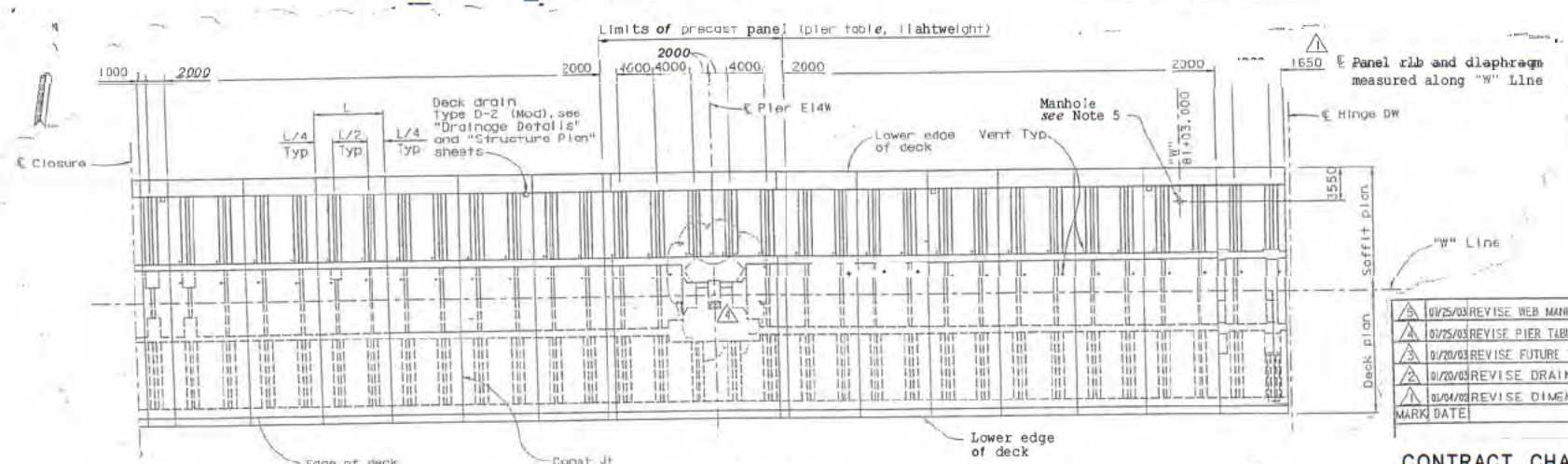

PLAN 1 2 3
1:250

MARK	DATE	DESCRIPTIONS	CHD	BY	CH'D
5	01/25/03	REVISE WEB MANHOLE LOCATIONS	2451	MR	JC
4	01/25/03	REVISE PIER TABLE BOTTOM SLAB ACCESS OPENING		MR	JC
3	01/20/03	REVISE FUTURE TENDON DEV BLOCK LOCATION.		MR	JC
2	01/20/03	REVISE DRAIN LOCATIONS	2E	MR	SS
1	01/04/02	REVISE DIMENSION	4	TM	SC

REVISIONS

CONTRACT CHANGE ORDER NO. 52
SHEET 13 OF 49

ALL DIMENSIONS ARE IN MILLIMETERS UNLESS OTHERWISE SHOWN

SAN FRANCISCO OAKLAND BAY BRIDGE
EAST SPAN SEISMIC SAFETY PROJECT

SKYWAY STRUCTURES

GIRDER LAYOUT E14W

DESIGN OFFICE CHIEF DATE 8/6/2003

DESIGN	BY S. Abbas	CHECKED M. Lamont	
DETAILS	BY A. Lishansky	CHECKED M. Lamont	
QUANTITIES	BY K. Cormier	CHECKED S. Shi	

PREPARED FOR THE STATE OF CALIFORNIA DEPARTMENT OF TRANSPORTATION

Salid Abbas
PROJECT ENGINEER

DRAWING NO. 34-0006L/R
ALIGNMENT POST 13.9/14.5, 0.0/1.6

CU 04
EA 04-012021

ORIGINAL SCALE IN MILLIMETERS FOR REDUCED PLANS

REVISION DATES (PRELIMINARY STAGE ONLY)

SHEET 115

Rev. Date 5-10-99

DIST.	COUNTY	ROUTE	KILOMETER POST TOTAL PROJECT	SHEET NO.	TOTAL SHEETS
04	SF/Ala	80	13.9/14.3. 0.0/1.6	549B3	978

Said Abbas
REGISTERED ENGINEER - CIVIL
6-4-01
PLANS APPROVAL DATE

REGISTERED PROFESSIONAL ENGINEER Said Abbas No. C 055274 Exp. 12/31/04 CIVIL STATE OF CALIFORNIA

The State of California or its officers or agents shall not be responsible for the accuracy or completeness of electronic copies of this plan sheet.

T.Y. LIN / MOFFATT & NICHOL
825 BATTERY STREET
SAN FRANCISCO, CA 94111

Caltrans now has a web site! To get to the web site, go to: http://www.dot.ca.gov

NOTES

1. For notes, see "Girder Layout E3W" sheet.
2. For vent details, see "Girder Layout E3W" sheet.
3. Key to segment nomenclature: E or W — Segment No. — East or West
4. For web manhole details, see "Miscellaneous Details" sheets.
5. For deck manhole **details**, see D7-11.
6. Orientation of diaphragm and precast panel rib shall be normal to "W" Line.

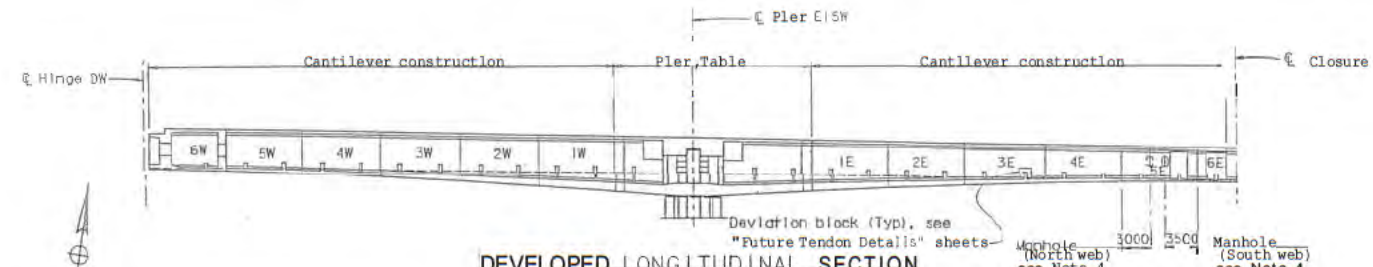

DEVELOPED LONGITUDINAL SECTION
1:250

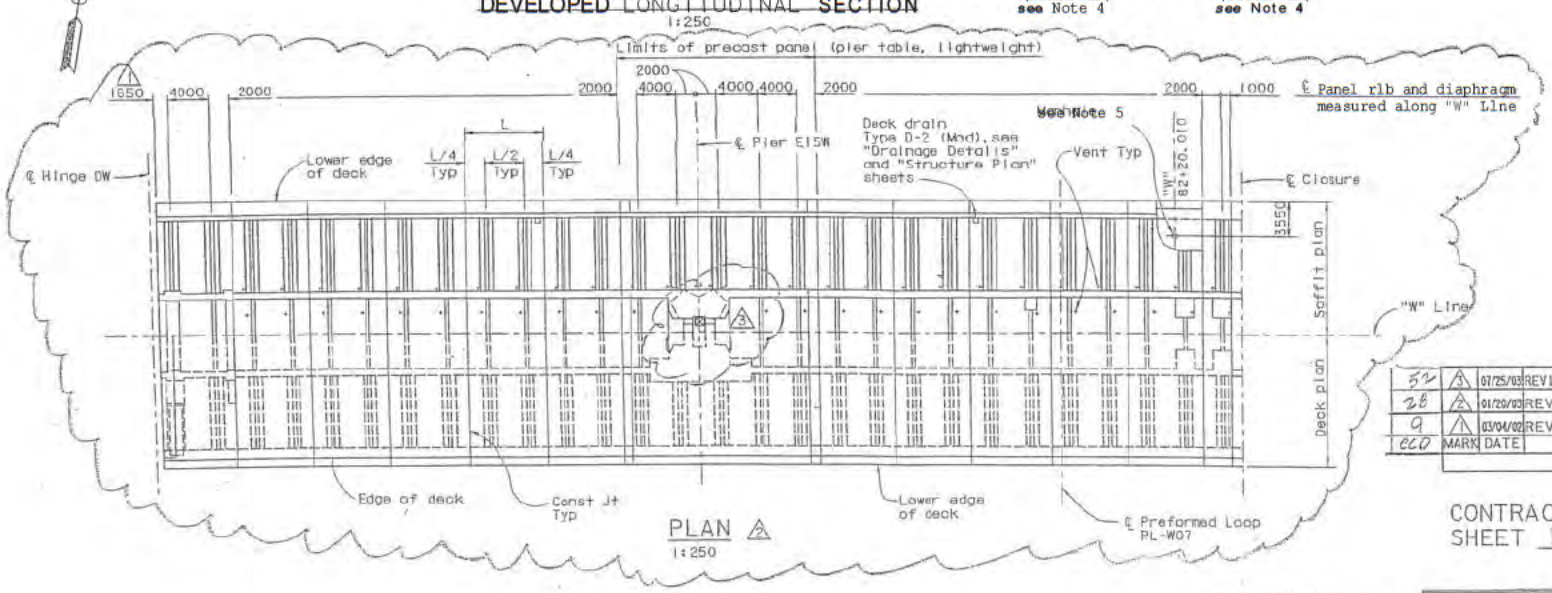

PLAN 2
1:250

MARK	DATE	DESCRIPTIONS	BY	CH'D
52	07/25/03	REVISE PIER TABLE BOTTOM SLAB ACCESS OPENING	MR	JC
28	01/20/03	REVISE DRAIN LOCATIONS	MR	SS
9	03/04/02	REVISE DIMENSION	TM	SC
ECO		REVISIONS		

CONTRACT CHANGE ORDER NO. 52
SHEET 14 OF 49

100 % PS&E

ALL DIMENSIONS ARE IN MILLIMETERS UNLESS OTHERWISE SHOWN

DESIGN OVERSIGHT
8/6/2003
SIGN OFF DATE

DESIGN	S. Abbas	M. Lamont	
DETAILS	A. Lithansky	M. Lamont	
QUANTITIES	K. Cornier	S. Shi	

PREPARED FOR THE STATE OF CALIFORNIA DEPARTMENT OF TRANSPORTATION

Said Abbas
PROJECT ENGINEER

BRIDGE NO. 34-0006L/R
KILOMETER POST 13.9/14.3. 0.0/1.6

CU 04
EA 04-012021

SAN FRANCISCO OAKLAND BAY BRIDGE
EAST SPAN SEISMIC SAFETY PROJECT

SKYWAY STRUCTURES

GIRDER LAYOUT E15W

ORIGINAL SCALE IN MILLIMETERS FOR REDUCED PLANS

DISREGARD PRINTS BEARING EARLIER REVISION DATES

REVISION DATES (PRELIMINARY STAGE ONLY)

Rev. Date: 1-10-00

NOTES:

1. For notes, see "Girder Layout E3W" sheet.
2. For vent detoI Is, see "Girder Layout E3W" sheet.
3. Key to segment nomenclature: E or W
   - Segment No.
   - East or West
4. For web manhole details, see "Miscellaneous Details" sheets.
5. For deck manhole details, see 87-11.
6. Orientation of diaphragm and precast panel rib shall be normal to "W" Line.

DIST.	COUNTY	ROUTE	KILOMETER POST TOTAL PROJECT	SHEET NO.	TOTAL SHEETS
04	SF/Alo	80	13.9/14.3, 0.0/1.8	55083	978

REGISTERED ENGINEER - CIVIL

6-4-01

PLANS APPROVAL DATE

The State of California or its officers or agents shall not be responsible for the accuracy or completeness of electronic copies of this plan.

Sajid Abbas No. C 055276 Exp. 12/31/04 CIVIL STATE OF CALIFORNIA

T.Y LIN / MOFFATT & NICHOL
825 BATTERY STREET
SAN FRANCISCO, CA 94111

Caltrans now has a web site! To get to the web site, go to: http://www.dot.ca.gov

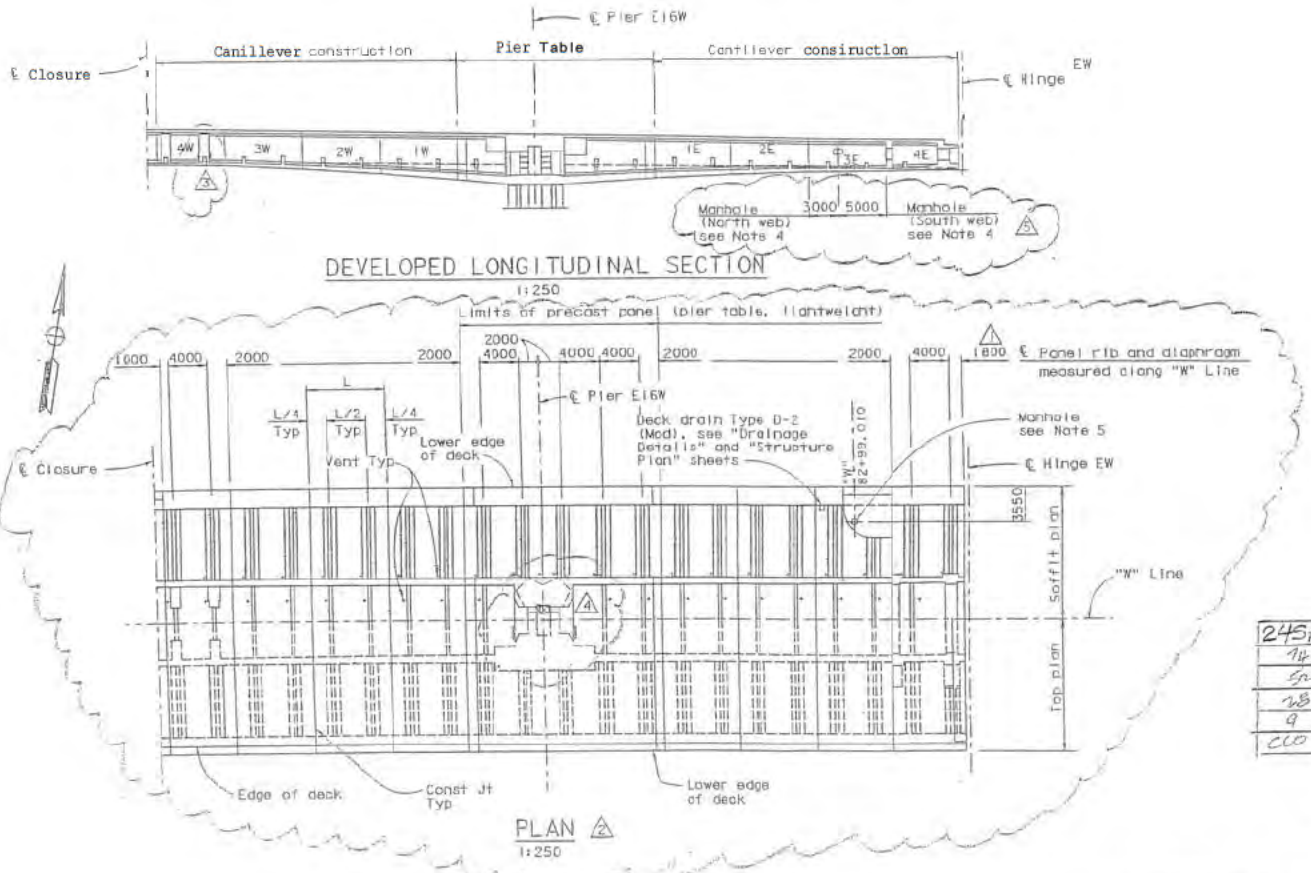

MARK	DATE	DESCRIPTIONS	BY	CH'D
5	01/25/03	REVISE WEB MANHOLE LOCATIONS	MR	JC
4	01/25/03	REVISE PIER TABLE BOTTOM SLAB ACCESS OPENING	MR	SS
3	01/20/03	REVISE FUTURE TENDON DEV BLOCK LOCATION	MR	SS
2	01/20/03	REVISE DRAINAGE LOCATIONS	MR	SS
1	03/01/02	REVISE DIMENSION	TM	SC

REVISIONS

CONTRACT CHANGE ORDER NO. [redacted]
SHEET [redacted] OF 49

ALL DIMENSIONS ARE IN MILLIMETERS UNLESS OTHERWISE SHOWN

SAN FRANCISCO OAKLAND BAY BRIDGE
EAST SPAN SEISMIC SAFETY PROJECT

SKYWAY STRUCTURES

GIRDER LAYOUT E16W

DESIGN OVERSIGHT 8/6/2003
SIGN OFF DATE

DESIGN	BY S. Abbas	CHECKED M. Lamont	
DETAILS	BY A. Lishansky	CHECKED M. Lamont	
QUANTITIES	BY K. Cormier	CHECKED S. Shi	

PREPARED FOR THE STATE OF CALIFORNIA DEPARTMENT OF TRANSPORTATION

Sajid Abbas
PROJECT ENGINEER

BRIDGE NO. 34-0006L/R
KILOMETER POST 13.9/14.3, 0.0/1.8

CU 04
EA 04-012021

DISREGARD PRINTS BEARING EARLIER REVISION DATES

SHEET 11A OF

Rev. Dec. 5-19-00

ORIGINAL SCALE IN MILLIMETERS FOR REDUCED PLANS 0 10 20 30 40 50 60 70 80 90 100

100 % PSAL

DIST	COUNTY	ROUTE	KILOMETER POST TOTAL	KILOMETER POST PROJECT	SHEET NO.	TOTAL SHEETS
04	SF, Ala	80	13.9 / 0.0	14.3 / 1.6	551R2	978

REGISTERED ENGINEER - CIVIL

6-4-01

PLANS APPROVAL DATE

Scott Hunter
Exp. 12/31/03
CIVIL
STATE OF CALIFORNIA

The State of California or its officers or agents shall not be responsible for the accuracy or completeness of electronic copies of this plan sheet.

T.Y. LIN / MOFFATT & NICHOL
815 BATTERY STREET
SAN FRANCISCO, CA 94111

NOTES:

1. For notes, see "Girder Layout E3W" sheet.
2. For vent details, see "Girder Layout E3W" sheet.
3. For bikepath details, see "Bikepath Details" sheets.
4. Key to segment nomenclature: 1 E or W
   Segment No. — East or West
5. For web manhole details, see "Miscellaneous Details" sheets.
6. For deck manhole details, see (37-11).
7. Orientation of diaphragm and precast panel rib shall be normal to "E" Line.

MARK	DATE	DESCRIPTIONS	BY	CH'D
4	07/25/03	REVISE WEB MANHOLE LOCATIONS	MR	JC
3	07/25/03	REVISE PIER TABLE BOTTOM SLAB ACCESS OPENING	MR	JC
2	01/20/03	REVISE FUTURE TENDON DEV BLOCK LOCATION	MR	JC
1	01/20/03	REVISE DRAIN LOCATIONS	MR	SS

REVISIONS

CONTRACT CHANGE ORDER NO. 52
SHEET 16 OF 49

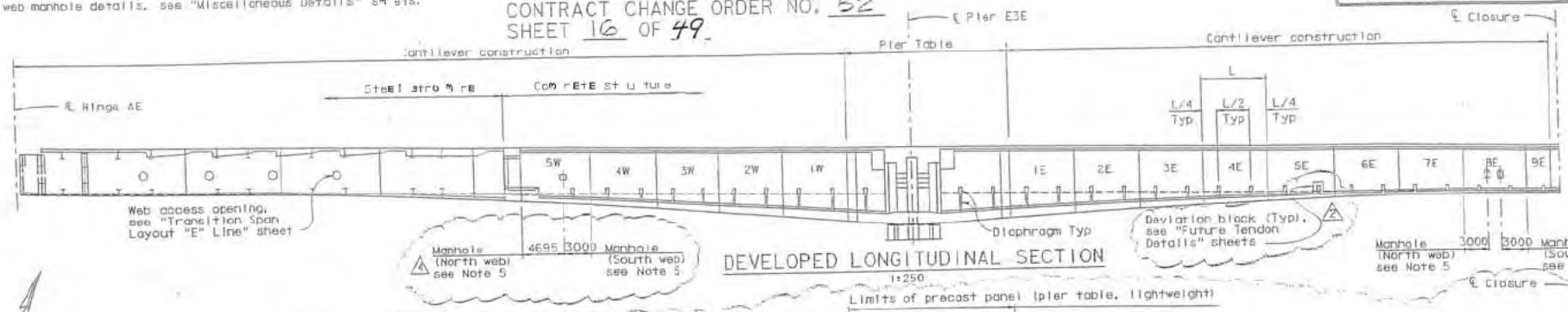

DEVELOPED LONGITUDINAL SECTION
1:250

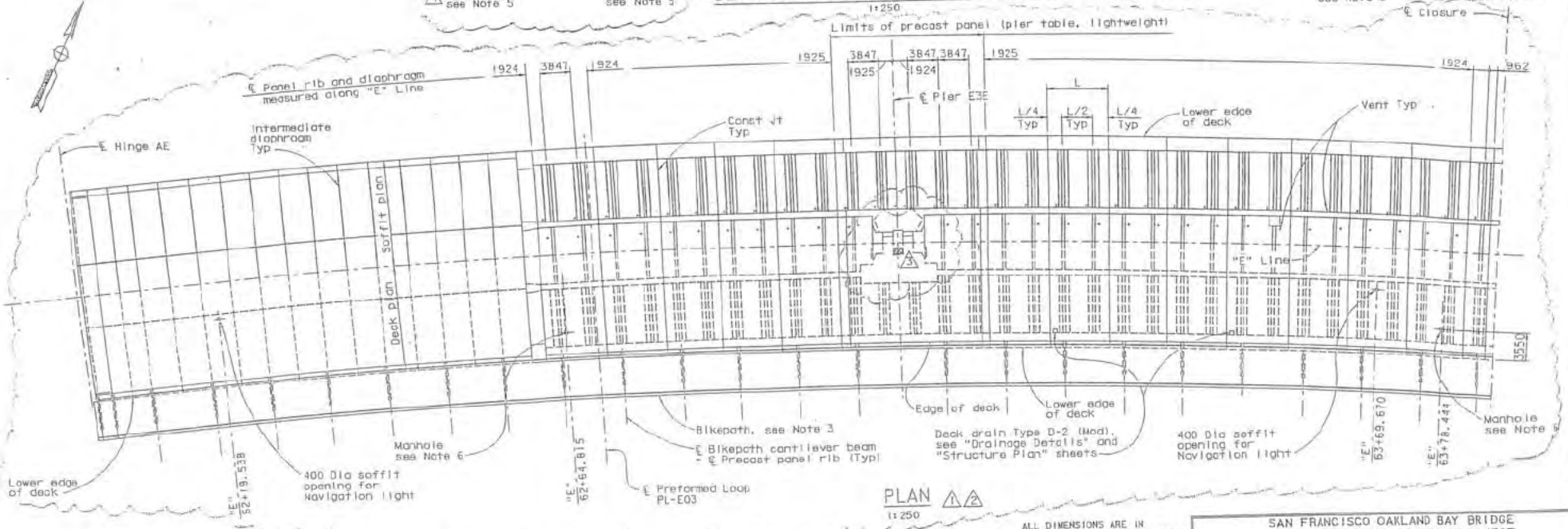

PLAN
1:250

ALL DIMENSIONS ARE IN MILLIMETERS UNLESS OTHERWISE SHOWN

100 % PS&E

DESIGN OVERSIGHT 8/6/2003
SIGN OFF DATE
Rev. Date 5-19-00

DESIGN	BY S. Hunter	CHECKED M. Lamont	
DETAILS	BY A. Litsansky	CHECKED M. Lamont	
QUANTITIES	BY K. Cormier	CHECKED S. Shi	

ORIGINAL SCALE IN MILLIMETERS FOR REDUCED PLAN 10 20 30 40 50 60 70 80 90 100

PREPARED FOR THE STATE OF CALIFORNIA DEPARTMENT OF TRANSPORTATION

Sajid Abbas
PROJECT ENGINEER

BRIDGE NO. 34-0006L/R
KILOMETER POST 3.9/14.3 0.0/1.6

CU 04
EA 012021

DISREGARD PRINTS BEARING EARLIER REVISION DATES

SAN FRANCISCO OAKLAND BAY BRIDGE
EAST SPAN SEISMIC SAFETY PROJECT

SKYWAY STRUCTURES

GIRDER LAYOUT E3E

REVISION DATES (PRELIMINARY STAGE ONLY) 01/1998 02/1998 06/1998 11/1998 12/1998 03/1999 05/1999 01/2000 01/2003

SHEET 119 OF

NOTES:

1. For notes, see "Girder Layout E3W" sheet.
2. For vent details, see "Girder Layout E3W" sheet.
3. For bikepath details, see "Bikepath Details" sheets.
4. Key to segment nomenclature: 1 E or W
   Segment No. — East or West
5. For web manhole details, see "Miscellaneous Details" sheets.
6. For deck manhole details, see (ST-11).
7. Orientation of diaphragm and precast panel rib shall be normal to "E" Line.

MARK	DATE	DESCRIPTIONS	BY	CH'D	
3	07/25/03	REVISE PIER TABLE BOTTOM SLAB ACCESS OPENING	MR	JC	74
2	01/20/03	REVISE FUTURE TENDON DEV BLOCK LOCATION	MR	JC	52
1	01/20/03	REVISE DRAIN LOCATIONS	MR	SS	28
		REVISIONS			CCO

CONTRACT CHANGE ORDER NO. 52
SHEET 17 OF 49

DIST	COUNTY	ROUTE	TOTAL PROJECT	NO.	SHEETS
04	SF, Ala	80	13.9 / 14.3, 0.0 / 1.6	552R2	978

REGISTERED ENGINEER - CIVIL
6-4-01
PLANS APPROVAL DATE
The State of California or its officers or agents shall not be responsible for the accuracy or completeness of electronic copies of this document.

REGISTERED PROFESSIONAL ENGINEER Scott Hunter No. C 048066 Exp. 12/31/03 CIVIL STATE OF CALIFORNIA

T.Y. LIN / MOFFATT & NICHOL
825 BATTERY STREET
SAN FRANCISCO, CA 94111

California Metric

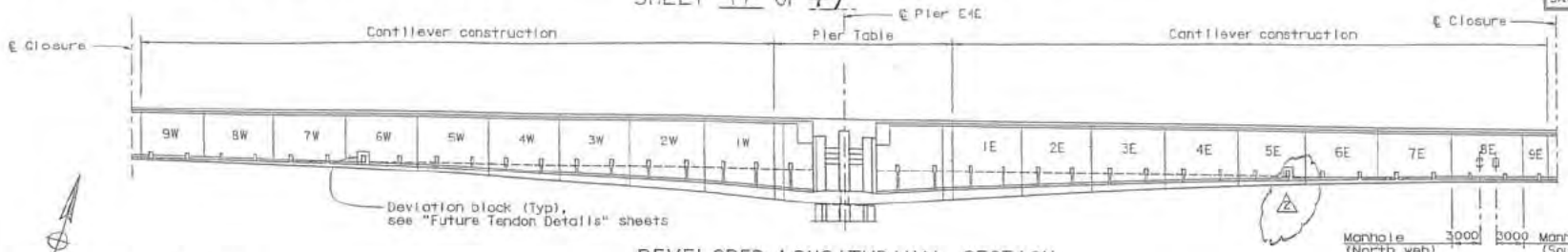

DEVELOPED LONGITUDINAL SECTION
1:250

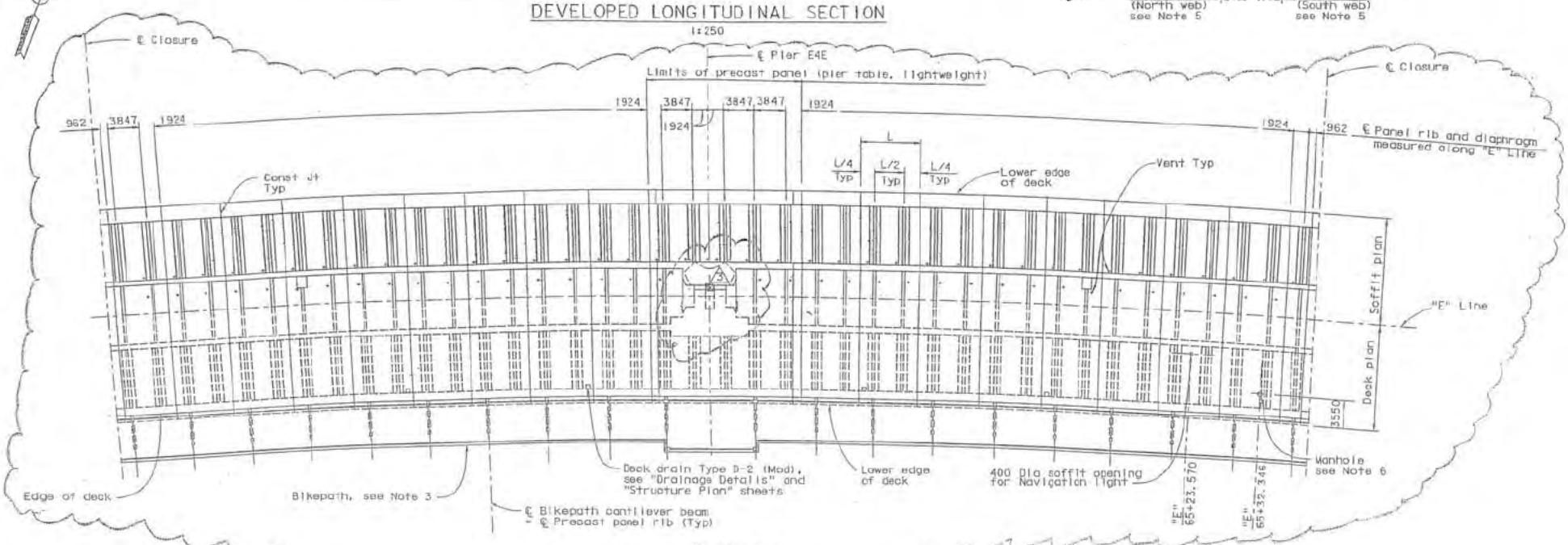

PLAN 1 2
1:250

ALL DIMENSIONS ARE IN MILLIMETERS UNLESS OTHERWISE SHOWN

100 % PS&E

DESIGN OVERSIGHT 8/6/2007
SIGN OFF DATE

DESIGN	S. Hunter	M. Lamont	
DETAILS	A. Lishansky	M. Lamont	
QUANTITIES	K. Cormier	S. Shi	

PREPARED FOR THE STATE OF CALIFORNIA DEPARTMENT OF TRANSPORTATION

Sajid Abbas
PROJECT ENGINEER

BRIDGE NO. 34-0006L/R
HOLOMETER POST 13.5/14.3, 0.0/1.6

CU 04
EA 012021

DISREGARD PRINTS BEARING EARLIER REVISION DATES

SAN FRANCISCO OAKLAND BAY BRIDGE
EAST SPAN SEISMIC SAFETY PROJECT

SKYWAY STRUCTURES
GIRDER LAYOUT E4E

SHEET 120

NOTES:

1. For notes, see "Girder Layout E3W" sheet.
2. For vent details, see "Girder Layout E3W" sheet.
3. For bikepath details, see "Bikepath Details" sheets.
4. Key to segment nomenclature: | E or W
   Segment No. — East or West
5. For web manhole details, see "Miscellaneous Details" sheets.
6. For deck manhole details, see B7-11.
7. Orientation of diaphragm and precast panel rib shall be normal to "E" Line.

MARK	DATE	DESCRIPTIONS	BY	CH'D
3	01/25/03	REVISE PIER TABLE BOTTOM SLAB ACCESS OPENING	MR	JC
2	01/20/03	REVISE FUTURE TENDON DEV BLOCK LOCATION	MR	JC
1	01/20/03	REVISE DRAIN LOCATIONS	MR	SS

REVISIONS

CONTRACT CHANGE ORDER NO. 52
SHEET 18 OF 49

DIST.	COUNTY	ROUTE	KILOMETER POST TOTAL PROJECT	SHEET NO.	TOTAL SHEETS
04	SF, Ala	80	13.9 / 14.3, 0.0 / 1.6	553R2	978

REGISTERED ENGINEER - CIVIL
6-4-01
PLANS APPROVAL DATE
Scott Hunter No. C 048065 Exp. 12/31/03 CIVIL STATE OF CALIFORNIA
The State of California or its officers or agents shall not be responsible for the accuracy or completeness of electronic copies of this plan sheet.

T.Y. LIN / MOFFATT & NICHOL
825 BATTERY STREET
SAN FRANCISCO, CA 94111

Caltrans now has a web site! To get to the web site, go to: http://www.dot.ca.gov

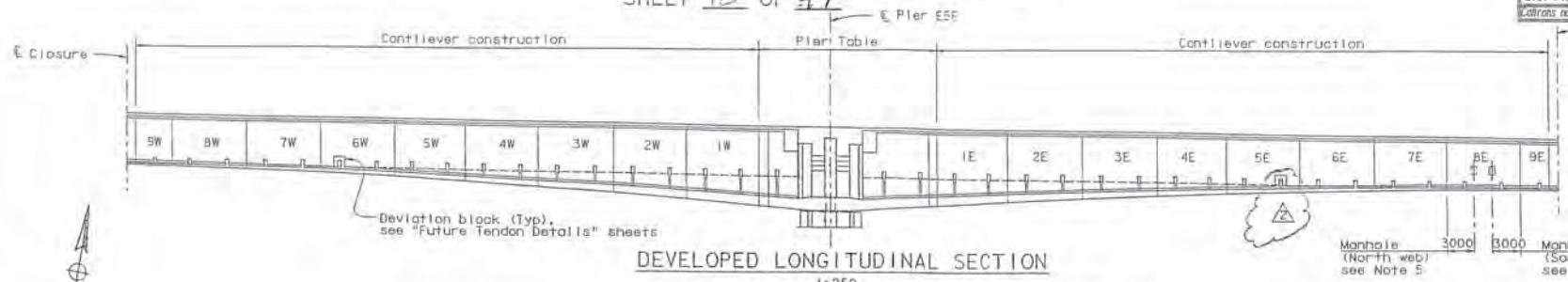

DEVELOPED LONGITUDINAL SECTION
1:250

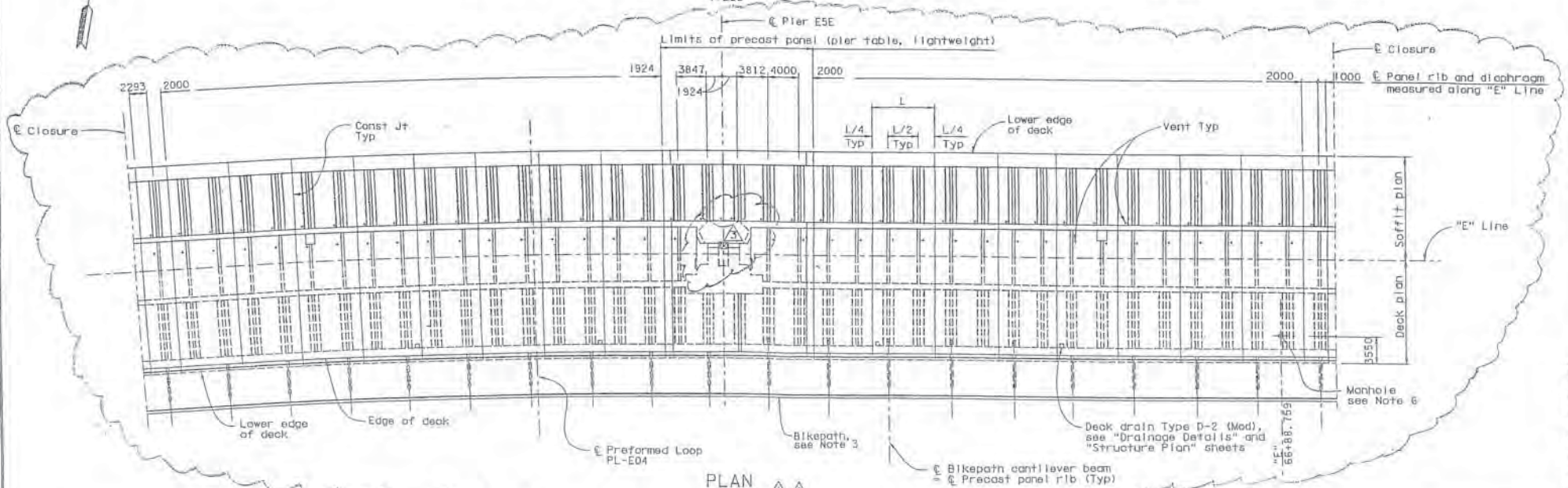

PLAN
1:250

ALL DIMENSIONS ARE IN MILLIMETERS UNLESS OTHERWISE SHOWN

DESIGN OVERSIGHT 8/6/2003
SIGN OFF DATE
Rev. Date: 5-18-88

DESIGN	BY S. Hunter	CHECKED M. Lamont	
DETAILS	BY A. Lishansky	CHECKED M. Lamont	
QUANTITIES	BY K. Cormier	CHECKED S. Shi	

PREPARED FOR THE STATE OF CALIFORNIA DEPARTMENT OF TRANSPORTATION

Sajid Abbas
PROJECT ENGINEER

BRIDGE NO. 34-0006L/R
KILOMETER POST 13.9/14.3, 0.0/1.6

CU 04
EA 012021

DISREGARD PRINTS BEARING EARLIER REVISION DATES

ORIGINAL SCALE IN MILLIMETERS FOR REDUCED PLANS 0 10 20 30 40 50 60 70 80 90 100

SAN FRANCISCO OAKLAND BAY BRIDGE
EAST SPAN SEISMIC SAFETY PROJECT

SKYWAY STRUCTURES

GIRDER LAYOUT E5E

REVISION DATES (PRELIMINARY STAGE ONLY) 01/00/00 01/00/00 01/00/00 01/00/00 01/00/00 01/00/00 01/00/00 01/00/00 01/00/00

SHEET 121

100 % PS&E

NOTES:

1. For notes, see "Girder Layout E3W" sheet.
2. For vent details, see "Girder Layout E3W" sheet.
3. For bikepath details, see "Bikepath Details" sheets.
4. Key to segment nomenclature: E or W
   Segment No. — East or West
5. For web manhole details, see "Miscellaneous Details" sheets.
6. For deck manhole details, see [illegible].
7. Orientation of diaphragm and precast panel rib shall be normal to "E" Line.

MARK	DATE	DESCRIPTIONS	BY	CH'D	
4	01/25/03	REVISE WEB MANHOLE LOCATIONS	MR	JC	2451
3	01/20/03	REVISE PIER TABLE BOTTOM SLAB ACCESS OPENING	MR	JC	74
2	01/20/03	REVISE FUTURE TENDON DEV BLOCK LOCATION	MR	JC	52
1	01/20/03	REVISE DRAIN LOCATIONS	MR	SS	28

REVISIONS

CONTRACT CHANGE ORDER NO. 52
SHEET 19 OF 49

REGISTERED ENGINEER - CIVIL
6-4-01
PLANS APPROVAL DATE
Scott Hunter No. C 048066 Exp. 12/31/03 CIVIL STATE OF CALIFORNIA
The State of California or its officers or agents shall not be responsible for the accuracy or completeness of electronic copies of this plan sheet.

T.Y. LIN / MOFFATT & NICHOL
825 BATTERY STREET
SAN FRANCISCO, CA 94111

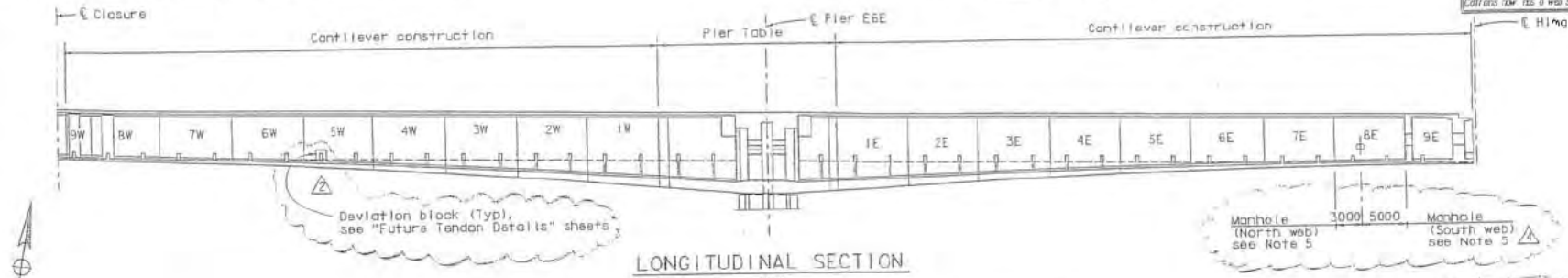

LONGITUDINAL SECTION
1:250

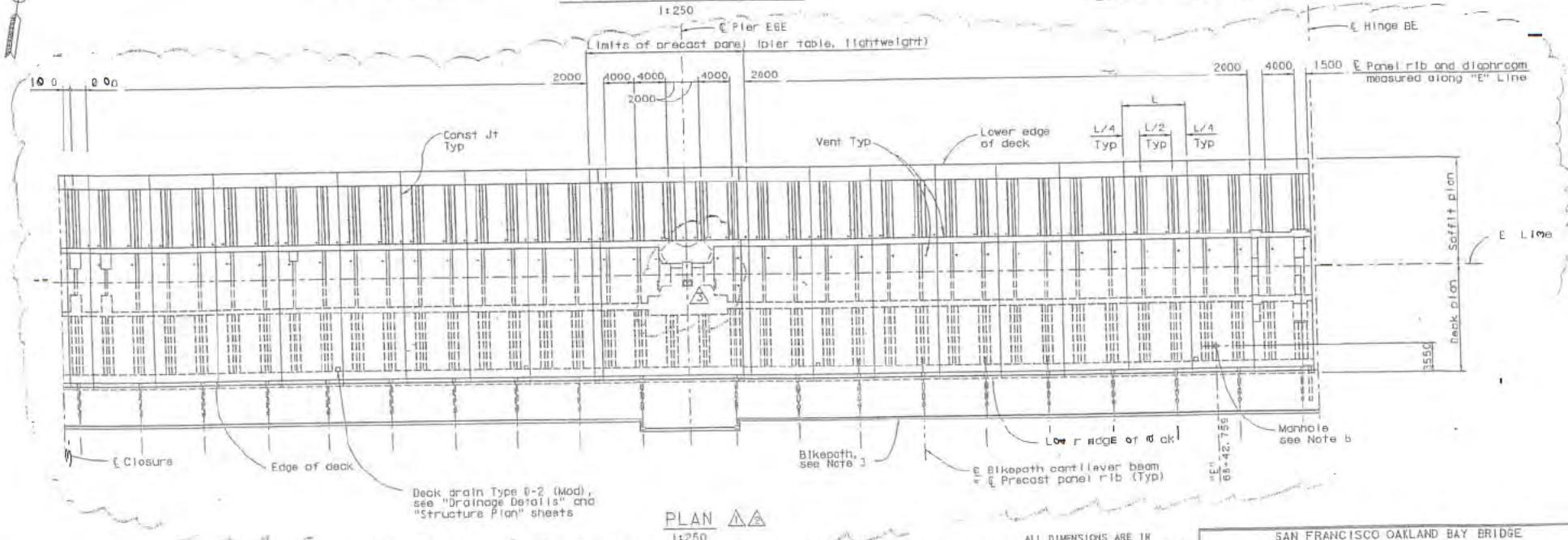

PLAN
1:250

ALL DIMENSIONS ARE IN MILLIMETERS UNLESS OTHERWISE SHOWN

SAN FRANCISCO OAKLAND BAY BRIDGE
EAST SPAN SEISMIC SAFETY PROJECT

SKYWAY STRUCTURES
GIRDER LAYOUT E6E

DESIGN OVERSIGHT: 8/6/2003
SIGN OFF DATE

DESIGN	BY S. Hunter	CHECKED M. Lamont	
DETAILS	BY A. Lishansky	CHECKED M. Lamont	
QUANTITIES	BY K. Cormier	CHECKED S. Shi	

PREPARED FOR THE STATE OF CALIFORNIA DEPARTMENT OF TRANSPORTATION

Salid Abbas
PROJECT ENGINEER

BRIDGE NO. 34-0006L/R
ODOMETER POST 3.974.3 / 0.071.6

CU 04
EA 01202

DISCREPANCY PRINTS BEARING EARLIER REVISION DATES:

REVISION DATES (PRELIMINARY STAGE ONLY)

SHEET 122

Rev. Date 3-10-98

100 % PS&E

NOTES:

1. For notes, see "Girder Layout E3W" sheet.
2. For vent aetalls, see "Girder Layout E3W" sheet.
3. For blkepath detal Is, see "Blkepath Detalls" sheets.
4. Key to segment nomenclatura: E or W
   - Segment No.
   - East or West
5. For web manhole details, see "Mlscel laneous Detal Is" sheets.
6. For deck manhole detal is, see B7-11.
7. Orientat ion of dlaphragm and precast panel rib shal l be normal to "E" Line.

For steel grating detal l, see "Miscel laneous Details" sheets.

DIST	COUNTY	ROUTE	TOTAL PROJECT	NO.	SHEETS
04	SF, Ala	80	13.9 / 14.3, 0.0 / 1.6	555R2	978

REGISTERED ENGINEER - CIVIL

6-4-01

PLANS APPROVAL DATE

The State of California or its officers or agents shall not be responsible for the accuracy or completeness of electronic copies of this plan sheet.

Scott Hunter No. C 048066 Exp. 12/31/03 CIVIL STATE OF CALIFORNIA

T.Y. LIN / MOFFATT & NICHOL
825 BATTERY STREET
SAN FRANCISCO, CA 94111

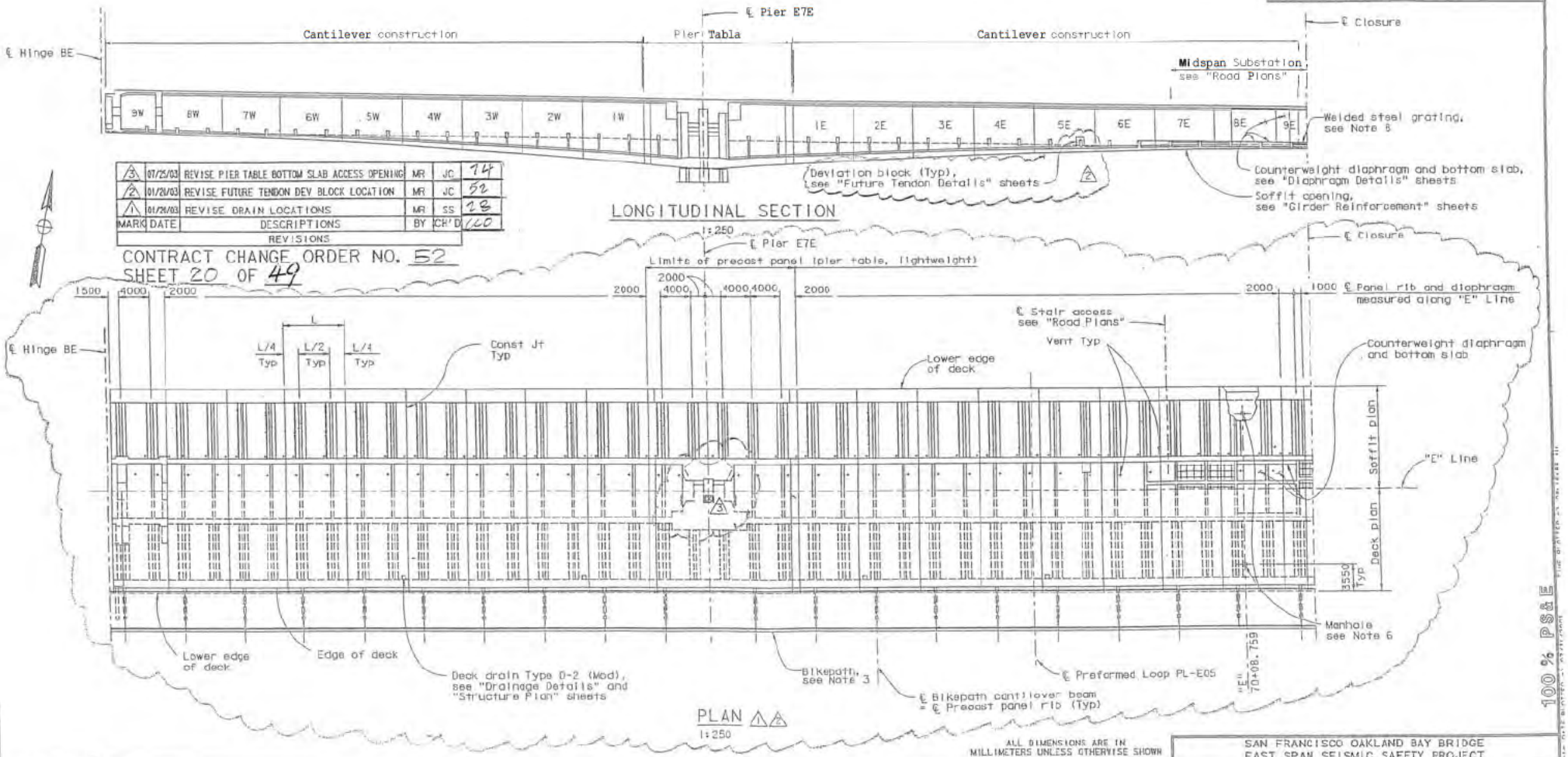

MARK	DATE	DESCRIPTIONS	BY	CH'D
3	07/25/03	REVISE PIER TABLE BOTTOM SLAB ACCESS OPENING	MR	JC
2	01/28/03	REVISE FUTURE TENDON DEV BLOCK LOCATION	MR	JC
1	01/26/03	REVISE DRAIN LOCATIONS	MR	SS

REVISIONS

CONTRACT CHANGE ORDER NO. 52
SHEET 20 OF 49

ALL DIMENSIONS ARE IN MILLIMETERS UNLESS OTHERWISE SHOWN

100 % PS&E

DESIGN OVERSIGHT 8/6/2003
SIGN OFF DATE

DESIGN	BY S. Hunter	CHECKED M. Lamont	
DETAILS	BY A. Lishansky	CHECKED M. Lamont	
QUANTITIES	BY K. Carmier	CHECKED S. Shi	

PREPARED FOR THE STATE OF CALIFORNIA DEPARTMENT OF TRANSPORTATION

Salid Abbas
PROJECT ENGINEER

CU 04
EA 012021

GRIDDIC NO. 34-0006L/R
HOLCOMBE POST 5.9/14.3, 0.0/1.6

SAN FRANCISCO OAKLAND BAY BRIDGE
EAST SPAN SEISMIC SAFETY PROJECT

SKYWAY STRUCTURES

GIRDER LAYOUT E7E

Rev. Date: 5-10-98

ORIGINAL SCALE IN MILLIMETERS FOR REDUCED PLANS

DISREGARD PRINTS BEARING EARLIER REVISION DATES

REVISION DATES (PRELIMINARY STAGE ONLY)

NOTES:

1. For notes, see "Girder Layout E3W" sheet.
2. For vent details, see "Girder Layout E3W" sheet.
3. For bikepath details, see "Bikepath Details" sheets.
4. Key to segment nomenclature: 1 E or W
   Segment No. — East or West
5. For web manhole details, see "Miscellaneous Details" sheets.
6. For deck manhole details, see B7-11.
7. Orientation of diaphragm and precast panel rib shall be normal to "E" Line.
8. For steel grating detail, see "Miscellaneous Details" sheets.

04	SF, A10	80	13.9 / 0.0 / 4.3 / .6	556R2	978

Scott Hunter
REGISTERED ENGINEER - CIVIL
6-4-01
PLANS APPROVAL DATE

REGISTERED PROFESSIONAL ENGINEER Scott Hunter No. C 048066 Exp. 12/31/03 CIVIL STATE OF CALIFORNIA

The State of California or its officers or agents shall not be responsible for the accuracy or completeness of electronic copies of this plan sheet.

J.V. LIU / MOFFATT & NICHOL
825 BATTERY STREET
SAN FRANCISCO, CA 94111

Caltrans now has a web site! To get to the web site, go to http://www.dot.ca.gov

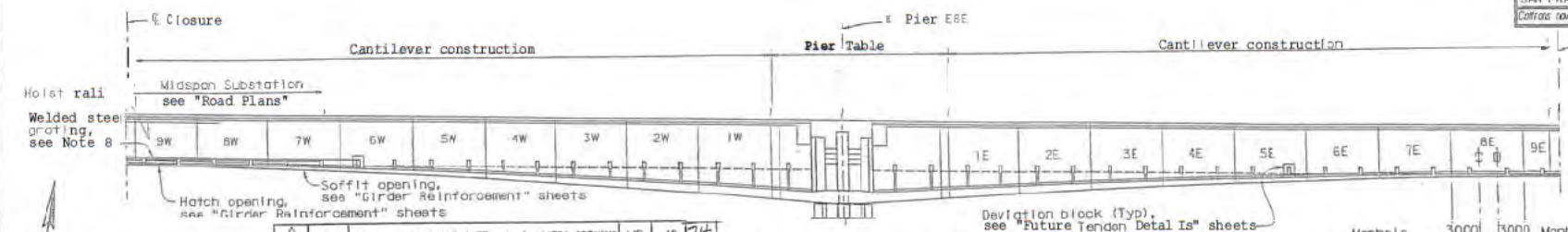

LONGITUDINAL SECTION

1:250

MARK	DATE	DESCRIPTIONS	BY	CH'D	DCCO
3	01/25/03	REVISE PIER TABLE BOTTOM SLAB ACCESS OPENING	MR	JC	74
2	01/20/03	REVISE FUTURE TENDON DEV BLOCK LOCATION	MR	JC	52
1	01/20/03	REVISE DRAIN LOCATIONS	MR	SS	28

REVISIONS

CONTRACT CHANGE ORDER NO. 52
SHEET 01 OF 40

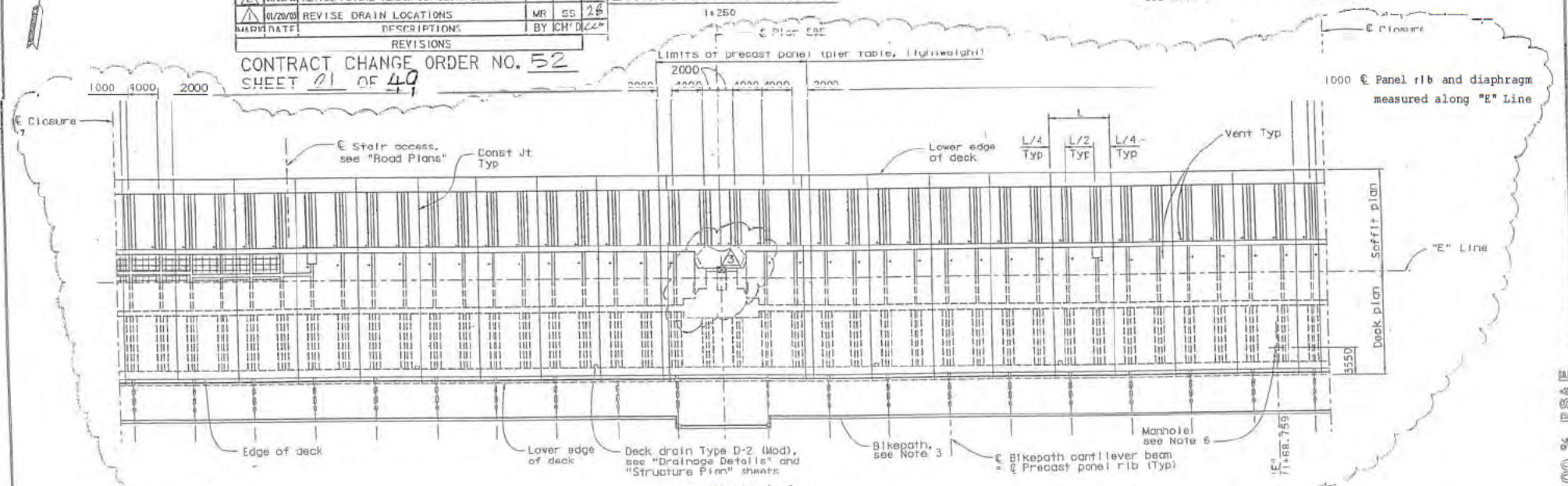

PLAN 1 2

1:250

ALL DIMENSIONS ARE IN MILLIMETERS UNLESS OTHERWISE SHOWN

SAN FRANCISCO OAKLAND BAY BRIDGE
EAST SPAN SEISMIC SAFETY PROJECT

SKYWAY STRUCTURES

GIRDER LAYOUT E8E

DESIGN OVERSIGHT 8/6/2003
SIGN OFF DATE

DESIGN	S. Hunter	CHECKED	M. Lamont
DETAILS	A. Lishansky	CHECKED	M. Lamont
QUANTITIES	K. Cormier	CHECKED	S. Shi

PREPARED FOR THE STATE OF CALIFORNIA DEPARTMENT OF TRANSPORTATION

Salid Abbas
PROJECT ENGINEER

BRIDGE NO. 34-0006L/R
KILOMETER POST 13.9/14.3, 0.0/1.6

CU 04
EA 01202

DISREGARD PRINTS BEARING EARLIER REVISION DATES

REVISION DATES (PRELIMINARY STAGE ONLY)

SHEET 124

ORIGINAL SCALE-IN-MILLIMETERS FOR REDUCED PLANS

100% PS&E

NOTES:

1. For no-tes, see "Girder Loyout E3W" sheet.
2. For vent details, see "Ginder layout E3W" sheet.
3. For bikepath detolls, see "Bikepatn Detolls" sheets.
4. Key to segment nomenclature: E or W
   Segment No. — East or West
5. For web monhole detolls, see "Miscel laneous Detalls" sheets.
6. For deck monhols detalls, see B7-11.
7. Orientation of diaphragm and precast panel rib shall be normal to "E" Line.

MARK	DATE	DESCRIPTIONS	BY	CH'D	CCD
3	07/25/03	REVISE PIER TABLE BOTTOM SLAB ACCESS OPENING	MR	JC	74
2	01/20/03	REVISE FUTURE TENDON DEV BLOCK LOCATION	MR	JC	52
1	01/20/03	REVISE DRAIN LOCATIONS	MR	SS	28

REVISIONS

CONTRACT CHANGE ORDER NO. 52
SHEET 22 OF 49

DIST.	COUNTY	ROUTE	KILOMETER POST TOTAL PROJECT	SHEET NO.	TOTAL SHEETS
04	SF, Ala	80	13.9 / 14.3, 0.0 / 1.6	557R2	978

REGISTERED ENGINEER - CIVIL
6-4-01
PLANS APPROVAL DATE
Scott Hunter No. C 048066 Exp. 12/31/03 CIVIL STATE OF CALIFORNIA
The State of California or its officers or agents shall not be responsible for the accuracy or completeness of electronic copies of this plan sheet.

T.Y. LIN / MOFFATT & NICHOL
825 BATTERY STREET
SAN FRANCISCO, CA 94111

Caltrans now has a web site! To get to the web site, go to: http://www.dot.ca.gov

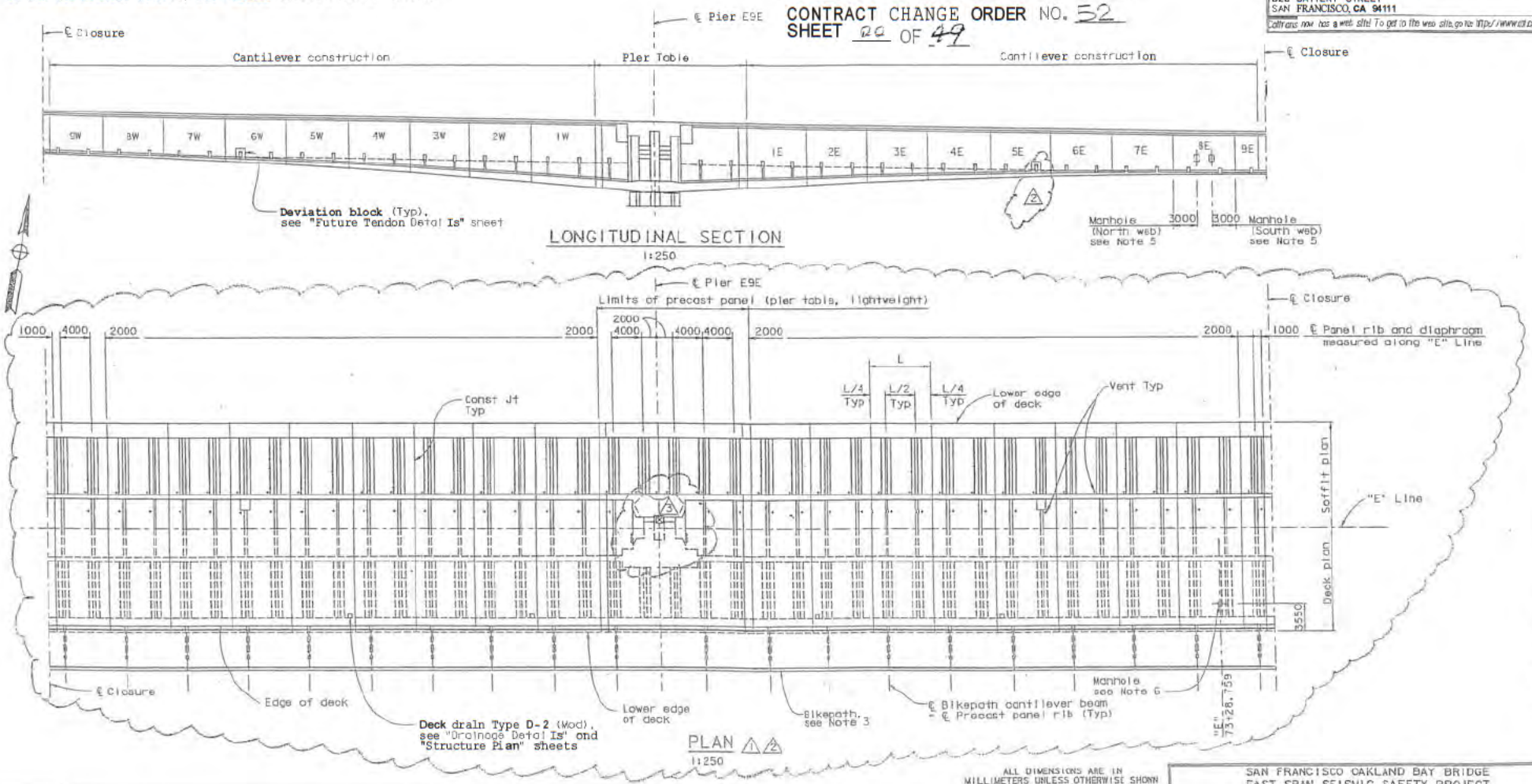

ALL DIMENSIONS ARE IN MILLIMETERS UNLESS OTHERWISE SHOWN

SAN FRANCISCO OAKLAND BAY BRIDGE
EAST SPAN SEISMIC SAFETY PROJECT

SKYWAY STRUCTURES

GIRDER LAYOUT E9E

DESIGN OVERSIGHT 8/16/2003
SIGN OFF DATE

DESIGN	BY S. Hunter	CHECKED M. Lamont	
DETAILS	BY A. Liskovsky	CHECKED M. Lamont	
QUANTITIES	BY K. Corrales	CHECKED S. Sti	

PREPARED FOR THE STATE OF CALIFORNIA DEPARTMENT OF TRANSPORTATION

Salid Abbas
PROJECT ENGINEER

BRIDGE NO. 34-0006L/R
KILOMETER POST 13.8/14.3, 0.0/1.6

CU 04

Rev. Date: 5-10-96

ORIGINAL GRADE-IN-MILLIMETERS FOR REDUCED PLANS

DISREGARD PRINTS BEARING EARLIER REVISION DATES

REVISIONS DATES (PRELIMINARY STAGE ONLY)

SHEET OF

100 % PS&E

NOTES:

1. For notes, see "Girder Layout E3W" sheet.
2. For vent details, see "Girder Layout E3W" sheet.
3. For Bikepath details, *see* "Bikepath Details" sheets.
4. Key to segment nomenclature: | E or W

   Segment No. — East or West
5. For web manhole details, see "Miscellaneous Details" sheets.
5. For deck manhole details, see (87-11).
7. Orientation of diaphragm and precast panel rib shall be normal to "E" Line.

MARK	DATE	DESCRIPTIONS	BY	CH'D
4	07/25/13	REVISE WEB MANHOLE LOCATIONS	MR	JC
3	07/25/13	REVISE PIER TABLE BOTTOM SLAB ACCESS OPENING	MR	JC
2	01/20/13	REVISE FUTURE TENDON DEV BLOCK LOCATION	MR	JC
1	01/20/13	REVISE DRAIN LOCATIONS	MR	SS

REVISIONS

CONTRACT CHANGE ORDER NO. 52
SHEET 23 OF 49

04 | SF.Ala | 30 | 13.9 / 14.3 / 0.0 / 1.6 | 558R2 | 978

REGISTERED ENGINEER - CIVIL
6-4-01
PLANS APPROVAL DATE
The State of California or its officers or agents shall not be responsible for the accuracy or completeness of electronic copies of this drawing.

Scott Hunter No. C 048066 Exp. 12/31/03 CIVIL STATE OF CALIFORNIA

T.Y. LIN / MOFFATT & NICHOL
805 BATTERY STREET
SAN FRANCISCO, CA 94111

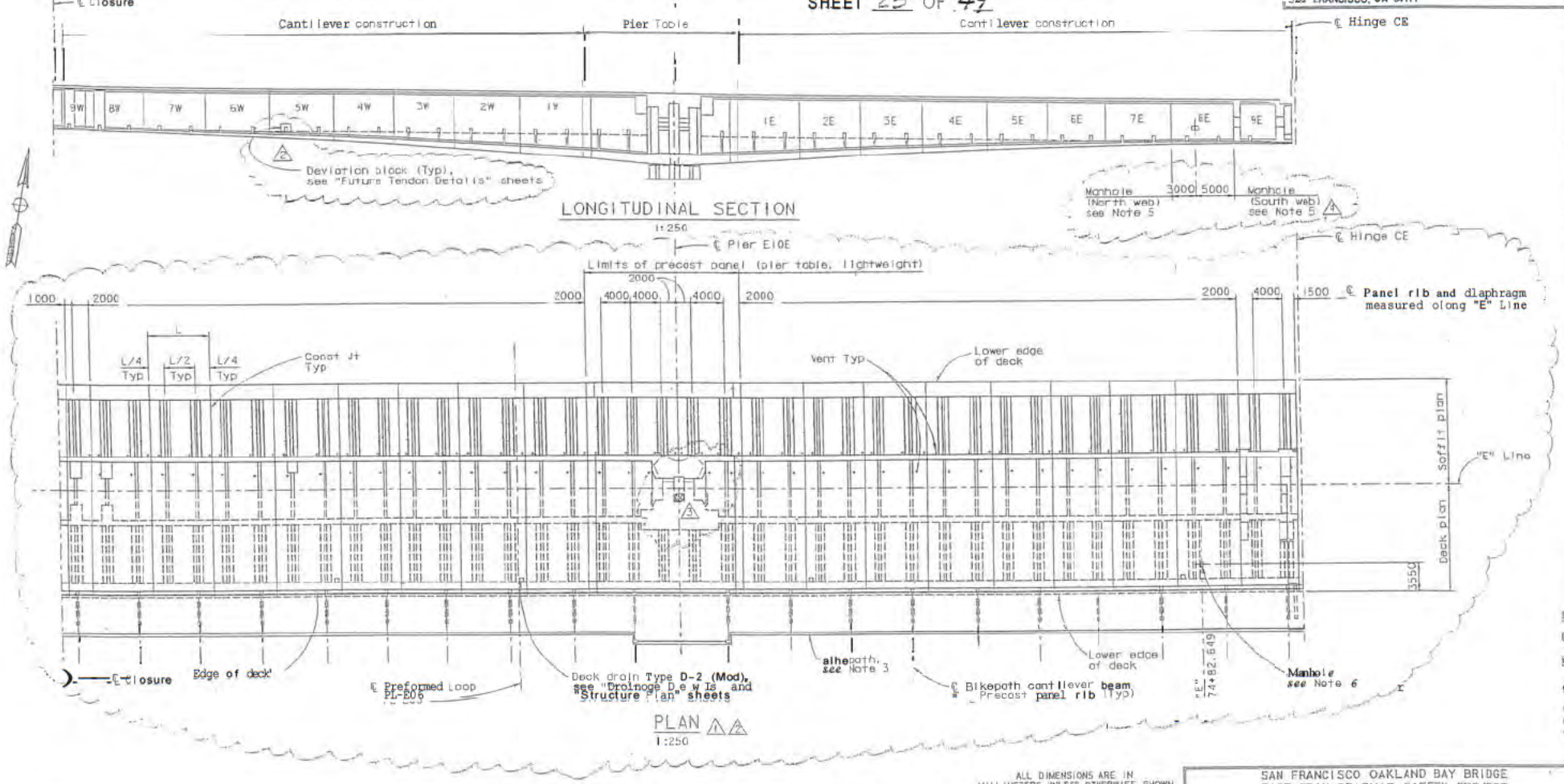

ALL DIMENSIONS ARE IN MILLIMETERS UNLESS OTHERWISE SHOWN

SAN FRANCISCO OAKLAND BAY BRIDGE
EAST SPAN SEISMIC SAFETY PROJECT

SKYWAY STRUCTURES

GIRDER LAYOUT E10E

DESIGN OVERSIGHT 6/1/2007
SIGN OFF DATE
Rev. Date: 3-30-98

DESIGN	S. Hunter	H. Lamont	
DETAILS	A. Liehansky	H. Lamont	
QUANTITIES	K. Cormier	S. Shi	

ORIGINAL SCALE IN MILLIMETERS FOR REDUCED PLANS

PREPARED FOR THE STATE OF CALIFORNIA DEPARTMENT OF TRANSPORTATION

Solid Abbas
PROJECT ENGINEER

CU 04
EA 012021

BRIDGE NO. 34-0006L/R
KILOMETER POST 13.9/14.3, 0.0/1.6

DISREGARD PRINTS BEARING EARLIER REVISION DATES

REVISION DATES (PRELIMINARY STAGE ONLY)

SHEET 126 OF

100 % PS&E

NOTES:

1. For notes, *see* "Girder Layout E3W" sheet.
2. For vent details, *see* "Girder Layout E3W" sheet.
3. For bikepath details, **see** "Bikepath Details" **sheets.**
4. Key to segment nomenclature: 1 E or W
   Segment No. — East or West
5. For **web** manhole details, *see* "Miscellaneous Details" sheets.
6. For deck manhole- detail Is, *see* B7-11.
7. Orientation of diaphragm and precast panel rib shall be normal to "E" Line.

DIST.	COUNTY	ROUTE	TOTAL PROJECT	SHEET NO.	TOTAL SHEETS
04	SF, Ala	80	13.9 / 14.3, 0.0 / 1.6	559R2	978

REGISTERED ENGINEER - CIVIL

6-4-01

PLANS APPROVAL DATE

Scott Hunter No. C 048066 Exp. 12/31/03 CIVIL STATE OF CALIFORNIA

The State of California or its officers or agents shall not be responsible for the accuracy or completeness of electronic copies of this plan sheet.

T.Y. LIN / MOFFATT & NICHOL
825 BATTERY STREET
SAN FRANCISCO, CA 94111

Caltrans now has a web site! To get to the web site, go to http://www.dot.ca.gov

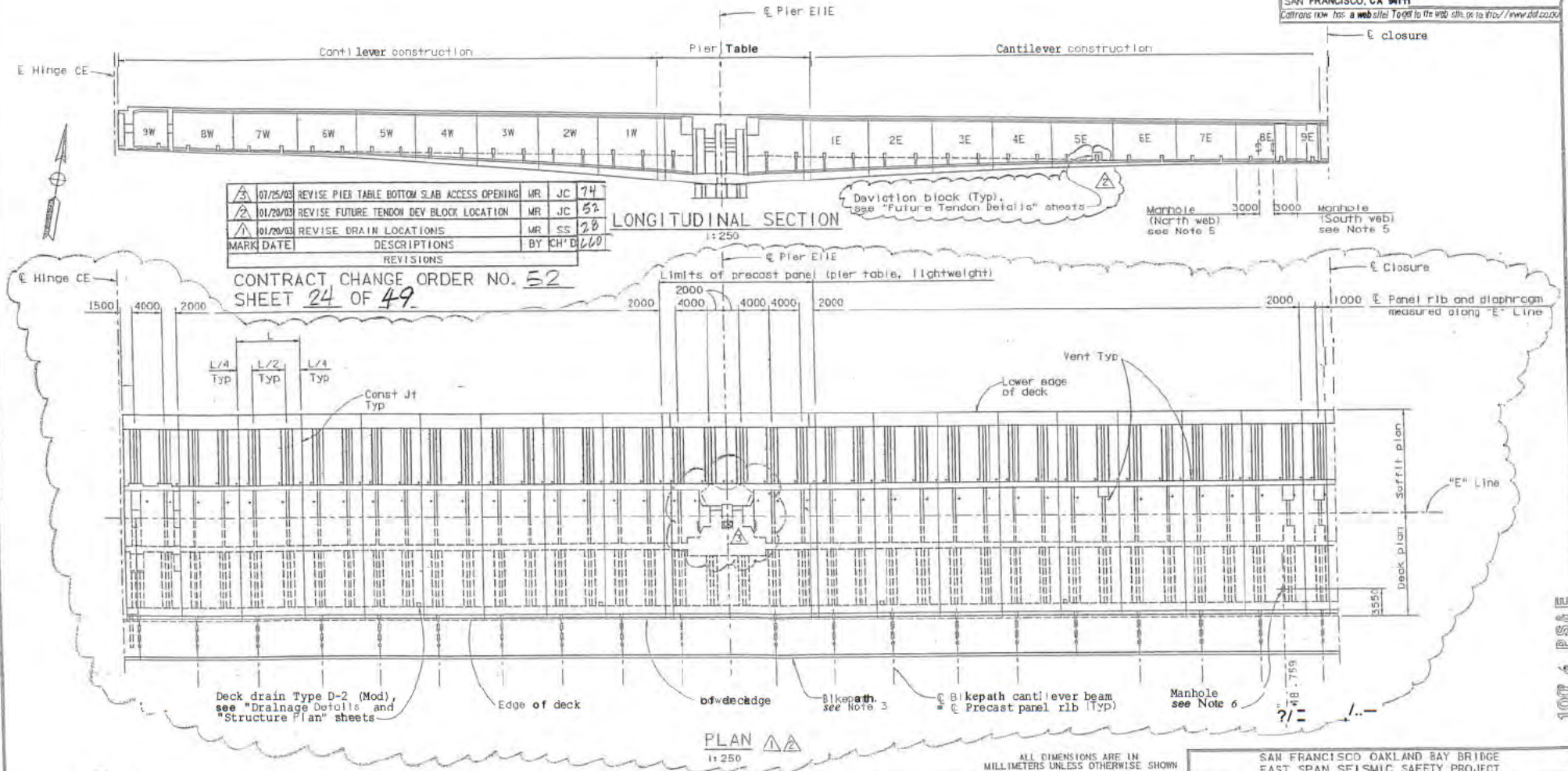

MARK	DATE	DESCRIPTIONS	BY	CH'D
3	07/25/03	REVISE PIER TABLE BOTTOM SLAB ACCESS OPENING	MR	JC
2	01/20/03	REVISE FUTURE TENDON DEV BLOCK LOCATION	MR	JC
1	01/20/03	REVISE DRAIN LOCATIONS	MR	SS

REVISIONS

CONTRACT CHANGE ORDER NO. 52
SHEET 24 OF 49

ALL DIMENSIONS ARE IN MILLIMETERS UNLESS OTHERWISE SHOWN

SAN FRANCISCO OAKLAND BAY BRIDGE
EAST SPAN SEISMIC SAFETY PROJECT

SKYWAY STRUCTURES

GIRDER LAYOUT E11E

DESIGN OVERSIGHT 8/6/2002
SIGN OFF DATE

DESIGN	S. Hunter	M. Lamont
DETAILS	A. Liskovsky	M. Lamont
QUANTITIES	L. Corsler	S. Shi

PREPARED FOR THE STATE OF CALIFORNIA DEPARTMENT OF TRANSPORTATION

Sajid Abbas
PROJECT ENGINEER

BRIDGE NO. 34-0006L/R
DIAMETER POST 13.9/14.3, 0.0/1.6

CU 04
EA 0T2U2T

DISREGARD PRINTS BEARING EARLIER REVISION DATES

SHEET 127

Rev. Date: 5-18-99

ORIGINAL SCALE IN MILLIMETERS FOR REDUCED PLANS 0 10 20 30 40 50 60 70 80 90 100

100% PS&E

1. For notes, see "Girder Layout E3W" sheet.
2. For vent details, see "Vent Layout E3W" sheet.
3. For bikepath details, see "Bikepath Details" sheets.
4. Key to segment nomenclature: 1 E or W (Segment No. — East or West)
5. For web manhole details, see "Miscellaneous Details" sheets.
6. For deck manhole details, see [illegible].
7. Orientation of diaphragm and precast panel rib shall be normal to "E" Line.

MARK	DATE	DESCRIPTIONS	BY	CH'D
74	07/25/03	REVISE PIER TABLE BOTTOM SLAB ACCESS OPENING	MR	JC
52	01/20/03	REVISE FUTURE TENDON DEV BLOCK LOCATION	MR	JC
28	01/20/03	REVISE DRAIN LOCATIONS	MR	SS

REVISIONS

CONTRACT CHANGE ORDER NO. 52
SHEET 25 OF 49

04 | SF, Ala | 80 | 0.0 / 1.6 | 560R2 | 578

Scott Hunter
REGISTERED ENGINEER - CIVIL
6-4-01
PLANS APPROVAL DATE
The State of California or its officers or agents shall not be responsible for the accuracy or completeness of electronic copies of this plan sheet.

REGISTERED PROFESSIONAL ENGINEER Scott Hunter C 048066 Exp. 12/31/03 CIVIL STATE OF CALIFORNIA

T.Y. LIN / MOFFATT & NICHOL
325 BATTERY STREET
SAN FRANCISCO, CA 94111
Caltrans now has a web site! To get to its web site, go to: http://www.dot.ca.gov

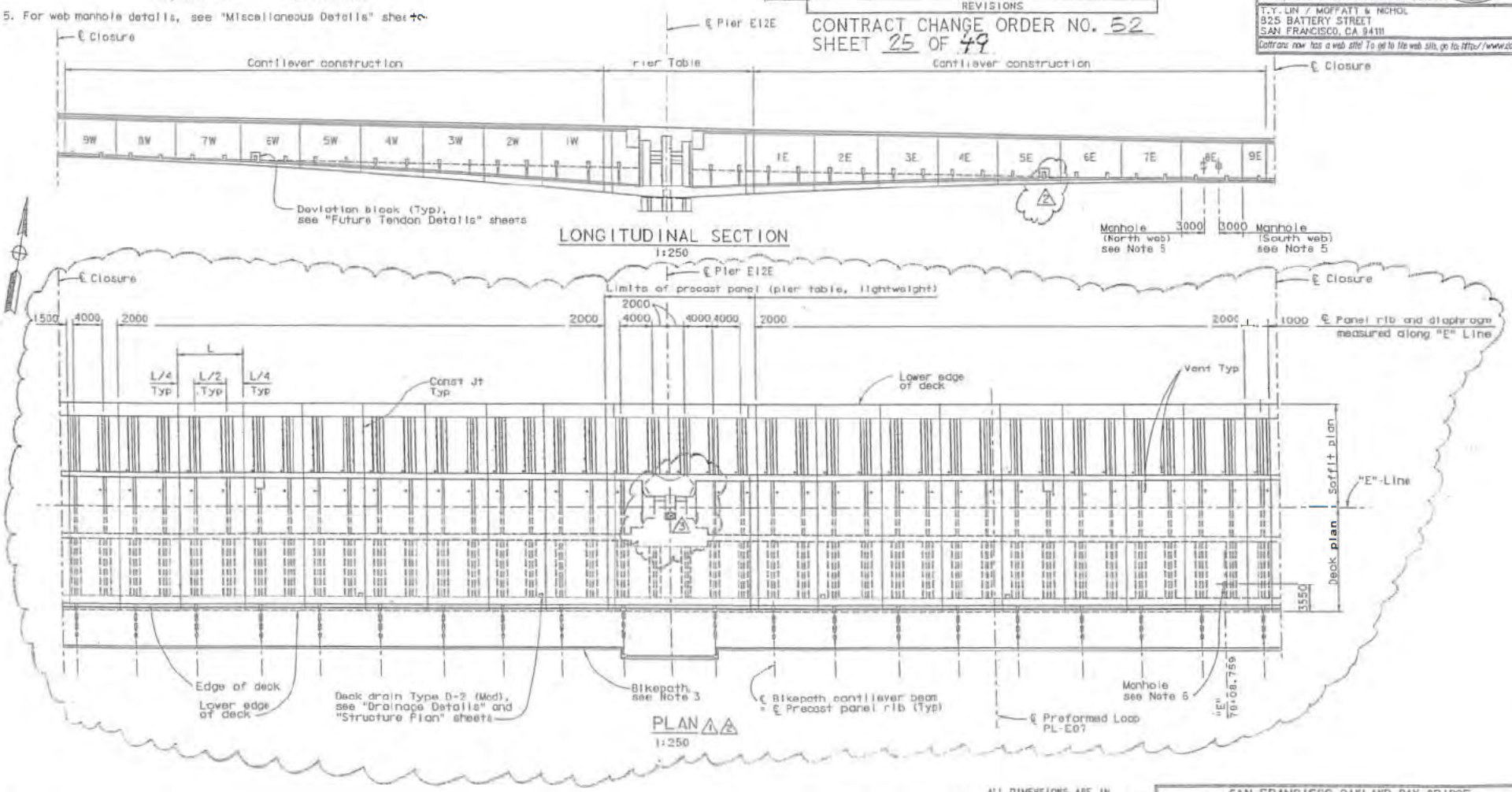

ALL DIMENSIONS ARE IN MILLIMETERS UNLESS OTHERWISE SHOWN

SAN FRANCISCO OAKLAND BAY BRIDGE
EAST SPAN SEISMIC SAFETY PROJECT

100 % PS&E

DESIGN OVERSIGHT 8/6/2003
SIGN OFF DATE

DESIGN	S. Hunter		M. Lamont
DETAILS	A. Ishansky	CHECKED	M. Lamont
QUANTITIES	K. Cormier	CHECKED	S. Shi

PREPARED FOR THE STATE OF CALIFORNIA DEPARTMENT OF TRANSPORTATION

Salid Abbas
PROJECT ENGINEER

34-0006L/R
KILOMETER POST 13.9/14.3, 0.0/1.6

SKYWAY STRUCTURES
GIRDER LAYOUT E12E

Rev. Date 5-15-98

ORIGINAL SCALE IN MILLIMETERS FOR REDUCED PLANS

CU 04
EA 0T2021

DISREGARD PRINTS BEARING EARLIER REVISION DATES

SHEET 128

NOTES:

1. For notes, see "Girder Layout E3W" sheet.
2. For vent detail Is, see "Girder Layout E3W" sheet.
3. For blkepath detal-Is, see "Blkepath Detal Is" sheets.
4. Key to segment nomenclature: 1 E or W
   Segment No. — East or West
5. For web monhole details, see "Miscellaneous Details" sheets.
6. For deck manhole derails, see (B7-11).
7. Orientation of diaphragm and precast panel rib shal be normal to "E" Line.

Metric

Scott Hunter
REGISTERED ENGINEER - CIVIL
6-4-01
PLANS APPROVAL DATE

REGISTERED PROFESSIONAL ENGINEER Scott Hunter No. C 048086 Exp. 12/31/03 CIVIL STATE OF CALIFORNIA

The State of California or its officers or agents shall not be responsible for the accuracy or completeness of electronic copies of this plan sheet.

T.Y. LIN / MOFFATT & NICHOL
825 BATTERY STREET
SAN FRANCISCO, CA 94111

Caltrans now has a web site! To get to the web site, go to: http://www.dot.ca.gov

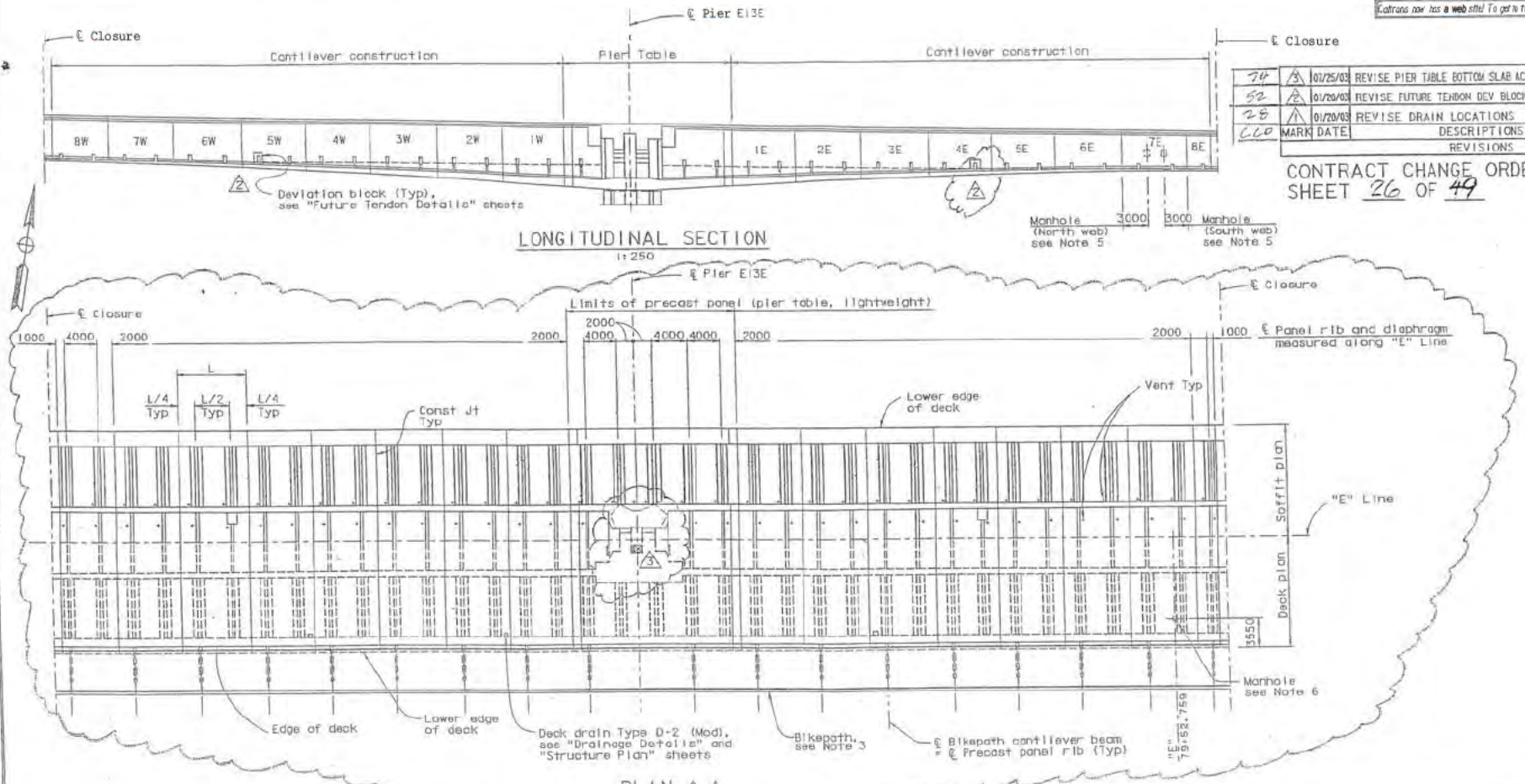

MARK	DATE	DESCRIPTIONS	BY	CH'D
74	03/25/03	REVISE PIER TABLE BOTTOM SLAB ACCESS OPENING	MR	JC
52	01/20/03	REVISE FUTURE TENDON DEV BLOCK LOCATION	MR	JC
28	01/20/03	REVISE DRAIN LOCATIONS	MR	SS
CCO		REVISIONS		

CONTRACT CHANGE ORDER NO. 52
SHEET 26 OF 49

100 % PSAE

ALL DIMENSIONS ARE IN MILLIMETERS UNLESS OTHERWISE SHOWN

SAN FRANCISCO OAKLAND BAY BRIDGE
EAST SPAN SEISMIC SAFETY PROJECT

SKYWAY STRUCTURES

GIRDER LAYOUT E13E

DESIGN OVERSIGHT 8/16/2003
SIGN OFF DATE

DESIGN	S. Hunter	CHECKED	W. Lamont
DETAILS	A. Lishansky	CHECKED	W. Lamont
QUANTITIES	K. Cormier	CHECKED	S. Shi

PREPARED FOR THE STATE OF CALIFORNIA DEPARTMENT OF TRANSPORTATION

Solid Abbas
PROJECT ENGINEER

BRIDGE NO. 34-0006L/R
KILOMETER POST 3.9/14.3, 0.0/1.6

CU 04
EA 012021

DISREGARD PRINTS BEARING EARLIER REVISION DATES

REVISION DATES (PRELIMINARY STAGE ONLY)

SHEET 129 OF

Rev. Date 5-18-86

ORIGINAL SCALE IN MILLIMETERS FOR REDUCED PLANS

NOTES:

1. For notes, see "Girder Layout E3W" sheet.
2. For vent details, see "Girder Layout E3W" sheet.
3. For bikepath details, see "Bikepath Details" sheets.
4. Key to segment nomenclature: 1 E or W
   Segment No. — East or West
5. For web manhole details, see "Miscellaneous Details" sheets.
6. For deck manhole details, see (87-11).
7. Orientation of diaphragm and precast panel rib shall be normal to "E" Line.

DIST.	COUNTY	ROUTE	KILOMETER POST TOTAL PROJECT	SHEET NO.	TOTAL SHEETS
04	SF/Ala	80	13.9/14.3, 0.0/1.6	562R3	978

REGISTERED ENGINEER - CIVIL
6-4-01
PLANS APPROVAL DATE
Saiid Abbas No. C 055274 Exp. 12/31/04 CIVIL STATE OF CALIFORNIA
The State of California or its officers or agents shall not be responsible for the accuracy or completeness of electronic copies of this plan sheet.

T.Y. LIN / MOFFATT & NICHOL
825 BATTERY STREET
SAN FRANCISCO, CA 94111

Caltrans now has a web site! To get to the web site, go to: http://www.dot.ca.gov

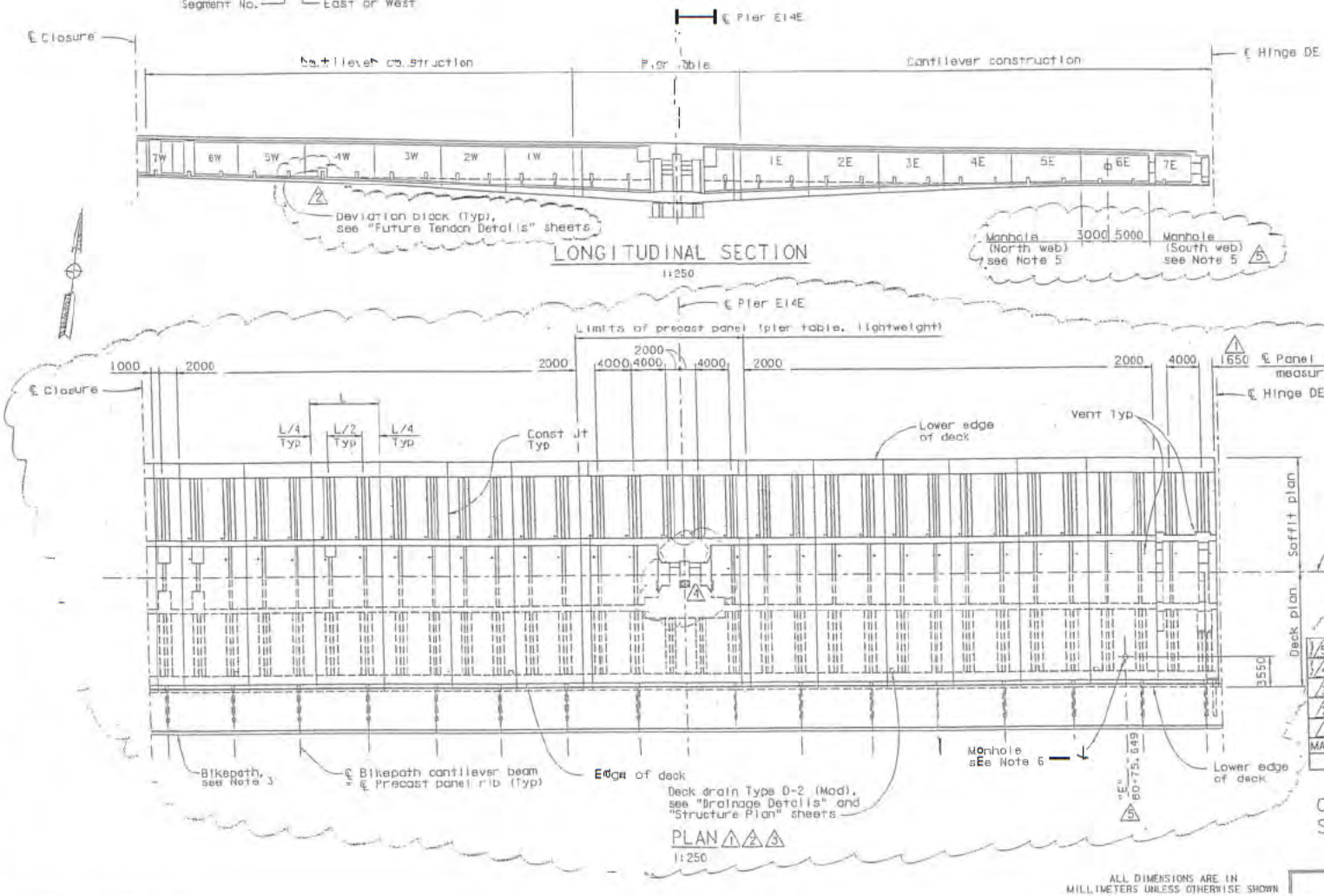

MARK	DATE	DESCRIPTIONS	BY	CH'D
5	07/25/03	REVISE WEB AND DECK MANHOLE LOCATIONS	MR	JC
4	07/25/03	REVISE PIER TABLE BOTTOM SLAB ACCESS OPENING	MR	JC
3	01/20/03	REVISE FUTURE TENDON DEV BLOCK LOCATIONS	MR	JC
2	01/20/03	REVISE DRAIN LOCATIONS	MR	SS
1	03/04/02	REVISE DIMENSION	TM	SC

REVISIONS

CONTRACT CHANGE ORDER NO. 52
SHEET 27 OF 49

100 % PLANS

ALL DIMENSIONS ARE IN MILLIMETERS UNLESS OTHERWISE SHOWN

SAN FRANCISCO OAKLAND BAY BRIDGE
EAST SPAN SEISMIC SAFETY PROJECT

DESIGN OVERSIGHT 8/6/2003
SIGN OFF DATE

DESIGN	S. Abbas		M. Lamont
DETAILS	A. Lishansky	CHECKED	M. Lamont
QUANTITIES	K. Cormier	CHECKED	J. Shi

PREPARED FOR THE STATE OF CALIFORNIA DEPARTMENT OF TRANSPORTATION

Saiid Abbas
PROJECT ENGINEER

34-0006L/R
KILOMETER POST 13.9/14.3, 0.0/1.6

CU 04
EA 04-012021

SKYWAY STRUCTURES
GIRDER LAYOUT E14E

DISREGARD PRINTS BEARING EARLIER REVISION DATES

SHEET 130

Rev. Date 3-19-98

ORIGINAL SCALE IN MILLIMETERS FOR REDUCED PLANS 0 10 20 30 40 50 60 70 80 90 100

DIST.	COUNTY	ROUTE	KILOMETER POST TOTAL PROJECT	SHEET NO.	TOTAL SHEETS
04	SF/Ala	80	13.9/14.3, 0.0/1.6	563R3	978

REGISTERED ENGINEER - CIVIL

6-4-01

PLANS APPROVAL DATE

The State of California or its officers or agents shall not be responsible for the accuracy or completeness of electronic copies of this plan sheet.

Sajid Abbas, No. C 055174, Exp. 12/31/04, CIVIL, STATE OF CALIFORNIA

T.Y. LIN / MOFFATT & NICHOL
825 BATTERY STREET
SAN FRANCISCO, CA 94111

Caltrans now has a web site! To get to its web site, go to: http://www.dot.ca.gov

NOTES:

1. For notes, see "Girder Layout E3W" sheet.
2. For vent details, see "Girder Layout E3W" sheet.
3. For bikepath details, see "Bikepath Details" sheets.
4. Key to segment nomenclature: 1 E or W — Segment No. — East or West
5. For web manhole details, see "Miscellaneous Details" sheets.
6. For deck manhole details, see (B7-L1).
7. Orientation of diaphragm and precast panel rib shall be normal to 'E' Line.

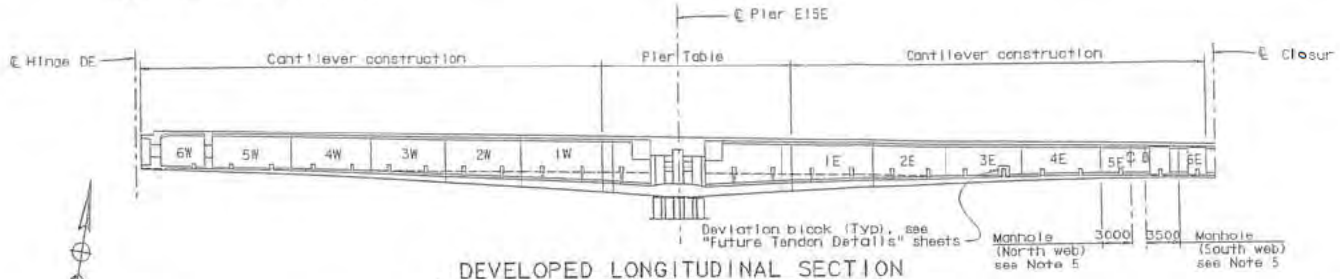

DEVELOPED LONGITUDINAL SECTION

1:250

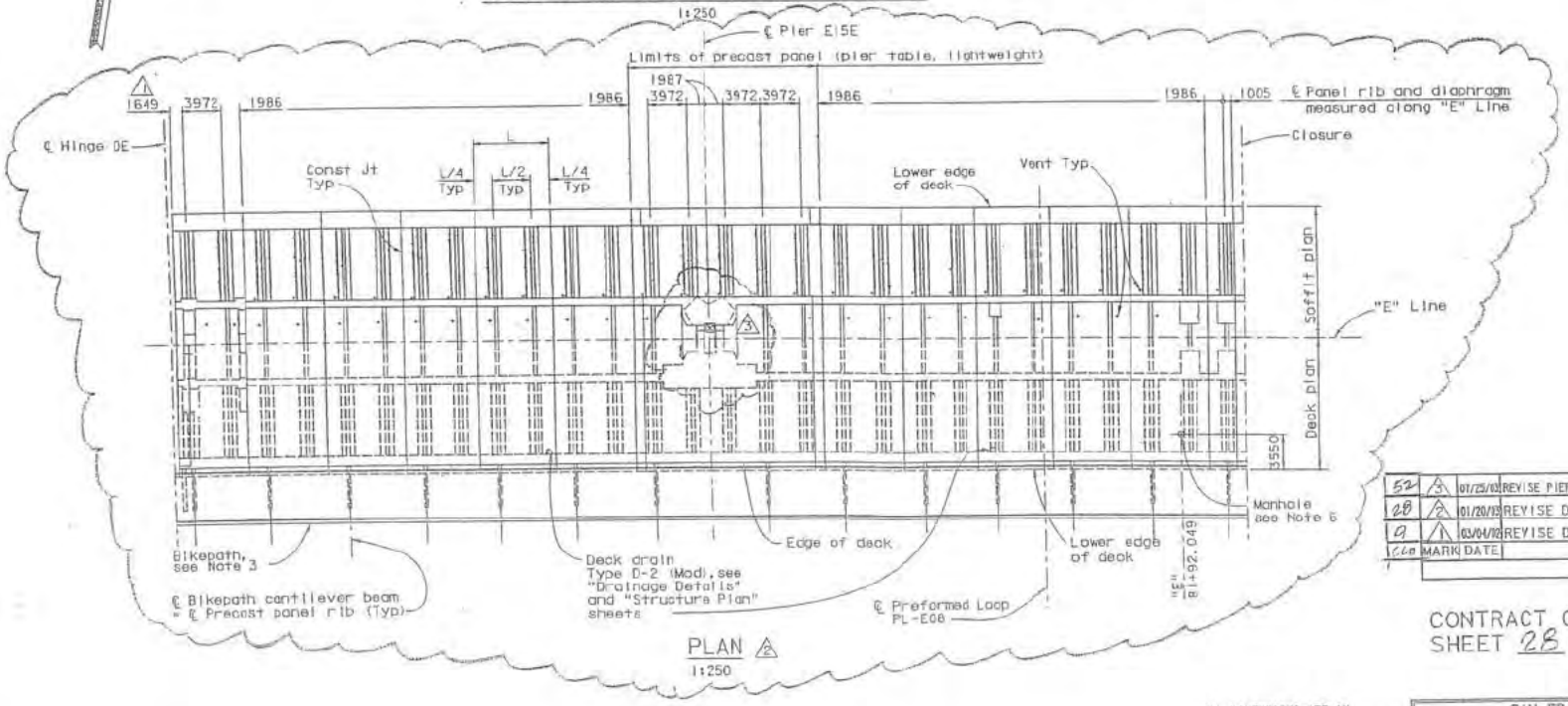

PLAN

1:250

MARK	DATE	DESCRIPTIONS	BY	CH'D
52	01/25/03	REVISE PIER TABLE BOTTOM SLAB ACCESS OPENING	MR	JC
28	01/20/03	REVISE DRAIN LOCATIONS	MR	SS
9	03/04/02	REVISE DIMENSION	TM	SC

REVISIONS

CONTRACT CHANGE ORDER NO. 52
SHEET 28 OF 49

ALL DIMENSIONS ARE IN MILLIMETERS UNLESS OTHERWISE SHOWN

SAN FRANCISCO OAKLAND BAY BRIDGE
EAST SPAN SEISMIC SAFETY PROJECT

SKYWAY STRUCTURES

GIRDER LAYOUT E15E

DESIGN OVERSIGHT 8/6/2003
SIGN OFF DATE

DESIGN	S. Abbas	W. Lamont	
DETAILS	A. Lishansky	W. Lamont	
QUANTITIES	K. Cormier	S. Shi	

PREPARED FOR THE STATE OF CALIFORNIA DEPARTMENT OF TRANSPORTATION

Sajid Abbas, PROJECT ENGINEER

BRIDGE NO. 34-0006L/R
KILOMETER POST 13.9/14.3, 0.0/1.6

CU 04
EA 04-012021

ORIGINAL SCALE IN MILLIMETERS FOR REDUCED PLANS

DISREGARD PRINTS BEARING EARLIER REVISION DATES

REVISION DATES (PRELIMINARY STAGE ONLY)

SHEET 171 OF

100 76 PS&E

DIST.	COUNTY	ROUTE	KILOMETER POST TOTAL PROJECT	SHEET NO.	TOTAL SHEETS
04	SF/Ala	80	13.9/14.3, 0.0/1.6	564R3	978

REGISTERED ENGINEER - CIVIL

6-4-01

PLANS APPROVAL DATE

Said Abbas No. C 055274 Exp. 12/31/04 CIVIL STATE OF CALIFORNIA

The State of California or its officers or agents shall not be responsible for the accuracy or completeness of electronic copies of this plan sheet.

T.Y. LIN / MOFFATT & NICHOL
825 BATTERY STREET
SAN FRANCISCO, CA 94111

Caltrans now has a web site! To get to the web site, go to: http://www.dot.ca.gov

NOTES:

1. For notes, see "Girder Layout E3W" sheet.
2. For vent details, see "Girder Layout E3W" sheet.
3. For bikepath details, see "Bikepath Details" sheets.
4. Key to segment nomenclature: E or W
   - Segment No.
   - East or West
5. For web manhole details, see "Miscellaneous Details"
6. For deck manhole details, see (97-11).
7. Orientation of diaphragm and precast panel rib shall [illegible] to ℄ Line.

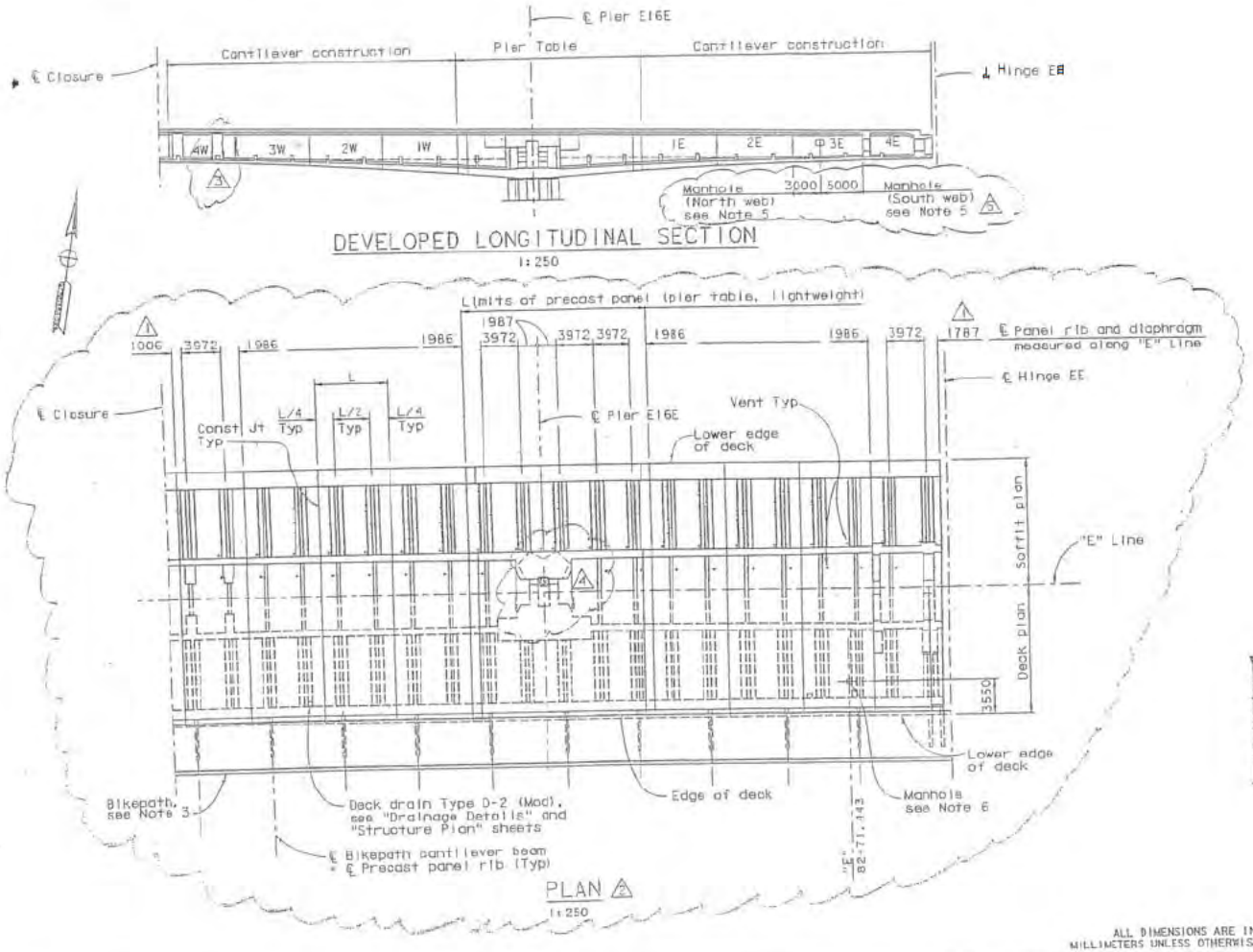

MARK	DATE	DESCRIPTIONS	BY	CH'D
245	07/25/03	REVISE WEB MANHOLE LOCATIONS	MR	JC
74	07/25/03	REVISE PIER TABLE BOTTOM SLAB ACCESS OPENING	MR	SS
52	01/20/03	REVISE FUTURE TENDON DEV BLOCK LOCATION	MR	SS
28	01/20/03	REVISE DRAIN LOCATION	MR	SS
9	03/04/02	REVISE DIMENSIONS	TM	SC
CEO		REVISIONS		

CONTRACT CHANGE ORDER NO. 52
SHEET 29 OF 49

100 % PSA

ALL DIMENSIONS ARE IN MILLIMETERS UNLESS OTHERWISE SHOWN

SAN FRANCISCO OAKLAND BAY BRIDGE
EAST SPAN SEISMIC SAFETY PROJECT

SKYWAY STRUCTURES

GIRDER LAYOUT E16E

DESIGN OVERSIGHT
SIGN OFF DATE 8/6/2003

DESIGN	S. Abbas	CHECKED	M. Lamont
DETAILS	A. Lishansky	CHECKED	M. Lamont
QUANTITIES	K. Cormier	CHECKED	S. Shi

PREPARED FOR THE STATE OF CALIFORNIA DEPARTMENT OF TRANSPORTATION

Said Abbas
PROJECT ENGINEER

BRIDGE NO. 34-0006L/R
KILOMETER POST 13.9/14.3, 0.0/1.6

CU 04
EA 04-013031

DISREGARD PRINTS BEARING EARLIER REVISION DATE

ORIGINAL SCALE IN MILLIMETERS FOR REDUCED PLANS

Rev. Date 3-19-99

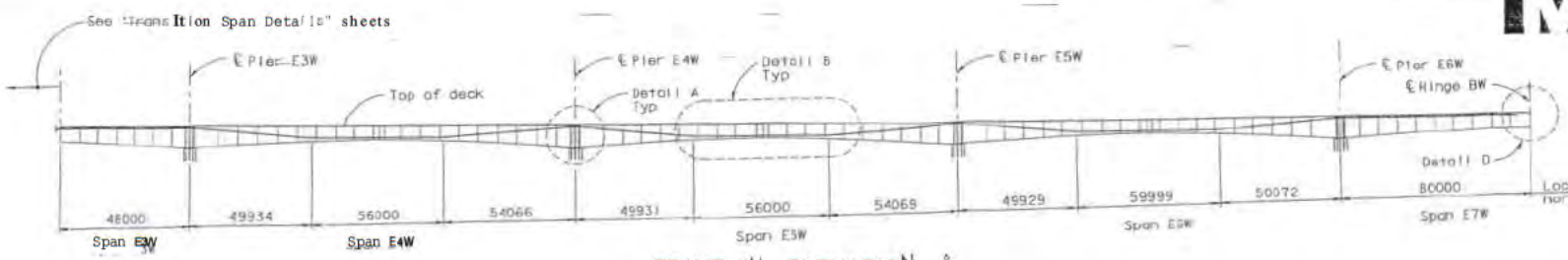

FRAME W1 ELEVATION ⚠1

1:1000

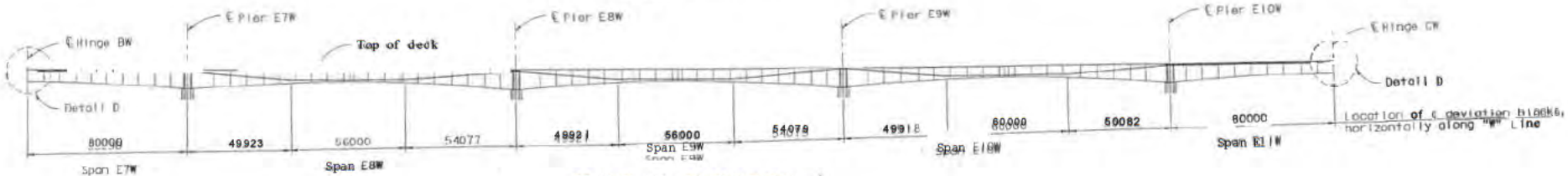

FRAME W2 ELEVATION ⚠1

1:1000

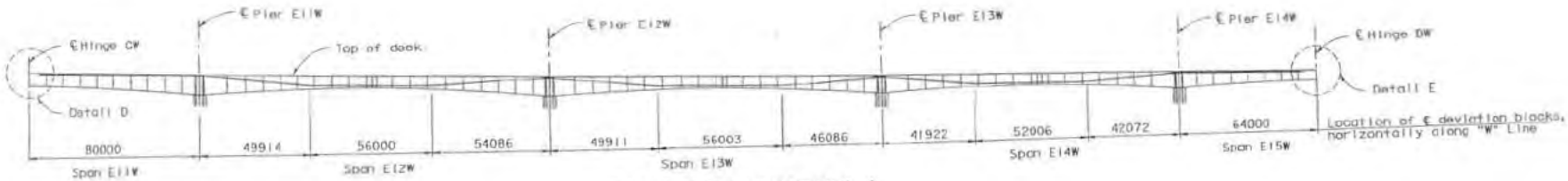

FRAME W3 ELEVATION ⚠1

1:1000

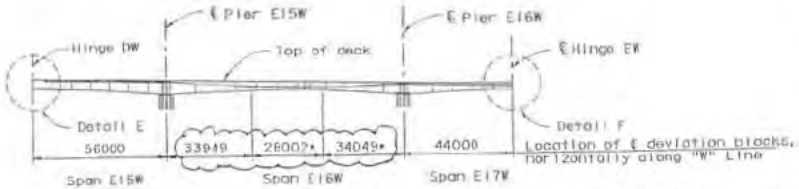

FRAME W4 ELEVATION ⚠1 ⚠2

1:1000

MARK	DATE	DESCRIPTIONS	BY	CH' D	CCO#
⚠2	04/30/04	REVISE DIMENSION AND ADD NOTE	JC	MS	52
⚠1	05/21/03	REVISE FUTURE TENDON DEV BLOCK LOCATION AND ADD NOTES	CR	MR	52

REVISIONS

CONTRACT CHANGE ORDER NO. 52
SHEET 35 OF 49

NOTES:

1. For Detail A, see "Future Tendon Details No.1" sheet.
2. For Detail B, see "Future Tendon Details No.2" sheet.
3. ⚠1 For Detail D, see "Fully Precast Hinge B, C Details" sheet.
4. ⚠1 For Detail E, see "Fully Precast Hinge D Details" sheet.
5. ⚠1 For Detail F, see "Fully Precast Hinge E Details" sheet.
6. Future Jacking Force: 3705 KN per Tendon.

* Dimensions are calculated using panel rib to rib and diaphragm to diaphragm spacing of 4000 mm in lieu of L/2 rule as stipulated in "Girder Layout" sheets. ⚠2

ALL DIMENSIONS ARE IN MILLIMETERS UNLESS OTHERWISE SHOWN

REGISTERED ENGINEER - CIVIL
6-4-01
PLANS APPROVAL DATE
The State of California or its officers or agents shall not be responsible for the accuracy or completeness of electronic copies of this plan sheet.
Charles Redfield, No. C-027605, Exp. 12/31/05, CIVIL, STATE OF CALIFORNIA

T.Y. LIN / MOFFATT & NICHOL
825 BATTERY STREET
SAN FRANCISCO, CA 94111

SAN FRANCISCO OAKLAND BAY BRIDGE
EAST SPAN SEISMIC SAFETY PROJECT

SKYWAY STRUCTURES

FUTURE TENDON LAYOUT "W" LINE

DESIGN: C. Redfield | DETAILS: E. Zharkov | QUANTITIES: C. Redfield
CHECKED: M. Lamont | CHECKED: M. Lamont | CHECKED: M. Lamont

PREPARED FOR THE STATE OF CALIFORNIA DEPARTMENT OF TRANSPORTATION

Sajid Abbas, PROJECT ENGINEER

BRIDGE NO. 34-0006L/R
HELIOMETER POST 3.8/14.3, 0.0/1.6

CU 04
EA 012021

DIGITAL SIGNATURE 5/6/04
SIGN DEV DATE

REVISION DATES (PRELIMINARY STAT ONLY): 10/26/01 | 11/29/01 | 12/28/01 | 1/30/02 | 10/30/04
EARLIER REVISION DATE(S):

SHEET 251

100% PS&E

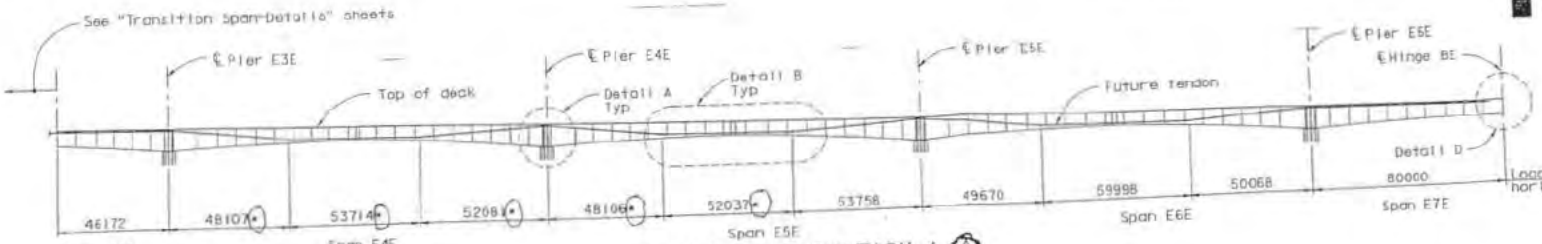

FRAME E1 ELEVATION △ 2

1:1000

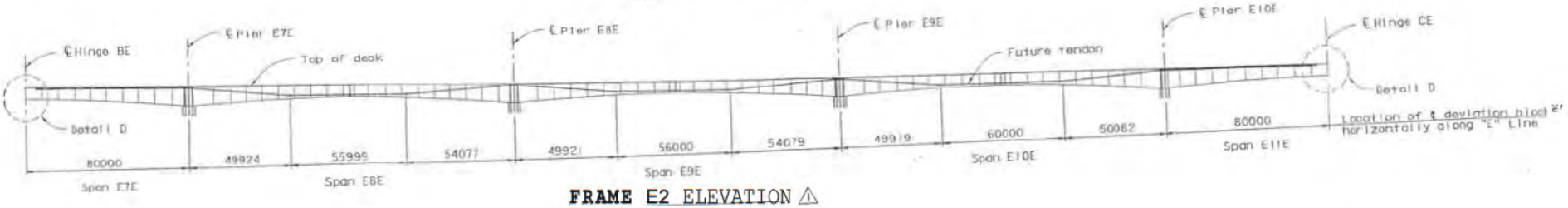

FRAME E2 ELEVATION △

1:1000

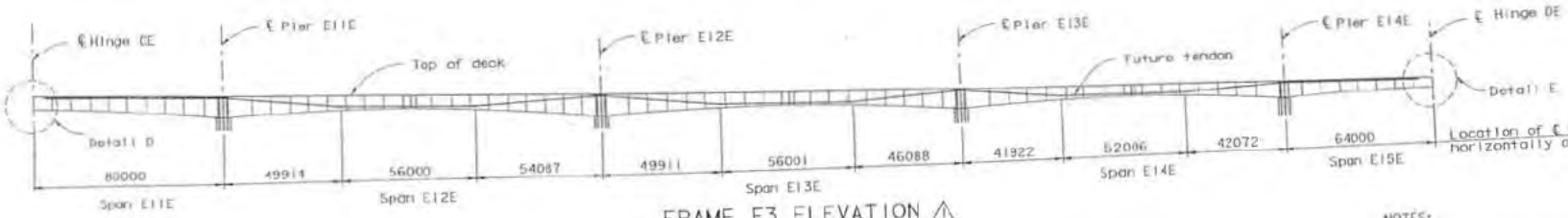

FRAME E3 ELEVATION △

1:1000

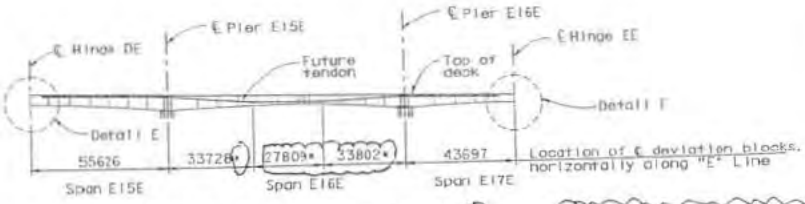

FRAME E4 ELEVATION △ 2

1:1000

NOTES:

1. For Detail A, see "Future Tendon Details No.1" sheet.
2. For Detail B, see "Future Tendon Details No.2" sheet.
3. △1 For Detail D, see "Fully Precast Hinge B, C Details" sheet.
4. △1 For Detail E, see "Fully Precast Hinge D Details" sheet.
5. △1 For Detail F, see "Fully Precast Hinge E Details" sheet.
6. Future Jacking Force: 3705 kN per Tendon.

MARK	DATE	DESCRIPTIONS	BY	CH'D	CCO#
2	04/30/04	REVISE DIMENSION AND ADD NOTE	JC	MS	52
1	05/21/03	REVISE FUTURE TENDON DEV BLOCK LOCATION AND ADD NOTES	CR	MR	51

REVISIONS

CONTRACT CHANGE ORDER NO. 52

SHEET 31 OF 49

• Dimensions are calculated using panel rib to rib and diaphragm to diaphragm spacing of 4000 mm in lieu of L/2 rule as stipulated in "Girder Layout" sheets. △2

ALL DIMENSIONS ARE IN MILLIMETERS UNLESS OTHERWISE SHOWN

REGISTERED ENGINEER - CIVIL

6-4-01

PLANS APPROVAL DATE

The State of California or its officers or agents shall not be responsible for the accuracy or completeness of electronic copies of this plan sheet.

Charles Redfield No. C-021605 Exp. 12/31/05 CIVIL STATE OF CALIFORNIA

T.Y. LIN / MOFFATT & NICHOL
825 BATTERY STREET
SAN FRANCISCO, CA 94111

SAN FRANCISCO OAKLAND BAY BRIDGE
EAST SPAN SEISMIC SAFETY PROJECT

SKYWAY STRUCTURES

FUTURE TENDON LAYOUT "E" LINE

DESIGN OVERSIGHT 5/6/04 SIGN OFF DATE

Signature per Hendrson Pl. Engr

DESIGN C. Redfield — CHECKED W. Lanoir
DETAILS E. Zharkov — CHECKED W. Lanoir
QUANTITIES C. Redfield — CHECKED W. Lanoir

PREPARED FOR THE STATE OF CALIFORNIA DEPARTMENT OF TRANSPORTATION

Salid Abbas
PROJECT ENGINEER

CU 04
EA 01202

34-0006L/R
PM/ACCTER POST 3.8/14.3, 0.0/1.6

DISTRIBUTED PRINTS BEARING EARLIER REVISION DATES

REVISION DATES

SHEET 252

ORIGINAL SCALE IN MILLIMETERS FOR REDUCED PLANS

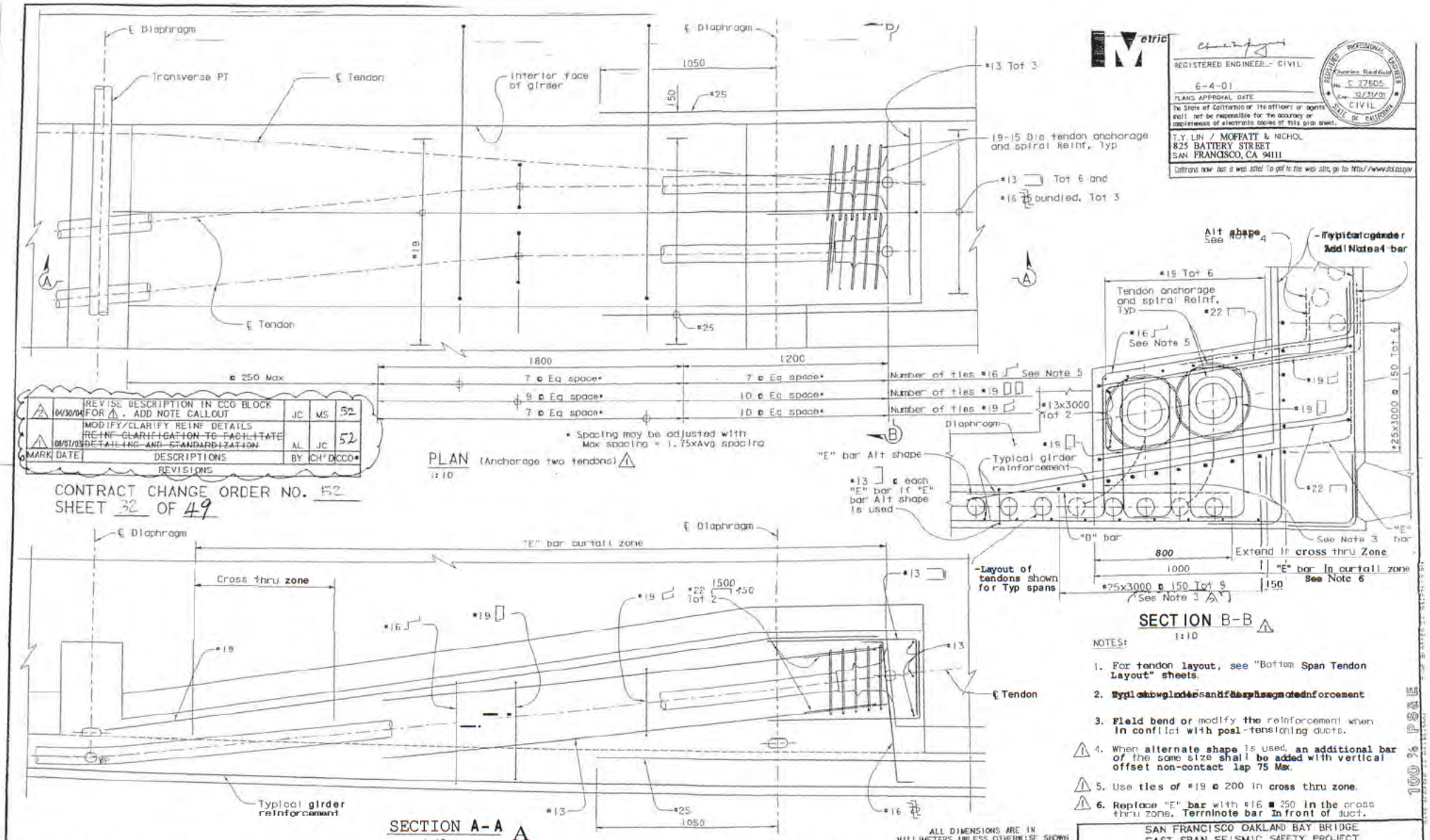

MARK	DATE	DESCRIPTIONS	BY	CH'D	CCO#
2	04/30/04	REVISE DESCRIPTION IN CCO BLOCK FOR 1. ADD NOTE CALLOUT	JC	MS	52
1	08/07/03	MODIFY/CLARIFY REINF DETAILS ~~REINF CLARIFICATION TO FACILITATE DETAILING AND STANDARDIZATION~~	AL	JC	52

REVISIONS

CONTRACT CHANGE ORDER NO. 52
SHEET 32 OF 49

NOTES:

1. For tendon layout, see "Bottom Span Tendon Layout" sheets.
2. Typical girder sections and diaphragm reinforcement
3. Field bend or modify the reinforcement when in conflict with post-tensioning ducts.
4. When alternate shape is used, an additional bar of the same size shall be added with vertical offset non-contact lap 75 Max.
5. Use ties of #19 @ 200 in cross thru zone.
6. Replace "E" bar with #16 @ 250 in the cross thru zone. Terminate bar in front of duct.

ALL DIMENSIONS ARE IN MILLIMETERS UNLESS OTHERWISE SHOWN

Metric

REGISTERED ENGINEER - CIVIL
6-4-01
PLANS APPROVAL DATE
The State of California or its officers or agents shall not be responsible for the accuracy or completeness of electronic copies of this plan sheet.

REGISTERED PROFESSIONAL ENGINEER Charles Redfield No. C 27605 Exp. 12/31/01 CIVIL STATE OF CALIFORNIA

T.Y. LIN / MOFFATT & NICHOL
825 BATTERY STREET
SAN FRANCISCO, CA 94111

Caltrans now has a web site! To get to the web site, go to: http://www.dot.ca.gov

DESIGN OVERSIGHT: 5/6/04
SIGN OFF DATE

DESIGN	C. Redfield	CHECKED	H. Lund
DETAILS	L. Lisnevsky	CHECKED	K. Lund
QUANTITIES	K. Corsler	CHECKED	J. Chan

PREPARED FOR THE STATE OF CALIFORNIA DEPARTMENT OF TRANSPORTATION

Solid Abbas
PROJECT ENGINEER

BRIDGE NO. 34-0006L/R
KILOMETER POST 13.9/14.3, 0.0/1.6

CU 04
EA 012021

SAN FRANCISCO OAKLAND BAY BRIDGE
EAST SPAN SEISMIC SAFETY PROJECT

SKYWAY STRUCTURES

BOTTOM SPAN TENDON DETAILS NO. 2

SHEET 261

ORIGINAL SCALE IN MILLIMETERS FOR REDUCED PLANS

100 % PLANS

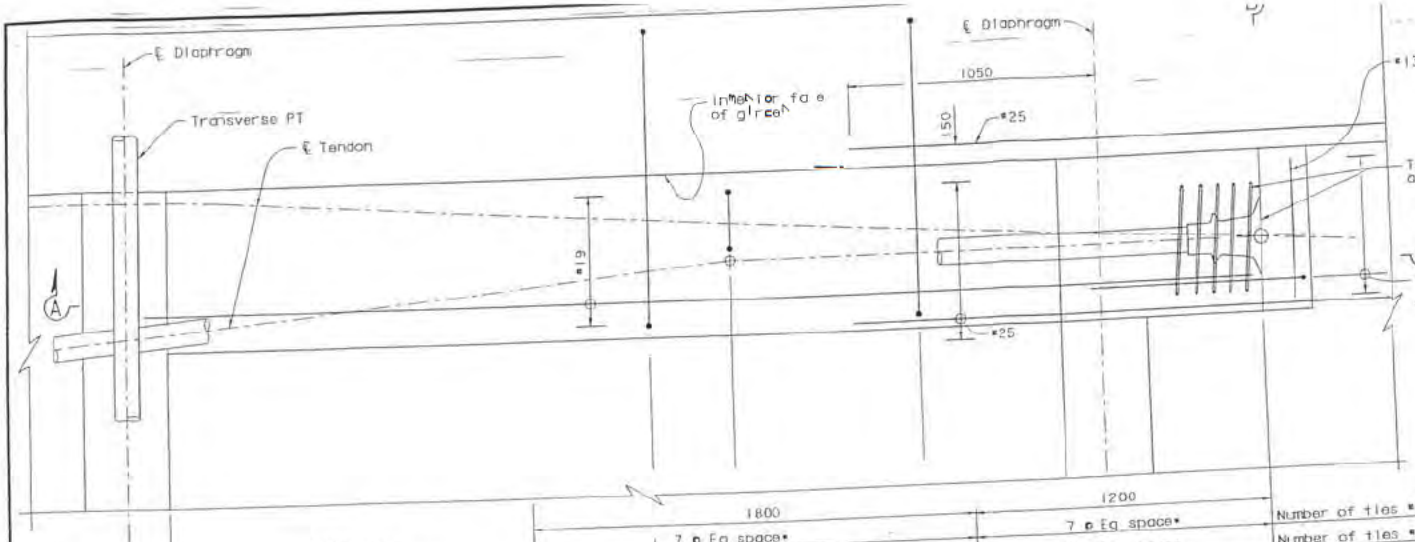

PLAN (Anchorage one tendon) △1
1:10

MARK	DATE	DESCRIPTIONS	BY	CH' D	CCO#
		REVISIONS			
2	04/30/04	REVISE DESCRIPTION IN CCO BLOCK FOR △1. ADD NOTE CALLOUT	JC	MS	52
1	08/07/03	MODIFY/CLARIFY REINF DETAILS ~~REINF CLARIFICATION TO FACILITATE DETAILING AND STANDARDIZATION~~	AL	JC	52

CONTRACT CHANGE ORDER NO. 52
SHEET 35 OF 49

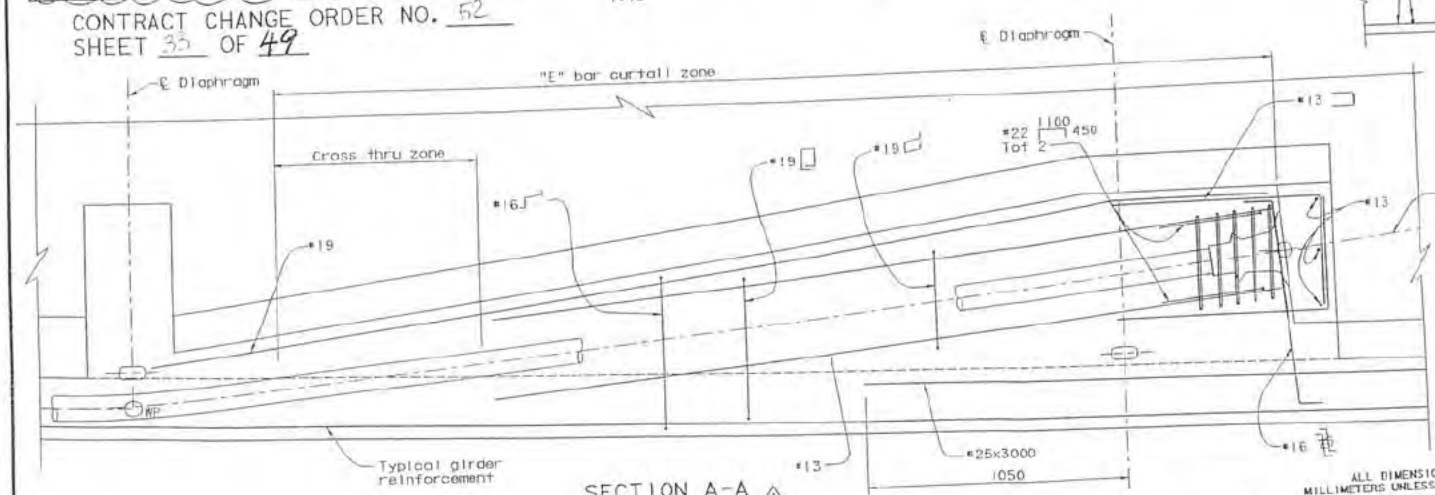

SECTION A-A △1
1:10

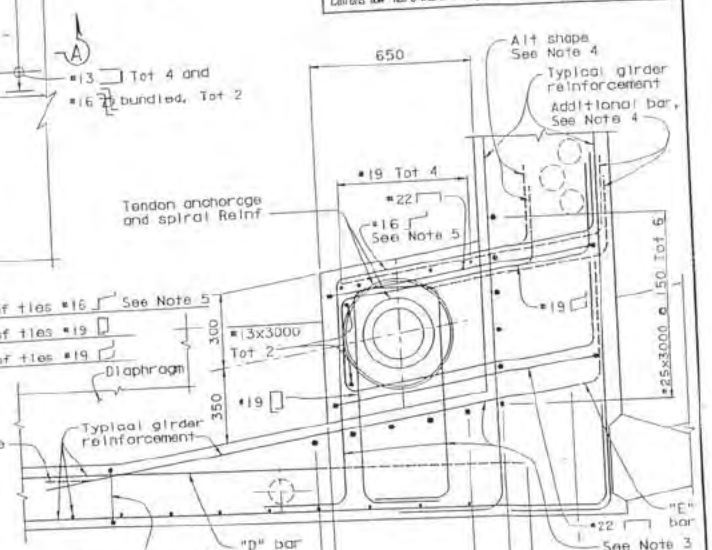

SECTION B-B △1
1:10

NOTES:

1. For tendon layout, see "Bottom Span Tendon Layout" sheets.
2. Typical girder and diaphragm reinforcement not shown unless otherwise noted.
3. Field bend or modify the reinforcement when in conflict with post-tensioning ducts.
4. △1 When alternate shape is used, an additional bar of the same size shall be added with vertical offset non-contact lap 75 Max.
5. △1 Use ties of #19 @ 200 in cross thru zone.
6. △1 Replace "E" bar with #16 @ 250 in the cross thru zone. Terminate bar in front of duct.

ALL DIMENSIONS ARE IN MILLIMETERS UNLESS OTHERWISE SHOWN

REGISTERED ENGINEER - CIVIL
6-4-01
PLANS APPROVAL DATE
Charles Redfield No. C 27605 Exp. 12/31/01 CIVIL STATE OF CALIFORNIA
The State of California or its officers or agents shall not be responsible for the accuracy or completeness of electronic copies of this plan sheet.

T.Y. LIN / MOFFATT & NICHOL
825 BATTERY STREET
SAN FRANCISCO, CA 94111

Caltrans now has a web site! To get to the web site, go to: http://www.dot.ca.gov

SAN FRANCISCO OAKLAND BAY BRIDGE
EAST SPAN SEISMIC SAFETY PROJECT

SKYWAY STRUCTURES

BOTTOM SPAN TENDON DETAILS NO. 3

DESIGN	C. Redfield / S. Gee	CHECKED	H. Lund
DETAILS	A. Lishansky	CHECKED	H. Lund
QUANTITIES	K. Corriker	CHECKED	J. Chan

PREPARED FOR THE STATE OF CALIFORNIA DEPARTMENT OF TRANSPORTATION

Sajid Abbas
PROJECT ENGINEER

CU 04
EA 012021

BRIDGE NO. 34-0006L/R
BLONCTERI POST 3.9/14.3, 0.0/1.6

DESIGN OVERSIGHT 5/6/04
SIGN OFF DATE

DISREGARD PRINTS BEARING EARLIER REVISION DATES

REVISION DATES (PRELIMINARY STAGE ONLY)

SHEET 262

ORIGINAL SCALE IN MILLIMETERS FOR REDUCED PLANS

100 % PS&E

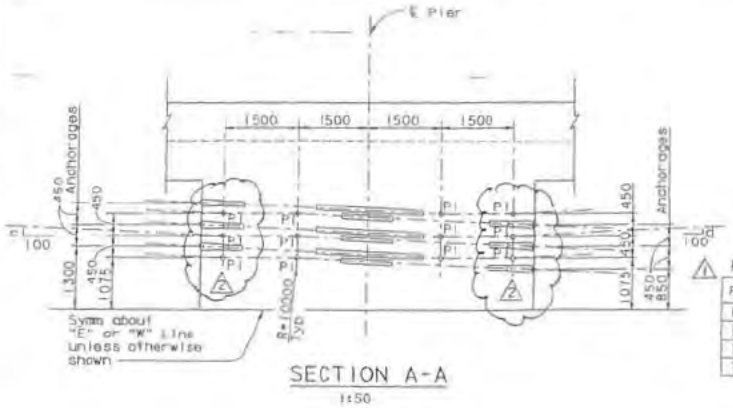

SECTION A-A

1:50

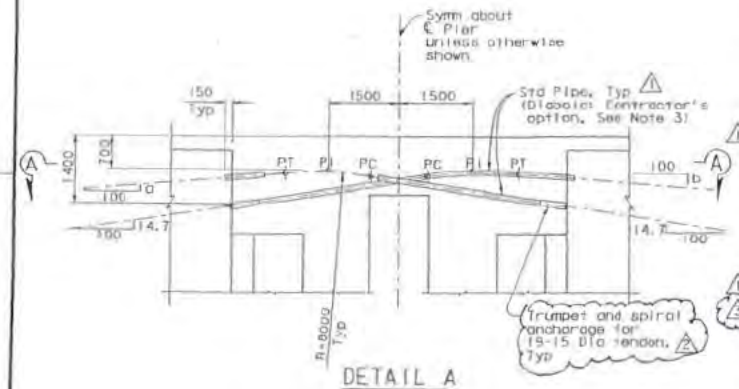

DETAIL A

1:50

Up Station

Frame W1

Pier	a	b	c (N)	c (S)	d (N)	d (S)	Std Pipe	Anchor Plate
E3W	0	8.05	2.21	2.64	0.75	4.78	100 Dia	55x370x370
E4W	7.43	8.05	0.52	4.58	0.74	4.79		
E5W	7.43	8.05	0.52	4.58	2.54	3.53		
E6W	8.05	0	3.03	3.03	1.22	1.22		

Frame W2

Pier	a	b	c (N)	c (S)	d (N)	d (S)	Std Pipe	Anchor Plate
E7W	0	8.05	1.22	1.22	3.03	3.03	100 Dia	55x370x370
E8W	7.43	8.05	2.79	2.79	3.03	3.03		
E9W	7.43	8.05	2.79	2.79	3.03	3.03		
E10W	8.05	0	3.03	3.03	1.22	1.22		

Frame W3

Pier	a	b	c (N)	c (S)	d (N)	d (S)	Std Pipe	Anchor Plate
E11W	0	8.05	1.22	1.22	3.03	3.03	100 Dia	55x370x370
E12W	7.43	8.05	2.79	2.79	3.03	3.03		
E13W	8.46	8.10	3.31	3.31	3.65	3.65		
E14W	7.40	0	3.65	3.65	-0.88	-0.88		

Frame W4

Pier	a	b	c (N)	c (S)	d (N)	d (S)	Std Pipe	Anchor Plate
E15W	0	6.00	1.40	-0.59	4.49	5.03	100 Dia	55x370x370
E16W	3.53	0	4.50	5.02	-1.09	-0.44		

Frame E1

Pier	a	b	c (N)	c (S)	d (N)	d (S)	Std Pipe	Anchor Plate
E3E	0	8.37	2.20	2.65	1.06	4.69	100 Dia	55x370x370
E4E	7.72	8.37	0.81	4.49	1.14	4.61		
E5E	7.49	8.10	0.53	4.59	2.93	3.16		
E6E	8.05	0	3.03	3.03	1.22	1.22		

Frame E2

Pier	a	b	c (N)	c (S)	d (N)	d (S)	Std Pipe	Anchor Plate
E7E	0	8.05	1.22	1.22	3.03	3.03	100 Dia	55x370x370
E8E	7.43	8.05	2.79	2.79	3.03	3.03		
E9E	7.43	8.13	2.79	2.79	3.03	3.03		
E10E	8.05	0	3.03	3.03	1.22	1.22		

Frame E3

Pier	a	b	c (N)	c (S)	d (N)	d (S)	Std Pipe	Anchor Plate
E11E	0	8.05	1.22	1.22	3.03	3.03	100 Dia	55x370x370
E12E	7.43	8.05	2.79	2.79	3.03	3.03		
E13E	8.43	8.10	3.31	3.31	3.65	3.65		
E14E	7.40	0	3.65	3.65	-0.85	-0.85		

Frame E4

Pier	a	b	c (N)	c (S)	d (N)	d (S)	Std Pipe	Anchor Plate
E15E	0	6.03	-1.43	-0.61	4.55	4.99	100 Dia	55x370x370
E16E	5.57	0	4.55	5.05	-1.02	-0.44		

Note: Vertical slopes "a" and "b" are measured relative to top slab profile.
horizontal slopes "c" and "d" are measured relative to "W" or "E" Line.
(N) indicates deviation slope North of "W" Line or "E" Line.
(S) indicates deviation slope South of "W" Line or "E" Line.

NOTES:

1. For location of Detail A, see "Future Tendon Layout "W" Line" and "Future Tendon Layout
2. Slopes c and d shown for middle of 3 future tendons. Adjacent tendons vary by +/-0.18 Max.
3. If contractor selects to use Diabolos at Piers minimum concrete cover for reinforcement around the Diabolo shall be 40mm.
4. Positive slopes shown in section A-A indicate that future tendon radiates away from ℄ "E" or "W" - line as it approaches the hinge.

MARK	DATE	DESCRIPTIONS	BY	CH	DICCO#
3	04/30/04	REVISE TABLE	JC	MS	52
2	04/30/04	DELETE ANCHOR PL AND ADD TRUMPET	JC	MS	52
1	05/21/03	REVISE TABLE AND ADD NOTES	CR	MR	52

REVISIONS

CONTRACT CHANGE ORDER NO. 52
SHEET 34 OF 49

Vetric

REGISTERED ENGINEER - CIVIL
6-04-01
PLANS APPROVAL DATE
The State of California or its officers or agents shall not be responsible for the accuracy or completeness of electronic copies of this plan sheet.

Charles Redfield
No. E-027606
Exp. 12/31/05
CIVIL
STATE OF CALIFORNIA

T.Y. LIN / MOFFATT & NICHOL
825 BATTERY STREET
SAN FRANCISCO, CA 94111

Caltrans now has a web site! To get to this web site, go to: http://www.dot.ca.gov

ALL DIMENSIONS ARE IN MILLIMETERS UNLESS OTHERWISE SHOWN

SAN FRANCISCO OAKLAND BAY BRIDGE
EAST SPAN SEISMIC SAFETY PROJECT

SKYWAY STRUCTURES

FUTURE TENDON DETAILS NO. 1

DESIGN OVERSIGHT 5/6/04

DESIGN C. Redfield
DETAILS E. Ihrkov
QUANTITIES C. Redfield
CHECKED K. Lamont
CHECKED K. Lamont
CHECKED K. Lamont

PREPARED FOR THE STATE OF CALIFORNIA DEPARTMENT OF TRANSPORTATION

Sajid Abbas
PROJECT ENGINEER

BRIDGE NO. 34-0000
DIRECTED POST 33.9/14.3, 0.0/1.E

CU 04
EA 012021

DISREGARD PRINTS BEARING EARLIER REVISION DATES

SHEET 277

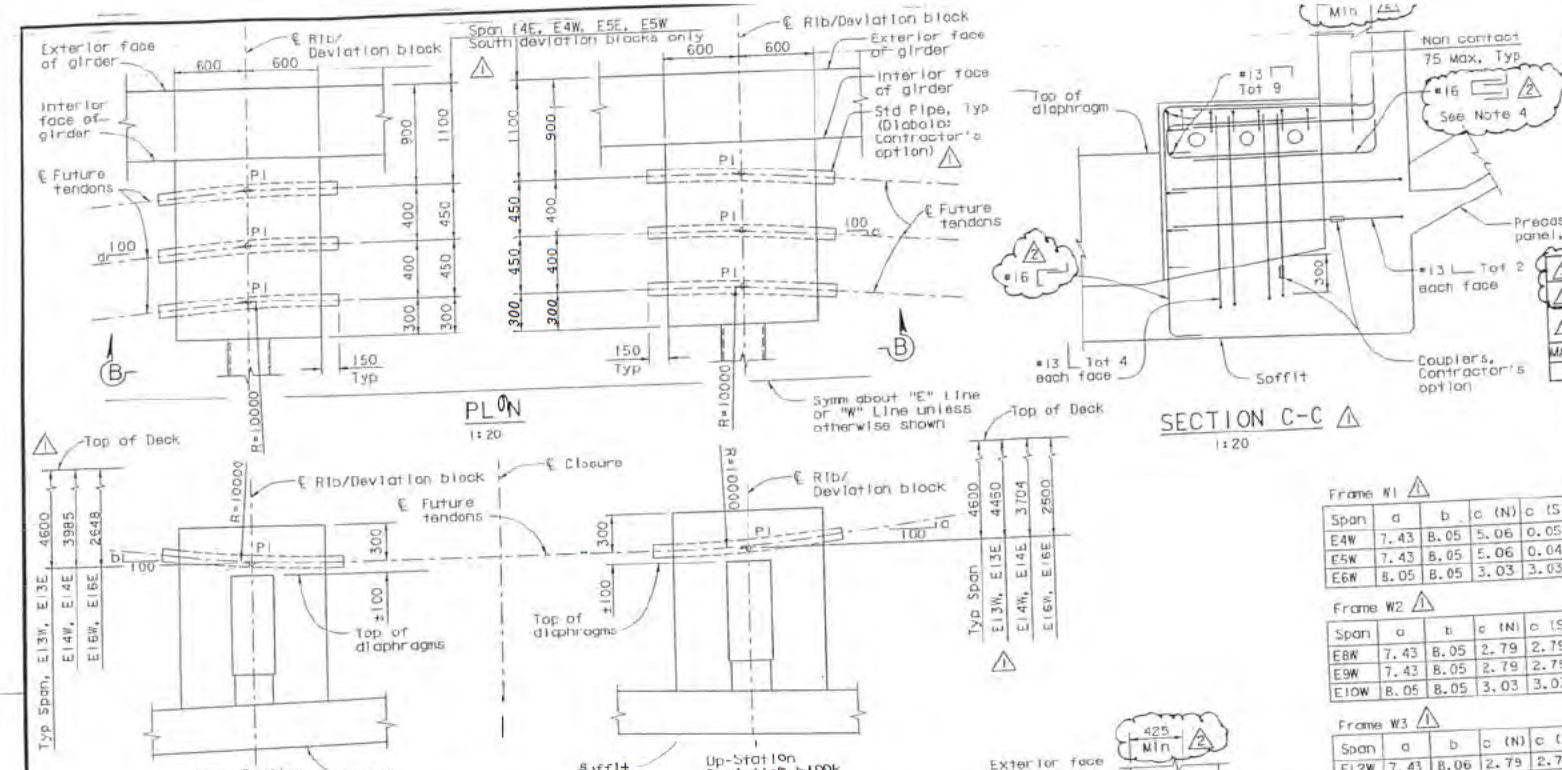

Metric

REGISTERED ENGINEER - CIVIL

6-04-01
PLANS APPROVAL DATE

The State of California or its officers or agents shall not be responsible for the accuracy or completeness of electronic copies of this plan sheet.

REGISTERED PROFESSIONAL ENGINEER Charles Redfield No. C-027605 Exp. 12/31/05 CIVIL STATE OF CALIFORNIA

T.Y. LIN / MOFFATT & NICHOL
825 BATTERY STREET
SAN FRANCISCO, CA 94111

Caltrans now has a web site! To get to the web site, go to: http://www.dot.ca.gov

MARK	DATE	DESCRIPTIONS	BY	CH	DCCO
3	04/30/04	REVISE TABLE	JC	MS	52
2	04/30/04	REVISE/CLARIFY REINFORCEMENT DETAILS	JC	MS	52
1	05/21/03	REVISE FUTURE TENDON BLOCK LOCATION. ADD NOTES AND ADD SECTION C-C	CR	MR	52

REVISIONS

CONTRACT CHANGE ORDER NO. 52
SHEET 35 OF 49

Frame N1 (1)

Span	a	b	c (N)	c (S)	d (N)	d (S)
E4W	7.43	8.05	5.06	0.05	5.29	0.24
E5W	7.43	8.05	5.06	0.04	5.28	0.25
E6W	8.05	8.05	3.03	3.03	3.05	3.02

Frame W2 (1)

Span	a	b	c (N)	c (S)	d (N)	d (S)
E8W	7.43	8.05	2.79	2.79	3.03	3.03
E9W	7.43	8.05	2.79	2.79	3.03	3.03
E10W	8.05	8.05	3.03	3.03	3.03	3.03

Frame W3 (1)

Span	a	b	c (N)	c (S)	d (N)	d (S)
E12W	7.43	8.06	2.79	2.79	3.03	3.03
E13W	8.46	8.06	3.32	3.31	3.03	3.03
E14W	7.40	8.10	3.65	3.65	3.65	3.65

Frame W4 (1) (3)

Span	a	b	c (N)	c (S)	d (N)	d (S)
E16W	6.53	6.00	5.00	4.52	4.99	4.53

Frame E1 (1)

Span	a	b	c (N)	c (S)	d (N)	d (S)
E4E	7.72	8.37	5.05	0.24	5.31	0.45
E5E	7.46	8.37	5.25	0.13	5.39	0.36
E6E	8.02	8.08	3.03	3.03	3.06	3.04

Frame E2 (1)

Span	a	b	c (N)	c (S)	d (N)	d (S)
E8E	7.43	8.05	2.79	2.79	3.03	3.03
E9E	7.43	8.05	2.79	2.79	3.03	3.03
E10E	8.05	8.13	3.03	3.03	3.03	3.03

Frame E3 (1)

Span	a	b	c (N)	c (S)	d (N)	d (S)
E12E	7.43	8.05	2.79	2.79	3.03	3.03
E13E	8.43	8.05	3.31	3.31	3.03	3.03
E14E	7.40	8.10	3.65	3.65	3.65	3.65

Frame E4 (1) (3)

Span	a	b	c (N)	c (S)	d (N)	d (S)
E16E	5.57	6.03	5.05	4.55	5.01	4.58

Note: Vertical slopes "a" and "b" are measured relative to top slab profile, horizontal slopes "c" and "d" are measured relative to "W" or "E" Line.
(N) indicates deviation slope North of "W" or "E" Line.
(S) indicates deviation slope South of "W" or "E" Line.

NOTES:

1. For location of Detail B, see "Future Tendon Layout "W" Line" and "Future Tendon Layout "E" Line" sheets.
2. Box girder reinforcement not shown.
3. (1) Slopes c and d shown for middle of 3 future tendons. Adjacent tendons vary by +/-0.18 Max.
4. If Contractor selects to use Diabolos at deviation blocks, (1) minimum concrete cover for reinforcement around the Diabolo shall be 40 mm.
5. (1) Contractor's option to turn and hook 90° on top of girder reinforcement, and add anchor bar.

ALL DIMENSIONS ARE IN MILLIMETERS UNLESS OTHERWISE SHOWN

SAN FRANCISCO OAKLAND BAY BRIDGE
EAST SPAN SEISMIC SAFETY PROJECT

SKYWAY STRUCTURES

FUTURE TENDON DETAILS NO. 2

DESIGN OVERSIGHT: 8/6/04
SIGN OFF DATE
Rev. Date: 5-18-99

DESIGN BY C. Redfield CHECKED M. Lamont
DETAILS BY E. Zharkov CHECKED M. Lamont
QUANTITIES BY C. Redfield CHECKED M. Lamont

ORIGINAL SCALE IN MILLIMETERS FOR REDUCED PLANS

PREPARED FOR THE STATE OF CALIFORNIA DEPARTMENT OF TRANSPORTATION

Sajid Abbas
PROJECT ENGINEER

CU 04
EA 012021

BRIDGE NO. 34-0006
KILOMETER POST 3.9/14.3, 0.0/1.6

DISREGARD PRINTS BEARING EARLIER REVISION DATES

REVISION DATES (PRELIMINARY STAGE ONLY)

SHEET 278

100% PS&E

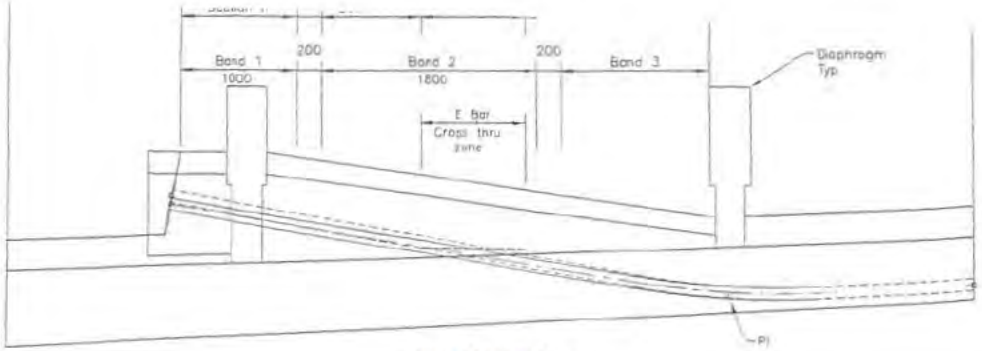

SEGMENT 4E

1:40

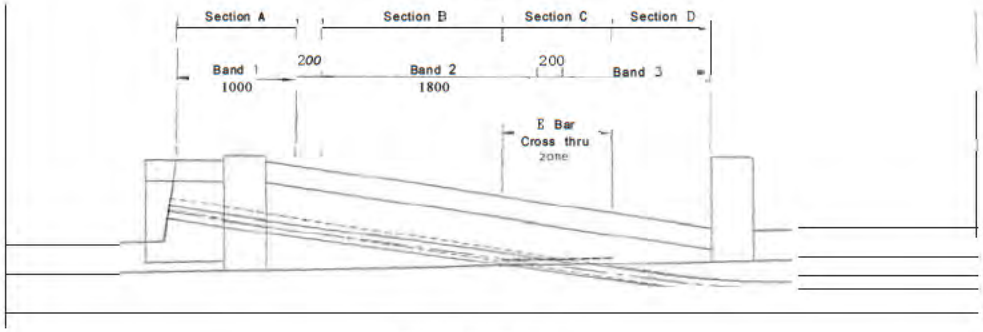

SEGMENT 6E

1:40

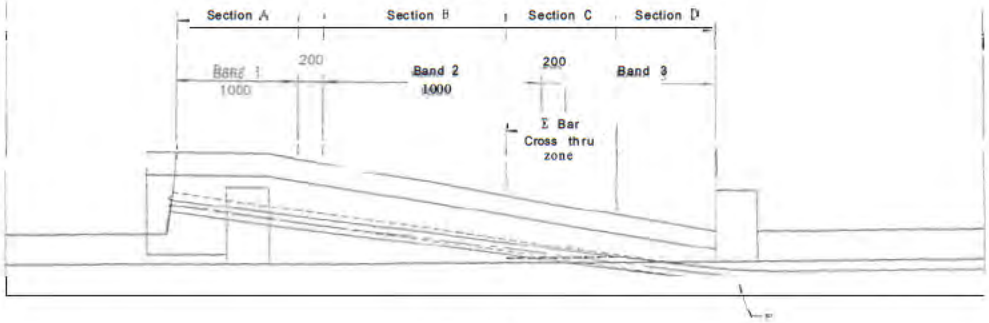

SEGMENT 8E

1:40

REGISTERED CIVIL ENGINEER

03/05/03

PLANS APPROVAL DATE

the State of California or its officers or agents shall not be responsible for the accuracy or completeness of electronic copies of this plan sheet.

Shi Fu John Chan
No. C 39457
Exp. 12/31/05
CIVIL
STATE OF CALIFORNIA

TYLIN / MOFFAT & NICHOL
825 BATTERY STREET
SAN FRANCISCO, CA 94111

SAMPLE LAYOUTS - CANTILEVER 12E
BAND REINFORCEMENT REQUIREMENTS

	Band 1	Band 2	Band 3
#16 Skin bars	7	7 **	@ 250 Max **
#19 Vertical ties	10	9	None
#19 Horizontal ties	10	7	None

Note Resize and/or respace within bands to preserve total steel areas shown in each band to −5%, + (no limit)
** See Sections B & C for requirements that may increase minimum area required of skin bars

CONTRACT NO. 04-012024
CCO NO. 52
PAGE 36 OF 49

SUBMITTED BY: _____
RESIDENT ENGINEER

DESIGN INTERSECTION 3/24/03
SIGN DFT DATE
DESIGN DETAIL SHEET (METRIC)

DESIGN J. Chan | CHECKED J. Otter
DETAIL Y. Narasaki | CHECKED J. Otter
QUANTITIES | CHECKED

PREPARED FOR THE
STATE OF CALIFORNIA
DEPARTMENT OF TRANSPORTATION

Sami Abbas
PROJECT ENGINEER

ALL DIMENSIONS ARE IN MILLIMETERS UNLESS OTHERWISE SHOWN

SAN FRANCISCO OAKLAND BAY BRIDGE
EAST SPAN SEISMIC SAFETY PROJECT

SKYWAY STRUCTURES

COMPOSITE DETAILS

BOTTOM SPAN TENDON BLISTER DETAIL NO. 1

SK-RFI 377-1

REGISTERED CIVIL ENGINEER

03/05/03

PLANS APPROVAL DATE

The State of California or its officers or agents shall not be responsible for the accuracy or completeness of electronic copies of this plan sheet.

REGISTERED PROFESSIONAL ENGINEER Su Fu Jim Chen No. C 39457 Exp. 12/31/05 CIVIL STATE OF CALIFORNIA

TYLIN / MOFFAT & NICHOL
825 BATTERY STREET
SAN FRANCISCO, CA 94111

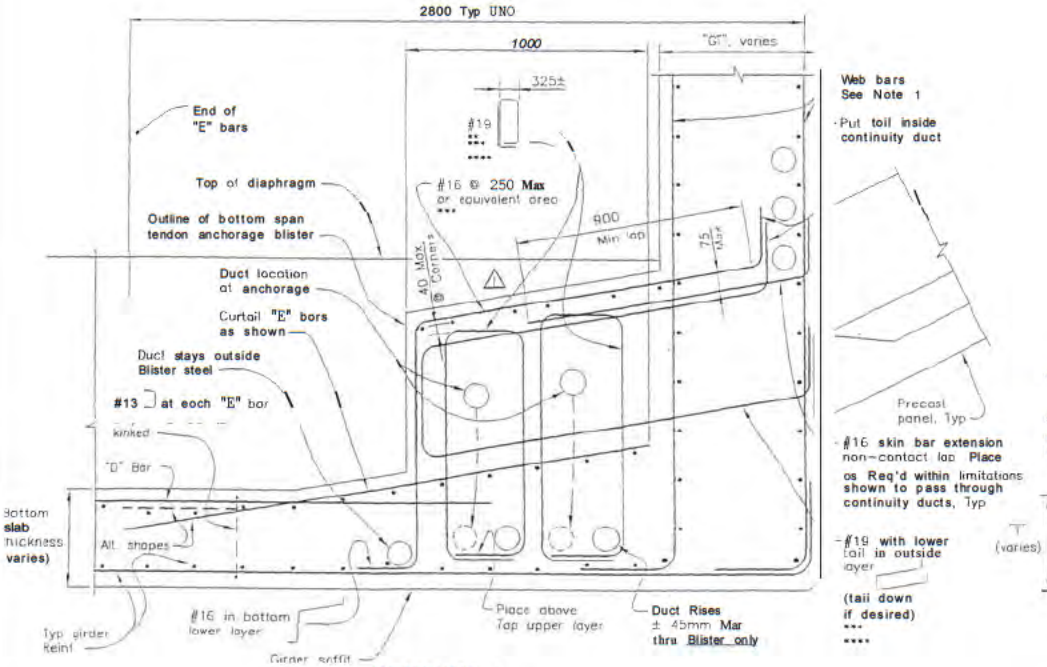

SECTION A

1:20

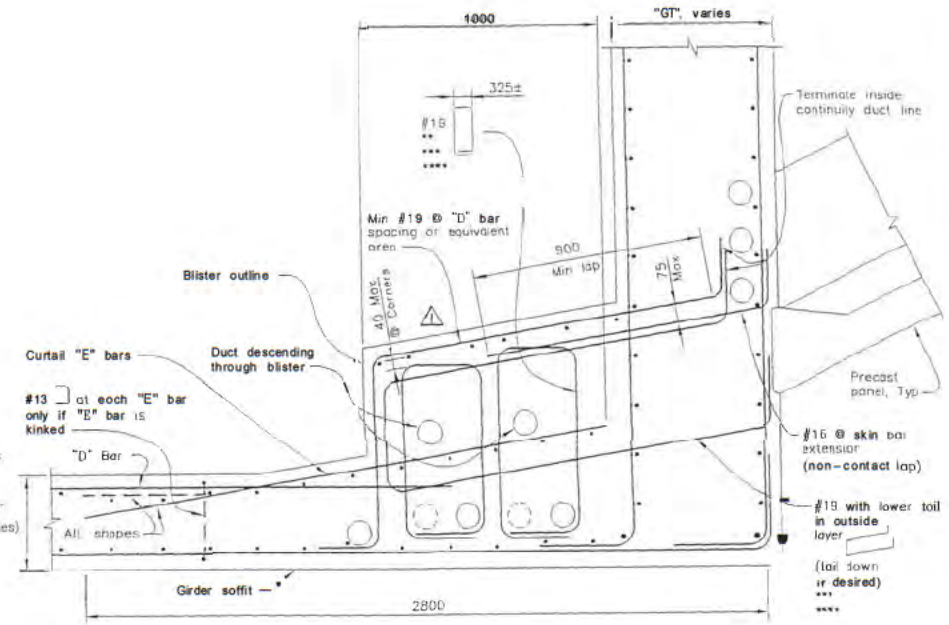

SECTION B (START OF CROSS THRU)

1:20

** These can be stocked above bottom steel

*** Resize and respace as desirable to match spacing of web bars Maintain total steel areas shown in contract plans from −5%, + (no limit).

**** Alternative for #19's could use headed bars or

Notes:

1. Could consider U Bars in webs as opposed to (contractor's option)
2. Sections shown for oier E12E, segment 6E. Other blisters similar

MARK	DATE	DESCRIPTIONS	BY	CH'D
1	01/17/03	HORIZONTAL TOP OF STIRRUPS ADDED	JD	JC

REVISIONS

CONTRACT NO. 04-012024
CCO NO. 52
PAGE 37 OF 49
SUBMITTED BY _____ RESIDENT ENGINEER

ALL DIMENSIONS ARE IN MILLIMETERS UNLESS OTHERWISE SHOWN

SAN FRANCISCO OAKLAND BAY BRIDGE
EAST SPAN SEISMIC SAFETY PROJECT

SKYWAY STRUCTURES

COMPOSITE DETAILS

BOTTOM SPAN TENDON BLISTER DETAIL NO. 2

SIGN OVERSIGHT 5/24/05

SIGN OFF DATE

SIGN DETAIL SHEET METRIC

DESIGN	J Chen	CHECKED	J Otter
DETAILS	T Marasigan	CHECKED	J Otter
QUANTITIES		CHECKED	

PREPARED FOR THE STATE OF CALIFORNIA DEPARTMENT OF TRANSPORTATION

PROJECT ENGINEER

PROJECT NO

SUBMITTER POS

SK-RFI 377-2R1

03/05/03
PLANS APPROVAL DATE

The State of California or its officers or agents shall not be responsible for the accuracy or completeness of electronic copies of this plan sheet.

REGISTERED PROFESSIONAL ENGINEER
Su Ie John Chen
No. C 39457
Exp. 12/31/05
CIVIL
STATE OF CALIFORNIA

TYLIN / MOFFAT & NICHOL
825 BATTERY STREET
SAN FRANCISCO, CA 94111

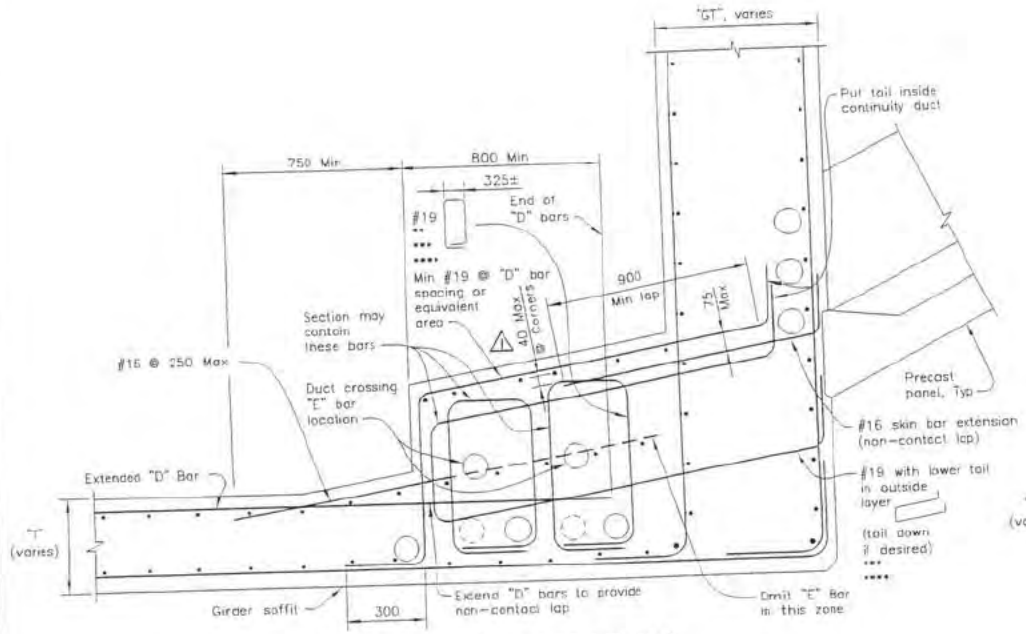

SECTION C (MIDDLE OF CROSS THRU)

1:20

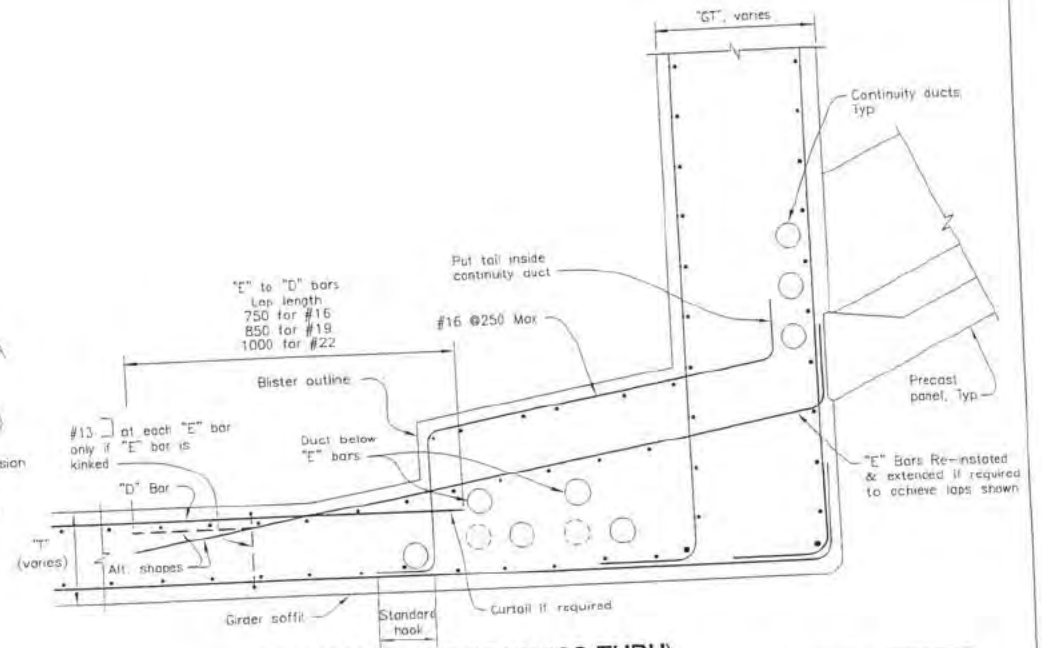

SECTION D (END OF CROSS THRU)

1:20

CONTRACT NO. 04-012-024
CCO NO. 52
PAGE 38 OF 49
SUBMITTED BY _____ RESIDENT ENGINEER

- •• These can be stacked above bottom steel
- ••• Resize and respace as desirable to match spacing of web bars. Maintain total steel areas shown in contract plans from −5%, + (no limit)
- •••• Alternative for #19's: could use headed bars or

Notes:

1. Could consider U Bars in webs as opposed to JJ (contractor's option)
2. Sections shown for pier E12E, segment 6E, Other blisters similar.

MARK	DATE	DESCRIPTIONS	BY	CH'D
1	10/17/03	HORIZONTAL TOP OF STIRRUPS ADDED	JO	JC

REVISIONS

ALL DIMENSIONS ARE IN MILLIMETERS UNLESS OTHERWISE SHOWN

SAN FRANCISCO OAKLAND BAY BRIDGE
EAST SPAN SEISMIC SAFETY PROJECT

SKYWAY STRUCTURES

COMPOSITE DETAILS

BOTTOM SPAN TENDON BLISTER DETAIL NO. 3

SK-RFI 377-3R1

PREPARED FOR THE STATE OF CALIFORNIA DEPARTMENT OF TRANSPORTATION

DESIGN: J. Chen — CHECKED: J. Otter
DETAILS: T. Morasiach — CHECKED: J. Otter
QUANTITIES:

PROJECT ENGINEER

BRIDGE NO.
KILOMETER POST

DESIGN OVERSIGHT
3/24/13
SIGN OFF DATE
DESIGN DETAIL SHEET (METRIC)

ORIGINAL SCALE IN MILLIMETERS FOR REDUCED PLANS

(TILE AT REDUCED)

REGISTERED ENGINEER - CIVIL

03/05/03

PLANS APPROVAL DATE

Shu Fu John Chen, No. C 39457, Exp. 12/31/03, CIVIL, STATE OF CALIFORNIA, REGISTERED PROFESSIONAL ENGINEER

The State of California or its officers or agents shall not be responsible for the accuracy or completeness of electronic copies of this plan sheet.

TYLIN / MOFFAT & NICHOL
825 BATTERY STREET
SAN FRANCISCO, CA 94111

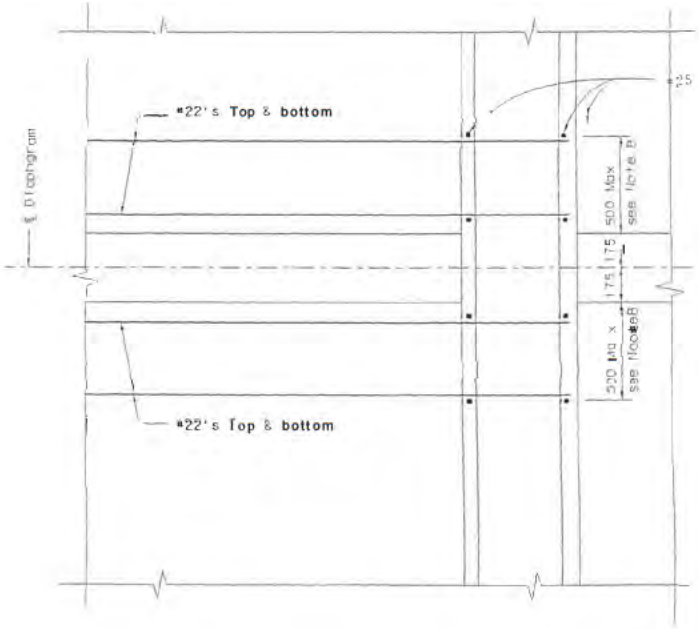

Note B: Contractor to locate bar: within this I-anae to clear other reinforcement.

PLAN
1:50

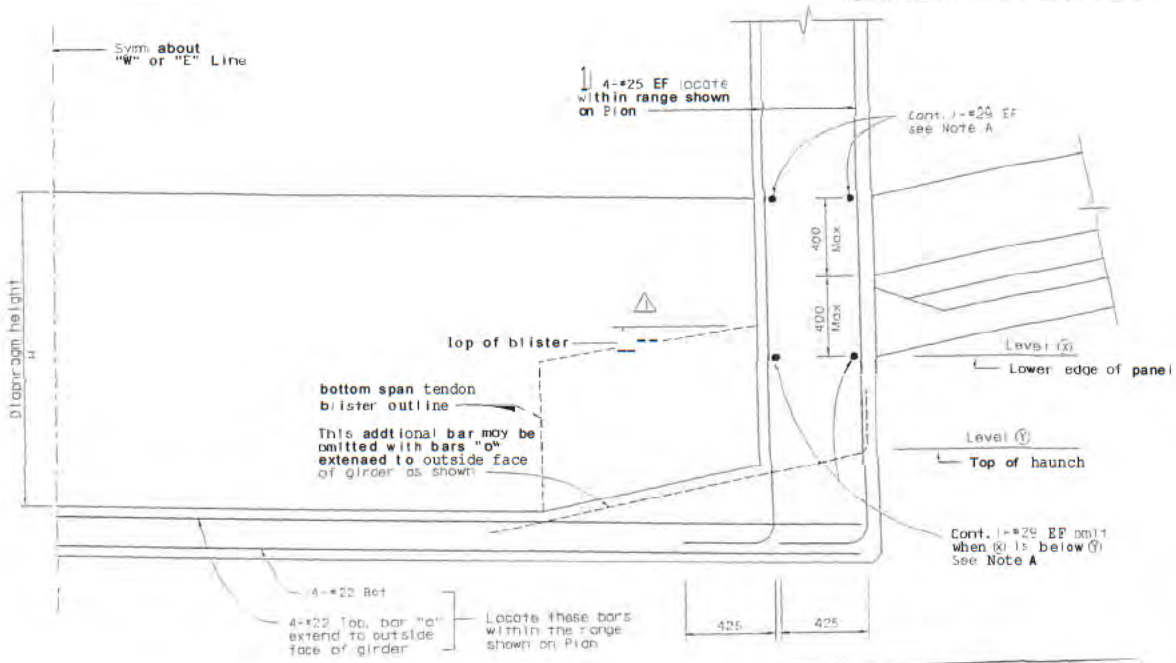

Note A: These bars may be amalgamated with other girder horizontals if same total area is maintained (contractor option).

REINF CLARIFICATION AT DIAPHRAGMS (Reference sheet 730)
1:50

Showing only the additional horizontal and vertical bars required close to diaphragm. All bars shown are in addition to standard girder reinforcement.

Additional bar as shown are required if diaphragm height 'H' exceeds 700mm

MARK	DATE	DESCRIPTIONS	BY	CH'D
1	03/05/03	NOTE REMOVED AND NOTE ADDED	JO	JC

REVISIONS

CONTRACT NO 04-012024
CCO NO 52
PAGE 39 OF 49
SUBMITTED BY
RESIDENT ENGINEER

ALL DIMENSIONS ARE IN MILLIMETERS UNLESS OTHERWISE SHOWN

SAN FRANCISCO OAKLAND BAY BRIDGE
EAST SPAN SEISMIC SAFETY PROJECT

SKYWAY STRUCTURES

COMPOSITE DETAILS

DIAPHRAGM DETAILS NO. 1

SK-RFI 377-4R1

DESIGN OVERSIGHT 5/2/03

DESIGN: S. Chen — CHECKED: J. Otter
DETAILS: T. Morasiegn — CHECKED: J. Otter
DRAFTED: — CHECKED:

PREPARED FOR THE STATE OF CALIFORNIA DEPARTMENT OF TRANSPORTATION

Salic Abdo
PROJECT ENGINEER

BRIDGE NO.
KILOMETER POST

DESIGN DETAIL SHEET (METRIC)

ORIGINAL SCALE IN MILLIMETERS FOR REDUCED PLANS

DISREGARD PRINTS BEARING EARLIER REVISION DATE: 03/05/03

REVISION DATES (PRELIMINARY STAGE ONLY)

FILE: J:\SFOBB\Contract\Construction Support\Modification Sketches\RFI 377\SK04001.dgn

For H=70 or less, terminate diaphragm @ blister as shown

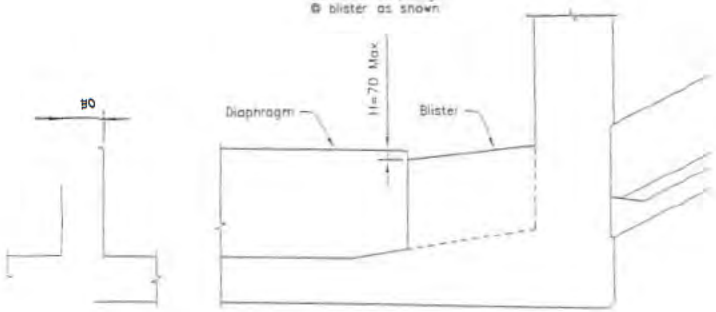

For H=71 or greater, use diaphragm geometry shown

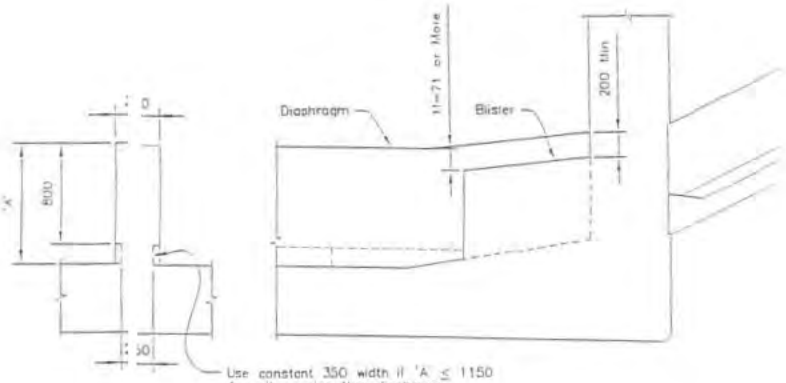

Use constant 350 width if 'A' ≤ 1150 & omit opening thru diaphragm. If 'A' ≥ 1151, neck down @ base as shown & provide opening thru diaphragm

CLARIFICATION OF DIAPHRAGM GEOMETRY AT BLISTER

03/05/03
PLANS APPROVAL DATE

The State of California or its officers or agents shall not be responsible for the accuracy or completeness of electronic copies of this plan sheet.

TYLIN / MOFFAT & NICHOL
825 BATTERY STREET
SAN FRANCISCO, CA 94111

NOTES:

1. The dimensions & reinforcement shown are specific to Cantilever 12E but the principles illustrated are to be applied by the contractor to all other Cantilevers.
2. Dimesions shown are taken at ℄ diaphragm. Dimensions are approximate & are provided as guidelines only.
3. The diaphragms & blisters are shown for the side (North or South) of the structure indicated. Other side is similar.
4. ~~5~~. Diaphragms shown are only those that contain a bottom blister. For diaphragms without blisters, details are similar where applicable.

CONTRACT NO. 04-012024
CCO NO. 52
PAGE 40 OF 49
SUBMITTED BY: _____
RESIDENT ENGINEER

ALL DIMENSIONS ARE IN MILLIMETERS UNLESS OTHERWISE SHOWN

PREPARED FOR THE STATE OF CALIFORNIA DEPARTMENT OF TRANSPORTATION

Salid Abbas
PROJECT ENGINEER

SAN FRANCISCO OAKLAND BAY BRIDGE
EAST SPAN SEISMIC SAFETY PROJECT

SKYWAY STRUCTURES

COMPOSITE DETAILS

DIAPHRAGM DETAILS NO. 2

SK-RFI 377-5

DESIGN DETAIL SHEET (METRIC)

MARK	DATE	DESCRIPTIONS	BY	CH'D
1	03/05/03	CLARIFICATIONS ADDED BENT BAR OPTION SHOWN	JO	JC

REVISIONS

REGISTERED CIVIL ENGINEER

03/05/03

PLANS APPROVAL DATE

The State of California or its officers or agents shall not be responsible for the accuracy or completeness of electronic copies of this plan sheet.

REGISTERED CIVIL ENGINEER — Sai Fu John Chan — No. C 39457 — Exp. 12/31/05 — CIVIL — STATE OF CALIFORNIA

TYLIN / MOFFAT & NICHOL
825 BATTERY STREET
SAN FRANCISCO, CA 94111

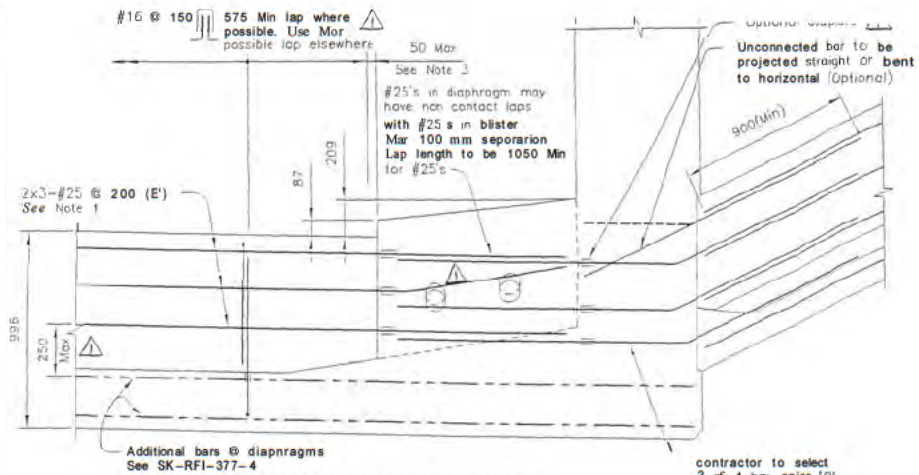

PARTIAL CROSS-SECTION @ ℄ DIAPHRAGM - TYPE 'B'

(SEGMENT E12E-8WS)

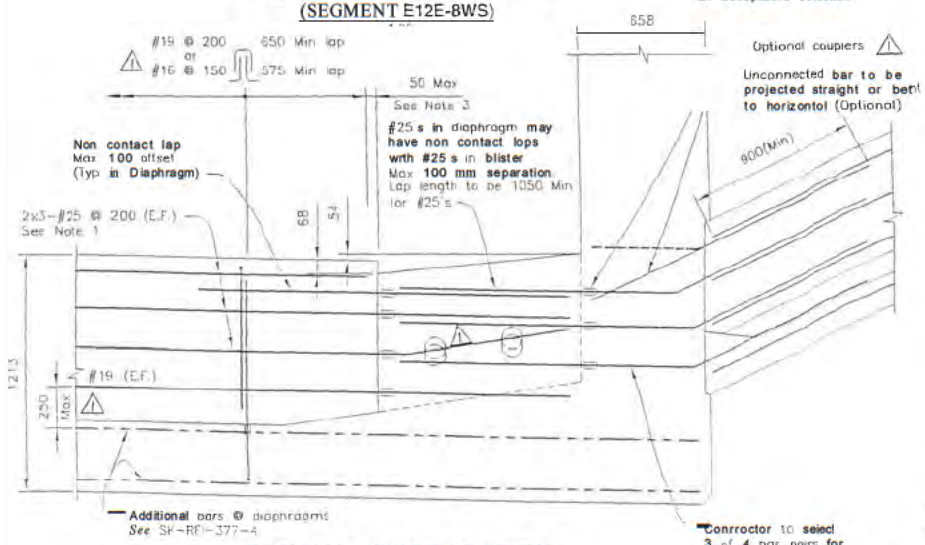

PARTIAL CROSS-SECTION @ ℄ DIAPHRAGM - TYPE 'B'

(SEGMENT E12E-7WS)

1:25

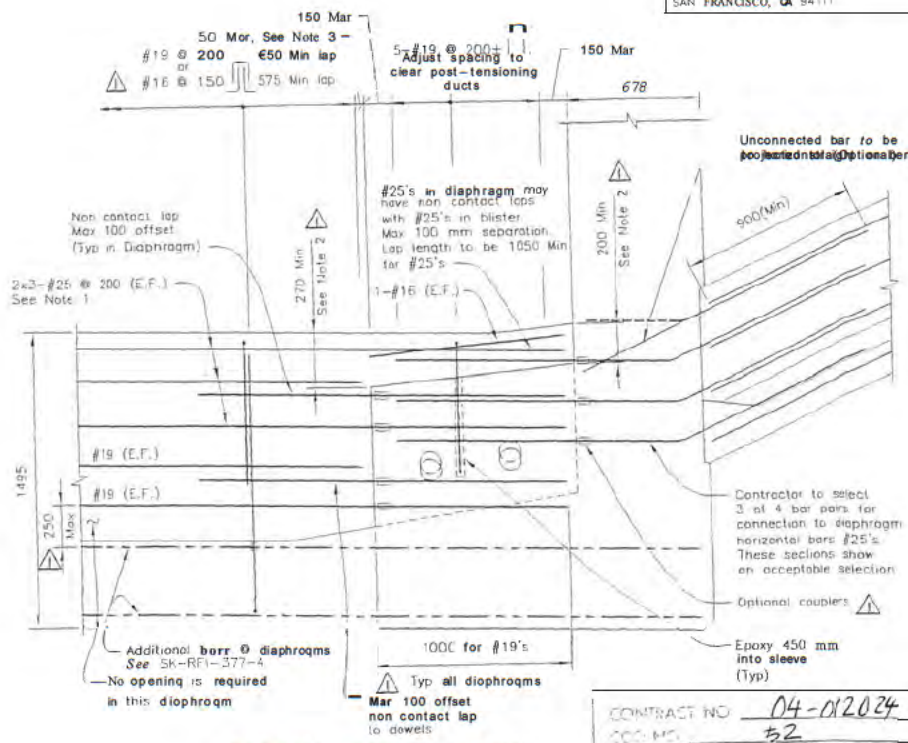

PARTIAL CROSS-SECTION @ ℄ DIAPHRAGM - TYPE 'C'

(SEGMENT E12E-6WS)

1:25

CONTRACT NO. 04-012024
SHEET NO. 52
PAGE 41 OF 49

NOTES:

1. Lap #25's as convenient.
2. Increase these dimensions if required to enclose projecting #25 bars
3. For first stirrup spacing, use 125 Max wherever needed to clear bottom tendon

ALL DIMENSIONS ARE IN MILLIMETERS UNLESS OTHERWISE SHOWN

SAN FRANCISCO OAKLAND BAY BRIDGE
EAST SPAN SEISMIC SAFETY PROJECT

SKYWAY STRUCTURES

COMPOSITE DETAILS

DIAPHRAGM DETAILS NO. 3

SK-RFI 377-6R1

DESIGN OVERSIGHT 3/24/03

DESIGN J. Chan — CHECKED J. Otter
DETAILS T. Marasigan — CHECKED J. Otter
QUANTITIES — CHECKED

PREPARED FOR THE STATE OF CALIFORNIA DEPARTMENT OF TRANSPORTATION

Solid Abbas
PROJECT ENGINEER

BRIDGE NO.
KILOMETER POST

ORIGINAL SCALE IN MILLIMETERS FOR REDUCED PLANS

ORIGINALLY PRINTS BEARING LATEST REVISION DATE 03/05/03

REVISION DATES (PRELIMINARY STAGE ONLY)

USERNAME = S-FISHER

REVISIONS

03/05/03
PLANS APPROVAL DATE

The State of California or its officers or agents shall not be responsible for the accuracy or completeness of electronic copies of this plan sheet

C 39457
EXP. 12/31/05
CIVIL
STATE OF CALIFORNIA

TYLIN / MOFFAT & NICHOL
825 BATTERY STREET
SAN FRANCISCO, CA 94111

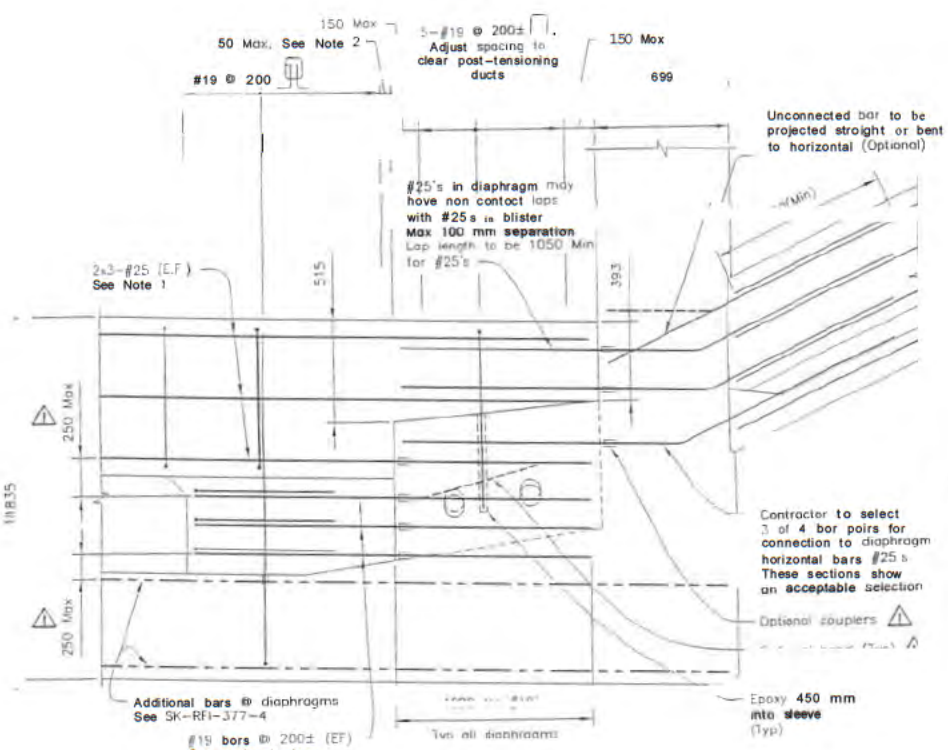

PARTIAL CROSS-SECTION
@ ℄ DIAPHRAGM - TYPE 'A'
(SEGMENT E12E-5WS)
1:25

NOTE:

1. Lap #25's as convenient
2. For first stirrup spacing, use 125 Max wherever needed to clear bottom tendon

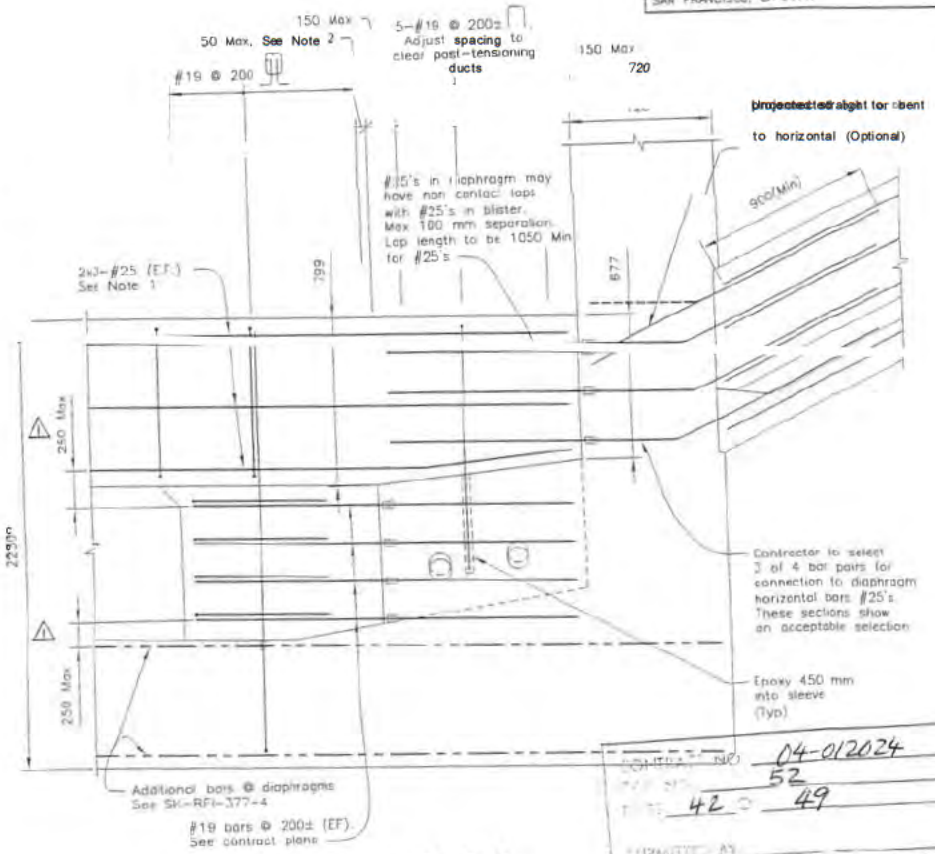

PARTIAL CROSS-SECTION
@ ℄ DIAPHRAGM - TYPE 'A'
(SEGMENT E12E-4WS)
1:25

ALL DIMENSIONS ARE IN MILLIMETERS UNLESS OTHERWISE SHOWN

CONTRACT NO. 04-012024
SHEET NO. 52
DATE 42 OF 49
SUBMITTED BY

SAN FRANCISCO-OAKLAND BAY BRIDGE
EAST SPAN SEISMIC SAFETY PROJECT

SKYWAY STRUCTURES

COMPOSITE DETAILS

DIAPHRAGM DETAILS NO. 4

SK-RFI 377-7R1

DESIGN REVISION 3/24/03
DESIGN DETAIL SHEET (METRIC)

DESIGN: J. Otter
DETAIL: T. Marasigan
QUANTITIES:
CHECKED: J. Otter
CHECKED: J. Otter

PREPARED FOR THE
STATE OF CALIFORNIA
DEPARTMENT OF TRANSPORTATION

Said Abbas
PROJECT ENGINEER

STANDARD PRINTED SEAL (UNLESS REVISION DATE) 03/05/03

DATE PLOTTED => 8/19/03
TIME PLOTTED => 11:19:07

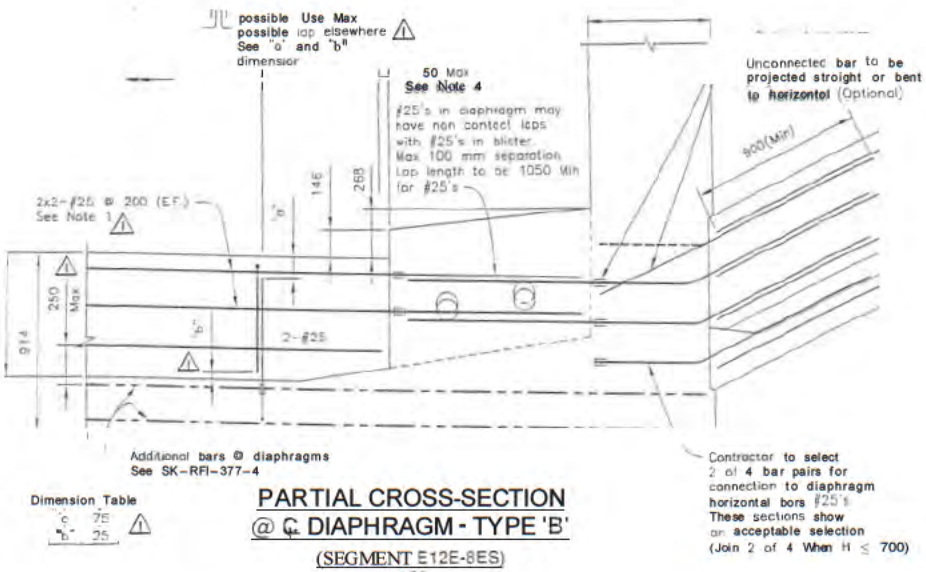

Dimension Table

"a"	75
"b"	25

PARTIAL CROSS-SECTION @ ℄ DIAPHRAGM - TYPE 'B'

(SEGMENT E12E-8ES)

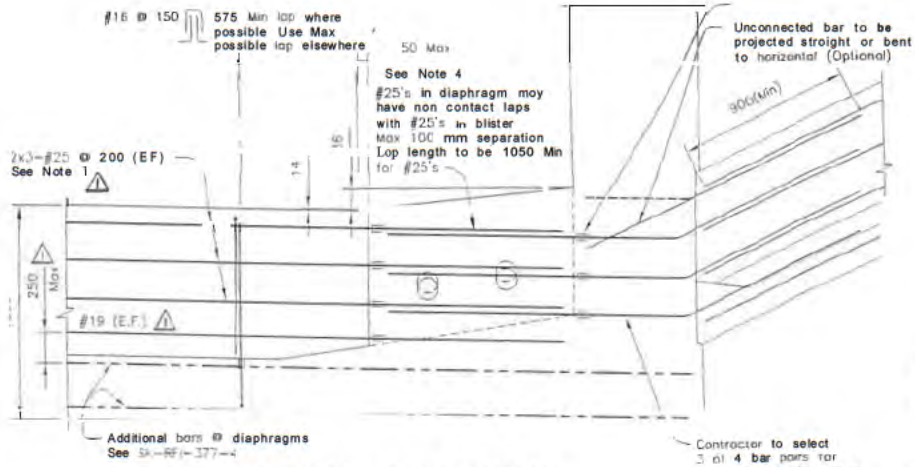

PARTIAL CROSS-SECTION @ ℄ DIAPHRAGM - TYPE 'B

(SEGMENT E12E-7ES)

1:25

MARK	DATE	DESCRIPTIONS	BY	CH'D
1	03/05/03	CLARIFICATIONS ADDED		

REVISIONS

REGISTERED CIVIL ENGINEER

03/05/03

PLANS APPROVAL DATE

The State of California or its officers or agents shall not be responsible for the completeness of this

TYLIN / MOFFAT & NICHOL
825 BATTERY STREET
SAN FRANCISCO, CA 94111

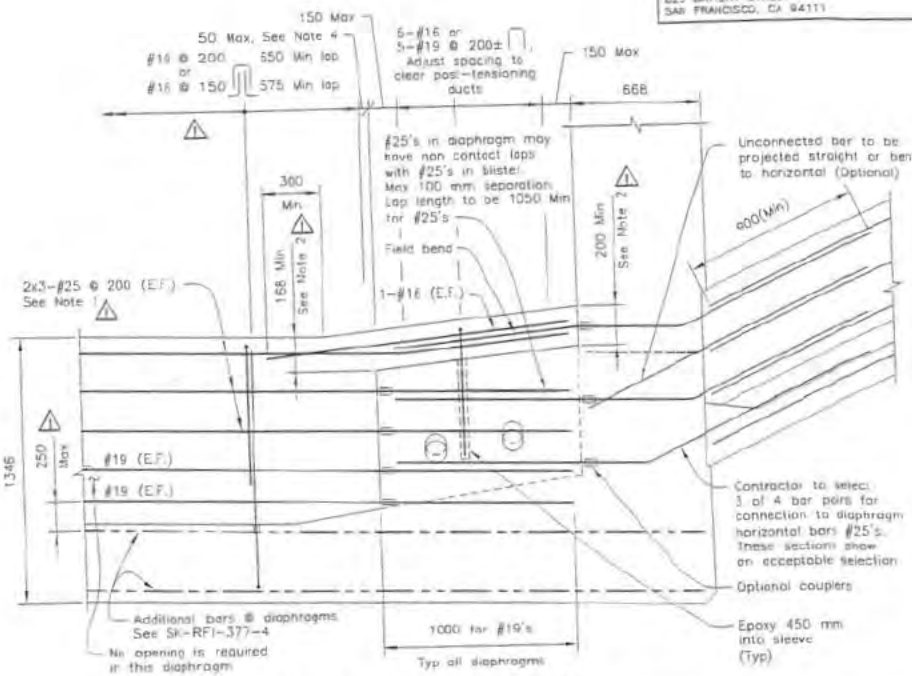

PARTIAL CROSS-SECTION @ ℄ DIAPHRAGM - TYPE 'C'

(SEGMENT E12E-8ES)

1:25

CONTRACT NO. 04-012024
52
43 OF 49

SUBMITTED BY

REGISTERED ENGINEER

NOTES:

1. Lap #25's as convenient.
2. Increase these dimensions if required to enclose projecting #25 bars.

diaphragm need be coupled.

4. For first stirrup spacing, use 125 Max wherever needed to clear bottom tendon.

ALL DIMENSIONS ARE IN MILLIMETERS UNLESS OTHERWISE

5/24/03

DESIGN	J Chen	ENGINEER	J Otter
DETAILS	T Morasoom	DRAWN	J Otter

PREPARED FOR THE STATE OF CALIFORNIA DEPARTMENT OF TRANSPORTATION

Sajic-Abbas
PROJECT ENGINEER

SAN FRANCISCO OAKLAND BAY BRIDGE
EAST SPAN SEISMIC SAFETY PROJECT

SKYWAY STRUCTURES

COMPOSITE DETAILS

DIAPHRAGM DETAILS NO. 5

SK-RFI 377-8R1

MARK	DATE	DESCRIPTIONS
		REVISIONS

REGISTERED CIVIL ENGINEER

03/05/03

PLANS APPROVAL DATE

Sio Fu John Chan
No. C 39457
Exp. 12/31/05
CIVIL
STATE OF CALIFORNIA

The State of California or its officers or agents shall not be responsible for the accuracy or completeness of electronic copies of this plan sheet.

TYLIN / MOFFAT & NICHOL
825 BATTERY STREET
SAN FRANCISCO, CA 94111

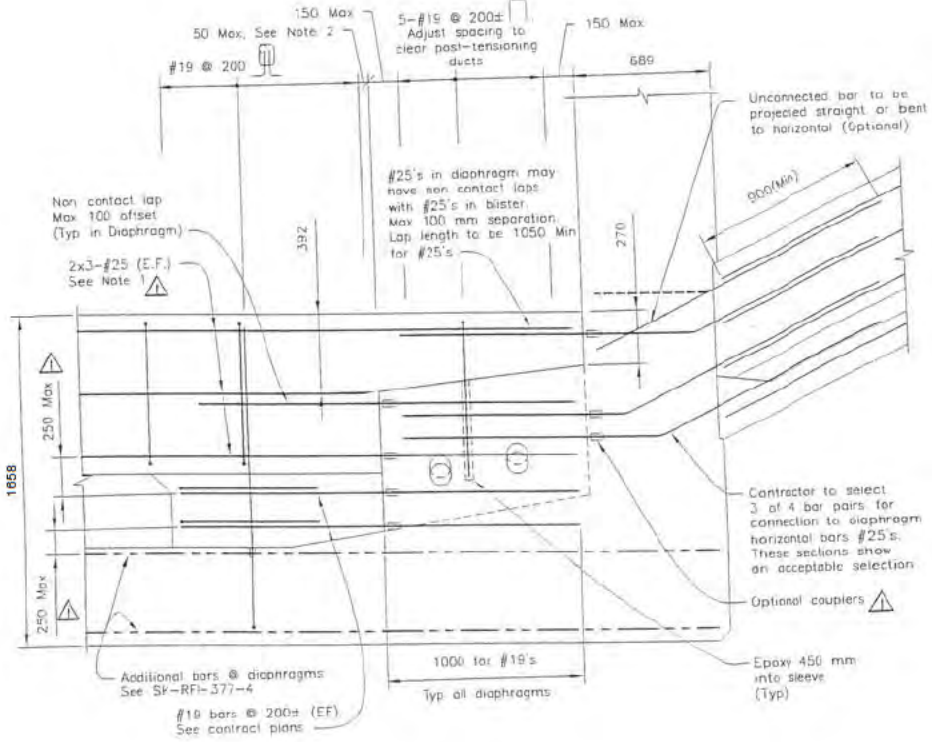

PARTIAL CROSS-SECTION
@ ℄ DIAPHRAGM - TYPE 'A'
(SEGMENT E12E-5ES)
1:25

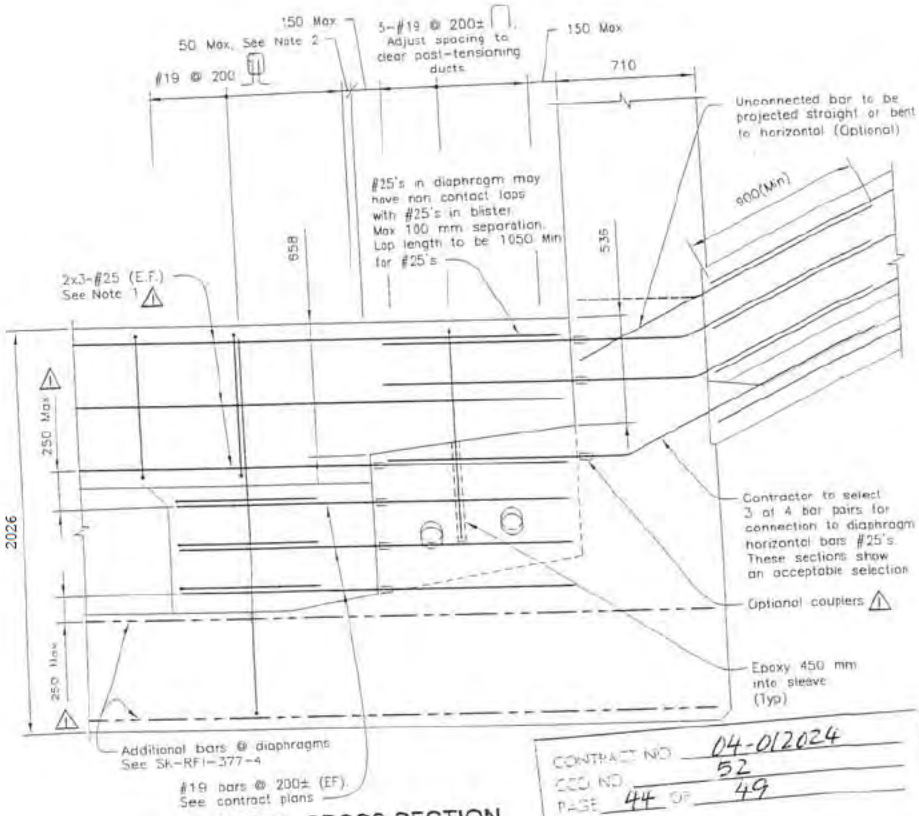

PARTIAL CROSS-SECTION
@ ℄ DIAPHRAGM - TYPE 'A'
(SEGMENT E12E-4ES)
1:25

NOTE:

1. Lap #25's as convenient.
2. For first stirrup spacing, use 125 Max wherever needed to clear bottom tendon.

ALL DIMENSIONS ARE IN MILLIMETERS UNLESS OTHERWISE SHOWN

CONTRACT NO 04-012024
SEQ. NO 52
PAGE 44 OF 49

SUBMITTED BY RESIDENT ENGINEER

SAN FRANCISCO OAKLAND BAY BRIDGE
EAST SPAN SEISMIC SAFETY PROJECT

SKYWAY STRUCTURES

COMPOSITE DETAILS

DIAPHRAGM DETAILS NO. 6

SK-RFI 377-9R1

DESIGN OVERSIGHT 3/26/03

SIGN INT DATE

DESIGN DETAIL SHEET (METRIC)

DESIGN	J. Chan	CHECKED	J. Otter
DETAILS	T. Marasigan	CHECKED	J. Otter
QUANTITIES		CHECKED	

PREPARED FOR THE STATE OF CALIFORNIA DEPARTMENT OF TRANSPORTATION

Sajid Abbas
PROJECT ENGINEER

BRIDGE NO.

KILOMETER POST

REVISION DATES (PRELIMINARY STAGE ONLY)

ORIGINAL SCALE IN MILLIMETERS FOR REDUCED PLANS

0 10 20 30 40 50 60 70 80 90 100

TITLE = SPECIFICS

DISCIPLINARY ASSISTS DURING EARLIER REVISION DATES: 03/05/03

TIME PLOTTED -> $TIME

DATE PLOTTED -> $DATE

DRAWING NAME -> $TIME

03/05/03
PLANS APPROVAL DATE

The State of California or its officers or agents shall not be responsible for the accuracy or completeness of electronic copies of this plan sheet

REGISTERED Sai Fu John Chan C 39457 Exp. 12/31/05 CIVIL STATE OF CALIFORNIA PROFESSIONAL ENGINEER

NLIN / MOFFAT & NICHOL
825 BATTERY STREET
SAN FRANCISCO, CA 94111

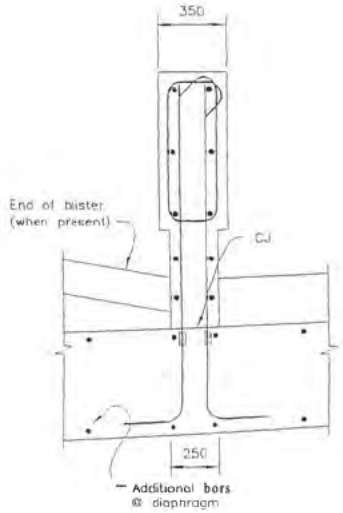

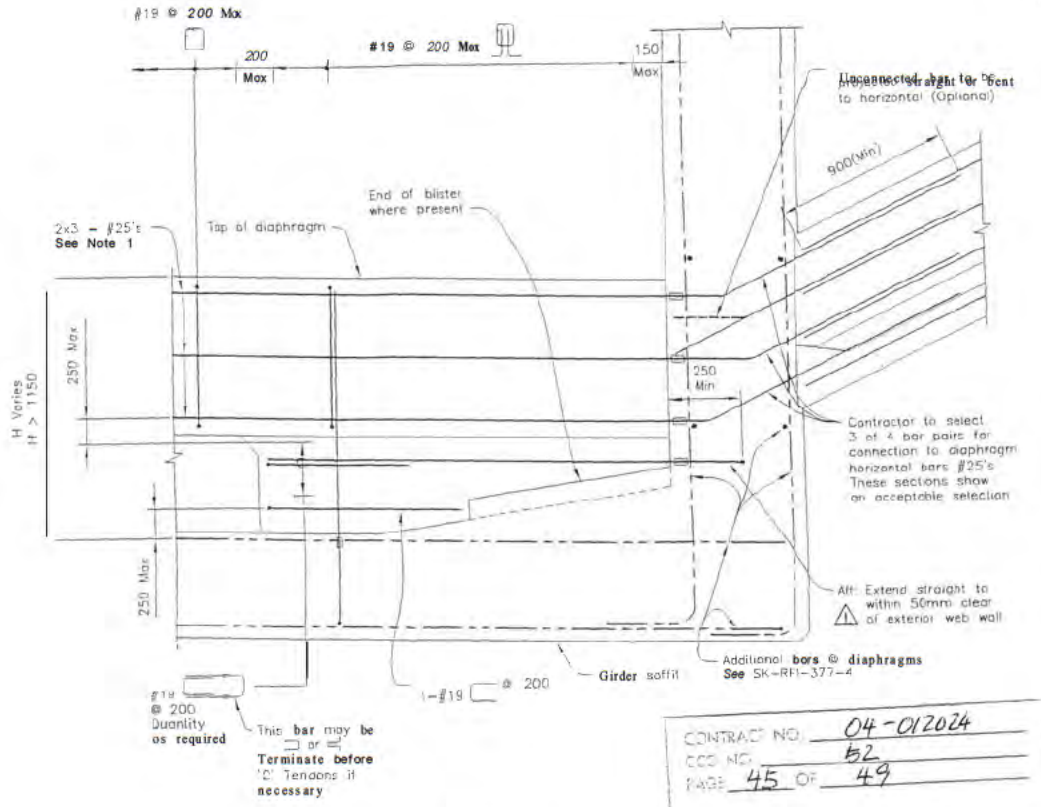

NOTE:

1 Lap #25's as convenient

CONTRACT NO. 04-012024
CCO NO. 52
PAGE 45 OF 49

MARK	DATE	DESCRIPTIONS	BY	CH'D
1	03/05/03	SHOW ALT SHAPE	JO	JC

REVISIONS

PARTIAL CROSS-SECTION @ ℄ DIAPHRAGM - TYPE 'A'

Without Bottom Blister or at low end of Bottom Blister
H>1150
1:25

ALL DIMENSIONS ARE IN MILLIMETERS UNLESS OTHERWISE SHOWN

SAN FRANCISCO OAKLAND BAY BRIDGE
EAST SPAN SEISMIC SAFETY PROJECT

SKYWAY STRUCTURES

COMPOSITE DETAILS

DIAPHRAGM DETAILS NO. 7

SK-RFI 377-10R1

DESIGN OVERSIGHT 3/3/03

DESIGN J. Chan CHECKED J. Otter
DETAILS
QUANTITIES BY CHECKED

PREPARED FOR THE DEPARTMENT OF TRANSPORTATION

Sajic Abbas

BRIDGE NO.
KILOMETER POST

ORIGINAL SCALE IN MILLIMETERS FOR REDUCED PLANS

DESIGN DATA PRINTS BEARING EARLIER REVISION DATE:

REVISION DATE PRELIMINARY DRAFT

DESIGN DETAIL SHEET (METRIC)

USER

■ L A

03/05/03
PLANS APPROVAL DATE

to State of California or its officers or agents shall not be responsible for the accuracy or completeness of electronic copies of this plan sheet.

Sei Fu John Chen
C 36457
Exp. 12/31/03
CIVIL
STATE OF CALIFORNIA

TYLIN / MOFFAT & NICHOL
825 BATTERY STREET
SAN FRANCISCO, CA 94111

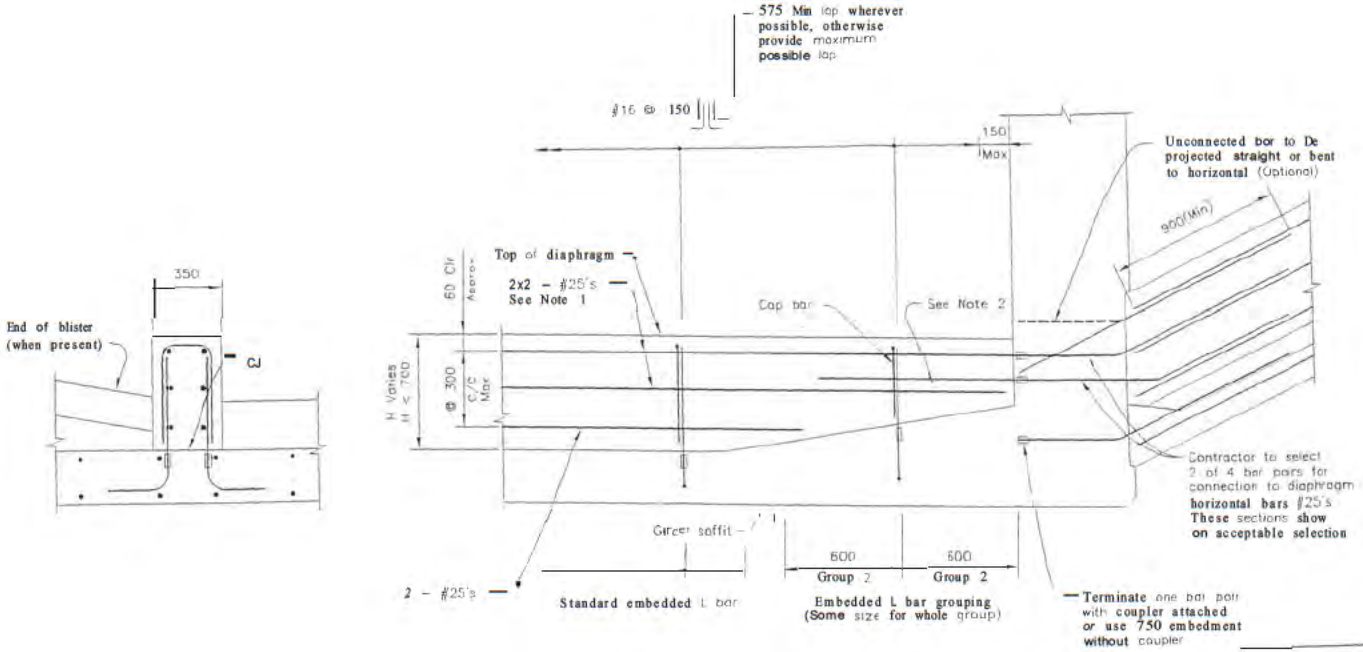

NOTES:

1. Lap #25's as convenient
2. Non contact lap is permissible Max 75 mm offset.

CONTRACT NO. 04-012024
ECO NO. 62
PAGE 46 OF 49

SUBMITTED BY: _____
RESIDENT ENGINEER

PARTIAL CROSS-SECTION @ ℄ DIAPHRAGM - TYPE 'B' or 'C'

Without Bottom Blister or at low end of Bottom Blister

H < 700

1:25

SAN FRANCISCO OAKLAND BAY BRIDGE
EAST SPAN SEISMIC SAFETY PROJECT

RES

DESIGN: J. Chen — CHECKED: J. Otter
DETAILS: T. Morasigan — CHECKED: J. Otter
QUANTITIES: — CHECKED:

PREPARED FOR THE STATE OF CALIFORNIA DEPARTMENT OF TRANSPORTATION

Sajid Abbas
ENGINEER

DESIGN OVERSIGHT 3/24/03
DESIGN CITY DATE

DIAPHRAGM DETAILS NO. 8

03/05/03
PLANS APPROVAL DATE

The State of California or its officers or agents shall not be responsible for the accuracy or completeness of electronic copies of this plan sheet.

Sio Fu John Chen
No. C 39457
Exp. 12/31/05
CIVIL
STATE OF CALIFORNIA

BASIN BATTERY STREET NICHOL
SAN FRANCISCO, CA 94111

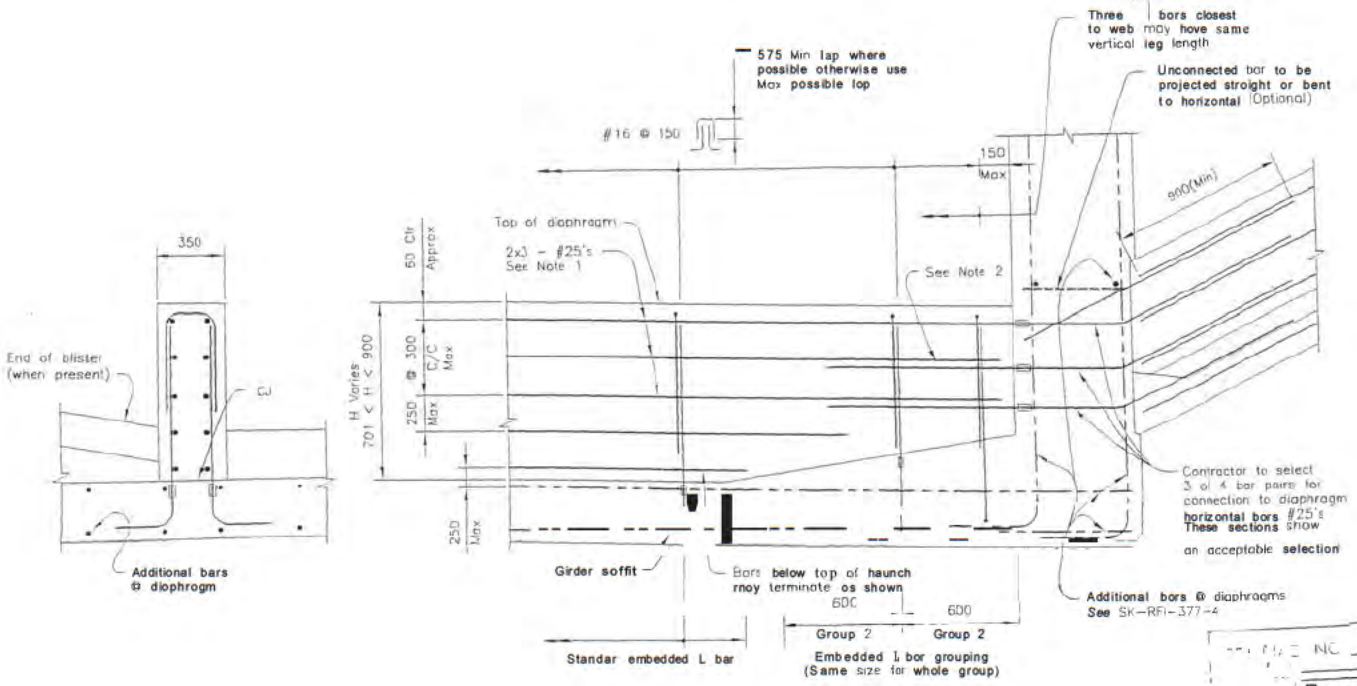

NOTES:

1. Lap #25's as convenient
2. Non contact lap is permissible Max 75 mm offset

RFI NO. 04-012024
52
47 OF 49
SUBMITTED BY
RESIDENT ENGINEER

PARTIAL CROSS-SECTION
@ ℄ DIAPHRAGM - TYPE 'B' or 'C'

Without Bottom Blister or at low end of Bottom Blister
701 < H < 900
1.25

ALL DIMENSIONS ARE IN MILLIMETERS UNLESS OTHERWISE SHOWN

SAN FRANCISCO OAKLAND BAY BRIDGE
EAST SPAN SEISMIC SAFETY PROJECT

SKYWAY STRUCTURES
COMPOSITE DETAILS
DIAPHRAGM DETAILS NO. 9

SK-RFI 377-12

DESIGN OVERSIGHT 3/24/03

DESIGN J. Chen | CHECKED J. Otter
DETAILS T. Moradsadri | CHECKED J. Otter
QUANTITIES | CHECKED

PREPARED FOR THE STATE OF CALIFORNIA DEPARTMENT OF TRANSPORTATION

Said Abbas
PROJECT ENGINEER

BRIDGE NO.
KILOMETER POST

REVISION DATE (DAY/MONTH/YEAR) (MONTH) (YEAR)

PRINTING SCALE IN MILLIMETERS FOR REDUCED PLANS

1 FILE = BREAKOUT

DATE PLOTTED >> DATE
TIME PLOT
USER
CADFILE

03/05/03
PLANS APPROVAL DATE

The State of California or its officers or agents shall not be responsible for the accuracy or completeness of electronic copies of this plan sheet.

Sai Fu John Chan
No. C 39457
Exp. 12/31/05
CIVIL
STATE OF CALIFORNIA

TYLIN / MOFFAT & NICHOL
825 BATTERY STREET
SAN FRANCISCO, CA 94111

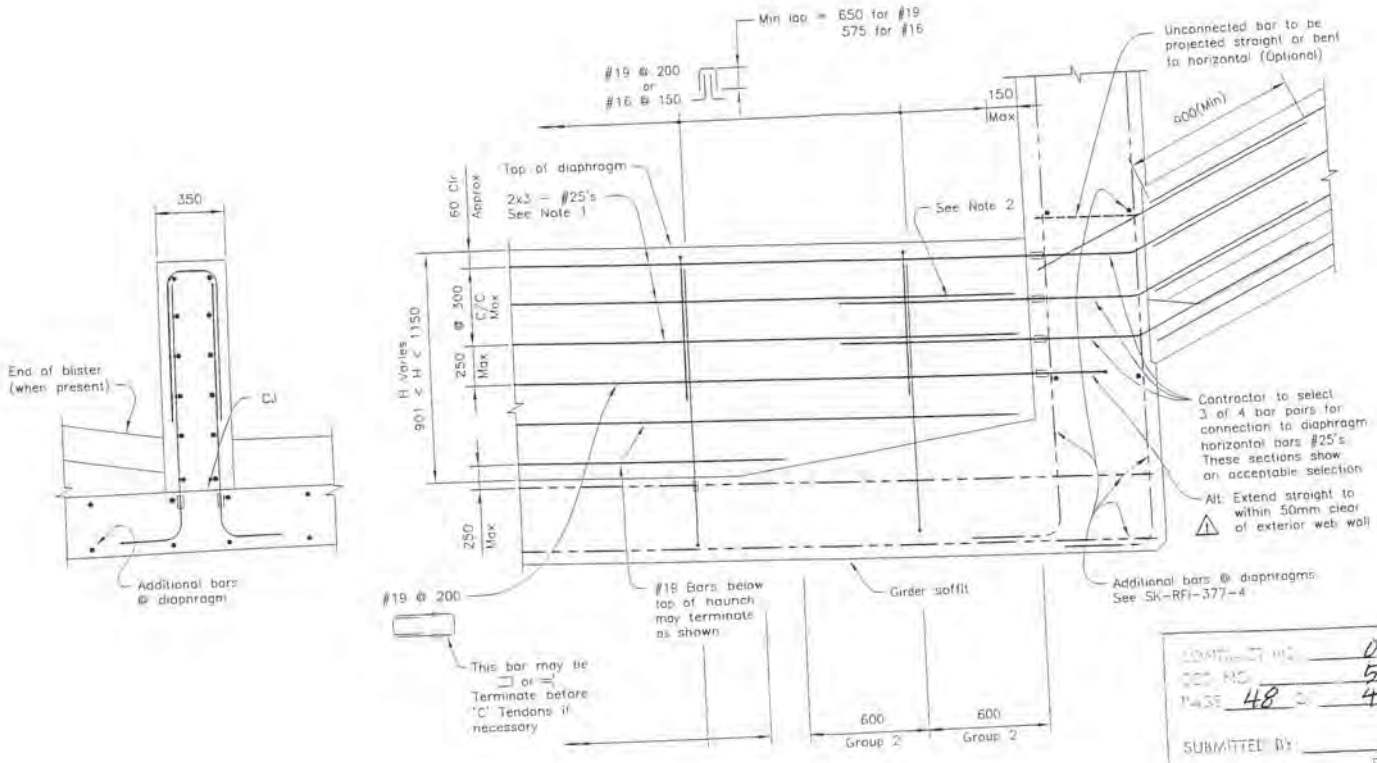

PARTIAL CROSS-SECTION
@ ℄ DIAPHRAGM - TYPE 'B' or 'C'
Without Bottom Blister or at low end of Bottom Blister
901 < H < 1150

1.25

NOTES:

1. Lap #25's as convenient.
2. Non contact lap is permissible Max 75 min offset.

CONTRACT NO. 04-012024
SHEET NO. 52
PAGE 48 OF 49

SUBMITTED BY: _____
RESIDENT ENGINEER

MARK	DATE	DESCRIPTIONS	BY	CH'D
1	03/05/03	SHOW ALT SHAPE	JO	JC

REVISIONS

ALL DIMENSIONS ARE IN MILLIMETERS UNLESS OTHERWISE SHOWN

PREPARED FOR THE STATE OF CALIFORNIA DEPARTMENT OF TRANSPORTATION

Solid Abbas
PROJECT ENGINEER

DESIGN: J. Chan
DETAIL: T. Morosian
CHECKED: J. Otte
CHECKED: J. Otte

DESIGN OVERSIGHT: 3/24/03
SIGN OFF DATE

DESIGN DETAIL SHEET (METRIC)

ORIGINAL SCALE IN MILLIMETERS FOR REDUCED PLANS

FULL = 1 REDUCED

SAN FRANCISCO OAKLAND BAY BRIDGE
EAST SPAN SEISMIC SAFETY PROJECT

SKYWAY STRUCTURES

COMPOSITE DETAILS

DIAPHRAGM DETAILS NO. 10

SK-RFI 377-13R1

REGISTERED CIVIL ENGINEER

03/06/03

PLANS APPROVAL DATE

Sai Fu John Chan
No. C 39457
Exp. 12/31/05
CIVIL
STATE OF CALIFORNIA

e State of California or its officers or agents hall not be responsible for the accuracy or completeness of electronic copies of this plan sheet.

TYLIN / MOFFAT & NICHOL
825 BATTERY STREET
SAN FRANCISCO, CA 94111

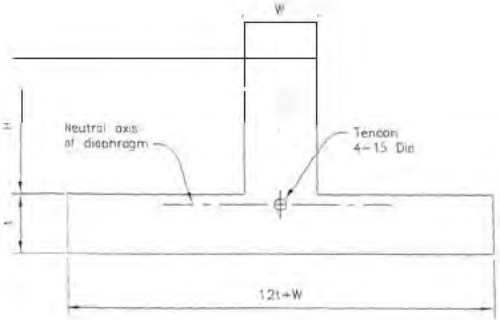

DIAPHRAGM SECTION

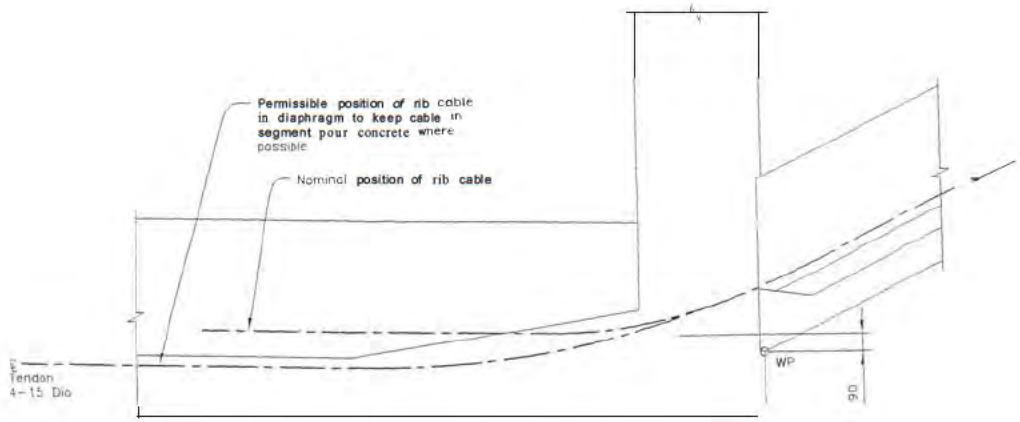

DIAPHRAGM ELEVATION

PROJECT NO. 04-012024
52
49 OF 49

SUBMITTED BY _____
RESIDENT ENGINEER

ALL DIMENSIONS ARE IN MILLIMETERS UNLESS OTHERWISE SHOWN

SAN FRANCISCO OAKLAND BAY BRIDGE
EAST SPAN SEISMIC SAFETY PROJECT

SKYWAY STRUCTURES

COMPOSITE DETAILS

DIAPHRAGM DETAILS NO. 11

SK-RFI 377-14

DESIGN OVERSIGHT 3/24/03
DESIGN OFF. DATE

DESIGN: J. Chan | CHECKED: J. Otter
DETAILS: T. Nanasiam | CHECKED: J. Otter
QUANTITIES: | CHECKED:

PREPARED FOR THE
STATE OF CALIFORNIA
DEPARTMENT OF TRANSPORTATION

Sajid Abbas
PROJECT ENGINEER

BRIDGE NO.
KILOMETER POST

DESIGN DETAIL SHEET (METRIC)

ORIGINAL SCALE IN MILLIMETERS FOR REDUCED PLANS

REVISION DATES (PRELIMINARY STAGE ONLY)

SUPERSEDES PRINTED DRAWING EARLIER REVISION DATED

DATE PLOTTED

STATE OF CALIFORNIA - DEPARTMENT OF TRANSPORTATION

CONTRACT CHANGE ORDER MEMORANDUM

TO: PETER SIEGENTHALER / DOUG COE, Supervising Br. Eng.	FILE: E.A. 04 - 012024
FROM: DOUG COE, Supervising Br. Eng.	CO-RTE-PM 04-SF,Ala-80-13.9/14.3,0.0/1.6
	FED. NO. ACIM-080-1(085)8N
CCO#: 52 SUPPLEMENT#: 0 Category Code: CHPT	CONTINGENCY BALANCE (incl. this change) $59,997,597.96
COST: $92,244.00 INCREASE ☑ DECREASE ☐	HEADQUARTERS APPROVAL REQUIRED? ☐ YES ☑ NO
SUPPLEMENTAL FUNDS PROVIDED: $0.00	IS THIS REQUEST IN ACCORDANCE WITH ENVIRONMENTAL DOCUMENTS? ☑ YES ☐ NO
CCO DESCRIPTION: Bottom Span Anchor Block Conflicts	**PROJECT DESCRIPTION:** REPLACE SFOBB EAST SPAN

LOCATION: IN SAN FRANCISCO AND ALAMEDA COUNTIES IN SAN FRANCISCO AND OAKLAND FROM 1.3 KM EAST OF THE YERBA BUENA ISL

THIS CHANGE ORDER PROVIDES FOR:

furnishing and installing additional reinforcement at the bottom span tendons and the revised locations for future tendon deviator blocks as shown on revised plan sheets 537R2, 538R2, 539R2, 540R2, 541R3, 542R2, 543R2, 544R2, 545R2, 546R2, 547R2, 548R3, 549R3, 550R3, 551R2, 552R2, 553R2, 554R2, 555R2, 556R2, 557R2, 558R2, 559R2, 560R2, 561R2, 562R3, 563R3, 564R3, 683R2, 684R2, 693R2, 694R2, 709R2 and 710R2 of 978 as shown on pages 2 to 35 of this change order.

Furnishing all labor, materials, tools, equipment and incidentals to construct the additional concrete work for the expanded anchor blocks, as shown on revised sheets SK-RFI 377-1, SK-RFI 377-2R1, SK-RFI 377-3R1, SK-RFI 377-4R1, SK-RFI 377-5, SK-RFI 377-6R1, SK-RFI 377-7R1, SK-RFI 377-8R1, SK-RFI 377-9R1, SK-RFI 377-10R1, SK-RFI 377-11,SK-RFI 377-12, SK-RFI 377-13R1 and SK-RFI 377-14 as shown on pages 36 to 49 of this change order.

This change order mitigates the multiple reinforcement conflicts, between the bottom span tendon anchor block reinforcement and the typical segment reinforcement, found during the development of the Contractor's composite segment working drawings for the superstructure precast segments. This change order resolves the following issues: provides for additional reinforcement in the bottom span tendon anchor block, relocates the future tendon deviator block, and for furnishes the additional concrete work to expand the anchor blocks.

For this work, the Contractor shall accept the agreed lump sum payment of $92,244.00. This sum constitutes full and complete compensation for providing all labor, material, equipment, tools and incidentals, including markups, for all direct and indirect costs, and all associated project impacts for this work.

An analysis of the Contractor's proposal is on file with the project records and it has been found to be fair and reasonable based on a force account analysis.

No adjustment of contract time is warranted, as this change does not affect the controlling operation.

Maintenance Concurrence is not required because changes not affecting manintenance operations.

FHWA prior approval is not required because this is not a major contract change order.

RECEIVED
035854 MAR 28 05

CONCURRED BY:		
Construction Engineer:	Douglas Coe	Date 3-9-05
Bridge Engineer:	Douglas Coe	Date 3-9-05
FHWA Representative:		Date
Project Engineer:	Structures: Hasan El-Natur	Date 8/6/2003
Other (specify): Senior Bridge Engineer: David Wu		Date2/15/2005
		Date
		Date
District Prior Approval By:		Date
HQ (Issue Approve) By:		Date
Resident Engineer's Signature:		Date 3-9-05

ESTIMATE OF COST

	THIS REQUEST	TOTAL TO DATE
ITEMS	$0.00	$0.00
FORCE ACCOUNT	$0.00	$0.00
AGREED PRICE	$0.00	$0.00
ADJUSTMENT	$92,244.00	$92,244.00
TOTAL	$92,244.00	$92,244.00

FEDERAL PARTICIPATION

☑ PARTICIPATING ☐ PARTICIPATING IN PART ☐ NONE
☐ NON-PARTICIPATING (MAINTENANCE) ☐ NON-PARTICIPATING

FEDERAL SEGREGATION (if more than one Funding Source or P.I.P. type)
☑ CCO FUNDED PER CONTRACT ☐ CCO FUNDED AS FOLLOWS

FEDERAL FUNDING SOURCE	PERCENT

California Department of Transportation

SFOBB New East Span

Contract: 04-012024, Skyway

CCO 53(0)

Deleted

STATE OF CALIFORNIA - DEPARTMENT OF TRANSPORTATION

CONTRACT CHANGE ORDER

Change Requested by: Engineer

CCO: 54	Suppl. No. 0	Contract No. 04 - 012024	Road 04-SF,Ala-80-13.9/14.3,0.0/1.6	FED. AID LOC.: ACIM-080-1(085)8N

To: **KIEWIT / FCI / MANSON a JV**

You are directed to make the following changes from the plans and specifications or do the following described work not included in the plans and specifications for this contract. ***NOTE: This change order is not effective until approved by the Engineer.***

Description of work to be done, estimate of quantities and prices to be paid. (Segregate between additional work at contract price, agreed price and force account.) Unless otherwise stated, rates for rental of equipment cover only such time as equipment is actually used and no allowance will be made for idle time. This last percentage shown is the net accumulated increase or decrease from the original quantity in the Engineer's Estimate.

Adjustment of Compensation at Lump Sum:

Install additional mounting brackets at the top of the survey towers in the Precast Yard in Stockton as shown on sheet 2 of this change order.

The contractor will receive an agreed lump sum of $ 4,586.19 for this change. This sum constitutes full compensation, including all markups, for this change.

Estimated cost of Adjustment of Compensation at Lump Sum $4,586.19

Estimated Cost: Increase ☑ Decrease ☐ **$4,586.19**

By reason of this order the time of completion will be adjusted as follows: 0 days

Submitted by

Signature	Resident Engineer: COE D.	Date 4-28-03

Approval Recommended by

Signature	Construction Engineer: COE D.	Date 4-28-03

Engineer Approval by

Signature	(Print name and title) PETER SIEGENTHALER - Chief	Date 5/15/03

We the undersigned contractor, have given careful consideration to the change proposed and agree, if this proposal is approved, that we will provide all equipment, furnish the materials, except as may otherwise be noted above, and perform all services necessary for the work above specified, and will accept as full payment therefor the prices shown above.

NOTE: If you, the contractor, do not sign acceptance of this order, your attention is directed to the requirements of the specifications as to proceeding with the ordered work and filing a written protest within the time therein specified.

Contractor Acceptance by

Signature	(Print name and title) A.T. Skoro, Project Director	Date 5/1/03

California Department of Transportation

SFOBB New East Span

Contract: 04-012024, Skyway

CCO 50(0)

Is a part of

CCO 200

STATE OF CALIFORNIA - DEPARTMENT OF TRANSPORTATION

CONTRACT CHANGE ORDER MEMORANDUM

DATE: 4/25/03

TO: PETER SIEGENTHALER / COE D.	FILE: **E.A.** 04 - 012024
FROM: COE D.	**CO-RTE-PM** 04-SF,Ala-80-13.9/14.3,0.0/1.6
	FED. NO. ACIM-080-1(085)8N
CCO#: **54** SUPPLEMENT#: **0** Category Code: **CHGA**	CONTINGENCY BALANCE (incl. this change) **$52,927,820.27**
COST: **$4,586.19** INCREASE ☑ DECREASE ☐	HEADQUARTERS APPROVAL REQUIRED? ☐ YES ☑ NO
SUPPLEMENTAL FUNDS PROVIDED: **$0.00**	IS THIS REQUEST IN ACCORDANCE WITH ENVIRONMENTAL DOCUMENTS? ☑ YES ☐ NO
CCO DESCRIPTION: Survey Towers at Precast Yard	**PROJECT DESCRIPTION:** REPLACE SFOBB EAST SPAN

LOCATION: IN SAN FRANCISCO AND ALAMEDA COUNTIES IN SAN FRANCISCO AND OAKLAND FROM 1.3 KM EAST OF THE YERBA BUENA ISL

THIS CHANGE ORDER PROVIDES FOR:

installing additional mounting brackets at the top of the survey towers in the Precast Yard in Stockton.

The contractor's original design provided one mounting bracket at each survey tower for the geometry control equipment. An additional bracket is needed to mount the Caltrans survey equipment to ensure Quality Assurance.

For the above-mentioned work, the contractor has agreed to a lump sum payment of $ 4,586.19. This sum constitutes full compensation including all markups for this change. Records and calculations used to determine the adjustment of compensation are on file in the project records.

No adjustment in Contract time will be made as this change order does not affect the controlling operations.

Maintenance concurrence is not required as this does not affect the structure.

FHWA and Headquarters concurrence is not required.

CONCURRED BY:	
Construction Engineer:	Date
Bridge Engineer:	Date
FHWA Representative:	Date
Project Engineer:	Date
Other (specify):	Date
	Date
	Date
District Prior Approval By:	Date
HQ (Issue Approve) By:	Date
Resident Engineer's Signature:	Date 4-28-03

ESTIMATE OF COST

	THIS REQUEST	TOTAL TO DATE
ITEMS	$0.00	$0.00
FORCE ACCOUNT	$0.00	$0.00
AGREED PRICE	$0.00	$0.00
ADJUSTMENT	$4,586.19	$4,586.19
TOTAL	$4,586.19	$4,586.19

FEDERAL PARTICIPATION

☑ PARTICIPATING ☐ PARTICIPATING IN PART ☐ NONE
☐ NON-PARTICIPATING (MAINTENANCE) ☐ NON-PARTICIPATING

FEDERAL SEGREGATION (if more than one Funding Source or P.I.P. type)
☑ CCO FUNDED PER CONTRACT ☐ CCO FUNDED AS FOLLOWS

RECEIVED 007462 MAY 28 03

FEDERAL FUNDING SOURCE	PERCENT

79.054

CONTRACT CHANGE ORDER

Change Requested by: Engineer

CCO: 55	Suppl. No. 0	Contract No. 04 - 012024	Road 04-SF,Ala-80-13.9/14.3,0.0/1.6	FED. AID LOC.: ACIM-080-1(085)8N

To: KIEWIT / FCI / MANSON a JV

You are directed to make the following changes from the plans and specifications or do the following described work not included in the plans and specifications for this contract. ***NOTE: This change order is not effective until approved by the Engineer.***

Description of work to be done, estimate of quantities and prices to be paid. (Segregate between additional work at contract price, agreed price and force account.) Unless otherwise stated, rates for rental of equipment cover only such time as equipment is actually used and no allowance will be made for idle time. This last percentage shown is the net accumulated increase or decrease from the original

Adjustment of Compensation at Lump Sum:

Furnish all labor, materials, tools, equipment and incidentals to construct the permanent counterweights for the fully precas hinge segments, as shown on revised plan sheets 733R1, 734R1, 734A, 734B and 734C of 978 (Page 2 through 6 of this change order) for the SFOBB East Span Skyway, Bridge Nos. 34-0006L/R.

Furnish all labor, materials, tools, equipment and incidentals to construct the precast hinge segments B, C, D, and E, as shown on revised plan sheets 786R3, 787R4, 788R2, 789R2, 790R2, 791R2, 792R3, 793R3, 794R3, 795R4, 796R3, 797R3, 797AR1, 798R4, 799R2, 799AR1, 799BR1, 800R3, 801R3, 802R3, 803R3, 804R3, 805R3, 806R3, 807R3, 807AR1, 807BR1, 808R3, 809R3, 810R2, 811R3, 812R2, 813R1, 814R3, 815R2, 816R3, 817R4, 818R3, 819R1, 820R3, 821R2, 822R3, 823R3, 824R3, 825R3, 825AR1, 826R3, 827R3, 828R3, 829R1, 830R2, 831R2, 832R1, 833R2, 834R2, 835R2, 836R3, 837R3, 838R3, 839R4, 840R3, 841R2, 842R3, 843R2, 843A, 844R4, 845R3, 846R3, 847R3, 848R3, 849R3, 850R3, 851R2, and 851AR1 of 978 (Page 7 through 80 of this change order) for the SFOBB East Span Skyway, Bridge Nos. 34-0006L/R.

Revise the grout pockets to continuous circular grout pockets as shown on revised plan sheets 879R2, 880R2 and 881AR2 of 978 (Page 81 through 83 of this change order) for the SFOBB East Span Skyway, Bridge Nos. 34-0006L/R.

Revise the blockout dimensions for the modular joint seal assemblies as shown on revised plan sheets 885R1, and 885AR2 of 978 (Page 84 and 85 of this change order) for the SFOBB East Span Skyway, Bridge Nos. 34-0006L/R.

Full and complete compensation for providing all labor, material, equipment, tools and incidentals, including markups, for a direct and indirect costs, and all associated project impacts for this work is included in the lump sum payment of CCO No. 200 and no further payment will be made as a result of this CCO.

Estimated Cost: Increase ☐ Decrease ☐

By reason of this order the time of completion will be adjusted as follows: 0 days

Submitted by

Signature	Resident Engineer: DOUG COE, Supervising Br. Eng.	Date 8-24-06

Approval Recommended by

Signature	Construction Engineer: DOUG COE, Supervising Br. Eng.	Date 8-24-06

Engineer Approval by

Signature	(Print name and title) PETER SIEGENTHALER - Chief	Date 9-8-06

We the undersigned contractor, have given careful consideration to the change proposed and agree, if this proposal is approved, that we will provide all equipment, furnish the materials, except as may otherwise be noted above, and perform all services necessary for the work above specified, and will accept as full payment therefor the prices shown above.

NOTE: If you, the contractor, do not sign acceptance of this order, your attention is directed to the requirements of the specifications as to proceeding with the ordered work and filing a written protest within the time therein specified.

Contractor Acceptance by

Signature	(Print name and title) LEE ZINK, Project Director	Date 9/5/2006

9/5/2006

STATE OF CALIFORNIA - DEPARTMENT OF TRANSPORTATION

CONTRACT CHANGE ORDER MEMORANDUM

TO: PETER SIEGENTHALER / PETER SIEGENTHALER

FROM: DOUG COE, Supervising Br. Eng.

FILE: E.A. 04 - 012024
CO-RTE-PM 04-SF,Ala-80-13.9/14.3,0.0/1.6
FED. NO. ACIM-080-1(085)8N

CCO# 55 SUPPLEMENT#: 0 Category Cod CHPT

CONTINGENCY BALANCE (incl. this change

COST: INCREASE ☐ DECREASE ☐

HEADQUARTERS APPROVAL REQUIRED? ☑ YES ☐ NO

SUPPLEMENTAL FUNDS PROVIDED: $0.00

IS THIS REQUEST IN ACCORDANCE WITH ENVIRONMENTAL DOCUMENTS? ☑ YES ☐ NO

CCO DESCRIPTION:
Fully Precast Hinge Modifications

PROJECT DESCRIPTION:
REPLACE SFOBB EAST SPAN

LOCATION: IN SAN FRANCISCO AND ALAMEDA COUNTIES IN SAN FRANCISCO AND OAKLAND FROM 1.3 KM EAST OF THE YERBA BUENA ISL

THIS CHANGE ORDER PROVIDES FOR:

Furnishing and installing of the hinge segments for hinges B, C, D and E in accordance with the revised contract plan sheet numbers 733R1, 734R1, 734A, 734B, 734C, 786R3, 787R4, 788R2, 789R2, 790R2, 791R2, 792R3, 793R3, 794R3, 795R4, 796R3, 797R3, 797AR1, 798R4, 799R2, 799AR1, 799BR1, 800R3, 801R3, 802R3, 803R3, 804R3, 805R3, 806R3, 807R3, 807AR1, 807BR1, 808R3, 809R3, 810R2, 811R3, 812R2, 813R1, 814R3, 815R2, 816R3, 817R4, 818R3, 819R1, 820R3, 821R2, 822R3, 823R3, 824R3, 825R3, 825AR1, 826R3, 827R3, 828R3, 829R1, 830R2, 831R2, 832R1, 833R2, 834R2, 835R2, 836R3, 837R3, 838R3, 839R4, 840R3, 841R2, 842R3, 843R2, 843A, 844R4, 845R3, 846R3, 847R3, 848R3, 849R3, 850R3, 851R2, 851AR1, 879R2, 880R2, 881R2, 885R1, and 885AR2 of 978 (sheets 2 through 85 of the change order) for the SFOBB East Span Skyway, Bridge Nos. 34-0006L/R.

The major changes include modification of the hinge segments to fully precast hinge segments in lieu of cast-in-place diaphragms, thickening the diaphragms, modification of the hinge bearing grout pockets, modification of the permanent counterweight segments, and modification of the blockout dimensions for the modular joint seal assemblies.

The original design sequence provided for cast-in-place hinge bearing diaphragms after erection of the hinge segments. During "Mission Control" design review and development of composite segment working drawings, a joint decision was made to change the hinge segment to a fully precast design thereby eliminating the cast-in-place hinge bearing diaphragms in the field and related constructability issues. The resulting heavier hinge segment necessitates the simultaneous erection of a heavy segment to balance the moments on the pier. This requires changing the counterweight from cast-in-place to precast. Additionally, the square grout pockets for the circular segmental hinge pipe beam bearings will be changed to a continuous circular pocket to facilitate constructability issues.

During the development of composite working drawings in "Mission Control" and the fabrication in the Stockton pre-cast yard, several constructability and conflict issues were identified and resolved e.g., conflicts and congestion in the hinge segments between reinforcing steel bars, prestress tendons, vertical post tensioning bars, and hinge bearings.

The Contractor presented the Department with an estimate of $6,576,868.00 on April 4,2005 for all of the additional cost incurred to resolve the issues. After extensive reviews and analysis, the Department and the Contractor have agreed on a total cost of $2,364,000.00.

The agreed compensation for this contract change order is included in the lump sum compensation portion of resolution CCO No. 200. For this work, the Contractor will receive an agreed lump sum amount of $2,364,000.00.

A detailed force account analysis prepared by the Engineer for the cost of this change order is on file in the project records.

Mr. Pete Siegenthaler, SFOBB Toll Bridge Construction Manager, concurs with this change. A copy of the concurrence signed by Mr. Siegenthaler is attached.

Prior Approval was obtained from Ms. Nancy Bobb, FHWA Bay Bridge Project Manager, via electronic message on June 29, 2006. A printed copy of the prior approval provided by Ms. Bobb is attached.

Ken Terpstra, SFOBB Project Manager, provided concurrence on July 3, 2006. A copy of the concurrence provided by Mr. Terpstra is attached.

Mr. Hasan El-Natur, Design Oversight Engineer, as indicated by the signature on the revised contract plan sheets, provides design concurrence.

Maintenance concurrence is not required because this change does not use maintenance funds or affect maintenance facilities or operations.

Authorization to proceed with this change order was issued by Headquarters Division of Construction on September 9, 2003.

CONCURRED BY:

Construction Engineer:	Douglas Coe	Date 8-24-06
Bridge Engineer:	Douglas Coe	Date 8-24-06
FHWA Representative:	Nancy Bobb	Date 6/29/2006
Project Engineer:		Date
Other (specify): Ken Terpstra, SFOBB Project Manager		Date 7/3/2006
TBPOC		Date 8/24/2006
		Date
District Prior Approval By:		Date
HQ (Issue Approve) By:	Ken Darby	Date
Resident Engineer's Signature:		Date 8-24-06

ESTIMATE OF COST

	THIS REQUEST	TOTAL TO DATE
ITEMS	$0.00	$0.00
FORCE ACCOUNT	$0.00	$0.00
AGREED PRICE	$0.00	$0.00
ADJUSTMENT		
TOTAL		

FEDERAL PARTICIPATION

☑ PARTICIPATING ☐ PARTICIPATING IN PART ☐ NONE
☐ NON-PARTICIPATING (MAINTENANCE) ☐ NON-PARTICIPATING

FEDERAL SEGREGATION (if more than one Funding Source or P.I.P. type)
☑ CCO FUNDED PER CONTRACT ☐ CCO FUNDED AS FOLLOWS

FEDERAL FUNDING SOURCE PERCENT

CONTRACT CHANGE ORDER

Change Requested by: Engineer

CCO: 56	Suppl. No. 0	Contract No. 04 - 012024	Road 04-SF,Ala-80-13.9/14.3,0.0/1.6	FED. AID LOC.: ACIM-080-1(085)8N

To: **KIEWIT / FCI / MANSON a JV**

You are directed to make the following changes from the plans and specifications or do the following described work not included in the plans and specifications for this contract. ***NOTE: This change order is not effective until approved by the Engineer.***

Description of work to be done, estimate of quantities and prices to be paid. (Segregate between additional work at contract price, agreed price and force account.) Unless otherwise stated, rates for rental of equipment cover only such time as equipment is actually used and no allowance will be made for idle time. This last percentage shown is the net accumulated increase or decrease from the original

Adjustment of Compensation at Lump Sum:

As shown on Detail A of revised contract plan sheet number 423R2 of 978, (page 2 of this change order) install the conduit pipe sleeves (total of 7) in lieu of the conduit stub-outs (as shown on plan sheet 423) for the future light pipe in the west bound steel transition section, and eliminate the PVC conduit sleeves in the west bound concrete bridge sections (as shown on plan sheet 423 R1) of the SFOBB East Span Skyway, Bridge No. 34-0006L/R.

Full compensation for all costs, including markups, all direct and indirect costs, all associated projects impacts, and all overhead costs are included in the lump sum payment under Contract Change Order No. 200. No further payment will be made as a result of this Change Order.

Estimated Cost: Increase ☐ Decrease ☐

By reason of this order the time of completion will be adjusted as follows: 0 days

Submitted by

Signature	Resident Engineer: DOUG COE, Supervising Br. Eng.	Date 8-24-06

Approval Recommended by

Signature	Construction Engineer: DOUG COE, Supervising Br. Eng.	Date 8-24-06

Engineer Approval by

Signature	(Print name and title) DOUG COE, Supervising Br. Eng. - Construction Engin	Date

We the undersigned contractor, have given careful consideration to the change proposed and agree, if this proposal is approved, that we will provide all equipment, furnish the materials, except as may otherwise be noted above, and perform all services necessary for the work above specified, and will accept as full payment therefor the prices shown above.

NOTE: If you, the contractor, do not sign acceptance of this order, your attention is directed to the requirements of the specifications as to proceeding with the ordered work and filing a written protest within the time therein specified.

Contractor Acceptance by

Signature	(Print name and title) LEE ZINK, Project Director	Date 9/5/06

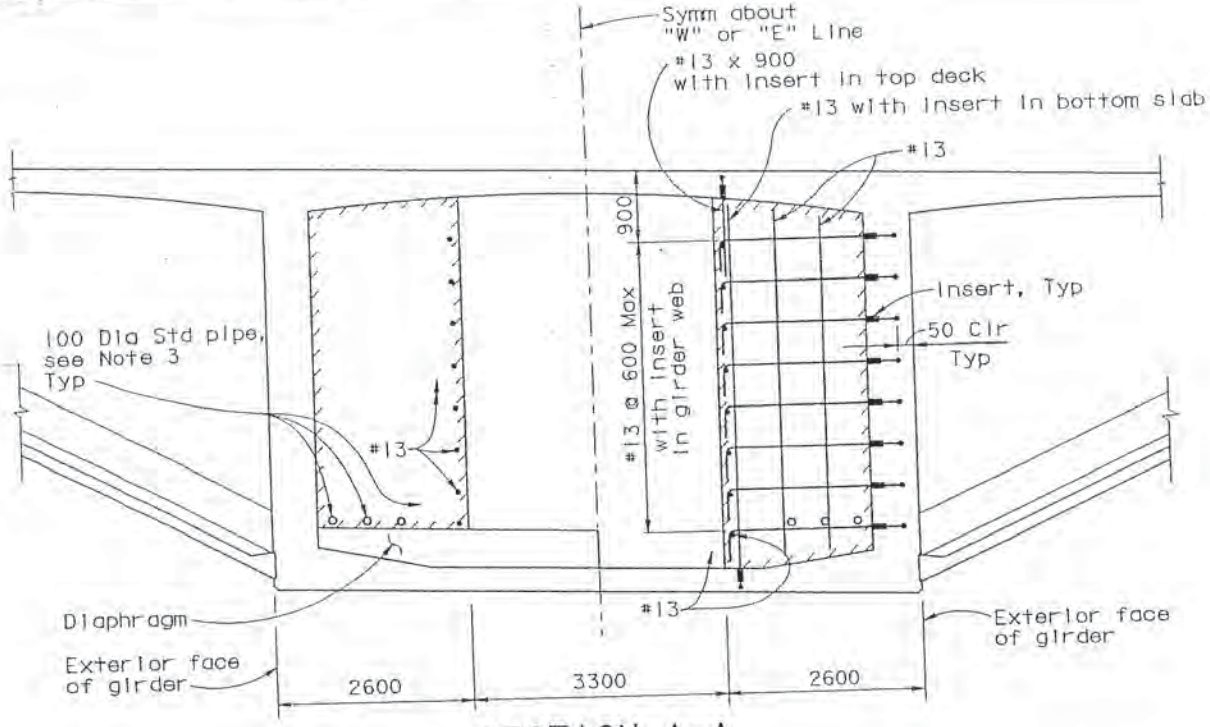

SECTION A-A

1:50

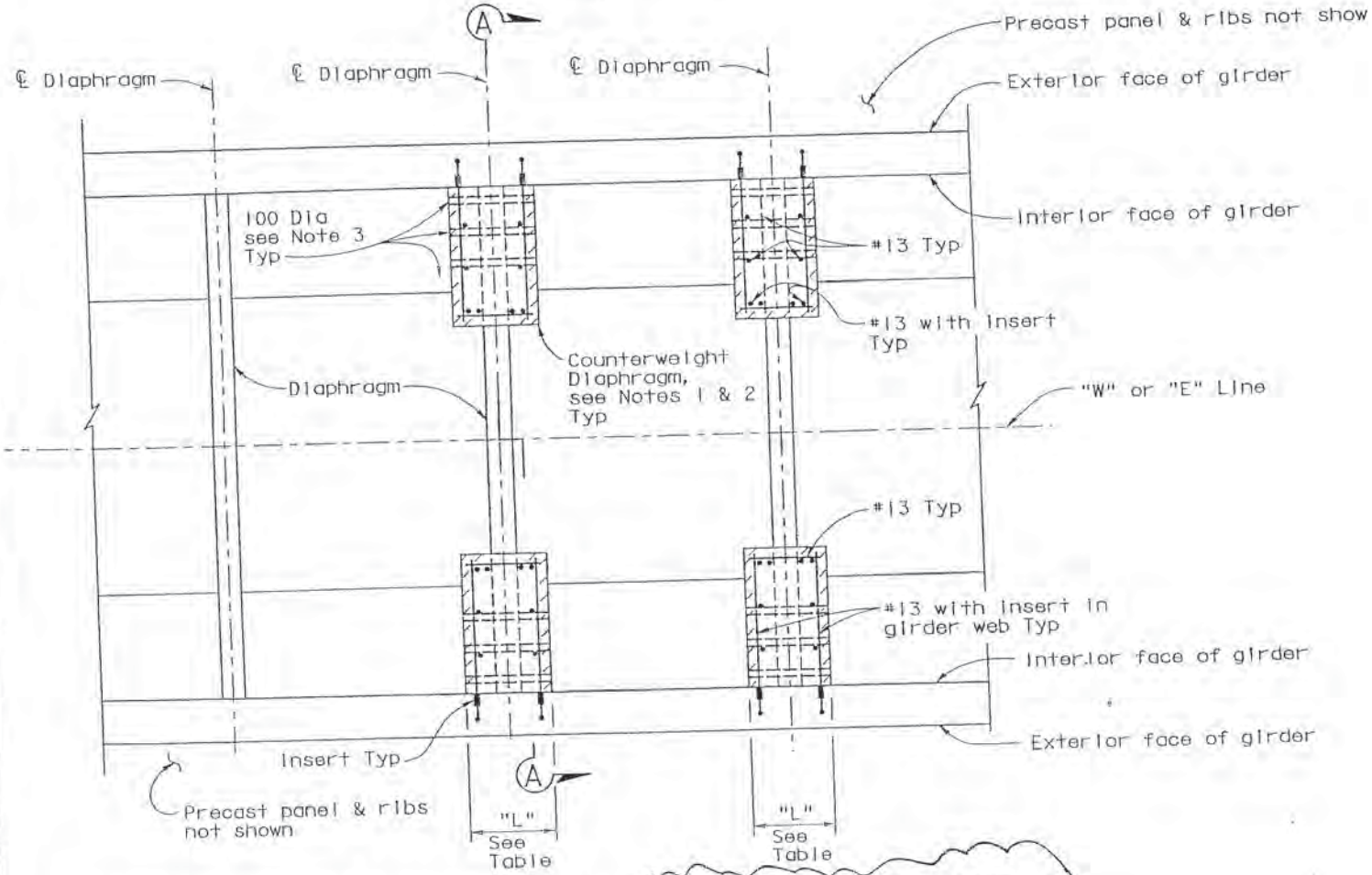

PARTIAL BOTTOM SLAB PLAN - CIP COUNTERWEIGHT ⚠1

1:50

DESIGN OVERSIGHT	DESIGN	BY J. Chan	CHECKED C. Wert
3/4/04	DETAILS	BY A. Lishansky	CHECKED C. Wert
SIGN OFF DATE	QUANTITIES	BY J. Chan	CHECKED S. Shi

Rev. Date: 5-18-98

ORIGINAL SCALE IN MILLIMETERS FOR REDUCED PLANS

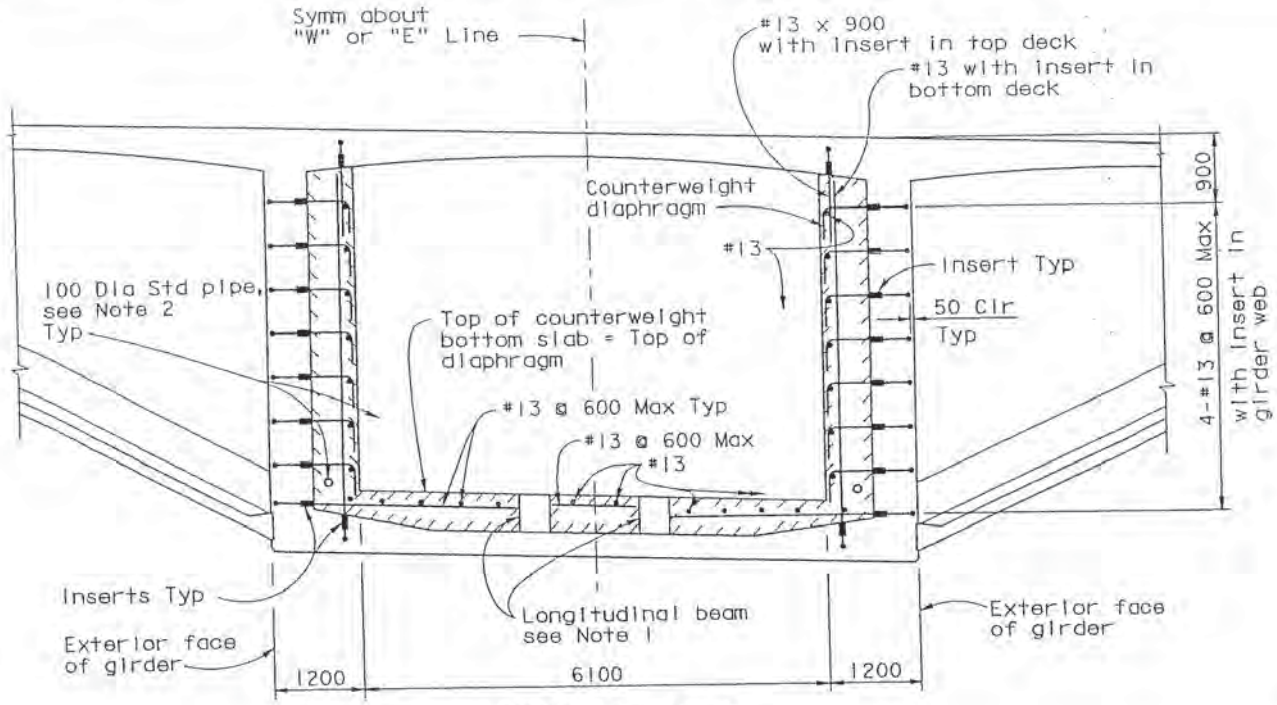

SECTION A-A

1:50

Pier E7

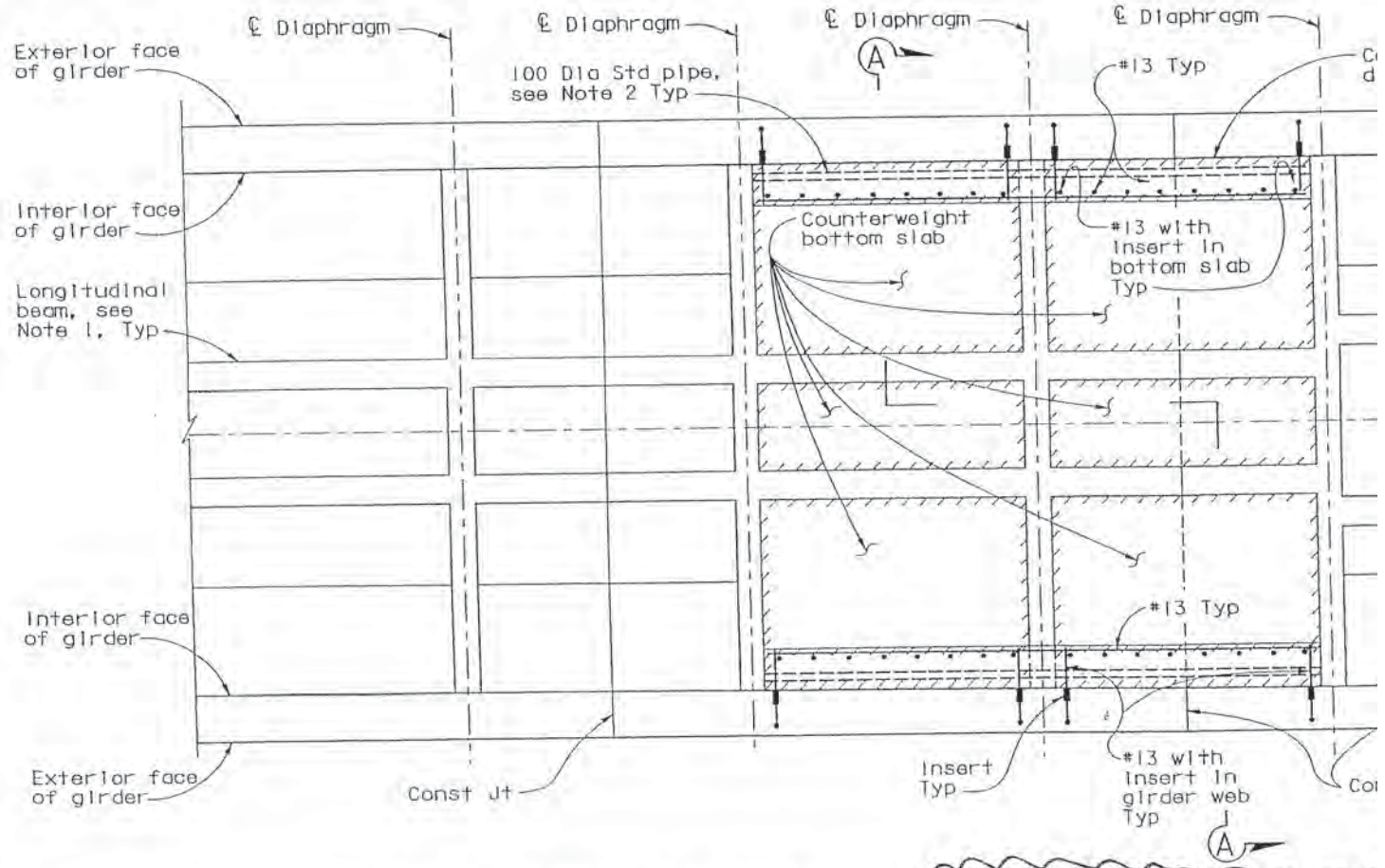

PARTIAL BOTTOM SLAB PLAN - CIP COUNTERWEIGHT ⚠1

1:50

DESIGN OVERSIGHT 3/4/04	DESIGN	BY J. Chan	CHECKED C. Werts
SIGN OFF DATE	DETAILS	BY A. Lishansky	CHECKED C. Werts
	QUANTITIES	BY J. Chan	CHECKED S. Shi

Rev. Date: 5-18-98

ORIGINAL SCALE IN MILLIMETERS FOR REDUCED PLANS

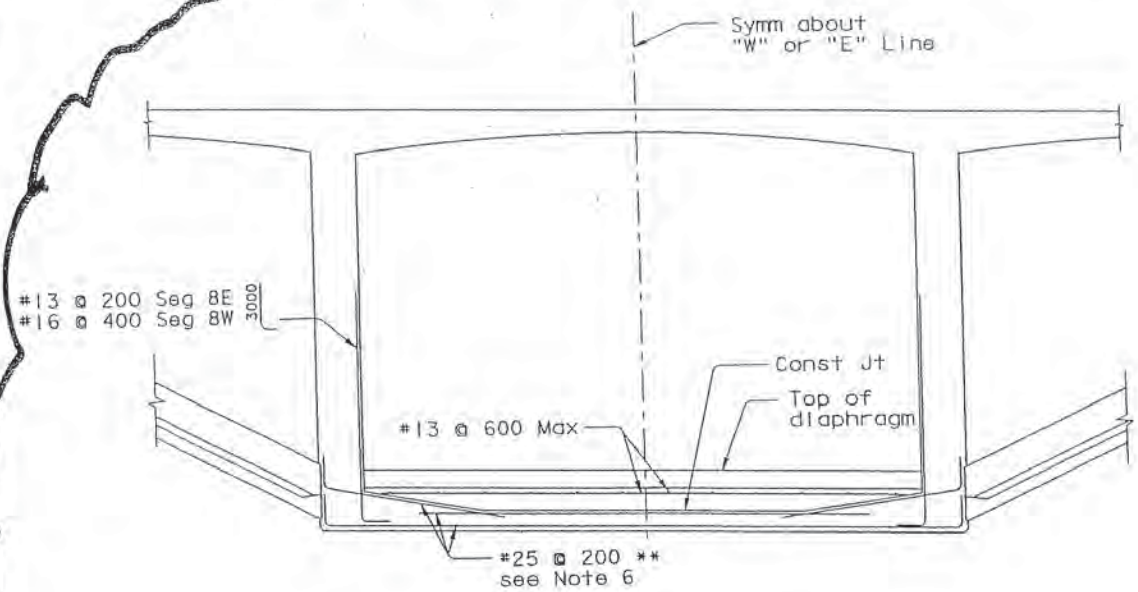

SECTION A-A

1:50

(Segment 8E for Piers E11E, E11W
Segment 8W for Piers E6E, E6W, E10E, E10W)

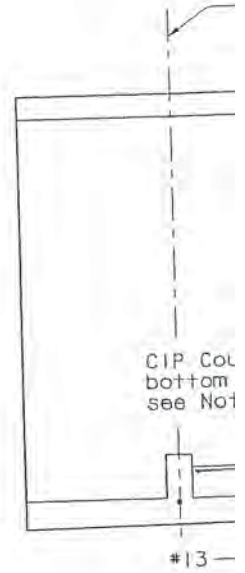

ELEVATION - COU

(Pie
ott

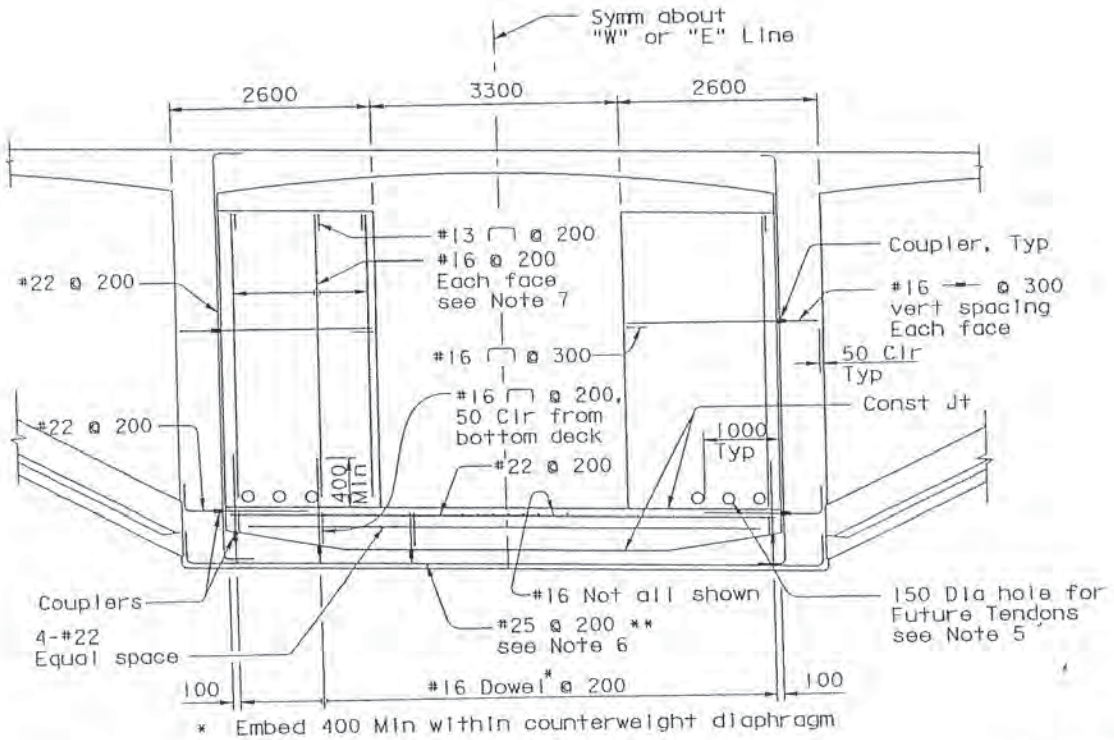

SECTION B-B

1:50

(Segment 9E for Piers E11E, E11W
Segment 9W fpr Piers E6E, E6W, E10E, E10W
Segment 7W for Piers E14E, E14W)

#16 @ 3

#16 @

ELEVATION - COU

DESIGN OVERSIGHT 3/4/04	DESIGN	BY J. Chan	CHECKED R. Malik
SIGN OFF DATE	DETAILS	BY H. Li	CHECKED R. Malik
	QUANTITIES	BY J. Chan	CHECKED R. Malik

Rev. Date: 5-18-98

ORIGINAL SCALE IN MILLIMETERS
FOR REDUCED PLANS

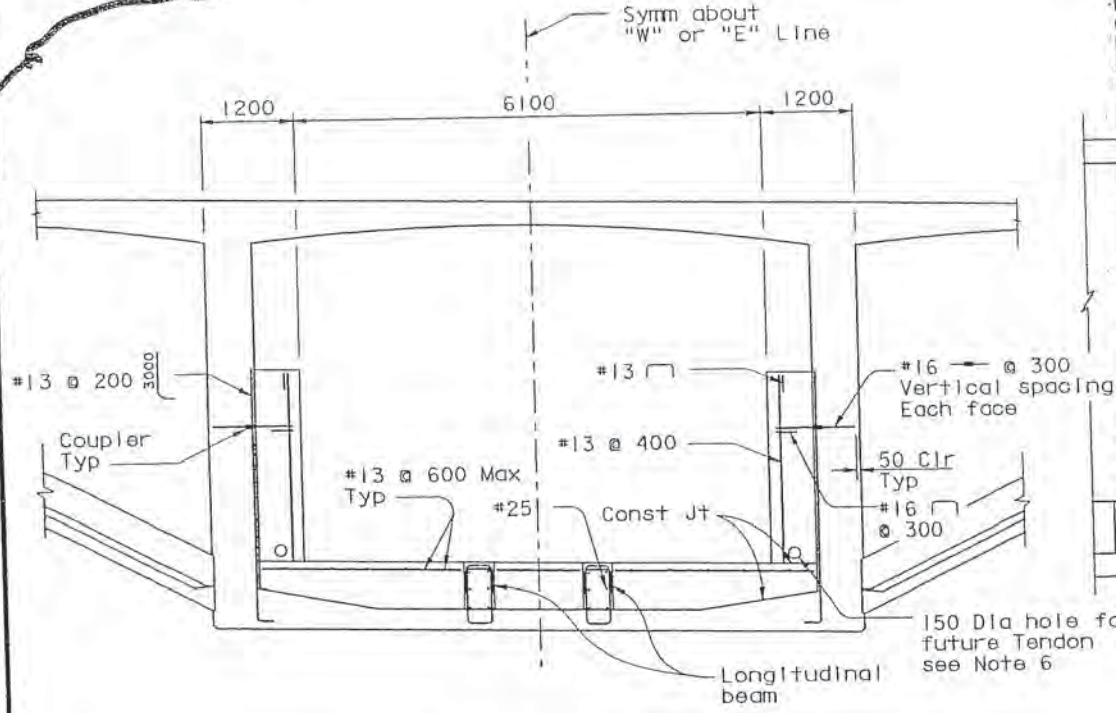

SECTION A-A

1:50

(Segment 8E)

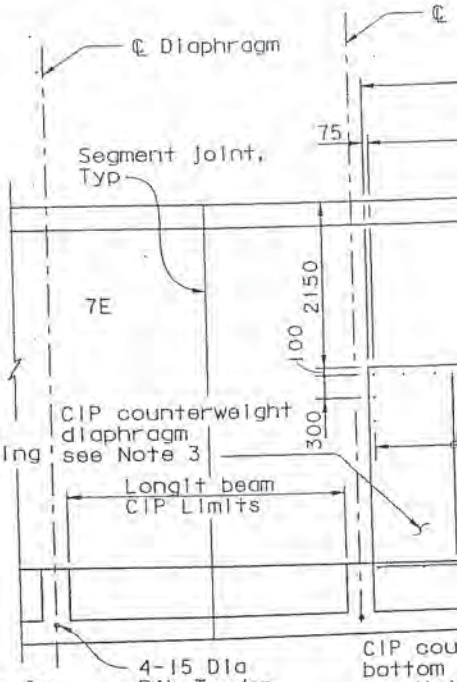

E

(Pie

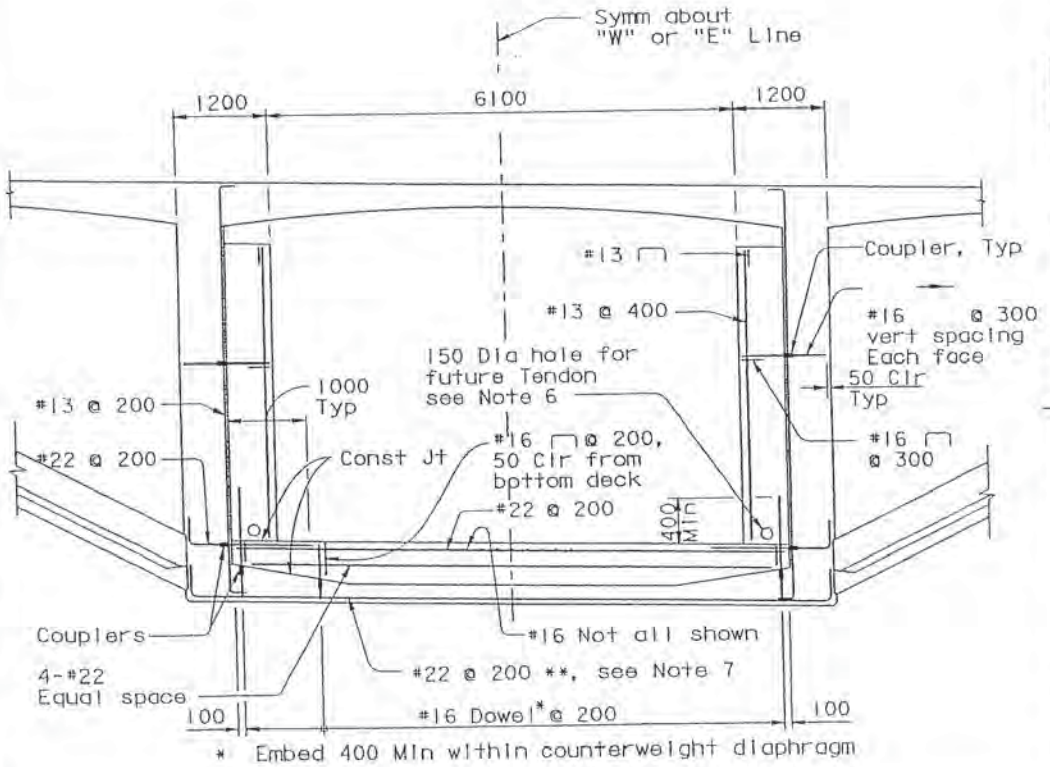

SECTION B-B

1:50

(Segment 9E)

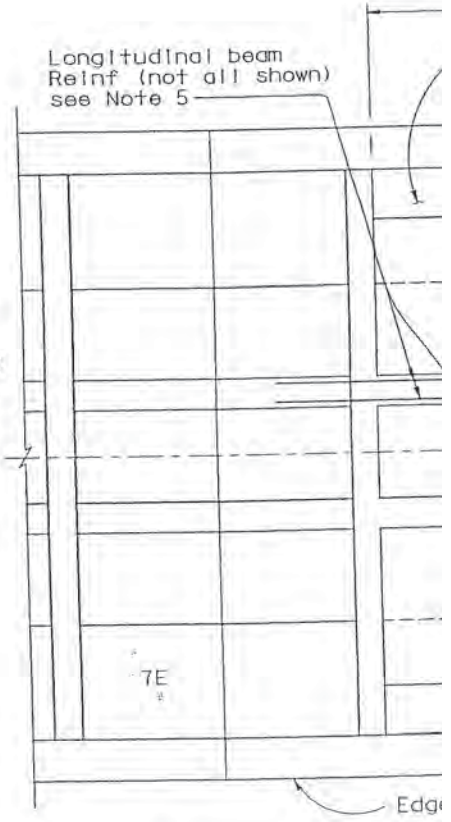

PART BOTTOM SLAB PLAN - (

DESIGN OVERSIGHT 3/4/04		DESIGN	BY J. Chan	CHECKED	E. Chan
		DETAILS	BY H. Li	CHECKED	E. Chan
SIGN OFF DATE		QUANTITIES	BY J. Chan	CHECKED	E. Chan

Rev. Date: 5-18-98

ORIGINAL SCALE IN MILLIMETERS FOR REDUCED PLANS

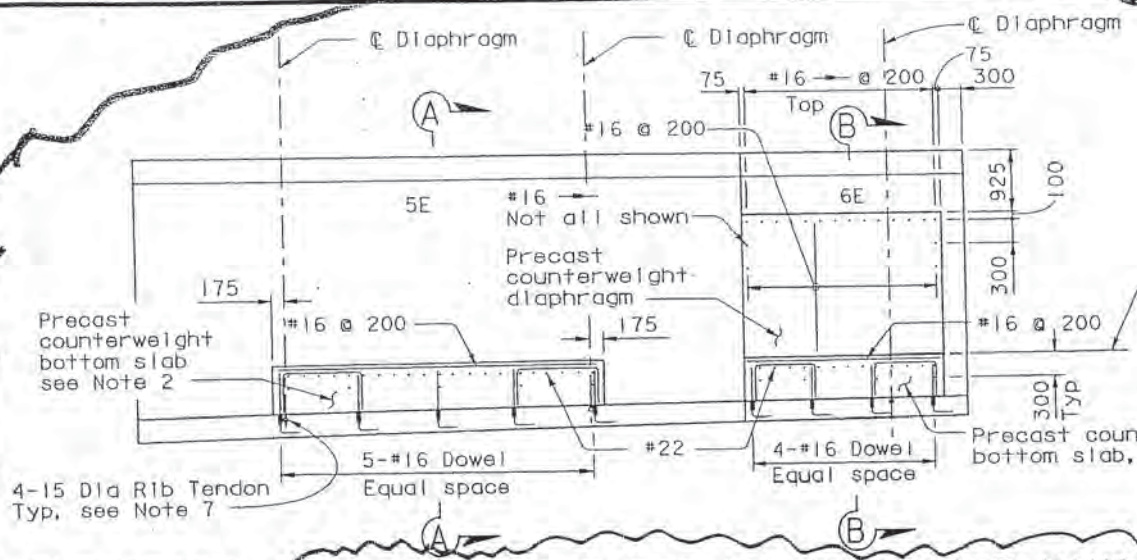

ELEVATION - COUNTERWEIGHT FOR FULLY PRECAST HINGE

1:50

(Piers E15E and E15W)

ELEVATION -

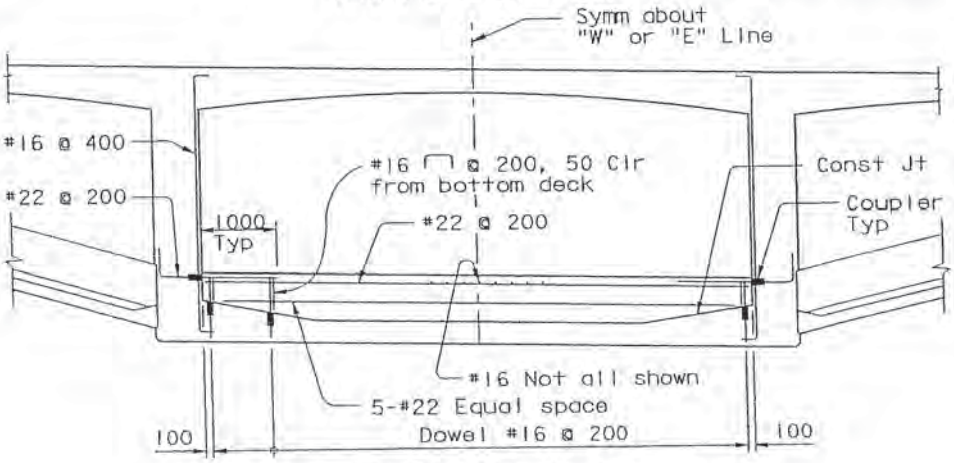

SECTION A-A

1:50

(Segment 5E)

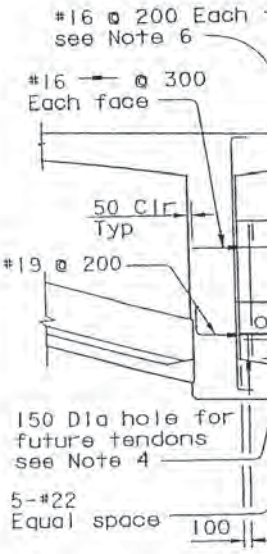

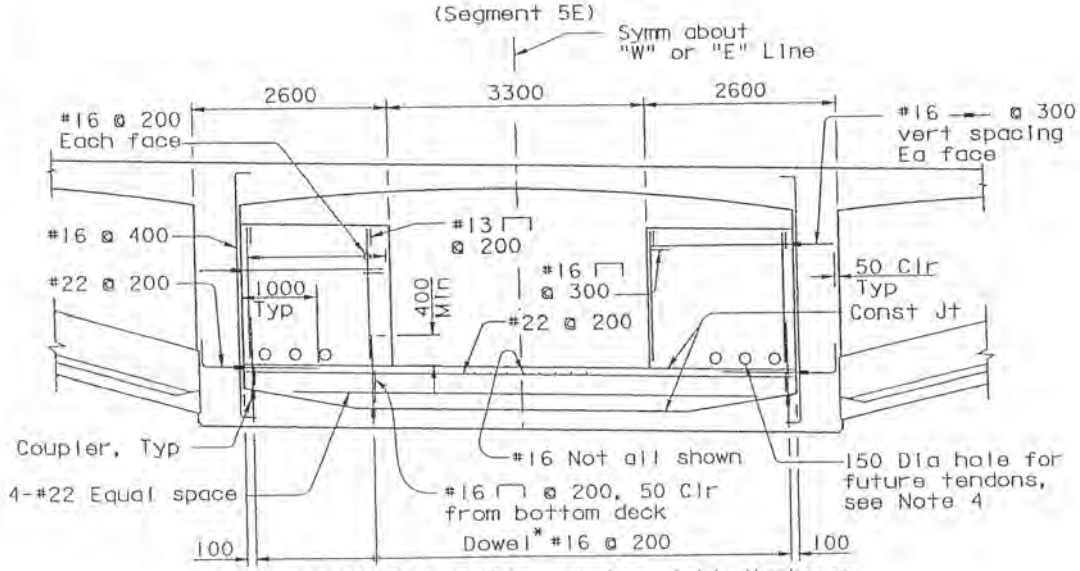

* Embed 400 Min within counterweight diaphragm

SECTION B-B

1:50

(Segment 6E)

DESIGN OVERSIGHT 3/4/04	DESIGN	BY J. Chan	CHECKED	R. Malik
	DETAILS	BY H. Li	CHECKED	R. Malik
SIGN OFF DATE	QUANTITIES	BY J. Chan	CHECKED	R. Malik

Rev. Date: 5-18-98

ORIGINAL SCALE IN MILLIMETERS FOR REDUCED PLANS

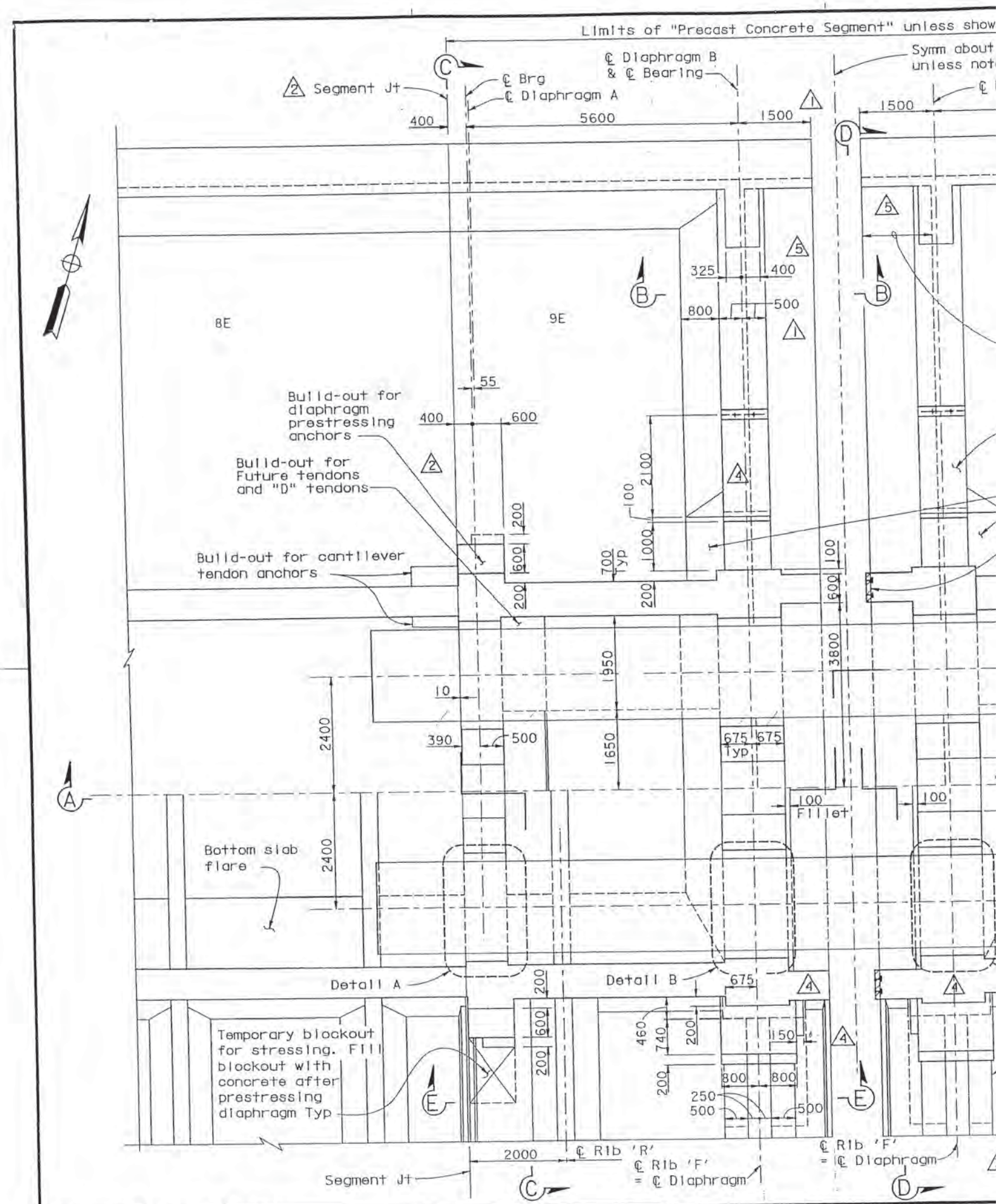

DESIGN OVERSIGHT 1/16/04 SIGN OFF DATE		DESIGN	BY S. Abbas/C. Redfield	CHECKED C. Werts
		DETAILS	BY A. Lishansky	CHECKED C. Werts
		QUANTITIES	BY J. Chan	CHECKED S. Shi

Rev. Date: 5-18-98

ORIGINAL SCALE IN MILLIMETERS FOR REDUCED PLANS

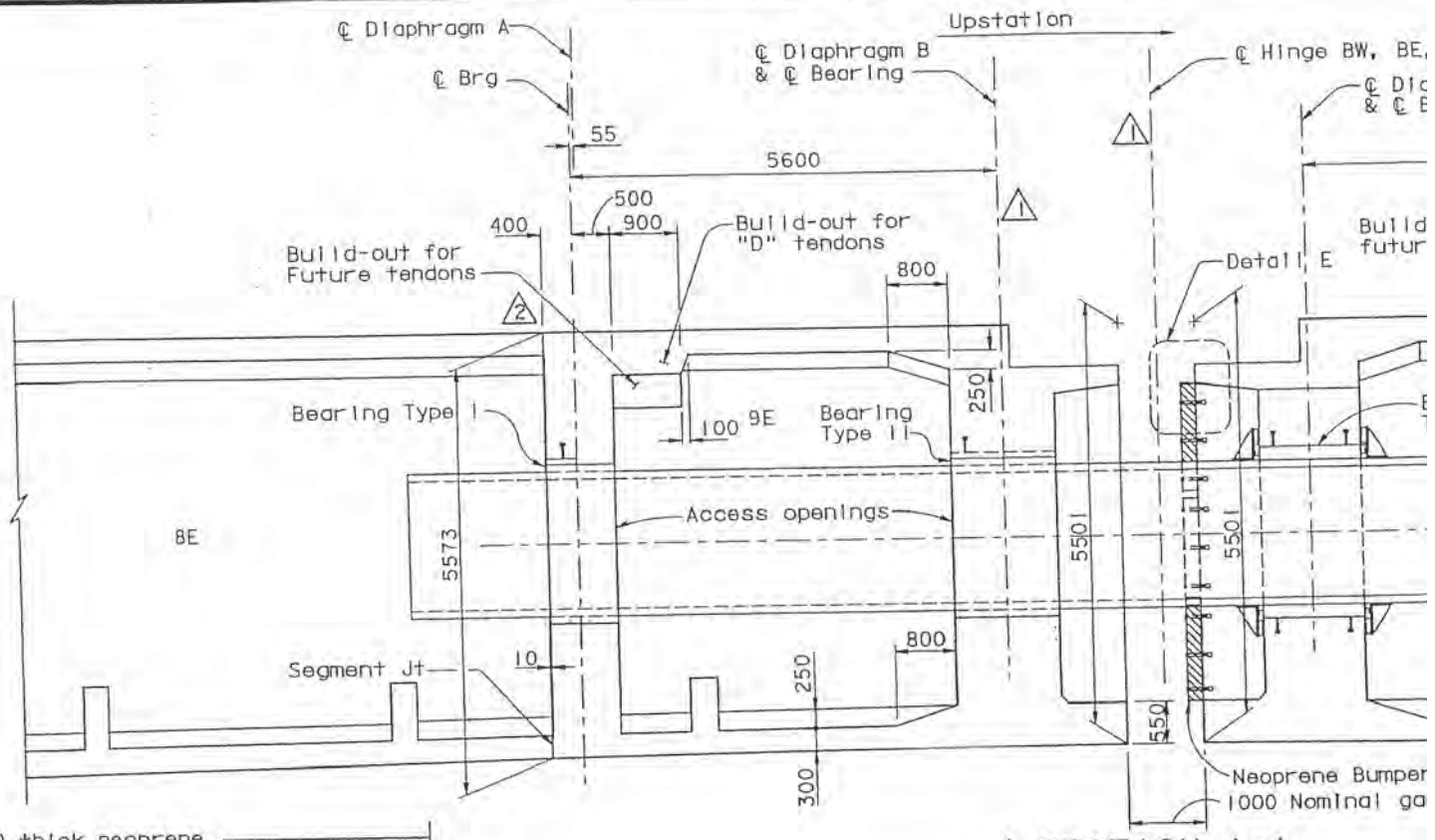

SECTION A-A
1:50

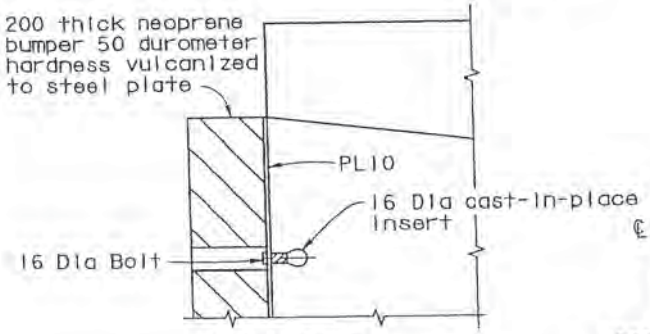

DETAIL E
1:10

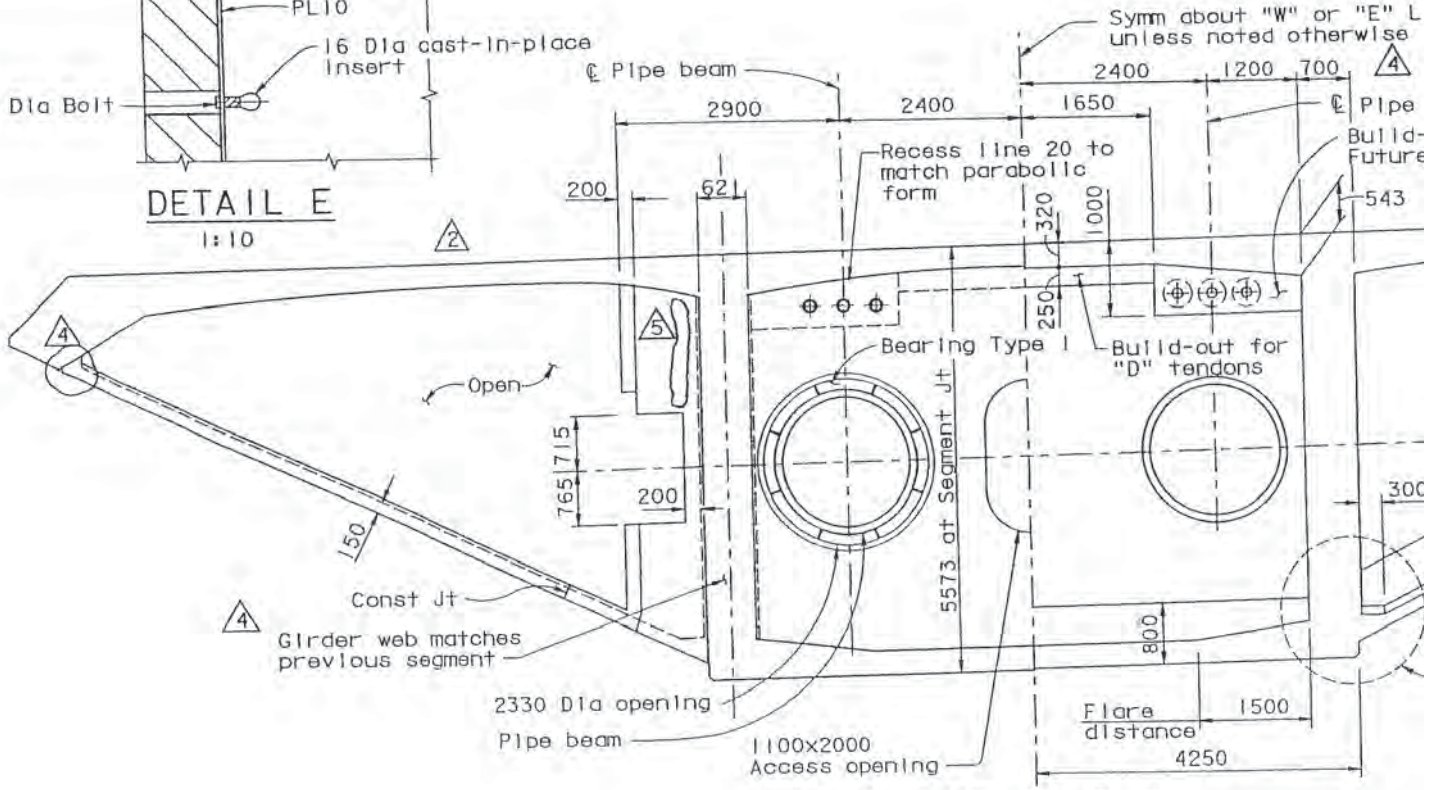

SECTION C-C
1:50

DESIGN OVERSIGHT 1/16/04		DESIGN	BY S. Abbas/C. Redfield	CHECKED	C. Werts
SIGN OFF DATE		DETAILS	BY A. Lishansky	CHECKED	C. Werts
		QUANTITIES	BY J. Chan	CHECKED	S. Shi

Rev. Date: 5-18-98

ORIGINAL SCALE IN MILLIMETERS
FOR REDUCED PLANS

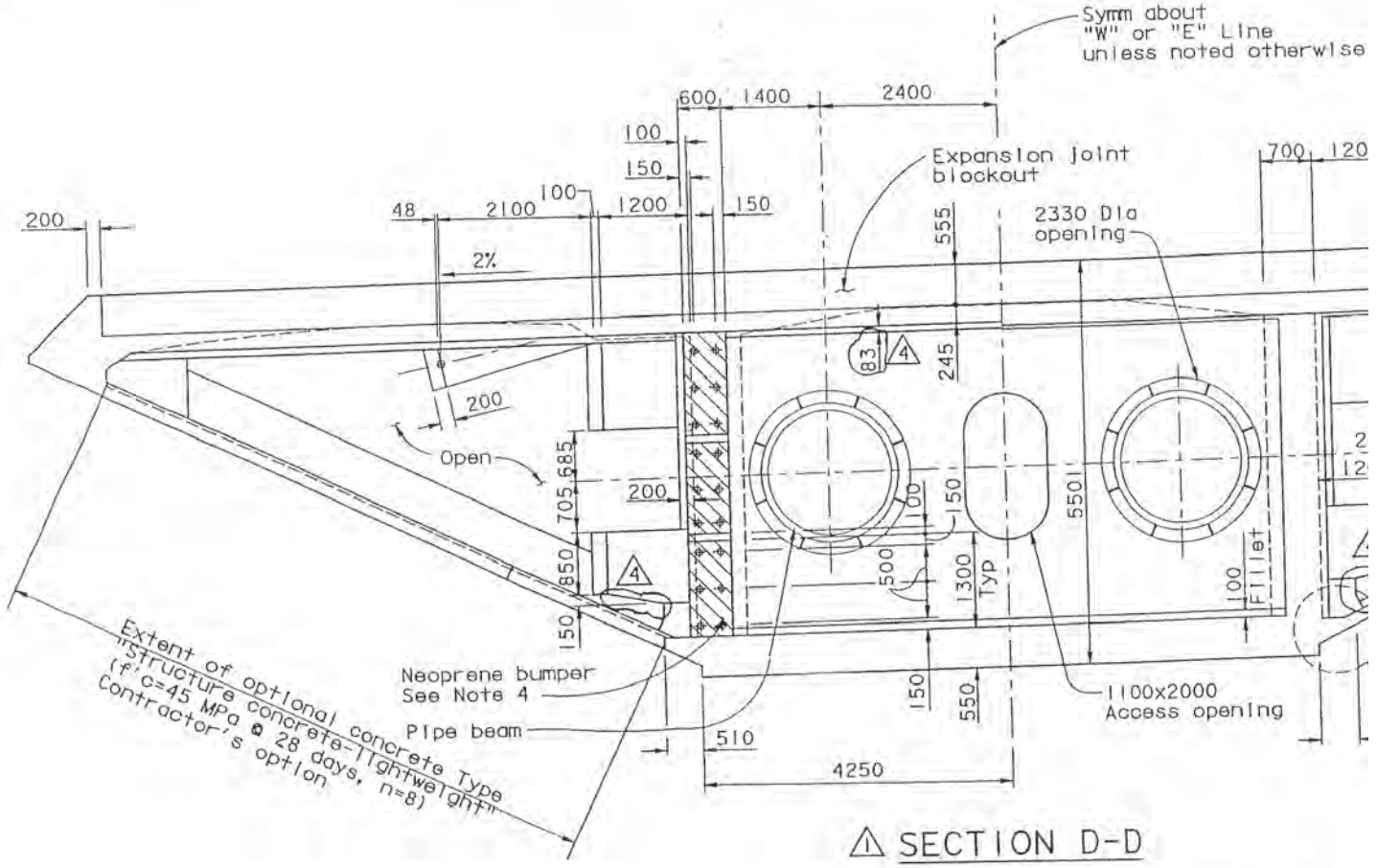

1 SECTION D-D

1:50

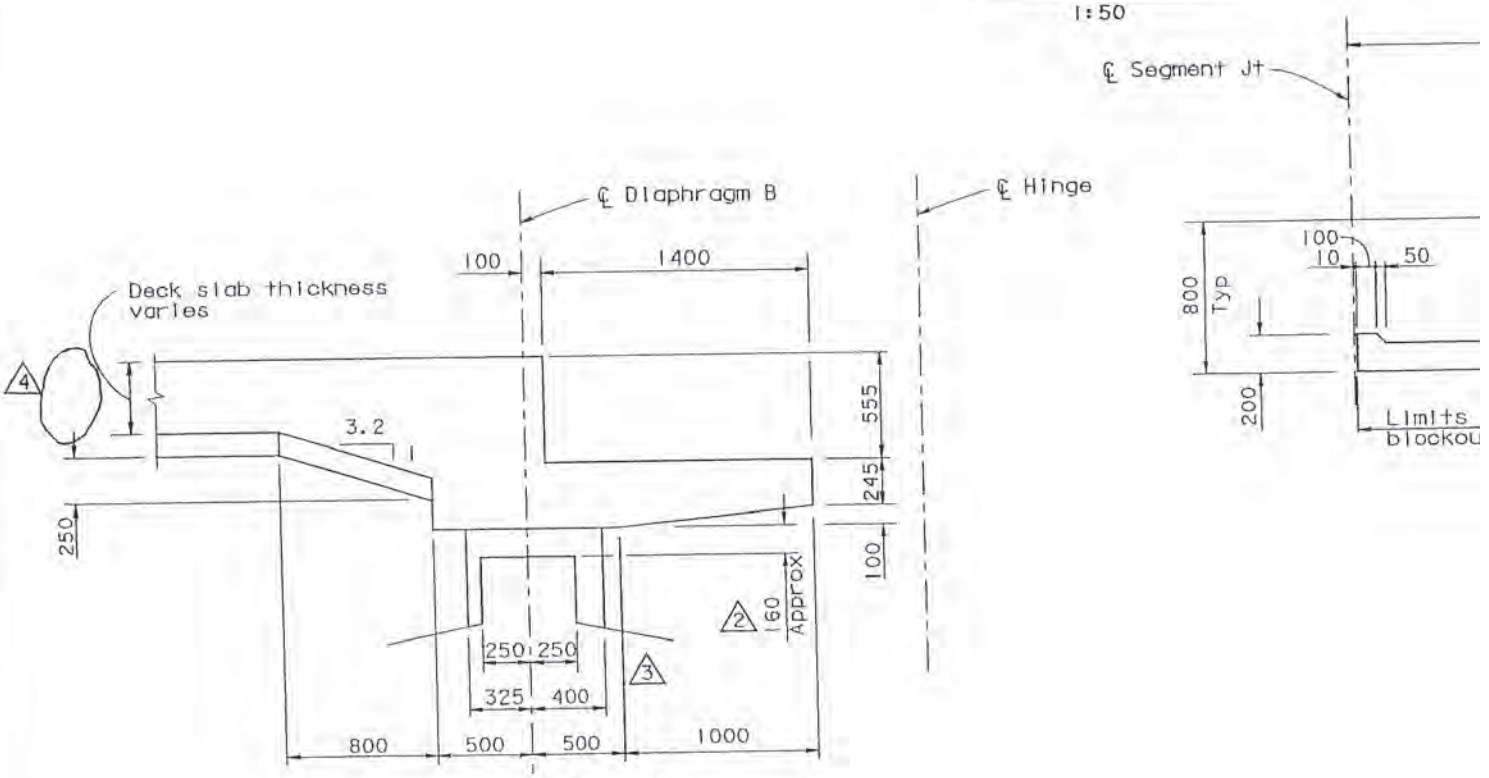

SECTION B-B

1:20

DESIGN OVERSIGHT 1/16/04 SIGN OFF DATE		DESIGN	BY J. Krizek/C. Redfield	CHECKED C. Werts
		DETAILS	BY A. Lishansky	CHECKED C. Werts
		QUANTITIES	BY T. West	CHECKED L. Greer

Rev. Date: 5-18-98

ORIGINAL SCALE IN MILLIMETERS FOR REDUCED PLANS

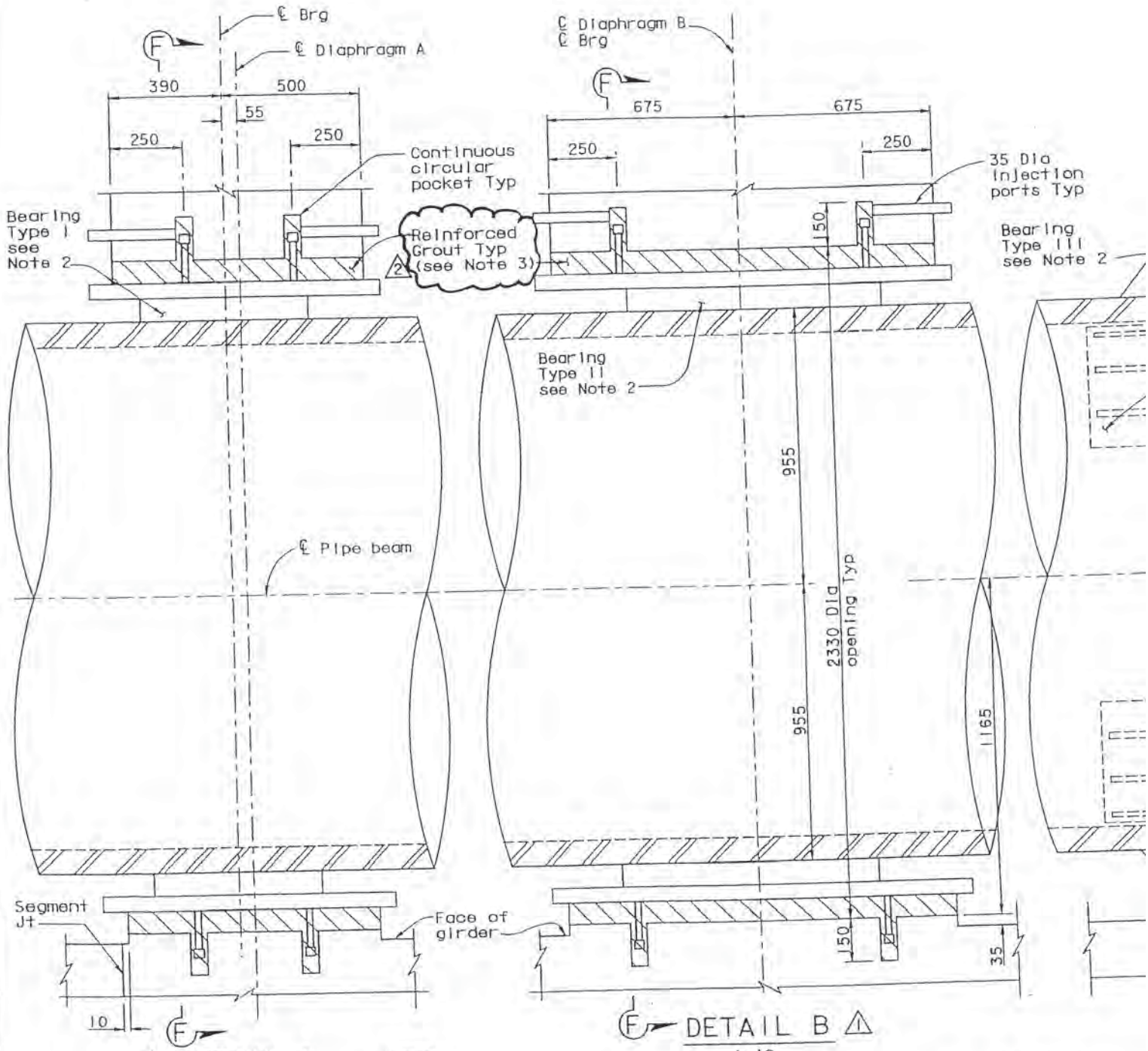

NOTES:

1. For Section F-F, see "Fully Precast Hinge B,C Details No.5" sheet.
2. For clarity, bearings and restraint brackets shown schematically. For details of bearings and restraint brackets, see "Bearing Details" sheet

DESIGN OVERSIGHT 11/21/03	Gan Hasan El-Nahlaw	DESIGN	BY J. Krizek/C. Redfield	CHECKED C. Werts
SIGN OFF DATE		DETAILS	BY A. Lishansky	CHECKED C. Werts
		QUANTITIES	BY T. West	CHECKED L. Greer

Rev. Date: 5-16-96

ORIGINAL SCALE IN MILLIMETERS FOR REDUCED PLANS

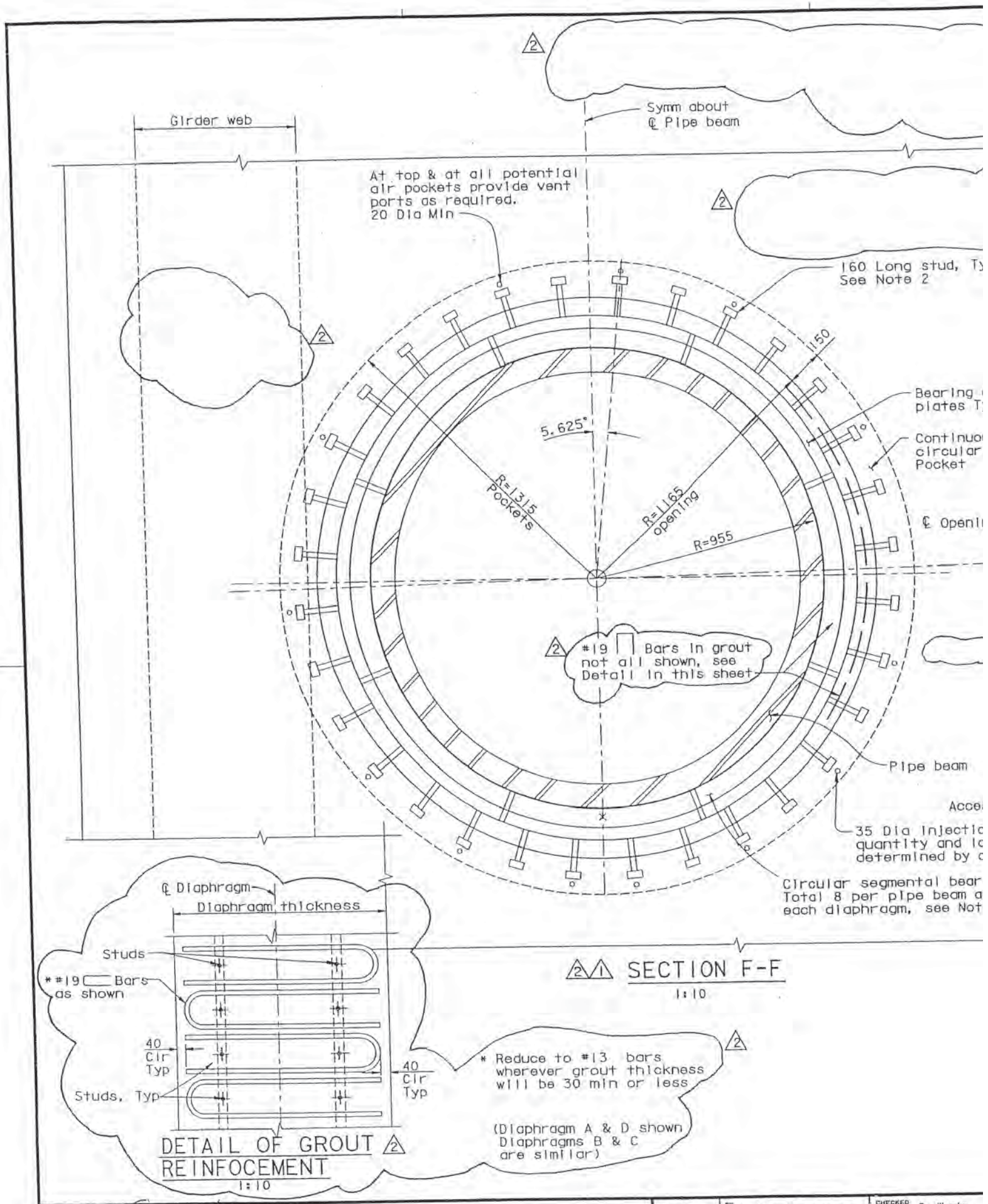

DESIGN OVERSIGHT 1/16/04	DESIGN	BY S. Abbas/J. Krizek	CHECKED C. Werts
SIGN OFF DATE	DETAILS	BY A. Lishansky	CHECKED C. Werts
	QUANTITIES	BY T. West	CHECKED L. Greer

Rev. Date: 5-18-98

ORIGINAL SCALE IN MILLIMETERS FOR REDUCED PLANS

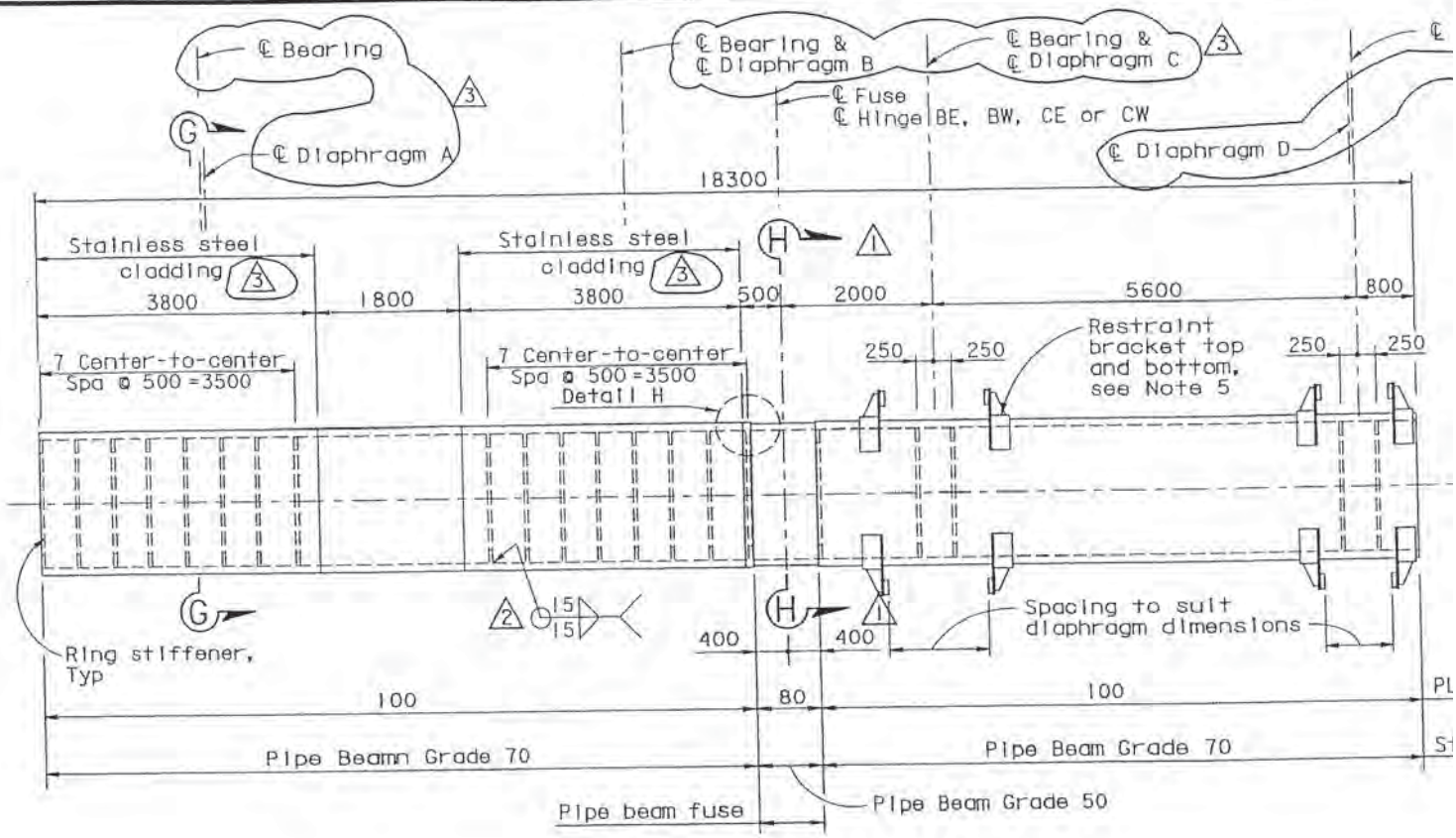

PIPE BEAM ELEVATION

1:50

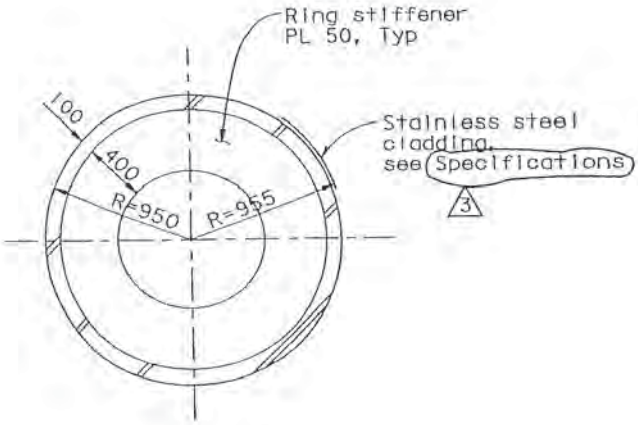

SECTION G-G

1:25

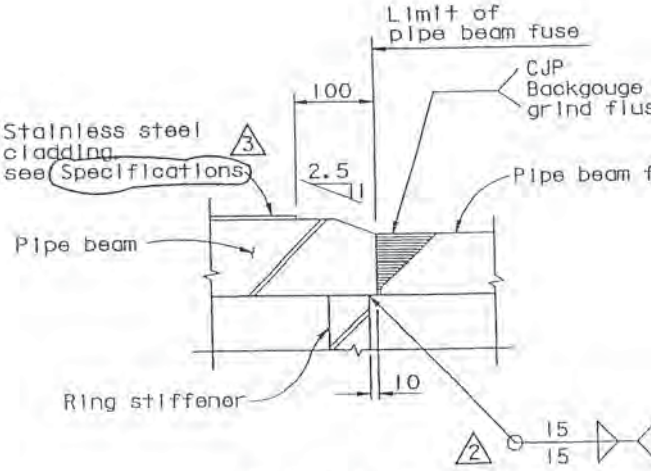

DETAIL H

1:5

DESIGN OVERSIGHT	DESIGN	BY R. Malik	CHECKED C. Werts
1/16/04	DETAILS	BY A. Lishansky	CHECKED C. Werts
SIGN OFF DATE	QUANTITIES	BY R. Malik	CHECKED T. West

Rev. Date: 5-18-98

ORIGINAL SCALE IN MILLIMETERS FOR REDUCED PLANS

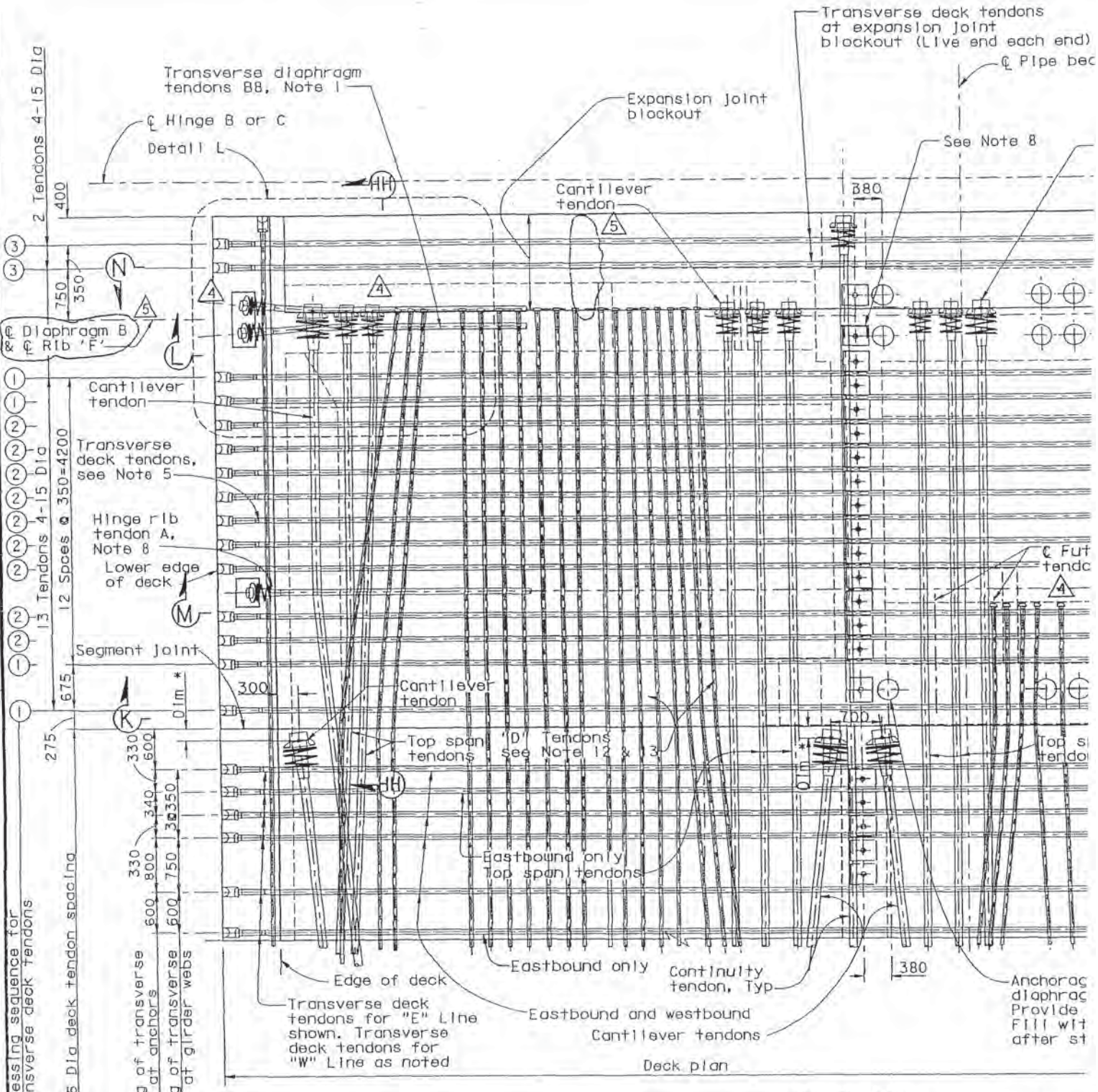

3 PLAN Prestressing Layou

1:40

Note * : Anchorage face of cantilever tendons to be 175 Min from segment joint in segments

Note ** : For spacing of prestressing bars in segment 8E or 8W, see "Fully Precast Hinge B, C Detai No. 8" sheet.

DESIGN OVERSIGHT 5/16/04	DESIGN	BY R. Malik	CHECKED C. Werts
	DETAILS	BY S. Lee	CHECKED C. Werts
SIGN OFF DATE	QUANTITIES	BY R. Malik	CHECKED T. Nguyen

Rev. Date: 5-10-98

ORIGINAL SCALE IN MILLIMETERS FOR REDUCED PLANS

MARK	DATE	DESCRIPTIONS	BY	CH'D	CCO#
3	01/16/04	REVISE CONCRETE DIMENSION	SS	SA	
2	06/27/03	ADJUST SPACING OF PRESTRESSING BARS MODIFY NOTES AND ADD SECTIONS	CR	EC	
1	10/07/02	DELETE CIP TOP DECK CLOSURE	EC	CR	

REVISIONS

CONTRACT CHANGE ORDER NO. 55
SHEET 14 OF 85

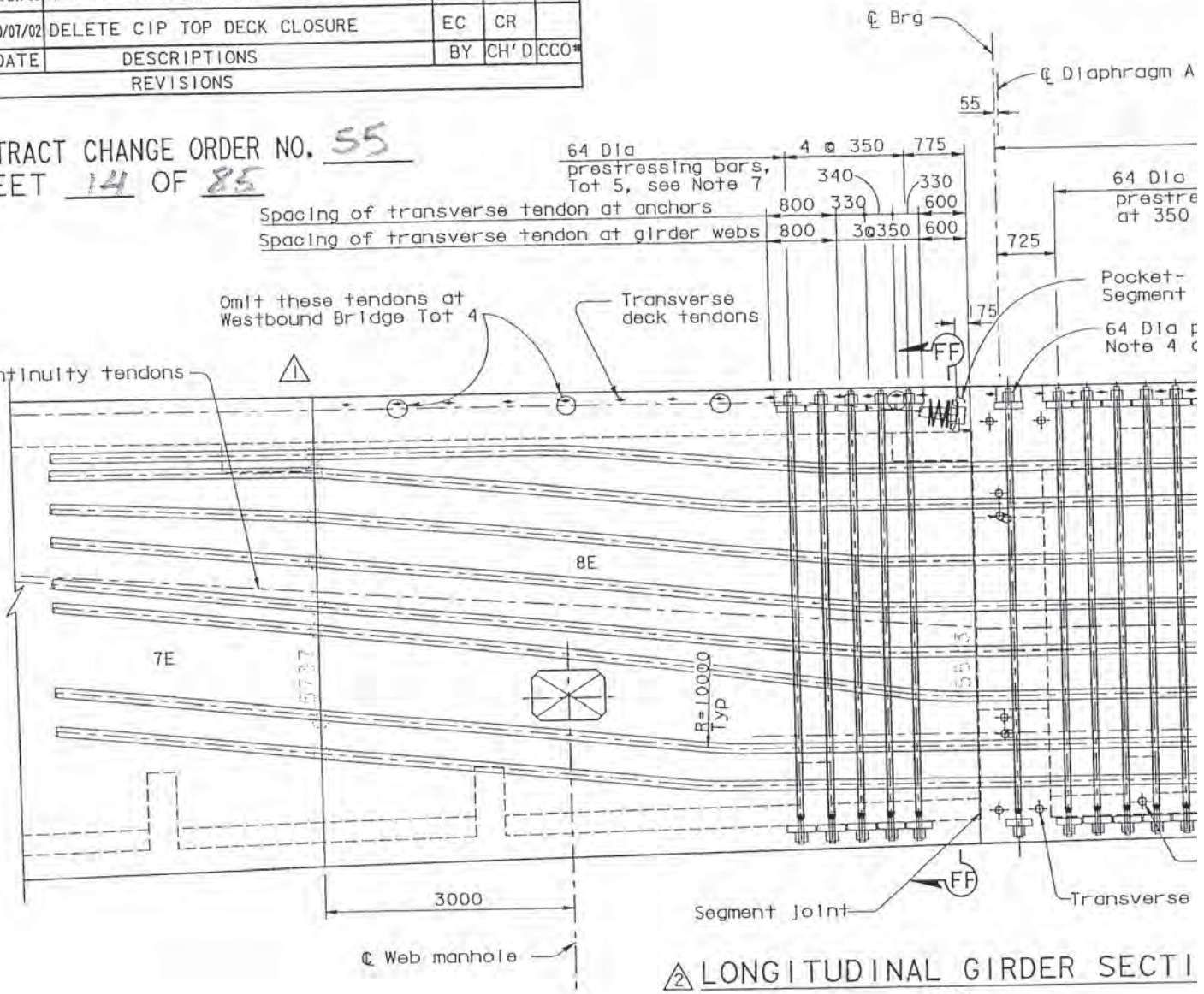

2 LONGITUDINAL GIRDER SECTI
1:40

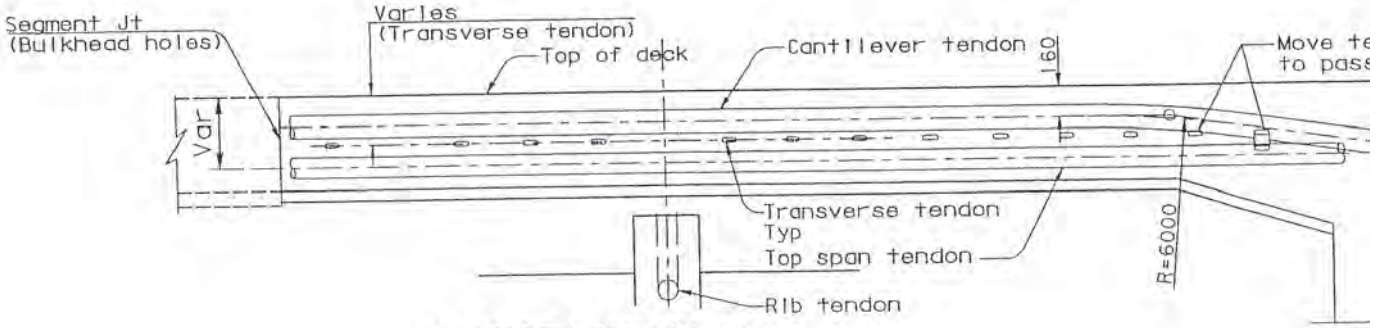

2 SECTION HH-HH
1:20

DESIGN OVERSIGHT
1/16/04
SIGN OFF DATE

DESIGN	BY R. Malik	CHECKED C. Werts	
DETAILS	BY S. Lee	CHECKED C. Werts	
QUANTITIES	BY R. Malik	CHECKED T. Nguyen	

Rev. Date: 5-18-98

ORIGINAL SCALE IN MILLIMETERS FOR REDUCED PLANS

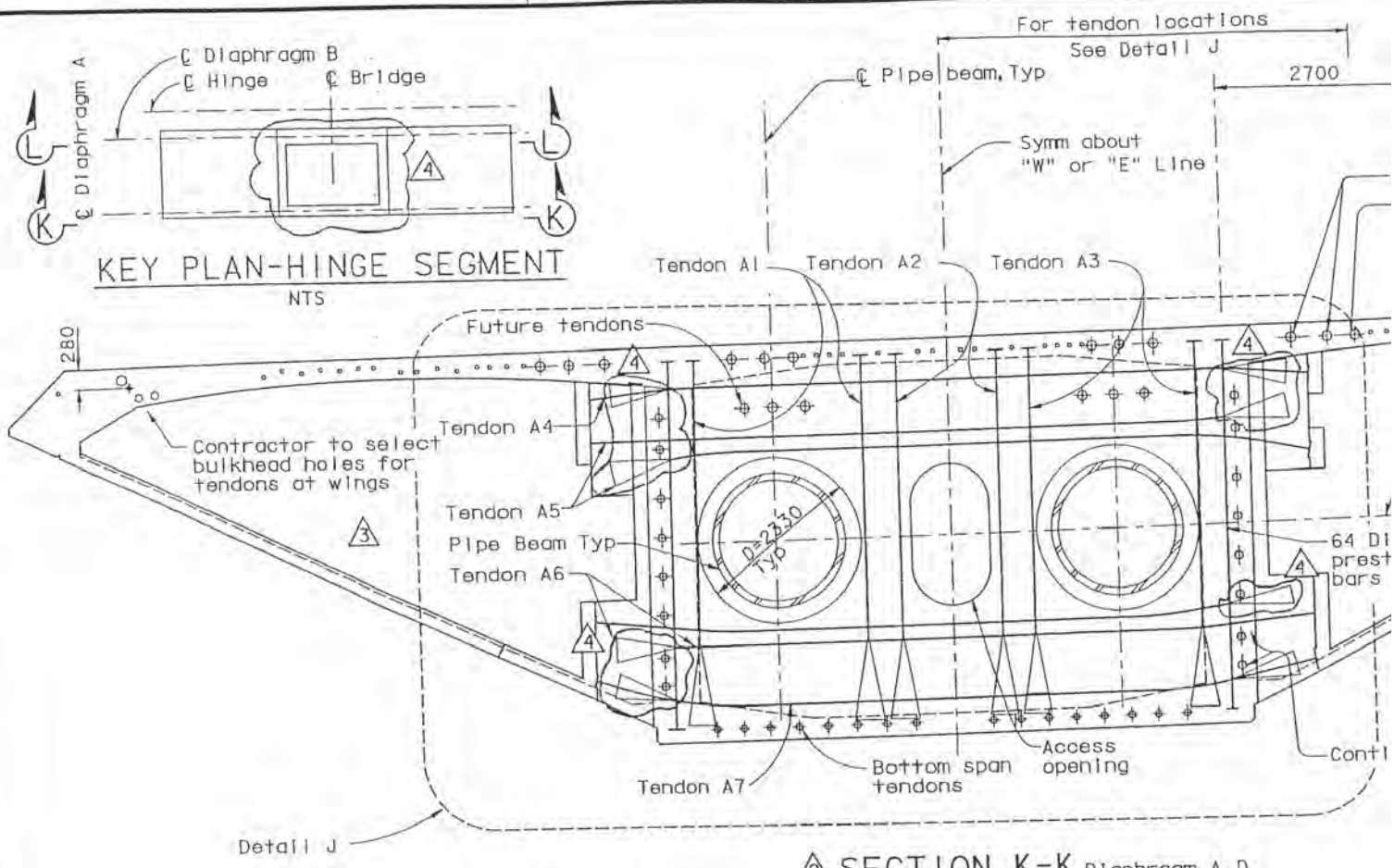

KEY PLAN-HINGE SEGMENT

NTS

2 SECTION K-K Diaphragm A, D

1:50

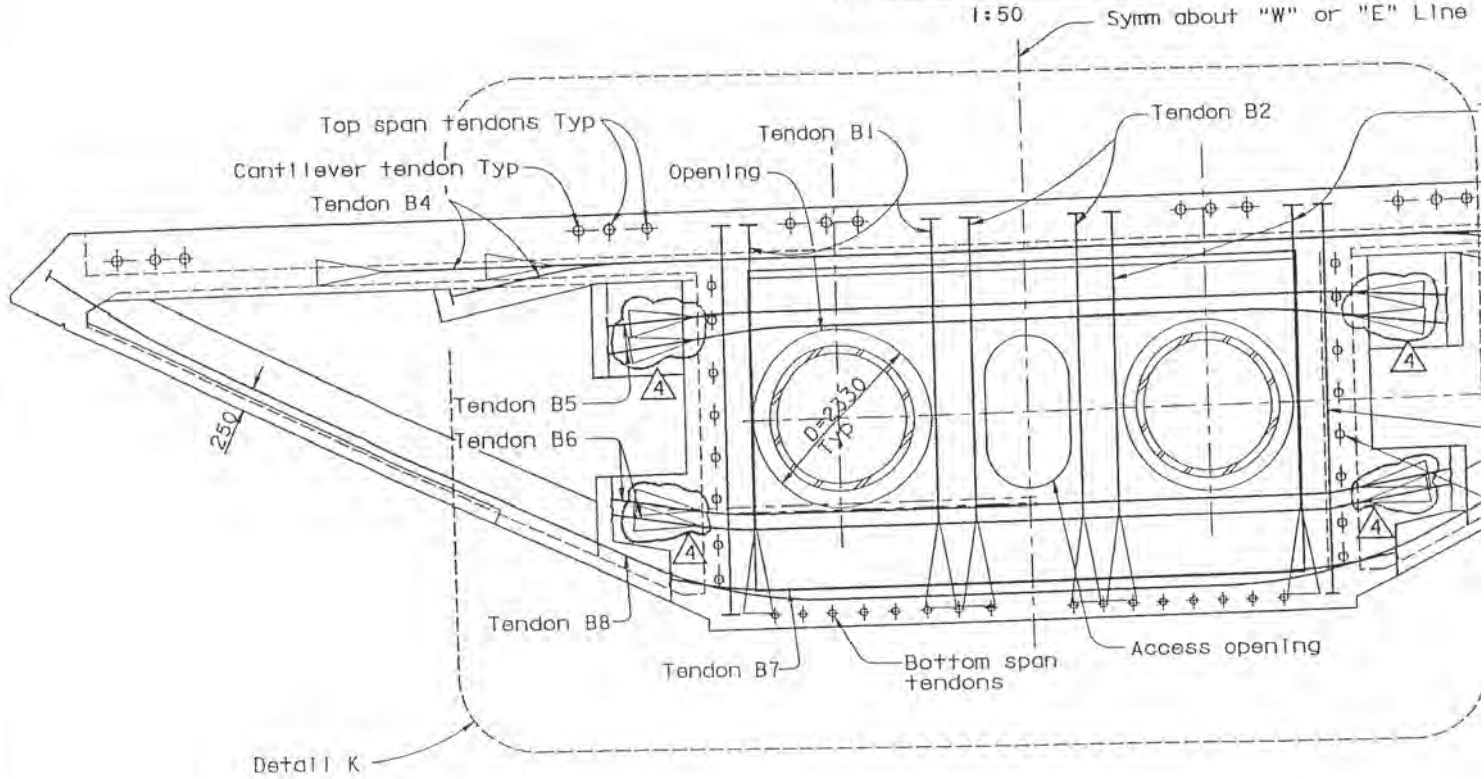

2 SECTION L-L Diaphragm B, C

1:50

DESIGN OVERSIGHT 1/16/04 SIGN OFF DATE	DESIGN	BY R. Malik	CHECKED C. Werts
	DETAILS	BY S. Lee	CHECKED C. Werts
	QUANTITIES	BY R. Malik	CHECKED T. Nguyen

Rev. Date: 5-18-98

ORIGINAL SCALE IN MILLIMETERS FOR REDUCED PLANS

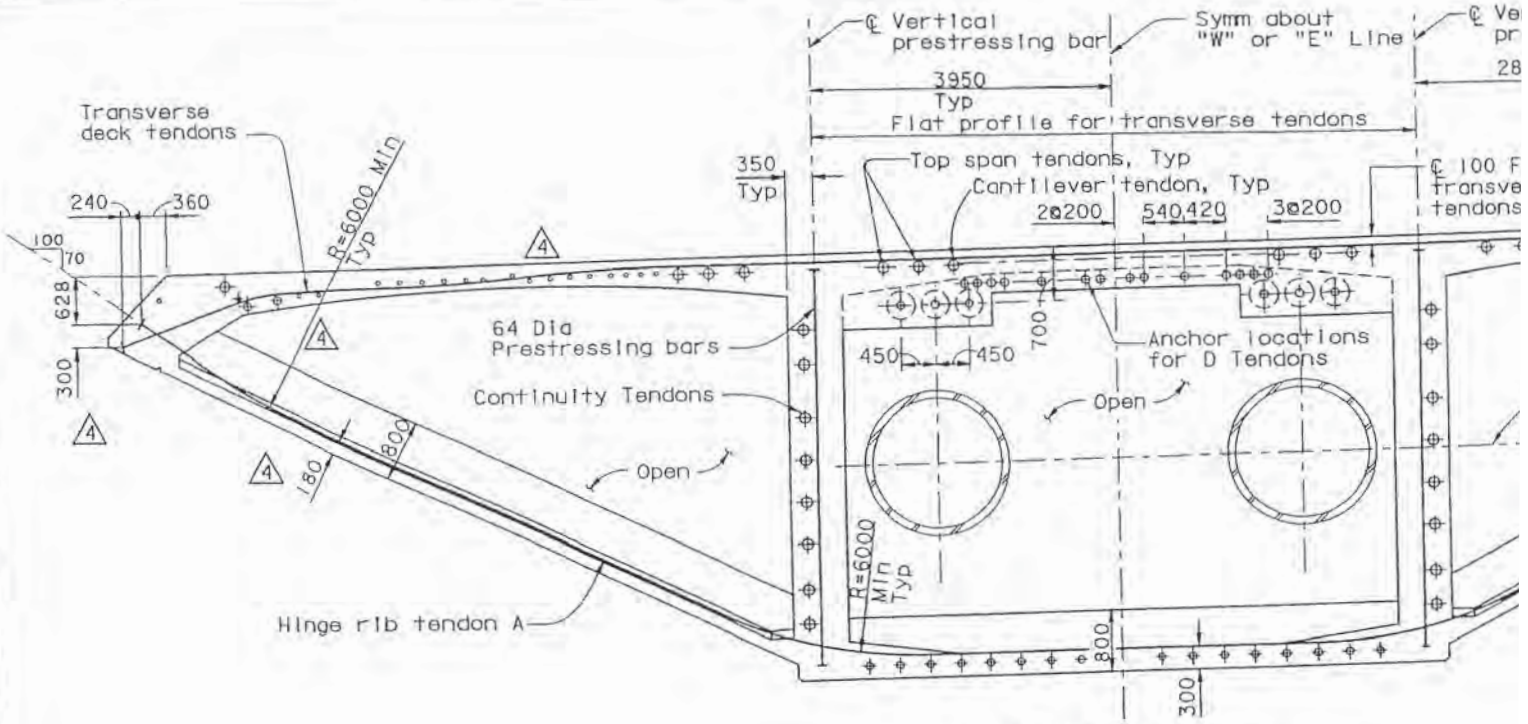

3 SECTION M-M

1:50

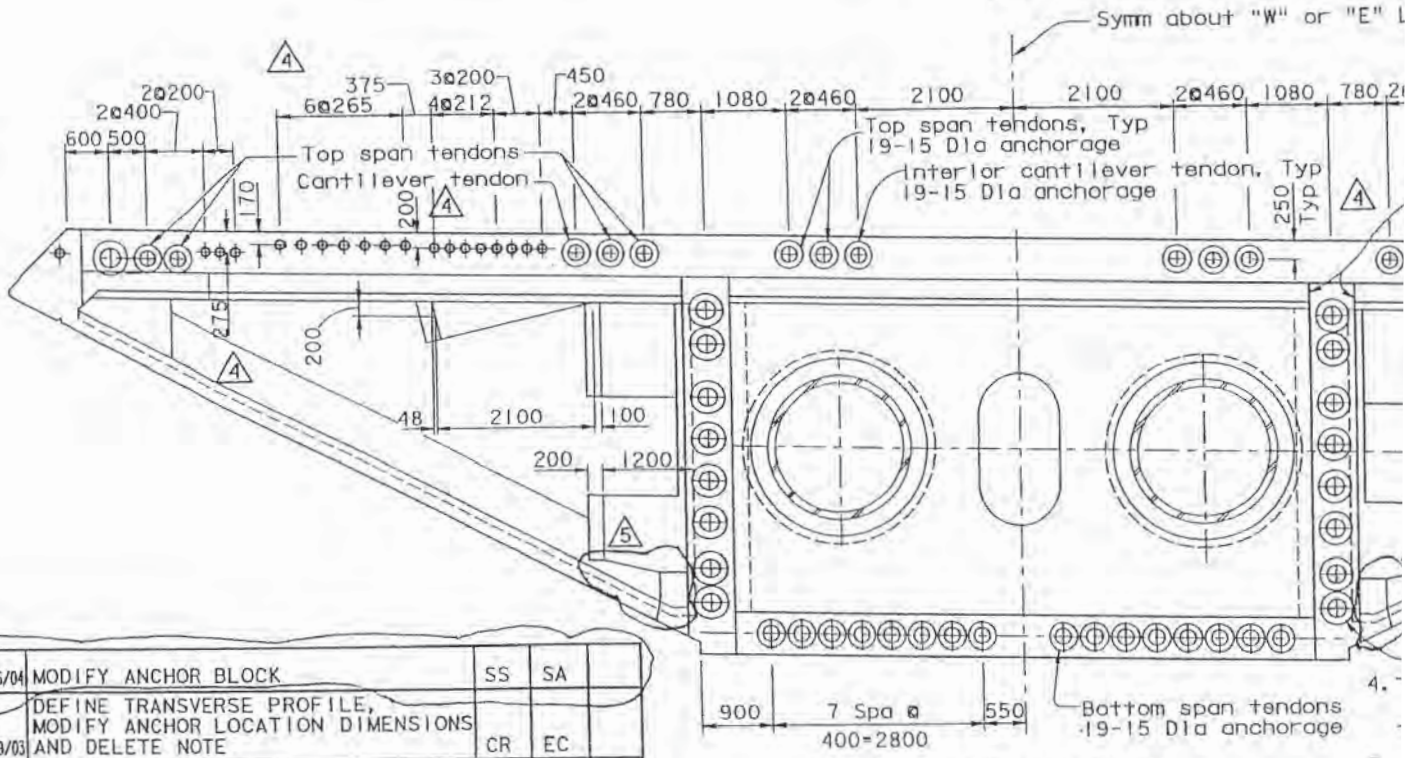

3 SECTION N-N

1:50

MARK	DATE	DESCRIPTIONS	BY	CH'D	CCO#
5	01/16/04	MODIFY ANCHOR BLOCK	SS	SA	
4	09/19/03	DEFINE TRANSVERSE PROFILE, MODIFY ANCHOR LOCATION DIMENSIONS AND DELETE NOTE	CR	EC	
3	06/27/03	MODIFY PRESTRESSING, NOTES AND ADJUST GEOMETRY	CR	EC	
2	10/07/02	ADD "D" TENDONS	EC	CR	
1	03/04/02	REVISE CALLOUT	TM	SC	

REVISIONS

3

NOTES:

1. For bottom span tendon layout, see "Bottom Span Tendon Layout" sheets.
2. For cantilever tendon layout, see "Cantilever Tendon Layout" sheets.
3. For top span tendon, see "Top Span Tendon Layout" sheets.

CONTRACT CHANGE ORDER NO. 55

SHEET 16 OF 85

DESIGN OVERSIGHT

1/16/04

SIGN OFF DATE

DESIGN	BY R. Malik	CHECKED C. Werts	
DETAILS	BY S. Lee	CHECKED C. Werts	
QUANTITIES	BY R. Malik	CHECKED T. Nguyen	

Rev. Date: 5-18-88

ORIGINAL SCALE IN MILLIMETERS FOR REDUCED PLANS

MARK	DATE	DESCRIPTIONS
5	01/16/04	MODIFY ANCHORAGE
4	09/19/03	PIPE SIZE AND DIMENSION TO D
3	06/27/03	MODIFY PRESTRESSING AND NOTE
2	10/07/02	DELETE CIP TOP DECK CLOSURE
1	10/07/02	ADD "D" TENDONS

REVISIONS

CONTRACT CHANGE ORDER
SHEET 17 OF 85

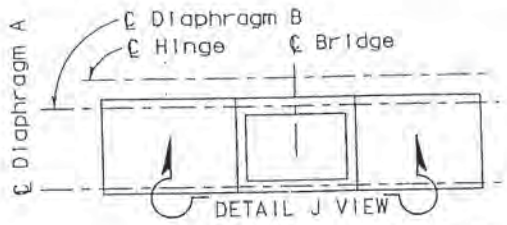

KEY PLAN-HINGE SEGMENT
NTS

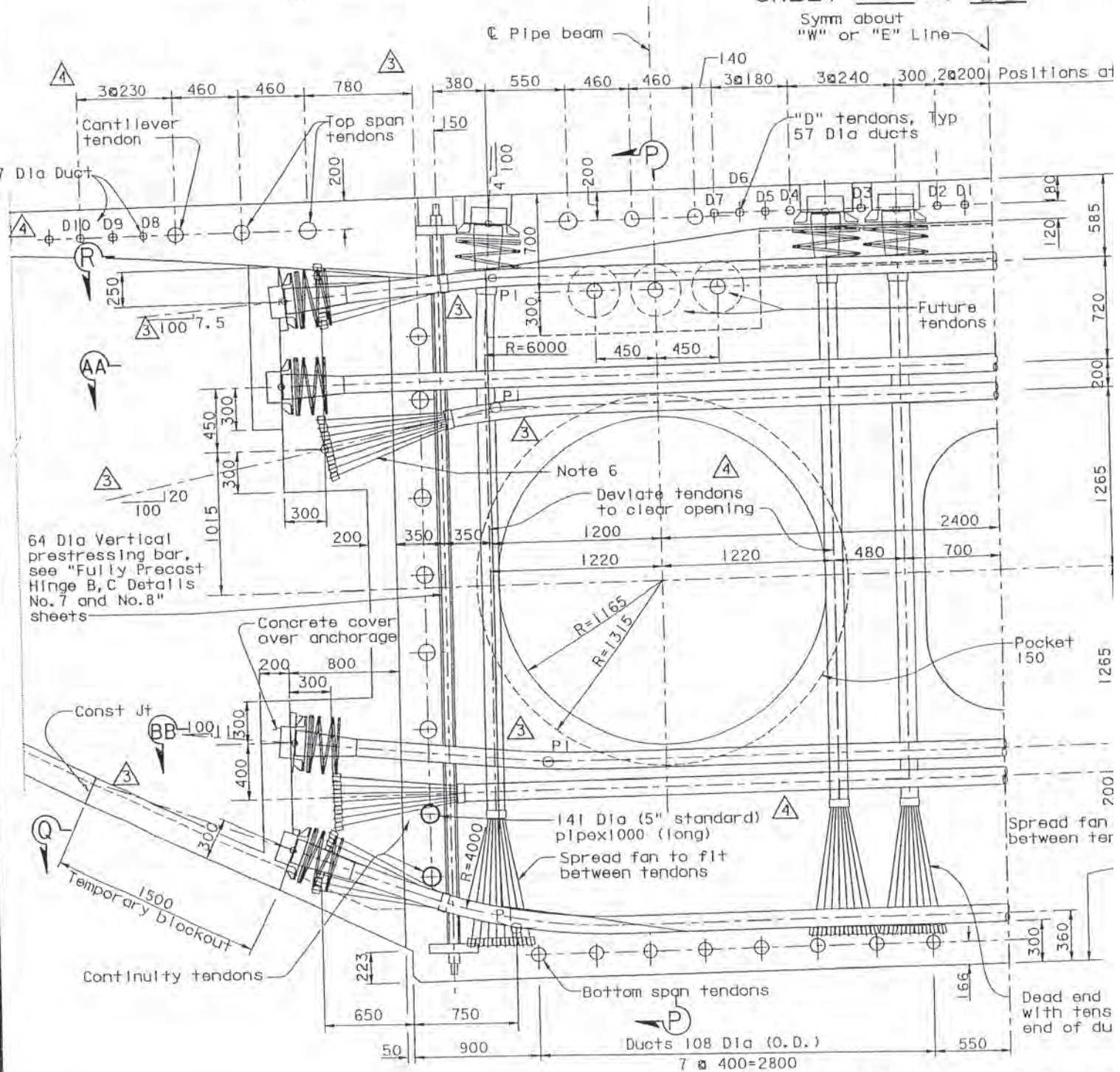

DETAIL J (Diaphragm A Diaphragm D
1:20

DESIGN OVERSIGHT	DESIGN	BY R. Malik	CHECKED C. Werts
	DETAILS	BY S. Lee	CHECKED C. Werts
	QUANTITIES	BY R. Malik	CHECKED T. Nguyen

SIGN OFF DATE

Rev. Date: 5-18-98

ORIGINAL SCALE IN MILLIMETERS FOR REDUCED PLANS

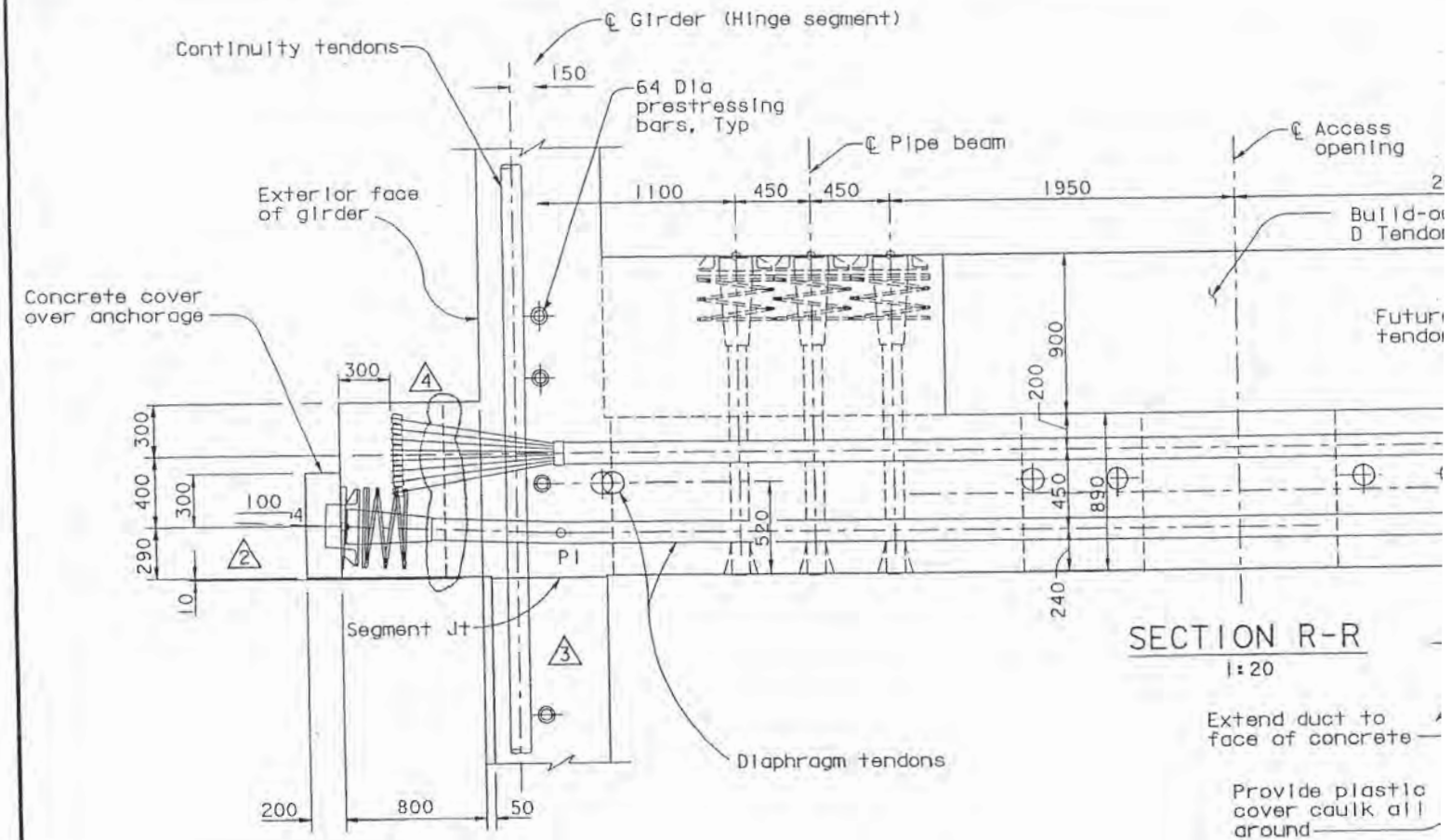

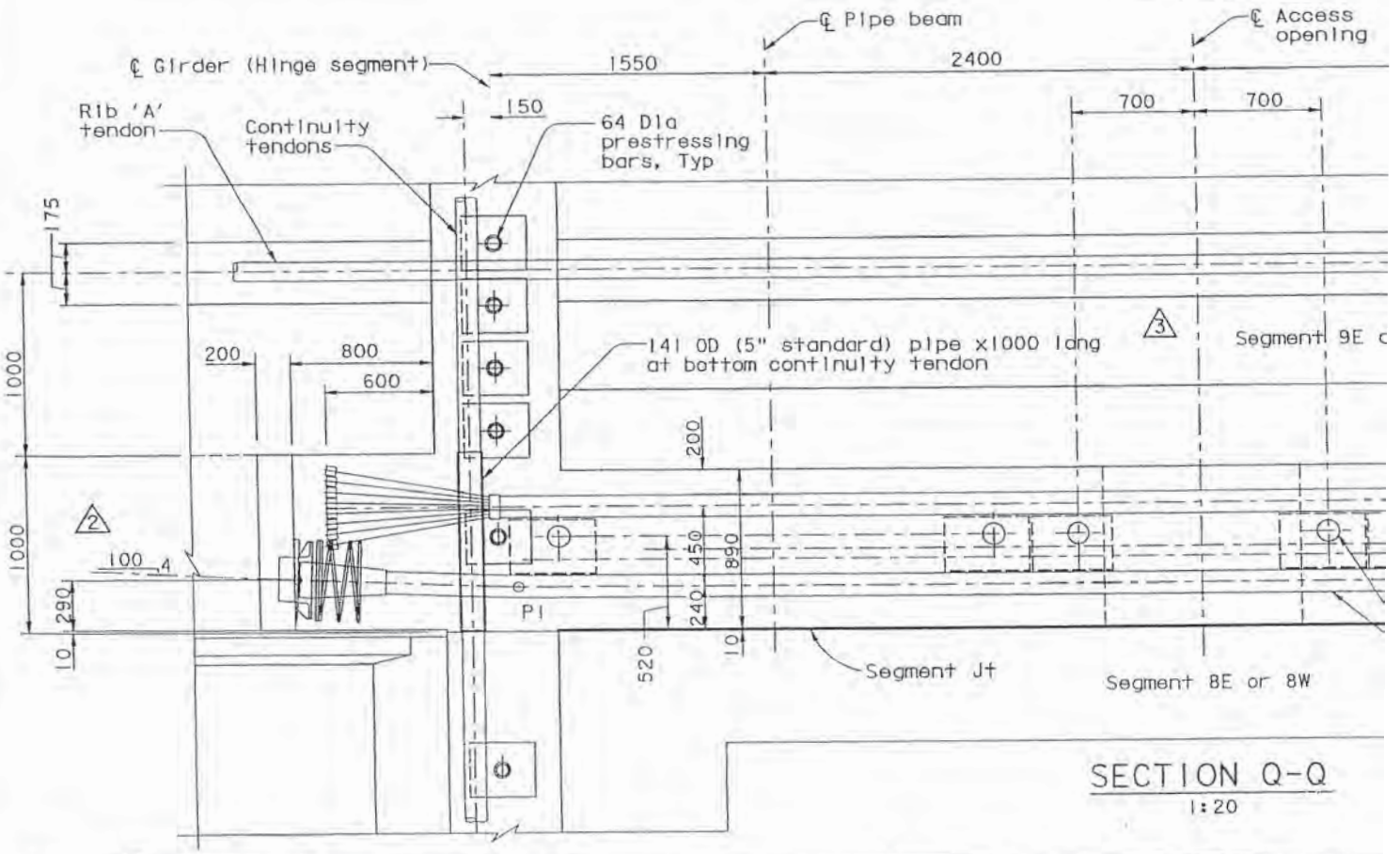

DESIGN OVERSIGHT 1/16/04	DESIGN	BY R. Malik	CHECKED C. Werts
SIGN OFF DATE	DETAILS	BY S. Lee	CHECKED C. Werts
	QUANTITIES	BY R. Malik	CHECKED T. Nguyen

Rev. Date: 5-18-98

ORIGINAL SCALE IN MILLIMETERS FOR REDUCED PLANS

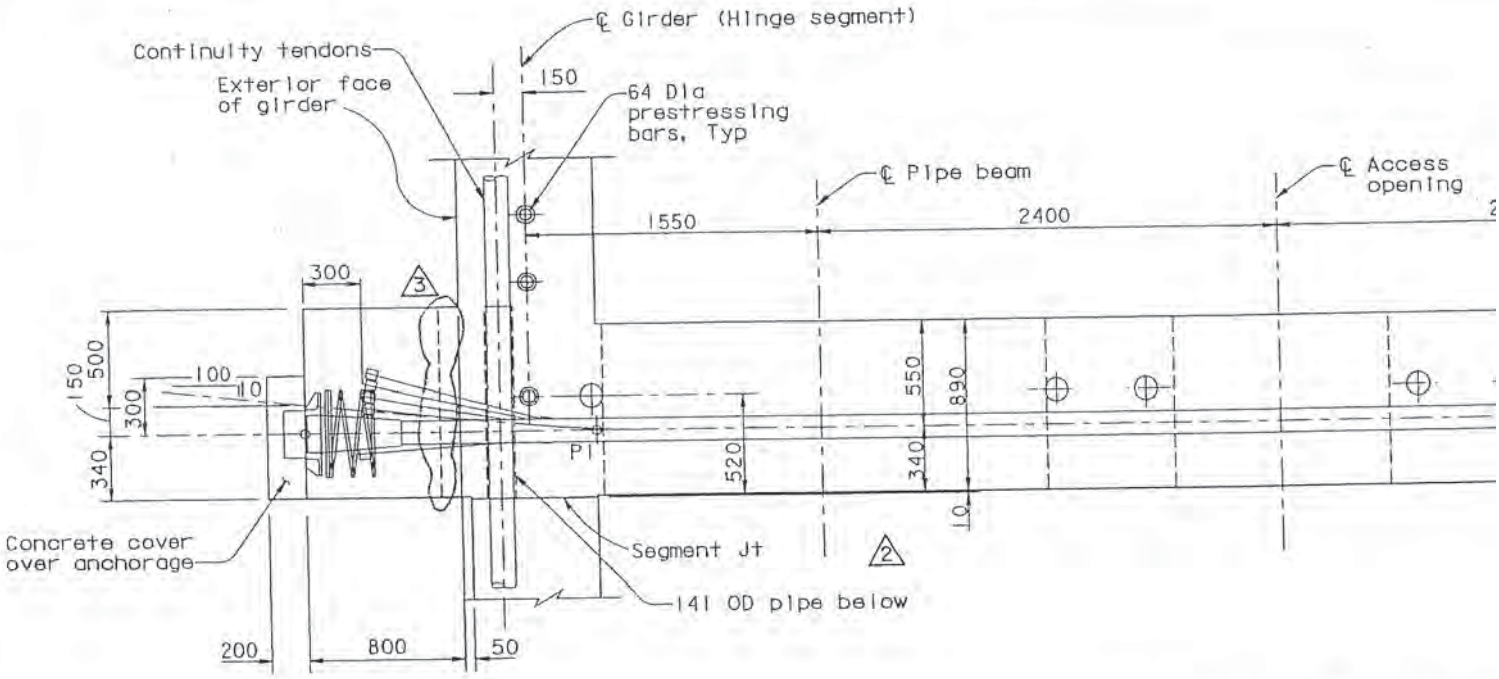

1 SECTION AA-AA
1:20

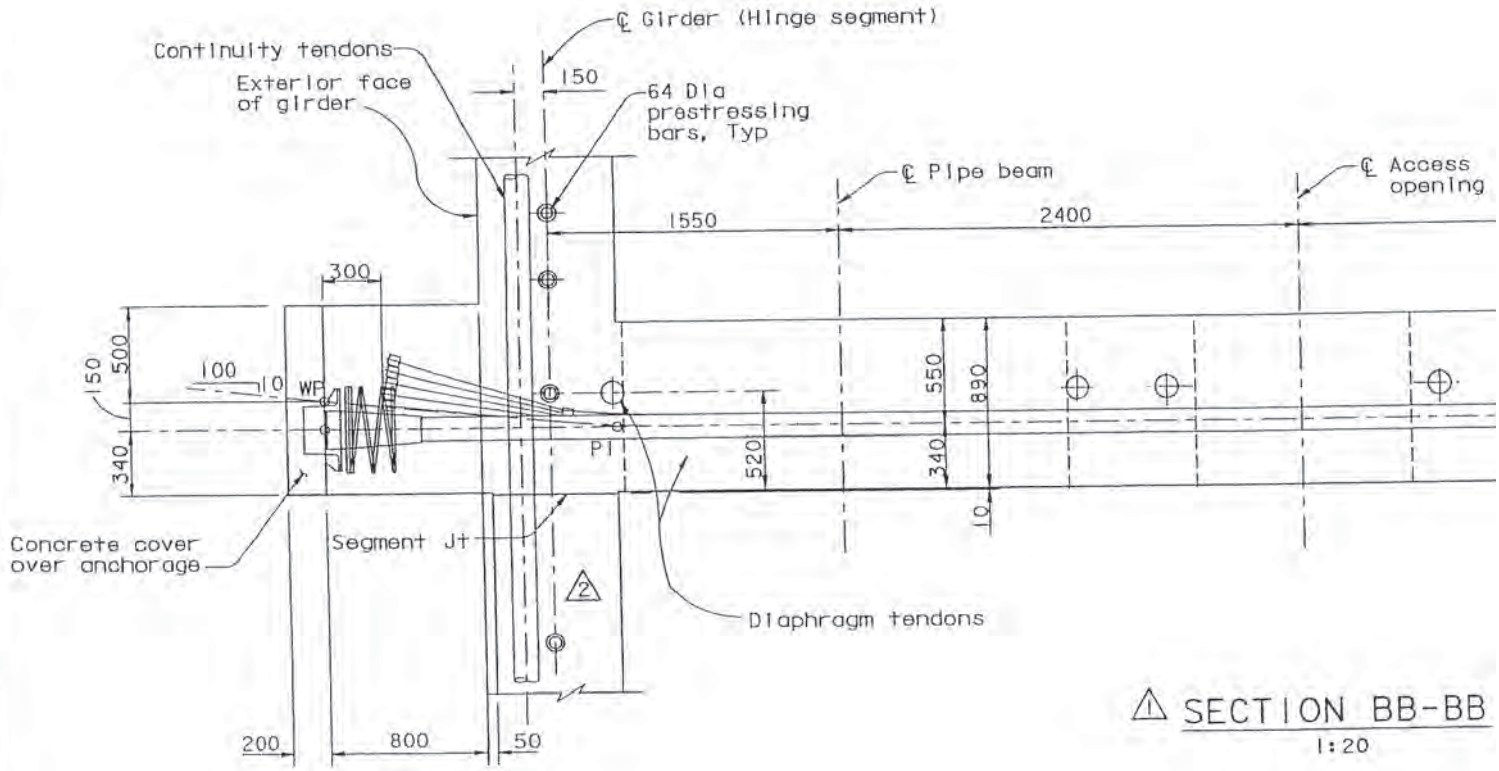

1 SECTION BB-BB
1:20

DESIGN OVERSIGHT 1/16/04	DESIGN	BY R. Malik	CHECKED C. Werts
SIGN OFF DATE	DETAILS	BY S. Lee	CHECKED C. Werts
	QUANTITIES	BY R. Malik	CHECKED T. Nguyen

Rev. Date: 5-18-98

ORIGINAL SCALE IN MILLIMETERS FOR REDUCED PLANS

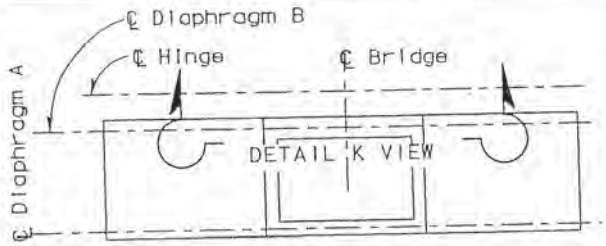

KEY PLAN-HINGE SEGMENT
NTS

MARK	DATE	DESCRIPTIONS	BY	CH'K
5	01/16/04	AS NOTED	SS	SA
4	09/19/03	DUCT LOCATIONS AND DIMENSIONS	CR	EC
3	06/27/03	MODIFY PRESTRESSING AND NOTES	CR	EC
2	10/07/02	ADD "D" TENDONS	EC	CR
1	03/04/02	REVISE TENDON LOCATION	TM	SC

REVISIONS

CONTRACT CHANGE ORDER NO. 55
SHEET 20 OF 85

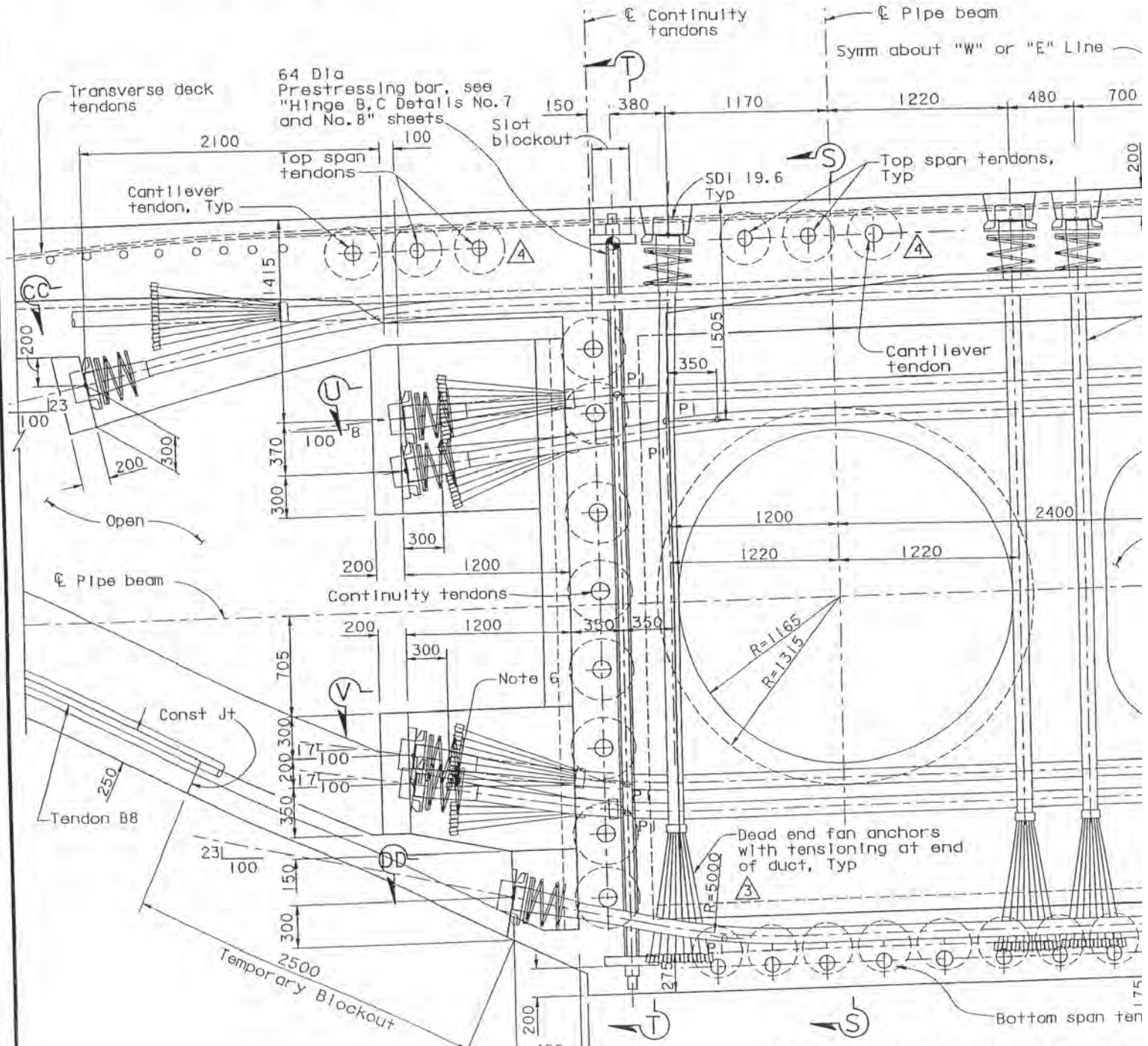

DETAIL K (Diaphragm B shown, Diaphragm C simil
1:20

DESIGN OVERSIGHT 1/16/04	DESIGN	BY R. Malik	CHECKED C. Werts
	DETAILS	BY S. Lee	CHECKED C. Werts
SIGN OFF DATE	QUANTITIES	BY R. Malik	CHECKED T. Nguyen

Rev. Date: 5-18-98

ORIGINAL SCALE IN MILLIMETERS FOR REDUCED PLANS

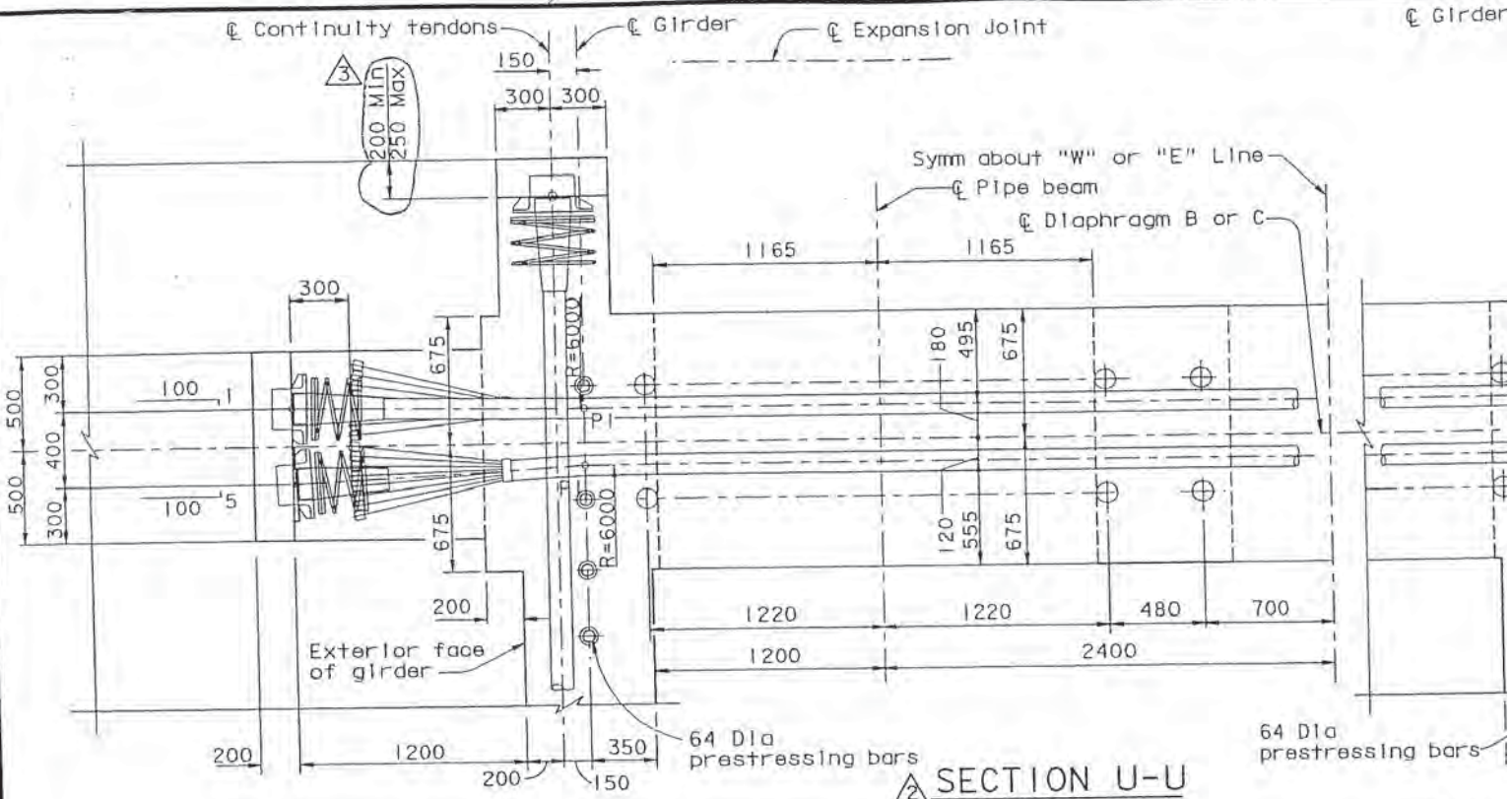

2 SECTION U-U

1:20

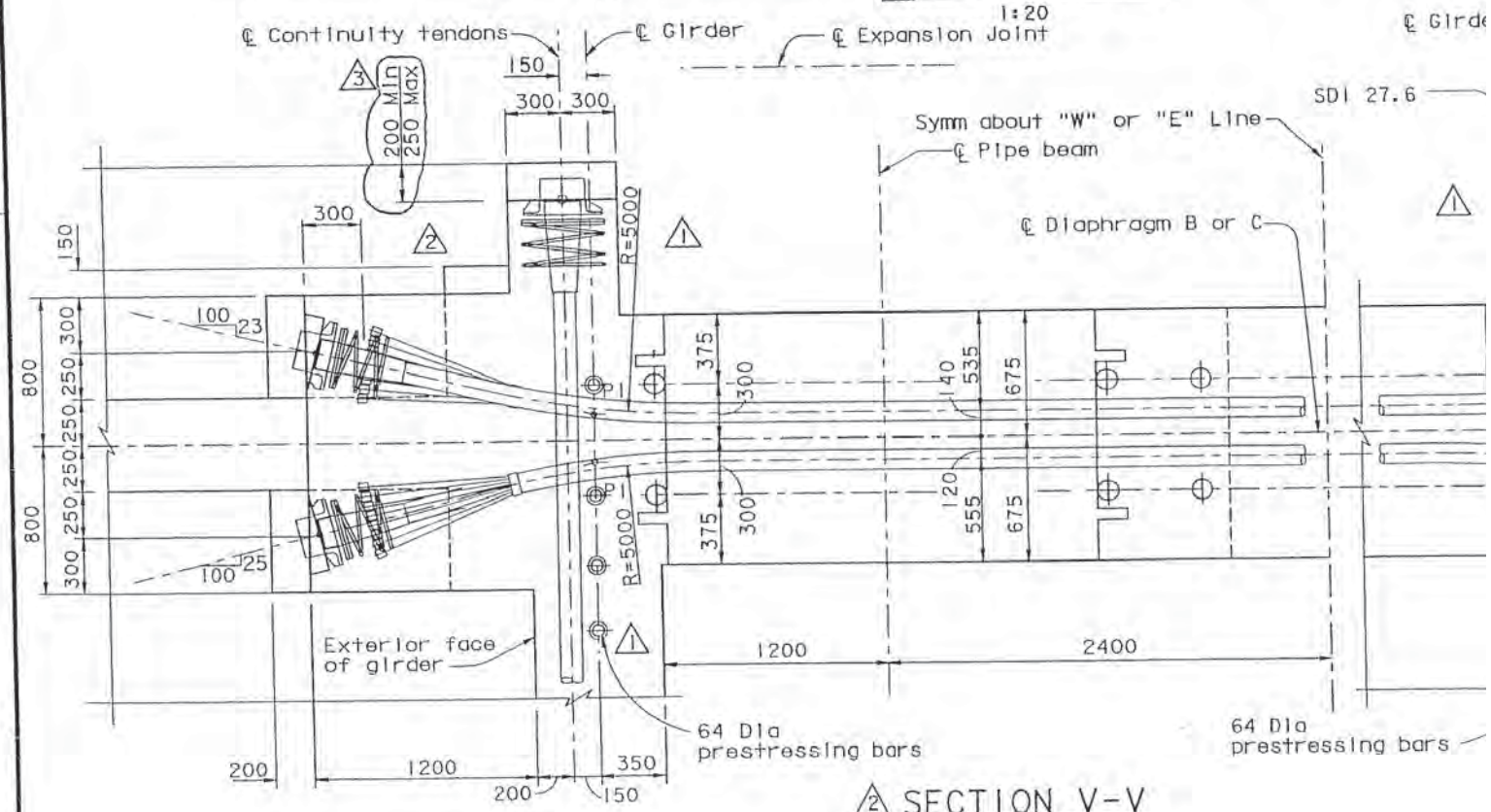

2 SECTION V-V

1:20

DESIGN OVERSIGHT 1/16/04		DESIGN	BY R. Malik	CHECKED C. Werts
SIGN OFF DATE		DETAILS	BY S. Lee	CHECKED C. Werts
		QUANTITIES	BY R. Malik	CHECKED T. Nguyen

Rev. Date: 5-18-98

ORIGINAL SCALE IN MILLIMETERS FOR REDUCED PLANS

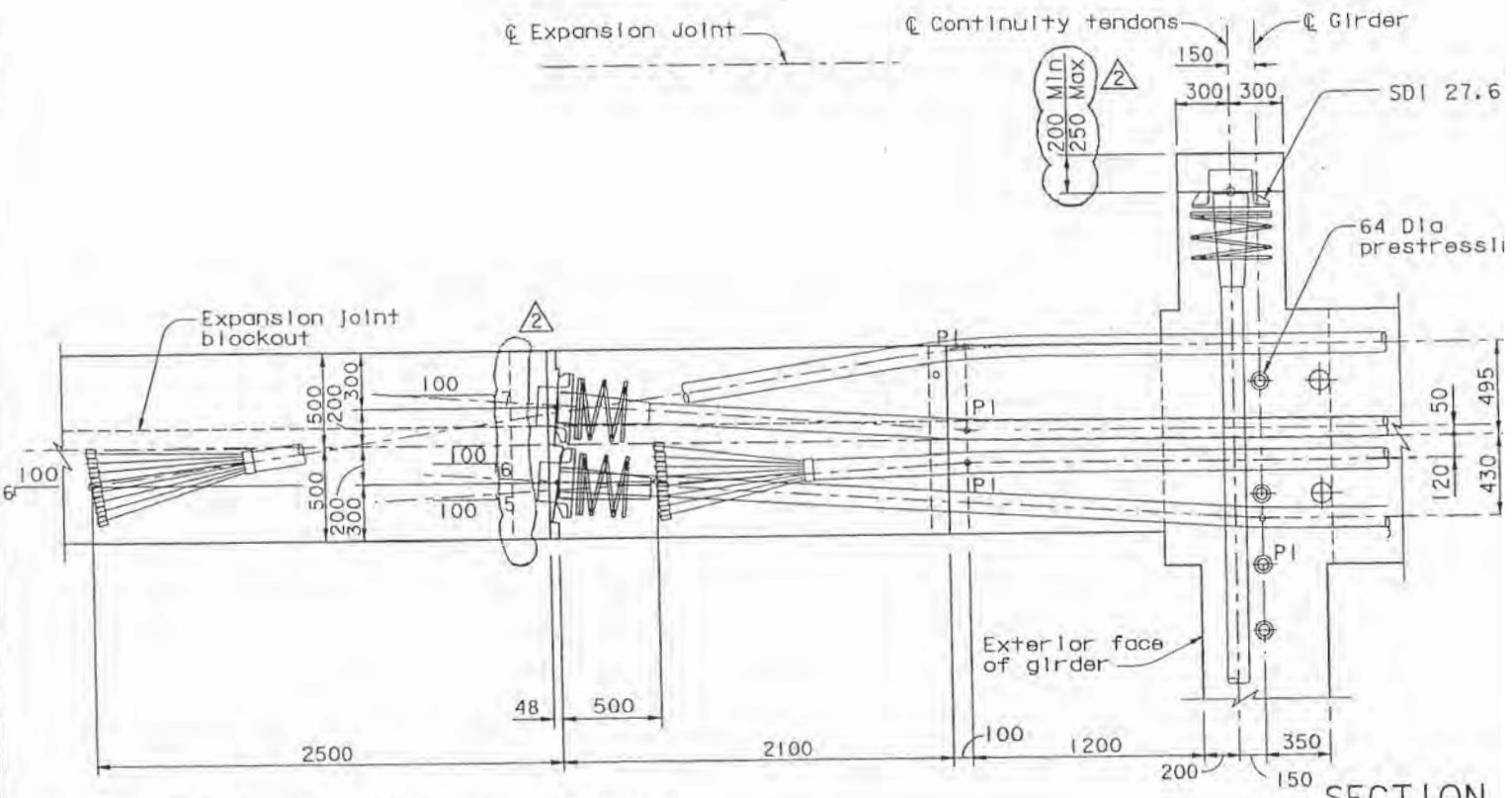

SECTION
1:20

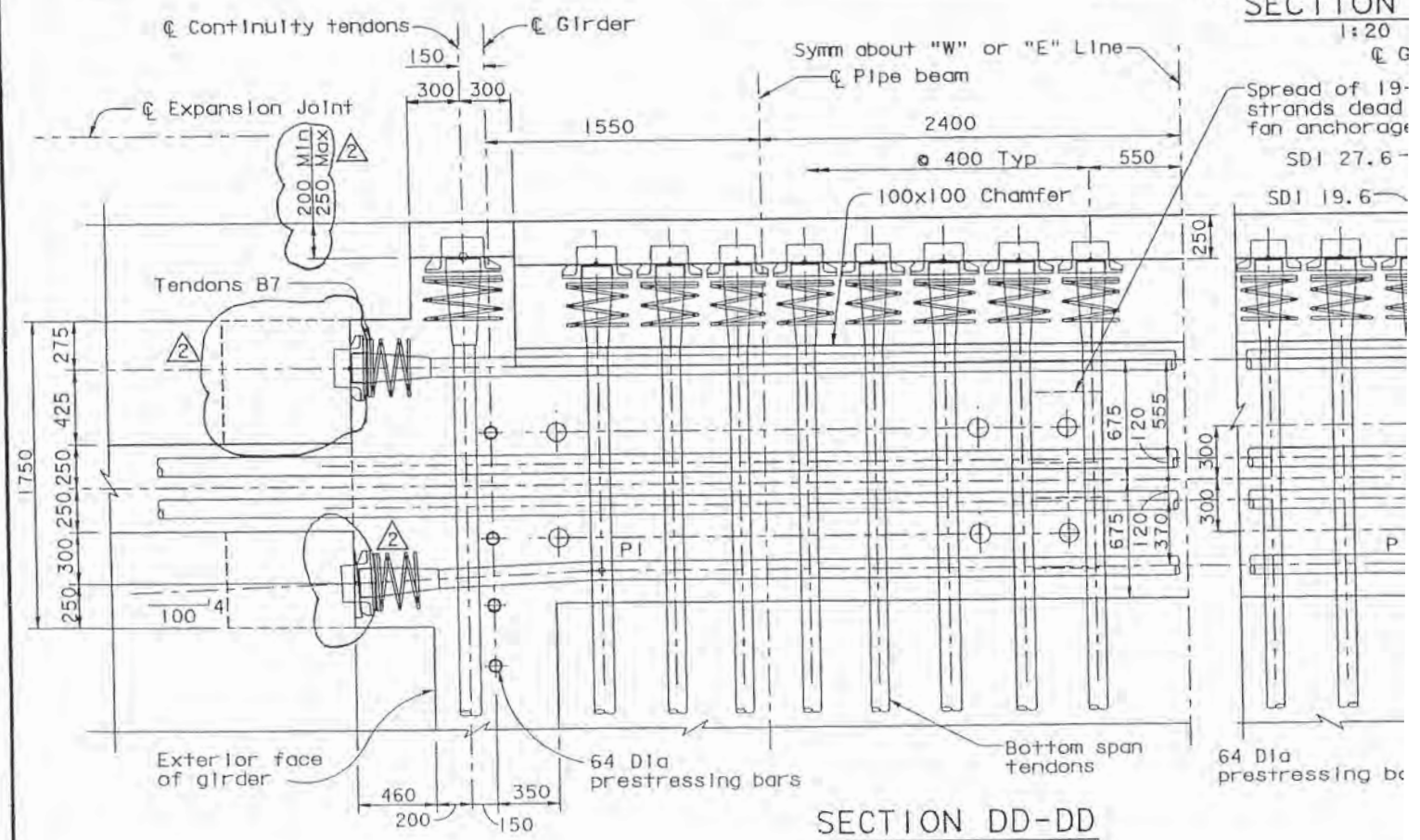

SECTION DD-DD
1:20

DESIGN OVERSIGHT 1/16/04	DESIGN	BY R. Malik	CHECKED C. Werts
SIGN OFF DATE	DETAILS	BY S. Lee	CHECKED C. Werts
	QUANTITIES	BY R. Malik	CHECKED T. Nguyen

Rev. Date: 5-18-98

ORIGINAL SCALE IN MILLIMETERS FOR REDUCED PLANS

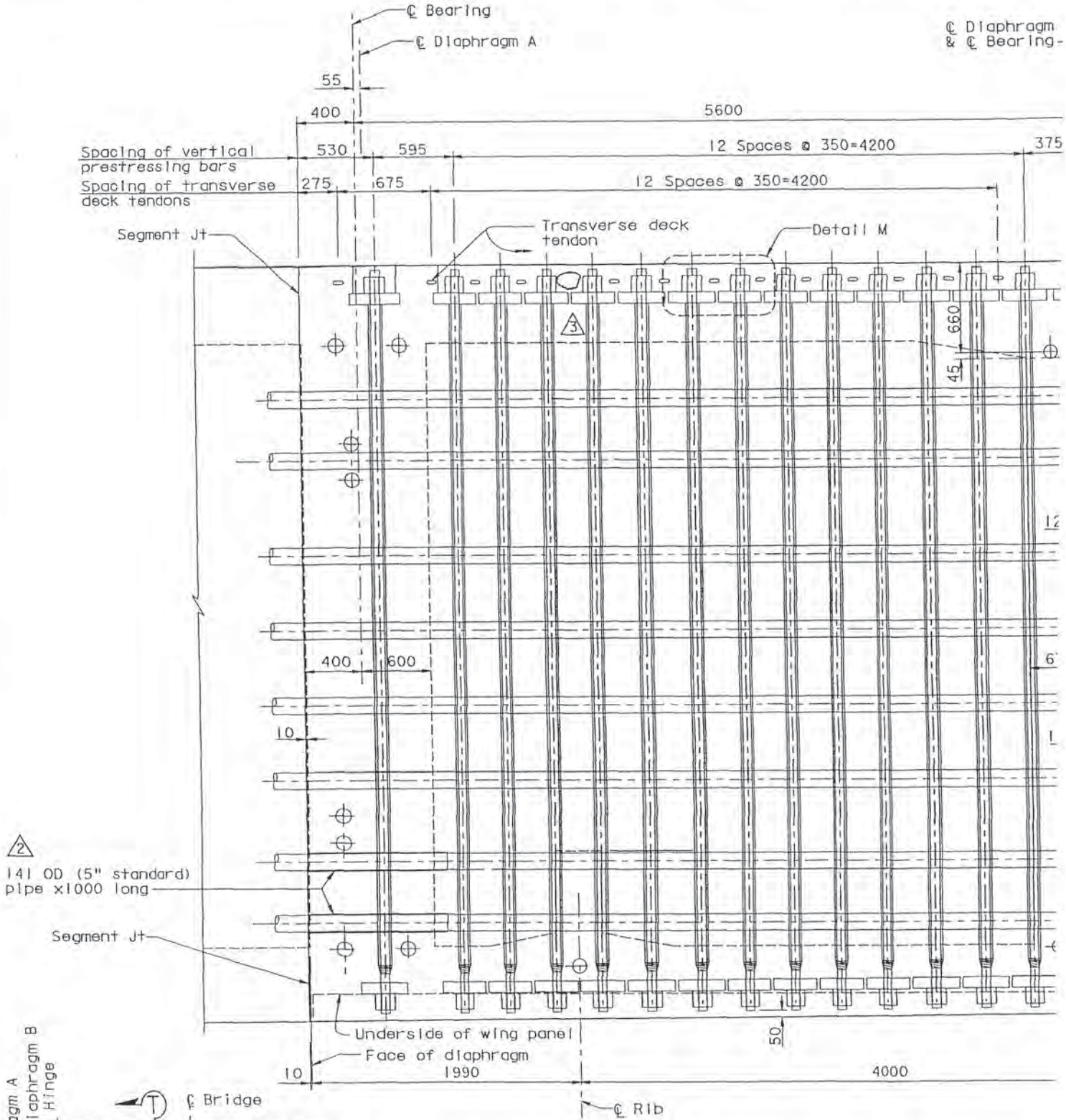

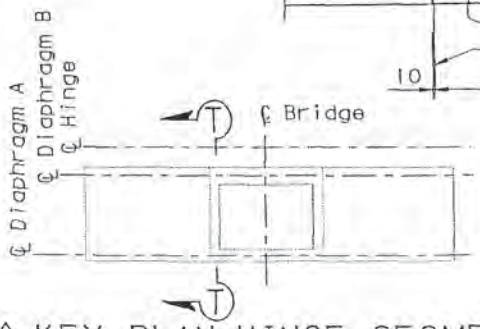

1 KEY PLAN-HINGE SEGMENT
NTS

SECTION T-T
1:20

MARK	DATE	
3	01/16/04	REVISE F CONCRETE
2	09/19/03	PIPE SIZ
1	06/27/03	ADD NEW

CONTRACT CHANGE ORDER NO. 55
SHEET 23 OF 85

DESIGN OVERSIGHT
1/16/04
SIGN OFF DATE

DESIGN	BY R. Malik	CHECKED	C. Werts
DETAILS	BY S. Lee	CHECKED	C. Werts
QUANTITIES	BY R. Malik	CHECKED	T. Nguyen

Rev. Date: 5-18-98

ORIGINAL SCALE IN MILLIMETERS FOR REDUCED PLANS

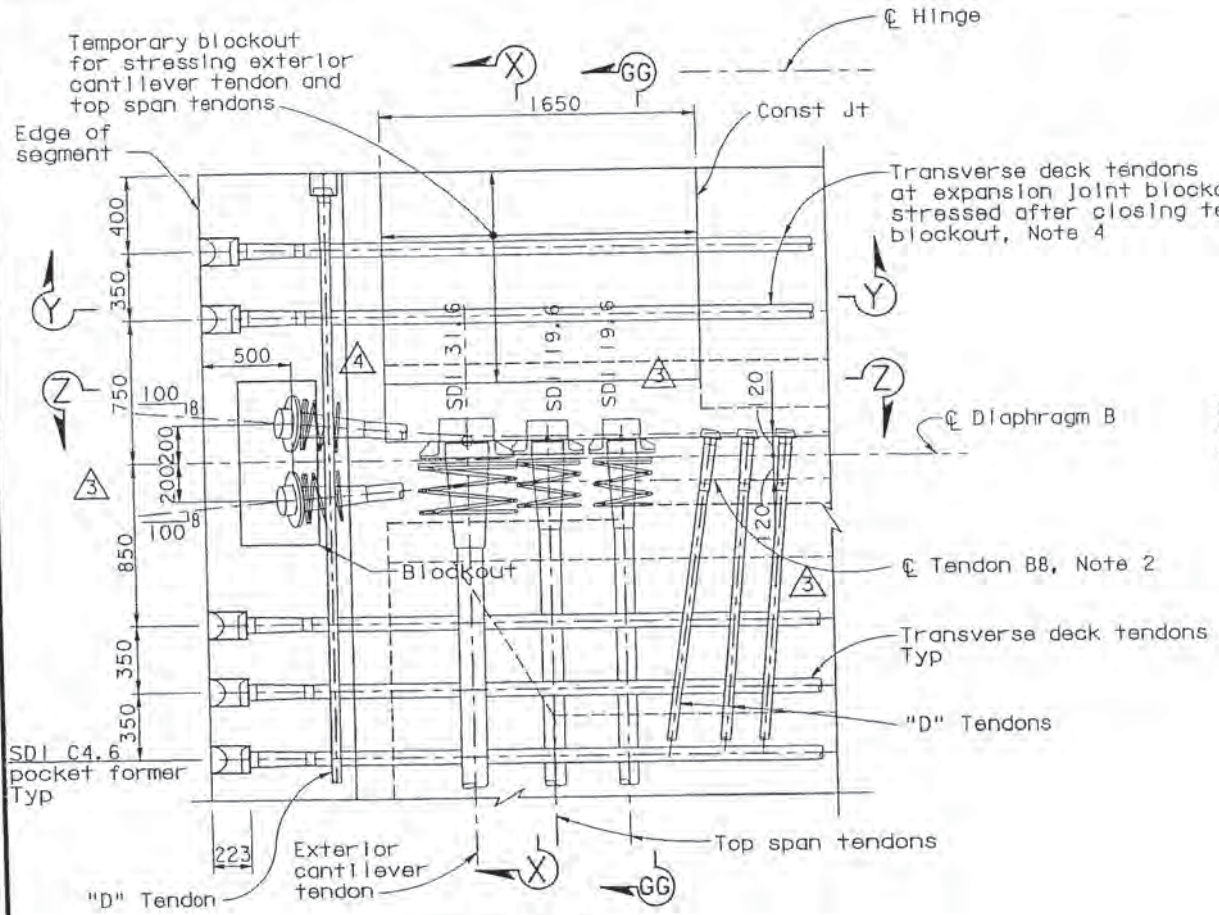

DETAIL L

1:20

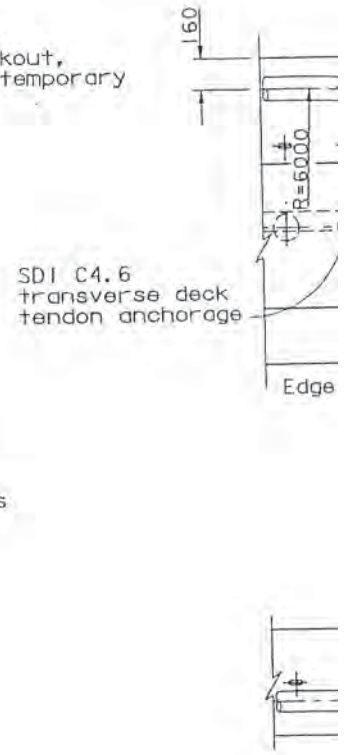

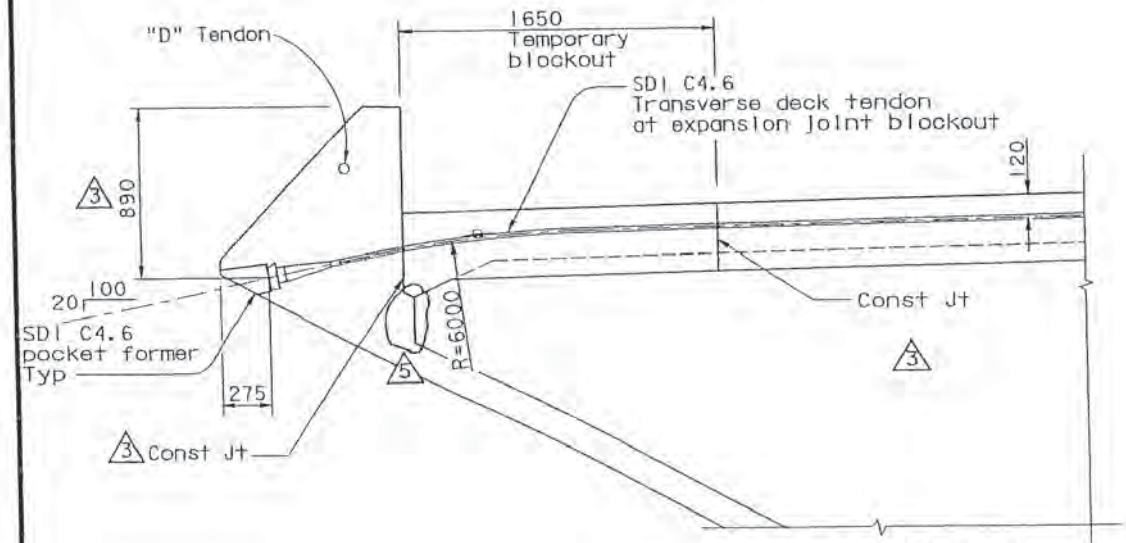

SECTION Y-Y

1:20

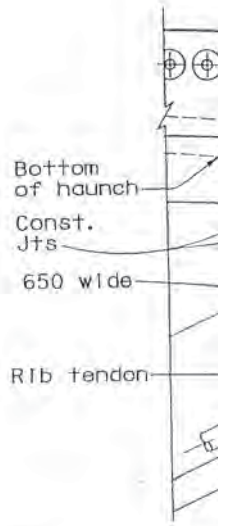

DESIGN OVERSIGHT 1/16/04 SIGN OFF DATE		DESIGN BY R. Malik	CHECKED C. Werts
		DETAILS BY S. Lee	CHECKED C. Werts
		QUANTITIES BY R. Malik	CHECKED T. Nguyen

Rev. Date: 5-18-98

ORIGINAL SCALE IN MILLIMETERS FOR REDUCED PLANS

MARK	DATE	DESCRIPTIONS	BY	CH'D	CCO#
6	01/16/04	REVISE REINFORCEMENT AS NOTED	SS	SA	
5	09/24/03	CHANGE BAR NUMBER	CR	EC	
4	09/19/03	AS NOTED	CR	EC	
3	06/27/03	REMOVE CONTENTS OF SHT NO. 801R1 ADD DETAILS AND NOTES	CR	EC	
2	10/07/02	DELETE CIP TOP DECK CLOSURE	EC	CR	
1	10/07/02	ADD "D" TENDONS	EC	CR	

REVISIONS

CONTRACT CHANGE ORDER NO. 55
SHEET 25 OF 85

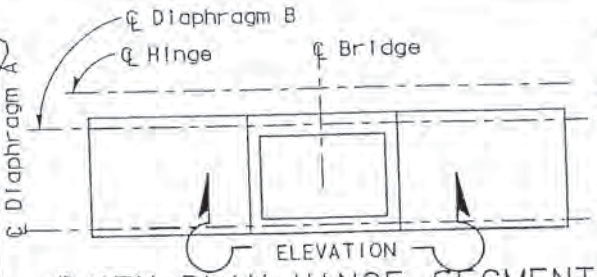

KEY PLAN-HINGE SEGMENT
NTS

NOTES:
1. Adjust reinf prestressing
2. For Sections and Section Hinge B, C D
3. For Detail Hinge B, C
4. For Section Hinge B, C
5. For Section Hinge B, C D

Slab reinforcement (not all shown), see "Fully Precast Hinge B, C Details No. 20" sheet
#29 Lap 1200 past end of #36's
#29 Embed 900 into anchor block
#32 3 rows Tot 24
#25
200 Clr for #57 headed bars this row only
120 Clr for #36 headed bars unless noted
Top of #36
#36 as shown
180
2 equal spaces
3 @ 200 =600
100
#25 In future tendon block Tot 10
#36 Tot 2 12900 long
240 240 240 300 200 200
230
50
#32 Tot 12
#16 Tot 3
#25 @200
#16 @300 Field bend
#19 @ 300 Max in bottom face (Bars not shown)
#16 @200
#36 Ea face as shown
#57 Tot 3 & #36 Tot 2
#25 @ 200 Girder web Reinf not all shown
70 Clr
725
#19 @ 300 Max
920
#25 Tot 8
#16 Field bent into pourback Tot 7
#32 Tot 19
#32 Tot 12
Const joint
Panel #16's terminate 450 into anchor block
Blockout for prestressing
#16 Tot 5
Panel Reinf (Bot mat only)
out at anchorage
#25 Tot 4
900
50 Clr
Bottom of #36
#29 Tot 4 (can be set above #43)
#16 @300 Max
400
200
550
170
#36 Tot 2
#36 Tot 3 (1 head stops in girder web)
℄ Pipe beam
#32 Tot 2 Hoop bars
350
#19 @200 Nom, 300 Max around perimeter
#57 Tot 2
#36 Tot 2
#36 Tot 3, 1 head stops as shown
Detail g **
#25
#32
#36 @200 nominal EF Tot 22 and #36 middle @ 200 Tot 11
75 Clr
50 Clr
#25
Additional #25 in the vicinity Shown thus x
#36
#25 spacing x400 (H) noted.
#57

ELEVATION
1:20
Diaphragm A shown
Diaphragm D similar

** Lower max 4 heads at bottom of opening. (If r

DESIGN OVERSIGHT
1/16/04
SIGN OFF DATE

DESIGN	BY E. Chan	CHECKED	C. Werts
DETAILS	BY S. Lee	CHECKED	C. Werts
QUANTITIES	BY E. Chan	CHECKED	J. Leventi

Rev. Date: 5-18-98

ORIGINAL SCALE IN MILLIMETERS FOR REDUCED PLANS

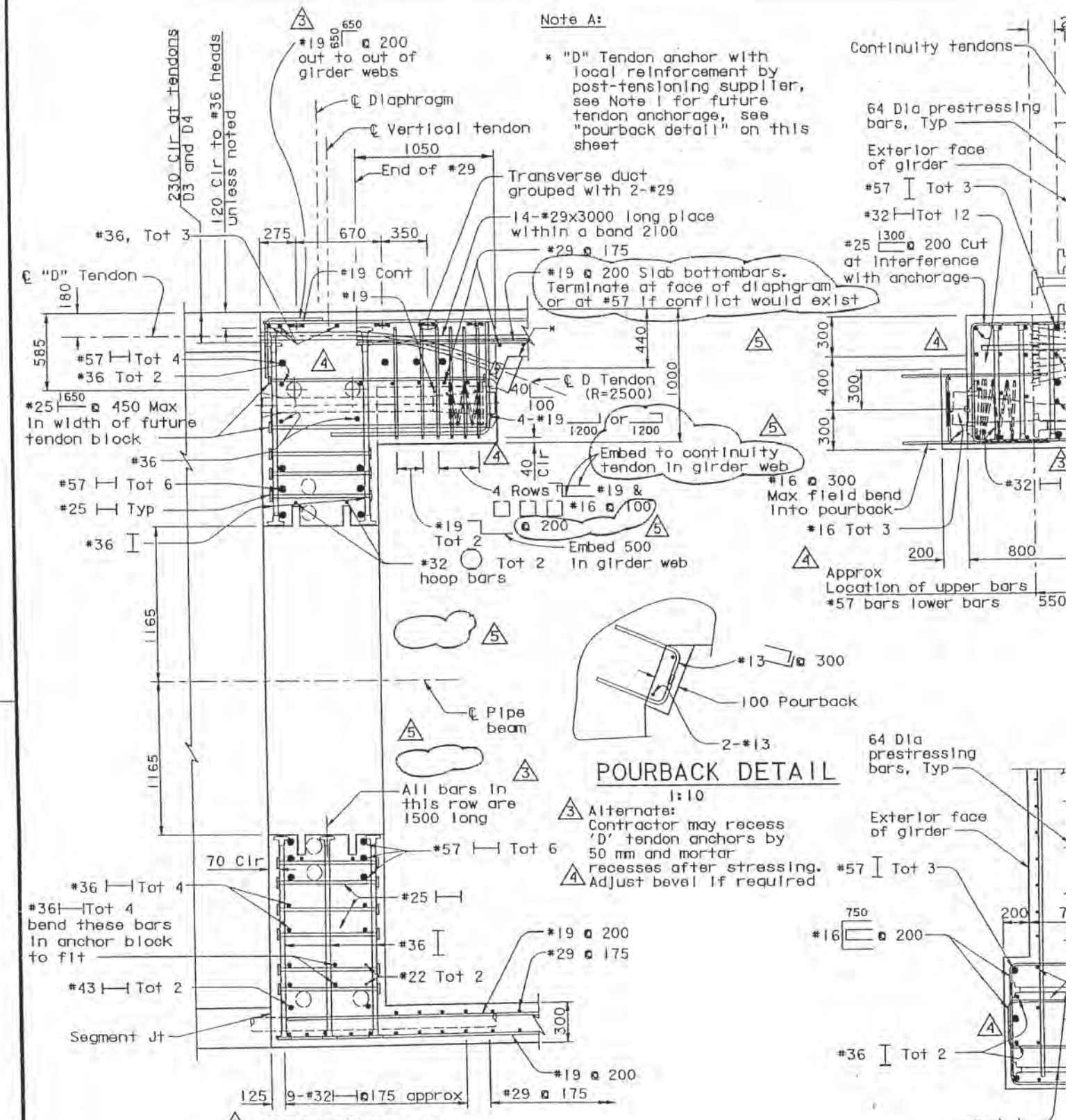

DESIGN OVERSIGHT 1/16/04	DESIGN	BY R. Malik	CHECKED C. Werts
SIGN OFF DATE	DETAILS	BY S. Lee	CHECKED C. Werts
	QUANTITIES	BY R. Malik	CHECKED T. Nguyen

Rev. Date: 5-18-98

ORIGINAL SCALE IN MILLIMETERS FOR REDUCED PLANS

MARK	DATE	DESCRIPTIONS	BY	CH'D	CCO#
5	01/16/04	REVISE REINFORCEMENT AS NOTED	SS	SA	
4	09/19/03	BAR QUANTITIES AND LENGTHS	CR	EC	
3	06/27/03	REMOVE CONTENTS OF SHT NO. 803R1 ADD DETAILS AND NOTES	CR	EC	
2	10/07/02	DELETE CIP TOP DECK CLOSURE	EC	CR	
1	10/07/02	ADD "D" TENDONS	EC	CR	

REVISIONS

3 NOTES:

1. For Sections k-k, m-m and n-n, see "Fully Precast Hinge B,C Details No.19" sheet.
2. For Sections f-f and h-h, see "Fully Precast Hinge B,C Details No.22" sheet.
3. For additional reinforcement, see "Fully Precas Hinge B,C Details No.21" sheet.
4. Adjust reinforcement to clear prestressing tendons.

CONTRACT CHANGE ORDER NO. 55
SHEET 27 OF 85

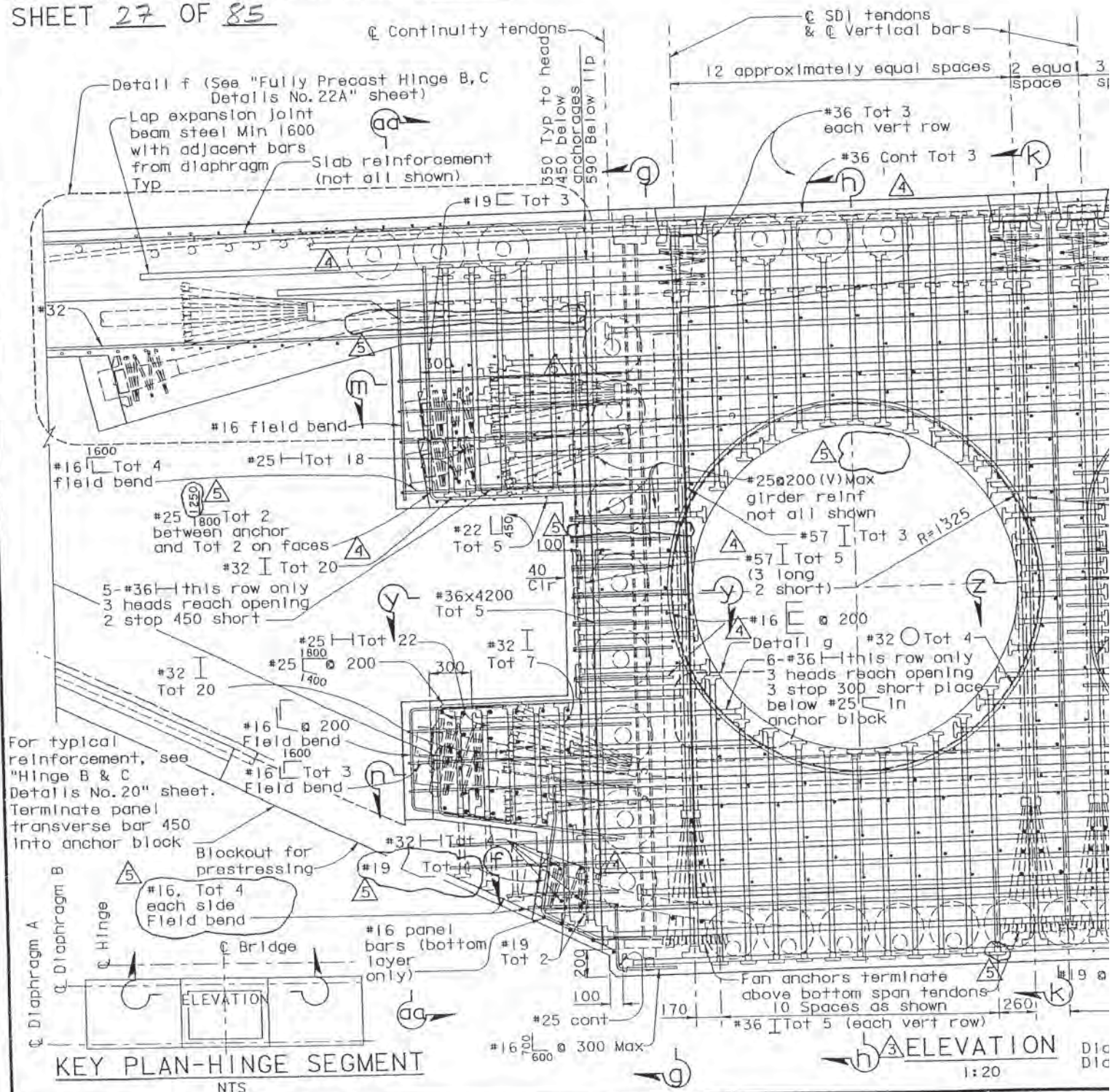

KEY PLAN-HINGE SEGMENT
NTS

ELEVATION
1:20

DESIGN OVERSIGHT 1/16/04		DESIGN BY E. Chan	CHECKED C. Werts
SIGN OFF DATE		DETAILS BY S. Lee	CHECKED C. Werts
		QUANTITIES BY E. Chan	CHECKED J. Leventi

Rev. Date: 5-18-98

ORIGINAL SCALE IN MILLIMETERS FOR REDUCED PLANS

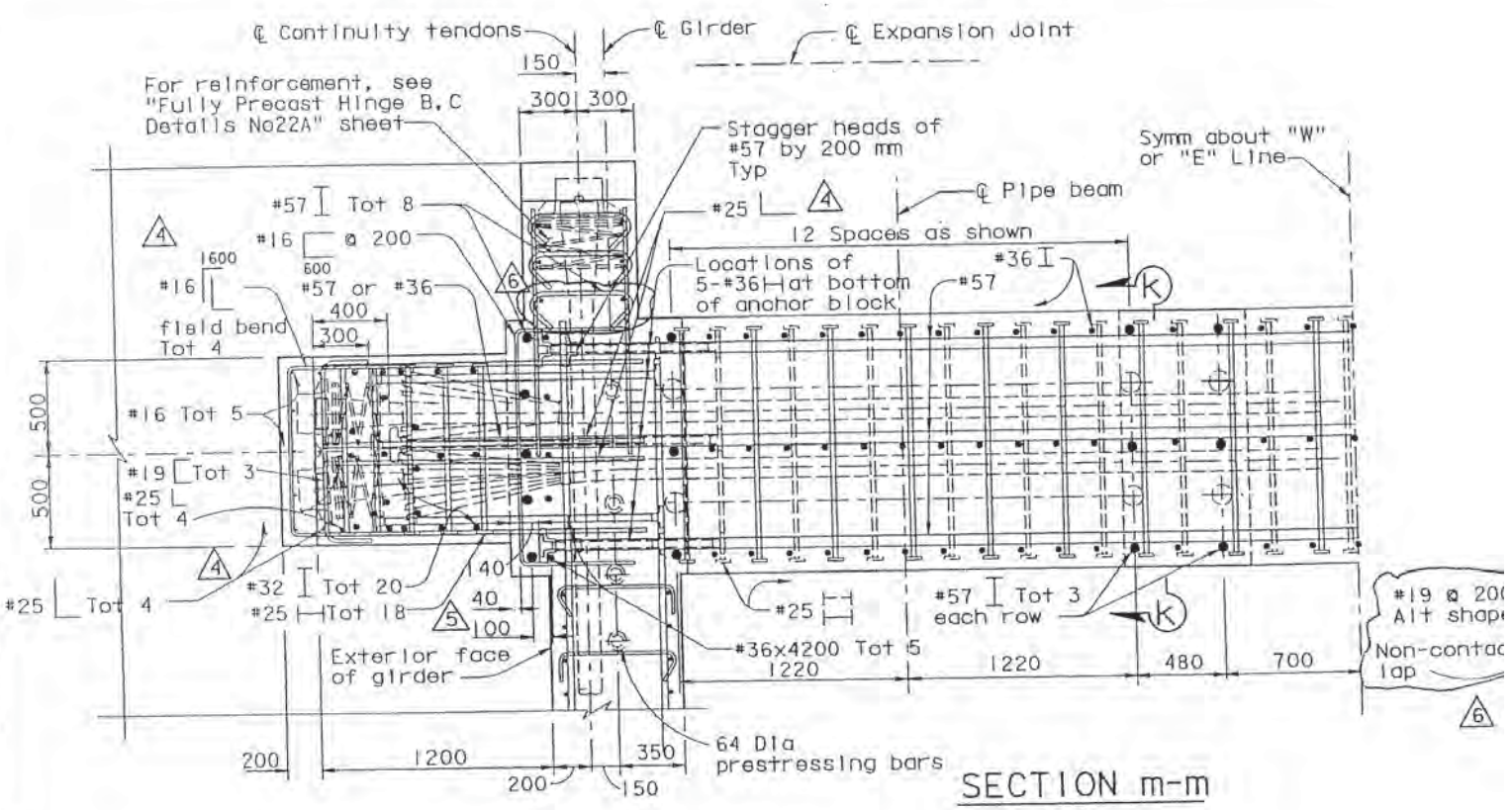

SECTION m-m

1:20

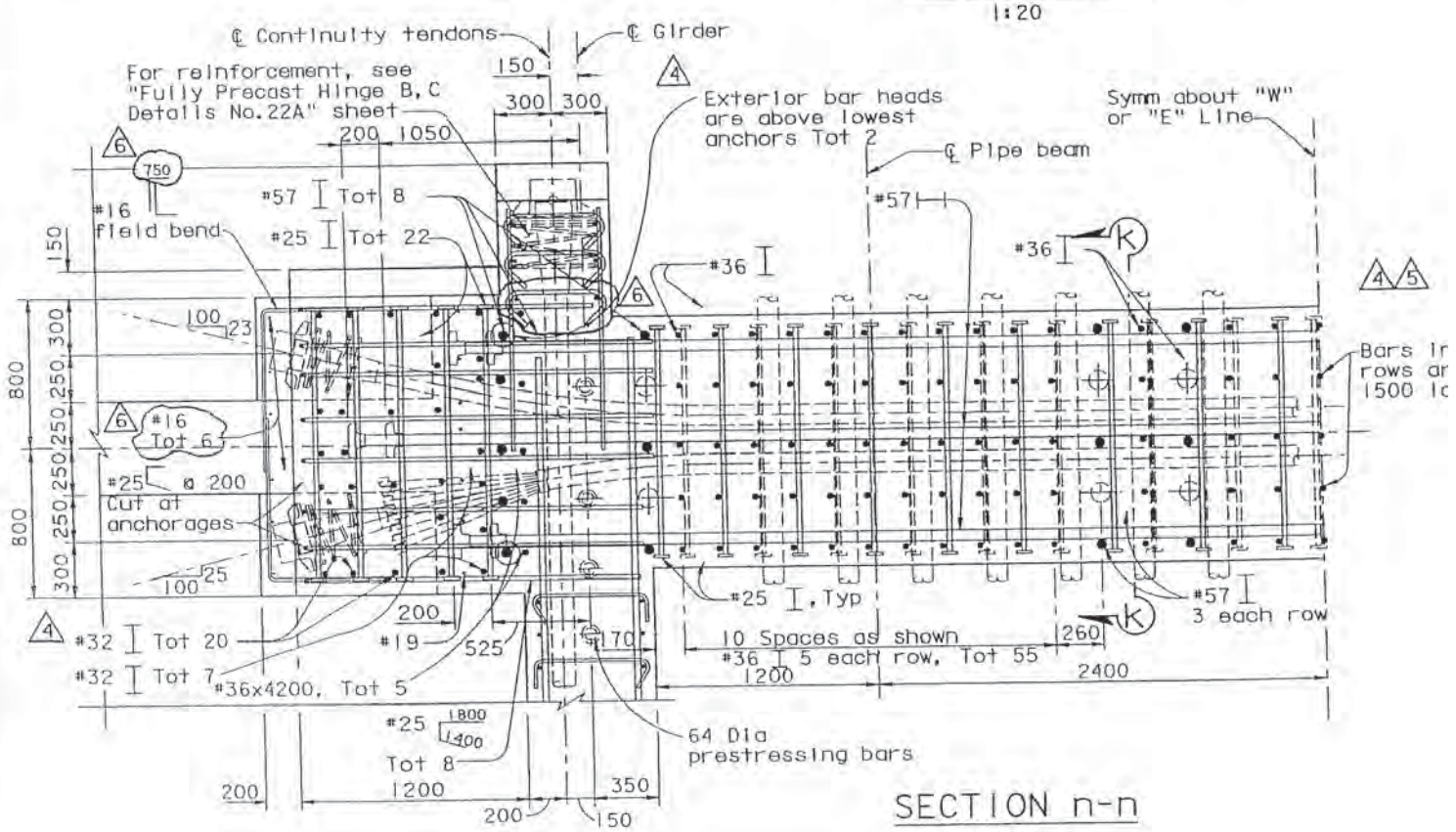

SECTION n-n

1:20

DESIGN OVERSIGHT 1/16/04	DESIGN	BY R. Malik	CHECKED C. Werts
	DETAILS	BY S. Lee	CHECKED C. Werts
	QUANTITIES	BY R. Malik	CHECKED T. Nguyen

SIGN OFF DATE

Rev. Date: 5-18-98

ORIGINAL SCALE IN MILLIMETERS FOR REDUCED PLANS

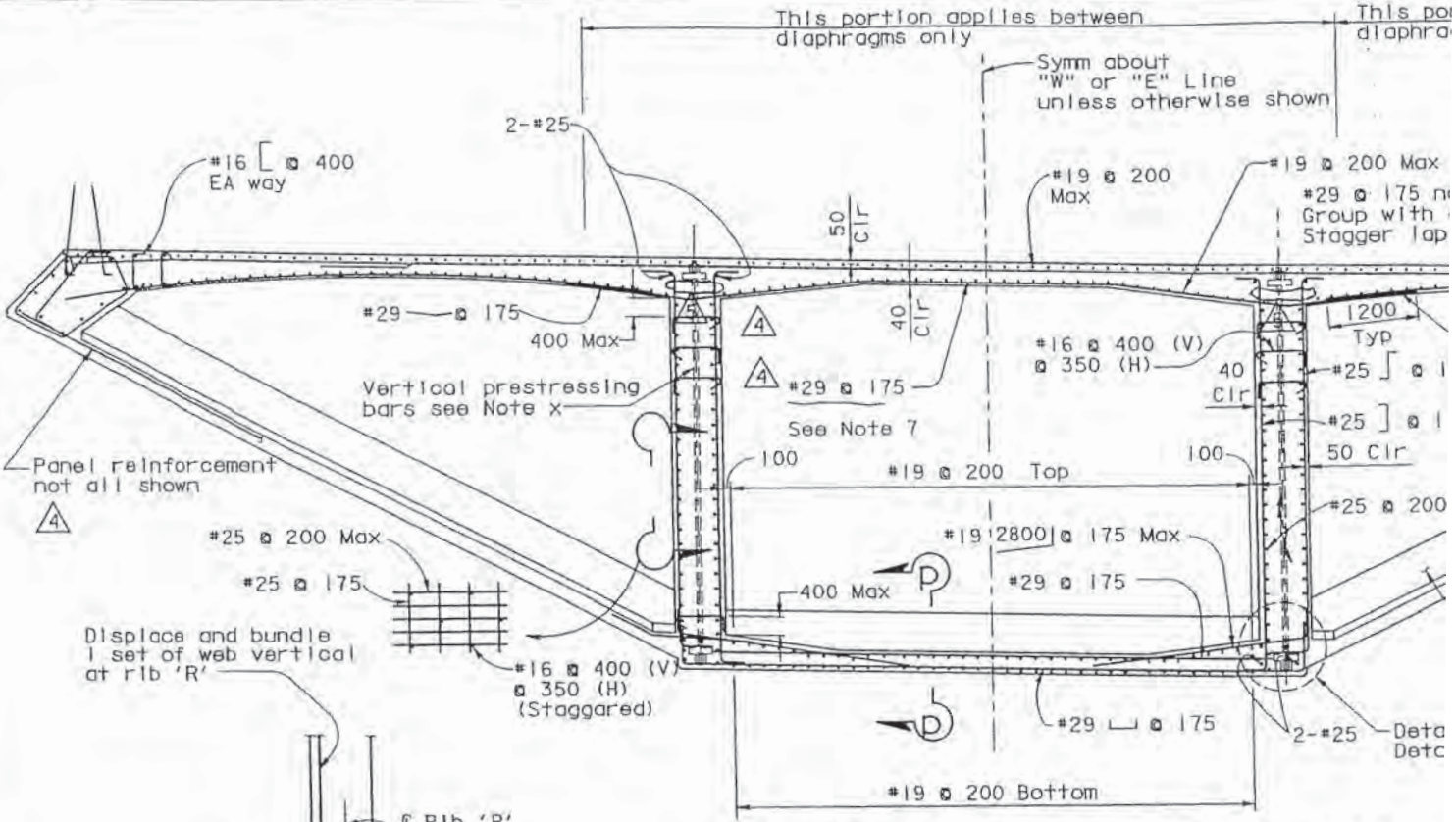

TYPICAL SECTION
1:50

Between Diaphragm A & B
Between Diaphragm C & D Sim

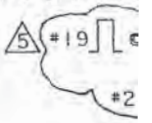

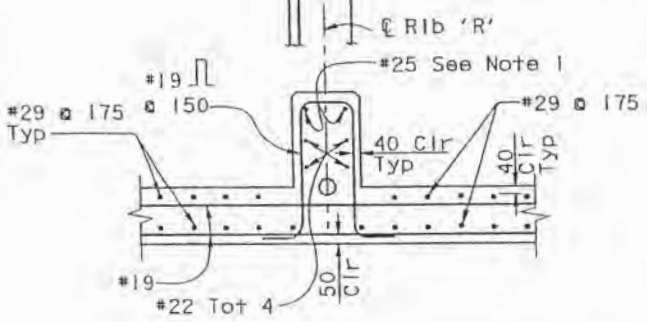

SECTION p-p
1:20

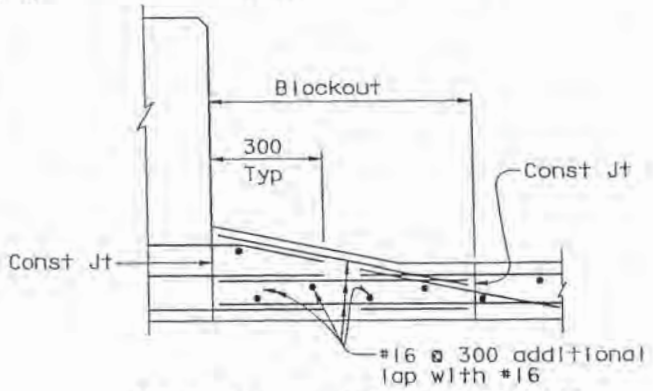

DETAIL e AT BLOCKOUT
1:10
Lap bars as shown or use couplers (Contractor's option)

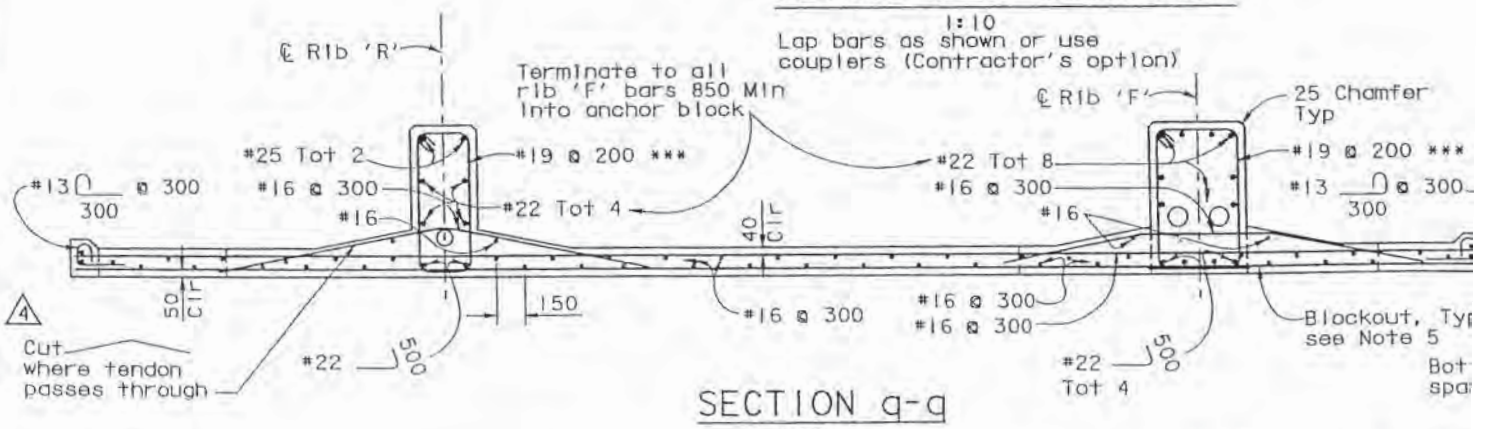

SECTION q-q
1:20
(*** Interrupt these bars at segment Girders)

7. Splice in #29 may b girder webs.

DESIGN OVERSIGHT 4/16/04 SIGN OFF DATE	DESIGN	BY E. Chan	CHECKED C. Werts
	DETAILS	BY S. Lee	CHECKED C. Werts
	QUANTITIES	BY E. Chan	CHECKED J. Leventh

Rev. Date: 5-18-98

ORIGINAL SCALE IN MILLIMETERS FOR REDUCED PLANS

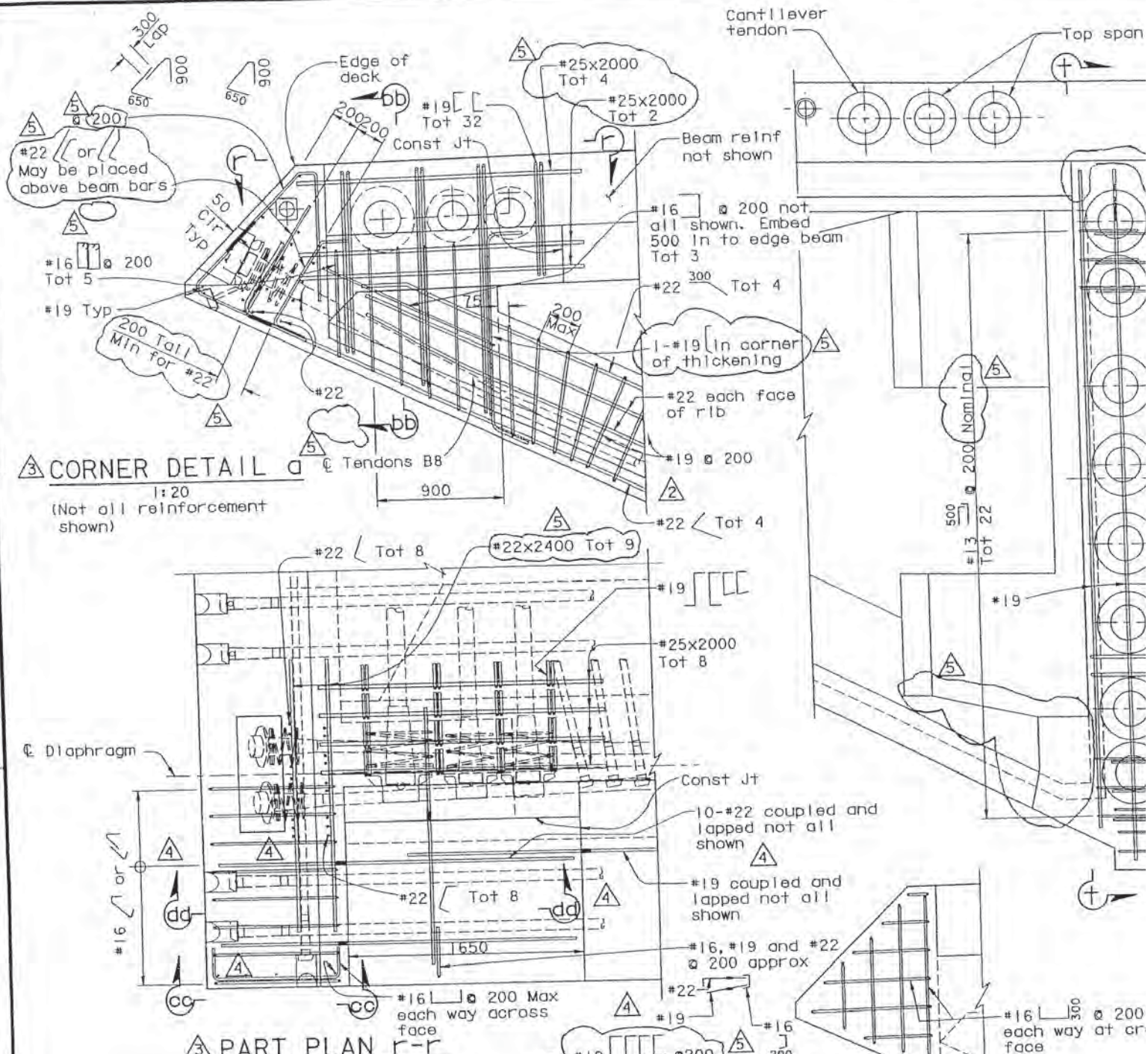

MARK	DATE	DESCRIPTIONS
5	01/16/04	AS NOTED
4	09/24/03	AS NOTED
3	09/19/03	REVISE DETAILS: CORNER DETAIL a, PART PLAN r-r AND SECTION bb-bb
2	06/27/03	MODIFY REINFORCEMENT
1	10/07/02	ADD "D" TENDONS

REVISIONS

DESIGN OVERSIGHT 1/16/04

SIGN OFF DATE

DESIGN	BY E. Chan	CHECKED C. Werts
DETAILS	BY S. Lee	CHECKED C. Werts
QUANTITIES	BY E. Chan	CHECKED J. Leventin

ORIGINAL SCALE IN MILLIMETERS FOR REDUCED PLANS

Rev. Date: 5-18-98

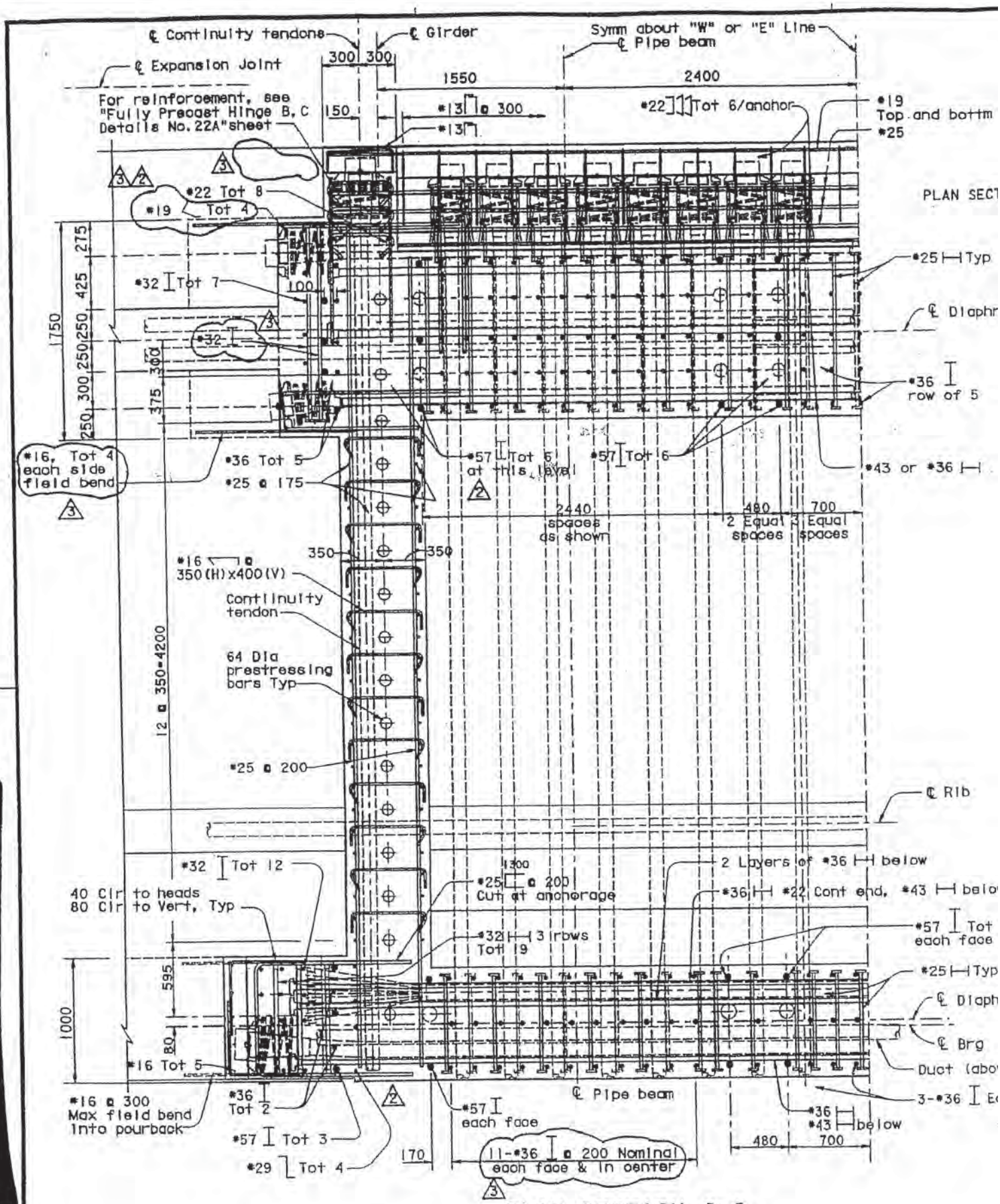

PLAN SECTION f-f

1:20

DESIGN OVERSIGHT 1/16/04	DESIGN	BY R. Malik	CHECKED C. Werts
SIGN OFF DATE	DETAILS	BY S. Lee	CHECKED C. Werts
	QUANTITIES	BY R. Malik	CHECKED T. Nguyen

Rev. Date: 5-12-96

ORIGINAL SCALE IN MILLIMETERS FOR REDUCED PLANS

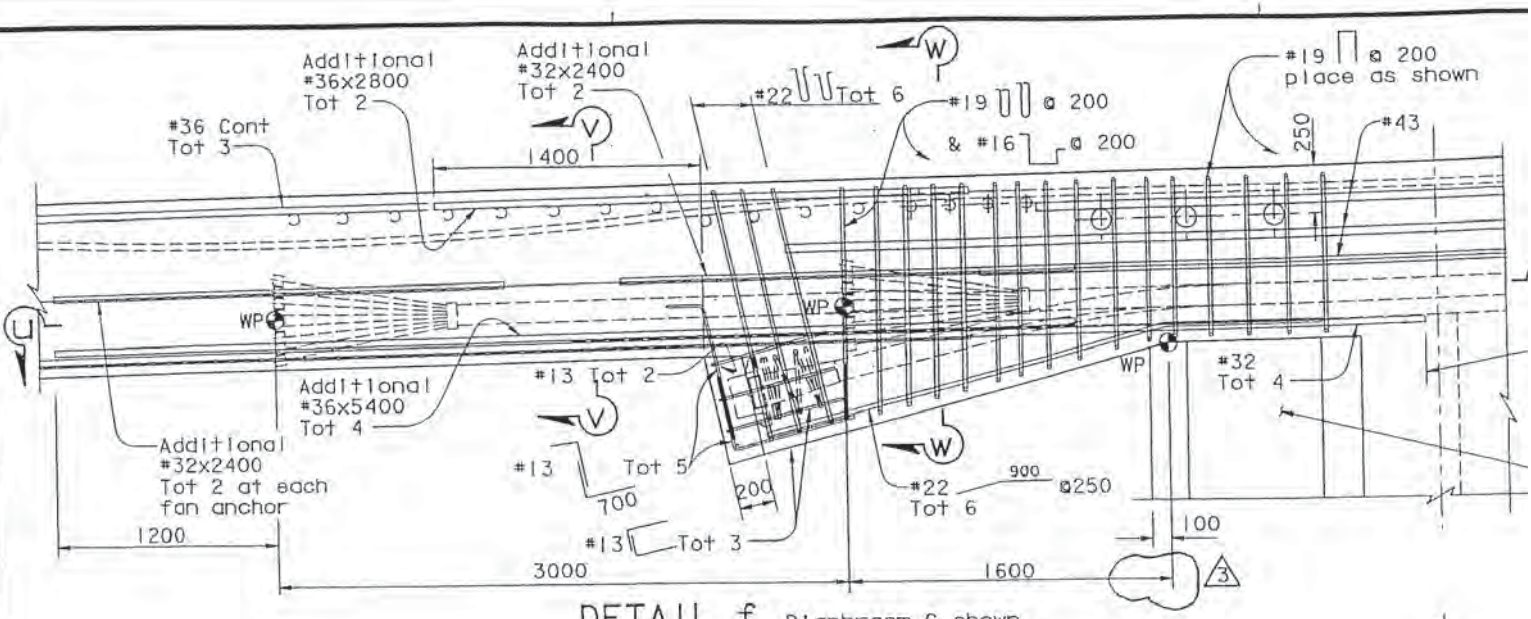

DETAIL f
1:20
Diaphragm C shown
Diaphragm B similar

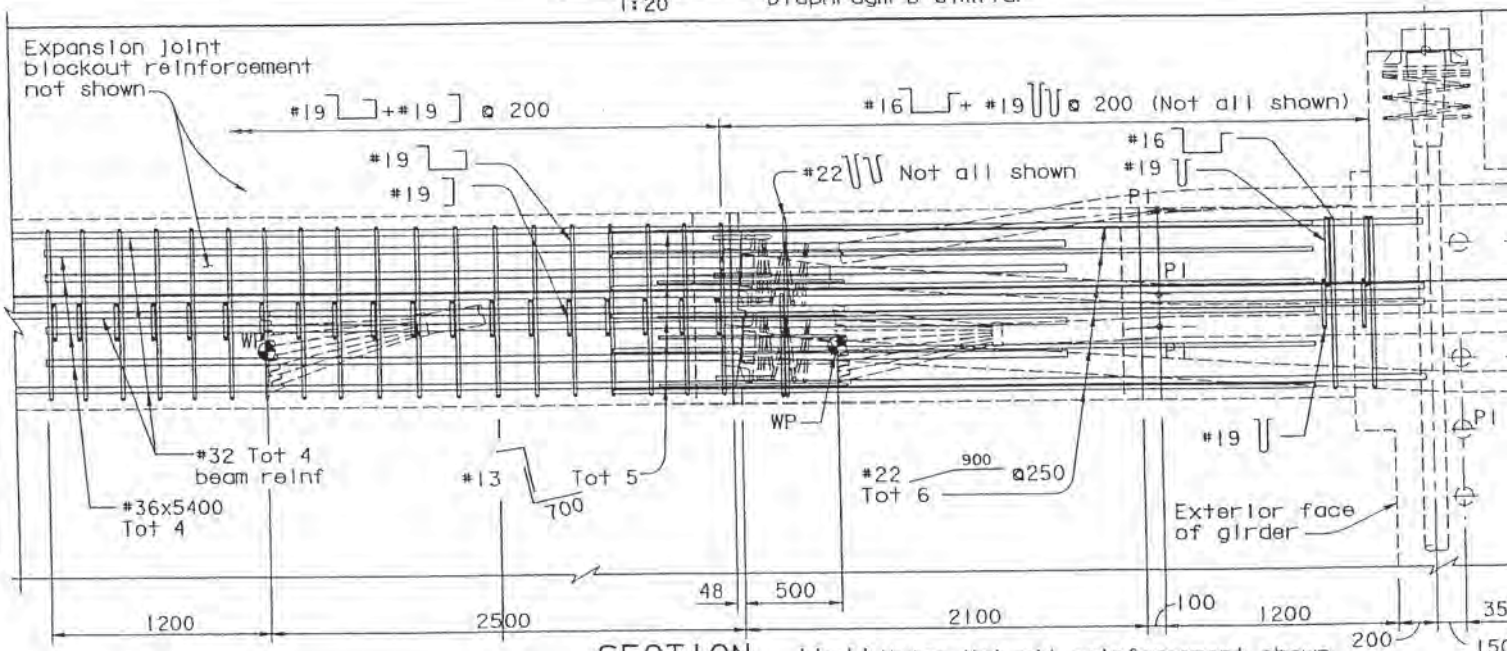

SECTION U-U
1:20
Note: Not all reinforcement shown

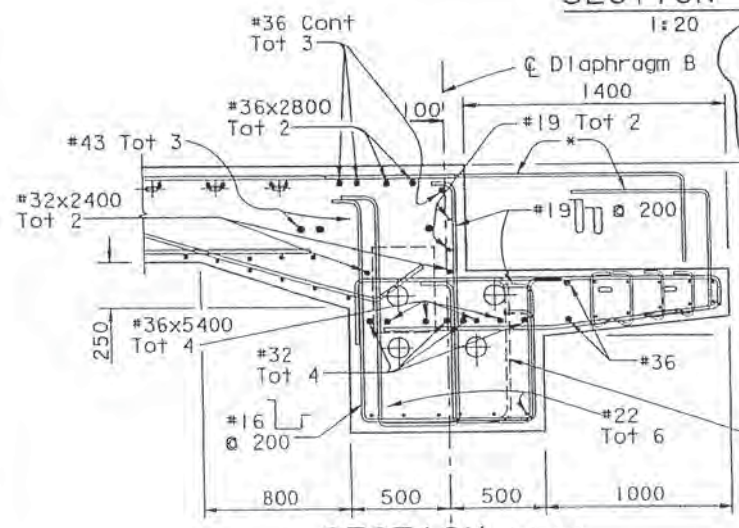

SECTION W-W
1:20

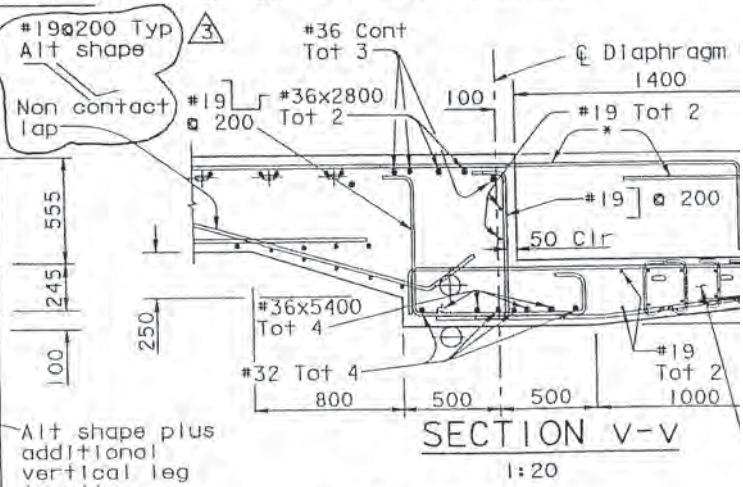

SECTION V-V
1:20

* #16 @ 200 Dowels for Expansion Joint blockout

DESIGN OVERSIGHT 1/16/04 SIGN OFF DATE		DESIGN BY R. Malik	CHECKED C. Werts
		DETAILS BY S. Lee	CHECKED C. Werts
		QUANTITIES BY R. Malik	CHECKED T. Nguyen

Rev. Date: 5-18-98

ORIGINAL SCALE IN MILLIMETERS FOR REDUCED PLANS

MARK	DATE	
4	01/16/04	AS NO
3	09/24/03	ADD S
2	09/19/03	BAR S
1	06/27/03	ADD N

CONTRACT
SHEET 3

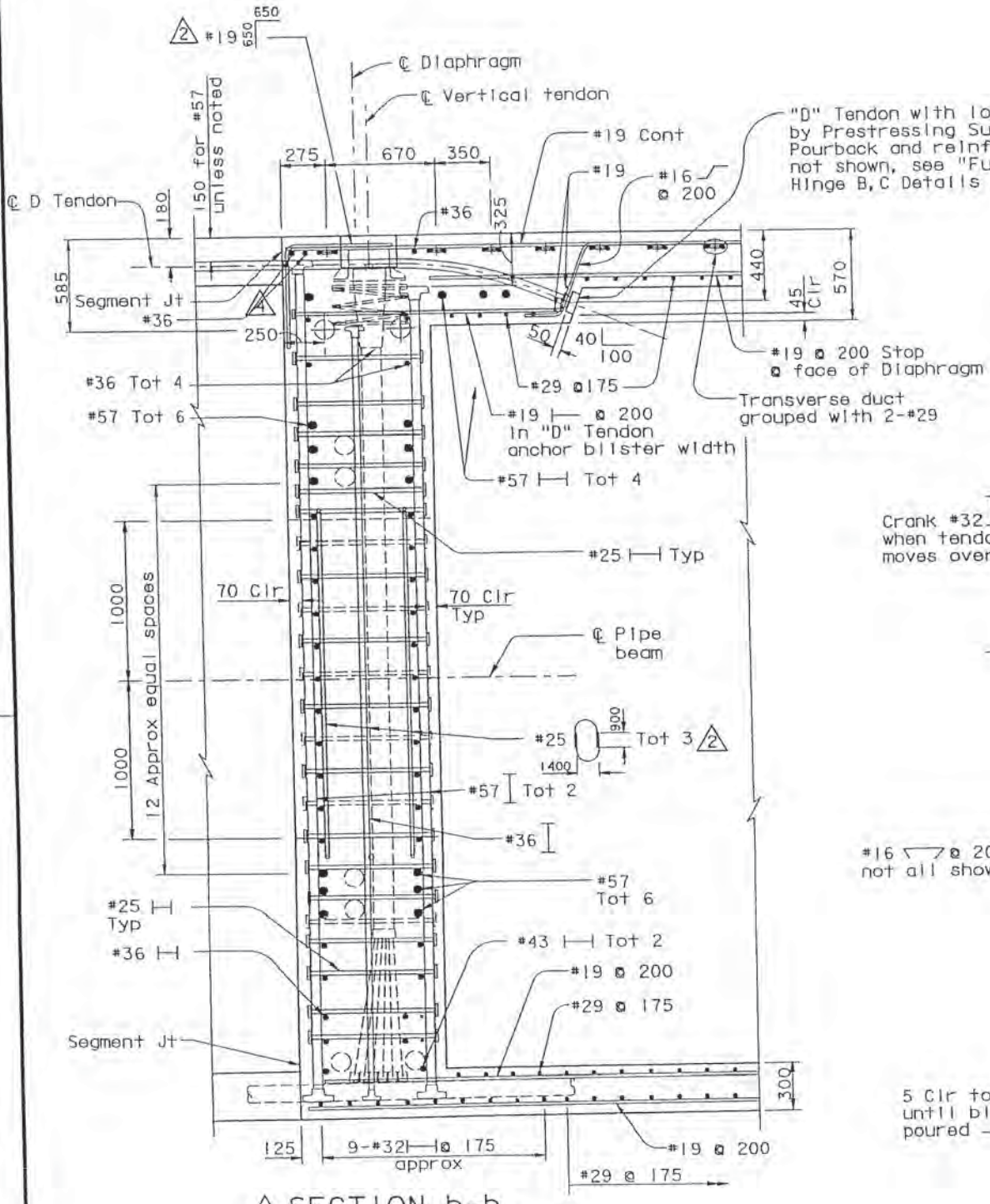

1 SECTION b-b
1:20

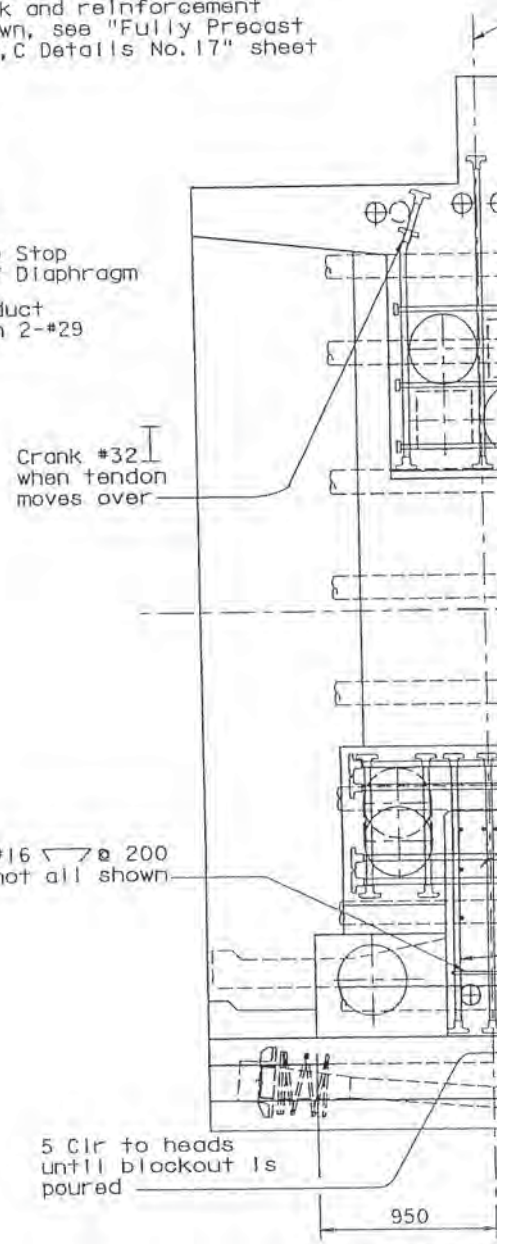

1 SECTI
1:2
2 (Not all rein

DESIGN OVERSIGHT 1/16/04	DESIGN	BY R. Malik	CHECKED C. Werts
SIGN OFF DATE	DETAILS	BY S. Lee	CHECKED C. Werts
	QUANTITIES	BY R. Malik	CHECKED T. Nguyen

Rev. Date: 5-18-98

ORIGINAL SCALE IN MILLIMETERS FOR REDUCED PLANS

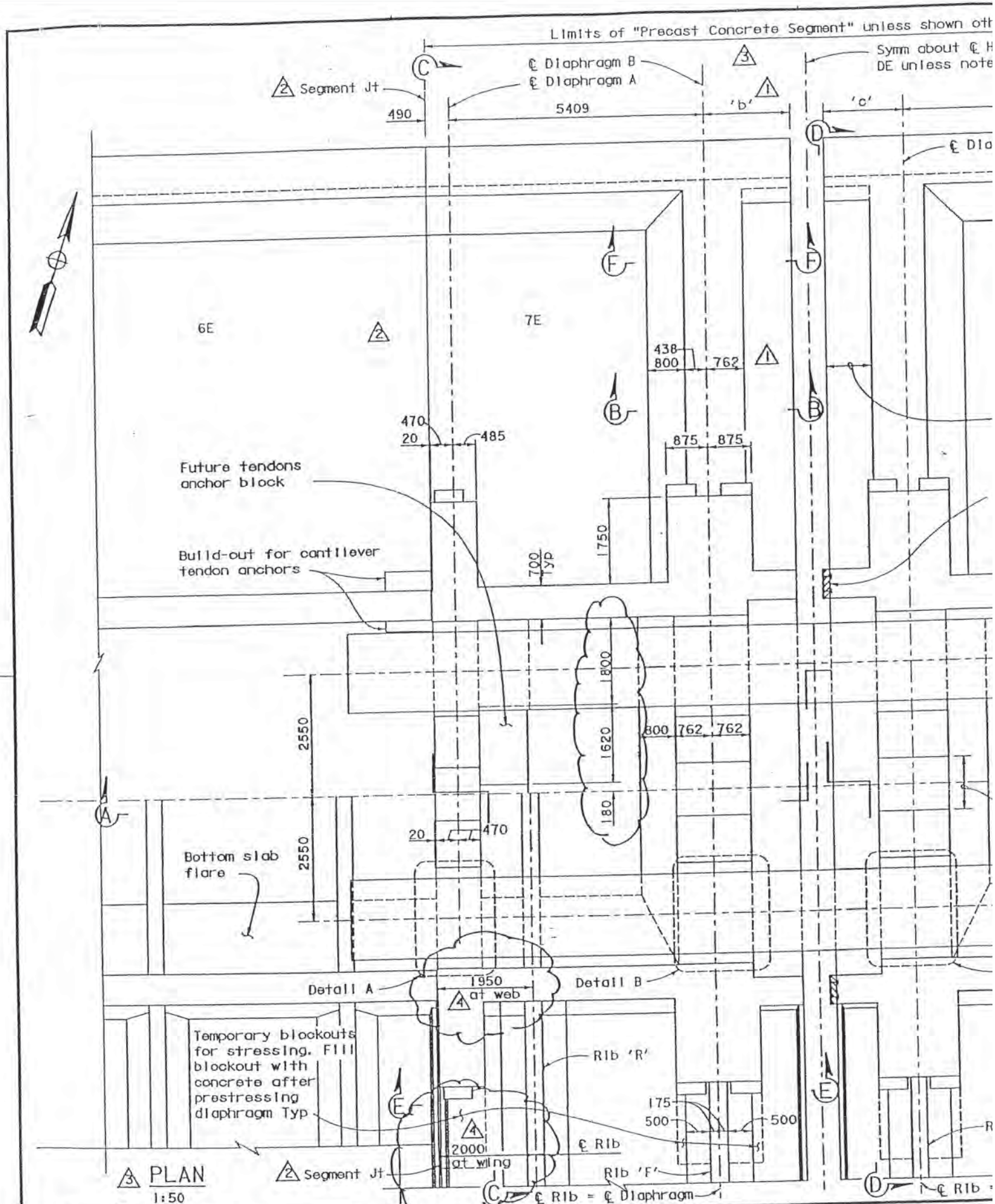

DESIGN OVERSIGHT	DESIGN	BY J. Krizek/C. Redfield	CHECKED C. Werts
SIGN OFF DATE 7/24/03	DETAILS	BY A. Lishansky	CHECKED C. Werts
	QUANTITIES	BY J. Chan	CHECKED S. Shi

Rev. Date: 5-18-98

ORIGINAL SCALE IN MILLIMETERS FOR REDUCED PLANS 0 10

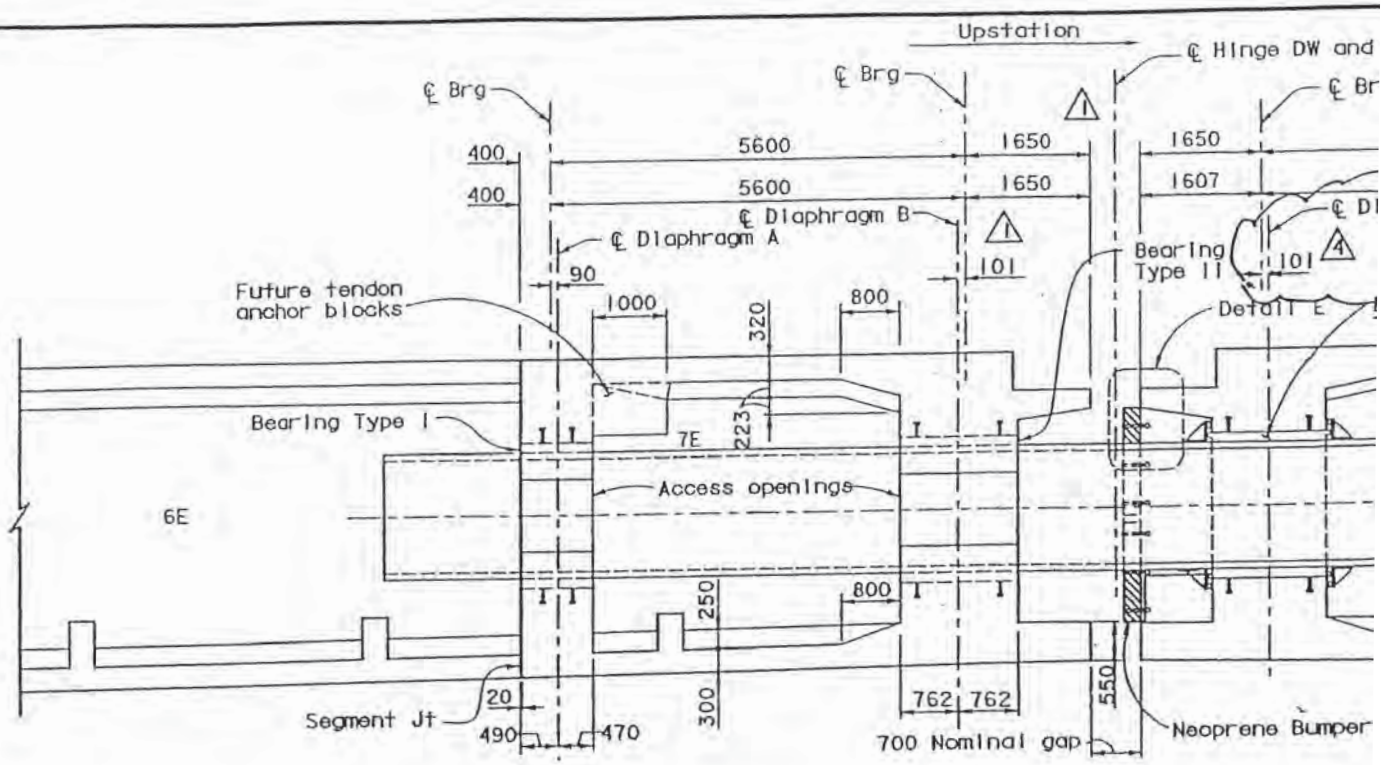

3 SECTION A-A
1:50

200 t
50 du
vulca

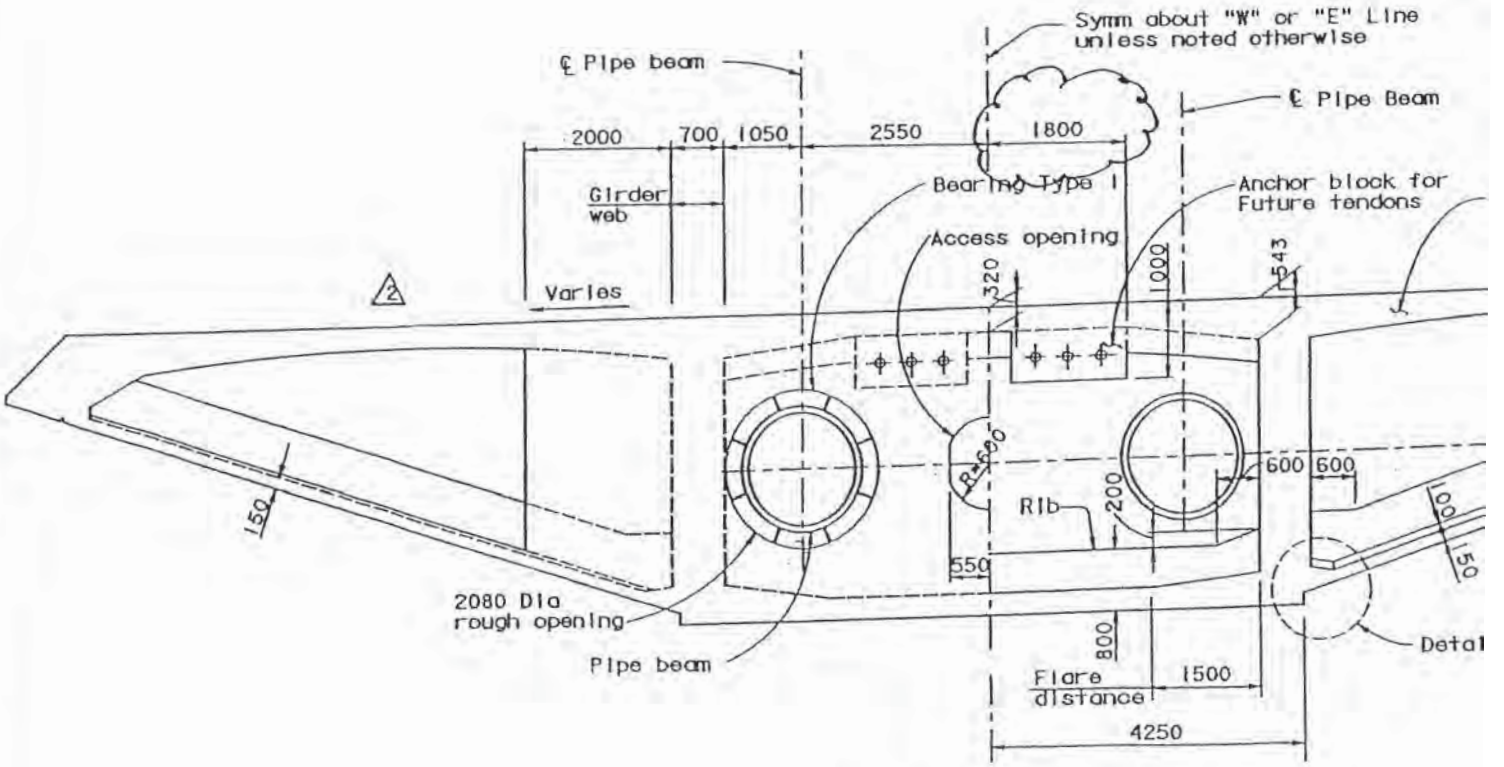

3 SECTION C-C
1:50

DESIGN OVERSIGHT 7/24/03	DESIGN	BY J. Krizek	CHECKED C. Werts
SIGN OFF DATE	DETAILS	BY A. Lishansky	CHECKED C. Werts
	QUANTITIES	BY J. Chan	CHECKED S. Shi

Rev. Date: 5-18-98

ORIGINAL SCALE IN MILLIMETERS FOR REDUCED PLANS 0 10

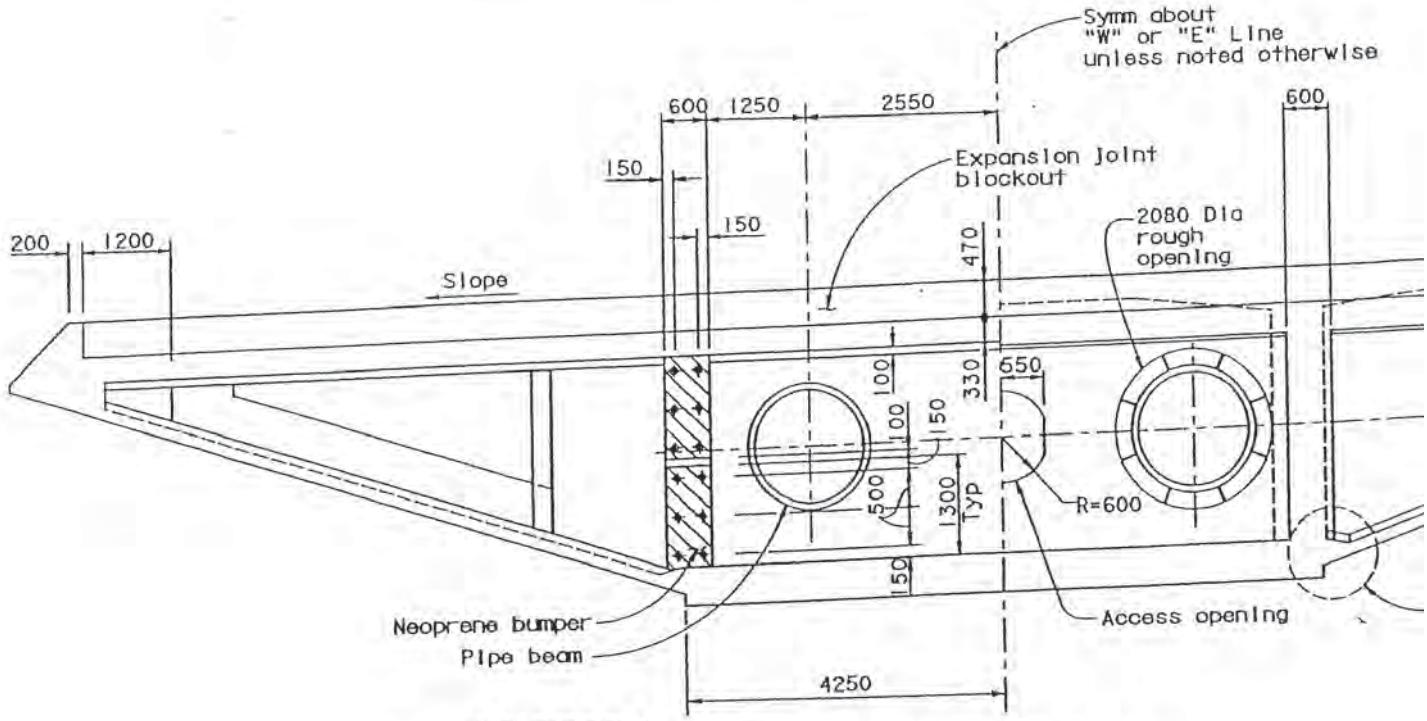

2 SECTION D-D
1:50

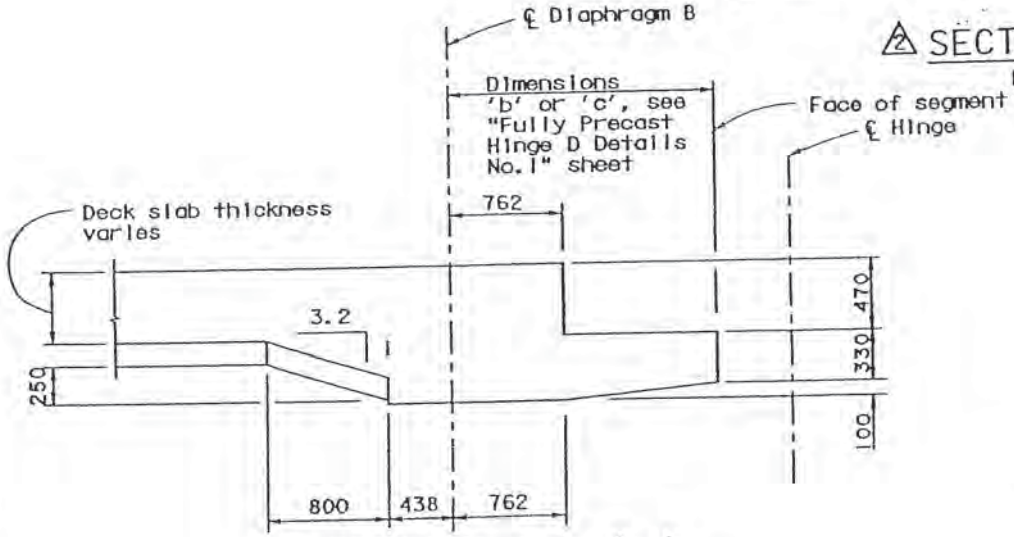

SECTION B-B 1 2
1:25

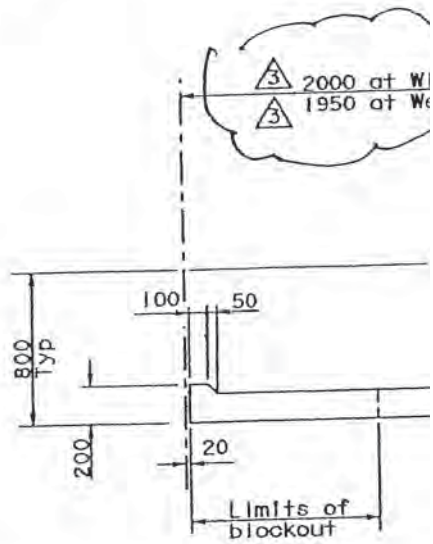

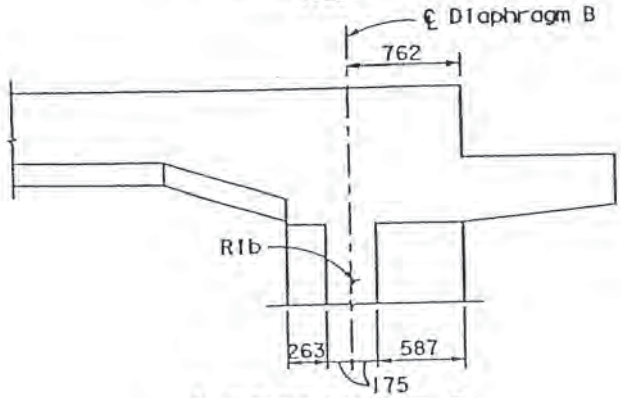

2 SECTION F-F
1:25

MARK	DATE	DESCRIPTIONS
3	07/16/03	RIB LOCATION MODIFIED
2	04/23/03	ADJUST FORM GEOMETRY. MODIFY NOTES
1	03/04/02	REVISE BLOCKOUT DETAILS AT SECTION B-B

REVISIONS

CONTRACT CHANGE ORDE
SHEET 36 OF 85

DESIGN OVERSIGHT
7/24/03
SIGN OFF DATE

DESIGN	BY J. Krizek	CHECKED	C. Werts
DETAILS	BY A. Lishansky	CHECKED	C. Werts
QUANTITIES	BY T. West	CHECKED	L. Greer

ORIGINAL SCALE IN MILLIMETERS FOR REDUCED PLANS 0 10

Rev. Date: 5-18-98

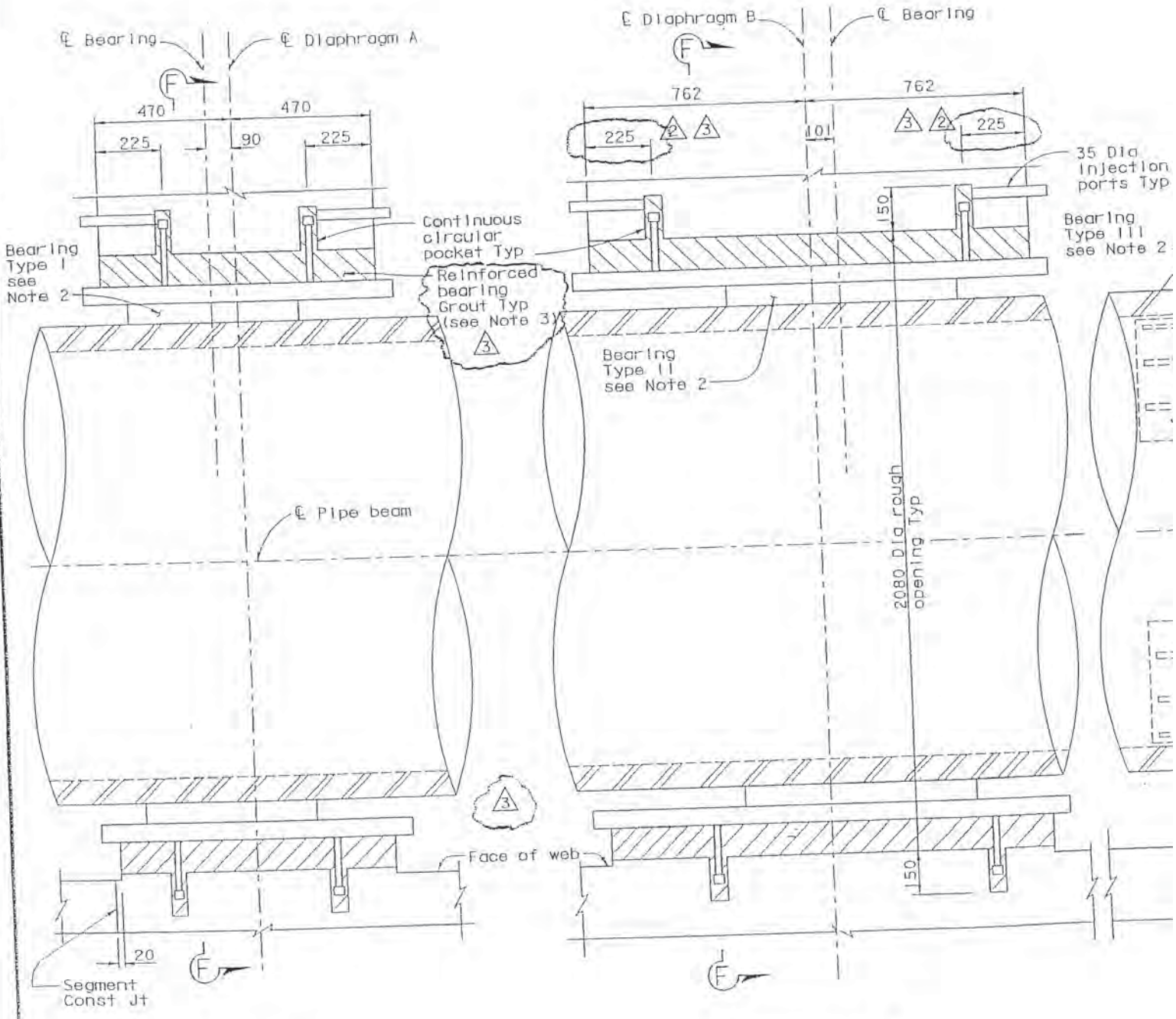

⚠ DETAIL A
1:10

⚠ DETAIL B
1:10

DESIGN OVERSIGHT 11/21/03	HAUAN EC - [illegible]	DESIGN	BY J. Krizek	CHECKED C. Werts
SIGN OFF DATE		DETAILS	BY A. Lishansky	CHECKED C. Werts
Rev. Date: 5-16-98		QUANTITIES	BY T. West	CHECKED L. Greer

ORIGINAL SCALE IN MILLIMETERS FOR REDUCED PLANS

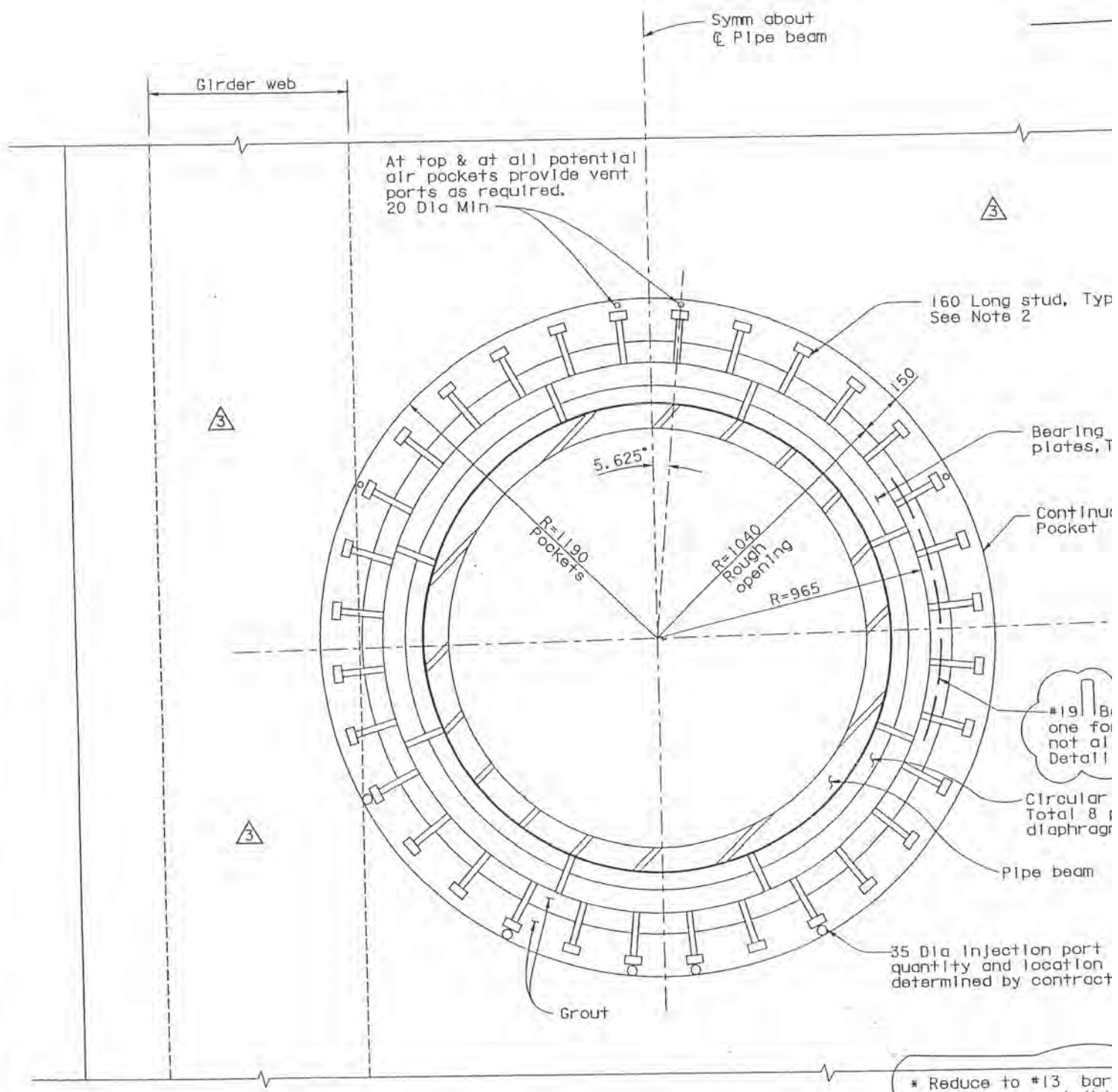

DESIGN OVERSIGHT SIGN OFF DATE 12/19/03		DESIGN	BY J. Krizek	CHECKED	C. Werts
		DETAILS	BY A. Lishansky	CHECKED	C. Werts
		QUANTITIES	BY T. West	CHECKED	L. Greer

Rev. Date: 5-18-98

ORIGINAL SCALE IN MILLIMETERS
FOR REDUCED PLANS

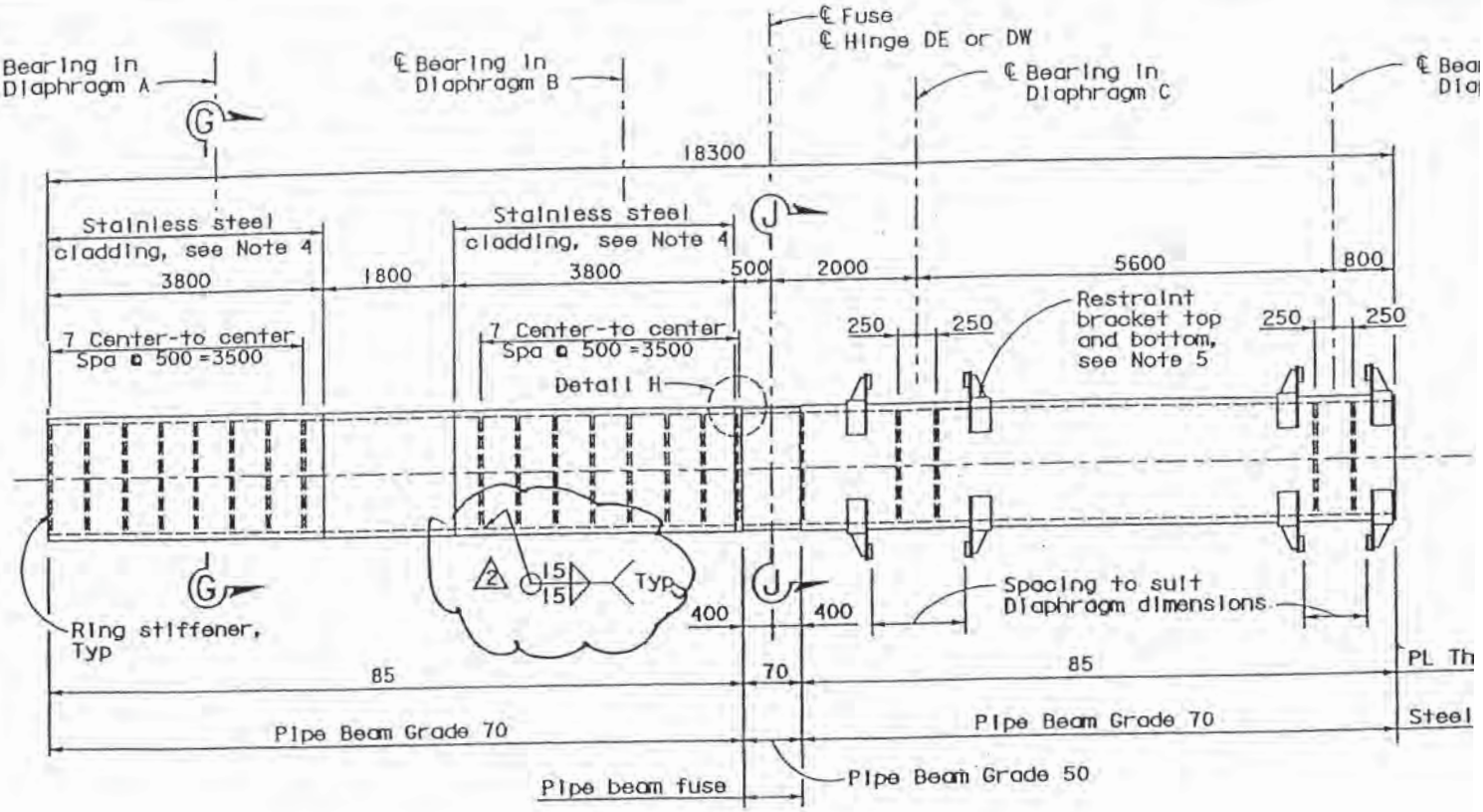

PIPE BEAM ELEVATION

1:50

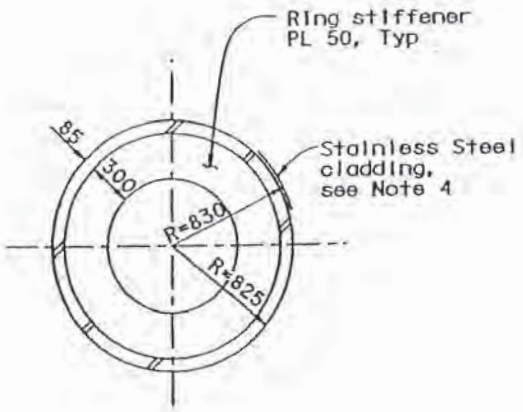

SECTION G-G

1:25

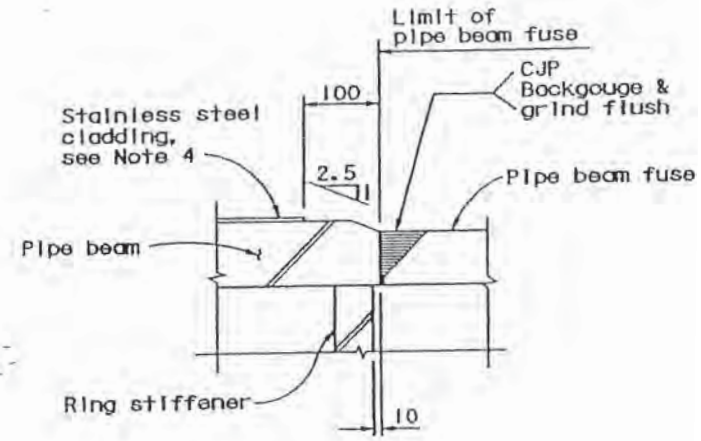

DETAIL H

1:5

DESIGN OVERSIGHT 7/24/03	DESIGN	BY R. Malik	CHECKED C. Werts
SIGN OFF DATE	DETAILS	BY A. Lishansky	CHECKED C. Werts
	QUANTITIES	BY R. Malik	CHECKED T. West

Rev. Date: 5-18-98

ORIGINAL SCALE IN MILLIMETERS FOR REDUCED PLANS 0 10

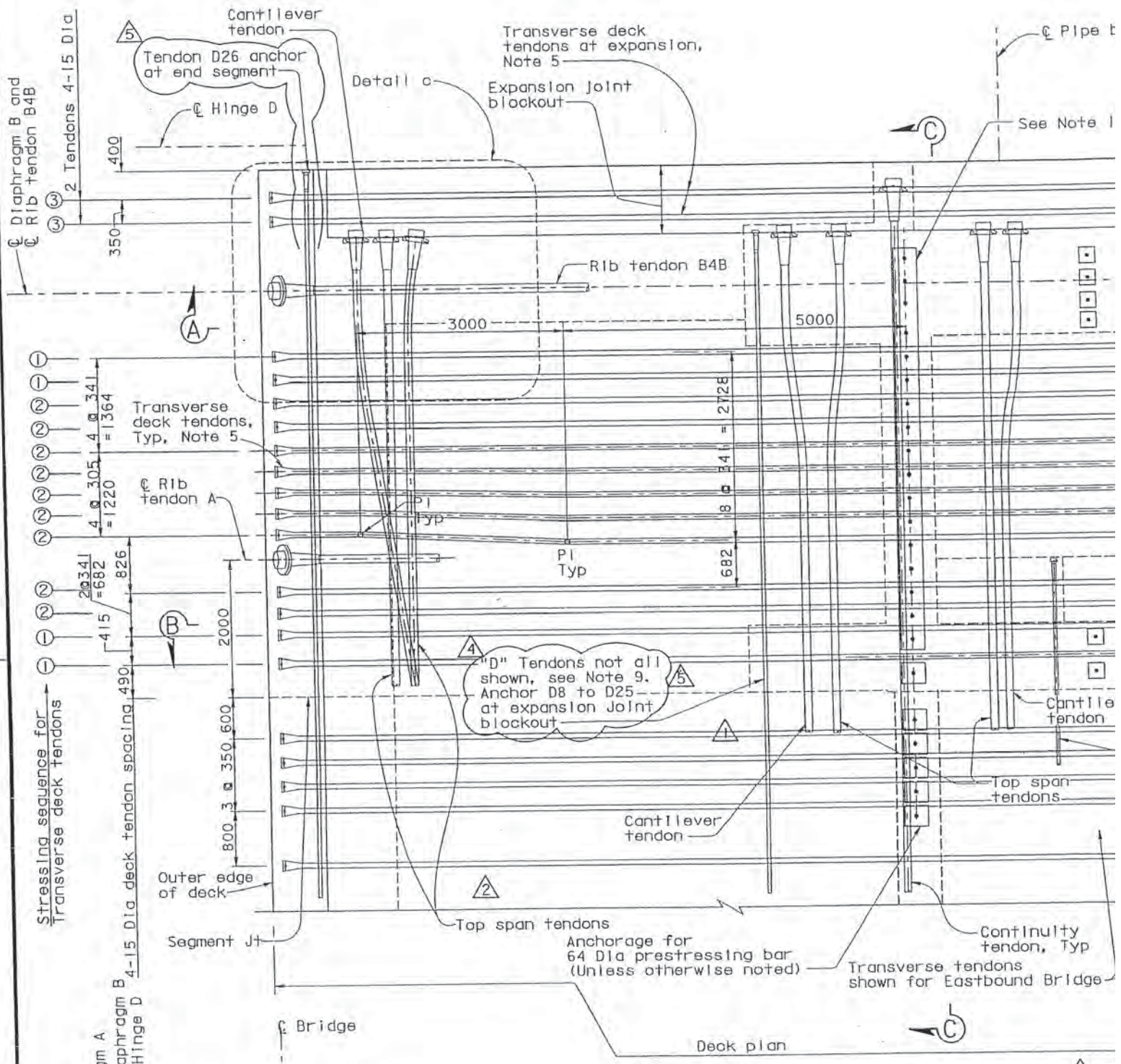

KEY PLAN-HINGE D SEGMENT 3

NTS

3 PLAN DETAIL a (Prestressing Layout)

1:40

DESIGN OVERSIGHT 12/19/03	DESIGN	BY R. Malik	CHECKED C. Werts
SIGN OFF DATE	DETAILS	BY S. Lee	CHECKED C. Werts
	QUANTITIES	BY R. Malik	CHECKED T. Nguyen

Rev. Date: 5-18-98

ORIGINAL SCALE IN MILLIMETERS FOR REDUCED PLANS

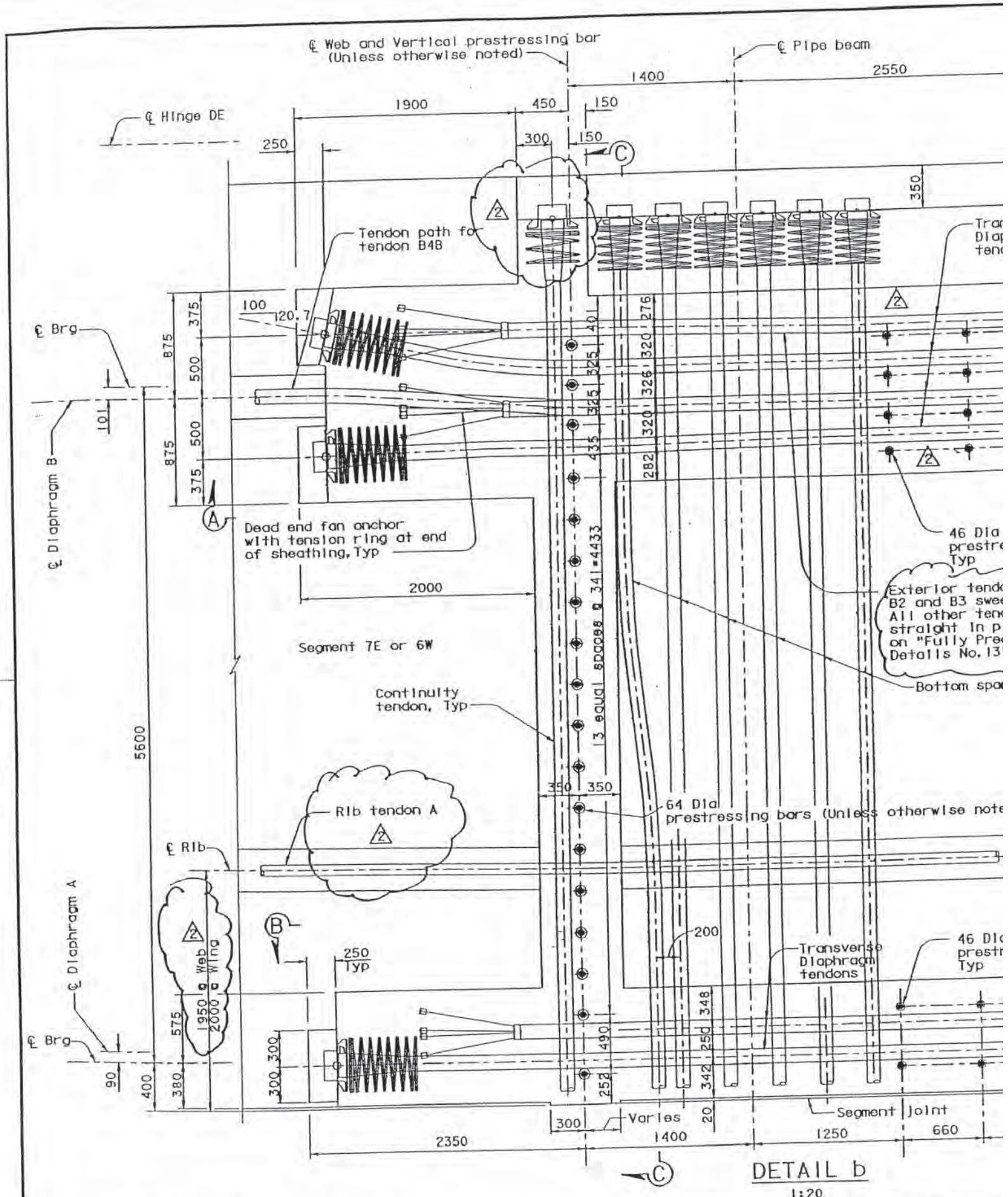

DETAIL b

1:20

DESIGN OVERSIGHT 7/24/03	DESIGN	BY R. Malik/J. Otter	CHECKED E. Chan
SIGN OFF DATE	DETAILS	BY K. Tam	CHECKED J. Otter
	QUANTITIES	BY R. Malik	CHECKED T. Nguyen

Rev. Date: 5-16-98

ORIGINAL SCALE IN MILLIMETERS FOR REDUCED PLANS

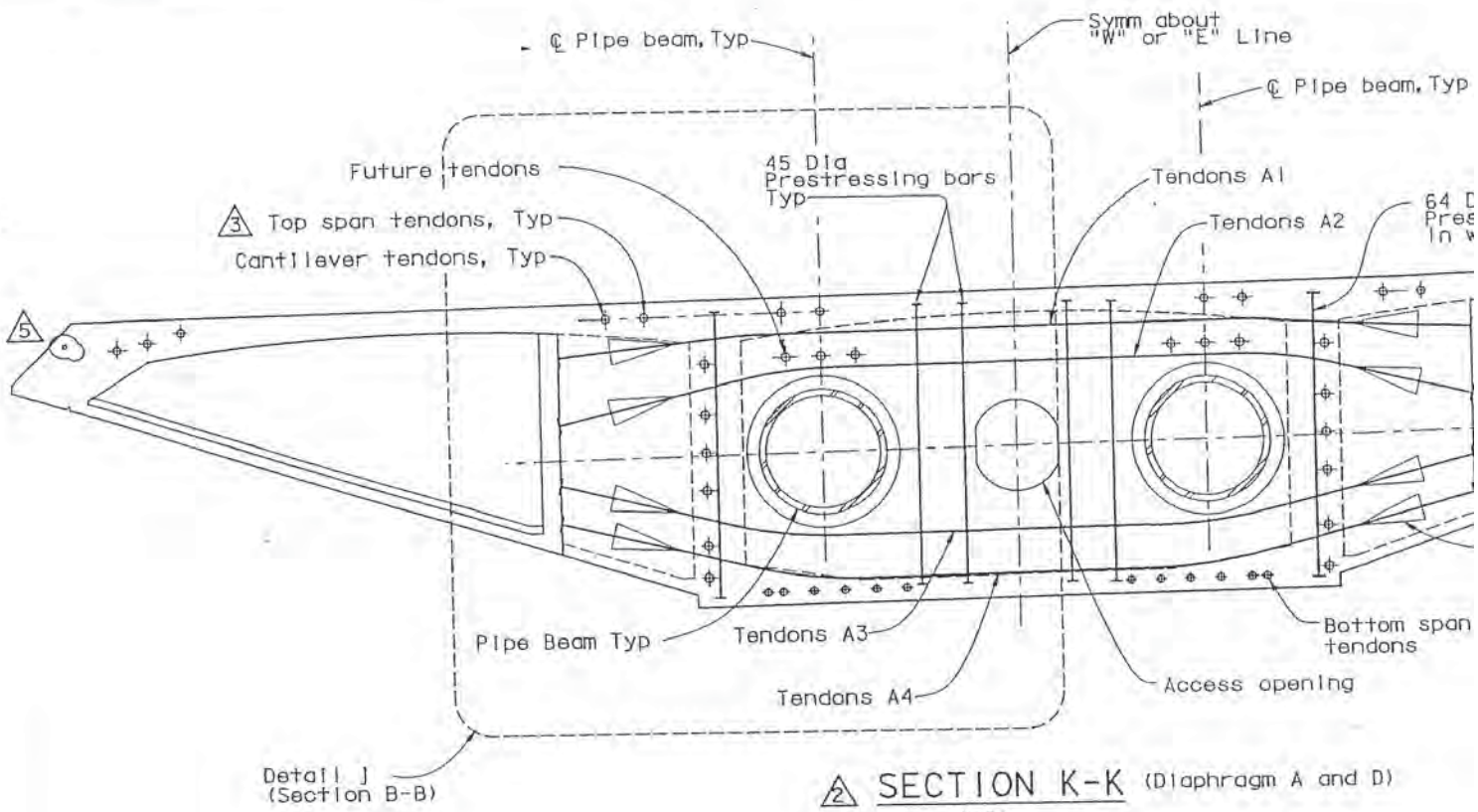

2 SECTION K-K (Diaphragm A and D)
1:50

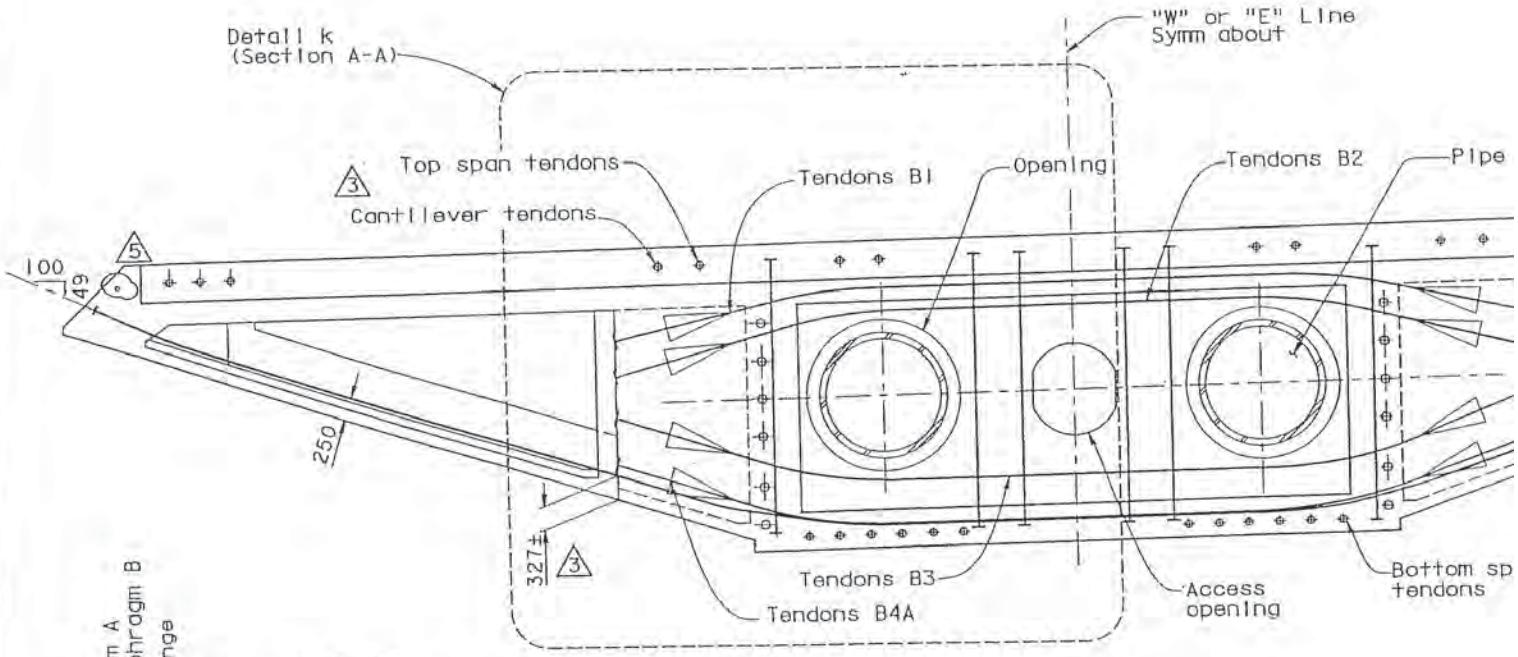

2 SECTION L-L (Diaphragm B and C)
1:50

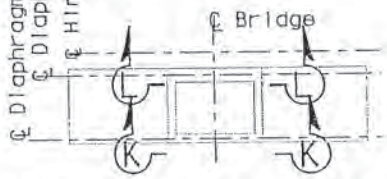

2 KEY PLAN-HINGE D SEGMENT
NTS

DESIGN OVERSIGHT 12/19/03 SIGN OFF DATE	DESIGN	BY R. Malik	CHECKED C. Werts
	DETAILS	BY S. Lee	CHECKED C. Werts
	QUANTITIES	BY R. Malik	CHECKED T. Nguyen

Rev. Date: 5-18-98

ORIGINAL SCALE IN MILLIMETERS FOR REDUCED PLANS 0

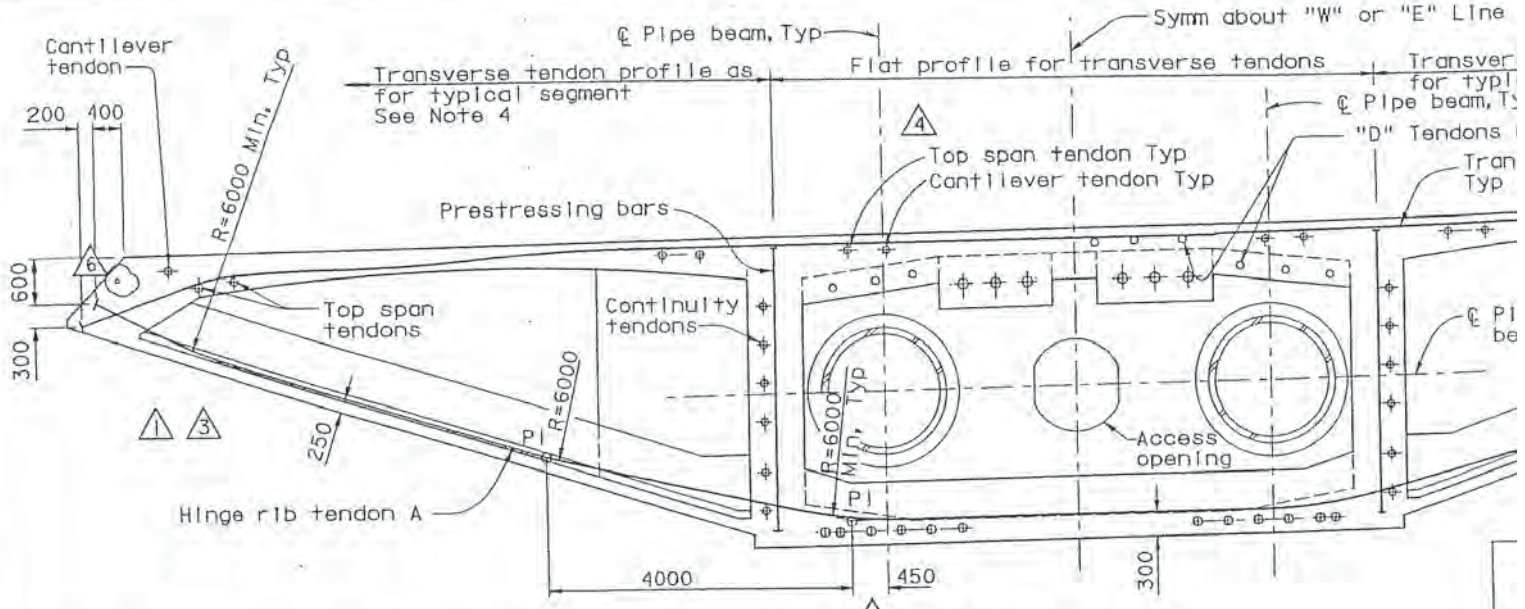

SECTION M-M

1:50

CONTRACT CHANGE ORDER NO. 55
SHEET 43 OF 85

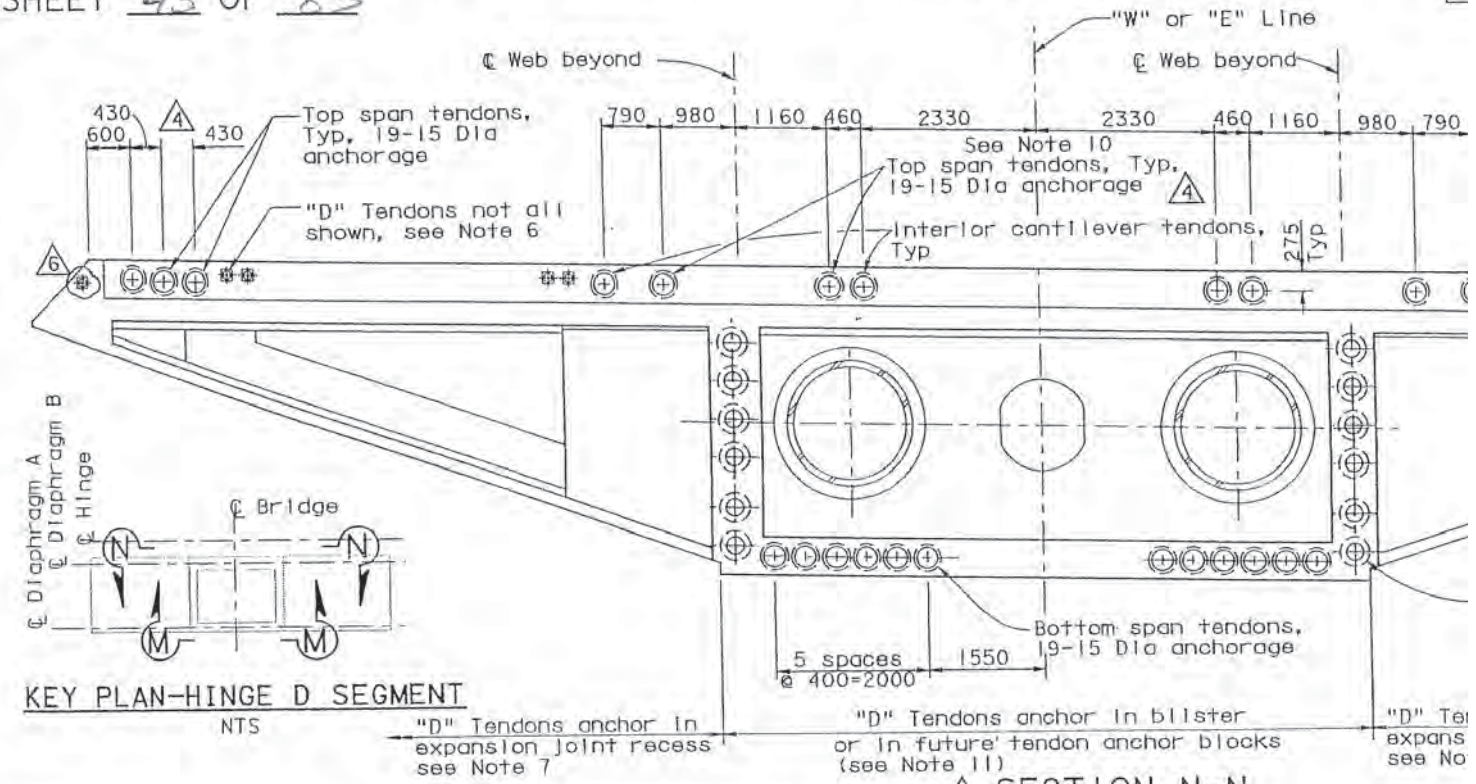

KEY PLAN-HINGE D SEGMENT

NTS

SECTION N-N

1:50

MARK	DATE	DESCRIPTIONS	BY	CH'D	CCO#
6	12/17/03	AS NOTED	SS	SA	55
5	10/30/03	MODIFY NOTE	SS	SA	
4	07/16/03	INTERCHANGE TOP SPAN AND CANTILEVER TENDONS, MODIFY ANCHOR SIZE, DIM. REVISE CABLE PROFILE AND ADD NOTE	RM	EC	
3	04/23/03	MODIFY PRESTRESSING AND NOTES	RM		
2	10/07/02	ADD "D" TENDONS	EC	CR	
1	10/07/02	REVISE CALLOUT	TM	SC	

REVISIONS

NOTES:

1. For bottom span tendon layout, see "Bottom Span Tendons Layout" sheets.
2. For cantilever tendon layout, see "Cantilever Tendons Layout" sheets.
3. For top span tendon, see "Top Span Tendons Layout" sheets.
4. For Transverse deck tendon profile in outer cells, see "Transverse Tendon Details" sheet.
5. For prestressing notes, see "Prestressing Notes" sheet.

DESIGN OVERSIGHT
12/19/03
SIGN OFF DATE

DESIGN	BY R. Malik	CHECKED	C. Werts
DETAILS	BY S. Lee	CHECKED	C. Werts
QUANTITIES	BY R. Malik	CHECKED	T. Nguyen

Rev. Date: 5-18-98

ORIGINAL SCALE IN MILLIMETERS FOR REDUCED PLANS

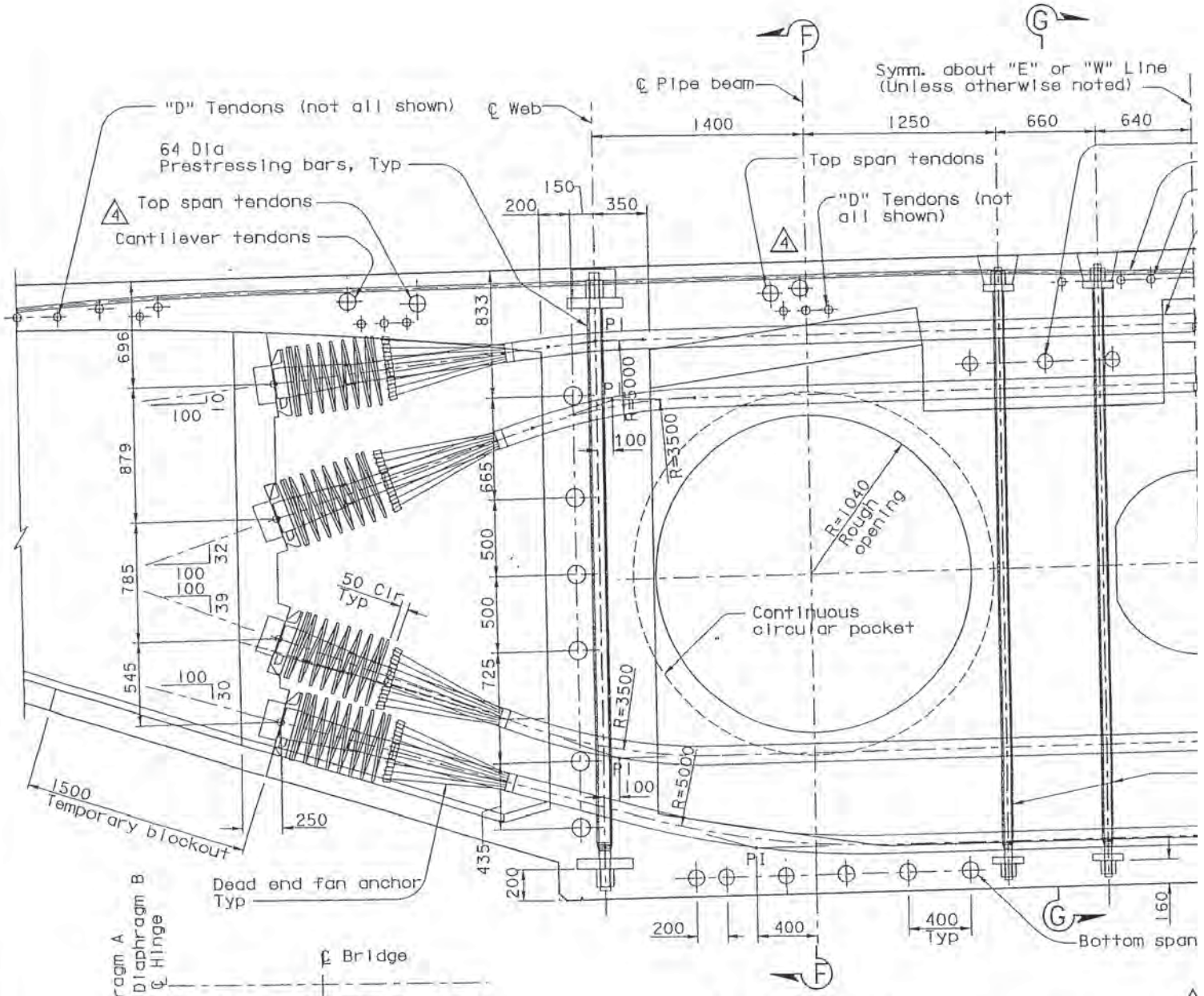

3 SECTION B-B (Diaphragm A shown, Diaphragm D similar)
1:20
(DETAIL J)

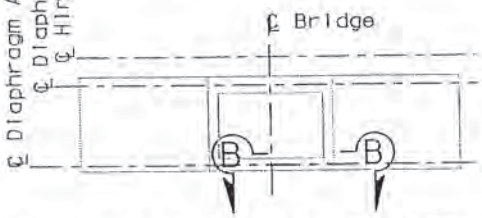

KEY PLAN-HINGE D SEGMENT 3
NTS

DESIGN OVERSIGHT 12/19/03 SIGN OFF DATE	DESIGN	BY R. Malik	CHECKED C. Werts
	DETAILS	BY S. Lee	CHECKED C. Werts
	QUANTITIES	BY R. Malik	CHECKED T. Nguyen

Rev. Date: 5-18-98

ORIGINAL SCALE IN MILLIMETERS FOR REDUCED PLANS

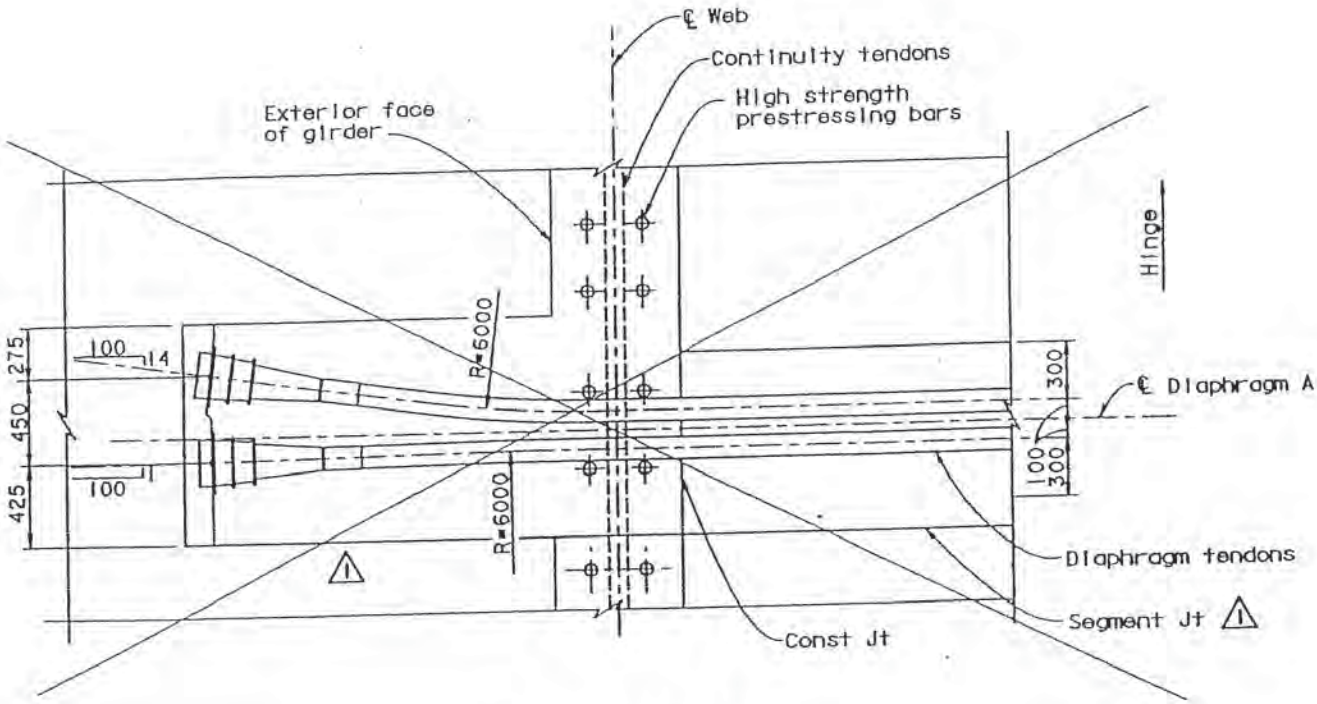

2 SECTION Q-Q

1:20

DESIGN OVERSIGHT 7/24/03 SIGN OFF DATE		DESIGN	BY R. Malik	CHECKED C. Werts
		DETAILS	BY S. Lee	CHECKED C. Werts
		QUANTITIES	BY R. Malik	CHECKED T. Nguyen

Rev. Date: 5-18-98

ORIGINAL SCALE IN MILLIMETERS FOR REDUCED PLANS 0 10 2

MARK	DATE	DESCRIPTIONS
4	12/17/03	REVISED DEPTH TO PLATE
3	07/16/03	CABLE CURVE REVISED AND AD UPDATE ANCHOR SIZE
2	04/23/03	MODIFY TENDONS AND NOTES
1	10/07/02	ADD "D" TENDONS

REVISIONS

CONTRACT CHANGE ORDER NO. 4

SHEET 46 OF 85

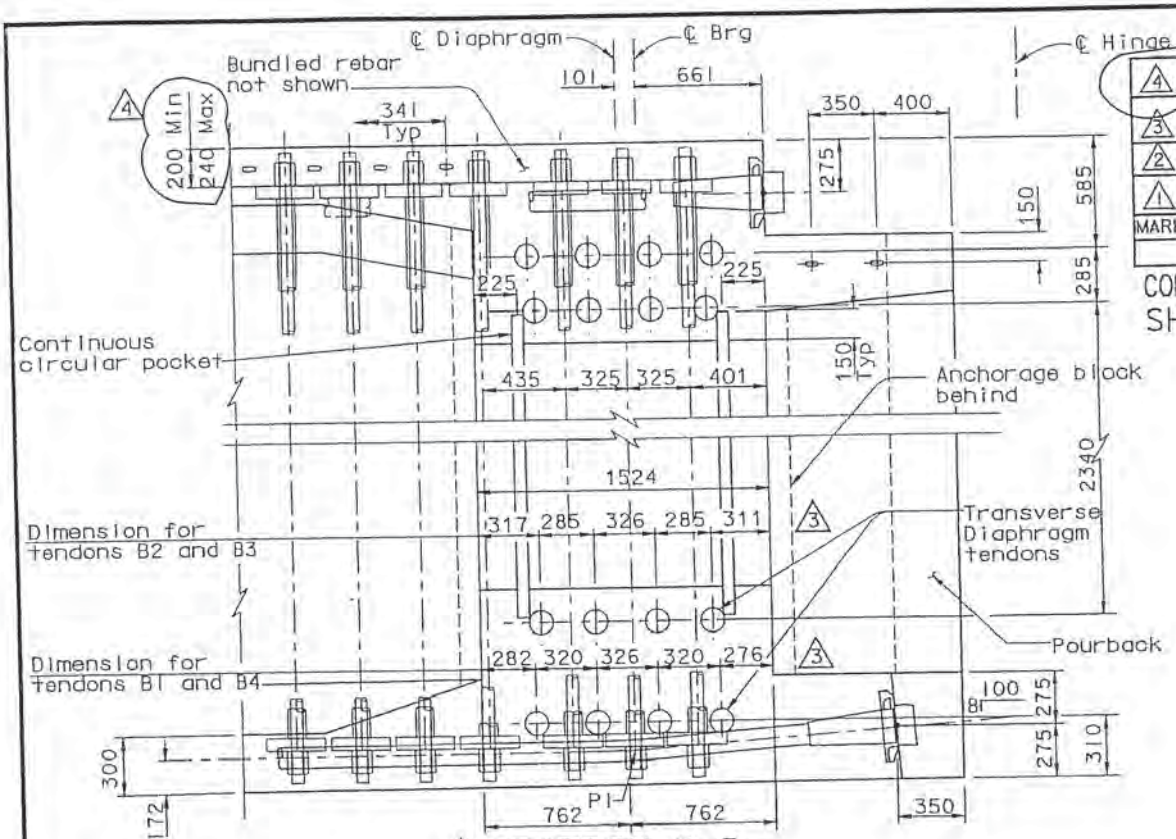

2 SECTION D-D

1:20

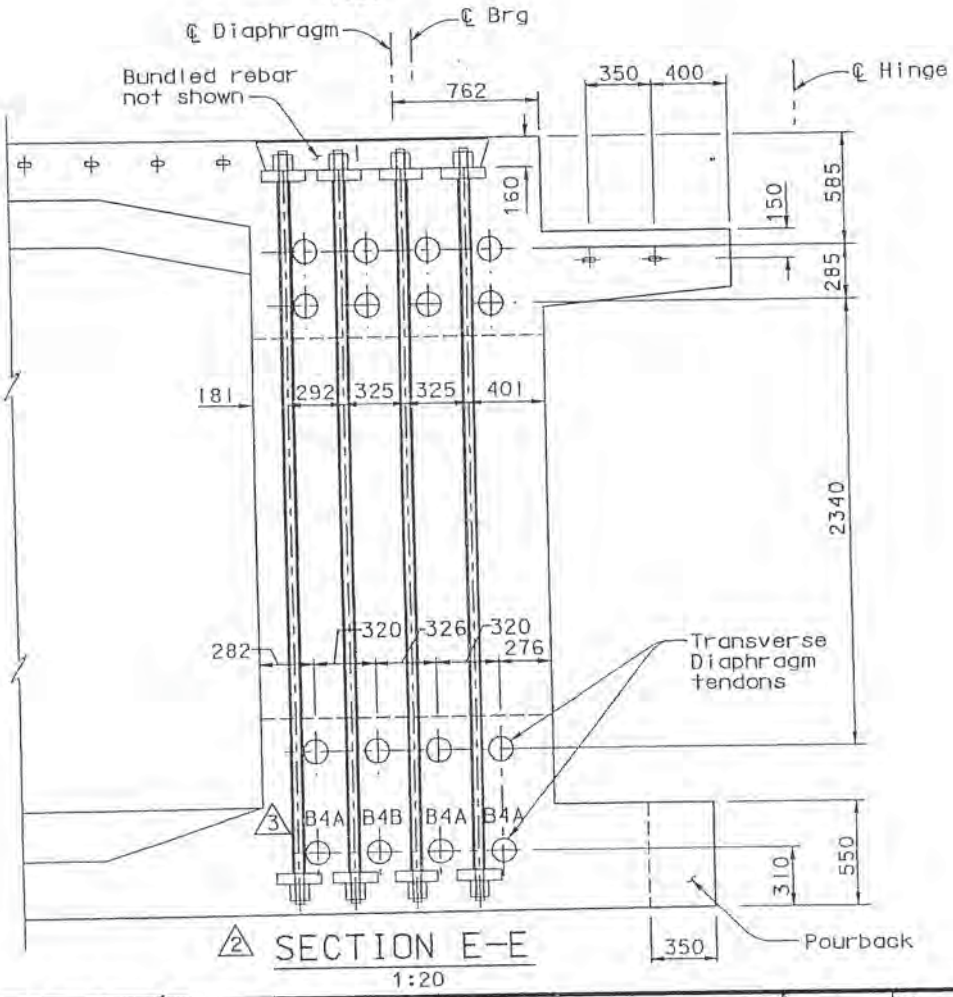

2 SECTION E-E

1:20

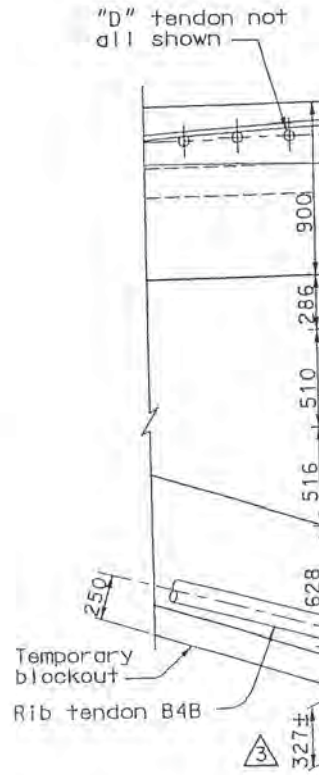

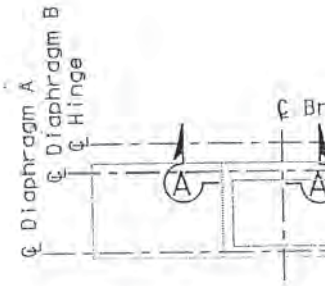

KEY PLAN-HINGE

NTS

DESIGN	BY R. Malik	CHECKED C. Werts	
DETAILS	BY S. Lee	CHECKED C. Werts	
QUANTITIES	BY R. Malik	CHECKED T. Nguyen	

DESIGN OVERSIGHT

12/19/03

SIGN OFF DATE

Rev. Date: 5-18-98

ORIGINAL SCALE IN MILLIMETERS FOR REDUCED PLANS

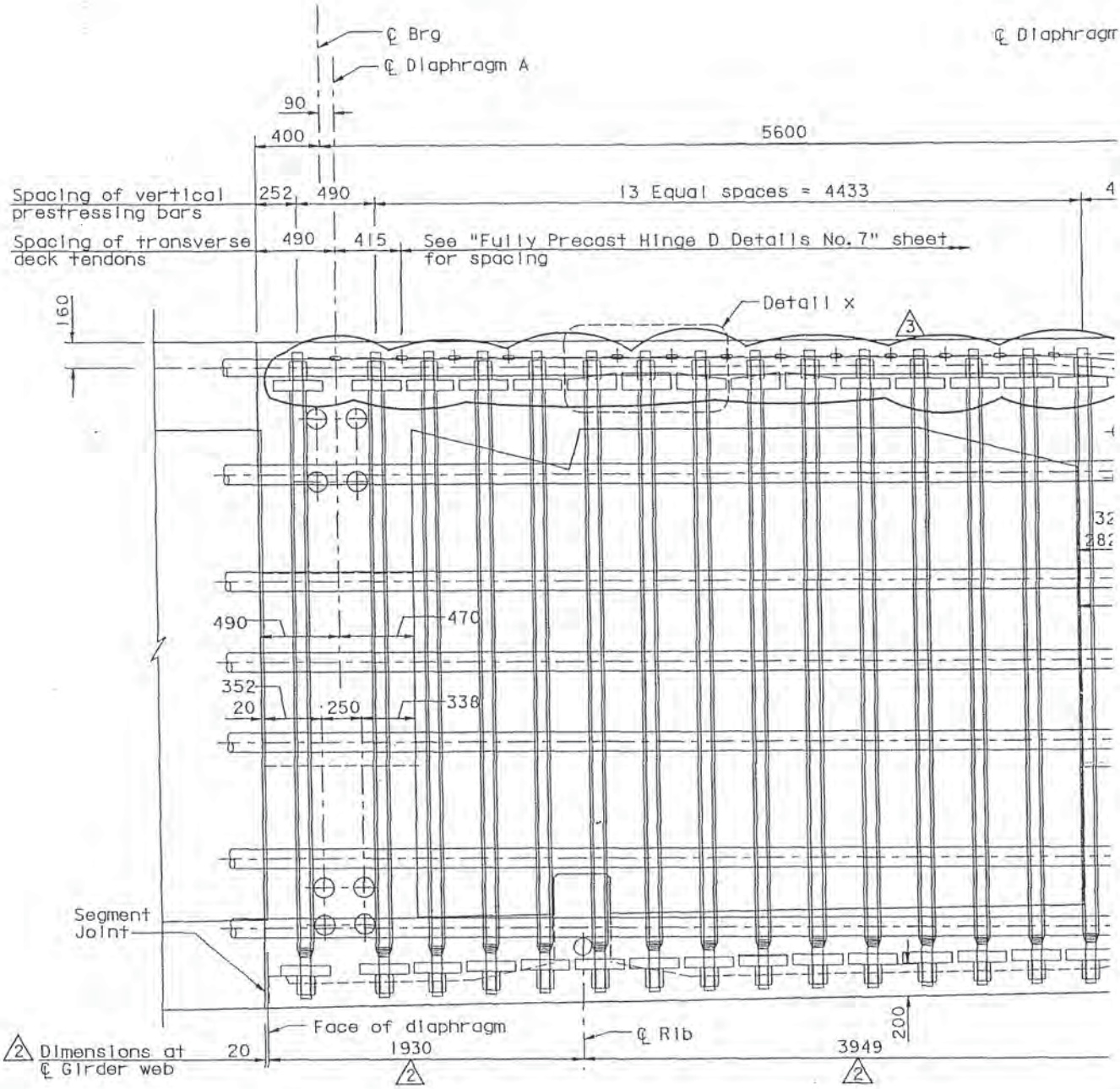

1 SECTION C-C
1:20

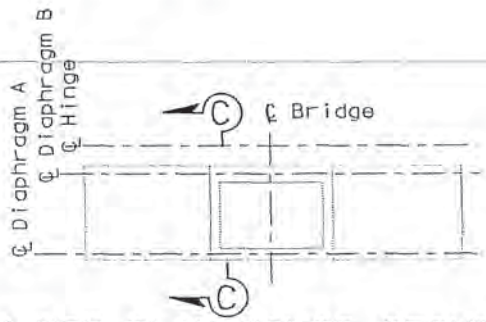

1 KEY PLAN-HINGE SEGMENT
NTS

DESIGN OVERSIGHT 12/19/03 SIGN OFF DATE	DESIGN	BY R. Malik/J. Otter	CHECKED E. Chan
	DETAILS	BY K. Tam	CHECKED J. Otter
	QUANTITIES	BY R. Malik	CHECKED T. Nguyen

Rev. Date: 5-18-88

ORIGINAL SCALE IN MILLIMETERS FOR REDUCED PLANS

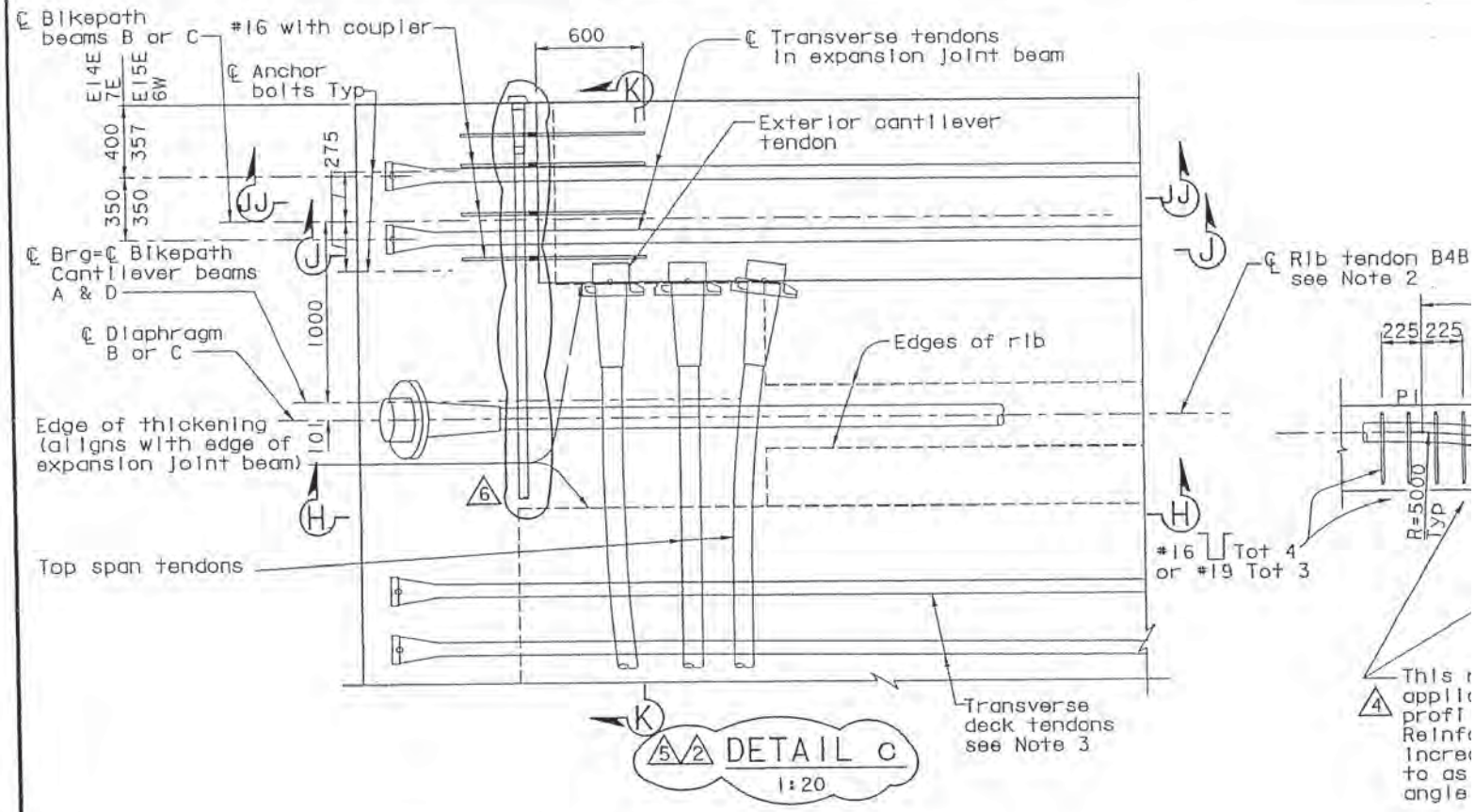

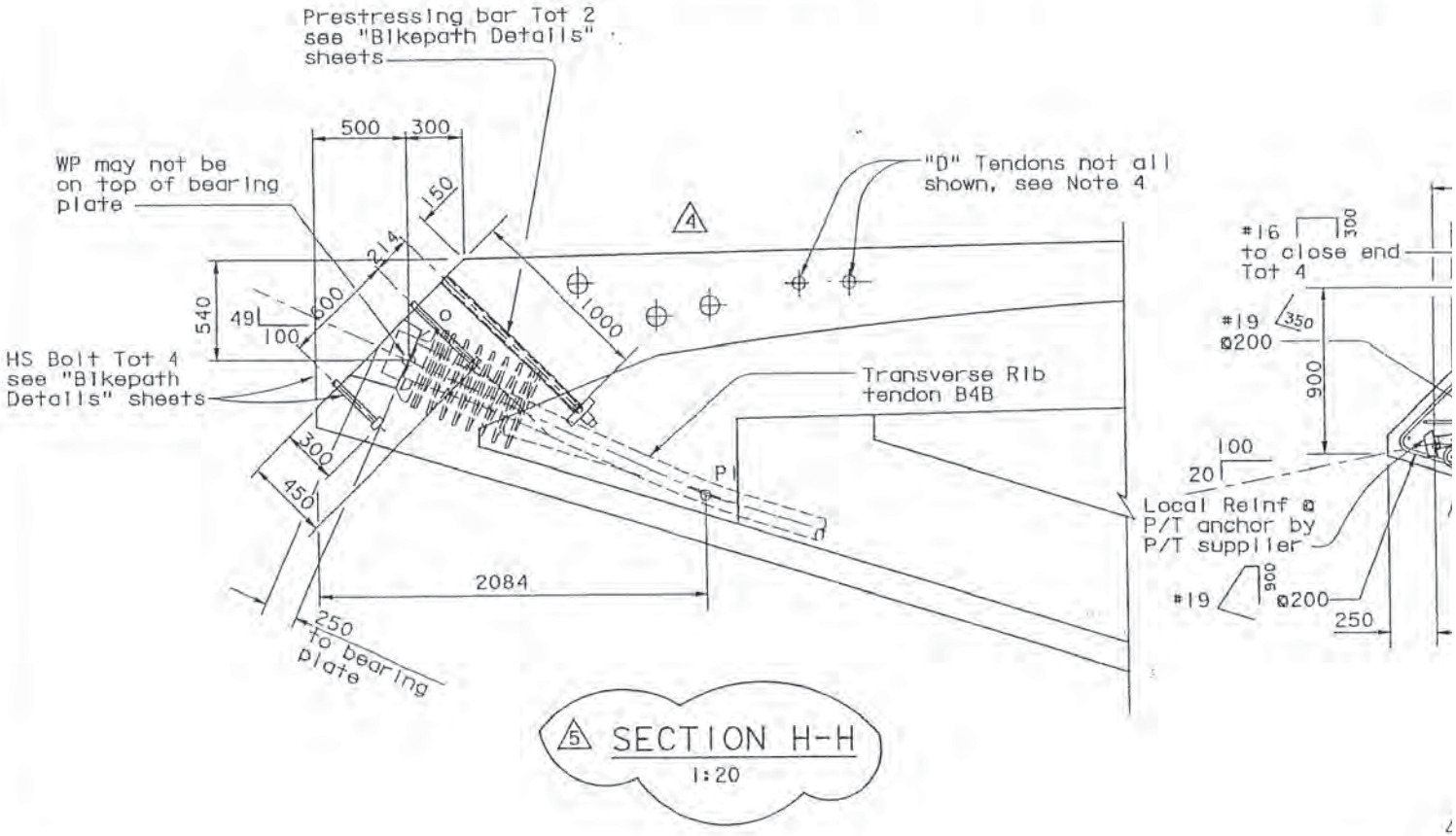

DESIGN OVERSIGHT	DESIGN	BY R. Malik	CHECKED C. Werts
SIGN OFF DATE 12/19/03	DETAILS	BY S. Lee	CHECKED C. Werts
	QUANTITIES	BY R. Malik	CHECKED T. Nguyen

Rev. Date: 5-18-98

ORIGINAL SCALE IN MILLIMETERS FOR REDUCED PLANS

Note: Terminate headed bars low only if required to clear tendon anchorages, front row only, Typ

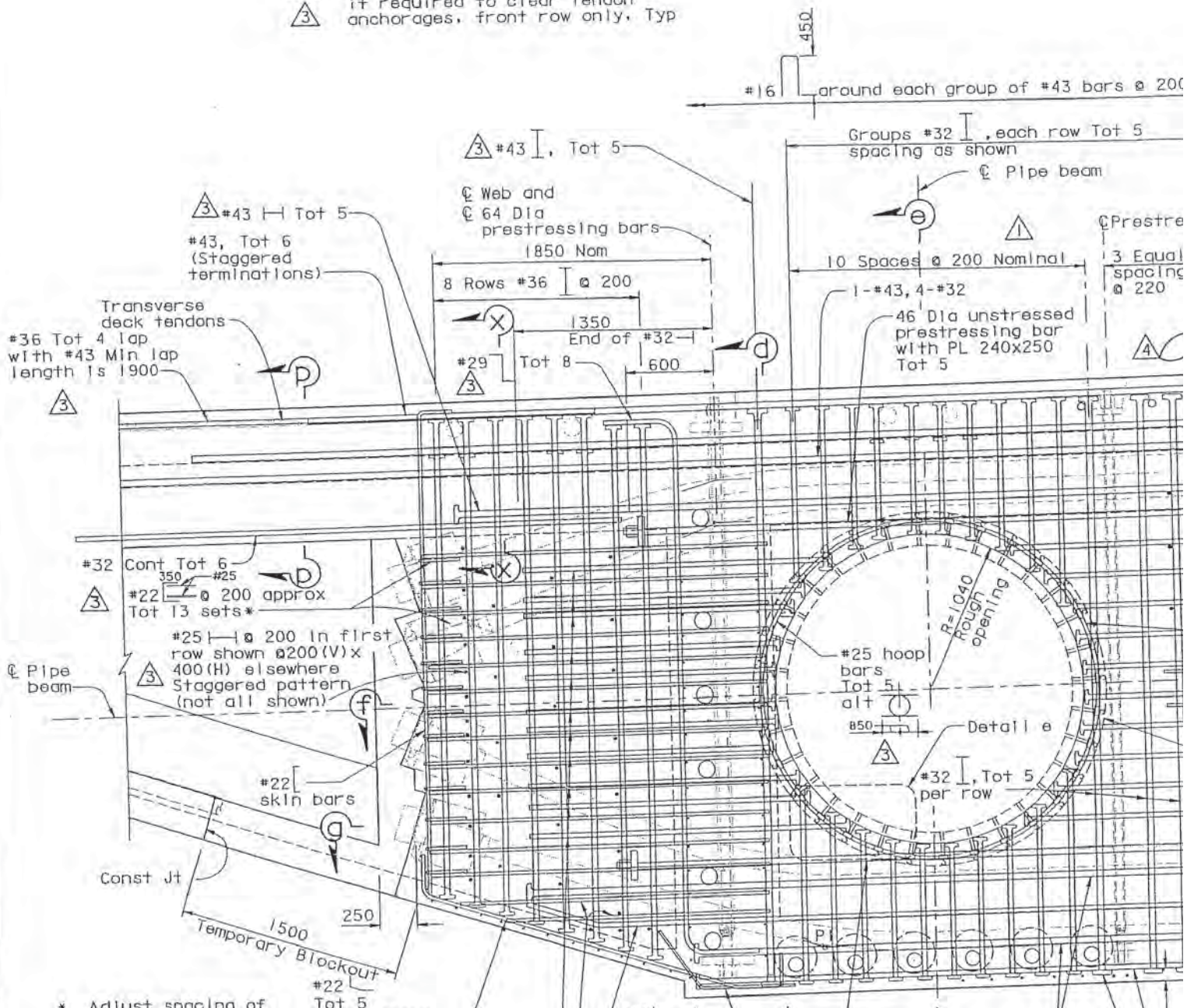

* Adjust spacing of #22 [at anchorages

KEY PLAN-HINGE D SEGMENT

NTS

SECTION A-A (Diaphragm B shown, Diaphragm C similar)

1:20

NOTES:

1. For Section e-e, see "Fully Precast Hinge D Detail No. 19" sheet.
2. For Sections f-f and x-x, see "Fully Precast Hinge D Details No. 18A" sheet.
3. For Section g-g, see "Fully Precast Hinge D Details No. 19" sheet.
4. For Section p-p, see "Fully Precast Hinge D Details No. 19" sheet.

DESIGN OVERSIGHT 12/19/03 SIGN OFF DATE	DESIGN BY E. Chan	CHECKED C. Werts
	DETAILS BY S. Lee	CHECKED C. Werts
	QUANTITIES BY E. Chan	CHECKED J. Leventini

Rev. Date: 5-18-98

ORIGINAL SCALE IN MILLIMETERS FOR REDUCED PLANS

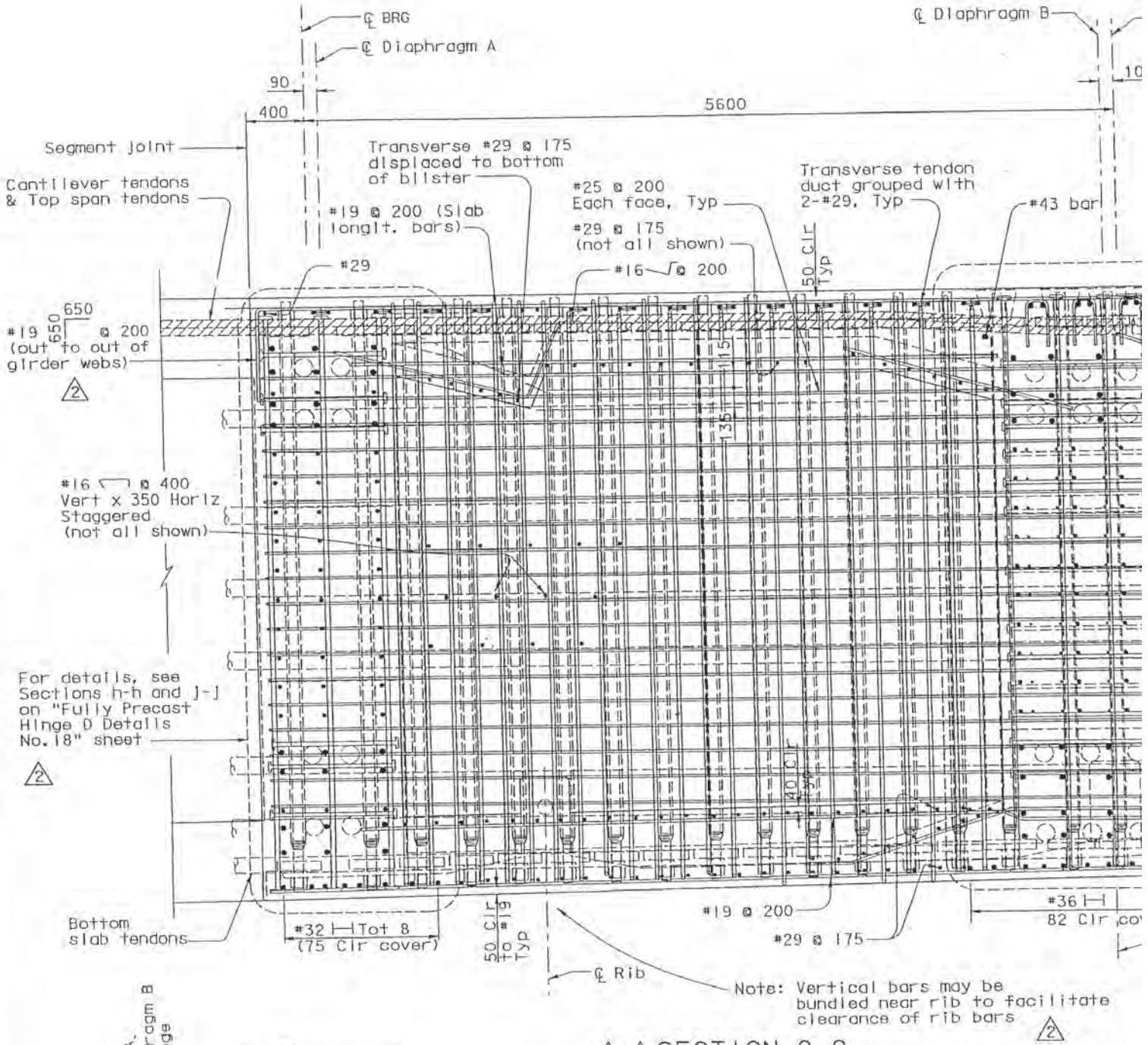

2 1 SECTION C-C

1:20

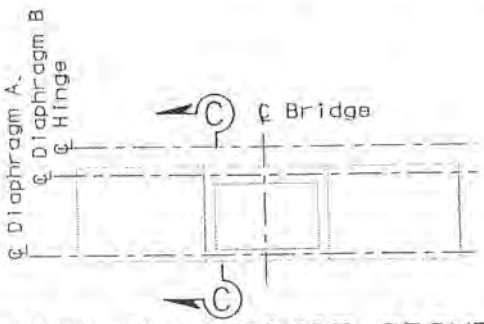

1 KEY PLAN-HINGE SEGMENT

NTS

MARK	DATE	DESCRIPTIONS	BY	CH'D	CCO#
3	12/17/03	ADD NOTE AS SHOWN	SS	SA	55
2	07/16/03	AS NOTED, FIX SHEET AND SECTION CALL OUT, DETAIL ADDED	RM	EC	
1	04/23/03	REMOVE CONTENTS OF SHT NO. 824R1, ADD SECTION AND DETAILS	RM	EC	

REVISIONS

CONTRACT CHANGE ORDER NO. 55

SHEET 50 OF 85

DESIGN OVERSIGHT

12/19/03

SIGN OFF DATE

DESIGN	BY R. Malik/J. Otter	CHECKED E. Chan	
DETAILS	BY K. Tam	CHECKED J. Otter	
QUANTITIES	BY R. Malik	CHECKED C. Werts	

Rev. Date: 5-18-98

ORIGINAL SCALE IN MILLIMETERS FOR REDUCED PLANS

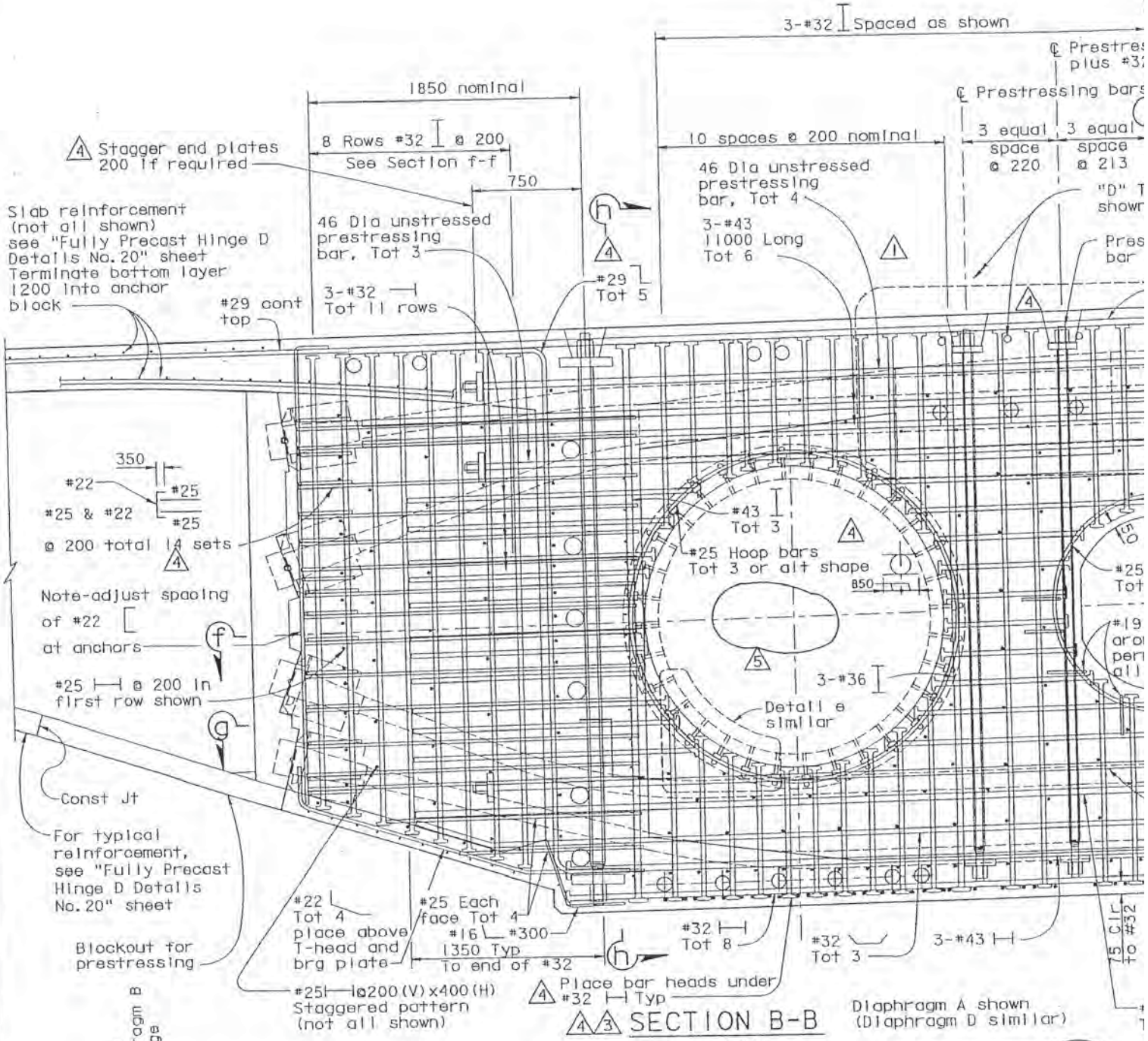

SECTION B-B

1:20

KEY PLAN-HINGE D SEGMENT

NTS

MARK	DATE	DESCRIPTIONS	BY	CH'D	CCO#
5	12/17/03	MODIFY REINFORCEMENT AS NOTED	SS	SA	55
4	07/16/03	MODIFY REINF. AND ADD NOTE 8. DELETE GROUP CAP	RM	EC	
3	04/23/03	MODIFY REINF. AND NOTES	RM	EC	
2	10/07/02	DELETE CIP TOP DCRK CLOSURE	EC	CR	
1	10/07/02	ADD "D" TENDONS	EC	CR	

REVISIONS

CONTRACT CHANGE ORDER NO. 55

SHEET 51 OF 85

DESIGN OVERSIGHT

12/19/03

SIGN OFF DATE

DESIGN	BY E. Chan	CHECKED C. Werts	
DETAILS	BY S. Lee	CHECKED C. Werts	
QUANTITIES	BY E. Chan	CHECKED J. Leventini	

Rev. Date: 5-18-98

ORIGINAL SCALE IN MILLIMETERS FOR REDUCED PLANS

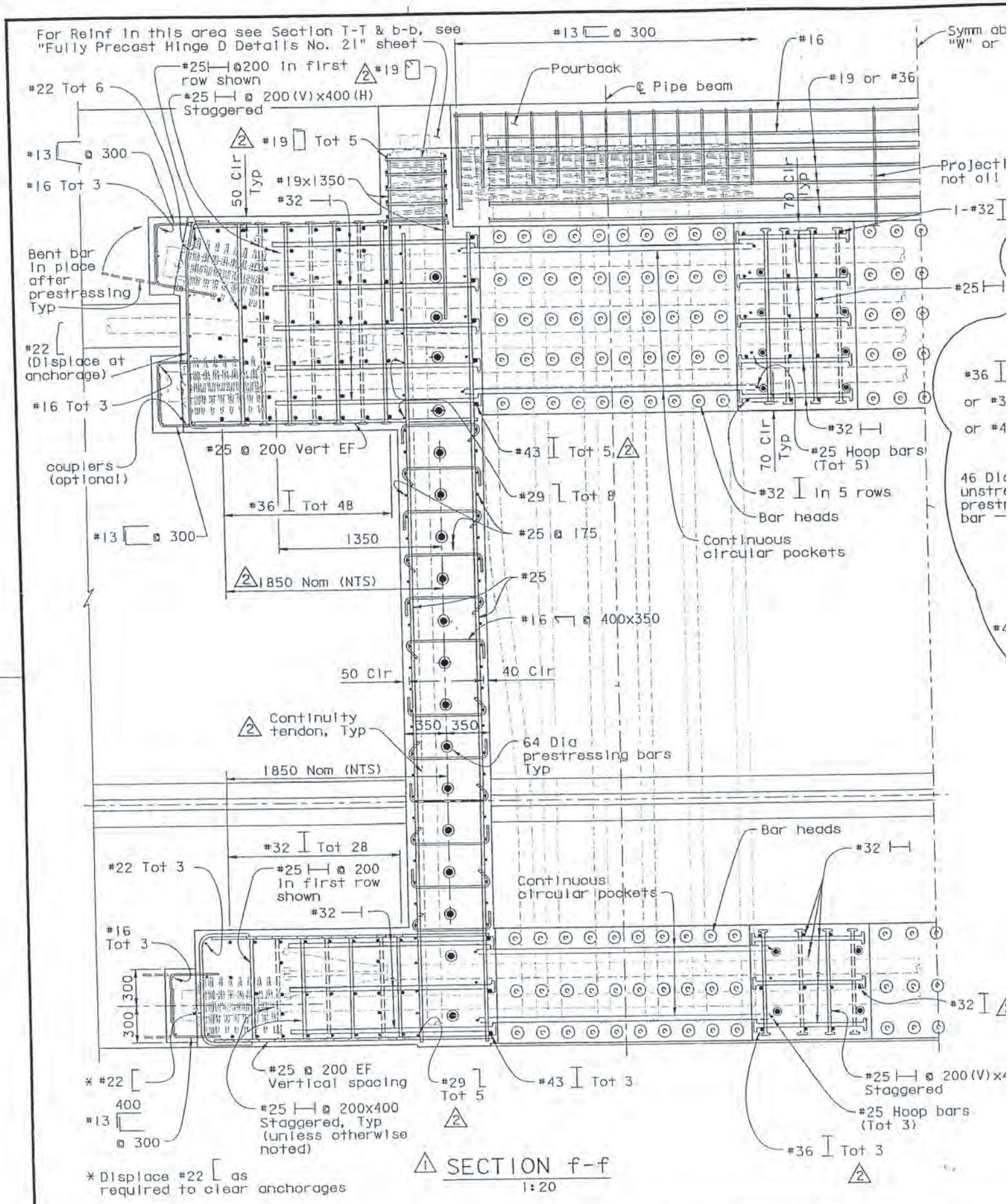

1 SECTION f-f
1:20

DESIGN OVERSIGHT 12/19/03 SIGN OFF DATE	DESIGN	BY R. Malik/J. Otter	CHECKED E. Chan
	DETAILS	BY K. Tam	CHECKED J. Otter
	QUANTITIES	BY J. Otter	CHECKED J. Leventini

Rev. Date: 5-18-98

ORIGINAL SCALE IN MILLIMETERS FOR REDUCED PLANS

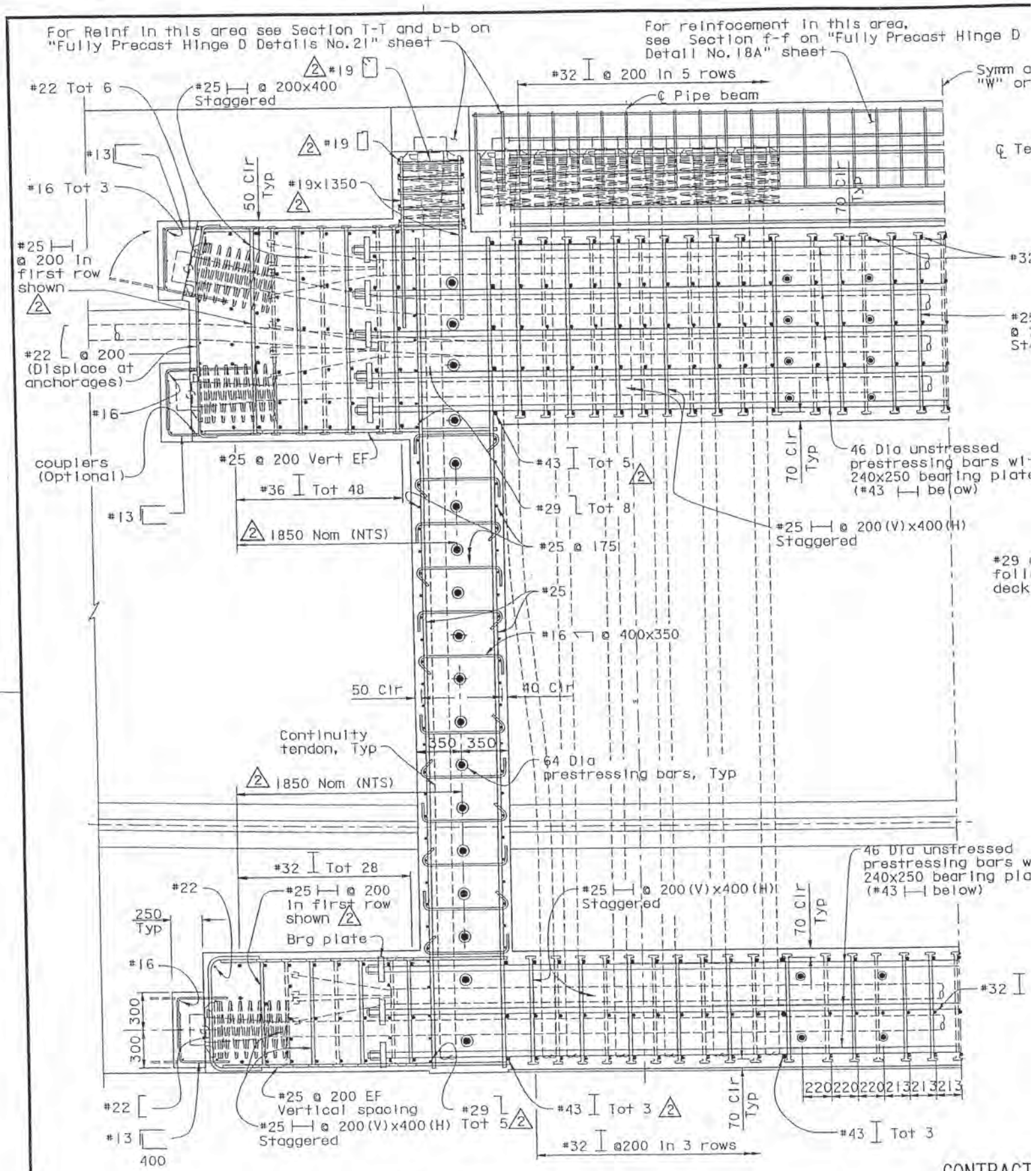

CONTRACT SHEET

SECTION g-g

1:20

DESIGN OVERSIGHT	DESIGN	BY R. Malik/J. Otter	CHECKED E. Chan
12/19/03	DETAILS	BY K. Tam	CHECKED J. Otter
SIGN OFF DATE	QUANTITIES	BY J. Otter	CHECKED J. Leventini

Rev. Date: 5-18-98

ORIGINAL SCALE IN MILLIMETERS FOR REDUCED PLANS

This portion applies between diaphragms only

Symm about "W" or "E" Line unless otherwise shown

#16 [@ 400 EA way (150)

2-#25

#19 @ 200

#19 @ 200

1200 Typ

50 Clr

1200

#29 @ 175

1200 Typ

40 Clr

#16 @ 400 Max EA way Alt hooks **

#25 @ 1

50 Clr

#29 @ 175 **

40 Clr

#25] @ 1

100

100

#19 @ 200 Top

#19 @ 175 **

#29 Cont @ 175 **

Limit of Optional "Structure Concrete, Lightweight" (f'c = 45 MPa @ 28 days, n=8) (Contractor's option)

#29 @ 175 **

Detail

Detail

2-#25

#16 [@ EA #19 at slab transition only

#19 @ 200 Bottom

"D" tend not show

Terminate at web verticals

℄ Girder

#25]

Prestressing bar

#25

#25 (Adjust to clear tendon)

** Bars designated are omitted within diaphragm widths

#19

Omit haunch bar @ ribs

663 Min

75

#22

2-#16x1700

TYPICAL SECTION (AT HINGE SEGMENTS)

SEGMENT 7E SHOWN

SEGMENT 6W SIMILAR

1:50

2-#16x1600

#19

#25 **

#19

#22 **

Hinge rib tendon (12-15 Dia)

#22 800 Rib bars

CIP panel

#29

R=5000 Min

200 c-c Max @ bottom

Bottom span tendons

#25

40 Clr Min

** Lap these bars class C @ locations convenient for Contractor's chosen construction sequence

#19 Cont @ 200 Adjust to clear tendon

DETAIL N1 (@ Rib 'R')

1:20

℄ Rib

#25 See Note 1

#19 @ 200

#29

40 Clr, Typ

#19

50 Clr

#29

#25

#19 (rib stl

℄ Bar = ℄ Girder

40 Clr

50 Clr

#25 cont above bearing plates, Tot 2/girder

#25

Continuity tendons (Typ)

SECTION r-r

1:20

CONTRACT CHANG

SHEET 54 OF 8

2800

#25 @200

#19 @175 bent to clear tendon, omit at rib

#25

℄ Rib 'R'

#25

#19 @ 200 ***

#22 Tot 3

#29@175

#16 @ 300

#16 @ 300

#13 300 @ 300

#16 [at EA #19

250

#16

#16

#16

50 Clr

150

40 Clr

#16 @

CIP panel

#22 500

Bottom span tendons

#29

50 Max

#25

#16 @ 300 Place on top of P/T bar anchor plates

#19 @ 200

*** Interrupt these bar

DETAIL N (Typical)

1:20

Varies 151 to 223

SECTI

1:2

DESIGN OVERSIGHT 12/19/03	DESIGN	BY E. Chan	CHECKED C. Werts
	DETAILS	BY S. Lee	CHECKED C. Werts
SIGN OFF DATE	QUANTITIES	BY E. Chan	CHECKED J. Leventini

Rev. Date: 5-18-98

ORIGINAL SCALE IN MILLIMETERS FOR REDUCED PLANS

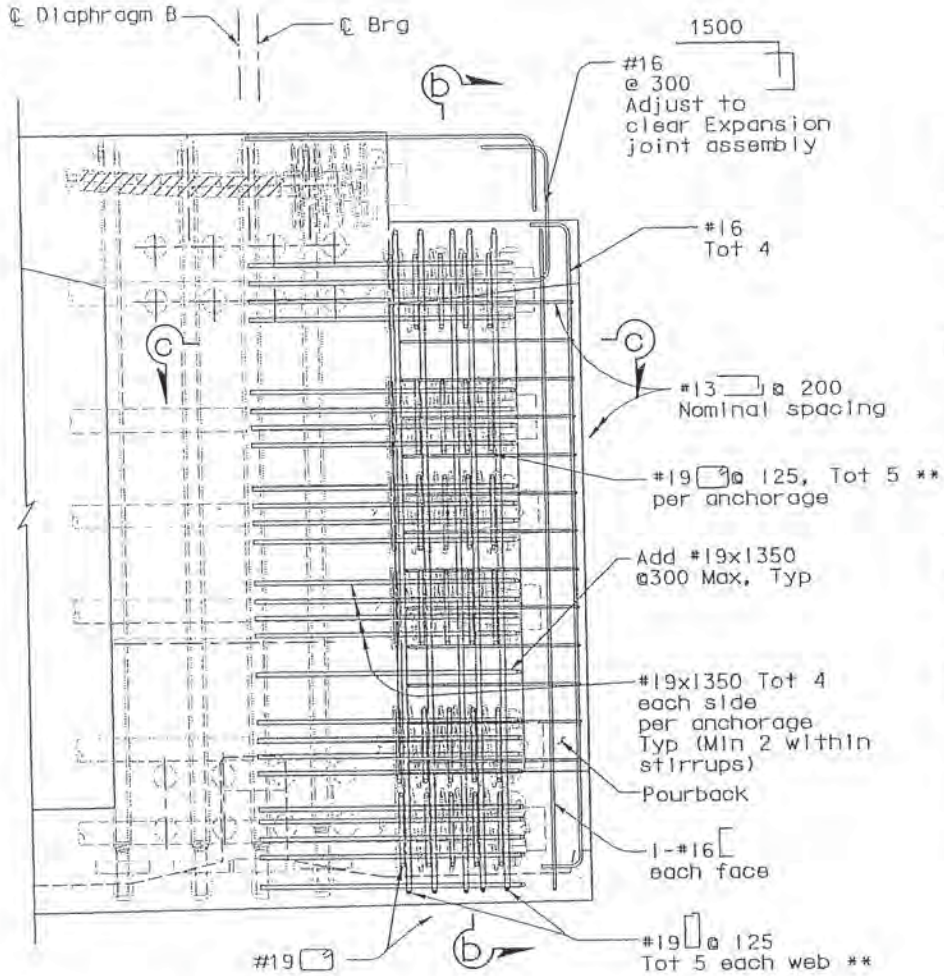

2 1 SECTION T-T
1:20

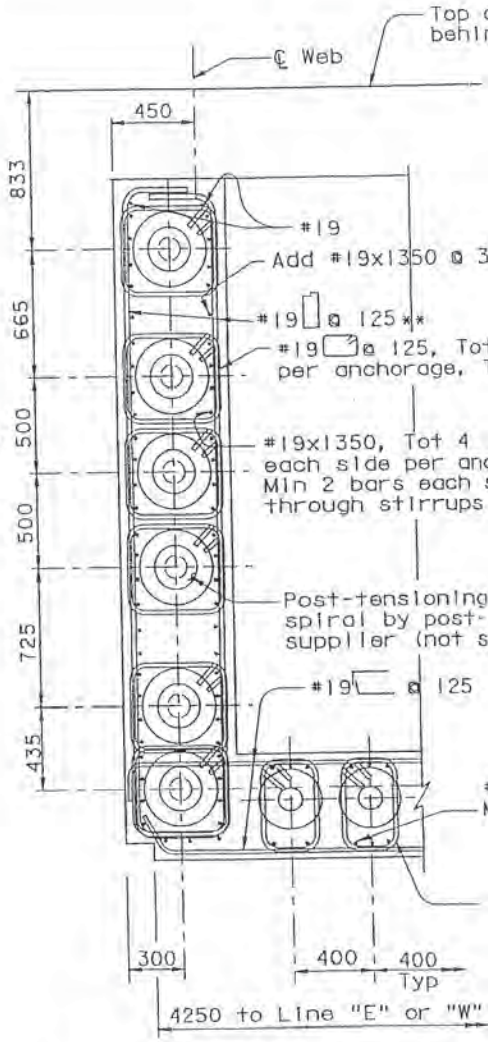

2 1 SECTION b-b
1:20

2 ** Contractor to reduce quantity of these b
If llp is shortened. Maintain Max 125 C/

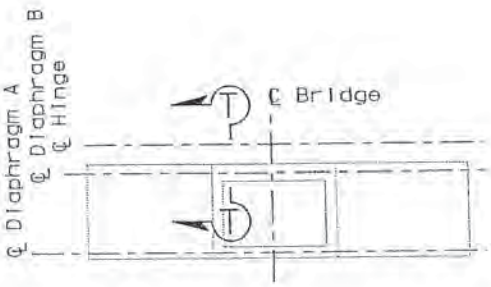

1 KEY PLAN-HINGE D SEGMENT
NTS

DESIGN OVERSIGHT 12/19/03 SIGN OFF DATE	DESIGN	BY E. Chan	CHECKED C. Werts
	DETAILS	BY K. Lo	CHECKED C. Werts
	QUANTITIES	BY E. Chan	CHECKED J. Leventini

Rev. Date: 5-18-98

ORIGINAL SCALE IN MILLIMETERS FOR REDUCED PLANS

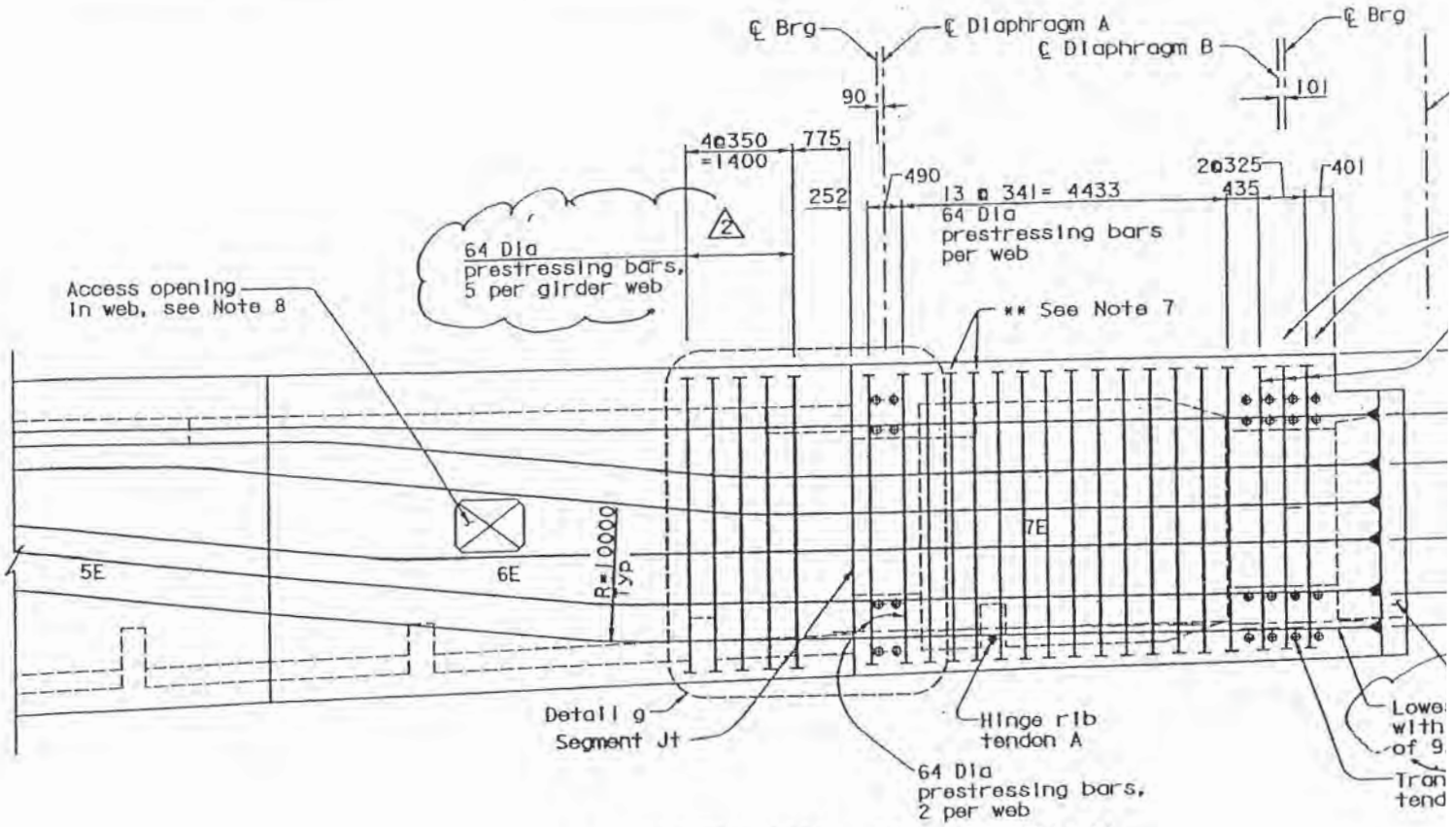

1 LONGITUDINAL WEB SECTION

1:50

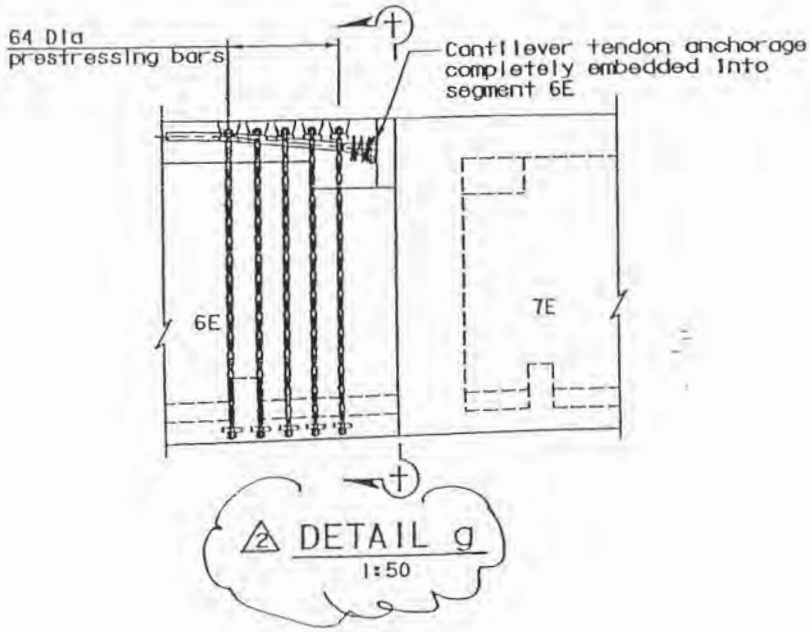

2 DETAIL g

1:50

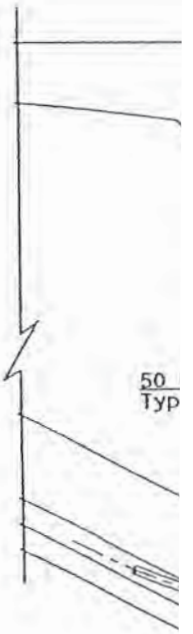

DESIGN OVERSIGHT 7/24/03	DESIGN	BY R. Malik/J. Otter	CHECKED E. Chan
SIGN OFF DATE	DETAILS	BY K. Tam	CHECKED J. Otter
	QUANTITIES	BY J. Otter	CHECKED E. Chan

Rev. Date: 5-16-90

ORIGINAL SCALE IN MILLIMETERS FOR REDUCED PLANS 0 10

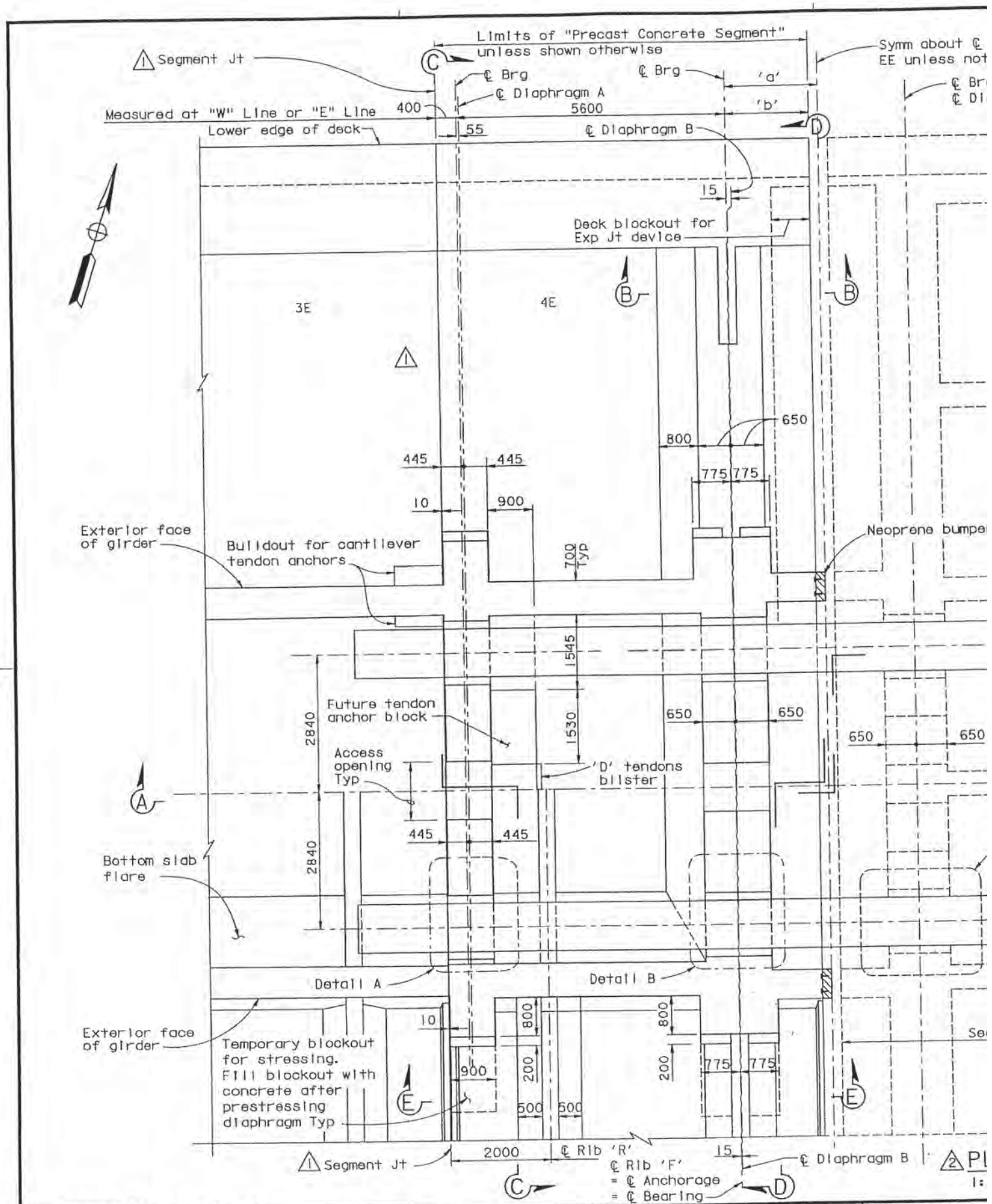

DESIGN OVERSIGHT 1/16/04	DESIGN	BY J. Krizek/C. Redfield	CHECKED	C. Werts
SIGN OFF DATE	DETAILS	BY A. Lishansky	CHECKED	C. Werts
	QUANTITIES	BY J. Chan	CHECKED	S. Shi

Rev. Date: 5-18-98

ORIGINAL SCALE IN MILLIMETERS FOR REDUCED PLANS

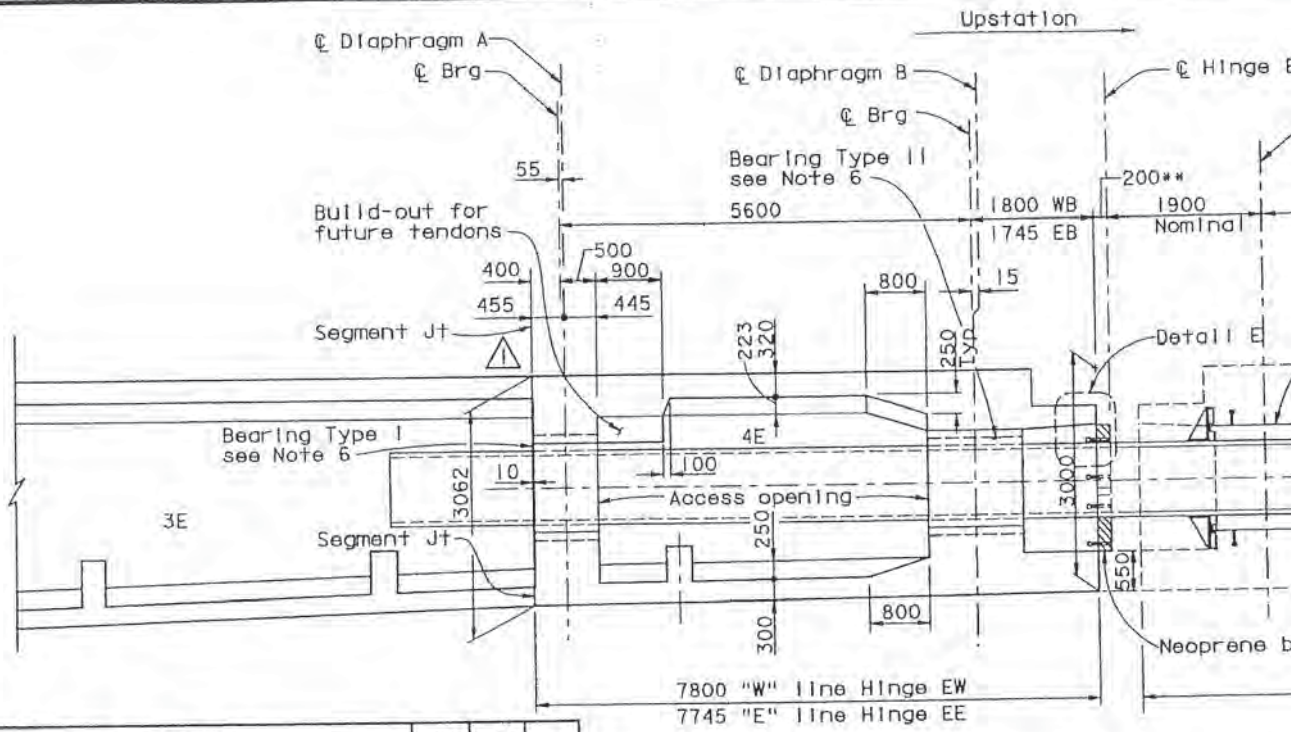

SECTION A-A

1:50

MARK	DATE	DESCRIPTIONS	BY	CH'D	CCO#
2	08/22/03	ADJUST FORM GEOMETRY	CR	EC	
1	10/07/02	DELETE CIP TOP DECK CLOSURE	EC	CR	

REVISIONS

CONTRACT CHANGE ORDER NO. 55
SHEET 58 OF 85

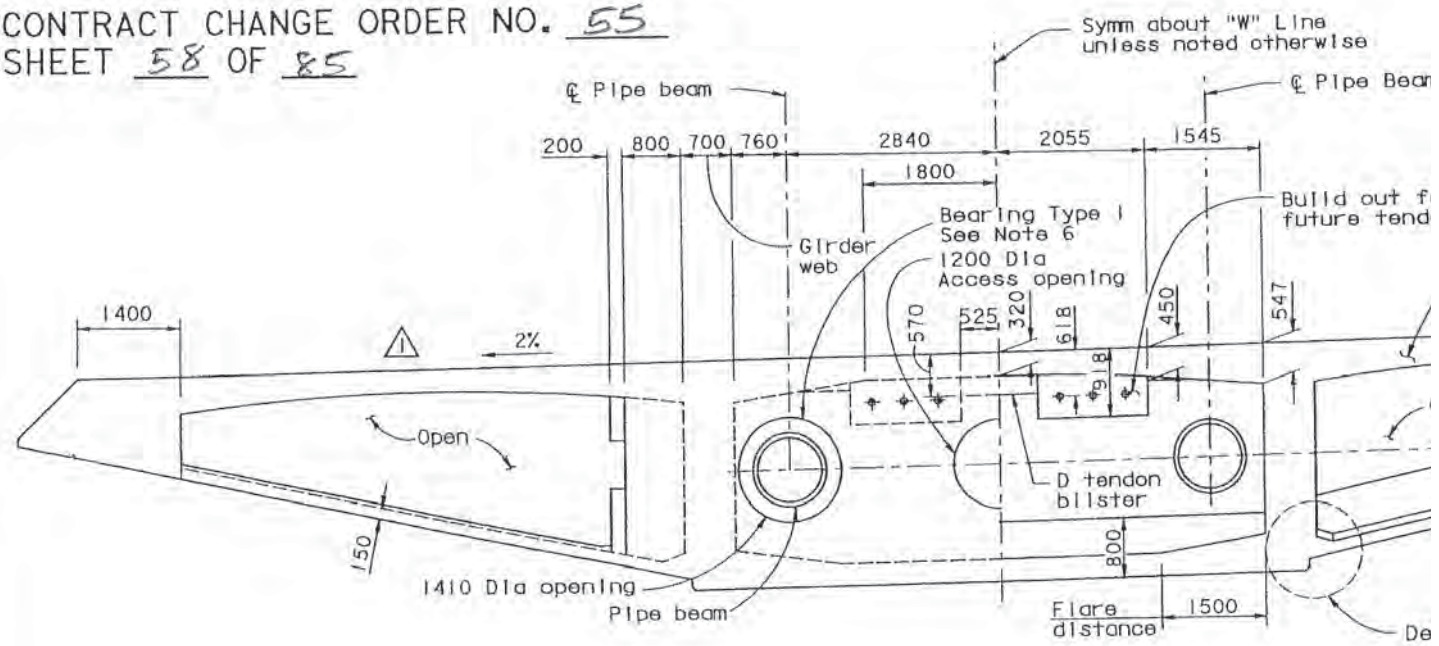

SECTION C-C

1:50

7 REVISED PER ADDENDUM NO. 7 DATED NOVEMBER 2,

DESIGN OVERSIGHT
SIGN OFF DATE 1/16/04

DESIGN	BY J. Krizek/C. Redfield	CHECKED C. Werts	
DETAILS	BY A. Lishansky	CHECKED C. Werts	
QUANTITIES	BY J. Chan	CHECKED S. Shi	

Rev. Date: 5-18-98

ORIGINAL SCALE IN MILLIMETERS FOR REDUCED PLANS

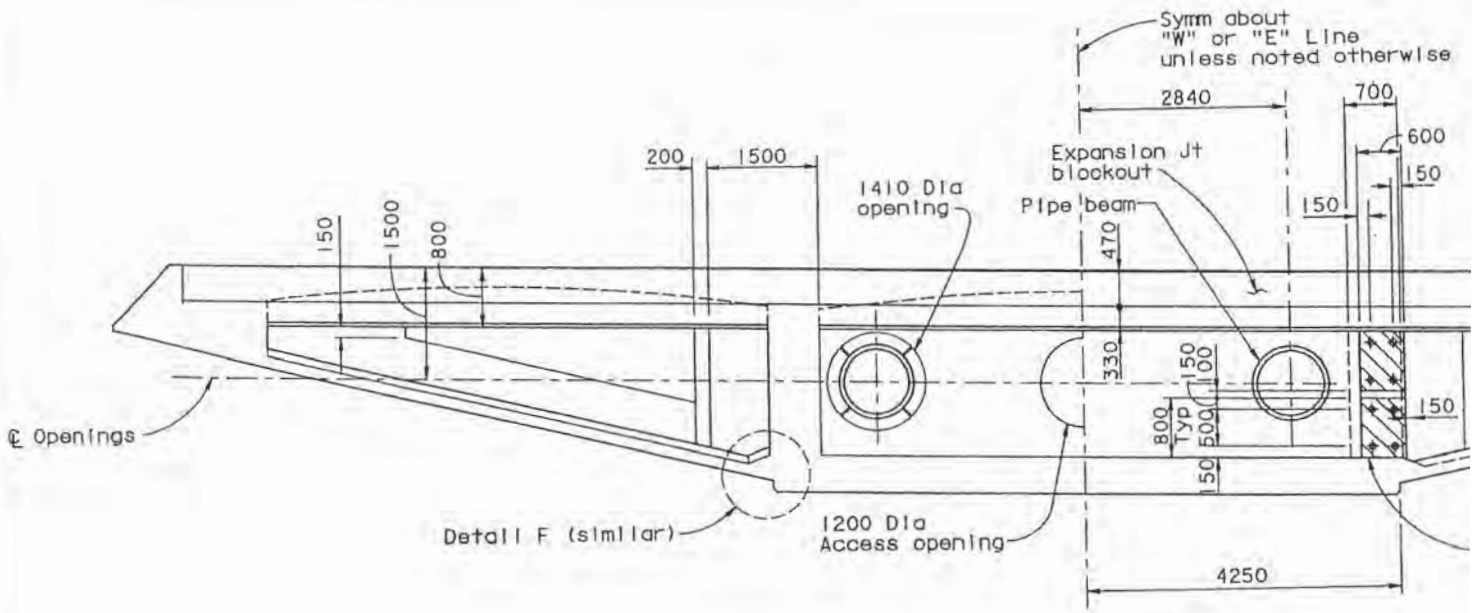

SECTION D-D

1:50

Measured at "W" Line or "E" Line

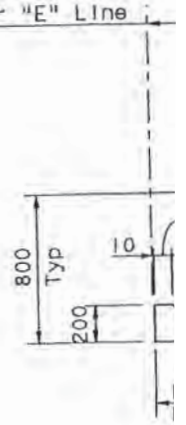

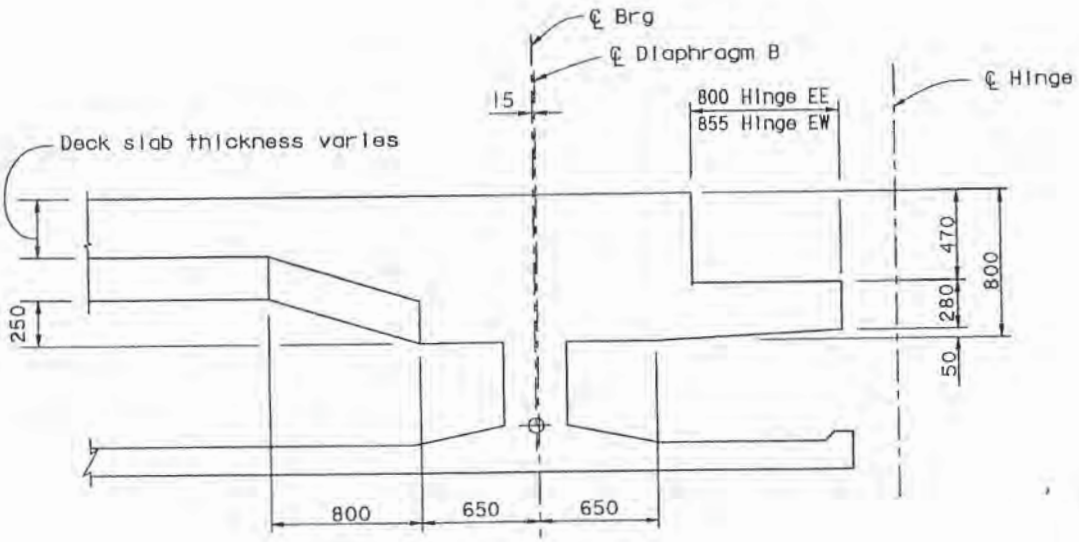

SECTION B-B

1:20

MARK	DATE	
1	08/22/03	ADJUST F

CONTRACT C
SHEET 59

DESIGN OVERSIGHT		DESIGN	BY J. Krizek/C. Redfield	CHECKED C. Werts	
1/16/04		DETAILS	BY A. Lishansky	CHECKED C. Werts	
SIGN OFF DATE		QUANTITIES	BY J. Chan	CHECKED L. Greer	

Rev. Date: 5-18-98

ORIGINAL SCALE IN MILLIMETERS FOR REDUCED PLANS

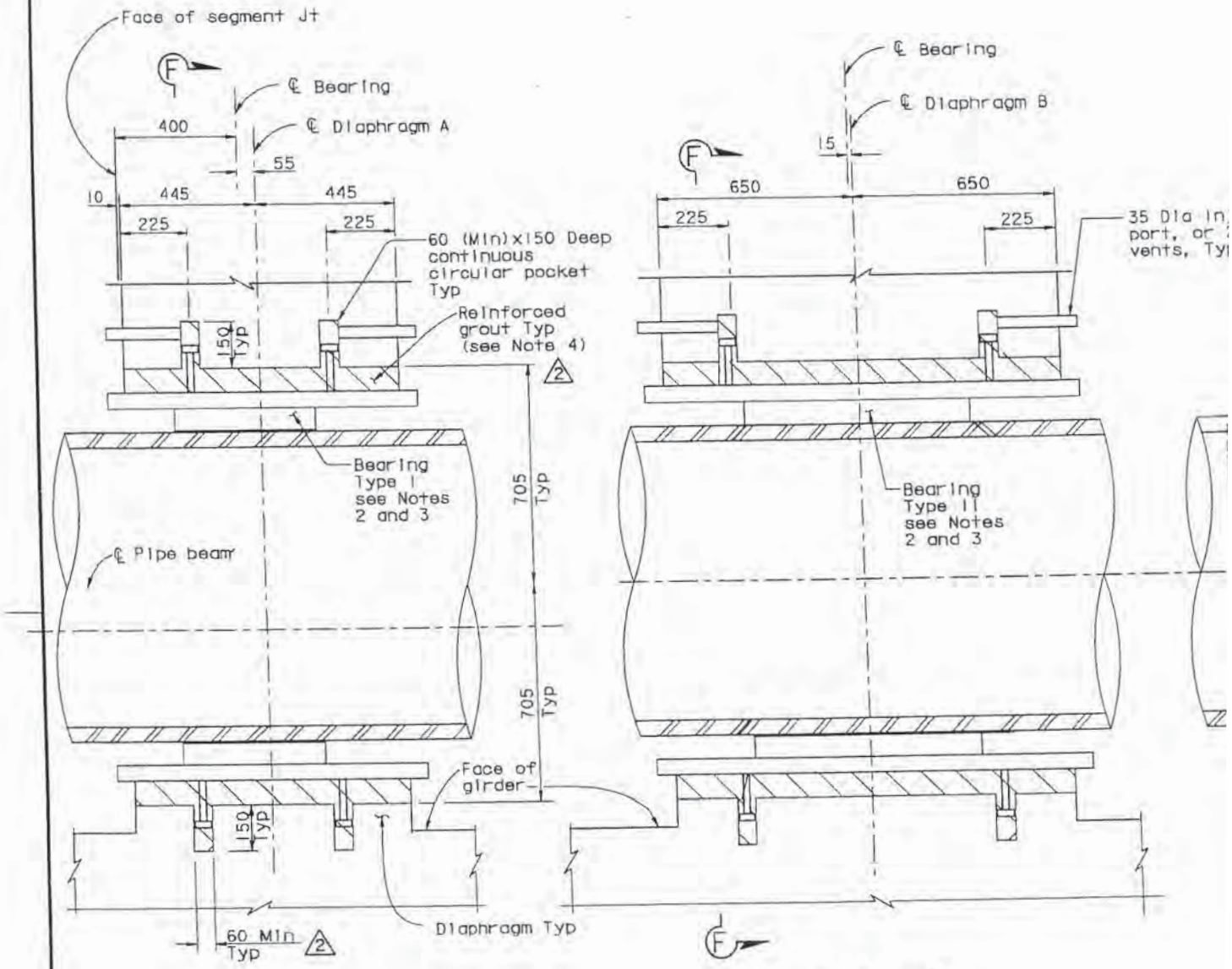

△1 DETAIL A
1:10

△1 DETAIL B
1:10

DESIGN OVERSIGHT 11/21/03 SIGN OFF DATE	for Hassan El-Hafez	DESIGN	BY J. Krizek/C. Redfield	CHECKED C. We
		DETAILS	BY A. Lishansky	CHECKED C. W
		QUANTITIES	BY T. West	CHECKED L. C

Rev. Date: 5-18-98

ORIGINAL SCALE IN MILLI FOR REDUCED PLANS

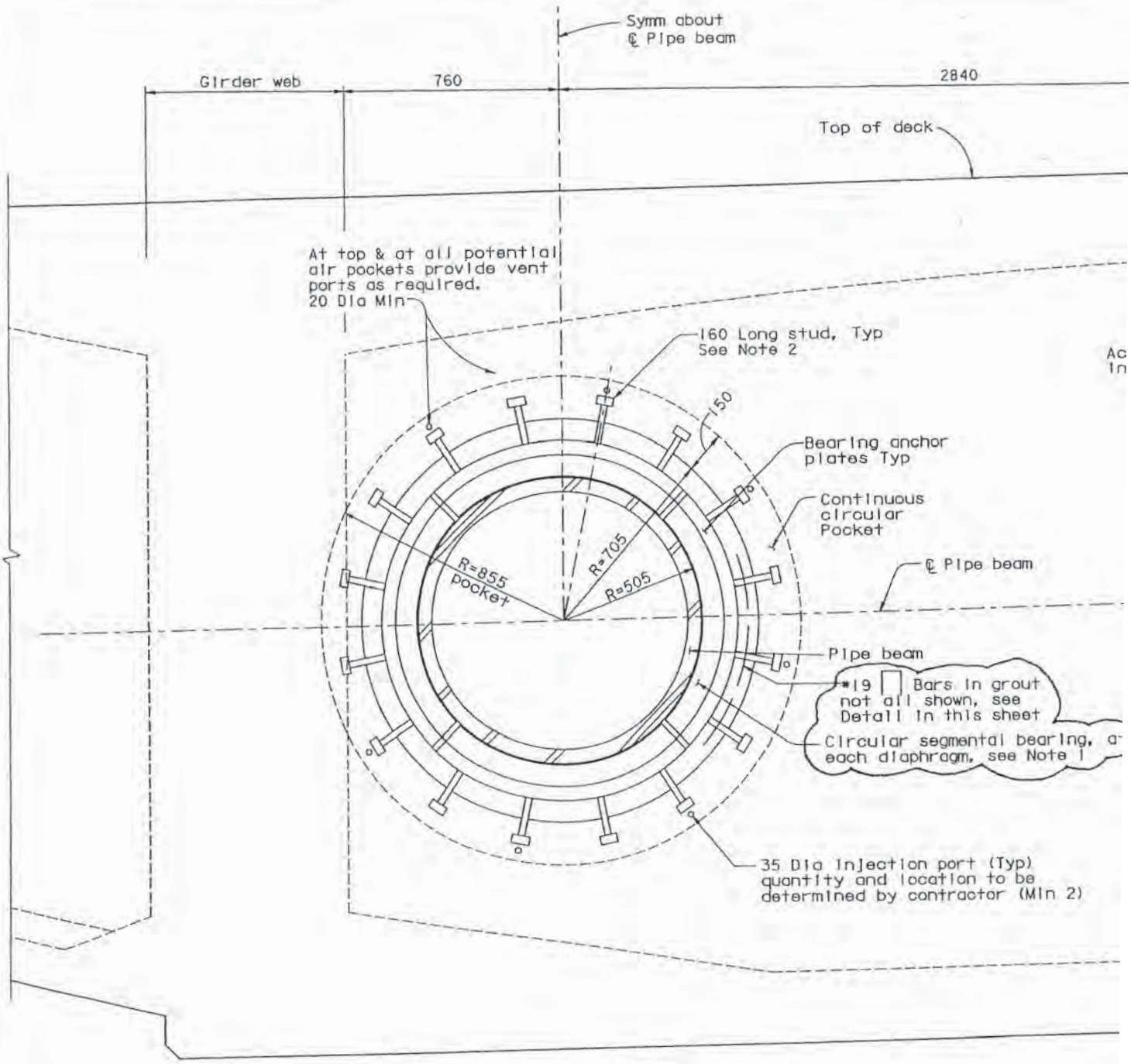

2 1 SECTION F-F

1:10

2 * Reduce to #13 bars wherever grout thickness will be 30 min or less

(Diaphragm A shown Diaphragms B is similar)

DESIGN OVERSIGHT 1/14/04 SIGN OFF DATE	DESIGN	BY J. Krizek/C. Redfield	CHECKED C. Werts
	DETAILS	BY A. Lishansky	CHECKED C. Werts
	QUANTITIES	BY T. West	CHECKED L. Greer

Rev. Date: 5-18-98

ORIGINAL SCALE IN MILLIMETERS FOR REDUCED PLANS

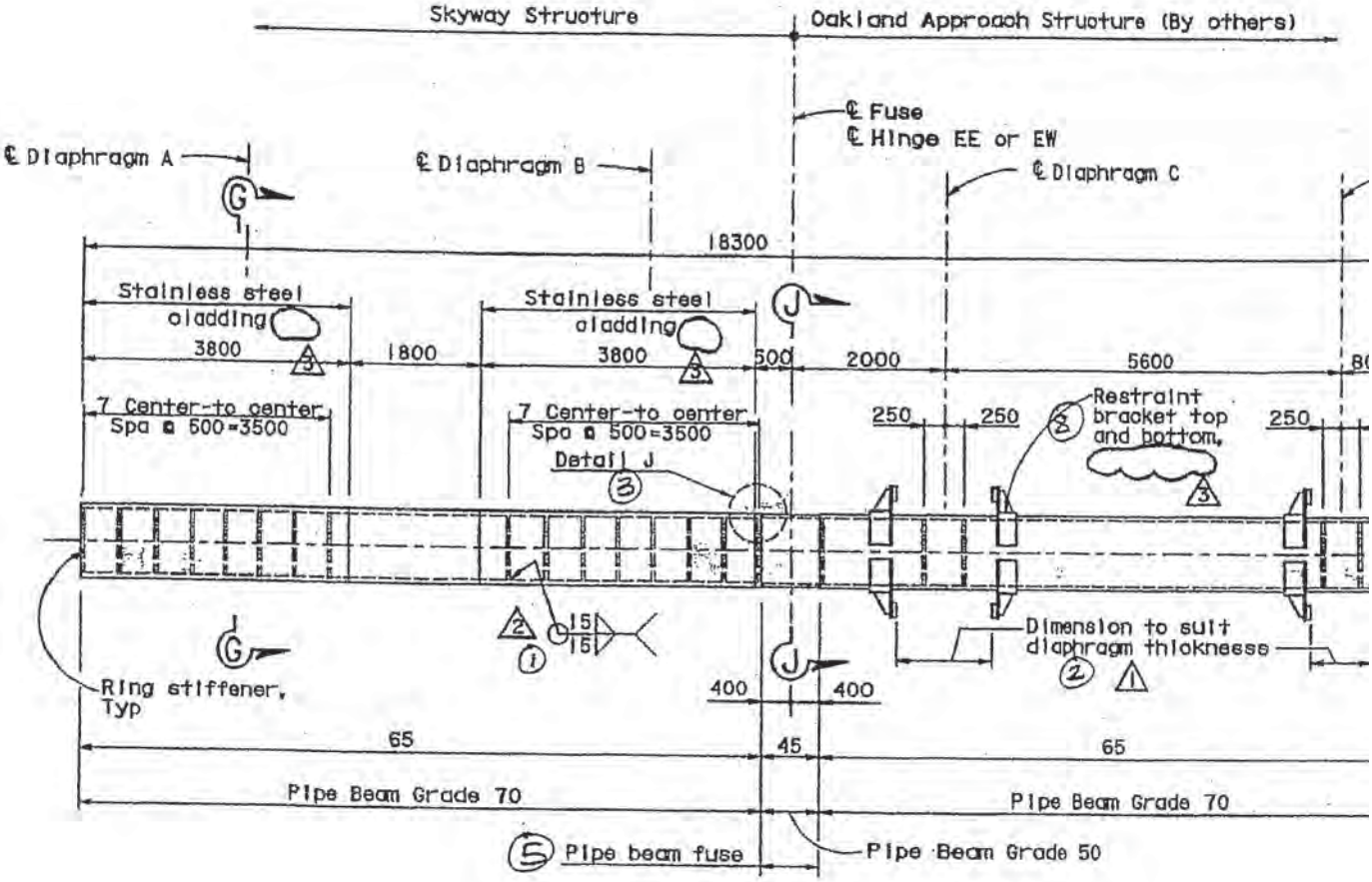

PIPE BEAM ELEVATION

1:50

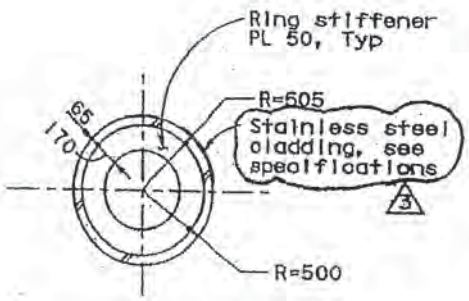

SECTION G-G

1:25

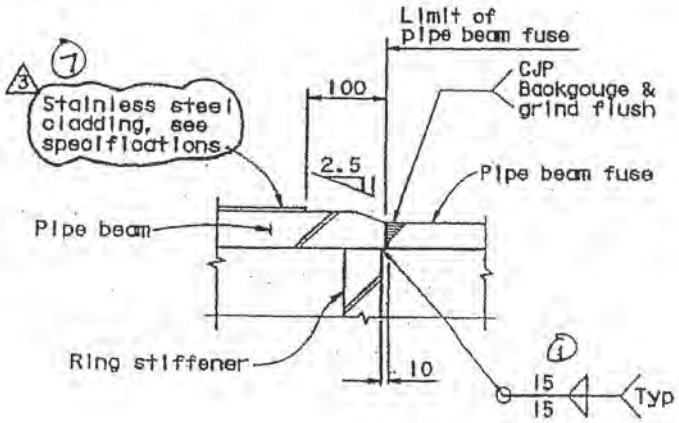

DETAIL J

1:5

DESIGN OVERSIGHT 1/16/04	DESIGN	BY R. Malik	CHECKED C. Werts
SIGN OFF DATE	DETAILS	BY A. Lishansky	CHECKED C. Werts
Rev. Dates 5-18-96	QUANTITIES	BY R. Malik	CHECKED T. West

ORIGINAL SCALE IN MILLIMETERS FOR REDUCED PLANS 0 10

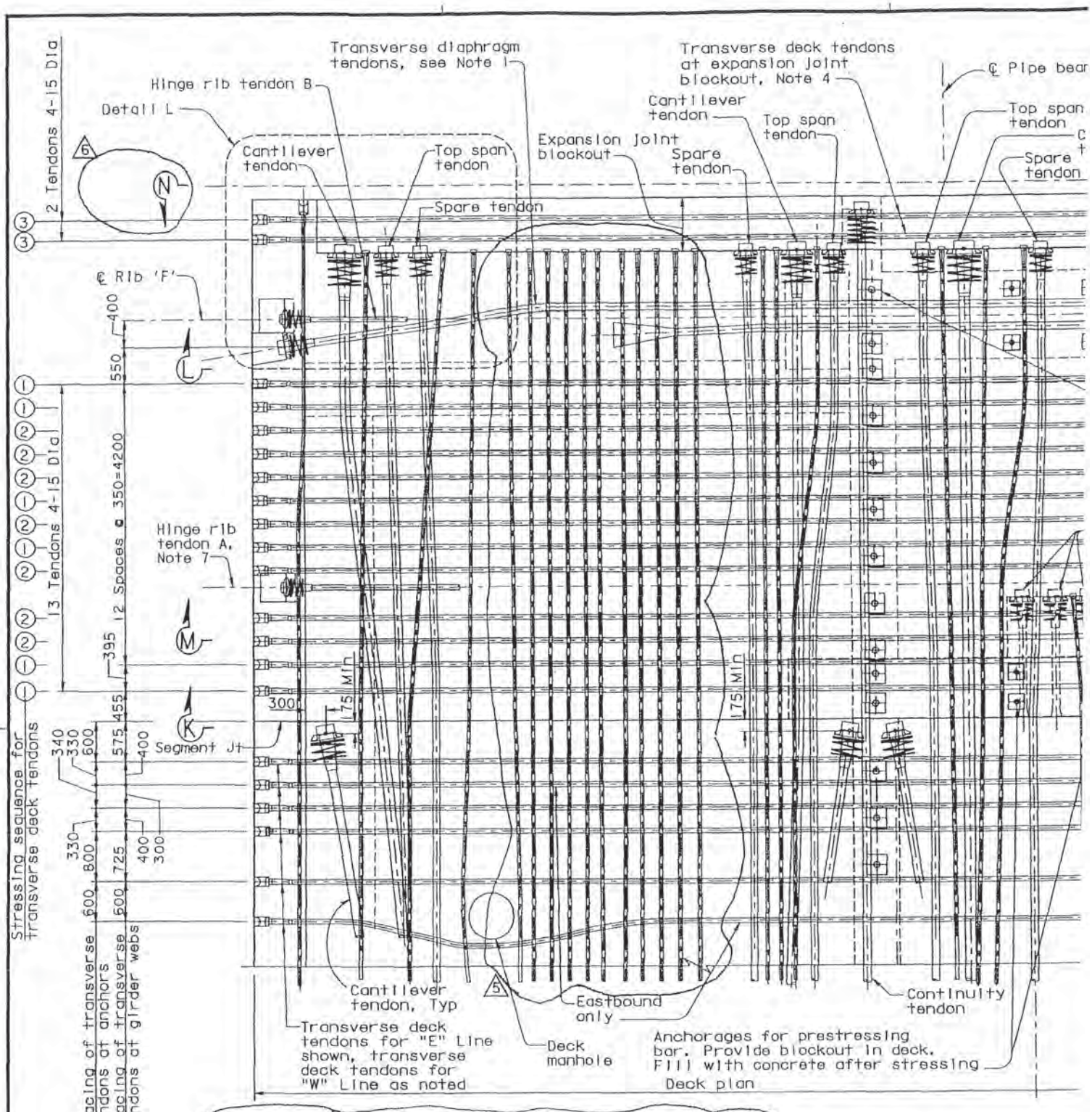

MARK	DATE	DESCRIPTIONS	BY	CH'D	CCO#
6	01/07/04	REMOVE DIMENSIONS	SS	SA	
5	10/15/03	MODIFY PRESTRESSING	CR	EC	
4	08/22/03	MODIFY PRESTRESSING AND NOTES	CR	EC	
3	10/07/02	REVISE SPACING OF TRANSVERSE TENDONS	EC	CR	
2	10/07/02	DELETE CIP TOP DECK CLOSURE	EC	CR	
1	10/07/02	ADD "D" TENDONS	EC	CR	

REVISIONS

3 PLAN Prestressing Layout
1:40

DESIGN OVERSIGHT
SIGN OFF DATE 1/16/04

DESIGN	BY R. Malik	CHECKED	C. Werts
DETAILS	BY S. Lee	CHECKED	C. Werts
QUANTITIES	BY R. Malik	CHECKED	T. Nguyen

Rev. Date: 5-18-98

ORIGINAL SCALE IN MILLIMETERS FOR REDUCED PLANS

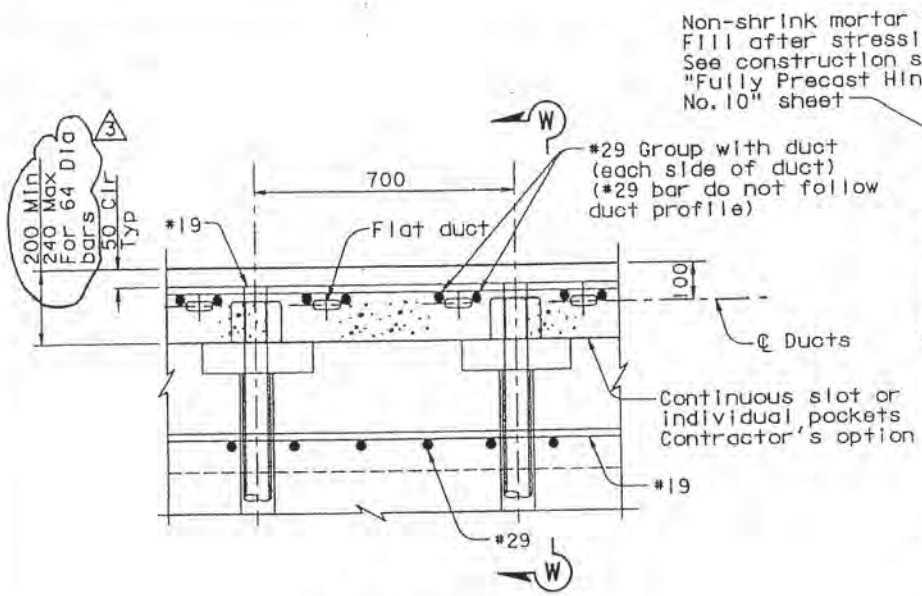

DETAIL M
1:10

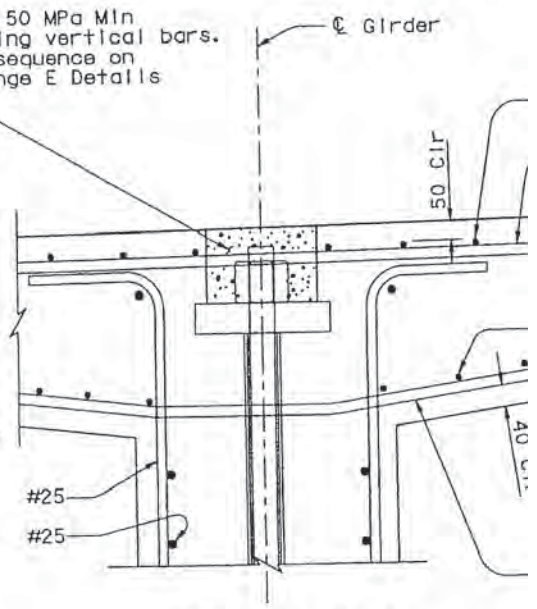

SECTION W-W
1:10

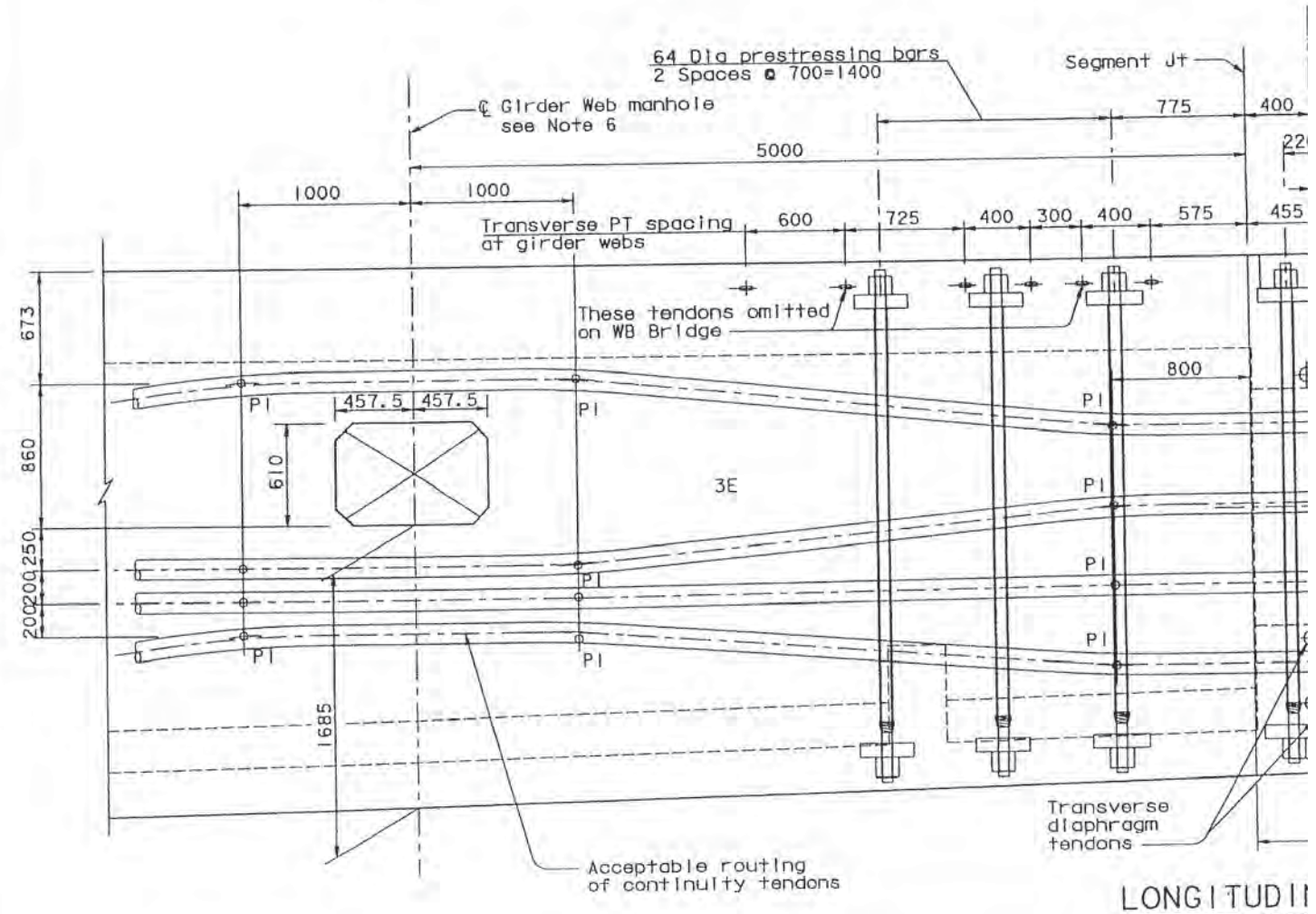

LONGITUDI

DESIGN OVERSIGHT 1/16/04	DESIGN	BY R. Malik	CHECKED C. Werts
SIGN OFF DATE	DETAILS	BY S. Lee	CHECKED C. Werts
	QUANTITIES	BY R. Malik	CHECKED T. Nguyen

Rev. Date: 5-18-98

ORIGINAL SCALE IN MILLIMETERS FOR REDUCED PLANS

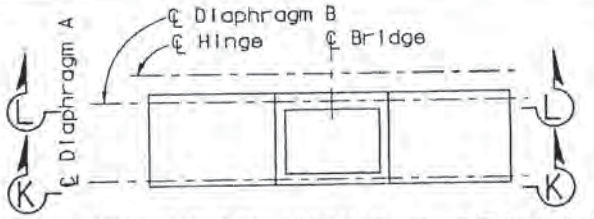

KEY PLAN-HINGE E SEGMENT

NTS

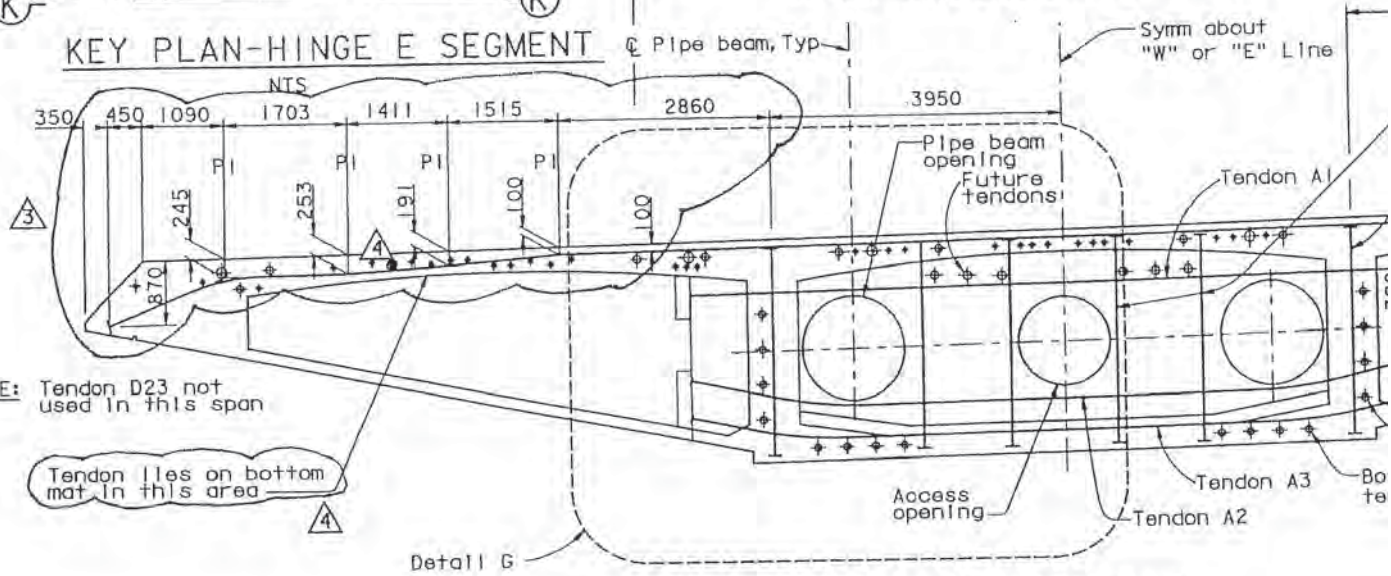

SECTION K-K

1:50

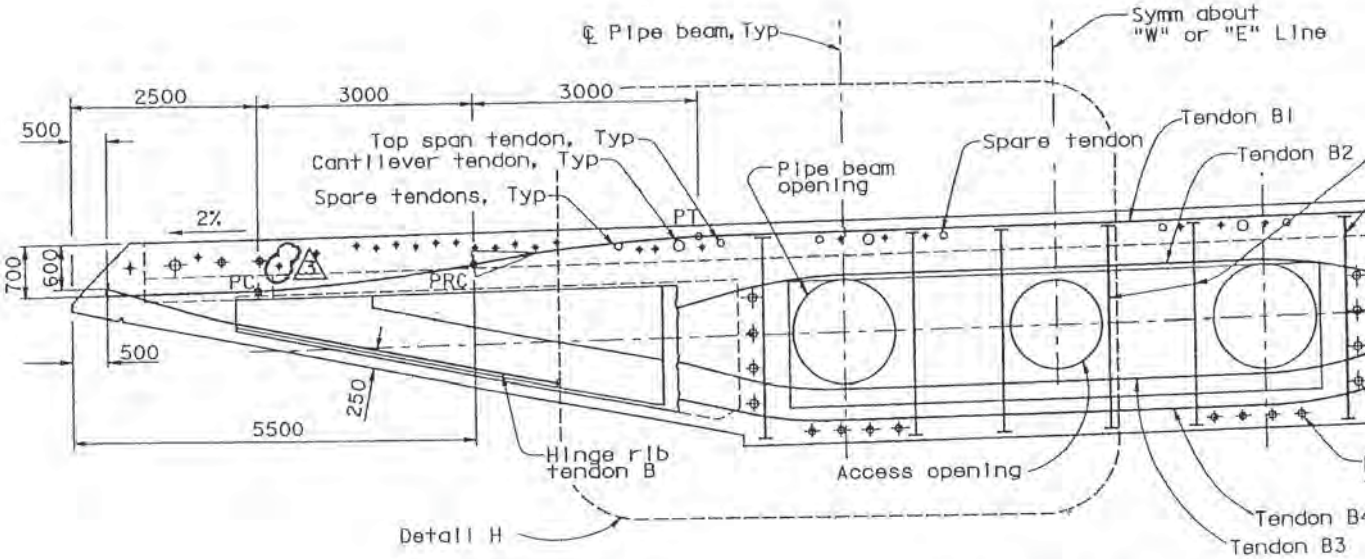

SECTION L-L

1:50

DESIGN OVERSIGHT 1/16/04 SIGN/OFF DATE	DESIGN	BY R. Malik	CHECKED C. Werts
	DETAILS	BY S. Lee	CHECKED C. Werts
	QUANTITIES	BY R. Malik	CHECKED T. Nguyen

Rev. Date: 5-18-98

ORIGINAL SCALE IN MILLIMETERS FOR REDUCED PLANS 0

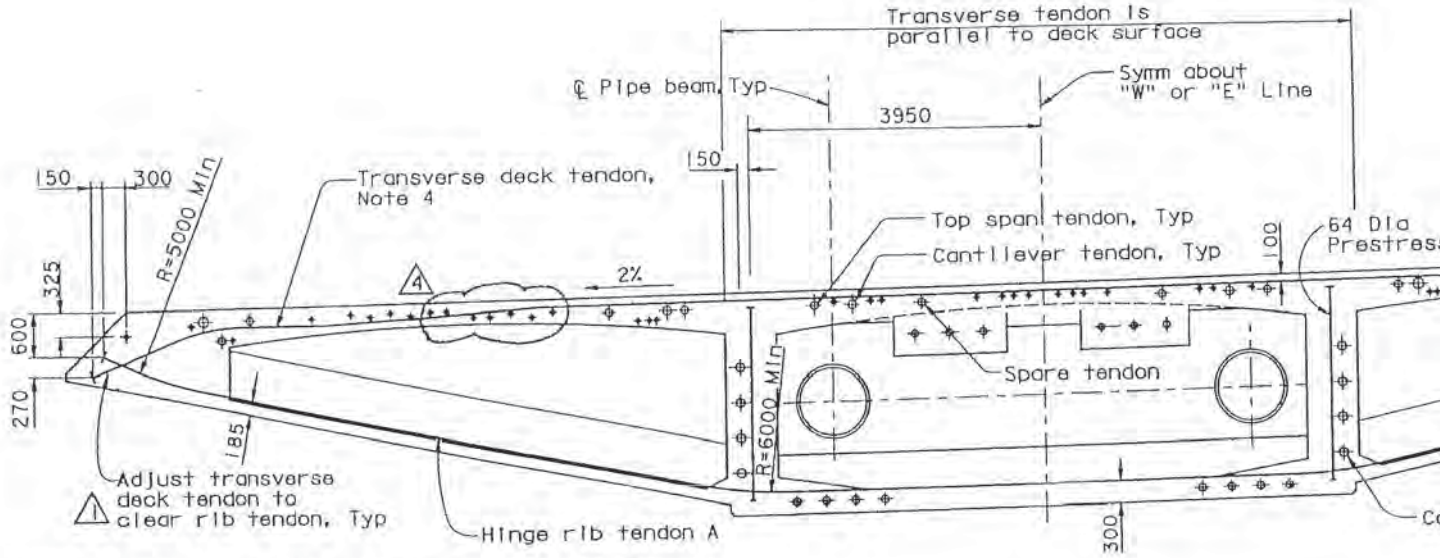

CONTRACT CHANGE ORDER NO. 55
SHEET 66 OF 85

4 SECTION M-M
1:50

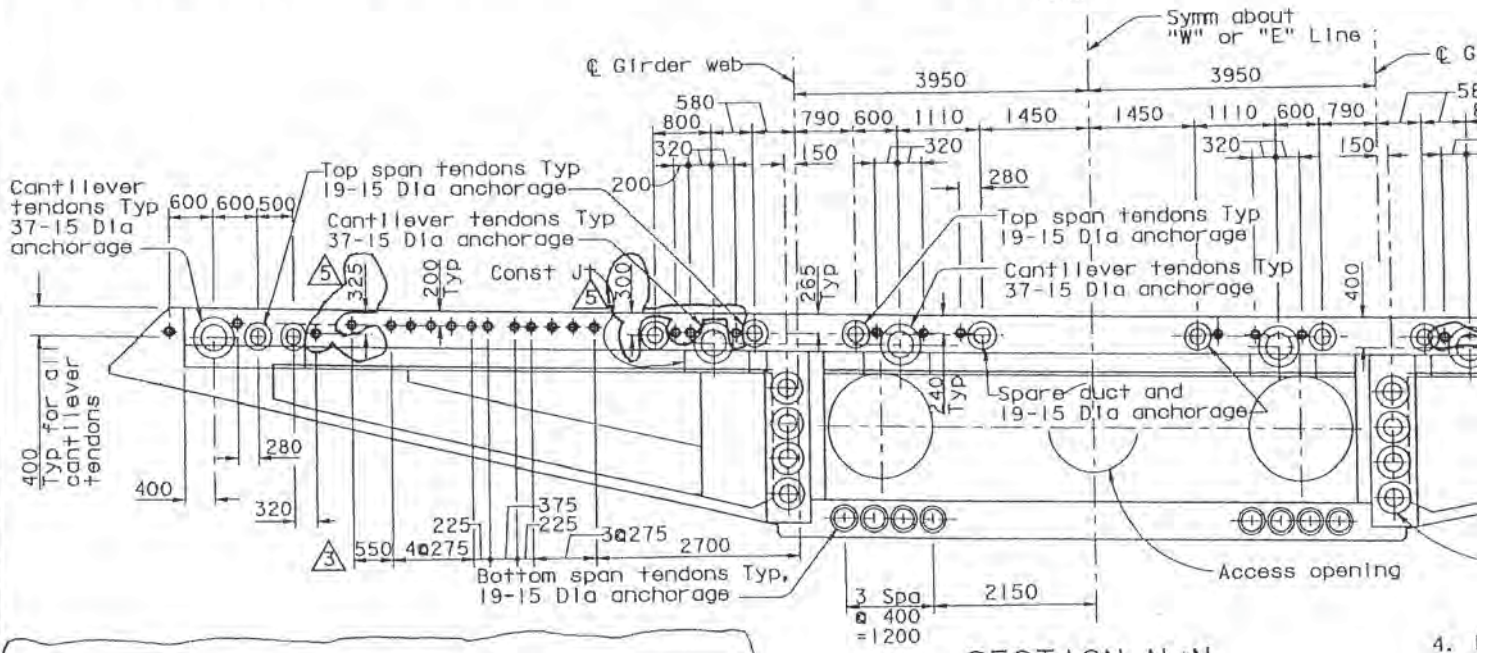

SECTION N-N
1:50

MARK	DATE	DESCRIPTIONS	BY	CH'D	CCO#
5	01/07/04	MODIFY PRESTRESSING TENDONS	SS	SA	
4	10/15/03	MODIFY PRESTRESSING TENDONS	CR	EC	
3	08/22/03	MODIFY PRESTRESSING, NOTES AND ADJUST GEOMETRY	CR	EC	
2	10/07/02	ADD "D" TENDONS	EC	CR	
1	03/04/02	REVISE CALLOUT	TM	SC	

REVISIONS

NOTES:

1. For bottom span tendon layout, see "Bottom Span Tendon Layout" sheets.
2. For cantilever tendon layout, see "Cantilever Tendon Layout" sheets.
3. For top span tendon, see "Top Span Tendon Layout" sheets.
4.
5.
6.

DESIGN OVERSIGHT
SIGN OFF DATE 1/16/04

DESIGN	BY R. Malik	CHECKED C. Werts	
DETAILS	BY S. Lee	CHECKED C. Werts	
QUANTITIES	BY R. Malik	CHECKED T. Nguyen	

Rev. Date: 5-18-98

ORIGINAL SCALE IN MILLIMETERS FOR REDUCED PLANS

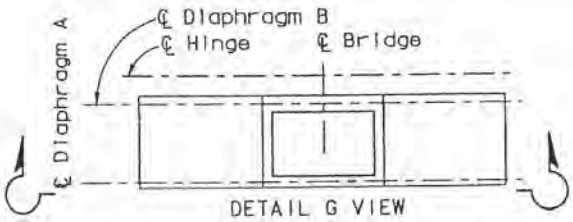

KEY PLAN-HINGE E SEGMENT

NTS

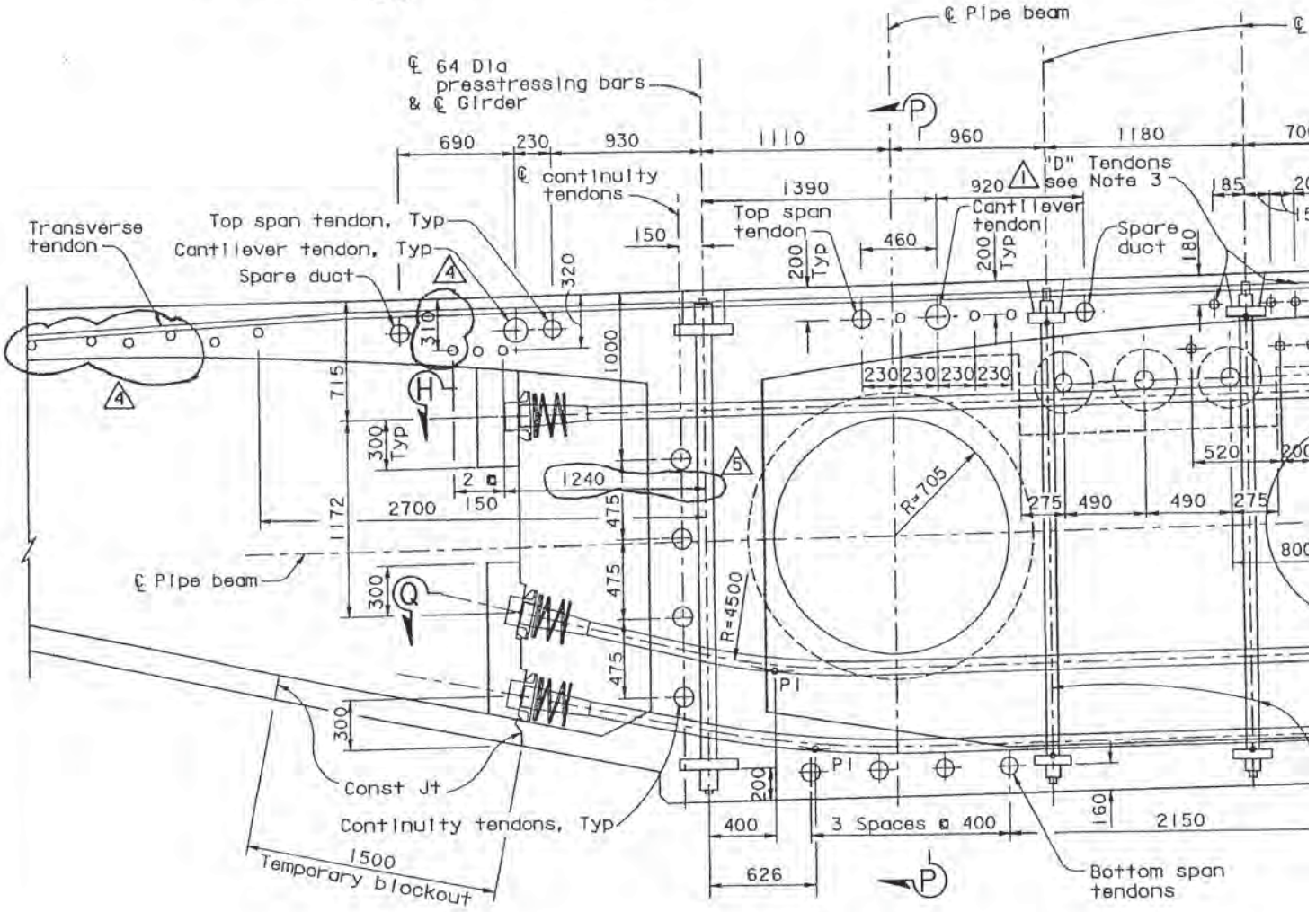

MARK	DATE	
5	01/07/04	AS NOTED
4	10/15/03	MODIFY PRE
3	08/22/03	MODIFY PRE
2	10/07/02	DELETE CIP
1	10/07/02	ADD "D" TE

CONTRACT CH
SHEET 67 O

DESIGN OVERSIGHT
1/26/04
SIGN OFF DATE

DESIGN	BY R. Malik	CHECKED C. Werts	
DETAILS	BY S. Lee	CHECKED C. Werts	
QUANTITIES	BY R. Malik	CHECKED T. Nguyen	

Rev. Date: 5-18-98

ORIGINAL SCALE IN MILLIMETERS FOR REDUCED PLANS

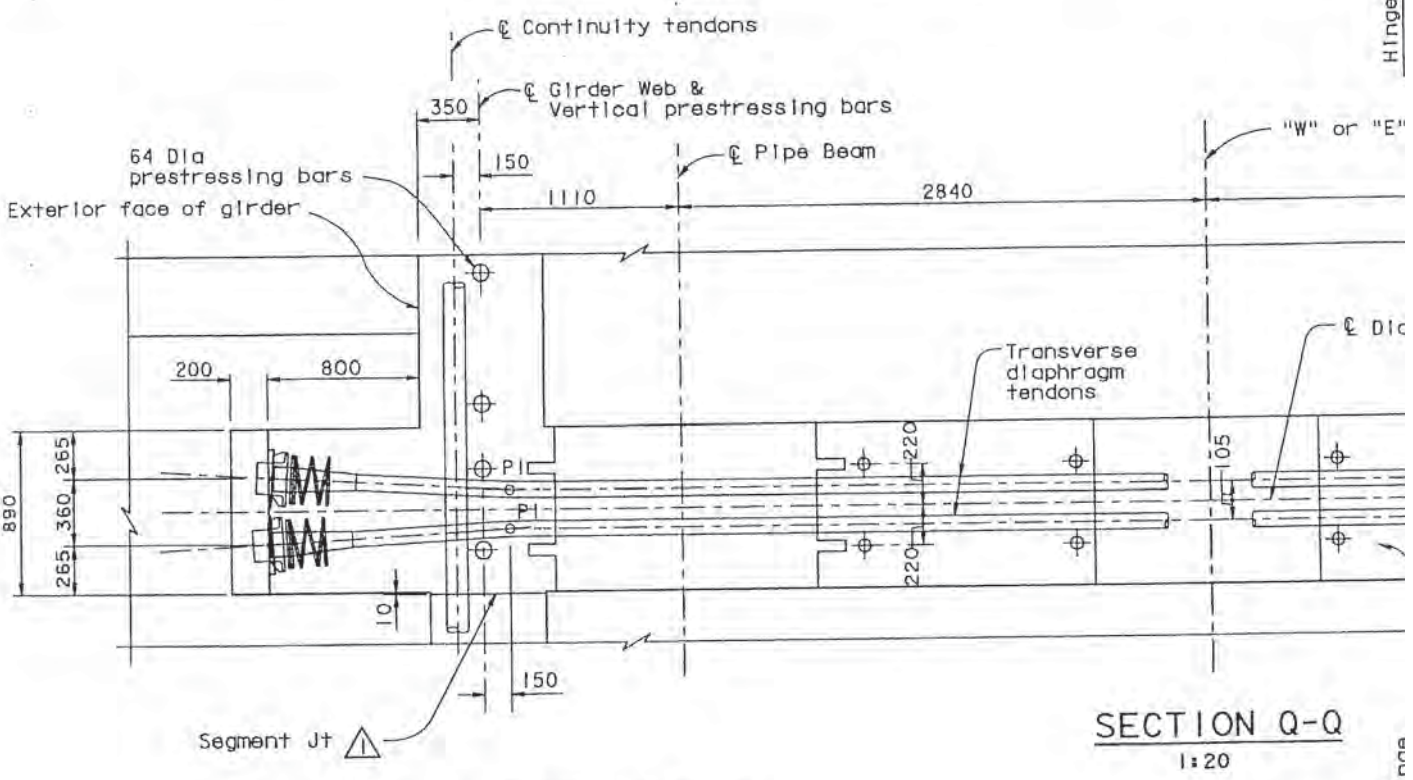

SECTION Q-Q
1:20

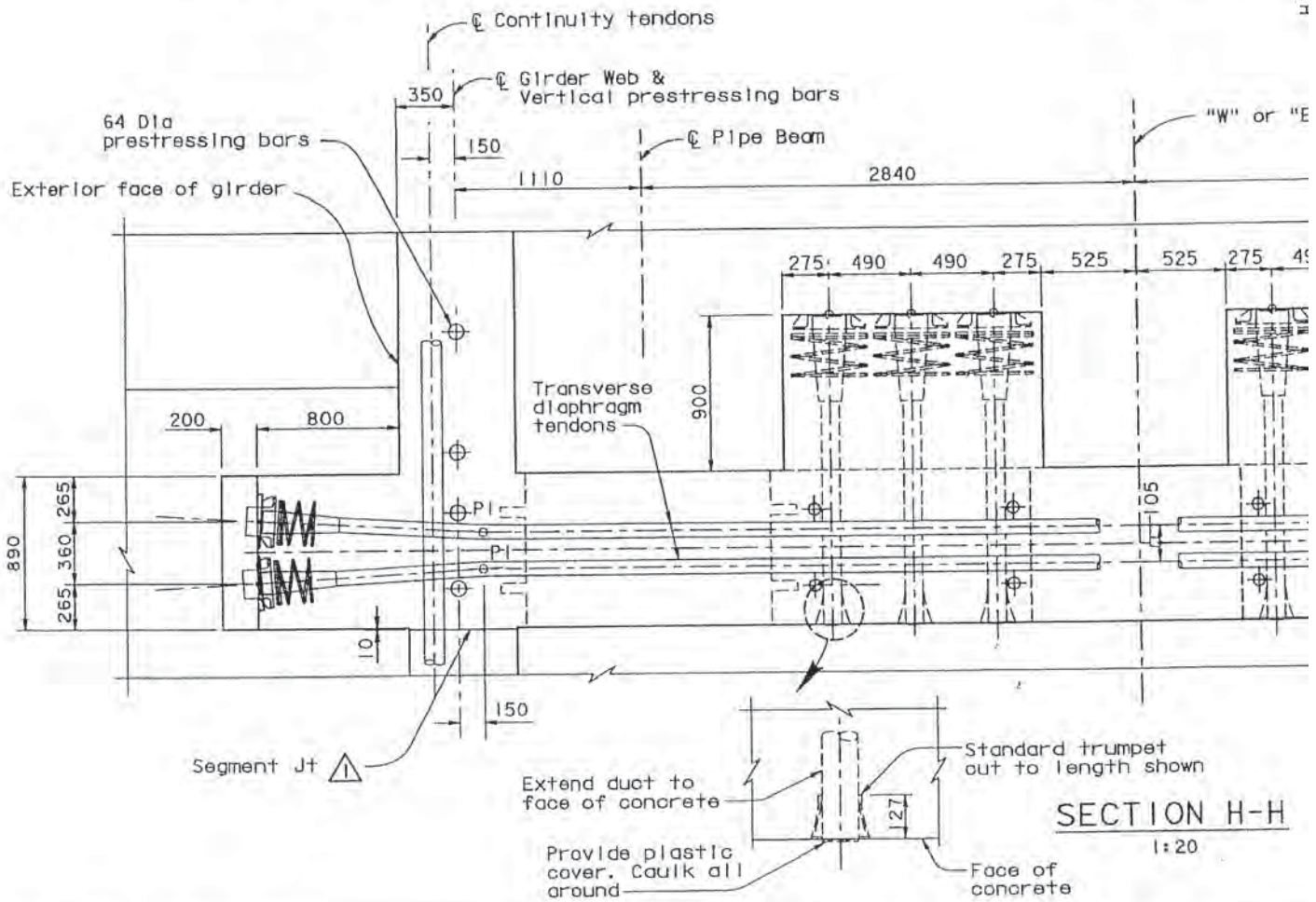

SECTION H-H
1:20

DESIGN OVERSIGHT 1/16/04 SIGN OFF DATE	DESIGN	BY R. Malik	CHECKED C. Werts
	DETAILS	BY S. Lee	CHECKED C. Werts
	QUANTITIES	BY R. Malik	CHECKED T. Nguyen

Rev. Date: 5-18-98

ORIGINAL SCALE IN MILLIMETERS FOR REDUCED PLANS 0 1

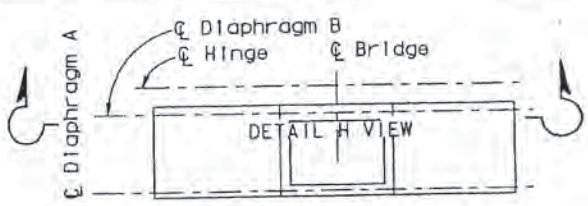

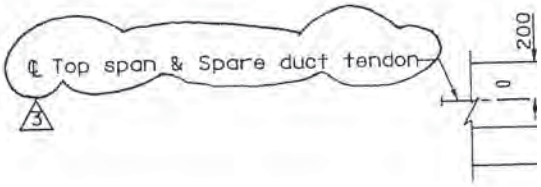

KEY PLAN-HINGE E SEGMENT

NTS

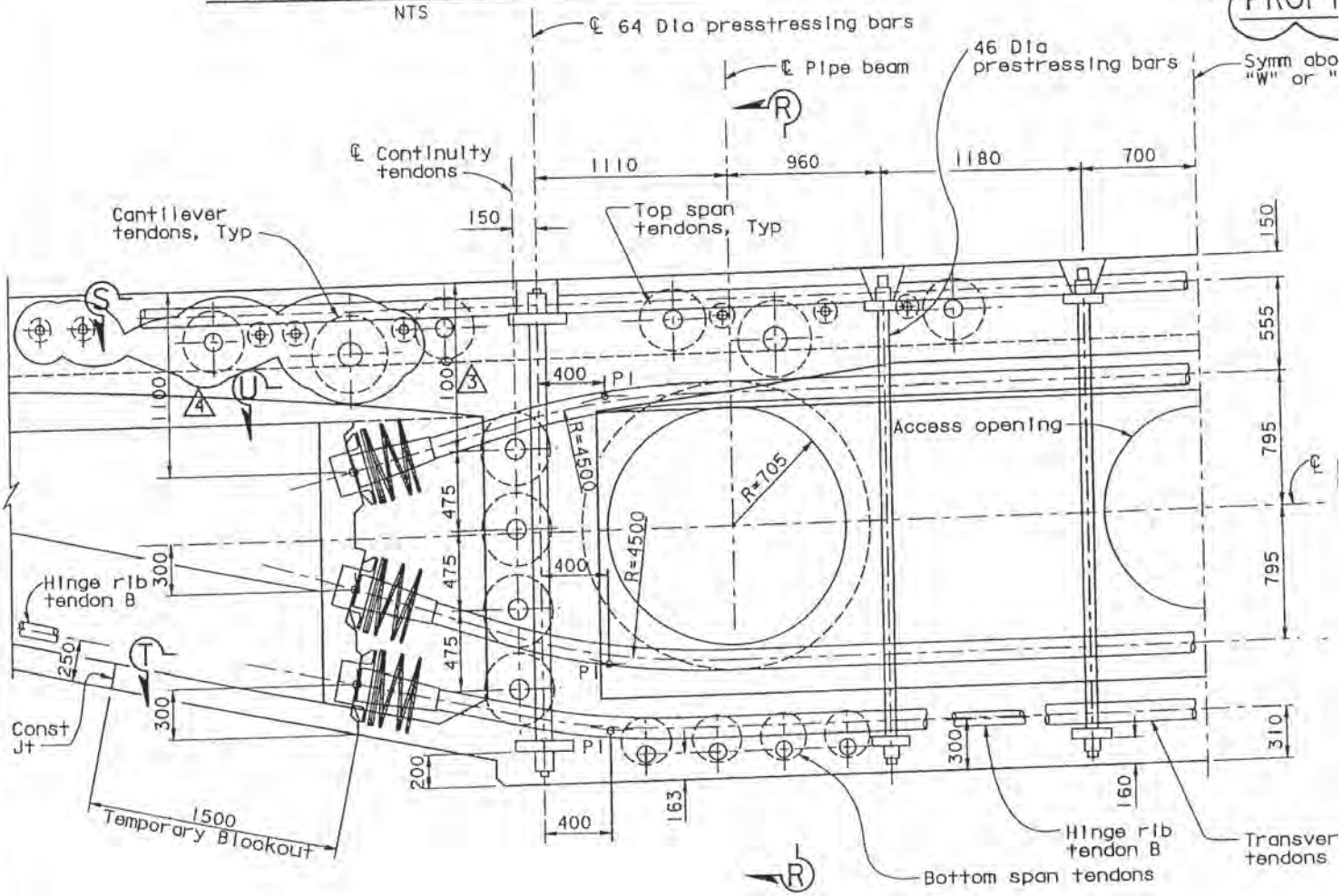

DETAIL H

1:20

MARK	DATE	
4	01/07/04	ILLU ANCH
3	10/15/03	MOD I
2	08/22/03	MOD I
1	10/07/02	ADD

CONTRACT
SHEET 6

DESIGN OVERSIGHT 1/16/04 SIGN OFF DATE	DESIGN	BY R. Malik	CHECKED C. Werts
	DETAILS	BY S. Lee	CHECKED C. Werts
	QUANTITIES	BY R. Malik	CHECKED T. Nguyen

Rev. Date: 3-18-98

ORIGINAL SCALE IN MILLIMETERS FOR REDUCED PLANS 0

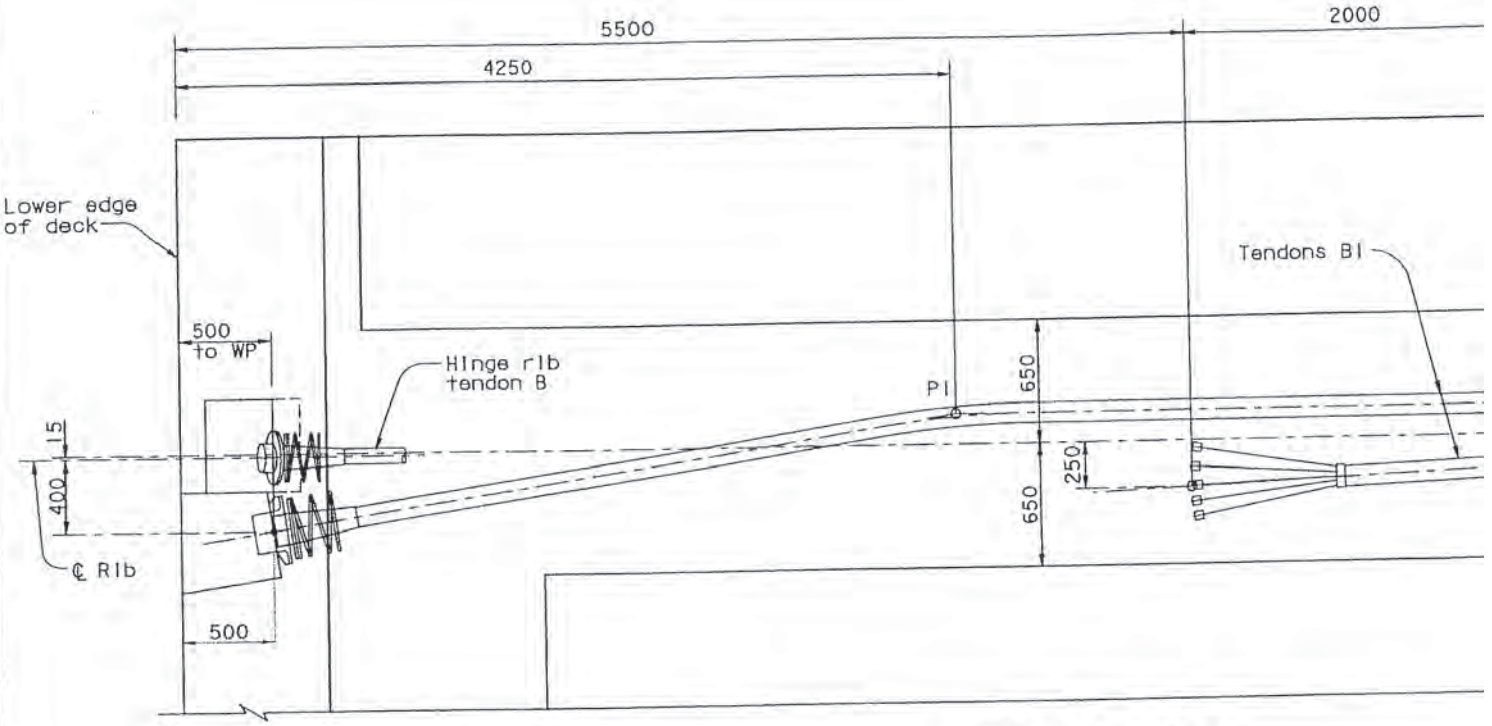

SECTION S-S
1:20

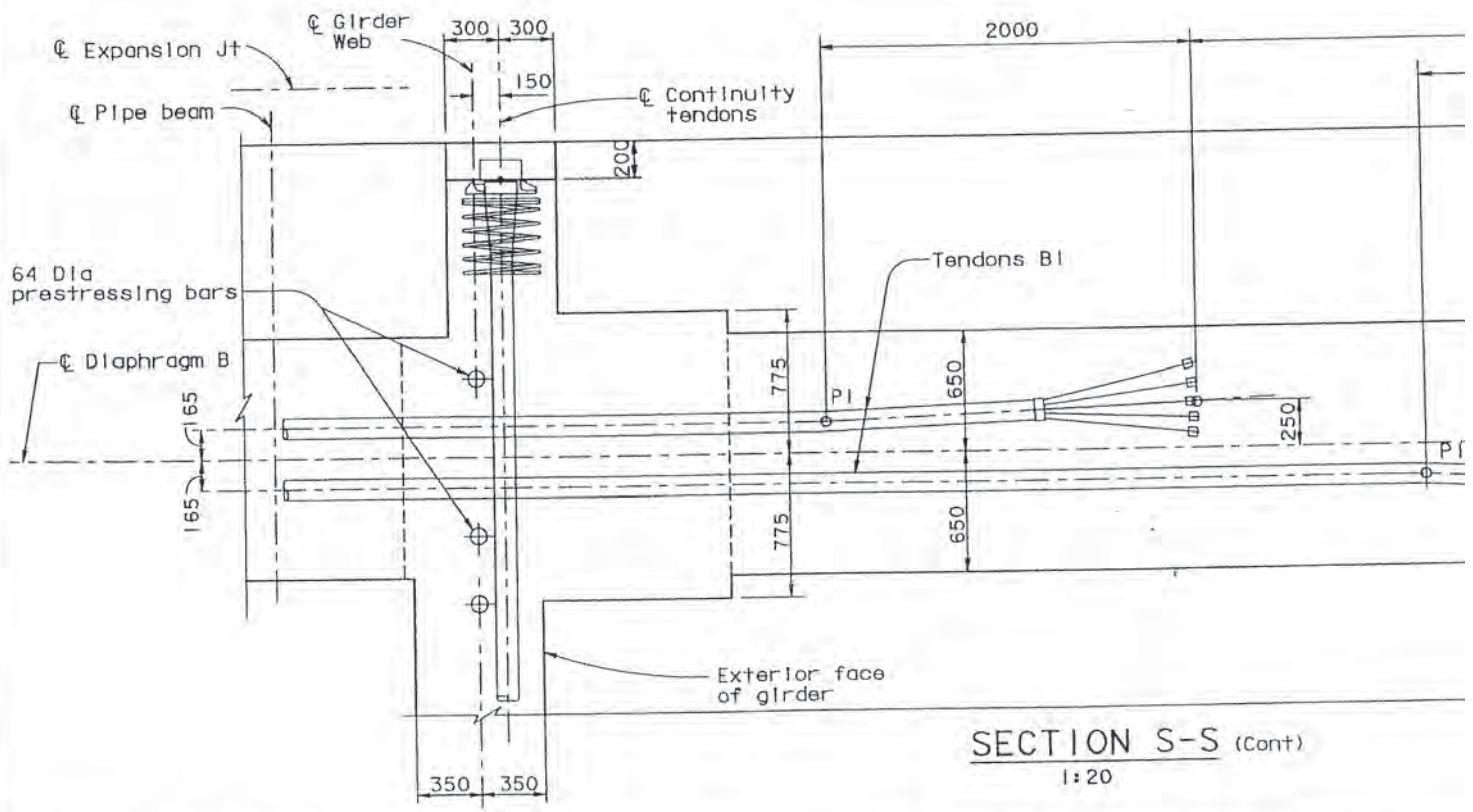

SECTION S-S (Cont)
1:20

DESIGN OVERSIGHT 1/16/04		DESIGN	BY R. Malik	CHECKED C. Werts
SIGN OFF DATE		DETAILS	BY S. Lee	CHECKED C. Werts
		QUANTITIES	BY R. Malik	CHECKED T. Nguyen

Rev. Date: 5-18-98

ORIGINAL SCALE IN MILLIMETERS FOR REDUCED PLANS

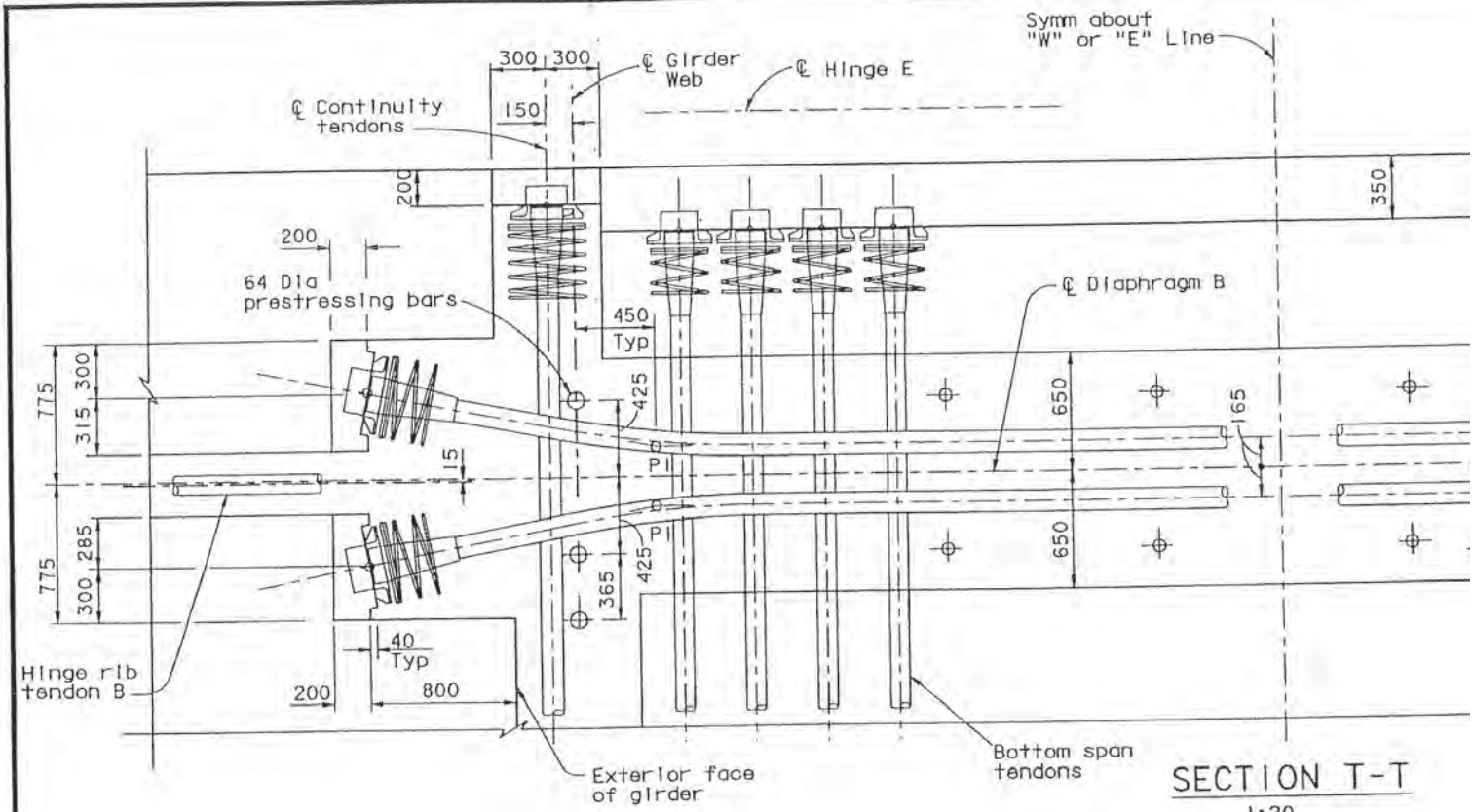

SECTION T-T

1:20

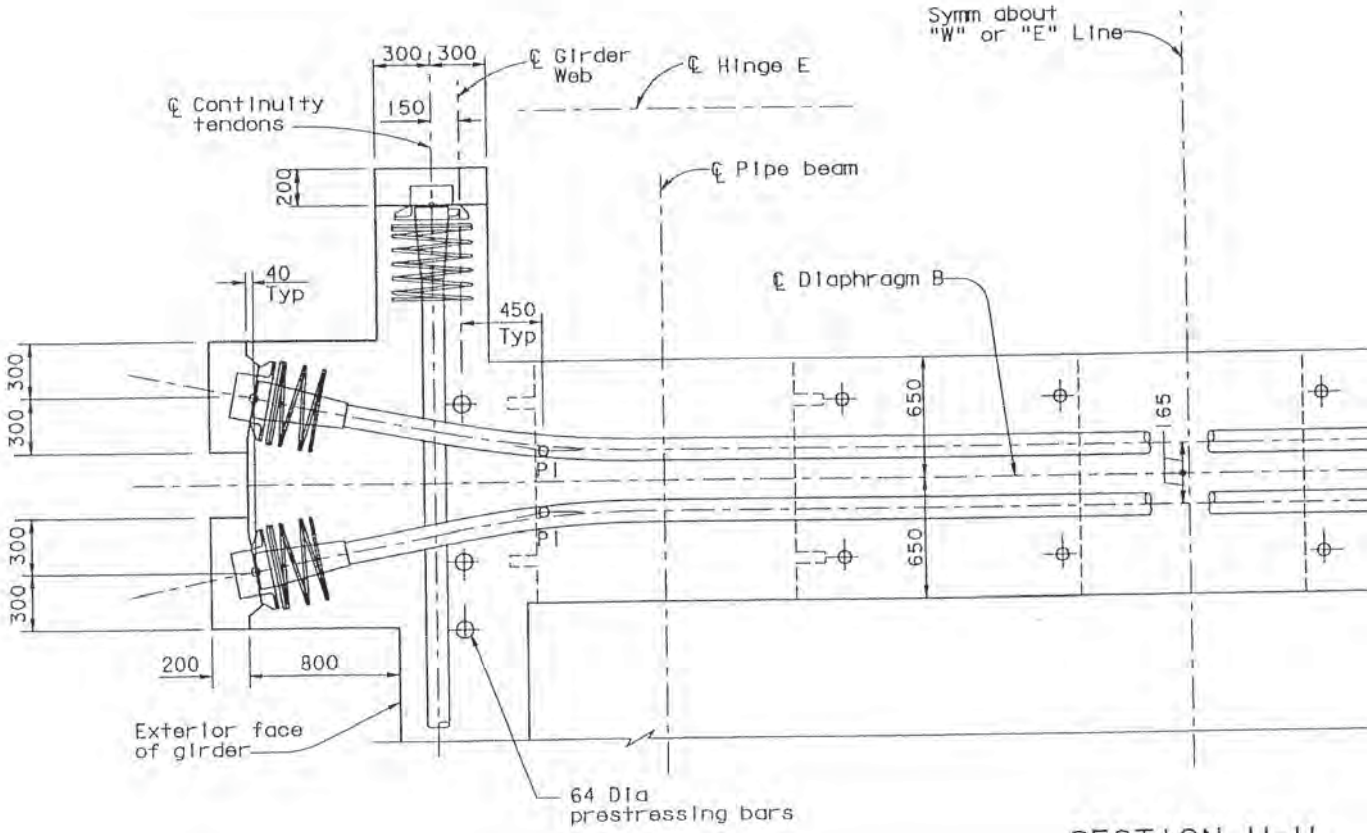

SECTION U-U

1:20

DESIGN OVERSIGHT 1/16/04	DESIGN	BY R. Malik	CHECKED C. Werts
SIGN OFF DATE	DETAILS	BY S. Lee	CHECKED C. Werts
	QUANTITIES	BY R. Malik	CHECKED T. Nguyen

Rev. Date: 5-18-98

ORIGINAL SCALE IN MILLIMETERS FOR REDUCED PLANS

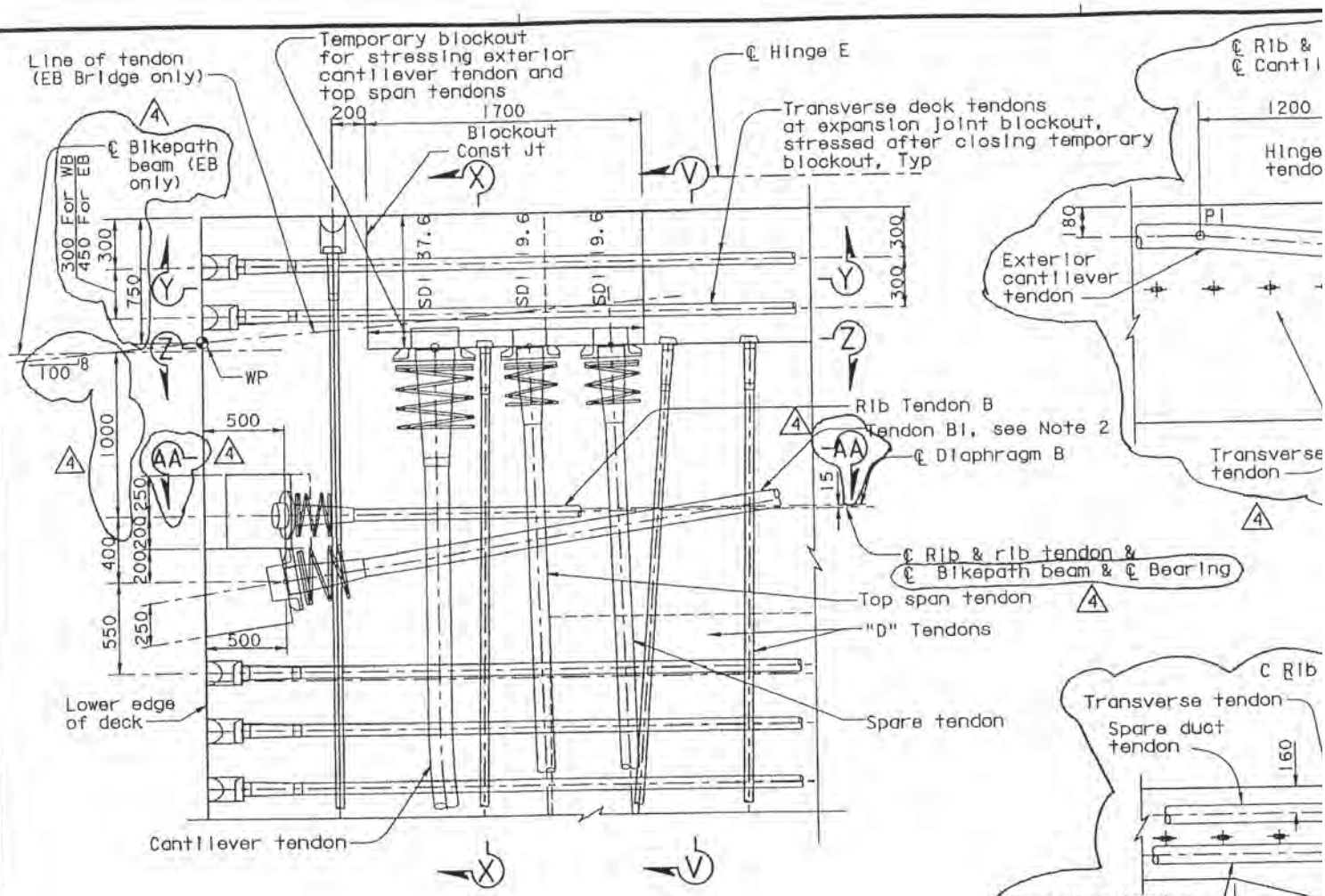

DETAIL L
1:20

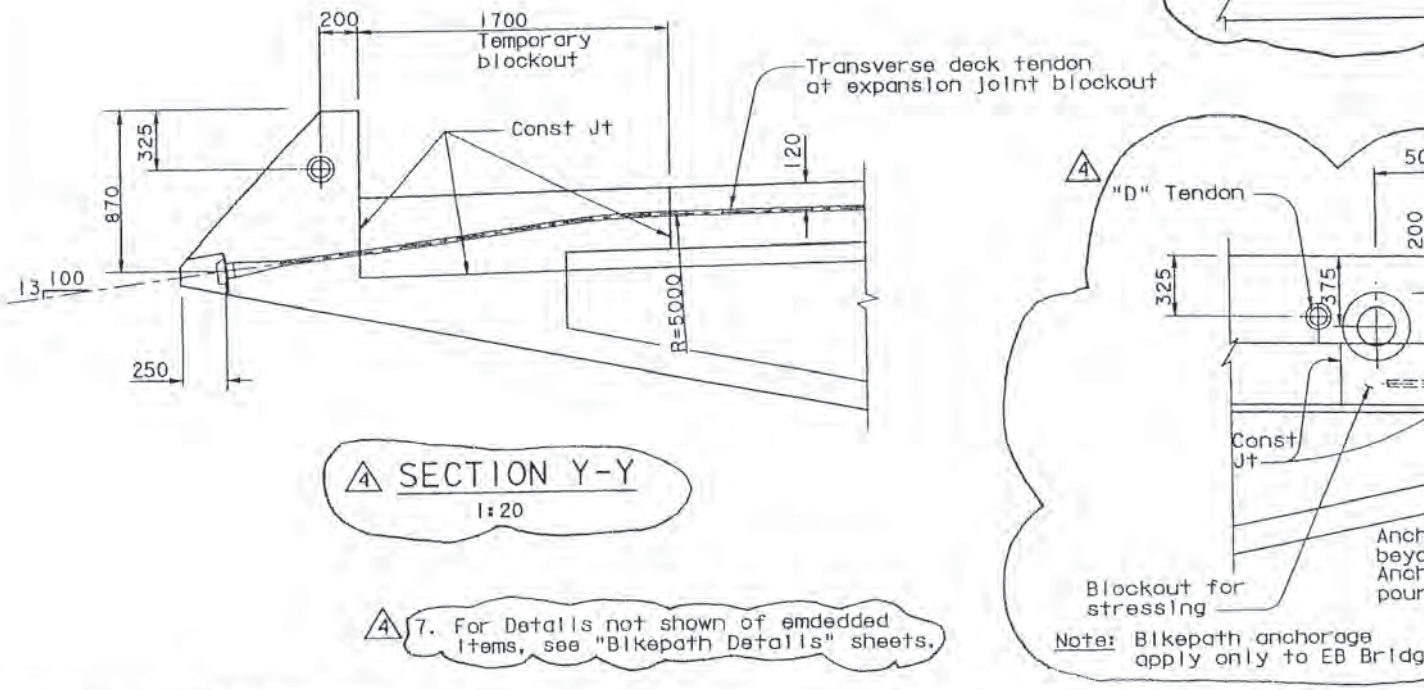

SECTION Y-Y
1:20

7. For Details not shown of embedded items, see "Bikepath Details" sheets.

Note: Bikepath anchorage apply only to EB Bridge

DESIGN OVERSIGHT 1/16/04	DESIGN	BY R. Malik	CHECKED C. Werts
SIGN OFF DATE	DETAILS	BY S. Lee	CHECKED C. Werts
	QUANTITIES	BY R. Malik	CHECKED T. Nguyen

Rev. Date: 5-18-98

ORIGINAL SCALE IN MILLIMETERS FOR REDUCED PLANS

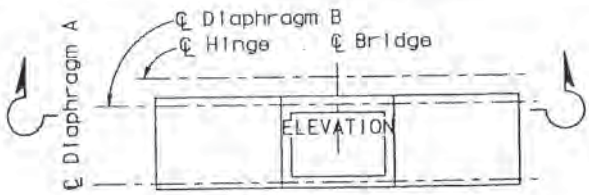

KEY PLAN-HINGE E SEGMENT

NTS

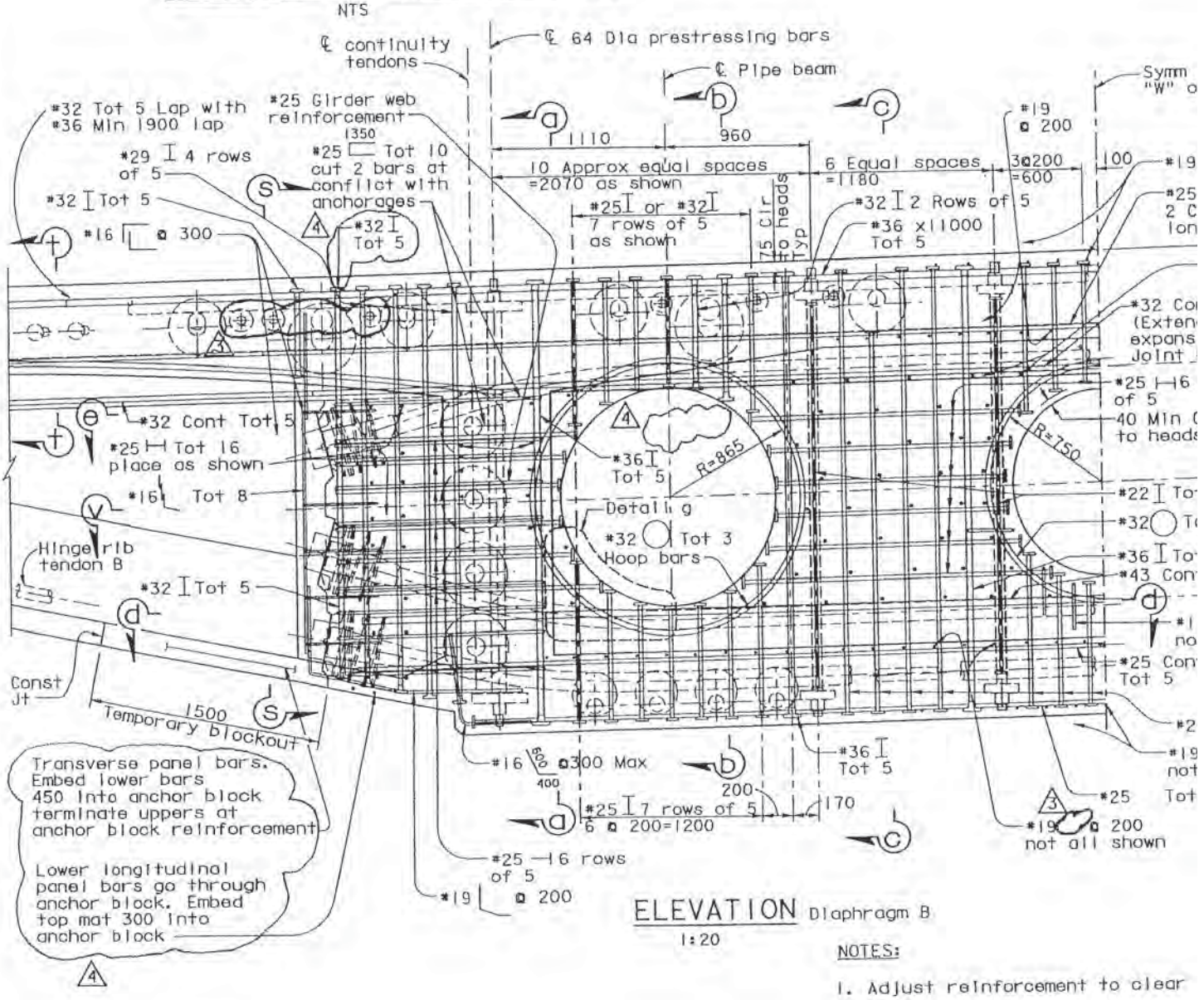

ELEVATION Diaphragm B

1:20

NOTES:

1. Adjust reinforcement to clear
2. For Section b-b, Section a-c, see " Fully Precast Hinge E De
3. For Sections d-d and s-s, see Details No. 22" sheet.
4. For Section v-v, see "Fully Pr
5. For Detail g, see "Fully Preca

DESIGN OVERSIGHT 1/16/04 SIGN OFF DATE	DESIGN	BY E. Chan	CHECKED C. Werts
	DETAILS	BY K. Lo	CHECKED C. Werts
	QUANTITIES	BY E. Chan	CHECKED J. Leventini

Rev. Date: 5-18-98

ORIGINAL SCALE IN MILLIMETERS FOR REDUCED PLANS

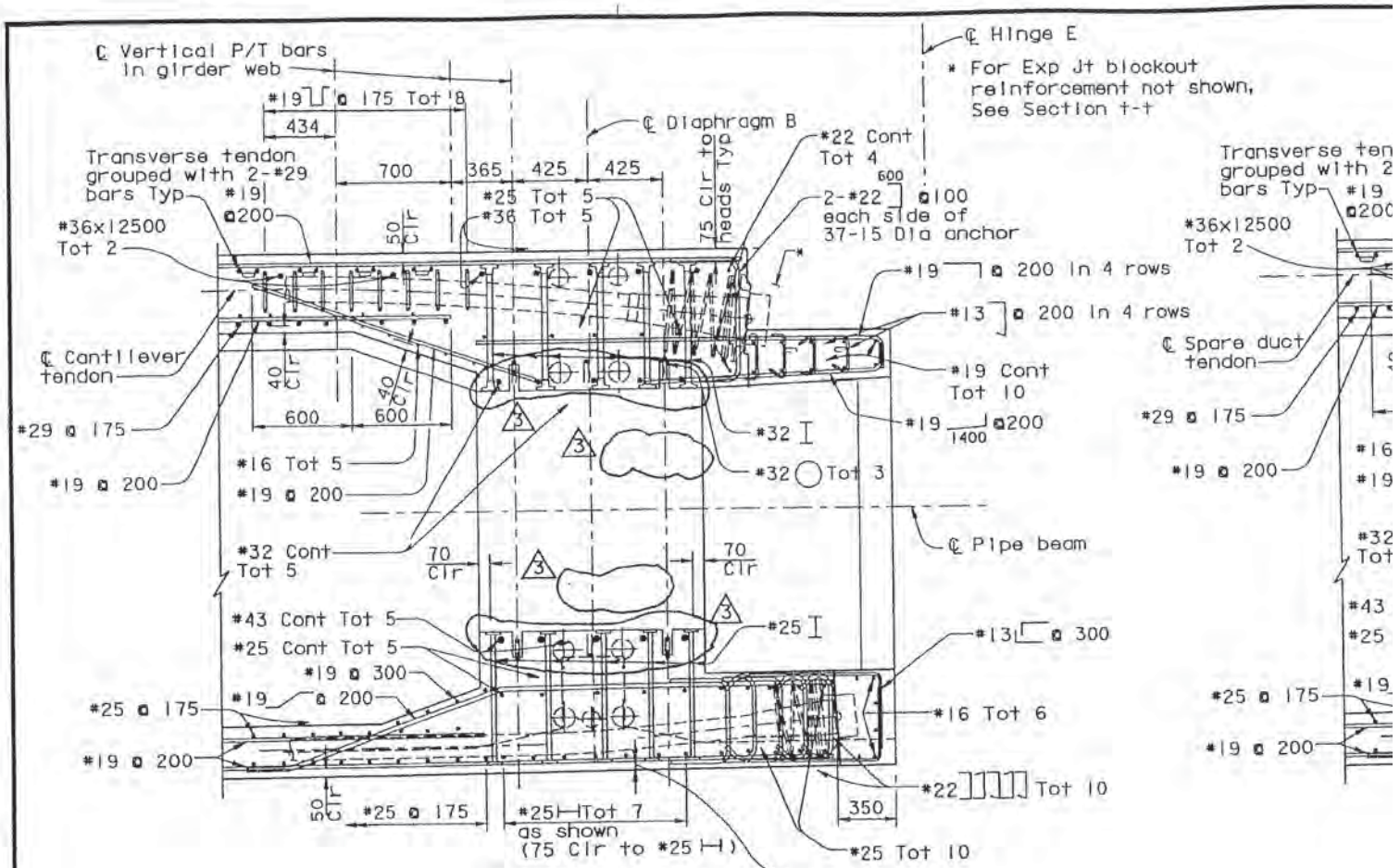

SECTION b-b

1:20

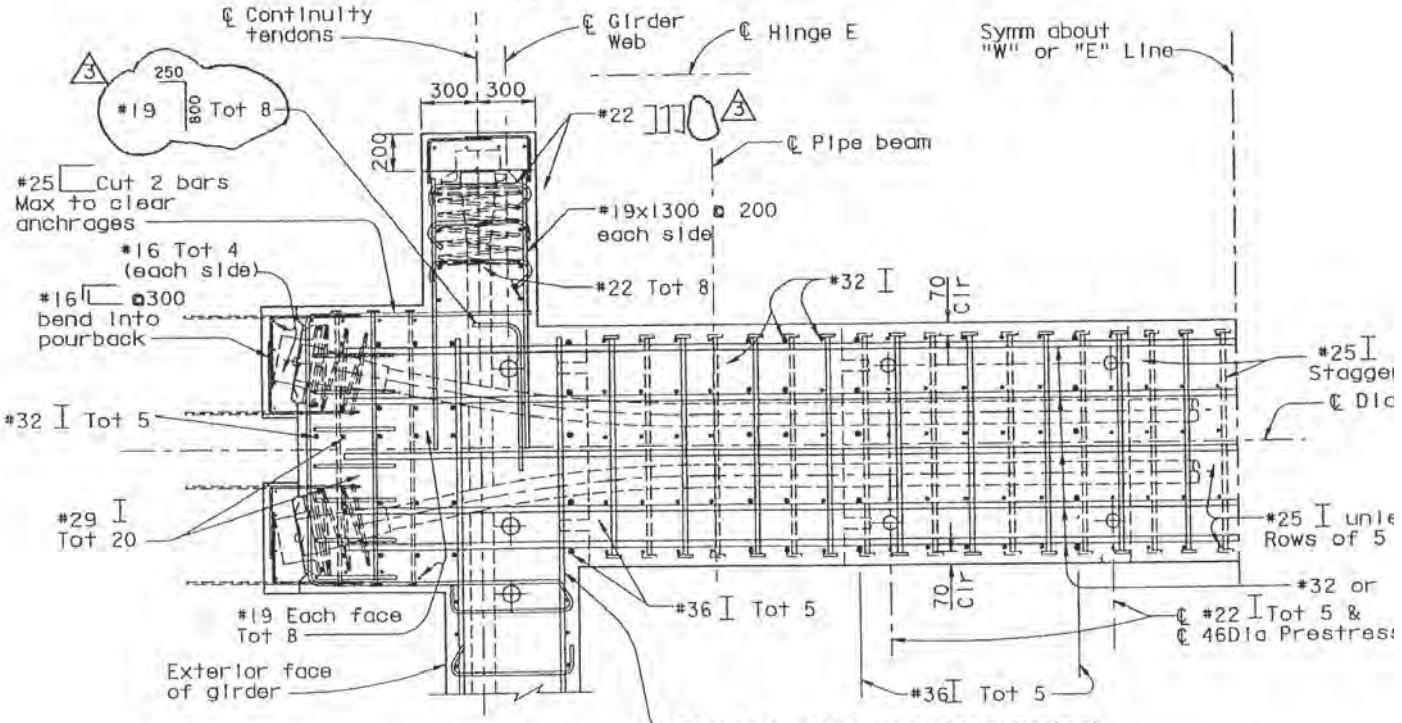

SECTION e-e

1:20

DESIGN OVERSIGHT 1/16/04	DESIGN	BY E. Chan	CHECKED C. Werts
	DETAILS	BY S. Lee	CHECKED C. Werts
SIGN OFF DATE	QUANTITIES	BY E. Chan	CHECKED J. Leventini

Rev. Date: 5-18-98

ORIGINAL SCALE IN MILLIMETERS FOR REDUCED PLANS

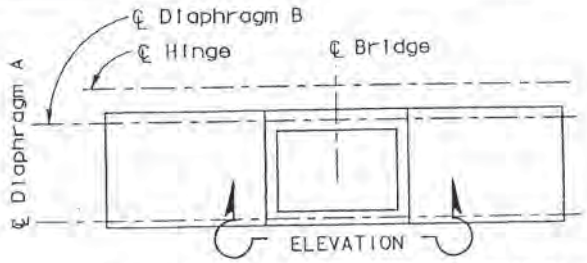

KEY PLAN-HINGE SEGMENT

NTS

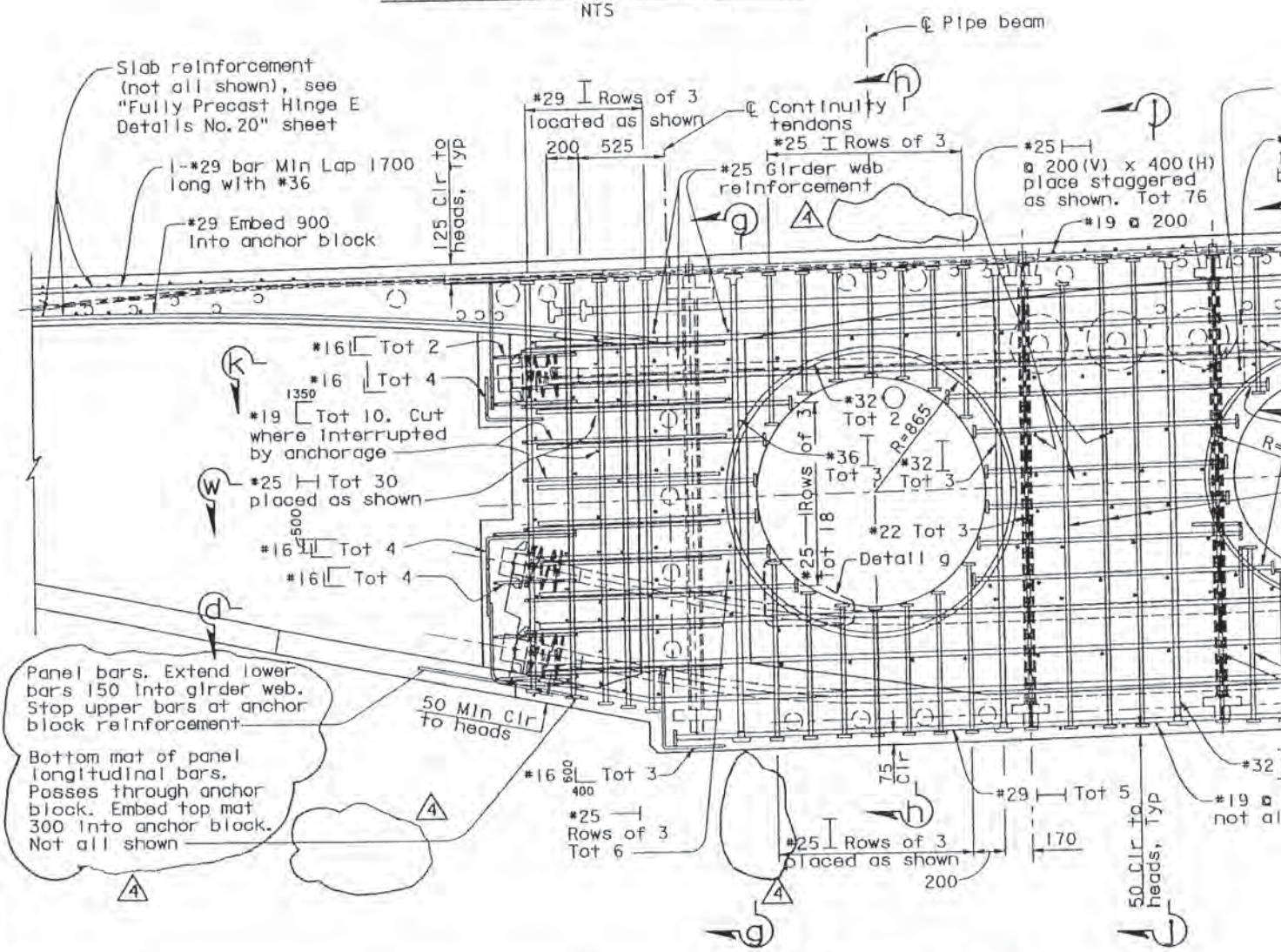

ELEVATION Diaphragm A

1:20

MARK	DATE	DESCRIPTIONS	BY	CH'D	CCO#
4	01/07/04	AS NOTED	SS	SA	
3	08/22/03	ADD DETAILS AND NOTES	CR	EC	
2	10/07/02	DELETE CIP TOP DECK CLOSURE	EC	CR	
1	10/07/02	ADD "D" TENDONS	EC	CR	

REVISIONS

CONTRACT CHANGE ORDER NO. 55

SHEET 75 OF 85

DESIGN OVERSIGHT

1/16/04

SIGN OFF DATE

DESIGN	BY E. Chan	CHECKED	C. Werts
DETAILS	BY S. Lee	CHECKED	C. Werts
QUANTITIES	BY E. Chan	CHECKED	J. Leventini

Rev. Date: 5-18-98

ORIGINAL SCALE IN MILLIMETERS FOR REDUCED PLANS

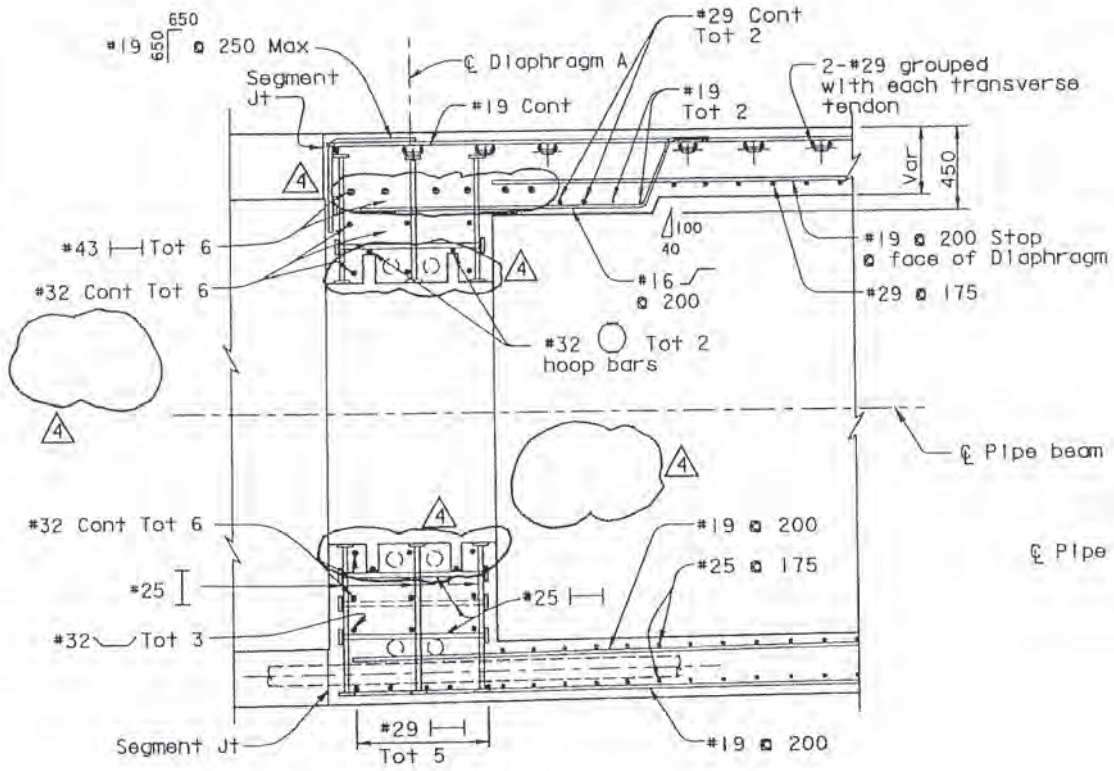

SECTION h-h

1:20

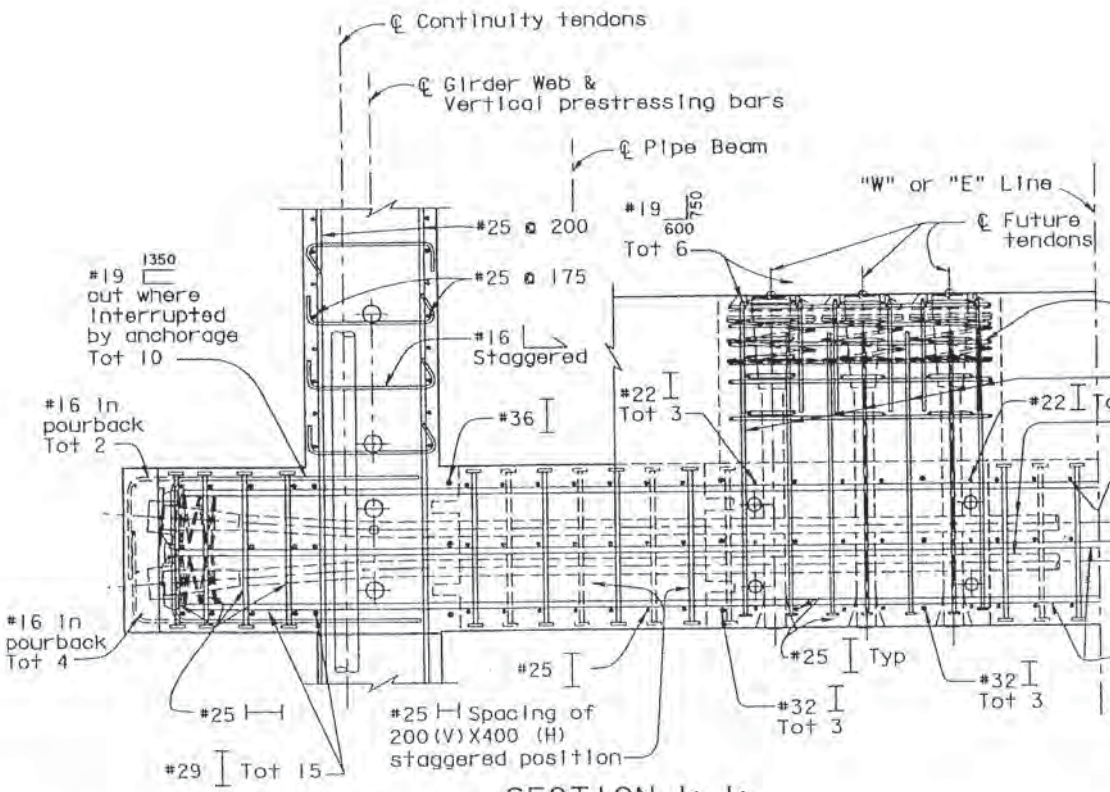

SECTION k-k

1:20

DESIGN OVERSIGHT 1/16/04	DESIGN	BY E. Chan	CHECKED C. Werts
SIGN OFF DATE	DETAILS	BY S. Lee	CHECKED C. Werts
	QUANTITIES	BY E. Chan	CHECKED J. Leventini

Rev. Date: 5-18-98

ORIGINAL SCALE IN MILLIMETERS FOR REDUCED PLANS 0

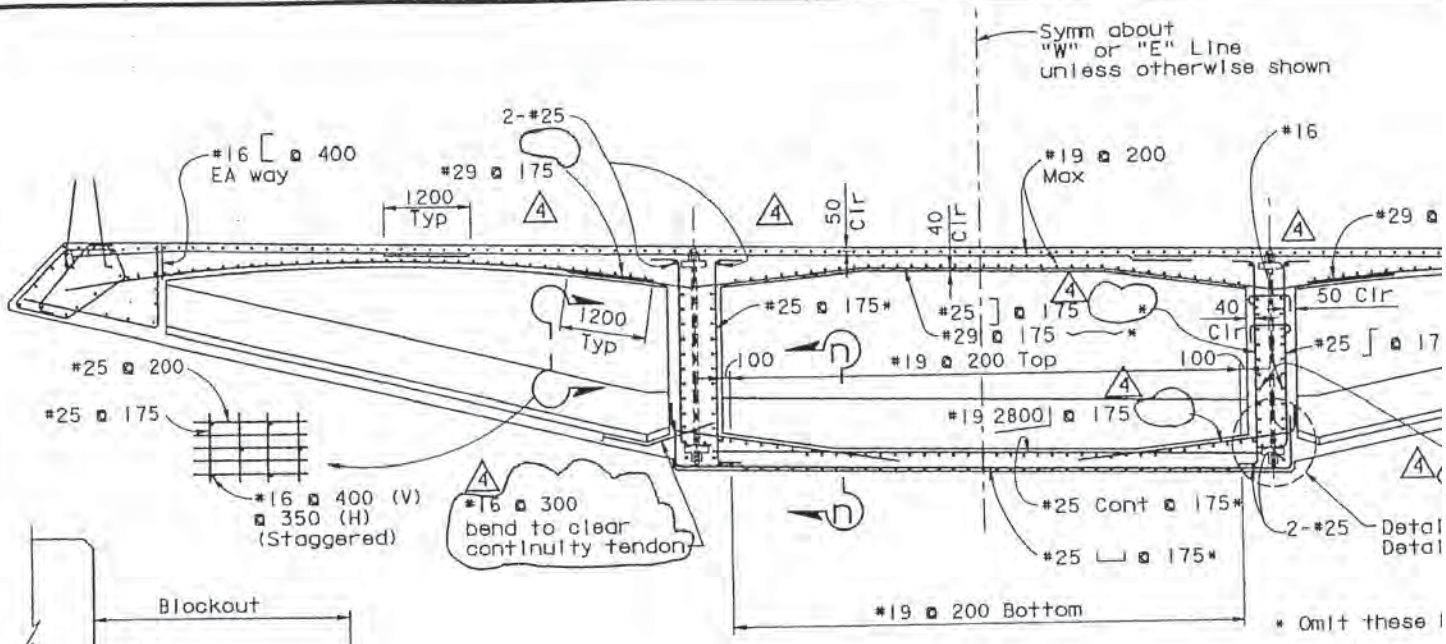

TYPICAL SECTION

Between Diaphragm A & B

1:50

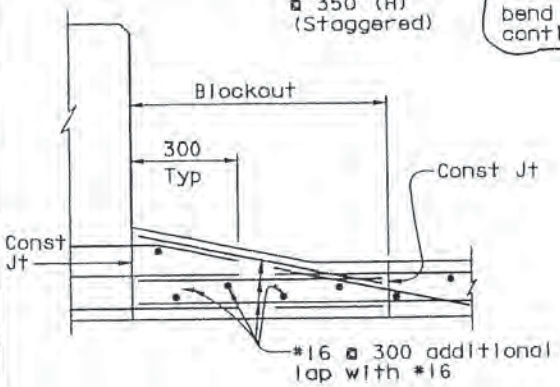

DETAIL e AT BLOCKOUT

1:10

Lap bars as shown or use couplers (Contractor's option)

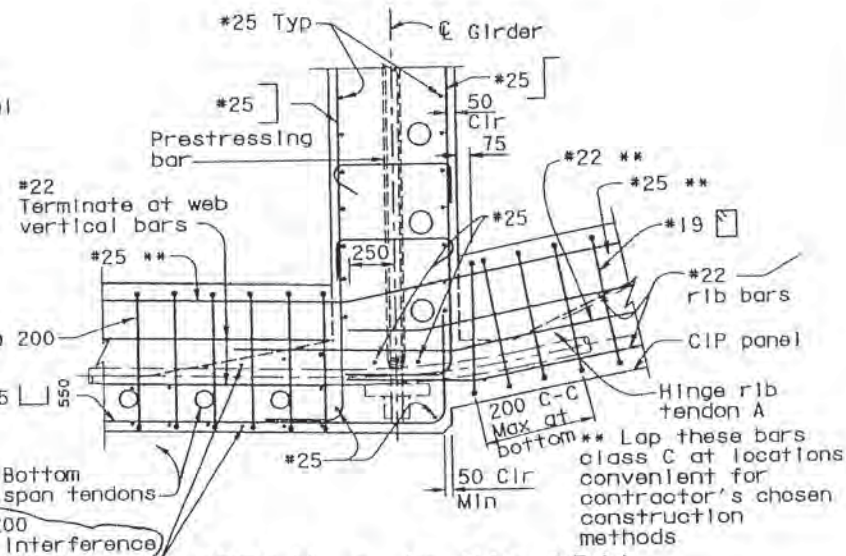

DETAIL c (@ Rib 'R')

1:20

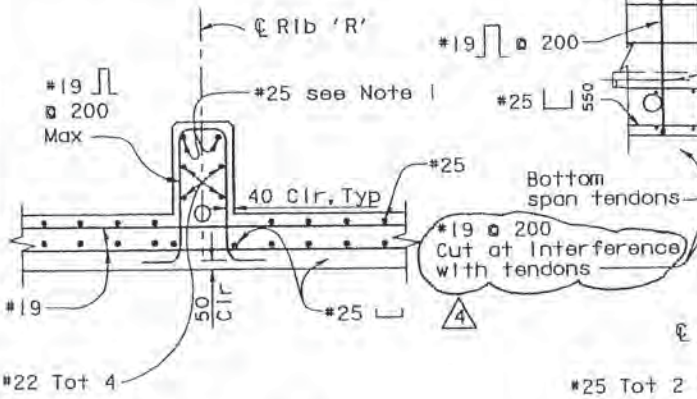

SECTION n-n

1:20

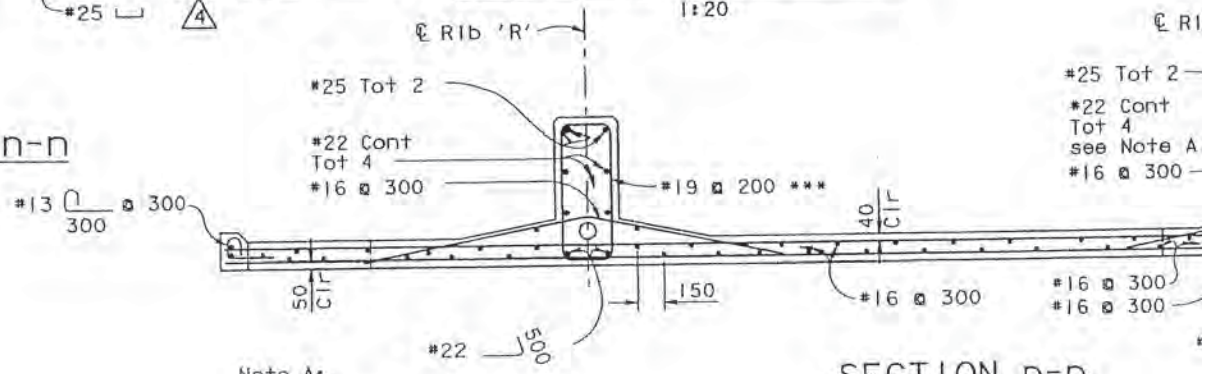

Note A:

Terminate all Rib 'F' bars 900 Min into anchor block.

SECTION p-p

1:20

(*** Interrupt these bars at segment Girder

DESIGN OVERSIGHT	DESIGN	BY E. Chan	CHECKED C. Werts
1/16/04	DETAILS	BY S. Lee	CHECKED C. Werts
SIGN OFF DATE	QUANTITIES	BY E. Chan	CHECKED J. Leventini

Rev. Date: 5-18-98

ORIGINAL SCALE IN MILLIMETERS FOR REDUCED PLANS

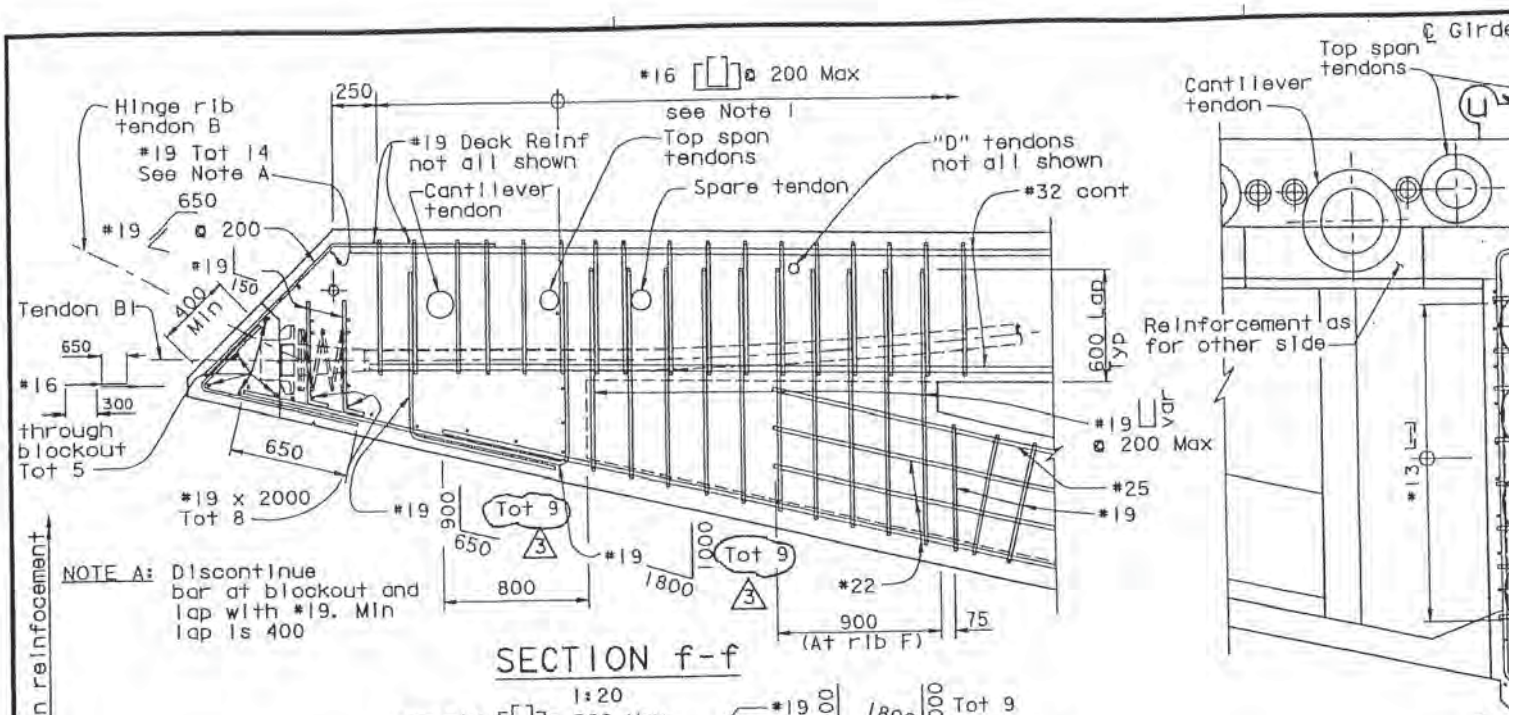

SECTION f-f

1:20

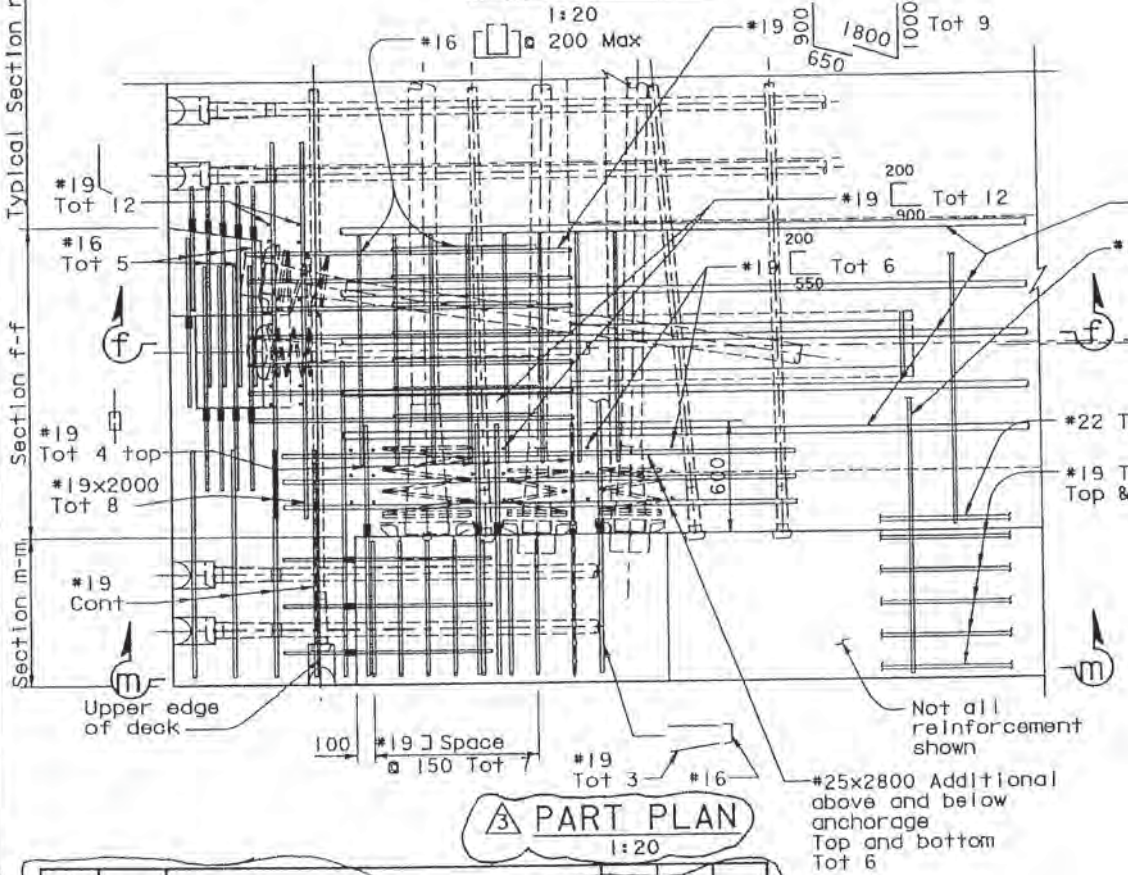

3 PART PLAN

1:20

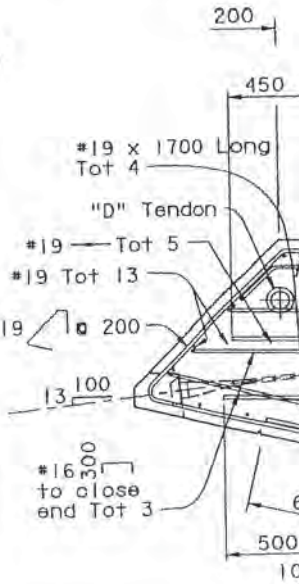

MARK	DATE	DESCRIPTIONS	BY	CH'D	CCO#
3	01/07/04	AS NOTED	SS	SA	
2	08/22/03	MODIFY REINFORCEMENT AND ADD SECTIONS	CR	EC	
1	10/07/02	ADD "D" TENDONS	EC	CR	

REVISIONS

CONTRACT CHANGE ORDER NO. 55

SHEET 78 OF 85

DESIGN OVERSIGHT

1/16/04

SIGN OFF DATE

DESIGN	BY E. Chan	CHECKED C. Werts	
DETAILS	BY S. Lee	CHECKED C. Werts	
QUANTITIES	BY E. Chan	CHECKED J. Leventini	

Rev. Date: 5-18-98

ORIGINAL SCALE IN MILLIMETERS FOR REDUCED PLANS

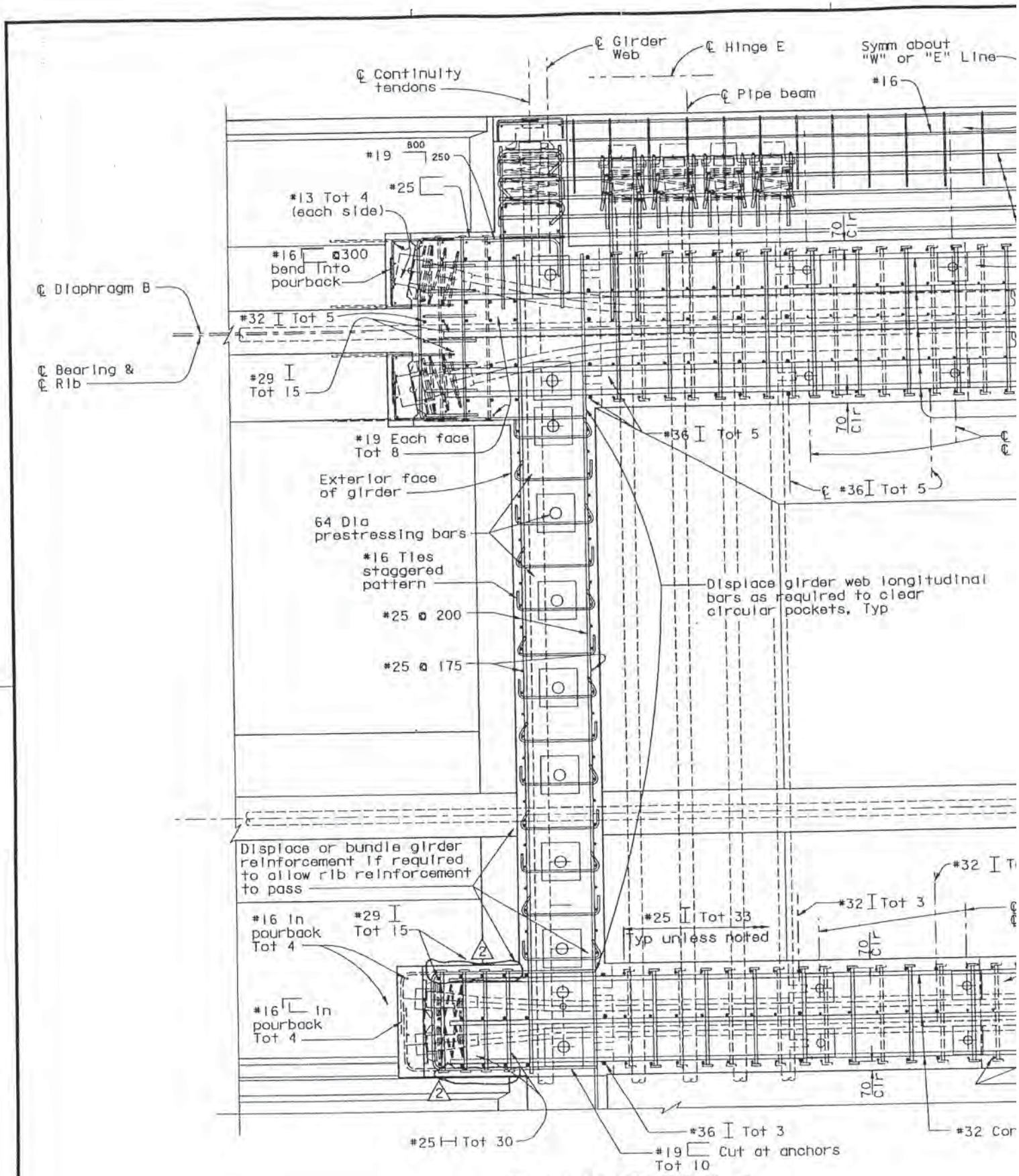

PLAN SECTION d-d

1:20

DESIGN OVERSIGHT 1/16/04	DESIGN	BY E. Chan	CHECKED C. Werts
SIGN OFF DATE	DETAILS	BY S. Lee	CHECKED C. Werts
	QUANTITIES	BY E. Chan	CHECKED J. Leventini

Rev. Date: 5-18-98

ORIGINAL SCALE IN MILLIMETERS FOR REDUCED PLANS

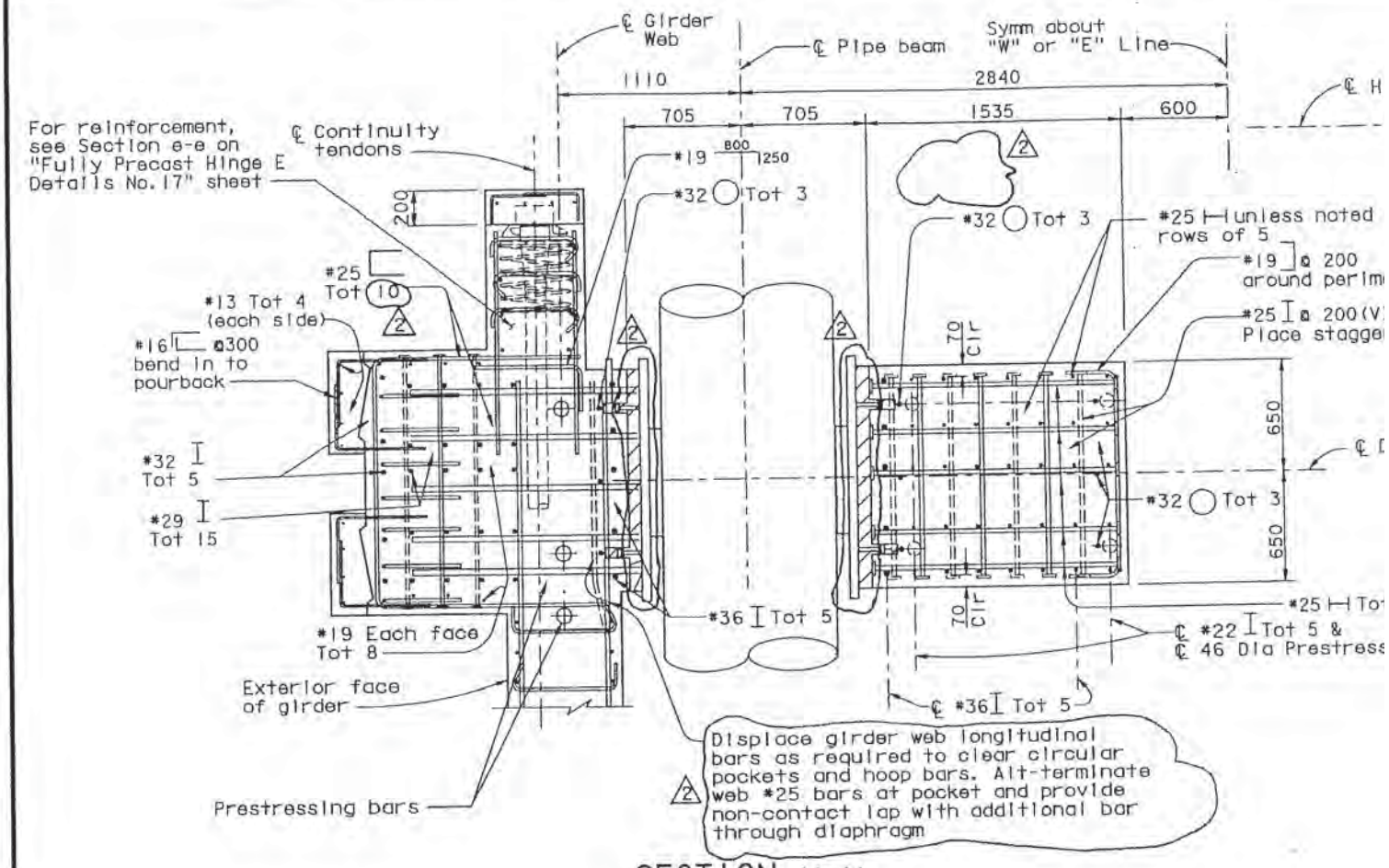

SECTION V-V

1:20

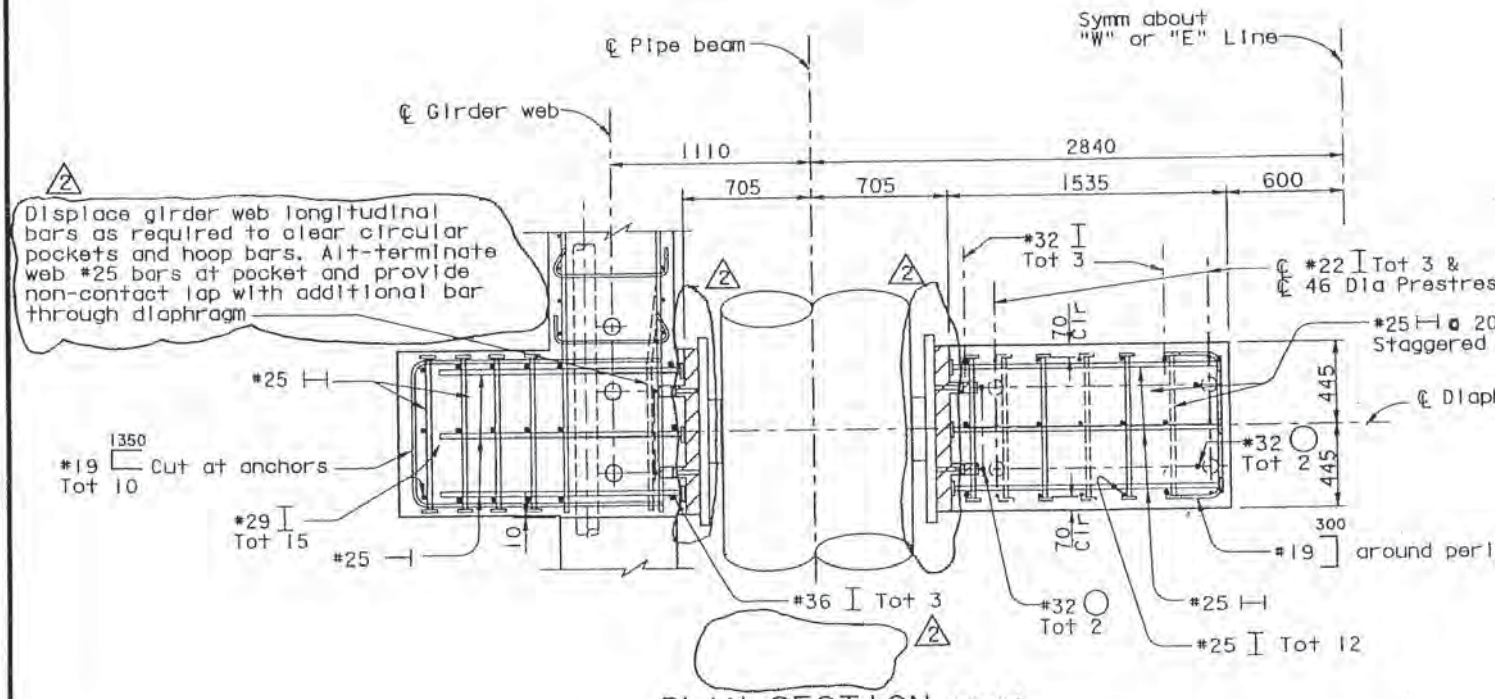

PLAN SECTION W-W

1:20

DESIGN OVERSIGHT	DESIGN	BY R. Malik	CHECKED C. Werts
1/16/04	DETAILS	BY S. Lee	CHECKED C. Werts
SIGN OFF DATE	QUANTITIES	BY R. Malik	CHECKED T. Nguyen

Rev. Date: 5-18-98

ORIGINAL SCALE IN MILLIMETERS FOR REDUCED PLANS

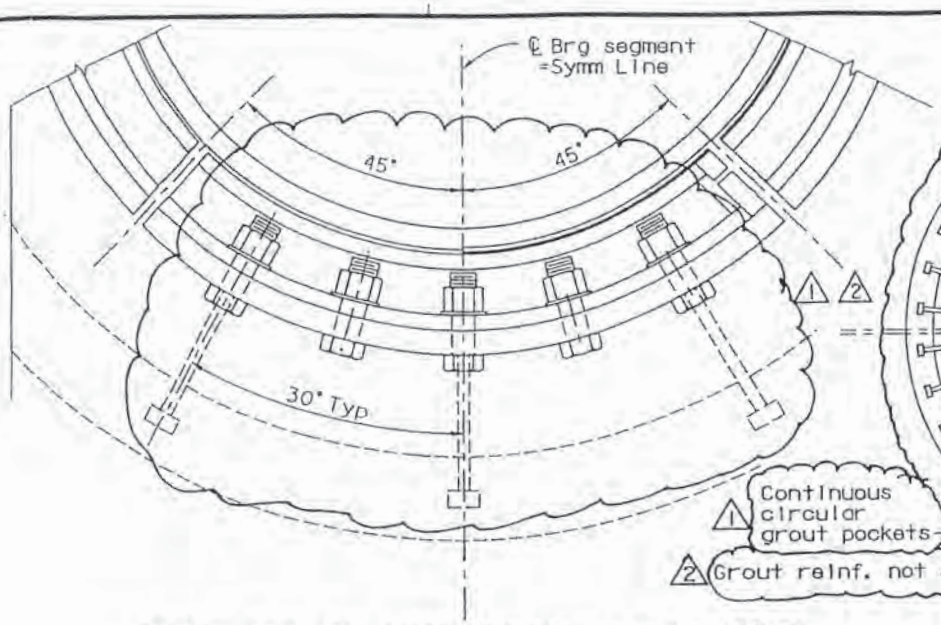

Details shown for fixed brg type III and IV | Details shown for sliding brg type I and II

(Hinge E)

Note: See Hinge B, C, and D for details not shown

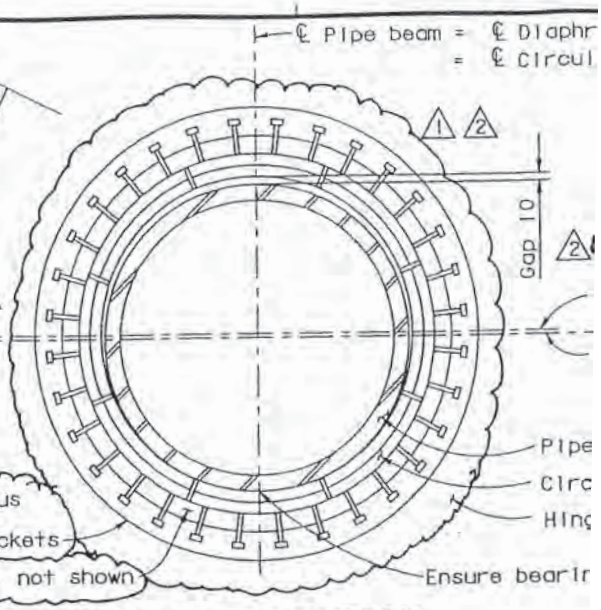

GAP DISPOSITION

No Scale

Type I and IV Bearings at Hinges B, C and D

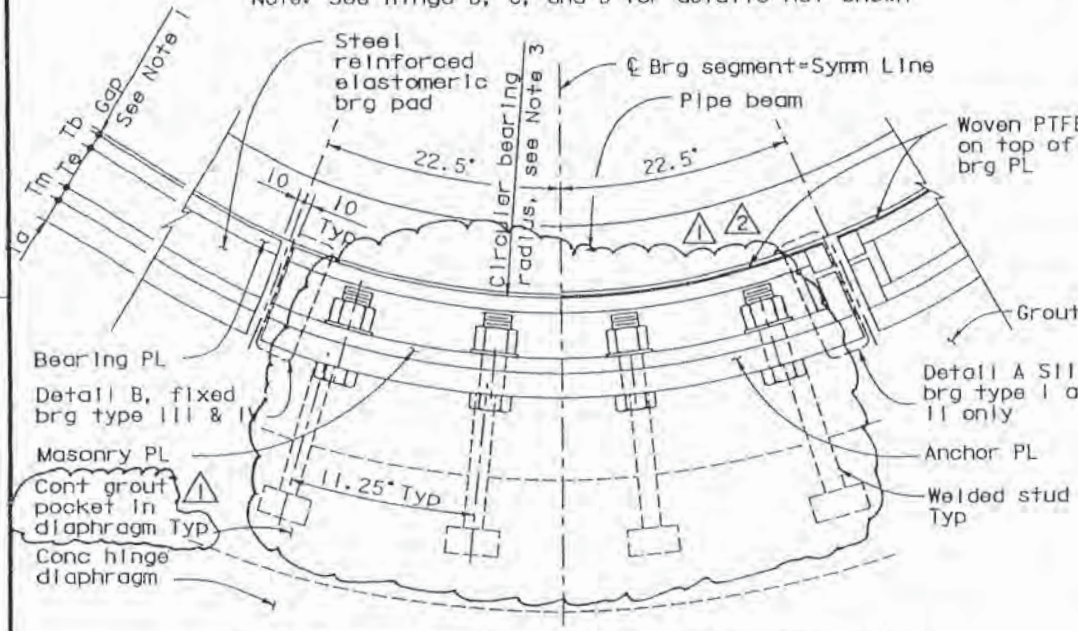

Details shown for fixed brg type III and IV | Details shown for sliding brg type I and II

(Hinge B, C and D)

SECTION A-A

No Scale

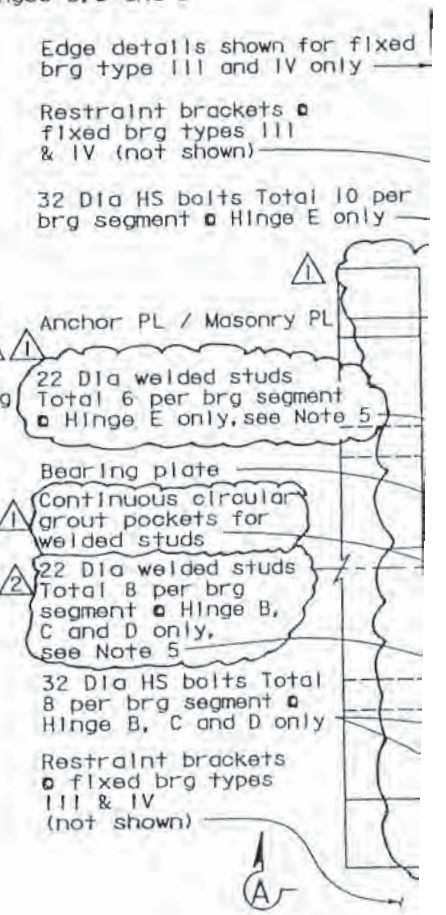

Notes:

1. Gap at installaion of brg segment prior to releasing pipe beam from temporary support system. Gap obtained using spacers around pipe beam and then grouting studs into hinge diaphragm. For hinges B, C and D, when grouted in their final position, the bearings segments shall be concentric and form a cylindrical surface.

2. For details not shown, see "Hinge Details" and "Construction Sequence" sheets.

3. Circular bearing radius measured to top of bearing PL for fixed bearings and top of PTFE for sliding bearings.

CIRCULAR SEGMENTED BE

6 REVISED PER ADDENDUM NO. 6 DATED OCTO

Dwight Mac Gee	HASBAN EL-NATH PE	DESIGN	BY J. Krizek/J. Stanton	CHECKED C. Werts
DESIGN OVERSIGHT		DETAILS	BY A. Lishansky	CHECKED C. Werts
11/10/03		QUANTITIES	BY T. West	CHECKED L. Greer
OFF DATE				

ORIGINAL SCALE IN MILLIMETERS

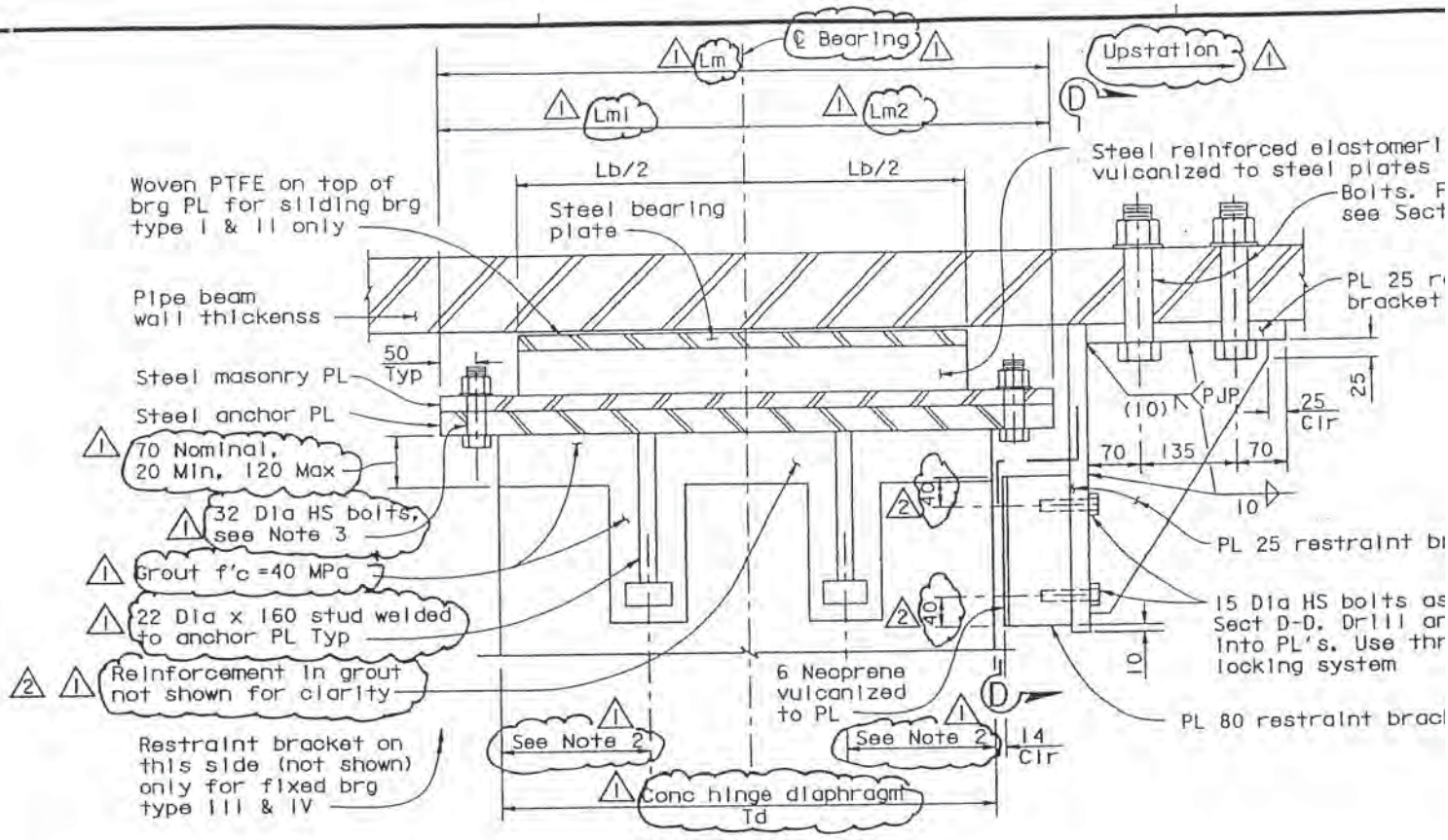

SECTION B-B

No Scale

Note: Restraint brackets on both sides of Conc diaphragm for fixed brg type III & IV only.

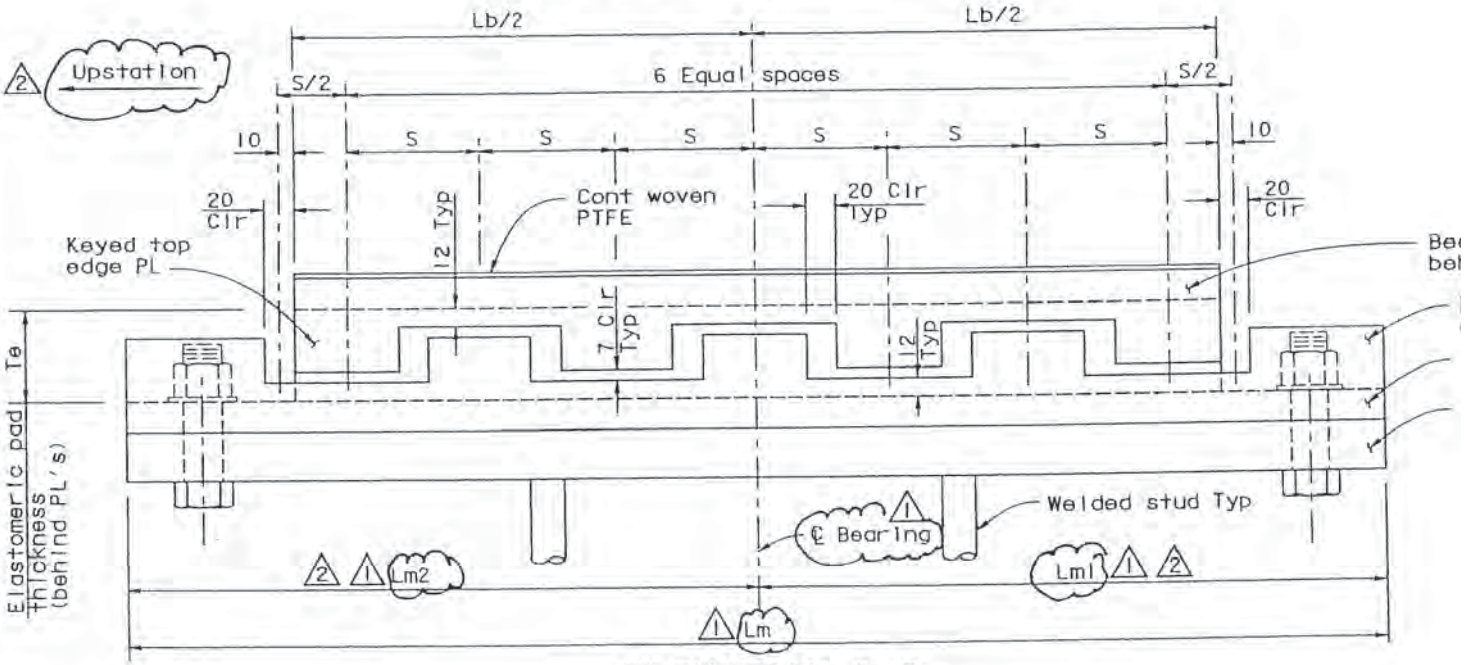

ELEVATION C-C

No Scale

Notes: 1. Keyed edge plates only at sliding bearing type I and II.
2. All keyed edge plates steel Grade 70.

CIRCULAR SEGMENTED BEA

6 REVISED PER ADDENDUM NO. 6 DATED OCTOBER 3

DESIGN OVERSIGHT 11/10/03 SIGN OFF DATE		DESIGN	BY J. Krizek/J. Stanton	CHECKED C. Werts
		DETAILS	BY A. Lishansky	CHECKED C. Werts
		QUANTITIES	BY T. West	CHECKED L. Greer

ORIGINAL SCALE IN MILLIMETERS

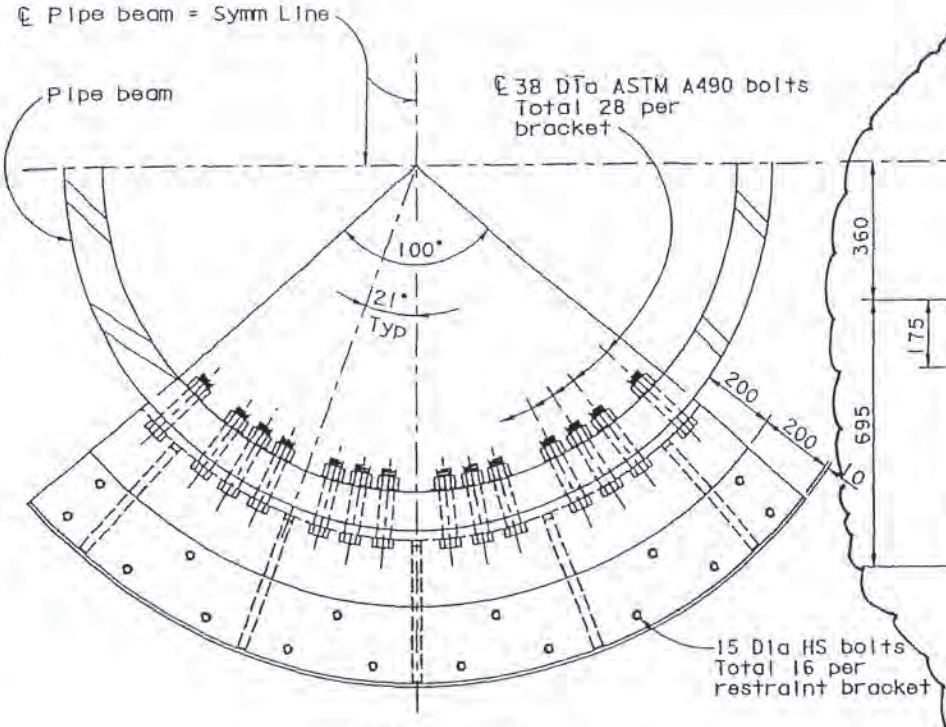

HINGES B AND C

Note: Total 4 restraint brackets per pipe beam per diaphragm location (2 on each side of diaphragm).

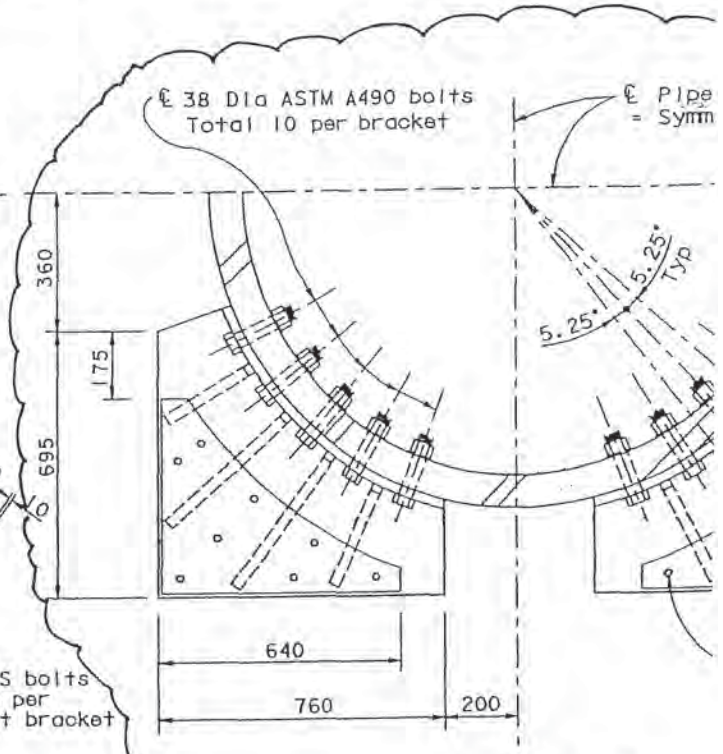

HINGE D 2

Note: Total 8 restraint brackets per pi
diaphragm location (4 on each sid

SECTION D-D

No Scale

Hinge	Diaphragm	Bearing Type	Support Type	Circular Bearing Radius	Pipe Beam Radius	Diaphragm Opening Radius	Design Service Load (kN per pipe beam)	Design Ultimate Load (kN per pipe beam)		Design Rotatio (radian	
								Vertical	Transverse	Service	Ult
AW, AE	A	IV	Fixed	955	950	1110	8500 *	24400	2300	0.0005	0
	B	III	Fixed	955	950	1110	9300 *	40200	10100	0.0025	0
	C	II	Sliding	960	955	1110	9300 *	35000	6200	0.0015	0
	D	I	Sliding	960	955	1110	8500 *	21600	1100	0.0005	0
BW, BE	A	I	Sliding	960	955	1120	8500	20200	550	0.0010	0
	B	II	Sliding	960	955	1120	9300	28500	2650	0.0035	0
	C	III	Fixed	955	950	1120	9300	26900	5150	0.0035	0
	D	IV	Fixed	955	950	1120	8500	19200	250	0.0010	0
CW, CE	A	I	Sliding	960	955	1120	8500	20200	550	0.0005	0
	B	II	Sliding	960	955	1120	9300	28500	2650	0.0015	0
	C	III	Fixed	955	950	1120	9300	26900	5150	0.0015	0
	D	IV	Fixed	955	950	1120	8500	19200	250	0.0005	0
DW, DE	A	I	Sliding	835	830	995	4200	12500	2200	0.0010	0
	B	II	Sliding	835	830	995	4800	16500	4200	0.0030	0
	C	III	Fixed	830	825	995	4800	15600	520	0.0030	0
	D	IV	Fixed	830	825	995	4000	12000	1150	0.0010	0
EW, EE	A	I	Sliding	510	505	660	1200	3700	1000	0.0020	0
	B	II	Sliding	510	505	660	1100	1400	10600	0.0040	0
	C	III	Fixed	505	500	660	2800	2200	10900	0.0050	0
	D	IV	Fixed	505	500	660	1600	1350	3100	0.0020	0

Note: 1. All plates grade 50 steel (fy = 345 MPa) and painted after final fabrication.

* Pending final construction sequence of Frame I 1

CIRCULAR SEGMENTED BEARING

6 REVISED PER ADDENDUM NO. 6 DATED OCT

DESIGN OVERSIGHT 11/10/03 SIGN OFF DATE	HASSAN EL-HAFTUR	DESIGN BY J. Krizek/J. Stanton	CHECKED C. Werts
		DETAILS BY A. Lishansky	CHECKED C. Werts
		QUANTITIES BY T. West	CHECKED L. Greer

Rev. Date: 5-18-99

ORIGINAL SCALE IN MILLIMETERS

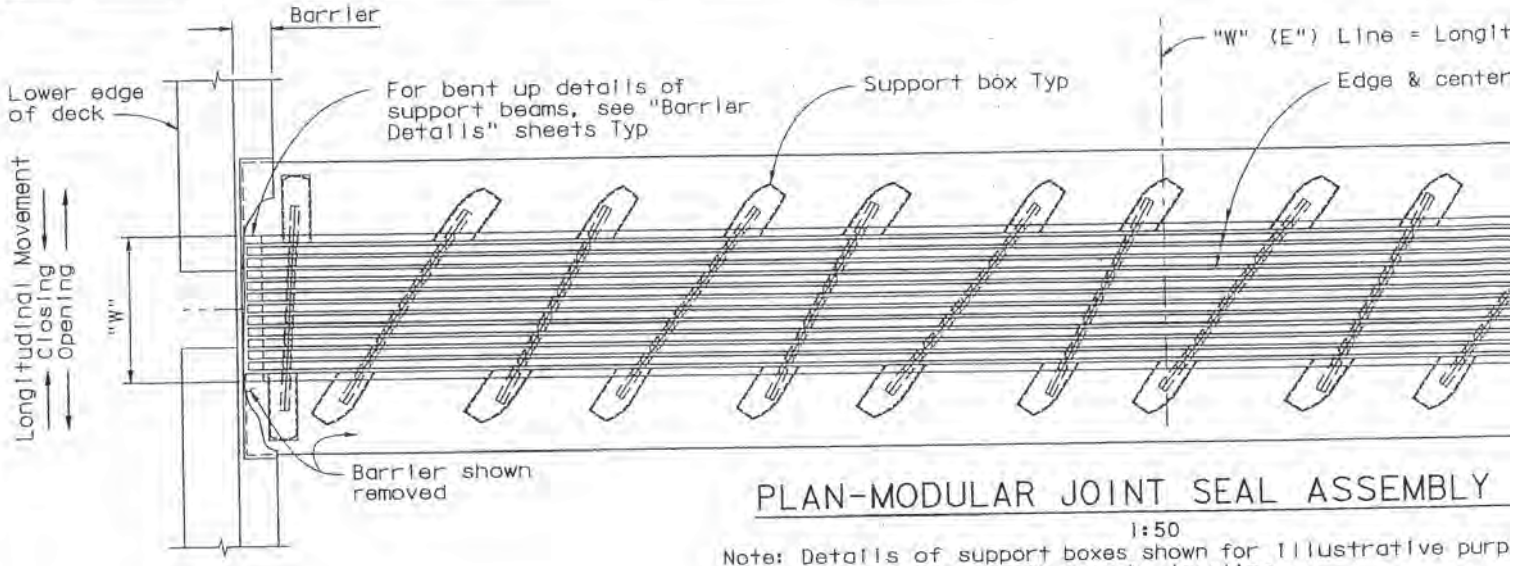

PLAN-MODULAR JOINT SEAL ASSEMBLY

1:50

Note: Details of support boxes shown for illustrative purp
Actual details may vary by location.

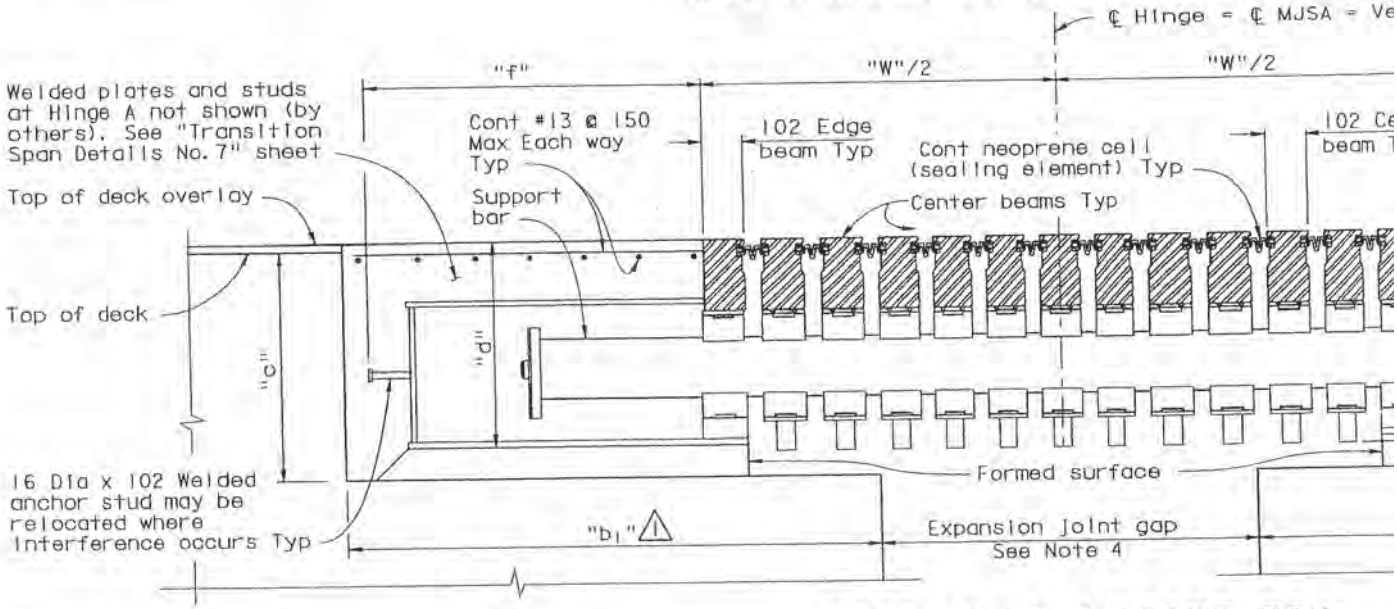

SECTION AT SUPPORT BOX

1:10

Note: Number of cells shown for illustrative purposes
Actual details may vary by location.

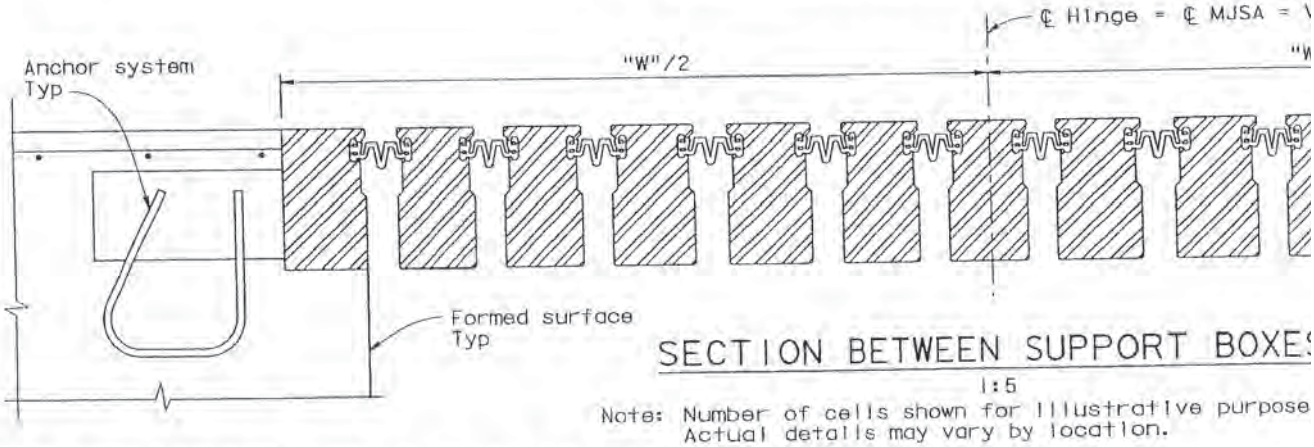

SECTION BETWEEN SUPPORT BOXES

1:5

Note: Number of cells shown for illustrative purpose
Actual details may vary by location.

4 REVISED PER ADDENDUM NO. 4 DATED OCTOBER 16, 2001

DESIGN OVERSIGHT 5/27/04		DESIGN	BY J. Krizek	CHECKED C. Werts
SIGN OFF DATE		DETAILS	BY H. Li	CHECKED C. Werts
		QUANTITIES	BY T. West	CHECKED L. Greer

Rev. Date: 5-18-98

ORIGINAL SCALE IN MILLIMETERS FOR REDUCED PLANS

MODULAR JOINT SEAL ASSEMBLY DESIGN DATA

	Location	Longitudinal movement demand (includes "fanning" effect due to rotation @ vertical axis)					Transverse movement demand	@ vert axis
		Closing		Opening				
		Trise	SEE closing	CS	Tdrop	SEE opening		
		(mm)	(mm)	(mm)	(mm)	(mm)	(mm)	(rad
(See Note)	Hinge AW, AE	△1 179	△1 1140	160	△1 179	△1 1170	△1 24	0.00
	Hinge BW, BE	137	580	270	125	549	15	0.00
	Hinge CW, CE	136	540	224	125	576	15	0.01
	Hinge DW	83	298	117	75	369	15	0.00
	Hinge DE	83	298	117	75	369	15	0.00
(See Note)	Hinge EW	41	212	60	37	220	50	0.00
(See Note)	Hinge EE	41	212	60	37	220	50	0.00

Note: Modular joint seal assembly furnish and install by others at hinges AW, AE, EW and EE.

BLOCKOUT DIMENSIONS AND MJSA FABRICATION D

Hinge	Blockout Data △2			Deck overlay thickness (mm)	Join	
	"b_1" (mm)	"b_2" (mm)	"c" (mm)		Max "d" (mm)	Max "e" (m
AW, AE		△1 2465	625	50	651	602
BW, BE	1400	1400	555	20	523	539
CW, CE	1400	1400	555	20	516	532
DW	989	989	470	20	433	449
DE	989	946	470	20	433	449
EW	855		470	20	439	455
EE	800		470	20	439	455

Notes: 1. MJSA = Modular joint seal assemblies.

2. Dimensions "d", "e" and "f" provided by the Manufacturer.

3. Modular joint seal assembly furnish and install by others at hinges AW, AE, EW and E

MODULAR JOINT SEAL ASSEMBLY INSTALLATION WIDTH, "W" (m

Air Temperature (T)	Hinge BW, BE ("g" = 69 mm)	Hinge CW, CE ("g" = 64 mm)	Hinge DW, DE ("g" = 41
5° C	2112	1962	1176
10° C	2077	1930	1155
15° C	2043	1898	1135
20° C	2008	1866	1114
25° C	1974	1834	1094
30° C	1939	1802	1073
35° C	1905	1770	1053

Notes: 1. Modular joint seal assembly installation width, "W", is based on a support beam width of 102 mm (data provided by the Manufacturer).

2. "W" = (No. of cells +1)x102 + SEE closing - $\frac{(T-20^\circ C)g}{10^\circ C}$

3. "g" is expansion joint movement per 10° C.

△4 ADDED PER ADDENDUM NO. 4 DATED OCTOBER 16, 2001

DESIGN OVERSIGHT 8/27/04 SIGN OFF DATE	for Hadow Elliott	DESIGN	BY J. Krizek	CHECKED C. Werts
		DETAILS	BY H. Li	CHECKED C. Werts
		QUANTITIES	BY T. West	CHECKED L. Greer

Rev. Date: 5-18-98

ORIGINAL SCALE IN MILLIMETERS FOR REDUCED PLANS

DIST	COUNTY	ROUTE	KILOMETER POST TOTAL PROJECT	SHEET NO.	TOTAL SHEETS
04	SF,Ala	80	13.9/14.3, 0.0/1.6	423R2	978

REGISTERED ENGINEER-ELECTRICAL

6-04-01

PLANS APPROVAL DATE

No. E16039 Exp. 9-30-03 ELECTRICAL STATE OF CALIFORNIA

The State of California or its officers or agents shall not be responsible for the accuracy or completeness of electronic copies of this plan sheet.

T.Y. LIN / MOFFATT & NICHOL
825 BATTERY STREET
SAN FRANCISCO, CA 94111

Caltrans now has a web site! To get to the web site, go to: http://www.dot.ca.gov

THIS SHEET REPLACES SHEET NO. 423 OF 978 OF PLAN APPROVED JUNE 4, 2001

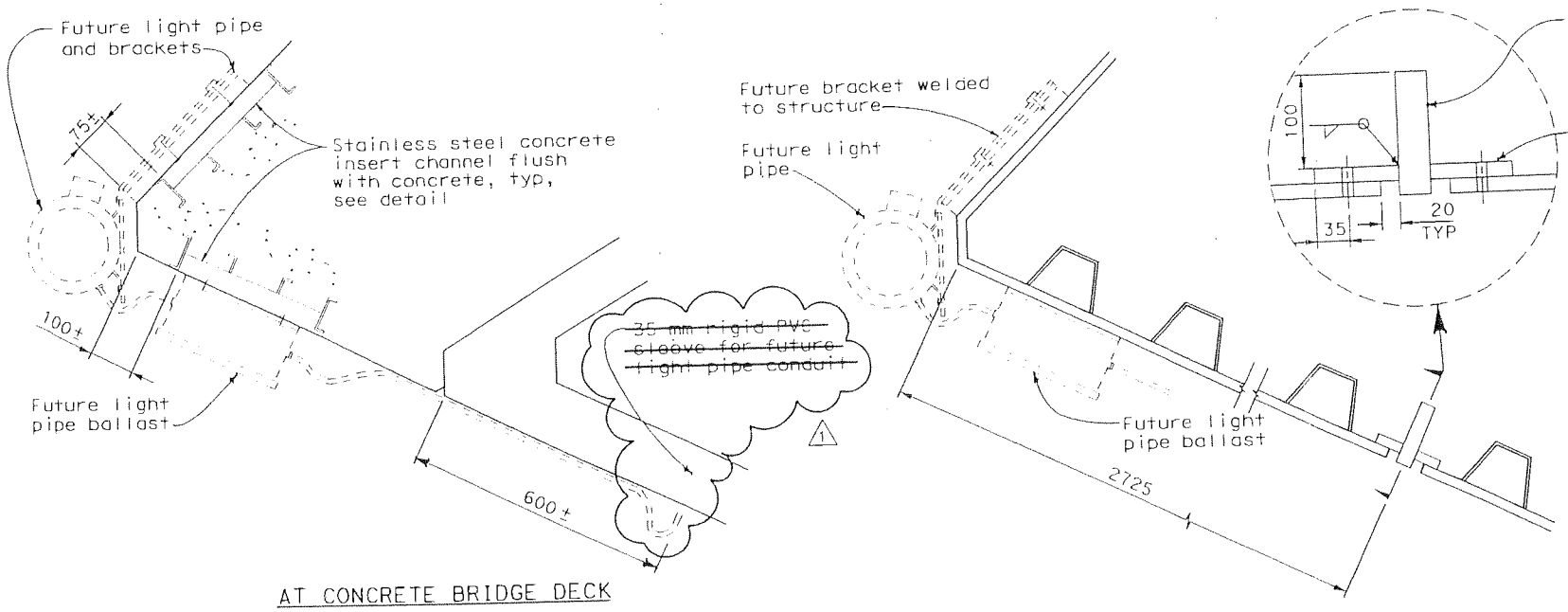

AT CONCRETE BRIDGE DECK

AT STEEL BRIDGE DECK

DETAIL A
Not to scale

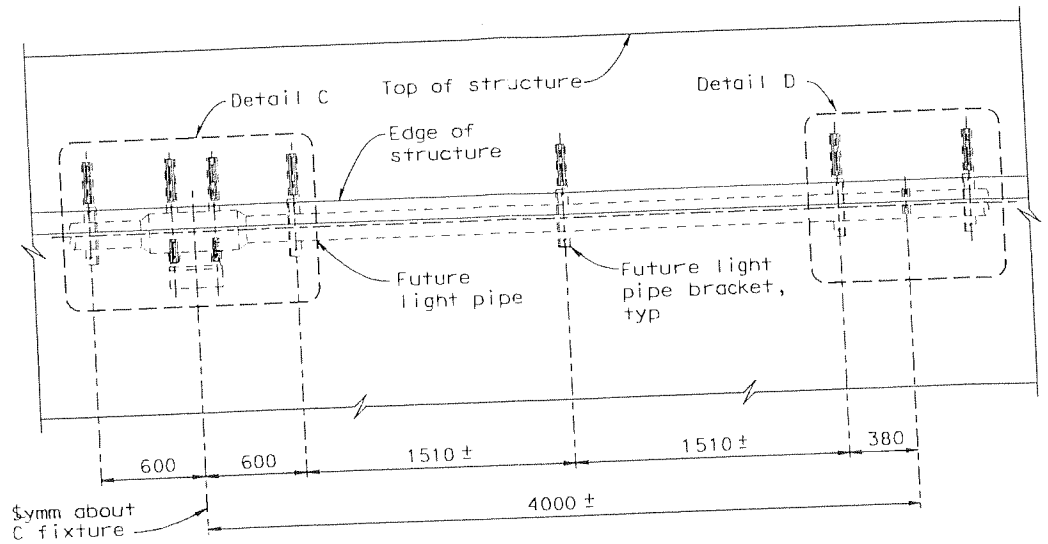

ELEVATION - TYPICAL LIGHT PIPE FIXTURE
(Shown at concrete bridge deck similar at steel bridge deck and bikeway)
1:20

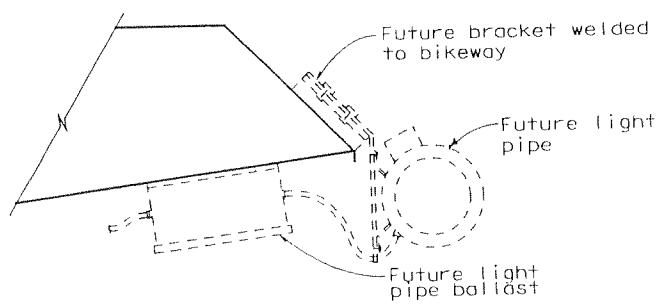

AT STEEL BIKEWAY DECK

DETAIL B
Not to scale

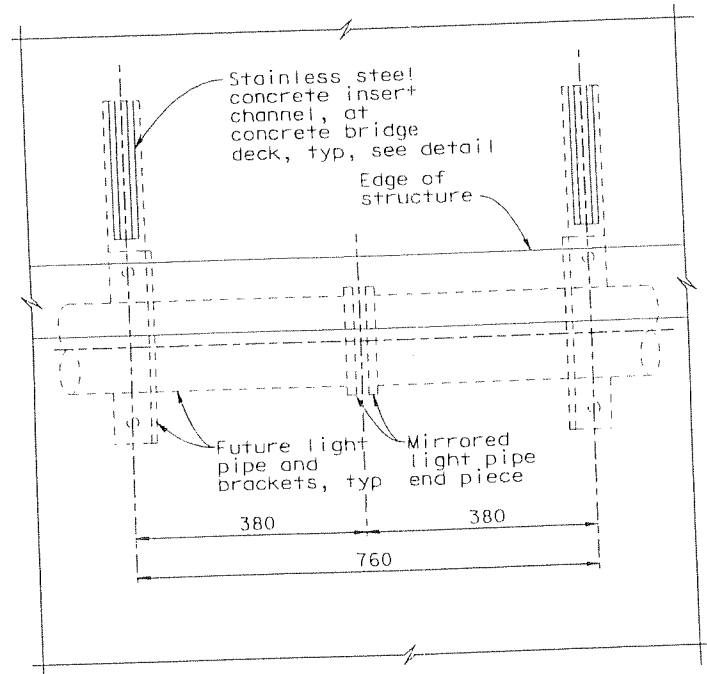

DETAIL D
Not to scale

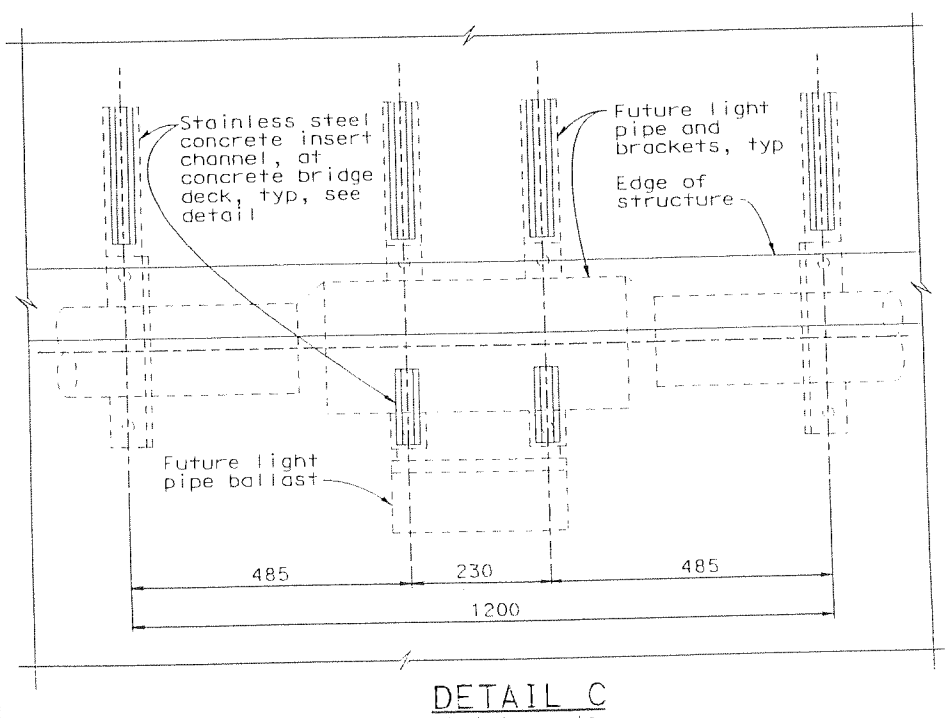

DETAIL C
Not to scale

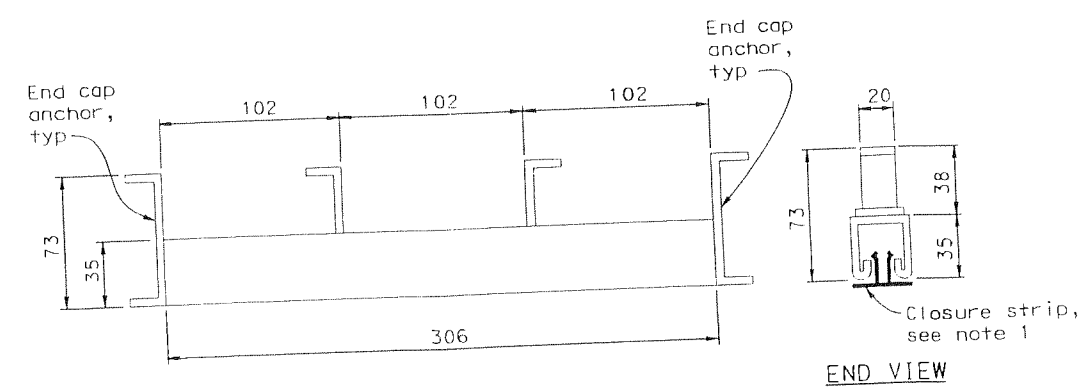

END VIEW

CONCRETE INSERT CHANNEL DETAIL
1:2

Notes

1. Install full length, stainless steel closure strips at all concrete insert channels to cover channels until future light pipe is installed.
2. For concrete penetrations, conduit for future light will be routed through the gap between the precast segments. (1)

1 Mahbub Hossain 2/7/06
REGISTERED CIVIL ENGINEER DATE

REGISTERED PROFESSIONAL ENGINEER M. Hossain No. 59006 Exp. 6-30-07 CIVIL STATE OF CALIFORNIA

MARK	DATE	DESCRIPTIONS	REV	CK
1	2/7/06	Deleted conduit stub-out for concrete penetrations. Added note 2.	MH	WBH

REVISIONS — CCO NO. 56

CONTRACT CHANGE ORDER NO. 56
SHEET 2 OF 2

ALL DIMENSIONS ARE IN MILLIMETERS UNLESS OTHERWISE SHOWN.

DETAILS
LIGHT PIPE INSTALLATION NO.2
SCALE AS NOTED

EE-424

FOR REDUCED PLANS ORIGINAL SCALE IN MILLIMETERS 0 20 40 60 80

FILE => 04-012024_0423R2.dgn
USERNAME => mhossain

CU 04251 EA 012021

LAST REVISION DATE PLOTTED => 09-FEB-2006
09-30-00 TIME PLOTTED => 12:53

STATE OF CALIFORNIA - DEPARTMENT OF TRANSPORTATION
Caltrans
SKYWAY STRUCTURE

DESIGN OVERSIGHT Bob Zandipour

CALCULATED/DESIGNED BY GAM DATE 10/00 REVISED BY
CHECKED BY TYL 10/00 DATE REVISED

STATE OF CALIFORNIA - DEPARTMENT OF TRANSPORTATION

CONTRACT CHANGE ORDER MEMORANDUM

TO: PETER SIEGENTHALER / DOUG COE, Supervising Br. Eng.	FILE: E.A. 04 - 012024
FROM: DOUG COE, Supervising Br. Eng.	CO-RTE-PM 04-SF,Ala-80-13.9/14.3,0.0/1.6
	FED. NO. ACIM-080-1(085)8N
CCO# 56 SUPPLEMENT#: 0 Category Cod **CHPC**	CONTINGENCY BALANCE (incl. this change
COST: INCREASE ☑ DECREASE ☐	HEADQUARTERS APPROVAL REQUIRED? ☐ YES ☑ NO
SUPPLEMENTAL FUNDS PROVIDED: **$0.00**	IS THIS REQUEST IN ACCORDANCE WITH ENVIRONMENTAL DOCUMENTS? ☑ YES ☐ NO
CCO DESCRIPTION: Future Light Pipe	**PROJECT DESCRIPTION:** REPLACE SFOBB EAST SPAN

LOCATION: IN SAN FRANCISCO AND ALAMEDA COUNTIES IN SAN FRANCISCO AND OAKLAND FROM 1.3 KM EAST OF THE YERBA BUENA ISL

THIS CHANGE ORDER PROVIDES FOR:

fabrication and installation of future light pipe conduit sleeves (total of 7) instead of conduit stub-outs in the west bound steel transition span, and elimination of the PVC conduit sleeves in the west bound concrete bridge deck in accordance with detail A of revised contract plan sheet number 423R2 of 978 of the SFOBB East Span Skyway, Bridge No. 34-0006L/R.

The PVC pipe sleeve layout locations in the pre-cast panels interfered with the top span blisters and the flanges on panel types, I, II, IIIA. In order to mitigate these interferences, it was found that the conduit can be installed through the gap between the pre-cast panels and to eliminate the stub-outs from the concrete bridge sections. The stub-outs at the steel bridge deck are to be changed to sleeves and installed per revised plan sheet 423R2 detail A. Plan sheet 423 did not show sufficient detail to construct the sleeves in the steel transition span. The additional detail provided by design changed the stub-outs to sleeves.

The agreed compensation for this contract change order is included in the lump sum compensation portion of resolution CCO No. 200. For this work the Contractor will be compensated an agreed lump sum amount of $41,194.00.

A detailed force account analysis prepared by the Engineer for the cost of this change order is on file in the project records.

Mr. Pete Siegenthaler, SFOBB Construction Manager, Toll Bridge Construction, concurs with this change. A copy of the concurrence signed by Mr. Siegenthaler on January 6, 2004 is attached.

FHWA prior approval is not required because this is not a major contract change order.

Design concurred by submitting revised plan sheet 423R1 on April 17, 2003 and per Mission Control Construction Resolution Session, MC-CRS-091 "Future Light Pipe" on July 22, 2003 (Revisions reflected on plan sheet 423R2).

Concurrence from Maintenance was obtained from Mr. Kenneth Brown, Structure Maintenance and Investigations, on March 29, 2006. A copy of the concurrence received from Maintenance is attached.

No adjustment in Contract time will be made as this change order does not affect the controlling operations.

CONCURRED BY:		
Construction Engineer:	Douglas Coe	Date 8-24-06
Bridge Engineer:	Douglas Coe	Date 8-24-06
FHWA Representative:		Date
Project Engineer:		Date
Other (specify): Ken Brown, Maintenance		Date3/29/2006
		Date
		Date
District Prior Approval By:		Date
HQ (Issue Approve) By:		Date
Resident Engineer's Signature:		Date 8-24-06

ESTIMATE OF COST

	THIS REQUEST	TOTAL TO DATE
ITEMS	$0.00	$0.00
FORCE ACCOUNT	$0.00	$0.00
AGREED PRICE	$0.00	$0.00
ADJUSTMENT		
TOTAL		

FEDERAL PARTICIPATION

☑ PARTICIPATING ☐ PARTICIPATING IN PART ☐ NONE
☐ NON-PARTICIPATING (MAINTENANCE) ☐ NON-PARTICIPATING

FEDERAL SEGREGATION (if more than one Funding Source or P.I.P. type)
☑ CCO FUNDED PER CONTRACT ☐ CCO FUNDED AS FOLLOWS

FEDERAL FUNDING SOURCE	PERCENT

CONTRACT CHANGE ORDER

Change Requested by: Engineer

CCO: 57	Suppl. No. 0	Contract No. 04 - 012024	Road 04-SF,Ala-80-13.9/14.3,0.0/1.6	FED. AID LOC.: ACIM-080-1(085)8N

To: **KIEWIT / FCI / MANSON a JV**

You are directed to make the following changes from the plans and specifications or do the following described work not included in the plans and specifications for this contract. ***NOTE: This change order is not effective until approved by the Engineer.***

Description of work to be done, estimate of quantities and prices to be paid. (Segregate between additional work at contract price, agreed price and force account.) Unless otherwise stated, rates for rental of equipment cover only such time as equipment is actually used and no allowance will be made for idle time. This last percentage shown is the net accumulated increase or decrease from the original quantity in the Engineer's Estimate.

Adjustment of Compensation at Lump Sum:

Compensate the Contractor's vendor for cost incurred through November 26, 2003, to re-detail shop drawings associated with the structural steel web, stiffeners, and diaphragm plates for the bikepath boxes on the SFOBB - East Span Skyway, Bridge Nos. 34-0006 UR, as shown on revised contract plan sheets 867R3, 868R3, and 869R3 of 978 (pages 2 through 4 of this change order).

The Contractor will receive and agrees to accept the agreed lump sum amount of $21,768.00 for this change. This sum constitutes full compensation, including markups, for re-detailing the bikepath shop drawings as described above.

Cost of Adjustment of Compensation at Agreed Lump Sum $21,768.00

Estimated Cost: Increase ☑ Decrease ☐ $21,768.00

By reason of this order the time of completion will be adjusted as follows: 0 days

Submitted by		
Signature	Resident Engineer: COE D.	Date 1-20-04
Approval Recommended by		
Signature	Construction Engineer: COE D.	Date 1-20-04
Engineer Approval by		
Signature	(Print name and title) PETER SIEGENTHALER - Chief	Date

We the undersigned contractor, have given careful consideration to the change proposed and agree, if this proposal is approved, that we will provide all equipment, furnish the materials, except as may otherwise be noted above, and perform all services necessary for the work above specified, and will accept as full payment therefor the prices shown above.

NOTE: If you, the contractor, do not sign acceptance of this order, your attention is directed to the requirements of the specifications as to proceeding with the ordered work and filing a written protest within the time therein specified.

Contractor Acceptance by		
Signature	(Print name and title) A.T. Sikora, Project Director	Date 2/27/04

CONTRACT CHANGE ORDER

Change Requested by: Engineer

CCO 58	Suppl. No. 0	Contract No. 04 - 012024	Road 04-SF,Ala-80-13.9/14.3,0.0/1.6	FED. AID LOC.: ACIM-080-1(085)8N

To: **KIEWIT / FCI / MANSON a JV**

You are directed to make the following changes from the plans and specifications or do the following described work not included in the plans and specifications for this contract. ***NOTE: This change order is not effective until approved by the Engineer.***

Description of work to be done, estimate of quantities and prices to be paid. (Segregate between additional work at contract price, agreed price and force account.) Unless otherwise stated, rates for rental of equipment cover only such time as equipment is actually used and no allowance will be made for idle time. This last percentage shown is the net accumulated increase or decrease from the original quantity in the Engineer's Estimate.

Extra Work at Force Account:

1. Furnish 17 painted metal belvedere benches as shown on Bench Location Layout on sheet 109P (page 3 of 5 of this change order) and Bench Location Layout and Section on sheet 109QR2 (page 4 of 5 of this change order) . Two benches shall be installed at each of the five belvedere locations, seven benches are to be placed in storage at a location designated by the Engineer.

2. Revise the polyester concrete overlay color at the belvedere portions of the bikepath as shown on Bikepath Details on sheet 875AR4 (page 5 of 5 of this change order). Extend the yellow traffic stripe (100 mm) on the bikepath centerline along the belvedere locations as shown on Pavement Delineation Details on sheet 35R1 (page 2 of 5 of this change order).

3. Add the following sentence to the second paragraph of Section 10-1.36, "Polyester Concrete Overlay (20MM, 13MM)", sub-section "Construction", of the Special Provisions: "The Engineer shall approve the location for each trial overlay."

Estimated cost of Extra Work at Force Account $200,000.00

Estimated Cost: Increase ☑ Decrease ☐ **$200,000.00**

By reason of this order the time of completion will be adjusted as follows: 0 days

Submitted by

Signature	Resident Engineer: DOUG COE, Supervising Br. Eng.	Date 10-26-05

Approval Recommended by

Signature	Construction Engineer: DOUG COE, Supervising Br. Eng.	Date 10-26-05

Engineer Approval by

Signature	(Print name and title) DOUG COE, Supervising Br. Eng. - Construction Engin	Date 9-13-06

We the undersigned contractor, have given careful consideration to the change proposed and agree, if this proposal is approved, that we will provide all equipment, furnish the materials, except as may otherwise be noted above, and perform all services necessary for the work above specified, and will accept as full payment therefor the prices shown above.

NOTE: If you, the contractor, do not sign acceptance of this order, your attention is directed to the requirements of the specifications as to proceeding with the ordered work and filing a written protest within the time therein specified.

Contractor Acceptance by

Signature	(Print name and title) Lee Zink Project Director	Date 8/7/06

STATE OF CALIFORNIA - DEPARTMENT OF TRANSPORTATION

CONTRACT CHANGE ORDER MEMORANDUM

TO: PETER SIEGENTHALER / DOUG COE, Supervising Br. Eng.	FILE: **E.A.** 04 - 012024
	CO-RTE-PM 04-SF,Ala-80-13.9/14.3,0.0/1.6
FROM: DOUG COE, Supervising Br. Eng.	**FED. NO.** ACIM-080-1(085)8N
CCO#: **58** SUPPLEMENT#: **0** Category Code: **CHPX**	CONTINGENCY BALANCE (incl. this change) **$30,782,411.28**
COST: **$200,000.00** INCREASE ☑ DECREASE ☐	HEADQUARTERS APPROVAL REQUIRED? ☑ YES ☐ NO
SUPPLEMENTAL FUNDS PROVIDED: **$0.00**	IS THIS REQUEST IN ACCORDANCE WITH ENVIRONMENTAL DOCUMENTS? ☑ YES ☐ NO
CCO DESCRIPTION: Belvedere Benches and Bikepath Color	**PROJECT DESCRIPTION:** REPLACE SFOBB EAST SPAN

LOCATION: IN SAN FRANCISCO AND ALAMEDA COUNTIES IN SAN FRANCISCO AND OAKLAND FROM 1.3 KM EAST OF THE YERBA BUENA ISL

THIS CHANGE ORDER PROVIDES FOR:

1. Furnishing 17 painted metal belvedere benches. Two benches will be installed at each of the five belvedere locations, and seven benches will be placed in storage to be installed on the Self-Anchored Suspension Bridge Project (Contract No. 04-0120F4).

2. Revising the polyester concrete overlay color at the belvedere portions of the bikepath from light gray to charcoal gray. Also, continuing the yellow traffic stripe (100 mm) on the bikepath centerline along the belvedere locations as shown on sheets 2, 3, 4 and 5 of this change order. The revised contract plans reflecting these changes are 35R1, 109P, 109QR2 and 875AR4 of 978.

3. In the Special Provisions, Section 10-1.36, "Polyester Concrete Overlay (20MM, 13MM)", sub-section "Construction", the following sentence is added to the second paragraph: "The Engineer shall approve the location for each trial overlay."

This change order is necessary to comply with the following requirements:

Bay Conservation and Development Commission (BCDC) Permit 8,01, Section III-C "Maximum Feasible Public Access" dated November 20, 2001, last amended July 13, 2005, now requires that light-weight benches be installed at each belvedere location;

Section 6-03.3 "Contrast Treatment," of Caltrans Traffic Manual requires continuous color contrast between a bicycle lane and a pedestrian lane throughout the entire length of a bicycle-pedestrian pathway;

And continuous yellow striping shall be provided throughout the entire length of the bicycle lane to separate opposing lanes of traffic as shown on revised pavement delineation sheet PD-8 (35R1) stamped by Roland Au-Yeung, Chief of Traffic Operations, District4, on August 30, 2005. Current Contract Plan shows a break in yellow striping at the belvedere locations.

This work will be paid for as Extra Work at Force Account for an estimated cost of $200,000.00, which can be financed from the contingency fund.

Concurrence was obtained from Mr. Rick Morrow for Mr. Pete Siegenthaler, SFOBB East Span Skyway Principal Construction Engineer, October 13, 2005.

This change order has been discussed with and concurred by Mr. Hasan El-Natur, Design Oversight Engineer, on January 28, 2005.

FHWA Prior Approval was obtained from Nancy Bobb on July 12, 2005.

Concurrence from Maintenance was obtained from Alan Chow, Senior Bridge Engineer, on July 21, 2005.

Authorization to proceed with this change order was issued by Division of Construction on September 18, 2005.

No time adjustment is warranted for this change as it does not affect the controlling operation.

RECEIVED
056641 OCT-2 '05

CONCURRED BY:		
Construction Engineer:	Douglas Coe	Date 10-26-05
Bridge Engineer:	Douglas Coe	Date 10-26-05
FHWA Representative:	Nancy Bobb	Date 7/12/2005
Project Engineer:	Hasan El-Natur	Date 1/2/2005
Other (specify): Clive Endress, Senior Landscape Architect		Date 9/14/2005
Alan Chow, Sr. Bridge Engineer, Maintenance		Date 7/21/2005
Roland Au-Yeung, D-4 Chief of Traffic Operations		Date 8/30/2005
District Prior Approval By:		Date
HQ (Issue Approve) By:		Date
Resident Engineer's Signature:		Date 10-26-05

ESTIMATE OF COST

	THIS REQUEST	TOTAL TO DATE
ITEMS	$0.00	$0.00
FORCE ACCOUNT	$200,000.00	$200,000.00
AGREED PRICE	$0.00	$0.00
ADJUSTMENT	$0.00	$0.00
TOTAL	$200,000.00	$200,000.00

FEDERAL PARTICIPATION

☑ PARTICIPATING ☐ PARTICIPATING IN PART ☐ NONE
☐ NON-PARTICIPATING (MAINTENANCE) ☐ NON-PARTICIPATING

FEDERAL SEGREGATION (if more than one Funding Source or P.I.P. type)
☑ CCO FUNDED PER CONTRACT ☐ CCO FUNDED AS FOLLOWS

FEDERAL FUNDING SOURCE	PERCENT

CONTRACT CHANGE ORDER

Change Requested by: Engineer

CCO: 59	Suppl. No. 0	Contract No. 04 - 012024	Road 04-SF,Ala-80-13.9/14.3,0.0/1.6	FED. AID LOC.: ACIM-080-1(085)8N

To: **KIEWIT / FCI / MANSON a JV**

You are directed to make the following changes from the plans and specifications or do the following described work not included in the plans and specifications for this contract. ***NOTE: This change order is not effective until approved by the Engineer.***

Description of work to be done, estimate of quantities and prices to be paid. (Segregate between additional work at contract price, agreed price and force account.) Unless otherwise stated, rates for rental of equipment cover only such time as equipment is actually used and no allowance will be made for idle time. This last percentage shown is the net accumulated increase or decrease from the original

Adjustment of Compensation at Lump Sum:

Revise all ladders at deck manholes (32 locations) and revise the electrical girder-access lighting fixtures at the deck manholes of spans E15W/E, E16W/E, and E17W/E as shown on revised contract plan sheet numbers 93BR3, 93CR5, 93ER2, 94R4, 97BR4, 97CR5, 97ER1, 98R6, 102R6, 102C, 190R2, 210R2, and 310R2 of 978 of the SFOBB East Span Skyway, Bridge Nos. 34-0006L/R (page 2 through 14 of this change order).

Full compensation for providing all labor, material, equipment, tools and incidentals, including markups, for all direct and indirect costs, and all associated project impacts for this work is included in the lump sum payment of CCO No. 200 and no further payment will be made as a result of this CCO.

Estimated Cost: Increase ☐ Decrease ☐

By reason of this order the time of completion will be adjusted as follows: 0 days

Submitted by

Signature	Resident Engineer: DOUG COE, Supervising Br. Eng.	Date 8-24-06

Approval Recommended by

Signature	Construction Engineer: DOUG COE, Supervising Br. Eng.	Date 8-24-06

Engineer Approval by

Signature	(Print name and title) DOUG COE, Supervising Br. Eng. - Construction Engin	Date

We the undersigned contractor, have given careful consideration to the change proposed and agree, if this proposal is approved, that we will provide all equipment, furnish the materials, except as may otherwise be noted above, and perform all services necessary for the work above specified, and will accept as full payment therefor the prices shown above.

NOTE: If you, the contractor, do not sign acceptance of this order, your attention is directed to the requirements of the specifications as to proceeding with the ordered work and filing a written protest within the time therein specified.

Contractor Acceptance by

Signature	(Print name and title) LEE Zink, Project Director	Date 9/5/06

STATE OF CALIFORNIA - DEPARTMENT OF TRANSPORTATION

CONTRACT CHANGE ORDER MEMORANDUM

TO: PETER SIEGENTHALER / DOUG COE, Supervising Br. Eng.

FROM: DOUG COE, Supervising Br. Eng.

FILE: E.A. 04 - 012024
CO-RTE-PM 04-SF,Ala-80-13.9/14.3,0.0/1.6
FED. NO. ACIM-080-1(085)8N

CCO#. 59 SUPPLEMENT#: 0 Category Cod CHPA

CONTINGENCY BALANCE (incl. this change

COST: INCREASE ☐ DECREASE ☐

HEADQUARTERS APPROVAL REQUIRED? ☐ YES ☑ NO

SUPPLEMENTAL FUNDS PROVIDED: $0.00

IS THIS REQUEST IN ACCORDANCE WITH ENVIRONMENTAL DOCUMENTS? ☑ YES ☐ NO

CCO DESCRIPTION:
Ladder at Deck Manholes

PROJECT DESCRIPTION:
REPLACE SFOBB EAST SPAN

LOCATION: IN SAN FRANCISCO AND ALAMEDA COUNTIES IN SAN FRANCISCO AND OAKLAND FROM 1.3 KM EAST OF THE YERBA BUENA ISL

THIS CHANGE ORDER PROVIDES FOR:

revising all ladders at deck manholes (32 locations) and revising the electrical girder-access lighting fixtures at the deck manholes of spans E15W/E, E16W/E, and E17W/E as shown on revised contract plan sheet numbers 93BR3, 93CR5, 93ER2, 94R4, 97BR4, 97CR5, 97ER1, 98R6, 102R6, 102C, 190R2, 210R2, and 310R2 of 978 (sheets 2 through 14 of the contract change order).

This change order is needed to resolve a conflict in the plans. The original ladder was designed for a 762 mm diameter manhole as shown on contract plan sheet 102 of 978. Late in the design phase the diameter of the manhole was reduced to 600 mm thereby eliminating conflicts with the placement of the transverse tendons. Although the structure contract plans were updated with this information the substation architectural plans were not. This resulted in the need to revise the ladder detail to provide better access through the manhole. This modification will revise the ladder to an incline ladder bolted to the bottom of the deck concrete instead of inside the manhole opening. The revision also includes the installation of two (2) grab-bars inside the manhole opening. This modification will bring the ladder into compliance with OSHA standards.

This change order is also needed to revise the girder-access lighting fixtures at the deck manholes of spans E15W/E, E16W/E, and E17W/E to ceiling mounted access lighting. Electrical changes to the girder-access lighting fixtures are needed as a consequence of branch walkway deletion portion of contract change order no. 24 supplement 2 executed on March 14, 2006.

The agreed compensation for this contract change order is included in the lump sum compensation portion of resolution CCO No. 200. For this work, the Contractor agrees to accept a lump sum amount of $101,030.00.

A detailed force account analysis prepared by the Engineer for the cost of this change order is on file in the project records.

Mr. Pete Siegenthaler, SFOBB Construction Manager, Toll Bridge Construction, provided District Prior Approval for this change order on August 20, 2003. A copy of the concurrence signed by Mr. Siegenthaler is attached.

FHWA Prior Approval is not required as this is a minor change order.

Design concurrence was provided by Muthanna S. Omran, OSD designer, on April 22, 2005, as indicated by his signature on the revised contract plan sheets.

Verbal concurrence from Maintenance was obtained from Mr. Kenneth Brown on August 24, 2006. Verbal concurrence was provided to Mr. Bill Howe, Senior Engineer, SFOBB Skyway Project.

No time adjustment is warranted for this change order as it does not affect the controlling operation.

CONCURRED BY:

Construction Engineer:	Douglas Coe	Date 8-24-06
Bridge Engineer:	Douglas Coe	Date 8-24-06
FHWA Representative:		Date
Project Engineer:		Date
Other (specify):		Date
		Date
		Date
District Prior Approval By:	Pete Siegenthaler	Date 8/20/2003
HQ (Issue Approve) By:		Date
Resident Engineer's Signature:		Date 8-24-06

ESTIMATE OF COST

	THIS REQUEST	TOTAL TO DATE
ITEMS	$0.00	$0.00
FORCE ACCOUNT	$0.00	$0.00
AGREED PRICE	$0.00	$0.00
ADJUSTMENT		
TOTAL		

FEDERAL PARTICIPATION

☑ PARTICIPATING ☐ PARTICIPATING IN PART ▲ NONE
☐ NON-PARTICIPATING (MAINTENANCE) ☐ NON-PARTICIPATING

FEDERAL SEGREGATION (if more than one Funding Source or P.I.P. type)
☑ CCO FUNDED PER CONTRACT ☐ CCO FUNDED AS FOLLOWS

FEDERAL FUNDING SOURCE	PERCENT

CONTRACT CHANGE ORDER

Change Requested by: Engineer

CCO: 60	Suppl. No. 0	Contract No. 04 - 012024	Road 04-SF,Ala-80-13.9/14.3,0.0/1.6	FED. AID LOC.: ACIM-080-1(085)8N

To: KIEWIT / FCI / MANSON a JV

You are directed to make the following changes from the plans and specifications or do the following described work not included in the plans and specifications for this contract. ***NOTE: This change order is not effective until approved by the Engineer.***

Description of work to be done, estimate of quantities and prices to be paid. (Segregate between additional work at contract price, agreed price and force account.) Unless otherwise stated, rates for rental of equipment cover only such time as equipment is actually used and no allowance will be made for idle time. This last percentage shown is the net accumulated increase or decrease from the original quantity in the Engineer's Estimate.

Extra Work at Lump Sum:

Install State furnished call boxes, pipe posts, and assembly plates, and eliminate the power supply and photoelectric control system of lighting for call boxes, as shown on the revised contract plan sheets (sheets 2 through 33 of 37 of this change order). Also, replace the Supplement To The Special Provisions and Plans Binder 1 of 2 - Westbound, Circuit Schedule Westbound Sheet EE-324B (23 pages) and Conduit and Tray Schedule Westbound, Sheet EE-325C (75 pages); and Binder 2 of 2 - Eastbound, Circuit Schedule Eastbound Sheet EE-327B (36 pages) and Conduit and Tray Schedule Eastbound Sheet EE-328C (113 pages) with the revised sheets provided herein (sheets 34 through 37 of this change order).

The revised contract plan sheets reflecting this change are 93BR1, 93CR1, 94R1, 97BR1, 97CR1, 98R1, 130R1, 277R1, 280R1, 283R1, 289R1, 292R1, 295R1, 350R1, 351R1, 352R1, 352B, 366R1, 367R1, 368R1, 370R1, 371R1, 372R1, 376R1, 379R1, 380R1, 381R1, 384R1, 385R1, 388R1, 389R1, and 896AR2 of 978 (32 sheets).

For this work, the Contractor shall receive an agreed lump sum amount of $51,295.00. This agreed sum constitutes full compensation, including all mark-ups, for all direct and indirect costs, all project impacts, including all overhead costs.

Cost of Extra Work at Lump Sum $51,295.00

Estimated Cost: Increase ☐ Decrease ☐ $51.295.00

By reason of this order the time of completion will be adjusted as follows: 0 days

Submitted by		
Signature	**Resident Engineer:** COE D.	Date 10-5-04
Approval Recommended by		
Signature	**Construction Engineer:** COE D.	Date 10-5-04
Engineer Approval by		
Signature	(Print name and title) PETER SIEGENTHALER - Chief	Date

We the undersigned contractor, have given careful consideration to the change proposed and agree, if this proposal is approved, that we will provide all equipment, furnish the materials, except as may otherwise be noted above, and perform all services necessary for the work above specified, and will accept as full payment therefor the prices shown above.

NOTE: If you, the contractor, do not sign acceptance of this order, your attention is directed to the requirements of the specifications as to proceeding with the ordered work and filing a written protest within the time therein specified.

Contractor Acceptance by		
Signature	(Print name and title) Tom Skoro, Project Director	Date 11-5-04

STATE OF CALIFORNIA - DEPARTMENT OF TRANSPORTATION

CONTRACT CHANGE ORDER MEMORANDUM

DATE: 10/5/2004 Page 1 of 1

TO: PETER SIEGENTHALER / COE D.	FILE: **E.A.** 04 - 012024
FROM: COED.	**CO-RTE-PM** 04-SF,Ala-80-13.9/14.3,0.0/1.6
	FED. NO. ACIM-080-1(085)8N
CCO#: **60** | SUPPLEMENT#: **0** | Category Code: **CBPC**	CONTINGENCY BALANCE (incl. this change) **$1,040,566.17**
COST: **$51,295.00** INCREASE ☑ DECREASE ☐	HEADQUARTERS APPROVAL REQUIRED? ☐ YES ☑ NO
SUPPLEMENTAL FUNDS PROVIDED: $0.00	IS THIS REQUEST IN ACCORDANCE WITH ENVIRONMENTAL DOCUMENTS? ☐ YES ☐ NO
CCO DESCRIPTION: Elimination of Call Box Switches Power	**PROJECT DESCRIPTION:** REPLACE SFOBB EAST SPAN

LOCATION: IN SAN FRANCISCO AND ALAMEDA COUNTIES IN SAN FRANCISCO AND OAKLAND FROM 1.3 KM EAST OF THE YERBA BUENA ISL

THIS CHANGE ORDER PROVIDES FOR:

installing State furnished call boxes, posts, and plates, and eliminating the power supply and photoelectric control system of lighting for call boxes.

This change was requested by the District 4 Electrical Design Unit in order to upgrade the system to incorporate the latest technology. Upgrading the system required modifying the contract plans to reflect a change from the original dual power circuit supply design shown in the contract plans to the new, single power circuit design, as shown on the revised contract plans.

This change order provides for compensating the Contractor an agreed lump sum amount for the extra work associated with installing the State furnished items and for performing the work in accordance with the revised contract drawings. Payment to the Contractor will be extra work at agreed lump sum. This change will increase the project costs by $51,295.00, which can be financed from the contingency funds. A detailed cost analysis is on file in the project records.

Prior approval was obtained from Pete Siegenthaler on August 20, 2003. This change order was discussed with and concurred by Bezhad Golemohammadi, District 4 Electrical Design Oversight Representative, on August 13, 2003, and by Samad Hamoud, Structure Maintenance Representative, on June 24, 2003. A copy of these concurrences is attached.

The work associated with this change order will not affect the controlling operation; therefore, no additional contract time is required.

CONCURRED BY:		
Construction Engineer:	Douglas Coe	Date 10-5-04
Bridge Engineer:	Douglas Coe	Date 10-5-04
FHWA Representative:		Date
Project Engineer		Date
Other (specify) Bezhad Golemohammadi		Date8/13/2003
Samad Hamoud		Date6/24/2003
		Date
District Prior Approval By:	Pete Siegenthaler	Date8/20/2003
HQ (Issue Approve) By:		Date
Resident Engineer's Signature:		Date 10-5-04

ESTIMATE OF COST

	THIS REQUEST	TOTAL TO DATE
ITEMS	$0.00	$0.00
FORCE ACCOUNT	$0.00	$0.00
AGREED PRICE	$51,295.00	$51,295.00
ADJUSTMENT	$0.00	$0.00
TOTAL	$51,295.00	$51,295.00

FEDERAL PARTICIPATION

☑ PARTICIPATING ☐ PARTICIPATING IN PART ☐ NONE
☐ NON-PARTICIPATING (MAINTENANCE) ☐ NON-PARTICIPATING

FEDERAL SEGREGATION (if more than one Funding Source or P.I.P. type)
☑ CCO FUNDED PER CONTRACT ☐ CCO FUNDED AS FOLLOWS

FEDERAL FUNDING SOURCE	PERCENT

CONTRACT CHANGE ORDER

Change Requested by: Contractor

CCO: 61	Suppl. No. 0	Contract No. 04 - 012024	Road 04-SF,Ala-80-13.9/14.3,0.0/1.6	FED. AID LOC.: ACIM-080-1(085)8N

To: **KIEWIT / FCI / MANSON a JV**

You are directed to make the following changes from the plans and specifications or do the following described work not included in the plans and specifications for this contract. ***NOTE: This change order is not effective until approved by the Engineer.***

Description of work to be done, estimate of quantities and prices to be paid. (Segregate between additional work at contract price, agreed price and force account.) Unless otherwise stated, rates for rental of equipment cover only such time as equipment is actually used and no allowance will be made for idle time. This last percentage shown is the net accumulated increase or decrease from the original quantity in the Engineer's Estimate.

Adjustment of Compensation at Lump Sum:

Revise the corrosion protection covering on epoxy-coated reinforcement splices as required by Section 52-1.02B "Epoxy-coated Reinforcement" of the Standard Specifications by allowing the following procedure:

Epoxy paint may be utilized for corrosion protection covering provided that its use conforms to the following procedure:

A. T-heads on #57 Bars:
1. Epoxy paint the male threads
2. Epoxy paint the female T-head
3. Epoxy paint the seam between the pieces after obtaining the specified torque requirement
4. Epoxy paint surface scratches from torquing operation

B. Pre-Coated Couplers for #43 Column Bars where specified:
1. HRC Couplers are coated through coating line along with reinforcing bar. (Both male and female ends are coated separately and threads are protected and kept bare)
2. Field Installation:
   a. Epoxy paint threads on male and female side just prior to coupling, torque to specified requirement
   b. Epoxy paint the seam between the coupler assembly
   c. Epoxy paint surface scratches from torquing operation

For this work the State will take an agreed lump sum credit of $59,211.00. This sum constitutes full compensation, including all markups, for this change.

Cost of Adjustment of Compensation (Decrease) at Agreed Lump Sum .....($59,211.00)

Estimated Cost: *Increase* ☐ *Decrease* ☑ **($59,211.00)**

By reason of this order the time of completion will be adjusted as follows: 0 days

Submitted by

Signature	Resident Engineer: COE D.	Date 4-15-04

Approval Recommended by

Signature	Construction Engineer: COE D.	Date 4-15-04

Engineer Approval by

Signature	(Print name and title) PETER SIEGENTHALER - Chief	Date 05/10/04

We the undersigned contractor, have given careful consideration to the change proposed and agree, if this proposal is approved, that we will provide all equipment, furnish the materials, except as may otherwise be noted above, and perform all services necessary for the work above specified, and will accept as full payment therefor the prices shown above.

NOTE: If you, the contractor, do not sign acceptance of this order, your attention is directed to the requirements of the specifications as to proceeding with the ordered work and filing a written protest within the time therein specified.

Contractor Acceptance by

Signature	(Print name and title) A.T. Skolo, Project Director	Date 4/21/04

STATE OF CALIFORNIA - DEPARTMENT OF TRANSPORTATION

CONTRACT CHANGE ORDER MEMORANDUM

TO: PETER SIEGENTHALER / COE D.	FILE: E.A. 04 - 012024
FROM: COE D.	CO-RTE-PM 04-SF,Ala-80-13.9/14.3,0.0/1.6
	FED. NO. ACIM-080-1(085)8N
CCO#: 61 SUPPLEMENT#: 0 Category Code: CHSB	CONTINGENCY BALANCE (incl. this change) $23,309,495.66
COST: ($59,211.00) INCREASE ☐ DECREASE ☑	HEADQUARTERS APPROVAL REQUIRED? ☑ YES ☐ NO
SUPPLEMENTAL FUNDS PROVIDED: $0.00	IS THIS REQUEST IN ACCORDANCE WITH ENVIRONMENTAL DOCUMENTS? ☑ YES ☐ NO
CCO DESCRIPTION: Epoxy Splices on Epoxy-Coated Rebar	**PROJECT DESCRIPTION:** REPLACE SFOBB EAST SPAN

LOCATION: IN SAN FRANCISCO AND ALAMEDA COUNTIES IN SAN FRANCISCO AND OAKLAND FROM 1.3 KM EAST OF THE YERBA BUENA ISL

THIS CHANGE ORDER PROVIDES FOR:
allowing the use of epoxy paint in lieu of the corrosion protection covering for splices on epoxy-coated reinforcement required by Section 52-1.02B, "Epoxy-coated Reinforcement" of the Standard Specifications.

The Contractor is required to coat splices on epoxy-coated reinforcement with a corrosion protection covering. Epoxy-coated reinforcement splices are necessary on the pile cage T-Heads on the #57 bars, the #43 bars in the top mat of the footing box, and on the #43 bars in the pier column cage within the epoxy-coated zone. The shrink-wrap sleeve (splice seal) that were used to assemble the pile cages for footing E16E was removed from the Department's list of approved products due to legal issues associated with the newly patented shrink-wrap material.

The Contractor requested the use of epoxy paint as corrosion protection cover implementing the following procedure:

A. T-heads on #57 Bars:
1. Epoxy paint the male threads
2. Epoxy paint the female T-head
3. Epoxy paint the seam between the pieces after obtaining the specified torque requirement
4. Epoxy paint surface scratches from torquing operation

B. Pre-Coated Couplers for #43 Column Bars where specified:
1. HRC Couplers are coated through coating line along with reinforcing bar. (Both male and female ends are coated separately and threads are protected and kept bare)
2. Field Installation:
   a. Epoxy paint threads on male and female side just prior to coupling, torque to specified requirement
   b. Epoxy paint the seam between the coupler assembly
   c. Epoxy paint surface scratches from torquing operation

Tensile tests were performed by the Contractor, as requested by Materials Engineering and Testing Services (METS), to demonstrate epoxy painting of the assembly did not affect structural integrity of the rebar splice.

Written concurrence from Rob Reiss of the Corrosion Technology Branch (Division of METS) was received by email on 5/14/03 and is on file in the project records. Concurrence from Nancy Bobb, FHWA was received by email on 3/29/04. Concurrence from Maintenance is not required because this change does not affect the maintenance of the structure.

No adjustment of contract time is warranted, as this change does not affect the controlling operation. For this change order, the Contractor agreed to credit the State a lump sum payment of $59,211.00. This sum constitutes full compensation, including all markups. Records and calculations used to determine the adjustment of compensation are on file in the project records.

RECEIVED
053022 MAY 18 05

CONCURRED BY:		
Construction Engineer: Douglas Coe DBC	Date 4-15-04	
Bridge Engineer:	Date	
FHWA Representative: Nancy Bobb	Date 3/~~24~~ 29/2004	
Project Engineer:	Date	
Other (specify): Rob Reiss, METS	Date 5/14/2003	
	Date	
	Date	
District Prior Approval By:	Date	
HQ (Issue Approve) By: CORI DARBY	Date 04/01/04	
Resident Engineer's Signature:	Date 4-28-04	

ESTIMATE OF COST

	THIS REQUEST	TOTAL TO DATE
ITEMS	$0.00	$0.00
FORCE ACCOUNT	$0.00	$0.00
AGREED PRICE	$0.00	$0.00
ADJUSTMENT	($59,211.00)	($59,211.00)
TOTAL	($59,211.00)	($59,211.00)

FEDERAL PARTICIPATION

☑ PARTICIPATING ☐ PARTICIPATING IN PART ☐ NONE
☐ NON-PARTICIPATING (MAINTENANCE) ☐ NON-PARTICIPATING

FEDERAL SEGREGATION (if more than one Funding Source or P.I.P. type)
☑ CCO FUNDED PER CONTRACT ☐ CCO FUNDED AS FOLLOWS

FEDERAL FUNDING SOURCE	PERCENT

CONTRACT CHANGE ORDER

Change Requested by: Engineer

CCO: 62	Suppl. No. 0	Contract No. 04 - 012024	Road 04-SF,Ala-80-13.9/14.3,0.0/1.6	FED. AID LOC.: ACIM-080-1(085)8N

To: **KIEWIT / FCI / MANSON a JV**

You are directed to make the following changes from the plans and specifications or do the following described work not included in the plans and specifications for this contract. ***NOTE: This change order is not effective until approved by the Engineer.***

Description of work to be done, estimate of quantities and prices to be paid. (Segregate between additional work at contract price, agreed price and force account.) Unless otherwise stated, rates for rental of equipment cover only such time as equipment is actually used and no allowance will be made for idle time. This last percentage shown is the net accumulated increase or decrease from the original quantity in the Engineer's Estimate.

As authorized by the Engineer, incorporate the revisions to the details as shown on sheets 4 through 7 of this change order to allow a monolithic pour for the access casing wall, and delete the cast-in-place requirements for the access casing top cover and permit the use of a precast concrete access casing top cover for the SFOBB East Span Skyway Bridge Nos. 34-0006L/R.

Replace contract plan sheet numbers 494R1, 495R2, 496R2, and 497R2 of 978 with the attached, revised contract plan sheet numbers 494R2, 495R3, 496R3, and 497R3 of 978.

The fourth paragraph of Section 5-1.23, "Payments," of the Special Provisions is revised as follows:

In determining the partial payments to be made to the Contractor, only the following listed materials will be considered for inclusion in the payment as materials furnished but not incorporated in the work:

A. Steel Shells for Cast-In-Steel Shell Piling
B. Prestressing Steel in Sealed Containers
C. Prestressing Ducts and Anchorages
D. Precast Concrete Panel (Lightweight)
E. Precast Concrete Wall
F. Precast Concrete Fender Modules
G. Precast Concrete Segments
H. Circular Segmented Bearings
I. Joint Seal (Type B)
J. Modular Joint Seal Assemblies
K. Bar Reinforcing Steel
L. Bar Reinforcing Steel (Epoxy Coated)
M. Welded Headed Bar Reinforcement
N. Structural Steel
O. Miscellaneous Metal
P. Bridge Deck Drainage System
Q. Steel Barrier
R. Bikepath Railing
S. Equipment for Substation Eastbound and Substation Westbound
T. Service Platforms
U. Walkways
V. Precast Concrete Access Casing Top Slab

The first papargraph of Section 8-2.02, "Corrosion Control for Portland Cement Concrete," of the Special Provisions is revised as follows:

Portland cement concrete for reinforced concrete at bridge piers, bridge footing, bridge footing (lightweight concrete), precast concrete wall (bridge footing), precast concrete fender modules, and precast concrete access casing top slab is considered to be in a corrosive environment and shall conform to the provisions in Section 90, "Portland Cement Concrete," of the Standard Specifications and these special provisions.

The third paragraph of Section 8-2.04, "Precast Concrete Quality Control," of the Special Provisions is revised as follows:

Precast concrete quality control shall apply when any concrete is precast in conformance with "Concrete Structures," of these special provisions and for the following elements as shown on the plans:

A. Precast concrete segments
B. Precast lightweight concrete panels

CONTRACT CHANGE ORDER

Change Requested by: Engineer

CCO: 62	Suppl. No. 0	Contract No. 04 - 012024	Road 04-SF,Ala-80-13.9/14.3,0.0/1.6	FED. AID LOC.: ACIM-080-1(085)8N

C. Precast concrete walls for footings
D. Precast concrete fender modules for fender systems
E. Precast concrete top slab for access casing

The first sentence of the seventeenth paragraph of Section 8-2.04, "Precast Concrete Quality Control," of the Special Provisions is revised as follows:

The Contractor shall submit to the Engineer a separate PCQCP for: concrete segments, lightweight concrete panels, concrete walls for footings, concrete fender modules for fender systems, and precast concrete top slab for access casing.

The eleventh paragraph of Section 10-1.27, "Concrete Structures," of the Special Provisions is revised as follows:

Precast concrete walls and precast concrete fender modules at the footings and precast concrete top slab for access casing will be jointly inspected by the Engineer and the Contractor after casting, after moving to storage, and before and after erection. Cast-in-place closures for the precast concrete top slab for access casing will be jointly inspected by the Engineer and the Contractor 90 days after the last closure is made for each pier. Crack widths larger than 0.15 mm shall be repaired. Cracks longer than 300 mm shall be filled with pressure-injected epoxy. Cracks to be filled shall be cleaned and filled by pressure injection methods so that all portions of the crack are completely filled with epoxy. No repairs shall begin until the Engineer has approved the repair plan.

The requirement for providing a Quality Control Manager (QCM) and a Quality Control Inspector that is a licensed Civil Engineers in the State of California, as prescribed in Special Provisions Section 8-2.04, "Precast Concrete Quality Control," is hereby waived for the production of the precast access casing top covers.

Precast concrete for the access casing top slabs shall be measured by the cubic meter and paid as structural concrete, bridge pier.

Estimate of Increase in Contract Item at Contract Price:

F) Item No. 39: STRUCTURAL CONCRETE, BRIDGE PIER
78 M3 (+0.28%) @ $425.00 /M3 = +$33,150.00 (+0.20%)

5-F) Item No. 63: BAR REINFORCING STEEL (EPOXY COATED) (BRIDGE)
7740 KG (+0.08%) @ $2.60 /KG = +$20,124.00 (-0.17%)

Total cost for Increase in Contract Item.....$53,274.00

The quantity increases shown here for Contract Item No. 39, "Structural Concrete, Bridge Pier," and Contract Item No. 63, "Bar Reinforcing Steel (Epoxy Coated)(Bridge)," when combined with quantities shown in the engineer's estimate, and as modified by any previous change orders, will be the final quantities for which payment will be made for each contract item.

Extra Work at Lump Sum:

For furnishing and installing dowels and neoprene padding as shown on sheets 4 through 7 of this change order, the Contractor shall be paid an agreed lump sum of $337,100. This agreed lump sum constitutes full compensation, including markups, for all direct and indirect costs, all associated project impacts, and Time Related Overhead (TRO) expenses, and any and all risks associated with this change.

A partial payment of 5% of the agreed lump sum amount to be paid will be made to the Contractor per pier as each pier access casing top slab is set in place and all work associated with the installation of the dowels at the pier has been completed and accepted by the Engineer. In no case will the total amount of all the percentage payments exceed the agreed lump sum of $337,100.00.

Total cost of Extra Work at agreed Lump Sum $337,100.00

Adjustment of Compensation at Lump Sum:

CONTRACT CHANGE ORDER

Change Requested by: Engineer

CCO: 62	Suppl. No. 0	Contract No. 04 - 012024	Road 04-SF,Ala-80-13.9/14.3,0.0/1.6	FED. AID LOC.: ACIM-080-1(085)8N

For allowing the Contractor to construct the access casing walls and architectural flares monolithically and precast the access casing top slabs, the Contractor shall credit the State an agreed lump sum amount of $341,274.00. This agreed lump sum constitutes full compensation, including markups, for all direct and indirect costs, all associated project impacts, and Time Related Overhead (TRO) expenses, and all risks associated with this change.

The State shall receive a partial credit of 5% of the agreed lump sum amount per pier as each precast access casing top slab is set in place. In no case will the total amount of the sum of all of the partial credits exceed the agreed lump sum amount of $341,274.00.

Total cost of Adjustment of Compensation at Lump Sum .....($341,274.00)

Estimated Cost: Increase ☑ **Decrease** ☐ **$49,100.00**

By reason of this order the time of completion will be adjusted as follows: 0 days

Submitted by

Signature	**Resident Engineer:** COE D.	**Date** 1-5-04

Approval Recommended by

Signature	**Construction Engineer:** COE D.	**Date** 1-5-04

Engineer Approval by

Signature P.L. Siegenthaler	**(Print name and title)** PETER SIEGENTHALER - Chief	**Date** 2-24-04

We the undersigned contractor have given careful consideration to the change proposed and agree, if this proposal is approved, that we will provide all equipment, furnish the materials, except as may otherwise be noted above, and perform all services necessary for the work above specified, and will accept as full payment therefor the prices shown above.

NOTE: If you, the contractor, do not sign acceptance of this order, your attention is directed to the requirements of the specifications as to proceeding with the ordered work and filing a written protest within the time therein specified.

Contractor Acceptance by

Signature	**(Print name and title)** A.T. Skoro, Project Director	**Date** 1/16/04

STATE OF CALIFORNIA - DEPARTMENT OF TRANSPORTATION

CONTRACT CHANGE ORDER MEMORANDUM

DATE: 1/9/2004

TO: PETER SIEGENTHALER / COE D.	FILE: E.A. 04 - 012024
FROM: COE D.	CO-RTE-PM 04-SF,Ala-80-13.9/14.3,0.0/1.6
	FED. NO. ACIM-080-1(085)8N
CCO#: 62 SUPPLEMENT#: 0 Category Code: CHPT	CONTINGENCY BALANCE (incl. this change) $55,676,036.73
COST: $49,100.00 INCREASE ☑ DECREASE ☐	HEADQUARTERS APPROVAL REQUIRED? ☑ YES ☐ NO
SUPPLEMENTAL FUNDS PROVIDED: $0.00	IS THIS REQUEST IN ACCORDANCE WITH ENVIRONMENTAL DOCUMENTS? ☑ YES ☐ NO
CCO DESCRIPTION: Acc Casng Monolithic Wall & Precast Top	**PROJECT DESCRIPTION:** REPLACE SFOBB EAST SPAN

LOCATION: IN SAN FRANCISCO AND ALAMEDA COUNTIES IN SAN FRANCISCO AND OAKLAND FROM 1.3 KM EAST OF THE YERBA BUENA ISL

THIS CHANGE ORDER PROVIDES FOR:

constructing access casing walls and architectural flares monolithically, constructing and installing precast concrete access casing top slabs, furnishing and installing dowels between the precast access casing top slabs and access casing walls, and for furnishing and installing neoprene padding in lieu of polystyrene at various locations on Piers E7E through E16E and Piers E7W through E16W of the SFOBB Skyway, Bridge Nos. 34-0006 L/R. The revised contract plans reflecting this change are 494R2, 495R3, 496R3, and 497R3 of 978.

The access casing walls have been redesigned to allow a single, monolithic pour and the access casing top slabs have been redesigned to be precast in lieu of cast-in-place. This effort results in a benefit to the State in the form of a lump sum credit for the amount of $341,274.00, as it eliminates the need for a second-stage pour to construct the "flared" section of the access casing walls, and it also eliminates the need for falsework to construct the cast-in-place access casing top slabs.

The Designer has also requested an upgrade to the pier access casing top slab/wall detail. Dowels have been added to pin the access casing top slab to the access casing wall, and the polystyrene padding at the top of the access casing wall beneath the top slab has been replaced with neoprene. For this design upgrade, the Contractor will be paid an agreed lump sum of $337,100.00.

This change order increases the quantities of Contract Item Nos. 39, "Structural Concrete, Bridge Pier," and 63, "Bar Reinforcing Steel (Epoxy Coated) (Bridge).

This change also provides for compensating the contractor an agreed lump amount for the extra work involved to furnish and install the dowels and neoprene padding as there is no contract item that would be applicable to this work.

This change order includes an adjustment at agreed lump sum that provides a credit to the State for allowing the Contractor to construct the access casing walls and the architectural flares on the casing walls monolithically, and for allowing the Contractor to precast the access casing top slabs in lieu of cast in place.

This contract change will result in a net cost increase of $49,100.00, which can be financed from the contingency funds. A complete cost analysis is on file with the project records.

This additional work will not affect the overall project schedule, therefore no additional contract time will be granted for this change order.

Prior approval was obtained from Pete Siegenthaler on September 9, 2003. Design concurrence was obtained from Hasan El-Natur on September 30, 2003, as indicated on the revised drawings. Maintenance concurrence was obtained from Samad Hamoud via email on January 9, 2004. FHWA concurrence ws obatined via email from Ms. Nancy Bobb on January 8, 2004. A copy of the concurrences referenced is attached.

No time adjustment is warranted for this change, as it does not affect the controlling operation.

CONCURRED BY:		
Construction Engineer:	Douglas Coe	Date 1-5-04
Bridge Engineer:	Bill Casey	Date 5/5/2003
FHWA Representative:	Nancy Bobb	Date 1/8/2004
Project Engineer:	Hasan El-Natur	Date9/30/2003
Other (specify): Samad Hamoud		Date 1/9/2004
		Date
		Date
District Prior Approval By:	Pete Siegenthaler	Date 9/9/2003
HQ (Issue Approve) By:	Patrick Bockari	Date
Resident Engineer's Signature:		Date 1-5-04

ESTIMATE OF COST

	THIS REQUEST	TOTAL TO DATE
ITEMS	$53,274.00	$53,274.00
FORCE ACCOUNT	$0.00	$0.00
AGREED PRICE	$337,100.00	$337,100.00
ADJUSTMENT	($341,274.00)	($341,274.00)
TOTAL	$49,100.00	$49,100.00

FEDERAL PARTICIPATION

☑ PARTICIPATING ☐ PARTICIPATING IN PART ☐ NONE
☐ NON-PARTICIPATING (MAINTENANCE) ☐ NON-PARTICIPATING

FEDERAL SEGREGATION (if more than one Funding Source or P.I.P. type)
☑ CCO FUNDED PER CONTRACT ☐ CCO FUNDED AS FOLLOWS

FEDERAL FUNDING SOURCE	PERCENT

STATE OF CALIFORNIA - DEPARTMENT OF TRANSPORTATION

CONTRACT CHANGE ORDER

Change Requested by: Engineer

CCO: 64	Suppl. No. 0	Contract No. 04 - 012024	Road 04-SF,Ala-80-13.9/14.3,0.0/1.6	FED. AID LOC.: ACIM-080-1(085)8N

To: KIEWIT / FCI / MANSON a JV

You are directed to make the following changes from the plans and specifications or do the following described work not included in the plans and specifications for this contract. ***NOTE: This change order is not effective until approved by the Engineer.***

Description of work to be done, estimate of quantities and prices to be paid. (Segregate between additional work at contract price, agreed price and force account.) Unless otherwise stated, rates for rental of equipment cover only such time as equipment is actually used and no allowance will be made for idle time. This last percentage shown is the net accumulated increase or decrease from the original quantity in the Engineer's Estimate.

Extra Work at Lump Sum:

Furnish labor, equipment, and material to perform the following tests on 60mm High Strength Bars as authorized by the Engineer.

1. One 41 Mpa concrete test block with 200mm diameter anchor plate, 60mm thick.
2. One 41 Mpa concrete test block with 225mm diameter anchor plate, 60mm thick.

EXTRA WORK AT AGREED LUMP SUM:

Testing of 60mm High Strength Bars $20,116.00

This sum constitutes full and complete compensation, including markups for all direct and indirect costs, all associated project impacts, and Time Related Overhead (TRO) expenses.

This additional work does not affect the overall project schedule; therefore, no additional contract time will be granted for this change order.

Estimated cost of Extra Work at Lump Sum $20,116.00

Estimated Cost: Increase ☑ Decrease ☐ **$20,116.00**

By reason of this order the time of completion will be adjusted as follows: 0 days

Submitted by

Signature	Resident Engineer: COE D.	Date 6-27-03

Approval Recommended by

Signature	Construction Engineer: COE D.	Date 6-27-03

Engineer Approval by

Signature	(Print name and title) PETER SIEGENTHALER - Chief	Date 8/18/03

We the undersigned contractor, have given careful consideration to the change proposed and agree, if this proposal is approved, that we will provide all equipment, furnish the materials, except as may otherwise be noted above, and perform all services necessary for the work above specified, and will accept as full payment therefor the prices shown above.

NOTE: If you, the contractor, do not sign acceptance of this order, your attention is directed to the requirements of the specifications as to proceeding with the ordered work and filing a written protest within the time therein specified.

Contractor Acceptance by

Signature	(Print name and title) A.T. Skoro, Project Director	Date 7/17/03

STATE OF CALIFORNIA - DEPARTMENT OF TRANSPORTATION

CONTRACT CHANGE ORDER MEMORANDUM

TO: PETER SIEGENTHALER / DOUG COE, Supervising Br. Eng.	FILE: E.A. 04 - 012024
FROM: DOUG COE, Supervising Br. Eng.	CO-RTE-PM 04-SF,Ala-80-13.9/14.3,0.0/1.6
	FED. NO. ACIM-080-1(085)8N
CCO#: 65 SUPPLEMENT#: 0 Category Code: CHPT	CONTINGENCY BALANCE (incl. this change) $59,997,592.96
COST: $200,000.00 INCREASE ☑ DECREASE ☐	HEADQUARTERS APPROVAL REQUIRED? ☐ YES ☑ NO
SUPPLEMENTAL FUNDS PROVIDED: $0.00	IS THIS REQUEST IN ACCORDANCE WITH ENVIRONMENTAL DOCUMENTS? ☑ YES ☐ NO
CCO DESCRIPTION: Additional Rebar Due to Jacking	**PROJECT DESCRIPTION:** REPLACE SFOBB EAST SPAN

LOCATION: IN SAN FRANCISCO AND ALAMEDA COUNTIES IN SAN FRANCISCO AND OAKLAND FROM 1.3 KM EAST OF THE YERBA BUENA ISL

THIS CHANGE ORDER PROVIDES FOR:

Furnishing and installing additional bar reinforcement steel for segments at jacking locations and closure pours between Piers E12E and E13E, E12W and E13W, E8E and E9E, E8W and E9W, E4E and E5E, E4W and E5W, as shown on revisied contract plan sheet 857R2 of 978, of the SFOBB East Span Skyway, Bridge Numbers 34-0006L/R, to relieve tension forces in the deck and resist bursting forces in the structure's webs when the mid-frame jacking is performed.

Special Provision Section 10-1.31 "Jack Superstructure" currently requires the Contractor to apply a specific jacking force and imposed displacement across the closure, located at the center of gravity of the segment and aligned with the centroidal axis of the box girder. The Contractor submitted a Jacking Plan based on applying a jacking load to the segment aligned with the centroidal axis of the box girder that complied with the contract requirements, but that was different from the Design Engineer's assumption of distributing load uniformly around the box grider. A finite element computer model found that additional bar reinforcement steel is required to distribute the jacking forces, applied as required by the special provisions, within the structure. To relieve tension forces in the deck and resist bursting forces in the structure's webs, additional bar reinforcement steel is required at the locations described above.

For this work, the Contractor will receive and accept the agreed lump sum of $200,000. This sum constitutes full compensation for providing all labor, material, equipment, tools and incidentals, including markups, for all direct and indirect costs, and all associated project impacts for this work.

An analysis of the Contractor's proposal is on file with the project records and it has been found to be fair and reasonable based on a force account analysis.

The determination of any adjustment to contract time will be deferred until the completion of work associated with this change.

Maintenance concurrence is not required.

FHWA concurrence is on file.

RECEIVED

035853 MAR 28 05

STATE OF CALIFORNIA - DEPARTMENT OF TRANSPORTATION

CONTRACT CHANGE ORDER MEMORANDUM

DATE: 6/20/2003

TO: PETER SIEGENTHALER / COE D.	FILE: E.A. 04 - 012024
FROM: COE D.	CO-RTE-PM 04-SF,Ala-80-13.9/14.3,0.0/1.6
	FED. NO. ACIM-080-1(085)8N
CCO#: 64 SUPPLEMENT#: 0 Category Code: CHPT	CONTINGENCY BALANCE (incl. this change) $55,643,036.73
COST: $20,116.00 INCREASE ☑ DECREASE ☐	HEADQUARTERS APPROVAL REQUIRED? ☐ YES ☑ NO
SUPPLEMENTAL FUNDS PROVIDED: $0.00	IS THIS REQUEST IN ACCORDANCE WITH ENVIRONMENTAL DOCUMENTS? ☑ YES ☐ NO
CCO DESCRIPTION: Testing 2 1/2" Diameter Bars	**PROJECT DESCRIPTION:** REPLACE SFOBB EAST SPAN

LOCATION: IN SAN FRANCISCO AND ALAMEDA COUNTIES IN SAN FRANCISCO AND OAKLAND FROM 1.3 KM EAST OF THE YERBA BUENA ISL

THIS CHANGE ORDER PROVIDES FOR:

Furnish labor, equipment, and material to perform the following tests on 60mm High Strength Bars:

1. One 41 Mpa concrete test block with 200mm diameter anchor plate, 60mm thick.
2. One 41 Mpa concrete test block with 225mm diameter anchor plate, 60mm thick.

The purpose of this test is to replace the existing 460mm x 230mm x 60mm rectangular bearing plate with a smaller 200mm or 225mm diameter x 60mm round bearing plate in the hinge segments. There are a total of 14 hinge segments. The hinge segments are highly congested with steel reinforcing bars, prestress ducts, hinge pipe beams, and high strength bars. Interference, congestion, and constructability issues have been identified by the State, the Contractor, and the Designer. In order to resolve these issues, it has been determined that changing to a smaller and different shaped bearing plate would be a viable solution to allow concrete placement under the bearing plates. The existing rectangular bearing plates were designed for concrete with a normal compressive strength. The concrete for the hinge segments are specified as high compressive strength. Therefore, we can take advantage of the higher strength concrete by using a smaller bearing plate to resolve the congestion issues. The test will be performed to confirm the calculated performance of the redesigned bearing plate before proceeding with the change. The redesign of the bearing plate will be written as a Supplement to this Change Order.

Payment will be by extra work at agreed lump sum. Price constitutes full and complete compensation including all markups. Additional costs may be incurred if re-testing is required. A cost estimate from Schwager Davis Inc, the testing subcontractor, is on file in the project records.

EXTRA WORK AT AGREED LUMP SUM

Testing of 60 mm High Strength Bars $20,116.00

This contract change order does not affect the overall project schedule; therefore, no additional contract time is required.

Concurrence from Maintenance and FHWA is not required.

CONTRACT CHANGE ORDER MEMORANDUM

EA: 012024 CCO: 64 - 0 DATE: 6/20/03

CONCURRED BY:

Construction Engineer:	Date
Bridge Engineer:	Date
FHWA Representative:	Date
Project Engineer:	Date
Other (specify):	Date
	Date
	Date
District Prior Approval By:	Date
HQ (Issue Approve) By:	Date
Resident Engineer's Signature:	Date

ESTIMATE OF COST

	THIS REQUEST	TOTAL TO DATE
ITEMS	$0.00	$0.00
FORCE ACCOUNT	$0.00	$0.00
AGREED PRICE	$20,116.00	$20,116.00
ADJUSTMENT	$0.00	$0.00
TOTAL	$20,116.00	$20,116.00

FEDERAL PARTICIPATION

☑ PARTICIPATING ☐ PARTICIPATING IN PART ☐ NONE

☐ NON-PARTICIPATING (MAINTENANCE) ☐ NON-PARTICIPATING

FEDERAL SEGREGATION (if more than one Funding Source or P.I.P. type)

☑ CCO FUNDED PER CONTRACT ☐ CCO FUNDED AS FOLLOWS

FEDERAL FUNDING SOURCE	PERCENT

CONTRACT CHANGE ORDER

Change Requested by: Engineer

CCO: 65	Suppl. No. 0	Contract No. 04 - 012024	Road 04-SF,Ala-80-13.9/14.3,0.0/1.6	FED, AID LOC.: ACIM-080-1(085)8N

To: KIEWIT / FCI / MANSON a JV

You are directed to make the following changes from the plans and specifications or do the following described work not included in the plans and specifications for this contract. **NOTE: This change order is not effective *until* approved *by* the Engineer.**

Description of work to be done, estimate of quantities and prices to be paid. (Segregate between additional work at contract price, agreed price and force account.) Unless otherwise stated, rates for rental of equipment cover only such time as equipment is actually used and no allowance will be made for idle time. This last percentage shown is the net accumulated increase or decrease from the original quantity in the Engineer's Estimate.

Adjustment of Compensation at Lump Sum:

Increase the amount of bar reinforcing steel for segments at mid-frame jacking locations, not including the closure pours, between Piers E12E and E13E, E12W and E13W, E8E and E9E, E8W and E9W, E4E and E5E, E4W and E5W of the SFOBB East Span Skyway, Bridge Numbers 34-0006L/R as shown on revised contract plan sheet 857R2 of 978 (page 2 of this change order).

For this work, the Contractor shall receive and accept the agreed lump sum of $200,000. This sum constitutes full compensation for providing all labor, material, equipment, tools and incidentals, including markups, for all direct and indirect costs, and all associated project impacts for this work.

Estimated cost of Adjustment of Compensation at Lump Sum $200,000.00

Estimated Cost: Increase ☑ Decrease ☐ $200,000.00

By reason of this order the time of completion will be adjusted as follows: Deferred

Submitted by

Signature	Resident Engineer: DOUG COE, Supervising Br. Eng.	Date 3-15-05

Approval Recommended by

Signature	Construction Engineer: DOUG COE, Supervising Br. Eng.	Date 3-15-05

Engineer Approval by

Signature	(Print name and title) for PETER SIEGENTHALER - Chief	Date 3-25-05

We the undersigned contractor, have given careful consideration to the change proposed and agree, if this proposal is approved, that we will provide all equipment, furnish the materials, except as may otherwise be noted above, and perform all services necessary for the work above specified, and will accept as full payment therefor the prices shown above.

NOTE: If you, the contractor, do not sign acceptance of this order, your attention is directed to the requirements of the specifications as to proceeding with the ordered work and filing a written protest within the time therein specified.

Contractor Acceptance by

Signature	(Print name and title) DEPUTY PROJ DIRECTOR	Date 3-17-05

STATE OF CALIFORNIA - DEPARTMENT OF TRANSPORTATION

CONTRACT CHANGE ORDER MEMORANDUM

TO PETER SIEGENTHALER / DOUG COE; Supervising Br Eng.

FROM DOUG COE, Supervising Br Eng

CCO#: 65 SUPPLEMENT#, 0 Category Code: CHPT

COST: $200,000.00 INCREASE ☑ DECREASE ☐

SUPPLEMENTAL FUNDS PROVIDED: $0.00

CCO DESCRIPTION:
Additional Rebar Due to Jackina

FILE EA 04 - 012024
CO-RTE-PM 04-SF,Ala-80-13 9/14 3,0 0/1 6
FED. NO. ACIM-080-1(085)8N

CONTINGENCY BALANCE (incl. this change) $59,997,592.96

HEADQUARTERS APPROVAL REQUIRED? ☐ YES ☐ NO

IS THIS REQUEST IN ACCORDANCE WITH ENVIRONMENTAL DOCUMENTS? ☑ YES ☐ NO

PROJECT DESCRIPTION:
REPLACE SFOBB EAST SPAN

LOCATION: IN SAN FRANCISCO AND ALAMEDA COUNTIES IN SAN FRANCISCO AND OAKLAND FROM 1.3 KM EAST OF THE YERBA BUENA ISL

THIS CHANGE ORDER PROVIDES FOR:
Furnishing and installing additional bar reinforcement steel for segments at jacking locations and closure pours between Piers E12E and E13E, E12W and E13W, E8E and E9E, E8W and E9W, E4E and E5E, E4W and E5W, as shown on revisied contract plan sheet 857R2 of 978, of the SFOBB East Span Skyway, Bridge Numbers 34-0006L/R, to relieve tension forces in the deck and resist bursting forces in the structure's webs when the mid-frame jacking is performed.

Special Provision Section 10-1.31 "Jack Superstructure" currently requires the Contractor to apply a specific jacking force and imposed displacement across the closure, located at the center of gravity of the segment and aligned with the centroidal axis of the box girder. The Contractor submitted a Jacking Plan based on applying a jacking load to the segment aligned with the centroidal axis of the box girder that complied with the contract requirements, but that was different from the Design Engineer's assumption of distributing load uniformly around the box grider. A finite element computer model found that additional bar reinforcement steel is required to distribute the jacking forces, applied as required by the special provisions, within the structure. To relieve tension forces in the deck and resist bursting forces in the structure's webs, additional bar reinforcement steel is required at the locations described above.

For this work, the Contractor will receive and accept the agreed lump sum of $200,000. This sum constitutes full compensation for providing all labor, material, equipment, tools and incidentals, including markups, for all direct and indirect costs, and all associated project impacts for this work.

An analysis of the Contractor's proposal is on file with the project records and it has been found to be fair and reasonable based on a force account analysis.

The determination of any adjustment to contract time will be deferred until the completion of work associated with this change.

Maintenance concurrence is not required

FHWA concurrence is on file

RECEIVED
035853 MAR 28 05

CONCURRED BY:

Construction Engineer	Douglas Coe	Date 3-2-05
Bridge Engineer	Douglas Coe	Date 3-2-05
FHWA Representative		Date
Project Engineer	Hasan El-Natur	Date 8/5/2003
Other (specify) Senior Bridge Engineer	David Wu	Date
		Date
		Date
District Prior Approval By		Date
HQ (Issue Approve) By:		Date
Resident Engineer's Signature:		Date 3-2-05

ESTIMATE OF COST

	THIS REQUEST	TOTAL TO DATE-
ITEMS	$0.00	$0.00
FORCE ACCOUNT	$0.00	$0.00
AGREED PRICE	$0.00	$0.00
ADJUSTMENT	$200,000.00	$200,000.00
TOTAL	$200,000.00	$200,000.00

FEDERAL PARTICIPATION

☑ PARTICIPATING ☐ PARTICIPATING IN PART ☐ NONE
☐ NON-PARTICIPATING (MAINTENANCE) ☐ NON-PARTICIPATING

FEDERAL SEGREGATION (if more than one Funding Source or P.I.P. type)
☑ CCO FUNDED PER CONTRACT ☐ CCO FUNDED AS FOLLOWS

FEDERAL FUNDING SOURCE	PERCENT

CONTRACT CHANGE ORDER

Change Requested by: Engineer

CCO: 65	Suppl. No. 1	Contract No. 04 - 012024	Road 04-SF,Ala-80-13.9/14.3,0.0/1.6	FED. AID LOC.: ACIM-080-1(085)8N

To: **KIEWIT / FCI / MANSON a JV**

You are directed to make the following changes from the plans and specifications or do the following described work not included in the plans and specifications for this contract. ***NOTE: This change order is not effective until approved by the Engineer.***

Description of work to be done, estimate of quantities and prices to be paid. (Segregate between additional work at contract price, agreed price and force account.) Unless otherwise stated, rates for rental of equipment cover only such time as equipment is actually used and no allowance will be made for idle time. This last percentage shown is the net accumulated increase or decrease from the original

Extra Work at Lump Sum:

Supply and install additional transverse reinforcement at the mid-frame closure pours at the superstructure jacking locations as shown on revised plan sheet 857R3 of 978, (page 2 of this change order) of the SFOBB East Span Skyway, Bridge Numbers 34-0006L/R.

This change order also closes the deferred time element of Contract Change Order No. 65 Supplement 0 of the SFOBB East Span Skyway, Bridge Numbers 34-0006L/R.

The deferred time associated with Contract Change Order No. 65, Supplement 0, was resolved by executing Contract Change Orders No. 107, Supplement 0 through Supplement 3.

Full compensation for all costs, including markups, all direct and indirect costs, all associated projects impacts, and all overhead costs are included in the lump sum payment under Contract Change Order No. 200. No further payment will be made as a result of this Change Order.

Estimated Cost: Increase ☐ Decrease ☐

By reason of this order the time of completion will be adjusted as follows: 0 days

Submitted by

Signature	Resident Engineer: DOUG COE, Supervising Br. Eng.	Date 8-24-06

Approval Recommended by

Signature	Construction Engineer: DOUG COE, Supervising Br. Eng.	Date 8-24-06

Engineer Approval by

Signature	(Print name and title) PETER SIEGENTHALER - Chief	Date

We the undersigned contractor, have given careful consideration to the change proposed and agree, if this proposal is approved, that we will provide all equipment, furnish the materials, except as may otherwise be noted above, and perform all services necessary for the work above specified, and will accept as full payment therefor the prices shown above.

NOTE: **If you, the contractor, do not sign acceptance of this order, your attention is directed to the requirements of the specifications as to proceeding with the ordered work and filing a written protest within the time therein specified.**

Contractor Acceptance by

Signature	(Print name and title) LEE ZINK, Project Director	Date 9/5/06

STATE OF CALIFORNIA - DEPARTMENT OF TRANSPORTATION

CONTRACT CHANGE ORDER MEMORANDUM

TO: PETER SIEGENTHALER / DOUG COE, Supervising Br. Eng.	FILE: E.A. 04 - 012024
FROM: DOUG COE, Supervising Br. Eng.	CO-RTE-PM 04-SF,Ala-80-13.9/14.3,0.0/1.6 FED. NO. ACIM-080-1(085)8N
CCO# 65 SUPPLEMENT#: 1 Category Cod CHPT	CONTINGENCY BALANCE (incl. this change
COST: INCREASE ☐ DECREASE ☐	HEADQUARTERS APPROVAL REQUIRED? ☑ YES ☐ NO
SUPPLEMENTAL FUNDS PROVIDED: $0.00	IS THIS REQUEST IN ACCORDANCE WITH ENVIRONMENTAL DOCUMENTS? ☑ YES ☐ NO
CCO DESCRIPTION: Add'l Rebar due to Jacking(Closure Pour)	**PROJECT DESCRIPTION:** REPLACE SFOBB EAST SPAN

LOCATION: IN SAN FRANCISCO AND ALAMEDA COUNTIES IN SAN FRANCISCO AND OAKLAND FROM 1.3 KM EAST OF THE YERBA BUENA ISL

THIS CHANGE ORDER PROVIDES FOR:

furnishing and installing additional transverse reinforcement for the mid-frame closure pours at the superstructure jacking locations as shown on revised plan sheet 857R3 of 978, (attached as page 2 of the contract change order) of the SFOBB East Span Skyway, Bridge Numbers 34-0006L/R.

The contract plans do not provide for sufficient transverse reinforcement required to distribute the forces from mid-frame jacking into the mid-frame closure pours. Therefore, the designer of record, Madon Sah of T.Y.LIN / MOFFAT & NICHOL a joint venture, has requested additional transverse reinforcement for the closure pours in spans E5, E9, and E13 of both the Eastbound and Westbound spans.

The agreed compensation for this contract change order is included in the lump sum compensation portion of resolution CCO No. 200. For this work, the Contractor will receive and accept the agreed lump sum of $45,117.00.

A detailed force account analysis prepared by the Engineer for the cost of this change order is on file in the project records.

This change order will also close out the deferred time element of CCO No. 65 Supplement 0. All of the time impacts associated with CCO No. 65 Supplement 0 were accounted and compensated for in CCO No. 107 Supplement 0 through Supplement 3.

Mr. Pete Siegenthaler, SFOBB Construction Manager, Toll Bridge Construction, concurs with this change. A copy of the concurrence signed by Mr. Siegenthaler on December 15, 2005 is attached.

Mr. Ken Terpstra, SFOBB Project Manager, provided concurrence on April 24, 2006. A copy of the concurrence provided by Mr. Terpstra is attached.

Prior Approval was obtained from Ms. Nancy Bobb, FHWA Bay Bridge Project Manager, via electronic message on April 4, 2006. A printed copy of the prior approval provided by Ms. Bobb is attached.

Design concurrence was obtained from Hasan El-Natur on May 5, 2003, as indicated by his signature on the revised contract plan sheets.

Maintenance concurrence is not required because this change does not use maintenance funds or affect maintenance facilities or operations.

No adjustment of contract time is warranted for this change, as it does not affect the controlling operation.

CONCURRED BY:		
Construction Engineer:	Douglas Coe	Date 8-24-06
Bridge Engineer:	Douglas Coe	Date 8-24-06
FHWA Representative:	Nancy Bobb	Date
Project Engineer:		Date
Other (specify): Ken Terpstra, Project Manager		Date
		Date
		Date
District Prior Approval By:		Date
HQ (Issue Approve) By:	Ken Darby	Date
Resident Engineer's Signature:		Date 8-24-06

ESTIMATE OF COST

	THIS REQUEST	TOTAL TO DATE
ITEMS	$0.00	$0.00
FORCE ACCOUNT	$0.00	$0.00
AGREED PRICE		
ADJUSTMENT	$0.00	
TOTAL		

FEDERAL PARTICIPATION

☑ PARTICIPATING ☐ PARTICIPATING IN PART ☐ NONE
☐ NON-PARTICIPATING (MAINTENANCE) ☐ NON-PARTICIPATING

FEDERAL SEGREGATION (if more than one Funding Source or P.I.P. type)
☑ CCO FUNDED PER CONTRACT ☐ CCO FUNDED AS FOLLOWS

FEDERAL FUNDING SOURCE	PERCENT

CONTRACT CHANGE ORDER

Change Requested by: Contractor

CCO: 66	Suppl. No. 0	Contract No. 04 - 012024	Road 04-SF,Ala-80-13.9/14.3,0.0/1.6	FED. AID LOC.: ACIM-080-1(085)8N

To: KIEWIT / FCI / MANSON a JV

You are directed to make the following changes from the plans and specifications or do the following described work not included in the plans and specifications for this contract. ***NOTE: This change order is not effective until approved by the Engineer.***

Description of work to be done, estimate of quantities and prices to be paid. (Segregate between additional work at contract price, agreed price and force account.) Unless otherwise stated, rates for rental of equipment cover only such time as equipment is actually used and no allowance will be made for idle time. This last percentage shown is the net accumulated increase or decrease from the original quantity in the Engineer's Estimate.

Adjustment of Compensation at Lump Sum:

Modify the D-Tendon layout in Cantilever 16 as shown on sheets 2 through 4 of this change order for the SFOBB East Span Skyway, Bridge Nos. 340006L/R.

The revised contract plans reflecting this change are 688DR2, 688ER2, and 688FR2 of 978.

For this work, there shall be no cost or credit to the State by reason of this change. This agreement constitutes full compensation to the Contractor, including mark ups for all direct and indirect costs, all associated project impacts, all overhead costs, and any and all risks associated with this work.

Cost of Adjustment of Compensation at Agreed Lump Sum $0.00

Estimated Cost: Increase ☐ Decrease ☐ **$0.00**

By reason of this order the time of completion will be adjusted as follows: 0 days

Submitted by

Signature	Resident Engineer: COE D.	Date 11-24-04

Approval Recommended by

Signature	Construction Engineer: COE D.	Date 11-24-04

Engineer Approval by

Signature	(Print name and title) for PETER SIEGENTHALER - Chief	Date 12/15/04

We the undersigned contractor, have given careful consideration to the change proposed and agree, if this proposal is approved, that we will provide all equipment, furnish the materials, except as may otherwise be noted above, and perform all services necessary for the work above specified, and will accept as full payment therefor the prices shown above.

NOTE: If you, the contractor, do not sign acceptance of this order, your attention is directed to the requirements of the specifications as to proceeding with the ordered work and filing a written protest within the time therein specified.

Contractor Acceptance by

Signature	(Print name and title) A.T. Skorio, Project Director	Date 12-9-04

STATE OF CALIFORNIA - DEPARTMENT OF TRANSPORTATION

CONTRACT CHANGE ORDER MEMORANDUM

TO: PETER SIEGENTHALER / COE D.	FILE: E.A. 04 - 012024
	CO-RTE-PM 04-SF,Ala-80-13.9/14.3,0.0/1.6
FROM: COE D.	FED. NO. ACIM-080-1(085)8N
CCO#: 66 SUPPLEMENT#: 0 Category Code: CHPT	CONTINGENCY BALANCE (incl. this change) $66,537,480.27
COST: $0.00 INCREASE ☐ DECREASE ☐	HEADQUARTERS APPROVAL REQUIRED? ☐ YES ☑ NO
SUPPLEMENTAL FUNDS PROVIDED: $0.00	IS THIS REQUEST IN ACCORDANCE WITH ENVIRONMENTAL DOCUMENTS? ☑ YES ☐ NO
CCO DESCRIPTION: CANTILEVER 16 BULKHEAD REVISIONS	**PROJECT DESCRIPTION:** REPLACE SFOBB EAST SPAN

LOCATION: IN SAN FRANCISCO AND ALAMEDA COUNTIES IN SAN FRANCISCO AND OAKLAND FROM 1.3 KM EAST OF THE YERBA BUENA ISL

THIS CHANGE ORDER PROVIDES FOR:

modifying the D-Tendon layout in Cantilever 16 to place tendon D23 in the spare duct, and at the closure, providing a 12-strand anchor and bursting steel for the spare tendon/D23 tendon and a 19-strand tendon trumpet and bar reinforcement bursting steel for the remaining spare ducts.

This contract change order is needed to provide for a modification to the D-Tendon layout to allow the Contractor to use the standard bulkhead for Cantilever 16. This was achieved by placing tendon D23 in the spare duct. The contract plans were also updated to show the anchor requirements for the other spare ducts in Cantilever 16 since this information was not shown on the original contract plans.

The Contractor has requested to modify the arrangement for Tendon D23 in Cantilever 16, using details similar to those shown on Contract Plan Sheet No. 688E of 978, in lieu of utilizing the details required by the contract as shown on Contract Plan Sheet No. 688F of 978. This proposed arrangement would allow KFM's precast yard to use the same bulkhead at Cantilever 16 as the bulkhead used for the other segments.

TY Lin International, the Designer of Record, reviewed the Contractor's request and concluded that it would be possible but would require modifications to reinforce the anchorage for the affected ducts.

The Engineer has performed an analysis and has determined that this change results in a zero cost adjustment. This analysis is on file in the project records.

District Prior Approval was obtained from Mr. Pete Siegenthaler on March 9, 2004. A copy of the prior approval signed by Mr. Siegenthaler is attached.

Mr. Hasan El-Natur is in concurrence with this change. Mr. El-Natur provided concurrence with his signature on the revised drawings dated March 4, 2004.

Maintenance concurrence is not required for this change as this change does not modify the original design intent.

FHWA prior approval is not required as this is a minor change order.

No adjustment in contract time is warranted, as this change does not affect the controlling operation.

RECEIVED
031956 JAN-7 3

CONCURRED BY:		
Construction Engineer:	Douglas Coe	Date 11-24-04
Bridge Engineer:	Douglas Coe	Date 11-24-04
FHWA Representative:		Date
Project Engineer:		Date
Other (specify): Hasan El-Natur		Date 3/4/2004
		Date
		Date
District Prior Approval By:	Pete Siegenthaler	Date 3/9/2004
HQ (Issue Approve) By:		Date
Resident Engineer's Signature:		Date 11-24-04

ESTIMATE OF COST

	THIS REQUEST	TOTAL TO DATE
ITEMS	$0.00	$0.00
FORCE ACCOUNT	$0.00	$0.00
AGREED PRICE	$0.00	$0.00
ADJUSTMENT	$0.00	$0.00
TOTAL	$0.00	$0.00

FEDERAL PARTICIPATION

☑ PARTICIPATING ☐ PARTICIPATING IN PART ☐ NONE
☐ NON-PARTICIPATING (MAINTENANCE) ☐ NON-PARTICIPATING

FEDERAL SEGREGATION (if more than one Funding Source or P.I.P. type)
☑ CCO FUNDED PER CONTRACT ☐ CCO FUNDED AS FOLLOWS

FEDERAL FUNDING SOURCE	PERCENT

STATE OF CALIFORNIA - DEPARTMENT OF TRANSPORTATION

CONTRACT CHANGE ORDER

Change Requested by: Engineer

CCO: 68	Suppl. No. 0	Contract No. 04 - 012024	Road 04-SF,Ala-80-13.9/14.3,0.0/1.6	FED. AID LOC.: ACIM-080-1(085)8N

To: **KIEWIT / FCI / MANSON a JV**

You are directed to make the following changes from the plans and specifications or do the following described work not included in the plans and specifications for this contract. ***NOTE: This change order is not effective until approved by the Engineer.***

Description of work to be done, estimate of quantities and prices to be paid. (Segregate between additional work at contract price, agreed price and force account.) Unless otherwise stated, rates for rental of equipment cover only such time as equipment is actually used and no allowance will be made for idle time. This last percentage shown is the net accumulated increase or decrease from the original quantity in the Engineer's Estimate.

Adjustment of Compensation at Lump Sum:

Furnish and install the Pile Corrosion Monitoring System for the SFOBB - East Span Skyway, Bridge Nos. 34-0006L/R as shown on page 2 of 2 of this change order (revised contract plan sheet 222R1 of 978).

This change constitutes a Zero cost adjustment for both the Contractor and the State.

Cost of Adjustment of Compensation at Lump Sum $0.00

Estimated Cost: **Increase** ☐ **Decrease** ☐ **$0.00**

By reason of this order the time of completion will be adjusted as follows: 0 days

Submitted by

Signature	Resident Engineer: COE D.	Date 1-6-04

Approval Recommended by

Signature	Construction Engineer: COE D.	Date 1-6-04

Engineer Approval by

Signature	(Print name and title) PETER SIEGENTHALER - Chief	Date 3-22-04

We the undersigned contractor, have given careful consideration to the change proposed and agree, if this proposal is approved, that we will provide all equipment, furnish the materials, except as may otherwise be noted above, and perform all services necessary for the work above specified, and will accept as full payment therefor the prices shown above.

NOTE: If you, the contractor, do not sign acceptance of this order, your attention is directed to the requirements of the specifications as to proceeding with the ordered work and filing a written protest within the time therein specified.

Contractor Acceptance by

Signature	(Print name and title) A.T. Skoro, Project Director	Date 2/11/04

STATE OF CALIFORNIA - DEPARTMENT OF TRANSPORTATION

CONTRACT CHANGE ORDER MEMORANDUM

DATE: 2/17/2004

TO: PETER SIEGENTHALER / COE D.	FILE: E.A. 04 - 012024
FROM: COE D.	CO-RTE-PM 04-SF,Ala-80-13.9/14.3,0.0/1.6
	FED. NO. ACIM-080-1(085)8N
CCO#: 68 SUPPLEMENT#: 0 Category Code: CHPC	CONTINGENCY BALANCE (incl. this change) $25,633,096.99
COST: $0.00 INCREASE ☐ DECREASE ☐	HEADQUARTERS APPROVAL REQUIRED? ☐ YES ☑ NO
SUPPLEMENTAL FUNDS PROVIDED: $0.00	IS THIS REQUEST IN ACCORDANCE WITH ENVIRONMENTAL DOCUMENTS? ☑ YES ☐ NO
CCO DESCRIPTION: Relocate Corrosion Monitor	**PROJECT DESCRIPTION:** REPLACE SFOBB EAST SPAN

LOCATION: IN SAN FRANCISCO AND ALAMEDA COUNTIES IN SAN FRANCISCO AND OAKLAND FROM 1.3 KM EAST OF THE YERBA BUENA ISL

THIS CHANGE ORDER PROVIDES FOR:

Re-locating and re-routing conduit for the electrical resistance rate probe for the pile corrosion monitoring system as shown on revised contract plan sheet 222R1 of 978.

The Pile Corrosion Monitoring Systems will be relocated from Pier E3E to E3W, Pier E7E to E7W, and E16E to E14W. The conduit for the corrosion rate probe at Pier E3 will be re-routed through the top and bottom plates in line with the pier column at footing box 3. The conduit will be attached to the underside of the footing box with clamps to a distance of 1.5 meters from the middle pile socket. The original route through the annular space between the pile and the pile sleeve is unsuitable and during an extreme seismic event the piles will move inside the pile socket which may crush the conduit within the annular space.

There will be no additional costs as a result of this change order. A force account analysis is on file in the project records.

Mr. Gerry Houlahan (Designer with TY Lin) concurred with this change on 7/1/03.
Maintenance concurrence for this change order is not required as it does not affect maintanence duties.
FHWA concurrence is not required.

No time adjustment is warranted for this change as it does not affect the controlling operation.

CONCURRED BY:		
Construction Engineer: Douglas Coe	Date 8/20/2003	
Bridge Engineer:	Date	
FHWA Representative:	Date	
Project Engineer:	Date	
Other (specify): Gerry Houlahan	Date 7/1/2003	
	Date	
	Date	
District Prior Approval By:	Date	
HQ (Issue Approval) By: KEN DARBY	Date 2/10/04	
Resident Engineer's Signature:	Date 2-18-04	

ESTIMATE OF COST

	THIS REQUEST	TOTAL TO DATE
ITEMS	$0.00	$0.00
FORCE ACCOUNT	$0.00	$0.00
AGREED PRICE	$0.00	$0.00
ADJUSTMENT	$0.00	$0.00
TOTAL	$0.00	$0.00

FEDERAL PARTICIPATION

☑ PARTICIPATING ☐ PARTICIPATING IN PART ☐ NONE
☐ NON-PARTICIPATING (MAINTENANCE) ☐ NON-PARTICIPATING

FEDERAL SEGREGATION (if more than one Funding Source or P.I.P. type)
☑ CCO FUNDED PER CONTRACT ☐ CCO FUNDED AS FOLLOWS

FEDERAL FUNDING SOURCE	PERCENT

CCO: 69	Suppl. No. 0	Contract No, 04 - 012024	Road 04-SF,Ala-80-13.9/14.3,0.0/1.6	FED. AID LOC.: ACIM-080-1(085)8N

Description of work to be done, estimate of quantities and prices to be paid. (Segregate between additional work at contract price, agreed price and force account.) Unless otherwise stated, rates for rental of equipment cover only such time as equipment is actually used and no allowance will be made for idle time. This last percentage shown is the net accumulated increase or decrease from the original quantity in the Engineer's Estimate.

As shown on sheets 2 and 3 of 3 of this change order, modify the bar reinforcing steel for the Concrete Barrier (Type 732 Modified), delete the Steel Barrier (Type 732 Modified) at Hinge A, and provide Steel Barrier (Type 732 Modified) diaphragm end plates where indicated.

The revised contract plan sheets reflecting this change are **887R1** and 890R1 of 978.

Estimate of Decrease in Contract Item at Contract Price:

Item No. 91: STEEL BARRIER (TYPE 732 MODIFIED)
-14.7 M (-6.18%) @ $300.00 /M = -$4,410.00 (-6.18%)

Total cost for Decrease in Contract Item..... ($4,410.00)

The quantity decreases shown here for Contract Item No. 91, "Steel Barrier (Type 732 Modified)," when combined with quantities shown in the engineer's estimate, and as modified by any previous change orders, will be the final quantities for which payment will be made for each contract item.

Adjustment of Compensation at Lump Sum:

For modifying the bar reinforcing steel for Concrete Barrier (Type 732 Modified) and providing Steel Barrier (Type 732 Modified) diaphragm end plates, the State will receive a credit for the agreed lump sum amount of $8,025.00. This sum constitutes full compensation, including all markups, for direct and indirect costs, all associated project impacts, and overhead costs.

Adjustment of Compensation at Agreed Lump Sum ..... ($8,025.00)

Estimated Cost: Increase ☐ Decrease ☑ **($12,435.00)**

By reason of this order the time of completion will be adjusted as follows: 0 days

Submitted by

Signature	Resident Engineer: COE D.	Date 6-23-04

Approval Recommended by

Signature	Construction Engineer: COE D.	Date 6-23-04

Engineer Approval by

Signature	(Print name and title) PETER SIEGENTHALER - Chief	Date

Contractor Acceptance by

Signature	(Print name and title) A.F. Skoro, Project Director	Date 7-12-04

TO: PETER SIEGENTHALER / COE D.	FILE: E.A. 04 - 012024
FROM: COED.	CO-RTE-PM 04-SF,Ala-80-13.9/14.3,0.0/1.6
	FED. NO. ACIM-080-1(085)8N
CCO# 69 | SUPPLEMENT#: 0 | Category Code: CHPA	CONTINGENCY BALANCE (incl. this change) **$6,036,837.11**
COST: **($12,435.00)** INCREASE ☐ DECREASE ☑	HEADQUARTERS APPROVAL REQUIRED? ☐ YES ☐ NO
SUPPLEMENTAL FUNDS PROVIDED: $0.00	IS THIS REQUEST IN ACCORDANCE WITH ENVIRONMENTAL DOCUMENTS? ☐ YES ☐ NO
CCO DESCRIPTION: Barrier Rebar Modification	**PROJECT DESCRIPTION:** REPLACE SFOBB EAST SPAN

LOCATION: IN SAN FRANCISCO AND ALAMEDA COUNTIES IN SAN FRANCISCO AND OAKLAND FROM 1.3KM EAST OF THE YERBA BUENA ISL

THIS CHANGE ORDER PROVIDES FOR:
modifying the vertical bar reinforcing steel in Concrete Barrier (Type 732 Modified), field bending reinforcing steel after the superstructure segments have been erected, and deleting the Steel Barrier (Type 732 Modified) at Hinge A.

This change is needed to resolve the conflicts between the cantilever tendon ducts and the vertical bar reinforcing steel embedded in the concrete deck for Concrete Barrier (Type 723 Modified) near the tendon transition. Also, this change is needed to delete Steel Barrier (Type 732 Modified) at Hinge A. The steel barrier does not have steel deck beneath it, and therefore, does not have the appropriate surface to bolt to at the expansion joint seal block out at the hinge. As a result, the steel barrier is removed from this contract and will be constructed on a future contract.

This change order decreases the quantities of Contract Item No. 91, "Steel Barrier (Type 732 Modified)." Also, this change order includes an adjustment at agreed lump sum that provides a credit to the State for modifications to the bar reinforcing steel in Concrete Barrier (Type 732 Modified) and Steel Barrier (Type 732 Modified).

This change order will result in a net cost decrease to the project of $12,435.00. A detailed cost analysis is on file with the project records.

Prior approval was obtained from Pete Siegenthaler on October 10, 2003. Design concurrence was obtained from Hasan El-Natur on August 5, 2003, as indicated on the revised drawings. Maintenance concurrence is not required as the work associated with this changed does not affect Maintenance facilities . FHWA concurrence is not required as this is a minor change.

No time adjustment is warranted for this change, as it does not affect the controlling operation.

CONCURRED BY		
Construction Engineer:	Douglas Coe	Date
Bridge Engineer:	Douglas Coe	Date
FHWA Representative:		Date
Project Engineer:		Date
Other (specify): Hasan El-Natur		Date 8/5/2003
Janet Adams		Date 7/26/04
		Date
District Prior Approval By:	Pete Siegenthaler	Date 10/2/2003
HQ (Issue Approve) By:		Date
Resident Engineer's Signature:		Date

ESTIMATE OF COST		
	THIS REQUEST	TOTAL TO DATE
ITEMS	($4,410.00)	($4,410.00)
FORCE ACCOUNT	$0.00	$0.00
AGREED PRICE	$0.00	$0.00
ADJUSTMENT	($8,025.00)	($8,025.00)
TOTAL	($12,435.00)	($12,435.00)

FEDERAL PARTICIPATION

☐ PARTICIPATING ☐ PARTICIPATING IN PART ☐ NONE
☐ NON-PARTICIPATING (MAINTENANCE) ☐ NON-PARTICIPATING

FEDERAL SEGREGATION (if more than one Funding Source or P.I.P. type)
☑ CCO FUNDED PER CONTRACT ☐ CCO FUNDED AS FOLLOWS

FEDERAL FUNDING SOURCE	PERCENT

CONTRACT CHANGE ORDER

Change Requested by: Engineer

CCO: 71	Suppl. No. 0	Contract No. 04 - 012024	Road 04-SF,Ala-80-13.9/14.3,0.0/1.6	FED. AID LOC.: ACIM-080-1(085)8N

To: KIEWIT / FCI / MANSON a JV

You are directed to make the following changes from the plans and specifications or do the following described work not included in the plans and specifications for this contract. ***NOTE: This change order is not effective until approved by the Engineer.***

Description of work to be done, estimate of quantities and prices to be paid. (Segregate between additional work at contract price, agreed price and force account.) Unless otherwise stated, rates for rental of equipment cover only such time as equipment is actually used and no allowance will be made for idle time. This last percentage shown is the net accumulated increase or decrease from the original quantity in the Engineer's Estimate.

Adjustment of Compensation at Lump Sum:

Furnishing and installing transverse bar reinforcing steel in the web and bottom slab of the precast concrete segments per the revised reinforcement schedule as shown on revised contract plan sheet numbers 852R3, 853R3, 854R4, 855R3, 856R2, 857R3, 858R3, 859R3, 860R3, and 863R4 (sheets 2 to 11 of this change order) for the SFOBB East Span Skyway, Bridge Nos. 34-0006L/R.

For this work, the Contractor agrees to accept a lump sum amount of $55,114.00. This agreed lump sum constitutes full compensation for all costs, including markups, all direct and indirect costs, all associated project impacts, and all overhead costs.

Cost of Adjustment of Compensation at Agreed Lump Sum $55,114.00

Estimated Cost: **Increase** ☑ **Decrease** ☐ **$55,114.00**

By reason of this order the time of completion will be adjusted as follows: 0 days

Submitted by

Signature	Resident Engineer: DOUG COE, Supervising Br. Eng.	Date 2-7-06

Approval Recommended by

Signature	Construction Engineer: DOUG COE, Supervising Br. Eng.	Date 2-7-06

Engineer Approval by

Signature David Sullivan for	(Print name and title) PETER SIEGENTHALER - Chief	Date 3-14-06

We the undersigned contractor, have given careful consideration to the change proposed and agree, if this proposal is approved, that we will provide all equipment, furnish the materials, except as may otherwise be noted above, and perform all services necessary for the work above specified, and will accept as full payment therefor the prices shown above.

NOTE: If you, the contractor, do not sign acceptance of this order, your attention is directed to the requirements of the specifications as to proceeding with the ordered work and filing a written protest within the time therein specified.

Contractor Acceptance by

Signature	(Print name and title) Regional Project Director	Date 2/27/06

STATE OF CALIFORNIA - DEPARTMENT OF TRANSPORTATION

CONTRACT CHANGE ORDER

Change Requested by: Engineer

CCO: 72	Suppl. No. 0	Contract No. 04 - 012024	Road 04-SF,Ala-80-13.9/14.3,0.0/1.6	FED. AID LOC.: ACIM-080-1(085)8N

To: KIEWIT / FCI / MANSON a JV

You are directed to make the following changes from the plans and specifications or do the following described work not included in the plans and specifications for this contract. ***NOTE: This change order is not effective until approved by the Engineer.***

Description of work to be done, estimate of quantities and prices to be paid. (Segregate between additional work at contract price, agreed price and force account.) Unless otherwise stated, rates for rental of equipment cover only such time as equipment is actually used and no allowance will be made for idle time. This last percentage shown is the net accumulated increase or decrease from the original quantity in the Engineer's Estimate.

Adjustment of Compensation at Lump Sum:

Modify the lifting frame used at beds 1 and 2 to allow for the extra weight from the additional jacking steel executed under change order #65.

For this work, the contractor will be paid an agreed lump sum of $11,326.00. This sum constitutes full compensation, including markups, for this change.

Cost of Adjustment of Compensation at Agreed Lump Sum $11,326.00

Estimated Cost: Increase ☑ Decrease ☐ **$11,326.00**

By reason of this order the time of completion will be adjusted as follows: 0 days

Submitted by

Signature	Resident Engineer: COE D.	Date 10-3-03

Approval Recommended by

Signature	Construction Engineer: COE D.	Date 10-3-03

Engineer Approval by

Signature P. S. Siegenthaler	(Print name and title) PETER SIEGENTHALER - Chief	Date 10/14/03

We the undersigned contractor, have given careful consideration to the change proposed and agree, if this proposal is approved, that we will provide all equipment, furnish the materials, except as may otherwise be noted above, and perform all services necessary for the work above specified, and will accept as full payment therefor the prices shown above.

NOTE: If you, the contractor, do not sign acceptance of this order, your attention is directed to the requirements of the specifications as to proceeding with the ordered work and filing a written protest within the time therein specified.

Contractor Acceptance by

Signature	(Print name and title) A.T. Skoro, Project Director	Date 10/6/03

STATE OF CALIFORNIA - DEPARTMENT OF TRANSPORTATION

CONTRACT CHANGE ORDER MEMORANDUM

DATE: 9/30/2003

TO: PETER SIEGENTHALER / COE D.	FILE: E.A. 04 - 012024
FROM: COE D.	CO-RTE-PM 04-SF,Ala-80-13.9/14.3,0.0/1.6
	FED. NO. ACIM-080-1(085)8N
CCO#: 72 SUPPLEMENT#: 0 Category Code: CHXX	CONTINGENCY BALANCE (incl. this change) $36,312,031.43
COST: $11,326.00 INCREASE ☑ DECREASE ☐	HEADQUARTERS APPROVAL REQUIRED? ☐ YES ☑ NO
SUPPLEMENTAL FUNDS PROVIDED: $0.00	IS THIS REQUEST IN ACCORDANCE WITH ENVIRONMENTAL DOCUMENTS? ☑ YES ☐ NO
CCO DESCRIPTION: Modify Lift'g Frame for Deck Reinforcm't	**PROJECT DESCRIPTION:** REPLACE SFOBB EAST SPAN

LOCATION: IN SAN FRANCISCO AND ALAMEDA COUNTIES IN SAN FRANCISCO AND OAKLAND FROM 1.3 KM EAST OF THE YERBA BUENA ISL

THIS CHANGE ORDER PROVIDES FOR:

Modifications to the lifting frame used at beds 1 and 2 at the Stockton precast yard .

These modifications are necessary to increase the load carrying capacity of the lifting frame due to Change Order #65 that added reinforcing steel required for jacking forces in segments 7, 8, and 9. The additional 2,273 kg of reinforcing steel was compensated for under CCO #65.

For this work, the contractor will be paid an agreed lump sum of $11,326. This sum constitutes full compensation, including markups, for this change. An analysis of the Contractor's proposal is on file with the project records and it has been found to be fair and reasonable based on a force account analysis.

No adjustment of contract time is warranted, as this change does not affect the controlling operation.

Concurrence from FHWA is not required. Maintenance concurrence is not required, as this work does not affect any permanent Caltrans facility. Design concurrence is also not required since the work is not design-related.

CONCURRED BY:

Construction Engineer:	Douglas Coe	Date 10-3-03
Bridge Engineer:		Date
FHWA Representative:	N/A	Date
Project Engineer:	N/A	Date
Other (specify): Dave Neumann		Date 9/30/2003
		Date
		Date
District Prior Approval By:		Date
HQ (Issue Approve) By:		Date
Resident Engineer's Signature.		Date 10-3-03

ESTIMATE OF COST

	THIS REQUEST	TOTAL TO DATE
ITEMS	$0.00	$0.00
FORCE ACCOUNT	$0.00	$0.00
AGREED PRICE	$0.00	$0.00
ADJUSTMENT	$11,326.00	$11,326.00
TOTAL	$11,326.00	$11,326.00

FEDERAL PARTICIPATION

☑ PARTICIPATING ☐ PARTICIPATING IN PART ☐ NONE
☐ NON-PARTICIPATING (MAINTENANCE) ☐ NON-PARTICIPATING

FEDERAL SEGREGATION (if more than one Funding Source or P.I.P. type)
☑ CCO FUNDED PER CONTRACT ☐ CCO FUNDED AS FOLLOWS

FEDERAL FUNDING SOURCE	PERCENT

STATE OF CALIFORNIA - DEPARTMENT OF TRANSPORTATION

CONTRACT CHANGE ORDER

Change Requested by: Engineer

CCO: 73	Suppl. No. 0	Contract No. 04 - 012024	Road 04-SF,Ala-80-13.9/14.3,0.0/1.6	FED. AID LOC.: ACIM-080-1(085)8N

To: KIEWIT / FCI / MANSON a JV

You are directed to make the following changes from the plans and specifications or do the following described work not included in the plans and specifications for this contract. ***NOTE: This change order is not effective until approved by the Engineer.***

Description of work to be done, estimate of quantities and prices to be paid. (Segregate between additional work at contract price, agreed price and force account.) Unless otherwise stated, rates for rental of equipment cover only such time as equipment is actually used and no allowance will be made for idle time. This last percentage shown is the net accumulated increase or decrease from the original quantity in the Engineer's Estimate.

Extra Work at Force Account:

As authorized by the Engineer and in accordance with Section 4-1.03D "Extra Work" and Section 9-1.03 "Force Account Payment " of the Standard Specifications and Section 5-1.21 "Force Account Payment" of the Special Provisions, provide the labor, materials, and equipment as necessary to perform all work to resolve minor constructability issues that have no effect on contract time during the construction of the precast segments at the Contractor's Stockton yard.

Estimated cost of Extra Work at Force Account $10,000.00

Estimated Cost: Increase ☑ Decrease ☐ **$10,000.00**

By reason of this order the time of completion will be adjusted as follows: 0 days

Submitted by		
Signature	**Resident Engineer:** COE D.	Date 5-26-03
Approval Recommended by		
Signature	**Construction Engineer:** COE D.	Date 5-26-03
Engineer Approval by		
Signature	**(Print name and title)** PETER SIEGENTHALER - Chief	Date 10/7/03

We the undersigned contractor, have given careful consideration to the change proposed and agree, if this proposal is approved, that we will provide all equipment, furnish the materials, except as may otherwise be noted above, and perform all services necessary for the work above specified, and will accept as full payment therefor the prices shown above.

NOTE: If you, the contractor, do not sign acceptance of this order, your attention is directed to the requirements of the specifications as to proceeding with the ordered work and filing a written protest within the time therein specified.

Contractor Acceptance by		
Signature	(Print name and title)	Date

CONTRACT CHANGE ORDER

Change Requested by: Engineer

CCO: 73	Suppl. No. 1	Contract No, 04 - 012024	Road 04-SF,Ala-80-13.9/14.3,0.0/1.6	FED. AID LOC.: ACIM-080-1(085)8N

To: **KIEWIT / FCI / MANSON a JV**

You are directed *to* make the following changes from the plans and specifications or do the following described work not included in the plans and specifications for this contract. ***NOTE:*** *This change order is not effective until approved* ***by*** *the Engineer,*

Description of work to be done, estimate of quantities and prices to be paid. (Segregate between additional work at contract price, agreed price and force account.) Unless otherwise stated, rates for rental of equipment cover only such time as equipment is actually used and no allowance will be made for idle time. This last percentage shown is the net accumulated increase or decrease from the original quantity in the Engineer's Estimate.

Extra Work at Force Account:

As authorized by the Engineer and in accordance with Section 4-1.03D "Extra Work" and Section 9-1.03 "Force Account Payment " of the Standard Specifications and Section 5-1.21 "Force Account Payment" of the Special Provisions, provide the labor, materials, and equipment as necessary to perform all work to resolve minor constructability issues involving changes with the embeds and conduit sleeves that have no effect on contract time during the construction *of* the precast segments at the Contractor's Stockton yard.

Estimated cost of Extra Work at Force Account $100,000.00

Estimated Cost: Increase ☑ Decrease ☐ $100,000.00

By reason of this order the time of completion will be adjusted as follows: 0 days

Submitted by

Signature	Resident Engineer: COE D.	Date 1-20-04

Approval Recommended by

Signature	Construction Engineer: COE D.	Date 1-20-04

Engineer Approval by

Signature	(Print name and title) PETER SIEGENTHALER - Chief	Date

We the undersigned contractor, have given careful consideration to the change proposed and agree, if this proposal is approved, that we will provide all equipment, furnish the materials, except as may otherwise be noted above, and perform all services necessary for the work above specified, and will accept as full payment therefor the prices shown above.

NOTE: If you, the contractor, do not sign acceptance of this order, your attention is directed to the requirements of the specifications as to proceeding with the ordered work and filing a written protest within the time therein specified.

Contractor Acceptance by

Signature	(Print name and title)	Date

STATE OF CALIFORNIA - DEPARTMENT OF TRANSPORTATION

CONTRACT CHANGE ORDER MEMORANDUM

DATE: 1/7/2004

TO: PETER SIEGENTHALER / COE D.	FILE: E.A. 04 - 012024
FROM: COED.	CO-RTE-PM 04-SF,Ala-80-13.9/14.3,0.0/1.6
	FED. NO. ACIM-080-1(085)8N
CCO#: 73 SUPPLEMENT#: 1 Category Code: BZZZ	CONTINGENCY BALANCE (incl. this change) $27,185,833.10
COST: $100,000.00 INCREASE ☑ DECREASE ☐	HEADQUARTERS APPROVAL REQUIRED? ☐ YES ☑ NO
SUPPLEMENTAL FUNDS PROVIDED: $0.00	IS THIS REQUEST IN ACCORDANCE WITH ENVIRONMENTAL DOCUMENTS? ☑ YES ☐ NO
CCO DESCRIPTION: Field Conflict Resolution-Embeds	**PROJECT DESCRIPTION:** REPLACE SFOBB EAST SPAN

LOCATION: IN SAN FRANCISCO AND ALAMEDA COUNTIES IN SAN FRANCISCO AND OAKLAND FROM 1.3 KM EAST OF THE YERBA BUENA ISL

THIS CHANGE ORDER PROVIDES FOR:

Establishing a method to resolve minor constructability issues that have no effect on contract time during the construction of the precast segments at the Contractor's Stockton yard.

This change order will allow personnel at the Stockton precast yard to quickly resolve interference issues arising during the construction of the precast segments, which are on the critical-path, before the Contractor is delayed. These issues include changes with the electrical, mechanical, and walkway embeds, and conduit sleeves due to prestress tendon and reinforcing steel interference in the segments.

Embeds are covered as various items under this contract; therefore, payment for this work will be at Extra Work at Force Account for an estimated cost of $100,000.00, which can be financed from the contingency fund.

No adjustment of contract time is warranted, as this change does not affect the controlling operation.

Concurrence from FHWA is not required for this change is considered minor work. Maintenance concurrence is not required, as this work does not affect any permanent Caltrans facility. Design concurrence is also not required since the work is not design-related.

Similar to the original CCO 73, the Contractor refuses to sign the contract change order because it does not address time adjustments for the extra work. This contract change order is being processed unilaterally by the Engineer so that minor constructibility issues will be quickly resolved and construction of the precast segments will not be delayed.

CONCURRED BY:

Construction Engineer: Douglas Coe	Date 1-20-04
Bridge Engineer:	Date
FHWA Representative:	Date
Project Engineer:	Date
Other (specify):	Date
	Date
	Date
District Prior Approval By:	Date
HQ (Issue Approve) By:	Date
Resident Engineer's Signature:	Date 1-20-04

ESTIMATE OF COST

	THIS REQUEST	TOTAL TO DATE
ITEMS	$0.00	$0.00
FORCE ACCOUNT	$100,000.00	$110,000.00
AGREED PRICE	$0.00	$0.00
ADJUSTMENT	$0.00	$0.00
TOTAL	$100,000.00	$110,000.00

FEDERAL PARTICIPATION

☑ PARTICIPATING ☐ PARTICIPATING IN PART ☐ NONE
☐ NON-PARTICIPATING (MAINTENANCE) ☐ NON-PARTICIPATING

FEDERAL SEGREGATION *(if more than* one Funding *Source* or P I P. type)
☑ CCO FUNDED PER CONTRACT ☐ CCO FUNDED AS FOLLOWS

FEDERAL FUNDING SOURCE	PERCENT

STATE OF CALIFORNIA - DEPARTMENT OF TRANSPORTATION

CONTRACT CHANGE ORDER

Change Requested by: Engineer

CCO: 73	Suppl. No. 3	Contract No. 04 - 012024	Road 04-SF,Ala-80-13.9/14.3,0.0/1.6	FED. AID LOC.: ACIM-080-1(085)8N

To: **KIEWIT / FCI / MANSON a JV**

You are directed to make the following changes from the plans and specifications or do the following described work not included in the plans and specifications for this contract. ***NOTE: This change order is not effective until approved by the Engineer.***

Description of work to be done, estimate of quantities and prices to be paid. (Segregate between additional work at contract price, agreed price and force account.) Unless otherwise stated, rates for rental of equipment cover only such time as equipment is actually used and no allowance will be made for idle time. This last percentage shown is the net accumulated increase or decrease from the original

As authorized by the Engineer, and in lieu of installing eight (8) of the twelve (12) preformed loop detector arrays that were to be cast into the precast segments during segment fabrication at the Stockton precast yard, provide an agreed credit of $31,156.00. Furnish labor, equipment, and material to saw cut the top deck and install eight (8) traffic loop detector arrays after deck grinding is complete. Replace the already installed preformed loop detector arrays if damaged during deck preparations before placement of polyester overlay. Loops shall be installed in accordance with added subsection "Loop Detector Station" to section 10-3.11 of the Special Provisions, (page 2 of 3 of this change order) and in accordance with added contract plan sheet 394A of 978 (page 3 of 3 of this change order), for the SFOBB East Span Skyway, Bridge Nos. 34-0006L/R.

Extra Work at Force Account:

Compensation for the installation of traffic loop detector arrays after deck grinding is complete will be provided in accordance with section 4-1.03D "Extra Work", and section 9-1.03 "Force Account Payment" of the Standard Specifications, and section 5-1.21 "Force Account Payment" of the Special provisions.

Estimated cost of Extra Work at Force Account $100,000.00

Adjustment of Compensation at Lump Sum:

For the deletion of eight (8) Pre-formed Traffic Loop Arrays the Contractor will credit the State the agreed to lump sum amount of $31,156.00.

Adjustment of Compensation at Agreed Lump Sum .....($31,156.00)(Credit)

Estimated Cost: Increase ☑ Decrease ☐ **$68,844.00**

By reason of this order the time of completion will be adjusted as follows: 0 days

Submitted by

Signature	Resident Engineer: DOUG COE, Supervising Br. Eng.	Date 11-20-06

Approval Recommended by

Signature	Construction Engineer: DOUG COE, Supervising Br. Eng.	Date 11-20-06

Engineer Approval by

Signature	(Print name and title) PETER SIEGENTHALER - Chief	Date 4-19-07

We the undersigned contractor, have given careful consideration to the change proposed and agree, if this proposal is approved, that we will provide all equipment, furnish the materials, except as may otherwise be noted above, and perform all services necessary for the work above specified, and will accept as full payment therefor the prices shown above.

NOTE: If you, the contractor, do not sign acceptance of this order, your attention is directed to the requirements of the specifications as to proceeding with the ordered work and filing a written protest within the time therein specified.

Contractor Acceptance by

Signature	(Print name and title) Lee Zink Project Director	Date 4/9/07

LOOP DETECTOR STATION

The Contractor shall install the following Inductive loop detector station equipment at each station as described in these special provisions and as shown on the plans:

1. Ten saw cut type E inductive loops.
2. One State-furnished Model 170, controller assembly (described elsewhere in these special provisions).
3. One fiber optic data modem (described elsewhere in these special provisions).

Loop detector sensor units will be State-furnished in conformance with the provisions in "Materials" of these special provisions.

The saw cut Inductive loops shall be the type shown on the plans.

The loop shall be 1.8 m circular unless otherwise shown. The loop shall consist of 4 turns of No. 16, or larger, wire with Type TFE or TFFN insulation. Loop detector lead-in cable shall be Type B.

Slots in Portland cement concrete shall be filled with epoxy sealant conforming to the provision in Section 95-2.09, "Epoxy Sealant for Inductive Loops (State Specification 8040-06)," of the Standard Specifications. The depth of loop sealant above the top of the uppermost loop wire in the sawed slots shall be 10 mm, minimum.

Conductors are to be terminated in the pull box and labeled as shown on the plans.

REGISTERED PROFESSIONAL ENGINEER
MIGUEL EGEA
No. 014762
Exp. 6/30/07
ELECTRICAL
STATE OF CALIFORNIA

Miguel Egea
5/18/06

CONTRACT NO. 04-012024
COO NO. 7353
PAGE 2 OF 3

DIST	COUNTY	ROUTE	KILOMETER POST TOTAL PROJECT	SHEET NO.	TOTAL SHEETS
04	SF, Ala	80	13.9/14.3, 0.0/1.6	394A	978

REGISTERED ELECTRICAL ENGINEER DATE 5-18-06

PLANS APPROVAL DATE 5-18-06

The State of California or its officers or agents shall not be responsible for the accuracy or completeness of electronic copies of this plan sheet.

Caltrans now has a web site! To get to the web site, go to: http://www.dot.ca.gov

Caltrans Metric

Miguel Egea 5/18/06

REGISTERED PROFESSIONAL ENGINEER MIGUEL EGEA No. 014752 Exp. 6/30/07 ELECTRICAL STATE OF CALIFORNIA

SHEET NOTES:

1- The maximum depth of sawcut shall be limited to ¾ of the depth of the concrete cover over the existing reinforcement but in no case shall exceed 19 mm. The depth shall be consistent throughout each loop, but each loop may be different. The lead- in sawcuts shall be determined separately.

2- The depth of the concrete cover over the reinforcement shall be determined electronically by the Contractor and verified in the presence of Structure Construction or their designee. On circular loops and lead-in sawcuts, electronic readings shall be taken at 1.5 m maximum intervals along the line of the proposed sawcut. On other loops, electronic readings shall be taken a minimum of four locations along the sides of the loop including one location at each of the ends.

3- Approval shall be obtained from the Office of Structure Construction prior to any sawcutting on the bridge deck.

4- For loop installation procedure, see ES-5A. After the loop conductors are installed, the sawcut shall be sealed with approved epoxy sealant (See Standard Specifications Section 95-2.09).

5- The office of Structure Construction representative will inspect all sawcut epoxy seal operations.

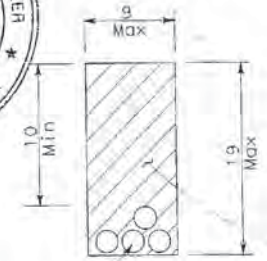

MODIFIED SLOT DETAIL

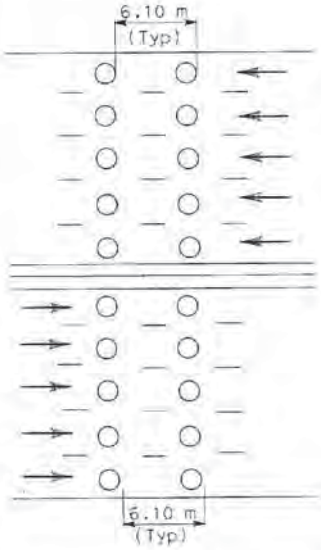

Freeway Mainline Detector Designation:

N=Northbound Lanes (NB)
S=Southbound Lanes (SB)
E=Eastbound Lanes (EB)
W=Westbound Lanes (WB)

Number of Lanes from left with respect to Direction of Traffic:

1=First Lane from left
2=Second Lane from left
3=Third Lane from left
4=Fourth Lane from left

Number of Detector in the same Lane:

1=Entering Detector
2=Leaving Detector

N 3-2

TYPICAL LOOP DETECTOR STATION INSTALLATION

LOOP DETECTOR STATION SCHEDULE

ID #	STATION	CABINET ID #	SERVICE PLATFORM REFERENCE SHEET	ROADWAY LEVEL REFERENCE SHEET	INSTALLATION STATUS
PL-E03	E 62+71.681	TOS-09EA	EE-281	EE-41	SAWCUT
PL-W02	W 62+80.921	TOS-09WA	EE-266	EE-21	SAWCUT
PL-E04	E 65+94.268	TOS-11EA	EE-283	EE-44	SAWCUT
PL-W03	W 66+24.950	TOS-11WA	EE-268	EE-24	SAWCUT
PL-E05	E 69+81.699	TOS-13EA	EE-285	EE-47	SAWCUT
PL-W04	W 70+04.950	TOS-13WA	EE-270	EE-27	SAWCUT
PL-E06	E 73+97.699	TOS-16EA	EE-288	EE-50	INSTALLED
PL-W05	W 74+20.950	TOS-16WA	EE-273	EE-30	SAWCUT
PL-E07	E 77+81.699	TOS-18EA	EE-290	EE-53	INSTALLED
PL-W06	W 78+04.950	TOS-18WA	EE-275	EE-33	INSTALLED
PL-E08	E 81+81.077	TOS-21EA	EE-293	EE-56	INSTALLED
PL-W07	W 82+04.950	TOS-21WA	EE-278	EE-36	SAWCUT

DATE	DESCRIPTIONS	REV	CK	
5/08/06	New Drawing Sawcut Inductive loops	RS	ME	CCO No. 7353

REVISIONS

CONTRACT CHANGE ORDER No. 73 S3

SHEET 3 OF 3

DETAILS
TRAFFIC OPERATIONS SYSTEM
SAWCUT LOOP DETECTOR STATION INSTALLATION
NOT TO SCALE

EE-382A

STATE OF CALIFORNIA - DEPARTMENT OF TRANSPORTATION

Caltrans

PROJECT ENGINEER: MIGUEL EGEA

CALCULATED/DESIGNED BY: RS DATE 5/06 REVISED BY

CHECKED BY: ME DATE 5/06 DATE REVISED

ALL DIMENSIONS IN MILLIMETERS UNLESS OTHERWISE SHOWN

FOR REDUCED PLANS ORIGINAL SCALE IS IN MILLIMETERS

CU 04251 EA 012021

DATE PLOTTED = 13-MAY-2006 TIME PLOTTED = 08:27

LAST REVISION 05-12-06

STATE OF CALIFORNIA - DEPARTMENT OF TRANSPORTATION

CONTRACT CHANGE ORDER MEMORANDUM

TO: PETER SIEGENTHALER / DOUG COE, Supervising Br. Eng.

FROM: DOUG COE, Supervising Br. Eng.

FILE: **E.A.** 04 - 012024
CO-RTE-PM 04-SF,Ala-80-13.9/14.3,0.0/1.6
FED. NO. ACIM-080-1(085)8N

CCO# **73** SUPPLEMENT#: **3** Category Cod **CBSA**

CONTINGENCY BALANCE (incl. this change **$9,507,750.82**

COST: **$68,844.00** INCREASE ☑ DECREASE ☐

HEADQUARTERS APPROVAL REQUIRED? ☑ YES ☐ NO

SUPPLEMENTAL FUNDS PROVIDED: **$0.00**

IS THIS REQUEST IN ACCORDANCE WITH ENVIRONMENTAL DOCUMENTS? ☑ YES ☐ NO

CCO DESCRIPTION:
Traffic Loops

PROJECT DESCRIPTION:
REPLACE SFOBB EAST SPAN

Original Contract Time:	Time Adj. This Change:	Previously Approved CCO Time Adjustments:	Percentage Time Adjusted: (including this change)	Total # of Unreconciled Deferred Time CCO(s): (including this change)
1000 Day(s)	**0** Day(s)	**424** Day(s)	**42** %	**0**

THIS CHANGE ORDER PROVIDES FOR:

At the authorization of the Engineer, in lieu of installing eight (8) of the twelve (12) preformed loop detector arrays that were to be cast into the segments during segment fabrication at the Stockton precast yard provide an agreed credit of $31,156.00. Furnishing labor, equipment, and material to saw cut the top deck and install eight (8) traffic loop detector arrays after deck grinding is complete. Replacing of the already installed preformed loop detector arrays if damaged during deck preparations before placement of the polyester overlay. Loops shall be installed in accordance with added subsection "Loop Detector Station" to section 10-3.11 of the Special Provisions, (page 2 of 3 of the change order) and in accordance with added contract plan sheet 394A of 978 (page 3 of 3 of the change order), for the SFOBB East Span Skyway, Bridge Nos. 34-0006L/R.

Traffic loop arrays were being cast in the segments per contract plans and specifications. The design added reinforcing steel in the top deck of the segments added to congestion of the reinforcing. This led to a reduction in concrete cover over the reinforcing. The contract plans show the traffic loops to be placed on top of the reinforcing steel thereby reducing the concrete cover over the traffic loop tee connectors to less than 9 mm. Out of concern of possible damage to the tee connectors during deck grinding operations, which would render the loop system useless, the Engineer requested the loops to be installed after completion of deck grinding. This will prevent damage to the traffic loops and guarantee proper operation.

There are twelve (12) Loop Detector Arrays shown on the contract plans. Four (4) preformed loop detector arrays were installed at the precast yard. Eight (8) loop detector arrays need to be installed after completion of deck preparation and before placement of the polyester concrete overlay. Additionally, any of the already installed preformed loop detector arrays damaged during deck preparations will need to be replaced with a saw cut type E inductive loop detector array.

An agreed to credit for the deletion of the eight (8) preformed loops arrays of $31,156.00 will be applied to this Force Account contract change order.

This change order will compensate the Contractor at Extra Work at Force Account an estimated amount of $100,000.00 for the costs to sawcut the deck and install the Type E arrays. A force account analysis for this work is on file in the project records. This work will be funded from the project contingency funds.

Mr. Pete Siegenthaler, SFOBB Construction Manager, Toll Bridge Construction, concurs with this change. A copy of the concurrence signed by Mr. Jason Tom, Supervising Bridge Engineer, on behalf of Mr. Siegenthaler on August 7, 2006 is attached.

Ken Terpstra, SFOBB Toll Bridge Project Manager, provided concurrence on November 1, 2006. A copy of the concurrence provided by Mr. Terpstra is attached.

Prior Approval was obtained from Ms. Nancy Bobb, FHWA Bay Bridge Project Manager, via electronic message on October 31, 2006. A printed copy of the prior approval provided by Ms. Bobb is attached.

Design concurrence is provided by Mr. Miguel Egea, ATCAS install. Mgr., as indicated by the signature on the revised contract plan sheet.

Gregory Klein, Maintenance Manager II, provided maintenance concurrence on November 2, 2006. A copy of the concurrence provided by Mr. Klein is attached.

ADA Notice: For individuals with sensory disabilities, this document is available in alternate formats. For information call: (916) 654-6410 or TDD (916) 654-3880 or write Records and Forms Management, 1120 N Street, MS-89, Sacramento, CA 95814.

No adjustment of contract time is warranted, as this change does not affect the controlling operation.

CONCURRED BY:			
Construction Engineer:	Douglas Coe	Date 11-20-06	
Bridge Engineer:	Douglas Coe	Date 11-20-06	
Project Engineer:		Date	
Project Manager:	Ken Terpstra	Date	11/1/06
FHWA Rep.:	Nancy Bobb	Date	10/31/06
Environmental:		Date	
Other (specify):	Gregory Klein, Maintenance Manag	Date	11/2/06
Other (specify):		Date	
District Prior Approval By:	Doug Coe, Acting District Rep.	Date	8/7/06
HQ (Issue Approval) By:	Ken Darby	Date	10/31/06
Resident Engineer's Signature:		Date	
		11-20-06	

ESTIMATE OF COST

	THIS REQUEST	TOTAL TO DATE
ITEMS	$0.00	$0.00
FORCE ACCOUNT	$100,000.00	$710,000.00
AGREED PRICE	$0.00	$0.00
ADJUSTMENT	($31,156.00)	($31,156.00)
TOTAL	$68,844.00	$678,844.00

FEDERAL PARTICIPATION

☑ PARTICIPATING ☐ PARTICIPATING IN PART ☐ NONE
☐ NON-PARTICIPATING (MAINTENANCE) ☐ NON-PARTICIPATING

FEDERAL SEGREGATION (if more than one Funding Source or P.I.P. type)
☑ CCO FUNDED PER CONTRACT ☐ CCO FUNDED AS FOLLOWS

FEDERAL FUNDING SOURCE PERCENT

ADA Notice: For individuals with sensory disabilities, this document is available in alternate formats. For information call: (916) 654-6410 or TDD (916) 654-3880 or write Records and Forms Management, 1120 N Street, MS-89, Sacramento, CA 95814.

CONTRACT CHANGE ORDER

Change Requested by: Engineer

CCO: 74	Suppl. No. 0	Contract No. 04 - 012024	Road 04-SF,Ala-80-13.9/14.3,0.0/1.6	FED. AID LOC.: ACIM-080-1(085)8N

To: KIEWIT / FCI / MANSON a JV

You are directed to make the following changes from the plans and specifications or do the following described work not included in the plans and specifications for this contract. ***NOTE: This change order is not effective until approved by the Engineer.***

Description of work to be done, estimate of quantities and prices to be paid. (Segregate between additional work at contract price, agreed price and force account.) Unless otherwise stated, rates for rental of equipment cover only such time as equipment is actually used and no allowance will be made for idle time. This last percentage shown is the net accumulated increase or decrease from the original

Adjustment of Compensation at Lump Sum:

Furnish additional labor, supervision, equipment, material, supplies, and other resources as required to construct the pier and pier tables as shown on revised contract plan sheet numbers 502R3, 503R3, 504R3, 505R4, 736R3, 737R1, 738R3, 739R1, 740R1, 741R1, 742R1, 743R1, 744R1, 745R1, 746R1, 748R3, 749R1, 750R3, 751R1, 752R2, 753R1, 754R1, 755R1, and 756R1 of 978 (sheets 2 through 25 of this change order) for the SFOBB East Span Skyway, Bridge No. 34-0006L/R.

Full compensation for all costs, including markups, all direct and indirect costs, escalation caused by the delay in completion of the revised contract plan sheets, all inefficiencies created by the numerous field issues, all overhead costs, a associated project impacts, and all risks associated with this change is included in the lump sum payment of CCO No. 200 and no further payment will be made as a result of this CCO.

Estimated Cost: Increase ☐ Decrease ☐

By reason of this order the time of completion will be adjusted as follows: 0 days

Submitted by		
Signature	Resident Engineer: DOUG COE, Supervising Br. Eng.	Date 8-24-06
Approval Recommended by		
Signature	Construction Engineer: DOUG COE, Supervising Br. Eng.	Date 8-24-06
Engineer Approval by		
Signature	(Print name and title) PETER SIEGENTHALER - Chief	Date

We the undersigned contractor, have given careful consideration to the change proposed and agree, if this proposal is approved, that we will provide all equipment, furnish the materials, except as may otherwise be noted above, and perform all services necessary for the work above specified, and will accept as full payment therefor the prices shown above.

NOTE: If you, the contractor, do not sign acceptance of this order, your attention is directed to the requirements of the specifications as to proceeding with the ordered work and filing a written protest within the time therein specified.

Contractor Acceptance by		
Signature	(Print name and title) LEE ZINK, Project Director	Date 9/5/06

STATE OF CALIFORNIA - DEPARTMENT OF TRANSPORTATION

CONTRACT CHANGE ORDER MEMORANDUM

TO: PETER SIEGENTHALER / PETER SIEGENTHALER	FILE: E.A. 04 - 012024
	CO-RTE-PM 04-SF,Ala-80-13.9/14.3,0.0/1.6
FROM: DOUG COE, Supervising Br. Eng.	FED. NO. ACIM-080-1(085)8N
CCO# 74 SUPPLEMENT#: 0 Category Cod CHPT	CONTINGENCY BALANCE (incl. this change
COST: INCREASE ☐ DECREASE ☐	HEADQUARTERS APPROVAL REQUIRED? ☑ YES ☐ NO
SUPPLEMENTAL FUNDS PROVIDED: $0.00	IS THIS REQUEST IN ACCORDANCE WITH ENVIRONMENTAL DOCUMENTS? ☑ YES ☐ NO
CCO DESCRIPTION: Revised Pier & Pier Table Drawings	**PROJECT DESCRIPTION:** REPLACE SFOBB EAST SPAN

LOCATION: IN SAN FRANCISCO AND ALAMEDA COUNTIES IN SAN FRANCISCO AND OAKLAND FROM 1.3 KM EAST OF THE YERBA BUENA ISL

THIS CHANGE ORDER PROVIDES FOR:

modification of the pier and pier table details as shown on revised contract plan sheet numbers 502R3, 503R3, 504R3, 505R4, 736R3, 737R1, 738R3, 739R1, 740R1, 741R1, 742R1, 743R1, 744R1, 745R1, 746R1, 748R3, 749R1, 750R3, 751R1, 752R2, 753R1, 754R1, 755R1, and 756R1 of 978 (sheet 2 through 25 of the change order) for the SFOBB East Span Skyway, Bridge Nos. 34-0006L/R.

Numerous requests for information (RFIs) revealed conflicts and interferences amongst the various pier table embedded items (reinforcing steel bars, prestress tendons, post tensioning bars, mechanical/electrical embeds, etc). This resulted in the issuance of CCO No. 12, to construct a mockup of a typical pier table. Construction of this mockup revealed additional conflicts. Consequently, the Department issued CCO No. 99, authorizing the Contractor to produce pier table composite working drawings for each pier table. These working drawings, which were produced in the Skyway "Mission Control" Office, provided a contractual mechanism for the Department and the Contractor to agree on the details to be constructed prior to actual field construction. Completion of these drawings delayed the planned start of pier table construction from July 2003 to December 2003.

Resulting major detail changes are as follows;

1. Stem wall stirrup spacing was changed to allow a non-standardized specifically defined spacing for each pier table to accommodate transverse deck tendons, horizontal T-Headed re-steel, the interface of the precast pier table panel re-steel and transverse rib post tensioning tendons.
2. Transverse deck tendon and horizontal T-Head re-steel spacing was varied to avoid conflict with the main vertical column re-steel.
3. Transverse deck tendon spacing was adjusted to accommodate vertical stem post tensioning bars and drop in vertical double 'T' head re-steel.
4. Postioning and orientation of vertical post tensioning bars must vary in all three dimensions to avoid conflict with other post tensioning and re-steel.
5. Pier Table Precast Panel rib tendons could not pass through pier table diaphragm. The Contract anchorage detail was in conflict with the column main vertical pier wall re-steel. Panel rib tendons were revised to use a dead end anchor.
6. P-Tendons were not fully shown on pier table detail sheets. They were only shown in schematic format on contract details. P-tendons needed to be adjusted to weave through the pier table main diaphragm section to avoid conflict with other post tensioning and re-steel in all three dimensions.
7. Drop in double T-headed vertical re-steel now have 5 different lengths to avoid conflicts with transverse deck, diaphragm, cantilever, and "D" tendon post tensioning, deck re-steel, and horizontal and longitudinal double 'T' headed resteel. The original contract details only called for two different lengths of drop in double 'T' headed vertical re-steel.
8. Additional pier table precast panel interface re-steel was added to allow a 30% cutt-off as necessary to interface the pier table precast panel re-steel with the vertical stem wall resteel and post tensioning.
9. Allowable fabrication tolerances for bending re-steel were substantially reduced to +/- 10 mm from that allowed in the ACI Building Code as per Standard Specification 52-1.06 "Bending". Additionally, some areas of the pier table have zero bending tolerance.

The completed composite placing drawings "as best as possible" resolved all known conflicts however, there were conflicts ("field issues") that arose as the work progressed. These "field issues" required specific direction from the Resident Engineer to resolve. Additionally, in order to accommodate the precision necessary with which to complete the work, the Contractor (KFM) and the reinforcing steel Sub-Contractor (HSBAR) employed extraordinary measures to precisely layout and place re-steel and post tensioning ducts. These measures included special fabrication tolerances for re-steel, re-fabrication of re-steel, precision re-steel and post tensioning duct layout, additional surveying to ensure precise placement, etc.

Although the pier table construction was never on the critical path, it was for some time within approximately one-month of critical. HSBAR worked ten-hour shifts five days a week including Saturdays when necessary. KFM added additional supervision and a swing shift to mitigate delays created by the changes, the just in time completion of the composite placing drawings, and the resolution of field issues as they arose. KFM claimed major installation inefficiencies associated with the changes and the just in time completion of the composite placing drawings with respect to the reinforcement, post tensioning and associated form work operations.

This change order provides compensation for labor, material, and equipment needed as a result of the changes made to the pier table details, the material cost increases resulting from the Engineer's delayed completion of the contract plan sheets and subsequent start of construction, and the inefficiencies created by the numerous changes.

The agreed compensation for this contract change order is included in the lump sum compensation portion of resolution CCO No. 200. For this work the Contractor will be compensated an agreed lump sum amount of $5,771,104.00

A detailed force account analysis prepared by the Engineer for the cost of this change order is on file in the project records.

Mr. Pete Siegenthaler, SFOBB Construction Manager, Toll Bridge Construction, concurs with this change. A copy of the concurrence signed by Mr. Siegenthaler on September 3, 2003 is attached.

Ken Terpstra, SFOBB Toll Bridge Project Manager, provided concurrence on July 3, 2006. A copy of the concurrence provided by Mr. Terpstra is attached.

Prior Approval was obtained from Ms. Nancy Bobb, FHWA Bay Bridge Project Manager, via electronic message on July 12, 2006. A printed copy of the prior approval provided by Ms. Bobb is attached.

Design concurrence is provided by Mr. Hasan El-Natur, Design Oversight Engineer, as indicated by the signature on the revised contract plan sheets.

Concurrence from Maintenance is not required as this change order does not use maintenance funds or affect maintenance facilities or operations.

No adjustment of contract time is warranted, as this change does not affect the controlling operation.

CONCURRED BY:

Construction Engineer:	Douglas Coe	Date 8-24-06
Bridge Engineer:	Douglas Coe	Date 8-24-06
FHWA Representative:	Nancy Bobb	Date 7/12/2006
Project Engineer:		Date
Other (specify): Ken Terpstra		Date 7/3/2006
TBPOC		Date 8/24/2006
		Date
District Prior Approval By:		Date
HQ (Issue Approve) By:	Ken Darby	Date
Resident Engineer's Signature:		Date 8-24-06

ESTIMATE OF COST

	THIS REQUEST	TOTAL TO DATE
ITEMS	$0.00	$0.00
FORCE ACCOUNT	$0.00	$0.00
AGREED PRICE	$0.00	$0.00
ADJUSTMENT		
TOTAL		

FEDERAL PARTICIPATION

☑ PARTICIPATING ☐ PARTICIPATING IN PART ☐ NONE
☐ NON-PARTICIPATING (MAINTENANCE) ☐ NON-PARTICIPATING

FEDERAL SEGREGATION (if more than one Funding Source or P.I.P. type)
☑ CCO FUNDED PER CONTRACT ☐ CCO FUNDED AS FOLLOWS

FEDERAL FUNDING SOURCE	PERCENT

CONTRACT CHANGE ORDER

Change Requested by: Engineer

CCO: 75 | Suppl. No. 1 | Contract No. 04 - 012024 | Road 04-SF,Ala-80-13.9/14.3,0.0/1.6 | FED. AID LOC.: ACIM-080-1(085)8N

To: **KIEWIT / FCI / MANSON a JV**

You are directed to make the following changes from the plans and specifications or do the following described work not included in the plans and specifications for this contract. ***NOTE: This change order is not effective until approved by the Engineer.***

Description of work to be done, estimate of quantities and prices to be paid. (Segregate between additional work at contract price, agreed price and force account.) Unless otherwise stated, rates for rental of equipment cover only such time as equipment is actually used and no allowance will be made for idle time. This last percentage shown is the net accumulated increase or decrease from the original

Extra Work at Lump Sum:

Furnish labor, supervision, and equipment to modify the Eastbound and Westbound electrical substation in accordance witl the revised contract plan sheets provided with contract change order no. 75 supplement 0, executed on February 16, 2006. Supply and install additional items as shown on revised contract plan sheets 109R4 and 897R4 of 978 (sheets 2 and 3 of 8 of this change order), install the substation exterior stairs per revised contract plan sheet 89R1 of 978 (sheet 4 of 8 of this change order), and install the monorail in the substations as modified per revised contract plan sheet 91R1 of 978 (sheet 5 of 8 of this change order) and State letters no. 8865, no. 8986, and no.8998, (attached as sheet 6 through 8 of 8 of this change order) for the SFOBB East Span Skyway, Bridge Nos. 34-0006L/R.

In addition to the work above, perform the following work as authorized by the Engineer:

1.) Raise the equipment and materials into the substation through the hatch as necessary.
2.) Install embed plates at walls at midspan closure E7E-E8E in the eastbound Substation.
3.) Install angles to the substation walls in the eastbound span for substation grating wall connection.
4.) Perform load test on angles installed to the substation wall in the eastbound span.
5.) Install substation end walls from top of diaphragm to ceiling and adjust the substation floor to match.
6.) Install R-13 insulation batting in the substation walls.
7.) Increase specified vent size, revise ventilation routing and termination for electric incinerating toilets.
8.) Supply Hilman roller system, equipped to move substation flooring, for each substation.
9.) Install scissor lifts shown on revised contract plan sheet 897R4 in the substations.

Full compensation for all costs, including markups, all direct and indirect costs, all associated project impacts, and all overhead costs are included in the lump sum payment of CCO No. 200 and no further payment will be made as a result of this CCO.

Estimated Cost: Increase ☐ Decrease ☐

By reason of this order the time of completion will be adjusted as follows: 0 days

Submitted by

Signature	Resident Engineer: DOUG COE, Supervising Br. Eng.	Date 8-24-06

Approval Recommended by

Signature	Construction Engineer: DOUG COE, Supervising Br. Eng.	Date 8-24-06

Engineer Approval by

Signature	(Print name and title) PETER SIEGENTHALER - Chief	Date

We the undersigned contractor, have given careful consideration to the change proposed and agree, if this proposal is approved, that we will provide all equipment, furnish the materials, except as may otherwise be noted above, and perform all services necessary for the work above specified, and will accept as full payment therefor the prices shown above.

NOTE: If you, the contractor, do not sign acceptance of this order, your attention is directed to the requirements of the specifications as to proceeding with the ordered work and filing a written protest within the time therein specified.

Contractor Acceptance by

Signature	(Print name and title) LEE ZINK, PROJECT DIRECTOR	Date 9/5/06

STATE OF CALIFORNIA - DEPARTMENT OF TRANSPORTATION

CONTRACT CHANGE ORDER MEMORANDUM

TO: PETER SIEGENTHALER / DOUG COE, Supervising Br. Eng.	FILE: E.A. 04 - 012024
FROM: DOUG COE, Supervising Br. Eng.	CO-RTE-PM 04-SF,Ala-80-13.9/14.3,0.0/1.6 FED. NO. ACIM-080-1(085)8N
CCO#: 75 SUPPLEMENT#: 1 Category Code: CHPA	CONTINGENCY BALANCE (incl. this change)
COST: INCREASE ☐ DECREASE ☐	HEADQUARTERS APPROVAL REQUIRED? ☑ YES ☐ NO
SUPPLEMENTAL FUNDS PROVIDED: $0.00	IS THIS REQUEST IN ACCORDANCE WITH ENVIRONMENTAL DOCUMENTS? ☑ YES ☐ NO
CCO DESCRIPTION: Substation Installation	**PROJECT DESCRIPTION:** REPLACE SFOBB EAST SPAN

LOCATION: IN SAN FRANCISCO AND ALAMEDA COUNTIES IN SAN FRANCISCO AND OAKLAND FROM 1.3 KM EAST OF THE YERBA BUENA ISL

THIS CHANGE ORDER PROVIDES FOR:

Furnishing labor, supervision, and equipment to modify the Eastbound and Westbound electrical substation in accordance with the revised contract plan sheets provided with contract change order no. 75 supplement 0, executed on February 16, 2006. Supply and install additional items as shown on revised contract plan sheets 109R4 and 897R4 of 978 (sheets 2 and 3 of 8 of the change order), install the substation exterior stairs per revised contract plan sheet 89R1 of 978 (sheet 4 of 8 of this change order), and install the monorail in the substations as modified per revised contract plan sheet 91 R1 of 978 (sheet 5 of 8 of the change order) and State letters no. 8865, no. 8986, and no.8998, (attached as sheet 6 through 8 of 8 of the change order) for the SFOBB East Span Skyway, Bridge Nos. 34-0006L/R.

To resolve the conflict between the electrical substation flooring and the future tendon ducts, the floor grating system of the substation was raised 525 mm above the concrete beams using steel pedestals bolted to the beams to provide an unobstructed pathway for the future tendons ducts. Contract change order no. 75 supplement 0 provided compensation for the fabrication of the steel pedestals. This supplemental change order provides for the additional installation costs.

Late completion of the revised design drawings requires the floor grating system to be loaded out in the field, through the hatch of the already erected segments instead of after segment casting at the Stockton precast yard. Raising the floor reduced the headroom in the substations making it difficult to install electrical equipment and requiring the design, supply, and installation of special lifting equipment as shown on revised plan sheet 897R4. The longitudinal beams at the substations created enclosed "dead spaces" in the segment cells under the floor. However, the contract plans do not indicate vent holes for these areas. To correct this oversight, the Engineer required the installation of drain pipes to prevent build up of condensation. Connections for the exterior substation access stairs to the embeds did not provide for adequate tolerances. Revised plan sheet 89R1 addresses the connection tolerance issues. During the development of shop drawings an interference between the S250 x 52 monorail hanger beams and the 28.58 mm connection bolts was noted. The Engineer increased the size of the S250 x 52 hanger beams to S250 x 58 as shown on revised plan sheet 91R1. Furthermore, segmental construction tolerances created a larger than specified midspan closure opening. This required a redesign to the connection knife plates at the westend of the monorail beam of the Eastbound substation. Verification of field dimensions as shown on the contract plan sheet would have delayed the procurement of material and fabrication of the monorail beam. To prevent this from occurring in the Westbound substation the Engineer added an additional embed. To facilitate inspection and maintenance of the soffit area under the substation flooring, Toll Bridge Maintenance requested the addition of a Hillman roller system, equipped to move the substation flooring, for each substation.

The Contractor submitted several additional Request For Information (RFI), which the Engineer addressed by State letters. The following resolutions to the RFI's are included in this change order:

1.) The variation of the midspan closure between span E7E and E8E left a section of the substation floor unsupported. The Engineer allows the Contractor to use threaded rods, bonded into the web wall concrete to create supports for the floor per State letter 9829.
2.) The Engineer approved shop drawings for the connection of the floor grating to the substation walls of the Eastbound span showed 6.35 mm nelson studs instead of the required 13 mm studs. The Engineer required the Contractor to install reinforcing angles to account for the undersized nelson studs in the wall embeds per State letter 8965.
3.) The raised floor required the Contractor to install embeds into the North and South substation walls for attachment of the floor grating. The subsequent field welding to the embeds created a spalling problem behind the embeds. In order to verify the capacity of embeds the Engineer required the Contractor to perform a load test per State letter 9802.
4.) Additional modification is required to the monorail installation in the substations. The Engineer provided direction to the Contractor in State letter 8865, 8986, and 8998.
5.) The revised contract plans for raising the substation floor did not include any details showing the closure of the gap created by raising the floor by 525 mm. State letter 10004 and 10041 provide clarification for contractor RFI 1661.

6.) The original design for the substation metal walls did not include any insulation. The Engineer directed the Contractor in response to RFI 1749 to install fiberglass batt insulation per State letter 10148.

7.) The ventilation termination for the incinerating toilet in the substation was not shown on the original contract plans. The Contractor submitted RFI 1383. The Engineer directed a change in the routing and termination of the vent as well as an increase of the specified vent size from 75 mm to 102 mm per State letter 7425 and 8946.

8.) The scissor lifts shown on revised contract plan sheet 897R4 will be installed in the substations at the direction of the Engineer.

Any contract plan changes resulting from these RFI's will be shown on the "as-built" plan sheets.

The agreed compensation for this contract change order is included in the lump sum compensation portion of resolution CCO No. 200. For this work, the Contractor agrees to accept a lump sum amount of $209,803.00.

A detailed force account analysis prepared by the Engineer for the cost of this change order is on file in the project records.

Pete Siegenthaler, SFOBB Construction Manager, provided concurrence on August 20, 2003. A copy of the concurrence provided by Mr. Siegenthaler is attached.

Ken Terpstra, SFOBB Project Manager, provided concurrence on July 30, 2006. A copy of the concurrence provided by Mr. Terpstra is attached.

Verbal concurrence from Maintenance was obtained from Mr. Kenneth Brown on August 24, 2006. Verbal concurrence was provided to Mr. Bill Howe, Senior Engineer, SFOBB Skyway Project.

Design concurrence was provided by Hasan El-Natur on April 12, 2004 as indicated by his signature on the revised contract plan sheets.

FHWA prior approval was obtained from Ms. Nancy Bobb on August 8, 2006. A copy of the prior approval provided by Ms. Bobb is attached.

No adjustment of contract time is warranted, as this change does not affect the controlling operation.

CONCURRED BY:		
Construction Engineer:	Douglas Coe	Date 8-24-06
Bridge Engineer:	Douglas Coe	Date 8-24-06
FHWA Representative:	Nancy Bobb	Date 8/8/2006
Project Engineer:		Date
Other (specify): Ken Terpstra, SFOBB Project Manager		Date 7/30/2006
Ken Brown, Toll Bridge Maintenance		Date
		Date
District Prior Approval By:		Date
HQ (Issue Approve) By:	Ken Darby	Date
Resident Engineer's Signature:		Date 8-24-06

ESTIMATE OF COST	THIS REQUEST	TOTAL TO DATE
ITEMS	$0.00	$0.00
FORCE ACCOUNT	$0.00	$0.00
AGREED PRICE ADJUSTMENT	$0.00	$0.00
TOTAL		

FEDERAL PARTICIPATION

☑ PARTICIPATING ☐ PARTICIPATING IN PART ☐ NONE
☐ NON-PARTICIPATING (MAINTENANCE) ☐ NON-PARTICIPATING

FEDERAL SEGREGATION (if more than one Funding Source or P.I.P. type)
☑ CCO FUNDED PER CONTRACT ☐ CCO FUNDED AS FOLLOWS

FEDERAL FUNDING SOURCE	PERCENT

CONTRACT CHANGE ORDER

Change Requested by: Engineer

CCO: 76	Suppl. No. 0	Contract No. 04 - 012024	Road 04-SF,Ala-80-13.9/14.3,0.0/1.6	FED. AID LOC.: ACIM-080-1(085)8N

To: **KIEWIT / FCI / MANSON a JV**

You are directed to make the following changes from the plans and specifications or do the following described work not included in the plans and specifications for this contract. ***NOTE: This change order is not effective until approved by the Engineer.***

Description of work to be done, estimate of quantities and prices to be paid. (Segregate between additional work at contract price, agreed price and force account.) Unless otherwise stated, rates for rental of equipment cover only such time as equipment is actually used and no allowance will be made for idle time. This last percentage shown is the net accumulated increase or decrease from the original quantity in the Engineer's Estimate.

Extra Work at Force Account:

As authorized by the Engineer, provide the following services:

1. Purchase equipment as shown on sheets 2 through 8 of 10 (or equivalent) of this change order. The video and still cameras are to be installed on the existing San Francisco/Oakland Bay Bridge (SFOBB);

2. At each of the five (5) locations shown on sheets 9 and 10 of 10 of this change order, install a camera package consisting of one (1) still and one (1) video camera along with NEMA 4X enclosures and encoders. All equipment is to be anchored to the existing bridge members with beam clamps, and shall be installed in accordance with the manufacturer's recommendations. Anchorage details shall be submitted to the Engineer for review and approval prior to installation;

3. Run 600V Multi Conductor armored electrical power cables as shown on sheet 8 of 10 of this change from the south side of the existing SFOBB to the specified camera locations listed on sheets 9 and 10 of 10 of this change orfer. Details for the electrical panel connections are to be determined by the Engineer; and

4. Perform an electronic audit on the existing bridge to verify bandwidth availability for wireless equipment.

Estimated cost of Extra Work at Force Account $260,000.00

Estimated Cost: **Increase** ☑ **Decrease** ☐ **$260,000.00**

By reason of this order the time of completion will be adjusted as follows: 0 days

Submitted by

Signature		Resident Engineer: COE D.	Date 6/17/04

Approval Recommended by

Signature		Construction Engineer: COE D.	Date 6/17/04

Engineer Approval by

Signature		(Print name and title) PETER SIEGENTHALER - Chief	Date 6/28/04

We the undersigned contractor, have given careful consideration to the change proposed and agree, if this proposal is approved, that we will provide all equipment, furnish the materials, except as may otherwise be noted above, and perform all services necessary for the work above specified, and will accept as full payment therefor the prices shown above.

NOTE: If you, the contractor, do not sign acceptance of this order, your attention is directed to the requirements of the specifications as to proceeding with the ordered work and filing a written protest within the time therein specified.

Contractor Acceptance by

Signature	(Print name and title) T. Shoro, Project Director	Date 6-22-04

49.076, 5.02.2

STATE OF CALIFORNIA - DEPARTMENT OF TRANSPORTATION

CONTRACT CHANGE ORDER MEMORANDUM

TO: PETER SIEGENTHALER / COE D.	FILE: **E.A.** 04 - 012024
FROM: COE D.	**CO-RTE-PM** 04-SF,Ala-80-13.9/14.3,0.0/1.6
	FED. NO. ACIM-080-1(085)8N
CCO#: **76** SUPPLEMENT#: **0** Category Code: **CXGX**	CONTINGENCY BALANCE (incl. this change) **$6,450,794.96**
COST: **$260,000.00** INCREASE ☑ DECREASE ☐	HEADQUARTERS APPROVAL REQUIRED? ☐ YES ☑ NO
SUPPLEMENTAL FUNDS PROVIDED: **$100,000.00**	IS THIS REQUEST IN ACCORDANCE WITH ENVIRONMENTAL DOCUMENTS? ☑ YES ☐ NO
CCO DESCRIPTION: Historical Documentation Cameras	**PROJECT DESCRIPTION:** REPLACE SFOBB EAST SPAN

LOCATION: IN SAN FRANCISCO AND ALAMEDA COUNTIES IN SAN FRANCISCO AND OAKLAND FROM 1.3 KM EAST OF THE YERBA BUENA ISL

THIS CHANGE ORDER PROVIDES FOR:

procuring and installing five (5) still and five (5) video cameras for documentation of the construction of the San Francisco Oakland Bay Bridge (SFOBB) East Span Replacement Project (ESR).

This change is needed to provide high-resolution still photographs for historical documentation of the construction of the ESR. The proposed system will operate by transmitting data from each camera location back to a base station located in the server room of the Public Information Building (PIB) located on Pier 7. The cameras will be located at the following locations on the existing SFOBB: Piers E2, E3, E6, E9 and TI (refer to the sheets 9 and 10 of 10 of the change order). The cameras will have pan tilt and zoom (PTZ) capability.

Video cameras are an integral part of this system and, for the Skyway, will be used to aim the still cameras. At some future date web cast video may be deemed useful. For this reason, all the hardware installed on the bridge (control boxes, racks, connectors etc.) will include the necessary elements to enable future web cast video capability. The cameras will be controlled remotely using hardware and software supplied by TLC Watch, Inc. (or equivalent), and the system will include the following components at each camera location (for additional information, refer to the complete TLC Watch, Inc. proposal on sheets 2 through 6 of the change order):

RECEIVED
02 4972 JUL 16 '04

1. Weather tight NEMA 4X Ethernet network based video encoder server.
2. Tsunami multipoint wireless subscriber unit
3. Canon 10D six mega pixel digital camera
4. Canon 10D AC power adapter
5. Canon EF 28mm f2.8 wide angle lens
6. Canon picture capture control software
7. Videolarm pressurized Dome enclosure with custom frame
8. Videolarm parapet mount pole
9. Cohu 3950 Day/Night DSP Color video camera
10. Cohu mounting hardware
11. 100 ft. USB extender inside Videolarm dome
12. Miscellaneous cables

In addition to the equipment and software required to at each camera location, there will also be a base station located at the PIB that will include the following equipment:

1. Video decoder server
2. TLC Image Database server
3. TLC Software development and integration service
4. Communications server
5. 200 DVD Ram Jukebox and 200 DVDs
6. Tsunami Multi-point wireless base station
7. Cisco 2950 switch
8. TLC web server (required for still camera operation)
9. 27" TV monitor

This work will be done as Extra Work at Force Account at an estimated cost of $260,000.00. Supplemental funds totaling $100,000 for photo survey/public relations have been provided in the contract. The additional $160,000.00 will be provided through the project contingency fund. A complete cost analysis is on file with the project records.

The contractor will install the camera equipment on the existing bridge and will make the necessary tie-ins to the existing electrical panels to enable TLC Watch, Inc., to turn on the system. Installation of all the base hardware at the PIB will be performed by CALTRANS IT staff after the cameras and base equipment are installed on the existing SFOBB. TLC Watch, Inc. will install and fine tune the software for the cameras.

The system that is to be provided is designed for durability and should require very little maintenance. Therefore, routine maintenance costs for the cameras mounted on the bridge have not been included in this change. If such maintenance is required, a supplement to this CCO will be prepared to cover the additional costs. Maintenance of the PIB base station will be performed by CALTRANS IT staff. The system as a whole is provided with a manufacturer's warranty. TLC Watch, Inc. warranties their work for two years. It is anticipated that the warranty provided by TLC Watch, Inc., will be adequate for the remaining duration of the SFOBB East Span Skyway Replacement Project.

This CCO was requested by Dennis Trujillo of Headquarters Public Affairs.

Prior Approval was obtained from Pete Siegenthaler on November 10, 2003. Design concurrence was obtained via email from Bob Zandipour, District 4 Electrical Design, on April 15, 2004. Maintenance concurrence was obtained from Samad Hamoud, Structure Maintenance, via email on August 8, 2003. Felix Zambrano, HQ IT, provided concurrence on March 5, 2004. Copies of these concurrences are attached.

FHWA Prior Approval was obtained from Ms. Nancy Bobb via email on June 16, 2004. A copy of the prior approval provided by Ms. Bobb is attached.

This additional work will not affect the overall project schedule. Therefore no additional contract time will be granted for this change order.

CONCURRED BY:		
Construction Engineer:	Douglas Coe by DAS	Date 6/17/04
Bridge Engineer:	Douglas Coe by DAS	Date 6/17/04
FHWA Representative:	Nancy Bobb	Date6/16/2004
Project Engineer:		Date
Other (specify): Bob Zandipour, DO4 Electrical		Date4/15/2004
Samad Hamoud, Str. Mtce.		Date 8/8/2003
Felix Zambrano, HQ IT		Date 3/5/2004
District Prior Approval By:	Pete Siegenthaler	Date 11/10/03
HQ (Issue Approve) By:		Date
Resident Engineer's Signature:	for Doug Coe	Date 6/17/04

ESTIMATE OF COST	THIS REQUEST	TOTAL TO DATE
ITEMS	$0.00	$0.00
FORCE ACCOUNT	$260,000.00	$260,000.00
AGREED PRICE	$0.00	$0.00
ADJUSTMENT	$0.00	$0.00
TOTAL	$260,000.00	$260,000.00

FEDERAL PARTICIPATION

☑ PARTICIPATING ☐ PARTICIPATING IN PART ☐ NONE
☐ NON-PARTICIPATING (MAINTENANCE) ☐ NON-PARTICIPATING

FEDERAL SEGREGATION (if more than one Funding Source or P.I.P. type)
☑ CCO FUNDED PER CONTRACT ☐ CCO FUNDED AS FOLLOWS

FEDERAL FUNDING SOURCE	PERCENT

CONTRACT CHANGE ORDER

Change Requested by: Engineer

CCO: 76	Suppl. No. 1	Contract No. 04 - 012024	Road 04-SF,Ala-80-13.9/14.3,0.0/1.6	FED. AID LOC.: ACIM-080-1(085)8N

To: KIEWIT / FCI / MANSON a JV

You are directed to make the following changes from the plans and specifications or do the following described work not included in the plans and specifications for this contract. ***NOTE: This change order is not effective until approved by the Engineer.***

Description of work to be done, estimate of quantities and prices to be paid. (Segregate between additional work at contract price, agreed price and force account.) Unless otherwise stated, rates for rental of equipment cover only such time as equipment is actually used and no allowance will be made for idle time. This last percentage shown is the net accumulated increase or decrease from the original quantity in the Engineer's Estimate.

Extra Work at Force Account:

Provide Additional Funds $100,000.00

Estimated Cost: Increase ☑ Decrease ☐ **$100,000.00**

By reason of this order the time of completion will be adjusted as follows: 0 days

Submitted by

Signature	Resident Engineer: DOUG COE, Supervising Br. Eng.	Date 6-8-05

Approval Recommended by

Signature	Construction Engineer: DOUG COE, Supervising Br. Eng.	Date 6-8-05

Engineer Approval by

Signature	(Print name and title) for PETER SIEGENTHALER - Chief	Date 6/10/05

We the undersigned contractor, have given careful consideration to the change proposed and agree, if this proposal is approved, that we will provide all equipment, furnish the materials, except as may otherwise be noted above, and perform all services necessary for the work above specified, and will accept as full payment therefor the prices shown above.

NOTE: If you, the contractor, do not sign acceptance of this order, your attention is directed to the requirements of the specifications as to proceeding with the ordered work and filing a written protest within the time therein specified.

Contractor Acceptance by

Signature	(Print name and title) Chris Villa, Deputy Project Director	Date 6-9-05

STATE OF CALIFORNIA - DEPARTMENT OF TRANSPORTATION

CONTRACT CHANGE ORDER MEMORANDUM

DATE: 6/8/2005

TO: PETER SIEGENTHALER / DOUG COE, Supervising Br. Eng.	FILE: **E.A.** 04 - 012024
FROM: DOUG COE, Supervising Br. Eng.	**CO-RTE-PM** 04-SF,Ala-80-13.9/14.3,0.0/1.6
	FED. NO. ACIM-080-1(085)8N
CCO#: **76** SUPPLEMENT#: **1** Category Code: **CXGX**	CONTINGENCY BALANCE (incl. this change) **$58,881,240.64**
COST: **$100,000.00** INCREASE ☑ DECREASE ☐	HEADQUARTERS APPROVAL REQUIRED? ☑ YES ☐ NO
SUPPLEMENTAL FUNDS PROVIDED: **$0.00**	IS THIS REQUEST IN ACCORDANCE WITH ENVIRONMENTAL DOCUMENTS? ☑ YES ☐ NO
CCO DESCRIPTION: Historical Documentation Cameras	**PROJECT DESCRIPTION:** REPLACE SFOBB EAST SPAN

LOCATION: IN SAN FRANCISCO AND ALAMEDA COUNTIES IN SAN FRANCISCO AND OAKLAND FROM 1.3 KM EAST OF THE YERBA BUENA ISL

THIS CHANGE ORDER PROVIDES FOR:

additional funds to complete the installation and set up of the historical documentation cameras for the SFOBB East Span Skyway Bridge Replacement Project, Bridge Nos. 34-0006L/R.

Additional funds are required due to the following conditions unknown when the original estimate for Contract Change Order No. 76 was prepared:

1. The original estimate was based on utilizing the existing 110-volt electrical power currently supplying the upper deck of the existing bridge as shown on the as-built plans. During the installation of the cameras, the Engineer discovered that the power source shown on the as-built was not usable, and power had to be brought up from the lower deck of the bridge. This unanticipated change required additional labor and material to complete.

2. In accordance with the International Brotherhood of Electrical Workers (IBEW), electricians receive premium pay at the rate of double time whenever they are working above a bridge deck or over water. This was not accounted for in the original estimate.

3. The original estimate contemplated using the existing bridge to mount the cameras and appurtenances. The Engineer later discovered that several of the sites required special mounting poles and supports for the cameras and equipment. In order to standardize the installation, the Engineer required the design and fabrication of the special mounting poles and supports for all camera sites.

4. Due to inclement weather conditions, the installation of the special mounting poles and supports for the cameras was delayed. The work was to be performed on a Sunday, and completed in one shift. The unfavorable weather conditions forced the cancellation of work on two consecutive scheduled Sundays. Costs for the first two Sundays included call out expenses for the Contractor's and subcontractor's personnel.

The Engineer has estimated that an additional $100,000.00 will cover these costs necessary to complete the installation of the historical documentation cameras. These funds are available in the project contingency funds.

This change order provides for compensating the contractor for the additional work necessary for the installation of the historical documentation cameras. Compensation will be extra work at force account for an estimated cost of $100,000.00. This additional estimated project cost can be financed from the contingency funds provided for this contract.

Ms. Nancy Bobb, FHWA Bay Bridge Project Manager, provided prior approval via an electronic message on June 7, 2005. A printed copy of the prior approval provided by Ms. Bobb is attached.

Janet Adams, SFOBB Toll Bridge Project Manager, provided concurrence on June 3, 2005. A copy of the concurrence provided by Ms. Adams is attached.

Concurrence from Maintenance is not required as this change does not use maintenance funds or affect any permanent maintenance facilities or operations.

The work associated with this change order does not affect the controlling operation. Therefore, consideration of contract time adjustment is not warranted.

RECEIVED
039404 JUN 13 05

CONCURRED BY:		
Construction Engineer:	Douglas Coe	Date 6-8-05
Bridge Engineer:	Douglas Coe	Date 6-8-05
FHWA Representative:	Nancy Bobb	Date 6/7/2005
Project Engineer:		Date
Other (specify): Janet Adams		Date 6/3/2005
		Date
		Date
District Prior Approval By:		Date
HQ (Issue Approve) By:		Date
Resident Engineer's Signature:		Date 6-8-05

ESTIMATE OF COST

	THIS REQUEST	TOTAL TO DATE
ITEMS	$0.00	$0.00
FORCE ACCOUNT	$100,000.00	$360,000.00
AGREED PRICE	$0.00	$0.00
ADJUSTMENT	$0.00	$0.00
TOTAL	$100,000.00	$360,000.00

FEDERAL PARTICIPATION

☑ PARTICIPATING ☐ PARTICIPATING IN PART ☐ NONE
☐ NON-PARTICIPATING (MAINTENANCE) ☐ NON-PARTICIPATING

FEDERAL SEGREGATION (if more than one Funding Source or P.I.P. type)
☑ CCO FUNDED PER CONTRACT ☐ CCO FUNDED AS FOLLOWS

FEDERAL FUNDING SOURCE	PERCENT

CONTRACT CHANGE ORDER

Change Requested by: Engineer

CCO: 79 **Suppl. No. 0** **Contract No. 04 - 012024** **Road** 04-SF,Ala-80-13.9/14.3,0.0/1.6 **FED. AID LOC.:** ACIM-080-1(085)8N

To: **KIEWIT / FCI / MANSON a JV**

You are directed to make the following changes from the plans and specifications or do the following described work not included in the plans and specifications for this contract. ***NOTE: This change order is not effective until approved by the Engineer.***

Description of work to be done, estimate of quantities and prices to be paid. (Segregate between additional work at contract price, agreed price and force account.) Unless otherwise stated, rates for rental of equipment cover only such time as equipment is actually used and no allowance will be made for idle time. This last percentage shown is the net accumulated increase or decrease from the original

Extra Work at Lump Sum:

Modify the transverse tendons, cut off girder reinforcement and add No. 13 U-bars at the manholes as shown on revised contract plan sheet numbers 699R3, 700R3, 701R2, and 702R3 of 978 (sheets 2 through 5 of this change order) for the SFOBB East Span Skyway, Bridge Numbers 34-0006L/R.

Full compensation for all costs, including markups, all direct and indirect costs, all associated project impacts, and all overhead costs are included in the lump sum payment of CCO No. 200 and no further payment will be made as a result of this CCO.

Estimated Cost: Increase ☐ Decrease ☐

By reason of this order the time of completion will be adjusted as follows: 0 days

Submitted by

Signature	Resident Engineer: DOUG COE, Supervising Br. Eng.	Date 8-24-06

Approval Recommended by

Signature	Construction Engineer: DOUG COE, Supervising Br. Eng.	Date 8-24-06

Engineer Approval by

Signature	(Print name and title) PETER SIEGENTHALER - Chief	Date

We the undersigned contractor, have given careful consideration to the change proposed and agree, if this proposal is approved, that we will provide all equipment, furnish the materials, except as may otherwise be noted above, and perform all services necessary for the work above specified, and will accept as full payment therefor the prices shown above.

NOTE: If you, the contractor, do not sign acceptance of this order, your attention is directed to the requirements of the specifications as to proceeding with the ordered work and filing a written protest within the time therein specified.

Contractor Acceptance by

Signature	(Print name and title) LEE ZINK, Project Director	Date 9/5/06

STATE OF CALIFORNIA - DEPARTMENT OF TRANSPORTATION

CONTRACT CHANGE ORDER MEMORANDUM

TO: PETER SIEGENTHALER / DOUG COE, Supervising Br. Eng.	FILE: E.A. 04 - 012024
FROM: DOUG COE, Supervising Br. Eng.	CO-RTE-PM 04-SF,Ala-80-13.9/14.3,0.0/1.6
	FED. NO. ACIM-080-1(085)8N
CCO# 79 SUPPLEMENT#: 0 Category Cod **CHPT**	CONTINGENCY BALANCE (incl. this change
COST: INCREASE ☐ DECREASE ☐	HEADQUARTERS APPROVAL REQUIRED? ☐ YES ☑ NO
SUPPLEMENTAL FUNDS PROVIDED: **$0.00**	IS THIS REQUEST IN ACCORDANCE WITH ENVIRONMENTAL DOCUMENTS? ☑ YES ☐ NO
CCO DESCRIPTION: Transverse Rib Tendon/Continuity Tendon	**PROJECT DESCRIPTION:** REPLACE SFOBB EAST SPAN

LOCATION: IN SAN FRANCISCO AND ALAMEDA COUNTIES IN SAN FRANCISCO AND OAKLAND FROM 1.3 KM EAST OF THE YERBA BUENA ISL

THIS CHANGE ORDER PROVIDES FOR:

modifying the transverse tendons, cutting off girder reinforcement and adding No. 13 U-bars at the manholes as shown on revised contract plan sheet numbers 699R3, 700R3, 701R2, and 702R3 of 978 (sheets 2 through 5 of this change order) for the SFOBB East Span Skyway, Bridge Numbers 34-0006L/R.

In order to avoid conflicts with the top span tendon blisters, and the cantilever tendon spirals, the spacing of the transverse tendons require modification.

The original contract plans do not provide the necessery information to slope the rib tendons at the anchorages in both east and westbound Cantilever Nos. 13, 14, and 15 segments. Revised plan sheet 702R3 provides this information.

At the Contractor's request, this contract change order also provides for lowering of the rib tendon path below the bottom slab haunch to prevent the tendon duct from passing through the steel form work.

The original contract plans do not provide details for the termination of the girder reinforcing at the manholes. This change order provides for cutting of the girder reinforcement at the manholes, and adding # 13 U bars as shown on revised contract plan sheet 702R3.

The agreed compensation for this contract change order is included in the lump sum compensation portion of resolution CCO No. 200. For this work, the Contractor agrees to accept a lump sum amount of $1,635.00.

A detailed force account analysis prepared by the Engineer for the cost of this change order is on file in the project records.

Mr. Pete Siegenthaler, SFOBB Construction Manager, Toll Bridge Construction, provided District Prior Approval for this change order on August 20, 2003. A copy of the concurrence signed by Mr. Siegenthaler is attached.

FHWA Prior Approval is not required as this is a minor change order.

Design concurrence was provided by Mr. Hasan El-Natur on May 25, 2004, as indicated by his signature on the revised contract plan sheets.

Concurrence from Maintenance is not required as this change order does not use maintenance funds or affect maintenance facilities or operations.

No time adjustment is warranted for this change order as it does not affect the controlling operation.

CONCURRED BY:		
Construction Engineer:	Douglas Coe	Date 8-24-06
Bridge Engineer:	Douglas Coe	Date 8-24-06
FHWA Representative:		Date
Project Engineer:	Hasan El-Natur	Date5/25/2004
Other (specify):		Date
		Date
		Date
District Prior Approval By:	Rick Morrow,	Date1/21/2003
HQ (Issue Approve) By:		Date
Resident Engineer's Signature:		Date 8-24-06

ESTIMATE OF COST

	THIS REQUEST	TOTAL TO DATE
ITEMS	$0.00	$0.00
FORCE ACCOUNT	$0.00	$0.00
AGREED PRICE ADJUSTMENT	$0.00	$0.00
TOTAL		

FEDERAL PARTICIPATION

☑ PARTICIPATING ☐ PARTICIPATING IN PART ☐ NONE
☐ NON-PARTICIPATING (MAINTENANCE) ☐ NON-PARTICIPATING

FEDERAL SEGREGATION (if more than one Funding Source or P.I.P. type)
☑ CCO FUNDED PER CONTRACT ☐ CCO FUNDED AS FOLLOWS

FEDERAL FUNDING SOURCE	PERCENT

CONTRACT CHANGE ORDER

Change Requested by: Engineer

CCO: 80	Suppl. No. 0	Contract No. 04 - 012024	Road 04-SF,Ala-80-13.9/14.3,0.0/1.6	FED. AID LOC.: ACIM-080-1(085)8N

To: **KIEWIT / FCI / MANSON a JV**

You are directed to make the following changes from the plans and specifications or do the following described work not included in the plans and specifications for this contract. ***NOTE: This change order is not effective until approved by the Engineer.***

Description of work to be done, estimate of quantities and prices to be paid. (Segregate between additional work at contract price, agreed price and force account.) Unless otherwise stated, rates for rental of equipment cover only such time as equipment is actually used and no allowance will be made for idle time. This last percentage shown is the net accumulated increase or decrease from the original

Extra Work at Lump Sum:

Apply incremental frame jacking and install counterweight at Frame 3 to control long term moments and to mitigate impacts of using a creep coefficient of 2.35, instead of a lower value for the work done on the SFOBB East Span Skyway, Bridge Nos. 34-0006L/R.

Full compensation for all costs, including markups, all direct and indirect costs, all associated project impacts, and all overhead costs are included in the lump sum payment of CCO No. 200 and no further payment will be made as a result of this CCO.

Estimated Cost: Increase ☐ Decrease ☐

By reason of this order the time of completion will be adjusted as follows: 0 days

Submitted by

Signature	Resident Engineer: DOUG COE, Supervising Br. Eng.	Date 8-24-06

Approval Recommended by

Signature	Construction Engineer: DOUG COE, Supervising Br. Eng.	Date 8-24-06

Engineer Approval by

Signature	(Print name and title) PETER SIEGENTHALER - Chief	Date

We the undersigned contractor, have given careful consideration to the change proposed and agree, if this proposal is approved, that we will provide all equipment, furnish the materials, except as may otherwise be noted above, and perform all services necessary for the work above specified, and will accept as full payment therefor the prices shown above.

NOTE: **If you, the contractor, do not sign acceptance of this order, your attention is directed to the requirements of the specifications as to proceeding with the ordered work and filing a written protest within the time therein specified.**

Contractor Acceptance by

Signature	(Print name and title) Lee Zink, Project Director	Date 9/5/06

STATE OF CALIFORNIA - DEPARTMENT OF TRANSPORTATION

CONTRACT CHANGE ORDER MEMORANDUM

TO: PETER SIEGENTHALER / DOUG COE, Supervising Br. Eng.	FILE: **E.A.** 04 - 012024
FROM: DOUG COE, Supervising Br. Eng.	**CO-RTE-PM** 04-SF,Ala-80-13.9/14.3,0.0/1.6 **FED. NO.** ACIM-080-1(085)8N
CCO#: **80** SUPPLEMENT#: **0** Category Code: **CHSA**	CONTINGENCY BALANCE (incl. this change)
COST: INCREASE ☑ DECREASE ☐	HEADQUARTERS APPROVAL REQUIRED? ☑ YES ☐ NO
SUPPLEMENTAL FUNDS PROVIDED: **$0.00**	IS THIS REQUEST IN ACCORDANCE WITH ENVIRONMENTAL DOCUMENTS? ☑ YES ☐ NO
CCO DESCRIPTION: Jacking Loads - Shrink & Creep	**PROJECT DESCRIPTION:** REPLACE SFOBB EAST SPAN

LOCATION: IN SAN FRANCISCO AND ALAMEDA COUNTIES IN SAN FRANCISCO AND OAKLAND FROM 1.3 KM EAST OF THE YERBA BUENA ISL

THIS CHANGE ORDER PROVIDES FOR:

Incremental frame jacking and the use of a counterweight at Frame 3 to control long term moments.

The Contractor calculated a creep coefficient of 1.1 for the superstructure concrete, which was lower than expected by the Engineer. Therefore, the Engineer directed the Contractor to use the original design creep coefficient of 2.35 until additional testing could confirm the value. After six months of additional testing, the Engineer accepted a creep coefficient of 1.6 to be reasonable for the structure. In addition, the contractor will be directed to incrementally jack the structure and use counterweights at Frame 3. Incremental jacking and the use of counterweights are not required by the contract, but will be used in conjunction with the 1.6 creep value to control long term moments and improve the structures performance.

The agreed compensation for this change order is included in the lump sum compensation portion of resolution CCO No. 200. For this change, the contractor will receive an agreed lump sum of $208,633.00.

A detailed force account analysis prepared by the Engineer for the cost of this change order is on file in the project records.

Mr. Pete Siegenthaler, SFOBB Construction Manager, Toll Bridge Construction, provided his concurrence for this change order on February 3, 2006. A copy of the concurrence signed by Mr. Siegenthaler is attached.

Prior Approval was obtained from Ms. Nancy Bobb, FHWA Bay Bridge Project Manager, via electronic message on February 23, 2006. A printed copy of the prior approval provided by Ms. Bobb is attached.

Mr. Ken Terpstra, SFOBB Project Manager, provided concurrence on April 24, 2006. A copy of the concurrence provided by Mr. Terpstra is attached.

Design concurrence was provided by Hasan El-Natur, Senior Bridge Engineer, on April 4, 2006. A copy of the concurrence provided by Mr. El-Natur is attached.

Concurrence from Maintenance is not required as this change order does not use maintenance funds or affect maintenance facilities or operations.

Authorization to proceed with this change order was issued by Division of Construction on February 14, 2006.

No time adjustment is warranted for this change order as it does not affect the controlling operation.

CONCURRED BY:		
Construction Engineer:	Douglas Coe	Date 9-24-06
Bridge Engineer:	Douglas Coe	Date 9-24-06
FHWA Representative:	Nancy Bobb	Date 2/23/2006
Project Engineer:		Date
Other (specify): Ken Terpstra, SFOBB Project Manager		Date 4/24/2006
Hasan El-Natur		Date 4/4/2006
		Date
District Prior Approval By:		Date
HQ (Issue Approve) By:	Ken Darby	Date
Resident Engineer's Signature:		Date 9-24-06

ESTIMATE OF COST

	THIS REQUEST	TOTAL TO DATE
ITEMS	$0.00	$0.00
FORCE ACCOUNT	$0.00	$0.00
AGREED PRICE		
ADJUSTMENT	$0.00	$0.00
TOTAL		

FEDERAL PARTICIPATION

☑ PARTICIPATING ☐ PARTICIPATING IN PART ☐ NONE
☐ NON-PARTICIPATING (MAINTENANCE) ☐ NON-PARTICIPATING

FEDERAL SEGREGATION (if more than one Funding Source or P.I.P. type)
☑ CCO FUNDED PER CONTRACT ☐ CCO FUNDED AS FOLLOWS

FEDERAL FUNDING SOURCE	PERCENT

CONTRACT CHANGE ORDER

Change Requested by: Engineer

CCO: 81	Suppl. No. 0	Contract No. 04 - 012024	Road 04-SF,Ala-80-13.9/14.3,0.0/1.6	FED. AID LOC.: ACIM-080-1(085)8N

To: KIEWIT / FCI / MANSON a JV

You are directed to make the following changes from the plans and specifications or do the following described work not included in the plans and specifications for this contract. ***NOTE: This change order is not effective until approved by the Engineer.***

Description of work to be done, estimate of quantities and prices to be paid. (Segregate between additional work at contract price, agreed price and force account.) Unless otherwise stated, rates for rental of equipment cover only such time as equipment is actually used and no allowance will be made for idle time. This last percentage shown is the net accumulated increase or decrease from the original

Adjustment of Compensation at Lump Sum:

Modify the bar reinforcing steel deck ties as shown on revised contract plan sheet number 852R3 of 978 (sheet 2 of this change order) for the SFOBB East Span Skyway, Bridge Numbers 34-0006L/R.

Full compensation for all direct and indirect costs, and all associated project impacts is included in the lump sum payment of CCO No. 200 and no further payment will be made as a result of this CCO.

Estimated Cost: Increase ☐ Decrease ☐

By reason of this order the time of completion will be adjusted as follows: 0 days

Submitted by

Signature	Resident Engineer: DOUG COE, Supervising Br. Eng.	Date 8-24-06

Approval Recommended by

Signature	Construction Engineer: DOUG COE, Supervising Br. Eng.	Date 8-24-06

Engineer Approval by

Signature	(Print name and title) PETER SIEGENTHALER - Chief	Date

We the undersigned contractor, have given careful consideration to the change proposed and agree, if this proposal is approved, that we will provide all equipment, furnish the materials, except as may otherwise be noted above, and perform all services necessary for the work above specified, and will accept as full payment therefor the prices shown above.

NOTE: **If you, the contractor, do not sign acceptance of this order, your attention is directed to the requirements of the specifications as to proceeding with the ordered work and filing a written protest within the time therein specified.**

Contractor Acceptance by

Signature	(Print name and title) Lee Zink, Project Director	Date 9/5/06

STATE OF CALIFORNIA - DEPARTMENT OF TRANSPORTATION

CONTRACT CHANGE ORDER MEMORANDUM

TO: PETER SIEGENTHALER / DOUG COE, Supervising Br. Eng.	FILE: E.A. 04 - 012024
FROM: DOUG COE, Supervising Br. Eng.	CO-RTE-PM 04-SF,Ala-80-13.9/14.3,0.0/1.6
	FED. NO. ACIM-080-1(085)8N
CCO# **81** SUPPLEMENT#: **0** Category Cod **CHPA**	CONTINGENCY BALANCE (incl. this change
COST: INCREASE ☐ DECREASE ☐	HEADQUARTERS APPROVAL REQUIRED? ☐ YES ☑ NO
SUPPLEMENTAL FUNDS PROVIDED: **$0.00**	IS THIS REQUEST IN ACCORDANCE WITH ENVIRONMENTAL DOCUMENTS? ☑ YES ☐ NO
CCO DESCRIPTION: Bridge Deck Rebar - Revise Deck Ties	**PROJECT DESCRIPTION:** REPLACE SFOBB EAST SPAN

LOCATION: IN SAN FRANCISCO AND ALAMEDA COUNTIES IN SAN FRANCISCO AND OAKLAND FROM 1.3 KM EAST OF THE YERBA BUENA ISL

THIS CHANGE ORDER PROVIDES FOR:

Modifying the bar reinforcing steel deck ties as shown on revised contract plan sheet number 852R3 (sheet 2 of the contract change order) for the SFOBB East Span Skyway, Bridge Numbers 34-0006L/R.

This change order is needed to eliminate conflicts between the longitudinal post-tensioning ducts and the segment bar reinforcing steel deck ties. The original detail is not able to be constructed in accordance with the contract plans due to confilcts with the longitudinal post-tensioning ducts and rebar bending tolerances. This conflict is further complicated by the segment's parabolic deck profile. To resolve the conflict and facilitate installation, one of the deck tie hook bends is revised from a 135 degree bend to a 90 degree bend.

The revision of the hook bends of the bar reinforcing steel deck ties per plan sheet 825R3 changes the overall length from 140mm to 155mm. Although, there is an increase in material, the piece count does not change. Therefore, the installation labor does not change. The Contractor will be compensated for the increase in material cost only.

The agreed compensation for this contract change order is included in the lump sum compensation portion of resolution CCO No. 200. For this work, the Contractor agrees to accept a lump sum amount of $6,637.00.

A detailed force account analysis prepared by the Engineer for the cost of this change order is on file in the project records.

Mr. Pete Siegenthaler, SFOBB Construction Manager, Toll Bridge Construction, provided District Prior Approval for this change order on September 9, 2003. A copy of the concurrence signed by Mr. Siegenthaler is attached.

FHWA Prior Approval is not required as this is a minor change order.

Design concurrence was provided by Mr. Hasan El-Natur, Senior Bridge Engineer, on March 29, 2004, as indicated by his signature on the revised contract plan sheet.

Concurrence from Maintenance is not required as this change order does not use maintenance funds or affect maintenance facilities or operations.

No time adjustment is warranted for this change order as it does not affect the controlling operation.

CONCURRED BY:		
Construction Engineer:	Douglas Coe	Date 9-27-06
Bridge Engineer:	Douglas Coe	Date 9-27-06
FHWA Representative:		Date
Project Engineer:	Hasan El-Natur	Date 3/29/2004
Other (specify):		Date
		Date
		Date
District Prior Approval By:	Pete Siegenthaler	Date 9/9/2003
HQ (Issue Approve) By:		Date
Resident Engineer's Signature:		Date 3-24-06

ESTIMATE OF COST

	THIS REQUEST	TOTAL TO DATE
ITEMS	$0.00	$0.00
FORCE ACCOUNT	$0.00	$0.00
AGREED PRICE	$0.00	$0.00
ADJUSTMENT		
TOTAL		

FEDERAL PARTICIPATION

☑ PARTICIPATING ☐ PARTICIPATING IN PART ☐ NONE
☐ NON-PARTICIPATING (MAINTENANCE) ☐ NON-PARTICIPATING

FEDERAL SEGREGATION (if more than one Funding Source or P.I.P. type)
☑ CCO FUNDED PER CONTRACT ☐ CCO FUNDED AS FOLLOWS

FEDERAL FUNDING SOURCE	PERCENT

CONTRACT CHANGE ORDER

Change Requested by: Engineer

CCO: 82 | Suppl. No. 0 | Contract No. 04 - 012024 | Road 04-SF,Ala-80-13.9/14.3,0.0/1.6 | FED. AID LOC.: ACIM-080-1(085)8N

To: KIEWIT / FCI / MANSON a JV

You are directed to make the following changes from the plans and specifications or do the following described work not included in the plans and specifications for this contract. ***NOTE: This change order is not effective until approved by the Engineer.***

Description of work to be done, estimate of quantities and prices to be paid. (Segregate between additional work at contract price, agreed price and force account.) Unless otherwise stated, rates for rental of equipment cover only such time as equipment is actually used and no allowance will be made for idle time. This last percentage shown is the net accumulated increase or decrease from the original

Adjustment of Compensation at Lump Sum:

Modify the diaphragm rebars and the precast panel to diaphragm connection details on the SFOBB East Span Skyway, Bridge Nos. 34-0006 L/R, as shown on the revised contract plan sheets 730R2, 731R2, 732R2, and 762R1 of 978 (pages 2 through 5 of this change order).

Full compensation for all costs, including markups, all direct and indirect costs, all associated project impacts, and all overhead costs is included in the lump sum payment of CCO No. 200 and no further payment will be made as a result of this CCO.

Estimated Cost: Increase ☐ Decrease ☐

By reason of this order the time of completion will be adjusted as follows: 0 days

Submitted by

Signature	Resident Engineer: DOUG COE, Supervising Br. Eng.	Date 8-24-06

Approval Recommended by

Signature	Construction Engineer: DOUG COE, Supervising Br. Eng.	Date 8-24-06

Engineer Approval by

Signature	(Print name and title) PETER SIEGENTHALER - Chief	Date

We the undersigned contractor, have given careful consideration to the change proposed and agree, if this proposal is approved, that we will provide all equipment, furnish the materials, except as may otherwise be noted above, and perform all services necessary for the work above specified, and will accept as full payment therefor the prices shown above.

NOTE: If you, the contractor, do not sign acceptance of this order, your attention is directed to the requirements of the specifications as to proceeding with the ordered work and filing a written protest within the time therein specified.

Contractor Acceptance by

Signature	(Print name and title) Lee Zink, Project Director	Date 9/5/06

STATE OF CALIFORNIA - DEPARTMENT OF TRANSPORTATION

CONTRACT CHANGE ORDER MEMORANDUM

DATE: 2/23/2006

TO: PETER SIEGENTHALER / DOUG COE, Supervising Br. Eng.	FILE: E.A. 04 - 012024
FROM: DOUG COE, Supervising Br. Eng.	CO-RTE-PM 04-SF,Ala-80-13.9/14.3,0.0/1.6
	FED. NO. ACIM-080-1(085)8N
CCO#: 82 SUPPLEMENT#: 0 Category Code: CHPT	CONTINGENCY BALANCE (incl. this change)
COST: INCREASE ☑ DECREASE ☐	HEADQUARTERS APPROVAL REQUIRED? ☐ YES ☑ NO
SUPPLEMENTAL FUNDS PROVIDED: $0.00	IS THIS REQUEST IN ACCORDANCE WITH ENVIRONMENTAL DOCUMENTS? ☑ YES ☐ NO
CCO DESCRIPTION: Precast Panel/Diaphragm Rebar & Alignm't	**PROJECT DESCRIPTION:** REPLACE SFOBB EAST SPAN

LOCATION: IN SAN FRANCISCO AND ALAMEDA COUNTIES IN SAN FRANCISCO AND OAKLAND FROM 1.3 KM EAST OF THE YERBA BUENA ISL

THIS CHANGE ORDER PROVIDES FOR:

Modifying the diaphragm rebars and the precast panel to diaphragm connection details as shown on the revised contract plan sheets 730R2, 731R2, 732R2, and 762R1 of 978.

During the development of the composite drawings for the precast segments, multiple conflicts were found in the precast panel to diaphragm connection. This Contract Change Order will provide adjustments to the diaphragm rebars to avoid conflict in panel to diaphragm connections.

The agreed compensation for this change order is included in the lump sum compensation portion of resolution CCO No. 200. For this change, the contractor will receive an agreed lump sum of $70,000.00.

A detailed force account analysis prepared by the Engineer for the cost of this change order is on file in the project records.

Mr. Pete Siegenthaler, SFOBB Construction Manager, Toll Bridge Construction, provided District Prior Approval for this change order on October 16, 2003.

Design concurrence was obtained from Hasan El-Natur, Senior Bridge Engineer on September 30, 2003.

This is a minor change order and does not require prior approval from FHWA.

Concurrence from Maintenance is not required because this change does not affect maintenance facilities or operations.

No adjustment of contract time is warranted, as this change does not affect the controlling operation.

CONCURRED BY:		
Construction Engineer: Douglas Coe		Date 2-24-06
Bridge Engineer:		Date 2-24-06
FHWA Representative:		Date
Project Engineer:		Date
Other (specify): Hasan El-Natur, Senior Bridge Engineer		Date 9/30/2003
		Date
		Date
District Prior Approval By:		Date
HQ (Issue Approve) By:		Date
Resident Engineer's Signature:		Date 2-24-06

ESTIMATE OF COST	THIS REQUEST	TOTAL TO DATE
ITEMS	$0.00	$0.00
FORCE ACCOUNT	$0.00	$0.00
AGREED PRICE	$0.00	$0.00
ADJUSTMENT		
TOTAL		

FEDERAL PARTICIPATION

☑ PARTICIPATING ☐ PARTICIPATING IN PART ☐ NONE
☐ NON-PARTICIPATING (MAINTENANCE) ☐ NON-PARTICIPATING

FEDERAL SEGREGATION (if more than one Funding Source or P.I.P. type)
☑ CCO FUNDED PER CONTRACT ☐ CCO FUNDED AS FOLLOWS

FEDERAL FUNDING SOURCE	PERCENT

CONTRACT CHANGE ORDER

Change Requested by: Engineer

CCO: 83	Suppl. No. 0	Contract No. 04 - 012024	Road 04-SF,Ala-80-13.9/14.3,0.0/1.6	FED. AID LOC.: ACIM-080-1(085)8N

To: **KIEWIT / FCI / MANSON a JV**

You are directed to make the following changes from the plans and specifications or do the following described work not included in the plans and specifications for this contract. ***NOTE: This change order is not effective until approved by the Engineer.***

Description of work to be done, estimate of quantities and prices to be paid. (Segregate between additional work at contract price, agreed price and force account.) Unless otherwise stated, rates for rental of equipment cover only such time as equipment is actually used and no allowance will be made for idle time. This last percentage shown is the net accumulated increase or decrease from the original quantity in the Engineer's Estimate.

Revise the Special Provisions Section 10-1.44 "STEEL STRUCTURE," sub-section "FABRICATION" paragraph "Punching" to include the following sentence: "Standard Specification Section 55-3.14A(1) "Punching" shall apply to Item 77-021685 "SERVICE PLATFORMS" only."

Adjustment of Compensation at Lump Sum:

For fabrication of the service platforms (total of 26) in accordance with the revised contract plan sheet numbers 103R5, 104R5, 105R9, 105AR4, 105BR4, 105C, 106R5, and 107R3 of 978 (sheets 2 through 9 of this change order) of the SFOBB East Span Skyway, Bridge No. 34-0006L/R.

For this work, the Contractor shall be paid an agreed Lump Sum amount of $1,055,531.00. This amount includes compensation for all costs, including markups, all direct and indirect costs, and all overhead costs to fabricate the service platforms as shown on the revised contract plan sheets.

Adjustment of Compensation at Agreed Lump Sum $1,055,531.00

Estimated Cost: **Increase** ☑ **Decrease** ☐ **$1,055,531.00**

By reason of this order the time of completion will be adjusted as follows: Deferred

Submitted by

Signature	Resident Engineer: DOUG COE, Supervising Br. Eng.	Date 2-14-06

Approval Recommended by

Signature	Construction Engineer: PETER SIEGENTHALER	Date 2-14-06

Engineer Approval by

Signature	(Print name and title) PETER SIEGENTHALER - Chief	Date 2-14-06

We the undersigned contractor, have given careful consideration to the change proposed and agree, if this proposal is approved, that we will provide all equipment, furnish the materials, except as may otherwise be noted above, and perform all services necessary for the work above specified, and will accept as full payment therefor the prices shown above.

NOTE: If you, the contractor, do not sign acceptance of this order, your attention is directed to the requirements of the specifications as to proceeding with the ordered work and filing a written protest within the time therein specified.

Contractor Acceptance by

Signature	(Print name and title) Deputy Project Director	Date 2/27/06

STATE OF CALIFORNIA - DEPARTMENT OF TRANSPORTATION

CONTRACT CHANGE ORDER MEMORANDUM

TO: PETER SIEGENTHALER / PETER SIEGENTHALER	FILE: **E.A.** 04 - 012024
FROM: DOUG COE, Supervising Br. Eng.	**CO-RTE-PM** 04-SF,Ala-80-13.9/14.3,0.0/1.6
	FED. NO. ACIM-080-1(085)8N
CCO#: **83** SUPPLEMENT#: **0** Category Code: **CHPA**	CONTINGENCY BALANCE (incl. this change) **$51,982,731.31**
COST: **$1,055,531.00** INCREASE ☑ DECREASE ☐	HEADQUARTERS APPROVAL REQUIRED? ☑ YES ☐ NO
SUPPLEMENTAL FUNDS PROVIDED: **$0.00**	IS THIS REQUEST IN ACCORDANCE WITH ENVIRONMENTAL DOCUMENTS? ☑ YES ☐ NO
CCO DESCRIPTION: Service Platform Dimensions	**PROJECT DESCRIPTION:** REPLACE SFOBB EAST SPAN

LOCATION: IN SAN FRANCISCO AND ALAMEDA COUNTIES IN SAN FRANCISCO AND OAKLAND FROM 1.3 KM EAST OF THE YERBA BUENA ISL

THIS CHANGE ORDER PROVIDES FOR:

Fabrication of the service platforms (total of 26) in accordance with the revised contract plan sheet numbers 103R5, 104R5, 105R9, 105AR4, 105BR4, 105C, 106R5, and 107R3 of 978 (sheets 2 through 9 of this change order) for the SFOBB East Span Skyway, Bridge No. 34-0006L/R and revising the Special Provisions Section 10-1.44 "STEEL STRUCTURE," sub-section "FABRICATION" paragraph "Punching" to include the following sentence; "Standard Specification Section 55-3.14A(1) "Punching" shall apply to Item 77-021685 "SERVICE PLATFORMS" only."

This change order compensates the Contractor for design revisions needed to address constructability issues in the service platforms. These revisions include extending the service platform support beam dimension beyond the edge of deck to provide clearance for the equipment on the platforms, and changing the connection details for attaching the service platforms to the bridge superstructure. Due to delayed contract drawings, the Contractor submitted TIA No. 21, "Service Platform Redesign," dated August 1, 2005, and TIA No. 21 R1, "Service Platform Redesign (Revised), dated August 15, 2005, indicating an 86-day delay to the project schedule. Although no further revisions have been received, the December, 05, project schedule update shows a 145 day delay to the service platforms. The drawing delay was initiated by revisions that the Designer made to the contract plans. This change order will address drawing revisions, revisions to the Special Provisions, and fabrication changes only. A supplemental change order will address field assembly and installation, delay mitigation, and the Engineer ordered revised service platform mock-up.

Mountain States Steel, a supplier to the Contractor, was to fabricate bid item 72 "FURNISH STRUCTURAL STEEL (BRIDGE BIKE PATH)" and bid item 77 "SERVICE PLATFORMS". Design delays, to fabrication of the "BRIDGE BIKE PATH" conflicted with fabrication of the "SERVICE PLATFORMS". To mitigate schedule impacts the Contractor sought another supplier to fabricate the service platforms. Global Fabricators was contracted to fabricate and supply the service platforms. In order to expedite the fabrication process the Special Provisions are revised to allow for punching of the 19mm plate instead of drilling as allowed per the Standard Specifications. The Design Engineer concurs with this change in the Special Provisions as indicated by the approval of the working drawings.

The State and the Contractor have agreed to a fabrication cost for the revised Service Platforms of $1,576,444.00 which includes bid item 77 "Service Platforms" bid time anticipated fabrication cost of $520,913.00 leaving a net additional fabrication cost of $1,055,531.00. The remaining installation amount of $129,087.00 included in the total amount of bid item 77 ($650,000.00 - $520,913.00) will be credited to the force account installation costs provided for in supplement 1 of this change order.

The method of payment for the increased fabrication costs will be Adjustment of Compensation at Agreed Lump Sum for the amount of $1,055,531.00. This amount includes compensation for all costs, including markups, all direct and indirect costs, and all overhead costs linked to the fabrication process. A force account analysis is on file in the project records.

Mr. Jon Tapping, Acting SFOBB Toll Bridge Program Manager, provided concurrence on February 14, 2006. A copy of the concurrence provided by Mr. Tapping is attached.

Mr. Pete Siegenthaler, SFOBB Toll Bridge Construction Manager, concurs with this change. A copy of the concurrence signed by Mr. Siegenthaler is attached.

Prior Approval was obtained from Ms. Nancy Bobb, FHWA Bay Bridge Project Manager, via electronic message on September 30, 2005. A printed copy of the prior approval provided by Ms. Bobb is attached.

Design concurrence is provided by Mr. Muthanna S. Omran on September 29, 2005, as indicated by the signature on the revised contract plan sheets.

Maintenance concurrence was obtained from Mr. Kenneth Brown on February 14, 2006. Verbal concurrence provided on this day to be followed with E-mail concurrence.

Authorization to proceed with this change order was issued by Headquarters on October 6, 2005.

Any time adjustment warranted for this change will be addressed in a supplement change order.

RECEIVED
050637 MAR 27 98

CONCURRED BY:		
Construction Engineer:	Peter Siegenthaler	Date 2-14-06
Bridge Engineer:	Douglas Coe	Date 2-14-06
FHWA Representative:	Nancy Bobb	Date 10/3/2005
Project Engineer:	Peter Siegenthaler	Date
Other (specify): Jon Tapping, Acting PM		Date
TBPOC		Date
		Date
District Prior Approval By:		Date
HQ (Issue Approve) By:		Date
Resident Engineer's Signature:		Date 2-14-06

ESTIMATE OF COST

	THIS REQUEST	TOTAL TO DATE
ITEMS	$0.00	$0.00
FORCE ACCOUNT	$0.00	$1,000,000.00
AGREED PRICE	$0.00	$0.00
ADJUSTMENT	$1,055,531.00	$1,055,531.00
TOTAL	$1,055,531.00	$2,055,531.00

FEDERAL PARTICIPATION

☑ PARTICIPATING ☐ PARTICIPATING IN PART ☐ NONE
☐ NON-PARTICIPATING (MAINTENANCE) ☐ NON-PARTICIPATING

FEDERAL SEGREGATION (if more than one Funding Source or P.I.P. type)
☑ CCO FUNDED PER CONTRACT ☐ CCO FUNDED AS FOLLOWS

FEDERAL FUNDING SOURCE	PERCENT

CONTRACT CHANGE ORDER

Change Requested by: Engineer

CCO: 83	Suppl. No. 1	Contract No. 04 - 012024	Road 04-SF,Ala-80-13.9/14.3,0.0/1.6	FED. AID LOC.: ACIM-080-1(085)8N

To: **KIEWIT / FCI / MANSON a JV**

You are directed to make the following changes from the plans and specifications or do the following described work not included in the plans and specifications for this contract. ***NOTE: This change order is not effective until approved by the Engineer.***

Description of work to be done, estimate of quantities and prices to be paid. (Segregate between additional work at contract price, agreed price and force account.) Unless otherwise stated, rates for rental of equipment cover only such time as equipment is actually used and no allowance will be made for idle time. This last percentage shown is the net accumulated increase or decrease from the original quantity in the Engineer's Estimate.

Extra Work at Force Account:

For field assembly and installation of 26 revised service platforms as provided for in CCO No. 83 Supplement 0, expediting the installation of the revised service platforms to prevent project delays as directed by the Engineer, fabricating and installing a mock-up of the revised service platform at Pier E13E as directed by the Engineer.

Reimbursement will be Extra Work at Force Account as specified in Section 5-1.21, "Force Account Payment" of the Special Provisions.

The Contractor will credit $4,964.88 to the force account installation cost of each platform, in order to compensate for the installation amount included in Bid Item No. 77 "Service Platforms". The total credit shall be (26 x $4,964.88) $129,087.00.

Estimated cost of Extra Work at Force Account $500,000.00

Estimated Cost: **Increase** ☑ **Decrease** ☐ **$500,000.00**

By reason of this order the time of completion will be adjusted as follows: Deferred

Submitted by

Signature	Resident Engineer: DOUG COE, Supervising Br. Eng.	Date 4-5-06

Approval Recommended by

Signature	Construction Engineer: PETER SIEGENTHALER	Date 4-11-06

Engineer Approval by

Signature	(Print name and title) PETER SIEGENTHALER - Chief	Date

We the undersigned contractor, have given careful consideration to the change proposed and agree, if this proposal is approved, that we will provide all equipment, furnish the materials, except as may otherwise be noted above, and perform all services necessary for the work above specified, and will accept as full payment therefor the prices shown above.

NOTE: If you, the contractor, do not sign acceptance of this order, your attention is directed to the requirements of the specifications as to proceeding with the ordered work and filing a written protest within the time therein specified.

Contractor Acceptance by

Signature	(Print name and title) Lee Zink Project Director	Date 4-20-06

STATE OF CALIFORNIA - DEPARTMENT OF TRANSPORTATION

CONTRACT CHANGE ORDER MEMORANDUM

TO: PETER SIEGENTHALER / PETER SIEGENTHALER	FILE: **E.A.** 04 - 012024
FROM: DOUG COE, Supervising Br. Eng.	**CO-RTE-PM** 04-SF,Ala-80-13.9/14.3,0.0/1.6
	FED. NO. ACIM-080-1(085)8N
CCO#: **83** SUPPLEMENT#: **1** Category Code: **CHPA**	CONTINGENCY BALANCE (incl. this change) **$27,724,295.90**
COST: **$500,000.00** INCREASE ☑ DECREASE ☐	HEADQUARTERS APPROVAL REQUIRED? ☑ YES ☐ NO
SUPPLEMENTAL FUNDS PROVIDED: **$0.00**	IS THIS REQUEST IN ACCORDANCE WITH ENVIRONMENTAL DOCUMENTS? ☑ YES ☐ NO
CCO DESCRIPTION: Service Platform Installation	**PROJECT DESCRIPTION:** REPLACE SFOBB EAST SPAN

LOCATION: IN SAN FRANCISCO AND ALAMEDA COUNTIES IN SAN FRANCISCO AND OAKLAND FROM 1.3 KM EAST OF THE YERBA BUENA ISL

THIS CHANGE ORDER PROVIDES FOR:

the increased cost of field assembling and installing the revised service platforms as provided in CCO 83, expediting the installation, and constructing a mock-up of a revised service platform as directed by the Engineer.

CCO 83 revised the service platforms. These revisions delayed the start of fabrication and impacted the originally anticipated installation method of the service platforms. The contractor originally planned to deliver and install the platforms as one piece. The platforms will now need to be shipped in multiple pieces due to the increase in dimension. This requires additional handling and field assembling. Also, the delay prohibits the installation to occur during construction of the pier tables, as planned. As a result, the contractor will need to remobilize to install the service platforms.

The delays to the start of fabrication and the unknown duration to install the revised service platforms could impact the critical path schedule. To avoid impacting the schedule, the Contractor will be required to expedite the installation of the service platforms if necessary.

To minimize complications during the installation of the revised platforms, the contractor will be required to fabricate and install a mock-up of the revised service platform for Pier E13E.

Bid Item No. 77 "Service Platforms" comprised of 26 platforms at $25,000.00 for a total amount of $650,000.00, includes $520,913.00 for fabrication of the platforms and $129,087.00 for installation. In order to compensate the State for the installation costs included in the bid item, the Contractor, will be required to credit the, at force account computed, installation costs by $4,964.88 per platform installed. Total credit will equal $129,087.00 (26 x $4,964.88).

The method of payment for the installation cost, expediting the installation, and the cost of the mock-up will be Extra Work at Force Account. The anticipated cost for this work including the credit is estimated at $ 500,000.00. A force account analysis is on file in the project records.

Mr. Jon Tapping, Acting SFOBB Toll Bridge Project Manager, provided concurrence on February 14, 2006. A copy of the concurrence provided by Mr. Tapping is attached.

Mr. Pete Siegenthaler, SFOBB Toll Bridge Construction Manager, concurs with this change. A copy of the concurrence signed by Mr. Siegenthaler is attached.

Prior Approval was obtained from Ms. Nancy Bobb, FHWA Bay Bridge Project Manager, via electronic message on March 1 , 2006. A printed copy of the prior approval provided by Ms. Bobb is attached.

Concurrence from Design is not required because this change does not affect any design issues.

Concurrence from Maintenance is not required because this change does not affect maintenance facilities or operations.

Authorization to proceed with this change order was issued by the Division of Construction on February 14, 2006.

Any time adjustment is deferred, as this change could affect the controlling operation.

CONCURRED BY:		
Construction Engineer:	Peter Siegenthaler	Date
Bridge Engineer:	Douglas Coe	Date 4-5-06
FHWA Representative:	Nancy Bobb	Date 3/1/2006
Project Engineer:		Date
Other (specify): Jon Tapping Acting PM		Date2/14/2006
TBPOC		Date2/23/2006
		Date
District Prior Approval By:		Date
HQ (Issue Approve) By:	Ken Darby	Date2/14/2006
Resident Engineer's Signature:		Date 4-5-06

ESTIMATE OF COST

	THIS REQUEST	TOTAL TO DATE
ITEMS	$0.00	$0.00
FORCE ACCOUNT	$500,000.00	$500,000.00
AGREED PRICE	$0.00	$0.00
ADJUSTMENT	$0.00	$1,055,531.00
TOTAL	$500,000.00	$1,555,531.00

FEDERAL PARTICIPATION

☑ PARTICIPATING ☐ PARTICIPATING IN PART ☐ NONE
☐ NON-PARTICIPATING (MAINTENANCE) ☐ NON-PARTICIPATING

FEDERAL SEGREGATION (if more than one Funding Source or P.I.P. type)
☑ CCO FUNDED PER CONTRACT ☐ CCO FUNDED AS FOLLOWS

FEDERAL FUNDING SOURCE	PERCENT

CONTRACT CHANGE ORDER

Change Requested by: Engineer

CCO: 83	Suppl. No. 2	Contract No. 04 - 012024	Road 04-SF,Ala-80-13.9/14.3,0.0/1.6	FED. AID LOC.: ACIM-080-1(085)8N

To: **KIEWIT / FCI / MANSON a JV**

You are directed to make the following changes from the plans and specifications or do the following described work not included in the plans and specifications for this contract. ***NOTE: This change order is not effective until approved by the Engineer.***

Description of work to be done, estimate of quantities and prices to be paid. (Segregate between additional work at contract price, agreed price and force account.) Unless otherwise stated, rates for rental of equipment cover only such time as equipment is actually used and no allowance will be made for idle time. This last percentage shown is the net accumulated increase or decrease from the original

Extra Work at Force Account:

Provide additional funds for the field assembly and installation of the 26 revised service platforms, for the SFOBB East Span Skyway, Bridge Nos. 34-0006L/R.

Payment for this work shall be made in accordance with Section 5-1.21, "Force Account Payment," of the Special Provisions, and Section 9-1.03, "Force Account Payment," of the Standard Specifications.

Estimated cost of Extra Work at Force Account $500,000.00

Estimated Cost: Increase ☑ Decrease ☐ **$500,000.00**

By reason of this order the time of completion will be adjusted as follows: 0 days

Submitted by

Signature	Resident Engineer DOUG COE, Supervising Br. Eng.	Date 7-24-07

Approval Recommended by

Signature	Construction Manager PETER SIEGENTHALER	Date 10/31/07

Engineer Approval by

Signature	Construction Manager PETER SIEGENTHALER	Date 11/14/07

We the undersigned contractor, have given careful consideration to the change proposed and agree, if this proposal is approved, that we will provide all equipment, furnish the materials, except as may otherwise be noted above, and perform all services necessary for the work above specified, and will accept as full payment therefor the prices shown above.

NOTE: If you, the contractor, do not sign acceptance of this order, your attention is directed to the requirements of the specifications as to proceeding with the ordered work and filing a written protest within the time therein specified.

Contractor Acceptance by

Signature	(Print name and title) Lee Zink Proj. Director	Date 11/20/07

STATE OF CALIFORNIA - DEPARTMENT OF TRANSPORTATION

CONTRACT CHANGE ORDER MEMORANDUM

TO: PETER SIEGENTHALER / DOUG COE, Supervising Br. Eng.	FILE: **E.A.** 04 - 012024
FROM: DOUG COE, Supervising Br. Eng.	**CO-RTE-PM** 04-SF,Ala-80-13.9/14.3,0.0/1.6
	FED. NO. ACIM-080-1(085)8N
CCO# **83** SUPPLEMENT#: **2** Category Cod **CHPA**	CONTINGENCY BALANCE (incl. this change **$4,073,112.11**
COST: **$500,000.00** INCREASE ☑ DECREASE ☐	HEADQUARTERS APPROVAL REQUIRED? ☑ YES ☐ NO
SUPPLEMENTAL FUNDS PROVIDED: **$0.00**	IS THIS REQUEST IN ACCORDANCE WITH ENVIRONMENTAL DOCUMENTS? ☑ YES ☐ NO
CCO DESCRIPTION: Added Funds for Service Platform Install	**PROJECT DESCRIPTION:** REPLACE SFOBB EAST SPAN

Original Contract Time:	Time Adj. This Change:	Previously Approved CCO Time Adjustments:	Percentage Time Adjusted: (including this change)	Total # of Unreconciled Deferred Time CCO(s): (including this change)
1000 Day(s)	**0** Day(s)	**424** Day(s)	**42** %	**0**

THIS CHANGE ORDER PROVIDES FOR:

additional funds for the field assembly and installation of the 26 revised service platforms, for the SFOBB East Span Skyway, Bridge Nos. 34-0006L/R.

This change order is needed to provide additional funds to complete the field assembly and installation of the 26 revised service platforms as provided for in CCO No. 83 Supplement 0. TBPOC, FHWA, and HQ approvals were originally obtained for the amount $870,913.00. In order to control costs, Contract Change Order No. 83 Supplement 1 was issued for only $370,913.00 on November 3, 2006. Since the submitted and approved Extra Work Bills (EWB) have exceeded the amount authorized in Contract Change Order 83 Supplement 1, and the work is still ongoing, this contract change order will be issued for the remainder of the previously approved amount for this work ($870,913.00 - $ 370,913.00 = $500,000.00).

This work will be paid for as Extra Work at Force Account for an estimated cost of $500,000.00, which can be financed from the contingency fund. A force account analysis is on file in the project records.

Mr. Pete Siegenthaler, SFOBB Construction Manager, Toll Bridge Construction, concurs with this change. A copy of the concurrence signed by Mr. Siegenthaler is attached.

Mr. Jon Tapping, Acting SFOBB Toll Bridge Project Manager, provided concurrence on February 14, 2006. A copy of the concurrence provided by Mr. Tapping is attached.

Prior Approval was obtained from Ms. Nancy Bobb, FHWA Bay Bridge Project Manager, via electronic message on March 1 , 2006. A printed copy of the prior approval provided by Ms. Bobb is attached.

Concurrence from Design is not required because this change does not affect any design issues.

Concurrence from Maintenance is not required because this change does not affect maintenance facilities or operations.

Authorization to proceed with this change order was issued by the Division of Construction on February 14, 2006.

No adjustment of contract time is warranted, as this change does not affect the controlling operation.

RECEIVED
066122 DEC 11 6

ADA Notice: For individuals with sensory disabilities, this document is available in alternate formats. For information call: (916) 654-6410 or TDD (916) 654-3880 or write Records and Forms Management, 1120 N Street, MS-89, Sacramento, CA 95814.

CONCURRED BY:			
Construction Engineer:	Peter Siegenthaler PES	Date	9-24-07
Bridge Engineer:	Douglas Coe DBC	Date	9-24-07
Project Engineer:		Date	
Project Manager:	Jon Tapping, Acting PM	Date	2/14/06
FHWA Rep.:	Nancy Bobb	Date	3/1/06
Environmental:		Date	
Other (specify):	TBPOC	Date	2/23/06
Other (specify):		Date	
District Prior Approval By:	Peter Siegenthaler	Date	3/13/06
HQ (Issue-Approve) By:	Ken Darby	Date	2/14/06
Resident Engineer's Signature:		Date	9-24-07

ESTIMATE OF COST

	THIS REQUEST	TOTAL TO DATE
ITEMS	$0.00	$0.00
FORCE ACCOUNT	$500,000.00	$1,000,000.00
AGREED PRICE	$0.00	$0.00
ADJUSTMENT	$0.00	$926,444.00
TOTAL	$500,000.00	$1,926,444.00

FEDERAL PARTICIPATION

☑ PARTICIPATING ☐ PARTICIPATING IN PART ☐ NONE
☐ NON-PARTICIPATING (MAINTENANCE) ☐ NON-PARTICIPATING

FEDERAL SEGREGATION (if more than one Funding Source or P.I.P. type)
☑ CCO FUNDED PER CONTRACT ☐ CCO FUNDED AS FOLLOWS

FEDERAL FUNDING SOURCE	PERCENT

ADA Notice: For individuals with sensory disabilities, this document is available in alternate formats. For information call: (916) 654-6410 or TDD (916) 654-3880 or write Records and Forms Management, 1120 N Street, MS-89, Sacramento, CA 95814.

CONTRACT CHANGE ORDER

Change Requested by: Engineer

CCO: 84	Suppl. No. 0	Contract No. 04 - 012024	Road 04-SF,Ala-80-13.9/14.3,0.0/1.6	FED. AID LOC.: ACIM-080-1(085)8N

Description of work to be done, estimate of quantities and prices to be paid. (Segregate between additional work at contract price, agreed price and force account.) Unless otherwise stated, rates for rental of equipment cover only such time as equipment is actually used and no allowance will be made for idle time. This last percentage shown is the net accumulated increase or decrease from the original quantity in the Engineer's Estimate.

Adjustment of Compensation at Lump Sum:

Eliminate double end stressing at locations shown on the revised contract plans and utilize single end stressing for all cantilever tendons on the East Span Skyway, Bridge Nos. 340006L/R.

The revised contract plans reflecting this change are 566R2, 567R2, 568R2, 569R2, 570R2, 571R2, 572R2, 573R2, 574R2, 575R2, 576R2, 577R3, 578R2, 579R2, 581R2, 582R2, 583R2, 584R2, 585R2, 586R2, 587R2, 588R2, 589R2, 590R2, 591R2, 592R3, 593R2, and 594R2 of 978 (sheets 2 through 29 of this change order).

For this work, there shall be no cost or credit to the State by reason of this change.

Adjustment of Compensation at Lump Sum $0.00

Estimated Cost: Increase ☐ Decrease ☐ $0.00

By reason of this order the time of completion will be adjusted as follows: 0 days

Submitted by

Signature	Resident Engineer: DOUG COE, Supervising Br. Eng.	Date 2-11-05

Approval Recommended by

Signature	Construction Engineer: DOUG COE, Supervising Br. Eng.	Date 2-11-05

Engineer Approval by

Signature	(Print name and title) PETER SIEGENTHALER - Chief	Date

We the undersigned contractor, have given careful consideration to the change proposed and agree, if this proposal is approved, that we will provide all equipment, furnish the materials, except as may otherwise be noted above, and perform all services necessary for the work above specified, and will accept as full payment therefor the prices shown above.

NOTE: If you, the contractor, do not sign acceptance of this order, your attention is directed to the requirements of the specifications as to proceeding with the ordered work and filing a written protest within the time therein Specified.

Contractor Acceptance by

Signature	(Print name and title) Chris Villa, Deputy Project Director	Date 3-2-05

STATE OF CALIFORNIA - DEPARTMENT OF TRANSPORTATION

CONTRACT CHANGE ORDER MEMORANDUM

DATE: 2/10/2005 Page 1 of 1

TO: PETER SIEGENTHALER / DOUG COE, Supervising Br Eng

FROM: DOUG COE, Supervising Br. Eng.

FILE. **E.A.** 04 - 012024
CO-RTE-PM 04-SF,Ala-80-13.9/14.3,0.0/1.6
FED. NO. ACIM-080-1(085)8N

CCO#: **84** | SUPPLEMENT#: **0** Category Code: **CHPT**

CONTINGENCY BALANCE (incl. this change) **$61,497,778.93**

COST: $0.00 INCREASE ☐ DECREASE ☐

HEADQUARTERS APPROVAL REQUIRED? ☐ YES ☐ NO

SUPPLEMENTAL FUNDS PROVIDED: $0.00

IS THIS REQUEST IN ACCORDANCE WITH ENVIRONMENTAL DOCUMENTS? ☑ YES ☐ NO

CCO DESCRIPTION:
Cantilever Tendon S/E Stress

PROJECT DESCRIPTION:
REPLACE SFOBB EAST SPAN

LOCATION: IN SAN FRANCISCO AND ALAMEDA COUNTIES IN SAN FRANCISCO AND OAKLAND FROM 1.3 KM EAST OF THE YERBA BUENA ISL

THIS CHANGE ORDER PROVIDES FOR:
eliminating the double end stressing at locations shown on the revised contract plans and utilizing single end stressing for all cantilever tendons.

The revised contract plan sheets reflecting this change are 566R2, 567R2, 568R2, 569R2, 570R2, 571R2, 572R2, 573R2, 574R2, 575R2, 576R2, 577R3, 578R2, 579R2, 581R2, 582R2, 583R2, 584R2, 585R2, 586R2, 587R2, 588R2, 589R2, 590R2, 591R2, 592R3, 593R2, and 594R2 of 978.

This change order is needed because the original contract plans show single end stressing for the short cantilever tendons and double end stressing for the longer cantilever tendons. The double stressed tendons have short elongations from the second end resulting in a potential regrip of the strand by the wedges. To eliminate the double biting (regrip) of the tendons, single end stressing of all cantilever tendons is recommended. This allows the stressing tendons from alternate ends to match the force diagrams on the contract plans.

The Engineer has performed an analysis and has determined that this change results in a zero cost adjustment. The contractor is in agreement with this determination. A detailed analysis is on file in the project records.

Prior Approval was obtained from Mr. Pete Siegenthaler, Principal Bridge Engineer for the SFOBB East Span Replacement, on September 5, 2003. A copy of the prior approval signed by Mr. Siegenthaler is attached.

Hasan El-Natur, Design Oversight Engineer, provided design concurrence on August 7, 2003, with his signature on the revised contract plan sheets.

Concurrence from Maintenance is not required as this change does not use maintenance funds or affect maintenance facilities or operations.

No time adjustment is warranted for this change as it does not affect the controlling operation of work.

CONCURRED BY:

Construction Engineer	Douglas Coe	Date 2-11-05
Bridge Engineer	Douglas Coe	Date 2-11-05
FHWA Representative		Date
Project Engineer	Hasan El-Natur	Date 8/7/2003
Other (specify):		Date
		Date
		Date
District Prior Approval By:	Pete Siegenthaler	Date 9/5/2003
HQ (Issue Approve) By:		Date
Resident Engineer's Signature:		Date 2-11-05

ESTIMATE OF COST

	THIS REQUEST	TOTAL TO DATE
ITEMS	$0.00	$0 00
FORCE ACCOUNT	$0.00	$0.00
AGREED PRICE	$0.00	$0.00
ADJUSTMENT	$0.00	$0.00
TOTAL	$0.00	$0.00

FEDERAL PARTICIPATION

☑ PARTICIPATING ☐ PARTICIPATING IN PART ☐ NONE
☐ NON-PARTICIPATING (MAINTENANCE) ☐ NON-PARTICIPATING

FEDERAL SEGREGATION (if [illegible] Source or P I P type)
☑ CCO FUNDED PER CONTRACT ☐ CCO FUNDED AS FOLLOWS

FEDERAL FUNDING S[illegible]NT

RECEIVED 035253 MAR 15 [illegible]

CONTRACT CHANGE ORDER

Change Requested by: Engineer

CCO: 85	Suppl. No. 0	Contract No. 04 - 012024	Road 04-SF,Ala-80-13.9/14.3,0.0/1.6	FED. AID LOC.: ACIM-080-1(085)8N

To: **KIEWIT / FCI / MANSON a JV**

You are directed to make the following changes from the plans and specifications or do the following described work not included in the plans and specifications for this contract. ***NOTE: This change order is not effective until approved by the Engineer.***

Description of work to be done, estimate of quantities and prices to be paid. (Segregate between additional work at contract price, agreed price and force account.) Unless otherwise stated, rates for rental of equipment cover only such time as equipment is actually used and no allowance will be made for idle time. This last percentage shown is the net accumulated increase or decrease from the original quantity in the Engineer's Estimate.

Adjustment of Compensation at Lump Sum:

Revise the stressing end location for the external top span tendons in Spans E14E and E14W as shown on revised contract plan sheet numbers 605R2 and 619R2 of 978 (sheets 2 and 3 of this change order) for the SFOBB East Span Skyway, Bridge Numbers 34-0006L/R.

For this work, there shall be no cost or credit to the State by reason of this change.

Adjustment of Compensation at Lump Sum $0.00

Estimated Cost: **Increase** ☐ **Decrease** ☐ **$0.00**

By reason of this order the time of completion will be adjusted as follows: 0 days

Submitted by

Signature	Resident Engineer: DOUG COE, Supervising Br. Eng.	Date 6-8-05

Approval Recommended by

Signature	Construction Engineer: DOUG COE, Supervising Br. Eng.	Date 6-8-05

Engineer Approval by

Signature	(Print name and title) For PETER SIEGENTHALER - Chief	Date 8/12/05

We the undersigned contractor, have given careful consideration to the change proposed and agree, if this proposal is approved, that we will provide all equipment, furnish the materials, except as may otherwise be noted above, and perform all services necessary for the work above specified, and will accept as full payment therefor the prices shown above.

NOTE: If you, the contractor, do not sign acceptance of this order, your attention is directed to the requirements of the specifications as to proceeding with the ordered work and filing a written protest within the time therein specified.

Contractor Acceptance by

Signature	(Print name and title) Lee Zink Proj. Director	Date 8/9/05

STATE OF CALIFORNIA - DEPARTMENT OF TRANSPORTATION

CONTRACT CHANGE ORDER MEMORANDUM

DATE: 6/8/2005 Page 1 of 1

TO: PETER SIEGENTHALER / DOUG COE, Supervising Br. Eng.	FILE: **E.A.** 04 - 012024
FROM: DOUG COE, Supervising Br. Eng.	**CO-RTE-PM** 04-SF,Ala-80-13.9/14.3,0.0/1.6
	FED. NO. ACIM-080-1(085)8N
CCO#: **85** SUPPLEMENT#: **0** Category Code: **CHPJ**	CONTINGENCY BALANCE (incl. this change) **$59,078,872.64**
COST: **$0.00** INCREASE ☐ DECREASE ☐	HEADQUARTERS APPROVAL REQUIRED? ☐ YES ☑ NO
SUPPLEMENTAL FUNDS PROVIDED: **$0.00**	IS THIS REQUEST IN ACCORDANCE WITH ENVIRONMENTAL DOCUMENTS? ☑ YES ☐ NO
CCO DESCRIPTION: External Top Span Tendon	**PROJECT DESCRIPTION:** REPLACE SFOBB EAST SPAN

LOCATION: IN SAN FRANCISCO AND ALAMEDA COUNTIES IN SAN FRANCISCO AND OAKLAND FROM 1.3 KM EAST OF THE YERBA BUENA ISL

THIS CHANGE ORDER PROVIDES FOR:
revising the stressing end location for the external top span tendons in Spans E14E and E14W of the East Span Skyway Bridge as shown on revised contract plan sheet numbers 605R2 and 619R2 of 978.

The contract plans use the 'typical span' external top span tendon anchorage location in Spans E14E and E14W and show stressing of these tendons from the upstation (east) side of the closure. However, the external web depth progressively decreases east of the closure in Spans E14E and E14W and the flatter panel geometry causes the depth at the wingtip to be reduced. The reduced blister depth does not allow sufficient jack clearance when the tendon anchorage is at the 'typical span' external top span tendon location. To provide the required jacking clearance, it is necessary to stress the tendons from the opposite end.

The Engineer has performed an analysis and has determined that this change results in a zero cost adjustment. The contractor is in agreement with this determination. A detailed analysis is on file in the project records.

Prior Approval was obtained from Mr. David Salladay, District Representative for the SFOBB East Span Skyway Bridge Replacement, on September 17, 2004. A copy of the prior approval signed by Mr. Salladay is attached.

Hasan El-Natur, Design Oversight Engineer, provided design concurrence on April 22, 2004, with his signature on the revised contract plan sheets.

Concurrence from Maintenance is not required as this change does not use maintenance funds or affect maintenance facilities or operations.

No time adjustment is warranted for this change as it does not affect the controlling operation of work.

CONCURRED BY:

Construction Engineer:	Douglas Coe	Date 6-8-05
Bridge Engineer:	Douglas Coe	Date 6-8-05
FHWA Representative:		Date
Project Engineer:		Date
Other (specify): Hasan El-Natur		Date4/22/2004
		Date
		Date
District Prior Approval By:		Date
HQ (Issue Approve) By:		Date
Resident Engineer's Signature:		Date 6-8-05

ESTIMATE OF COST

	THIS REQUEST	TOTAL TO DATE
ITEMS	$0.00	$0.00
FORCE ACCOUNT	$0.00	$0.00
AGREED PRICE	$0.00	$0.00
ADJUSTMENT	$0.00	$0.00
TOTAL	$0.00	$0.00

FEDERAL PARTICIPATION

☑ PARTICIPATING ☐ PARTICIPATING IN PART ☐ NONE
☐ NON-PARTICIPATING (MAINTENANCE) ☐ NON-PARTICIPATING

FEDERAL SEGREGATION (if more than one Funding Source or P.I.P. type)
☑ CCO FUNDED PER CONTRACT ☐ CCO FUNDED AS FOLLOWS

FEDERAL FUNDING SOURCE PERCENT

RECEIVED
042020 AUG 16 13

CONTRACT CHANGE ORDER

Change Requested by: Engineer

CCO: 88	Suppl. No. 0	Contract No. 04 - 012024	Road 04-SF,Ala-80-13.9/14.3,0.0/1.6	FED. AID LOC.: ACIM-080-1(085)8N

To: **KIEWIT / FCI / MANSON a JV**

You are directed to make the following changes from the plans and specifications or do the following described work not included in the plans and specifications for this contract. ***NOTE: This change order is not effective until approved by the Engineer.***

Description of work to be done, estimate of quantities and prices to be paid. (Segregate between additional work at contract price, agreed price and force account.) Unless otherwise stated, rates for rental of equipment cover only such time as equipment is actually used and no allowance will be made for idle time. This last percentage shown is the net accumulated increase or decrease from the original

Adjustment of Compensation at Lump Sum:

Modify the Transition Span Structure to resolve conflicts between the reinforcing steel and post-tensioning bars, and incorporate design detailing changes in the structural steel work as shown on revised contract plan sheet numbers 712R3, 713R3, 714R2, 717R2, 718R3, 722R3, 723R3, 724R4, 725R4, 726R4, 727R1, and 728R2 of 978 (sheets 2 through 13 of this change order) for the SFOBB East Span Skyway, Bridge Nos. 34-0006L/R.

This change order compensates the Contractor for the additional work performed in the field as dictated by the above listed revised contract plan sheets. The costs to implement the changes to the steel transition span shown in the revised contract plans listed above will be compensated in a supplement change order.

Full compensation for all costs, including markups, all direct and indirect costs, all associated project impacts, all overhead expenses, and all risk associated with the field work is included in the lump sum payment of CCO No. 200 and no further payment will be made as a result of this CCO.

Estimated Cost: Increase ☐ Decrease ☐

By reason of this order the time of completion will be adjusted as follows: 0 days

Submitted by

Signature	Resident Engineer: DOUG COE, Supervising Br. Eng.	Date 8-24-06

Approval Recommended by

Signature	Construction Engineer: DOUG COE, Supervising Br. Eng.	Date 8-24-06

Engineer Approval by

Signature	(Print name and title) PETER SIEGENTHALER - Chief	Date

We the undersigned contractor, have given careful consideration to the change proposed and agree, if this proposal is approved, that we will provide all equipment, furnish the materials, except as may otherwise be noted above, and perform all services necessary for the work above specified, and will accept as full payment therefor the prices shown above.

NOTE: If you, the contractor, do not sign acceptance of this order, your attention is directed to the requirements of the specifications as to proceeding with the ordered work and filing a written protest within the time therein specified.

Contractor Acceptance by

Signature	(Print name and title) Lee Zink, Project Director	Date 9/5/06

STATE OF CALIFORNIA - DEPARTMENT OF TRANSPORTATION

CONTRACT CHANGE ORDER MEMORANDUM

TO: PETER SIEGENTHALER / DOUG COE, Supervising Br. Eng.	FILE: E.A. 04 - 012024
FROM: DOUG COE, Supervising Br. Eng.	CO-RTE-PM 04-SF,Ala-80-13.9/14.3,0.0/1.6 FED. NO. ACIM-080-1(085)8N
CCO# **88** SUPPLEMENT#: **0** Category Cod **CHPA**	CONTINGENCY BALANCE (incl. this change
COST: INCREASE ☐ DECREASE ☐	HEADQUARTERS APPROVAL REQUIRED? ☑ YES ☐ NO
SUPPLEMENTAL FUNDS PROVIDED: **$0.00**	IS THIS REQUEST IN ACCORDANCE WITH ENVIRONMENTAL DOCUMENTS? ☑ YES ☐ NO
CCO DESCRIPTION: Transition Span Closure Layouts	**PROJECT DESCRIPTION:** REPLACE SFOBB EAST SPAN

LOCATION: IN SAN FRANCISCO AND ALAMEDA COUNTIES IN SAN FRANCISCO AND OAKLAND FROM 1.3 KM EAST OF THE YERBA BUENA ISL

THIS CHANGE ORDER PROVIDES FOR:

modifications to the Transition Span as shown on revised contract plan sheet numbers 712R3, 713R3, 714R2, 717R2, 718R3, 722R3, 723R3, 724R4, 725R4, 726R4, 727R1, and 728R2 of 978 (sheets 2 through 13 of this change order).

This contract change order is needed to revise the details for the Transition Span structure to resolve conflicts between the reinforcing steel and post-tensioning bars, and to incorporate design detailing changes in the structural steel work. The changes can be summarized as follows:

1) Changes in the vertical end plate details due to the extended expansion joint blockout at Hinges AE and AW to suit the dimensions from the revised joint seal assemblies.

2) Design modifications to plate and stiffener sizes.

3) Design modifications increasing the number of studs in the wing plates.

4) Changes in the location of the PT bars in the bottom slab and use of staggered dead-end anchors to relieve congestion.

5) Changes to the thickened bottom slab of segment 5W to allow it to be cast at the erection site. This slab thickening is required to be cast after erection to accommodate the PT bars with dead-end anchors.

6) Epoxy coated stressed PT bars in the bottom slab replaced with PT bars installed in standard pipe and grouted with permanent grout caps after stressing.

7) The added requirement for permanent grout caps on wing panel PT bars.

8) Embedded dead-end anchors detailed on the bottom of vertical PT bars instead of pocket formers.

9) The bottom slab dowels from the Transition Span now use welded couplers. The designer also required the dowel bars from the transition span and segment 5W to be extended to provide the required lap.

10) Design changes in the length of the standard pipes for the Cantilever tendons and Future tendons to allow the necessary projection at the closure.

All of these changes were necessitated through Mission Control conflict resolutions.

This change order only covers those costs related to the field changes as shown in the revised contract plans listed above. The costs to implement the changes to the steel transition span shown in the revised contract plans listed above are to be compensated in a supplement change order.

The agreed compensation for this contract change order is included in the lump sum compensation portion of resolution CCO No. 200. For this work, the Contractor agrees to accept a lump sum amount of $211,016.00.

A detailed force account analysis prepared by the Engineer for the cost of this change order is on file in the project records.

Pete Siegenthaler, SFOBB Construction Manager, provided concurrence on October 8, 2003. A copy of the concurrence provided by Mr. Siegenthaler is attached.

Ken Terpstra, SFOBB Project Manager, provided concurrence on June 14, 2006. A copy of the concurrence provided by Mr. Terpstra is attached.

Design concurrence was provided by Hasan El-Natur on August 5, 2003, as indicated by his signature on the revised contract plan sheets.

FHWA prior approval was obtained from Ms. Nancy Bobb on January 30, 2006. A copy of the prior approval provided by Ms. Bobb is attached.

Concurrence from Maintenance is not required as this change order does not use maintenance funds or affect maintenance facilities or operation.

No adjustment of contract time is warranted, as this change does not affect the controlling operation.

CONCURRED BY:		
Construction Engineer:	Douglas Coe	Date 8-24-06
Bridge Engineer:	Douglas Coe	Date 8-24-06
FHWA Representative:	Nancy Bobb	Date1/30/2006
Project Engineer:	Hasan El-Natur	Date 8/5/2003
Other (specify): Ken Terpstra, SFOBB Project Manager		Date6/14/2006
		Date
		Date
District Prior Approval By:		Date
HQ (Issue Approve) By:		Date
Resident Engineer's Signature		Date 8-24-06

ESTIMATE OF COST

	THIS REQUEST	TOTAL TO DATE
ITEMS	$0.00	$0.00
FORCE ACCOUNT	$0.00	$0.00
AGREED PRICE	$0.00	$0.00
ADJUSTMENT		
TOTAL		

FEDERAL PARTICIPATION

☑ PARTICIPATING ☐ PARTICIPATING IN PART ☐ NONE
☐ NON-PARTICIPATING (MAINTENANCE) ☐ NON-PARTICIPATING

FEDERAL SEGREGATION (if more than one Funding Source or P.I.P. type)
☑ CCO FUNDED PER CONTRACT ☐ CCO FUNDED AS FOLLOWS

FEDERAL FUNDING SOURCE	PERCENT

CONTRACT CHANGE ORDER

Change Requested by: Engineer

CCO: 89	Suppl. No. 0	Contract No. 04 - 012024	Road 04-SF,Ala-80-13.9/14.3,0.0/1.6	FED. AID LOC.: ACIM-080-1(085)8N

To: **KIEWIT / FCI / MANSON a JV**

You are directed to make the following changes from the plans and specifications or do the following described work not included in the plans and specifications for this contract. ***NOTE: This change order is not effective until approved by the Engineer.***

Description of work to be done, estimate of quantities and prices to be paid. (Segregate between additional work at contract price, agreed price and force account.) Unless otherwise stated, rates for rental of equipment cover only such time as equipment is actually used and no allowance will be made for idle time. This last percentage shown is the net accumulated increase or decrease from the original quantity in the Engineer's Estimate.

Extra Work at Lump Sum:

Modify the girder shear key details at locations where single and double continuity tendons exit the precast segment bulkhead for the SFOBB East Span Skyway, Bridge Nos. 34-0006L/R, in accordance with revised contract plan sheet number 865R2 of 978 (sheet 2 of 2). In addition, perform field tests of the epoxy joints in accordance with the approved Segment Erect Epoxy Test Procedure dated August 9, 2004, prior to erecting the segments.

For this work, the Contractor will be paid an agreed lump sum amount of $89,997.00. This sum constitutes full compensation for all costs, including markups, all direct and indirect costs, all associated project impacts, all overhead expenses, and all risk associated with this work.

Cost of Extra Work at Lump Sum $89,997.00

Estimated Cost: Increase ☑ Decrease ☐ **$89,997.00**

By reason of this order the time of completion will be adjusted as follows: 0 days

Submitted by

Signature	Resident Engineer: DOUG COE, Supervising Br. Eng.	Date 8-23-05

Approval Recommended by

Signature	Construction Engineer: DOUG COE, Supervising Br. Eng.	Date 8-23-05

Engineer Approval by

Signature David Salladay	(Print name and title) for PETER SIEGENTHALER - Chief	Date 10-25-05

We the undersigned contractor, have given careful consideration to the change proposed and agree, if this proposal is approved, that we will provide all equipment, furnish the materials, except as may otherwise be noted above, and perform all services necessary for the work above specified, and will accept as full payment therefor the prices shown above.

NOTE: If you, the contractor, do not sign acceptance of this order, your attention is directed to the requirements of the specifications as to proceeding with the ordered work and filing a written protest within the time therein specified.

Contractor Acceptance by

Signature	(Print name and title) Lee Zink - Project Div Director	Date 10/2/05

STATE OF CALIFORNIA - DEPARTMENT OF TRANSPORTATION

CONTRACT CHANGE ORDER MEMORANDUM

TO: PETER SIEGENTHALER / DOUG COE, Supervising Br. Eng.	FILE: **E.A.** 04 - 012024
FROM: DOUG COE, Supervising Br. Eng.	**CO-RTE-PM** 04-SF,Ala-80-13.9/14.3,0.0/1.6
	FED. NO. ACIM-080-1(085)8N
CCO#: **89** SUPPLEMENT#: **0** Category Code: **CHPA**	CONTINGENCY BALANCE (incl. this change) **$57,653,000.67**
COST: **$89,997.00** INCREASE ☑ DECREASE ☐	HEADQUARTERS APPROVAL REQUIRED? ☐ YES ☑ NO
SUPPLEMENTAL FUNDS PROVIDED: **$0.00**	IS THIS REQUEST IN ACCORDANCE WITH ENVIRONMENTAL DOCUMENTS? ☑ YES ☐ NO
CCO DESCRIPTION: Shear Key Details	**PROJECT DESCRIPTION:** REPLACE SFOBB EAST SPAN

LOCATION: IN SAN FRANCISCO AND ALAMEDA COUNTIES IN SAN FRANCISCO AND OAKLAND FROM 1.3 KM EAST OF THE YERBA BUENA ISL

THIS CHANGE ORDER PROVIDES FOR:
providing shear key details where single and double continuity tendons exit the bulkhead.

The revised contract plan sheet reflecting this change is sheet number 865R2 of 978.

This change order is needed to the provide information necessary to construct the segment girder shear keys that was not provided on the original contract plan sheets, and to clarifiy the number of shear keys required at each segment joint. TYLin/Moffatt & Nichol, a Joint Venture, the Designer of Record, will review and approve the Contractor's detailed calculations verifying the number of shear keys required at each segment joint in accordance with the Contractor's erection manual once they have been submitted. In addition, the Engineer wants to ensure that the epoxy applied between matching segments has adequate strength prior to lifting the next segment. The extra work provided for in this change order includes:

1.) Constructing new shear key lengths and formwork modifications as a consequence of the revised shear key layout requirements shown on the revised contract plans.

2.) Field testing epoxy joints in accordance with the approved Segment Erect Epoxy Test Procedure dated August 9, 2004, prior to erecting the segment. As a consequence of this change order, the surface area of shear keys is reduced due to the prestressing ducts for the continuity tendons passing through the precast segment vertical stem walls. There are no provisions in the specifications that require the Contractor to verify the shear strength of the joint based on the number of shear keys and the epoxy compound. Also, revised contract drawing number 865R2 of 978 requires the Contractor to submit calculations based on the erection method to the Engineer for approval to field verify the calculated shear strength of the joint based on the results obtained from field testing the epoxy.

The additional epoxy testing equipment and supplies, and the additional labor to perform epoxy testing during the segment erection are included in this change order.

For this extra work, the Contractor will be paid an agreed lump sum amount of $89,997.00. This sum constitutes full compensation, including all markups. The method of payment will be Extra Work at Agreed Lump Sum. A force account cost analysis for this change is on file in the project records.

Prior Approval for this change order was obtained from Pete Siegenthaler, SFOBB Construction Manager, on September 9, 2003. A copy of the prior approval provided by Mr. Siegenthaler is attached.

Design concurrence was obtained from Hasan El-Natur on August 6, 2003, as indicated on the revised drawings.

Maintenance concurrence is not required because this work will not involve manitenance funds and does not affect maintenance facilities or operations .

Prior Approval from FHWA is not required as this is a minor change order and does not meet the requirements established by FHWA for prior approvals.

No time adjustment is warranted for this change as it does not affect the controlling operation.

CONCURRED BY:		
Construction Engineer:	Douglas Coe	Date 8-23-05
Bridge Engineer:	Douglas Coe	Date 8-23-05
FHWA Representative:		Date
Project Engineer:		Date
Other (specify): Hasan El-Natur		Date 8/6/2003
		Date
		Date
District Prior Approval By:	Pete Siegenthaler	Date 9/9/2003
HQ (Issue Approve) By:		Date
Resident Engineer's Signature:		Date 8-23-05

ESTIMATE OF COST

	THIS REQUEST	TOTAL TO DATE
ITEMS	$0.00	$0.00
FORCE ACCOUNT	$0.00	$0.00
AGREED PRICE	$89,997.00	$89,997.00
ADJUSTMENT	$0.00	$0.00
TOTAL	$89,997.00	$89,997.00

FEDERAL PARTICIPATION

☑ PARTICIPATING ☐ PARTICIPATING IN PART ☐ NONE
☐ NON-PARTICIPATING (MAINTENANCE) ☐ NON-PARTICIPATING

FEDERAL SEGREGATION (if more than one Funding Source or P.I.P. type)
☑ CCO FUNDED PER CONTRACT ☐ CCO FUNDED AS FOLLOWS

FEDERAL FUNDING SOURCE	PERCENT

CONTRACT CHANGE ORDER

Change Requested by: Engineer

CCO: 90	Suppl. No. 0	Contract No. 04 - 012024	Road 04-SF,Ala-80-13.9/14.3,0.0/1.6	FED. AID LOC.: ACIM-080-1(085)8N

To: **KIEWIT / FCI / MANSON a JV**

You are directed to make the following changes from the plans and specifications or do the following described work not included in the plans and specifications for this contract. ***NOTE: This change order is not effective until approved by the Engineer.***

Description of work to be done, estimate of quantities and prices to be paid. (Segregate between additional work at contract price, agreed price and force account.) Unless otherwise stated, rates for rental of equipment cover only such time as equipment is actually used and no allowance will be made for idle time. This last percentage shown is the net accumulated increase or decrease from the original quantity in the Engineer's Estimate.

Extra Work at Lump Sum:

Furnish and install the Bike Path for the SFOBB East Span Skyway, Bridge Nos. 34-0006L/R, as shown on revised contrac plan sheets 771R2, 772R1, 773R2, 774R2, 775R2, 776R1, 777R1, 778R1, 779R2, 780R1, 781R1, 782R1, 783R2, 784R2, 867R3, 868R3, 869R3, 870R5, 871R5, 872R4, 873R3, 874R4, 875R4, 875AR3, 893R3, and 895R2 of 978 (pages 3 through 28 of this change order).

This change order compensates the Contractor for additional costs incurred for work performed on the Bike Path prior to the State directed work suspension including, but not limited to:

1. The cost of raw material for Bid Item 72 that has been consumed and cannot be reused for the Bike Path fabrication per the revised contract plans.
2. A credit to the State for the resale value of the unusable material.
3. All interest accrued for Bid Item 72 which did not qualify for 'materials on hand' payment.
4. All labor and fabrication costs for partially fabricated material per the original Bike Path contract plan sheets that will be scrapped.
5. All additional work completed as directed by the State for partially fabricated material per previous revisions to the original Bike Path contract plan sheets that will be scrapped.
6. Redetailing of shop drawings per revised Bike Path contract plan sheets included in this change order required to complete Bike Path fabrication and installation.

Compensation for additional work required to fabricate and install the Bike Path as a result of the revised Bike Path contract plan sheets will be provided by a supplement to this change order.

For this change, the Contractor will receive an agreed Lump Sum of $565,291.00. This agreed lump sum constitutes full compensation, including all markups, for all direct and indirect costs, all associated project impacts, and all overhead costs.

Estimated cost of Extra Work at Agreed Lump Sum $565,291.00

CONTRACT CHANGE ORDER

Change Requested by: Engineer

CCO: 90	Suppl. No. 0	Contract No. 04 - 012024	Road 04-SF,Ala-80-13.9/14.3,0.0/1.6	FED. AID LOC.: ACIM-080-1(085)8N

Estimated Cost: Increase ☑ Decrease ☐ $565,291.00

By reason of this order the time of completion will be adjusted as follows: 0 days

Submitted by

Signature	Resident Engineer: COE D.	Date 10-12 04

Approval Recommended by

Signature	Construction Engineer: COE D.	Date 10-12 04

Engineer Approval by

Signature	(Print name and title) PETER SIEGENTHALER - Chief	Date

We the undersigned contractor, have given careful consideration to the change proposed and agree, if this proposal is approved, that we will provide all equipment, furnish the materials, except as may otherwise be noted above, and perform all services necessary for the work above specified, and will accept as full payment therefor the prices shown above.

NOTE: If you, the contractor, do not sign acceptance of this order, your attention is directed to the requirements of the specifications as to proceeding with the ordered work and filing a written protest within the time therein specified.

Contractor Acceptance by

Signature	(Print name and title) A.I. Skoro, Project Director	Date 10-20-04

STATE OF CALIFORNIA - DEPARTMENT OF TRANSPORTATION

CONTRACT CHANGE ORDER MEMORANDUM

DATE: 9/7/2005 Page 1 of 1

TO: PETER SIEGENTHALER / DOUG COE, Supervising Br. Eng.	FILE: E.A. 04 - 012024
FROM: DOUG COE, Supervising Br. Eng.	CO-RTE-PM 04-SF,Ala-80-13.9/14.3,0.0/1.6
	FED. NO. ACIM-080-1(085)8N
CCO#: 91 SUPPLEMENT#: 0 Category Code: CHPA	CONTINGENCY BALANCE (incl. this change) $58,342,565.65
COST: $50,000.00 INCREASE ☑ DECREASE ☐	HEADQUARTERS APPROVAL REQUIRED? ☐ YES ☑ NO
SUPPLEMENTAL FUNDS PROVIDED: $0.00	IS THIS REQUEST IN ACCORDANCE WITH ENVIRONMENTAL DOCUMENTS? ☑ YES ☐ NO
CCO DESCRIPTION: Vertical PT Bar Tolerance	**PROJECT DESCRIPTION:** REPLACE SFOBB EAST SPAN

LOCATION: IN SAN FRANCISCO AND ALAMEDA COUNTIES IN SAN FRANCISCO AND OAKLAND FROM 1.3 KM EAST OF THE YERBA BUENA ISL

THIS CHANGE ORDER PROVIDES FOR:

replacing 46 mm diameter high strength vertical PT bars with 65 mm diameter high-strength vertical PT bars in the hinge, minus-1 segments.

The revised drawings reflecting this change are contract plan sheet numbers 704R2, 792R3, 793R3, 814R3, 829R1, 836R3, and 837R3 of 978.

The double row of 46 mm diameter high-strength vertical PT bars will be replaced with a single row of 64 mm diameter high-strength bars to relieve congestion and resolve interferences in the web adjacent to the hinge segment.

For this work, the Contractor agrees to accept a lump sum amount of $50,000.00. The method of payment will be Adjustment of Compensation at Agreed Lump Sum. This additional project cost can be financed from the contingency funds provided for this contract. The Contractor submitted a detailed analysis supporting the cost for this change. The Engineer has verified that these costs are fair and reasonable for the work associated with this change, and has placed a copy of these costs in the project file.

Mr. Pete Siegenthaler, SFOBB Toll Bridge Construction Manager, concurs with this change.

Prior approval from FHWA is not required as this is a minor change.

Design concurrence is provided by Mr. Hasan El-Natur as is indicated by the signature on the revised contract plan sheets.

Concurrence from Maintenance is not required as this change order does not use maintenance funds or affect maintenance facilities or operations.

No time adjustment is warranted for this change as it does not affect the controlling operation.

CONCURRED BY:		
Construction Engineer:	Douglas Coe	Date 9-8-05
Bridge Engineer:	Douglas Coe	Date 9-8-05
FHWA Representative:		Date
Project Engineer:	Hasan El-Natur	Date7/24/2004
Other (specify):		Date
		Date
		Date
District Prior Approval By:	Pete Siegenthaler	Date9/24/2003
HQ (Issue Approve) By:		Date
Resident Engineer's Signature:		Date 9-8-05

ESTIMATE OF COST

	THIS REQUEST	TOTAL TO DATE
ITEMS	$0.00	$0.00
FORCE ACCOUNT	$0.00	$0.00
AGREED PRICE	$0.00	$0.00
ADJUSTMENT	$50,000.00	$50,000.00
TOTAL	$50,000.00	$50,000.00

FEDERAL PARTICIPATION

☑ PARTICIPATING ☐ PARTICIPATING IN PART ☐ NONE
☐ NON-PARTICIPATING (MAINTENANCE) ☐ NON-PARTICIPATING

FEDERAL SEGREGATION (if more than one Funding Source or P.I.P. type)
☑ CCO FUNDED PER CONTRACT ☐ CCO FUNDED AS FOLLOWS

FEDERAL FUNDING SOURCE	PERCENT

CONTRACT CHANGE ORDER

Change Requested by: Engineer

CCO: 90	Suppl. No. 1	Contract No. 04 - 012024	Road 04-SF,Ala-80-13.9/14.3.0.0/1.6	FED. AID LOC.: ACIM-080-1(085)8N

To: KIEWIT / FCI / MANSON a JV

You are directed to make the following changes from the plans and specifications or do the following described work not included in the plans and specifications for this contract. ***NOTE: This change order is not effective until approved by the Engineer.***

Descrrption of work to be done, estimate of quantities and prices to be paid. (Segregate between additional work at contract price, agreed price and force account.) Unless otherwise stated, rates for rental of equipment cover only such time as equipment is actually used and no allowance will be made for idle time. This last percentage shown is the net accumulated increase or decrease from the original quantity in the Engineer's Estimate.

Extra Work at Lump Sum:

Provide additional labor and material to fabricate the Bike Path (Bid Item No. 72) in accordance with revised sheets 3 through 28 of Contract Change Order No. 90, "Bike Path Tolerance," executed in November 2004, for the SFOBB East Span Skyway, Bridge Nos. 34-0006L/R.

This supplement includes costs not covered in Contract Change Order No. 90 that are associated with the additional work required to fabricate the Bike Path in accordance with the revised contract drawings. These costs include:

1. Increased labor and material costs to fabricate the Bike Path (Bid Item No. 72) due to the suspension of work on the Bike Path ordered by the Engineer as a result of design changes requiring revisions to the contract plan sheets that occurred after the material was fabricated per the original design details;

2. Increased labor cost necessary to fabricate the special box panels to match the actual measured field dimensions;

3. The increased freight cost to deliver the fabricated Bike Path components due to the delay in completing the fabrication of the Bike Path as a result of revisions to the contract plan sheets and the suspension of work on the Bike Path ordered by the Engineer.

For the work of this change order, the Contractor shall receive an agreed lump sum amount of $1,670,167.00. This agreed lump sum constitutes full compensation, including all markups, for all direct and indirect costs, all associated impact costs including delayed material procurement, fabrication, and delivery to the job site, and all overhead costs.

Consideration of additional compensation, related impacts, and time adjustment if any, for work required to set up and initiate an extra bay to prevent future delay impacts to the fabrication of the Bike Path, shall be deferred and addressed in a supplement to Change Order No. 90.

Cost of Extra Work at Agreed Lump Sum ..... $1,670,167.00.

CONTRACT CHANGE ORDER

Change Requested by: Engineer

CCO: 90	Suppl. No. 1	Contract No. 04 - 012024	Road 04-SF,Ala-80-13.9/14.3,0.0/1.6	FED. AID LOC.: ACIM-080-1(085)8N

Estimated Cost: **Increase** ☑ **Decrease** ☐ **$1,670,167.00**

By reason of this order the time of completion will be adjusted as follows: Deferred

Submitted by

Signature	Resident Engineer: DOUG COE, Supervising Br. Eng.	Date 3-17-05

Approval Recommended by

Signature	Construction Engineer: DOUG COE, Supervising Br. Eng.	Date 3-17-05

Engineer Approval by

Signature	(Print name and title) PETER SIEGENTHALER - Chief	Date 3-18-05

We the undersigned contractor, have given careful consideration to the change proposed and agree, if this proposal is approved, that we will provide all equipment, furnish the materials, except as may otherwise be noted above, and perform all services necessary for the work above specified, and will accept as full payment therefor the prices shown above.

NOTE: If you, the contractor, do not sign acceptance of this order, your attention is directed to the requirements of the specifications as to proceeding with the ordered work and filing a written protest within the time therein specified.

Contractor Acceptance by

Signature	(Print name and title) DEPUTY PROJ. DIRECTOR	Date 3-18-05

STATE OF CALIFORNIA - DEPARTMENT OF TRANSPORTATION

CONTRACT CHANGE ORDER MEMORANDUM

TO: PETER SIEGENTHALER / DOUG COE, Supervising Br. Eng.	FILE: E.A. 04 - 012024
FROM: DOUG COE, Supervising Br. Eng.	CO-RTE-PM 04-SF,Ala-80-13.9/14.3,0.0/1.6
	FED. NO. ACIM-080-1(085)8N
CCO#: 90 SUPPLEMENT#: 1 Category Code: CHPT	CONTINGENCY BALANCE (incl. this change) $56,142,968.02
COST: $1,670,167.00 INCREASE ☑ DECREASE ☐	HEADQUARTERS APPROVAL REQUIRED? ☑ YES ☐ NO
SUPPLEMENTAL FUNDS PROVIDED: $0.00	IS THIS REQUEST IN ACCORDANCE WITH ENVIRONMENTAL DOCUMENTS? ☑ YES ☐ NO
CCO DESCRIPTION: Bike Path Tolerance	**PROJECT DESCRIPTION:** REPLACE SFOBB EAST SPAN

The work shall be performed in accordance with the revised contract plan sheets issued with Contract Change Order No. 90.

Contract Change Order No. 90 S0 provides for compensation to the Contractor for the additional costs incurred for work performed on the Bike Path in accordance with the original contract plan sheets prior to the State directed work suspension. These costs include, but are not limited to, the cost of raw materials for Bid Item No. 72 that has been consumed and cannot be reused for the Bike Path fabrication per the revised contract plans; all labor and fabrication costs for partially fabricated material per the original Bike Path contract plan sheets that will be scrapped; and redetailing shop drawings per the revised Bike Path contract plan sheets required to complete Bike Path fabrication and installation.

Contract Change Order No. 90 S1 provides for compensation to the Contractor for the increased labor, material, and freight costs that resulted as a consequence of the Engineer's suspension of the Bike Path fabrication, and also as a consequence of the impacts that resulted from revising the contract plan sheets and producing new shop drawings in accordance with the revised contract plans.

The Contractor began fabricating the Bike Path on June 20, 2003, based on the original contract plans. Subsequently, it was determined that the fabrication and construction tolerances were insufficient, and would not allow a proper fit with the bridge superstructure. Consequently, design revisions were made to the contract plans. The Engineer suspended Bike Path fabrication on December 11, 2003, and, in the same month, issued the revised contract drawings. The Contractor immediately began working on revised shop drawings based on the revised contract plans. On May 12, 2004, the Engineer approved the shop drawings for revised Bike Path, Frame 2, and removed the suspension of the Bike Path fabrication. Due to this delay, the Contractor's procurement of steel raw materials was delayed. During this delay, the cost of steel increased approximately eighty five (85) percent, and is a significant cause for the increase in cost to perform the work. The following are additional increased costs that resulted as consequence of the Engineer's suspension that are included in this change order to fabricate and deliver the Bike Path:

1. The increased material costs necessary to replace the material that was scrapped per Contract Change Order No. 90;
2. The increased material costs for the balance of materials to be utilized for the Bike Path;
3. The increased labor costs for work to be done fabricating the Bike Path;
4. The increased freight costs for delivery of fabricated Bike Path components;
5. The fabrication costs for Contract Change Order No. 90 drawing revisions;
6. The increased labor cost to fabricate the special box panels; and
7. The payment for all items submitted by the contractor that are now incorporated into the Contract Change Order No. 90 drawings.

For this change, the Contractor will receive an agreed lump sum of $1,670,167.00. This agreed lump sum constitutes full compensation including all markups, for all direct and indirect costs, all associated project impacts, and all overhead costs, Records and calculations used to determine the costs are on file in the project records.

Consideration of additional compensation, related impacts, and time adjustment if any, for work required to set up and initiate an extra bay to prevent future delay impacts to the fabrication of the Bike Path, shall be deferred and addressed in a supplement to Change Order No. 90.

Mr. Pete Siegenthaler, Principal Engineer, Toll Bridge, concurs with this change order.

FHWA Prior Approval was received on February 17, 2005, via email from Ms. Nancy Bobb, Bay Bridge Project Oversight Manager.

Ms. Janet Adams, SFOBB Toll Bridge Project Manager, concurred with this change order on March 15, 2005, via email.

Maintenance concurrence is not required as this change does not use maintenance funds or affect maintenance facilities or operations.

CONCURRED BY:

Construction Engineer	Douglas Coe	Date 3-17-05
Bridge Engineer	Douglas Coe	Date 3-17-05
FHWA Representative	Nancy Bobb	Date212412005
Project Engineer		Date
Other (specify):		Date
	Janet Adams	Date311512005
		Date
District Prior Approval By:		Date
HQ (Issue Approve) By:		Date
Resident Engineer's Signature:		Date 3-17-05

ESTIMATE OF COST

	THIS REQUEST	TOTAL TO DATE
ITEMS	$0.00	$0.00
FORCE ACCOUNT	$0.00	$0.00
AGREED PRICE	$1,670,167.00	$2,235,458.00
ADJUSTMENT	$0.00	$0.00
TOTAL	$1,670,167.00	$2,235,458.00

FEDERAL PARTICIPATION

☐ PARTICIPATING ☐ PARTICIPATING IN PART ☐ NONE
☐ NON-PARTICIPATING (MAINTENANCE) ☐ NON-PARTICIPATING

FEDERAL SEGREGATION (if more than one Funding Source or P I P type)
☑ CCO FUNDED PER CONTRACT ☐ CCO FUNDED AS FOLLOWS

FEDERAL FUNDING SOURCE	PERCENT

RECEIVED
035850 MAR 28 05

CONTRACT CHANGE ORDER

Change Requested by: Engineer

CCO: 90	Suppl. No. 2	Contract No. 04 - 012024	Road 04-SF,Ala-80-13.9/14.3,0.0/1.6	FED. AID LOC.: ACIM-080-1(085)8N

To: **KIEWIT / FCI / MANSON a JV**

You are directed to make the following changes from the plans and specifications or do the following described work not included in the plans and specifications for this contract. ***NOTE: This change order is not effective until approved by the Engineer.***

Description of work to be done, estimate of quantities and prices to be paid. (Segregate between additional work at contract price, agreed price and force account.) Unless otherwise stated, rates for rental of equipment cover only such time as equipment is actually used and no allowance will be made for idle time. This last percentage shown is the net accumulated increase or decrease from the original quantity in the Engineer's Estimate.

Adjustment of Compensation at Lump Sum:

Furnish additional labor, supervision, equipment, material, supplies and other resources as required to mitigate the lost time caused by the Engineer's ordered work suspension and the associated rework required for the period beginning June 20, 2003, and ending May 12, 2004, for revising the Bike Path design (Contract Bid Item No. 72) for the SFOBB East Span Skyway, Bridge Nos. 34-0006L/R.

Cost of Adjustment of Compensation at Agreed Lump Sum $397,996.00

It is mutually agreed that the increased labor costs to fabricate the Bike Path as provided for in Contract Change Order Number 90, Supplement No. 1, "Bike Path Tolerance," were projected over a two (2) year period, and that the actual increased labor costs will only be required for a period of one (1) year. The difference in costs between the one (1) year and two (2) year projections is $150,312.00. As a consequence, the State shall receive a credit in the amount of $150,312.00 for the increased labor costs that were paid to the Contractor through Contract Change Order No. 90, Supplement No. 1.

Adjustment of Compensation at Agreed Lump Sum (Credit) .....($150,312.00)

It is mutually agreed that acceptance of this change order resolves all time related impacts as identified in Contract Change Order No. 90, Supplement No. 1, "Bike Path Tolerance," executed on March 18, 2005, regarding the fabrication of the Bike Path (Contract Bid Item No. 72), and also resolves Time Impact Analysis No. 18, "Bike Path," dated November 19, 2004. The Contractor shall meet the dates as provided in schedule C5E0.

For this work, the Contractor shall be paid the above payment and credit for a total agreed lump sum amount of $247,684.00. This agreed lump sum constitutes full compensation for all costs, including markups, all direct and indirect costs, all associated project impacts, all overhead costs, and all risks associated with this change.

CONTRACT CHANGE ORDER

Change Requested by: Engineer

CCO: 90	Suppl. No. 2	Contract No. 04 - 012024	Road 04-SF,Ala-80-13.9/14.3,0.0/1.6	FED. AID LOC.: ACIM-080-1(085)8N

Estimated Cost: *Increase* ☑ *Decrease* ☐ **$247,684.00**

By reason of this order the time of completion will be adjusted as follows: 0 days

Submitted by

Signature	Resident Engineer: DOUG COE, Supervising Br. Eng.	Date 10-17-05

Approval Recommended by

Signature	Construction Engineer: PETER SIEGENTHALER, Chief	Date 10-26-05

Engineer Approval by

Signature	(Print name and title) PETER SIEGENTHALER - Chief	Date

We the undersigned contractor, have given careful consideration to the change proposed and agree, if this proposal is approved, that we will provide all equipment, furnish the materials, except as may otherwise be noted above, and perform all services necessary for the work above specified, and will accept as full payment therefor the prices shown above.

NOTE: If you, the contractor, do not sign acceptance of this order, your attention is directed to the requirements of the specifications as to proceeding with the ordered work and filing a written protest within the time therein specified.

Contractor Acceptance by

Signature	(Print name and title) Lee Zink ~~Proj. Engr.~~ Proj. Director	Date 12/16/05

STATE OF CALIFORNIA - DEPARTMENT OF TRANSPORTATION

CONTRACT CHANGE ORDER MEMORANDUM

TO: PETER SIEGENTHALER / DOUG COE, Supervising Br. Eng.	FILE: **E.A.** 04 - 012024
FROM: DOUG COE, Supervising Br. Eng.	**CO-RTE-PM** 04-SF,Ala-80-13.9/14.3,0.0/1.6 **FED. NO.** ACIM-080-1(085)8N
CCO#: **90** SUPPLEMENT#: **2** Category Code: **BZZZ**	CONTINGENCY BALANCE (incl. this change) **$52,006,904.80**
COST: **$247,684.00** INCREASE ☑ DECREASE ☐	HEADQUARTERS APPROVAL REQUIRED? ☑ YES ☐ NO
SUPPLEMENTAL FUNDS PROVIDED: **$0.00**	IS THIS REQUEST IN ACCORDANCE WITH ENVIRONMENTAL DOCUMENTS? ☑ YES ☐ NO
CCO DESCRIPTION: Bike Path Tolerance	**PROJECT DESCRIPTION:** REPLACE SFOBB EAST SPAN

LOCATION: IN SAN FRANCISCO AND ALAMEDA COUNTIES IN SAN FRANCISCO AND OAKLAND FROM 1.3 KM EAST OF THE YERBA BUENA ISL

THIS CHANGE ORDER PROVIDES FOR:

furnishing additional labor, supervision, equipment, material, supplies, and other resources as required to mitigate the time lost fabricating the Bike Path (Contract Item No. 72) due to the Engineer's ordered work stoppage, and to perform the necessary rework required as a consequence of revising the Bike Path design.

This change order is needed to mitigate delays to the production of the Bike Path as a consequence of the work stoppage ordered by the Engineer via State Letter No. 3192, dated December 11, 2003, due to the redesign of the Bike Path. The Contractor began fabricating the Bike Path on June 20, 2003, based on the original contract plans. Subsequently, it was determined that the fabrication and construction tolerances were insufficient, and would not allow a proper fit with the bridge superstructure. Consequently, design revisions were made to the contract plans. The Engineer suspended Bike Path fabrication on December 11, 2003, and, in the same month, issued the revised contract drawings. The Contractor immediately began working on revised shop drawings based on the revised contract plans. On May 12, 2004, the Engineer approved the shop drawings for revised Bike Path, Frame 2, and removed the suspension of the Bike Path fabrication. Due to this delay, the Contractor is required to commit additional resources to complete the work for the Bike Path (Contract Bid Item No. 72) based on the revised design.

The time period associated with the delay impacts covered in this change order begins on June 20, 2003 and ends May 12, 2004. Contract Change Order No. 90, "Bike Path Tolerance," required the Contractor to scrap the fabrication work that the Contractor performed between June 2003 and December 2003. In order to mitigate the delay and facilitate the production of the Bike Path, the Contractor will open an additional bay at the fabrication facility, in addition to working overtime with additional coordination and quality control personnel. For several months, the Contractor's schedule had not properly shown that the Bike Path production activity was on the critical path. Had the Contractor notified the Engineer of this situation in a timely manner (this activity should have been identified by the Contractor as a critical activity on the May 2004, or earlier, schedule update), mitigation efforts could have been implemented to a lesser extent. Therefore, the Contractor is responsible for the portion of the cost necessary to mitigate future delays that are attributable to the Contractor's failure to notify the Engineer in a timely manner. The Engineer has determined that the equitable compensation to the Contractor for the work necessary to mitigate the State's portion of the delay is $397,996.00.

In addition, the increased labor costs to fabricate the Bike Path provided in Contract Change Order Number 90, Supplement No. 1, "Bike Path Tolerance," were projected over a two (2) year period. However, the increased labor costs are only required for a one (1) year period as a result of cooperative efforts to mitigate the delays to the production of the Bike Path. As a result, there is a reduction to the increased labor costs provided for in Contract Change Order No. 90, Supplement No. 1, by $150,312.00. Consequently, the Contractor agrees to reduce the amount of compensation paid in this change order by an amount equal to $150,312.00. Therefore, the resulting amount paid to the Contractor as a result of this change order to mitigate future delays is $247,684.00 ($397,996.00 minus $150,312.00).

For this change, the contractor will receive an agreed lump sum of $247,684.00. This agreed lump sum constitutes full compensation including all markups, for all direct and indirect cost, all associated project impacts, and all overhead costs. This change order will be paid as Adjustment of Compensation at Agreed Lump Sum, and can be financed with the project contingency funds. A detailed force account analysis prepared by the Engineer for the cost of this change order is on file in the project records.

It is mutually agreed that acceptance of this change order resolves Time Impact Analysis (TIA) No. 18, "Bike Path," dated November 19, 2004. TIA No. 18 was submitted by the Contractor as a consequence of the Bike Path redesign that was issued via Contract Change Order No. 90, "Bike Path Tolerance," and the resulting eleven (11) month delay to the Contractor to initiate the bike path work while waiting for the Engineer to complete the redesign.

Pete Siegenthaler, SFOBB Construction Manager, Toll Bridge Construction, concurs with this change order.

Janet Adams, SFOBB Toll Bridge Project Manager, provided concurrence on July 7, 2005 via electronic message. A copy of the concurrence provided by Ms. Adams is attached.

FHWA prior approval was obtained from Ms. Nancy Bobb, Bay Bridge Project Manager, on July 5, 2005. A copy of the prior approval provided by Ms. Bobb is attached.

Consideration of additional compensation, if any, for work required to install the Bike Path in accordance with the revised contract plan sheets, shall be deferred and addressed in a supplement to Change Order No. 90.

It is mutually agreed that this contract change order resolves all time related impacts as identified in Contract Change Order No. 90, Supplement No. 1, executed on March 18, 2005, regarding the fabrication of the Bike Path; therefore, no adjustment of contract time is warranted as this work does not affect the controlling operation.

Maintenance concurrence is not required as this change does not use maintenance funds or affect maintenance facilities or operations.

CONCURRED BY:		
Construction Engineer:	Douglas Coe	Date 10-17-05
Bridge Engineer:	Douglas Coe	Date 10-17-05
FHWA Representative:	Nancy Bobb	Date 7/5/2005
Project Engineer:		Date
Other (specify):		Date
	Janet Adams	Date 7/7/2005
		Date
District Prior Approval By:		Date
HQ (Issue Approve) By:	Ken Darby	Date 7/25/2005
Resident Engineer's Signature:		Date 10-17-05

ESTIMATE OF COST

	THIS REQUEST	TOTAL TO DATE
ITEMS	$0.00	$0.00
FORCE ACCOUNT	$0.00	$0.00
AGREED PRICE	$0.00	$2,235,458.00
ADJUSTMENT	$247,684.00	$247,684.00
TOTAL	$247,684.00	$2,483,142.00

FEDERAL PARTICIPATION

☑ PARTICIPATING ☐ PARTICIPATING IN PART ☐ NONE
☐ NON-PARTICIPATING (MAINTENANCE) ☐ NON-PARTICIPATING

FEDERAL SEGREGATION (if more than one Funding Source or P.I.P. type)
☑ CCO FUNDED PER CONTRACT ☐ CCO FUNDED AS FOLLOWS

FEDERAL FUNDING SOURCE	PERCENT

CONTRACT CHANGE ORDER

Change Requested by: Engineer

CCO: 90 **Suppl. No. 3** **Contract No. 04 - 012024** **Road** 04-SF,Ala-80-13.9/14.3,0.0/1.6 **FED. AID LOC.:** ACIM-080-1(085)8N

To: **KIEWIT / FCI / MANSON a JV**

You are directed to make the following changes from the plans and specifications or do the following described work not included in the plans and specifications for this contract. ***NOTE: This change order is not effective until approved by the Engineer.***

Description of work to be done, estimate of quantities and prices to be paid. (Segregate between additional work at contract price, agreed price and force account.) Unless otherwise stated, rates for rental of equipment cover only such time as equipment is actually used and no allowance will be made for idle time. This last percentage shown is the net accumulated increase or decrease from the original

Extra Work at Lump Sum:

Provide additional labor, material and equipment to install the Bike Path (Bid Item No. 72) in accordance with revised plan sheets 3 through 28 of Contract Change Order No. 90 supplement 0, "Bike Path Tolerance," executed on November 3, 2004, for the SFOBB East Span Skyway, Bridge Nos. 34-0006L/R.

Full compensation for all costs, including markups, all direct and indirect costs, all associated project impacts, and all overhead costs are included in the lump sum payment of CCO No. 200 and no further payment will be made as a result of this CCO.

Estimated Cost: **Increase** ☐ **Decrease** ☐

By reason of this order the time of completion will be adjusted as follows: 0 days

Submitted by

Signature	Resident Engineer: DOUG COE, Supervising Br. Eng.	Date

Approval Recommended by

Signature	Construction Engineer: DOUG COE, Supervising Br. Eng.	Date

Engineer Approval by

Signature	(Print name and title) PETER SIEGENTHALER - Chief	Date

We the undersigned contractor, have given careful consideration to the change proposed and agree, if this proposal is approved, that we will provide all equipment, furnish the materials, except as may otherwise be noted above, and perform all services necessary for the work above specified, and will accept as full payment therefor the prices shown above.

NOTE: If you, the contractor, do not sign acceptance of this order, your attention is directed to the requirements of the specifications as to proceeding with the ordered work and filing a written protest within the time therein specified.

Contractor Acceptance by

Signature	(Print name and title) Lee Zink, Project Director	Date 9/5/06

STATE OF CALIFORNIA - DEPARTMENT OF TRANSPORTATION

CONTRACT CHANGE ORDER MEMORANDUM

TO: PETER SIEGENTHALER / DOUG COE, Supervising Br. Eng.	FILE: E.A. 04 - 012024
FROM: DOUG COE, Supervising Br. Eng.	CO-RTE-PM 04-SF,Ala-80-13.9/14.3,0.0/1.6
	FED. NO. ACIM-080-1(085)8N
CCO# 90 SUPPLEMENT#: 3 Category Cod AXZZ	CONTINGENCY BALANCE (incl. this change
COST: INCREASE ☐ DECREASE ☐	HEADQUARTERS APPROVAL REQUIRED? ☑ YES ☐ NO
SUPPLEMENTAL FUNDS PROVIDED: $0.00	IS THIS REQUEST IN ACCORDANCE WITH ENVIRONMENTAL DOCUMENTS? ☑ YES ☐ NO
CCO DESCRIPTION: Bike Path Tolerance	**PROJECT DESCRIPTION:** REPLACE SFOBB EAST SPAN

LOCATION: IN SAN FRANCISCO AND ALAMEDA COUNTIES IN SAN FRANCISCO AND OAKLAND FROM 1.3 KM EAST OF THE YERBA BUENA ISL

THIS CHANGE ORDER PROVIDES FOR:

additional labor, material, and equipment costs for the installation of the Bike Path (Bid Item No. 72) per revised contract plan sheets issued with Contract Change Order No. 90 S0, for the SFOBB East Span Skyway, Bridge Nos. 34-0006L/R.

This change order provides compensation to the Contractor for the additional costs of installing the bike path panels per revised contract plans. This includes the additional costs of sorting and handling of the unique panels that were fabricated to exact field dimensions and the installation of stainless steel shims for horizontal alignment of the panels. Also included is the field installation of a joint cover plate to ensure a consistent gap of 7 to 10 mm between the panels and four (4) additional structural grade washers with an eccentric hole for each panel.

The agreed compensation for this contract change order is included in the lump sum compensation portion of resolution CCO No. 200. For this work, the Contractor agrees to accept a lump sum amount of $403,284.00.

A detailed force account analysis prepared by the Engineer for the cost of this change order is on file in the project records.

Mr. Pete Siegenthaler, SFOBB Construction Manager, Toll Bridge Construction, concurs with this change. A copy of the concurrence signed by Mr. Siegenthaler on May 18, 2004 is attached.

Prior Approval was obtained from Ms. Nancy Bobb, FHWA Bay Bridge Project Manager, via electronic message on July 13, 2006. A printed copy of the prior approval provided by Ms. Bobb is attached.

Mr. Ken Terpstra, SFOBB Toll Bridge Project Manager, concurred with this change order on July 6, 2006. A copy of the concurrence provided by Mr. Terpstra is attached.

Design concurrence for this contract change order is not required since this supplement only deals with the installation portion of this change.

Maintenance concurrence is not required because the changes to the contract plans do not change the original design intent.

CONCURRED BY:		
Construction Engineer:	Douglas Coe	Date 8-24-06
Bridge Engineer:	Douglas Coe	Date 8-24-06
FHWA Representative:	Nancy Bobb	Date 7/13/2006
Project Engineer:		Date
Other (specify): Ken Terpstra, SFOBB Project Manager		Date 7/6/2006
		Date
		Date
District Prior Approval By:		Date
HQ (Issue Approve) By:	Ken Darby	Date
Resident Engineer's Signature:		Date 8-24-06

ESTIMATE OF COST

	THIS REQUEST	TOTAL TO DATE
ITEMS	$0.00	$0.00
FORCE ACCOUNT	$0.00	$0.00
AGREED PRICE		
ADJUSTMENT	$0.00	
TOTAL		

FEDERAL PARTICIPATION

☑ PARTICIPATING ☐ PARTICIPATING IN PART ☐ NONE
☐ NON-PARTICIPATING (MAINTENANCE) ☐ NON-PARTICIPATING

FEDERAL SEGREGATION (if more than one Funding Source or P.I.P. type)
☑ CCO FUNDED PER CONTRACT ☐ CCO FUNDED AS FOLLOWS

FEDERAL FUNDING SOURCE	PERCENT

CONTRACT CHANGE ORDER

Change Requested by: Engineer

CCO: 91	Suppl. No. 0	Contract No. 04 - 012024	Road 04-SF,Ala-80-13.9/14.3,0.0/1.6	FED. AID LOC.: ACIM-080-1(085)8N

To: **KIEWIT / FCI / MANSON a JV**

You are directed to make the following changes from the plans and specifications or do the following described work not included in the plans and specifications for this contract. ***NOTE: This change order is not effective until approved by the Engineer.***

Description of work to be done, estimate of quantities and prices to be paid. (Segregate between additional work at contract price, agreed price and force account.) Unless otherwise stated, rates for rental of equipment cover only such time as equipment is actually used and no allowance will be made for idle time. This last percentage shown is the net accumulated increase or decrease from the original quantity in the Engineer's Estimate.

Adjustment of Compensation at Lump Sum:

Replace the 46 mm diameter high strength vertical PT bars with 64 mm diameter high strength vertical PT bars in the hinge minus 1 precast segments as provided on revised contract plan sheet numbers 704R2, 792R3, 793R3, 814R3, 829R1, 836R3, and 837R3 of 978 (sheets 2 through 8 of this change order) for the SFOBB East Span Skyway, Bridge Nos. 34-0006L/R.

For this work, the Contractor agrees to accept a lump sum amount of $50,000.00. This agreed lump sum constitutes full compensation for all costs, including markups, all direct and indirect costs, all associated project impacts, and all overhead costs.

Estimated cost of Adjustment of Compensation at Lump Sum $50,000.00

RECEIVED 05 OCT 28 PM 3:40

Estimated Cost: Increase ☑ **Decrease** ☐ **$50,000.00**

By reason of this order the time of completion will be adjusted as follows: 0 days

Submitted by

Signature	Resident Engineer: DOUG COE, Supervising Br. Eng.	Date 9-8-05

Approval Recommended by

Signature	Construction Engineer: DOUG COE, Supervising Br. Eng.	Date 9-8-05

Engineer Approval by

Signature David Salladay	(Print name and title) for PETER SIEGENTHALER - Chief	Date 10-20-05

We the undersigned contractor, have given careful consideration to the change proposed and agree, if this proposal is approved, that we will provide all equipment, furnish the materials, except as may otherwise be noted above, and perform all services necessary for the work above specified, and will accept as full payment therefor the prices shown above.

NOTE: If you, the contractor, do not sign acceptance of this order, your attention is directed to the requirements of the specifications as to proceeding with the ordered work and filing a written protest within the time therein specified.

Contractor Acceptance by

Signature	(Print name and title) Lee Zink - Project Director	Date 10/14/05

STATE OF CALIFORNIA - DEPARTMENT OF TRANSPORTATION

CONTRACT CHANGE ORDER

Change Requested by: Engineer

CCO: 92	Suppl. No. 0	Contract No. 04 - 012024	Road 04-SF,Ala-80-13.9/14.3,0.0/1.6	FED. AID LOC.: ACIM-080-1(085)8N

To: KIEWIT / FCI / MANSON a JV

You are directed to make the following changes from the plans and specifications or do the following described work not included in the plans and specifications for this contract. ***NOTE: This change order is not effective until approved by the Engineer.***

Description of work to be done, estimate of quantities and prices to be paid. (Segregate between additional work at contract price, agreed price and force account.) Unless otherwise stated, rates for rental of equipment cover only such time as equipment is actually used and no allowance will be made for idle time. This last percentage shown is the net accumulated increase or decrease from the original quantity in the Engineer's Estimate.

Extra Work at Lump Sum:

Furnish and install one (1) additional ring stiffener for each pipe beam at Hinges AW and AE located near the Fuse, and center the remaining stiffeners with the stainless steel cladding on the SFOBB East Span Skyway, Bridge Nos. 34-0006L/R as shown on sheet 2 of this change order. There are four (4) pipe beams, and thus, a total of four (4) added stiffeners.

The revised contract plan sheet reflecting this change is 785R2.

For this work, the Contractor will be paid an agreed lump sum amount of $25,387.00. This sum constitutes full compensation, including markups, for all direct and indirect costs, all associated project impacts, and all Time Related Overhead (TRO) expenses.

Total cost of Extra Work at Agreed Lump Sum $25,387.00

Estimated Cost: Increase ☑ Decrease ☐ $25,387.00

By reason of this order the time of completion will be adjusted as follows: 0 days

Submitted by		
Signature	Resident Engineer: COE D.	Date 3-22-04
Approval Recommended by		
Signature	Construction Engineer: COE D.	Date 3-22-04
Engineer Approval by		
Signature	(Print name and title) PETER SIEGENTHALER - Chief	Date

We the undersigned contractor, have given careful consideration to the change proposed and agree, if this proposal is approved, that we will provide all equipment, furnish the materials, except as may otherwise be noted above, and perform all services necessary for the work above specified, and will accept as full payment therefor the prices shown above.

NOTE: If you, the contractor, do not sign acceptance of this order, your attention is directed to the requirements of the specifications as to proceeding with the ordered work and filing a written protest within the time therein specified.

Contractor Acceptance by		
Signature	(Print name and title) A.T. Skoro, Project Director	Date 4/12/04

STATE OF CALIFORNIA - DEPARTMENT OF TRANSPORTATION

CONTRACT CHANGE ORDER

Change Requested by: Engineer

CCO: 92	Suppl. No. 0	Contract No. 04 - 012024	Road 04-SF,Ala-80-13.9/14.3,0.0/1.6	FED. AID LOC.: ACIM-080-1(085)8N

To: KIEWIT / FCI / MANSON a JV

You are directed to make the following changes from the plans and specifications or do the following described work not included in the plans and specifications for this contract. ***NOTE: This change order is not effective until approved by the Engineer.***

Description of work to be done, estimate of quantities and prices to be paid. (Segregate between additional work at contract price, agreed price and force account.) Unless otherwise stated, rates for rental of equipment cover only such time as equipment is actually used and no allowance will be made for idle time. This last percentage shown is the net accumulated increase or decrease from the original quantity in the Engineer's Estimate.

Extra Work at Lump Sum:

Furnish and install one (1) additional ring stiffener for each pipe beam at Hinges AW and AE located near the Fuse, and center the remaining stiffeners with the stainless steel cladding on the SFOBB East Span Skyway, Bridge Nos. 34-0006L/R as shown on sheet 2 of this change order. There are four (4) pipe beams, and thus, a total of four (4) added stiffeners.

The revised contract plan sheet reflecting this change is 785R2.

For this work, the Contractor will be paid an agreed lump sum amount of $25,387.00. This sum constitutes full compensation, including markups, for all direct and indirect costs, all associated project impacts, and all Time Related Overhead (TRO) expenses.

Total cost of Extra Work at Agreed Lump Sum $25,387.00

Estimated Cost: Increase ☑ Decrease ☐ $25,387.00

By reason of this order the time of completion will be adjusted as follows: 0 days

Submitted by		
Signature	Resident Engineer: COE D.	Date 3-22-04
Approval Recommended by		
Signature	Construction Engineer: COE D.	Date 3-22-04
Engineer Approval by		
Signature	(Print name and title) PETER SIEGENTHALER - Chief	Date

We the undersigned contractor, have given careful consideration to the change proposed and agree, if this proposal is approved, that we will provide all equipment, furnish the materials, except as may otherwise be noted above, and perform all services necessary for the work above specified, and will accept as full payment therefor the prices shown above.

NOTE: If you, the contractor, do not sign acceptance of this order, your attention is directed to the requirements of the specifications as to proceeding with the ordered work and filing a written protest within the time therein specified.

Contractor Acceptance by		
Signature	(Print name and title) A.T. Skoro, Project Director	Date 4/12/04

CONTRACT CHANGE ORDER

Change Requested by: Contractor

CCO: 93	Suppl. No. 0	Contract No. 04 - 012024	Road 04-SF,Ala-80-13.9/14.3,0.0/1.6	FED. AID LOC.: ACIM-080-1(085)8N

To: **KIEWIT / FCI / MANSON a JV**

You are directed *to* make the following changes from the plans and specifications or do the following described work not included in the plans and *specifications for this contract* **NOTE: This change order is not effective until approved *by* the Engineer.**

Description of work to be done, estimate of quantities and prices to be paid. (Segregate between additional work at contract price, agreed price and force account.) Unless otherwise stated, rates for rental of equipment cover only such time as equipment is actually used and no allowance will be made for idle time. This last percentage shown is the net accumulated increase or decrease from the original quantity in the Engineer's Estimate.

The State agrees to accept the CRIP submitted in KFM transmittal number KFM-TRN-001357 dated March 18, 2004, and as specified in this change order.

In accordance with Section 5-1.14, "Cost Reduction Incentive Proposals," of the Special Provisions, furnish Temporary Tower CE and CW for the SFOBB - East Span Skyway Project, Bridge Nos. 34-0006L/R as specified in this change order.

Adiustment of Compensation at Lump Sum:

Section 10-1.25 "Temporary Towers," Subsection "Temporary Tower Design," Subsection "Vessel Impact Design Loads," paragraphs 1, 2, 3, and 4 shall not apply to Temporary Tower CE and CW.

The Contractor shall design, furnish, and install dolphin piles, subject to approval of the Engineer, to protect Temporary Towers CE and CW from barge impacts.

Section 10-1.25 "Temporary Towers," Subsection "Temporary Tower Design," Subsection "Seismic Design Loads," paragraph 2, shall not apply to Temporary Towers CE and CW. The seismic design load has been revised, to 0.1g.

In accordance with Section 5-1.14, "Cost Reduction Incentive," of the Special Provisions, the Contractor shall credit the State $455,015.00 for revisions to the design requirements for Temporary Towers CE and CW. By accepting this Change Order, should the Contractor encounter differing site conditions during the installation of Temporary Towers CE and CW, the Contractor agrees that additional costs shall be shared equally between the Contractor and the State.

Adjustment of Compensation at Agreed Lump Sum ..... ($455,015.00)

Estimated Cost: **Increase** ☐ **Decrease** ☑ **($455,015.00)**

By reason of this order the time of completion will be adjusted as follows: 0 days

Submitted by		
Signature	Resident Engineer: COED.	Date 6-8-04
Approval Recommended by		
Signature	Construction Engineer: COE D.	Date 6-8-04
Engineer Approval by		
Signature	(Print name and title) PETER SIEGENTHALER - Chief	Date

We the undersigned contractor, have given careful consideration to the change proposed and agree, if this proposal is approved, that we will provide all equipment, furnish the materials, except as may otherwise be noted above, and perform all services necessaiy for the work above specified, and will accept as full payment therefor the prices shown above.

NOTE: If you, the contractor, do not sign acceptance of this order, your attention is directed to the requirements of the specifications as to proceeding with the ordered work and filing a written protest within the time therein specified.

Contractor Acceptance by		
Signature	(Print name and title) A.J. Shore, Project Director	Date 6-15-04

STATE OF CALIFORNIA - DEPARTMENT OF TRANSPORTATION

CONTRACT CHANGE ORDER MEMORANDUM

TO: PETER SIEGENTHALER / COE D.	FILE: **E.A.** **04 - 012024**
FROM: COED.	**CO-RTE-PM** 04-SF,Ala-80-13.9/14.3,0.0/1.6
	FED. NO. ACIM-080-1(085)8N
CCO#: **93** | SUPPLEMENT#: **0** | Category Code: **DHSA**	CONTINGENCY BALANCE (incl. this change) **$6,878,610.95**
COST: ($455,015.00) INCREASE ☐ DECREASE ☑	HEADQUARTERS APPROVAL REQUIRED? ☑ YES ☐ NO
SUPPLEMENTAL FUNDS PROVIDED: **$0.00**	IS THIS REQUEST IN ACCORDANCE WITH ENVIRONMENTAL DOCUMENTS? ☑ YES ☐ NO
CCO DESCRIPTION: Tower C Alternate	**PROJECT DESCRIPTION:** REPLACE SFOBB EAST SPAN

With the redefined seismic loads and the elimination of the vessel impact design requirement, the Contractor is allowed to build temporary towers that consist of a truss supported on a central main tower and two smaller wing towers. This truss will support the bridge spans and will be easier to remove.

Although the towers are used to control long-term deflection until the completion of the SFOBB - Oakland Touchdown Project, the Designer has determined that the seismic requirements can be redefined because in the event of an earthquake, the cantilever is self-supporting and the temporary towers can be reconstructed before long-term deflection can occur. The revised design will not compromise the structure's integrity and will result in a cost savings to the State.

The net savings in construction costs resulting from this contract change order is $910,030.00. The State will be credited $455,015.00, one half of the net savings, in accordance with Section 5-1.14, "Cost Reduction Incentive Proposals," of the Special Provisions. The cost analysis for this change is on file in the the project records. This change order will decrease the scope of work and cost for Contract Item 10: Furnish Temporary Tower (Location CE) and Contract Item 13: Furnish Temporary Tower (Location CW).

Should the Contractor encounter differing site conditions, the additional costs shall be shared equally between the Contractor and the State. By accepting this change order, the Contractor agrees to accept half the the responsibility for differing site conditions that may be encountered.

Jerry Olmes of the US Coast Guard (USCG) provided verbal approval on January 23, 2004, as documented in the State's February 6, 2004, confirmation letter. Michelle Burt Levenson of BCDC provided approval in a February 4, 2004, letter to Rosemary Slabaugh, CT-Environmental. No Maintenance approval is required for this change as this does not affect any permanent facility. FHWA prior approval was received on February 5, 2004, from Nancy Bobb, by email. Brian Maroney, Technical Project Manager, also provided his concurrence on November 6, 2003, by email.

No adjustment of contract time is warranted, as this change does not affect the controlling operation.

CONCURRED BY:		
Construction Engineer:	Douglas Coe	Date 6-7-04
Bridge Engineer	Douglas Coe	Date 6-4-04
FHWA Representative	Nancy Bobb	Date 2/5/2004
Project Engineer:	Brian Maroney	Date11/6/2003
Other (specify): Jerry Olmes, USCG		Date1/23/2004
Michelle Burt Levenson, BCDC		Date 2/4/2004
Patrick Treacy, HQ Const		Date2/20/2004
District Prior Approval By:		Date
HQ (Issue Approve) By:		Date
Resident Engineer's Signature:		Date 6-4-04

ESTIMATE OF COST

	THIS REQUEST	TOTAL TO DATE
ITEMS	$0.00	$0.00
FORCE ACCOUNT	$0.00	$0.00
AGREED PRICE	$0.00	$0.00
ADJUSTMENT	($455,015.00)	($455,015.00)
TOTAL	($455,015.00)	($455,015.00)

FEDERAL PARTICIPATION

☑ PARTICIPATING ☐ PARTICIPATING IN PART ☐ NONE
☐ NON-PARTICIPATING (MAINTENANCE) ☐ NON-PARTICIPATING

FEDERAL SEGREGATION (if more than one Funding Source or P.I.P. type)
☑ CCO FUNDED PER CONTRACT ☐ **CCO** FUNDED AS FOLLOWS

FEDERAL FUNDING SOURCE PERCENT

CONTRACT CHANGE ORDER

Change Requested by: Engineer

CCO: 94	Suppl. No. 0	Contract No. 04 - 012024	Road 04-SF,Ala-80-13.9/14.3,0.0/1.6	FED. AID LOC.: ACIM-080-1(085)8N

Description of work to be done, estimate of quantities and prices to be paid. (Segregate between additional work at contract price, agreed price and force account.) Unless otherwise stated, rates for rental of equipment cover only such time as equipment is actually used and no allowance will be made for idle time. This last percentage shown is the net accumulated increase or decrease from the original quantity in the Engineer's Estimate.

Extra Work at Unit Price:

Prepare the surface at the top and bottom of the pile head connection slots to perform additional ultrasonic inspection of the pile head connection plate weldments and provide access to the engineer to perform this inspection at Piers E3W to E16W and E3E to E15E (27 piers).

For this extra work, the Contractor agrees to a unit price of $1,700 per pier. This unit price constitutes full compensation, including markups, for all direct and indirect costs; all associated project impacts; and Time Related Overhead (TRO) expenses, for this work.

Estimated cost of Extra Work at Agreed Unit Price .....27 piers @ $1,700.00 / pier = $45,900.00

Extra Work at Lump Sum:

For replacing the access to the piles at Pier E16E, for assisting in preparing surfaces at the top and bottom of the pile head connection slots for inspection by ultrasonic testing, and for remobilizing for the annular grout pour, the Contractor will be paid an agreed lump sum of $49,905.00. This sum constitutes full compensation, including markups, for all direct and indirect costs; all associated project impacts; and Time Related Overhead (TRO) expenses, for this change.

Estimated cost of Extra Work at Agreed Lump Sum $49,905.00

Estimated Cost: Increase ☑ Decrease ☐ $95,805.00

By reason of this order the time of completion will be adjusted as follows: 0 days

Submitted by		
Signature	Resident Engineer: COE D.	Date 6-2-04
Approval Recommended by		
Signature	Construction Engineer: COE D.	Date 6-2-04
Engineer Approval by		
Signature	(Print name and title) PETER SIEGENTHALER - Chief	Date

We the undersigned contractor, have given careful consideration to the change proposed and agree, if this proposal is approved, that we will provide all equipment, furnish the materials, except as may otherwise be noted above, and perform all services necessary for the work above specified, and will accept as full payment therefor the prices shown above.

NOTE: If you, the contractor, do not sign acceptance of this order, your attention is directed to the requirements of the specifications as to proceeding with the ordered work and filing a written protest within the time therein specified.

Contractor Acceptance by		
Signature	(Print name and title) A.T. Shore, Project Director	Date 6-7-04

STATE OF CALIFORNIA - DEPARTMENT OF TRANSPORTATION

CONTRACT CHANGE ORDER MEMORANDUM

DATE: 6/1/2004 Page 1 of 1

TO: PETER SIEGENTHALER / COE D.	FILE: E.A. 04 - 012024
	CO-RTE-PM 04-SF,Ala-80-13.9/14.3,0.0/1.6
FROM: COED.	FED. NO. ACIM-080-1(085)8N
CCO#: 94 | SUPPLEMENT#: 0 | Category Code: AVZZ	CONTINGENCY BALANCE (incl. this change) $6,539,796.01
COST: $95,805.00 INCREASE ☑ DECREASE ☐	HEADQUARTERS APPROVAL REQUIRED? ☐ YES ☑ NO
SUPPLEMENTAL FUNDS PROVIDED: $45,900.00	IS THIS REQUEST IN ACCORDANCE WITH ENVIRONMENTAL DOCUMENTS? ☑ YES ☐ NO
CCO DESCRIPTION: Foundation Inspection Support	**PROJECT DESCRIPTION:** REPLACE SFOBB EAST SPAN

LOCATION: IN SAN FRANCISCO AND ALAMEDA COUNTIES IN SAN FRANCISCO AND OAKLAND FROM 1.3 KM EAST OF THE YERBA BUENA ISL

THIS CHANGE ORDER PROVIDES FOR:

compensating the Contractor for suspending work at Pier E16 Eastbound and for providing access to the Engineer to perform additional ultrasonic inspection of the pile head connection plate at each of the 28 footing boxes.

Work was suspended at Pier E16 Eastbound, on July 10, 2003, for additional ultrasonic inspections at this footing. The Contractor had to replace the access to the piles, assist in preparing the surfaces for testing, and remobilize for the annular grout pour that was scheduled for July 11, 2003. The designer had concerns about cracks occuring at the top and bottom of the pile head connection slots and requested additional ultrasonic testing.

For this change order, the Contractor will be paid an agreed lump sum of $49,905.00 for the suspension of work and for the weld inspection support services at Pier E16 Eastbound. Additionally, the Contractor will be paid an agreed unit price of $1,700.00 per pier for preparing the surface at the ends of the pile head connection slots for QA ultrasonic inspection which is not called out in the Special Provisions or AWS D1.5 and for providing access to perform the inspection for the remaining 27 piers ($45,900). This constitutes full compensation, including all markups. A force account cost analysis for this change is on file in the project records.

The cost of the additional weld inspection services will be financed from supplemental funds provided for in this contract.

No adjustment of contract time is warranted, as this change does not affect the controlling operation.

FHWA concurrence is not required. Concurrence from Maintenance is not required because this work does not affect the maintenance of the structures.

CONCURRED BY:

Construction Engineer:	Douglas Coe	Date 6-2-04
Bridge Engineer:	Douglas Coe	Date 6-2-04
FHWA Representative:		Date
Project Engineer:		Date
Other (specify): Robert Kobal. HQ CCO Coordinator		Date 9/3/2003
		Date
		Date
District Prior Approval By:		Date
HQ (Issue Approve) By:		Date
Resident Engineer's Signature:		Date 6-2-04

ESTIMATE OF COST

	THIS REQUEST	TOTAL TO DATE
ITEMS	$0.00	$0.00
FORCE ACCOUNT	$0.00	$0.00
AGREED PRICE	$95,805.00	$95,805.00
ADJUSTMENT	$0.00	$0.00
TOTAL	$95,805.00	$95,805.00

FEDERAL PARTICIPATION

☐ PARTICIPATING ☐ PARTICIPATING IN PART ☐ NONE
☐ NON-PARTICIPATING (MAINTENANCE) ☐ NON-PARTICIPATING

FEDERAL SEGREGATION (if more than one Funding Source or P.I.P. type)
☑ CCO FUNDED PER CONTRACT ☐ CCO FUNDED AS FOLLOWS

FEDERAL FUNDING SOURCE	PERCENT

CCO: 97	Suppl. No. 0	Contract No, 04 - 012024	Road 04-SF,Ala-80-13.9/14.3.0.0/1.6	FED. AID LOC.: ACIM-080-1(085)8N

To: KIEWIT / FCI / MANSON a JV

You are directed to make the following changes from the plans and specifications or do the following described work not included in the plans and specifications for this contract. ***NOTE: This change order is not effective until approved by the Engineer.***

Description of work to be done, estimate of quantities and prices to be paid. (Segregate between additional work at contract price, agreed price and force account.) Unless otherwise stated, rates for rental of equipment cover only such time as equipment is actually used and no allowance will be made for idle time. This last percentage shown is the net accumulated increase or decrease from the original quantity in the Engineer's Estimate.

Adjustment of Compensation at Lump Sum:

Transfer the turbidity control monitoring work of coffercells from the Contractor to the Engineer by deleting the last two paragraphs under "Pile and Cofferdam Dewater" in Section 10-1.03, "Non-Storm Water Discharge" of the Special Provisions and replacing with sheet 2 of this change order.

This transfer of monitoring work does not relieve the contractor of the responsibility to implement adequate water pollution control measures for construction activities within the cofferdam other than dewatering, as required under the contract. Other activities, such as concrete pours, that have the potential to introduce pollutants that can alter the pH and dissolved oxygen concentration of the receiving water shall not be considered as included in the dewatering process.

Eliminate the "Additional Turbidity Control" item of $300,000.00 under "Excavation and Coffercells" of CCO 7, Supplement 0.

Cost of Adjustment of Compensation (Decrease) at Agreed Lump Sum .....($300,000.00)

Estimated Cost: Increase ☐ Decrease ☑ ($300,000.00)

By reason of this order the tim will be as follows: 0

Submitted by		
Signature	Resident Engineer: COE D.	Date 10-2-03
Approval Recommended by		
Signature	Construction Engineer: COE D.	Date 10-3-03
Engineer Approval by		
Signature	(Print name and title) PETER SIEGENTHALER - Chief	Date

We the undersigned contractor, have given careful consideration to the change proposed and agree, if this proposal is approved, that we will provide all equipment, furnish the materials, except as may otherwise be noted above, and perform all services necessary for the work above specified, and will accept as full payment therefor the prices shown above.

NOTE: If you, the contractor, do not sign acceptance of this order, your attention is directed to the requirements of the specifications as to proceeding with the ordered work and filing a written protest within the time therein specified.

Contractor Acceptance by		
Signature	(Print name and title) A.T. Skoro, Project Director	Date 10/7/03

STATE OF CALIFORNIA - DEPARTMENT OF TRANSPORTATION

CONTRACT CHANGE ORDER MEMORANDUM

TO: PETERSIEGENTHALER / COE D.	FILE: **E.A.** 04 - 012024
	CO-RTE-PM 04-SF,Ala-80-13.9/14.3,0.0/1.6
FROM: COED.	**FED. NO.** ACIM-080-1(085)8N
CCO#: **97** SUPPLEMENT#: **0** Category Code: **CXSX**	CONTINGENCY BALANCE (incl. this change) **$43,788,305.55**
COST: **($300,000.00)** INCREASE ☐ DECREASE ☑	HEADQUARTERS APPROVAL REQUIRED? ☑ YES ☐ NO
SUPPLEMENTAL FUNDS PROVIDED: **$0.00**	IS THIS REQUEST IN ACCORDANCE WITH ENVIRONMENTAL DOCUMENTS? ☑ YES ☐ NO
CCO DESCRIPTION: Turbiditv Monitorina	**PROJECT DESCRIPTION:** REPLACE SFOBB EAST SPAN

LOCATION: IN SAN FRANCISCO AND ALAMEDA COUNTIES IN SAN FRANCISCO AND OAKLAND FROM 1.3 KM EAST OF THE YERBA BUENA ISL

THIS CHANGE ORDER PROVIDES FOR:

transferring the turbidity control monitoring work of coffercells, originally under CCO 7, Supplement 0 from the Contractor to the Engineer, by deleting paragraphs six and seven under Section 10-1.03, "Non-Storm Water Discharge" of the Special Provisions and replacing with sheet 2 of this change order.

Additional monitoring requirements issued by the San Francisco Bay Regional Water Quality Control Board, after the bid opening date for this contract, were not incorporated in the turbidity monitoring work to be performed by the Contractor. In addition, SEA Engineering was chosen by both the State and the Contractor to perform turbidity control monitoring. To avoid conflicts between Contractor requested monitoring work and State monitoring work, it was decided the State would take over all monitoring. The Environmental Engineering Office will execute a Task Order to allow SEA Engineering to monitor the turbidity control work for the coffercells. This task order will also include the additional turbidity monitoring requirements required to be in compliance with current regulations.

This transfer of monitoring work does not relieve the contractor of the responsibility to implement adequate water pollution control measures for construction activities within the cofferdam other than dewatering, as required under the contract. Other activities, such as concrete pours, that have the potential to introduce pollutants that can alter the pH and dissolved oxygen concentration of the receiving water shall not be considered as included in the dewatering process.

This change order will eliminate the additional turbidity control work under Excavation and Coffercells of CCO 7, SO and is being executed under a separate change order to credit the full amount of the turbidity monitoring work for coffercells. Eliminate "Additional Turbidity Control" item of $300,000.00 under "Excavation and Coffercells" of CCO 7, Supplement 0. A copy of the cost associated with the Proposed Modifications under CCO 7 SO is on file in the project records. The existing $15,000 for dewatering coffercells and piles under Item 16, Water Pollution Control, will remain since the Contractor will continue to be responsible for adhering to the water quality requirements such as removal of floating oil and other substances prior to beginning a discharge and setup of the dewatering operation in a manner that minimizes bottom scour.

This contract change order does not affect the overall project schedule; therefore, no additional contract time is required.

This change order has been discussed and concurred by Charles Smith, D04 Environmental Engineering on September 30, 2003. Maintenance concurrence is not required because this work will not effect any permanent Caltrans facility.

CONCURRED BY:		
Construction Engineer:	Douglas Coe	Date 10-3-03
Bridge Engineer:		Date
FHWA Representative:	Nancy Bobb	Date 9/24/2003
Project Engineer:		Date
Other (specify)	Charles Smith-D04 Env Engring	Date 9/30/2003
		Date
		Date
District Prior Approval By		Date
HQ (Issue Approve) By:		Date
Resident Engineer's Signature:		Date 10-3-03

ESTIMATE OF COST

	THIS REQUEST	TOTAL TO DATE
ITEMS	$0.00	$0.00
FORCE ACCOUNT	$0.00	$0.00
AGREED PRICE	$0.00	$0.00
ADJUSTMENT	($300,000.00)	($300,000.00)
TOTAL	($300,000.00)	($300,000.00)

FEDERAL PARTICIPATION

☑ PARTICIPATING ☐ PARTICIPATING IN PART ☐ NONE
☐ NON-PARTICIPATING (MAINTENANCE) ☐ NON-PARTICIPATING

FEDERAL SEGREGATION (if more than one Funding Source or P.I.P. type)
☑ CCO FUNDED PER CONTRACT ☐ CCO FUNDED AS FOLLOWS

FEDERAL FUNDING SOURCE	PERCENT

STATE OF CALIFORNIA - DEPARTMENT OF TRANSPORTATION

CONTRACT CHANGE ORDER

Change Requested by: Engineer

CCO: 97	Suppl. No. 1	Contract No. 04 - 012024	Road 04-SF,Ala-80-13.9/14.3,0.0/1.6	FED. AID LOC.: ACIM-080-1(085)8N

To: KIEWIT / FCI / MANSON a JV

You are directed to make the following changes from the plans and specifications or do the following described work not included in the plans and specifications for this contract. ***NOTE: This change order is not effective until approved by the Engineer.***

Description of work to be done, estimate of quantities and prices to be paid. (Segregate between additional work at contract price, agreed price and force account.) Unless otherwise stated, rates for rental of equipment cover only such time as equipment is actually used and no allowance will be made for idle time. This last percentage shown is the net accumulated increase or decrease from the original quantity in the Engineer's Estimate.

Adjustment of Compensation at Lump Sum:

Modify Section 10-1.03, "Non-Storm Water Discharge" of the Special Provisions as follows:

1. Add the following sentence at the end of the second paragraph under "Pile and Cofferdam Dewater: "Sampling of the discharge will be conducted at 3 meters maximum from the outfall of the dewatering system."

2. In lieu of the location specified for the background in the third sentence of the second paragraph under "Pile and Cofferdam Dewater," sampling location of the background (receiving water) will be upgradient (upstream) of the cofferdams at a distance of 274 meters.

There shall be no cost to the state by reason of this clarification and change.

Estimated Cost: Increase ☐ Decrease ☐ $0.00

By reason of this order the time of completion will be adjusted as follows: 0 days

Submitted by

Signature	Resident Engineer: COE D.	Date 2-4-04

Approval Recommended by

Signature	Construction Engineer: COE D.	Date 2-4-04

Engineer Approval by

Signature	(Print name and title) PETER SIEGENTHALER - Chief	Date 05/07/04

We the undersigned contractor, have given careful consideration to the change proposed and agree, if this proposal is approved, that we will provide all equipment, furnish the materials, except as may otherwise be noted above, and perform all services necessary for the work above specified, and will accept as full payment therefor the prices shown above.

NOTE: If you, the contractor, do not sign acceptance of this order, your attention is directed to the requirements of the specifications as to proceeding with the ordered work and filing a written protest within the time therein specified.

Contractor Acceptance by

Signature	(Print name and title) Lee Zink, Project Director	Date 9/5/06

STATE OF CALIFORNIA - DEPARTMENT OF TRANSPORTATION

CONTRACT CHANGE ORDER MEMORANDUM

TO: PETER SIEGENTHALER / DOUG COE, Supervising Br. Eng.	FILE: E.A. 04 - 012024
FROM: DOUG COE, Supervising Br. Eng.	CO-RTE-PM 04-SF,Ala-80-13.9/14.3,0.0/1.6
	FED. NO. ACIM-080-1(085)8N
CCO# 97 SUPPLEMENT#: 1 Category Cod **CXSA**	CONTINGENCY BALANCE (incl. this change
COST: INCREASE ☐ DECREASE ☐	HEADQUARTERS APPROVAL REQUIRED? ☑ YES ☐ NO
SUPPLEMENTAL FUNDS PROVIDED: **$0.00**	IS THIS REQUEST IN ACCORDANCE WITH ENVIRONMENTAL DOCUMENTS? ☑ YES ☐ NO
CCO DESCRIPTION: Turbidity Monitoring	**PROJECT DESCRIPTION:** REPLACE SFOBB EAST SPAN

LOCATION: IN SAN FRANCISCO AND ALAMEDA COUNTIES IN SAN FRANCISCO AND OAKLAND FROM 1.3 KM EAST OF THE YERBA BUENA ISL

THIS CHANGE ORDER PROVIDES FOR:

1. Clarification of the discharge sampling location during the dewatering of coffercells and piles, and
2. Specification change for the receiving water (background) sampling location.

These changes were requested by the District 04 Environmental Engineering Branch to provide sampling locations that more accurately encompassed the pile cleanout and cofferdam dewatering work. The original sampling specification was written for dredging operations. The sampling specification for this contract change order corrects the oversight.

The original CCO transfered the turbidity control monitoring work of coffercells from the Contractor to the Engineer. It also defined the water quality monitoring protocol during coffercell and pile dewatering and set the allowable limits for the water quality monitoring parameters (i.e., turbidity, pH, and dissolved oxygen). The contractor is responsible for not exceeding the water quality limits set in the change order.

The Contractor included a discharge sampling location recommended by the State in SWPPP Amendment No. 4, "Coffercell Dewatering." Currently, the State is monitoring the water quality parameters persuant to SWPPP Amendment No. 4. This supplement clarifies the sampling location.

Special Provisions specify that the background turbidity shall be measured upgradient (upstream) of piles and cofferdams at a distance between 20 meters and 45 meters. Based on the monitoring work during dredging, the District-04 Environmental Office determined that the water quality between 20 meters and 45 meters have the potential to be affected by the dredging and dewatering operations. The background sample taken at this location will not measure true background water quality parameters. Consequently, the background sampling locations was chosen at a distance of 274 meters upstream of the coffercells. This supplement changes the specification provided in the Special Provisions for the background sampling location.

This change does not constitute any additional work; therfore, no compensation will be provided as a result of this change.

No adjustment of contract time is warranted, as this change does not affect the controlling operation.

This change order has been discussed and concurred by Charles Smith, D04 Environmental Office on 02/04/04. This change constitutes a change in specification; therefore, FHWA concurrence was obtained on 02/05/04 via email. Maintenance concurrence is not required because this work will not effect any permanent Caltrans facility.

The Resident Engineer recommends this change order be approved.

The Contractor refuses to sign this contract change order because he does not agree it is a no cost change. The contractor believes he can not quantify the risk, therefore it is recommended this change order be processed unilaterally.

Resolution of this contract change order is included in the lump sum compensation portion of resolution CCO No. 200.

CONCURRED BY:		
Construction Engineer:	Douglas Coe	Date 1/6/2004
Bridge Engineer:	Douglas Coe	Date 1/6/2004
FHWA Representative:	Nancy Bobb	Date 2/5/2004
Project Engineer:		Date
Other (specify): Charles Smith, D04 Environmental		Date 2/4/2004
		Date
		Date
District Prior Approval By:		Date
HQ (Issue Approve) By:	Patrick Bockari	Date 2/6/2004
Resident Engineer's Signature:		Date 8-24-00

ESTIMATE OF COST

	THIS REQUEST	TOTAL TO DATE
ITEMS	$0.00	$0.00
FORCE ACCOUNT	$0.00	$0.00
AGREED PRICE	$0.00	$0.00
ADJUSTMENT	$0.00	
TOTAL	$0.00	

FEDERAL PARTICIPATION

☑ PARTICIPATING ☐ PARTICIPATING IN PART ☐ NONE
☐ NON-PARTICIPATING (MAINTENANCE) ☐ NON-PARTICIPATING

FEDERAL SEGREGATION (if more than one Funding Source or P.I.P. type)
☑ CCO FUNDED PER CONTRACT ☐ CCO FUNDED AS FOLLOWS

FEDERAL FUNDING SOURCE	PERCENT

CCO: 98	Suppl. No. 0	Contract No. 04 - 012024	Road 04-SF,Ala-80-13.9/14.3,0.0/1.6	FED. AID LOC.: ACIM-080-1(085)8N

Description of work to be done, estimate of quantities and prices to be paid. (Segregate between additional work at contract price, agreed price and force account.) Unless otherwise stated, rates for rental of equipment cover only such time as equipment is actually used and no allowance will be made for idle time. This last percentage shown is the net accumulated increase or decrease from the original quantity in the Engineer's Estimate.

Adjustment of Compensation at Lump Sum:

Replace Section 10-1.24A, "Marine Pile Driving Energy Attenuator," of the Contract Special Provisions for the SFOBB - East Span Skyway, Bridge Nos. 34-0006L/R with the revised specification section attached herin as pages 2 through 4 of this change order.

The Contractor agrees *to* credit the State an agreed lump sum of $80,000.00 for this change. This sum constitutes full compensation, including all markups, for this change.

Estimated cost of Adjustment of Compensation at Lump Sum .....($80,000.00)

Estimated Cost: **Increase** ☐ **Decrease** ☑ **($80,000.00)**

By reason of this order the time of completion will be adjusted as follows: 0 days

Submitted by		
Signature	**Resident Engineer:** COE D.	Date 6-1-04
Approval Recommended by		
Signature	**Construction Engineer:** COE D.	Date 6-1-04
Engineer Approval by		
Signature	(Print name and title) PETER SIEGENTHALER - Chief	Date

Contractor Acceptance by		
Signature	(Print name and title) A.T. Skoro, Project Director	Date 6-15-04

STATE OF CALIFORNIA - DEPARTMENT OF TRANSPORTATION

CONTRACT CHANGE ORDER MEMORANDUM

DATE: 5/27/2004

TO: PETERSIEGENTHALER / COE D.	FILE: **E.A.** 04 - 012024
FROM: COED.	**CO-RTE-PM** 04-SF,Ala-80-13.9/14.3,0.0/1.6
	FED. NO. ACIM-080-1(085)8N
CCO#: 98 | SUPPLEMENT#: 0 | Category Code: **CXSA**	CONTINGENCY BALANCE (incl. this change) **$6,505,794.96**
COST: ($80,000.00) INCREASE ☐ DECREASE ☑	HEADQUARTERS APPROVAL REQUIRED? ☐ YES ☐ NO
SUPPLEMENTAL FUNDS PROVIDED: $0.00	IS THIS REQUEST IN ACCORDANCE WITH ENVIRONMENTAL DOCUMENTS? ☑ YES ☐ NO
CCO DESCRIPTION: Revise MPDEA (Bubble Curtain)	**PROJECT DESCRIPTION:** REPLACESFOBBEASTSPAN

LOCATION: IN SAN FRANCISCO AND ALAMEDA COUNTIES IN SAN FRANCISCO AND OAKLAND FROM 1.3 KM EAST OF THE YERBA BUENA ISL

THIS CHANGE ORDER PROVIDES FOR:

revising Section 10-1.24A, "Marine Pile Driving Energy Attenuator" of the Special Provisions, to incorporate new improvements in the attenuator (bubble curtain) design that were obtained from work done after the Skyway Project bid. This CCO also provides a mechanism to properly evaluate the new attenuator's performance.

Improvements in attenuator technology design have led to improvements in mitigating the effects of the hydroacoustic noise on the various species of marine mammals and fish. In addition, the State will achieve a cost savings due to the reduced air requirements of the new design. These changes include:

1. Increasing the number of layers of aeration pipe to provide a more complete air bubble coverage of the pile during operations when there is a current. This also helps to provide a more consistent bubble size in the water column.
2. Reducing the required diameter of the rings and the bubble flux from 3.0 to 2.0 cubic meters per minute per linear meter of pipe.
   -Because the diameter of the rings around the piles are much smaller and there are more layers in the vertical plane around the pile, the amount of air in the annular space around the pile can be reduced while improving sound attenuation.
   -Results of the pile driving operations at the Benicia-Martinez Bridge proved that initiating the bubbles closer to the pile separates the pile from the water column which further reduces the amount of energy that can propagate into the water and improves the effectiveness of the bubble curtain in reducing the environmental impact.
3. Requiring the Contractor to conduct a performance test prior to any pile driving operations and to submit an inspection/performance report within 72 hours following the performance test. This requirement was put in place to confirm the calculated pressures and flow rates at each manifold ring. The data for the report shall be generated electronically in the form of a graphical plot showing the variation of the meter readings with time. This data will be verified by the Engineer and used as the baseline for failure criteria.
4. Adding a failure criteria to define the success of the system. The failure criteria is based upon 90% of the flow meter results demonstrated in the performance test. Also, each manufacturer has specific requirements on how their flow meters should be installed in order to accurately measure laminar or non-laminar flow. This CCO requires that the Contractor install the meters in accordance with the manufacturer's recommendations.

These revised specifications were developed in cooperation with Mara Melandry, District 04 Toll Bridge Environmental. Mara Melandry provided concurrence with this change order via email on 9/24/03.

The State will receive a credit for the agreed lump sum amount of $80,000.00. This sum constitutes full and complete compensation, including all markups for this change. A cost estimate is in the project files.

This additional work will not affect the overall project schedule, therefore no additional contract time will be granted for this change order.

FHWA concurrence was obtained from Nancy Bobb on 5/28/04 via email. Maintenance concurrences is not required as this does not affect maintenance of the structure.

CONCURRED BY:

Construction Engineer:	Douglas Coe	Date 6-2-04
Bridge Engineer		Date
FHWA Representative:	Nancy Bobb	Date 5/28/2004
Project Engineer:		Date
Other (specify): Mara Melandtv. Toll Bridae Environmental		Date 9/24/2003
		Date
		Date
District Prior Approval By		Date
HQ (Issue Approve) By		Date
Resident Engineer's Signature:		Date 6-2-04

ESTIMATE OF COST

	THIS REQUEST	TOTAL TO DATE
ITEMS	$0.00	$0.00
FORCE ACCOUNT	$0.00	$0.00
AGREED PRICE	$0.00	$0.00
ADJUSTMENT	($80,000.00)	($80,000.00)
TOTAL	($80,000.00)	($80,000.00)

FEDERAL PARTICIPATION

☑ PARTICIPATING ☐ PARTICIPATING IN PART ☐ NONE
☐ NON-PARTICIPATING (MAINTENANCE) ☐ NON-PARTICIPATING

FEDERAL SEGREGATION (if more than one Funding Source cr P.I.P. type)
☑ CCO FUNDED PER CONTRACT ☐ CCO FUNDED AS FOLLOWS

FEDERAL FUNDING SOURCE PERCENT

STATE OF CALIFORNIA - DEPARTMENT OF TRANSPORTATION

CONTRACT CHANGE ORDER MEMORANDUM

TO: PETER SIEGENTHALER / COE D.	FILE: **E.A.** 04 - 012024
	CO-RTE-PM 04-SF,Ala-80-13.9/14.3,0.0/1.6
FROM: COED.	**FED. NO.** ACIM-080-1(085)8N
CCO#: **99** SUPPLEMENT#: **0** Category Code: **CHPA**	CONTINGENCY BALANCE (incl. this change) **$25,592,784.45**
COST: **$2,800,000.00** INCREASE ☑ DECREASE ☐	HEADQUARTERS APPROVAL REQUIRED? ☑ YES ☐ NO
SUPPLEMENTAL FUNDS PROVIDED: **$0.00**	IS THIS REQUEST IN ACCORDANCE WITH ENVIRONMENTAL DOCUMENTS? ☑ YES ☐ NO
CCO DESCRIPTION: Pier Table Composite Drawings	**PROJECT DESCRIPTION:** REPLACE SFOBB EAST SPAN

LOCATION: IN SAN FRANCISCO AND ALAMEDA COUNTIES IN SAN FRANCISCO AND OAKLAND FROM 1.3 KM EAST OF THE YERBA BUENA ISL

THIS CHANGE ORDER PROVIDES FOR:

the Contractor to produce composite pier table drawings for Bridge Nos. 34-0006 L/R and submit the completed drawings to the Engineer for approval. This work is being performed on-site at Pier 7, in trailers known as the "Mission Control" office.

The Special provisions do not require composite placing drawings for the pier tables. It has been identified that the pier tables are highly congested sections with bar reinforcing steel, prestress ducting, electrical/mechanical conduits, and other embeds. Further, in excess of a hundred RFI's have been recieved from the Contractor identifying conflicts. To mitigate these conflicts, some embeds have to be moved in excess of 0.5M. In order to provide the Engineer with documentation of said mitigation for review and approval, prior to actual construction, it is necessary to require the Contractor to submit composite placing drawings for each individual pier table. These drawings will be to scale and in sufficient detail to show the relative positions of all items that are to be embedded in the concrete and their embedment depth. In addition, these drawings shall show enough detail to ensure that there will be no conflict between the planned positions of any embedded items, and that the concrete cover will be adequate.

The cost to furnish composite placing drawings for all Pier Tables will be reimbursed as Extra Work at Force Account in accordance with Section 4-1.03D, "Extra Work," and Section 9-1.03, "Force Account Payment," of the Standard Specifications and Section 5-1.21, "Force Account Payment," of the Special Provisions. As Contract Change Order No. 12, "Pier Table Mockup," compensated the contractor for only producing a partial composite drawing for Pier Table E I2E, this change will pay for the additional costs to complete that drawing.

On a weekly basis, the Contractor's representative and the Department's representative shall determine and agree on the additional construction engineering and the corresponding labor hours required to resolve and implement the solutions to these issues and costs for the production of composite pier table drawings.

This change provides for compensating the contractor for the extra work involved in producing the pier table composite placing drawings. Compensation will be extra work at force account at an estimated cost of $2,850,600.00, which can be financed from the contingency funds provided for this contract. The estimated value is based on the projected cost to produce the pier table composite placing drawings for each pier. There are 28 piers that will require the production of composite placing drawings. The contractor's estimated cost per pier is approximately $102,000.00.

Although the pier table composite drawings were not a contractual requirement, the Contractor had planned to produce composite drawings solely as an aid to construction. The Contractor has set aside $50,600.00 to produce these composite drawings. By the Engineer requiring the Contractor to produce and submit all the pier table composite drawings, the Contractor will return to the State a lump sum credit of $50,600.00. The Contractor submitted documentation supporting the amount of this credit. It has been verified and placed in the project file. A copy of the document is attached for reference.

Brian Maroney, Technical Project Manager, is in concurrence with this change. Mr. Maroney provided concurrence via an electronic message dated August 14, 2003. A copy of this message is attached.

Ms. Nancy Bobb, FHWA Bay Bridge Project Manager, provided Prior Approval via an electronic message on January 6, 2004. A printed copy of the prior approval provided by Ms. Bobb is attached.

Janet Adams, Toll Bridge Region Project Manager, is in concurrence with this change. Ms Adams provided concurrence via an electronic message on December 23, 2003. A copy of the message providing concurrence from Ms. Adams is attached.

District Prior Approval was obtained by Pete Siegenthaler on August 26, 2003. A copy of the prior approval form is included.

Maintenance concurrence is not required.

The determination of any adjustment to contract time will be deferred until the completion of work associated with this change.

CONCURRED BY:		
Construction Engineer:	Douglas Coe	Date 2-6-04
Bridge Engineer:		Date
FHWA Representative:	Nancy Bobb	Date 1/6/2004
Project Engineer:	Brian Maroney	Date8/14/2003
Other (specify): Janet Adams		Date 12/23/03
		Date
		Date
District Prior Approval By:	Peter Siegenthaler	Date8/26/2003
HQ (Issue Approve) By:	Patrick Bockari	Date10/3/2003
Resident Engineer's Signature:		Date 2-6-04

ESTIMATE OF COST

	THIS REQUEST	TOTAL TO DATE
ITEMS	$0.00	$0.00
FORCE ACCOUNT	$2,850,600.00	$2,850,600.00
AGREED PRICE	$0.00	$0.00
ADJUSTMENT	($50,600.00)	($50,600.00)
TOTAL	$2,800,000.00	$2,800,000.00

FEDERAL PARTICIPATION

☐ PARTICIPATING ☐ PARTICIPATING IN PART ☐ NONE
☐ NON-PARTICIPATING(MAINTENANCE) ☐ NON-PARTICIPATING

FEDERAL SEGREGATION (if more than one Funding Source or P.I.P. type)
☑ CCO FUNDED PER CONTRACT ☐ CCO FUNDED AS FOLLOWS

FEDERAL FUNDING SOURCE	PERCENT

STATE OF CALIFORNIA - DEPARTMENT OF TRANSPORTATION

CONTRACT CHANGE ORDER

Change Requested by Engineer

CCO: 99 | **Suppl. No. 1** **Contract No 04 - 012024** | **Road** 04-SF,Ala-80-13.9/14.3,0.0/1.6 **FED. AID LOC.:** ACIM-080-1(085)8N

To: **KIEWIT / FCI IMANSON a JV**

You are directed io make the following changes from the plans and specifications *or* do the *following* described work not included *in* the plans and *specifications for this contract* **NOTE: This change order is not effective until approved *by the* Engineer.**

Description of work to be done, estimate of quantities and prices to be paid. (Segregate between additional work at contract price, agreed price and force account.) Unless otherwise stated, rates for rental of equipment cover only such time as equipment is actually used and no allowance will be made for idle time This last percentage shown is the net accumulated increase or decrease from the original quantity in the Engineer's Estimate.

Extra Work at Force Account:

Provide additional funds .....$1,543,000.00.

Consideration of time adjustment and related impacts shall be deferred until completion of the work specified in this contract change order.

Adiustment of Compensation at Lump Sum:

The State will accept a Lump Sum payment of $43,000.00 as a credit from the Contractor for the estimated value of producing shop drawings for the pier tables and closures.

Adjustment of Compensation at Agreed Lump Sum ..... ($43,000.00).

Estimated Cost: **Increase** ☑ **Decrease** ☐ $1,500,000.00

By reason of this order the time of completion will be adjusted as follows: Deferred

Submitted by

Signature	Resident Engineer: DOUG COE, Supervising Br. Eng.	Date 2-11-05

Approval Recommended by

Signature	Construction Engineer: DOUG COE, Supervising Br. Eng.	Date 2-11-05

Engineer Approval by

Signature	(Print name and title) PETER SIEGENTHALER - Chief	Date 2-17-05

We the undersigned contractor, have given careful consideration to the change proposed and agree, if this proposal is approved, that we will provide all equipment, furnish the materials, except as may otherwise be noted above, and perform all services necessary for the work above specified, and will accept as full payment therefor the prices shown above

NOTE: If you, the contractor, do not sign acceptance of this order, your attention is directed to the requirements of the specifications as to proceeding with the ordered work and filing a written protest within the time therein specified.

Contractor Acceptance by

Signature	(Print name and title) Chris Villa, Deputy Project Director	Date 2-15-05

STATE OF CALIFORNIA - DEPARTMENT OF TRANSPORTATION

CONTRACT CHANGE ORDER MEMORANDUM

DATE 1/10/2005

TO PETER SIEGENTHALER / DOUG COE Supervising Br Eng

FROM DOUG COE, Supervising Br Eng

FILE E.A. 04 . 012024

CO-RTE-PM 04-SF Ala-80-13 9/14 3,G 0/1 6

FED. NO. ACIM-080-1(085)8N

CCO# 99 | SUPPLEMENT# 1 | Category Code CHPA

CONTINGENCY BALANCE (incl this change) $59,997,778.96

COST: $1,500,000.00 INCREASE ☑ DECREASE ☐

HEADQUARTERS APPROVAL REQUIRED? ☑ YES ☐ NO

SUPPLEMENTAL FUNDS PROVIDED: $0.00

IS THIS REQUEST IN ACCORDANCE WITH ENVIRONMENTAL DOCUMENTS? ☑ YES ☐ NO

CCO DESCRIPTION:
Pier Table Composite Drawings

PROJECT DESCRIPTION:
REPLACE SF0BB EAST SPAN

LOCATION: IN SAN FRANCISCO AND ALAMEDA COUNTIES IN SAN FRANCISCO AND OAKLAND FROM 1.3 KM EAST OF THE YERBA BUENA ISL

THIS CHANGE ORDER PROVIDES FOR:
additional funds for the Contractor to produce pier table composite placing drawings for Bridge Nos. 34-0006 L/R and submit the completed drawings to the Engineer for approval This work is being performed on-site at Pier 7, in trailers known as the "Mission Control" office.

The Special Provisions do not require composite placing drawings for the pier tables. It has been identified that the pier tables are highly congested sections with bar reinforcing steel, prestress ducting, electrical/mechanical conduits, and other embeds. Further, in excess of a hundred RFI's have been received from the Contractor identifying conflicts. To mitigate these conflicts, some embeds have to be moved in excess of 0.5M. In order to provide the Engineer with documentation of said mitigation for review and approval, prior to actual construction, it is necessary to require the Contractor to submit composite placing drawings for each individual pier table. These drawings will be to scale and in sufficient detail to show the relative positions of all items that are to be embedded in the concrete and their embedment depth. In addition, these drawings shall show enough detail to ensure that there will be no conflict between the planned positions of any embedded items, and that the concrete cover will be adequate.

The cost to furnish pier table composite placing drawings will be reimbursed as Extra Work at Force Account in accordance with Section 4-1.03D, "Extra Work," and Section 9-1.03, "Force Account Payment," of the Standard Specifications and Section 5-1.21, "Force Account Payment," of the Special Provisions. The estimated cost increase at force account for CCO 99 Supplement 1 is $1,543,000.00, which can be financed from the contingency funds provided for this contract. The initial estimated value is $102,000.00 per pier, while the actual average value, based on the completed pier table composite placing drawings to date, is $156,000.00 per pier. Currently the Contractor has completed 64% of all pier table composite placing drawings. This supplement is to compensate the Contractor to complete the remaining pier table composite placing drawings. The contract drawings will be revised to reflect the completed pier table composite placing drawings. The additional cost to perform the work in accordance with the revised contract drawings will be covered under Contract Change Order No. 74, "Revised Pier and Pier Table Drawings."

The Contractor's sub-contractor had planned to use the same pier table composite placing drawings as an aid to construction. In return the Contractor's sub-contractor paid the Contractor an amount of $93,600.00. In CCO 99, the Contractor has returned to the State a lump sum credit of $50,600.00. The balance of $43,000.00 will be included in CCO 99 Supplement 1 as additional credit to the State. The documentation supporting the amount of this credit has been placed in the project file. The determination of any adjustment to contract time will be deferred until the completion of work associated with this change.

Brian Maroney, Technical Project Manager, is in concurrence with the original change order. Mr. Maroney provided his concurrence via an electronic message dated August 14, 2003. Nancy Bobb, FHWA Bay Bridge Project Manager, provided concurrence on January 07, 2005. Janet Adams, Toll Bridge Region Project Manager, is in concurrence with this change. Ms. Adams provided concurrence on January 20, 2005. Maintenance concurrence is not required because this extra work is not related to any permanent Caltrans facility. A copy of the concurrences referenced is attached.

RECEIVED
033607 FEB 18

CONCURRED BY:

Construction Engineer	Douglas Coe	DBC	Date 1/10/2005
Bridge Engineer	Douglas Coe	DBC	Date 1/10/2005
FHWA Representative	Nancy Bobb		Date 1/7/2005
Project Engineer			Date
Other (specify)'			Date
	Janet Adams		Date 1/28/05
			Date
District Prior Approval By:			Date
HQ (Issue Approve) By:	Ken Dinsby		Date 1/14/05
Resident Engineer's Signature:			Date 1-28-05

ESTIMATE OF COST

	THIS REQUEST	TOTAL TO DATE
ITEMS	$0.00	$0 00
FORCE ACCOUNT	$1,543,000.00	$4,393,600 00
AGREED PRICE	$0.00	$0.00
ADJUSTMENT	($43,000.00)	($93,600 00)
TOTAL	$1,500,000 00	$4,300,000.00

FEDERAL PARTICIPATION

☑ PARTICIPATING ☐ PARTICIPATING IN PART ☐ NONE
☐ NON-PARTICIPATING (MAINTENANCE) ☐ NON-PARTICIPATING

FEDERAL SEGREGATION (if more than one Funding Source or P I P type)
☑ CCO FUNDED PER CONTRACT ☐ CCO FUNDED AS FOLLOWS

FEDERAL FUNDING SOURCE	PERCENT

STATE OF CALIFORNIA - DEPARTMENT OF TRANSPORTATION

CONTRACT CHANGE ORDER

Change Requested by: Engineer

CCO: 99 | Suppl. No. 2 | Contract No. 04 - 012024 | Road 04-SF,Ala-80-13.9/14.3,0.0/1.6 | FED. AID LOC.: ACIM-080-1(085)8N

To: KIEWIT / FCI / MANSON a JV

You are directed to make the following changes from the plans and specifications or do the following described work not included in the plans and specifications for this contract. ***NOTE: This change order is not effective until approved by the Engineer.***

Description of work to be done, estimate of quantities and prices to be paid. (Segregate between additional work at contract price, agreed price and force account.) Unless otherwise stated, rates for rental of equipment cover only such time as equipment is actually used and no allowance will be made for idle time. This last percentage shown is the net accumulated increase or decrease from the original

Adjustment of Compensation at Lump Sum:

This change order shall close the deferred time element of Contract Change Order No. 99, Supplement Nos. 0 and 1, for the SFOBB East Span Skyway, Bridge No. 34-0006L/R.

Full compensation to the Contractor, including mark ups for all direct and indirect costs, all associated project impacts, all overhead costs, and any and all risks associated with this work are included in the lump sum payment of CCO No. 200 and no further payment will be made as a result of this CCO.

Estimated Cost: Increase ☐ Decrease ☐

By reason of this order the time of completion will be adjusted as follows: 0 days

Submitted by

Signature	Resident Engineer: DOUG COE, Supervising Br. Eng.	Date 8-24-06

Approval Recommended by

Signature	Construction Engineer: DOUG COE, Supervising Br. Eng.	Date 8-24-06

Engineer Approval by

Signature	(Print name and title) PETER SIEGENTHALER - Chief	Date

We the undersigned contractor, have given careful consideration to the change proposed and agree, if this proposal is approved, that we will provide all equipment, furnish the materials, except as may otherwise be noted above, and perform all services necessary for the work above specified, and will accept as full payment therefor the prices shown above.

NOTE: If you, the contractor, do not sign acceptance of this order, your attention is directed to the requirements of the specifications as to proceeding with the ordered work and filing a written protest within the time therein specified.

Contractor Acceptance by

Signature	(Print name and title) Lee Zink, Project Director	Date 9/5/06

STATE OF CALIFORNIA - DEPARTMENT OF TRANSPORTATION

CONTRACT CHANGE ORDER MEMORANDUM

DATE: 12/1 /2005 Page 1 of 1

TO: PETER SIEGENTHALER / DOUG COE, Supervising Br. Eng.	FILE: E.A. 04 - 012024
FROM: DOUG COE, Supervising Br. Eng.	CO-RTE-PM 04-SF,Ala-80-13.9/14.3,0.0/1.6
	FED. NO. ACIM-080-1(085)8N
CCO# 99 SUPPLEMENT#: 2 Category Cod CHPA	CONTINGENCY BALANCE (incl. this change
COST: INCREASE ☐ DECREASE ☐	HEADQUARTERS APPROVAL REQUIRED? ☑ YES ☐ NO
SUPPLEMENTAL FUNDS PROVIDED: $0.00	IS THIS REQUEST IN ACCORDANCE WITH ENVIRONMENTAL DOCUMENTS? ☑ YES ☐ NO
CCO DESCRIPTION: Pier Table Composite Drawings	**PROJECT DESCRIPTION:** REPLACE SFOBB EAST SPAN

LOCATION: IN SAN FRANCISCO AND ALAMEDA COUNTIES IN SAN FRANCISCO AND OAKLAND FROM 1.3 KM EAST OF THE YERBA BUENA ISL

THIS CHANGE ORDER PROVIDES FOR:

closing out the deferred time element of Contract Change Order No. 99, "Pier Table Composite Drawings", Supplement Nos. 0 and 1.

The work has been completed. The Engineer and the Contractor agree that there were no impacts to the controlling operation of work. The time element of this change order is therefore resolved.

For this change order, the Engineer and the Contractor agree that there are no costs to either the State or the Contractor, and that this change order results in a zero cost adjustment.

Resolution of this contract change order is included in the resolution CCO No. 200.

Mr. Jon Tapping, Acting SFOBB Toll Bridge Project Manager, concurs with this change order. Mr. Tapping provided concurrence via electronic message on December 16, 2005. A copy of the concurrence provided by Mr. Tapping is attached.

Mr. Pete Siegenthaler, SFOBB Construction Manager, concurs with this change. A copy of the concurrence signed by Mr. Siegenthaler on December 15, 2005, is attached.

Prior Approval was obtained from Ms. Nancy Bobb, FHWA Bay Bridge Project Manager, via electronic message on December 20, 2005. A printed copy of the prior approval provided by Ms. Bobb is attached.

Concurrence from Maintenance is not required as this change order does not use maintenance funds or affect maintenance facilities or operations.

A determination has been made that no time adjustment is warranted for this change as it does not affect the controlling operation.

CONCURRED BY:

Construction Engineer:	Douglas Coe	Date 2-24-06
Bridge Engineer:	Douglas Coe	Date
FHWA Representative:	Nancy Bobb	Date
Project Engineer:		Date
Other (specify):		Date
		Date
		Date
District Prior Approval By:		Date
HQ (Issue Approve) By:		Date
Resident Engineer's Signature:		Date 2-24-06

ESTIMATE OF COST

	THIS REQUEST	TOTAL TO DATE
ITEMS	$0.00	$0.00
FORCE ACCOUNT	$0.00	
AGREED PRICE	$0.00	$0.00
ADJUSTMENT	$0.00	
TOTAL	$0.00	

FEDERAL PARTICIPATION

☑ PARTICIPATING ☐ PARTICIPATING IN PART ☐ NONE
☐ NON-PARTICIPATING (MAINTENANCE) ☐ NON-PARTICIPATING

FEDERAL SEGREGATION (if more than one Funding Source or P.I.P. type)
☑ CCO FUNDED PER CONTRACT ☐ CCO FUNDED AS FOLLOWS

FEDERAL FUNDING SOURCE	PERCENT

STATE OF CALIFORNIA - DEPARTMENT OF TRANSPORTATION

CONTRACT CHANGE ORDER MEMORANDUM

TO: PETER SIEGENTHALER / COE D.	FILE: **E.A.** 04 - 012024
	CO-RTE-PM 04-SF,Ala-80-13.9/14.3,0.0/1.6
FROM: COED.	**FED. NO.** ACIM-080-1(085)8N
CCO#: **99** SUPPLEMENT#: **0** Category Code: **CHPA**	CONTINGENCY BALANCE (incl. this change) **$25,592,784.45**
COST: **$2,800,000.00** INCREASE ☑ DECREASE ☐	HEADQUARTERS APPROVAL REQUIRED? ☑ YES ☐ NO
SUPPLEMENTAL FUNDS PROVIDED: **$0.00**	IS THIS REQUEST IN ACCORDANCE WITH ENVIRONMENTAL DOCUMENTS? ☑ YES ☐ NO
CCO DESCRIPTION: Pier Table Composite Drawings	**PROJECT DESCRIPTION:** REPLACE SFOBB EAST SPAN

LOCATION: IN SAN FRANCISCO AND ALAMEDA COUNTIES IN SAN FRANCISCO AND OAKLAND FROM 1.3 KM EAST OF THE YERBA BUENA ISL

THIS CHANGE ORDER PROVIDES FOR:

the Contractor to produce composite pier table drawings for Bridge Nos. 34-0006 L/R and submit the completed drawings to the Engineer for approval. This work is being performed on-site at Pier 7, in trailers known as the "Mission Control" office.

The Special provisions do not require composite placing drawings for the pier tables. It has been identified that the pier tables are highly congested sections with bar reinforcing steel, prestress ducting, electrical/mechanical conduits, and other embeds. Further, in excess of a hundred RFI's have been recieved from the Contractor identifying conflicts. To mitigate these conflicts, some embeds have to be moved in excess of 0.5M. In order to provide the Engineer with documentation of said mitigation for review and approval, prior to actual construction, it is necessary to require the Contractor to submit composite placing drawings for each individual pier table. These drawings will be to scale and in sufficient detail to show the relative positions of all items that are to be embedded in the concrete and their embedment depth. In addition, these drawings shall show enough detail to ensure that there will be no conflict between the planned positions of any embedded items, and that the concrete cover will be adequate.

The cost to furnish composite placing drawings for all Pier Tables will be reimbursed as Extra Work at Force Account in accordance with Section 4-1.03D, "Extra Work," and Section 9-1.03, "Force Account Payment," of the Standard Specifications and Section 5-1.21, "Force Account Payment," of the Special Provisions. As Contract Change Order No. 12, "Pier Table Mockup," compensated the contractor for only producing a partial composite drawing for Pier Table E I2E, this change will pay for the additional costs to complete that drawing.

On a weekly basis, the Contractor's representative and the Department's representative shall determine and agree on the additional construction engineering and the corresponding labor hours required to resolve and implement the solutions to these issues and costs for the production of composite pier table drawings.

This change provides for compensating the contractor for the extra work involved in producing the pier table composite placing drawings. Compensation will be extra work at force account at an estimated cost of $2,850,600.00, which can be financed from the contingency funds provided for this contract. The estimated value is based on the projected cost to produce the pier table composite placing drawings for each pier. There are 28 piers that will require the production of composite placing drawings. The contractor's estimated cost per pier is approximately $102,000.00.

Although the pier table composite drawings were not a contractual requirement, the Contractor had planned to produce composite drawings solely as an aid to construction. The Contractor has set aside $50,600.00 to produce these composite drawings. By the Engineer requiring the Contractor to produce and submit all the pier table composite drawings, the Contractor will return to the State a lump sum credit of $50,600.00. The Contractor submitted documentation supporting the amount of this credit. It has been verified and placed in the project file. A copy of the document is attached for reference.

Brian Maroney, Technical Project Manager, is in concurrence with this change. Mr. Maroney provided concurrence via an electronic message dated August 14, 2003. A copy of this message is attached.

Ms. Nancy Bobb, FHWA Bay Bridge Project Manager, provided Prior Approval via an electronic message on January 6, 2004. A printed copy of the prior approval provided by Ms. Bobb is attached.

Janet Adams, Toll Bridge Region Project Manager, is in concurrence with this change. Ms Adams provided concurrence via an electronic message on December 23, 2003. A copy of the message providing concurrence from Ms. Adams is attached.

District Prior Approval was obtained by Pete Siegenthaler on August 26, 2003. A copy of the prior approval form is included.

Maintenance concurrence is not required.

The determination of any adjustment to contract time will be deferred until the completion of work associated with this change.

CONCURRED BY:		
Construction Engineer:	Douglas Coe	Date 2-6-04
Bridge Engineer:		Date
FHWA Representative:	Nancy Bobb	Date 1/6/2004
Project Engineer:	Brian Maroney	Date8/14/2003
Other (specify): Janet Adams		Date 12/23/03
		Date
		Date
District Prior Approval By:	Peter Siegenthaler	Date8/26/2003
HQ (Issue Approve) By:	Patrick Bockari	Date10/3/2003
Resident Engineer's Signature:		Date 2-6-04

ESTIMATE OF COST

	THIS REQUEST	TOTAL TO DATE
ITEMS	$0.00	$0.00
FORCE ACCOUNT	$2,850,600.00	$2,850,600.00
AGREED PRICE	$0.00	$0.00
ADJUSTMENT	($50,600.00)	($50,600.00)
TOTAL	$2,800,000.00	$2,800,000.00

FEDERAL PARTICIPATION

☐ PARTICIPATING ☐ PARTICIPATING IN PART ☐ NONE
☐ NON-PARTICIPATING(MAINTENANCE) ☐ NON-PARTICIPATING

FEDERAL SEGREGATION (if more than one Funding Source or P.I.P. type)
☑ CCO FUNDED PER CONTRACT ☐ CCO FUNDED AS FOLLOWS

FEDERAL FUNDING SOURCE	PERCENT

CONTRACT CHANGE ORDER

Change Requested by: Engineer

CCO: 100	Suppl. No. 0	Contract No. 04 - 012024	Road 04-SF,Ala-80-13.9/14.3,0.0/1.6	FED. AID LOC.: ACIM-080-1(085)8N

To: **KIEWIT / FCI / MANSON a JV**

You are directed *to* make the following changes from the plans and specifications or *do* the following described work *not* included in the plans and *specifications for this contract.* **NOTE: This change order is *not* effective until approved *by the* Engineer.**

Description of work to be done, estimate of quantities and prices to be paid. (Segregate between additional work at contract price, agreed price and force account.) Unless otherwise stated, rates for rental of equipment cover only such time as equipment is actually used and no allowance will be made for idle time. This last percentage shown is the net accumulated increase or decrease from the original quantity in the Engineer's Estimate.

Adjustment of Compensation at Lump Sum:

Revise the dimensions for the sign support and modify the bar reinforcing steel detail for the luminaire sign support base as shown on sheets 2 and 3 of this change.

The revised contract plans reflecting this change are 876R2 and 878R2 of 978.

For this work, there shall be no cost or credit to the State by reason of this change. This agreement constitutes full compensation to the Contractor, including mark ups for all direct and indirect costs, all associated project impacts, Time Related Overhead expenses, and any and all risks associated with this work.

Cost of Adjustment of Compensation at agreed Lump Sum $0.00

Estimated Cost: **Increase** ☐ **Decrease** ☐ **$0.00**

By reason of this order the time of completion will be adjusted as follows: 0 days

Submitted by

Signature	Resident Engineer: COE D.	Date 3-3-04

Approval Recommended by

Signature	Construction Engineer: COE D.	Date 3-3-04

Engineer Approval by

Signature	(Print name and title) PETER SIEGENTHALER - Chief	Date

We the undersigned contractor, have given careful consideration to the change proposed and agree, if this proposal is approved, that we will provide all equipment, furnish the materials, except as may otherwise be noted above, and perform all services necessary for the work above specified, and will accept as full payment therefor the prices shown above

NOTE: If you, the contractor, do not sign acceptance of this order, your attention is directed to the requirements of the specifications as to proceeding with the ordered work and filing a written protest within the time therein specified.

Contractor Acceptance by

Signature	(Print name and title) A.T. Skoro, Project Director	Date 6-7-04

STATE OF CALIFORNIA - DEPARTMENT OF TRANSPORTATION

CONTRACT CHANGE ORDER MEMORANDUM

DATE: 3/3/2004

TO: PETERSIEGENTHALER / COE D.

FROM: COED.

FILE: **E.A.** 04 - 012024
CO-RTE-PM 04-SF,Ala-80-13.9/14.3,0.0/1.6
FED. NO. ACIM-080-1(085)8N

CCO#: **100** | SUPPLEMENT#: **0** | Category Code: **CHPA**

CONTINGENCY BALANCE (incl. this change) **$23,189,810.67**

COST: **$0.00** INCREASE [I] DECREASE ☐

HEADQUARTERS APPROVAL REQUIRED? ☐ YES ☑ NO

SUPPLEMENTAL FUNDS PROVIDED: **$0.00**

IS THIS REQUEST IN ACCORDANCE WITH ENVIRONMENTAL DOCUMENTS? ☑ YES ☐ NO

CCO DESCRIPTION:
Sign/Luminare Support Details

PROJECT DESCRIPTION:
REPLACESFOBBEASTSPAN

The Engineer has performed an analysis and has determined that this change results in a zero cost adjustment. This analysis is on file in the project records.

CONCURRED BY:

Construction Engineer: Douglas Coe	Date 3-3-04
Bridge Engineer:	Date 6-8-04
FHWA Representative	Date
Project Engineer	Date
Other (specify) Hasan El-Natur	Date 2/3/2004
	Date
	Date
District Prior Approval By: Pete Siegenthaler	Date2/27/2004
HQ (Issue Approve) By:	Date
Resident Engineer's Signature:	Date 3-3-04

ESTIMATE OF COST

ITEMS	THIS REQUEST	TOTAL TO DATE
AGREED PRICE	$0.00	$0.00
ADJUSTMENT	$0.00	$0.00
TOTAL	$0.00	$0.00

FEDERAL PARTICIPATION

☑ PARTICIPATING ☐ PARTICIPATING IN PART ☐ NONE
☐ NON-PARTICIPATING (MAINTENANCE) ☐ NON-PARTICIPATING

FEDERAL SEGREGATION (if more than one Funding Source or P.I.P. type)
☑ CCO FUNDED PER CONTRACT ☐ CCO FUNDED AS FOLLOWS

CCO: 102	Suppl. No. 0	Contract No. 04 - 012024	Road 04-SF,Ala-80-13.9/14.3,0.0/1.6	FED. AID LOC.: ACIM-080-1(085)8N

To: **KIEWIT / FCI / MANSON a JV**

You are directed *to* make *the* following changes *from* the plans and specifications or do the following described work not included in the plans and specifications for this contract. ***NOTE: This change order is not effective until approved by the Engineer.***

Description of work to be done, estimate of quantities and prices to be paid. (Segregate between additional work at contract price, agreed price and force account.) Unless otherwise stated, rates for rental of equipment cover only such time as equipment is actually used and no allowance will be made for idle time. This last percentage shown is the net accumulated increase or decrease from the original quantity in the Engineer's Estimate.

Extra Work at Lump Sum:

Construct the pier column cage and footing interface for the SFOBB East Span Skyway, Bridge Nos. 34-0006L/R, as shown on revised contract plan sheets 488R2, 489R3, 490R3, and 493R2 of 978 (pages 2 through 5 of this change order).

For this extra work, the Contractor will be paid an agreed lump sum of $62,295.00. This sum constitutes full compensation, including markups, for all direct and indirect costs; all associated project impacts; and Time Related Overhead (TRO) expenses, for this change.

Estimated cost of Extra Work at Lump Sum $62,295.00

Estimated Cost: Increase ☑ **Decrease** ☐ **$62,295.00**

By reason of this order the time of completion will be adjusted as follows: 0 days

Submitted by		
Signature	**Resident Engineer:** COE D.	**Date** 4-30-04
Approval Recommended by		
Signature	**Construction Engineer:** COE D.	**Date** 4-30-04
Engineer Approval by		
Signature	**(Print name and title)** PETER SIEGENTHALER - Chief	**Date**

We the undersigned contractor, have given careful consideration to the change proposed and agree, if this proposal is approved, that we will provide all equipment, furnish the materials, except as may otherwise be noted above, and perform all services necessary for the work above specified, and will accept as full payment therefor the prices shown above.

NOTE: If you, the contractor, do not sign acceptance of this order, your attention is directed to the requirements of the specifications as to proceeding with the ordered work and filing a written protest within the time therein specified.

Contractor Acceptance by		
Signature	**(Print name and title)** A.T. Skoro, Project Director	**Date** 6-15-04

STATE OF CALIFORNIA - DEPARTMENT OF TRANSPORTATION

CONTRACT CHANGE ORDER MEMORANDUM

DATE: 4/30/2004 Page 1 of 1

TO: PETER SIEGENTHALER / COE D.	FILE: **E.A.** 04 - 012024
FROM: COED.	**CO-RTE-PM** 04-SF,Ala-80-13.9/14.3,0.0/1.6
	FED. NO. ACIM-080-1(085)8N
CCO#: **102** SUPPLEMENT#: **0** Category Code: **CHPG**	CONTINGENCY BALANCE (incl. this change) **$22,036,980.94**
COST: **$62,295.00** INCREASE ☑ DECREASE ☐	HEADQUARTERS APPROVAL REQUIRED? ☐ YES ☑ NO
SUPPLEMENTAL FUNDS PROVIDED: **$0.00**	IS THIS REQUEST IN ACCORDANCE WITH ENVIRONMENTAL DOCUMENTS? ☑ YES ☐ **NO**
CCO DESCRIPTION: Remove Column Steel at Footing Interface	**PROJECT DESCRIPTION:** REPLACESFOBBEASTSPAN

The most effective and economical way to install rebar is to continue assembling the columns with all bars, then cut selected bars while installing the footing rebar.

This change compensates the Contractor for the extra work involved in removing the conflicting pier column cage rebar and placing the #43 top slab reinforcing steel. The Contractor agreed to accept a lump sum payment of $62,295.00.

This change order will not affect the overall project schedule, therefore no additional contract time will **be** granted.

A copy of the concurrence memorandum from Doug Coe, Supervising Bridge Engineer, and Pete Siegenthaler, Principal Bridge Engineer, as well as Robert Kobal, Headquarters Reviewer is in the project files.

FHWA and Maintenance concurrences are not required for this change.

CONCURRED BY:

Construction Engineer:	Douglas Coe	Date 4-30-04
Bridge Engineer:	Douglas Coe	Date 4-30-04
FHWA Representative:		Date
Project Engineer:		Date
Other (specify) Phil Lana. TY Lin		Date 8/29/2003
Robert Kobal, HQ CCO Coordinator		Date 9/8/2003
		Date
District Prior Approval By:		Date
HQ (Issue Approve) By:		Date
Resident Engineer's Signature:		Date 4-30-04

ESTIMATE OF COST

	THIS REQUEST	TOTAL TO DATE
ITEMS	$0.00	$0.00
FORCE ACCOUNT	$0.00	$0.00
AGREED PRICE	$62,295.00	$62,295.00
ADJUSTMENT	$0.00	$0.00
TOTAL	$62,295.00	$62,295.00

FEDERAL PARTICIPATION

☑ PARTICIPATING ☐ PARTICIPATING IN PART ☐ NONE
☐ NON-PARTICIPATING (MAINTENANCE) ☐ NON-PARTICIPATING

FEDERAL SEGREGATION (if more than one Funding Source or P.I.P. type)
☑ CCO FUNDED PER CONTRACT ☐ **CCO** FUNDED AS FOLLOWS

FEDERAL FUNDING SOURCE	PERCENT

CONTRACT CHANGE ORDER

Change Requested by: Engineer

CCO: 103	Suppl. No. 0	Contract No. 04 - 012024	Road 04-SF,Ala-80-13.9/14.3,0.0/1.6	FED. AID LOC.: ACIM-080-1(085)8N

To: **KIEWIT / FCI / MANSON a JV**

You are directed to make the following changes from the plans and specifications or do the following described work not included in the plans and specifications for this contract. ***NOTE: This change order is not effective until approved by the Engineer.***

Description of work to be done, estimate of quantities and prices to be paid. (Segregate between additional work at contract price, agreed price and force account.) Unless otherwise stated, rates for rental of equipment cover only such time as equipment is actually used and no allowance will be made for idle time. This last percentage shown is the net accumulated increase or decrease from the original quantity in the Engineer's Estimate.

Extra Work at Force Account:

As authorized by the Engineer, design additional hinge pipe beam temporary supports at locations necessary to eliminate over-stressing the precast segment diaphragms during the installation of the hinge pipe beams for the SFOBB East Span Skyway, Bridge Nos. 34-0006L/R.

The Contractor shall submit shop drawings of the proposed additional hinge pipe beam temporary support system to the Engineer for approval a minimum of three (3) weeks prior to installing the system. The shop drawings shall indicate the locations for the system, any proposed deck penetrations, and calculations demonstrating that there will be no excessive loading sequences that may over-stress the structure. Working drawings for the additional temporary support system shall comply with Section 10-1.44, " Steel Structures," subsection "Pipe Beam Temporary Support System," of the Special Provisions.

Estimated cost of Extra Work at Force Account $150,000.00

Estimated Cost: Increase ☑ Decrease ☐ **$150,000.00**

By reason of this order the time of completion will be adjusted as follows: 0 days

Submitted by

Signature	Resident Engineer: DOUG COE, Supervising Br. Eng.	Date 10-25-05

Approval Recommended by

Signature	Construction Engineer: DOUG COE, Supervising Br. Eng.	Date 10-25-05

Engineer Approval by

Signature	(Print name and title) PETER SIEGENTHALER - Chief	Date

We the undersigned contractor, have given careful consideration to the change proposed and agree, if this proposal is approved, that we will provide all equipment, furnish the materials, except as may otherwise be noted above, and perform all services necessary for the work above specified, and will accept as full payment therefor the prices shown above.

NOTE: If you, the contractor, do not sign acceptance of this order, your attention is directed to the requirements of the specifications as to proceeding with the ordered work and filing a written protest within the time therein specified.

Contractor Acceptance by

Signature	(Print name and title) CHRISTOPHER J. Villa Deputy Project Director	Date 11/28/05

STATE OF CALIFORNIA - DEPARTMENT OF TRANSPORTATION

CONTRACT CHANGE ORDER

Change Requested by: Engineer

CCO: 103 Suppl. No. 1 Contract No. 04 - 012024 Road 04-SF,Ala-80-13.9/14.3,0.0/1.6 FED. AID LOC.: ACIM-080-1 (085)8N

To: KIEWIT / FCI / MANSON a JV

You are directed to make the following changes from the plans and specifications or do the following described work not included in the plans and specifications for this contract. ***NOTE: This change order is not effective until approved by the Engineer.***

Description of work to be done, estimate of quantities and prices to be paid. (Segregate between additional work at contract price, agreed price and force account.) Unless otherwise stated, rates for rental of equipment cover only such time as equipment is actually used and no allowance will be made for idle time. This last percentage shown is the net accumulated increase or decrease from the original

Extra Work at Lump Sum:

furnish additional labor, supervision, equipment, and material, to install and remove the temporary supports at locations necessary to eliminate over-stressing the precast segment diaphragms during the installation of the hinge pipe beams for the SFOBB East Span Skyway, Bridge Nos. 34-0006L/R.

This Contract Change Order resolves all impacts related to the installation of Hinge Pipe Beams B, C, and D, Eastbound and Westbound.

Full compensation, including all markups, for all direct and indirect costs, all associated impact costs, and all overhead costs are included in the lump sum payment of CCO No. 200 and no further payment will be made as a result of this CCO.

Estimated Cost: Increase ☐ Decrease ☐

By reason of this order the time of completion will be adjusted as follows: 0 days

Submitted by

Signature	Resident Engineer: DOUG COE, Supervising Br. Eng.	Date 8-24-06

Approval Recommended by

Signature	Construction Engineer: DOUG COE, Supervising Br. Eng.	Date 8-24-06

Engineer Approval by

Signature	(Print name and title) PETER SIEGENTHALER - Chief	Date

We the undersigned contractor, have given careful consideration to the change proposed and agree, if this proposal is approved, that we will provide all equipment, furnish the materials, except as may otherwise be noted above, and perform all services necessary for the work above specified, and will accept as full payment therefor the prices shown above.

NOTE: If you, the contractor, do not sign acceptance of this order, your attention is directed to the requirements of the specifications as to proceeding with the ordered work and filing a written protest within the time therein specified.

Contractor Acceptance by

Signature	(Print name and title) Lee Zink, Project Director	Date 9/5/06

STATE OF CALIFORNIA - DEPARTMENT OF TRANSPORTATION

CONTRACT CHANGE ORDER MEMORANDUM

TO: PETER SIEGENTHALER / DOUG COE, Supervising Br. Eng.	FILE: E.A. 04 - 012024
FROM: DOUG COE, Supervising Br. Eng.	CO-RTE-PM 04-SF,Ala-80-13.9/14.3,0.0/1.6 FED. NO. ACIM-080-1(085)8N
CCO# **103** SUPPLEMENT#: **1** Category Cod **CHTX**	CONTINGENCY BALANCE (incl. this change
COST: INCREASE ☐ DECREASE ☐	HEADQUARTERS APPROVAL REQUIRED? ☑ YES ☐ NO
SUPPLEMENTAL FUNDS PROVIDED: **$0.00**	IS THIS REQUEST IN ACCORDANCE WITH ENVIRONMENTAL DOCUMENTS? ☑ YES ☐ NO
CCO DESCRIPTION: Pipe Beam Temp. Supports (Installation)	**PROJECT DESCRIPTION:** REPLACE SFOBB EAST SPAN

LOCATION: IN SAN FRANCISCO AND ALAMEDA COUNTIES IN SAN FRANCISCO AND OAKLAND FROM 1.3 KM EAST OF THE YERBA BUENA ISL

THIS CHANGE ORDER PROVIDES FOR:

Furnishing additional labor, supervision, equipment, and material to prevent over-stressing of the hinge segment diaphragms during installation of the hinge pipe beams, for the SFOBB East Span Skyway, Bridge Nos. 34-0006L/R.

During the development of working drawings and supplemental design calculations for the temporary supports for the installation sequence of the hinge pipe beams per Section 10-1.44, "Steel Structures" of the Special Provisions, it was found that the segment diaphragms would be over-stressed during certain stages of the sequence when installed as shown on the contract plans. To eliminate the over-stressing the Contractor was required to design and use an elaborate system of adjustable temporary supports and a hanging support to reduce the load on the segment diaphragms. CCO No. 103 Supplement 0 was issued to compensate the Contractor for the additional engineering effort and to develop a support system.

This change order will compensate the Contractor for the fabrication of specialty equipment and for the fieldwork of installing, adjusting, and removing the specialty equipment to prevent the hinge pipe beam from over-stressing the segment diaphragms during the installation sequence until they are placed in their final position.

The agreed compensation for this contract change order is included in the lump sum compensation portion of resolution CCO No. 200. For this work the Contractor will be compensated an agreed lump sum amount of $305,000.00.

A detailed force account analysis prepared by the Engineer for the cost of this change order is on file in the project records.

Mr. Pete Siegenthaler, SFOBB Construction Manager, Toll Bridge Construction, concurs with this change. A copy of the concurrence signed by Mr. Siegenthaler on September 9, 2003 is attached.

Prior Approval was obtained from Ms. Nancy Bobb, FHWA Bay Bridge Project Manager, via electronic message on July 20, 2006. A printed copy of the prior approval provided by Ms. Bobb is attached.

Mr. Ken Terpstra, SFOBB Toll Bridge Project Manager, concurred with this change order on July 7, 2007.
A copy of the concurrence provided by Mr. Terpstra is attached.

Design concurrence for this contract change order is not required since this supplement only deals with the installation portion of this change.

Maintenance concurrence is not required, as the change reflects only temporary work during construction.

There will be no time adjustment by reason of this contract change order, as this change does not affect the controlling operation.

CONCURRED BY:		
Construction Engineer:	Douglas Coe	Date 8-24-06
Bridge Engineer:	Douglas Coe	Date 8-24-06
FHWA Representative:	Nancy Bobb	Date7/20/2006
Project Engineer:		Date
Other (specify): Ken Terpstra, SFOBB Project Manager		Date 7/7/2006
		Date
		Date
District Prior Approval By:		Date
HQ (Issue Approve) By:	Ken Darby	Date
Resident Engineer's Signature		Date 8-24-06

ESTIMATE OF COST

	THIS REQUEST	TOTAL TO DATE
ITEMS	$0.00	$0.00
FORCE ACCOUNT	$0.00	
AGREED PRICE		
ADJUSTMENT	$0.00	$0.00
TOTAL		

FEDERAL PARTICIPATION

☑ PARTICIPATING ☐ PARTICIPATING IN PART ☐ NONE
☐ NON-PARTICIPATING (MAINTENANCE) ☐ NON-PARTICIPATING

FEDERAL SEGREGATION (if more than one Funding Source or P.I.P. type)
☐ CCO FUNDED PER CONTRACT ☐ CCO FUNDED AS FOLLOWS

FEDERAL FUNDING SOURCE	PERCENT

CONTRACT CHANGE ORDER

Change Requested by: Engineer

CCO: 104	Suppl. No. 0	Contract No. 04 - 012024	Road 04-SF,Ala-80-13.9/14.3,0.0/1.6	FED. AID LOC.: ACIM-080-1(085)8N

To: **KIEWIT / FCI / MANSON a JV**

You are directed to make the following changes from the plans and specifications or do the following described work not included in the plans and specifications for this contract. ***NOTE: This change order is not effective until approved by the Engineer.***

Description of work to be done, estimate of quantities and prices to be paid. (Segregate between additional work at contract price, agreed price and force account.) Unless otherwise stated, rates for rental of equipment cover only such time as equipment is actually used and no allowance will be made for idle time. This last percentage shown is the net accumulated increase or decrease from the original quantity in the Engineer's Estimate.

Revise Special Provisions Section 10-1.53, "Clean And Paint Structural Steel," as shown on sheets 2 through 11 of this change order to allow the use of a solvent based zinc inorganic primer, provide additional requirements for the use of water borne inorganic zinc primers, and require the use of a polysiloxane based finish coat paint, for the SFOBB East Span Skyway Bridge Replacement Project, Bridge Nos. 340006L/R.

The Contractor shall assure that the finish top coat paint is compatible with the primer.

Adjustment of Compensation at Lump Sum:

For the work associated with this change order, as provided in the revised specifications, the Contractor agrees to accept an agreed lump sum amount of $795,059.00. This agreed lump sum constitutes full compensation, including markups, for all direct and indirect costs, all associated project impacts, and all overhead costs.

Cost of Adjustment of Compensation at Agreed Lump Sum $795,059.00

Estimated Cost: **Increase** ☑ **Decrease** ☐ **$795,059.00**

By reason of this order the time of completion will be adjusted as follows: 0 days

Submitted by

Signature	Resident Engineer: DOUG COE, Supervising Br. Eng.	Date 2-28-05

Approval Recommended by

Signature	Construction Engineer: DOUG COE, Supervising Br. Eng.	Date 2-28-05

Engineer Approval by

Signature	(Print name and title) PETER SIEGENTHALER - Chief	Date 5-13-05

We the undersigned contractor, have given careful consideration to the change proposed and agree, if this proposal is approved, that we will provide all equipment, furnish the materials, except as may otherwise be noted above, and perform all services necessary for the work above specified, and will accept as full payment therefor the prices shown above.

NOTE: If you, the contractor, do not sign acceptance of this order, your attention is directed to the requirements of the specifications as to proceeding with the ordered work and filing a written protest within the time therein specified.

Contractor Acceptance by

Signature	(Print name and title) Chris Villa, Deputy Project Director	Date 5-10-05

STATE OF CALIFORNIA - DEPARTMENT OF TRANSPORTATION

CONTRACT CHANGE ORDER MEMORANDUM

TO: PETER SIEGENTHALER / DOUG COE, Supervising Br. Eng.	FILE: **E.A.** 04 - 012024
FROM: DOUG COE, Supervising Br. Eng.	**CO-RTE-PM** 04-SF,Ala-80-13.9/14.3,0.0/1.6
	FED. NO. ACIM-080-1(085)8N
CCO#: **104** SUPPLEMENT#: **0** Category Code: **CHSA**	CONTINGENCY BALANCE (incl. this change) **$61,154,970.31**
COST: **$795,059.00** INCREASE ☑ DECREASE ☐	HEADQUARTERS APPROVAL REQUIRED? ☑ YES ☐ NO
SUPPLEMENTAL FUNDS PROVIDED: **$0.00**	IS THIS REQUEST IN ACCORDANCE WITH ENVIRONMENTAL DOCUMENTS? ☑ YES ☐ NO
CCO DESCRIPTION: Revise Paint Spec For Structural Steel	**PROJECT DESCRIPTION:** REPLACE SFOBB EAST SPAN

LOCATION: IN SAN FRANCISCO AND ALAMEDA COUNTIES IN SAN FRANCISCO AND OAKLAND FROM 1.3 KM EAST OF THE YERBA BUENA ISL

THIS CHANGE ORDER PROVIDES FOR:

modifying the contract Special Provisions to allow the use of a solvent based zinc organic primer, provide additional requirements for the use of water borne inorganic zinc primers, and require the use of a polysiloxane based finish coat paint.

The Contract Special Provisions are amended by revising Section 10-1.53, "Clean and Paint Structural Steel," as provided on sheets 2 through 11 of the change order.

This change order is needed to mitigate potential conflicts that may exist in the testing requirements for the the water borne inorganic zinc undercoat as provided in the Special Provisions Section 10-1.53, "Clean and Paint Structural Steel, " Subsection "Painting." This change order corrects the specification that does not adequately address curing issues and does not include provisions for testing and protecting the painted surfaces. By correcting the specification, this change will prevent problems related to the curing of water based inorganic zinc primer that have occurred on other State projects, such as protecting the coating from water immersion conditions during curing, shipping, and storage; measuring the surface pH of the coating; and meeting the dry to solvent insolubility requirements of the coating, all of which are not adequately addressed in the Contract Special Provisons. In addition, Materials Engineering and Testing Services (METS), Office of Structural Materials (OSM), is recommending the substitution of a single polysiloxane finish coat for the two (2) acrylic latex finish coats that are required in the contract specifications because the single polysiloxane coat application will retain color and gloss longer than the application of two (2) acrylic latex coats. The use of a solvent based zinc undercoat and polysiloxane finish coat are in alignment with future toll bridge projects.

This change order compensates the Contractor for the difference in material cost between latex and polysiloxane paints, the difference in material cost between water borne inorganic zinc primer and solvent based inorganic zinc primer, and for performing the tests required for the use of solvent based inorganic zinc primer as provided in the revised specification. Compensation will be Adjustment of Compensation At Agreed Lump Sum of $795,059.00. This agreed lump sum amount constitutes full compensation including all markups.This additional project cost can be financed from the contingency funds provided for this contract. A detailed cost analysis is on file in the project records.

FHWA Prior Approval was obtained from Nancy Bobb, Bay Bridge Project Oversight Manager, via electronic message on January 12, 2005. A copy of the prior approval provided by Ms. Bobb is attached.

Janet Adams, Toll Bridge Region Project Manager, is in concurrence with this change. A copy of the message providing concurrence from Ms. Adams is attached.

Maintenance concurrence was obtained from Alfred Martinez on December 30, 2004. A copy of the concurrence provided by Mr. Martinez is attached.

Pete Siegenthaler, SFOBB East Span Skyway Principal Construction Engineer, concurs with this change.

This change order was discussed with Andy Rogerson, Senior Chemical Testing Engineer, Engineering Service Center, Materials Engineering and Testing Services, Office of Structural Materials, and Mr. John C. Rogers, Senior Bridge Engineer. Both Mr. Rogerson and Mr. Rogers agree with this change.

No adjustment of contract time is warranted, as this change does not affect the controlling operation of work.

RECEIVED
038090 MAY 16 05

CONCURRED BY:		
Construction Engineer:	Douglas Coe	Date 2-3-05
Bridge Engineer:	Douglas Coe	Date 2-3-05
FHWA Representative:	Nancy Bobb	Date 1/12/2005
Project Engineer:	Ade Akinsanya	Date 1/14/2005
Other (specify): Alfred Martinez		Date 12/30/2004
Andy Rogerson		Date 10/15/2003
Janet Adams		Date 1/21/2005
District Prior Approval By:	Pete Siegenthaler	Date 1/4/2005
HQ (Issue Approve) By:		Date
Resident Engineer's Signature:		Date 2-3-05

ESTIMATE OF COST

	THIS REQUEST	TOTAL TO DATE
ITEMS	$0.00	$0.00
FORCE ACCOUNT	$0.00	$0.00
AGREED PRICE	$0.00	$0.00
ADJUSTMENT	$795,059.00	$795,059.00
TOTAL	$795,059.00	$795,059.00

FEDERAL PARTICIPATION

☑ PARTICIPATING ☐ PARTICIPATING IN PART ☐ NONE
☐ NON-PARTICIPATING (MAINTENANCE) ☐ NON-PARTICIPATING

FEDERAL SEGREGATION (if more than one Funding Source or P.I.P. type)
☑ CCO FUNDED PER CONTRACT ☐ CCO FUNDED AS FOLLOWS

FEDERAL FUNDING SOURCE PERCENT

CONTRACT CHANGE ORDER

Change Requested by: Engineer

CCO: 104	Suppl. No. 1	Contract No. 04 - 012024	Road 04-SF,Ala-80-13.9/14.3,0.0/1.6	FED. AID LOC.: ACIM-080-1(085)8N

To: **KIEWIT / FCI / MANSON a JV**

You are directed to make the following changes from the plans and specifications or do the following described work not included in the plans and specifications for this contract. ***NOTE: This change order is not effective until approved by the Engineer.***

Description of work to be done, estimate of quantities and prices to be paid. (Segregate between additional work at contract price, agreed price and force account.) Unless otherwise stated, rates for rental of equipment cover only such time as equipment is actually used and no allowance will be made for idle time. This last percentage shown is the net accumulated increase or decrease from the original

Revise the Special Provisions for the SFOBB East Span Skyway Bridge Replacement Project, Bridge Nos. 340006L/R as follows:

1.) Add the following sentence to Section 10-1.48, Traveler Support Rails, as paragraph six: "Traveler rails shall receive a finish paint coat in accordance with the requirements specified in Section 10-1.53, Clean and Paint Structural Steel, elsewhere in these special provisions."

2.) Add the following "Painting" sub-section to Section 10-1.51, Sign Structures: "Overhead sign structures shall be galvanized and painted in accordance with the requirements specified in Section 10-1.53, Clean and Paint Structural Steel, elsewhere in these special provisions."

3.) Revise the fifth paragraph of Sub-section "Steel pipe railings and hand railings" under Section 10-1.57, Miscellaneous Metal (Substation, Service Platforms, and Walkways), as follows: " Steel railings shall be galvanized and painted in acordance with the requirements specified in Section 10-1.53, Clean and Paint Structural Steel, elsewhere in these special provisions. After galvanizing, all elements of the railing shall be free of fins, abrasions, rough or sharp edges, and other surface defects and shall not be kinked, twisted or bent."

4.) Add the following "Painting" sub-section to Section 10-1.57, Miscellaneous Metal (Substation, Service Platforms, and Walkways), after Sub-section, Steel pipe railings and hand railings; "Miscellaneous Metal in the Substations, Service Platforms, and Walkways designated to be painted shall be painted in accordance with the requirements specified in Section 10-1.53, Clean and Paint Structural Steel, elsewhere in these special provisions."

5.) Revise sub-section "Painting" of Section 10-1.58, Hinged Doors (Substations), as follows: " Except for the primer application specified herein, doors and frames shall be cleaned, prepared and painted in accordance with the requirements specified in Section 10-1.53, Clean and Paint Structural Steel, elsewhere in these special provisions."

6.) Add the following sentence to Section 10-1.62, Metal Bridge Railing, as paragraph two: " All galvanized bikepath railing elements shall be painted in accordance with the requirements specified in Section 10-1.53, Clean and Paint Structural Steel, elsewhere in these special provisions."

7.) Add the following sentence to Section 10-3.05, Conduit, Sub-section, Polyvinyl Chloride Coated Galvanized Rigid Steel Conduit, Threaded Couplings, and Elbows, as paragraph two: "The polyvinyl chloride (PVC) coated galvanized rigid steel (GRS) conduit, threaded couplings, and elbows designated to be painted shall be free from moisture, visible dust, visible grease, or other deleterious materials immediately prior to application of the finish coat in accordance with the requirements specified in Section 10-1.53, Clean and Paint Structural Steel, elsewhere in these special provisions."

8.) Revise paragraph five of Sub-section "Pipe and fittings for line 4 NPS or greater" of Section 10-4.04, CCSF Water Main and Sewage Force Main, as follows: "Ductile iron pipe and fittings shall have cement mortar lining and seal coating conforming to ANSI/AWWA C104/A21.4. Pipe shall have a bituminous outside coating conforming to ANSI/AWWA C151/A21.51 and fittings shall have a bituminous outside coating conforming to ANSI/AWWA C110/A21.10, except for the pipe and fittings on the outside of the orthotropic transition span, which shall be primed with "MC-FerroClad" TM or equal and painted in accordance with the requirements specified in Section 10-1.53, Clean and Paint Structural Steel, elsewhere in these special provisions."

CONTRACT CHANGE ORDER

Change Requested by: Engineer

CCO: 104	Suppl. No. 1	Contract No. 04 - 012024	Road 04-SF,Ala-80-13.9/14.3,0.0/1.6	FED. AID LOC.: ACIM-080-1(085)8N

Extra Work at Lump Sum:

As authorized by the Engineer, and in addition to areas specified to be painted elsewhere in the Special Provisions, paint the following visible areas in accordance with the provisions of Contract Change Order No. 104 Supplement 0, of the SFOBB East Span Skyway project, Bridge Nos. 34-0006L/R:

1.) The galvanized traveler support rails on the bikepath and orthotropic box girders.
2.) The bikepath handrail, attachment pieces, light fixtures, and emergency gates except for the emergency gate wheels.
3.) The PVC coated conduit on the bikepath.
4.) The belvedere benches on the bikepath belvederes.
5.) The service platforms access stairs and railing.
6.) The service platforms handrails and C200 support channel face.
7.) The cabinets, conduits, and support legs on the service platforms, except for any stainless steel components, rubber gaskets, nameplates, and sealflex conduit.
8.) The overhead and CMS sign support structures.
9.) The 6, 10, and 12 NPS ductile iron pipe, on the outside of the orthotropic box girders, including the transition, fittings, supports and hangers.
10.) The substation access stairs and railings from the barrier rail to and inclusive of the first landing, except for the bottom of the stairs and the bottom of the landing surface.

All finish coats are to be applied after installation of the components to be painted.

For the extra work associated with this change order, as provided in the revised specifications, the Contractor agrees to accept an agreed lump sum amount of $1,867,645.00. This agreed lump sum constitutes full compensation, including markups, for all direct and indirect costs, all associated project impacts including environmental and weather impacts, and all overhead costs.

Extra Work at Agreed Lump Sum $1,867,645.00

Estimated Cost: Increase ☑ Decrease ☐ $1,867,645.00

By reason of this order the time of completion will be adjusted as follows: 0 days

Submitted by

Signature	Resident Engineer DOUG COE, Supervising Br. Eng.	Date 6-1-07

Approval Recommended by

Signature	Construction Engineer PETER SIEGENTHALER	Date 6-1-07

Engineer Approval by

Signature	Construction Manager PETER SIEGENTHALER	Date 8-24-07

We the undersigned contractor, have given careful consideration to the change proposed and agree, if this proposal is approved, that we will provide all equipment, furnish the materials, except as may otherwise be noted above, and perform all services necessary for the work above specified, and will accept as full payment therefor the prices shown above.

NOTE: If you, the contractor, do not sign acceptance of this order, your attention is directed to the requirements of the specifications as to proceeding with the ordered work and filing a written protest within the time therein specified.

Contractor Acceptance by

Signature	(Print name and title) A.T. SKORO VICE PRESIDENT	Date 7/18/07

STATE OF CALIFORNIA - DEPARTMENT OF TRANSPORTATION

CONTRACT CHANGE ORDER MEMORANDUM

TO: PETER SIEGENTHALER / DOUG COE, Supervising Br. Eng.	FILE: E.A. 04 - 012024
	CO-RTE-PM 04-SF,Ala-80-13.9/14.3,0.0/1.6
FROM: DOUG COE, Supervising Br. Eng.	FED. NO. ACIM-080-1(085)8N
CCO# **104** SUPPLEMENT#: **1** Category Cod **CHSA**	CONTINGENCY BALANCE (incl. this change **$5,784,340.69**
COST: **$1,867,645.00** INCREASE ☑ DECREASE ☐	HEADQUARTERS APPROVAL REQUIRED? ☑ YES ☐ NO
SUPPLEMENTAL FUNDS PROVIDED: **$0.00**	IS THIS REQUEST IN ACCORDANCE WITH ENVIRONMENTAL DOCUMENTS? ☑ YES ☐ NO
CCO DESCRIPTION: Additional Painting	**PROJECT DESCRIPTION:** REPLACE SFOBB EAST SPAN

Original Contract Time:	Time Adj. This Change:	Previously Approved CCO Time Adjustments:	Percentage Time Adjusted: (including this change)	Total # of Unreconciled Deferred Time CCO(s): (including this change)
1000 Day(s)	**0** Day(s)	**424** Day(s)	**42** %	**0**

THIS CHANGE ORDER PROVIDES FOR:

Painting of the following galvanized or otherwise coated steel components: 1) The traveler support rails on the bikepath and Orthotropic box girders, 2) The bikepath handrail, attachment pieces, light fixtures, and emergency gates except for the emergency gate wheels, 3) The PVC coated conduit on the bikepath, 4) The belvedere benches on the bikepath belvederes, 5) The service platform access stairs and railing, 6) The service platform handrails and C200 support channel face, 7) The cabinets, conduits, and support legs on the service platforms, except for any stainless steel components, rubber gaskets, nameplates, and sealflex conduit, 8) The overhead and CMS sign support structures, 9) The 6, 10, and 12 NPS ductile iron pipe, on the outside of the Orthotropic box girders, including the transition, fittings, supports and hangers, and 10) The substation access stairs and railings from the barrier rail to and inclusive of the first landing except for the bottom of the stairs and the bottom of the landing surface.

In mid-2006, an architectural review of the project and contract documents revealed that some visible steel surfaces, which are supposed to be painted white, are shown to be galvanized or otherwise coated per contract specifications and plans. This Change Order is needed to paint, with white paint the visible galvanized or otherwise coated steel components to meet the design intent.

The District 4, Bridge Architect, Clive Endress requires the additional areas to be painted as follows:

The galvanized and installed traveler scaffold support rails on the bikepath and orthotropic box girders will be painted over the galvanizing.

All of the galvanized bikepath handrailing elements, except for the emergency gate wheels, will be painted over the galvanizing .

The black PVC coated conduit which is fasten to the bottom of the bikepath panels will be painted with the finish coat directly over the PVC coating.

The belvedere benches designated to be shop painted with the finish coat will now be field painted after installation on the belvederes.

The access stairs, the handrails, and the outside face of the C200 support channel of the service platforms to be painted.

The components placed on the service platforms including cabinets, conduits, and supports except for any stainless steel components, rubber seals, nameplates, and sealflex conduits.

The specified to be galvanized overhead and CMS sign structures.

The ductile iron pipe specified to have a bituminous outside coating, will be replaced with ductile iron pipe with the specified zinc primer and painted with the specified finish coat.

The galvanized stairs providing access from the road deck to the sub-stations from the barrier rail to and including the first landing except for the bottom of the stair and landing surface.

All finish coats are to be applied after installation of the components to be painted.

Painting shall be done in accordance with the requirements specified in Section 10-1.53 "Clean and Paint Structural Steel" of the Special Provisions, as revised by Contract Change Order No. 104, Supplement 0, and the following revisions to the Special Provisions, of the SFOBB East Span Skyway Bridge Replacement Project, Bridge Nos. 340006L/R:

1.) Add the following sentence to Section 10-1.48, Traveler Support Rails, as paragraph six: "Traveler rails shall receive a finish paint coat in accordance with the requirements specified in Section 10-1.53, Clean and Paint Structural Steel, elsewhere in these special provisions."

ADA Notice: For individuals with sensory disabilities, this document is available in alternate formats. For information call: (916) 654-6410 or TDD (916) 654-3880 or write Records and Forms Management, 1120 N Street, MS-89, Sacramento, CA 95814.

2.) Add the following "Painting" sub-section to Section 10-1.51, Sign Structures: "Overhead sign structures shall be galvanized and painted in accordance with the requirements specified in Section 10-1.53, Clean and Paint Structural Steel, elsewhere in these special provisions."

3.) Revise the fifth paragraph of Sub-section "Steel pipe railings and hand railings" under Section 10-1.57, Miscellaneous Metal (Substation, Service Platforms, and Walkways), as follows: " Steel railings shall be galvanized and painted in acordance with the requirements specified in Section 10-1.53, Clean and Paint Structural Steel, elsewhere in these special provisions. After galvanizing, all elements of the railing shall be free of fins, abrasions, rough or sharp edges, and other surface defects and shall not be kinked, twisted or bent."

4.) Add the following "Painting" sub-section to Section 10-1.57, Miscellaneous Metal (Substation, Service Platforms, and Walkways), after Sub-section, Steel pipe railings and hand railings; "Miscellaneous Metal in the Substations, Service Platforms, and Walkways designated to be painted shall be painted in accordance with the requirements specified in Section 10-1.53, Clean and Paint Structural Steel, elsewhere in these special provisions."

5.) Revise sub-section "Painting" of Section 10-1.58, Hinged Doors (Substations), as follows: " Except for the primer application specified herein, doors and frames shall be cleaned, prepared and painted in accordance with the requirements specified in Section 10-1.53, Clean and Paint Structural Steel, elsewhere in these special provisions."

6.) Add the following sentence to Section 10-1.62, Metal Bridge Railing, as paragraph two: " All galvanized bikepath railing elements shall be painted in accordance with the requirements specified in Section 10-1.53, Clean and Paint Structural Steel, elsewhere in these special provisions."

7.) Add the following sentence to Section 10-3.05, Conduit, Sub-section, Polyvinyl Chloride Coated Galvanized Rigid Steel Conduit, Threaded Couplings, and Elbows, as paragraph two: "The polyvinyl chloride (PVC) coated galvanized rigid steel (GRS) conduit, threaded couplings, and elbows designated to be painted shall be free from moisture, visible dust, visible grease, or other deleterious materials immediately prior to application of the finish coat in accordance with the requirements specified in Section 10-1.53, Clean and Paint Structural Steel, elsewhere in these special provisions."

8.) Revise paragraph five of Sub-section "Pipe and fittings for line 4 NPS or greater" of Section 10-4.04, CCSF Water Main and Sewage Force Main, as follows: "Ductile iron pipe and fittings shall have cement mortar lining and seal coating conforming to ANSI/AWWA C104/A21.4. Pipe shall have a bituminous outside coating conforming to ANSI/AWWA C151/A21.51 and fittings shall have a bituminous outside coating conforming to ANSI/AWWA C110/A21.10, except for the pipe and fittings on the outside of the orthotropic transition span, which shall be primed with "MC-FerroClad" TM or equal and painted in accordance with the requirements specified in Section 10-1.53, Clean and Paint Structural Steel, elsewhere in these special provisions."

Compensation will be Extra Work At Agreed Lump Sum of $1,867,645.00. This agreed lump sum amount constitutes full compensation including all markups, for all direct and indirect costs, all associated project impacts including environmental and weather impacts, and all overhead costs. This additional project cost can be financed from the contingency funds provided for this contract. A detailed cost analysis is on file in the project records.

Mr. Pete Siegenthaler, SFOBB Construction Manager, Toll Bridge Construction, concurs with this change. A copy of the concurrence signed by Mr. Siegenthaler on February 14, 2007 is attached.

Prior Approval was obtained from Ms. Nancy Bobb, FHWA Bay Bridge Project Manager, via electronic message on April 4, 2007. A printed copy of the prior approval provided by Ms. Bobb is attached.

Prior Approval was obtained from Mr. Ken Terpstra, SFOBB Project Manager, via electronic message on April 6, 2007. A printed copy of the prior approval provided by Mr. Terpstra is attached.

Design concurrence was provided by Mr. Steve Hulsebus on August 8, 2006, as indicated by the attached E-mail.

Maintenance concurrence was obtained from Mr. Bill Zanetich, Structure Maintenance and Investigation, via electronic message on April 26, 2007. A printed copy of the prior approval provided by Mr. Zanetich is attached.

Authorization to proceed with this change order was issued by Headquarters on April 19, 2007.

ADA Notice: For individuals with sensory disabilities, this document is available in alternate formats. For information call: (916) 654-6410 or TDD (916) 654-3880 or write Records and Forms Management, 1120 N Street, MS-89, Sacramento, CA 95814.

No adjustment of contract time is warranted for this change, as it does not affect the controlling operation.

CONCURRED BY:			
Construction Engineer:	Douglas Coe DBC	Date	6-1-07
Bridge Engineer:	Douglas Coe DBC	Date	6-1-07
Project Engineer:		Date	
Project Manager:	Ken Terpstra	Date	4/6/07
FHWA Rep.:	Nancy Bobb	Date	4/4/07
Environmental:		Date	
Other (specify):	TBPOC	Date	
Other (specify):	Andy Rogerson, Senior Chemical T	Date	4/19/07
District Prior Approval By:		Date	
HQ (Issue Approve) By:	Ken Darby	Date	4/19/07
Resident Engineer's Signature:		Date	
			6-1-07

ESTIMATE OF COST

	THIS REQUEST	TOTAL TO DATE
ITEMS	$0.00	$0.00
FORCE ACCOUNT	$0.00	$0.00
AGREED PRICE	$1,867,645.00	$1,867,645.00
ADJUSTMENT	$0.00	$795,059.00
TOTAL	$1,867,645.00	$2,662,704.00

FEDERAL PARTICIPATION

☑ PARTICIPATING ☐ PARTICIPATING IN PART ☐ NONE
☐ NON-PARTICIPATING (MAINTENANCE) ☐ NON-PARTICIPATING

FEDERAL SEGREGATION (If more than one Funding Source or P.I.P. type)
☑ CCO FUNDED PER CONTRACT ☐ CCO FUNDED AS FOLLOWS

FEDERAL FUNDING SOURCE	PERCENT

ADA Notice: For individuals with sensory disabilities, this document is available in alternate formats. For information call: (916) 654-6410 or TDD (916) 654-3880 or write Records and Forms Management, 1120 N Street, MS-89, Sacramento, CA 95814.

STATE OF CALIFORNIA - DEPARTMENT OF TRANSPORTATION

CONTRACT CHANGE ORDER

Change Requested by: Engineer

CCO: 104	Suppl. No. 2	Contract No. 04 - 012024	Road 04-SF,Ala-80-13.9/14.3,0.0/1.6	FED. AID LOC.: ACIM-080-1(085)8N

To: **KIEWIT / FCI / MANSON a JV**

You are directed to make the following changes from the plans and specifications or do the following described work not included in the plans and specifications for this contract. ***NOTE: This change order is not effective until approved by the Engineer.***

Description of work to be done, estimate of quantities and prices to be paid. (Segregate between additional work at contract price, agreed price and force account.) Unless otherwise stated, rates for rental of equipment cover only such time as equipment is actually used and no allowance will be made for idle time. This last percentage shown is the net accumulated increase or decrease from the original

Adjustment of Compensation at Lump Sum:

Eliminate the following items from the extra work included in the scope of Contract Change Order No. 104 Supplement 1, of the SFOBB East Span Skyway project, Bridge Nos. 34-0006L/R:

5.) The service platforms access stairs and railing,
6.) The service platforms handrails and C200 support channel face,
7.) The cabinets, conduits, and support legs on the service platforms, except for any stainless steel components, rubber gaskets, nameplates, and sealflex conduit.
8.) The overhead and CMS sign support structures.

For the elimination of extra work associated with this change order, the Contractor agrees to credit the State an agreed lump sum amount of $391,237.17. This agreed lump sum constitutes full compensation, including markups, for all direct and indirect costs, all associated project impacts, and all overhead costs.

Adjustment of Compensation at Agreed Lump Sum .....($391,237.17)<credit>

Estimated Cost: Increase ☐ Decrease ☑ **($391,237.17)**

By reason of this order the time of completion will be adjusted as follows: 0 days

Submitted by

Signature	Resident Engineer DOUG COE, Supervising Br. Eng.	Date 2-20-08

Approval Recommended by

Signature	Construction Engineer DOUG COE	Date 2-20-08

Engineer Approval by

Signature Michael Forner	Construction Manager MIKE FORNER	Date 3-7-08

We the undersigned contractor, have given careful consideration to the change proposed and agree, if this proposal is approved, that we will provide all equipment, furnish the materials, except as may otherwise be noted above, and perform all services necessary for the work above specified, and will accept as full payment therefor the prices shown above.

NOTE: If you, the contractor, do not sign acceptance of this order, your attention is directed to the requirements of the specifications as to proceeding with the ordered work and filing a written protest within the time therein specified.

Contractor Acceptance by

Signature	(Print name and title) Lee Zink Project Director	Date 3/5/08

STATE OF CALIFORNIA - DEPARTMENT OF TRANSPORTATION

CONTRACT CHANGE ORDER MEMORANDUM

TO: MICHAEL FORNER / DOUG COE, Supervising Br. Eng.

FROM: DOUG COE, Supervising Br. Eng.

FILE: E.A. 04 - 012024
CO-RTE-PM 04-SF,Ala-80-13.9/14.3,0.0/1.6
FED. NO. ACIM-080-1(085)8N

CCO# **104** SUPPLEMENT#: **2** Category Cod **CHSA**

CONTINGENCY BALANCE (incl. this change **$2,329,170.94**

COST: **($391,237.17)** INCREASE ☐ DECREASE ☑

HEADQUARTERS APPROVAL REQUIRED? ☑ YES ☐ NO

SUPPLEMENTAL FUNDS PROVIDED: **$0.00**

IS THIS REQUEST IN ACCORDANCE WITH ENVIRONMENTAL DOCUMENTS? ☑ YES ☐ NO

CCO DESCRIPTION:
Delete Service Platform Painting

PROJECT DESCRIPTION:
REPLACE SFOBB EAST SPAN

Original Contract Time:	Time Adj. This Change:	Previously Approved CCO Time Adjustments:	Percentage Time Adjusted: (including this change)	Total # of Unreconciled Deferred Time CCO(s): (including this change)
1000 Day(s)	**0** Day(s)	**424** Day(s)	**42** %	**7**

THIS CHANGE ORDER PROVIDES FOR:
Eliminating the following items from the extra work included in the scope of Contract Change Order No. 104 Supplement 1, of the SFOBB East Span Skyway project, Bridge Nos. 34-0006L/R:

5.) The service platforms access stairs and railing,
6.) The service platforms handrails and C200 support channel face,
7.) The cabinets, conduits, and support legs on the service platforms, except for any stainless steel components, rubber gaskets, nameplates, and sealflex conduit.
8.) The overhead and CMS sign support structures.

Contract Change Order No. 104 Supplement 1, required the Contractor to paint essential all visible metal areas of the project, including the galvanized service platform handrailing and the galvanized overhead and CMS sign support structures. It was contemplated to replace the handrailing on this contract with a re-design but due to availability of materials and contract time constrains this could not be completed. Painting of the handrailing represents the majority of the painting on the platforms. To prevent damage to other painted surfaces on the platforms during the eventual replacement of the handrails, all of the service platform painting will be eliminated from this contract.

The contract change order work to paint the overhead and CMS sign support structures is impacting the contract completion and will therefore be removed from this contract.

Painting of the service platforms, the overhead sign structures, and the CMS sign structures, will be included in a subsequent SFOBB East Span Replacement Contract once the handrail issue is resolved. Mr. Steven Hulsebus, Office Chief, Toll Bridge Design, concurs with this approach.

The elimination of this extra work will be credited to the State as an Adjustment of Compensation at Agreed Lump Sum of ($391,237.17). This agreed lump sum amount constitutes full compensation including all markups, for all direct and indirect costs, all associated project impacts, and all overhead costs. This project credit will be returned to the contingency funds provided for this contract. A detailed cost analysis is on file in the project records.

Mr. Mike Forner, SFOBB Construction Manager, Toll Bridge Construction, concurs with this change. A copy of the concurrence signed by Mr. Forner on January 16, 2008 is attached.

Prior Approval was obtained from Ms. Nancy Bobb, FHWA Bay Bridge Project Manager, via electronic message on February 19, 2008. A printed copy of the prior approval provided by Ms. Bobb is attached.

Prior Approval was obtained from Mr. Ken Terpstra, SFOBB Project Manager, via electronic message on February 14, 2008. A printed copy of the prior approval provided by Mr. Terpstra is attached.

Design concurrence was provided by Mr. Steve Hulsebus on January 11, 2008, as indicated by the attached E-mail.

Maintenance concurrence is not required as this change does not modify the finished structure.

No adjustment of contract time is warranted for this change, as it does not affect the controlling operation.

ADA Notice: For individuals with sensory disabilities, this document is available in alternate formats. For information call: (916) 654-6410 or TDD (916) 654-3880 or write Records and Forms Management, 1120 N Street, MS-89, Sacramento, CA 95814.

CONCURRED BY:

Construction Engineer:	Douglas Coe DSC	Date 2-20-08
Bridge Engineer:	Douglas Coe DSC	Date 2-20-08
Project Engineer:		Date
Project Manager:	Ken Terpstra	Date 2/14/08
FHWA Rep.:	Nancy Bobb	Date 2/19/08
Environmental:		Date
Other (specify):	Steven Hulsebus, Design	Date 1/11/08
Other (specify):		Date
District Prior Approval By:		Date
HQ (Issue Approve) By:	Ken Darby	Date
Resident Engineer's Signature:		Date 2-20-08

ESTIMATE OF COST

	THIS REQUEST	TOTAL TO DATE
ITEMS	$0.00	$0.00
FORCE ACCOUNT	$0.00	$0.00
AGREED PRICE	$0.00	$1,867,645.00
ADJUSTMENT	($391,237.17)	$403,821.83
TOTAL	($391,237.17)	$2,271,466.83

FEDERAL PARTICIPATION

☑ PARTICIPATING ☐ PARTICIPATING IN PART ☐ NONE
☐ NON-PARTICIPATING (MAINTENANCE) ☐ NON-PARTICIPATING

FEDERAL SEGREGATION (if more than one Funding Source or P.I.P. type)
☑ CCO FUNDED PER CONTRACT ☐ CCO FUNDED AS FOLLOWS

FEDERAL FUNDING SOURCE	PERCENT

ADA Notice: For individuals with sensory disabilities, this document is available in alternate formats. For information call: (916) 654-6410 or TDD (916) 654-3880 or write Records and Forms Management, 1120 N Street, MS-89, Sacramento, CA 95814.

STATE OF CALIFORNIA - DEPARTMENT OF TRANSPORTATION

CONTRACT CHANGE ORDER

Change Requested by: Engineer

CCO: 105	Suppl. No. 0	Contract No. 04 - 0120 24	Road 04-SF,Ala-80-13.9/14.3,0.0/1.6	FED. AID LOC.: ACIM-080-1(085)8N

To: KIEWIT / FCI / MANSON a JV

You are directed to make the following changes from the plans and specifications or do the following described work not included in the plans and for this contract. ***NOTE: This change order is not effective until approved by the Engineer.***

Description of work to be done, estimate of quantities and prices to be paid. (Segregate between additional work at contract price, agreed price and force account.) Unless otherwise stated, rates for rental of equipment cover only such time as equipment is actually used and no allowance will be made for idle time. This last percentage shown is the net accumulated increase or decrease from the original quantity in the Engineer's Estimate.

Extra Work at Lump Sum:

Furnish all labor, materials, tools, equipment, and incidentals required to galvanize the dead-end, nonembedded bearing plates of the bike path anchorage assembly's high strength bars shown on Contract Plan sheet 870R4 of 978. This work is to be carried out in conformance with Section 75-1.05, "Galvanizing" of the Standard Specifications.

For this work, the Contractor will be paid an agreed lump sum of $5,726.00. This sum constitutes full compensation, including all markups, for this change.

Estimated cost of Extra Work at Agreed Lump Sum $5,726.00

Estimated Cost: Increase ☑ Decrease ☐ $5,726.00

By reason of this order the time of completion will be adjusted as follows: 0 days

Submitted by

Signature	Resident Engineer: COE D.	Date 4-7-04

Approval Recommended by

Signature	Construction Engineer: COE D	Date 4-7-04

Engineer Approval by

Signature	(Print name and title) PETER SIEGENTHALER - Chief	Date

We the undersigned contractor, have given careful consideration to the change proposed and agree, if this proposal is approved, that we will provide all equipment, furnish the materials, except as may otherwise be noted above, and perform all services necessary for the work above specified, and will accept as full payment therefor the prices shown above.

NOTE: If you, the contractor, do not sign acceptance of this order, your attention is directed to the requirements of the specifications as to proceeding with the ordered work and filing a written protest within the time therein specified.

Contractor Acceptance by

Signature	(Print name and title) A.T. Ishiko, Project Director	Date 4/12/04

STATE OF CALIFORNIA - DEPARTMENT OF TRANSPORTATION

CONTRACT CHANGE ORDER MEMORANDUM

DATE: 3/23/2004 Page 1 of 1

TO: PETER SIEGENTHALER / COE D.	FILE: **E.A.** 04 - 012024
FROM: COED.	**CO-RTE-PM** 04-SF,Ala-80-13.9/14.3,0.0/1.6
	FED. NO. ACIM-080-1(085)8N
CCO#: **105** | SUPPLEMENT#: **0** | Category Code: **CHPT**	CONTINGENCY BALANCE (incl. this change) **$23,270,434.67**
COST: **$5,726.00** INCREASE ☑ DECREASE ☐	HEADQUARTERS APPROVAL REQUIRED? ☐ YES ☑ NO
SUPPLEMENTAL FUNDS PROVIDED: **$0.00**	IS THIS REQUEST IN ACCORDANCE WITH ENVIRONMENTAL DOCUMENTS? ☑ YES ☐ NO
CCO DESCRIPTION: Galvanize Bike Path Bearing Plate	**PROJECT DESCRIPTION:** REPLACE SFOBB EAST SPAN

LOCATION: IN SAN FRANCISCO AND ALAMEDA COUNTIES IN SAN FRANCISCO AND OAKLAND FROM 1.3 KM EAST OF THE YERBA BUENA ISL

THIS CHANGE ORDER PROVIDES FOR:

galvanizing the dead-end, nonembedded bearing plates of the bike path anchorage assembly's high strength (HS) bars. This work is to be carried out in conformance with Section 75-1.05, "Galvanizing" of the Standard Specifications.

The bike path dead-end, nonembedded bearing plates require corrosion protection as they are exposed to moisture. The bike path HS bars and bearing plates are included in the scope of work for Bid Item #35 "Pre-Stressing High Strength Bars". There are no requirements in the prestressing specifications to paint or galvanize the bearing plates.

For this change order, the Contractor will be paid an agreed lump sum payment of $5,726.00. This sum constitutes full compensation, including all markups. A force account cost analysis for this change is on file in the project records.

No adjustment of contract time is warranted for this change, as it does not affect the controlling operation.

Written concurrence from Samad Hamoud of Structures Maintenance was received on 12/5/03 and is on file in the project records. FHWA concurrence is not required.

CONCURRED BY:		
Construction Engineer:	Douglas Coe DB	Date 4-7-04
Bridge Engineer:	Douglas Coe DBC	Date 4-7-04
FHWA Representative:		Date
Project Engineer:		Date
Other (specify): Samad Hamoud, Struct. Maint.		Date 12/5/2003
		Date
		Date
District Prior Approval By:		Date
HQ (Issue Approve) By:		Date
Resident Engineer's Signature:		Date 4-7-04

ESTIMATE OF COST

	THIS REQUEST	TOTAL TO DATE
ITEMS	$0.00	$0.00
FORCE ACCOUNT	$0.00	$0.00
AGREED PRICE	*$5,726.00*	*$5,726.00*
ADJUSTMENT	$0.00	$0.00
TOTAL	*$5,726.00*	*$5,726.00*

FEDERAL PARTICIPATION

☑ PARTICIPATING ☐ PARTICIPATING IN PART ☐ NONE
☐ NON-PARTICIPATING (MAINTENANCE) ☐ NON-PARTICIPATING

FEDERAL SEGREGATION (if more than one Funding Source or P I P type)
☑ CCO FUNDED PER CONTRACT CCO FUNDED AS FOLLOWS

FEDERAL FUNDING SOURCE	PERCENT

STATE OF CALIFORNIA - DEPARTMENT OF TRANSPORTATION

CONTRACT CHANGE ORDER

Change Requested by: Engineer

CCO: 106	Suppl. No. 0	Contract No, 04- 012024	Road 04-SF,Ala-80-13.9/14.3,0.0/1.6	FED. AID LOC.: ACIM-080-1(085)8N

specifications

Description of work to be done, estimate of quantities and prices to be paid. (Segregate between additional work at contract price, agreed price and force account.) Unless otherwise stated, rates for rental of equipment cover only such time as equipment is actually used and no allowance will be made for idle time. This last percentage shown is the net accumulated increase or decrease from the original quantity in the Engineer's Estimate.

Extra Work at Lump Sum:

At the Precast Yard in Stockton, furnish and install new soffit and web bulkhead panels for Beds 1 and 2 in lieu of repairing old bulkheads panels. Cut new holes or modify existing holes in the soffit, web, and deck bulkhead forms, provide additional bar reinforcing steel for revised tendon locations, and install relocated mechanical pipe support embeds for segment E11E-8W of the SFOBB East Span Skyway Bridge Nos. 34-0006L/R.

For this work, the contractor shall receive and accept the agreed lump sum of $350,000.00. This agreed lump sum constitutes full and complete compensation, including all markup, for all direct and indirect costs, all associated project impacts, including all overhead expenses.

Cost of Extra Work at Lump Sum $350,000.00

RECEIVED
026730 AUG 13 '04

Estimated Cost: Increase ☑ Decrease ☐ $350,000.00

By reason of this order the time of completion will be adjusted as follows: 0 days

Submitted by		
Signature	Resident Engineer: COE D.	Date 7-15-04
Approval Recommended by		
Signature	Construction Engineer: COE D.	Date 7-15-04
Engineer Approval by		
Signature	(Print name and title) PETER SIEGENTHALER - Chief	Date 8-10-04

We the undersigned contractor, have given careful consideration to the change proposed and agree, if this proposal is approved, that we will provide all equipment, furnish the materials, except as may otherwise be noted above, and perform all services necessary for the work above specified, and will accept as full payment therefor the prices shown above.

NOTE: If you, the contractor, do not sign acceptance of this order, your attention is directed to the requirements of the specifications as to proceeding with the ordered work and filing a written protest within the time therein specified.

Contractor Acceptance by		
Signature	(Print name and title) A.I. Shoro, Project Director	Date 7/22/04

STATE OF CALIFORNIA - DEPARTMENT OF TRANSPORTATION

CONTRACT CHANGE ORDER MEMORANDUM

TO: PETER SIEGENTHALER / COE D.	FILE: E.A. 04 - 012024
	CO-RTE-PM 04-SF,Ala-80-13.9/14.3,0.0/1.6
FROM: COED.	FED. NO. ACIM-080-1(085)8N
CCO#: 106 SUPPLEMENT#: 0 Category Code: CHXX	CONTINGENCY BALANCE (incl. this change) $21,859,610.95
COST: $350,000.00 INCREASE ☑ DECREASE ☐	HEADQUARTERS APPROVAL REQUIRED? ☐ YES ☐ NO
SUPPLEMENTAL FUNDS PROVIDED: $0.00	IS THIS REQUEST IN ACCORDANCE WITH ENVIRONMENTAL DOCUMENTS? ☐ YES ☐ NO
CCO DESCRIPTION: Revised Holes in Bulkhead	PROJECT DESCRIPTION: REPLACE SFOBB EAST SPAN

CONCURRED BY:		
Construction Engineer:	Douglas Coe	Date 6-23-04
Bridge Engineer:	Douglas Coe	Date 6-23-04
FHWA Representative	Nancv Bobb	Date 6/9/2004
Project Engineer:		Date
Other (specify):		Date
		Date
		Date
District Prior Approval By:	Pete Sieaenthaler	Date 6/7/2004
HQ (Issue Approve) By		Date
Resident Engineer's Signature:		Date 6-23-04

ESTIMATE OF COST

	THIS REQUEST	TOTAL TO DATE
ITEMS	$0.00	$0.00
FORCE ACCOUNT	$0.00	$0.00
AGREED PRICE	$350,000.00	$350,000.00
ADJUSTMENT	$0.00	$0.00
TOTAL	$350,000.00	$350,000.00

FEDERAL PARTICIPATION

☑ PARTICIPATING ☐ PARTICIPATING IN PART ☐ NONE
☐ NON-PARTICIPATING(MAINTENANCE) ☐ NON-PARTICIPATING

FEDERAL SEGREGATION (if more than one Funding Source or P I P type)
☑ CCO FUNDED PER CONTRACT ☐ CCO FUNDED AS FOLLOWS

FEDERAL FUNDING SOURCE	PERCENT

STATE OF CALIFORNIA - DEPARTMENT OF TI ..SPORTATION

CONTRACT CHANGE ORDER

Change Requested by: Engineer

CCO: 107	Suppl. No. 0	Contract No. 04 - 012024	Road 04-SF,Ala-80-13.9/14.3,0.0/1.6	FED. AID LOC.: ACIM-080-1(085)8N

To: KIEWIT / FCI / MANSON a JV

You are directed to make the following changes from the plans and specifications or do the following described work not included in the plans and specifications for this contract. ***NOTE: This change order is not effective until approved by the Engineer.***

Description of work to be done, estimate of quantities and prices to be paid. (Segregate between additional work at contract price, agreed price and force account.) Unless otherwise stated, rates for rental of equipment cover only such time as equipment is actually used and no allowance will be made for idle time. This last percentage shown is the net accumulated increase or decrease from the original quantity in the Engineer's Estimate.

In accordance with Section 8-1.07, "Liquidated Damages," of the Standard Specifications; and Sections 10-1.11, "Overhead" and 10-1.10, "Progress Schedule (Critical Path)" of the Special Provisions, a contract time extension of 49 working days is hereby granted for Time Impact Analysis's (TIA's) 3,4,5, and 6.

Preparation of composite working drawings for cantilever E12E was disrupted due to various post tensioning and reinforcement conflicts, which ultimately impacted the controlling operation of segment casting. The end date of the project was delayed by 49 working days due to impacts of cantilever E12E construction. The Engineer has identified the following delay days: March 5, 2003 thought March 28, 2003, inclusive (18WD) and June 4, 2003 through July 17, 2003 inclusive (31 WD).

It is mutually agreed that the acceptance of this change order resolves all time impacts (TIA's 3,4,5, and 6) through the casting of cantilever E12E segments.

This change order does not provide compensation for other costs which are not included in Bid Item # 7 "Time Related Overhead." These other costs were requested by the Contractor on September 12, 2003 and revised on October 16, 2003. An adjustment compensation for these other costs has been deferred until a determination of merit has been made. A supplemental change order will be processed after the other costs have been evaluated.

Estimate of Increase in Contract Item at Contract Price:

Item No. 7: TIME-RELATED OVERHEAD
18 WDAY (+1.80%) @$208,000.00 /WDAY =+$3,744,000.00 (+1.80%)

Total cost for Increase in Contract Item.....$3,744,000.00

To process the full time extension granted to the Contractor, CCO 107, Supplement 0 will grant 18 working days for TIA 3 and CCO 107, Supplement 1 will grant 31 working days for TIA's 4, 5, and 6.

Estimated Cost: Increase ☑ Decrease ☐ $3,744,000.00

By reason of this order the time of completion will be adjusted as follows: 18 days

Submitted by		
Signature	**Resident Engineer:** COE D.	**Date** 3-23-04
Approval Recommended by		
Signature	**Construction Engineer:** COE D.	**Date** 2-23-04
Engineer Approval by		
Signature	**(Print name and title)** PETER SIEGENTHALER - Chief	**Date** 3-12-04

We the undersigned contractor, have given careful consideration to the change proposed and agree, if this proposal is approved, that we will provide all equipment, furnish the materials, except as may otherwise be noted above, and perform all services necessary for the work above specified, and will accept as full payment therefor the prices shown above.

NOTE: If you, the contractor, do not sign acceptance of this order, your attention is directed to the requirements of the specifications as to proceeding with the ordered work and filing a written protest within the time therein specified.

Contractor Acceptance by		
Signature	**(Print name and title)** A.T. Skoro, Project Director	**Date** 2/27/04

STATE OF CALIFORNIA - DEPARTMENT OF TRANSPORTATION

CONTRACT CHANGE ORDER MEMORANDUM

TO: PETER SIEGENTHALER / COE D.	FILE: E.A. 04 - 012024
FROM: COE D.	CO-RTE-PM 04-SF,Ala-80-13.9/14.3,0,0/1.6
	FED. NO. ACIM-080-1(085)8N
CCO#: 107 SUPPLEMENT#: 0 Category Code: FHCC	CONTINGENCY BALANCE (incl. this change) $32,082,104.61
COST: $3,744,000.00 INCREASE ☑ DECREASE ☐	HEADQUARTERS APPROVAL REQUIRED? ☑ YES ☐ NO
SUPPLEMENTAL FUNDS PROVIDED: $0.00	IS THIS REQUEST IN ACCORDANCE WITH ENVIRONMENTAL DOCUMENTS? ☑ YES ☐ NO
CCO DESCRIPTION: Resolution of TIA# 3	**PROJECT DESCRIPTION:** REPLACE SFOBB EAST SPAN

LOCATION: IN SAN FRANCISCO AND ALAMEDA COUNTIES IN SAN FRANCISCO AND OAKLAND FROM 1.3 KM EAST OF THE YERBA BUENA ISL

THIS CHANGE ORDER PROVIDES FOR:

Time adjustments for disruptions associated with the construction of precast segments for Cantilever E12E. Although numerous RFIs, congestion issues and segment interferences were resolved through the composite drawing process at "Mission Control," the Contractor's casting yard operations were delayed because the composite drawing approvals for cantilever section E12E could not be produced in a timely manner.

Congestion issues that disrupted the Contractor's planned segment construction operations at the Stockton casting yard included, but not limited to, the following:

1.) Conflicts between post tensioning ducts and the segment web of the precast panels.
2.) Deck drain conflicts with reinforcement and post tensioning ducts in the top slab of the segments and the precast panels.
3.) Multiple conflicts between the bottom span tendon anchor block reinforcement and the typical segmental post tensioning and main reinforcement.

The Contractor submitted timely Time Impact Analyzes (TIAs) in accordance with Section 10-1.10, "Progress Schedule (Critical Path)" of the Special Provisions. These TIAs addressed the disruptions in four affected segments within cantilever E12E. (There are nine total segments for this cantilever).

Time Impact Analysis #3 was submitted on Jan 23, 2003, for disruptions to the first Segment (E12E-1E). TIA #3 was based on a forecasted finish date of the composite drawing review. The Engineer (letter # 5.03.1-001107) deferred the review of TIA #3 until completion of the initial trial segment, which later was agreed to by the Contractor. During subsequent discussions between the Contractor and the Engineer, it was decided that the time impacts to the project would be based on the disruption of the segments' actual casting date as opposed to the disruption in the forecasted finish date of the drawing reviews. The segment casting date is on the critical path of the approved CPM schedule; whereas, specific drawing reviews are not included in the baseline CPM. This procedure of evaluating the TIA is in accordance with Section 10-1.10, "Progress Schedule (Critical Path)" of the Special Provisions.

The actual casting date for the first segment (E12E-1E) was March 29, 2003. An analysis of the approved project schedule showed that the disruptions to the drawings for segment E12E-1E resulted in an 18 working day delay to the completion date of the project. This analysis was performed using TIA schedules T03A and T03X, which are on file in the project records.

Similar analyses were performed for TIA 4, 5, and 6 . TIA #4 (T04B) was submitted on April 14, 2003, for Segment E12E-7E, cast on June 30, 2003. An analysis, using TIA schedules T04A and T04B, resulted in a 10 working day delay to the project completion date.

TIA #5 (T05C) was submitted on May 15, 2003, for Segment E12E-8E, which was cast on July 10, 2003. An analysis was performed using TIA schedule T05C, which resulted in a 19 working day delay to the project completion date.

TIA #6 (T06C) was submitted on Jun 04, 2003, for Segment E12E-9E, which was cast on July 17, 2003. An analysis was performed using TIA schedules T06C and T06X, which resulted in a 2 working day delay to the project completion date.

The combined delay impact of TIA 3, 4,5, and 6 resulted in a 49 working day extension to the project end date. Although, the Contractor had originally requested a 60 working day contract extension; they have agreed to accept the Engineer's analysis of the actual casting date disruptions. The project's controlling operation was delayed on the following dates, March 5, 2003 through March 28, 2003 inclusive (18 WDs, TIA #3) and June 4, 2003 through July 17, 2003 inclusive (31WDs, TIA 4, 5, and 6). These dates were identified by the Engineer. Bid Item No. 7 "Time-Related Overhead" will be adjusted as follows:

$208,000/day * 49 = $10,192,000.

Due to the inability of the CAS system to process this amount, CCO 107 will grant 18 working days for TIA 3 in the amount of $3,744,000.00 and CCO 107-S1 will grant 31 working days for TIA's 4, 5, and 6 in the amount of $6,448,000.00.

It is mutually agreed that the acceptance of this change order resolves all time impacts (TIA's 3,4,5, and 6) through the casting of cantilever E12E segments.

This change order does not provide compensation for other costs which are not included in Bid Item # 7 "Time Related Overhead." These other costs were requested by the Contractor on September 12, 2003, and revised on October 16, 2003. An adjustment compensation for these other costs has been deferred until a determination of merit has been made. A supplemental change order will be processed after the other costs have been evaluated. The Contractor has requested approximately $125,000 per working day of delay for costs not associated with Bid Item #7, "Time Related Overhead".

This change order has been discussed with and concurred by Jon Tapping, Pete Siegenthaler, Rob Kobal, and Doug Coe. Maintenance concurrence is not required as this change is not related to the maintenance of the bridges.
Project Manager Janet Adams reviewed and concurred with this change order via email on 1/26/04. Nancy Bobb of FHWA concurred with this change order via email on 1/21/04.

CONCURRED BY:		
Construction Engineer:	Douglas Coe	Date 3-5-04
Bridge Engineer:		Date
FHWA Representative:	Nancy Bobb	Date 1/21/2004
Project Engineer:		Date
Other (specify):		Date
	Bob Knickerbocker	Date 1/20/2004
	Janet Adams	Date 1/26/2004
District Prior Approval By:		Date
HQ (Issue Approve) By:		Date
Resident Engineer's Signature:		Date 3-5-04

ESTIMATE OF COST	THIS REQUEST	TOTAL TO DATE
ITEMS	$3,744,000.00	$3,744,000.00
FORCE ACCOUNT	$0.00	$0.00
AGREED PRICE	$0.00	$0.00
ADJUSTMENT	$0.00	$0.00
TOTAL	$3,744,000.00	$3,744,000.00

FEDERAL PARTICIPATION

☑ PARTICIPATING ☐ PARTICIPATING IN PART ☐ NONE
☐ NON-PARTICIPATING (MAINTENANCE) ☐ NON-PARTICIPATING

FEDERAL SEGREGATION (if more than one Funding Source or P.I.P. type)
☑ CCO FUNDED PER CONTRACT ☐ CCO FUNDED AS FOLLOWS

FEDERAL FUNDING SOURCE	PERCENT

STATE OF CALIFORNIA - DEPARTMENT OF TRANSPORTATION

CONTRACT CHANGE ORDER MEMORANDUM

DATE: 2/20/2004 Page 1 of 1

TO: PETER SIEGENTHALER / COE D.	FILE: E.A. 04 - 012024
	CO-RTE-PM 04-SF,Ala-80-13.9/14.3,0.0/1.6
FROM: COE D.	FED. NO. ACIM-080-1(085)8N
CCO#: 107 SUPPLEMENT#: 1 Category Code: FHCC	CONTINGENCY BALANCE (incl. this change) $25,634,104.61
COST: $6,448,000.00 INCREASE ☑ DECREASE ☐	HEADQUARTERS APPROVAL REQUIRED? ☑ YES ☐ NO
SUPPLEMENTAL FUNDS PROVIDED: $0.00	IS THIS REQUEST IN ACCORDANCE WITH ENVIRONMENTAL DOCUMENTS? ☑ YES ☐ NO
CCO DESCRIPTION: *Resolution of TIA's 4,5, and 6*	**PROJECT DESCRIPTION:** REPLACE SFOBB EAST SPAN

LOCATION: IN SAN FRANCISCO AND ALAMEDA COUNTIES IN SAN FRANCISCO AND OAKLAND FROM 1.3 KM EAST OF THE YERBA BUENA ISL

THIS CHANGE ORDER PROVIDES FOR:

Thirty-one (31) working days granted to the Contractor for Time Impact Analysis's (TIA's) 4, 5, and 6, as discussed in the memorandum for Contract Change Order 107, Supplement 0.

Due to the inability of the CAS system to process $10,192,000.00, CCO 107, Supplement 0 will grant 18 working days for TIA 3 in the amount of $3,744,000.00 and CCO 107-Supplement 1 will grant 31 working days for TIA's 4, 5, and 6 in the amount of $6,448,000.00.

For a complete explanation of the scope and cost and a list of required concurrence see CCO 107, Supplement 0, which is attached to this Change Order.

CONCURRED BY:

Construction Engineer:	Douglas Coe	Date 2-23-04
Bridge Engineer:		Date
FHWA Representative:	Nancy Bobb	Date1/21/2004
Project Engineer:		Date
Other (specify):		Date
	Bob Knickerbocker	Date1/20/2004
	Janet Adams	Date1/26/2004
District Prior Approval By:		Date
HQ (Issue Approve) By:		Date
Resident Engineer's Signature:		Date 2-23-04

ESTIMATE OF COST

	THIS REQUEST	TOTAL TO DATE
ITEMS	$6,448,000.00	$10,192,000.00
FORCE ACCOUNT	$0.00	$0.00
AGREED PRICE	$0.00	$0.00
ADJUSTMENT	$0.00	$0.00
TOTAL	$6,448,000.00	$10,192,000.00

FEDERAL PARTICIPATION

☑ PARTICIPATING ☐ PARTICIPATING IN PART ☐ NONE
☐ NON-PARTICIPATING (MAINTENANCE) ☐ NON-PARTICIPATING

FEDERAL SEGREGATION (if more than one Funding Source or P.I.P. type)
☑ CCO FUNDED PER CONTRACT ☐ CCO FUNDED AS FOLLOWS

FEDERAL FUNDING SOURCE	PERCENT

CONTRACT CHANGE ORDER

Change Requested by: Engineer

CCO: 107	Suppl. No. 2	Contract No. 04 - 012024	Road 04-SF,Ala-80-13.9/14.3,0.0/1.6	FED. AID LOC.: ACIM-080-1(085)8N

To: KIEWIT / FCI / MANSON a JV

You are directed to make the following changes from the plans and specifications or do the following described work not included in the plans and specifications for this contract. ***NOTE: This change order is not effective until approved by the Engineer.***

Description of work to be done, estimate of quantities and prices to be paid. (Segregate between additional work at contract price, agreed price and force account.) Unless otherwise stated, rates for rental of equipment cover only such time as equipment is actually used and no allowance will be made for idle time. This last percentage shown is the net accumulated increase or decrease from the original quantity in the Engineer's Estimate.

Adjustment of Compensation at Lump Sum:

This change order provides payment for extended equipment costs as a result of working drawing delays for cantilever E12E. These delays resulted in an agreed 49 working day project extension, which extended contract completion from June 6, 2006, to August 15, 2006 (exclusive of weather days).

This change order does not provide for additional labor escalation costs. An analysis of these costs has been deferred until a later date.

This change order is based on supporting documentation provided by the Contractor through September 1, 2004. The payment provided in this Change Order shall be deemed full and final compensation for all direct, indirect, and all consequential costs except for labor escalation as noted above.

Cost of Adjustment of Compensation at Lump Sum $1,670,697.00

Estimated Cost: Increase ☑ Decrease ☐ **$1,670,697.00**

By reason of this order the time of completion will be adjusted as follows: 0 days

Submitted by

Signature	Resident Engineer: COE D.	Date 9-9-04

Approval Recommended by

Signature	Construction Engineer: COE D.	Date 9-9-04

Engineer Approval by

Signature	(Print name and title) PETER SIEGENTHALER - Chief	Date 9-9-04

We the undersigned contractor, have given careful consideration to the change proposed and agree, if this proposal is approved, that we will provide all equipment, furnish the materials, except as may otherwise be noted above, and perform all services necessary for the work above specified, and will accept as full payment therefor the prices shown above.

NOTE: If you, the contractor, do not sign acceptance of this order, your attention is directed to the requirements of the specifications as to proceeding with the ordered work and filing a written protest within the time therein specified.

Contractor Acceptance by

Signature	(Print name and title)	Date

This change order will be paid for as an adjustment of compensation at a lump sum of $1,670,697.00, which can be financed from the contingency funds. A summary of the total delay costs as determined by the State is included as sheet 2 of 2 of this change order. A complete cost analysis is on file with the project records.

This change order was discussed with Mr. Pete Siegenthaler, SFOBB Construction Manager. Mr. Siegenthaler is in concurrence with this change order.

This contract change order has been discussed with Ms. Nancy Bobb, FHWA Bay Bridge Project Manager. Ms. Bobb provided FHWA concurrence via electronic message on September 9, 2004. A printed copy of the prior approval provided by Ms. Bobb is attached.

This change order was also discussed with Ms. Janet Adams, Toll Bridge Region Project Manager. Ms. Adams is in concurrence with this change. Ms. Adams provided concurrence via an electronic message on September 10, 2004. A copy of the concurrence from Ms. Adams is attached.

Maintenance concurrence is not required for this change because no structural modifications are necessary.

Adjustment of contract time was provided for in Contract Change Order Nos. 107 and 107 Supplement No. 1. There will be no additional time adjustment by reason of this contract change order.

CONCURRED BY:		
Construction Engineer:	Douglas Coe by DAS	Date 9/17/04
Bridge Engineer:	Douglas Coe by DAS	Date 9/17/04
FHWA Representative:	Nancy Bobb	Date 9/9/2004
Project Engineer:		Date
Other (specify): Janet Adams		Date9/10/2004
		Date
		Date
District Prior Approval By:	Pete Siegenthaler	Date10/8/2003
HQ (Issue Approve) By:		Date
Resident Engineer's Signature:	for Doug Coe	Date 9/17/04

ESTIMATE OF COST	THIS REQUEST	TOTAL TO DATE
ITEMS	$0.00	$10,192,000.00
FORCE ACCOUNT	$0.00	$0.00
AGREED PRICE	$0.00	$0.00
ADJUSTMENT	$1,670,697.00	$1,670,697.00
TOTAL	$1,670,697.00	$11,862,697.00

FEDERAL PARTICIPATION

☑ PARTICIPATING ☐ PARTICIPATING IN PART ☐ NONE
☐ NON-PARTICIPATING (MAINTENANCE) ☐ NON-PARTICIPATING

FEDERAL SEGREGATION (if more than one Funding Source or P.I.P. type)
☑ CCO FUNDED PER CONTRACT ☐ CCO FUNDED AS FOLLOWS

FEDERAL FUNDING SOURCE	PERCENT

CONTRACT CHANGE ORDER

Change Requested by: Engineer

CCO: 107	Suppl. No. 3	Contract No. 04 - 012024	Road 04-SF,Ala-80-13.9/14.3,0.0/1.6	FED. AID LOC.: ACIM-080-1(085)8N

To: **KIEWIT / FCI / MANSON a JV**

Ycu are directed to make the following changes from the plans and specifications or do the following described work not included in the plans and specifications for this contract. ***NOTE: This change order is not effective until approved by the Engineer.***

Description of work to be done, estimate of quantities and prices to be paid. (Segregate between additional work at contract price, agreed price and force account.) Unless otherwise stated, rates for rental of equipment cover only such time as equipment is actually used and no allowance will be made for idle time. This last percentage shown is the net accumulated increase or decrease from the original quantity in the Engineer's Estimate.

Adjustment of Compensation at Lump Sum:

This change order provides full and final payment for all extended labor, equipment, and escalation costs as a result of working drawing delays to cantilever E12E. These delays resulted in an agreed 49 working day project extension (CCO 107 S0 & S1), which extended contract completion from June 6, 2006 (WD 314) to August 15, 2006 (WD 363) exclusive of future weather days.

The Contractor agrees to accept the lump sum of in the amount of $4,748,834. This agreed lump sum amount constitutes full compensation, including all markups, all direct and indirect costs, all overhead costs not covered in Bid Item 7 (Time Related Overhead), and all associated project impacts. This amount is in addition to the previous payment of $1,670,697.00 provided in CCO 107 S2.

A supplemental change order (credit) may be issued if equipment identified in CCO 107S2 is removed from the project site prior to the planned early finish dates in CPM schedule "C3G0".

This Change Order resolves the Contractor's protest to CCO 107 S2 as outlined in KFM Letter No. 954 dated September 24, 2004

Adjustment of Compensation at Lump Sum $4,748,834.00

Estimated Cost: **Increase** ☑ **Decrease** ☐ **$4,748,834.00**

By reason of this order the time of completion will be adjusted as follows: 0 days

Submitted by

Signature	Resident Engineer: DOUG COE, Supervising Br. Eng.	Date 9/8/05

Approval Recommended by

Signature	Construction Engineer: PETER SIEGENTHALER, Chief	Date 9/9/05

Engineer Approval by

Signature	(Print name and title) PETER SIEGENTHALER - Chief	Date

We the undersigned contractor, have given careful consideration to the change proposed and agree, if this proposal is approved, that we will provide all equipment, furnish the materials, except as may otherwise be noted above, and perform all services necessary for the work above specified, and will accept as full payment therefor the prices shown above.

NOTE: If you, the contractor, do not sign acceptance of this order, your attention is directed to the requirements of the specifications as to proceeding with the ordered work and filing a written protest within the time therein specified.

Contractor Acceptance by

Signature	(Print name and title) Tim Skoro, Project Director	Date 9/14/05

STATE OF CALIFORNIA - DEPARTMENT OF TRANSPORTATION

CONTRACT CHANGE ORDER MEMORANDUM

TO: PETER SIEGENTHALER / DOUG COE, Supervising Br. Eng.	FILE: E.A. 04 - 012024
FROM: DOUG COE, Supervising Br. Eng.	CO-RTE-PM 04-SF,Ala-80-13.9/14.3,0.0/1.6
	FED. NO. ACIM-080-1(085)8N
CCO#: 107 SUPPLEMENT#: 3 Category Code: FHCA	CONTINGENCY BALANCE (incl. this change) $52,165,178.80
COST: $4,748,834.00 INCREASE ☑ DECREASE ☐	HEADQUARTERS APPROVAL REQUIRED? ☑ YES ☐ NO
SUPPLEMENTAL FUNDS PROVIDED: $0.00	IS THIS REQUEST IN ACCORDANCE WITH ENVIRONMENTAL DOCUMENTS? ☑ YES ☐ NO
CCO DESCRIPTION: Additional Delay Compensation TRO Plus	**PROJECT DESCRIPTION:** REPLACE SFOBB EAST SPAN

LOCATION: IN SAN FRANCISCO AND ALAMEDA COUNTIES IN SAN FRANCISCO AND OAKLAND FROM 1.3 KM EAST OF THE YERBA BUENA ISL

THIS CHANGE ORDER PROVIDES FOR:

final compensation for the Contractor's extended equipment and labor costs associated with the working drawing delays for cantilever E12E, precast segments 1, 7, 8, and 9. Time Impact Analyses (TIAs 3, 4, 5, and 6) were submitted for these segments and resulted in a combined project extension of forty-nine (49) working days. Contract Change Order (CCO) Nos. 107 and 107 Supplement No.1 were issued to resolve time and time-related overhead (TRO) costs associated with the working drawing delays resulting from changes. CCO No. 107 Supplemental No. 2 was issued unilaterally for extended equipment costs as a result of these delays. CCO No. 107 Supplement No. 2 was issued unilaterally because there was a dispute over what is included in TRO, and the Contractor was unwilling to submit requested documentation for equipment, such as the tower cranes.

The Contractor protested the Department's unilateral execution of CCO No. 107 Supplement No. 2, and the issue was presented to a Dispute Review Board (DRB) on November 4, 2004 and November 19, 2004. The claim value as of November 4, 2004, was $12,349,691.00 (less the unilateral payment of $1,670,697.00).

The Dispute Review Board provided detailed recommendations on how to settle the quantum issue of the protested change order. The key points of the Dispute Review Board recommendations (Attachment 1) are summarized as follows:

- Entitlement should be based on Public Contract Code 7102, which governs in this case, and that 8-1.09, "Right of Way Delay," is complementary but not limiting because of unreasonable delays. All actual damages should be compensated.
- The DRB reviewed the Escrow Bid Documents after the initial meeting and determined that overhead for pay Item No. 47, "Furnish Precast Segments", Item No. 40, "Furnish Precast Concrete Panel", and all other precast yard items was included in the bid items. Since overhead for the bid items performed at the precast yard is included in the items, then it is not included in TRO. For the marine work to be performed at the Oakland project site, the DRB determined that overhead was not included in the bid items and that, since overhead was not included in the items, it must be included in TRO. Therefore, the DRB concluded that overhead is included with Item No. 47 and all other items of work performed at the Stockton Precast Yard, but not for marine related items of work performed in Oakland.
- Right of Way factors are not appropriate for equipment that can not be turned off and is performing it's duty.
- Material, Labor and Equipment escalation should be compensated as entitlement. The Contractor's approach to escalation is reasonable.
- A delay of 49 working days on the critical path should delay all equipment on that path for 49 working days, unless the contractor removes equipment earlier than anticipated.
- Contractor should reduce the item overhead by the amount of markups paid in CCO's during the actual delay of segment casting.
- Subcontractor's delay costs should be treated the same way as the prime contractor.
- Profit should be excluded.

The Contractor did not accept the DRB recommendations but complied with the DRB request to provide more information on the tower cranes and other equipment. The District believes that it is in the best interest of the Department to resolve this dispute using the DRB recommendations as a quantum guideline for not only for this delay, but also, for future delays

including those affecting the hinge segments. Each delay will be evaluated separately since the effected manpower and equipment varies.

The enclosed spreadsheet (Attachment 2) shows the Contractor's claim value, the initial unilateral value of the Department, the proposed resolution value, and the DRB reference recommending the change. Based on the DRB recommendations, CCO No. 107 Supplement No. 3 would be issued to the Contractor as an adjustment of compensation at a lump sum of $4,748,834.00. The extended equipment and supervision delay damage for the working drawing disruption to segments in cantilever E12E is $131,011.00 per working day.

The Contractor has indicated that they would accept this amount as full restitution of the delay. This change order can be financed from the contingency funds. A complete cost analysis and detailed backup is on file in the project records.

This change order was discussed with Mr. Robert Pieplow of Headquarter's Construction. Mr. Pieplow is in concurrence with this change order.

Janet Adams, SFOBB Toll Bridge Project Manager, provided concurrence on September 8, 2005. A copy of the concurrence provided by Ms. Adams is attached

Prior Approval was obtained from Ms. Nancy Bobb, FHWA Bay Bridge Project Manager, via electronic message on September 9, 2005. A printed copy of the prior approval provided by Ms. Bobb is attached.

Concurrence from Maintenance is not required as this change order does not use maintenance funds or affect maintenance facilities or operations.

No time adjustment is warranted for this change as it does not affect the controlling operation.

CONCURRED BY:		
Construction Engineer:	Douglas Coe by DAS	Date 9-14-05
Bridge Engineer:		Date
FHWA Representative:	Nancy Bobb	Date 9/9/2005
Project Engineer:		Date
Other (specify): Janet Adams, Project Mgr.		Date 9/8/2005
		Date
		Date
District Prior Approval By:		Date
HQ (Issue Approve) By:	Ken Darby	Date9/12/2005
Resident Engineer's Signature:	David Shelly for Doug Coe	Date 9-14-05

ESTIMATE OF COST

	THIS REQUEST	TOTAL TO DATE
ITEMS	$0.00	$10,192,000.00
FORCE ACCOUNT	$0.00	$0.00
AGREED PRICE	$0.00	$0.00
ADJUSTMENT	$4,748,834.00	$6,419,531.00
TOTAL	$4,748,834.00	$16,611,531.00

FEDERAL PARTICIPATION

☑ PARTICIPATING ☐ PARTICIPATING IN PART ☐ NONE
☐ NON-PARTICIPATING (MAINTENANCE) ☐ NON-PARTICIPATING

FEDERAL SEGREGATION (if more than one Funding Source or P.I.P. type)
☑ CCO FUNDED PER CONTRACT ☐ CCO FUNDED AS FOLLOWS

FEDERAL FUNDING SOURCE PERCENT

CONTRACT CHANGE ORDER

Change Requested by: Engineer

CCO: 108 **Suppl. No. 0** **Contract No. 04 - 012024** **Road** 04-SF,Ala-80-13.9/14.3,0.0/1.6 **FED. AID LOC.:** ACIM-080-1(085)8N

To: **KIEWIT / FCI / MANSON a JV**

You are directed to make the following changes from the plans and specifications or do the following described work not included in the plans and specifications for this contract. ***NOTE: This change order is not effective until approved by the Engineer.***

Description of work to be done, estimate of quantities and prices to be paid. (Segregate between additional work at contract price, agreed price and force account.) Unless otherwise stated, rates for rental of equipment cover only such time as equipment is actually used and no allowance will be made for idle time. This last percentage shown is the net accumulated increase or decrease from the original

Adjustment of Compensation at Lump Sum:

The Contractor shall redesign Temporary Tower B for the SFOBB East Span Skyway, Bridge Nos. 34-0006L/R, to accommodate a higher dead load reaction demand, and shall incorporate the following requirements:

1.) Provide a strongback at the closure between the EB transition span and segment E3E-5W and at the closure between the WB transition span and segment E3W-5W;

2.) Provide additional temporary post-tensioning (PT) across the transition span closure;

3.) Provide additional soffit stiffening due to increased dead load reaction, if required;

4.) Use 0.1g for the seismic design criteria for the interim stage construction; and

5.) Substitute the vessel impact requirement at Tower B with tugboat protection 24 hours per day, 7 days per week for the period the transition span is supported on Tower B.

Full compensation for all costs, including markups, all direct and indirect costs, all associated projects impacts, and all overhead costs are included in the lump sum payment under Contract Change Order No. 200. No further payment will be made as a result of this Change Order.

Estimated Cost: Increase ☐ Decrease ☐

By reason of this order the time of completion will be adjusted as follows: 0 days

Submitted by

Signature	Resident Engineer: DOUG COE, Supervising Br. Eng.	Date 8-24-06

Approval Recommended by

Signature	Construction Engineer: DOUG COE, Supervising Br. Eng.	Date 8-24-06

Engineer Approval by

Signature	(Print name and title) PETER SIEGENTHALER - Chief	Date

We the undersigned contractor, have given careful consideration to the change proposed and agree, if this proposal is approved, that we will provide all equipment, furnish the materials, except as may otherwise be noted above, and perform all services necessary for the work above specified, and will accept as full payment therefor the prices shown above.

NOTE: If you, the contractor, do not sign acceptance of this order, your attention is directed to the requirements of the specifications as to proceeding with the ordered work and filing a written protest within the time therein specified.

Contractor Acceptance by

Signature	(Print name and title) Lex Zink, Project Director	Date 9/5/06

STATE OF CALIFORNIA - DEPARTMENT OF TRANSPORTATION

CONTRACT CHANGE ORDER MEMORANDUM

TO: PETER SIEGENTHALER / DOUG COE, Supervising Br. Eng.	FILE: E.A. 04 - 012024
FROM: DOUG COE, Supervising Br. Eng.	CO-RTE-PM 04-SF, Ala-80-13.9/14.3,0.0/1.6 FED. NO. ACIM-080-1(085)8N
CCO# 108 SUPPLEMENT#: 0 Category Cod	CONTINGENCY BALANCE (incl. this change
COST: INCREASE ☐ DECREASE ☐	HEADQUARTERS APPROVAL REQUIRED? ☑ YES ☐ NO
SUPPLEMENTAL FUNDS PROVIDED: $0.00	IS THIS REQUEST IN ACCORDANCE WITH ENVIRONMENTAL DOCUMENTS? ☑ YES ☐ NO
CCO DESCRIPTION: Temporary Tower B Reaction Loads	**PROJECT DESCRIPTION:** REPLACE SFOBB EAST SPAN

LOCATION: IN SAN FRANCISCO AND ALAMEDA COUNTIES IN SAN FRANCISCO AND OAKLAND FROM 1.3 KM EAST OF THE YERBA BUENA ISL

THIS CHANGE ORDER PROVIDES FOR:

Redesigning of Temporary Tower B for a higher dead load reaction and incorporating the following requirements: 1.) Provide a strongback at the closure between the EB transition span and segment E3E-5W and simularly for the WB structure; 2.) Provide additional temporary post-tensioning (PT) across the transition span closure; 3.) Use 0.1g for the seismic design criteria for the interim stage construction; 4.) Eliminate the vessel impact load requirement and utilize an Erection Device (ED) as an alternative support system; and 5.) Substitute the vessel impact requirement at Tower B with tugboat protection 24 hours per day, 7 days per week for the period the transition span is supported on tower 8 (approx. 4 weeks).

The redesign of temporary Tower B is needed to accommodate the increased tower reaction due to the weight of the closure pour concrete, which is not included in the reaction shown on the contract plans. The strongback at the closure is not shown on the contract plans, but it should have been shown. Additional PT is needed to eliminate tension across the transition span closure. This requirement only became apparent after running the longitudinal construction analysis. The Contractor could not contemplate the additional PT during bid time. FUGRO's foundation report provided substantial information regarding the number of piles required for each temporary tower. However, the actual number of piles needed is 4 to 5 times greater than what is stated in the report. To mitigate the State's exposure to costly claims, the Engineer agrees to change the design criteria for the interim stage construction of Tower A & B, and modify the vessel impact requirement for Tower B, which will lower the piles numbers and reduce the size of the foundation. The contractor will provide tugboat protection 24 hrs/day & 7 days/week to protect Tower B from errant vessels for the period the transition span is supported on temporary tower B.

The agreed credit for this contract change order is included in the lump sum compensation portion of resolution CCO No. 200. This change order provides to the State an agreed lump sum credit of $200,000.00.

A detailed force account analysis prepared by the Engineer for the cost of this change order is on file in the project records.

Mr. Brian Maroney, District Division Chief, Toll Bridge Design, provided Design concurrence for this change on December 1, 2003. A copy of the electronic message indicating concurrence by Mr. Maroney is attached.

Mr. Jon Tapping, Acting SFOBB Toll Bridge Project Manager, provided concurrence on December 16, 2005. A copy of the concurrence provided by Mr. Tapping is attached.

Mr. Pete Siegenthaler, SFOBB Construction Manager, Toll Bridge Construction, concurs with this change. A copy of the concurrence signed by Mr. Siegenthaler on August 31, 2005, is attached.

This issue was discussed with David Suloff, Chief Bridge Section, United States Coast Guard, on July 21, 2005. Mr. Suloff indicated that the Coast Guard defers the decision regarding this issue to the owner.

Prior Approval was obtained from Ms. Nancy Bobb, FHWA Bay Bridge Project Manager, via electronic message on September 1, 2005. A printed copy of the prior approval provided by Ms. Bobb is attached.

Concurrence from Maintenance is not required as this change order does not use maintenance funds or affect maintenance facilities or operations.

Authorization to proceed with this change order was issued by Headquarters on September 1, 2005.

No time adjustment is warranted for this change order as it does not affect the controlling operation.

CONCURRED BY:		
Construction Engineer:	Douglas Coe	Date 8-24-06
Bridge Engineer:	Douglas Coe	Date 8-24-06
FHWA Representative:	Nancy Bobb	Date
Project Engineer:	Brian Maroney, Toll Br. Design	Date12/1/2003
Other (specify): David Suloff, Coast Guard		Date7/21/2005
		Date
Ken Darby, HQ CCO		Date 9/1/2005
District Prior Approval By:		Date
HQ (Issue Approve) By:		Date
Resident Engineer's Signature:		Date 8-24-06

ESTIMATE OF COST

	THIS REQUEST	TOTAL TO DATE
ITEMS	$0.00	$0.00
FORCE ACCOUNT	$0.00	$0.00
AGREED PRICE	$0.00	$0.00
ADJUSTMENT		
TOTAL		

FEDERAL PARTICIPATION

☑ PARTICIPATING ☐ PARTICIPATING IN PART ☐ NONE
☐ NON-PARTICIPATING (MAINTENANCE) ☐ NON-PARTICIPATING

FEDERAL SEGREGATION (if more than one Funding Source or P.I.P. type)
☑ CCO FUNDED PER CONTRACT ☐ CCO FUNDED AS FOLLOWS

FEDERAL FUNDING SOURCE	PERCENT

CONTRACT CHANGE ORDER

Change Requested by: Engineer

CCO 109	Suppl. No. 0	Contract No. 04 - 012024	Road 04-SF,Ala-80-13.9/14.3,0.0/1.6	FED. AID LOC.: ACIM-080-1(085)8N

To: **KIEWIT / FCI / MANSON a JV**

You are directed to make the following changes from the plans and specifications or do the following described work not included in the plans and specifications for this contract. ***NOTE: This change order is not effective until approved by the Engineer.***

Description of work to be done, estimate of quantities and prices to be paid. (Segregate between additional work at contract price, agreed price and force account.) Unless otherwise stated, rates for rental of equipment cover only such time as equipment is actually used and no allowance will be made for idle time. This last percentage shown is the net accumulated increase or decrease from the original quantity in the Engineer's Estimate.

Adjustment of Compensation at Lump Sum:

Revise the 36-mm diameter high-strength (HS) bars that connect the bike path cantilever beams to the bridge from coarse threaded bars to fine threaded bars. The fine threaded bars shall be stressed to 700 kN after seating using a calibrated torque wrench as approved by the Engineer. For the coarse threaded bars that have already been cast into the bridge, the bars shall be stressed to 700 kN by repeatedly stressing and tightening the nuts to refusal and releasing the bars. The bar forces shall be confirmed by the Engineer. Modify the cast-in place bearing plates (dead end) to 7" x 7" size with 50 ksi material. Modification of high-strength (HS) bars shall be in accordance with revised Contract Plan sheets 870R5, 871R5, 874R4, and 875R4 of 978 (pages 2 to 5 of this Change Order).

Adjustment of Compensation at Agreed Lump Sum $198,180.00

Estimated Cost: Increase ☑ Decrease ☐ **$198,180.00**

By reason of this order the time of completion will be adjusted as follows: 0 days

Submitted by

Signature	Resident Engineer: DOUG COE, Supervising Br. Eng.	Date 5-25-06

Approval Recommended by

Signature	Construction Engineer: DOUG COE, Supervising Br. Eng.	Date 5-25-06

Engineer Approval by

Signature	(Print name and title) For PETER SIEGENTHALER - Chief	Date 6-9-06

We the undersigned contractor, have given careful consideration to the change proposed and agree, if this proposal is approved, that we will provide all equipment, furnish the materials, except as may otherwise be noted above, and perform all services necessary for the work above specified, and will accept as full payment therefor the prices shown above.

NOTE: If you, the contractor, do not sign acceptance of this order, your attention is directed to the requirements of the specifications as to proceeding with the ordered work and filing a written protest within the time therein specified.

Contractor Acceptance by

Signature	(Print name and title) CHRISTOPHER J. VILLA	Date 4/25/06

STATE OF CALIFORNIA - DEPARTMENT OF TRANSPORTATION

CONTRACT CHANGE ORDER MEMORANDUM

DATE: 3/3/2006

TO: PETER SIEGENTHALER / DOUG COE, Supervising Br. Eng.	FILE: **E.A.** 04 - 012024
FROM: DOUG COE, Supervising Br. Eng.	**CO-RTE-PM** 04-SF,Ala-80-13.9/14.3,0.0/1.6
	FED. NO. ACIM-080-1(085)8N
CCO#: **109** SUPPLEMENT#: **0** Category Code: **CHPA**	CONTINGENCY BALANCE (incl. this change) **$29,523,597.62**
COST: **$198,180.00** INCREASE ☑ DECREASE ☐	HEADQUARTERS APPROVAL REQUIRED? ☐ YES ☑ NO
SUPPLEMENTAL FUNDS PROVIDED: **$0.00**	IS THIS REQUEST IN ACCORDANCE WITH ENVIRONMENTAL DOCUMENTS? ☑ YES ☐ NO
CCO DESCRIPTION: Bike Path Post Tensioning Bar	**PROJECT DESCRIPTION:** REPLACE SFOBB EAST SPAN

LOCATION: IN SAN FRANCISCO AND ALAMEDA COUNTIES IN SAN FRANCISCO AND OAKLAND FROM 1.3 KM EAST OF THE YERBA BUENA ISL

THIS CHANGE ORDER PROVIDES FOR:

Revising the 36-mm diameter high-strength (HS) bars that connect the bike path cantilever beams to the bridge from coarse threaded bars to fine threaded bars. The fine threaded bars shall be stressed to 700 kN after seating using a calibrated torque wrench as approved by the Engineer. For the coarse threaded bars that have already been cast into the bridge, the bars shall be stressed to 700 kN by repeatedly stressing and tightening the nuts to refusal and releasing the bars. The bar forces shall be confirmed by the Engineer. This CCO also provides for revising the cast-in place bearing plates (dead end) to 7" x 7" size with 50 ksi material. Modification of high-strength (HS) bars shall be in accordance with revised Contract Plan sheets 870R5, 871R5, 874R4, and 875R4 of 978 (4 sheets).

The Contract Plans require the 36-mm diameter high-strength (HS) bars on the bike path to attain a specified force of 700 kN after seating. Post tensioning calculations reveal that the required lock-off force can not be achieved with the standard post tensioning procedure due to seating losses associated with the coarse threaded HS bars. To achieve the required seating force of 700 kN, fine threaded bars with lower seating losses shall be used. The size of the cast-in place bearing plates are modified to 7"x 7" size with 50 ksi material to alleviate conflicts and congestion in the bikepath area.

For this work, the Contractor will be compensated an agreed lump sum of $198,180.00. This sum constitutes full compensation for providing all labor, material, equipment, tools and incidentals, including markups, for all direct and indirect costs, and all associated project impacts for this work. The cost analysis for this change is on file in the project records.

Mr. David Salladay, District Representative, concurred with this change for Mr. Pete Siegenthaler, Principal Bridge Engineer for the SFOBB East Span Replacement, on May 19, 2004.

Prior Approval was obtained from Ms. Nancy Bobb, FHWA Bay Bridge Project Manager, on December 13, 2005.

Authorization to proceed with this change order was issued by Division of Construction on December 13, 2005.

Issue and Approve (I & A) from Division of Construction is not required since the agreed lump sum cost is below $200,000.00.

Concurrence from Maintenance is not required as this change order does not use maintenance funds or affect maintenance facilities or operations.

No time adjustment is warranted for this change as it does not affect the controlling operation.

RECEIVED

052791 MAY 11 06

CONCURRED BY:		
Construction Engineer:	Douglas Coe DSC	Date 8-25-06
Bridge Engineer:	Douglas Coe DSC	Date 3-25-06
FHWA Representative:	Nancy Bobb	Date 2/13/2005
Project Engineer:		Date
Other (specify):		Date
		Date
		Date
District Prior Approval By:		Date
HQ (Issue Approve) By:		Date
Resident Engineer's Signature:		Date 3-29-06

ESTIMATE OF COST

	THIS REQUEST	TOTAL TO DATE
ITEMS	$0.00	$0.00
FORCE ACCOUNT	$0.00	$0.00
AGREED PRICE	$0.00	$0.00
ADJUSTMENT	$198,180.00	$198,180.00
TOTAL	$198,180.00	$198,180.00

FEDERAL PARTICIPATION

☑ PARTICIPATING ☐ PARTICIPATING IN PART ☐ NONE
☐ NON-PARTICIPATING (MAINTENANCE) ☐ NON-PARTICIPATING

FEDERAL SEGREGATION (if more than one Funding Source or P.I.P. type)
☑ CCO FUNDED PER CONTRACT ☐ CCO FUNDED AS FOLLOWS

FEDERAL FUNDING SOURCE	PERCENT

STATE OF CALIFORNIA - DEPARTMENT OF TRANSPORTATION

CONTRACT CHANGE ORDER

Change Requested by: Engineer

CCO: 109	Suppl. No. 1	Contract No. 04 - 012024	Road 04-SF,Ala-80-13.9/14.3,0.0/1.6	FED. AID LOC.: ACIM-080-1(085)8N

To: **KIEWIT / FCI / MANSON a JV**

You are directed to make the following changes from the plans and specifications or do the following described work not included in the plans and specifications for this contract. ***NOTE: This change order is not effective until approved by the Engineer.***

Description of work to be done, estimate of quantities and prices to be paid. (Segregate between additional work at contract price, agreed price and force account.) Unless otherwise stated, rates for rental of equipment cover only such time as equipment is actually used and no allowance will be made for idle time. This last percentage shown is the net accumulated increase or decrease from the original quantity in the Engineer's Estimate.

Adjustment of Compensation at Lump Sum:

Delete Contract Change Order No. 109 Supplement 0 "Bike Path Post Tensioning Bar", and credit the State the Lump Sum payment made in Contract Pay Estimate No. 59, as Extra Work Bill No. 2463, RE No. 0001, for the SFOBB East Span Skyway, Bridge Nos. 34-0006L/R.

A no-cost Contract Change Order in lieu of CCO No. 109 Supplement 0 will be re-issued as Contract Change Order No. 109 Supplement 2 in Contract Change Order No. 200.

Adjustment of Compensation at Agreed Lump Sum .....($198,180.00)<Credit>

Estimated Cost: Increase ☐ Decrease ☑ **($198,180.00)**

By reason of this order the time of completion will be adjusted as follows: 0 days

Submitted by

Signature	Resident Engineer: DOUG COE, Supervising Br. Eng.	Date 7-28-06

Approval Recommended by

Signature	Construction Engineer: DOUG COE, Supervising Br. Eng.	Date 7-28-06

Engineer Approval by

Signature	(Print name and title) PETER SIEGENTHALER - Chief	Date 10/16/06

We the undersigned contractor, have given careful consideration to the change proposed and agree, if this proposal is approved, that we will provide all equipment, furnish the materials, except as may otherwise be noted above, and perform all services necessary for the work above specified, and will accept as full payment therefor the prices shown above.

NOTE: If you, the contractor, do not sign acceptance of this order, your attention is directed to the requirements of the specifications as to proceeding with the ordered work and filing a written protest within the time therein specified.

Contractor Acceptance by

Signature	(Print name and title) Lee Zink Project Director	Date 9/8/06

STATE OF CALIFORNIA - DEPARTMENT OF TRANSPORTATION

CONTRACT CHANGE ORDER MEMORANDUM

DATE: 7/27/2006 Page 1 of 1

TO: PETER SIEGENTHALER / DOUG COE, Supervising Br. Eng.	FILE: E.A. 04 - 012024
FROM: DOUG COE, Supervising Br. Eng.	CO-RTE-PM 04-SF,Ala-80-13.9/14.3,0.0/1.6
	FED. NO. ACIM-080-1(085)8N
CCO#: 109 SUPPLEMENT#: 1 Category Code: CHPA	CONTINGENCY BALANCE (incl. this change) $23,404,432.70
COST: ($198,180.00) INCREASE ☐ DECREASE ☑	HEADQUARTERS APPROVAL REQUIRED? ☐ YES ☑ NO
SUPPLEMENTAL FUNDS PROVIDED: $0.00	IS THIS REQUEST IN ACCORDANCE WITH ENVIRONMENTAL DOCUMENTS? ☑ YES ☐ NO
CCO DESCRIPTION: Reversal of funds paid for CCO 109 S0	**PROJECT DESCRIPTION:** REPLACE SFOBB EAST SPAN

LOCATION: IN SAN FRANCISCO AND ALAMEDA COUNTIES IN SAN FRANCISCO AND OAKLAND FROM 1.3 KM EAST OF THE YERBA BUENA ISL

THIS CHANGE ORDER PROVIDES FOR:

Deleting Contract Change Order No. 109 Supplement 0 "Bike Path Post Tensioning Bar", and crediting the State the Lump Sum payment made in Contract Pay Estimate No. 59, as Extra Work Bill No. 2463, RE No. 0001, for the SFOBB East Span Skyway, Bridge Nos. 34-0006L/R.

The compensation for already executed Contract Change Order No. 109 Supplement 0, will be included in the lump sum payment of Contract Change Order No. 200. Therefore, Contract Change Order No. 109 Supplement 0, will be deleted and re-issued as no-cost Contract Change Order No. 109 Supplement 2. The lump sum amount already paid to the the Contractor will be credited back to the State, so that the amount can be included in the lump sum payment of Contract Change Order No. 200.

Mr. Douglas Coe, Acting District Representative, concurs with this change.

Design concurrence is not required as this is a administrative issue.

Concurrence from Maintenance is not required as this change order does not use maintenance funds or affect maintenance facilities or operations.

No time adjustment is warranted for this change as it does not affect the controlling operation.

RECEIVED 05722 OCT 23 90

CONCURRED BY:			
Construction Engineer:	Douglas Coe		Date 7-28-06
Bridge Engineer:	Douglas Coe		Date 7-28-06
FHWA Representative:			Date
Project Engineer:			Date
Other (specify):			Date
			Date
			Date
District Prior Approval By:			Date
HQ (Issue Approve) By:			Date
Resident Engineer's Signature:			Date 7-28-06

ESTIMATE OF COST

	THIS REQUEST	TOTAL TO DATE
ITEMS	$0.00	$0.00
FORCE ACCOUNT	$0.00	$0.00
AGREED PRICE	$0.00	$0.00
ADJUSTMENT	($198,180.00)	$197,381.00
TOTAL	($198,180.00)	$197,381.00

FEDERAL PARTICIPATION

☑ PARTICIPATING ☐ PARTICIPATING IN PART ☐ NONE
☐ NON-PARTICIPATING (MAINTENANCE) ☐ NON-PARTICIPATING

FEDERAL SEGREGATION (if more than one Funding Source or P.I.P. type)
☑ CCO FUNDED PER CONTRACT ☐ CCO FUNDED AS FOLLOWS

FEDERAL FUNDING SOURCE	PERCENT

CONTRACT CHANGE ORDER

Change Requested by: Engineer

CCO: 109	Suppl. No. 2	Contract No. 04 - 012024	Road 04-SF,Ala-80-13.9/14.3,0.0/1.6	FED. AID LOC.: ACIM-080-1(085)8N

To: KIEWIT / FCI / MANSON a JV

You are directed to make the following changes from the plans and specifications or do the following described work not included in the plans and specifications for this contract. ***NOTE: This change order is not effective until approved by the Engineer.***

Description of work to be done, estimate of quantities and prices to be paid. (Segregate between additional work at contract price, agreed price and force account.) Unless otherwise stated, rates for rental of equipment cover only such time as equipment is actually used and no allowance will be made for idle time. This last percentage shown is the net accumulated increase or decrease from the original

Adjustment of Compensation at Lump Sum:

Revise the 36-mm diameter high-strength (HS) bars that connect the bike path cantilever beams to the bridge from coarse threaded bars to fine threaded bars. The fine threaded bars shall be stressed to 700 kN after seating using a calibrated torque wrench as approved by the Engineer. For the coarse threaded bars that have already been cast into the bridge, the bars shall be stressed to 700 kN by repeatedly stressing and tightening the nuts to refusal and releasing the bars. The bar forces shall be confirmed by the Engineer. Modify the cast-in place bearing plates (dead end) to 7" x 7" size with 50 ksi material. Modification of high-strength (HS) bars shall be in accordance with revised Contract Plan sheets 870R5, 871R5, 874R4, and 875R4 of 978 (pages 2 to 5 of this Change Order).

Full compensation for all costs, including markups, all direct and indirect costs, all associated project impacts, and all overhead costs are included in the lump sum payment of CCO No. 200 and no further payment will be made as a result of this CCO.

Estimated Cost: Increase ☐ Decrease ☐

By reason of this order the time of completion will be adjusted as follows: 0 days

Submitted by

Signature	Resident Engineer: DOUG COE, Supervising Br. Eng.	Date 8-24-06

Approval Recommended by

Signature	Construction Engineer: DOUG COE, Supervising Br. Eng.	Date 8-24-06

Engineer Approval by

Signature	(Print name and title) PETER SIEGENTHALER - Chief	Date

We the undersigned contractor, have given careful consideration to the change proposed and agree, if this proposal is approved, that we will provide all equipment, furnish the materials, except as may otherwise be noted above, and perform all services necessary for the work above specified, and will accept as full payment therefor the prices shown above.

NOTE: If you, the contractor, do not sign acceptance of this order, your attention is directed to the requirements of the specifications as to proceeding with the ordered work and filing a written protest within the time therein specified.

Contractor Acceptance by

Signature	(Print name and title) Lee Zink, Project Director	Date 9/5/06

STATE OF CALIFORNIA - DEPARTMENT OF TRANSPORTATION

CONTRACT CHANGE ORDER MEMORANDUM

TO: PETER SIEGENTHALER / DOUG COE, Supervising Br. Eng.	FILE: **E.A.** 04 - 012024
FROM: DOUG COE, Supervising Br. Eng.	**CO-RTE-PM** 04-SF,Ala-80-13.9/14.3,0.0/1.6
	FED. NO. ACIM-080-1(085)8N
CCO# **109** SUPPLEMENT#: **2** Category Cod **CHPA**	CONTINGENCY BALANCE (incl. this change
COST: INCREASE ☐ DECREASE ☐	HEADQUARTERS APPROVAL REQUIRED? ☐ YES ☑ NO
SUPPLEMENTAL FUNDS PROVIDED: **$0.00**	IS THIS REQUEST IN ACCORDANCE WITH ENVIRONMENTAL DOCUMENTS? ☑ YES ☐ NO
CCO DESCRIPTION: Resolution of CCO 109 Supplement 0	**PROJECT DESCRIPTION:** REPLACE SFOBB EAST SPAN

LOCATION: IN SAN FRANCISCO AND ALAMEDA COUNTIES IN SAN FRANCISCO AND OAKLAND FROM 1.3 KM EAST OF THE YERBA BUENA ISL

THIS CHANGE ORDER PROVIDES FOR:

Revising the 36-mm diameter high-strength (HS) bars that connect the bike path cantilever beams to the bridge from coarse threaded bars to fine threaded bars. The fine threaded bars shall be stressed to 700 kN after seating using a calibrated torque wrench as approved by the Engineer. For the coarse threaded bars that have already been cast into the bridge, the bars shall be stressed to 700 kN by repeatedly stressing and tightening the nuts to refusal and releasing the bars. The bar forces shall be confirmed by the Engineer. This CCO also provides for revising the cast-in place bearing plates (dead end) to 7" x 7" size with 50 ksi material. Modification of high-strength (HS) bars shall be in accordance with revised Contract Plan sheets 870R5, 871R5, 874R4, and 875R4 of 978 (4 sheets).

The Contract Plans require the 36-mm diameter high-strength (HS) bars on the bike path to attain a specified force of 700 kN after seating. Post tensioning calculations reveal that the required lock-off force can not be achieved with the standard post tensioning procedure due to seating losses associated with the coarse threaded HS bars. To achieve the required seating force of 700 kN, fine threaded bars with lower seating losses shall be used. The size of the cast-in place bearing plates are modified to 7"x 7" size with 50 ksi material to alleviate conflicts and congestion in the bikepath area.

The agreed compensation for this contract change order is included in the lump sum compensation portion of resolution CCO No. 200. For this work the Contractor will be compensated an agreed lump sum amount of $197,381.00.

A detailed force account analysis prepared by the Engineer for the cost of this change order is on file in the project records.

Mr. David Salladay, District Representative, concurred with this change for Mr. Pete Siegenthaler, Principal Bridge Engineer for the SFOBB East Span Replacement, on May 19, 2004.

Prior Approval from FHWA is not required since the agreed lump sum cost is below $200,000.00.

Concurrence from Maintenance is not required as this change order does not use maintenance funds or affect maintenance facilities or operations.

No time adjustment is warranted for this change as it does not affect the controlling operation.

CONCURRED BY:		
Construction Engineer:	Douglas Coe	Date 8-24-06
Bridge Engineer:	Douglas Coe	Date 8-24-06
FHWA Representative:		Date
Project Engineer:		Date
Other (specify):		Date
		Date
		Date
District Prior Approval By:		Date
HQ (Issue Approve) By:		Date
Resident Engineer's Signature:		Date 8-24-06

ESTIMATE OF COST

	THIS REQUEST	TOTAL TO DATE
ITEMS	$0.00	$0.00
FORCE ACCOUNT	$0.00	$0.00
AGREED PRICE	$0.00	$0.00
ADJUSTMENT		
TOTAL		

FEDERAL PARTICIPATION

☑ PARTICIPATING ☐ PARTICIPATING IN PART ☐ NONE
☐ NON-PARTICIPATING (MAINTENANCE) ☐ NON-PARTICIPATING

FEDERAL SEGREGATION (if more than one Funding Source or P.I.P. type)
☑ CCO FUNDED PER CONTRACT ☐ CCO FUNDED AS FOLLOWS

FEDERAL FUNDING SOURCE	PERCENT

CONTRACT CHANGE ORDER

CCO: 110	Suppl. No. 0	Contract No. 04 - 012024	Road 04-SF,Ala-80-13.9/14.3,0.0/1.6	FED. AID LOC.: ACIM-080-1(085)8N

To: **KIEWIT / FCI / MANSON a JV**

You are directed to make the following changes from the plans and specifications or do the following described work not included in the plans and specifications for this contract. ***NOTE: This change order is not effective until approved by the Engineer.***

Description of work to be done, estimate of quantities and prices to be paid. (Segregate between additional work at contract price, agreed price and force account.) Unless otherwise stated, rates for rental of equipment cover only such time as equipment is actually used and no allowance will be made for idle time. This last percentage shown is the net accumulated increase or decrease from the original quantity in the Engineer's Estimate.

Extra Work at Lump Sum:

Install one (1) steel safety access ladder each on Piers E4 and E5 of the existing SFOBB - East Span, Bridge No. 33-0025, for a total of two (2) ladders with locking hinged steel ladder security doors, as shown on sheet 2 of this contract change order. These ladders will provide safe access for survey work during construction of the SFOBB - East Span Skyway, Bridge Nos. 34-0006 UR. Provide five (5) sets of keys for each security door with the Pier Number stamped into the key for each respective pier. Different locks and keys shall be used for each Pier. Steel shall be hot dipped galvanized and all bolts, screws, and miscellaneous hardware shall be of equal or better corrosion resistance. Security doors shall be installed as shown on the attached plan sheet to allow clearance for gunwales of transport boats at high tides. Existing railing shall be tied into the ladder rails.

For this work, the Contractor shall receive and accept the agreed lump sum of $33,223.00. This sum constitutes full and complete compensation for providing all labor, materials, equipment, tools, and incidentals, including all markups, for this change.

Cost of Extra Work at Agreed Lump Sum $33,223.00

Estimated Cost: Increase ☑ Decrease ☐ **$33,223.00**

By reason of this order the time of completion will be adjusted as follows: 0 days

Submitted by		
Signature	**Resident Engineer:** COE D.	Date 2-6-04
Approval Recommended by		
Signature	**Construction Engineer:** COE D.	Date 2-6-04
Engineer Approval by		
Signature	(Print name and title) PETER SIEGENTHALER - Chief	Date

We the undersigned contractor, have given careful consideration to the change proposed and agree, if this proposal is approved, that we will provide all equipment, furnish the materials, except as may otherwise be noted above, and perform all services necessary for the work above specified, and will accept as full payment therefor the prices shown above.

NOTE: If you, the contractor, do not sign acceptance of this order, your attention is directed to the requirements of the specifications as to proceeding with the ordered work and filing a written protest within the time therein specified.

Contractor Acceptance by		
Signature	(Print name and title) A.T. Sxolo, Project Director	Date 2/11/04

STATE OF CALIFORNIA - DEPARTMENT OF TRANSPORTATION

CONTRACT CHANGE ORDER MEMORANDUM

DATE: 2/2/2004

TO: PETER SIEGENTHALER / COE D.	FILE: E.A. 04 - 012024
FROM: COED.	CO-RTE-PM 04-SF,Ala-80-13.9/14.3,0.0/1.6
	FED. NO. ACIM-080-1(085)8N
CCO#: 110 SUPPLEMENT#: 0 Category Code: AWZZ	CONTINGENCY BALANCE (incl. this change) $27,185,832.96
COST: $33,223.00 INCREASE ☑ DECREASE ☐	HEADQUARTERS APPROVAL REQUIRED? ☐ YES ☑ NO
SUPPLEMENTAL FUNDS PROVIDED: $33,223.00	IS THIS REQUEST IN ACCORDANCE WITH ENVIRONMENTAL DOCUMENTS? ☑ YES ☐ NO
CCO DESCRIPTION: Safety Access Ladders on Existing Piers	**PROJECT DESCRIPTION:** REPLACE SFOBB EAST SPAN

LOCATION: IN SAN FRANCISCO AND ALAMEDA COUNTIES IN SAN FRANCISCO AND OAKLAND FROM 1.3KM EAST OF THE YERBA BUENA ISL

THIS CHANGE ORDER PROVIDES FOR:

Install one (1) steel safety access ladder each on Piers E4 and E5 of the existing SFOBB - East Span, Bridge No. 33-0025, for a total of two (2) ladders with locking hinged steel ladder security doors and five sets of keys.

Ladders are needed to provide safe access for Caltrans Land Surveyors gaining access to survey control points located on top of the existing bridge footings at Piers E4 and E5 for the construction of the SFOBB - East Span Skyway, Bridge Nos. 34-0006 L/R. The top of these footings are more than six meters (twenty feet) above water. The original ladders were removed due to CHP security concerns.

The Engineer has determined that the Contractor's lump sum price is fair and reasonable based on a force account analysis on file in the project records. This work will be funded from the "Additional Construction Surveying" portion of the Supplemental funds.

Structure Maintenance Chief, Ken Brown has approved the installation of the ladders on 10/6/03 via email. He would like to salvage these ladders for use on the West Bay Spans Fender Rehabilitation Project before demolition of the existing SFOBB bridge. Concurrence from Project Design is not required as no change to original plans is proposed. Concurrence from FHWA is also not required.

No adjustment of contract time is warranted, as this Contract Change Order does not affect the controlling operation.

The Resident Engineer field approved this change order on 10/15/03.

CONCURRED BY:	
Construction Engineer: Douglas Coe	Date 2-6-04
Bridge Engineer:	Date
FHWA Representative:	Date
Project Engineer:	Date
Other (specify): Ken Brown	Date 10/6/2003
	Date
	Date
District Prior Approval By:	Date
HQ (Issue Approve) By:	Date
Resident Engineer's Signature:	Date 2-6-04

ESTIMATE OF COST

	THIS REQUEST	TOTAL TO DATE
ITEMS	$0.00	$0.00
FORCE ACCOUNT	$0.00	$0.00
AGREED PRICE	$33,223.00	$33,223.00
ADJUSTMENT	$0.00	$0.00
TOTAL	**$33,223.00**	**$33,223.00**

FEDERAL PARTICIPATION

☑ PARTICIPATING ☐ PARTICIPATING IN PART ☐ NONE
☐ NON-PARTICIPATING (MAINTENANCE) ☐ NON-PARTICIPATING

FEDERAL SEGREGATION (if more than one Funding Source or P.I.P. type)
☑ CCO FUNDED PER CONTRACT ☐ CCO FUNDED AS FOLLOWS

FEDERAL FUNDING SOURCE	PERCENT

CCO: 111	Suppl. No. 0	Contract No. 04 - 012024	Road 04-SF,Ala-80-13.9/14.3.0.0/1.6	FED. AID LOC.: ACIM-080-1(085)8N

To: **KIEWIT / FCI / MANSON a JV**

You are directed to make the following changes from the plans and specifications or do the following described work not included in the plans and specifications for this contract. ***NOTE: This change order is not effective until approved by the Engineer.***

Description of work to be done, estimate of quantities and prices to be paid. (Segregate between additional work at contract price, agreed price and force account.) Unless otherwise stated, rates for rental of equipment cover only such time as equipment is actually used and no allowance will be made for idle time. This last percentage shown is the net accumulated increase or decrease from the original quantity in the Engineer's Estimate.

Extra Work at Force Account:

As authorized by the Engineer and in accordance with Section 4-1.03D "Extra Work" and Section 9-1.03 "Force Account Payment" of the Standard Specifications and Section 5-1.21 "Force Account Payment" of the Special Provisions, compensate the Contractor for cost incurred to revise shop drawings associated with mechanical and electrical drawings fo the SFOBB - East Span Skyway, Bridge Nos. 34-0006 L/R.

Estimated cost of Extra Work at Force Account $50,000.00

Estimated Cost: Increase ☑ Decrease ☐ $50.000.00

By reason of this order the time of completion will be adjusted as follows: 0 days

Submitted by

Signature	Resident Engineer: COE D.	Date 2-24-04

Approval Recommended by

Signature	Construction Engineer: COE D.	Date 2-24-04

Engineer Approval by

Signature	(Print name and title) PETER SIEGENTHALER - Chief	Date

We the undersigned contractor, have given careful consideration to the change proposed and agree, if this proposal is approved, that we will provide all equipment, furnish the materials, except as may otherwise be noted above, and perform all services necessary for the work above specified, and will accept as full payment therefor the prices shown above.

NOTE: If you, the contractor, do not sign acceptance of this order, your attention is directed to the requirements of the specifications as to proceeding with the ordered work and filing a written protest within the time therein specified.

Contractor Acceptance by

Signature	(Print name and title) A.T. Skoro, Project Director	Date 2/27/04

STATE OF CALIFORNIA - DEPARTMENT OF TRANSPORTATION

CONTRACT CHANGE ORDER MEMORANDUM

TO: PETER SIEGENTHALER / COE D.	FILE: **E.A.** 04 - 012024
FROM: COED.	**CO-RTE-PM** 04-SF,Ala-80-13.9/14.3,0.0/1.6
	FED. NO. ACIM-080-1(085)8N
CCO#: 111 | SUPPLEMENT#: 0 | Category Code: **CBPC**	CONTINGENCY BALANCE (incl. this change) **$25,789,810.61**
COST: **$50,000.00** INCREASE ☑ DECREASE ☐	HEADQUARTERS APPROVAL REQUIRED? ☐ YES ☑ NO
SUPPLEMENTAL FUNDS PROVIDED: $0.00	IS THIS REQUEST IN ACCORDANCE WITH ENVIRONMENTAL DOCUMENTS? ☑ YES ☐ NO
CCO DESCRIPTION: Segment Mech/Elec Embed Conflict Resoln	**PROJECT DESCRIPTION:** REPLACE SFOBB EAST SPAN

THIS CHANGE ORDER PROVIDES FOR:

compensating the Contractor, for revising mechanical and electrical shop drawings.

During the development of the Contractor's composite segment working drawings, it was found that embeds were in conflict with tendons and reinforcing steel. These conflicts will require revisions to the electrical and mechanical shop drawings; therefore, the contractor will need to be compensated for this work.

This work will be paid for as Extra Work at Force Account for an estimated cost of $50,000.00, which can be financed from the contingency fund. A cost analysis prepared by the Engineer is on file in the project records.

No adjustment of contract time is warranted, as this change does not affect the controlling operation.

There is no change to the scope of the project, and the amount of the CCO is under $200,000.00, therefore FHWA concurrence is not required.

Concurrence from Maintenance is not required because the work consists of minor changes to elements already considered in the design, which will not affect the originally approved design.

CONCURRED BY:

Construction Engineer: Douglas Coe	Date 2-24-04
Bridge Engineer:	Date
FHWA Representative:	Date
Project Engineer:	Date
Other (specify):	Date
	Date
	Date
District Prior Approval By:	Date
HQ (Issue Approve) By:	Date
Resident Engineer's Signature:	Date 2-24-04

ESTIMATE OF COST

	THIS REQUEST	TOTAL TO DATE
ITEMS	$0.00	$0.00
FORCE ACCOUNT	*$50,000.00*	*$50,000.00*
AGREED PRICE	*$0.00*	*$0.00*
ADJUSTMENT	*$0.00*	*$0.00*
TOTAL	**$50,000.00**	**$50,000.00**

FEDERAL PARTICIPATION

☐ PARTICIPATING ☐ PARTICIPATING IN PART ☐ NONE
☐ NON-PARTICIPATING (MAINTENANCE) ☐ NON-PARTICIPATING

FEDERAL SEGREGATION (if more than one Funding Source or P.I.P. type)
☑ CCO FUNDED PER CONTRACT ☐ CCO FUNDED AS FOLLOWS

FEDERAL FUNDING SOURCE	PERCENT

CCO: 112	Suppl. No. 0	Contract No, 04 - 012024	Road 04-SF,Ala-80-13.9/14.3,0.0/1.6	FED. AID LOC.: ACIM-080-1(085)8N

contract.

Extra Work at Lump Sum:

Construct the cormorant nesting habitat for the SFOBB East Span Skyway, Bridge Nos. 34-0006L/R, as shown on revised contract plan sheets 902AR2 and 902BR1 of 978 (pages 2 through 3 of this change order).

For this extra work, the Contractor will be paid an agreed lump sum of $142,228.00. This sum constitutes full compensation, including markups, for all direct and indirect costs; all associated project impacts; and Time Related Overhead (TRO) expenses, for this change.

Estimated cost of Extra Work at Agreed Lump Sum $142,228.00

Estimated Cost: Increase ☑ Decrease ☐ **$142,228.00**

By reason of this order the time of completion will be adjusted as follows: 0 days

Submitted by

Signature	Resident Engineer: COE D.	Date 7-24-04

Approval/Recommended by

Signature	Construction Engineer: COE D.	Date 7-24-04

Engineer Approval by

Signature	(Print name and title) for PETER SIEGENTHALER - Chief	Date 11/22/04

We the undersigned contractor, have given careful consideration to the change proposed and agree, if this proposal is approved, that we will provide all equipment, furnish the materials, except as may otherwise be noted above, and perform all services necessary for the work above specified, and will accept as full payment therefor the prices shown above.

NOTE: **If** you, the contractor, do not sign acceptance of this order, your attention is directed to the requirements of the specifications **as to** proceeding with the ordered work and filing a written protest within the time therein specified.

Contractor Acceptance by

Signature	(Print name and title) Tom Skoro, Project Director	Date 11-5-04

STATE OF CALIFORNIA - DEPARTMENT OF TRANSPORTATION

CONTRACT CHANGE ORDER MEMORANDUM

DATE: 9/23/2004 Page 1 of 1

TO: PETER SIEGENTHALER / COE D.	FILE: EA 04 - 012024
FROM: COED.	CO-RTE-PM 04-SF,Ala-80-13.9/14.3,0.0/1.6
	FED. NO. ACIM-080-1(085)8N
CCO#: 112 SUPPLEMENT#: 0 Category Code: CHPE	CONTINGENCY BALANCE (incl. this change) $1,075,843.17
COST: $142,228.00 INCREASE ☑ DECREASE ☐	HEADQUARTERS APPROVAL REQUIRED? ☐ YES ☑ NO
SUPPLEMENTAL FUNDS PROVIDED: $0.00	IS THIS REQUEST IN ACCORDANCE WITH ENVIRONMENTAL DOCUMENTS? ☑ YES ☐ NO
CCO DESCRIPTION: Cormorant Nesting Habitat Details	**PROJECT DESCRIPTION:** REPLACE SFOBB EAST SPAN

For this change order, the Contractor will be paid an agreed lump sum payment of $142,228.00 which will be paid from the project contingency fund. This sum constitutes full compensation, including all markups. A force account cost analysis for this change is on file in the project records.

No adjustment of contract time is warranted for this change, as it does not affect the controlling operation.

An email from Alfred Martinez, Structure Maintenance, was received on 9/23/04 stating there are no maintenance issues related to this change order and Maintenance concurrence is not required. FHWA concurrence is not required.

CONCURRED BY:		
Construction Engineer:	Douglas Coe	Date 9-24-03
Bridge Engineer:	Douglas Coe	Date 9-24-03
FHWA Representative		Date
Project Engineer:		Date
Other (specify): Hasan El-Natur		Date 12/1/2003
		Date
		Date
		Date
		Date
Resident Engineer's Signature		Date 9-24-03

ESTIMATE OF COST	THIS REQUEST	TOTAL TO DATE
ITEMS	$0.00	$0.00
FORCE ACCOUNT	$0.00	$0.00
AGREED PRICE	$142,228.00	$142,228.00
ADJUSTMENT	$0.00	$0.00
TOTAL	$142,228.00	$142,228.00

FEDERAL PARTICIPATION

☐ PARTICIPATING ☐ PARTICIPATING IN PART ☐ NONE

FEDERAL SEGREGATION (if more than one Funding Source or P I P type)

☑ CCO FUNDED PER CONTRACT ☐ CCO FUNDED AS FOLLOWS

CONTRACT CHANGE ORDER

Change Requested by: Engineer

CCO: 114	Suppl. No. 0	Contract No. 04 - 012024	Road 04-SF,Ala-80-13.9/14.3,0.0/1.6	FED. AID LOC.: ACIM-080-1(085)8N

To: **KIEWIT / FCI / MANSON a JV**

You are directed to make the following changes from the plans and specifications or do the following described work not included in the plans and specifications for this contract. ***NOTE: This change order is not effective until approved by the Engineer.***

Description of work to be done, estimate of quantities and prices to be paid. (Segregate between additional work at contract price, agreed price and force account.) Unless otherwise stated, rates for rental of equipment cover only such time as equipment is actually used and no allowance will be made for idle time. This last percentage shown is the net accumulated increase or decrease from the original quantity in the Engineer's Estimate.

As authorized by the Engineer, incorporate the new specification, Section 10-1.06A, "Document Management System," attached as sheets 2 through 4 of this change order, into the contract Special Provisions.

The following information describes the current service agreement between KFM and Integral Vision.

1) Service Agreement expires June 17th, 2006.
2) KFM possesses 20 Concurrent User Licenses
3) KFM possesses 120 Pool Users for calculation of Annual Maintenance Fees.
4) Training (specific number of hours included)
5) Limited Support and Maintenance.

Extra Work at Force Account:

Provide support and services for the Document Management System, (PMIV by Integral Vision) as outlined in the attached specification and as authorized by the Engineer.

For all work performed under this change order, the Contractor will be paid "Extra Work at Force Account" as specified in Section 5-1.21 "Force Account Payment" of the Special Provisions, as authorized by the Engineer. Section 9-1.03B "Work Performed by Special Forces or Other Special Services" of the Standard Specifications shall not apply. The amount paid for the Document Management System shall include full compensation for furnishing all labor, material, tools, equipment, and incidentals, including computer software, and for doing all work involved in providing and maintaining the Document Management System as described; including instructing and assisting the Engineer in the use of the computer software and providing staff to assist the Engineer in data entry as directed by the Engineer.

Estimated cost of Extra Work at Force Account $425,000.00

Estimated Cost: Increase ☑ Decrease ☐ $425,000.00

By reason of this order the time of completion will be adjusted as follows: 0 days

Submitted by

Signature		Resident Engineer: COE D.	Date 4/2/04

Approval Recommended by

Signature		Construction Engineer: COE D.	Date 4/2/04

Engineer Approval by

Signature	(Print name and title) PETER SIEGENTHALER - Chief	Date 4/20/04

We the undersigned contractor, have given careful consideration to the change proposed and agree, if this proposal is approved, that we will provide all equipment, furnish the materials, except as may otherwise be noted above, and perform all services necessary for the work above specified, and will accept as full payment therefor the prices shown above.

NOTE: If you, the contractor, do not sign acceptance of this order, your attention is directed to the requirements of the specifications as to proceeding with the ordered work and filing a written protest within the time therein specified.

Contractor Acceptance by

Signature	(Print name and title) A.T. Skoro, Project Director	Date 4/12/04

STATE OF CALIFORNIA - DEPARTMENT OF TRANSPORTATION

CONTRACT CHANGE ORDER MEMORANDUM

TO: PETER SIEGENTHALER / COE D.	FILE: E.A. 04 - 012024
FROM: COE D.	CO-RTE-PM 04-SF,Ala-80-13.9/14.3,0.0/1.6
	FED. NO. ACIM-080-1(085)8N
CCO# 114 SUPPLEMENT#: 0 Category Cod CXSX	CONTINGENCY BALANCE (incl. this change $23,485,548.66
COST: $425,000.00 INCREASE ☑ DECREASE ☐	HEADQUARTERS APPROVAL REQUIRED? ☑ YES ☐ NO
SUPPLEMENTAL FUNDS PROVIDED: $0.00	IS THIS REQUEST IN ACCORDANCE WITH ENVIRONMENTAL DOCUMENTS? ☑ YES ☐ NO
CCO DESCRIPTION: PMIV SERVICES	**PROJECT DESCRIPTION:** REPLACE SFOBB EAST SPAN

LOCATION: IN SAN FRANCISCO AND ALAMEDA COUNTIES IN SAN FRANCISCO AND OAKLAND FROM 1.3 KM EAST OF THE YERBA BUENA ISL

THIS CHANGE ORDER PROVIDES FOR:

the Contractor to provide a complete Document Management System (hardware & software), to facilitate efficient document management and control on the project. The Contractor and the Engineer shall use the system for all documents during the life of the project, which may include, but are not limited to, submittals, transmittals, shop drawings and calculations, Request for Information (RFI), letters, memorandums, working drawings and plan sheets.

The use of "PMIV" by Integral Vision enhances efficient operations of document management and control. This efficiency is achieved when both parties are utilizing the same system. The Contractor chose to use Integral Vision for their own document management at the beginning of the project. Their service agreement is scheduled to expire on June 17th, 2006; four (4) months beyond the original completion date of the project. This change order will insure that the Contractor continues to use "PMIV" through the completion of the project as specified in this specification. The State will pay for the extension of the current License and Annual Maintenance Fees held by the Contractor from June 18th, 2006 through the completion of the project as determined by current and future contract time extensions.

This work will be paid for using Force Account payment methods. The estimated cost for this change is $425,000.00, which can be funded from the project contingency fund.

Ms. Nancy Bobb, FHWA Bay Bridge Project Manager, provided prior approval via an electronic message on March 11, 2003. A printed copy of the prior approval provided by Ms. Bobb is attached.

District prior approval was obtained from Mr. Pete Siegenthaler, on February 9, 2004. A copy of the prior approval provided by Mr. Siegenthaler is attached.

A copy of the letter authorizing the use of a single source product for this application is attached.

This change does not affect the controlling operations and therefore, there will be no adjustment to contract time.

CONCURRED BY:		
Construction Engineer:	Douglas Coe	Date 2/9/2004
Bridge Engineer:		Date
FHWA Representative:	Nancy Bobb	Date3/11/2004
Project Engineer:	Janet Adams	Date 3/1/2004
Other (specify):		Date
		Date
		Date
District Prior Approval By:	Pete Siegenthaler	Date 2/9/2004
HQ (Issue Approve) By:		Date
Resident Engineer's Signature:	For Doug Coe	Date 4/5/04

ESTIMATE OF COST

	THIS REQUEST	TOTAL TO DATE
ITEMS	$0.00	$0.00
FORCE ACCOUNT	$425,000.00	$425,000.00
AGREED PRICE	$0.00	$0.00
ADJUSTMENT	$0.00	$0.00
TOTAL	$425,000.00	$425,000.00

FEDERAL PARTICIPATION

☑ PARTICIPATING ☐ PARTICIPATING IN PART ☐ NONE
☐ NON-PARTICIPATING (MAINTENANCE) ☐ NON-PARTICIPATING

FEDERAL SEGREGATION (if more than one Funding Source or P.I.P. type)
☑ CCO FUNDED PER CONTRACT ☐ CCO FUNDED AS FOLLOWS

FEDERAL FUNDING SOURCE	PERCENT

STATE OF CALIFORNIA - DEPARTMENT OF TRANSPORTATION

CONTRACT CHANGE ORDER

Change Requested by: Engineer

CCO: 114	Suppl. No. 1	Contract No. 04 - 012024	Road 04-SF,Ala-80-13.9/14.3,0.0/1.6	FED. AID LOC.: ACIM-080-1(085)8N

To: **KIEWIT / FCI / MANSON a JV**

You are directed to make the following changes from the plans and specifications or do the following described work not included in the plans and specifications for this contract. ***NOTE: This change order is not effective until approved by the Engineer.***

Description of work to be done, estimate of quantities and prices to be paid. (Segregate between additional work at contract price, agreed price and force account.) Unless otherwise stated, rates for rental of equipment cover only such time as equipment is actually used and no allowance will be made for idle time. This last percentage shown is the net accumulated increase or decrease from the original

Extra Work at Force Account:

As authorized by the Engineer, provide support and services for the Document Management System, (PMIV by Integral Vision) as outlined in the Contract Change Order No. 114 Supplement 0 incorporated specification to the contract Special Provisions, Section 10-1.06A, "Document Management System".

For all work performed under this change order, the Contractor will be paid "Extra Work at Force Account" as specified in Section 5-1.21 "Force Account Payment" of the Special Provisions, as authorized by the Engineer. Section 9-1.03B "Work Performed by Special Forces or Other Special Services" of the Standard Specifications shall not apply. The amount paid for the Document Management System shall include full compensation for furnishing all labor, material, tools, equipment, and incidentals, including computer software, and for doing all work involved in providing and maintaining the Document Management System as described in added Special Provisions Section 10-1.06A "Document Management System"; including instructing and assisting the Engineer in the use of the computer software and providing staff to assist the Engineer in data entry as directed by the Engineer.

Estimated Cost: Increase ☑ Decrease ☐ **$75,000.00**

By reason of this order the time of completion will be adjusted as follows: 0 days

Submitted by

Signature	Resident Engineer: DOUG COE, Supervising Br. Eng.	Date 9-21-06

Approval Recommended by

Signature	Construction Engineer: DOUG COE, Supervising Br. Eng.	Date 9-21-06

Engineer Approval by

Signature	(Print name and title) PETER SIEGENTHALER - Chief	Date

We the undersigned contractor, have given careful consideration to the change proposed and agree, if this proposal is approved, that we will provide all equipment, furnish the materials, except as may otherwise be noted above, and perform all services necessary for the work above specified, and will accept as full payment therefor the prices shown above.

NOTE: If you, the contractor, do not sign acceptance of this order, your attention is directed to the requirements of the specifications as to proceeding with the ordered work and filing a written protest within the time therein specified.

Contractor Acceptance by

Signature	(Print name and title) Lee Bink, Projector	Date 10/18/06

STATE OF CALIFORNIA - DEPARTMENT OF TRANSPORTATION

CONTRACT CHANGE ORDER MEMORANDUM

TO: PETER SIEGENTHALER / DOUG COE, Supervising Br. Eng.	FILE: E.A. 04 - 012024
FROM: DOUG COE, Supervising Br. Eng.	CO-RTE-PM 04-SF,Ala-80-13.9/14.3,0.0/1.6
	FED. NO. ACIM-080-1(085)8N
CCO# **114** SUPPLEMENT#: **1** Category Cod **CXSX**	CONTINGENCY BALANCE (incl. this change **$7,362,542.10**
COST: **$75,000.00** INCREASE ☑ DECREASE ☐	HEADQUARTERS APPROVAL REQUIRED? ☑ YES ☐ NO
SUPPLEMENTAL FUNDS PROVIDED: **$0.00**	IS THIS REQUEST IN ACCORDANCE WITH ENVIRONMENTAL DOCUMENTS? ☑ YES ☐ NO
CCO DESCRIPTION: PMIV Services (Additional Funds)	**PROJECT DESCRIPTION:** REPLACE SFOBB EAST SPAN

LOCATION: IN SAN FRANCISCO AND ALAMEDA COUNTIES IN SAN FRANCISCO AND OAKLAND FROM 1.3 KM EAST OF THE YERBA BUENA ISL

THIS CHANGE ORDER PROVIDES FOR:

additional funds to CCO No. 114 Supplement 0 for the use of "PMIV" by Integral Vision to enhance the efficient operations of document management and control.

This change order is needed to provide additional funds for the extension of the current License and Annual Maintenance Fees for the use of "PMIV" by Integral Vision through the completion of the project as determined by the current contract time extension. The CCO No. 114 Supplement 0 estimated contract completion date is being exceeded.

This work will be paid for as Extra Work at Force Account for an estimated cost of $75,000.00, which can be financed from the contingency fund.

Mr. Pete Siegenthaler, SFOBB Construction Manager, Toll Bridge Construction, concurs with this change. A copy of the concurrence signed by Mr. Siegenthaler on September 9, 2006 is attached.

Ken Terpstra, SFOBB Toll Bridge Project Manager, provided concurrence on September 20, 2006. A copy of the concurrence provided by Mr. Terpstra is attached.

Prior Approval was obtained from Ms. Nancy Bobb, FHWA Bay Bridge Project Manager, via electronic message on September 19, 2006. A printed copy of the prior approval provided by Ms. Bobb is attached.

No time adjustment is warranted for this change as it does not affect the controlling operation.

CONCURRED BY:

Construction Engineer:	Douglas Coe	Date 9-21-06
Bridge Engineer:	Douglas Coe	Date 9-21-06
FHWA Representative:	Nancy Bobb	Date9/19/2006
Project Engineer:		Date
Other (specify): Ken Trepstra, SFOBB Project Manager		Date
		Date
		Date
District Prior Approval By:	Pete Siegenthaler	Date 9/7/2006
HQ (Issue Approve) By:	Ken Darby	Date
Resident Engineer's Signature:		Date 9-21-06

ESTIMATE OF COST

	THIS REQUEST	TOTAL TO DATE
ITEMS	$0.00	$0.00
FORCE ACCOUNT	$75,000.00	$500,000.00
AGREED PRICE	$0.00	$0.00
ADJUSTMENT	$0.00	$0.00
TOTAL	$75,000.00	$500,000.00

FEDERAL PARTICIPATION

☑ PARTICIPATING ☐ PARTICIPATING IN PART ☐ NONE
☐ NON-PARTICIPATING (MAINTENANCE) ☐ NON-PARTICIPATING

FEDERAL SEGREGATION (if more than one Funding Source or P.I.P. type)
☑ CCO FUNDED PER CONTRACT ☐ CCO FUNDED AS FOLLOWS

FEDERAL FUNDING SOURCE	PERCENT

CONTRACT CHANGE ORDER

Change Requested by: Engineer

CCO: 114	Suppl. No. 2	Contract No. 04 - 012024	Road 04-SF,Ala-80-13.9/14.3,0.0/1.6	FED. AID LOC.: ACIM-080-1(085)8N

To: **KIEWIT / FCI / MANSON a JV**

You are directed to make the following changes from the plans and specifications or do the following described work not included in the plans and specifications for this contract. ***NOTE: This change order is not effective until approved by the Engineer.***

Description of work to be done, estimate of quantities and prices to be paid. (Segregate between additional work at contract price, agreed price and force account.) Unless otherwise stated, rates for rental of equipment cover only such time as equipment is actually used and no allowance will be made for idle time. This last percentage shown is the net accumulated increase or decrease from the original

Adjustment of Compensation at Lump Sum:

As authorized by the Engineer, provide support and services for the Document Management System, (PMIV by Integral Vision) until the closure of the contract as outlined in the Contract Change Order No. 114 Supplement 0 incorporated specification to the contract Special Provisions, Section 10-1.06A, "Document Management System" and to provide support until 2014.

For all work performed under this change order, until the closure of the contract, the Contractor will be paid an agreed lump sum of $11,976.98. The amount paid for the Document Management System shall include full compensation for furnishing all labor, material, tools, equipment, and incidentals, including computer software, and for doing all work involved in providing and maintaining the Document Management System as described in added Special Provisions Section 10-1.06A "Document Management System".

For providing additional support until 2014 and to assist the Engineer in searching and retrieving data from the system; including:

One (1) user license Annual Maintenance until 2014
Three (3) months of Konica Support - until the end of June 2008
Eighty (80) hours of System Support - until 2014
Backing up of all the folders such as word documents, PDF files, and attachments onto an external hard drive (included).
Install the System backend on an existing onsite server to facilitate access.
Twenty (20) hours of support for the Contractor - until the end of June 2008, the Contractor will be paid an agreed lump sum of $30,136.97.

For this work, the Contractor agrees to accept a lump sum amount of $42,113.95. This agreed lump sum constitutes full compensation for all costs, including markups, all direct and indirect costs, all associated project impacts, and all overhead costs.

Adjustment of Compensation at Agreed Lump Sum $42,113.95

CONTRACT CHANGE ORDER

Change Requested by: Engineer

CCO: 114	Suppl. No. 2	Contract No. 04 - 012024	Road 04-SF,Ala-80-13.9/14.3,0.0/1.6	FED. AID LOC.: ACIM-080-1(085)8N

Estimated Cost: Increase ☑ Decrease ☐ $42,113.95

By reason of this order the time of completion will be adjusted as follows: 0 days

Submitted by

Signature	Resident Engineer DOUG COE, Supervising Br. Eng.	Date 4-14-08

Approval Recommended by

Signature	Construction Engineer DOUG COE	Date 4-14-08

Engineer Approval by

Signature	Construction Manager MIKE FORNER	Date 4/21/08

We the undersigned contractor, have given careful consideration to the change proposed and agree, if this proposal is approved, that we will provide all equipment, furnish the materials, except as may otherwise be noted above, and perform all services necessary for the work above specified, and will accept as full payment therefor the prices shown above.

NOTE: If you, the contractor, do not sign acceptance of this order, your attention is directed to the requirements of the specifications as to proceeding with the ordered work and filing a written protest within the time therein specified.

Contractor Acceptance by

Signature	(Print name and title) Lee Zink Proj. Director	Date 4/18/08

STATE OF CALIFORNIA - DEPARTMENT OF TRANSPORTATION

CONTRACT CHANGE ORDER MEMORANDUM

TO: MICHAEL FORNER / DOUG COE, Supervising Br. Eng.

FROM: DOUG COE, Supervising Br. Eng.

FILE: E.A. 04 - 012024
CO-RTE-PM 04-SF,Ala-80-13.9/14.3,0.0/1.6
FED. NO. ACIM-080-1(085)8N

CCO# 114 | SUPPLEMENT#: 2 | Category Cod CXSX

CONTINGENCY BALANCE (incl. this chang $1,216,158.97

COST: $42,113.95 INCREASE ☑ DECREASE ☐

HEADQUARTERS APPROVAL REQUIRED? ☑ YES ☐ NO

SUPPLEMENTAL FUNDS PROVIDED: $0.00

IS THIS REQUEST IN ACCORDANCE WITH ENVIRONMENTAL DOCUMENTS? ☑ YES ☐ NO

CCO DESCRIPTION:
Additional Funds for PMIV Services

PROJECT DESCRIPTION:
REPLACE SFOBB EAST SPAN

Original Contract Time:	Time Adj. This Change:	Previously Approved CCO Time Adjustments:	Percentage Time Adjusted: (including this change)	Total # of Unreconciled Deferred Time CCO(s): (including this change)
1000 Day(s)	0 Day(s)	424 Day(s)	42 %	9

THIS CHANGE ORDER PROVIDES FOR:

additional funds to CCO No. 114 Supplement 0 for the use of "PMIV" by Integral Vision until the closure of the contract as outlined in the Contract Change Order No. 114 Supplement 0 incorporated specification to the contract Special Provisions, Section 10-1.06A, "Document Management System" and for providing additional support until 2014 to assist the Engineer in searching and retrieving data from the system; including:

One (1) user license Annual Maintenance until 2014
Three (3) months of Konica Support - until the end of June 2008
Eighty (80) hours of System Support - until 2014
Backing up of all the folders such as word documents, PDF files, and attachments onto an external hard drive (included).
Installing the System backend on an existing onsite server to facilitate access.
Twenty (20) hours of support for the Contractor - until the end of June 2008.

This change order is needed to provide additional funds for the extension of the current License and Maintenance fees for the use of "PMIV" by Integral Vision through the completion of the SFOBB East Span Replacement project which is estimated to be completed in 2013 in order to access the Skyway files whenever needed.

The "PMIV" licensing agreement and support will be administrated and monitored by Mr. Chris Master, SFOBB Project Facilities Senior.

For this change order, the Contractor will be paid an agreed lump sum payment of $42,113.95 which will be paid from the project contingency fund. This sum constitutes full compensation, including all markups. A force account cost analysis for this change is on file in the project records.

Mr. Mike Forner, SFOBB Construction Manager, Toll Bridge Construction, concurs with this change. A copy of the concurrence signed by Mr. Forner on April 1, 2008 is attached.

Concurrence was obtained from Mr. Alec Melkonians for Mr. Ken Terpstra, SFOBB Project Manager, via electronic message on April 8, 2008. A printed copy of the concurrence provided by Mr. Melkonians is attached.

Prior Approval was obtained from Ms. Nancy Bobb, FHWA Bay Bridge Project Manager, for FHWA participation in the funding of the PMIV costs through the completion of this contract on March 24, 2008 but not for the additional license and support until 2014. The additional costs through the end of this contract amounts to $11,976.98. Prior approval was send via electronic message on April 9, 2008. A printed copy of the prior approval provided by Ms. Bobb is attached.

No time adjustment is warranted for this change as it does not affect the controlling operation.

ADA Notice: For individuals with sensory disabilities, this document is available in alternate formats. For information call: (916) 654-6410 or TDD (916) 654-3880 or write Records and Forms Management, 1120 N Street, MS-89, Sacramento, CA 95814.

RECEIVED
068749 APR 25 08

CONCURRED BY:			
Construction Engineer:	Douglas Coe	Date 4-14-08	
Bridge Engineer:	Douglas Coe	Date 4-14-8	
Project Engineer:		Date	
Project Manager:	Ken Terpstra	Date	4/8/08
FHWA Rep.:	Nancy Bobb	Date	4/9/08
Environmental:		Date	
Other (specify):		Date	
Other (specify):		Date	
District Prior Approval By:	Mike Forner	Date	4/1/08
HQ (Issue Approve) By:	Ken Darby	Date	
Resident Engineer's Signature:		Date 4-14-08	

ESTIMATE OF COST

	THIS REQUEST	TOTAL TO DATE
ITEMS	$0.00	$0.00
FORCE ACCOUNT	$0.00	$500,000.00
AGREED PRICE	$0.00	$0.00
ADJUSTMENT	$42,113.95	$42,113.95
TOTAL	$42,113.95	$542,113.95

FEDERAL PARTICIPATION

☐ PARTICIPATING ☑ PARTICIPATING IN PART ☐ NONE
☐ NON-PARTICIPATING (MAINTENANCE) ☐ NON-PARTICIPATING

FEDERAL SEGREGATION (if more than one Funding Source or P.I.P. type)
☐ CCO FUNDED PER CONTRACT ☑ CCO FUNDED AS FOLLOWS

FEDERAL FUNDING SOURCE	PERCENT

ADA Notice: For individuals with sensory disabilities, this document is available in alternate formats. For information call: (916) 654-6410 or TDD (916) 654-3880 or write Records and Forms Management, 1120 N Street, MS-89, Sacramento, CA 95814.

CONTRACT CHANGE ORDER

Change Requested by: Engineer

CCO: 115	Suppl. No. 0	Contract No. 04 - 012024	Road 04-SF,Ala-80-13.9/14.3,0.0/1.6	FED. AID LOC.: ACIM-080-1(085)8N

To: KIEWIT / FCI / MANSON a JV

You are directed *to* make *the* following changes from the plans and *specifications* or do the following described work *not* included in *the* plans and *specifications for this contract.*

NOTE: This change order is not effective until approved by the Engineer.

Description of work to be done, estimate of quantities and prices to be paid. (Segregate between additional work at contract price, agreed price and force account.) Unless otherwise stated, rates for rental of equipment cover only such time as equipment is actually used and no allowance will be made for idle time. This last percentage shown is the net accumulated increase or decrease from the original quantity in the Engineer's Estimate.

Adjustment of Compensation at Lump Sum:

Revise the segment age requirements for segments in Frames W3 and E3 from 18 months to 16 months prior to casting the closures in both exterior and interior spans, and revise the requirement for the minimum segment age at erection in Frames W3 and E3 from six (6) months to four (4) months for both the interior and exterior spans of the SFOBB East Span Skyway Bridge Replacement Project, Bridge Nos. 34-0006L/R.

The Closure and Jacking Schedule, located on contract plan sheet number 918 of 978, shall be revised per sheet 3 of 4 of this change order. In addition, the contract Special Provisions shall be amended by deleting the minimum age requirement: table in Special Provisions Section 10-1.29, "Furnish Precast Concrete Segment," Subsection "General," on revised page number 168," and replacing it with the revised Minimum Age Requirements Table as provided on sheet 4 of 4 of this change order.

This change order also resolves and provides Settlement for the Contractor's request for payment for the following items:

.Additional labor, equipment, supplies, and shipping costs associated with re-sequencing the casting yard activities; and all casting bed modifications in order to mitigate impacts associated with the segment curing time requirements.

.Additional labor, equipment costs, and all other impacts to the short-line bed operations that are necessary to mitigate Stockton casting yard segment storage issues resulting from re-sequencing segment casting due to this change. This Settlement includes all impacts up to and including the restart of the short-line bed through April 15, 2005. Compensation for impacts occurring beyond April 15, 2005, will be addressed under a separate contract change order.

.Additional labor, superintendence, field engineering, extended equipment, subcontractor extended equipment, pre-cast yard land rent, and pre-cast yard field office overhead costs associated with slowing down production on the 2nd long line bed to mitigate yard storage issues resulting from re-sequencing the casting of segments due to this change.

.Additional labor, equipment, and material costs to construct additional access ties between spans E12E and E14E.

Standard Specification 7-1.165, "Damage by Storm, Flood, Tsunami, or Earthquake," subsection F, "Payment for Repair Work," shall be replaced with the following during the period of additional exposure when Frame 3 will have freestanding cantilevers as a result of the additional segment curing requirements:

F. Payment for Repair Work - When the Occurrence that caused the damage was a storm, flood, tsunami, earthquake or other natural disaster the State will pay 100% of the cost of repair determined as provided in Subsection E.

The Contractor will receive and agrees to accept the lump sum amount of $4,000,000.00 for this change. This agreed lump sum constitutes full compensation, including all mark-ups, for all direct and indirect costs, all overhead expenses, and all associated project impacts.

This contract change order resolves Notice of Potential Claim No. 1, dated June 4, 2002; the protest to Contract Change Order No. 27, dated November 3, 2003; and all impacts, time related overhead (TRO), and all project costs associated with the Pacific Maritime Association (PMA) lockout between October 4, 2002, and November 15, 2002, resulting from the incorporation of the additional segment cure period.

Total cost of Adjustment of Compensation at Lump Sum $4,000,000.00

CCO: 115	Suppl. No. 0	Contract No, **04 - 012024**	Road 04-SF,Ala-80-13.9/14.3,0.0/1.6	**FED. AID LOC.:** ACIM-080-1(085)8N

Estimated Cost: **Increase** ☑ **Decrease** ☐ **$4,000,000.00**

By reason of this order the time of completion will be adjusted as follows: 0 days

Submitted by

Signature	**Resident Engineer:** COE D.	**Date** 12-3-04

Approval Recommended by

Signature	**Construction Engineer:** COE D.	**Date** 12-3-04

Engineer Approval by

Signature	**(Print name and title)** PETER SIEGENTHALER - Chief	**Date** 12-16-04

We the undersigned contractor, have given careful consideration to the change proposed and agree, if this proposal is approved, that we will provide all equipment, furnish the materials, except as may otherwise be noted above, and perform all services necessary for the work above specified, and will accept as full payment therefor the prices Shown above.

NOTE: If you, the contractor, do not sign acceptance **of** this order, your attention is directed to the requirements of the specifications as **to** proceeding with the ordered work and filing a written protest within the time therein specified.

Contractor Acceptance by

Signature	**(Print name and title)** A.T. Skoro, Project Director	**Date** 12-9-04

STATE OF CALIFORNIA - DEPARTMENT OF TRANSPORTATION

CONTRACT CHANGE ORDER MEMORANDUM

TO: PETERSIEGENTHALER / COE D.	FILE: E.A. 04 - 012024
	CO-RTE-PM 04-SF,Ala-80-13.9/14.3,0.0/1.6
FROM: COED.	FED. NO. ACIM-080-1(085)8N
CCO#: 115 | SUPPLEMENT#: 0 | Category Code: FXCD	CONTINGENCY BALANCE (incl. this change) $70,537,480.18
COST: $4,000,000.00 INCREASE ☑ DECREASE ☐	HEADQUARTERS APPROVAL REQUIRED? ☑ YES ☐ NO
SUPPLEMENTAL FUNDS PROVIDED: $0.00	IS THIS REQUEST IN ACCORDANCE WITH ENVIRONMENTAL DOCUMENTS? ☑ YES ☐ NO
CCO DESCRIPTION: NOPC 1 - 18 Month Segment Age	**PROJECT DESCRIPTION:** REPLACE SFOBB EAST SPAN

LOCATION: IN SAN FRANCISCO AND ALAMEDA COUNTIES IN SAN FRANCISCO AND OAKLAND FROM 1.3 KM EAST OF THE YERBA BUENA ISL

THIS CHANGE ORDER PROVIDES FOR:

revising the the segment age requirements for segments in Frames W3 and E3 prior to casting the closures in both exterior and interior spans from 18 months to 16 months, and revising the minimum segment age at erection in Frames W3 and E3 from six (6) months to four (4) months for both the interior and exterior spans. This change order also provides for the resolution of all costs incurred by the Contractor as a result of incorporating the additional segment cure period disputed in NOPC No. 1, and the protest to Contract Change Order No. 27 that disputed the contract administration of the Pacific Maritime Association lockout between October 4th, 2002, and November 15th, 2002. This contract change order is written in accordance with the Claim Settlement Report (CSR) dated October 4,2004, and approved by Mike Leonardo, Acting Chief Engineer, on November 19th, 2004, and will resolve all impacts/project costs associated with these issues.

The CSR approves a lump-sum payment of $4,000,000.00 to resolve the issues listed above.

The Closure and Jacking Schedule, located on contract plan sheet number 918 of 978, is revised per sheet 3 of 4 of this change order. In addition, the minimum age requirements table in Special Provisions Section 10-1.29, "Furnish Precast Concrete Segment," Subsection "General," on revised page number 168, is revised to reflect this change.

This change order will be paid for as an adjustment of compensation at a lump sum of $4,000,000.00, which can be financed from the project's contingency funds. A summary of the total costs agreed on by both the Engineer and the Contractor, and the detailed cost analysis is provided in the CSR.

Ms. Nancy Bobb, FHWA Bay Bridge Project Manager, provided Prior Approval via an electronic message on December 1, 2004. A printed copy of the prior approval provided by Ms. Bobb is attached.

Brian Maroney, Office of Structure Design Technical Project Manager, provided Design concurrence via an electronic message on April 4, 2003. A copy of the message from Mr. Maroney providing concurrence for this change is attached.

Janet Adams, Toll Bridge Region Project Manager, is in concurrence with this change. Ms Adams provided concurrence via an electronic message on December 2, 2004. A copy of the message providing concurrence from Ms. Adams is attached.

District Prior Approval was obtained by Pete Siegenthaler on February 24, 2004. A copy of the prior approval form *is* included.

Patrick Treacy, Headquarters Construction Coordinator, provided concurrence on March 3, 2004.

Maintenance concurrence is not required as this change order does not affect maintenance facilities or operations and does not include maintenance funds.

No adjustment in contract time is warranted as this change order does not affect contract time.

CONTROLD
031955 JAN-7 05

CONCURRED BY:		
Construction Engineer	Douglas Coe	Date 12-3-04
Bridge Engineer	Douglas Coe	Date 12-3-04
FHWA Representative	Nancy Bobb	Date 12/1/2004
Project Engineer:	Brian Maronev	Date 4/9/2003
Other (specify) Janet Adams		Date 12/2/2004
		Date
		Date
District Prior Approval By:	Pete Siegenthaler	Date 2/24/2004
HQ (Issue Approve) By		Date
Resident Engineer's Signature		Date 12-3-04

ESTIMATE OF COST

	THIS REQUEST	TOTAL TO DATE
ITEMS	$0 00	$0 00
FORCE ACCOUNT	$0 00	$0.00
AGREED PRICE	$0 00	$0 00
ADJUSTMENT	$4,000,000.00	$4,000,000.00
TOTAL	$4,000,000.00	$4,000,000 00

FEDERAL PARTICIPATION

☑ PARTICIPATING ☐ PARTICIPATING IN PART ☐ NONE
☐ NON-PARTICIPATING (MAINTENANCE) ○ NON-PARTICIPATING

FEDERAL SEGREGATION (if more than one Funding Source or P I P type)
☑ CCO FUNDED PER CONTRACT ☐ CCO FUNDED AS FOLLOWS

FEDERAL FUNDING SOURCE	PERCENT

CONTRACT CHANGE ORDER

Change Requested by: Engineer

CCO: 116	Suppl. No. 0	Contract No. 04 - 012024	Road 04-SF,Ala-80-13.9/14.3,0.0/1.6	FED. AID LOC.: ACIM-080-1(085)8N

To: **KIEWIT / FCI / MANSON a JV**

You are directed to make the following changes from the plans and specifications or do the following described work not included in the plans and specifications for this contract. ***NOTE: This change order is not effective until approved by the Engineer.***

Description of work to be done, estimate of quantities and prices to be paid. (Segregate between additional work at contract price, agreed price and force account.) Unless otherwise stated, rates for rental of equipment cover only such time as equipment is actually used and no allowance will be made for idle time. This last percentage shown is the net accumulated increase or decrease from the original quantity in the Engineer's Estimate.

Adjustment of Compensation at Lump Sum:

For approved concrete mix designs 7641, 7700, 7732, 7868, 8430, 8430C, 8436, 8530, 8657, 30868, 31386, 31387, and 31392, the 1.5 % limit of available alkali, as sodium oxide equivalent requirements in Section 90-4.08, "REQUIRED USE OF MINERAL ADMIXTURES," of the Special Provisions shall not apply.

This change constitutes a Zero cost adjustment for both the Contractor and the State.

Estimated Cost: Increase ☐ Decrease ☐ **$0.00**

By reason of this order the time of completion will be adjusted as follows: 0 days

Submitted by

Signature	Resident Engineer: COE D.	Date 9-7-04

Approval Recommended by

Signature	Construction Engineer: COE D.	Date 9-7-04

Engineer Approval by

Signature	(Print name and title) PETER SIEGENTHALER - Chief	Date 9/29/04

We the undersigned contractor, have given careful consideration to the change proposed and agree, if this proposal is approved, that we will provide all equipment, furnish the materials, except as may otherwise be noted above, and perform all services necessary for the work above specified, and will accept as full payment therefor the prices shown above.

NOTE: If you, the contractor, do not sign acceptance of this order, your attention is directed to the requirements of the specifications as to proceeding with the ordered work and filing a written protest within the time therein specified.

Contractor Acceptance by

Signature	(Print name and title) A. T. Skoro, Project Director	Date 9/22/04

STATE OF CALIFORNIA - DEPARTMENT OF TRANSPORTATION

CONTRACT CHANGE ORDER MEMORANDUM

TO: PETER SIEGENTHALER / COE D.	FILE: E.A. 04 - 012024
FROM: COE D.	CO-RTE-PM 04-SF,Ala-80-13.9/14.3,0.0/1.6 FED. NO. ACIM-080-1(085)8N
CCO#: **116** SUPPLEMENT#: **0** Category Code: **CHSA**	CONTINGENCY BALANCE (incl. this change) **$2,164,764.15**
COST: **$0.00** INCREASE ☐ DECREASE ☐	HEADQUARTERS APPROVAL REQUIRED? ☑ YES ☐ NO
SUPPLEMENTAL FUNDS PROVIDED: **$0.00**	IS THIS REQUEST IN ACCORDANCE WITH ENVIRONMENTAL DOCUMENTS? ☑ YES ☐ NO
CCO DESCRIPTION: Fly Ash Specification Change	**PROJECT DESCRIPTION:** REPLACE SFOBB EAST SPAN

LOCATION: IN SAN FRANCISCO AND ALAMEDA COUNTIES IN SAN FRANCISCO AND OAKLAND FROM 1.3 KM EAST OF THE YERBA BUENA ISL

THIS CHANGE ORDER PROVIDES FOR:

Revising Section 90-4.08 of the Special Provisions.

Section 90-4.08, "REQUIRED USE OF MINERAL ADMIXTURES,' of the Special Provisions requires that the available alkali, as sodium oxide equivalent, shall not exceed 1.5 percent when determined in conformance with the requirements in ASTM Designation: C 618. For approved concrete mix designs 7641, 7700, 7732, 7868, 8430, 8430C, 8436, 8530, 8657, 30868, 31386, 31387, and 31392, the available alkali requirement of Section 90-4.08 of the Special Provisions shall not apply.

Due to a minor change in the coal source used at the particular power plant which generates the fly ash (Jim Bridge Fly Ash supplied by ISG Resources) called for in the Pier Table, Pile and Lightweight SCC strength designed mixes, the fly ash no longer meets the sodium oxide equivalent (available alkalinity requirement of 1.5%) required by the Special Provisions. This requirement is placed in the Special Provisions as a Standard Special Provision in order to allow further control of Alkali-Silica Reactivity (ASR) beyond those controls placed on the reactivity of the aggregates themselves. This requirement is only a minor benefit in controlling the performance of the fly ash with respect to a reactive aggregate as evidenced by ASTM removing the same requirement from ASTM C 618 in the 2001 edition. For the mix designs which use Jim Bridge Fly Ash on the Skyway Project, Tom Pyle, Chief of the Office of Rigid Pavement Materials and Structural Concrete has determined that the alkali content of the fly ash will not affect the performance of the previously approved fly ash mixes with respect to ASR because of the innocuous nature of the aggregates used.

Re-qualifying each of these mixes using a different fly ash (many meet the requirements and are available) would require a time frame of up to six months due to the pre-qualification requirements for modulus of elasticity, creep and shrinkage. Not only would this time likely cause delays in the pier table work which is on the controlling path, the results of changing fly ashes and the subsequent changes in the creep and shrinkage values may cause the specified Construction and Camber Analysis for precasting and erecting the segments to become invalid. If this analysis is invalid, more than 90 out of the 452 total precast segments will have been cast to incorrect dimensions. By continuing to use the same fly ash, this can be avoided. This Contract Change Order allows the Contractor and the Engineer to reduce possible delays to the contract and allow the superstructure to be erected properly.

A force account analysis has been performed by the Engineer and it has been determined that there will be no credit or cost for this change. Consideration of time adjustment has been evaluated by Management. It has been determined that no time savings is warranted by this change.

Concurrence from Tom Pyle, Supervising Materials Engineer was received in a memo on 2/5/04. Prior approval from Nancy Bobb, FHWA was obtained on 2/23/04 via email. Maintenance concurrence is not required as this change is not related to the maintenance of the bridges.

CONCURRED BY:		
Construction Engineer:	Douglas Coe	Date 5-7-04
Bridge Engineer:	Douglas Coe	Date 5-7-04
FHWA Representative:	Nancy Bobb	Date 2/23/2004
Project Engineer:		Date
Other (specify): Tom Pyle, METS		Date 2/5/2004
		Date
		Date
District Prior Approval By:		Date
HQ (Issue Approve) By:		Date
Resident Engineer's Signature:		Date 8-7-04

ESTIMATE OF COST

	THIS REQUEST	TOTAL TO DATE
ITEMS	$0.00	$0.00
FORCE ACCOUNT	$0.00	$0.00
AGREED PRICE	$0.00	$0.00
ADJUSTMENT	$0.00	$0.00
TOTAL	$0.00	$0.00

FEDERAL PARTICIPATION

☑ PARTICIPATING ☐ PARTICIPATING IN PART ☐ NONE
☐ NON-PARTICIPATING (MAINTENANCE) ☐ NON-PARTICIPATING

FEDERAL SEGREGATION (if more than one Funding Source or P.I.P. type)
☑ CCO FUNDED PER CONTRACT ☐ CCO FUNDED AS FOLLOWS

FEDERAL FUNDING SOURCE	PERCENT

CONTRACT CHANGE ORDER

Change Requested by: Engineer

CCO: 117	Suppl. No. 0	Contract No. 04- 012024	Road 04-SF,Ala-80-13.9/14.3,0.0/1.6	FED. AID LOC.: ACIM-080-1(085)8N

Description of work to be done, estimate of quantities and prices to be paid. (Segregate between additional work at contract price, agreed price and force account.) Unless otherwise stated, rates for rental of equipment cover only such time as equipment is actually used and no allowance will be made for idle time. This last percentage shown is the net accumulated increase or decrease from the original quantity in the Engineer's Estimate.

Adjustment of Compensation at Lump Sum:

In section 10-1.37, "REINFORCEMENT" subsection "Ultimate Butt Splice Criteria" of the Special Provisions, replace "In addition, necking of the bar shall be visibly evident at rupture regardless of whether the bar breaks inside or outside the affected zone." with, "In addition, necking of the bar shall be either, 1) visibly evident or 2) measured with a minimum strain of 6% for #36 and larger bars and 9% for #32 and smaller bars as measured in accordance with California Test 670 dated May 2004, and either case shall apply at time of rupture regardless of whether the bar breaks inside or outside the affected zone." (California Test 670 dated May 2004 is attached as pages 2 through 9 of this change order.)

Initial job control (Quality Assurance) testing of sample splices representing a production lot or set of production lots shall be performed using the visibly evident criteria noted above. Only if these initial tests fail will the Quality Assurance Lab use the measured minimum strain criteria to test a subsequent set of job control sample splices representing the failed lot.

This change constitutes a Zero cost adjustment for both the Contractor and the State.

Estimated Cost: increase ☐ Decrease ☐ **$0.00**

By reason of this order the time of completion will be adjusted as follows: 0 days

Submitted by

Signature	Resident Engineer: COE D.	Date 6-25-04

Approval Recommended by

Signature	Construction Engineer: COE D.	Date 6-25-04

Engineer Approval by

Signature	(Print name and title) PETER SIEGENTHALER - Chief	Date

We the undersigned contractor, have given careful consideration to the change proposed and agree, if this proposal is approved, that we will provide all equipment, furnish the materials, except as may otherwise be noted above, and perform all services necessary for the work above specified, and will accept as full payment therefor the prices shown above.

NOTE: If you, the contractor, do not sign acceptance of this order, your attention is directed to the requirements of the specifications as to proceeding with the ordered work and filing a written protest within the time therein specified.

Contractor Acceptance by

Signature	(Print name and title) J.T. Skoro, Project Director	Date 8-4-03

STATE OF CALIFORNIA - DEPARTMENT OF TRANSPORTATION

CONTRACT CHANGE ORDER MEMORANDUM

DATE: 6/29/2004 Page 1 of 1

TO: PETER SIEGENTHALER / COE D.

FROM: COED.

FILE: **E.A.** 04 - 012024
CO-RTE-PM 04-SF,Ala-80-13.9/14.3,0.0/1.6
FED. NO. ACIM-080-1(085)8N

CCO#: **117** SUPPLEMENT#: **0** Category Code: **CHSA**

CONTINGENCY BALANCE (incl. this change) **$6,064,867.11**

COST: **$0.00** INCREASE ☐ DECREASE ☐

HEADQUARTERS APPROVAL REQUIRED? ☑ YES ☐ NO

SUPPLEMENTAL FUNDS PROVIDED: **$0.00**

IS THIS REQUEST IN ACCORDANCE WITH ENVIRONMENTAL DOCUMENTS? ☑ YES ☐ NO

CCO DESCRIPTION:
Ultimate Splice Specification Change

PROJECT DESCRIPTION:
REPLACE SFOBB EAST SPAN

LOCATION: IN SAN FRANCISCO AND ALAMEDA COUNTIES IN SAN FRANCISCO AND OAKLAND FROM 1.3 KM EAST OF THE YERBA BUENA ISL

THIS CHANGE ORDER PROVIDES FOR:

revising Section 10-1.37, "REINFORCEMENT" subsection "Ultimate Butt Splice Criteria" of the Special Provisions, by replacing "In addition, necking of the bar shall be visibly evident at rupture regardless of whether the bar breaks inside or outside the affected zone." with, "In addition, necking of the bar shall be either, 1) visibly evident or 2) measured with a minimum strain of 6% for #36 and larger bars and 9% for #32 and smaller bars as measured in accordance with California Test Method 670 dated May 2004, and either case shall apply at time of rupture regardless of whether the bar breaks inside or outside the affected zone." This change also provides that job control testing (Quality Assurance) will use the existing visible necking criteria unless a lot fails Quality Assurance testing.

The available A 706/A 706M reinforcing steel produces less necking in the larger sizes, causing larger bar splices such as #43 and #57 bars to fail without visible necking, while still showing plastic strain.

There will be no cost or credit to the State for this change since a similar procedure for measuring the strain is already being used at the quality control testing lab for information only. The Contractor has agreed this change will be at no cost to the State.

Mark Mahan, of the Division of Engineering Services Splice committee has recommended that this specification change is going to be used in the future to address this problem. Concurrence from Jon Denis, designer from TY Lin/Moffatt & Nichol was received on February 5,2004. A copy of the concurrence memorandum from Doug Coe, Sup. Br. Engr. and Pete Siegenthaler, Principal Bridge Engineer, with the SFOBB East Span Seismic Safety Projects as well as Robert Kobal, Headquarters Reviewer is in the project files. Maintenance concurrence is not required as this change is not related to the maintenance of the bridge. Prior approval from Nancy Bobb, FHWA was obtained on 02/23/04 via email.

No adjustment of contract time is warranted, as this change does not affect the controlling operation.

CONCURRED BY:

Construction Engineer:	Douglas Coe	Date 6-25-04
Bridge Engineer:	Douglas Coe	Date 6-25-04
FHWA Representative:	Nancy Bobb	Date 2/23/2004
Project Engineer:		Date
Other (specify): Mark Mahan, DES		Date 2/5/2004
John Denis. TY Lin		Date 2/5/2004
		Date
District Prior Approval By:		Date
HQ (Issue Approve) By		Date
Resident Engineer's Signature:		Date 6-25-04

ESTIMATE OF COST

	THIS REQUEST	TOTAL TO DATE
ITEMS	$0.00	$0.00
FORCE ACCOUNT	$0.00	$0.00
AGREED PRICE	$0.00	$0.00
ADJUSTMENT	$0.00	$0.00
TOTAL	$0.00	$0.00

FEDERAL PARTICIPATION

☐ PARTICIPATING ☐ PARTICIPATING IN PART ☐ NONE
☐ NON-PARTICIPATING (MAINTENANCE) ☐ NON-PARTICIPATING

FEDERAL SEGREGATION (if more than one Funding Source or P I P type)
☑ CCO FUNDED PER CONTRACT ☐ CCO FUNDED AS FOLLOWS

FEDERAL FUNDING SOURCE PERCENT

CCO: 118	Suppl. No. 0	Contract No. 04 - 012024	Road 04-SF,Ala-80-13.9/14.3,0.0/1.6	FED. AID LOC.: ACIM-080-1(085)8N

To: **KIEWIT / FCI / MANSON a JV**

You are directed *to* make the following changes from the plans and specifications or *do* the following described work not included in the plans and specifications for this contract. ***NOTE: This change order is not effective until approved by the Engineer.***

Description of work to be done, estimate of quantities and prices to be paid. (Segregate between additional work at contract price, agreed price and force account.) Unless otherwise stated, rates for rental of equipment cover only such time as equipment is actually used and no allowance will be made for idle time. This last percentage shown is the net accumulated increase or decrease from the original quantity in the Engineer's Estimate.

Adiustment of Compensation at Lump Sum:

As authorized by the Engineer, compensate the Contractor for increased direct labor costs associated with the Engineer's order to suspend implementing a second shift to produce superstructure segments during the period beginning May **19, 2003,** and ending June **13, 2003** for the SFOBB East Span Skyway, Bridge Nos. 34-0006L/R.

The Contractor will be paid an agreed lump sum amount of **$74,991**00. This sum constitutes full compenstation, including markups, for all direct costs and all Time Related Overhead (TRO) expenses. Any additional indirect costs or associated project impacts will be included in the deferred portion of CCO No. 107, Resolution of TIA No. **3,** and CCO No. 107 Supplement No. **1,** Resolution of TIA Nos. **4-6.**

Cost of Adjustment of Compensation at Agreed Lump Sum **$74,991**00

Estimated Cost: **Increase** ☑ **Decrease** ☐ **$74,991.00**

By reason of this order the time of completion will be adjusted as follows: 0 days

Submitted by		
Signature	**Resident Engineer:** COE D.	**Date** 5-12-04
Approval Recommended by		
Signature	**Construction Engineer:** COE D.	**Date** 5-12-04
Engineer Approval by		
Signature	**(Print name and title)** PETER SIEGENTHALER - Chief	**Date**

We the undersigned contractor, have given careful consideration to the change proposed and agree, if this proposal is approved, that we will provide all equipment, furnish the materials, except as may otherwise be noted above, and perform all services necessary for the work above specified, and will accept as full payment therefor the prices shown above.

NOTE: If you, the contractor, do not sign acceptance of this order, your attention is directed to the requirements of the specifications as to proceeding with the ordered work and filing a written protest within the time therein specified.

Contractor Acceptance by		
Signature	**(Print name and title)** A.T. Skoro, Project Director	**Date** 6-7-04

STATE OF CALIFORNIA - DEPARTMENT OF TRANSPORTATION

CONTRACT CHANGE ORDER MEMORANDUM

DATE: 4/8/2004

TO: PETER SIEGENTHALER / COE D.	FILE: E.A. 04 - 012024
FROM: COED.	CO-RTE-PM 04-SF,Ala-80-13.9/14.3,0.0/1.6
	FED. NO. ACIM-080-1(085)8N
CCO#: 118 SUPPLEMENT#: 0 Category Code: AXZZ	CONTINGENCY BALANCE (incl. this change) $22,691,166.68
COST: $74,991.00 INCREASE ☑ DECREASE ☐	HEADQUARTERS APPROVAL REQUIRED? ☐ YES ☐ NO
SUPPLEMENTAL FUNDS PROVIDED: $0.00	IS THIS REQUEST IN ACCORDANCE WITH ENVIRONMENTAL DOCUMENTS? ☐ YES ☐ NO
CCO DESCRIPTION: Suspension of 2nd Shift at Precast Yard	PROJECT DESCRIPTION: REPLACE SFOBB EAST SPAN

FHWA concurrence is not required as this is a minor change.

Maintenance concurrence is not required for this change.

A determination of the delay in completion of the contract due to the Engineer's direction to suspend the implementation of the second shift has been made, and compensation to the Contractor for time impacts associated with this change is included in CCO No. 107 and CCO No. 107 Supplement No. 1. No additional compensation for time impacts is provided in this change order.

CONCURRED BY:		
Construction Engineer:	Douglas Coe	Date 4-8-04
Bridge Engineer:		Date 5-12-04
FHWA Representative:		Date
Project Engineer:		Date
Other (specify):		Date
		Date
		Date
District Prior Approval By:	Pete Siegenthaler	Date 3/12/2004
HQ (Issue Approve) By:		Date
Resident Engineer's Signature:		Date 4-8-04

ESTIMATE OF COST

	THIS REQUEST	TOTAL TO DATE
ITEMS	$0.00	$0.00
FORCE ACCOUNT	$0.00	$0.00
AGREED PRICE	$0.00	$0.00
ADJUSTMENT	$74,991.00	$74,991.00
TOTAL	$74,991.00	$74,991.00

FEDERAL PARTICIPATION

☑ PARTICIPATING ☐ PARTICIPATING IN PART ☐ NONE
☐ NON-PARTICIPATING (MAINTENANCE) ☐ NON-PARTICIPATING

FEDERAL SEGREGATION (if more than one Funding Source or P.I P. type)
☑ CCO FUNDED PER CONTRACT ☐ CCO FUNDED AS FOLLOWS

FEDERAL FUNDING SOURCE PERCENT

C

CCO: 119	Suppl. No. 0	Contract No. 04 - 012024	Road 04-SF,Ala-80-13.9/14.3,0.0/1.6	FED. AID LOC.: ACIM-080-1(085)8N

To: **KIEWIT / FCI / MANSON a JV**

You are directed to make the following changes from the plans and specifications or do the following described work not included in the plans and specifications for this contract. **NOTE: This change order is not effective until approved *by the* Engineer.**

Description of work to be done, estimate of quantities and prices to be paid. (Segregate between additional work at contract price, agreed price and force account.) Unless otherwise stated, rates for rental of equipment cover only such time as equipment is actually used and no allowance will be made for idle time. This last percentage shown is the net accumulated increase or decrease from the original quantity in the Engineer's Estimate.

Adiustment of Compensation at Lump Sum:

Trial precast pier table panel E I6E-PEN-H3 may be incorporated as a production precast pier table panel at Pier Table 16E for the SFOBB East Span Skyway, Bridge No. 34-0006L/R.

For this work, the Contractor will credit the State an agreed lump sum of $4,756.10. This agreed lump sum constitutes full compensation, including markups, for all direct and indirect costs, all associated project impacts, and any and all risk associated with this change.

Cost of Adjustment of Compensation at Lump Sum .....($4,756.10)

Estimated Cost: Increase ☐ **Decrease** ☑ **($4,756.10)**

By reason of this order the time of completion will be adjusted as follows: 0 days

Submitted by		
Signature [signature] for	Resident Engineer: COE D.	Date 6/14/04
Approval Recommended by		
Signature [signature] for	Construction Engineer: COE D.	Date 6/14/04
Engineer Approval by		
Signature	(Print name and title) PETER SIEGENTHALER - Chief	Date

We the undersigned contractor, have given careful consideration to the change proposed and agree, if this proposal is approved, that we will provide all equipment, furnish the materials, except as may otherwise be noted above, and perform all services necessary for the work above specified, and will accept as full payment therefor the prices shown above.

NOTE: If you, the contractor, do not sign acceptance of this order, your attention is directed to the requirements of the specifications as to proceeding with the ordered work and filing a written protest within the time therein specified.

Contractor Acceptance by		
Signature [signature]	(Print name and title) A.J. Skoro, Project Director	Date 6-22-04

C

TO: PETER SIEGENTHALER / COE D.	FILE: **E.A.** 04 - 012024
FROM: COED.	**CO-RTE-PM** 04-SF,Ala-80-13.9/14.3,0.0/1.6
	FED. NO. ACIM-080-1(085)8N
CCO#: **119** SUPPLEMENT#: **0** Category Code: **CHXX**	CONTINGENCY BALANCE (incl. this change) **$6,136,837.17**
COST: **($4,756.10)** INCREASE ☐ DECREASE ☐	HEADQUARTERS APPROVAL REQUIRED? ☐ YES ☐ NO
SUPPLEMENTAL FUNDS PROVIDED: **$0.00**	IS THIS REQUEST IN ACCORDANCE WITH ENVIRONMENTAL DOCUMENTS? ☑ YES ☐ NO
CCO DESCRIPTION: Pier Table Pre-Cast Panel	**PROJECT DESCRIPTION:** REPLACE SFOBB EAST SPAN

This change order provides for crediting the State an agreed lump sum amount for allowing the use of a trial precast pier table panel as a production panel in the finished pier table, and willl result in a decrease in cost to the project of $4,756.10.

Mr. David Salladay, District 4 Representative, provided District Prior Approval on June 9, 2004. A copy of the prior approval form signed by Mr. Salladay is included.

Mr. Vankatesh S. Iyer, Structural Materials Representative, is in concurrence with this change. Mr. Iyer provided concurrence via a memorandum dated February 2, 2004. A copy of this memorandum is attached.

This change order is a minor change and does not require Prior Approval from FHWA.

Maintenance concurrence is not required as this change order does not modify the original design concept.

This change does not affect the overall project schedule; therefore, additional contract time is not considered.

CONCURRED BY:

Construction Engineer:	Douglas Coe by DAS	Date 6/14/04
Bridge Engineer:	Douglas Coe by DAS	Date 6/14/04
FHWA Representative:		Date
Project Engineer:		Date
	Venkatesh Iyer	
		Date
		Date
District Prior Approval By:		Date
HQ (Issue Approve) By:		Date
Resident Engineer's Signature:	David Slally for Doug Coe	Date 6/14/04

ESTIMATE OF COST

	THIS REQUEST	TOTAL TO DATE
ITEMS	$0.00	$0.00
FORCE ACCOUNT	$0.00	*$0.00*
AGREED PRICE	$0.00	$0.00
ADJUSTMENT	($4,756.10)	($4,756.10)

FEDERAL PARTICIPATION

PARTICIPATING ☐ PARTICIPATING IN PART ☐ NONE
☐ NON-PARTICIPATING (MAINTENANCE) ☐ NON-PARTICIPATING

FEDERAL SEGREGATION (if more than one Funding Source or P.I.P. type)
☑ CCO FUNDED PER CONTRACT ☐ CCO FUNDED AS FOLLOWS

FEDERAL FUNDING SOURCE	PERCENT

CONTRACT CHANGE ORDER

Change Requested by: Engineer

CCO 120	Suppl. No. 0	Contract No. 04 - 012024	Road 04-SF,Ala-80-13.9/14.3,0.0/1.6	FED. AID LOC.: ACIM-080-1(085)8N

To: **KIEWIT / FCI / MANSON a JV**

You are directed to make the following changes from the plans and specifications or do the following described work not included in the plans and specifications for this contract. ***NOTE: This change order is not effective until approved by the Engineer.***

Description of work to be done, estimate of quantities and prices to be paid. (Segregate between additional work at contract price, agreed price and force account.) Unless otherwise stated, rates for rental of equipment cover only such time as equipment is actually used and no allowance will be made for idle time. This last percentage shown is the net accumulated increase or decrease from the original quantity in the Engineer's Estimate.

Adjustment of Compensation at Lump Sum:

1) Eliminate the three-way switches, electrical receptacles, and pier lighting fixtures at the bottom of the pier stairs;

2) Relocate the remaining pier lighting fixtures to the nearest landing 1.5m above the highest observed water tide level of +1.74m;

3) Relocate the remaining electrical receptacles 0.45m above the highest observed water tide level of +1.74m.

This work shall be done in accordance with revised plan sheets EE-324C, EE-325D, EE-327C, EE-328D, 172R1, 173R1, 174R1, 175R1, 177R1, 178R1, 179R1, 180R1, 182R1, 183 R1, 184R1, 185R1, 186R1, 187R2, 189R2, 192R1, 193R1, 194R1, 195R1, 197R1, 198R1, 199R1, 200R1, 202R1, 203R1, 204R1, 205R1, 206R1, 207R1, 209R2, 251R2, 263R2, 276R2, 277R3, 278R2, 279R2, 280R3, 281R2, 282R2, 283R3, 284R2, 288R2, 289R3, 290R2, 291R2, 292R3, 293R2, 294R2, 295R3, 297R2, and 298R2 of 978 as shown on pages 2 to 56 of this change order.

For this work, the contractor will credit the State an agreed lump sum of $25,548.00.

Estimated cost of Adjustment of Compensation at Lump Sum .....($25,548.00)

Estimated Cost: **Increase** ☐ **Decrease** ☑ **($25,548.00)**

By reason of this order the time of completion will be adjusted as follows: 0 days

Submitted by

Signature	Resident Engineer: DOUG COE, Supervising Br. Eng.	Date 12-7-05

Approval Recommended by

Signature	Construction Engineer: DOUG COE, Supervising Br. Eng.	Date 12-7-05

Engineer Approval by

Signature	(Print name and title) PETER SIEGENTHALER - Chief	Date

We the undersigned contractor, have given careful consideration to the change proposed and agree, if this proposal is approved, that we will provide all equipment, furnish the materials, except as may otherwise be noted above, and perform all services necessary for the work above specified, and will accept as full payment therefor the prices shown above.

NOTE: If you, the contractor, do not sign acceptance of this order, your attention is directed to the requirements of the specifications as to proceeding with the ordered work and filing a written protest within the time therein specified.

Contractor Acceptance by

Signature	(Print name and title) Lee Zink Proj. Director	Date 1/16/06

STATE OF CALIFORNIA - DEPARTMENT OF TRANSPORTATION

CONTRACT CHANGE ORDER MEMORANDUM

TO: PETER SIEGENTHALER / DOUG COE, Supervising Br. Eng.	FILE: **E.A.** 04 - 012024
FROM: DOUG COE, Supervising Br. Eng.	**CO-RTE-PM** 04-SF,Ala-80-13.9/14.3,0.0/1.6
	FED. NO. ACIM-080-1(085)8N
CCO#: **120** SUPPLEMENT#: **0** Category Code: **CBPC**	CONTINGENCY BALANCE (incl. this change) **$55,550,396.20**
COST: **($25,548.00)** INCREASE ☐ DECREASE ☑	HEADQUARTERS APPROVAL REQUIRED? ☐ YES ☑ NO
SUPPLEMENTAL FUNDS PROVIDED: **$0.00**	IS THIS REQUEST IN ACCORDANCE WITH ENVIRONMENTAL DOCUMENTS? ☑ YES ☐ NO
CCO DESCRIPTION: Revise Pier Stair Lighting	**PROJECT DESCRIPTION:** REPLACE SFOBB EAST SPAN

LOCATION: IN SAN FRANCISCO AND ALAMEDA COUNTIES IN SAN FRANCISCO AND OAKLAND FROM 1.3 KM EAST OF THE YERBA BUENA ISL

THIS CHANGE ORDER PROVIDES FOR:

1) Eliminating the three-way switches, electrical receptacles, and pier lighting fixtures at the bottom of the pier stairs;

2) Relocating the remaining pier lighting fixtures to the nearest landing 1.5m above the highest observed water tide level of +1.74m;

3) Relocating the remaining electrical receptacles 0.45m above the highest observed water tide level of +1.74m.

This work shall be done in accordance with revised plan sheets EE-324C, EE-325D, EE-327C, EE-328D, 172R1, 173R1, 174R1, 175R1, 177R1, 178R1, 179R1, 180R1, 182R1, 183 R1, 184R1, 185R1, 186R1, 187R2, 189R2, 192R1, 193R1, 194R1, 195R1, 197R1, 198R1, 199R1, 200R1, 202R1, 203R1, 204R1, 205R1, 206R1, 207R1, 209R2, 251R2, 263R2, 276R2, 277R3, 278R2, 279R2, 280R3, 281R2, 282R2, 283R3, 284R2, 288R2, 289R3, 290R2, 291R2, 292R3, 293R2, 294R2, 295R3, 297R2, and 298R2 EE-324C, EE-325D, EE-327C, and EE-328Dof 978 as shown on pages 2 to 56 of this change order.

This change order will eliminate the three-way switches, relocate the electrical receptacles located at the bottom of the pier stairs and relocate the pier lighting fixtures above the highest observed water tide level, for the reason that the access casings were not designed to be completely water-tight and may fill with bay water over time. Maintenance is aware of this condition and recognizes that access case pumping may be required before access case inspection takes place. The electrical receptacles will be similarly relocated. Only one set of pier stair landings at each pier location will be affected.

For this change, the State will receive a credit of $25,548.00. This credit has been found to be fair and reasonable based on a force account analysis. A detailed cost analysis is on file.

FHWA Prior Approval was obtained from Nancy Bobb on October 28, 2005.

Design concurrence was obtained from Behzad Golemohammadi, Senior Electrical Engineer, on March 2, 2004.

Maintenance concurrence was obtained from Paul Parecadan, Senior Electrical Engineer, on May 24, 2005.

No adjustment of contract time is warranted, as this change does not affect the controlling operation.

CONCURRED BY:		
Construction Engineer:	Douglas Coe	Date 12-7-05
Bridge Engineer:	Douglas Coe	Date 12-7-05
FHWA Representative:	Nancy Bobb	Date0/28/2005
Project Engineer:		Date
Other (specify): Behzad Golemohammadi, Sr. Elec. Engr., Design		Date 3/2/2004
Paul Parecadan, Sr. Elec. Engr., Maintenance		Date5/24/2005
		Date
District Prior Approval By:		Date
HQ (Issue Approve) By:		Date
Resident Engineer's Signature:		Date 12-7-05

ESTIMATE OF COST

	THIS REQUEST	TOTAL TO DATE
ITEMS	$0.00	$0.00
FORCE ACCOUNT	$0.00	$0.00
AGREED PRICE	$0.00	$0.00
ADJUSTMENT	($25,548.00)	($25,548.00)
TOTAL	($25,548.00)	($25,548.00)

FEDERAL PARTICIPATION

☑ PARTICIPATING ☐ PARTICIPATING IN PART ☐ NONE
☐ NON-PARTICIPATING (MAINTENANCE) ☐ NON-PARTICIPATING

FEDERAL SEGREGATION (if more than one Funding Source or P.I.P. type)
☑ CCO FUNDED PER CONTRACT ☐ CCO FUNDED AS FOLLOWS

FEDERAL FUNDING SOURCE	PERCENT

CONTRACT CHANGE ORDER

Change Requested by: Engineer

CCO: 121 **Suppl. No. 0** **Contract No. 04 - 012024** **Road** 04-SF,Ala-80-13.9/14.3,0.0/1.6 **FED. AID LOC.:** ACIM-080-1(085)8N

To: **KIEWIT / FCI / MANSON a JV**

You are directed to make the following changes from the plans and specifications or do the following described work not included in the plans and specifications for this contract. ***NOTE: This change order is not effective until approved by the Engineer.***

Description of work to be done, estimate of quantities and prices to be paid. (Segregate between additional work at contract price, agreed price and force account.) Unless otherwise stated, rates for rental of equipment cover only such time as equipment is actually used and no allowance will be made for idle time. This last percentage shown is the net accumulated increase or decrease from the original

Adjustment of Compensation at Lump Sum:

Move the hinge expansion loops on Hinges B, C, D, and E for the 12 NPS CCSF Water, the NPS CCSF Reclaim Water, the 10 NPS CCSF Sewer with 18 NPS Casing, the 4 NPS Compressed Air, and the 2 1/2 NPS Domestic Water from the hinge minus 1 segment location to the hinge minus 2 segment for the Skyway Bridge Replacement Project, Bridge No. 340006 L/R, as shown on the revised contract plans 54R1, 58R1, 59R3, 63R2, 64R1, 65R2, 67R2, and 68R3 (sheets 2 to 9 of this Change Order).

Full compensation for all costs, including markups, all direct and indirect costs, all associated project impacts, and all overhead costs are included in the lump sum payment of CCO No. 200 and no further payment will be made as a result of this CCO.

Estimated Cost: **Increase** ☐ **Decrease** ☐

By reason of this order the time of completion will be adjusted as follows: 0 days

Submitted by

Signature	Resident Engineer: DOUG COE, Supervising Br. Eng.	Date 8-24-06

Approval Recommended by

Signature	Construction Engineer: DOUG COE, Supervising Br. Eng.	Date 8-24-06

Engineer Approval by

Signature	(Print name and title) PETER SIEGENTHALER - Chief	Date

We the undersigned contractor, have given careful consideration to the change proposed and agree, if this proposal is approved, that we will provide all equipment, furnish the materials, except as may otherwise be noted above, and perform all services necessary for the work above specified, and will accept as full payment therefor the prices shown above.

NOTE: If you, the contractor, do not sign acceptance of this order, your attention is directed to the requirements of the specifications as to proceeding with the ordered work and filing a written protest within the time therein specified.

Contractor Acceptance by

Signature	(Print name and title) Lee Zink, Project Director	Date 9/5/06

STATE OF CALIFORNIA - DEPARTMENT OF TRANSPORTATION

CONTRACT CHANGE ORDER MEMORANDUM

TO: PETER SIEGENTHALER / DOUG COE, Supervising Br. Eng.	FILE: E.A. 04 - 012024
FROM: DOUG COE, Supervising Br. Eng.	CO-RTE-PM 04-SF,Ala-80-13.9/14.3,0.0/1.6 FED. NO. ACIM-080-1(085)8N
CCO#: 121 SUPPLEMENT#: 0 Category Code: CHPK	CONTINGENCY BALANCE (incl. this change)
COST: INCREASE ☑ DECREASE ☐	HEADQUARTERS APPROVAL REQUIRED? ☐ YES ☑ NO
SUPPLEMENTAL FUNDS PROVIDED: $0.00	IS THIS REQUEST IN ACCORDANCE WITH ENVIRONMENTAL DOCUMENTS? ☑ YES ☐ NO
CCO DESCRIPTION: Mech Pipes & Expansion Loops at Hinges	**PROJECT DESCRIPTION:** REPLACE SFOBB EAST SPAN

LOCATION: IN SAN FRANCISCO AND ALAMEDA COUNTIES IN SAN FRANCISCO AND OAKLAND FROM 1.3 KM EAST OF THE YERBA BUENA ISL

THIS CHANGE ORDER PROVIDES FOR:

moving the hinge expansion loops on Hinges B, C, D, and E for the 12 NPS CCSF Water, the NPS CCSF Reclaim Water, the 10 NPS CCSF Sewer with 18 NPS Casing, the 4 NPS Compressed Air, and the 2 1/2 NPS Domestic Water from the hinge minus 1 segment location to the hinge minus 2 segment for the Skyway Bridge Replacement Project, Bridge No. 340006 L/R, as shown on the revised contract plans 54R1, 58R1, 59R3, 63R2, 64R1, 65R2, 67R2, and 68R3 of 978.

This change order is necessary to avoid congestion and resolve conflicts associated with post tensioning operation in the hinge segments for Hinges B, C, D, and E.

The agreed compensation for this change order is included in the lump sum compensation portion of resolution CCO No. 200. For this change, the contractor will receive an agreed lump sum of $39,123.00.

A detailed force account analysis prepared by the Engineer for the cost of this change order is on file in the project records.

District Prior Approval was obtained from Mr. David Salladay on May 25, 2004.

Design concurrence was obtained from Michael White, Mechanical Engineer on November 14, 2005.

Concurrence from Maintenance was obtained from Kenneth Brown, Office Chief, Toll Bridge Investigation and Maintenance on January 20, 2006.

No time adjustment is warranted for this change as it does not affect the controlling operation.

CONCURRED BY:		
Construction Engineer:	Douglas Coe	Date 2-24-06
Bridge Engineer:	Douglas Coe	Date 2-24-06
FHWA Representative:		Date
Project Engineer:		Date
Other (specify): Michael White, Mechanical Engineer		Date 1/14/2005
Kenneth Brown, Office Chief, Maintenance		Date 1/20/2006
		Date
District Prior Approval By:	David Salladay	Date 5/25/2004
HQ (Issue Approve) By:		Date
Resident Engineer's Signature:		Date 2-24-06

ESTIMATE OF COST

	THIS REQUEST	TOTAL TO DATE
ITEMS	$0.00	$0.00
FORCE ACCOUNT	$0.00	$0.00
AGREED PRICE	$0.00	$0.00
ADJUSTMENT		
TOTAL		

FEDERAL PARTICIPATION

☑ PARTICIPATING ☐ PARTICIPATING IN PART ☐ NONE
☐ NON-PARTICIPATING (MAINTENANCE) ☐ NON-PARTICIPATING

FEDERAL SEGREGATION (if more than one Funding Source or P.I.P. type)
☑ CCO FUNDED PER CONTRACT ☐ CCO FUNDED AS FOLLOWS

FEDERAL FUNDING SOURCE	PERCENT

CONTRACT CHANGE ORDER

Change Requested by: Contractor

CCO: 122	Suppl. No. 0	Contract No. 04 - 012024	Road 04-SF,Ala-80-13.9/14.3,0.0/1.6	FED. AID LOC.: ACIM-080-1(085)8N

To: **KIEWIT / FCI / MANSON a JV**

You are directed to make the following changes from the plans and specifications or do the following described work not included in the plans and specifications for this contract. ***NOTE: This change order is not effective until approved by the Engineer.***

Description of work to be done, estimate of quantities and prices to be paid. (Segregate between additional work at contract price, agreed price and force account.) Unless otherwise stated, rates for rental of equipment cover only such time as equipment is actually used and no allowance will be made for idle time. This last percentage shown is the net accumulated increase or decrease from the original quantity in the Engineer's Estimate.

Adjustment of Compensation at Lump Sum:

As authorized by the Engineer, replace the first sentence of Special Provisions Section 10-1.34, "Circular Segmented Bearing," subsection "Testing," subsection "Shear Test," Article C under "The acceptance criteria for shear test shall be the following:", with the following sentence:

"The stiffness of any individual test bearing shall not differ from the design stiffness by more than 37%."

As a result of this change, the State shall receive a credit for the agreed lump sum amount of $15,000.00. This agreed lump sum constitutes full compensation for all direct and indirect costs, and all associated project impacts.

Cost of Adjustment of Compensation at Lump Sum .....($15,000.00)

Estimated Cost: **Increase** ☐ **Decrease** ☑ **($15,000.00)**

By reason of this order the time of completion will be adjusted as follows: 0 days

Submitted by

Signature		Resident Engineer: COE D.	Date 6/14/04

Approval Recommended by

Signature		Construction Engineer: COE D.	Date 6/14/04

Engineer Approval by

Signature	(Print name and title) PETER SIEGENTHALER - Chief	Date

We the undersigned contractor, have given careful consideration to the change proposed and agree, if this proposal is approved, that we will provide all equipment, furnish the materials, except as may otherwise be noted above, and perform all services necessary for the work above specified, and will accept as full payment therefor the prices shown above.

NOTE: If you, the contractor, do not sign acceptance of this order, your attention is directed to the requirements of the specifications as to proceeding with the ordered work and filing a written protest within the time therein specified.

Contractor Acceptance by

Signature	(Print name and title) A. T. Shore, Project Director	Date 7-12-04

STATE OF CALIFORNIA - DEPARTMENT OF TRANSPORTATION

CONTRACT CHANGE ORDER MEMORANDUM

TO: PETER SIEGENTHALER / COE D.	FILE: E.A. 04 - 012024
FROM: COE D.	CO-RTE-PM 04-SF,Ala-80-13.9/14.3,0.0/1.6
	FED. NO. ACIM-080-1(085)8N
CCO#: 122 SUPPLEMENT#: 0 Category Code: CHSA	CONTINGENCY BALANCE (incl. this change) $6,569,646.01
COST: ($15,000.00) INCREASE ☐ DECREASE ☑	HEADQUARTERS APPROVAL REQUIRED? ☑ YES ☐ NO
SUPPLEMENTAL FUNDS PROVIDED: $0.00	IS THIS REQUEST IN ACCORDANCE WITH ENVIRONMENTAL DOCUMENTS? ☑ YES ☐ NO
CCO DESCRIPTION: Circular Segmented Bearing Shear Modulus	**PROJECT DESCRIPTION:** REPLACE SFOBB EAST SPAN

LOCATION: IN SAN FRANCISCO AND ALAMEDA COUNTIES IN SAN FRANCISCO AND OAKLAND FROM 1.3 KM EAST OF THE YERBA BUENA ISL

THIS CHANGE ORDER PROVIDES FOR:

modifying the Special Provisions Section 10-1.34, "Circular Segmented Bearing," subsection "Testing", subsection "Shear Test", subsection "C", Article C under "The acceptance criteria for shear test shall be the following:", to allow a stiffness modulus within 37% of the design stiffness in lieu of 20%.

This change order is necessary to minimize the potential impact to the project schedule since the hinges are on the critical path. The Engineer determined that the process of reformulating the bearing material is iterative and the time required to attain success is uncertain. Also, there is no certainty that the reformulated bearing material, if produced, would exhibit properties more desirable than the prototype.

This change order provides for crediting the State an agreed lump sum amount for modifying the contract special provisions to accept the circular segmented bearing, and will result in a decrease in cost to the project of $15,000.00. A cost analysis supporting the value of the agreed lump sum credit is on file in the project record.

The Design Team, including Mr. Brian Maroney, Technical Project Manager, the Design Engineers, and the Department's Oversight Engineers, recommended the adoption of the revised specification concerning the stiffness modulus tolerance for the circular segmented bearings. Mr. Maroney provided his concurrence via a memorandum to Mr. Doug Coe, Resident Engineer, dated March 23, 2004. A copy of this memorandum is attached. Ms. Janet Adams, District 4 Toll Bridge Region Project Manager, was included on the distribution list of the Memorandum from Mr. Maroney. Ms. Adams provided concurrence via email on June 10, 2004. A copy of the concurrence from Ms. Adams is attached.

Mr. Pete Siegenthaler provided District Prior Approval on May 4, 2004. A copy of the prior approval form signed by Mr. Siegenthaler is included. Ms. Nancy Bobb, FHWA Bay Bridge Project Manager, provided Prior Approval via an electronic message on June 8, 2004. Mr. Samad Hamoud provided Maintenance concurrence via electronic message on April 16, 2004. A printed copy of the electronic message from Ms. Bobb and Mr. Hamoud is attached.

This change does not effect contract time, and no adjustment in contract time in made in this contract change order.

CONCURRED BY:

Construction Engineer:	Douglas Coe by DAS	Date 6/14/04
Bridge Engineer:	Douglas Coe by DAS	Date 6/14/04
FHWA Representative:	Nancy Bobb	Date 6/8/2004
Project Engineer:	Brian Maroney	Date3/23/2004
Other (specify): Samad Hamoud		Date4/16/2004
Janet Adams		Date6/10/2004
		Date
District Prior Approval By:	Pete Siegenthaler	Date 5/4/2004
HQ (Issue Approve) By:		Date
Resident Engineer's Signature:	For Doug Coe	Date 6/14/04

ESTIMATE OF COST

	THIS REQUEST	TOTAL TO DATE
ITEMS	$0.00	$0.00
FORCE ACCOUNT	$0.00	$0.00
AGREED PRICE	$0.00	$0.00
ADJUSTMENT	($15,000.00)	($15,000.00)
TOTAL	($15,000.00)	($15,000.00)

FEDERAL PARTICIPATION

☑ PARTICIPATING ☐ PARTICIPATING IN PART ☐ NONE
☐ NON-PARTICIPATING (MAINTENANCE) ☐ NON-PARTICIPATING

FEDERAL SEGREGATION (if more than one Funding Source or P.I.P. type)
☑ CCO FUNDED PER CONTRACT ☐ CCO FUNDED AS FOLLOWS

FEDERAL FUNDING SOURCE	PERCENT

CONTRACT CHANGE ORDER

Change Requested by: Engineer

CCO: 123	Suppl. No. 0	Contract No. 04 - 012024	Road 04-SF,Ala-80-13.9/14.3,0.0/1.6	FED. AID LOC.: ACIM-080-1(085)8N

To: **KIEWIT / FCI / MANSON a JV**

You are directed to make the following changes from the plans and specifications or do the following described work not included in the plans and specifications for this contract. ***NOTE: This change order is not effective until approved by the Engineer.***

Description of work to be done, estimate of quantities and prices to be paid. (Segregate between additional work at contract price, agreed price and force account.) Unless otherwise stated, rates for rental of equipment cover only such time as equipment is actually used and no allowance will be made for idle time. This last percentage shown is the net accumulated increase or decrease from the original quantity in the Engineer's Estimate.

Delete the Roadway Lighting and Roadway Lighting Mock-up/Training/Testing portions of Contract Item No. 114, "Roadway Level Westbound," and Contract Item No. 116, "Roadway Level Eastbound," and coil 10 m of 3 #10 conductors into the lighting pull boxes adjacent to the light pole locations where shown on the contract plans to facilitate future installation of light poles and attached systems for the SFOBB East Span Skyway Bridge Replacement Project, Bridge Nos. 340006L/R.

Contract plan sheet numbers 415, 416, 418, 419, 420, and 425 of 978 are deleted as a result of this change order.

The revised contract plan sheets reflecting this change are 137R1, 138R1, 139R1, 140R1, 141R1, 142R1, 143R1, 144R1, 145R1, 146R1, 147R1, 148R1, 149R1, 150R1, 151R1, 152R1, 153R1, 154R1, 155R1, 156R1, 157R1, 158R1, 159R1, 160R1, 161R1, 162R1, 163R1, 164R1, 165R1, 166R1, 167R1, 168R1, 169R1, 170R1, 245R1, 246R1, 252R1, 253R1, 257R1, 258R1, 259R1, 260R1, 356R1, 360R1, and 417R2 of 978.

Revise Section 10-3.12, "Lighting," of the Special Provisions for the SFOBB East Span Skyway, Bridge Nos. 34-0006L/R, as follows:

Amend the subsection entitled "Roadway Lighting Assembly" as follows:

"The roadway lighting assembly shall include the anchor bolts as shown on the plans and in conformance with these special provisions."

Delete the subsections entitled "General," "Submittals," "Inspection," "Corrosion Resistance," "Pole," "Luminaire Lowering Device," "Roadway Luminaires Type SSR," and "Pole Mounted marker Lights Type SAM."

Anchor bolts for Roadway Lighting shall be installed in accordance with the contract plans and specifications. The Contractor shall install the anchor bolts as indicated on the "Anchorage" Table provided in the "Anchorage Detail" on contract plan sheet number 417R2 of 978. The Contractor shall cap the conduit runs terminating at the top of the light pole support foundation, and shall protect the anchor bolts, nuts, and washers from damage. All light pole locations shall be capped to prevent water intrusion.

Adjustment of Compensation at Lump Sum:

As consideration for this change, the Contractor agrees to credit the State a lump sum amount of $516,000.00. This sum constitutes full and complete compensation for this change.

Adjustment of Compensation at Lump Sum .....($516,000.00)

This Contract Change Order resolves Notice of Potential Claim (NOPC) No. 8, "Roadway Lighting Assembly," dated April 6, 2004.

CONTRACT CHANGE ORDER

Change Requested by: Engineer

CCO: 123	Suppl. No. 0	Contract No. 04 - 012024	Road 04-SF,Ala-80-13.9/14.3,0.0/1.6	FED. AID LOC.: ACIM-080-1(085)8N

RECEIVED
DEC -2 05
046326

Estimated Cost: Increase ☐ Decrease ☑ ($516,000.00)

By reason of this order the time of completion will be adjusted as follows: 0 days

Submitted by

Signature	Resident Engineer: DOUG COE, Supervising Br. Eng.	Date 12-14-05

Approval Recommended by

Signature	Construction Engineer: DOUG COE, Supervising Br. Eng.	Date 12-14-05

Engineer Approval by

Signature David Stellwagen	(Print name and title) for PETER SIEGENTHALER - Chief	Date 12/16/05

We the undersigned contractor, have given careful consideration to the change proposed and agree, if this proposal is approved, that we will provide all equipment, furnish the materials, except as may otherwise be noted above, and perform all services necessary for the work above specified, and will accept as full payment therefor the prices shown above.

NOTE: If you, the contractor, do not sign acceptance of this order, your attention is directed to the requirements of the specifications as to proceeding with the ordered work and filing a written protest within the time therein specified.

Contractor Acceptance by

Signature	(Print name and title) Lee Zink Project Director	Date 11/14/05

STATE OF CALIFORNIA - DEPARTMENT OF TRANSPORTATION

CONTRACT CHANGE ORDER MEMORANDUM

TO: PETER SIEGENTHALER / DOUG COE, Supervising Br. Eng.	FILE: **E.A.** 04 - 012024
FROM: DOUG COE, Supervising Br. Eng.	**CO-RTE-PM** 04-SF,Ala-80-13.9/14.3,0.0/1.6
	FED. NO. ACIM-080-1(085)8N
CCO#: **123** SUPPLEMENT#: **0** Category Code: **FBBD**	CONTINGENCY BALANCE (incl. this change) **$57,813,134.99**
COST: **($516,000.00)** INCREASE ☐ DECREASE ☑	HEADQUARTERS APPROVAL REQUIRED? ☐ YES ☑ NO
SUPPLEMENTAL FUNDS PROVIDED: **$0.00**	IS THIS REQUEST IN ACCORDANCE WITH ENVIRONMENTAL DOCUMENTS? ☑ YES ☐ NO
CCO DESCRIPTION: Eliminate Roadway Lighting Assembly	**PROJECT DESCRIPTION:** REPLACE SFOBB EAST SPAN

LOCATION: IN SAN FRANCISCO AND ALAMEDA COUNTIES IN SAN FRANCISCO AND OAKLAND FROM 1.3 KM EAST OF THE YERBA BUENA ISL

THIS CHANGE ORDER PROVIDES FOR:

deleting the roadway pole lighting assemblies (except for the anchor bolts, nuts, and washers) in Contract Item No. 114, "Roadway Level Westbound," and Contract Item No. 116, "Roadway Level Eastbound," pursuant to Special Provisions Section 10-3.12, "Lighting," and coiling 10 m of 3 #10 conductors into the lighting pull boxes adjacent to the light pole locations where shown on the contract plans to facilitate future installation of light poles and attached systems.

Contract plan sheet numbers 415, 416, 418, 419, 420, and 425 of 978 are deleted as a result of this change order.

The revised contract plan sheets reflecting this change are 137R1, 138R1, 139R1, 140R1, 141R1, 142R1, 143R1, 144R1, 145R1, 146R1, 147R1, 148R1, 149R1, 150R1, 151R1, 152R1, 153R1, 154R1, 155R1, 156R1, 157R1, 158R1, 159R1, 160R1, 161R1, 162R1, 163R1, 164R1, 165R1, 166R1, 167R1, 168R1, 169R1, 170R1, 245R1, 246R1, 252R1, 253R1, 257R1, 258R1, 259R1, 260R1, 356R1, 360R1, and 417R2 of 978. In addition, Section 10-3.12, "Lighting," of the Special Provisions, is revised to reflect this change.

This change order resolves a sole-source issue associated with the roadway pole lighting assemblies and to resolve Notice of Potential Claim (NOPC) No. 8, "Roadway Lighting Assembly," dated on April 6, 2004. Resolution of these issues will be accomplished by deleting a portion of the roadway pole lighting assemblies from the contract. The roadway lighting assembly includes the base plate, anchor bolts, pole, luminaries, and for poles over 12 m in height, a lowering device system for the luminaries. The anchor bolts for the light poles will remain in the contract. The deleted portions of the Roadway Pole Lighting Assembly will be added to the Self-Anchored Suspension (SAS) contract.

The project designer is T.Y. Lin International, Inc./Moffatt & Nichol, a joint venture. The joint venture partner, Moffatt & Nichol (MN), designed the roadway pole lighting assembly. During the preliminary design phase, MN consulted separate manufactures and engineers for information regarding the internal lifting mechanism, the luminaries, and the light poles. Two of the manufacturers that MN consulted are Sterner and Carolina High Mast. Each manufacturer submitted data for their individual components and performed some specification reviews for the individual components when requested by the designer. MN then combined the components into an integrated lighting system and produced the final contract drawings for the roadway pole lighting assemblies as shown on sheets 415 through 420 of 978 of the contract plans. MN also provided the light pole specifications included in Section 10-3.12, "Lighting," of the Special Provisions. These provisions call for the lowering device, along with lighting fixtures and poles, to be manufactured and tested as an integrated system. The system is to be provided and warranted by one manufacturer. The Special Provisions also require a prototype to be constructed by the manufacturer for testing the device with the fixture and track assembly shown on the plans.

Although MN drafted the specifications for the integrated lighting system to be manufactured and warranted by a single manufacturer, MN did not include in the bid documents which manufacturers they had consulted with during the design stage. The Contractor did not receive a bid for the complete integrated system until eight (8) months after the contract was awarded, and the cost proposal submitted was approximately $5 Million more than the bid price.

The Contractor's position is that the contract documents failed to provide sufficient information to obtain reliable and accurate quotes from a manufacturer for the light pole assembly during the bidding process, and the design of the high mast lighting poles was incomplete at the time of bid. The Contractor indicated that neither final drawings nor information that the project was being advertised in December 2001 was sent to Sterner or Carolina Highmast, the electrical lighting manufacturers that assisted MN on this design. Without final plans or knowledge that the project was out for bid, neither Sterner nor Carolina Highmast or any other electrical manufacturer provided quotes to the contractors in the preparation of their bids.

The Contractor has provided sufficient information to the Engineer to demonstrate that, prior to bid time, no electrical

manufacturer offered a price to build the complete, integrated light system. One company, Carolina Highmast, was willing to manufacture the poles, and another company, Holophane, was willing to manufacture the internal lifting mechanism for the poles. However, neither of these manufacturers was willing to manufacture and warrant the roadway pole lighting assembly as a whole, as is required by the Special Provisions. Lighting Systems is the only manufacturer that has been willing to build and warranty the roadway pole lighting assembly as required by the Special Provisions. However, Lighting System's quote was received approximately eight (8) months after the contract was awarded. The Engineer is concerned that the lighting assemblies may effectively be a sole source item.

The Contractor submitted NOPC No. 8 requesting an amount of $6,000,000.00, not including sales tax and mark-ups, for the additional costs to furnish the high mast lighting pole assemblies. After thorough review of the events that led to the NOPC, the Engineer decided that deleting the light pole system from the contract would be the best approach to resolving this conflict.

The Engineer and the Contractor both agree that deleting the high mast light pole system from the contract mitigates the sole source issue and resolves NOPC No. 8.

Deletion of the light poles results in a credit for the amount of $516,000.00. This amount represents the Contractor's bid price for the poles. A breakdown of the credit is on file in the project records.

Pete Siegenthaler, Construction Manager for the SFOBB East Span Replacement Project, concurred with this Contract Change Order on November 15, 2004. A copy of the concurrence provided by Mr. Siegenthaler is attached.

Janet Adams, Project Manager, SFOBB East Span Replacement, provided concurrence with this change on June 7, 2005. A copy of Ms. Adams concurrence is attached.

Vic Barbarick, District 4 Maintenance Electrical Region Manager, concurred with this change via electronic mail on November 15, 2004. A copy of the concurrence provided by Mr. Barbarick is attached.

Ade Akinsanya, Headquarters Project Design Manager, provided concurrence for this change order via electronic mail on June 6, 2005. A copy of Mr. Akinsanya's concurrence is attached.

Nancy Bobb, FHWA Area Engineer, provided Prior Approval on June 15, 2005. A copy of the prior approval provided by Ms. Bobb is attached.

No adjustment of contract time is warranted, as this change does not affect the controlling operation.

CONCURRED BY:		
Construction Engineer:	Douglas Coe	Date 10-14-05
Bridge Engineer:	Douglas Coe	Date 10-14-05
FHWA Representative:	Nancy Bobb	Date 6/15/2005
Project Engineer:	Ade Akinsanya, Design Mgr.	Date 6/6/2005
Other (specify): Janet Adams, Project Manager		Date 6/7/2005
Victor Barbarick, Maintenance		Date 11/16/2004
		Date
District Prior Approval By:		Date
HQ (Issue Approve) By:		Date
Resident Engineer's Signature		Date 10-14-05

ESTIMATE OF COST	THIS REQUEST	TOTAL TO DATE
ITEMS	$0.00	$0.00
FORCE ACCOUNT	$0.00	$0.00
AGREED PRICE	$0.00	$0.00
ADJUSTMENT	($516,000.00)	($516,000.00)
TOTAL	($516,000.00)	($516,000.00)

FEDERAL PARTICIPATION

☑ PARTICIPATING ☐ PARTICIPATING IN PART ☐ NONE
☐ NON-PARTICIPATING (MAINTENANCE) ☐ NON-PARTICIPATING

FEDERAL SEGREGATION (if more than one Funding Source or P.I.P. type)
☑ CCO FUNDED PER CONTRACT ☐ CCO FUNDED AS FOLLOWS

FEDERAL FUNDING SOURCE	PERCENT

STATE OF CALIFORNIA - DEPARTMENT OF TRANSPORTATION

CONTRACT CHANGE ORDER

Change Requested by: Engineer

CCO: 124	Suppl. No. 0	Contract No, 04 - 012024	Road 04-SF,Ala-80-13.9/14.3,0.0/1.6	FED. AID LOC.: ACIM-080-1(085)8N

To: KIEWIT / FCI / MANSON a JV

You are directed to make the following changes from the plans and specifications or do the following described work not included in the plans and specifications for this contract. ***NOTE: This change order is not effective until approved by the Engineer.***

Description of work to be done, estimate of quantities and prices to be paid. (Segregate between additional work at contract price, agreed price and force account.) Unless otherwise stated, rates for rental of equipment cover only such time as equipment is actually used and no allowance will be made for idle time. This last percentage shown is the net accumulated increase or decrease from the original quantity in the Engineer's Estimate.

Extra Work at Lump Sum:

Furnish and install Corrosion Rate Plates for the SFOBB - East Span Skyway, Bridge Nos. 34-0006L/R as shown on new contract plan sheet 222A of 978 (page 2 of 2 of this change order).

1 plate shall be delivered to the Engineer at 345 Burma Road, Oakland, CA 94607.

For this work, the Contractor will be paid an agreed lump sum of $15,869.00. This sum constitutes full compensation, including markups, for all direct and indirect costs, all associated project impacts, and Time Related Overhead (TRO) expenses.

Estimated cost of Extra Work at Agreed Lump Sum $15,869.00

Estimated Cost: Increase ☑ Decrease ☐ **$15,869.00**

By reason of this order the time of completion will be adjusted as follows: 0 days

Submitted by		
Signature	Resident Engineer: COE D.	Date 6-29-04
Approval Recommended by		
Signature	Construction Engineer: COE D.	Date 6-29-04
Engineer Approval by		
Signature	(Print name and title) PETER SIEGENTHALER - Chief	Date

We the undersigned contractor, have given careful consideration to the change proposed and agree, if this proposal is approved, that we will provide all equipment, furnish the materials, except as may otherwise be noted above, and perform all services necessary for the work above specified, and will accept as full payment therefor the prices shown above.

NOTE: If you, the contractor, do not sign acceptance of this order, your attention is directed to the requirements of the specifications as to proceeding with the ordered work and filing a written protest within the time therein specified.

Contractor Acceptance by		
Signature	(Print name and title) A.T. Skorø, Project Director	Date 7-12-04

STATE OF CALIFORNIA - DEPARTMENT OF TRANSPORTATION

CONTRACT CHANGE ORDER MEMORANDUM

DATE: 6/15/2004 Page 1 of 1

TO: PETER SIEGENTHALER / COE D.	FILE: **E.A.** 04 - 012024
FROM: COED.	**CO-RTE-PM** 04-SF,Ala-80-13.9/14.3,0.0/1.6
	FED. NO. ACIM-080-1(085)8N
CCO#: **125** | SUPPLEMENT#: **0** | Category Code: **CHXX**	CONTINGENCY BALANCE (incl. this change) **$6,069,646.02**
COST: **$500,000.00** INCREASE ☑ DECREASE ☐	HEADQUARTERS APPROVAL REQUIRED? ☑ YES ☐ NO
SUPPLEMENTAL FUNDS PROVIDED: **$0.00**	IS THIS REQUEST IN ACCORDANCE WITH ENVIRONMENTAL DOCUMENTS? ☑ YES ☐ NO
CCO DESCRIPTION: Bulkhead Modifications	**PROJECT DESCRIPTION:** REPLACE SFOBB EAST SPAN

LOCATION: IN SAN FRANCISCO AND ALAMEDA COUNTIES IN SAN FRANCISCO AND OAKLAND FROM 1.3 KM EAST OF THE YERBA BUENA ISL

THIS CHANGE ORDER PROVIDES FOR:
modifying the soffit, web, and deck steel bulkhead forms at the Stockton Precast Yard.

This change is needed to compensate the Contractor for modifying the steel bulkheads in the Stockton Precast Yard as a result of various design changes. These changes are beyond the scope of work covered in Contract Change Order No. 106, "Revised Holes In Bulkhead." Contract Change Order No. 106 includes modifications to the bulkhead panels for Segment E I1E-8W and Beds 1 and 2. Change Order No. 125 covers the continued additional modifications to bulkhead panels that have been required as the work progresses after the modifications were identified for Segment E I1E-8W, Bed 1 and Bed 2, and covered in Contract Change Order No. 106. The work associated with this change order includes modifications to all bulkheads due to the various design changes. Since the locations of the bulkhead modifications vary, and the amount of work to revise the bulkheads is indeterminate, the work associated with this change will be performed as extra work at force account.

This change order provides for compensating the contractor for the extra work associated with modifying the bulkhead forms to accommodate the revised design. Compensation will be extra work at force account at an estimated cost of $500,000.00. This additional estimated project cost can be financed from the contingency funds provided for this contract.

Ms. Nancy Bobb, FHWA Bay Bridge Project Manager, provided prior approval via an electronic message on June 14, 2004. A printed copy of the prior approval provided by Ms. Bobb is attached.

District 4 prior Approval was obtained by Pete Siegenthaler on June 7, 2004. A copy of the prior approval form is included.

Maintenance concurrence is not required as this change does not modify the finished structure from the original design.

Construction Engineer:	Douglas Coe by DAS	Date 6/15/04
Bridge Engineer:	Douglas Coe by DAS	Date 6/15/04
FHWA Representative	Nancy Bobb	Date 6/14/2004
Project Engineer:		Date
Other (specify):		Date
		Date
		Date
District Prior Approval BY:	Pete Sieaenthaler	Date 6/4/2004
HQ (Issue Approve) By:		Date
Resident Engineer's Signature:	for Doug Coe	Date 6/15/04

	THIS REQUEST	TOTAL TO DATE
ITEMS	$0.00	$0.00
FORCE ACCOUNT	$500,000.00	$500,000.00
AGREED PRICE	$0.00	$0.00
ADJUSTMENT	$0.00	$0.00
TOTAL	$500,000.00	$500,000.00

FEDERAL PARTICIPATION

☑ PARTICIPATING ☐ PARTICIPATING IN PART ☐ NONE
☐ NON-PARTICIPATING (MAINTENANCE) ☐ NON-PARTICIPATING

FEDERAL SEGREGATION (if more than one Funding Source or P / P type)
☑ CCO FUNDED PER CONTRACT ☐ CCO FUNDED AS FOLLOWS

FEDERAL FUNDING SOURCE	PERCENT

STATE OF CALIFORNIA - DEPARTMENT OF TRANSPORTATION

CONTRACT CHANGE ORDER MEMORANDUM

DATE: **6/28/2004** Page 1 of 1

TO. PETER SIEGENTHALER / COE D.

FROM: COED.

FILE: **E.A. 04 - 012024**

CO-RTE-PM 04-SF,Ala-80-13.9/14.3,0.0/1.6

FED. NO. ACIM-080-1(085)8N

CCO#: **124** SUPPLEMENT#: **0** Category Code: **CHPG**

CONTINGENCY BALANCE (incl. this change) **$6,064,867.11**

COST: **$15,869.00** INCREASE ☑ DECREASE ☐

HEADQUARTERS APPROVAL REQUIRED? ☐ YES ☑ NO

SUPPLEMENTAL FUNDS PROVIDED: **$0.00**

IS THIS REQUEST IN ACCORDANCE WITH ENVIRONMENTAL DOCUMENTS? ☑ YES ☐ NO

CCO DESCRIPTION:
Corrosion Rate Plates

PROJECT DESCRIPTION:
REPLACE SFOBB EAST SPAN

LOCATION: IN SAN FRANCISCO AND ALAMEDA COUNTIES IN SAN FRANCISCO AND OAKLAND FROM 1.3 KM EAST OF THE YERBA BUENA ISL

THIS CHANGE ORDER PROVIDES FOR

furnishing 13 A709 steel plates (440 mm x 310 mm x 60 mm) and welding 12 plates to the underside of the bottom plate at footing E3W with a 25 mm fillet weld.

It was determined that 12 steel plates welded to the bottom of the footing would be a long term and cost effective way of monitoring the corrosion rate of the piles and steel footing box E3W. Rob Reis, Senior Materials and Research Engineer Corrosion Specialist, from the Caltrans Office of Testing and Technology Services requested this change order in a memo dated April 7, 2004. The 13th plate will be delivered to the Engineer and utilized as a control plate to compare to the 12 welded plates.

For this change order, the Contractor will be paid an agreed lump sum payment of $15,869.00. This sum constitutes full compensation, including all markups. A force account cost analysis for this change is on file in the project records.

Maintenance concurrence was obtained from Samad Hamoud of Structures Maintenance on April 23, 2004 in a telephone conversation with Mark Woods. FHWA concurrence is not required.

No time adjustment is warranted for this change as it does not affect the controlling operation.

CONCURRED BY:

Construction Engineer	Douglas Coe	Date 6-25-04
Bridge Engineer:		Date
FHWA Representative:		Date
Project Engineer		Date
Other (specify): Rob Reis, METS		Date 4/7/2004
Samad Hamoud, Structures Maintenance		Date4/23/2004
		Date
District Prior Approval By	David Salladay	Date 6/7/2004
HQ (Issue Approve) By:		Date
Resident Engineer's Signature:		Date 6-25-04

ESTIMATE OF COST

	THIS REQUEST	TOTAL TO DATE
ITEMS	$0.00	$0.00
FORCE ACCOUNT	$0.00	$0.00
AGREED PRICE	$15,869.00	$15,869.00
ADJUSTMENT	$0.00	$0.00
	$15,869.00	$15,869.00

FEDERAL PARTICIPATION

☑ PARTICIPATING ☐ PARTICIPATING IN PART NONE
☐ NON-PARTICIPATING (MAINTENANCE) ☐ NON-PARTICIPATING

FEDERAL SEGREGATION (if more than one Funding Source or P I P type)
☑ CCO FUNDEDPERCONTRACT ☐ CCO FUNDED AS FOLLOWS

FEDERAL FUNDING SOURCE	PERCENT

CONTRACT CHANGE ORDER

Change Requested by: Engineer

CCO: 125	Suppl. No. 0	Contract No. 04 - 012024	Road 04-SF,Ala-80-13.9/14.3,0.0/1.6	FED. AID LOC.: ACIM-080-1(085)8N

Description of work to be done, estimate of quantities and prices to be paid. (Segregate between additional work at contract price, agreed price and force account.) Unless otherwise stated, rates for rental of equipment cover only such time as equipment is actually used and no allowance will be made for idle time. This last percentage shown is the net accumulated increase or decrease from the original quantity in the Engineer's Estimate.

Extra Work at Force Account:

As authorized by the Engineer, modify the soffit, web, and deck steel bulkhead forms at the Stockton Precast Yard for the SFOBB East Span Skyway, Bridge Nos. 34-0006L/R.

Estimated cost of Extra Work at Force Account $500,000.00

Estimated Cost: **Increase** ☑ **Decrease** ☐ **$500,000.00**

By reason of this order the time of completion will be adjusted as follows: 0 days

Submitted by

Signature	Resident Engineer:	Date
David Alley for	COE D.	6/15/04

Approval Recommended by

Signature	Construction Engineer:	Date
David Alley for	COE D.	6/15/04

Engineer Approval by

Signature	(Print name and title)	Date
	PETER SIEGENTHALER - Chief	

We the undersigned contractor, have given careful consideration to the change proposed and agree, if this proposal is approved, that we will provide all equipment, furnish the materials, except as may otherwise be noted above, and perform all services necessary for the work above specified, and will accept as full payment therefor the prices shown above.

NOTE: If you, the contractor, do not sign acceptance of this order, your attention is directed to the requirements of the specifications as to proceeding with the ordered work and filing a written protest within the time therein specified.

Contractor Acceptance by

Signature	(Print name and title)	Date
	A.T. Skoro, Project Director	6-22-04

STATE OF CALIFORNIA - DEPARTMENT OF TRANSPORTATION

CONTRACT CHANGE ORDER MEMORANDUM

DATE: 6/15/2004 Page 1 of 1

TO: PETER SIEGENTHALER / COE D.	FILE: **E.A.** 04 - 012024
FROM: COED.	**CO-RTE-PM** 04-SF,Ala-80-13.9/14.3,0.0/1.6
	FED. NO. ACIM-080-1(085)8N
CCO#: **125** | SUPPLEMENT#: **0** | Category Code: **CHXX**	CONTINGENCY BALANCE (incl. this change) **$6,069,646.02**
COST: **$500,000.00** INCREASE ☑ DECREASE ☐	HEADQUARTERS APPROVAL REQUIRED? ☑ YES ☐ NO
SUPPLEMENTAL FUNDS PROVIDED: **$0.00**	IS THIS REQUEST IN ACCORDANCE WITH ENVIRONMENTAL DOCUMENTS? ☑ YES ☐ NO
CCO DESCRIPTION: Bulkhead Modifications	**PROJECT DESCRIPTION:** REPLACE SFOBB EAST SPAN

LOCATION: IN SAN FRANCISCO AND ALAMEDA COUNTIES IN SAN FRANCISCO AND OAKLAND FROM 1.3 KM EAST OF THE YERBA BUENA ISL

THIS CHANGE ORDER PROVIDES FOR:
modifying the soffit, web, and deck steel bulkhead forms at the Stockton Precast Yard.

This change is needed to compensate the Contractor for modifying the steel bulkheads in the Stockton Precast Yard as a result of various design changes. These changes are beyond the scope of work covered in Contract Change Order No. 106, "Revised Holes In Bulkhead." Contract Change Order No. 106 includes modifications to the bulkhead panels for Segment E I1E-8W and Beds 1 and 2. Change Order No. 125 covers the continued additional modifications to bulkhead panels that have been required as the work progresses after the modifications were identified for Segment E I1E-8W, Bed 1 and Bed 2, and covered in Contract Change Order No. 106. The work associated with this change order includes modifications to all bulkheads due to the various design changes. Since the locations of the bulkhead modifications vary, and the amount of work to revise the bulkheads is indeterminate, the work associated with this change will be performed as extra work at force account.

This change order provides for compensating the contractor for the extra work associated with modifying the bulkhead forms to accommodate the revised design. Compensation will be extra work at force account at an estimated cost of $500,000.00. This additional estimated project cost can be financed from the contingency funds provided for this contract.

Ms. Nancy Bobb, FHWA Bay Bridge Project Manager, provided prior approval via an electronic message on June 14, 2004. A printed copy of the prior approval provided by Ms. Bobb is attached.

District 4 prior Approval was obtained by Pete Siegenthaler on June 7, 2004. A copy of the prior approval form is included.

Maintenance concurrence is not required as this change does not modify the finished structure from the original design.

Construction Engineer:	Douglas Coe by DAS	Date 6/15/04
Bridge Engineer:	Douglas Coe by DAS	Date 6/15/04
FHWA Representative	Nancy Bobb	Date 6/14/2004
Project Engineer:		Date
Other (specify):		Date
		Date
		Date
District Prior Approval BY:	Pete Sieaenthaler	Date 6/4/2004
HQ (Issue Approve) By:		Date
Resident Engineer's Signature:	for Doug Coe	Date 6/15/04

	THIS REQUEST	TOTAL TO DATE
ITEMS	$0.00	$0.00
FORCE ACCOUNT	$500,000.00	$500,000.00
AGREED PRICE	$0.00	$0.00
ADJUSTMENT	$0.00	$0.00
TOTAL	$500,000.00	$500,000.00

FEDERAL PARTICIPATION

☑ PARTICIPATING ☐ PARTICIPATING IN PART ☐ NONE
☐ NON-PARTICIPATING (MAINTENANCE) ☐ NON-PARTICIPATING

FEDERAL SEGREGATION (if more than one Funding Source or P / P type)
☑ CCO FUNDED PER CONTRACT ☐ CCO FUNDED AS FOLLOWS

FEDERAL FUNDING SOURCE	PERCENT

CONTRACT CHANGE ORDER

Change Requested by: Engineer

CCO: 126	Suppl. No. 0	Contract No. 04 - 012024	Road 04-SF,Ala-80-13.9/14.3,0.0/1.6	FED. AID LOC.: ACIM-080-1(085)8N

To: **KIEWIT / FCI / MANSON a JV**

You are directed to make the following changes from the plans and specifications or do the following described work not included in the plans and specifications for this contract. ***NOTE: This change order is not effective until approved by the Engineer.***

Description of work to be done, estimate of quantities and prices to be paid. (Segregate between additional work at contract price, agreed price and force account.) Unless otherwise stated, rates for rental of equipment cover only such time as equipment is actually used and no allowance will be made for idle time. This last percentage shown is the net accumulated increase or decrease from the original quantity in the Engineer's Estimate.

Modify the foundations at Pier Nos. E3 - E5 as shown on revised contract plan sheet numbers 486R2, 488R3, 924R2, 925R2, 926R2, 927R2, and 930R2 of 978 (sheets 3 through 9 of this change order) for the SFOBB East Span Skyway, Bridge Nos. 34-0006L/R.

Estimate of Increase in Contract Item at Contract Price:

Item No. 36: STRUCTURAL CONCRETE BRIDGE FOOTING
(F) 9 M3 (+0.03%) @ $950.00 /M3 = +$8,550.00 (+0.03%)

Estimated total cost for Increase in Contract Item.....$8,550.00

The quantity increases shown here for Contract Item No. 36, "Structural Concrete, Bridge Footing," when combined with quantities shown in the engineer's estimate, and as modified by any previous change orders, will be the final quantities for which payment will be made for each contract item.

Estimated total cost for Increase in Contract Item.....$8,550.00

Adjustment of Compensation at Lump Sum:

Compensate the Contractor for increased material and fabrication costs as a result of delays associated with the changes to the Precast Fender Modules delineated in the contract plan sheets identified above.

The Contractor shall receive an agreed lump sum amount of $310,604.00. This agreed lump sum constitutes full compensation, including all markups, for all direct and indirect costs, all associated project impact costs including delayed material procurement, fabrication, and delivery to the job site, and all overhead costs.

Adjustment of Compensation at Lump Sum $310,604.00

It is mutually agreed that this contract change order compensates the Contractor for the increased material costs due to the Engineer's resolution of the fender reinforcing conflicts and, therefore, resolves Notice of Potential Claim Number 12, "Mechanical Splice Relocation on Fender Modules," dated November 4, 2004, and Notice of Potential Claim Number 13, "Precast Fender Form Escalation Costs," dated December 2, 2004.

Total Cost of This Change Order $319,154.00

CONTRACT CHANGE ORDER

Change Requested by: Engineer

CCO: 126	Suppl. No. 0	Contract No. 04 - 012024	Road 04-SF,Ala-80-13.9/14.3,0.0/1.6	FED. AID LOC.: ACIM-080-1(085)8N

RECEIVED
046327 DEC -2 05

Estimated Cost: Increase ☑ Decrease ☐ $319,154.00

By reason of this order the time of completion will be adjusted as follows: 0 days

Submitted by

Signature	Resident Engineer: DOUG COE, Supervising Br. Eng.	Date 11-26-05

Approval Recommended by

Signature	Construction Engineer: DOUG COE, Supervising Br. Eng.	Date 11-26-05

Engineer Approval by

Signature	(Print name and title) PETER SIEGENTHALER - Chief	Date 11-18-05

We the undersigned contractor, have given careful consideration to the change proposed and agree, if this proposal is approved, that we will provide all equipment, furnish the materials, except as may otherwise be noted above, and perform all services necessary for the work above specified, and will accept as full payment therefor the prices shown above.

NOTE: If you, the contractor, do not sign acceptance of this order, your attention is directed to the requirements of the specifications as to proceeding with the ordered work and filing a written protest within the time therein specified.

Contractor Acceptance by

Signature	(Print name and title) Lee Zink Project Director	Date 11/15/05

STATE OF CALIFORNIA - DEPARTMENT OF TRANSPORTATION

CONTRACT CHANGE ORDER MEMORANDUM

TO: PETER SIEGENTHALER / DOUG COE, Supervising Br. Eng.	FILE: E.A. 04 - 012024
	CO-RTE-PM 04-SF,Ala-80-13.9/14.3,0.0/1.6
FROM: DOUG COE, Supervising Br. Eng.	FED. NO. ACIM-080-1(085)8N
CCO#: **126** SUPPLEMENT#: **0** Category Code: **FHBB**	CONTINGENCY BALANCE (incl. this change) **$51,831,024.80**
COST: **$319,154.00** INCREASE ☑ DECREASE ☐	HEADQUARTERS APPROVAL REQUIRED? ☑ YES ☐ NO
SUPPLEMENTAL FUNDS PROVIDED: **$0.00**	IS THIS REQUEST IN ACCORDANCE WITH ENVIRONMENTAL DOCUMENTS? ☑ YES ☐ NO
CCO DESCRIPTION: Fender Conflict Resolution	**PROJECT DESCRIPTION:** REPLACE SFOBB EAST SPAN

LOCATION: IN SAN FRANCISCO AND ALAMEDA COUNTIES IN SAN FRANCISCO AND OAKLAND FROM 1.3 KM EAST OF THE YERBA BUENA ISL

THIS CHANGE ORDER PROVIDES FOR:

increasing the Structural Concrete, Bridge Footing quantity for the footing boxes at Piers E3 through E5 (total of six footings); modifying the details for the Precast Fender Modules as indicated on revised contract plan sheet numbers 486R2, 488R3, 924R2, 925R2, 926R2, 927R2, and 930R2 of 978 (sheets 3 through 9 of the change order); and resolving Notices of Potential Claim (NOPC) No. 12, "Mechanical Splice Relocation on Fender Modules," dated November 4, 2004, and No. 13, "Precast Fender Form Escalation Costs," dated December 2, 2004.

This change order resolves the bar reinforcing steel interference in the interface of the fender and footing top slab and compensates the Contractor for the increased material costs incurred as a consequence of the delay revising the Precast Fender Module working drawings. The interference between the fender and the footing box consists of a congested slab where the plans require many reinforcing steel bars to cross each other yet remain in one plane. The revised plans (sheets 3 through 9 of this change) order provide for a layering of these bars and an increase in the slab thickness as well as other detailing corrections to allow for the constructability of the connection of the precast fender modules to the footing boxes. During the time that this issue was being resolved and the working drawings were being revised, the costs for bar reinforcing steel increased significantly and additional costs to alter formwork were incurred.

The Contractor submitted NOPC No. 12 as a consequence of the additional engineering and drafting time needed to revise the shop drawings to stagger the bar mechanical splices in the horizontal plane as required by the Engineer. There are also additional labor, supervision, and quality control costs involved in order to stagger the bars in different planes rather than only one plane. NOPC No. 13 was submitted as a consequence of the unforeseen delay caused by the Engineer's revision of the plans and delayed approval of the shop drawings. As a result, material costs for the steel to fabricate steel fender forms have increased.

As a consequence of the delay caused by these changes, the Contractor has experienced an unforeseen price escalation on raw and fabricated materials. These costs are included in the agreed lump sum amount for this change.

This change order increases the quantities of Contract Item Nos. 36, "Structural Concrete, Bridge Footing." This change also provides for compensating the contractor an agreed lump amount for the extra work to modify the details for the Precast Fender Modules and for the associated delay involved with revising the contract plan sheets.

This contract change will result in a net cost increase of $319,154.00, which can be financed from the contingency funds. A complete cost analysis is on file with the project records.

It is mutually agreed that this contract change order resolves Notice of Potential Claim Number 12, "Mechanical Splice Relocation on Fender Modules," dated November 4, 2004, and Notice of Potential Claim Number 13, "Precast Fender Form Escalation Costs," dated December 2, 2004.

Design concurrence is provided by Mr. Hasan El-Natur on February 1, 2005, as indicated by the signature on the revised contract plan sheets.

Mr. Pete Siegenthaler, SFOBB Construction Manager, Toll Bridge Construction, concurs with this change. A copy of the concurrence signed by Mr. Siegenthaler on June 22, 2005 is attached.

Janet Adams, SFOBB Toll Bridge Project Manager, provided concurrence on October 26, 2005. A copy of the concurrence provided by Ms. Adams is attached.

Prior Approval was obtained from Ms. Nancy Bobb, FHWA Bay Bridge Project Manager, via electronic message on October 24, 2005. A printed copy of the prior approval provided by Ms. Bobb is attached.

Concurrence from Maintenance is not required as this change order does not use maintenance funds or affect maintenance facilities or operations.

No time adjustment is warranted for this change order as it does not affect the controlling operation.

CONCURRED BY:		
Construction Engineer:	Douglas Coe	Date 10-26-05
Bridge Engineer:	Douglas Coe	Date 10-26-05
FHWA Representative:	Nancy Bobb	Date 0/24/2005
Project Engineer:	Hasan El-Natur	Date 2/1/2005
Other (specify): Janet Adams, Proj. Manager		Date 0/26/2005
		Date
		Date
District Prior Approval By:		Date
HQ (Issue Approve) By:		Date
Resident Engineer's Signature:		Date 10-26-05

ESTIMATE OF COST

	THIS REQUEST	TOTAL TO DATE
ITEMS	$8,550.00	$8,550.00
FORCE ACCOUNT	$0.00	$0.00
AGREED PRICE	$0.00	$0.00
ADJUSTMENT	$310,604.00	$310,604.00
TOTAL	$319,154.00	$319,154.00

FEDERAL PARTICIPATION

☑ PARTICIPATING ☐ PARTICIPATING IN PART ☐ NONE
☐ NON-PARTICIPATING (MAINTENANCE) ☐ NON-PARTICIPATING

FEDERAL SEGREGATION (if more than one Funding Source or P.I.P. type)
☑ CCO FUNDED PER CONTRACT ☐ CCO FUNDED AS FOLLOWS

FEDERAL FUNDING SOURCE	PERCENT

CONTRACT CHANGE ORDER

Change Requested by: Engineer

CCO: 127 **Suppl. No.** 2 **Contract No.** 04 - 012024 **Road** 04-SF,Ala-80-13.9/14.3,0.0/1.6 **FED. AID LOC.:** ACIM-080-1(085)8N

To: **KIEWIT / FCI / MANSON a JV**

You are directed to make the following changes from the plans and specifications or do the following described work not included in the plans and specifications for this contract. ***NOTE: This change order is not effective until approved by the Engineer.***

Description of work to be done, estimate of quantities and prices to be paid. (Segregate between additional work at contract price, agreed price and force account.) Unless otherwise stated, rates for rental of equipment cover only such time as equipment is actually used and no allowance will be made for idle time. This last percentage shown is the net accumulated increase or decrease from the original

Adjustment of Compensation at Lump Sum:

This change order provides full and final payment for all extended labor, equipment, and escalation costs as a result of disruptions associated with the construction of precast hinges E16E-4E (Hinge EE) and E15E-6W (Hinge DE). This delay resulted in an agreed 72 working day project extension (CCO 127 S0 & S1), which extended contract completion from August 15, 2006 (WD 363), to November 29, 2006 (WD 435), exclusive of future weather days.

This Change Order resolves the Contractor's protest to CCO 127 S0 and 127 S1 as outlined in KFM Letter No. 829 dated June 7, 2004.

Full compensation, including all markups, all direct and indirect costs, all overhead costs not covered in Bid Item 7 (Time Related Overhead), and all associated project impacts is included in the lump sum payment of CCO 200 and no further payment will be made as a result of this CCO.

Estimated Cost: Increase ☐ Decrease ☐

By reason of this order the time of completion will be adjusted as follows: 0 days

Submitted by

Signature	Resident Engineer: DOUG COE, Supervising Br. Eng.	Date 8-24-06

Approval Recommended by

Signature	Construction Engineer: DOUG COE, Supervising Br. Eng.	Date 8-24-06

Engineer Approval by

Signature	(Print name and title) PETER SIEGENTHALER - Chief	Date

We the undersigned contractor, have given careful consideration to the change proposed and agree, if this proposal is approved, that we will provide all equipment, furnish the materials, except as may otherwise be noted above, and perform all services necessary for the work above specified, and will accept as full payment therefor the prices shown above.

NOTE: If you, the contractor, do not sign acceptance of this order, your attention is directed to the requirements of the specifications as to proceeding with the ordered work and filing a written protest within the time therein specified.

Contractor Acceptance by

Signature	(Print name and title) Lee Zink, Project Director	Date 9/5/06

STATE OF CALIFORNIA - DEPARTMENT OF TRANSPORTATION

CONTRACT CHANGE ORDER MEMORANDUM

TO: PETER SIEGENTHALER / PETER SIEGENTHALER	FILE: E.A. 04 - 012024
	CO-RTE-PM 04-SF,Ala-80-13.9/14.3,0.0/1.6
FROM: DOUG COE, Supervising Br. Eng.	FED. NO. ACIM-080-1(085)8N
CCO# 127 SUPPLEMENT#: 2 Category Cod FHBB	CONTINGENCY BALANCE (incl. this change
COST: INCREASE ☐ DECREASE ☐	HEADQUARTERS APPROVAL REQUIRED? ☑ YES ☐ NO
SUPPLEMENTAL FUNDS PROVIDED: $0.00	IS THIS REQUEST IN ACCORDANCE WITH ENVIRONMENTAL DOCUMENTS? ☑ YES ☐ NO
CCO DESCRIPTION: Precast Yard Slowdown/restart	**PROJECT DESCRIPTION:** REPLACE SFOBB EAST SPAN

LOCATION: IN SAN FRANCISCO AND ALAMEDA COUNTIES IN SAN FRANCISCO AND OAKLAND FROM 1.3 KM EAST OF THE YERBA BUENA ISL

THIS CHANGE ORDER PROVIDES FOR:

final compensation for the Contractor's extended equipment and labor costs associated with the disruptions caused by the late composite drawing approval associated with the construction of precast hinges E16E-4E (Hinge EE) and E15E-6W (Hinge DE). Time Impact Analyses (TIA) No. 13 R3 was submitted for these hinges resulting in a project extension of seventy two (72) working days. Contract Change Order (CCO) Nos. 127 and 127 Supplement No.1 were issued unilateral to resolve time and time-related overhead (TRO) costs associated with the disruptions caused by the late composite drawing approval.

The Contractor protested the Department's unilateral execution of CCO Nos. 127 and 127 Supplement No.1 and submitted NOPC No. 9. Although this NOPC was not presented to a Dispute Review Board, the ruling of the Dispute Review Board for a similar issue, NOPC No. 3 (CCO No. 107 Supplement 3), was used as a quantum guideline for this change order.

The extended equipment and supervision delay damage for the late composite drawing approval of precast hinges E16E-4E (Hinge EE) and E15E-6W (Hinge DE) is $141,204.39 per working day.

The agreed compensation for this contract change order to resolve CCO 127 S0 and 127 S1 as outlined in KFM Letter No. 829, dated June 7, 2004, and NOPC No. 9, is included in the lump sum compensation portion of resolution CCO No. 200. For this work the Contractor will be compensated an agreed lump sum amount of $10,166,716.00.

A detailed force account analysis prepared by the Engineer for the cost of this change order is on file in the project records.

Mr. Pete Siegenthaler, SFOBB Construction Manager, Toll Bridge Construction, concurs with this change. A copy of the concurrence signed by David Sallady for Mr. Siegenthaler on May 20, 2004 is attached.

This change order was discussed with Mr. Robert Pieplow of Headquarter's Construction. Mr. Pieplow is in concurrence with this change order.

Ken Terpstra, SFOBB Toll Bridge Project Manager, provided concurrence on July 30, 2006. A copy of the concurrence provided by Mr. Terpstra is attached.

Prior Approval was obtained from Ms. Nancy Bobb, FHWA Bay Bridge Project Manager, via electronic message on August 8, 2006. A printed copy of the prior approval provided by Ms. Bobb is attached.

Concurrence from Maintenance is not required as this change order does not use maintenance funds or affect maintenance facilities or operations.

No time adjustment is warranted for this change as it does not affect the controlling operation. The time extension was previously addressed in Contract Change Order Nos. 127 Supplement 0 and Supplement 1.

CONCURRED BY:

Construction Engineer:	Douglas Coe	Date 8-24-06
Bridge Engineer:	Douglas Coe	Date 8-24-06
FHWA Representative:	Nancy Bobb	Date 8/8/2006
Project Engineer:		Date
Other (specify): Ken Trepstra, SFOBB Project Manager		Date7/30/2006
TBPOC		Date8/24/2006
		Date
District Prior Approval By:		Date
HQ (Issue Approve) By:	Ken Darby	Date
Resident Engineer's Signature:		Date 8-24-06

ESTIMATE OF COST

	THIS REQUEST	TOTAL TO DATE
ITEMS	$0.00	$14,976,000.00
FORCE ACCOUNT	$0.00	$0.00
AGREED PRICE	$0.00	$0.00
ADJUSTMENT		
TOTAL		

FEDERAL PARTICIPATION

☑ PARTICIPATING ☐ PARTICIPATING IN PART ☐ NONE
☐ NON-PARTICIPATING (MAINTENANCE) ☐ NON-PARTICIPATING

FEDERAL SEGREGATION (if more than one Funding Source or P.I.P. type)
☑ CCO FUNDED PER CONTRACT ☐ CCO FUNDED AS FOLLOWS

FEDERAL FUNDING SOURCE	PERCENT

CONTRACT CHANGE ORDER

Change Requested by: Engineer

CCO 128	Suppl. No. 0	Contract No. 04 - 012024	Road 04-SF,Ala-80-13.9/14.3,0.0/1.6	FED. AID LOC.: ACIM-080-1(085)8N

To: **KIEWIT / FCI / MANSON a JV**

You are directed to make the following changes from the plans and specifications or do the following described work not included in the plans and specifications for this contract. ***NOTE: This change order is not effective until approved by the Engineer.***

Description of work to be done, estimate of quantities and prices to be paid. (Segregate between additional work at contract price, agreed price and force account.) Unless otherwise stated, rates for rental of equipment cover only such time as equipment is actually used and no allowance will be made for idle time. This last percentage shown is the net accumulated increase or decrease from the original quantity in the Engineer's Estimate.

Adjustment of Compensation at Lump Sum:

Furnishing and installing bike path railings per revised contract plan sheets 867R4, 868R4, 869R4, 891R4, 892R3, 893R4 894R4, 896AR3, and 896R2 (Pages 2 to 10 of this Change Order).

Full compensation for all costs, including markups, all direct and indirect costs, all associated projects impacts, and all overhead costs are included in the lump sum payment under Contract Change Order No. 200. No further payment will be made as a result of this Change Order.

Estimated Cost: Increase ☐ Decrease ☐

By reason of this order the time of completion will be adjusted as follows: 0 days

Submitted by

Signature	Resident Engineer: DOUG COE, Supervising Br. Eng.	Date 8-24-06

Approval Recommended by

Signature	Construction Engineer: PETER SIEGENTHALER	Date 8-24-06

Engineer Approval by

Signature	(Print name and title) PETER SIEGENTHALER - Chief	Date

We the undersigned contractor, have given careful consideration to the change proposed and agree, if this proposal is approved, that we will provide all equipment, furnish the materials, except as may otherwise be noted above, and perform all services necessary for the work above specified, and will accept as full payment therefor the prices shown above.

NOTE: If you, the contractor, do not sign acceptance of this order, your attention is directed to the requirements of the specifications as to proceeding with the ordered work and filing a written protest within the time therein specified.

Contractor Acceptance by

Signature	(Print name and title) Lee Zink, Project Director	Date 9/5/06

STATE OF CALIFORNIA - DEPARTMENT OF TRANSPORTATION

CONTRACT CHANGE ORDER MEMORANDUM

TO: PETER SIEGENTHALER / DOUG COE, Supervising Br. Eng.	FILE: E.A. 04 - 012024
FROM: DOUG COE, Supervising Br. Eng.	CO-RTE-PM 04-SF,Ala-80-13.9/14.3,0.0/1.6 FED. NO. ACIM-080-1(085)8N
CCO#: 128 SUPPLEMENT#: 0 Category Code: CHPA	CONTINGENCY BALANCE (incl. this change)
COST: INCREASE ☑ DECREASE ☐	HEADQUARTERS APPROVAL REQUIRED? ☑ YES ☐ NO
SUPPLEMENTAL FUNDS PROVIDED: $0.00	IS THIS REQUEST IN ACCORDANCE WITH ENVIRONMENTAL DOCUMENTS? ☑ YES ☐ NO
CCO DESCRIPTION: Bike Path Railings	**PROJECT DESCRIPTION:** REPLACE SFOBB EAST SPAN

LOCATION: IN SAN FRANCISCO AND ALAMEDA COUNTIES IN SAN FRANCISCO AND OAKLAND FROM 1.3 KM EAST OF THE YERBA BUENA ISL

THIS CHANGE ORDER PROVIDES FOR:

Furnishing and installing bike path railings per revised contract plan sheets 867R4, 868R4, 869R4, 891R4, 892R3, 893R4, 894R4, 896AR3, and 896R2 (Pages 2 to 10 of this Change Order).

This change order will provide a maximum 4-inch clearance between the railing posts as required by the California Building Code, Title 24 (adopted from the Uniform Building Code). This requirement was not addressed in the original contract plans. Furthermore, this change order will incorporate revisions to the bike path railings to match bike path panel revisions under Contract Change Order 90.

The agreed compensation for this change order is included in the lump sum compensation portion of resolution CCO No. 200. For this change, the contractor will receive an agreed lump sum of $913,350.00.

A detailed force account analysis prepared by the Engineer for the cost of this change order is on file in the project records..

Mr. Pete Siegenthaler, Principal Bridge Engineer for the SFOBB East Span Replacement, concurred with this change on December 13, 2005.

Ken Terpstra, SFOBB Toll Bridge Project Manager, provided concurrence on April 17, 2006.

Prior Approval was obtained from Ms. Nancy Bobb, FHWA Bay Bridge Project Manager, on December 14, 2005.

Authorization to proceed with this change order was issued by the Division of Construction on December 16, 2005.

Clive Endress, District 4 Senior Landscape Architect, provided his concurrence on October 12, 2004.

Hasan El-Natur, Design Oversight Engineer, provided design concurrence with his signature on the revised contract plan sheets on October 4, 2004.

Concurrence from Maintenance was issued by Kenneth Brown, Office Chief, Toll Bridge Investigation and Maintenance, on January 17, 2006.

No time adjustment is warranted for this change as it does not affect the controlling operation.

CONCURRED BY:		
Construction Engineer:	Douglas Coe	Date 8-24-06
Bridge Engineer:	Douglas Coe	Date 8-24-06
FHWA Representative:	Nancy Bobb	Date 2/14/2005
Project Engineer:		Date
Other (specify): Ken Terpstra, Toll Bridge Project Manager		Date 4/17/2006
Hasan El-Natur, Design Oversight Engineer		Date 10/4/2004
Ken Brown, Office Chief, Toll Bridge Maintenance		Date 1/17/2006
District Prior Approval By:		Date
HQ (Issue Approve) By:		Date
Resident Engineer's Signature:		Date 8-24-06

ESTIMATE OF COST

	THIS REQUEST	TOTAL TO DATE
ITEMS	$0.00	$0.00
FORCE ACCOUNT	$0.00	$0.00
AGREED PRICE	$0.00	$0.00
ADJUSTMENT		
TOTAL		

FEDERAL PARTICIPATION

☑ PARTICIPATING ☐ PARTICIPATING IN PART ☐ NONE
☐ NON-PARTICIPATING (MAINTENANCE) ☐ NON-PARTICIPATING

FEDERAL SEGREGATION (if more than one Funding Source or P.I.P. type)
☑ CCO FUNDED PER CONTRACT ☐ CCO FUNDED AS FOLLOWS

FEDERAL FUNDING SOURCE	PERCENT

CONTRACT CHANGE ORDER

Change Requested by: Engineer

CCO: 129	Suppl. No. 0	Contract No. 04 - 012024	Road 04-SF,Ala-80-13.9/14.3,0.0/1.6	FED. AID LOC.: ACIM-080-1(085)8N

To: **KIEWIT / FCI / MANSON a JV**

You are directed to make the following changes from the plans and specifications or do the following described work not included in the plans and specifications for this contract. ***NOTE: This change order is not effective until approved by the Engineer.***

Description of work to be done, estimate of quantities and prices to be paid. (Segregate between additional work at contract price, agreed price and force account.) Unless otherwise stated, rates for rental of equipment cover only such time as equipment is actually used and no allowance will be made for idle time. This last percentage shown is the net accumulated increase or decrease from the original quantity in the Engineer's Estimate.

Extra Work at Lump Sum:

Furnish, install, and remove a 2.19 MN temporary counterweight at Cantilever E5E-W in accordance with the Longitudinal Construction Analysis for the Eastbound Structure, dated June 3, 2005, for the SFOBB East Span Skyway, Bridge No. 34-0006R.

The temporary counterweight shall be centered on the joint between segments 6W and 7W, and shall be set in place prior to the installation of the alignment beams and formwork for the closure in Span E6E. The counterweight shall remain in place until the concrete for the closure span has been placed and the span tendons have been post-tensioned.

For this work, the Contractor agrees to accept a lump sum amount of $57,232.00. This agreed lump sum constitutes full compensation for all costs, including markups, all direct and indirect costs, all associated project impacts, and all overhead costs.

Cost of Extra Work at Lump Sum $57,232.00

Estimated Cost: **Increase** ☑ **Decrease** ☐ **$57,232.00**

By reason of this order the time of completion will be adjusted as follows: 0 days

Submitted by

Signature	Resident Engineer: DOUG COE, Supervising Br. Eng.	Date 10-14-05

Approval Recommended by

Signature	Construction Engineer: DOUG COE, Supervising Br. Eng.	Date 10-14-05

Engineer Approval by

Signature David Gallagher	(Print name and title) PETER SIEGENTHALER - Chief	Date 11-18-05

We the undersigned contractor, have given careful consideration to the change proposed and agree, if this proposal is approved, that we will provide all equipment, furnish the materials, except as may otherwise be noted above, and perform all services necessary for the work above specified, and will accept as full payment therefor the prices shown above.

NOTE: If you, the contractor, do not sign acceptance of this order, your attention is directed to the requirements of the specifications as to proceeding with the ordered work and filing a written protest within the time therein specified.

Contractor Acceptance by

Signature	(Print name and title) Lee Zink Project Director	Date 11/14/05

STATE OF CALIFORNIA - DEPARTMENT OF TRANSPORTATION

CONTRACT CHANGE ORDER MEMORANDUM

TO: PETER SIEGENTHALER / DOUG COE, Supervising Br. Eng.	FILE: E.A. 04 - 012024
FROM: DOUG COE, Supervising Br. Eng.	CO-RTE-PM 04-SF,Ala-80-13.9/14.3,0.0/1.6
	FED. NO. ACIM-080-1(085)8N
CCO#: 129 SUPPLEMENT#: 0 Category Code: CHXX	CONTINGENCY BALANCE (incl. this change) $61,939,547.57
COST: $57,232.00 INCREASE ☑ DECREASE ☐	HEADQUARTERS APPROVAL REQUIRED? ☐ YES ☑ NO
SUPPLEMENTAL FUNDS PROVIDED: $0.00	IS THIS REQUEST IN ACCORDANCE WITH ENVIRONMENTAL DOCUMENTS? ☑ YES ☐ NO
CCO DESCRIPTION: Temp. Counterweight at Cantilever E5E-W	**PROJECT DESCRIPTION:** REPLACE SFOBB EAST SPAN

LOCATION: IN SAN FRANCISCO AND ALAMEDA COUNTIES IN SAN FRANCISCO AND OAKLAND FROM 1.3 KM EAST OF THE YERBA BUENA ISL

THIS CHANGE ORDER PROVIDES FOR:

furnishing, installing, and removing a 2.19 MN temporary counterweight at Cantilever E5E- West (E5E-W) in accordance with the Longitudinal Construction Analysis for the Eastbound Structure, dated June 3, 2005.

The temporary counterweight is needed on the bridge superstructure to prevent excessive bending moments from occurring in Pier E5E. The contract plans identify the locations where the temporary counterweights are to be placed; however, the contract plans do not indicate that a counterweight would be required at Cantilever E5E-W. The Contractor followed the construction sequence as shown on the contract plans. During the review of the Longitudinal Construction Analysis (LCA) submitted by the Contractor for the Eastbound Structure, it was determined that a temporary counterweight is required at Cantilever E5E-W to relieve stresses induced in Pier E5E during the construction process. The LCA is used to identify flexural stresses in the pier columns, and indicates whether or not the column will experience excessive bending stresses at various stages of construction sequencing. The designer, T. Y. Lin/Moffatt & Nichol, a Joint Venture, has confirmed that a 2.19 MN temporary counterweight is required on cantilever E5E-W to reduce the high bending moments in Pier E5E during Frame 1 jacking and should have been shown on the contract plans. The temporary counterweight will be centered on the joint between segments 6W and 7W, located on the west side of Cantilever E5E, and will be set in place prior to the installation of the alignment beams and formwork for the closure in Span E6E, and will remain in place until the concrete for the closure span has been placed and the span tendons have been post-tensioned.

For this work, the Contractor will receive and accept the agreed lump sum of $57,232.00. This sum constitutes full compensation for providing all labor, material, equipment, tools and incidentals, including markups, for all direct and indirect costs, and all associated project impacts for this work.

This change order results in an cost increase to the project, which can be financed through the project contingency funds. A detailed cost analysis is on file in the project records.

Mr. David Salladay, New East Span Skyway District Representative, concurs with this change. A copy of the concurrence signed by Mr. Salladay on May 25, 2004, is attached.

Design concurrence was provided via electronic message by Mr. Ade Akinsanya, SFOBB Structure Design, on September 16, 2005. A copy of the concurrence provided by Mr. Akinsanya is attached.

No adjustment of contract time is warranted, as this change does not affect the controlling operation.

Concurrence from Maintenance is not required as this change order does not use maintenance funds or affect maintenance facilities or operations.

FHWA prior approval is not required as this is a minor change.

RECEIVED
046328 DEC-28

CONCURRED BY:		
Construction Engineer:	Douglas Coe	Date 10-14-05
Bridge Engineer:	Douglas Coe	Date 10-14-05
FHWA Representative:		Date
Project Engineer:	Ade Akinsanya	Date9/16/2005
Other (specify):		Date
		Date
		Date
District Prior Approval By:	David Salladay	Date5/25/2004
HQ (Issue Approve) By:		Date
Resident Engineer's Signature:		Date 10-14-05

ESTIMATE OF COST

	THIS REQUEST	TOTAL TO DATE
ITEMS	$0.00	$0.00
FORCE ACCOUNT	$0.00	$0.00
AGREED PRICE	$57,232.00	$57,232.00
ADJUSTMENT	$0.00	$0.00
TOTAL	$57,232.00	$57,232.00

FEDERAL PARTICIPATION

☑ PARTICIPATING ☐ PARTICIPATING IN PART ☐ NONE
☐ NON-PARTICIPATING (MAINTENANCE) ☐ NON-PARTICIPATING

FEDERAL SEGREGATION (if more than one Funding Source or P.I.P. type)
☑ CCO FUNDED PER CONTRACT ☐ CCO FUNDED AS FOLLOWS

FEDERAL FUNDING SOURCE	PERCENT

CONTR

CCO: 130	Suppl. No. 0	Contract No. 04 - 012024	Road 04-SF,Ala-80-13.9/14.3.0.0/1.6	FED. AID LOC.: ACIM-080-1(085)8N

To: **KIEWIT / FCI / MANSON a JV**

You are directed *to* make the following changes from the plans and specifications *or do* the following *described* work not included in *the* plans and *specifications for this contract.*

NOTE: This change order is not effective until approved *by* the Engineer.

Description of work to be done, estimate of quantities and prices to be paid. (Segregate between additional work at contract price, agreed price and force account.) Unless otherwise stated, rates for rental of equipment cover only such time as equipment is actually used and no allowance will be made for idle time. This last percentage shown is the net accumulated increase or decrease from the original quantity in the Engineer's Estimate.

Extra Work at Lump Sum:

Perform micro-hardness testing using either a "Vickers" or "Knoop Indenter Traverse" on the macroetches of the stainless steel cladding of the hinge pipe beams and the HPS 70W PQR plates in their respective Heat Affected Zones (HAZ), provide visual assessments of the grain structure in the HAZ of both macroetches, and compare the grain structure of the two macroetches together, for the SFOBB East Span Skyway Bridge Replacement Project, Bridge Nos. 34-0006L/R.

The results of each test shall be compiled into a report, stamped and signed by an engineer who is registered as a Metallurgical Engineer in the State of California, and submitted to the Engineer prior to incorporating the strip electrode material into the finished work.

This test shall be performed to verify the requirements specified in Section 10-1.44, "Steel Structures," subsection "Welding Of HPS70W Steels For Pipe Beams," (Revised Page 250-251) of the Special Provisions, for strip electrode welding material.

For this extra work, the Contractor agrees to accept an agreed lump sum amount of $6,173.00. This agreed lump sum constitutes full compensation, including markups, for all direct and indirect costs, all associated project impacts, and all overhead costs for this work.

Cost of Extra Work at Lump Sum $6,173.00

Estimated Cost: **Increase** ☐ **Decrease** ☐ **$6.173.00**

By reason of this order the time of completion will be adjusted as follows: 0 days

Submitted by

Signature	Resident Engineer: COE D.	Date 12-16-04

Approval Recommended by

Signature	Construction Engineer: COE D.	Date 12-16-04

Engineer Approval by

Signature	(Print name and title) PETER SIEGENTHALER - Chief	Date 12/20/04

We the undersigned contractor, have given careful consideration to the change proposed and agree, if this proposal is approved, that we will provide all equipment, furnish the materials, except as may otherwise be noted above, and perform all services necessary for the work above specified, and will accept as full paymenttherefor the prices shown above.

NOTE: If you, the contractor, do not sign acceptance of this order, your attention is directed to the requirements of the specifications as to proceeding with the ordered work and filing a written protest within the time therein specified.

Contractor Acceptance by

Signature	Print name and title: A.T. Skaare, Project Director	Date 1/17/05

STATE OF CALIFORNIA - DEPARTMENT OF TRANSPORTATION

CONTRACT CHANGE ORDER MEMORANDUM

TO: PETER SIEGENTHALER / COE D.

FROM: COED.

FILE: E.A. 04 - 012024
CO-RTE-PM 04-SF,Ala-80-13.9/14.3,0.0/1.6
FED. NO. ACIM-080-1(085)8N

CCO#: 130 | SUPPLEMENT#: 0 | Category Code: CHSA

CONTINGENCY BALANCE (incl. this change) $1,037,480.18

COST: $6,173.00 INCREASE ☑ DECREASE ☐

HEADQUARTERS APPROVAL REQUIRED? ☑ YES ☐ NO

SUPPLEMENTAL FUNDS PROVIDED: $0.00

IS THIS REQUEST IN ACCORDANCE WITH ENVIRONMENTAL DOCUMENTS? ☑ YES ☐ NO

CCO DESCRIPTION:
Stainless Steel Hardness Testing

PROJECT DESCRIPTION:
REPLACE SFOBB EAST SPAN

LOCATION: IN SAN FRANCISCO AND ALAMEDA COUNTIES IN SAN FRANCISCO AND OAKLAND FROM 1.3 KM EAST OF THE YERBA BUENA ISL

THIS CHANGE ORDER PROVIDES FOR:

performing micro-hardness testing using either a "Vickers" or "Knoop Indenter Traverse" on the macroetches of both the hinge pipe beam stainless steel cladding and the HPS 70W PQR plates in their respective Heat Affected Zones (HAZ). In addition, visual assessments of the grain structure in the HAZ of both macroetches will be performed and compared together. The observations, based on the comparison of the grain structure of the macroetches, will be compiled into a report that is stamped and signed by an engineer who is registered as a Metallurgical Engineer in the State of California, and delivered to the Engineer prior to incorporating the strip electrode material into the finished work.

This change order is needed to provide an acceptable method to test strip electrodes. The Contractor submitted a Welding Procedure using strip electrode weld material and was approved by the Engineer. The heat input formula provided in the Special Provisions to test the electrode for conformance to the contract specifications is for cylindrical electrodes and does not provide a basis of comparison when using strip electrodes. The heat input formula is based on criteria established in the American Welding Society Code D1.5 (AWS D1.5), Bridge Welding Code, Section 5.12 . Although the heat input requirements apply to the stainless steel overlay, the AWS D1.5 heat input formula does not provide a reasonable basis for comparison for the strip electrodes.

Therefore, to compare the strip overlay heat input to the limits provided in the Special Provisions (between 1.5 to 3.5 kJ/mm), the Contractor will perform a comparative micro-hardness test and visual assessment in order to determine if the submitted material conforms to the requirements prescribed in Special Provisions Section 10-1.44, "Steel Structures," subsection "Welding of HPS 70W Steels For Pipe Beams," Article D, Heat Input (HI) (Revised Pages 250-251).

This test will be performed to verify the requirements specified in Section 10-1.44, "Steel Structures," subsection "Welding Of HPS70W Steels For Pipe Beams," (Revised Page 250-251) of the Special Provisions, for strip electrode welding material.

This change order will compensate the Contractor for performing the test on the strip electrode material submitted by the Contractor, and approved by the Engineer, to determine if the electrode material conforms to the requirements established in the contract Special Provisions. This issue was discussed with Vanketesh Iyer, METS, on November 11, 2004, and he indicated that only one (1) test is needed and does not need to be repeated.

For this extra work, the Contractor will be paid an agreed lump sum amount of $6,173.00. This sum constitutes full compensation, including all markups. A force account cost analysis for this change is on file in the project records.

Prior Approval was obtained from Mr. Pete Siegenthaler, Principal Bridge Engineer for the SFOBB East Span Replacement, on June 18, 2004. A copy of the prior approval signed by Mr. Siegenthaler is attached.

Prior Approval was obtained from Ms. Nancy Bobb, FHWA Bay Bridge Project Manager, via electronic message on December 15, 2004. A printed copy of the prior approval provided by Ms. Bobb is attached.

Concurrence from Maintenance is not required as this change does not use maintenance funds or affect maintenance facilities or operations.

RECEIVED

No time adjustment is warranted for this change as it does not affect the controlling operation.

032859 FEB-1 10

CONCURRED BY		
Construction Engineer	Douglas Coe	Date 12-16-04
Bridge Engineer	Douglas Coe	Date 12-16-04
FHWA Representative	Nancy Bobb	Date 2/15/2004
Project Engineer		Date
Other (specify) Venkatesh Iyer, METS		Date 6/2/2004
Doug Williams, TYLin		Date 4/20/2004
		Date
District Prior Approval By	Pete Siegenthaler	Date 6/18/2004
HQ (Issue Approve) By		Date
Resident Engineers Signature		Date 12-16-2004

ESTIMATE OF COST

ITEMS	THIS REQUEST	TOTAL TO DATE
FORCE ACCOUNT	$0.00	$0 00
AGREED PRICE	$0 00	$0 00
ADJUSTMENT	$6,173 00	$6,173 00
TOTAL	$0 00	$0 00
	$6,173 00	$6,173 00

FEDERAL PARTICIPATION

- [x] PARTICIPATING
- [ ] PARTICIPATING IN PART
- [ ] NONE
- [ ] NON-PARTICIPATING (MAINTENANCE)
- [ ] NON PARTICIPATING

FEDERAL SEGREGATION (if more than one Funding Source or P I P type)

- [x] CCO FUNDED PER CONTRACT
- [ ] CCO FUNDED AS FOLLOWS

FEDERAL FUNDING SOURCE	PERCENT

STATE OF CALIFORNIA - DEPARTMENT OF TRANSPORTATION

CONTRACT CHANGE ORDER

Change Requested by: Contractor

CCO: 131	Suppl. No. 0	Contract No. 04 - 012024	Road 04-SF,Ala-80-13.9/14.3,0.0/1.6	FED. AID LOC.: ACIM-080-1(085)8N

To: **KIEWIT / FCI / MANSON a JV**

You are directed to make the following changes from the plans and specifications or do the following described work not included in the plans and specifications for this contract. ***NOTE: This change order is not effective until approved by the Engineer.***

Description of work to be done, estimate of quantities and prices to be paid. (Segregate between additional work at contract price, agreed price and force account.) Unless otherwise stated, rates for rental of equipment cover only such time as equipment is actually used and no allowance will be made for idle time. This last percentage shown is the net accumulated increase or decrease from the original quantity in the Engineer's Estimate.

The Contractor shall be allowed to incorporate the procedure provided on pages 2 through 4 of 29 of this change, for the welding of pulling attachments to prefabricated bundles of strand for the SFOBB East Span Skyway Bridge Replacement Project, Bridge Nos. 340006L/R.

The eighth paragraph of Section 10-1.26, "Prestressing Concrete," of the Special Provisions is amended to read:

> After final fabrication of the seven-wire prestressing steel strand, no electric welding of any form shall be performed on the prestressing steel except for the welding of pulling attachments to prefabricated bundles of strand. In no case shall steel strand within 1 meter of a weld location, as measured along the strand, be incorporated into the permanent work.

Adjustment of Compensation at Lump Sum:

For allowing the electric welding of pulling attachments to prefabricated bundles of prestressing strands, the Contractor agrees to credit the State a lump sum amount of $208,000.00. This sum constitutes full and complete compensation for this change.

Adjustment of Compensation at Lump Sum .....($208,000.00)

Estimated Cost: **Increase** ☐ **Decrease** ☑ **($208,000.00)**

By reason of this order the time of completion will be adjusted as follows: 0 days

Submitted by		
Signature	**Resident Engineer:** DOUG COE, Supervising Br. Eng.	**Date** 2-2-05
Approval Recommended by		
Signature	**Construction Engineer:** DOUG COE, Supervising Br. Eng.	**Date** 2-2-05
Engineer Approval by		
Signature	**(Print name and title)** PETER SIEGENTHALER - Chief	**Date** 3-14-05

We the undersigned contractor, have given careful consideration to the change proposed and agree, if this proposal is approved, that we will provide all equipment, furnish the materials, except as may otherwise be noted above, and perform all services necessary for the work above specified, and will accept as full payment therefor the prices shown above.

NOTE: If you, the contractor, do not sign acceptance of this order, your attention is directed to the requirements of the specifications as to proceeding with the ordered work and filing a written protest within the time therein specified.

Contractor Acceptance by		
Signature	**(Print name and title)** Chris Villa, Deputy Project Director	**Date** 2-18-05

STATE OF CALIFORNIA - DEPARTMENT OF TRANSPORTATION

CONTRACT CHANGE ORDER MEMORANDUM

DATE: 2/1/2005 Page 1 of 1

TO: PETER SIEGENTHALER / DOUG COE, Supervising Br. Eng.	FILE: E.A. 04 - 012024
FROM: DOUG COE, Supervising Br. Eng.	CO-RTE-PM 04-SF,Ala-80-13.9/14.3,0.0/1.6
	FED. NO. ACIM-080-1(085)8N
CCO#: 131 SUPPLEMENT#: 0 Category Code: CHSA	CONTINGENCY BALANCE (incl. this change) $60,206,592.95
COST: ($208,000.00) INCREASE ☐ DECREASE ☑	HEADQUARTERS APPROVAL REQUIRED? ☑ YES ☐ NO
SUPPLEMENTAL FUNDS PROVIDED: $0.00	IS THIS REQUEST IN ACCORDANCE WITH ENVIRONMENTAL DOCUMENTS? ☑ YES ☐ NO
CCO DESCRIPTION: Prestressed Strand Welding	**PROJECT DESCRIPTION:** REPLACE SFOBB EAST SPAN

LOCATION: IN SAN FRANCISCO AND ALAMEDA COUNTIES IN SAN FRANCISCO AND OAKLAND FROM 1.3 KM EAST OF THE YERBA BUENA ISL

THIS CHANGE ORDER PROVIDES FOR:

modifying Section 10-1.26 "Prestressing Concrete," of the Special Provisions to allow electric welding of seven-wire prestressing strand in accordance with a specified procedure.

The Contractor requested this change to enable them to weld pulling attachments to prestressing strand. This will allow the strand to be installed into the embedded ducts as complete tendons, which vary in composition from 4 to 37 strands. This reduces the probability of tendons becoming lodged during installation. The State benefits from the reduced probability of tendons becoming lodged during installation and the remedial work necessary to remove any blockages. The prefabrication of tendons will provide a more efficient installation process and result in a cost savings to the project. The pulling attachment is for installation only and will not be incorporated into the work. The design has not been altered as a result of this change.

This contract change order results in a net savings in construction costs. The Contractor has agreed to credit the State $208,000.00 in the form of an adjustment in compensation at lump sum. Records that support the adjustment in compensation are on file in the project records.

Prior approval was obtained from Pete Siegenthaler on August 13, 2004. Design concurrence was obtained from Brian Maroney on May 14, 2004. METS concurrence was obtained from Byron Berger on August 13, 2004. Prior Approval was obtained from Ms. Nancy Bobb, FHWA Bay Bridge Project Manager, via electronic message on January 27, 2005. Concurrence from Maintenance is not required as this change does not use maintenance funds or affect maintenance facilities or operations. Copies of the concurrences referenced are attached.

No time adjustment is warranted for this change, as it does not affect the controlling operation.

CONCURRED BY:

Construction Engineer:	Douglas Coe	Date 2-2-05
Bridge Engineer:	Douglas Coe	Date 2-2-05
FHWA Representative:	Nancy Bobb	Date1/27/2005
Project Engineer:	Brian Maroney	Date5/14/2004
Other (specify): Byron Berger, METS		Date8/13/2004
		Date
		Date
District Prior Approval By:		Date
HQ (Issue Approve) By:		Date
Resident Engineer's Signature:		Date 2-2-05

ESTIMATE OF COST

	THIS REQUEST	TOTAL TO DATE
ITEMS	$0.00	$0.00
FORCE ACCOUNT	$0.00	$0.00
AGREED PRICE	$0.00	$0.00
ADJUSTMENT	($208,000.00)	($208,000.00)
TOTAL	($208,000.00)	($208,000.00)

FEDERAL PARTICIPATION

☑ PARTICIPATING ☐ PARTICIPATING IN PART ☐ NONE
☐ NON-PARTICIPATING (MAINTENANCE) ☐ NON-PARTICIPATING

FEDERAL SEGREGATION (if more than one Funding Source or P.I.P. type)
☑ CCO FUNDED PER CONTRACT ☐ CCO FUNDED AS FOLLOWS

FEDERAL FUNDING SOURCE PERCENT

RECEIVED
035284 MAR 15 05

CONTRACT CHANGE ORDER

Change Requested by: Engineer

CCO: 133	Suppl. No. 0	Contract No. 04 - 012024	Road 04-SF,Ala-80-13.9/14.3,0.0/1.6	FED. AID LOC.: ACIM-080-1(085)8N

To: **KIEWIT / FCI / MANSON a JV**

You are directed to make the following changes from the plans and specifications or do the following described work not included in the plans and specifications for this contract. ***NOTE: This change order is not effective until approved by the Engineer.***

Description of work to be done, estimate of quantities and prices to be paid. (Segregate between additional work at contract price, agreed price and force account.) Unless otherwise stated, rates for rental of equipment cover only such time as equipment is actually used and no allowance will be made for idle time. This last percentage shown is the net accumulated increase or decrease from the original quantity in the Engineer's Estimate.

Extra Work at Force Account:

Roughen the vertical stem wall surfaces of precast segments E15E-1E/W and E16E-1E/W for the SFOBB East Span Skyway, Bridge No. 34-0006R.

Estimated cost of Extra Work at Force Account $12,500.00

Extra Work at Lump Sum:

Roughen the pier table vertical stem wall surfaces at the cast-in-place (CIP) closures to a minimum amplitude of 6 mm for Pier Table Nos. E12E through E16E. As provided on sheets 2 through 12 of this change order, construct shear keys in the pier table vertical stem wall surfaces at the CIP closures for Pier Table Nos. E3E to E12E, and E3W to E16W for the SFOBB East Span Skyway, Bridge Nos. 34-0006L/R.

For this work, the Contractor agrees to accept a lump sum amount of $223,727.00. This agreed lump sum constitutes full compensation for all costs, including markups, all direct and indirect costs, all associated project impacts, and all overhead costs.

Cost of Extra Work at Agreed Lump Sum $223,727.00

Estimated Cost: **Increase** ☑ **Decrease** ☐ **$236,227.00**

By reason of this order the time of completion will be adjusted as follows: 0 days

Submitted by

Signature	Resident Engineer: DOUG COE, Supervising Br. Eng.	Date 6-22-05

Approval Recommended by

Signature	Construction Engineer: DOUG COE, Supervising Br. Eng.	Date 6-22-05

Engineer Approval by

Signature	(Print name and title) PETER SIEGENTHALER - Chief	Date 8-24-05 ~~6-22-05~~

We the undersigned contractor, have given careful consideration to the change proposed and agree, if this proposal is approved, that we will provide all equipment, furnish the materials, except as may otherwise be noted above, and perform all services necessary for the work above specified, and will accept as full payment therefor the prices shown above.

NOTE: If you, the contractor, do not sign acceptance of this order, your attention is directed to the requirements of the specifications as to proceeding with the ordered work and filing a written protest within the time therein specified.

Contractor Acceptance by

Signature	(Print name and title) Deputy Project Director	Date 7-20-05

STATE OF CALIFORNIA - DEPARTMENT OF TRANSPORTATION

CONTRACT CHANGE ORDER MEMORANDUM

TO: PETER SIEGENTHALER / DOUG COE, Supervising Br. Eng.	FILE: E.A. 04 - 012024
FROM: DOUG COE, Supervising Br. Eng.	CO-RTE-PM 04-SF,Ala-80-13.9/14.3,0.0/1.6
	FED. NO. ACIM-080-1(085)8N
CCO#: 133 SUPPLEMENT#: 0 Category Code: CHPT	CONTINGENCY BALANCE (incl. this change) $63,058,813.55
COST: $236,227.00 INCREASE ☑ DECREASE ☐	HEADQUARTERS APPROVAL REQUIRED? ☑ YES ☐ NO
SUPPLEMENTAL FUNDS PROVIDED: $0.00	IS THIS REQUEST IN ACCORDANCE WITH ENVIRONMENTAL DOCUMENTS? ☑ YES ☐ NO
CCO DESCRIPTION: Pier Table Vertical Stem Wall Surfaces	**PROJECT DESCRIPTION:** REPLACE SFOBB EAST SPAN

LOCATION: IN SAN FRANCISCO AND ALAMEDA COUNTIES IN SAN FRANCISCO AND OAKLAND FROM 1.3 KM EAST OF THE YERBA BUENA ISL

THIS CHANGE ORDER PROVIDES FOR:
roughening the vertical stem wall surfaces of Pier Table Nos. E12E through E16E to a minimum amplitude of 6 mm, constructing shear keys in the vertical stem wall surfaces for Pier Table Nos. E3E through E12E and E3W through E16W, and additional roughening of the vertical stem wall surfaces of precast segments E15E-1E/W and E16E-1E/W.

The contract documents do not include shear keys in the vertical stem wall surfaces at the face of the pier tables. The Designer determined that shear keys are required at the pier tables to transfer the frictional shear forces in accordance with Section 5.14.2.4.6c, "Design Details," of the AASHTO LRFD Bridge Construction Specifications 2000 Interim Revisions to the 1998 2nd Edition. The need for a design revision was identified after the Contractor had cast lift one (1) of three (3) at Pier Tables E12E and all of Pier Tables E13E through E16E in accordance with the contract drawings utilizing flat-faced formwork at the CIP closures. The Designer requested the following changes: 1.) For pier tables that have already been cast, roughen the vertical stem wall surfaces to a minimum of 6 mm amplitude. 2.) For pier tables not yet cast, incorporate shear keys in the formwork of the vertical stem wall surfaces.

Contract Plan Sheet No. 865R2 provides details to construct shear keys in the vertical stem wall surfaces of the precast segments. The Engineer approved the Contractor's RFI No. 486, dated January 20, 2003, which allowed the option of roughening the vertical stem wall surfaces of the precast segments at the pier table and mid-span closures to a minimum amplitude of 6 mm in lieu of constructing shear keys. The vertical stem wall surfaces of precast segment numbers E15E-1E/W and E16E-1E/W were initially roughened at the Stockton Precast Yard in accordance with RFI No. 486. After precast segments E15E-1E/W and E16E-1E/W were delivered to the project site, the Engineer mistakenly required the Contractor to perform additional roughening beyond the 6 mm minimum amplitude on the vertical stem wall surfaces of the precast segments.

For roughening the vertical stem wall surfaces of Pier Table Nos. E12E through E16E to a minimum amplitude of 6 mm, and constructing shear keys in the vertical stem wall surfaces for Pier Table Nos. E3E through E12E and E3W through E16W, the Contractor will be paid an lump sum amount of $223,727.00. This lump sum constitutes full compensation including all markups. The method of payment for this work is Extra Work at Agreed Lump Sum.

The additional roughening on the vertical stem wall surfaces of precast segments E15E-1E/W and E16E-1E/W will be paid as Extra Work at Force Account for an estimated amount of $12,500.00.

This contract change order will result in a cost increase of $236,227.00, which can be financed from the contingency funds. A complete cost analysis is on file with the project records.

Mr. Pete Siegenthaler, Construction Manager for the SFOBB East Span Replacement, concurs with this change order. A copy of the concurrence provided by Mr. Siegenthaler is attached.

Janet Adams, SFOBB Toll Bridge Project Manager, provided concurrence on July 5, 2005. A copy of the concurrence provided by Ms. Adams is attached.

Prior Approval was obtained from Ms. Nancy Bobb, FHWA Bay Bridge Project Manager, via electronic message on March 23, 2005. A printed copy of the prior approval provided by Ms. Bobb is attached.

Hasan El-Natur, Design Oversight Engineer, recommended this change on July 26, 2004, and concurs with this change order. A printed copy Mr. El-Natur's recommendation is attached.

Concurrence from Maintenance is not required as this change does not use maintenance funds or affect maintenance facilities or operations.

No time adjustment is warranted for this change as it does not affect the controlling operation of work.

RECEIVED 04 2551 AUG 26 PM

CONCURRED BY:		
Construction Engineer:	Douglas Coe	Date 7-7-05
Bridge Engineer:	Douglas Coe	Date 7-7-05
FHWA Representative:	Nancy Bobb	Date 3/23/2005
Project Engineer:		Date
Other (specify): Hasan El-Natur		Date 7/26/2004
Janet Adams		Date 7/5/2005
		Date
District Prior Approval By:		Date
HQ (Issue Approve) By:		Date
Resident Engineer's Signature:		Date 7-7-05

ESTIMATE OF COST

	THIS REQUEST	TOTAL TO DATE
ITEMS	$0.00	$0.00
FORCE ACCOUNT	$12,500.00	$12,500.00
AGREED PRICE	$223,727.00	$223,727.00
ADJUSTMENT	$0.00	$0.00
TOTAL	$236,227.00	$236,227.00

FEDERAL PARTICIPATION

☑ PARTICIPATING ☐ PARTICIPATING IN PART ☐ NONE
☐ NON-PARTICIPATING (MAINTENANCE) ☐ NON-PARTICIPATING

FEDERAL SEGREGATION (if more than one Funding Source or P.I.P. type)
☑ CCO FUNDED PER CONTRACT ☐ CCO FUNDED AS FOLLOWS

FEDERAL FUNDING SOURCE	PERCENT

STATE OF CALIFORNIA - DEPARTMENT OF TRANSPORTATION

CONTRACT CHANGE ORDER MEMORANDUM

DATE: 2/4/2005 Page 1 of 1

012024

FROM: DOUG COE, Supervising Br. Eng.

CO-RTE-PM 04-SF,Ala-80-13.9/14.3,0.0/1.6

FED. NO. ACIM-080-1(085)8N

CCO#: **134** | SUPPLEMENT#: **0** | Category Code: **CFMX**

CONTINGENCY BALANCE (incl. this change) **$4,120,307.18**

SUPPLEMENTAL FUNDS PROVIDED: **$0.00**

IS THIS REQUEST IN ACCORDANCE WITH ENVIRONMENTAL DOCUMENTS? ☑ YES ☐ NO

CCO DESCRIPTION:

Use of A615 Rebar

PROJECT DESCRIPTION:

REPLACE SFOBB EAST SPAN

LOCATION: IN SAN FRANCISCO AND ALAMEDA COUNTIES IN SAN FRANCISCO AND OAKLAND FROM 1 3 KM EAST OF THE YERBA BUENA ISL

THIS CHANGE OKDER PROVIDES FOR:

The substitution of ASTM Designation: A 706/A 706M reinforcing steel with ASTM Designation: A 615 (Grade 60) or A 615M (Grade 420) reinforcing steel, reinforcing bars Nos.16 through 36, as approved by the design engineer at the locations listed in the contract change order. This change will not allow welding of any reinforcing steel of ASTM designation: A 615 (Grade 60) or A 615M (Grade 420).

Presently there is a shortage of ASTM Designation: A 706/A 706M reinforcing steel within the state due to mill production deficits. By allowing the contractor to make this change, delays caused by the shortage of material will be mitigated.

There shall be no cost or credit to the State by reason of this change.

Robert Pieplow, Chief of Division of Construction, has provided the construction's authorization of approval (CPD 03-8 Memorandum, Reinforcing Steel Shortage) on October 17, 2003. Design concurrence was received via e-mail from Brian Maroney on July 1, 2004. FHWA Prior Approval was received via e-mail from Nancy Bobb on February 8, 2005. Maintenance concurrence was received via e-mail from Kenneth Brown on February 7, 2005. A copy of the concurrences referenced is attached.

No time adjustment is warranted for this change, as it does not affect the controlling operation.

CONCURRED BY:

Construction Engineer	Douglas Coe	Date 2-28-05
Bridge Engineer	Douglas Coe	Date 2-28-05
FHWA Representative	Nancy Bobb	Date 2/8/2005
Project Engineer		Date
Other (specify): Brian Maronev		Date 7/1/2004
William Casey		Date2/11/2005
Kenneth Brown		Date 2/7/2005
District Prior Approval By	Pete Siegenthaler	Date9/22/2004
HQ (Issue Approve) By:		Date
Resident Engineer's Signature:		Date 2-28-05

ESTIMATE OF COST

	THIS REQUEST	TOTAL TO DATE
ITEMS	$0.00	$0.00
FORCE ACCOUNT	$0.00	$0.00
AGREED PRICE	$0.00	$0.00
ADJUSTMENT	$0 00	$0.00
TOTAL	$0.00	$0 00

FEDERAL **PARTICIPATION**

☑ PARTICIPATING ☐ PARTICIPATING IN PART ☐ NONE

☐ NON-PARTICIPATING (MAINTENANCE) ☐ NON-PARTICIPATING

FEDERAL SEGREGATION (if more than one Funding Source or P I P type)

☑ CCO FUNDED PER CONTRACT ☐ CCO FUNDED AS FOLLOWS

FEDERAL FUNDING SOURCE PERCENT

RECEIVED

035852 MAR 28 13

CONTRACT CHANGE ORDER

Change Requested by: Contractor

CCO: 134	Suppl. No. 1	Contract No. 04 - 012024	Road 04-SF,Ala-80-13.9/14.3,0.0/1.6	FED. AID LOC.: ACIM-080-1(085)8N

To: **KIEWIT / FCI / MANSON a JV**

You are directed to make the following changes from the plans and specifications or do the following described work not included in the plans and specifications for this contract. ***NOTE: This change order is not effective until approved by the Engineer.***

Description of work to be done, estimate of quantities and prices to be paid. (Segregate between additional work at contract price, agreed price and force account.) Unless otherwise stated, rates for rental of equipment cover only such time as equipment is actually used and no allowance will be made for idle time. This last percentage shown is the net accumulated increase or decrease from the original quantity in the Engineer's Estimate.

Adjustment of Compensation at Lump Sum:

The contractor is allowed to substitute ASTM Designation: A 615 (Grade 60) or A615M (Grade 420) reinforcement for ASTM Designation: A 706/A 706M reinforcement, reinforcing bar Nos.13 through 29, used for the precast fender modules shown in the "Precast Fender Modules Details" plan sheets (Sheet Nos. 924R2 to 930R2 of 978).

The contractor shall not weld any reinforcing steel of ASTM Designation: A 615 (Grade 60) or A615M (Grade 420).

There shall be no cost or credit to the State by reason of this change. This agreement constitutes complete consideration, including all associated project impacts, all overhead costs, and any and all risks.

Adjustment of Compensation at Agreed Lump Sum $0.00

Estimated Cost: **Increase** ☐ **Decrease** ☐ **$0.00**

By reason of this order the time of completion will be adjusted as follows: 0 days

Submitted by

Signature	Resident Engineer: DOUG COE, Supervising Br. Eng.	Date 8-9-05

Approval Recommended by

Signature	Construction Engineer: DOUG COE, Supervising Br. Eng.	Date 8-9-05

Engineer Approval by

Signature	(Print name and title) PETER SIEGENTHALER - Chief	Date 8-15-05

We the undersigned contractor, have given careful consideration to the change proposed and agree, if this proposal is approved, that we will provide all equipment, furnish the materials, except as may otherwise be noted above, and perform all services necessary for the work above specified, and will accept as full payment therefor the prices shown above.

NOTE: If you, the contractor, do not sign acceptance of this order, your attention is directed to the requirements of the specifications as to proceeding with the ordered work and filing a written protest within the time therein specified.

Contractor Acceptance by

Signature	(Print name and title) CHRISTOPHER J. VILLA Deputy Proj Director	Date 9/1/05

STATE OF CALIFORNIA - DEPARTMENT OF TRANSPORTATION

CONTRACT CHANGE ORDER MEMORANDUM

DATE: 8/9/2005 Page 1 of 1

TO: PETER SIEGENTHALER / DOUG COE, Supervising Br. Eng.	FILE: E.A. 04 - 012024
	CO-RTE-PM 04-SF,Ala-80-13.9/14.3,0.0/1.6
FROM: DOUG COE, Supervising Br. Eng.	FED. NO. ACIM-080-1(085)8N
CCO#: 134 SUPPLEMENT#: 1 Category Code: CFMX	CONTINGENCY BALANCE (incl. this change) $58,881,240.64
COST: $0.00 INCREASE ☐ DECREASE ☐	HEADQUARTERS APPROVAL REQUIRED? ☑ YES ☐ NO
SUPPLEMENTAL FUNDS PROVIDED: $0.00	IS THIS REQUEST IN ACCORDANCE WITH ENVIRONMENTAL DOCUMENTS? ☑ YES ☐ NO
CCO DESCRIPTION: Use of A615 Rebar in Foundation	**PROJECT DESCRIPTION:** REPLACE SFOBB EAST SPAN

LOCATION: IN SAN FRANCISCO AND ALAMEDA COUNTIES IN SAN FRANCISCO AND OAKLAND FROM 1.3 KM EAST OF THE YERBA BUENA ISL

THIS CHANGE ORDER PROVIDES FOR:

The substitution of ASTM Designation: A 706/A 706M reinforcing steel with ASTM Designation: A 615 (Grade 60) or A615M (Grade 420) reinforcing steel, reinforcing bar Nos.13 through 29, as approved by the design engineer at the locations listed in the contract change order. This change will not allow welding of any reinforcing steel of ASTM designation: A 615 (Grade 60) or A 615M (Grade 420).

There is a shortage of ASTM Designation: A 706/A 706M reinforcing steel within the state due to mill production deficits. By allowing the contractor to make this change, delays caused by the shortage of material will be mitigated.

There shall be no cost or credit to the State by reason of this change.

Concurrence was obtained from Pete Siegenthaler on September 22, 2004. Design concurrence was obtained from Brian Maroney on July 1, 2004. FHWA Prior Approval was received from Nancy Bobb on August 2, 2005. A copy of the concurrences referenced is attached.

Concurrence from Maintenance is not required as this change order does not use maintenance funds or affect maintenance facilities or operations.

No time adjustment is warranted for this change, as it does not affect the controlling operation.

RECEIVED 04 35 17 SEP 19 05

CONCURRED BY:		
Construction Engineer:	Douglas Coe	Date 8-9-05
Bridge Engineer:	Douglas Coe	Date 8-9-05
FHWA Representative:	Nancy Bobb	Date 8/2/2005
Project Engineer:	Brian Maroney	Date 7/1/2004
Other (specify): Mark Woods		Date5/11/2005
		Date
		Date
District Prior Approval By:		Date
HQ (Issue Approve) By:		Date
Resident Engineer's Signature:		Date 8-9-05

ESTIMATE OF COST

	THIS REQUEST	TOTAL TO DATE
ITEMS	$0.00	$0.00
FORCE ACCOUNT	$0.00	$0.00
AGREED PRICE	$0.00	$0.00
ADJUSTMENT	$0.00	$0.00
TOTAL	$0.00	$0.00

FEDERAL PARTICIPATION

☑ PARTICIPATING ☐ PARTICIPATING IN PART ☐ NONE
☐ NON-PARTICIPATING (MAINTENANCE) ☐ NON-PARTICIPATING

FEDERAL SEGREGATION (if more than one Funding Source or P.I.P. type)
☑ CCO FUNDED PER CONTRACT ☐ CCO FUNDED AS FOLLOWS

FEDERAL FUNDING SOURCE	PERCENT

STATE OF CALIFORNIA - DEPARTMENT OF TRANSPORTATION

CONTRACT CHANGE ORDER

Change Requested by: Engineer

CCO: 135	Suppl. No. 0	Contract No. 04 - 012024	Road 04-SF,Ala-80-13.9/14.3,0.0/1.6	FED. AID LOC.: ACIM-080-1(085)8N

To: KIEWIT / FCI / MANSON a JV

You are directed to make the following changes from the plans and specifications or do the following described work not included in the plans and specifications for this contract. ***NOTE: This change order is not effective until approved by the Engineer.***

Description of work to be done, estimate of quantities and prices to be paid. (Segregate between additional work at contract price, agreed price and force account.) Unless otherwise stated, rates for rental of equipment cover only such time as equipment is actually used and no allowance will be made for idle time. This last percentage shown is the net accumulated increase or decrease from the original quantity in the Engineer's Estimate.

Modify Section 10-1.37, "Reinforcement" of the Special Provisions, for ultimate butt splices by:

1. Deleting the requirements that production tests be performed "in the presence of either the Engineer or the Engineer's authorized representative," and

2. Deleting the requirements that "The Engineer or the Engineer's authorized representative will be at the independent qualified testing laboratory within a maximum of 5 working days after receiving written notification that the samples are at the laboratory and ready for testing. Should the Engineer or the Engineer's authorized representative fail to be at the laboratory within this time allowance, and if, in the opinion of the Engineer, the Contractor's controlling operation is delayed or interfered with by reason of this action, the delay will be considered a right of way delay in conformance with the provisions in Section 8-1.09, 'Right of Way Delays,' of the Standard Specifications," and

3. Including the requirements that, "At least one week before testing, the Contractor shall notify the Engineer in writing of the date when and the location where the testing of the samples willl be performed."

Adjustment of Compensation at Lump Sum:

There shall be no cost or credit to the State as a result of this change order.

Adjustment of Compensation at Lump Sum $0.00

Estimated Cost: Increase ☐ Decrease ☐ $0.00

By reason of this order the time of completion will be adjusted as follows: 0 days

Submitted by

Signature	Resident Engineer: DOUG COE, Supervising Br. Eng.	Date 3-23-05

Approval Recommended by

Signature	Construction Engineer: DOUG COE, Supervising Br. Eng.	Date 3-23-05

Engineer Approval by

Signature	(Print name and title) for PETER SIEGENTHALER - Chief	Date 3-25-05

We the undersigned contractor, have given careful consideration to the change proposed and agree, if this proposal is approved, that we will provide all equipment, furnish the materials, except as may otherwise be noted above, and perform all services necessary for the work above specified, and will accept as full payment therefor the prices shown above.

NOTE: If you, the contractor, do not sign acceptance of this order, your attention is directed to the requirements of the specifications as to proceeding with the ordered work and filing a written protest within the time therein specified.

Contractor Acceptance by

Signature	(Print name and title) Lee Zink, Project Director	Date 9/5/06

STATE OF CALIFORNIA - DEPARTMENT OF TRANSPORTATION

CONTRACT CHANGE ORDER MEMORANDUM

DATE: 3/23/2005 Page 1 of 1

TO: PETER SIEGENTHALER / DOUG COE, Supervising Br. Eng.	FILE: E.A. 04 - 012024
FROM: DOUG COE, Supervising Br. Eng.	CO-RTE-PM 04-SF,Ala-80-13.9/14.3,0.0/1.6
	FED. NO. ACIM-080-1(085)8N
CCO# 135 SUPPLEMENT#: 0 Category Cod CHSA	CONTINGENCY BALANCE (incl. this change
COST: INCREASE ☐ DECREASE ☐	HEADQUARTERS APPROVAL REQUIRED? ☑ YES ☐ NO
SUPPLEMENTAL FUNDS PROVIDED: $0.00	IS THIS REQUEST IN ACCORDANCE WITH ENVIRONMENTAL DOCUMENTS? ☑ YES ☐ NO
CCO DESCRIPTION: Butt Splice SSP Revisions	**PROJECT DESCRIPTION:** REPLACE SFOBB EAST SPAN

LOCATION: IN SAN FRANCISCO AND ALAMEDA COUNTIES IN SAN FRANCISCO AND OAKLAND FROM 1.3 KM EAST OF THE YERBA BUENA ISL

THIS CHANGE ORDER PROVIDES FOR:

revising the requirements of Section 10-1.37, "Reinforcement," of the Special Provisions, in accordance with Division of Construction memorandum CPD 04-4, which provides blanket authorization to issue and approve this particular change within the District.

Production tests must still be performed. The Contractor must notify the Engineer in writing at least one week prior to the production testing. The Engineer or his authorized representative may or may not be present to witness the tests.

Mr. Jason Dietz of FHWA granted a statewide blanket prior approval for this change to federally funded projects on March 12, 2004. Maintenance concurrence is not required as this change is not related to the maintenance of the bridge.

Contract time will not be extended and the testing shall not be delayed for the sake of the State in case the Engineer or his authorized representative is not present to witness the production testing at the appointed time.

There will be no cost or credit to the State because of this change. The change order will be processed as an Adjustment of Compensation at Agreed Lump Sum.

The Contractor refuses to sign the contract change order because they do not agree that this change order, as written, constitues a no cost change. The Contractor believes that they will incur additional costs to notify the Engineer of re-scheduled tests associated with Item No. 3 of the change order . The Engineer does not agree with the Contractor's position: therefore, this contract change order is being processed unilaterally by the Engineer, as this change order is a Headquarters issued directive.

Resolution of this contract change order is included in the lump sum compensation portion of resolution CCO No. 200.

CONCURRED BY:

Construction Engineer:	Douglas Coe	Date 8-24-06
Bridge Engineer:	Douglas Coe	Date 8-24-06
FHWA Representative:	Jason Dietz	Date3/12/2004
Project Engineer:		Date
Other (specify):		Date
		Date
		Date
District Prior Approval By:	David Salladay	Date7/19/2004
HQ (Issue Approve) By:		Date
Resident Engineer's Signature:		Date 8-24-06

ESTIMATE OF COST

	THIS REQUEST	TOTAL TO DATE
ITEMS	$0.00	$0.00
FORCE ACCOUNT	$0.00	$0.00
AGREED PRICE	$0.00	$0.00
ADJUSTMENT	$0.00	$0.00
TOTAL	$0.00	$0.00

FEDERAL PARTICIPATION

☑ PARTICIPATING ☐ PARTICIPATING IN PART ☐ NONE
☐ NON-PARTICIPATING (MAINTENANCE) ☐ NON-PARTICIPATING

FEDERAL SEGREGATION (if more than one Funding Source or P.I.P. type)
☑ CCO FUNDED PER CONTRACT ☐ CCO FUNDED AS FOLLOWS

FEDERAL FUNDING SOURCE	PERCENT

CONTRACT CHANGE ORDER

Change Requested by: Contractor

CCO: 136	Suppl. No. 0	Contract No. 04 - 012024	Road 04-SF,Ala-80-13.9/14.3,0.0/1.6	FED. AID LOC.: ACIM-080-1(085)8N

To: **KIEWIT / FCI / MANSON a JV**

You are directed to make the following changes from the plans and specifications or do the following described work not included in the plans and specifications for this contract. ***NOTE: This change order is not effective until approved by the Engineer.***

Description of work to be done, estimate of quantities and prices to be paid. (Segregate between additional work at contract price, agreed price and force account.) Unless otherwise stated, rates for rental of equipment cover only such time as equipment is actually used and no allowance will be made for idle time. This last percentage shown is the net accumulated increase or decrease from the original quantity in the Engineer's Estimate.

Adjustment of Compensation at Lump Sum:

The first paragraph of Section 52-1.07, "Placing", of the Standard Specifications is amended to read as follows:

"Reinforcement shall be accurately placed as shown on the plans and shall be firmly and securely held in position by wiring at intersections and splices and by using precast mortar blocks or ferrous metal chairs, spacers, metal hangers, supporting wires, and other approved devices of sufficient strength to resist crushing under applied loads. Wooden and aluminum supports shall not be used. With the approval of the Engineer, plastic reinforcement bar supports may be used for the construction of lightweight precast concrete panels for precast segments and pier tables. The approved plastic reinforcement bar supports shall only be used in conjunction with steel forms. Placing bars on layers of fresh concrete as the work progress will not be permitted."

This change order constitutes a zero cost adjustment for both the Contractor and the State. A cost benefit analysis is on file in the project records.

Adjustment of Compensation at Agreed Lump Sum...$0.00

Estimated Cost: Increase ☐ Decrease ☐ **$0.00**

By reason of this order the time of completion will be adjusted as follows: 0 days

Submitted by

Signature	Resident Engineer: DOUG COE, Supervising Br. Eng.	Date 3-9-05

Approval Recommended by

Signature	Construction Engineer: DOUG COE, Supervising Br. Eng.	Date 3-9-05

Engineer Approval by

Signature	(Print name and title) PETER SIEGENTHALER - Chief	Date 4-20-05

We the undersigned contractor, have given careful consideration to the change proposed and agree, if this proposal is approved, that we will provide all equipment, furnish the materials, except as may otherwise be noted above, and perform all services necessary for the work above specified, and will accept as full payment therefor the prices shown above.

NOTE: If you, the contractor, do not sign acceptance of this order, your attention is directed to the requirements of the specifications as to proceeding with the ordered work and filing a written protest within the time therein specified.

Contractor Acceptance by

Signature	(Print name and title) Chris Villa, Deputy Project Director	Date 4-14-05

STATE OF CALIFORNIA - DEPARTMENT OF TRANSPORTATION

CONTRACT CHANGE ORDER MEMORANDUM

TO: PETER SIEGENTHALER / DOUG COE, Supervising Br. Eng.	FILE: E.A. 04 - 012024
FROM: DOUG COE, Supervising Br. Eng.	CO-RTE-PM 04-SF,Ala-80-13.9/14.3,0.0/1.6
	FED. NO. ACIM-080-1(085)8N
CCO#: 136 SUPPLEMENT#: 0 Category Code: CFMX	CONTINGENCY BALANCE (incl. this change) $56,265,285.74
COST: $0.00 INCREASE ☐ DECREASE ☐	HEADQUARTERS APPROVAL REQUIRED? ☑ YES ☐ NO
SUPPLEMENTAL FUNDS PROVIDED: $0.00	IS THIS REQUEST IN ACCORDANCE WITH ENVIRONMENTAL DOCUMENTS? ☑ YES ☐ NO
CCO DESCRIPTION: Plastic Rebar Chairs	**PROJECT DESCRIPTION:** REPLACE SFOBB EAST SPAN

LOCATION: IN SAN FRANCISCO AND ALAMEDA COUNTIES IN SAN FRANCISCO AND OAKLAND FROM 1.3 KM EAST OF THE YERBA BUENA ISL

THIS CHANGE ORDER PROVIDES FOR:

amending the first paragraph of Section 52-1.07, "Placing", of the Standard Specifications, as follows:

"Reinforcement shall be accurately placed as shown on the plans and shall be firmly and securely held in position by wiring at intersections and splices and by using precast mortar blocks or ferrous metal chairs, spacers, metal hangers, supporting wires, and other approved devices of sufficient strength to resist crushing under applied loads. Wooden and aluminum supports shall not be used. With the approval of the Engineer, plastic reinforcement bar supports may be used for the construction of lightweight precast concrete panels for precast segments and pier tables. The approved plastic reinforcement bar supports shall only be used in conjunction with steel forms. Placing bars on layers of fresh concrete as the work progress will not be permitted."

Precast mortar blocks (dobies) are typically used to support reinforcement on soffits of box girder bridges. Bridge soffits normally only receive an ordinary surface finish as specified in Section 51-1.18A, "Ordinary Surface Finish", of the Standard Specifications, whereas, the lightweight precast concrete panels use in Skyway receive a class 1 surface finish as specified in Section 51- 1.18B, "Class 1 Surface Finish", of the Standard Specifications. Because the use of dobies to support the panel reinforcement, as allowed for in Section 51-1.07, "Placing", of the Standard Specifications, results in a patched panel surface with a non-uniform and blotchy appearance, the use of plastic rebar supports will be allowed to improve the class 1 surface finish, thereby, enhancing the long-term durability of the panels while reducing any maintenance patching in the future.

There shall be no cost or credit to the State by reason of this change. A cost benefit analysis is on file in the project records.

Concurrence was obtained from Pete Siegenthaler on August 19, 2004. Rick Land provided design concurrence on June 28, 2004. Nancy Bobb provided FHWA concurrence on February 22, 2005. Rob Reis provided Material Engineering and Testing Services (METS) concurrence on July 19, 2004. Kenneth Brown provided maintenance concurrence on February 16, 2005. A copy of the concurrences referenced is attached.

No time adjustment is warranted for this change, as it does not affect the controlling operation.

RECEIVED
037198 APR 27 05

CONCURRED BY:		
Construction Engineer:	Douglas Coe	Date 4-19-05
Bridge Engineer:	Douglas Coe	Date 4-15-05
FHWA Representative:	Nancy Bobb	Date 2/22/2005
Project Engineer:		Date
Other (specify): Pete Siegenthaler		Date 8/19/2004
Rick Land		Date 6/28/2004
William S. Casey		Date 2/15/2005
District Prior Approval By:		Date
HQ (Issue/Approve) By:		Date
Resident Engineer's Signature:		Date 4-19-05

ESTIMATE OF COST

	THIS REQUEST	TOTAL TO DATE
ITEMS	$0.00	$0.00
FORCE ACCOUNT	$0.00	$0.00
AGREED PRICE	$0.00	$0.00
ADJUSTMENT	$0.00	$0.00
TOTAL	$0.00	$0.00

FEDERAL PARTICIPATION

☑ PARTICIPATING ☐ PARTICIPATING IN PART ☐ NONE
☐ NON-PARTICIPATING (MAINTENANCE) ☐ NON-PARTICIPATING

FEDERAL SEGREGATION (if more than one Funding Source or P.I.P. type)
☑ CCO FUNDED PER CONTRACT ☐ CCO FUNDED AS FOLLOWS

FEDERAL FUNDING SOURCE	PERCENT

STATE OF CALIFORNIA - DEPARTMENT OF TRANSPORTATION

CONTRACT CHANGE ORDER

Change Requested by: Engineer

CCO: 138 Suppl. No. 0 Contract No. 04 - 012024 Road 04-SF,Ala-80-13.9/14.3,0.0/1.6 FED. AID LOC.: ACIM-080-1(085)8N

To: KIEWIT / FCI / MANSON a JV

You are directed to make the following changes from the plans and specifications or do the following described work not included in the plans and specifications for this contract. ***NOTE: This change order is not effective until approved by the Engineer.***

Description of work to be done, estimate of quantities and prices to be paid. (Segregate between additional work at contract price, agreed price and force account.) Unless otherwise stated, rates for rental of equipment cover only such time as equipment is actually used and no allowance will be made for idle time. This last percentage shown is the net accumulated increase or decrease from the original

Extra Work at Lump Sum:

Modify as necessary, eleven (11) pre-cast segment storage foundations designed for the smaller (lighter) segments to support the larger (heavier) pre-cast segments and provide compensation for all double handling of segments at the Stockton Pre-cast Yard.

The Contractor shall accept any and all risk associated with the design and modification of the storage foundations.

Full and complete compensation for providing all labor, material, equipment, tools and incidentals, including markups, for a direct and indirect costs, and all associated project impacts for this work are included in the lump sum payment of CCO No 200 and no further payment will be made as a result of this CCO.

Estimated Cost: Increase ☐ Decrease ☐

By reason of this order the time of completion will be adjusted as follows: 0 days

Submitted by

Signature	Resident Engineer: DOUG COE, Supervising Br. Eng.	Date 8-24-06

Approval Recommended by

Signature	Construction Engineer: DOUG COE, Supervising Br. Eng.	Date 8-24-06

Engineer Approval by

Signature	(Print name and title) DOUG COE, Supervising Br. Eng. - Construction Engin	Date

We the undersigned contractor, have given careful consideration to the change proposed and agree, if this proposal is approved, that we will provide all equipment, furnish the materials, except as may otherwise be noted above, and perform all services necessary for the work above specified, and will accept as full payment therefor the prices shown above.

NOTE: If you, the contractor, do not sign acceptance of this order, your attention is directed to the requirements of the specifications as to proceeding with the ordered work and filing a written protest within the time therein specified.

Contractor Acceptance by

Signature	(Print name and title) Lee Zink, Project Director	Date 9/5/06

STATE OF CALIFORNIA - DEPARTMENT OF TRANSPORTATION

CONTRACT CHANGE ORDER MEMORANDUM

DATE: 6/15/2006 Page 1 of 1

TO: PETER SIEGENTHALER / DOUG COE, Supervising Br. Eng.	FILE: E.A. 04 - 012024
FROM: DOUG COE, Supervising Br. Eng.	CO-RTE-PM 04-SF,Ala-80-13.9/14.3,0.0/1.6
	FED. NO. ACIM-080-1(085)8N
CCO#: 138 SUPPLEMENT#: 0 Category Code: AXZZ	CONTINGENCY BALANCE (incl. this change)
COST: INCREASE ☐ DECREASE ☐	HEADQUARTERS APPROVAL REQUIRED? ☐ YES ☑ NO
SUPPLEMENTAL FUNDS PROVIDED: $0.00	IS THIS REQUEST IN ACCORDANCE WITH ENVIRONMENTAL DOCUMENTS? ☑ YES ☐ NO
CCO DESCRIPTION: Segment Foundation Modification	**PROJECT DESCRIPTION:** REPLACE SFOBB EAST SPAN

LOCATION: IN SAN FRANCISCO AND ALAMEDA COUNTIES IN SAN FRANCISCO AND OAKLAND FROM 1.3 KM EAST OF THE YERBA BUENA ISL

THIS CHANGE ORDER PROVIDES FOR:

Modifying the storage foundations for the precast segments at the Stockton Precast Yard, and compensate the contractor for double handling segments.

Foundations for storage of pre-cast segments in the contractors Stockton pre-cast yard are constructed for segments of specific weights. The segments are planned to be shipped in sequence to the project site in Oakland. This allows for the casting and storage of segments on a predictable cycle. Delays in approval of the composite shop drawings for the hinge segments, changed the production sequence causing shifts in casting and storage. Subsequent segment erection delays at the Oakland site will require some large segments to be stored on foundations built for lesser weight. To do this the contractor will have to modify eleven (11) foundations. This out of sequence casting and storing of segments is also resulting in additional handling.

The agreed compensation for this contract change order is included in the lump sum compensation portion of resolution CCO No. 200. For this work the Contractor will be compensated an agreed lump sum amount of $27,689.00.

A detailed force account analysis prepared by the Engineer for the cost of this change order is on file in the project records.

District Prior Approval was obtained from Mr. David Salladay on May 17, 2006.

This is a minor change order and does not require prior approval from FHWA.

Concurrence from maintenance is not required because this change does not affect maintenance facilities or operations.

No adjustment of contract time is warranted, as this change does not affect the controlling operation.

CONCURRED BY:		
Construction Engineer:	Douglas Coe	Date 8-24-06
Bridge Engineer:	Douglas Coe	Date 8-24-06
FHWA Representative:		Date
Project Engineer:		Date
Other (specify):		Date
		Date
		Date
District Prior Approval By:	David Salladay	Date 5/17/2006
HQ (Issue Approve) By:		Date
Resident Engineer's Signature:		Date 8-24-06

ESTIMATE OF COST

	THIS REQUEST	TOTAL TO DATE
ITEMS	$0.00	$0.00
FORCE ACCOUNT	$0.00	$0.00
AGREED PRICE		
ADJUSTMENT		
TOTAL		

FEDERAL PARTICIPATION

☑ PARTICIPATING ☐ PARTICIPATING IN PART ☐ NONE
☐ NON-PARTICIPATING (MAINTENANCE) ☐ NON-PARTICIPATING

FEDERAL SEGREGATION (if more than one Funding Source or P.I.P. type)
☑ CCO FUNDED PER CONTRACT ☐ CCO FUNDED AS FOLLOWS

FEDERAL FUNDING SOURCE	PERCENT

CONTRACT CHANGE ORDER

Change Requested by: Engineer

CCO: 139	Suppl. No. 0	Contract No. 04 - 012024	Road 04-SF,Ala-80-13.9/14.3.0.0/1.6	FED. AID LOC.: ACIM-080-1(085)8N

To: KIEWIT / FCI / MANSON a JV

You are directed to make the following changes from the plans and specifications or do the following described work not included in the plans and specifications for this contract. ***NOTE: This change order is not effective until approved by the Engineer.***

Description of work to be done, estimate of quantities and prices to be paid. (Segregate between additional work at contract price, agreed price and force account.) Unless otherwise stated, rates for rental of equipment cover only such time as equipment is actually used and no allowance will be made for idle time. This last percentage shown is the net accumulated increase or decrease from the original quantity in the Engineer's Estimate.

Adiustment of Compensation at Lump Sum:

Delete paragraphs five (5) and six (6) of Section 4, "Beginning of Work, Time of Completion and Liquidated Damages".

Amend paragraph three (3) of Section 10-1.01, "Order of Work," of the Contract Special Provisions, to read:

> "Within 90 calendar days of written notification by the Engineer, the Contractor shall vacate the Marine Access Area (as shown on on contract plan sheet number 25 of 978), and at no cost to the State, remove or relocate the access trestle outside of the Marine Access Area."

For this work, there shall be no cost or credit to the State by reason of this change. This agreement constitutes full compensation to the Contractor, including mark ups for all direct and indirect costs, all associated project impacts, all overhead costs, and any and all risks associated with this work.

Adjustment of Compensation at Agreed Lump Sum **$0.00**

Estimated Cost: Increase ☐ Decrease ☐ **$0.00**

By reason of this order the time of completion will be adjusted as follows: 0 days

Submitted by		
Signature	Resident Engineer: DOUG COE, Supervising Br. Eng.	Date 2-9-05
Approval Recommended by		
Signature	Construction Engineer: DOUG COE, Supervising Br. Eng.	Date 2-9-05
Engineer Approval by		
Signature	(Print name and title) PETER SIEGENTHALER - Chief	Date

We the undersigned contractor, have given careful consideration to the change proposed and agree, if this proposal is approved, that we will provide all equipment, furnish the materials, except as may otherwise be noted above, and perform all services necessary for the work above specified, and will accept as full payment therefor the prices shown above.

NOTE: If you, the contractor, do not sign acceptance of this order, your attention Is directed to the requirements of the specifications as to proceeding wlth the ordered work and filing a written protest wlthin the time therein specified.

Contractor Acceptance by		
Signature	(Print name and title) Chris Villa, Deputy Project Director	Date 3-2-05

STATE OF CALIFORNIA - DEPARTMENT OF TRANSPORTATION

CONTRACT CHANGE ORDER MEMORANDUM

TO: PETER SIEGENTHALER / DOUG COE, Supervising Br. Eng.

FROM: DOUG COE, Supervising Br. Eng.

FILE: E.A. 04 - 012024
CO-RTE-PM 04-SF,Ala-80-13.9/14.3,0.0/1.6
FED. NO. ACIM-080-1(085)8N

CCO#: 139 | SUPPLEMENT#: 0 | Category Code: AHZZ

CONTINGENCY BALANCE (incl. this change) $59,997,778.96

COST: $0.00 INCREASE ☐ DECREASE ☐

HEADQUARTERS APPROVAL REQUIRED? ☑ YES ☐ NO

SUPPLEMENTAL FUNDS PROVIDED: $0.00

IS THIS REQUEST IN ACCORDANCE WITH ENVIRONMENTAL DOCUMENTS? ☑ YES ☐ NO

CCO DESCRIPTION:
VACATE ADJACENT MARINE ACCESS AREAS

PROJECT DESCRIPTION:
REPLACE SFOBB EAST SPAN

LOCATION: IN SAN FRANCISCO AND ALAMEDA COUNTIES IN SAN FRANCISCO AND OAKLAND FROM 1.3 KM EAST OF THE YERBA BUENA ISL

THIS CHANGE ORDER PROVIDES FOR:
revising the special provisions to extend the time the Contractor may occupy the marine access area.

This change order is needed to revise the contract Special Provisions to extend the time the Contractor is allowed to occupy the marine access area, without incurring liquidated damages due to recognized project delays, so that a wider access ramp with better sight distance can be built through the marine access area to provide a safer access for all project personnel from the Oakland mole to Segment E4 of the eastbound bridge.

The Special Provisions currently require that the Contractor evacuate the marine access areas after 500 working days beginning on the fifteenth calendar day after approval of the contract, and build any access trestles or ramps clear of the marine access areas. The special provisions were necessary to prevent conflict of the Skyway marine operations with the Oakland Touchdown Project, Contract EA 04-012044, originally intended to bid during the Skyway Project. However, due to delays in awarding the Self Anchored Suspension bridge main span contract, the date for advertising the Oakland Touchdown has been postponed, and it is anticipated that the project will not begin until the East Span Skyway project is completed. This set of circumstances now allows the Contractor to construct a safer access ramp that will improve the construction traffic flow for both State and the Contractor personnel. However, should the Oakland Touchdown Project be awarded prior to completion of the Skyway project, the Contract Change Order contains a provision that will require the Contractor to remove or relocate the access ramp outside the marine access areas, within 90 days written notice of the Engineer, at no expense to the State.

The contract Special Provisions are amended as provided below:

Paragraph five (5) of Special Provisions Section 4, "Beginning of Work, Time of Completion and Liquidated Damages," is deleted in its entirety.

Paragraph six (6) of Special Provisions Section 4, "Beginning of Work, Time of Completion and Liquidated Damages," is deleted in its entirety, as the Oakland Touchdown project (Contract 04-0120440) has not yet been advertised.

Paragraph three (3) of Special Provisions Section 10-1.01, "Order of Work," is deleted in its entirety and replaced with the following paragraph:

> "Within 90 calendar days of written notification by the Engineer, the Contractor shall vacate the Marine Access Area (as shown on on contract plan sheet number 25 of 978), and at no cost to the State, remove or relocate the access trestle outside of the Marine Access Area."

This change order allows the Contractor to continue occupying the marine access area until April 30, 2007 without incurring liquidated damages.

This change only modifies the marine access area milestone, but does not effect contract time.

Bob Finney, District 04 Deputy Director of Construction, concurred with this change on August 11, 2004. Jon Tapping, Toll Bridge Coordinator, concurred with this change on August 23, 2004.

Maintenance concurrence is not required since the specification change is administrative and does not effect any permanent

work.

FHWA approval for this change was obtained on January 5, 2005.

There shall be no cost or credit to the state by reason of this change.

CONCURRED BY:		
Construction Engineer	Douglas Coe	Date 2-8-05
Bridge Engineer	Douglas Coe	Date 2-9-05
FHWA Representative:	Nancy Bobb	Date 1/5/2005
Project Engineer		Date
Other (specify) Bob Finney		Date8/11/2004
Jon Tapping		Date8/23/2004
		Date
District Prior Approval By:		Date
HQ (Issue Approve) By:		Date
Resident Engineer's Signature:		Date 2-9-05

ESTIMATE OF COST

	THIS REQUEST	TOTAL TO DATE
ITEMS	$0.00	$0.00
FORCE ACCOUNT	$0.00	$0.00
AGREED PRICE	$0 00	$0.00
ADJUSTMENT	$0.00	$0 00
TOTAL	$0.00	$0 00

FEDERAL PARTICIPATION

☑ PARTICIPATING ☐ PARTICIPATING IN PART ☐ NONE
☐ NON-PARTICIPATING (MAINTENANCE) ☐ NON-PARTICIPATING

FEDERAL SEGREGATION (if more than one Funding Source or P I P type)
☑ CCO FUNDED PER CONTRACT ☐ CCO FUNDED AS FOLLOWS

FEDERAL FUNDING SOURCE	PERCENT

STATE OF CALIFORNIA - DEPARTMENT OF TRANSPORTATION

CONTRACT CHANGE ORDER

Change Requested by: Engineer

CCO: 142	Suppl. No. 0	Contract No. 04 - 012024	Road 04-SF,Ala-80 13.9/14.3,0.0/1.6	FED. AID LOC.: ACIM-080-1(085)8N

To: KIEWIT / FCI / MANSON a JV

You are directed *to* make the following changes from the plans and specifications *or* do the *following* described work *not* included *in* the plans and *specifications for this contract.* ***NOTE: This change order is not effective until approved by the Engineer.***

Description of work to be done, estimate of quantities and prices to be paid. (Segregate between additional work at contract price, agreed price and force account.) Unless otherwise stated, rates for rental of equipment cover only such time as equipment is actually used and no allowance will be made for idle time. This last percentage shown is the net accumulated increase or decrease from the original quantity in the Engineer's Estimate.

Adjustment of Compensation at Lump Sum:

Paragraph nineteen (19) of Section 10-1.26, "Prestressing Concrete," subsection "Construction-Grouting," in the Special Provisions for the SFOBB East Span Skyway Bridge Replacement Project, Bridge Nos. 340006L/R, is amended as follows:

"The Contractor shall complete the grout operation within 30 calendar days after prestressing steel is stressed. Failure to grout the tendons within 30 calendar days will result in stoppage of the affected work. However, at the Engineer's discretion, the 30 calendar day grouting requirement of erected segments may be waived on a case by case basis."

There shall be no cost or credit to the State by reason of this change. This agreement constitutes full compensation to the Contractor, all associated project impacts, all overhead costs, and any and all risks associated with the performance of this work.

Adjustment of Compensation At Agreed Lump Sum $0.00

Estimated Cost: Increase ☐ Decrease ☐ **$0.00**

By reason of this order the time of completion will be adjusted as follows: 0 days

Submitted by

Signature	Resident Engineer: DOUG COE, Supervising Br. Eng.	Date 2-23-05

Approval Recommended by

Signature	Construction Engineer: DOUG COE, Supervising Br. Eng.	Date 2-23-05

Engineer Approval by

Signature	(Print name and title) PETER SIEGENTHALER - Chief	Date

We the undersigned contractor, have given careful consideration to the change proposed and agree, if this proposal is approved, that we will provide all equipment, furnish the materials, except as may otherwise be noted above, and perform all services necessary for the work above specified, and will accept as full payment therefor the prices shown above.

NOTE: If you, the contractor, do not sign acceptance of this order, your attention is directed to the requirements of the specifications as to proceeding with the ordered work and filing a written protest within the time therein specified.

Contractor Acceptance by

Signature	(Print name and title) Chris Villa, Deputy Project Director	Date 2-23-05

STATE OF CALIFORNIA - DEPARTMENT OF TRANSPORTATION

CONTRACT CHANGE ORDER MEMORANDUM

TO: PETER SIEGENTHALER / DOUG COE, Supervising Br. Eng	FILE: E.A. 04 - 012024
FROM: DOUG COE, Supervising Br. Eng.	CO-RTE-PM 04-SF,Ala-80-13.9/14.3,0.0/1.6
	FED. NO. ACIM-080-1(085)8N
CCO#: 142 | SUPPLEMENT#: 0 | Category Code: CHSA	CONTINGENCY BALANCE (incl. this change) $56,908,249.73
COST: $0.00 INCREASE ☐ DECREASE ☐	HEADQUARTERS APPROVAL REQUIRED? ☑ YES ☐ NO
SUPPLEMENTAL FUNDS PROVIDED: $0.00	IS THIS REQUEST IN ACCORDANCE WITH ENVIRONMENTAL DOCUMENTS? ☑ YES ☐ NO
CCO DESCRIPTION: Extend 30 Day Grout Requirement	**PROJECT DESCRIPTION:** REPLACE SFOBB EAST SPAN

LOCATION: IN SAN FRANCISCO AND ALAMEDA COUNTIES IN SAN FRANCISCO AND OAKLAND FROM 1.3KM EAST OF THE YERBA BUENA ISL

THIS CHANGE ORDER PROVIDES FOR:
modifying Special Provisions Section 10-1.26, "Prestressing Concrete," subsection "Construction-Grouting," to allow the Contractor to complete grouting operations beyond thirty (30) days, as approved by the Engineer, on a case by case basis.

This change order is needed to modify the specifications to prevent the segmental construction cross grouting that can occur at joints between the precast segments. In precast segmental construction methods, prestressing strands in ducts are stressed and grouted in a sequential order, and are not stressed concurrently; therefore, grouting ducts in close proximity to empty adjacent ducts as required by the current specification can cause grout leaks into the adjacent ducts and create an obstruction that will impair future tendon installation. Mitigating potential grout leaks into adjacent empty ducts benefits the State by minimizing the remedial work that would be required to remove concrete to access the duct in order to clear the obstruction. This also minimizes the possibility of abandoning ducts when grout leaks produce an extensive plug due to cross grouting and tendon installation is impossible. This change order waives the 30-day grouting requirement for segment construction only, on a case by case basis, to reduce the possibility of cross grouting.

The Engineer and the Contractor both agree that this change order results in a zero cost adjustment. The change order will be processed as an Adjustment of Compensation at Agreed Lump Sum.

Mr. Pete Siegenthaler, Principal Bridge Engineer for the SFOBB East Span Replacement, concurs with this change. A copy of the concurrence signed by Mr. Siegenthaler on January 19, 2005, is attached.

Prior Approval was obtained from Ms. Nancy Bobb, FHWA Bay Bridge Project Manager, via electronic message on February 18, 2005. A printed copy of the prior approval provided by Ms. Bobb is attached.

Design concurrence was obtained from Mike Pope, Structure Design Prestress Committee, on February 4, 2005.

METS concurrence was obtained from Mr. Rob Reis, Engineering Service Center, Office of Structural Materials, Materials Engineering and Testing Services, Corrosion Unit, on February 4, 2005.

Concurrence from Maintenance is not required as this change order does not use maintenance funds or affect maintenance facilities or operations.

No time adjustment is warranted for this change as it does not affect the controlling operation.

CONCURRED BY:		
Construction Engineer	Douglas Coe	Date 2-23-05
Bridge Engineer	Douglas Coe	Date 2-23-05
FHWA Representative:	Nancy Bobb	Date 2/18/2005
Project Engineer:		Date
Other (specify) Mike Pope Prestress Committee		Date 2/4/2005
Rob Reis METS Corrision Unit		Date 2/4/2005
		Date
District Prior Approval By:		Date
HQ (Issue Approve) By:		Date
Resident Engineer's Signature:		Date 2-23-05

ESTIMATE OF COST

	THIS REQUEST	TOTAL TO DATE
ITEMS	$0 00	$0 00
FORCE ACCOUNT	$0 00	$0 00
AGREED PRICE	$0.00	$0.00
ADJUSTMENT	$0.00	$0.00
TOTAL	$0 00	$0 00

FEDERAL PARTICIPATION

- [x] PARTICIPATING
- [ ] PARTICIPATING IN PART
- [ ] NONE
- [ ] NON-PARTICIPATING (MAINTENANCE)
- [ ] NON-PARTICIPATING

CONTRACT CHANGE ORDER

Change Requested by: Engineer

CCO: 143 Suppl. No. 0 Contract No. 04 - 012024 Road 04-SF,Ala-80-13.9/14.3,0.0/1.6 FED. AID LOC.: ACIM-080-1(085)8N

To: KIEWIT / FCI / MANSON a JV

You are directed to make the following changes from the plans and specifications or do the following described work not included in the plans and specifications for this contract. ***NOTE: This change order is not effective until approved by the Engineer.***

Description of work to be done, estimate of quantities and prices to be paid. (Segregate between additional work at contract price, agreed price and force account.) Unless otherwise stated, rates for rental of equipment cover only such time as equipment is actually used and no allowance will be made for idle time. This last percentage shown is the net accumulated increase or decrease from the original

Adjustment of Compensation at Lump Sum:

Install temporary power to energize the electrical equipment for the Skyway Project by utilizing the existing KFM temporary power supply for the SFOBB East Span Skyway Bridge Replacement Project, Bridge Nos. 34-0006L/R as shown and specified on plan sheets 2 to 15 of this Change Order. The use of generators is not required and KFM will be released from maintaining the power supply after contract acceptance.

Full compensation for all costs, including markups, all direct and indirect costs, all associated projects impacts, and all overhead costs are included in the lump sum payment under Contract Change Order No. 200. No further payment will be made as a result of this Change Order.

Estimated Cost: Increase ☐ Decrease ☐

By reason of this order the time of completion will be adjusted as follows: 0 days

Submitted by

Signature	Resident Engineer: DOUG COE, Supervising Br. Eng.	Date 8-24-06

Approval Recommended by

Signature	Construction Engineer: DOUG COE, Supervising Br. Eng.	Date 8-24-06

Engineer Approval by

Signature	(Print name and title) PETER SIEGENTHALER - Chief	Date

We the undersigned contractor, have given careful consideration to the change proposed and agree, if this proposal is approved, that we will provide all equipment, furnish the materials, except as may otherwise be noted above, and perform all services necessary for the work above specified, and will accept as full payment therefor the prices shown above.

NOTE: If you, the contractor, do not sign acceptance of this order, your attention is directed to the requirements of the specifications as to proceeding with the ordered work and filing a written protest within the time therein specified.

Contractor Acceptance by

Signature	(Print name and title) Lee Zink, Project Director	Date 9/5/06

STATE OF CALIFORNIA - DEPARTMENT OF TRANSPORTATION

CONTRACT CHANGE ORDER MEMORANDUM

TO: PETER SIEGENTHALER / DOUG COE, Supervising Br. Eng.	FILE: E.A. 04 - 012024
FROM: DOUG COE, Supervising Br. Eng.	CO-RTE-PM 04-SF,Ala-80-13.9/14.3,0.0/1.6 FED. NO. ACIM-080-1(085)8N
CCO#: 143 SUPPLEMENT#: 0 Category Code: CBPC	CONTINGENCY BALANCE (incl. this change)
COST: INCREASE ☑ DECREASE ☐	HEADQUARTERS APPROVAL REQUIRED? ☑ YES ☐ NO
SUPPLEMENTAL FUNDS PROVIDED: $0.00	IS THIS REQUEST IN ACCORDANCE WITH ENVIRONMENTAL DOCUMENTS? ☑ YES ☐ NO
CCO DESCRIPTION: Temporary Power for Elec. Equipment	**PROJECT DESCRIPTION:** REPLACE SFOBB EAST SPAN

LOCATION: IN SAN FRANCISCO AND ALAMEDA COUNTIES IN SAN FRANCISCO AND OAKLAND FROM 1.3 KM EAST OF THE YERBA BUENA ISL

THIS CHANGE ORDER PROVIDES FOR:

installing temporary power to energize the electrical equipment for the Skyway Project, by utilizing the existing KFM temporary power supply.

The Skyway Project is scheduled to be completed approximately five to six years ahead of the SAS and Oakland Touchdown Projects. Therefore, permanent power supply will not be available when the electrical equipment for the Skyway Project is installed. The equipment will remain in an idle and inactive state for an estimated 6 years. There is high risk of damage to the electrical equipment from this undetermined idle condition. This change order will keep the Skyway electrical system energized after project completion by connecting the new 15kV switchgear to the existing 15kV power cable from the KFM construction job site. Additional power costs shall be picked up by Maintenance when relief of maintenance is obtained from the Engineer.

The agreed compensation for this change order is included in the lump sum compensation portion of resolution CCO No. 200. The Contractor will be paid an agreed lump sum amount of $480,558.00 for furnishing temporary power for the electrical equipment.

A detailed force account analysis prepared by the Engineer for the cost of this change order is on file in the project records.

Prior approval was obtained from Pete Siegenthaler, SFOBB Construction Manager, Toll Bridge Construction, on December 20, 2004.

Janet Adams, SFOBB Toll Bridge Project Manager, provided concurrence on October 31, 2005.

Prior approval from FHWA was obtained from Ms. Nancy Bobb, FHWA Bay Bridge Project Manager, on October 28, 2005.

Design concurrence was obtained from Behzad Golemohammadi, Senior Electrical Engineer, on August 26, 2004.

Concurrence from Maintenance was obtained from Paul Parecadan on July 27, 2005.

Authorization to proceed with this change order was issued by Division of Construction on November 2, 2005.

No time adjustment is warranted for this change order as it does not affect the controlling operation.

CONCURRED BY:		
Construction Engineer:	Douglas Coe	Date 8-24-06
Bridge Engineer:	Douglas Coe	Date 8-24-06
FHWA Representative:	Nancy Bobb	Date 0/28/2005
Project Engineer:	Janet Adams, Project Manager	Date 0/31/2005
Other (specify): B. Golemohammadi, Senior Electrical Engineer		Date 8/26/2004
Paul Parecadan, Maintenance		Date
		Date
District Prior Approval By:		Date
HQ (Issue Approve) By:		Date
Resident Engineer's Signature:		Date 8-24-06

ESTIMATE OF COST

	THIS REQUEST	TOTAL TO DATE
ITEMS	$0.00	$0.00
FORCE ACCOUNT	$0.00	$0.00
AGREED PRICE	$0.00	$0.00
ADJUSTMENT		
TOTAL		

FEDERAL PARTICIPATION

☑ PARTICIPATING ☐ PARTICIPATING IN PART ☐ NONE
☐ NON-PARTICIPATING (MAINTENANCE) ☐ NON-PARTICIPATING

FEDERAL SEGREGATION (if more than one Funding Source or P.I.P. type)
☑ CCO FUNDED PER CONTRACT ☐ CCO FUNDED AS FOLLOWS

FEDERAL FUNDING SOURCE	PERCENT

CCO: 144	Suppl. No. 0	Contract No. 04 - 012024	Road 04-SF,Ala-80-13.9/14.3,0.0/1.6	FED, AID LOC.: ACIM-080-1(085)8N

specifications this contract.

Description of work to be done, estimate of quantities and prices to be paid. (Segregate between additional work at contract price, agreed price and force account.) Unless otherwise stated, rates for rental of equipment cover only such time as equipment is actually used and no allowance will be made for idle time. This last percentage shown is the net accumulated increase or decrease from the original quantity in the Engineer's Estimate.

Adjustment of Compensation at Lump Sum:

Provide additional molds and labor to facilitate the fabrication of circular bearings for Hinges DE and EE for the SFOBB East Span Skyway Bridge Replacement Project, Bridge Nos. 34-0006L/R.

For this work, the Contractor agrees to accept an agreed lump sum amount of $73,992.00. This agreed lump sum constitutes full compensation, including markups, for all direct and indirect costs, for all freight, shipping, and handling costs associated with procuring the additional molds, all associated project impacts, and all overhead costs.

Adjustment of Compensation at Lump Sum $73,992.00

By reason of this order the time of co

Submitted by

Signature	Resident Engineer: DOUG COE, Supervising Br. Eng	2-15-05
Approval Recommended by		
Signature	Construction Engineer: DOUG COE, Supervising Br. Eng	Date 2-15-05
Engineer Approval by		
Signature	(Print name and title) or PETER SIEGENTHALER - Chief	Date 3-4-05

proceeding with the ordered work and

Contractor Acceptance by

Signature

STATE OF CALIFORNIA - DEPARTMENT OF TRANSPORTATION

CONTRACT CHANGE ORDER MEMORANDUM

DATE: 2/15/2005 Page 1 of 1

TO: PETER SIEGENTHALER / DOUG COE, Supervising Br. Eng.

FROM: DOUG COE, Supervising Br. Eng.

FILE: E.A. 04 - 012024
CO-RTE-PM 04-SF,Ala-80-13.9/14.3,0.0/1.6
FED. NO. ACIM-080-1(085)8N

CCO#: 144 | SUPPLEMENT#: 0 | Category Code: BZZZ

CONTINGENCY BALANCE (incl. this change) $56,263,705.74

COST: $73,992.00 INCREASE ☑ DECREASE ☐

HEADQUARTERS APPROVAL REQUIRED? ☐ YES ☐ NO

SUPPLEMENTAL FUNDS PROVIDED: $0.00

IS THIS REQUEST IN ACCORDANCE WITH ENVIRONMENTAL DOCUMENTS? ☑ YES ☐ NO

CCO DESCRIPTION:
Hinge Bearing Delay Mitigation

PROJECT DESCRIPTION:
REPLACE SFOBB EAST SPAN

LOCATION: IN SAN FRANCISCO AND ALAMEDA COUNTIES IN SAN FRANCISCO AND OAKLAND FROM 1.3 KM EAST OF THE YERBA BUENA ISL

THIS CHANGE ORDER PROVIDES FOR:

compensating the Contractor to mititgate potential delays associated with the fabrication of the hinge circular bearings for Hinge DE and EE for the SFOBB East Span Skyway Bridge Replacement Project, Bridge Nos. 34-0006L/R.

This change order is needed to mitigate potential delay issues, due to changes ordered by the Engineer to the hinge bearing base plates, associated with fabricating the bearings for Hinge DE and EE. This change order will avert placing the fabrication schedule of the fully precast hinges at the Stockton Precast Yard on the critical path.

This change order will compensate the Contractor for providing additional molds and premium labor costs to facilitate the fabrication of the circular bearings.

For this extra work, the Contractor will be paid an agreed lump sum amount of $73,992.00. This sum constitutes full compensation, including all markups. The method of payment will be Adjustment Of Compensation At Agreed Lump Sum. A force account cost analysis for this change is on file in the project records.

Prior Approval was obtained from Mr. David Salladay, District Representative for the SFOBB East Span Replacement, on December 1, 2004. A copy of the prior approval signed by Mr. Salladay is attached.

FHWA prior approval is not required as this is a minor change order.

Concurrence from Maintenance is not required as this change does not use maintenance funds or affect maintenance facilities or operations.

No time adjustment is warranted for this change as it does not affect the controlling operation.

CONCURRED BY:

Construction Engineer:	Douglas Coe	Date 2-15-05
Bridge Engineer	Douglas Coe	Date 2-15-05
FHWA Representative		Date
Project Engineer		Date
Other (specify)		Date
		Date
		Date
District Prior Approval By:	David Salladay	Date12/1/2004
HQ (Issue Approve) By		Date
Resident Engineer's Signature		Date 2-15-05

ESTIMATE OF COST

	THIS REQUEST	TOTAL TO DATE
ITEMS	$0.00	$0.00
FORCE ACCOUNT	$0.00	$0.00
AGREED PRICE	$0.00	$0.00
ADJUSTMENT	$73,992.00	$73,992.00
TOTAL	$73,992.00	$73,992.00

FEDERAL PARTICIPATION

☑ PARTICIPATING ☐ PARTICIPATING IN PART ☐ NONE
☐ NON-PARTICIPATING(MAINTENANCE) ☐ NON-PARTICIPATING

FEDERAL SEGREGATION (if more than one Funding Source or P I P type)
☑ CCO FUNDED PER CONTRACT ☐ CCO FUNDED AS FOLLOWS

FEDERAL FUNDING SOURCE PERCENT

RECEIVED 034933 MAR-9 B

CONTRACT CHANGE ORDER

Change Requested by: Engineer

CCO: 146	Suppl. No. 0	Contract No. 04 - 012024	Road 04-SF,Ala-80-13.9/14.3,0.0/1.6	FED. AID LOC.: ACIM-080-1(085)8N

To: **KIEWIT / FCI / MANSON a JV**

You are directed to make the following changes from the plans and specifications or do the following described work not included in the plans and specifications for this contract. ***NOTE: This change order is not effective until approved by the Engineer.***

Description of work to be done, estimate of quantities and prices to be paid. (Segregate between additional work at contract price, agreed price and force account.) Unless otherwise stated, rates for rental of equipment cover only such time as equipment is actually used and no allowance will be made for idle time. This last percentage shown is the net accumulated increase or decrease from the original quantity in the Engineer's Estimate.

Extra Work at Force Account:

At locations identified by the Engineer, perform sixteen (16) additional creep tests in accordance with Article B of the third paragraph of Section 10-1.27, "Concrete Structures," subsection "Superstructure Concrete," of the Special Provisions.

At the completion of the tests, all cylinders shall become the property of the Contractor and shall be removed and disposed of as provided in Section 7-1.13, "Disposal of Material Outside the Right of Way," of the Standard Specifications.

Estimated cost of Extra Work at Force Account $120,000.00

Estimated Cost: **Increase** ☑ **Decrease** ☐ **$120,000.00**

By reason of this order the time of completion will be adjusted as follows: 0 days

Submitted by

Signature	Resident Engineer: DOUG COE, Supervising Br. Eng.	Date 4-20-05

Approval Recommended by

Signature	Construction Engineer: DOUG COE, Supervising Br. Eng.	Date 4-21-05

Engineer Approval by

Signature	(Print name and title) for PETER SIEGENTHALER - Chief	Date 4-21-05

We the undersigned contractor, have given careful consideration to the change proposed and agree, if this proposal is approved, that we will provide all equipment, furnish the materials, except as may otherwise be noted above, and perform all services necessary for the work above specified, and will accept as full payment therefor the prices shown above.

NOTE: If you, the contractor, do not sign acceptance of this order, your attention is directed to the requirements of the specifications as to proceeding with the ordered work and filing a written protest within the time therein specified.

Contractor Acceptance by

Signature	(Print name and title) Chris U. Ma, Deputy Project Director	Date 4-21-05

STATE OF CALIFORNIA - DEPARTMENT OF TRANSPORTATION

CONTRACT CHANGE ORDER MEMORANDUM

DATE: 4/12/2005 Page 1 of 1

TO: PETER SIEGENTHALER / DOUG COE, Supervising Br. Eng.	FILE: E.A. 04 - 012024
FROM: DOUG COE, Supervising Br. Eng.	CO-RTE-PM 04-SF,Ala-80-13.9/14.3,0.0/1.6
	FED. NO. ACIM-080-1(085)8N
CCO#: 146 SUPPLEMENT#: 0 Category Code: CHXX	CONTINGENCY BALANCE (incl. this change) $57,267,594.72
COST: $120,000.00 INCREASE ☑ DECREASE ☐	HEADQUARTERS APPROVAL REQUIRED? ☐ YES ☑ NO
SUPPLEMENTAL FUNDS PROVIDED: $0.00	IS THIS REQUEST IN ACCORDANCE WITH ENVIRONMENTAL DOCUMENTS? ☑ YES ☐ NO
CCO DESCRIPTION: Additional QA Creep Tests	**PROJECT DESCRIPTION:** REPLACE SFOBB EAST SPAN

LOCATION: IN SAN FRANCISCO AND ALAMEDA COUNTIES IN SAN FRANCISCO AND OAKLAND FROM 1.3 KM EAST OF THE YERBA BUENA ISL

THIS CHANGE ORDER PROVIDES FOR:

performing sixteen (16) additional creep tests in accordance with Articles B of the third paragraph of Section 10-1.27, "Concrete Structures," subsection "Superstructure Concrete," of the Special Provisions.

This change order was requested by Brian Maroney, SFOBB Design Manager, via electronic message on September 22, 2004, in order to obtain additional data to assist in performing and completing the Longitudinal Construction Analysis prior to jacking. The contract documents do not require the contractor to provide long term creep test data. This data is necessary for the designer to make recommendations on mid-frame jacking loads and closure pour age requirements between cantilevers. Additional creep tests are necessary in order to fulfill the requirements prescribed in Item C of the second paragraph of Section 10-1.29, "Furnish Precast Concrete Segment," subsection "Working Drawings," article "Furnish Precast Concrete Segment." This article requires detailed calculations for the superstructure and pier stresses accounting for the construction sequence, schedule, and material properties.

This work will be performed as extra work at force account for an estimated cost of $120,000.00.

The Contractor submitted a detailed analysis supporting the cost for this change. The Engineer has verified that these costs are fair and reasonable for the work, and has placed a copy of the cost analysis in the project file.

Mr. Brian Maroney, SFOBB Design Manager, requested this change order on September 22, 2004. A copy of the correspondence from Mr. Maroney requesting the change order is attached.

Concurrence from Maintenance is not required as this change order does not use maintenance funds or affect maintenance facilities or operations.

FHWA prior approval is not required because this is not a major contract change order.

No adjustment of contract time is warranted, as this change does not affect the controlling operation.

CONCURRED BY:

Construction Engineer:	Douglas Coe	Date 4-14-05
Bridge Engineer:	Douglas Coe	Date 4-14-05
FHWA Representative:		Date
Project Engineer:	Brian Maroney	Date 9/22/2004
Other (specify):		Date
		Date
		Date
District Prior Approval By:		Date
HQ (Issue Approve) By:		Date
Resident Engineer's Signature:		Date 4-14-05

ESTIMATE OF COST

	THIS REQUEST	TOTAL TO DATE
ITEMS	$0.00	$0.00
FORCE ACCOUNT	$120,000.00	$120,000.00
AGREED PRICE	$0.00	$0.00
ADJUSTMENT	$0.00	$0.00
TOTAL	$120,000.00	$120,000.00

FEDERAL PARTICIPATION

☑ PARTICIPATING ☐ PARTICIPATING IN PART ☐ NONE

☐ NON-PARTICIPATING (MAINTENANCE) ☐ NON-PARTICIPATING

FEDERAL SEGREGATION (if more than one funding source or P.I.P. type)

☑ CCO FUNDED PER CONTRACT ☐ CCO FUNDED AS FOLLOWS

FEDERAL FUNDING SOURCE: FEDERAL

RECEIVED 037425 MAY 2 3

STATE OF CALIFORNIA - DEPARTMENT OF TRANSPORTATION

CONTRACT CHANGE ORDER

Change Requested by: Engineer

CCO: 147	Suppl. No. 0	Contract No. 04 - 012024	Road 04-SF,Ala-80-13.9/14.3,0.0/1.6	FED. AID LOC.: ACIM-080-1(085)8N

Description of work to be done, estimate of quantities and prices to be paid. (Segregate between additional work at contract price, agreed price and force account.) Unless otherwise stated, rates for rental of equipment cover only such time as equipment is actually used and no allowance will be made for idle time. This last percentage shown is the net accumulated increase or decrease from the original quantity in the Engineer's Estimate.

Provide twelve (12) Raleigh "Retroglide" bicycles, 18 helmets of various sizes, four **(4)** additional tires for the correct size to fit the Raleigh "Retroglide" wheels, twelve (12) inner tubes for the correct size to fit the Raleigh "Retroglide" wheels, one **(1)** floor pump, one (1) can of chain spray, one (1) set of tools for bicycle repair, and one (1) metal free-standing rack to secure the bicycles, for the Engineer's use on the SFOBB East Span Skyway Bridge Replacement Project, Bridge Nos. 340006L/R.

The bicycles and all equipment listed above shall be delivered to the Engineer, at the SFOBB Skyway Project Trailer located at 345 Burma Road, Oakland, CA. The Contractor shall contact the Engineer at (510) 622-5105 to coordinate the delivery and retrieval of the bicycles and supplies.

Adjustment of Compensation at Lump Sum:

For providing the bicycles and supplies to the Engineer, the Contractor agrees to accept a lump sum amount of $3,682.28. This agreed lump sum constitutes full compensation, including markups, for all direct and indirect costs, all associated project impacts, and all overhead costs. The bicycles will be used by the Engineer for the length of the project and will remain the property of the Contractor at the completion of the contract.

Adjustment of Compensation at Agreed Lump Sum $3,682.28

Estimated Cost: Increase ☑ Decrease ☐ **$3,682.28**

By reason of this order the time of completion will be adjusted as follows: 0 days

Submitted by		
Signature	Resident Engineer: DOUG COE, Supervising Br. Eng.	Date 2-22-05
Approval Recommended by		
Signature	Construction Engineer: DOUG COE, Supervising Br. Eng.	Date 2-22-05
Engineer Approval by		
Signature	(Print name and title) PETER SIEGENTHALER - Chief	Date

We the undersigned contractor, have given careful consideration to the change proposed and agree, if this proposal is approved, that we will provide all equipment, furnish the materials, except as may otherwise be noted above, and perform all services necessary for the work above specified, and will accept as full payment therefor the prices shown above.

NOTE: If you, the contractor, do not sign acceptance of this order, your attention is directed to the requirements of the **specifications** as to proceeding with the ordered work and **filing** a written protest within the time therein specified.

Contractor Acceptance by		
Signature	(Print name and title) Chris Villa, Deputy Project Director	Date 3-2-05

STATE OF CALIFORNIA - DEPARTMENT OF TRANSPORTATION

CONTRACT CHANGE ORDER MEMORANDUM

DATE 2/18/2005 Page 1 of 1

TO: PETER SIEGENTHALER / DOUG COE, Supervising Br. Eng.	FILE: E.A. 04 - 012024
	CO-RTE-PM 04-SF,Ala-80-13.9/14.3,0.0/1.6
FROM: DOUG COE, Supervising Br. Eng.	FED. NO. ACIM-080-1(085)8N
CCO#: 147 | SUPPLEMENT#: 0 | Category Code: CXXX	CONTINGENCY BALANCE (incl. this change) $56,139,285.74
COST: $3,682.28 INCREASE ☑ DECREASE ☐	HEADQUARTERS APPROVAL REQUIRED? ☐ YES ☑ NO
SUPPLEMENTAL FUNDS PROVIDED: $0.00	IS THIS REQUEST IN ACCORDANCE WITH ENVIRONMENTAL DOCUMENTS? ☑ YES ☐ NO
CCO DESCRIPTION: Bicycle Transportation for the Engineer	**PROJECT DESCRIPTION:** REPLACE SFOBB EAST SPAN

THIS CHANGE ORDER PROVIDES FOR:

providing twelve (12) Raleigh "Retroglide" bicycles, 18 helmets of various sizes, four (4) additional tires for the correct size to fit the Raleigh "Retroglide" wheels, twelve (12) inner tubes for the correct size to fit the Raleigh "Retroglide" wheels, one (1) floor pump, one (1) can of chain spray, one (1) set of tools for bicycle repair, and one (1) metal free-standing rack to secure the bicycles for the use of the Engineer on the SFOBB East Span Skyway Bridge Replacement Project.

The Engineer's staff required an alternative method of transportation to access the job site to perform inspection and other duties. Other methods to alleviate the transportation problem, such as obtaining more vehicles, proved impractical. These twelve (12) bicycles provided by the Contractor will be used as an alternative, optional method of transportion for the Engineer's staff.

The bicycles and associated supplies will be used for the length of the project and will remain the property of the Contractor at the completion of the contract.

For providing the bicycles and supplies for the Engineer's use, the Contractor will be paid an agreed lump sum amount of $3,682.28. This sum constitutes full compensation, including all markups. An invoice submitted by the Contractor for this change is on file in the project records.

Prior Approval was obtained from Mr. David Salladay, Supervising Transportation Engineer for the SFOBB East Span Replacement, on January 25, 2005. A copy of the prior approval signed by Mr. Salladay is attached.

FHWA Prior Approval is not required as this is a minor change

Concurrence from Maintenance is not required as this change does not use maintenance funds or affect maintenance facilities or operations.

No time adjustment is warranted for this change as it does not affect the controlling operation.

CONCURRED BY:

Construction Engineer:	Douglas Coe	Date 2-22-05
Bridge Engineer:	Douglas Coe	Date 2-22-05
FHWA Representative		Date
Project Engineer:		Date
Other (specify):		Date
		Date
		Date
District Prior Approval By:	David Salladay	Date 1/25/2005
HQ (Issue Approve) By:		Date
Resident Engineer's Signature		Date 2-22-05

ESTIMATE OF COST

	THIS REQUEST	TOTAL TO DATE
ITEMS	$0.00	$0 00
FORCE ACCOUNT	$0.00	$0 00
AGREED PRICE	$0.00	$0 00
ADJUSTMENT	$3,682 28	$3,682 28
TOTAL	$3,682 28	$3,682 28

FEDERAL PARTICIPATION

☑ PARTICIPATING ☐ PARTICIPATING IN PART ☐ NONE

☐ NON-PARTICIPATING (MAINTENANCE) ☐ NON-PARTICIPATING

FEDERAL SEGREGATION (if more than one Funding Source or P.I.P. type)

☑ CCO FUNDED PER CONTRACT ☐ CCO FUNDED AS FOLLOWS

FEDERAL FUNDING SOURCE PERCENT

CCO: 148	Suppl. No. 0	Contract No, 04 - 012024	Road 04-SF,Ala-80-13.9/14.3,0.0/1.6	FED. AID LOC.: ACIM-080-1(085)8N

To: **KIEWIT / FCI / MANSON a JV**

You are directed to make the following changes from the plans and specifications or do the following described work not included in the plans and specifications for this contract. ***NOTE: This change order is not effective until approved by the Engineer.***

Description of work to be done, estimate of quantities and prices to be paid. (Segregate between additional work at contract price, agreed price and force account.) Unless otherwise stated, rates for rental of equipment cover only such time as equipment is actually used and no allowance will be made for idle time. This last percentage shown is the net accumulated increase or decrease from the original quantity in the Engineer's Estimate.

Extra Work at Force Account:

As directed by the Engineer, re-position and re-orient the drill and tap bearing segments from their current top position to a position adjacent to the web wall at Hinges D and E for East Span Skyway Bridge No. 340006R.

Estimated cost of Extra Work at Force Account $10,000.00

Estimated Cost: Increase ☑ Decrease ☐ **$10,000.00**

By reason of this order the time of completion will be adjusted as follows: 0 days

Submitted by		
Signature	**Resident Engineer:** DOUG COE, Supervising Br. Eng.	Date 1-20-05
Approval Recommended by		
Signature	**Construction Engineer:** DOUG COE, Supervising Br. Eng.	Date 1-20-05
Engineer Approval by		
Signature	(Print name and title) for PETER SIEGENTHALER - Chief	Date 2-17-05

We the undersigned contractor, have given careful consideration to the change proposed and agree, if this proposal is approved, that we will provide all equipment, furnish the materials, except as may otherwise be noted above, and perform all services necessary for the work above specified, and will accept as full payment therefor the prices shown above.

NOTE: If you, the contractor, do not sign acceptance of this order, your attention is directed to the requirements of the specifications as to proceeding with the ordered work and filing a written protest within the time therein specified.

Contractor Acceptance by		
Signature	(Print name and title) Chris Villa, Deputy Project Director	Date 2-9-05

STATE OF CALIFORNIA - DEPARTMENT OF TRANSPORTATION

CONTRACT CHANGE ORDER MEMORANDUM

DATE 1/18/2005 Page 1 of 1

TO	PETER SIEGENTHALER / DOUG COE, Supervising Br Eng Br. Eng.	FILE	E.A. 04 - 012024
			CO-RTE-PM 04-SF,Ala-80-13 9/14 3,0 0/1 6
FROM	Dave Wu, Senior Br Eng		FED, NO. ACIM-080-1(085)8N

CCO# 148	SUPPLEMENT# 0	Category Code CHPT		CONTINGENCY BALANCE (incl this change)	$61,497,778.93
COST: $10,000.00	INCREASE ☑	DECREASE ☐		HEADQUARTERS APPROVAL REQUIRED?	☐ YES ☑ NO
SUPPLEMENTAL FUNDS PROVIDED,		$0.00		IS THIS REQUEST IN ACCORDANCE WITH ENVIRONMENTAL DOCUMENTS?	☑ YES ☐ NO

CCO DESCRIPTION:
Hinae D and E Bearinu Orientation

PROJECT DESCRIPTION:
REPLACE SFOBB EAST SPAN

LOCATION: IN SAN FRANCISCOAND ALAMEDA COUNTIES IN SAN FRANCISCO AND OAKLAND FROM 1.3 KM EAST OF THE YERBA BUENA ISL

THIS CHANGE ORDER PROVIDES FOR:

re-positioning and re-orienting the drill and tap bearing segments from their current top position to a position adjacent to the web wall at Hinges D and E for East Span Skyway Bridge No. 340006R.

Drill and tap bearing segments for Hinges D and E were installed persuant to the approved shop drawings, which depicted drill and tap segments on top. After the bearings were installed in the hinge segments, it was discovered that the drill and tap bearings need to be positioned along the web wall in order to provide acccess for Maintenance to remove and replace the bearing segments in the event of an earthquake. Mr. Sajid Abbas, Project Engineer, TYLin International, the Designer of Record, is in concurrence with this change. A copy of Mr. Abbas' concurrence is attached.

This change order compensates the Contractor for providing the necessary labor to re-position and re-orient the drill and tap bearing segments. Compensation will be Extra Work At Force Account for an estimated amount of $10,000.00. This additional project cost can be financed from the contingency funds provided for this contract. A detailed analysis of estimated costs is on file in the project records.

Maintenance concurrence was obtained from Alfred Martinez, Structures Maintenance Liasion, on January 3, 2005. A copy of the concurrence provided by Maintenance is attached.

Prior approval was obtained from David Salladay, SFOBB East Span Skyway District Representative, on November 17, 2004. A copy of the prior approval provided by Mr. Salladay is attached.

FHWA prior approval is not required as this is a minor change order.

No adjustment of contract time is warranted, as this change does not affect the controlling operation.

RECEIVED 03827 MAR 50

CONCURRED BY:		
Construction Engineer:	Douglas Coe DBC	Date 1-20-05
Bridge Engineer:	Douglas Coe DBC	Date 1-20-05
FHWA Representative		Date
Project Engineer		Date
Other (specify) Alfred Martinez, Maintenance		Date 1/3/2005
		Date
		Date
District Prior Approval By:	David Salladay	Date 11/17/2004
HQ (Issue Approve) By:		Date
Resident Engineer's Signature:		Date 1-20-05

ESTIMATE OF COST

	THIS REQUEST	TOTAL TO DATE
ITEMS	$0.00	$0.00
FORCE ACCOUNT	$10,000 00	$10,000 00
AGREED PRICE	$0.00	$0 00
ADJUSTMENT	$0 00	$0 00
TOTAL	$10,000 00	$10,000 00

FEDERAL PARTICIPATION

☑ PARTICIPATING ☐ PARTICIPATING IN PART ☐ NONE
☐ NON-PARTICIPATING (MAINTENANCE) NON-PARTICIPATING

FEDERAL SEGREGATION (if more than one Funding Source or P I P type)
☑ CCO FUNDED PER CONTRACT CCO FUNDED AS FOLLOWS

FEDERAL FUNDING SOURCE PERCENT

CONTRACT CHANGE ORDER

Change Requested by: Engineer

CCO: 148	Suppl. No. 1	Contract No. 04 - 012024	Road 04-SF,Ala-80-13.9/14.3,0.0/1.6	FED. AID LOC.: ACIM-080-1(085)8N

To: **KIEWIT / FCI / MANSON a JV**

You are directed to make the following changes from the plans and specifications or do the following described work not included in the plans and specifications for this contract. ***NOTE: This change order is not effective until approved by the Engineer.***

Description of work to be done, estimate of quantities and prices to be paid. (Segregate between additional work at contract price, agreed price and force account.) Unless otherwise stated, rates for rental of equipment cover only such time as equipment is actually used and no allowance will be made for idle time. This last percentage shown is the net accumulated increase or decrease from the original quantity in the Engineer's Estimate.

Extra Work at Force Account:

As authorized by the Engineer, re-position the circular segmented bearings at Hinges C, D, and E of the East Span Skyway Bridge No. 34-0006R. Also, provide additional funds for the initial Engineer's direction to re-orient Hinge C.

Estimated cost of Extra Work at Force Account $35,000.00

Estimated Cost: **Increase** ☑ **Decrease** ☐ **$35,000.00**

By reason of this order the time of completion will be adjusted as follows: 0 days

Submitted by

Signature	Resident Engineer: DOUG COE, Supervising Br. Eng.	Date 4-15-05

Approval Recommended by

Signature	Construction Engineer: DOUG COE, Supervising Br. Eng.	Date 4-15-05

Engineer Approval by

Signature	(Print name and title) for PETER SIEGENTHALER - Chief	Date 4-29-05

We the undersigned contractor, have given careful consideration to the change proposed and agree, if this proposal is approved, that we will provide all equipment, furnish the materials, except as may otherwise be noted above, and perform all services necessary for the work above specified, and will accept as full payment therefor the prices shown above.

NOTE: If you, the contractor, do not sign acceptance of this order, your attention is directed to the requirements of the specifications as to proceeding with the ordered work and filing a written protest within the time therein specified.

Contractor Acceptance by

Signature	(Print name and title) Chris V. Hoi, Deputy Project Director	Date 4-21-05

STATE OF CALIFORNIA - DEPARTMENT OF TRANSPORTATION

CONTRACT CHANGE ORDER MEMORANDUM

TO: PETER SIEGENTHALER / DOUG COE, Supervising Br. Eng.	FILE: **E.A.** 04 - 012024
FROM: DOUG COE, Supervising Br. Eng.	**CO-RTE-PM** 04-SF,Ala-80-13.9/14.3,0.0/1.6
	FED. NO. ACIM-080-1(085)8N
CCO#: **148** SUPPLEMENT#: **1** Category Code: **CHPT**	CONTINGENCY BALANCE (incl. this change) **$56,983,645.72**
COST: **$35,000.00** INCREASE ☑ DECREASE ☐	HEADQUARTERS APPROVAL REQUIRED? ☐ YES ☑ NO
SUPPLEMENTAL FUNDS PROVIDED: **$0.00**	IS THIS REQUEST IN ACCORDANCE WITH ENVIRONMENTAL DOCUMENTS? ☑ YES ☐ NO
CCO DESCRIPTION: Hinge Bearing Orientation	**PROJECT DESCRIPTION:** REPLACE SFOBB EAST SPAN

LOCATION: IN SAN FRANCISCO AND ALAMEDA COUNTIES IN SAN FRANCISCO AND OAKLAND FROM 1.3 KM EAST OF THE YERBA BUENA ISL

THIS CHANGE ORDER PROVIDES FOR:
the initial re-orientation of the circular segmented bearings at Hinge C that was not included in Contract Change Order No. 148, Supplement No. 0, and provides for additional funds to re-position the circular segmented bearings at Hinges C, D, and E of the East Span Skyway Bridge No. 34-0006R (Eastbound).

This change order is needed to re-orient the circular segmented hinge bearings in order to place one of the bearing segments directly beneath the hinge pipe beam. The circular segmented hinge bearings had previously been re-oriented at the Engineer's direction through Contract Change Order No. 148, Supplement No. 0, "Hinge D and E Bearing Orientation." Change Order No. 148, Supplement No. 0 provided for re-positioning the segmented bearings with the drill and tap detail to a location along the web wall in order to provide access for Maintenance crews to remove and replace them in the event of an earthquake. As a consequence of this initial re-orientation, at the Engineer's direction, the circular segmented hinge bearings were re-positioned in a way that did not provide adequate bearing for the hinge pipe beam. The designer of record required the circular segmented bearings be re-positioned to place one of the bearing segments directly underneath the hinge pipe beam.

Contract Change Order No. 148, Supplement No. 0, provided $10,000.00 for the estimated cost of the initial extra work at force account to re-orient the circular segmented bearings. Hinges D and E were paid for in Supplement No. 0, and Hinge C should have been included, but was not.

This change order compensates the Contractor for the initial re-orientation of the circular segmented bearings at Hinge C that was not included in Supplement No. 0; and provides additional funds to re-position the circular segmented bearings at Hinges C, D, and E so that a bearing segment is located directly beneath the hinge pipe beam. The method of compensation will be Extra Work At Force Account for an additional amount of $35,000.00. This additional project cost can be financed from the contingency funds provided for this contract.

District Prior Approval and Maintenance concurrence were provided with Contract Change Order No. 148, "Hinge D and E Bearing Orientation."

FHWA prior approval is not required as this is a minor change order.

No adjustment of contract time is warranted, as this change does not affect the controlling operation.

RECEIVED
037426 MAY-2

CONCURRED BY:		
Construction Engineer:	Douglas Coe	Date 4-15-05
Bridge Engineer:	Douglas Coe	Date 4-15-05
FHWA Representative:		Date
Project Engineer:		Date
Other (specify):		Date
		Date
		Date
District Prior Approval By:	David Salladay	Date1/17/2004
HQ (Issue Approve) By:		Date
Resident Engineer's Signature:		Date 4-15-05

ESTIMATE OF COST

	THIS REQUEST	TOTAL TO DATE
ITEMS	$0.00	$0.00
FORCE ACCOUNT	$35,000.00	$45,000.00
AGREED PRICE	$0.00	$0.00
ADJUSTMENT	$0.00	$0.00
TOTAL	$35,000.00	$45,000.00

FEDERAL PARTICIPATION

☑ PARTICIPATING ☐ PARTICIPATING IN PART ☐ NONE
☐ NON-PARTICIPATING (MAINTENANCE) ☐ NON-PARTICIPATING

FEDERAL SEGREGATION (if more than one Funding Source or P.I.P. type)
☑ CCO FUNDED PER CONTRACT ☐ CCO FUNDED AS FOLLOWS

FEDERAL FUNDING SOURCE	PERCENT

CONTRACT CHANGE ORDER

Change Requested by: Engineer

CCO 149	Suppl. No. 0	Contract No. 04 - 012024	Road 04-SF,Ala-80-13.9/14.3,0.0/1.6	FED. AID LOC.: ACIM-080-1(085)8N

To: **KIEWIT / FCI / MANSON a JV**

You are directed to make the following changes from the plans and specifications or do the following described work not included in the plans and specifications for this contract. ***NOTE: This change order is not effective until approved by the Engineer.***

Description of work to be done, estimate of quantities and prices to be paid. (Segregate between additional work at contract price, agreed price and force account.) Unless otherwise stated, rates for rental of equipment cover only such time as equipment is actually used and no allowance will be made for idle time. This last percentage shown is the net accumulated increase or decrease from the original quantity in the Engineer's Estimate.

Extra Work at Force Account:

As authorized by the Engineer and in accordance with Section 4-1.03D "Extra Work," and Section 9-1.03 "Force Account Payment" of the Special Provisions:

1. Furnish and install two (2) additional 13 mm diameter x 80 mm long stainless steel studs between the 6.35 mm diameter studs on each of the 100 x 200 x 9.5 mm stainless steel substation embed plates for precast concrete segments E8E-9W, E8E-8W, and E8E-7W.

2. Retrofitt the installed 100 x 200 x 9.5 mm stainless steel substation embed plates by drilling a 22 mm diameter by 90 mm minimum deep hole through the 89 x 120 x 9.5 mm angle, and install a 19.05 mm by 90 mm long threaded rod and bond with epoxy. This retrofitting is for precast concrete segments E7E-7E, E7E-8E, E7E-9E, and at the closure pour between piers E7E and E8E.

Estimated cost of Extra Work at Force Account $50,000.00

Estimated Cost: Increase ☑ **Decrease** ☐ **$50,000.00**

By reason of this order the time of completion will be adjusted as follows: 0 days

Submitted by

Signature	Resident Engineer: DOUG COE, Supervising Br. Eng.	Date 11-9-05

Approval Recommended by

Signature	Construction Engineer: DOUG COE, Supervising Br. Eng.	Date 11-9-05

Engineer Approval by

Signature David Salladay	(Print name and title) David Salladay for DOUG COE, Supervising Br. Eng. - Construction Engin	Date 12-7-05

We the undersigned contractor, have given careful consideration to the change proposed and agree, if this proposal is approved, that we will provide all equipment, furnish the materials, except as may otherwise be noted above, and perform all services necessary for the work above specified, and will accept as full payment therefor the prices shown above.

NOTE: If you, the contractor, do not sign acceptance of this order, your attention is directed to the requirements of the specifications as to proceeding with the ordered work and filing a written protest within the time therein specified.

Contractor Acceptance by

Signature	(Print name and title) CHRISTOPHER J. VILLA DEPUTY PROJECT DIRECTOR	Date 11/29/05

STATE OF CALIFORNIA - DEPARTMENT OF TRANSPORTATION

CONTRACT CHANGE ORDER MEMORANDUM

DATE: 11/9/2005 Page 1 of 1

TO: PETER SIEGENTHALER / DOUG COE, Supervising Br. Eng.	FILE: E.A. 04 - 012024
FROM: DOUG COE, Supervising Br. Eng.	CO-RTE-PM 04-SF,Ala-80-13.9/14.3,0.0/1.6
	FED. NO. ACIM-080-1(085)8N
CCO#: 149 SUPPLEMENT#: 0 Category Code: CHPA	CONTINGENCY BALANCE (incl. this change) $54,268,381.14
COST: $50,000.00 INCREASE ☑ DECREASE ☐	HEADQUARTERS APPROVAL REQUIRED? ☐ YES ☑ NO
SUPPLEMENTAL FUNDS PROVIDED: $0.00	IS THIS REQUEST IN ACCORDANCE WITH ENVIRONMENTAL DOCUMENTS? ☑ YES ☐ NO
CCO DESCRIPTION: Retrofit Embed Plates At Casting Yard	**PROJECT DESCRIPTION:** REPLACE SFOBB EAST SPAN

LOCATION: IN SAN FRANCISCO AND ALAMEDA COUNTIES IN SAN FRANCISCO AND OAKLAND FROM 1.3 KM EAST OF THE YERBA BUENA ISL

THIS CHANGE ORDER PROVIDES FOR:

1. Furnishing and installing two (2) additional 13 mm diameter x 80 mm long stainless steel studs between the 6.35 mm diameter studs on each of the 100 x 200 x 9.5 mm stainless steel substation embed plates for precast concrete segments E8E-9W, E8E-8W, and E8E-7W.

2. Retrofitting the installed 100 x 200 x 9.5 mm stainless steel substation embed plates by drilling a 22 mm diameter by 90 mm minimum deep hole through the 89 x 120 x 9.5 mm angle, and installing a 19.05 mm by 90 mm long threaded rod and bond with epoxy. This retrofitting is for precast concrete segments E7E-7E, E7E-8E, E7E-9E, and at the closure pour between piers E7E and E8E.

The Contract plans call for 13 mm diameter by 90 mm long stainless steel studs to be welded to 100 x 200 x 9.5 mm embed plates. The Contractor submitted embed working drawings for the eastbound bridge substation showing 6.35 mm diameter x 58 mm long stainless steel studs. The submittal was mistakenly approved by the Engineer. The studs on the embedded plates should have been 13 mm, not 6.35 mm. This change order will retrofit the embed plates.

This work will be paid for as Extra Work at Force Account for an estimated cost of $50,000.00, which can be financed from the contingency fund.

District concurrence was obtained from Mr. David Salladay, East Span Skyway District Representative on June 1, 2005.

Design concurrence was obtained from Ade Akinsaya on November 7, 2005.

No time adjustment is warranted for this change as it does not affect the controlling operation.

RECEIVED 046887 DEC 19 05

CONCURRED BY:		
Construction Engineer:	Douglas Coe	Date 11-9-05
Bridge Engineer:	Douglas Coe	Date 11-9-05
FHWA Representative:		Date
Project Engineer:		Date
Other (specify): Ade Akinsanya		Date 11/7/2005
		Date
		Date
District Prior Approval By:	David Salladay	Date 6/1/2005
HQ (Issue Approval) By:		Date
Resident Engineer's Signature:		Date 11-9-05

ESTIMATE OF COST

	THIS REQUEST	TOTAL TO DATE
ITEMS	$0.00	$0.00
FORCE ACCOUNT	$50,000.00	$50,000.00
AGREED PRICE	$0.00	$0.00
ADJUSTMENT	$0.00	$0.00
TOTAL	$50,000.00	$50,000.00

FEDERAL PARTICIPATION

☑ PARTICIPATING ☐ PARTICIPATING IN PART ☐ NONE
☐ NON-PARTICIPATING (MAINTENANCE) ☐ NON-PARTICIPATING

FEDERAL SEGREGATION *(if more than one Funding Source or P.I.P. type)*
☑ CCO FUNDED PER CONTRACT ☐ CCO FUNDED AS FOLLOWS

FEDERAL FUNDING SOURCE	PERCENT

CCO: 150	Suppl. No. 0	Contract No. 04 - 012024	Road 04-SF,Ala-80-13.9/14.3,0.0/1.6	FED. AID LOC.: ACIM-080-1(085)8N

To: **KIEWIT / FCI / MANSON a JV**

You are directed to make the following changes from the plans and specifications or do the following described work not included in the plans and specifications for this contract. ***NOTE: This change order is not effective until approved by the Engineer.***

Description of work to be done, estimate of quantities and prices to be paid. (Segregate between additional work at contract price, agreed price and force account.) Unless otherwise stated, rates for rental of equipment cover only such time as equipment is actually used and no allowance will be made for idle time. This last percentage shown is the net accumulated increase or decrease from the original quantity in the Engineer's Estimate.

Extra Work at Force Account:

As directed by the Engineer, extend daily work shifts and add additional weekend work shifts at the Stockton Precast Yard to facilitate the construction of segments for Cantilever E6E for the SFOBB East Span Skyway Bridge No. 340006R.

Estimated cost of Extra Work at Force Account $50,000.00

Estimated Cost: Increase ☑ Decrease ☐ $50,000.00

By reason of this order the time of completion will be adjusted as follows: 0 days

Submitted by		
Signature	Resident Engineer: DOUG COE, Supervising Br. Eng.	Date 2-4-05
Approval Recommended by		
Signature	Construction Engineer: DOUG COE, Supervising Br. Eng.	Date 2-4-05
Engineer Approval by		
Signature	(Print name and title) for PETER SIEGENTHALER - Chief	Date 2-17-05

We the undersigned contractor, have given careful consideration to the change proposed and agree, if this proposal is approved, that we will provide all equipment, furnish the materials, except as may otherwise be noted above, and perform all services necessary for the work above specified, and will accept as full payment therefor the prices shown above.

NOTE: If you, the contractor, do not sign acceptance of this order, your attention is directed to the requirements of the specifications as to proceeding with the ordered work and filing a written protest within the time therein specified.

Contractor Acceptance by		
Signature	(Print name and title) Chris Villa, Deputy Project Director	Date 2-9-05

STATE OF CALIFORNIA - DEPARTMENT OF TRANSPORTATION

CONTRACT CHANGE ORDER MEMORANDUM

TO: PETER SIEGENTHALER / DOUG COE, Supervising Br. Eng.	FILE: E.A. 04 _ 012024
FROM: DOUG COE, Supervising Br. Eng.	CO-RTE-PM 04-SF,Ala-80-13.9/14.3,0.0/1.6 FED. NO. ACIM-080-1(085)8N
CCO#: 150 SUPPLEMENT#: 0 Category Code: BZZZ	CONTINGENCY BALANCE (incl. this change) $56,265,285.74
COST: $50,000.00 INCREASE ☑ DECREASE ☐	HEADQUARTERS APPROVAL REQUIRED? ☐ YES ☐ NO
SUPPLEMENTAL FUNDS PROVIDED: $0.00	IS THIS REQUEST IN ACCORDANCE WITH ENVIRONMENTAL DOCUMENTS? ☑ YES ☐ NO
CCO DESCRIPTION: Stockton Learning Curve Delay Mitigation	**PROJECT DESCRIPTION:** REPLACE SFOBB EAST SPAN

This change is needed to mitigate learning curve delays to the Stockton Precast Yard's segment production schedule for Bed Nos. 1 and 2. The Contractor's casting yard operations were impacted by the temporary shut down of casting bed numbers 1, 2, and 3. The temporary shut down of the casting beds began on May 14,2004, and ended on July 16,2004. The casting yard operations were delayed because the composite drawing approvals for Hinges E16E-4E and E15E-6W were not produced in a timely manner. Without completed composite drawings, the hinges could not be cast. Without completed hinges, the Contractor could not continue erecting completed segments on schedule. This created a storage problem in the precast yard for the completed segments. Once the casting operations for beds 1 and 2 restarted, the Contractor had to overcome a learning curve and completed casting the segments for Cantilever E9E one (1) day beyond the previous casting cycle prior to the shut down, one (1) extra day to complete casting the segments for Cantilever E8E, and three (3) extra days to complete casting the segments for Cantilever E7E. It has been determined that cantilevers E5E and E6E will each require an additional three (3) days to complete. In order to minimize additional time impacts to the schedule, the Contractor will be ordered to extend daily work shift hours and add additional weekend work shifts on premium time to increase production at the Stockton Precast Yard to facilitate the construction of segments for Cantilever E6E. The estimated cost of the additional shifts will be approximately $5,000.00 per day Monday through Friday, and $26,000.00 per day on Saturdays.

This change order will compensate the Contractor for providing additional crews and premium labor costs to facilitate the construction of Cantilever E6E.

For this extra work, the Contractor will be paid Extra Work At Force Account for the estimated cost of $50,000.

Prior Approval was obtained from Mr. David Salladay, District Representative for the SFOBB East Span Replacement, on January 11, 2005. A copy of the prior approval signed by Mr. Salladay is attached.

FHWA prior approval is not required as this is a minor change order.

Concurrence from Maintenance is not required as this change does not use maintenance funds or affect maintenance facilities or operations.

No time adjustment is warranted for this change as it does not affect the controlling operation.

RECEIVED
03 3828 MAR

CONCURRED BY:		
Construction Engineer:	Douglas Coe	Date 2-7-05
Bridge Engineer:	Douglas Coe	Date 2-4-05
FHWA Representative:		Date
Project Engineer		Date
Other (specify): Dave Neumann		Date 2/2/2005
		Date
		Date
District Prior Approval By	David Salladay	1/2005
Resident Engineer's Signature:		Date 2-4-05

ESTIMATE OF COST

	THIS REQUEST	TOTAL TO DATE
ITEMS	$0.00	$0.00
FORCE ACCOUNT	$50,000.00	$50,000.00
AGREED PRICE	$0.00	$0.00
ADJUSTMENT	$0.00	$0.00
TOTAL	$50,000.00	$50,000.00

FEDERAL **PARTICIPATION**

☐ NON-PARTICIPATING (MAINTENANCE)

FEDERAL SEGREGATION (if more than one Funding Source or P I P type)

☑ CCO FUNDED PER CONTRACT ☐ CCO FUNDED AS FOLLOWS

CONTRACT CHANGE ORDER

Change Requested by: Engineer

CCO: 151 Suppl. No. 0 Contract No. 04 - 012024 Road 04-SF,Ala-80-13.9/14.3,0.0/1.6 FED. AID LOC.: ACIM-080-1(085)8N

To: **KIEWIT / FCI / MANSON a JV**

You are directed to make the following changes from the plans and specifications or do the following described work not included in the plans and specifications for this contract. ***NOTE: This change order is not effective until approved by the Engineer.***

Description of work to be done, estimate of quantities and prices to be paid. (Segregate between additional work at contract price, agreed price and force account.) Unless otherwise stated, rates for rental of equipment cover only such time as equipment is actually used and no allowance will be made for idle time. This last percentage shown is the net accumulated increase or decrease from the original

Adjustment of Compensation at Lump Sum:

In the Special Provisions, Section 10-1.44A, "Cormorant Nesting Habitat," sub-section "Materials," ;

revise the second sentence as follows:
"Pipe shall be fabricated in conformance with the requirements of ASTM Designation: A312.",

revise the third sentence as follows:
"Pipe fittings shall be fabricated in conformance with the requirements of ASTM Designation: A312",

and revise the sixth sentence as follows:
" Welded wire mesh, fabricated from 10 mm diameter deformed stainless steel Type 316 L rebar, and pipe straps shall be of commercial quality."

Supply and install 13mm diameter stainless steel U-bolts with a plate at 600mm on center, approximately halfway between the already specified stainless steel pipe straps, to secure the wire mesh to the pipe frames.

Full compensation for all costs, including markups, all direct and indirect costs, all associated projects impacts, and all overhead costs are included in the lump sum payment under Contract Change Order No. 200. No further payment will be made as a result of this Change Order.

Estimated Cost: Increase ☐ Decrease ☐

By reason of this order the time of completion will be adjusted as follows: 0 days

Submitted by

Signature	Resident Engineer: DOUG COE, Supervising Br. Eng.	Date 8-24-06

Approval Recommended by

Signature	Construction Engineer: DOUG COE, Supervising Br. Eng.	Date 8-24-06

Engineer Approval by

Signature	(Print name and title) PETER SIEGENTHALER - Chief	Date

We the undersigned contractor, have given careful consideration to the change proposed and agree, if this proposal is approved, that we will provide all equipment, furnish the materials, except as may otherwise be noted above, and perform all services necessary for the work above specified, and will accept as full payment therefor the prices shown above.

NOTE: If you, the contractor, do not sign acceptance of this order, your attention is directed to the requirements of the specifications as to proceeding with the ordered work and filing a written protest within the time therein specified.

Contractor Acceptance by

Signature	(Print name and title) Lee Zink, Project Director	Date 9/5/06

STATE OF CALIFORNIA - DEPARTMENT OF TRANSPORTATION

CONTRACT CHANGE ORDER MEMORANDUM

TO: PETER SIEGENTHALER / DOUG COE, Supervising Br. Eng.	FILE: E.A. 04 - 012024
FROM: DOUG COE, Supervising Br. Eng.	CO-RTE-PM 04-SF,Ala-80-13.9/14.3,0.0/1.6 FED. NO. ACIM-080-1(085)8N
CCO#: 151 SUPPLEMENT#: 0 Category Code: CXSA	CONTINGENCY BALANCE (incl. this change)
COST: INCREASE ☐ DECREASE ☐	HEADQUARTERS APPROVAL REQUIRED? ☑ YES ☐ NO
SUPPLEMENTAL FUNDS PROVIDED: $0.00	IS THIS REQUEST IN ACCORDANCE WITH ENVIRONMENTAL DOCUMENTS? ☑ YES ☐ NO
CCO DESCRIPTION: Revise Pipe & Pipe Fitting Specification	**PROJECT DESCRIPTION:** REPLACE SFOBB EAST SPAN

LOCATION: IN SAN FRANCISCO AND ALAMEDA COUNTIES IN SAN FRANCISCO AND OAKLAND FROM 1.3 KM EAST OF THE YERBA BUENA ISL

THIS CHANGE ORDER PROVIDES FOR:

supplying and installing 13mm diameter stainless steel U-bolts with a plate; revising Special Provisions Section 10-1.44A, "Cormorant Nesting Habitat," Subsection "Materials," to reflect the correct ASTM Designation for the stainless steel pipe and pipe fittings; and to clarify the designer's requirements of the welded wire mesh.

The designer has requested that stainless steel U-bolts be used to secure the welded wire mesh to the pipe frames, in addition to the specified pipe straps, to provide the durability necessary for the design to function as intended.

The designer requires the Cormorant Nesting Habitat to be fabricated from stainless steel pipe and pipe fittings, ASTM Designation A312. The Special Provisions will be revised to require the pipe and pipe fittings to meet ASTM Designation A312.

Furthermore, the designer requests that for clarification purposes language be added to the Special Provisions stating that the wire mesh shall be fabricated from 10 mm deformed Stainless Steel Type 316 L rebar.

The agreed compensation for this contract change order is included in the lump sum compensation portion of resolution CCO No. 200. For this work the Contractor will be compensated an agreed lump sum amount of $159,445.00.

A detailed force account analysis prepared by the Engineer for the cost of this change order is on file in the project records.

Prior Approval was obtained from Ms. Nancy Bobb, FHWA Bay Bridge Project Manager, via electronic message on March 2, 2005. A printed copy of the prior approval provided by Ms. Bobb is attached.

Mr. Madon Sah, of TYLIN, the designer of record, provided Design Concurrence on March 17, 2006. A copy of the concurrence provided by Mr. Sah is attached.

Maintenance concurrence was obtained from Mr. Kenneth Brown, Supervising Bridge Engineer, Structures Maintenance and Investigations - Toll Bridges, on February 3, 2005. A copy of the concurrence provided by Maintenance is attached.

Mr. Ken Terpstra, SFOBB Toll Bridge Project Manager, provided concurrence on March 24, 2006. A copy of the concurrence provided by Mr. Terpstra is attached.

Mr. Pete Siegenthaler, Principal Bridge Engineer for the SFOBB East Span Replacement, is in concurrence with this change.

No time adjustment is warranted for this change as it does not affect the controlling operation.

CONCURRED BY:		
Construction Engineer:	Douglas Coe	Date 8-24-06
Bridge Engineer:	Douglas Coe	Date 8-24-06
FHWA Representative:	Nancy Bobb	Date 3/2/2005
Project Engineer:		Date
Other (specify): Ken Brown, Str. Mtce.		Date 2/11/2005
Ken Terpstra, Project Manager		Date
Madon Sah, Designer of Record		Date 3/17/2006
District Prior Approval By:		Date
HQ (Issue Approve) By:		Date
Resident Engineer's Signature:		Date 8-24-06

ESTIMATE OF COST

	THIS REQUEST	TOTAL TO DATE
ITEMS	$0.00	$0.00
FORCE ACCOUNT	$0.00	$0.00
AGREED PRICE	$0.00	$0.00
ADJUSTMENT		
TOTAL		

FEDERAL PARTICIPATION

☑ PARTICIPATING ☐ PARTICIPATING IN PART ☐ NONE
☐ NON-PARTICIPATING (MAINTENANCE) ☐ NON-PARTICIPATING

FEDERAL SEGREGATION (if more than one Funding Source or P.I.P. type)
☑ CCO FUNDED PER CONTRACT ☐ CCO FUNDED AS FOLLOWS

FEDERAL FUNDING SOURCE	PERCENT

CONTRACT CHANGE ORDER

Change Requested by: Engineer

CCO: 152 **Suppl. No. 0** **Contract No. 04 - 012024** **Road** 04-SF,Ala-80-13.9/14.3,0.0/1.6 **FED. AID LOC.:** ACIM-080-1(085)8N

To: **KIEWIT / FCI / MANSON a JV**

You are directed to make the following changes from the plans and specifications or do the following described work not included in the plans and specifications for this contract. ***NOTE: This change order is not effective until approved by the Engineer.***

Description of work to be done, estimate of quantities and prices to be paid. (Segregate between additional work at contract price, agreed price and force account.) Unless otherwise stated, rates for rental of equipment cover only such time as equipment is actually used and no allowance will be made for idle time. This last percentage shown is the net accumulated increase or decrease from the original

Adjustment of Compensation at Lump Sum:

Warp Precast Concrete Panels for Pier Tables No. 5, 13, 14, 15, and 16 as shown on the approved pier table composite drawings (CCO No. 99).

Furnish additional labor, supervision, equipment, material, supplies, other resources as required, and provide compensatio for the escalation costs caused by the delays and disruptions to Bid Item No. 41 "Furnish Precast Concrete Panel (Pier Table, Lightweight)" as a result of:

1. the late completion of pier table composite drawings as required by CCO No. 99, and
2. the procurement of new service platform embeds required as part of the CCO No. 83 service platform redesign.

Precast Concrete Panel Types I and III may be used for the Pier Table Precast Concrete Panels in place of Type II or Type IIA, shown on Contract Plan Sheets 763 through 770 of 978 of the SFOBB East Span Skyway Bridge Replacement Project Bridge Nos. 34-0006L/R.

Full compensation for all costs, including markups, all direct and indirect costs, all associated projects impacts, and all overhead costs are included in the lump sum payment under Contract Change Order No. 200. No further payment will be made as a result of this Change Order.

Estimated Cost: Increase ☐ Decrease ☐

By reason of this order the time of completion will be adjusted as follows: 0 days

Submitted by

Signature	Resident Engineer: DOUG COE, Supervising Br. Eng.	Date 8-24-06

Approval Recommended by

Signature	Construction Engineer: DOUG COE, Supervising Br. Eng.	Date 8-24-06

Engineer Approval by

Signature	(Print name and title) PETER SIEGENTHALER - Chief	Date

We the undersigned contractor, have given careful consideration to the change proposed and agree, if this proposal is approved, that we will provide all equipment, furnish the materials, except as may otherwise be noted above, and perform all services necessary for the work above specified, and will accept as full payment therefor the prices shown above.

NOTE: If you, the contractor, do not sign acceptance of this order, your attention is directed to the requirements of the specifications as to proceeding with the ordered work and filing a written protest within the time therein specified.

Contractor Acceptance by

Signature	(Print name and title) Lee Zink, Project Director	Date 9/5/06

STATE OF CALIFORNIA - DEPARTMENT OF TRANSPORTATION

CONTRACT CHANGE ORDER MEMORANDUM

TO: PETER SIEGENTHALER / DOUG COE, Supervising Br. Eng.	FILE: E.A. 04 - 012024
	CO-RTE-PM 04-SF,Ala-80-13.9/14.3,0.0/1.6
FROM: DOUG COE, Supervising Br. Eng.	FED. NO. ACIM-080-1(085)8N
CCO# 152 SUPPLEMENT#: 0 Category Cod AXZZ	CONTINGENCY BALANCE (incl. this change
COST: INCREASE ☐ DECREASE ☐	HEADQUARTERS APPROVAL REQUIRED? ☑ YES ☐ NO
SUPPLEMENTAL FUNDS PROVIDED: $0.00	IS THIS REQUEST IN ACCORDANCE WITH ENVIRONMENTAL DOCUMENTS? ☑ YES ☐ NO
CCO DESCRIPTION: Pier Table Pre-Cast Panel Warping	**PROJECT DESCRIPTION:** REPLACE SFOBB EAST SPAN

LOCATION: IN SAN FRANCISCO AND ALAMEDA COUNTIES IN SAN FRANCISCO AND OAKLAND FROM 1.3 KM EAST OF THE YERBA BUENA ISL

THIS CHANGE ORDER PROVIDES FOR:

Warping of precast concrete pier table panels, compensation for delays and disruptions to the construction of precast concrete pier table panels due to contract change orders 83 and 99, and allowing the option to use precast concrete pier table panel Types I and III in place of Type II or Type IIA.

Precast Concrete Panel Warping:

The geometric characteristics of the structure (variable depth, profile and cross-slope) require warping of 40 of the 112 precast concrete pier table panels. The affected Pier Tables are No.'s 5, 13, 14, 15, and 16. However, Contract Plan Sheets 757 through 770 of 978 (Precast Panel Details 1 through 14) show flat panels. Therefore additional work is required to warp the precast concrete panels.

The agreed compensation for this portion of the contract change order is included in the lump sum compensation portion of resolution CCO No. 200. For furnishing forty (40) warped precast concrete pier table panels, for Pier Tables 5, 13, 14, 15, and 16 the Contractor will be compensated an agreed lump sum amount of $36,704.00.

A detailed force account analysis prepared by the Engineer for the cost of this change order is on file in the project records.

Delays and Disruptions Associated with CCO No. 83 "Service Platform Redesign" and CCO No. 99 "Pier Table Composite Drawings":

Delays in completion of the CCO No. 83 revised service platform contract drawings by the Department, and the implementation of CCO No. 99 production of pier table composite drawings, affected Bid Item No. 41 "Furnish Precast Concrete Panel (Pier Table, Lightweight)", causing delays and disruptions to precast concrete panel construction work activities resulting in additional cost.

Electrical service platforms are attached to pier table's 3 through 15 of the Eastbound and Westbound Skyway Structure. These platforms have connection embeds that are cast into the precast concrete pier table panels. CCO No. 83 provided the Contractor with revised contract drawings for these platforms. As part of these revisions the Contractor had to procure new connection embeds. Procurement of the new embeds delayed and disrupted the casting of precast concrete pier table panels for pier table E15E, E14E, E11E, and E10E by nineteen (19) workdays resulting in standby and delay costs to this work.

Precast concrete panels are an integral part of the pier table. CCO No. 99 required pier table composite placing drawing packages for each pier table, incorporating all of the RFI's, Contract Change Orders, and "Mission Control" conflict resolutions. The drawing packages included precast concrete pier table panel drawings. These drawing packages required approval by the Department before work on any part of the pier table could begin. The time required to resolve conflicts and integrate the embedded items, delayed the release of the drawing packages for construction. This consequently caused delays and disruptions to the Contractors activities of constructing the precast concrete pier table panels. The initial production start was delayed by 106 workdays and an additional 22 workdays are attributable the intermitted delays. These delays and disruptions which, were not anticipated by the Contractor, resulted in additional cost to this work.

The agreed compensation for this portion of the contract change order is included in the lump sum compensation portion of resolution CCO No. 200. For furnishing precast concrete pier table panels (Bid Item No. 41) resulting from CCO No. 83 and 99 the Contractor will be compensated an agreed lump sum amount of $693,116.00.

A detailed force account analysis prepared by the Engineer for the cost of this change order is on file in the project records.

Alternate Precast Panel Details:

This change allows the contractor the option of using Precast Concrete Panel Types I and III in place of Type II or Type IIA shown on Contract Plan Sheets 763 through 770 of 978 of the Pier Tables. This revision was incorporated into the contract as part of the "Mission Control" pier table composite drawing work (CCO No. 99) taking place on site at the Pier 7 "Mission Control" office.

The agreed compensation for this portion of the contract change order is included in the lump sum compensation portion of resolution CCO No. 200. There shall be no cost or credit to the State for this portion of the change.

Mr. Pete Siegenthaler, Principal Bridge Engineer for the SFOBB East Span Replacement, concurs with this change. A copy of the concurrence signed by Mr. Siegenthaler on May 5, 2006, is attached.

Prior Approval was obtained from Ms. Nancy Bobb, FHWA Bay Bridge Project Manager, via electronic message on May 24, 2006. A printed copy of the prior approval provided by Ms. Bobb is attached.

Mr. Ken Terpstra, SFOBB Toll Bridge Project Manager, provided concurrence on July 2, 2006. A copy of the concurrence provided by Mr. Terpstra is attached.

Brian Maroney, Acting Deputy Toll Bridge Program Manager, provided design concurrence on June 14, 2006. A copy of the concurrence provided by Mr. Maroney is attached.

Concurrence from Maintenance is not required as this change does not use maintenance funds or affect maintenance facilities or operations.

No time adjustment is warranted for this change as it does not affect the controlling operation.

CONCURRED BY:		
Construction Engineer:	Douglas Coe	Date 8-24-06
Bridge Engineer:	Douglas Coe	Date 8-24-06
FHWA Representative:	Nancy Bobb	Date5/24/2006
Project Engineer:		Date
Other (specify): Brian Maroney		Date6/14/2006
Ken Terpstra, Project Manager		Date 7/2/2006
		Date
District Prior Approval By:		Date
HQ (Issue Approve) By:	Ken Darby	Date
Resident Engineer's Signature:		Date 8-24-06

ESTIMATE OF COST

	THIS REQUEST	TOTAL TO DATE
ITEMS	$0.00	$0.00
FORCE ACCOUNT	$0.00	$0.00
AGREED PRICE	$0.00	$0.00
ADJUSTMENT		
TOTAL		

FEDERAL PARTICIPATION

☑ PARTICIPATING ☐ PARTICIPATING IN PART ☐ NONE
☐ NON-PARTICIPATING (MAINTENANCE) ☐ NON-PARTICIPATING

FEDERAL SEGREGATION (if more than one Funding Source or P.I.P. type)
☑ CCO FUNDED PER CONTRACT ☐ CCO FUNDED AS FOLLOWS

FEDERAL FUNDING SOURCE	PERCENT

STATE OF CALIFORNIA - DEPARTMENT OF TRANSPORTATION

CONTRACT CHANGE ORDER

Change Requested by: Engineer

CCO: 153	Suppl. No. 0	Contract No. 04 - 012024	Road 04-SF,Ala-80-13.9/14.3,0.0/1.6	FED. AID LOC.: ACIM-080-1(085)8N

To: **KIEWIT / FCI / MANSON a JV**

You are directed to make the following changes from the plans and specifications or do the following described work not included in the plans and specifications for this contract. ***NOTE: This change order is not effective until approved by the Engineer.***

Description of work to be done, estimate of quantities and prices to be paid. (Segregate between additional work at contract price, agreed price and force account.) Unless otherwise stated, rates for rental of equipment cover only such time as equipment is actually used and no allowance will be made for idle time. This last percentage shown is the net accumulated increase or decrease from the original

Extra Work at Lump Sum:

Furnish all labor, supervision, equipment, material, supplies, and other resources as required to Warp two hundred and fourteen (214) of the precast lightweight concrete panels for the precast segments as indicated on the precast segment composite drawings for the East Span Skyway, Bridge No. 34-0006L/R.

Full compensation for all costs, including markups, all direct and indirect costs, all associated project impacts, all overhead costs, and all risks associated with this change is included in the lump sum payment of CCO No. 200 and no further payment will be made as a result of this CCO..

Estimated Cost: Increase ☐ Decrease ☐

By reason of this order the time of completion will be adjusted as follows: 0 days

Submitted by

Signature	Resident Engineer: DOUG COE, Supervising Br. Eng.	Date 8-24-06

Approval recommended by

Signature	Construction Engineer: DOUG COE, Supervising Br. Eng.	Date 8-24-06

Engineer Approval by

Signature	(Print name and title) PETER SIEGENTHALER - Chief	Date

We the undersigned contractor, have given careful consideration to the change proposed and agree, if this proposal is approved, that we will provide all equipment, furnish the materials, except as may otherwise be noted above, and perform all services necessary for the work above specified, and will accept as full payment therefor the prices shown above.

NOTE: If you, the contractor, do not sign acceptance of this order, your attention is directed to the requirements of the specifications as to proceeding with the ordered work and filing a written protest within the time therein specified.

Contractor Acceptance by

Signature	(Print name and title) Lee Zink, Project Director	Date 9/5/06

STATE OF CALIFORNIA - DEPARTMENT OF TRANSPORTATION

CONTRACT CHANGE ORDER MEMORANDUM

TO: PETER SIEGENTHALER / DOUG COE, Supervising Br. Eng.

FROM: DOUG COE, Supervising Br. Eng.

FILE: E.A. 04 - 012024
CO-RTE-PM 04-SF,Ala-80-13.9/14.3,0.0/1.6
FED. NO. ACIM-080-1(085)8N

CCO# 153 | SUPPLEMENT#: 0 | Category Cod AXZZ

CONTINGENCY BALANCE (incl. this change

COST: INCREASE ☐ DECREASE ☐

HEADQUARTERS APPROVAL REQUIRED? ☑ YES ☐ NO

SUPPLEMENTAL FUNDS PROVIDED: $0.00

IS THIS REQUEST IN ACCORDANCE WITH ENVIRONMENTAL DOCUMENTS? ☑ YES ☐ NO

CCO DESCRIPTION:
Stockton Precast Panel Warping

PROJECT DESCRIPTION:
REPLACE SFOBB EAST SPAN

LOCATION: IN SAN FRANCISCO AND ALAMEDA COUNTIES IN SAN FRANCISCO AND OAKLAND FROM 1.3 KM EAST OF THE YERBA BUENA ISL

THIS CHANGE ORDER PROVIDES FOR:

Warping of precast lightweight concrete panels for the precast segments as indicated on the precast segment composite drawings for the East Span Skyway, Bridge No. 34-0006L/R.

The geometric characteristics of the structure (variable depth, profile and cross-slope) require warping of 214 of the 874 precast lightweight concrete segment panels. However, Contract Plan Sheets 757 through 770 of 978 (Precast Panel Details 1 through 14) show flat panels. Therefore, the additional work required to warp the precast concrete panels is considered to be Extra Work not anticipated in the Bid Item and will be compensated per Section 4-1.03D "Extra Work" of the 1999 Standard Specifications.

The agreed compensation for this contract change order is included in the lump sum compensation portion of resolution CCO No. 200. For furnishing two hundred fourteen (214) warped precast concrete segment panels the Contractor will be compensated an agreed lump sum amount of $275,000.00.

A detailed force account analysis prepared by the Engineer for the cost of this change order is on file in the project records.

Mr. Pete Siegenthaler, Principal Bridge Engineer for the SFOBB East Span Replacement, concurs with this change. A copy of the concurrence signed by Mr. Siegenthaler on July 6, 2006, is attached.

Prior Approval was obtained from Ms. Nancy Bobb, FHWA Bay Bridge Project Manager, via electronic message on July 20, 2006. A printed copy of the prior approval provided by Ms. Bobb is attached.

Mr. Ken Terpstra, SFOBB Toll Bridge Project Manager, provided concurrence on July 13, 2006. A copy of the concurrence provided by Mr. Terpstra is attached.

Concurrence from design is not required since this is not a change in design but a clarification of the plans.

Concurrence from Maintenance is not required as this change does not use maintenance funds or affect maintenance facilities or operations.

No time adjustment is warranted for this change as it does not affect the controlling operation.

CONCURRED BY:

Construction Engineer:	Douglas Coe	Date 8-24-06
Bridge Engineer:	Douglas Coe	Date 8-24-06
FHWA Representative:	Nancy Bobb	Date 7/20/2006
Project Engineer:		Date
Other (specify): Ken Terpstra, SFOBB Project Manager		Date 7/13/2006
		Date
		Date
District Prior Approval By:		Date
HQ (Issue Approve) By:	Ken Darby	Date
Resident Engineer's Signature:		Date 8-24-06

ESTIMATE OF COST

	THIS REQUEST	TOTAL TO DATE
ITEMS	$0.00	$0.00
FORCE ACCOUNT	$0.00	$0.00
AGREED PRICE		
ADJUSTMENT	$0.00	$0.00
TOTAL		

FEDERAL PARTICIPATION

☑ PARTICIPATING ☐ PARTICIPATING IN PART ☐ NONE
☐ NON-PARTICIPATING (MAINTENANCE) ☐ NON-PARTICIPATING

FEDERAL SEGREGATION (If more than one Funding Source or P.I.P. type)
☑ CCO FUNDED PER CONTRACT ☐ CCO FUNDED AS FOLLOWS

FEDERAL FUNDING SOURCE	PERCENT

CONTRACT CHANGE ORDER

Change Requested by: Engineer

CCO: 154	Suppl. No. 0	Contract No. 04 - 012024	Road 04-SF,Ala-80-13.9/14.3,0.0/1.6	FED. AID LOC.: ACIM-080-1(085)8N

To: **KIEWIT / FCI / MANSON a JV**

You are directed to make the following changes from the plans and specifications or do the following described work not included in the plans and specifications for this contract. ***NOTE: This change order is not effective until approved by the Engineer.***

Description of work to be done, estimate of quantities and prices to be paid. (Segregate between additional work at contract price, agreed price and force account.) Unless otherwise stated, rates for rental of equipment cover only such time as equipment is actually used and no allowance will be made for idle time. This last percentage shown is the net accumulated increase or decrease from the original quantity in the Engineer's Estimate.

In accordance with Section 8-1.07, "Liquidated Damages," of the Standard Specifications, and Sections 10-1.10, "Progress Schedule (Critical Path)," and 10-1.11, "Overhead," of the Special Provisions, a contract time extension of 11 working days (WD's) is hereby granted for Time Impact Analyses (TIA) Number 13R4 for the SFOBB East Span Skyway Bridge Replacement Project, Bridge Nos. 340006L/R.

The delay in completion of the hinge composite drawings impacted the Contractor's casting yard operations, resulted in the temporary slow down of the Stockton Precast Yard (which began on May 14, 2004, and ended on July 16, 2004) and disrupted the Contractor's productivity for the construction of the following five (5) Cantilievers: E5E, E6E, E7E, E8E, and E9E. The end date of the contract was delayed by eleven (11) working days as a result of these disruptions.

These disruptions increased the cantilevers production durations. The Engineer has identified the following delay days: July 19, 2004 (one (1) WD for Cantilever E9E); September 22, 2004 (one (1) WD for Cantilever E8E); November 8, 9, and 11, 2004 (three (3) WD's for Cantilever E7E); December 28, 29, and 31, 2004 (three (3) WD's for Cantilever E6E); and February 8, 9, and 10, 2005 (Three (3) WD's for Cantilever E5E), for a total of eleven (11) WD's.

It is mutually agreed that acceptance of this change order resolves all time impacts, including TIA Nos. 10, 11, 12, 13R0, 13R1, 13R2, 13R3, 13R4, 14, 15, and 17, and the time associated with learning curve impacts, for the increased duration of the casting of Cantilevers E5E through E9E segments. Acceptance of this change order also resolves the time element of Notice of Potential Claim No. 9, dated June 9, 2004, and increases the quantity of Bid Item No. 7, "Time-Related Overhead," by eleven (11) working days.

This change order does not provide compensation for other costs that are not included in Bid Item No. 7, "Time-Related Overhead," as well as direct costs associated with the temporary slow down of the Stockton Precast Yard, and direct costs associated with the learning curve to restart the Stockton Precast Yard casting operations. The determination of an adjustment in compensation for these other costs has been deferred.

Estimate of Increase in Contract Item at Contract Price:

Item No. 7: TIME-RELATED OVERHEAD
11 WDAY (+1.10%) @$208,000.00 /WDAY =+$2,288,000.00 (+13.20%)

Estimated total cost for Increase in Contract Item.....$2,288,000.00

CONTRACT CHANGE ORDER

Change Requested by: Engineer

CCO: 154	Suppl. No. 0	Contract No. 04 - 012024	Road 04-SF,Ala-80-13.9/14.3,0.0/1.6	FED. AID LOC.: ACIM-080-1(085)8N

Estimated Cost: Increase ☑ Decrease ☐ $2,288,000.00

By reason of this order the time of completion will be adjusted as follows: 11 days

Submitted by

Signature	Resident Engineer: DOUG COE, Supervising Br. Eng.	Date 4-11-05

Approval Recommended by

Signature	Construction Engineer: PETER SIEGENTHALER, Chief	Date 4-11-05

Engineer Approval by

Signature	(Print name and title) PETER SIEGENTHALER - Chief	Date 4-20-05

We the undersigned contractor, have given careful consideration to the change proposed and agree, if this proposal is approved, that we will provide all equipment, furnish the materials, except as may otherwise be noted above, and perform all services necessary for the work above specified, and will accept as full payment therefor the prices shown above.

NOTE: If you, the contractor, do not sign acceptance of this order, your attention is directed to the requirements of the specifications as to proceeding with the ordered work and filing a written protest within the time therein specified.

Contractor Acceptance by

Signature	(Print name and title) Chris Villa, Deputy Project Director	Date 4-14-05

STATE OF CALIFORNIA - DEPARTMENT OF TRANSPORTATION

CONTRACT CHANGE ORDER MEMORANDUM

TO: PETER SIEGENTHALER / DOUG COE, Supervising Br. Eng.	FILE: E.A. 04 - 012024
FROM: DOUG COE, Supervising Br. Eng.	CO-RTE-PM 04-SF,Ala-80-13.9/14.3,0.0/1.6
	FED. NO. ACIM-080-1(085)8N
CCO#: 154 SUPPLEMENT#: 0 Category Code: FHAA	CONTINGENCY BALANCE (incl. this change) $56,265,285.74
COST: $2,288,000.00 INCREASE ☑ DECREASE ☐	HEADQUARTERS APPROVAL REQUIRED? ☑ YES ☐ NO
SUPPLEMENTAL FUNDS PROVIDED: $0.00	IS THIS REQUEST IN ACCORDANCE WITH ENVIRONMENTAL DOCUMENTS? ☑ YES ☐ NO
CCO DESCRIPTION: Resolve TIA's 13, 14, 15, & 17	**PROJECT DESCRIPTION:** REPLACE SFOBB EAST SPAN

LOCATION: IN SAN FRANCISCO AND ALAMEDA COUNTIES IN SAN FRANCISCO AND OAKLAND FROM 1.3 KM EAST OF THE YERBA BUENA ISL

THIS CHANGE ORDER PROVIDES FOR:
a contract time extension of eleven (11) working days due to disruptions to casting the segments for Cantilevers E5E, E6E, E7E, E8E, and E9E caused by the temporary slow down of the Stockton Precast Yard.

The Contractor's casting operations were impacted by the temporary slow down of the Stockton Precast Yard. The slow down period began on May 14, 2004 and ended on July 16, 2004. The Contractor's casting yard operations were delayed because the Engineer did not provide approved composite drawings for Cantilever Segment E12E to the Contractor in a timely manner. As a result of the delay, Contract Change Order Nos. 127 and 127 Supplement No. 1, "Resolution of TIA No. 13," were executed unilaterally to address this slow-down period, and granted a 72 working day extension to the contract. Contract Change Order Nos. 127 and 127 S1were executed unilaterally because the Contractor did not agree that 72 working days resolved the impacts to the Stockton Yard for both the slow-down and re-start operations.

When the slow-down period was complete and the production of segments was re-started, the cantilever production durations increased. The increased production durations represent the Contractor's learning curve to match the previous productivity for casting segments prior to the slow down period. The increased production durations are as follows: Cantilever E9E was completed one (1) day beyond the casting cycle prior to the slow down, Cantilever E8E was completed one (1) day beyond the casting cycle prior to the slow down, Cantilever E7E was completed three (3) days beyond the casting cycle prior to the slow down, Cantilever E6E was completed three (3) days beyond the casting cycle prior to the slow down, and Cantilever E5E was completed three (3) days beyond the casting cycle prior to the slow down. The total learning curve delay experienced by the Contractor due to increased production durations for the construction of the cantilevers is eleven (11) working days.

The Contractor had originally requested a 133 working day (WD) contract extension in Time Impact Analysis (TIA) No. 13R3. Contract Change Order Nos. 127 and 127 Supplement No. 1, "Resolution of TIA No. 13," compensated the Contractor for 72 of the requested 133 days. TIA No. 13R4 was submitted by the Contractor on November 4, 2004 proposing, as a resolution to the Notice Of Potential Claim No. 9 (NOPC No.9) time issues, that the Engineer grant a twenty (20) WD compensable time extension combined with a thirty (30) WD non-compensable time extension for disruptions to the casting operations. NOPC No. 9, "Yard Slow Down/Hinge Delays," dated June 9, 2004, was submitted in protest of the unilateral execution of Contract Change Order No. 127. After further discussions and several schedule evaluations, the Contractor has agreed to accept the Engineer's analysis of an eleven (11) WD disruption due to the increased durations for restarting the casting activity for Cantilevers E9E, E8E, E7E, E6E, and E5E associated with TIA No.13R4. The Engineer has identified the following delay dates: July 19, 2004; September 22, 2004; November 8, 9, and 11, 2004; December 28, 29, and 31, 2004; and February 8, 9, and 10, 2005, for a total of eleven (11) WD's.

The Contractor submitted various TIA's (TIA Nos. 10, 11, 12, 13R0, 13R1, 13R2, 14, 15, and 17) for delay impacts that are concurrent with the delay impacts outlined in TIA Nos. 13R3 and 13R4. Analysis of these TIA's indicates that the combined duration for TIA Nos. 13R3 and 13R4 envelopes the duration of these various TIA's. Therefore, this change order resolves all TIA's submitted with delay impacts that are concurrent with TIA Nos. 13R3 and 13R4. All Time Impact Analyses (TIA's) were submitted in accordance with Section 10-1.10, "Progress Schedule (Critical Path)" of the Special Provisions, and are acceptable to the Engineer.

This change order resolves TIA Nos. 10, 11, 12, 13R0, 13R1, 13R2, 13R3, 13R4, 14, 15, and 17, and resolves the time element of NOPC No. 9.

This change order does not provide compensation for other costs that are not included in Bid Item No. 7, "Time-Related Overhead." An adjustment of compensation for these other costs has been deferred until a determination of merit has been made. The Contractor has requested approximately $125,000 per working day of delay for costs not associated with Bid Item

No. 7, "Time-Related Overhead".

As a result of this change order, Bid Item No. 7, "Time-Related Overhead," will be increased by eleven (11) working days for a total increase of $2,288,000.00, and the contract time of completion will be extended by eleven (11) working days. The increased project cost due to this change can be financed by the project contingency funds.

Pete Siegenthaler, SFOBB Construction Manager, Toll Bridge Construction, provided concurrence on January 19, 2005. A copy of the concurrence provided by Mr. Siegenthaler is attached.

Janet Adams, SFOBB Toll Bridge Project Manager, provided concurrence on April 4, 2005. A copy of the concurrence provided by Ms. Adams is attached.

FHWA prior approval was obtained from Ms. Nancy Bobb, Bay Bridge Project Manager, on April 5, 2005. A copy of the prior approval provided by Ms. Bobb is attached.

Concurrence from Maintenance is not required as this change does not use maintenance funds or affect maintenance facilities or operations.

Design concurrence is not required as this change order does not modify the design.

A determination in contract time has been made: The contract time will be increased by 11 working days for the dates provided herein.

RECEIVED
037199 APR 27 '05

CONCURRED BY:		
Construction Engineer:	Douglas Coe	Date 4-12-05
Bridge Engineer:	Douglas Coe	Date 4-12-05
FHWA Representative:	Nancy Bobb	Date 4/5/2005
Project Engineer:		Date
Other (specify): Janet Adams		Date 4/4/2005
		Date
		Date
District Prior Approval By:		Date
HQ (Issue Approve) By:		Date
Resident Engineer's Signature:		Date 4-12-05

ESTIMATE OF COST	THIS REQUEST	TOTAL TO DATE
ITEMS	$2,288,000.00	$2,288,000.00
FORCE ACCOUNT	$0.00	$0.00
AGREED PRICE	$0.00	$0.00
ADJUSTMENT	$0.00	$0.00
TOTAL	$2,288,000.00	$2,288,000.00

FEDERAL PARTICIPATION

☑ PARTICIPATING ☐ PARTICIPATING IN PART ☐ NONE
☐ NON-PARTICIPATING (MAINTENANCE) ☐ NON-PARTICIPATING

FEDERAL SEGREGATION (if more than one Funding Source or P.I.P. type)
☑ CCO FUNDED PER CONTRACT ☐ CCO FUNDED AS FOLLOWS

FEDERAL FUNDING SOURCE	PERCENT

STATE OF CALIFORNIA - DEPARTMENT OF TRANSPORTATION

CONTRACT CHANGE ORDER

Change Requested by: Engineer

CCO: 154 Suppl. No. 1 Contract No. 04 - 012024 Road 04-SF,Ala-80-13.9/14.3,0.0/1.6 FED. AID LOC.: ACIM-080-1(085)8N

To: KIEWIT / FCI / MANSON a JV

You are directed to make the following changes from the plans and specifications or do the following described work not included in the plans and specifications for this contract. ***NOTE: This change order is not effective until approved by the Engineer.***

Description of work to be done, estimate of quantities and prices to be paid. (Segregate between additional work at contract price, agreed price and force account.) Unless otherwise stated, rates for rental of equipment cover only such time as equipment is actually used and no allowance will be made for idle time. This last percentage shown is the net accumulated increase or decrease from the original

Adjustment of Compensation at Lump Sum:

This change order provides full and final payment for all extended labor, equipment, and escalation costs as a result of disruptions associated with the construction of the following five (5) Cantilevers: E5E, E6E, E7E, E8E, and E9E. These disruptions resulted in delays which resulted in an agreed 11 working day project extension (CCO 154 S0), extending contract completion from December 29, 2006 (WD 455) to January 17, 2007 (WD 467) exclusive of future weather days.

Combined with Change Order No. 127 Supplement 2, this Change Order resolves the Contractor's Time Impact Analyses (TIA) Numbers 10, 11, 12, 13R0, 13R1, 13R2, 13R3, 13R4, 14, 15, and 17.

Full compensation, including all markups, all direct and indirect costs, all overhead costs not covered in Bid Item 7 (Time Related Overhead), and all associated project impacts is included in the lump sum payment of CCO 200 and no further payment will be made as a result of this CCO.

Estimated Cost: Increase ☐ Decrease ☐

By reason of this order the time of completion will be adjusted as follows: 0 days

Submitted by

Signature	Resident Engineer: DOUG COE, Supervising Br. Eng.	Date 8-24-06

Approval Recommended by

Signature	Construction Engineer: DOUG COE, Supervising Br. Eng.	Date 8-24-06

Engineer Approval by

Signature	(Print name and title) PETER SIEGENTHALER - Chief	Date

We the undersigned contractor, have given careful consideration to the change proposed and agree, if this proposal is approved, that we will provide all equipment, furnish the materials, except as may otherwise be noted above, and perform all services necessary for the work above specified, and will accept as full payment therefor the prices shown above.

NOTE: If you, the contractor, do not sign acceptance of this order, your attention is directed to the requirements of the specifications as to proceeding with the ordered work and filing a written protest within the time therein specified.

Contractor Acceptance by

Signature	(Print name and title) Lee Zink, Project Director	Date 9/5/06

STATE OF CALIFORNIA - DEPARTMENT OF TRANSPORTATION

CONTRACT CHANGE ORDER MEMORANDUM

TO: PETER SIEGENTHALER / PETER SIEGENTHALER	FILE: E.A. 04 - 012024
	CO-RTE-PM 04-SF,Ala-80-13.9/14.3,0.0/1.6
FROM: DOUG COE. Supervising Br. Eng.	FED. NO. ACIM-080-1(085)8N
CCO# 154 SUPPLEMENT#: 1 Category Cod FHBB	CONTINGENCY BALANCE (incl. this change
COST: INCREASE ☐ DECREASE ☐	HEADQUARTERS APPROVAL REQUIRED? ☑ YES ☐ NO
SUPPLEMENTAL FUNDS PROVIDED: $0.00	IS THIS REQUEST IN ACCORDANCE WITH ENVIRONMENTAL DOCUMENTS? ☑ YES ☐ NO
CCO DESCRIPTION: TRO+ for TIA's 13, 14, 15, and 17	**PROJECT DESCRIPTION:** REPLACE SFOBB EAST SPAN

LOCATION: IN SAN FRANCISCO AND ALAMEDA COUNTIES IN SAN FRANCISCO AND OAKLAND FROM 1.3 KM EAST OF THE YERBA BUENA ISL

THIS CHANGE ORDER PROVIDES FOR:

final compensation for the Contractor's extended equipment and labor costs associated with disruptions to casting the segments for Cantilevers E5E, E6E, E7E, E8E, and E9E caused by the temporary slow down of the Stockton Precast Yard. Time Impact Analyses (TIA) No. 13 R4 was submitted for disruptions to the casting operations resulting in a project extension of eleven (11) working days. Contract Change Order (CCO) No. 154 was issued to resolve time and time-related overhead (TRO) costs associated with the disruptions caused by the temporary slow down of the Stockton Precast Yard.

To comprise the value of this contract change order, the ruling of the Dispute Review Board for a similar issue, NOPC No. 3 (CCO No. 107 Supplement 3), was used as a quantum guideline.

The extended equipment and supervision delay damage for the disruptions to casting the segments for Cantilevers E5E, E6E, E7E, E8E, and E9E is $155,725.00 per working day.

The agreed compensation for this contract change order to resolve CCO 154 S0 as outlined in KFM's Time Impact Analyses (TIA) Numbers 10, 11, 12, 13R0, 13R1, 13R2, 13R3, 13R4, 14, 15, and 17, and Notice of Potential Claim (NOPC) No. 9 is included in the lump sum compensation portion of resolution CCO No. 200. The Contractor will be compensated an agreed lump sum amount of $1,712,970.00.

A detailed force account analysis prepared by the Engineer for the cost of this change order is on file in the project records.

Mr. Pete Siegenthaler, SFOBB Construction Manager, Toll Bridge Construction, concurs with this change. A copy of the concurrence signed by Mr. Siegenthaler on January 19, 2005 is attached.

Jon Tapping, Acting SFOBB Toll Bridge Project Manager, provided concurrence on August 3, 2006. A copy of the concurrence provided by Mr. Tapping is attached.

Prior Approval was obtained from Ms. Nancy Bobb, FHWA Bay Bridge Project Manager, via electronic message on August 8, 2006. A printed copy of the prior approval provided by Ms. Bobb is attached.

Concurrence from Maintenance is not required as this change order does not use maintenance funds or affect maintenance facilities or operations.

Design concurrence is not required as this change order does not modify the design.

No time adjustment is warranted for this change as it does not affect the controlling operation. The time extension was previously addressed in Contract Change Order No. 154 Supplement 0.

CONCURRED BY:		
Construction Engineer:	Douglas Coe	Date 8-24-06
Bridge Engineer:	Douglas Coe	Date 8-24-06
FHWA Representative:	Nancy Bobb	Date 8/8/2006
Project Engineer:		Date
Other (specify): Ken Terpstra, SFOBB Project Manager		Date 8/3/2006
TBPOC		Date8/24/2006
		Date
District Prior Approval By:		Date
HQ (Issue Approve) By:	Ken Darby	Date
Resident Engineer's Signature:		Date 8-24-06

ESTIMATE OF COST

	THIS REQUEST	TOTAL TO DATE
ITEMS	$0.00	$2,288,000.00
FORCE ACCOUNT	$0.00	$0.00
AGREED PRICE	$0.00	$0.00
ADJUSTMENT		
TOTAL		

FEDERAL PARTICIPATION

☑ PARTICIPATING ☐ PARTICIPATING IN PART ☐ NONE
☐ NON-PARTICIPATING (MAINTENANCE) ☐ NON-PARTICIPATING

FEDERAL SEGREGATION (if more than one Funding Source or P.I.P. type)
☑ CCO FUNDED PER CONTRACT ☐ CCO FUNDED AS FOLLOWS

FEDERAL FUNDING SOURCE	PERCENT

STATE OF CALIFORNIA - DEPARTMENT OF TRANSPORTATION

CONTRACT CHANGE ORDER

Change Requested by: Engineer

CCO 155	Suppl. No. 0	Contract No. 04 - 012024	Road 04-SF,Ala-80-13.9/14.3,0.0/1.6	FED. AID LOC.: ACIM-080-1(085)8N

To: KIEWIT / FCI / MANSON a JV

You are directed to make the following changes from the plans and specifications or do the following described work not included in the plans and specifications for this contract. ***NOTE: This change order is not effective until approved by the Engineer.***

Description of work to be done, estimate of quantities and prices to be paid. (Segregate between additional work at contract price, agreed price and force account.) Unless otherwise stated, rates for rental of equipment cover only such time as equipment is actually used and no allowance will be made for idle time. This last percentage shown is the net accumulated increase or decrease from the original quantity in the Engineer's Estimate.

Extra Work at Force Account:

As authorized by the Engineer, clean the tidal zone on top of the footing boxes at Piers E3E, E4E, E5E, E6E, E3W, E4W, E5W, and E6W (8 locations).

Estimated cost of Extra Work at Force Account $100,000.00

RECEIVED
048901 FEB 14 06

Estimated Cost: Increase ☑ Decrease ☐ $100,000.00

By reason of this order the time of completion will be adjusted as follows: 0 days

Submitted by

Signature	Resident Engineer: DOUG COE, Supervising Br. Eng.	Date 11-7-05

Approval Recommended by

Signature	Construction Engineer: DOUG COE, Supervising Br. Eng.	Date 11-7-05

Engineer Approval by

Signature David Sullivan	(Print name and title) for PETER SIEGENTHALER - Chief	Date 1/30/06

We the undersigned contractor, have given careful consideration to the change proposed and agree, if this proposal is approved, that we will provide all equipment, furnish the materials, except as may otherwise be noted above, and perform all services necessary for the work above specified, and will accept as full payment therefor the prices shown above.

NOTE: If you, the contractor, do not sign acceptance of this order, your attention is directed to the requirements of the specifications as to proceeding with the ordered work and filing a written protest within the time therein specified.

Contractor Acceptance by

Signature	(Print name and title) Lee Zink Proj. Director	Date 1/16/06

STATE OF CALIFORNIA - DEPARTMENT OF TRANSPORTATION

CONTRACT CHANGE ORDER MEMORANDUM

TO: PETER SIEGENTHALER / DOUG COE, Supervising Br. Eng.	FILE: **E.A.** 04 - 012024
FROM: DOUG COE, Supervising Br. Eng.	**CO-RTE-PM** 04-SF,Ala-80-13.9/14.3,0.0/1.6
	FED. NO. ACIM-080-1(085)8N
CCO#: **155** SUPPLEMENT#: **0** Category Code: **CHSA**	CONTINGENCY BALANCE (incl. this change) **$57,232,638.68**
COST: **$100,000.00** INCREASE ☑ DECREASE ☐	HEADQUARTERS APPROVAL REQUIRED? ☐ YES ☑ NO
SUPPLEMENTAL FUNDS PROVIDED: **$0.00**	IS THIS REQUEST IN ACCORDANCE WITH ENVIRONMENTAL DOCUMENTS? ☑ YES ☐ NO
CCO DESCRIPTION: Clean to Reinspect Cracks at Pier E3toE6	**PROJECT DESCRIPTION:** REPLACE SFOBB EAST SPAN

LOCATION: IN SAN FRANCISCO AND ALAMEDA COUNTIES IN SAN FRANCISCO AND OAKLAND FROM 1.3 KM EAST OF THE YERBA BUENA ISL

THIS CHANGE ORDER PROVIDES FOR:

removing marine growth and cleaning the tidal zone on top of the footing boxes at Piers E3E, E4E, E5E, E6E, E3W, E4W, E5W, and E6W (8 locations) so that the Engineer can re-inspect the precast concrete sidewalls for cracks.

Inspection for cracks was conducted on the precast concrete walls and precast concrete fender modules prior to placing the footing boxes into the bay as required in Section 10-1.27 of the Special Provisions, "Concrete Structures". After placement of concrete inside the footing boxes, shrinkage occurred and additional cracks appeared toward the top of the footing boxes due to the required placing sequence of pouring concrete inside the footing boxes after exterior concrete walls had set-up. The additional clean-up will allow re-inspection of the concrete footing sidewalls.

This work will be paid for as Extra Work at Force Account for an estimated cost of $100,000.00, which can be financed from the contingency fund.

Prior approval was obtained from Mr. David Salladay, East Span Skyway District Representative, on October 17, 2005.

FHWA Prior approval is not required as this is a minor change order.

Design concurrence was obtained from Gerry Houlihan, Foundation Engineer, on February 2, 2005.

Concurrence from Maintenance is not required, as this change order does not affect maintenance facilities or operations.

No time adjustment is warranted for this change as it does not affect the controlling operation.

CONCURRED BY:

Construction Engineer:	Douglas Coe	Date0/17/2005
Bridge Engineer:	Douglas Coe	Date0/17/2005
FHWA Representative:		Date
Project Engineer:		Date
Other (specify): Mark Woods		Date0/14/2005
		Date
		Date
District Prior Approval By:		Date
HQ (Issue Approve) By:		Date
Resident Engineer's Signature:		Date 11-7-05

ESTIMATE OF COST

	THIS REQUEST	TOTAL TO DATE
ITEMS	$0.00	$0.00
FORCE ACCOUNT	$100,000.00	$100,000.00
AGREED PRICE	$0.00	$0.00
ADJUSTMENT	$0.00	$0.00
TOTAL	$100,000.00	$100,000.00

FEDERAL PARTICIPATION

☑ PARTICIPATING ☐ PARTICIPATING IN PART ☐ NONE
☐ NON-PARTICIPATING (MAINTENANCE) ☐ NON-PARTICIPATING

FEDERAL SEGREGATION (if more than one Funding Source or P.I.P. type)
☑ CCO FUNDED PER CONTRACT ☐ CCO FUNDED AS FOLLOWS

FEDERAL FUNDING SOURCE	PERCENT

CONTRACT CHANGE ORDER

Change Requested by: Engineer

CCO: 156	Suppl. No. 0	Contract No. 04 - 012024	Road 04-SF,Ala-80-13.9/14.3,0.0/1.6	FED. AID LOC.: ACIM-080-1(085)8N

To: **KIEWIT / FCI / MANSON a JV**

You are directed to make the following changes from the plans and specifications or do the following described work not included in the plans and specifications for this contract. ***NOTE: This change order is not effective until approved by the Engineer.***

Description of work to be done, estimate of quantities and prices to be paid. (Segregate between additional work at contract price, agreed price and force account.) Unless otherwise stated, rates for rental of equipment cover only such time as equipment is actually used and no allowance will be made for idle time. This last percentage shown is the net accumulated increase or decrease from the original quantity in the Engineer's Estimate.

Revise Section 10-1.33, "Modular Joint Seal Assemblies," of the Special Provisions for the SFOBB East Span Skyway, Bridge Nos. 34-0006L/R, as follows:

Amend "Item B" of the "Specimens" section in subsection "Fatigue Testing of Metallic Structural Components and Connections" by adding the following sentence:

" Alternative test specimens shall be allowed as approved by the Engineer."

Delete the second sentence of "Item B" in the "Scope" section of subsection "Durability Testing of Elastomeric Support Bearings".

Modify the second sentence in "Item A" of the "Loading Details" section in subsection "Durability Testing of Elastomeric Support Bearings" as follows:

"Fatigue testing shall be performed using displacement or load control."

Delete "Item A" of the "Dynamic Stiffness Test" section in subsection "Durability Testing of Elastomeric Support Bearings," and replace it with the following:

"A. Testing shall be conducted on each specimen to be subjected to fatigue testing in order to establish its dynamic stiffness for at least three different loading frequencies. The maximum of these loading frequencies shall be equal to 50Hz."

Delete "Item B" of the acceptance criteria for dynamic testing of the modular joint seal assemblies as provided in paragraph thirteen (13) in subsection "Dynamic Testing."

Adjustment of Compensation at Lump Sum:

For revising Section 10-1.33, "Modular Joint Seal Assemblies," of the contract Special Provisions, to allow for alternate testing and acceptance criteria for the modular joint prototype, the Contractor agrees to credit the State an agreed lump sum amount of $10,000.00. This agreed lump sum constitutes full compensation for all direct and indirect costs, and all associated project impacts.

Cost of Adjustment of Compensation at Agreed Lump Sum .....($10,000.00)

REGISTERED PROFESSIONAL ENGINEER
DAVID W. WU
David W. Wu
No. C41265
Exp 3/31/07
CIVIL
STATE OF CALIFORNIA

CONTRACT CHANGE ORDER

Change Requested by: Engineer

CCO: 156	Suppl. No. 0	Contract No. 04 - 012024	Road 04-SF,Ala-80-13.9/14.3,0.0/1.6	FED. AID LOC.: ACIM-080-1(085)8N

Estimated Cost: Increase ☐ Decrease ☑ ($10,000.00)

By reason of this order the time of completion will be adjusted as follows: 0 days

Submitted by		
Signature	Resident Engineer: DOUG COE, Supervising Br. Eng.	Date 11-9-05
Approval Recommended by		
Signature	Construction Engineer: DOUG COE, Supervising Br. Eng.	Date 11-9-05
Engineer Approval by		
Signature	(Print name and title) PETER SIEGENTHALER - Chief	Date

We the undersigned contractor, have given careful consideration to the change proposed and agree, if this proposal is approved, that we will provide all equipment, furnish the materials, except as may otherwise be noted above, and perform all services necessary for the work above specified, and will accept as full payment therefor the prices shown above.

NOTE: If you, the contractor, do not sign acceptance of this order, your attention is directed to the requirements of the specifications as to proceeding with the ordered work and filing a written protest within the time therein specified.

Contractor Acceptance by		
Signature	(Print name and title)	Date

CONTRACT CHANGE ORDER

Change Requested by: Engineer

CCO: 156 **Suppl. No. 1** **Contract No. 04 - 012024** **Road** 04-SF,Ala-80-13.9/14.3,0.0/1.6 **FED. AID LOC.:** ACIM-080-1(085)8N

To: **KIEWIT / FCI / MANSON a JV**

You are directed to make the following changes from the plans and specifications or do the following described work not included in the plans and specifications for this contract. ***NOTE: This change order is not effective until approved by the Engineer.***

Description of work to be done, estimate of quantities and prices to be paid. (Segregate between additional work at contract price, agreed price and force account.) Unless otherwise stated, rates for rental of equipment cover only such time as equipment is actually used and no allowance will be made for idle time. This last percentage shown is the net accumulated increase or decrease from the original

Adjustment of Compensation at Lump Sum:

Fabricate the Modular Joint Seal Assemblies joint BW, BE, CW, CE, DW, and DE as shown on revised detail sheets 1 through 27 (pages 3 through 29 of this change order) and material sheet (page 30 of this change order). For the joint seal assemblies at hinge location DE, DW, and BE waive section "B" of paragraph 9, of subsection "Proof Testing" of the Special Provisions Section 10-1.33 "Modular Joint Seal Assemblies". Perform additional Proof Testing to comply with "Fit for Purpose" approval criteria as specified by the Engineer and described below for the Modular joint seal assemblies at hinge locations DE, DW, and BE. No further dynamic testing of the prototype assembly will be required as a result of the added proof testing procedures and parameters.

As specified by the Engineer, perform revised proof testing for 7- cell modular joint seal assembly DE and DW as follows:
Test 1, run proof test criteria 2 of the special provisions
Test 2, run proof test criteria 3 of the special provisions
Test 3, run proof test criteria 1 of the special provisions
Test 4, start joint at mid-opening position (use 50 mm spacers) - run test of 5.5 cycles of +/- 100 mm with speed of 5mm/sec
Test 5, start joint at mid-opening position (use 25 mm spacers) - run test of 5.5 cycles of +/- 100 mm with speed of 5mm/sec
Test 6, start joint at mid-opening position (use 50 mm spacers) - run test of 25.5 cycles of +/- 100 mm with speed of 25mm/sec
Test 7, start joint at mid-opening position (use 50 mm spacers) - run test of +/- 4.5 cycles of +/- 165 mm with speed of 50mm/sec

As specified by the Engineer, perform revised proof testing for 13 - cell modular joint seal assembly BE as follows:
Test 1, run proof test criteria 2 of the special provisions
Test 2, run proof test criteria 3 of the special provisions
Test 3, run proof test criteria 1 of the special provisions
Test 4, start joint at mid-opening position (use 50 mm spacers) - run test of 5.5 cycles of +/- 200 mm with speed of 5mm/sec
Test 5, start joint at mid-opening position (use 25 mm spacers) - run test of 5.5 cycles of +/- 200 mm with speed of 5mm/sec
Test 6, start joint at mid-opening position (use 50 mm spacers) - run test of 5.5 cycles of +/- 610 mm with speed of 25mm/sec
Test 7, start joint at mid-opening position (use 50 mm spacers) - run test of 18.5 cycles of +/- 200 mm with speed of 25mm/sec
Test 8, start joint at mid-opening position (use 50 mm spacers) - run test of +/- 2.5 cycles of +/- 200 mm with speed of 50mm/sec

Full compensation for all costs, including markups, all direct and indirect costs, all associated project impacts, and all overhead costs are included in the lump sum payment of CCO No. 200 and no further payment will be made as a result of this CCO.

CONTRACT CHANGE ORDER

Change Requested by: Engineer

CCO: 156 Suppl. No. 1 Contract No. 04 - 012024 Road 04-SF,Ala-80-13.9/14.3,0.0/1.6 FED. AID LOC.: ACIM-080-1(085)8N

Estimated Cost: Increase ☐ Decrease ☐

By reason of this order the time of completion will be adjusted as follows: 0 days

Submitted by

Signature	Resident Engineer: DOUG COE, Supervising Br. Eng.	Date 8-24-06

Approval Recommended by

Signature	Construction Engineer: DOUG COE, Supervising Br. Eng.	Date 8-24-06

Engineer Approval by

Signature	(Print name and title) PETER SIEGENTHALER - Chief	Date

We the undersigned contractor, have given careful consideration to the change proposed and agree, if this proposal is approved, that we will provide all equipment, furnish the materials, except as may otherwise be noted above, and perform all services necessary for the work above specified, and will accept as full payment therefor the prices shown above.

NOTE: If you, the contractor, do not sign acceptance of this order, your attention is directed to the requirements of the specifications as to proceeding with the ordered work and filing a written protest within the time therein specified.

Contractor Acceptance by

Signature	(Print name and title) Lee Zink, Project Director	Date 9/5/06

STATE OF CALIFORNIA - DEPARTMENT OF TRANSPORTATION

CONTRACT CHANGE ORDER MEMORANDUM

TO: PETER SIEGENTHALER / DOUG COE, Supervising Br. Eng.

FROM: DOUG COE, Supervising Br. Eng.

FILE: E.A. 04 - 012024
CO-RTE-PM 04-SF,Ala-80-13.9/14.3,0.0/1.6
FED. NO. ACIM-080-1(085)8N

CCO# **156** SUPPLEMENT#: **1** Category Cod **CXSA**

CONTINGENCY BALANCE (incl. this change

COST: INCREASE ☐ DECREASE ☐

HEADQUARTERS APPROVAL REQUIRED? ☑ YES ☐ NO

SUPPLEMENTAL FUNDS PROVIDED: **$0.00**

IS THIS REQUEST IN ACCORDANCE WITH ENVIRONMENTAL DOCUMENTS? ☑ YES ☐ NO

CCO DESCRIPTION:
Modular Joint Specification Change

PROJECT DESCRIPTION:
REPLACE SFOBB EAST SPAN

LOCATION: IN SAN FRANCISCO AND ALAMEDA COUNTIES IN SAN FRANCISCO AND OAKLAND FROM 1.3 KM EAST OF THE YERBA BUENA ISL

THIS CHANGE ORDER PROVIDES FOR:

fabricating of the Modular Joint Seal Assemblies joint BW, BE, CW, CE, DW, and DE as shown on revised detail sheets 1 through 27 (pages 3 through 29 of the change order) and material sheet (page 30 of this change order). For the joint seal assemblies at hinge location DE, DW, and BE, waive section "B" of paragraph 9, of subsection "Proof Testing" of the Special Provisions Section 10-1.33 "Modular Joint Seal Assemblies". Perform additional Proof Testing to comply with "Fit for Purpose" approval criteria as specified by the Engineer for the Modular joint seal assemblies at hinge locations DE, DW, and BE. No further dynamic testing of the prototype assembly will be required as a result of the added proof testing procedures and parameters.

Section 10-1.33 "Modular Joint Seal Assemblies" of the Special Provisions requires D. S. Brown, the sole source supplier, of the system to complete a series of tests on the system components. For modular joints DE, DW, and BE, D. S. Brown was unable to pass the test prescribed in the Special Provisions Section 10-1.33 "Modular Joint Seal Assemblies", subsection "Proof Testing", paragraph 9, section "B", "The ratio of the largest to the smallest cell size measured at end of Test No. 2 and Test No. 3 shall be less than 1.15.". The Engineer waived the requirements of this test and provided additional test protocol based on a determination of "fit for purpose". Without waiving this theoretical test requirement, the modular joints could not be accepted and therefore could not be installed under this contract. Additionally, in order to create a more symmetric structure, the cross beams are re-oriented into a V-shape or Chevron pattern as shown on the revised detail sheets.

The revised acceptance criteria for proof testing protocol for the 7- cell modular joint seal assembly DE and DW will be as follows:
Test 1, run proof test criteria 2 of the special provisions
Test 2, run proof test criteria 3 of the special provisions
Test 3, run proof test criteria 1 of the special provisions
Test 4, start joint at mid-opening position (use 50mm spacers) - run test of 5.5 cycles of +/- 100 mm with speed of 5mm/sec
Test 5, start joint at mid-opening position (use 25mm spacers) - run test of 5.5 cycles of +/- 100 mm with speed of 5mm/sec
Test 6, start joint at mid-opening position (use 50mm spacers) - run test of 25.5 cycles of +/- 100 mm with speed of 25mm/sec
Test 7, start joint at mid-opening position (use 50mm spacers) - run test of +/- 4.5 cycles of +/- 165 mm with speed of 50mm/sec

The revised acceptance criteria for proof testing protocol for the 13 - cell modular joint seal assembly BE will be as follows:
Test 1, run proof test criteria 2 of the special provisions
Test 2, run proof test criteria 3 of the special provisions
Test 3, run proof test criteria 1 of the special provisions
Test 4, start joint at mid-opening position (use 50mm spacers) - run test of 5.5 cycles of +/- 200 mm with speed of 5mm/sec
Test 5, start joint at mid-opening position (use 25mm spacers) - run test of 5.5 cycles of +/- 200 mm with speed of 5mm/sec
Test 6, start joint at mid-opening position (use 50mm spacers) - run test of 5.5 cycles of +/- 610 mm with speed of 25mm/sec
Test 7, start joint at mid-opening position (use 50mm spacers) - run test of 18.5 cycles of +/- 200 mm with speed of 25mm/sec
Test 8, start joint at mid-opening position (use 50mm spacers) - run test of +/- 2.5 cycles of +/- 200 mm with speed of 50mm/sec

The agreed credit for this contract change order is included in the lump sum compensation portion of resolution CCO No. 200. This change order provides to the State an agreed lump sum credit of $15,000.00.

A detailed force account analysis prepared by the Engineer for the cost of this change order is on file in the project records.

Mr. Pete Siegenthaler, SFOBB Construction Manager, Toll Bridge Construction, concurs with this change. A copy of the concurrence signed Mr. Siegenthaler on July 25, 2006 is attached.

The designer of record T.Y. LIN/MOFFATT & NICHOL a JV and the Division of Engineering Services (DES), Modular Joint Bearing specialist, Tim Delis, concur with this approach. A copy of the concurrence is attached.

Maintenance concurrence was obtained from Mr. Allan Chow, Senior Bridge Engineer, on August 2, 2006. A copy of the concurrence received from Mr. Chow is attached.

Prior Approval was obtained from Ms. Nancy Bobb, FHWA Bay Bridge Project Manager, via electronic message on August 8, 2006. A printed copy of the prior approval provided by Ms. Bobb is attached.

Jon Tapping, Acting SFOBB Toll Bridge Project Manager, provided concurrence on August 3, 2006. A copy of the concurrence provided by Mr. Tapping is attached.

No time adjustment is warranted for this change as it does not affect the controlling operation.

CONCURRED BY:

Construction Engineer:	Douglas Coe	Date 8-24-06
Bridge Engineer:	Douglas Coe	Date 8-24-06
FHWA Representative:	Nancy Bobb	Date 8/8/2006
Project Engineer:		Date
Other (specify): Jon Tapping, acting SFOBB Project Manager		Date 8/3/2006
		Date
		Date
District Prior Approval By:		Date
HQ (Issue Approve) By:	Ken Darby	Date
Resident Engineer's Signature:		Date 8-24-06

ESTIMATE OF COST

	THIS REQUEST	TOTAL TO DATE
ITEMS	$0.00	$0.00
FORCE ACCOUNT	$0.00	$0.00
AGREED PRICE	$0.00	$0.00
ADJUSTMENT		
TOTAL		

FEDERAL PARTICIPATION

☑ PARTICIPATING ☐ PARTICIPATING IN PART ☐ NONE
☐ NON-PARTICIPATING (MAINTENANCE) ☐ NON-PARTICIPATING

FEDERAL SEGREGATION (if more than one Funding Source or P.I.P. type)
☑ CCO FUNDED PER CONTRACT ☐ CCO FUNDED AS FOLLOWS

FEDERAL FUNDING SOURCE	PERCENT

CONTRACT CHANGE ORDER

Change Requested by: Engineer

CCO: 156	Suppl. No. 2	Contract No. 04 - 012024	Road 04-SF,Ala-80-13.9/14.3,0.0/1.6	FED. AID LOC.: ACIM-080-1(085)8N

To: **KIEWIT / FCI / MANSON a JV**

You are directed to make the following changes from the plans and specifications or do the following described work not included in the plans and specifications for this contract. ***NOTE: This change order is not effective until approved by the Engineer.***

Description of work to be done, estimate of quantities and prices to be paid. (Segregate between additional work at contract price, agreed price and force account.) Unless otherwise stated, rates for rental of equipment cover only such time as equipment is actually used and no allowance will be made for idle time. This last percentage shown is the net accumulated increase or decrease from the original

Adjustment of Compensation at Lump Sum:

For the joint seal assembly at hinge location CE, CW, and BW, waive section "B" of paragraph 9, of subsection "Proof Testing" of the Special Provisions Section 10-1.33 "Modular Joint Seal Assemblies". Perform additional Proof Testing to comply with the "Fit for Purpose" approval criteria as specified by the Engineer and described below for the Modular joint seal assembly at hinge location CE, CW, and BW. Further dynamic testing of the prototype assembly will not be required as a result of the added proof testing procedures and parameters.

As specified by the Engineer, perform revised proof testing for 12 - cell modular joint seal assembly CE and CW as follows:
Test 1, run proof test criteria 2 of the special provisions
Test 2, run proof test criteria 3 of the special provisions
Test 3, run proof test criteria 1 of the special provisions
Test 4, start joint at mid-opening position (use 50 mm spacers) - run test of 5.5 cycles of +/- 200 mm with speed of 5mm/sec
Test 5, start joint at mid-opening position (use 25 mm spacers) - run test of 5.5 cycles of +/- 200 mm with speed of 5mm/sec
Test 6, start joint at mid-opening position (use 50 mm spacers) - run test of 5.5 cycles of +/- 525 mm with speed of 25mm/sec
Test 7, start joint at mid-opening position (use 50 mm spacers) - run test of 17.5 cycles of +/- 200 mm with speed of 25mm/sec
Test 8, start joint at mid-opening position (use 50 mm spacers) - run test of +/- 3.5 cycles of +/- 200 mm with speed of 50mm/sec

As specified by the Engineer, perform revised proof testing for 13 - cell modular joint seal assembly BW as follows:
Test 1, run proof test criteria 2 of the special provisions
Test 2, run proof test criteria 3 of the special provisions
Test 3, run proof test criteria 1 of the special provisions
Test 4, start joint at mid-opening position (use 50 mm spacers) - run test of 5.5 cycles of +/- 200 mm with speed of 5mm/sec
Test 5, start joint at mid-opening position (use 25 mm spacers) - run test of 5.5 cycles of +/- 200 mm with speed of 5mm/sec
Test 6, start joint at mid-opening position (use 50 mm spacers) - run test of 5.5 cycles of +/- 425 mm with speed of 25mm/sec
Test 7, start joint at mid-opening position (use 50 mm spacers) - run test of 18.5 cycles of +/- 200 mm with speed of 25mm/sec
Test 8, start joint at mid-opening position (use 50 mm spacers) - run test of +/- 2.5 cycles of +/- 200 mm with speed of 50mm/sec

For this change the Contractor agrees to credit the State an agreed lump sum amount of $15,000.00. This agreed lump sum constitutes full compensation for all direct and indirect costs, and all associated project impacts.

Adjustment of Compensation at Agreed Lump Sum .....($15,000.00) (Credit)

CONTRACT CHANGE ORDER

Change Requested by: Engineer

CCO: 156	Suppl. No. 2	Contract No. 04 - 012024	Road 04-SF,Ala-80-13.9/14.3,0.0/1.6	FED. AID LOC.: ACIM-080-1(085)8N

Estimated Cost: Increase ☐ Decrease ☑ ($15,000.00)

By reason of this order the time of completion will be adjusted as follows: 0 days

Submitted by

Signature	Resident Engineer	Date
Kam Bala	for DOUG COE, Supervising Br. Eng.	7-20-07

Approval Recommended by

Signature	Construction Engineer	Date
for Doug Coe	DOUG COE	7/20/07

Engineer Approval by

Signature	Construction Manager	Date
P Siegenthaler	PETER SIEGENTHALER	9/24/07

We the undersigned contractor, have given careful consideration to the change proposed and agree, if this proposal is approved, that we will provide all equipment, furnish the materials, except as may otherwise be noted above, and perform all services necessary for the work above specified, and will accept as full payment therefor the prices shown above.

NOTE: If you, the contractor, do not sign acceptance of this order, your attention is directed to the requirements of the specifications as to proceeding with the ordered work and filing a written protest within the time therein specified.

Contractor Acceptance by

Signature	(Print name and title)	Date
	Lee Zink Project Director	9/4/07

STATE OF CALIFORNIA - DEPARTMENT OF TRANSPORTATION

CONTRACT CHANGE ORDER MEMORANDUM

TO: PETER SIEGENTHALER / DOUG COE, Supervising Br. Eng.	FILE: E.A. 04 - 012024
	CO-RTE-PM 04-SF,Ala-80-13.9/14.3,0.0/1.6
FROM: DOUG COE, Supervising Br. Eng.	FED. NO. ACIM-080-1(085)8N
CCO# 156 SUPPLEMENT#: 2 Category Cod CXSA	CONTINGENCY BALANCE (incl. this change $5,729,409.61
COST: ($15,000.00) INCREASE ☐ DECREASE ☑	HEADQUARTERS APPROVAL REQUIRED? ☑ YES ☐ NO
SUPPLEMENTAL FUNDS PROVIDED: $0.00	IS THIS REQUEST IN ACCORDANCE WITH ENVIRONMENTAL DOCUMENTS? ☑ YES ☐ NO
CCO DESCRIPTION: Modular Joint CE, CW and BW Spec. Change	**PROJECT DESCRIPTION:** REPLACE SFOBB EAST SPAN

Original Contract Time:	Time Adj. This Change:	Previously Approved CCO Time Adjustments:	Percentage Time Adjusted: (including this change)	Total # of Unreconciled Deferred Time CCO(s): (including this change)
1000 Day(s)	0 Day(s)	424 Day(s)	42 %	0

THIS CHANGE ORDER PROVIDES FOR:

waiving section "B" of paragraph 9, of subsection "Proof Testing" of the Special Provisions Section 10-1.33 "Modular Joint Seal Assemblies" for Modular joint CE, CW, and BW. Performing additional Proof Testing to comply with the "Fit for Purpose" approval criteria as specified by the Engineer for the Modular joint seal assembly at hinge location CE and CW. No further dynamic testing of the prototype assembly will be required as a result of the added proof testing procedures and parameters.

Section 10-1.33 "Modular Joint Seal Assemblies" of the Special Provisions requires D. S. Brown, the sole source supplier of the system, to complete a series of tests on the system components. (Similar to the modular joints in Contract Change Order No. 156 Supplement 1, but this time for modular joints CE, CW, and BW) D. S. Brown was unable to pass the test prescribed in Section 10-1.33 "Modular Joint Seal Assemblies", subsection "Proof Testing", paragraph 9, section "B", "The ratio of the largest to the smallest cell size measured at end of Test No. 2 and Test No. 3 shall be less than 1.15," of the Special Provisions. The Engineer waived the requirements of this test and provided additional test protocol based on a determination of "Fit for Purpose." Without waiving this theoretical test requirement, the modular joints could not be accepted and therefore could not be installed under this contract.

The revised acceptance criteria for proof testing protocol for the 12 - cell modular joint seal assembly CE and CW will be as follows:
Test 1, run proof test criteria 2 of the special provisions
Test 2, run proof test criteria 3 of the special provisions
Test 3, run proof test criteria 1 of the special provisions
Test 4, start joint at mid-opening position (use 50mm spacers) - run test of 5.5 cycles of +/- 200 mm with speed of 5mm/sec
Test 5, start joint at mid-opening position (use 25mm spacers) - run test of 5.5 cycles of +/- 200 mm with speed of 5mm/sec
Test 6, start joint at mid-opening position (use 50mm spacers) - run test of 5.5 cycles of +/- 525 mm with speed of 25mm/sec
Test 7, start joint at mid-opening position (use 50mm spacers) - run test of 17.5 cycles of +/- 200 mm with speed of 25mm/sec
Test 8, start joint at mid-opening position (use 50mm spacers) - run test of +/- 3.5 cycles of +/- 200 mm with speed of 50mm/sec

The revised acceptance criteria for proof testing protocol for the 13 - cell modular joint seal assembly BW will be as follows:
Test 1, run proof test criteria 2 of the special provisions
Test 2, run proof test criteria 3 of the special provisions
Test 3, run proof test criteria 1 of the special provisions
Test 4, start joint at mid-opening position (use 50mm spacers) - run test of 5.5 cycles of +/- 200 mm with speed of 5mm/sec
Test 5, start joint at mid-opening position (use 25mm spacers) - run test of 5.5 cycles of +/- 200 mm with speed of 5mm/sec
Test 6, start joint at mid-opening position (use 50mm spacers) - run test of 5.5 cycles of +/- 425 mm with speed of 25mm/sec
Test 7, start joint at mid-opening position (use 50mm spacers) - run test of 18.5 cycles of +/- 200 mm with speed of 25mm/sec
Test 8, start joint at mid-opening position (use 50mm spacers) - run test of +/- 2.5 cycles of +/- 200 mm with speed of 50mm/sec

This contract change order provides an agreed lump sum credit to the State of $15,000.00.

ADA Notice: For individuals with sensory disabilities, this document is available in alternate formats. For information call: (916) 654-6410 or TDD (916) 654-3880 or write Records and Forms Management, 1120 N Street, MS-89, Sacramento, CA 95814.

A detailed force account analysis prepared by the Engineer for the credit of this change order is on file in the project records.

Mr. Pete Siegenthaler, SFOBB Construction Manager, Toll Bridge Construction, concurs with this change. A copy of the concurrence signed Mr. Siegenthaler on April 20, 2007 is attached.

The designer of record T.Y. LIN/MOFFATT & NICHOL a JV and the Division of Engineering Services (DES), Modular Joint Bearing specialist, Tim Delis, concur with this approach. A copy of the concurrence is attached.

Concurrence from Maintenance was obtained from Mr. Bill Zanetich, Structure Maintenance and Investigation, on July 19, 2007. A copy of the concurrence provided by Maintenance is attached.

Prior Approval was obtained from Ms. Nancy Bobb, FHWA Bay Bridge Project Manager, via electronic message on June 29, 2007. A printed copy of the prior approval provided by Ms. Bobb is attached.

Ken Terpstra, SFOBB Toll Bridge Project Manager, provided concurrence on June 7, 2007. A copy of the concurrence provided by Mr. Terpstra is attached.

No time adjustment is warranted for this change as it does not affect the controlling operation.

CONCURRED BY:			
Construction Engineer:	Douglas Coe		Date 7-20-07
Bridge Engineer:	Douglas Coe	KB	Date 7-20-07
Project Engineer:	F. Delis		Date 7/28/07
Project Manager:	Ken Terpstra		Date 6/7/07
FHWA Rep.:	Nancy Bobb		Date 6/29/07
Environmental:			Date
Other (specify):	Tim Delis		Date 5/8/07
Other (specify):	Bill Zanetich		Date 7/19/07
District Prior Approval By:			Date
HQ (Issue Approve) By:	Ken Darby		Date
Resident Engineer's Signature:	Kame Bula for Doug Coe		Date 7-20-07

ESTIMATE OF COST	THIS REQUEST	TOTAL TO DATE
ITEMS	$0.00	$0.00
FORCE ACCOUNT	$0.00	$0.00
AGREED PRICE	$0.00	$0.00
ADJUSTMENT	($15,000.00)	($25,000.00)
TOTAL	($15,000.00)	($25,000.00)

FEDERAL PARTICIPATION

☑ PARTICIPATING ☐ PARTICIPATING IN PART ☐ NONE
☐ NON-PARTICIPATING (MAINTENANCE) ☐ NON-PARTICIPATING

FEDERAL SEGREGATION (If more than one Funding Source or P.I.P. type)
☑ CCO FUNDED PER CONTRACT ☐ CCO FUNDED AS FOLLOWS

FEDERAL FUNDING SOURCE	PERCENT

ADA Notice: For individuals with sensory disabilities, this document is available in alternate formats. For information call: (916) 654-6410 or TDD (916) 654-3880 or write Records and Forms Management, 1120 N Street, MS-89, Sacramento, CA 95814.

STATE OF CALIFORNIA - DEPARTMENT OF TRANSPORTATION

CONTRACT CHANGE ORDER MEMORANDUM

TO: PETER SIEGENTHALER / DOUG COE, Supervising Br. Eng.	FILE: **E.A.** 04 - 012024
FROM: DOUG COE, Supervising Br. Eng.	**CO-RTE-PM** 04-SF,Ala-80-13.9/14.3,0.0/1.6
	FED. NO. ACIM-080-1(085)8N
CCO#: **157** SUPPLEMENT#: **0** Category Code: **CHPA**	CONTINGENCY BALANCE (incl. this change) **$57,199,298.68**
COST: **$338,675.00** INCREASE ☑ DECREASE ☐	HEADQUARTERS APPROVAL REQUIRED? ☑ YES ☐ NO
SUPPLEMENTAL FUNDS PROVIDED: **$0.00**	IS THIS REQUEST IN ACCORDANCE WITH ENVIRONMENTAL DOCUMENTS? ☑ YES ☐ NO
CCO DESCRIPTION: Circular Segmented Bearing Revisions	**PROJECT DESCRIPTION:** REPLACE SFOBB EAST SPAN

LOCATION: IN SAN FRANCISCO AND ALAMEDA COUNTIES IN SAN FRANCISCO AND OAKLAND FROM 1.3 KM EAST OF THE YERBA BUENA ISL

THIS CHANGE ORDER PROVIDES FOR:

modifying the circular segmented bearing details for Hinges B, C, D, and E by revising the masonry plate dimensions, the stud spacing around the hinge pipe beam, and adding a "Drill and Tap Detail" for the connection of the masonry plate to the steel anchor plates.

The revised contract plan sheets reflecting this change are 789R2, 811R3, 833R2, 879R2, 880R2, 881R2, 882R1, 883R3, and 884R2 of 978.

The width of the hinge diaphragms was increased in order to relieve the congestion and conflicts between the bar reinforcing steel and the post tensioning ducts in the hinge segments. These changes are reflected in the composite drawings produced as a result of the Mission Control Construction Resolution Sessions addressing this issue. This change order is needed so that the circular segmented bearing details will be consistent with the increased hinge diaphragm width. In addition, the "Drill and Tap Detail" for the connections of the masonry plate to the steel anchor plates is being added as an option at locations where access for the installation of high strength bolts is limited.

The work of this change order was initially included with Contract Change Order No. 55. Headquarters provided authorization to proceed (ATP) with Change Order No. 55 on September 4, 2003. The portion of Contract Change Order No. 55 that is associated with fabricating the circular segmented hinge bearings in accordance with the revised contract plans has been agreed on between both the Engineer and the Contractor; however, all other issues remain unresolved. The Engineer recommends separating out the work involving the fabrication of the circular segmented hinge bearings in order to compensate the Contractor for the work that has been agreed on, while resolution of all other Contract Change Order No. 55 issues remain pending. The Contractor agrees with the Engineer's recommendation.

Therefore, the Contractor agrees to accept a lump sum amount of $338,675.00 for fabricating the hinge bearings in accordance with the revised contract plans. The method of payment will be Adjustment of Compensation at Agreed Lump Sum. This additional project cost can be financed from the contingency funds provided for this contract. The Contractor submitted a detailed analysis supporting the cost for this change. The Engineer has verified that these costs are fair and reasonable for the work associated with this change, and has placed a copy of these costs in the project file.

Janet Adams, SFOBB Toll Bridge Project Manager, provided concurrence on May 2, 2005. A copy of the concurrence provided by Ms. Adams is attached.

Mr. Pete Siegenthaler, Principal Bridge Engineer for the SFOBB East Span Replacement, concurs with this change. A copy of the concurrence signed by Mr. Siegenthaler is attached.

Prior Approval was obtained from Ms. Nancy Bobb, FHWA Bay Bridge Project Manager, via electronic message on April 14, 2005. A printed copy of the prior approval provided by Ms. Bobb is attached.

Design concurrence is provided by Mr. Hasan El-Natur on November 21, 2003, as indicated by the signature on the revised contract plan sheets.

Maintenance concurrence is not required as this change does not modify the original design intent.

No time adjustment is warranted for this change as it does not affect the controlling operation.

CONCURRED BY:		
Construction Engineer:	Douglas Coe	Date 5-2-05
Bridge Engineer:	Douglas Coe	Date 5-2-05
FHWA Representative:	Nancy Bobb	Date 4/14/2005
Project Engineer:		Date
Other (specify): Hasan El-Natur		Date 1/21/2003
Janet Adams		Date 5/2/2005
		Date
District Prior Approval By:		Date
HQ (Issue Approve) By:		Date
Resident Engineer's Signature:		Date 5-2-05

ESTIMATE OF COST

	THIS REQUEST	TOTAL TO DATE
ITEMS	$0.00	$0.00
FORCE ACCOUNT	$0.00	$0.00
AGREED PRICE	$0.00	$0.00
ADJUSTMENT	$338,675.00	$338,675.00
TOTAL	$338,675.00	$338,675.00

FEDERAL PARTICIPATION

☑ PARTICIPATING ☐ PARTICIPATING IN PART ☐ NONE
☐ NON-PARTICIPATING (MAINTENANCE) ☐ NON-PARTICIPATING

FEDERAL SEGREGATION (if more than one Funding Source or P.I.P. type)
☑ CCO FUNDED PER CONTRACT ☐ CCO FUNDED AS FOLLOWS

FEDERAL FUNDING SOURCE	PERCENT

CONTRACT CHANGE ORDER

Change Requested by: Engineer

CCO: 157	Suppl. No. 1	Contract No. 04 - 012024	Road 04-SF,Ala-80-13.9/14.3,0.0/1.6	FED. AID LOC.: ACIM-080-1(085)8N

To: **KIEWIT / FCI / MANSON a JV**

You are directed to make the following changes from the plans and specifications or do the following described work not included in the plans and specifications for this contract. ***NOTE: This change order is not effective until approved by the Engineer.***

Description of work to be done, estimate of quantities and prices to be paid. (Segregate between additional work at contract price, agreed price and force account.) Unless otherwise stated, rates for rental of equipment cover only such time as equipment is actually used and no allowance will be made for idle time. This last percentage shown is the net accumulated increase or decrease from the original quantity in the Engineer's Estimate.

Adjustment of Compensation at Lump Sum:

Fabricate the circular segmented bearings for Hinge A in accordance with revised contract plan sheet numbers 882R1, 883R3, and 884R2 of 978 as provided on sheets 8 through 10 of Contract Change Order No. 157, Supplement No. 0, "Circular Segmented Bearing Revisions," executed on May 11, 2005. Also, furnish additional beveled washer plates for the Circular Segmented Bearings at Hinge A (Transition Span Structure) as indicated on sheets 2 through 5 of this change order for the East Span Skyway, Bridge Nos. 34-0006L/R.

For this work, the Contractor shall be paid an agreed lump sum amount of $30,558.00. This agreed lump sum constitutes full compensation for all costs, including markups, all direct and indirect costs, all associated project impacts, all overhead costs, and all risks associated with this change.

Adjustment of Compensation at Agreed Lump Sum $30,558.00

Estimated Cost: Increase ☑ **Decrease** ☐ **$30,558.00**

By reason of this order the time of completion will be adjusted as follows: 0 days

Submitted by

Signature	Resident Engineer: DOUG COE, Supervising Br. Eng.	Date 10-28-05

Approval Recommended by

Signature	Construction Engineer: DOUG COE, Supervising Br. Eng.	Date 10-28-05

Engineer Approval by

Signature	(Print name and title) PETER SIEGENTHALER - Chief	Date

We the undersigned contractor, have given careful consideration to the change proposed and agree, if this proposal is approved, that we will provide all equipment, furnish the materials, except as may otherwise be noted above, and perform all services necessary for the work above specified, and will accept as full payment therefor the prices shown above.

NOTE: If you, the contractor, do not sign acceptance of this order, your attention is directed to the requirements of the specifications as to proceeding with the ordered work and filing a written protest within the time therein specified.

Contractor Acceptance by

Signature	(Print name and title)	Date

CONTRACT CHANGE ORDER

Change Requested by: Engineer

CCO 158	Suppl. No. 0	Contract No. 04 - 012024	Road 04-SF,Ala-80-13.9/14.3,0.0/1.6	FED. AID LOC.: ACIM-080-1(085)8N

To: **KIEWIT / FCI / MANSON a JV**

You are directed to make the following changes from the plans and specifications or do the following described work not included in the plans and specifications for this contract. ***NOTE: This change order is not effective until approved by the Engineer.***

Description of work to be done, estimate of quantities and prices to be paid. (Segregate between additional work at contract price, agreed price and force account.) Unless otherwise stated, rates for rental of equipment cover only such time as equipment is actually used and no allowance will be made for idle time. This last percentage shown is the net accumulated increase or decrease from the original quantity in the Engineer's Estimate.

The second paragraph of Section 86-2.09B, "Installation" under Section 86-2.09, "Wiring," of the July 1999 Standard Specifications, is revised to read:

"The Contractor shall hand-pull or motor-pull the conductors. Prior to installation of the motor-pulled conductors, the Contractor shall test the conductors in accordance with Section 10-3.08 "Conductors," of the Special Provisions. The Contractor shall submit the manufacturer's recommended procedures for pulling conductors to the Engineer for review and approval at least 20 days prior to installing the conductors. Mechanical aids may be used to assist the conductor installation. A tension measuring device or breakaway swivel shall be placed between the end of the conductor grip and pull rope, to ensure that the tension does not exceed 100 percent of recommended tension. The conductor grips shall have a ball bearing swivel to prevent the conductors from twisting during installation."

Adjustment of Compensation at Lump Sum:

There shall be no cost to the State by reason of this change. This agreement constitutes complete consideration, including all associated project impacts, all overhead costs, and any and all risks.

Adjustment of Compensation at Lump Sum $0.00

RECEIVED 046329 DEC-28

Estimated Cost: **Increase** ☐ **Decrease** ☐ **$0.00**

By reason of this order the time of completion will be adjusted as follows: 0 days

Submitted by

Signature	Resident Engineer: DOUG COE, Supervising Br. Eng.	Date 11-10-05

Approval Recommended by

Signature	Construction Engineer: DOUG COE, Supervising Br. Eng.	Date 11-10-05

Engineer Approval by

Signature	(Print name and title) PETER SIEGENTHALER - Chief	Date 11-12-05

We the undersigned contractor, have given careful consideration to the change proposed and agree, if this proposal is approved, that we will provide all equipment, furnish the materials, except as may otherwise be noted above, and perform all services necessary for the work above specified, and will accept as full payment therefor the prices shown above.

NOTE: If you, the contractor, do not sign acceptance of this order, your attention is directed to the requirements of the specifications as to proceeding with the ordered work and filing a written protest within the time therein specified.

Contractor Acceptance by

Signature	(Print name and title) Lee Zink Project Director	Date 11/15/05

STATE OF CALIFORNIA - DEPARTMENT OF TRANSPORTATION

CONTRACT CHANGE ORDER MEMORANDUM

TO: PETER SIEGENTHALER / DOUG COE, Supervising Br. Eng.	FILE: E.A. 04 - 012024
FROM: DOUG COE, Supervising Br. Eng.	CO-RTE-PM 04-SF,Ala-80-13.9/14.3,0.0/1.6
	FED. NO. ACIM-080-1(085)8N
CCO#: 158 SUPPLEMENT#: 0 Category Code: CBSB	CONTINGENCY BALANCE (incl. this change) $28,124,411.34
COST: $0.00 INCREASE ☐ DECREASE ☐	HEADQUARTERS APPROVAL REQUIRED? ☑ YES ☐ NO
SUPPLEMENTAL FUNDS PROVIDED: $0.00	IS THIS REQUEST IN ACCORDANCE WITH ENVIRONMENTAL DOCUMENTS? ☑ YES ☐ NO
CCO DESCRIPTION: Elec Spec Change to pull 15kV cable	**PROJECT DESCRIPTION:** REPLACE SFOBB EAST SPAN

LOCATION: IN SAN FRANCISCO AND ALAMEDA COUNTIES IN SAN FRANCISCO AND OAKLAND FROM 1.3 KM EAST OF THE YERBA BUENA ISL

THIS CHANGE ORDER PROVIDES FOR:

modifying Section 86-2.09B, "Installation" under Section 86-2.09, "Wiring," of the July 1999 Standard Specifications to allow the use of mechanical equipment to pull conductors into conduit during cable installation.

The size and weight of the 600V and 50 pair TOS/COM conductors make it impossible to pull the cables by hand as required in the standard specifications. This change order allows the use of a mechanical procedure for cable installation in compliance of pull tension requirement by the cable manufacturer.

There shall be no cost to the State by reason of this change.

Prior approval was obtained from Pete Siegenthaler on July 25, 2005.

Design concurrence was obtained from Parviz Boozarpour on August 18, 2005.

FHWA concurrence was received from Nancy Bobb on August 24, 2005.

Authorization to proceed with this change order was issued by Division of Construction on August 30, 2005.

Concurrence from Maintenance is not required, as this change order does not affect maintenance facilities or operations.

No time adjustment is warranted for this change, as it does not affect the controlling operation.

CONCURRED BY:

Construction Engineer:	Douglas Coe	Date 10-14-05
Bridge Engineer:	Douglas Coe	Date 10-14-05
FHWA Representative:	Nancy Bobb	Date 8/24/2005
Project Engineer:		Date
Other (specify): James Gilliam, DES-OE/PS&E/Electrical		Date 6/13/2005
Parviz Boozarpour, D-4 Elec. Design		Date 8/18/2005
		Date
District Prior Approval By:		Date
HQ (Issue Approve) By:	Bob Molera	Date 8/30/2005
Resident Engineer's Signature:		Date 10-14-05

ESTIMATE OF COST

	THIS REQUEST	TOTAL TO DATE
ITEMS	$0.00	$0.00
FORCE ACCOUNT	$0.00	$0.00
AGREED PRICE	$0.00	$0.00
ADJUSTMENT	$0.00	$0.00
TOTAL	$0.00	$0.00

FEDERAL PARTICIPATION

☑ PARTICIPATING ☐ PARTICIPATING IN PART ☐ NONE
☐ NON-PARTICIPATING (MAINTENANCE) ☐ NON-PARTICIPATING

FEDERAL SEGREGATION (if more than one Funding Source or P.I.P. type)
☑ CCO FUNDED PER CONTRACT ☐ CCO FUNDED AS FOLLOWS

FEDERAL FUNDING SOURCE	PERCENT

CONTRACT CHANGE ORDER

Change Requested by: Engineer

CCO: 159	Suppl. No. 0	Contract No. 04 - 012024	Road 04-SF,Ala-80-13.9/14.3,0.0/1.6	FED. AID LOC.: ACIM-080-1(085)8N

To: **KIEWIT / FCI / MANSON a JV**

You are directed to make the following changes from the plans and specifications or do the following described work not included in the plans and specifications for this contract. ***NOTE: This change order is not effective until approved by the Engineer.***

Description of work to be done, estimate of quantities and prices to be paid. (Segregate between additional work at contract price, agreed price and force account.) Unless otherwise stated, rates for rental of equipment cover only such time as equipment is actually used and no allowance will be made for idle time. This last percentage shown is the net accumulated increase or decrease from the original quantity in the Engineer's Estimate.

Extra Work at Force Account:

As authorized by the Engineer, furnish and install two (2) 600 mm long 13 mm reinforcing bars through the ferrule loops of each PS1 embed at the West bound pier tables for the East Span Skyway, Bridge No. 34-0006L.

Estimated cost of Extra Work at Force Account $10,000.00

Estimated Cost: Increase ☑ Decrease ☐ $10,000.00

By reason of this order the time of completion will be adjusted as follows: 0 days

Submitted by

Signature	Resident Engineer: DOUG COE, Supervising Br. Eng.	Date 7-1-05

Approval Recommended by

Signature	Construction Engineer: DOUG COE, Supervising Br. Eng.	Date 7-1-05

Engineer Approval by

Signature	(Print name and title) for PETER SIEGENTHALER - Chief	Date 8/12/05

We the undersigned contractor, have given careful consideration to the change proposed and agree, if this proposal is approved, that we will provide all equipment, furnish the materials, except as may otherwise be noted above, and perform all services necessary for the work above specified, and will accept as full payment therefor the prices shown above.

NOTE: If you, the contractor, do not sign acceptance of this order, your attention is directed to the requirements of the specifications as to proceeding with the ordered work and filing a written protest within the time therein specified.

Contractor Acceptance by

Signature	(Print name and title) Lee Zink Proj. Director	Date 8/9/05

STATE OF CALIFORNIA - DEPARTMENT OF TRANSPORTATION

CONTRACT CHANGE ORDER MEMORANDUM

TO: PETER SIEGENTHALER / DOUG COE, Supervising Br. Eng.	FILE: **E.A.** 04 - 012024
FROM: DOUG COE, Supervising Br. Eng.	**CO-RTE-PM** 04-SF,Ala-80-13.9/14.3,0.0/1.6
	FED. NO. ACIM-080-1(085)8N
CCO#: **159** SUPPLEMENT#: **0** Category Code: **CXXX**	CONTINGENCY BALANCE (incl. this change) **$61,996,779.57**
COST: **$10,000.00** INCREASE ☑ DECREASE ☐	HEADQUARTERS APPROVAL REQUIRED? ☐ YES ☑ NO
SUPPLEMENTAL FUNDS PROVIDED: **$0.00**	IS THIS REQUEST IN ACCORDANCE WITH ENVIRONMENTAL DOCUMENTS? ☑ YES ☐ NO
CCO DESCRIPTION: Embed Plate and D Tendon Conflict	**PROJECT DESCRIPTION:** REPLACE SFOBB EAST SPAN

LOCATION: IN SAN FRANCISCO AND ALAMEDA COUNTIES IN SAN FRANCISCO AND OAKLAND FROM 1.3 KM EAST OF THE YERBA BUENA ISL

THIS CHANGE ORDER PROVIDES FOR:
installing 600 mm long 13 mm reinforcing bars through the ferrule loops of the PS1 embed at the Westbound pier tables for the East Span Skyway, Bridge No. 34-0006L.

This change order is needed to provide additional bar reinforcing steel to anchor the PS1 embed plates into the concrete and develop the pull out strength of the PS1 embed at all westbound pier tables. The additional bar reinforcing steel is needed due to the interference between the D9 tendon and the ferrule loops of the PS1 embed plate. The D9 tendon runs between the ferrule loops and displaces the concrete necessary to develop the pull out strength of the embed. The additional 13 mm bars will be installed under the D9 tendon and threaded through the ferrule loops, and will be tied to the bar reinforcing steel mat in order to anchor the plate. The Engineer estimates that two (2) 13 mm reinforcing bars per embed plate at eight (8) locations per pier table (a total of 16 reinforcing bars per pier table) will be required.

For this work, the Contractor will be paid at Extra Work At Force Account for an estimated amount of $10,000.00. This additional project cost can be financed from the contingency funds provided for this contract. A detailed cost analysis is in the project file.

Mr. David Salladay, New East Span Skyway District Representative, provided concurrence for this change order on June 15, 2005. A copy of the concurrence signed by Mr. Salladay is attached.

FHWA Prior Approval is not required as this is a minor change order.

Design concurrence was provided on June 30, 2005 by Mr. Michael White, Headquarters SFOBB Mechanical Design support. A copy of the concurrence provided by Mr. White is attached.

Concurrence from Maintenance is not required as this change order does not use maintenance funds or affect maintenance facilities or operations.

No time adjustment is warranted for this change order as it does not affect the controlling operation.

RECEIVED
042021 AUG 16 '05

CONCURRED BY:		
Construction Engineer:	Douglas Coe	Date 7-1-05
Bridge Engineer:	Douglas Coe	Date 7-1-05
FHWA Representative:		Date
Project Engineer:		Date
Other (specify): Michael White		Date6/30/2005
		Date
		Date
District Prior Approval By:	David Salladay	Date6/15/2005
HQ (Issue Approve) By:		Date
Resident Engineer's Signature:		Date 7-1-05

ESTIMATE OF COST

	THIS REQUEST	TOTAL TO DATE
ITEMS	$0.00	$0.00
FORCE ACCOUNT	$10,000.00	$10,000.00
AGREED PRICE	$0.00	$0.00
ADJUSTMENT	$0.00	$0.00
TOTAL	$10,000.00	$10,000.00

FEDERAL PARTICIPATION

☑ PARTICIPATING ☐ PARTICIPATING IN PART ☐ NONE
☐ NON-PARTICIPATING (MAINTENANCE) ☐ NON-PARTICIPATING

FEDERAL SEGREGATION (if more than one Funding Source or P.I.P. type)
☑ CCO FUNDED PER CONTRACT ☐ CCO FUNDED AS FOLLOWS

FEDERAL FUNDING SOURCE	PERCENT

CONTRACT CHANGE ORDER

Change Requested by: Engineer

CCO: 160	Suppl. No. 0	Contract No. 04 - 012024	Road 04-SF,Ala-80-13.9/14.3,0.0/1.6	FED. AID LOC.: ACIM-080-1(085)8N

To: **KIEWIT / FCI / MANSON a JV**

You are directed to make the following changes from the plans and specifications or do the following described work not included in the plans and specifications for this contract. ***NOTE: This change order is not effective until approved by the Engineer.***

Description of work to be done, estimate of quantities and prices to be paid. (Segregate between additional work at contract price, agreed price and force account.) Unless otherwise stated, rates for rental of equipment cover only such time as equipment is actually used and no allowance will be made for idle time. This last percentage shown is the net accumulated increase or decrease from the original quantity in the Engineer's Estimate.

Extra Work at Force Account:

As authorized by the Engineer, incorporate the following procedures for the longitudinal seam welds of specific 100 mm thick hinge pipe beam cans for the SFOBB East Span Skyway, Bridge Nos. 34-0006L/R:

For selected cans that have already been rolled and welded, the following shall be done for repair and re-roll work:

1.) Use a de-burring tool to prepare welds for repairs along the toe. Repairs not along the toe can still be excavated using the air carbon arc method.
2.) Grind the welds smooth and flush with the adjacent base metal prior to re-rolling, including the stress riser sharp edges along the toes of the weld.
3.) Repair welding will not be needed if the excavated depth along the toe is not more than 5 mm. The profile of the removal shall be faired to provide a smooth transition with no sharp edges.
4.) When a toe excavation 5 mm deep or less exists within the area to receive the stainless steel overlay, F7A2 filler metal may be used to fill the excavated area.
5.) An F8A2 classification filler metal shall be used to repair excavations that are deeper that 5 mm.
6.) The procedure qualifications for the new filler metals shall be performed as authorized by the Engineer.
7.) Use a local Post Weld Heat Treatment (PWHT) to stress relieve three (3) selected cans.

For selected cans that have not yet been rolled, the following shall be done:

1.) The plates shall be shot blasted and cleaned of all mill scale before pre-forming or rolling.
2.) The ends of the plates shall be pre-formed using the Contractor's selected rollers.
3.) Replace the wire/flux combination.
   A.) Weld three (3) cans using a wire/flux combination that is classified as an F7A4.
   B.) Weld three (3) cans using a wire/flux combination that is classified as an F8P4/F9A4.
4.) The procedure qualifications for the new filler metals shall be performed as authorized by the Engineer.
5.) Grind the welds smooth and flush with the base metal prior to re-rolling, including the stress riser sharp edges along the toes of the weld.

Also, as authorized by the Engineer, provide labor, material, and equipment to take samples of the work at locations identified by the Engineer, package, and ship the samples to a testing lab identified by the Engineer for metalurgical inspections.

Payment for this work shall be made in accordance with Section 5-1.21, "Force Account Payment," of the Special Provisions, and Section 9-1.03, "Force Account Payment," of the Standard Specifications.

Estimated cost of Extra Work at Force Account $450,000.00

CONTRACT CHANGE ORDER

Change Requested by: Engineer

CCO: 160	Suppl. No. 0	Contract No. 04 - 012024	Road 04-SF,Ala-80-13.9/14.3,0.0/1.6	FED. AID LOC.: ACIM-080-1(085)8N

Estimated Cost: Increase ☑ Decrease ☐ $450,000.00

By reason of this order the time of completion will be adjusted as follows: Deferred

Submitted by

Signature	Resident Engineer: DOUG COE, Supervising Br. Eng.	Date 8-17-05

Approval Recommended by

Signature	Construction Engineer: DOUG COE, Supervising Br. Eng.	Date 8-17-05

Engineer Approval by

Signature P. C. Siegenthaler	(Print name and title) PETER SIEGENTHALER - Chief	Date 9-15-05

We the undersigned contractor, have given careful consideration to the change proposed and agree, if this proposal is approved, that we will provide all equipment, furnish the materials, except as may otherwise be noted above, and perform all services necessary for the work above specified, and will accept as full payment therefor the prices shown above.

NOTE: If you, the contractor, do not sign acceptance of this order, your attention is directed to the requirements of the specifications as to proceeding with the ordered work and filing a written protest within the time therein specified.

Contractor Acceptance by

Signature	(Print name and title) CHRISTOPHER J. VILLA DEPUTY PROJECT DIRECTOR	Date 9-12-05

STATE OF CALIFORNIA - DEPARTMENT OF TRANSPORTATION

CONTRACT CHANGE ORDER MEMORANDUM

TO: PETER SIEGENTHALER / DOUG COE, Supervising Br. Eng.	FILE: E.A. 04 - 012024
FROM: DOUG COE, Supervising Br. Eng.	CO-RTE-PM 04-SF,Ala-80-13.9/14.3,0.0/1.6
	FED. NO. ACIM-080-1(085)8N
CCO#: 160 SUPPLEMENT#: 0 Category Code: CHXX	CONTINGENCY BALANCE (incl. this change) $58,392,565.65
COST: $450,000.00 INCREASE ☑ DECREASE ☐	HEADQUARTERS APPROVAL REQUIRED? ☑ YES ☐ NO
SUPPLEMENTAL FUNDS PROVIDED: $0.00	IS THIS REQUEST IN ACCORDANCE WITH ENVIRONMENTAL DOCUMENTS? ☑ YES ☐ NO
CCO DESCRIPTION: Hinge Pipe Beam Weld Modifications	**PROJECT DESCRIPTION:** REPLACE SFOBB EAST SPAN

LOCATION: IN SAN FRANCISCO AND ALAMEDA COUNTIES IN SAN FRANCISCO AND OAKLAND FROM 1.3 KM EAST OF THE YERBA BUENA ISL

THIS CHANGE ORDER PROVIDES FOR:

modifications to the hinge pipe beam fabrication procedure to identify the cause of cracking and facilitate the production of acceptable hinge pipe beams.

The hinge pipe beam fabrication for the Skyway bridge project is delayed due to recurring toe cracking in the longitudinal seam welds in the heat affected zone (HAZ). The cracking problem is primarily observed after welding and re-rolling operations. Additional cracks are also found after weld repairs are made. This requires the Contractor's hinge pipe beam supplier, Trans Bay Steel (TBS), to perform additional repair work on the seam welds. The Engineer has not been able to determine if the toe cracking is caused by the fabrication procedure, the weld material, the base metal, or a combination of the three. The Contractor has maintained that these pipe beams are not constructible per the contract specifications.

On September 10, 2004, the Contractor forwarded a letter from TBS indicating that the only way to meet the tight tolerances prescribed in the special provisions is to re-roll the hinge pipe beam cans after the longitudinal seam has been welded. TBS indicated that during production, several of the longitudinal seam welds experienced a separation after re-rolling. In the letter, TBS states that the method of obtaining the maximum strain for the longitudinal and circumferential welds in the special provisions is inadequate, and that repairs required to the longitudinal seam welds are a result of greater strain than that which was demonstrated in the welding Procedure Qualification Record (PQR) requirements (performed in accordance with the requirements of the special provisions). On September 22, 2004, the Contractor forwarded correspondence from TBS regarding the difficulties that TBS had been experiencing during the fabrication of the hinge pipe beams for the Eastbound D and C hinges. According to TBS, the delivery of the hinge pipe beams is being delayed by the repair work associated with the separation in the longitudinal seam welds. TBS indicated that the hinge pipe beams are not constructible as specified, because the specifically described PQR does not address the strains required in re-rolling.

Consequently, on October 1, 2004, the Contractor submitted Notice of Potential Claim No. 11 (NOPC 11), "Hinge Pipe Beam Weld Separations," dated September 30, 2004, on behalf of TBS. According to NOPC 11, the Contractor is performing critical weld repairs and additional inspections on the longitudinal seam welds after re-rolling the hinge pipe beams. As a consequence, the Contractor is incurring additional costs, and the production of the hinge pipe beam is delayed, which impacts the project schedule. This issue was scheduled to be heard at the Dispute Review Board (DRB), but the State requested a postponement until the Engineer could determine the cause of the problem.

This change order is needed to incorporate modifications into the fabrication procedure for the hinge pipe beams in order to mitigate the fabrication issue that the Contractor has experienced and to assess the cause of the toe cracking. This contract change order modifies the specifications and the weld material used in the critical welds, and directs the Contractor to control certain strain conditions in the metals prior to re-rolling. These fabrication procedures may determine if the toe cracking can be eliminated, and if the cause for cracking is related to fabrication procedures or weld material.

In addition to these changes, the Engineer will require the Contractor to remove several samples of the weld and base metal for shipping to a State Testing Lab for metallurgical analysis.

For this work the Contractor will be paid an estimated amount of $450,000.00, which can be financed through the project contingency funds. The method of payment for this work will be performed as Extra Work at Force Account.

Mr. Brian Maroney, District Division Chief, Toll Bridge Design, concurs with this change order. A copy of the electronic message dated April 21, 2005 from Mr. Maroney is attached.

Mr. Pete Siegenthaler, SFOBB Construction Manager, Toll Bridge Construction, concurs with this change. A copy of the

concurrence signed by Mr. Siegenthaler on June 22, 2005 is attached.

Authorization to proceed (ATP) was issued by Headquarters on June 27, 2005. A copy of the ATP provided by Headquarters is attached.

Janet Adams, SFOBB Toll Bridge Project Manager, provided concurrence on August 16, 2005. A copy of the concurrence provided by Ms. Adams is attached.

Prior Approval was obtained from Ms. Nancy Bobb, FHWA Bay Bridge Project Manager, via electronic message on June 23, 2005. A printed copy of the prior approval provided by Ms. Bobb is attached.

Mr. Ade Akinsanya, SFOBB Structure Design, concurs with this change order. A copy of the concurrence provided by Mr. Akinsanya, dated June 23, 2005, is attached.

Concurrence from Maintenance is not required as this change order does not use maintenance funds or affect maintenance facilities or operations.

Adjustment to contract time is deferred, as this change could affect the controlling operation.

RECEIVED
04351 9 SEP 19 05

CONCURRED BY:		
Construction Engineer:	Douglas Coe	Date 8-17-05
Bridge Engineer:	Douglas Coe	Date 8-17-05
FHWA Representative:	Nancy Bobb	Date 6/23/2005
Project Engineer:	Ade Akinsanya	Date 6/23/2005
Other (specify): Brian Maroney		Date 4/21/2005
Janet Adams		Date 8/16/2005
		Date
District Prior Approval By:		Date
HQ (Issue Approve) By:		Date
Resident Engineer's Signature:		Date 8-17-05

ESTIMATE OF COST	THIS REQUEST	TOTAL TO DATE
ITEMS	$0.00	$0.00
FORCE ACCOUNT	$450,000.00	$450,000.00
AGREED PRICE	$0.00	$0.00
ADJUSTMENT	$0.00	$0.00
TOTAL	$450,000.00	$450,000.00

FEDERAL PARTICIPATION

☑ PARTICIPATING ☐ PARTICIPATING IN PART ☐ NONE
☐ NON-PARTICIPATING (MAINTENANCE) ☐ NON-PARTICIPATING

FEDERAL SEGREGATION (if more than one Funding Source or P.I.P. type)
☑ CCO FUNDED PER CONTRACT ☐ CCO FUNDED AS FOLLOWS

FEDERAL FUNDING SOURCE	PERCENT

CONTRACT CHANGE ORDER

Change Requested by: Engineer

CCO: 160	Suppl. No. 1	Contract No. 04 - 012024	Road 04-SF,Ala-80-13.9/14.3,0.0/1.6	FED. AID LOC.: ACIM-080-1(085)8N

To: **KIEWIT / FCI / MANSON a JV**

You are directed to make the following changes from the plans and specifications or do the following described work not included in the plans and specifications for this contract. ***NOTE: This change order is not effective until approved by the Engineer.***

Description of work to be done, estimate of quantities and prices to be paid. (Segregate between additional work at contract price, agreed price and force account.) Unless otherwise stated, rates for rental of equipment cover only such time as equipment is actually used and no allowance will be made for idle time. This last percentage shown is the net accumulated increase or decrease from the original quantity in the Engineer's Estimate.

Extra Work at Force Account:

Provide additional funds to CCO No. 160 Supplement 0 for the modifications to the hinge pipe beam fabrication procedure to facilitate the production of acceptable hinge pipe beams for the SFOBB East Span Skyway, Bridge Nos. 34-0006L/R.

Payment for this work shall be made in accordance with Section 5-1.21, "Force Account Payment," of the Special Provisions, and Section 9-1.03, "Force Account Payment," of the Standard Specifications.

Estimated cost of Extra Work at Force Account $450,000.00

Estimated Cost: **Increase** ☑ **Decrease** ☐ **$450,000.00**

By reason of this order the time of completion will be adjusted as follows: Deferred

Submitted by

Signature	Resident Engineer: DOUG COE, Supervising Br. Eng.	Date 5-2-06

Approval Recommended by

Signature	Construction Engineer: DOUG COE, Supervising Br. Eng.	Date 5-2-06

Engineer Approval by

Signature	(Print name and title) PETER SIEGENTHALER - Chief	Date

We the undersigned contractor, have given careful consideration to the change proposed and agree, if this proposal is approved, that we will provide all equipment, furnish the materials, except as may otherwise be noted above, and perform all services necessary for the work above specified, and will accept as full payment therefor the prices shown above.

NOTE: If you, the contractor, do not sign acceptance of this order, your attention is directed to the requirements of the specifications as to proceeding with the ordered work and filing a written protest within the time therein specified.

Contractor Acceptance by

Signature	(Print name and title)	Date

CONTRACT CHANGE ORDER

Change Requested by: Engineer

CCO: 161	Suppl. No. 0	Contract No. 04 - 012024	Road 04-SF,Ala-80-13.9/14.3,0.0/1.6	FED. AID LOC.: ACIM-080-1(085)8N

To: KIEWIT / FCI / MANSON a JV

You are directed to make the following changes from the plans and specifications or do the following described work not included in the plans and specifications for this contract. ***NOTE: This change order is not effective until approved by the Engineer.***

Description of work to be done, estimate of quantities and prices to be paid. (Segregate between additional work at contract price, agreed price and force account.) Unless otherwise stated, rates for rental of equipment cover only such time as equipment is actually used and no allowance will be made for idle time. This last percentage shown is the net accumulated increase or decrease from the original quantity in the Engineer's Estimate.

Extra Work at Lump Sum:

As authorized by the Engineer, incorporate the following Quality Control modifications to the approved Welding Quality Control Plan (WQCP) for the pile head connection plate (PHCP) welding for the SFOBB East Span Skyway, Bridge No. 34-0006L, at the PHCP welding locations for Piers E5W and E6W:

1. Establish a production hold point at the completion of each pass to ensure 100 percent visual inspection (VT) of all passes.

2. Post and maintain current Welding Procedure Specifications (WPS) and revisions in the immediate work area.

3. Provide photographic documentation of every root pass, selected middle fill pass layers, and cap passes.

4. Provide photographic documentation of each defect noted by the Quality Control or Quality Assurance personnel. Provide photographic documentation of completed repair excavation prior to re-welding, demonstrating the complete removal of the associated defect. The photographic documentation shall include the means of identifying positive removal of the defect by the appropriate non-destructive testing method.

5. Document depth and length of all weld repair excavations.

6. Measure and record the actual welding parameter variables for each welder or welding station a minimum of four times per eight-hour shift.

7. Label all photographic documentation and correlate to specific work location.

For this work, the Contractor agrees to accept a lump sum amount of $455,650.00. This agreed lump sum constitutes full compensation for all costs, including markups, all direct and indirect costs, all associated project impacts, and all overhead costs.

It is mutually agreed that acceptance of this change order resolves all time impacts, including Time Impact Analysis (TIA) No. 20, "Additional Pile Head Welding QC Plan," dated July 15, 2005, and TIA No. 20 R1, "Additional Pile Head Welding QC Plan (Revised), dated August 1, 2005.

Extra Work at Agreed Lump Sum $455,650.00

CONTRACT CHANGE ORDER

Change Requested by: Engineer

CCO: 161	Suppl. No. 0	Contract No. 04 - 012024	Road 04-SF,Ala-80-13.9/14.3,0.0/1.6	FED. AID LOC.: ACIM-080-1(085)8N

Estimated Cost: Increase ☑ Decrease ☐ $455,650.00

By reason of this order the time of completion will be adjusted as follows: 0 days

Submitted by

Signature	Resident Engineer: DOUG COE, Supervising Br. Eng.	Date 9-1-05

Approval Recommended by

Signature	Construction Engineer: DOUG COE, Supervising Br. Eng.	Date 9-1-05

Engineer Approval by

Signature	(Print name and title) PETER SIEGENTHALER - Chief	Date 9-15-05

We the undersigned contractor, have given careful consideration to the change proposed and agree, if this proposal is approved, that we will provide all equipment, furnish the materials, except as may otherwise be noted above, and perform all services necessary for the work above specified, and will accept as full payment therefor the prices shown above.

NOTE: If you, the contractor, do not sign acceptance of this order, your attention is directed to the requirements of the specifications as to proceeding with the ordered work and filing a written protest within the time therein specified.

Contractor Acceptance by

Signature	(Print name and title) CHRISTOPHER J. VILLA DEPUTY PROJECT DIRECTOR	Date 9-12-05

STATE OF CALIFORNIA - DEPARTMENT OF TRANSPORTATION

CONTRACT CHANGE ORDER MEMORANDUM

TO: PETER SIEGENTHALER / DOUG COE, Supervising Br. Eng.	FILE: **E.A.** 04 - 012024
FROM: DOUG COE, Supervising Br. Eng.	**CO-RTE-PM** 04-SF,Ala-80-13.9/14.3,0.0/1.6
	FED. NO. ACIM-080-1(085)8N
CCO#: **161** SUPPLEMENT#: **0** Category Code: **CHSA**	CONTINGENCY BALANCE (incl. this change) **$62,603,163.56**
COST: **$455,650.00** INCREASE ☑ DECREASE ☐	HEADQUARTERS APPROVAL REQUIRED? ☑ YES ☐ NO
SUPPLEMENTAL FUNDS PROVIDED: **$0.00**	IS THIS REQUEST IN ACCORDANCE WITH ENVIRONMENTAL DOCUMENTS? ☑ YES ☐ NO
CCO DESCRIPTION: Additional WQCP Documentation	**PROJECT DESCRIPTION:** REPLACE SFOBB EAST SPAN

LOCATION: IN SAN FRANCISCO AND ALAMEDA COUNTIES IN SAN FRANCISCO AND OAKLAND FROM 1.3 KM EAST OF THE YERBA BUENA ISL

THIS CHANGE ORDER PROVIDES FOR:

modifying the approved Welding Quality Control Plan (WQCP) to incorporate additional Quality Control requirements including photographic documentation of defective welds and the weld repair procedure for the pile head connection plates for Piers E5W and E6W of the SFOBB East Span Skyway, Bridge No. 34-0006L.

This change order is needed as a consequence of the Federal Highway Administration's (FHWA) investigation of welding processes and procedures for the pile head connection plates. In response to the FHWA investigation into welder allegations regarding substandard work, the Department proposed an enhanced Quality Assurance/Quality Control (QA/QC) Plan for the remainder of the foundation welding. The Department prepared the enhanced Quality Control documentation for the remainder of the work related to the pile head connection plate (PHCP) welding to mitigate potential future delay impacts due to welding issues. FHWA reviewed and approved the enhanced QA/QC plan developed by the Department, which includes documentation procedures with photographs of the work and photographs of defects, plus the insertion of a production hold point at the completion of each weld pass so that every pass will be ensured visual inspection. The enhanced measures will apply to the remaining PHCP welding in Piers E5W and E6W. The revised procedure requires the Contractor to establish a production hold point at the completion of each pass to ensure 100% visual inspection of all passes. This change order requires additional provisions in the WQCP which include the following:

1. Establish a production hold point at the completion of each pass to ensure 100 percent visual inspection (VT) of all passes.
2. Post and maintain current Welding Procedure Specifications (WPS) and revisions in the immediate work area.
3. Provide photographic documentation of every root pass, selected middle fill pass layer, and cap pass.
4. Provide photographic documentation of each defect noted by the Quality Control or Quality Assurance personnel. Provide photographic documentation of completed repair excavation prior to re-welding, demonstrating the complete removal of the associated defect. The photographic documentation shall include the means of identifying positive removal of the defect by the appropriate non-destructive testing method.
5. Document depth and length of all weld repair excavations.
6. Measure and record the actual welding parameter variables for each welder or welding station a minimum of four times per eight-hour shift.
7. Label all photographic documentation and correlate to specific work location.

For incorporating the additional quality control provisions, the Contractor will be paid at Extra Work at Agreed Lump Sum for an amount of $455,650.00. This agreed lump sum constitutes full compensation for all costs, including markups, all direct and indirect costs, all associated project impacts, and all overhead costs. This agreed price includes estimated production impacts to the Contractor's welding operations due to the additional WQCP requirements, including the additional time for labor and equipment is used as a result of the additional requirements.

This change order results in an cost increase to the project, which can be financed through the project contingency funds. A detailed cost analysis is on file in the project records.

This change order was initially forwarded to the Contractor on July 1, 2005. The Contractor returned the change order unsigned and attached Time Impact Analysis (TIA) No. 20 requesting the deferment or negotiation of the cost and time issues. The Contractor also asserted that, based on the TIA No. 20 schedule analysis, the additional work ordered in the change will cause two (2) days of negative float. The Engineer reviewed TIA No. 20 and determined that there is no merit. Subsequently, the Contractor submitted TIA No. 20 (Revision 1), dated July 25, 2005, requesting a four (4) day time extension for the work associated with this change order. The Engineer reviewed TIA No. 20 R1, and again, found no merit in the Contractor's request for a time extension. After further negotiations, the Contractor will accept the previously agreed amount of $455,650.00 and will rescind TIA Nos. 20 and 20 R1.

Therefore, it is mutually agreed that acceptance of this change order resolves all time impacts, including Time Impact Analysis (TIA) No. 20, "Additional Pile Head Welding QC Plan," dated July 15, 2005, and TIA No. 20 R1, "Additional Pile Head Welding QC Plan (Revised), dated August 1, 2005.

Mr. Pete Siegenthaler, Principal Bridge Engineer for the SFOBB East Span Replacement, concurs with this change. A copy of the concurrence signed by Mr. Siegenthaler on June 22, 2005 is attached.

Concurrence from SFOBB Project Management was provided on behalf of Janet Adams by Ken Terpstra on June 29, 2005. A copy of the concurrence provided by Ms. Terpstra is attached.

Prior Approval was obtained from Ms. Nancy Bobb, FHWA Bay Bridge Project Manager, via electronic message on June 24, 2005. A printed copy of the prior approval provided by Ms. Bobb is attached.

Design concurrence is not required for this change order as it does not modify the design.

Authorization to proceed with this change order was issued by Headquarters on June 23, 2005.

Headquarters authorized the District to Issue and Approve the change order on July 1, 2005.

Concurrence from Maintenance is not required as this change order does not use maintenance funds or affect maintenance facilities or operations.

No time adjustment is warranted for this change as it does not affect the controlling operation.

RECEIVED 043518 043518

CONCURRED BY:		
Construction Engineer:	Douglas Coe	Date 9-1-05
Bridge Engineer:	Douglas Coe	Date 9-1-05
FHWA Representative:	Nancy Bobb	Date 6/24/2005
Project Engineer:		Date
Other (specify): Ken Terpstra (for Janet Adams)		Date 6/29/2005
		Date
		Date
District Prior Approval By:		Date
HQ (Issue Approve) By:	Ken Darby	Date 7/1/2005
Resident Engineer's Signature:		Date 9-1-05

ESTIMATE OF COST

	THIS REQUEST	TOTAL TO DATE
ITEMS	$0.00	$0.00
FORCE ACCOUNT	$0.00	$0.00
AGREED PRICE	$455,650.00	$455,650.00
ADJUSTMENT	$0.00	$0.00
TOTAL	$455,650.00	$455,650.00

FEDERAL PARTICIPATION

☑ PARTICIPATING ☐ PARTICIPATING IN PART ☐ NONE
☐ NON-PARTICIPATING (MAINTENANCE) ☐ NON-PARTICIPATING

FEDERAL SEGREGATION (if more than one Funding Source or P.I.P. type)
☑ CCO FUNDED PER CONTRACT ☐ CCO FUNDED AS FOLLOWS

FEDERAL FUNDING SOURCE	PERCENT

CONTRACT CHANGE ORDER

Change Requested by: Engineer

CCO: 162	Suppl. No. 0	Contract No. 04 - 012024	Road 04-SF,Ala-80-13.9/14.3,0.0/1.6	FED. AID LOC.: ACIM-080-1(085)8N

To: **KIEWIT / FCI / MANSON a JV**

You are directed to make the following changes from the plans and specifications or do the following described work not included in the plans and specifications for this contract. ***NOTE: This change order is not effective until approved by the Engineer.***

Description of work to be done, estimate of quantities and prices to be paid. (Segregate between additional work at contract price, agreed price and force account.) Unless otherwise stated, rates for rental of equipment cover only such time as equipment is actually used and no allowance will be made for idle time. This last percentage shown is the net accumulated increase or decrease from the original quantity in the Engineer's Estimate.

Extra Work at Lump Sum:

Furnish, install, and paint the 8 mm vertical plates as indicated on sheet 2 of this change order for the transition span (Universal Structural, Inc. (USI) Assembly Nos. 6A, 7A, and 8A) of the SFOBB East Span Skyway, Bridge No. 34-0006L.

For this work, the Contractor agrees to accept a lump sum amount of $88,369.00. This agreed lump sum constitutes full compensation for all costs, including markups, all direct and indirect costs, all associated project impacts, and all overhead costs.

Cost of Extra Work at Agreed Lump Sum $88,369.00

Estimated Cost: **Increase** ☑ **Decrease** ☐ **$88,369.00**

By reason of this order the time of completion will be adjusted as follows: 0 days

Submitted by		
Signature	**Resident Engineer:** DOUG COE, Supervising Br. Eng.	**Date** 1-6-06
Approval Recommended by		
Signature	**Construction Engineer:** DOUG COE, Supervising Br. Eng.	**Date** 1-6-06
Engineer Approval by		
Signature David Sellerday	**(Print name and title)** for PETER SIEGENTHALER - Chief	**Date** 1/30/06

We the undersigned contractor, have given careful consideration to the change proposed and agree, if this proposal is approved, that we will provide all equipment, furnish the materials, except as may otherwise be noted above, and perform all services necessary for the work above specified, and will accept as full payment therefor the prices shown above.

NOTE: If you, the contractor, do not sign acceptance of this order, your attention is directed to the requirements of the specifications as to proceeding with the ordered work and filing a written protest within the time therein specified.

Contractor Acceptance by		
Signature	**(Print name and title)** Lee Zink Proj. Director	**Date** 1/16/06

STATE OF CALIFORNIA - DEPARTMENT OF TRANSPORTATION

CONTRACT CHANGE ORDER MEMORANDUM

TO: PETER SIEGENTHALER / DOUG COE, Supervising Br. Eng.	FILE: **E.A.** 04 - 012024
FROM: DOUG COE, Supervising Br. Eng.	**CO-RTE-PM** 04-SF,Ala-80-13.9/14.3,0.0/1.6
	FED. NO. ACIM-080-1(085)8N
CCO#: **162** SUPPLEMENT#: **0** Category Code: **CHXX**	CONTINGENCY BALANCE (incl. this change) **$53,906,908.24**
COST: **$88,369.00** INCREASE ☑ DECREASE ☐	HEADQUARTERS APPROVAL REQUIRED? ☐ YES ☑ NO
SUPPLEMENTAL FUNDS PROVIDED: **$0.00**	IS THIS REQUEST IN ACCORDANCE WITH ENVIRONMENTAL DOCUMENTS? ☑ YES ☐ NO
CCO DESCRIPTION: Sealer Plate at Continuous Web Stiffener	**PROJECT DESCRIPTION:** REPLACE SFOBB EAST SPAN

LOCATION: IN SAN FRANCISCO AND ALAMEDA COUNTIES IN SAN FRANCISCO AND OAKLAND FROM 1.3 KM EAST OF THE YERBA BUENA ISL

THIS CHANGE ORDER PROVIDES FOR:
furnishing, installing, and painting 8 mm vertical plates in the westbound transition span as shown on sheet 2 of the change order to seal the area beneath the 16x575 stiffener plate that is inaccessible for painting after it has been fabricated.

This change order is needed to provide corrosion protection for an area in the transition span that is not accessible to receive a protective coating. There are areas at the continuous web stiffener plate in the transition span adjacent to the soffit that would be inaccessible to paint once the structural elements are welded together. The area can not be painted prior to assembly since the paint would be damaged as a consequence of the welding preheat period. Therefore, this work can not be constructed as designed. During a meeting held on November 23, 2004, between the Engineer, the Contractor, and Universal Structural, Inc. (USI), the fabricator for the transition span, it was agreed to use a 8 mm thick vertical plate to seal the length of the area that would be inaccessible to painting in order to prevent steel corrosion. The 8 mm sealer plate will be needed for USI Assembly Nos. 6A, 7A, and 8A for the orthotropic tub in the westbound direction only.

Although this work was also intended for the eastbound transition span, it was determined that the cost far outweighed the benefits since the additional work would have impacted the critical path by approximatly 2 weeks. All cost incurred prior to cancellation of the change to the eastbound transition span are include in the agreed lump sum amount.

For this work, the Contractor will be paid an agreed lump sum amount of $88,369.00. This agreed lump sum constitutes full compensation, including all markups. The method of payment for this work is Extra Work at Agreed Lump Sum. This contract change order will result in a cost increase of $88,369.00 to the project, which can be financed from the contingency funds. A complete cost analysis is on file with the project records.

Mr. David Salladay, East Span Skyway District Representative, concurs with this change. A copy of the concurrence signed by Mr. Salladay on June 3, 2005, is attached.

Design concurrence was obtained from Mr. Ade Akinsanya on December 9, 2005. A copy of the concurrence received from Design is attached.

Concurrence from Maintenance was obtained from Mr. Rafael A. Montes, Structure Maintenance and Investigations, on November 9, 2005. A copy of the concurrence received from Maintenance is attached.

No time adjustment is warranted for this change as it does not affect the controlling operation.

RECEIVED
048902 FEB 14 06

CONCURRED BY:		
Construction Engineer:	Douglas Coe	Date 1-6-06
Bridge Engineer:	Douglas Coe	Date 1-6-06
FHWA Representative:		Date
Project Engineer:		Date
Other (specify): Rafael Montes, Str. Mtce.		Date11/9/2005
Ade Akinsanya, Design		Date12/9/2005
		Date
District Prior Approval By:	David Salladay	Date 6/3/2005
HQ (Issue Approve) By:		Date
Resident Engineer's Signature:		Date 1-6-06

ESTIMATE OF COST

	THIS REQUEST	TOTAL TO DATE
ITEMS	$0.00	$0.00
FORCE ACCOUNT	$0.00	$0.00
AGREED PRICE	$88,369.00	$88,369.00
ADJUSTMENT	$0.00	$0.00
TOTAL	$88,369.00	$88,369.00

FEDERAL PARTICIPATION

☑ PARTICIPATING ☐ PARTICIPATING IN PART ☐ NONE
☐ NON-PARTICIPATING (MAINTENANCE) ☐ NON-PARTICIPATING

FEDERAL SEGREGATION (if more than one Funding Source or P.I.P. type)
☑ CCO FUNDED PER CONTRACT ☐ CCO FUNDED AS FOLLOWS

FEDERAL FUNDING SOURCE	PERCENT

CONTRACT CHANGE ORDER

Change Requested by: Engineer

CCO: 163	Suppl. No. 0	Contract No. 04 - 012024	Road 04-SF,Ala-80-13.9/14.3,0.0/1.6	FED. AID LOC.: ACIM-080-1(085)8N

To: **KIEWIT / FCI / MANSON a JV**

You are directed to make the following changes from the plans and specifications or do the following described work not included in the plans and specifications for this contract. ***NOTE: This change order is not effective until approved by the Engineer.***

Description of work to be done, estimate of quantities and prices to be paid. (Segregate between additional work at contract price, agreed price and force account.) Unless otherwise stated, rates for rental of equipment cover only such time as equipment is actually used and no allowance will be made for idle time. This last percentage shown is the net accumulated increase or decrease from the original quantity in the Engineer's Estimate.

Extra Work at Force Account:

Modify the PS-19 pipe support under the bike path at the expansion loops for the SFOBB East Span Skyway, Bridge Nos. 34-0006L/R, as shown on revised contract plan sheet numbers 71R2 and 75R1of 978 (pages 2 and 3 of this change order)

Estimated cost of Extra Work at Force Account $10,000.00

RECEIVED
046330 DEC-2 05

Estimated Cost: Increase ☑ **Decrease** ☐ **$10,000.00**

By reason of this order the time of completion will be adjusted as follows: 0 days

Submitted by

Signature	Resident Engineer: DOUG COE, Supervising Br. Eng.	Date 10-19-05

Approval Recommended by

Signature	Construction Engineer: DOUG COE, Supervising Br. Eng.	Date 10-19-05

Engineer Approval by

Signature	(Print name and title) PETER SIEGENTHALER - Chief	Date 11-15-05

We the undersigned contractor, have given careful consideration to the change proposed and agree, if this proposal is approved, that we will provide all equipment, furnish the materials, except as may otherwise be noted above, and perform all services necessary for the work above specified, and will accept as full payment therefor the prices shown above.

NOTE: If you, the contractor, do not sign acceptance of this order, your attention is directed to the requirements of the specifications as to proceeding with the ordered work and filing a written protest within the time therein specified.

Contractor Acceptance by

Signature	(Print name and title) Lee Zink Project Director	Date 11/7/05

STATE OF CALIFORNIA - DEPARTMENT OF TRANSPORTATION

CONTRACT CHANGE ORDER MEMORANDUM

TO: PETER SIEGENTHALER / DOUG COE, Supervising Br. Eng.	FILE: **E.A.** 04 - 012024
FROM: DOUG COE, Supervising Br. Eng.	**CO-RTE-PM** 04-SF,Ala-80-13.9/14.3,0.0/1.6
	FED. NO. ACIM-080-1(085)8N
CCO#: **163** SUPPLEMENT#: **0** Category Code: **CXPA**	CONTINGENCY BALANCE (incl. this change) **$61,842,565.57**
COST: **$10,000.00** INCREASE ☑ DECREASE ☐	HEADQUARTERS APPROVAL REQUIRED? ☐ YES ☑ NO
SUPPLEMENTAL FUNDS PROVIDED: **$0.00**	IS THIS REQUEST IN ACCORDANCE WITH ENVIRONMENTAL DOCUMENTS? ☑ YES ☐ NO
CCO DESCRIPTION: PS-19 Modification at Bikepath	**PROJECT DESCRIPTION:** REPLACE SFOBB EAST SPAN

LOCATION: IN SAN FRANCISCO AND ALAMEDA COUNTIES IN SAN FRANCISCO AND OAKLAND FROM 1.3 KM EAST OF THE YERBA BUENA ISL

THIS CHANGE ORDER PROVIDES FOR:

modifying the PS-19 pipe support under the bike path at the expansion loops by sloping the bottom W100x19 support beam. The bottom support beam will be sloped to match the slope of the bottom of the bike path support beam.

The revised contract plan sheets reflecting this change are 71R2 and 75R1 of 978.

The bottom beam of the PS-19 pipe support, as shown on the contract drawings, is level and will interfere with the sloping traveler scaffolding under the bike path at the expansion loops. This change order will mitigate the interference by sloping the bottom beam of the PS-19 pipe support to match the bottom slope of the bike path support beam.

For this work, the Contractor will be paid at Extra Work At Force Account for an estimated amount of $10,000.00. This additional project cost can be financed from the contingency funds provided for this contract. A force account analysis is on file in the project records.

Mr. David Salladay, New East Span Skyway District Representative, provided District Prior Approval for this change order on June 20, 2005. A copy of the concurrence signed by Mr. Salladay is attached.

FHWA Prior Approval is not required as this is a minor change order.

Design concurrence was provided by Michael White on October 18, 2005, as indicated by his signature on the revised contract plan sheets.

Concurrence from Maintenance is not required as this change order does not use maintenance funds or affect maintenance facilities or operations.

No time adjustment is warranted for this change order as it does not affect the controlling operation.

CONCURRED BY:

Construction Engineer:	Douglas Coe	Date 10-19-05
Bridge Engineer:	Douglas Coe	Date 10-19-05
FHWA Representative:		Date
Project Engineer:		Date
Other (specify): Michael White, Mech. Design		Date 10/18/2005
		Date
		Date
District Prior Approval By:	David Salladay	Date 6/20/2005
HQ (Issue Approve) By:		Date
Resident Engineer's Signature:		Date 10-19-05

ESTIMATE OF COST

	THIS REQUEST	TOTAL TO DATE
ITEMS	$0.00	$0.00
FORCE ACCOUNT	$10,000.00	$10,000.00
AGREED PRICE	$0.00	$0.00
ADJUSTMENT	$0.00	$0.00
TOTAL	$10,000.00	$10,000.00

FEDERAL PARTICIPATION

☑ PARTICIPATING ☐ PARTICIPATING IN PART ☐ NONE
☐ NON-PARTICIPATING (MAINTENANCE) ☐ NON-PARTICIPATING

FEDERAL SEGREGATION (if more than one Funding Source or P.I.P. type)
☑ CCO FUNDED PER CONTRACT ☐ CCO FUNDED AS FOLLOWS

FEDERAL FUNDING SOURCE	PERCENT

STATE OF CALIFORNIA - DEPARTMENT OF TRANSPORTATION

CONTRACT CHANGE ORDER

Change Requested by: Engineer

CCO: 164	Suppl. No. 0	Contract No. 04 - 012024	Road 04-SF,Ala-80-13.9/14.3,0.0/1.6	FED. AID LOC.: ACIM-080-1(085)8N

To: **KIEWIT / FCI / MANSON a JV**

You are directed to make the following changes from the plans and specifications or do the following described work not included in the plans and specifications for this contract. ***NOTE: This change order is not effective until approved by the Engineer.***

Description of work to be done, estimate of quantities and prices to be paid. (Segregate between additional work at contract price, agreed price and force account.) Unless otherwise stated, rates for rental of equipment cover only such time as equipment is actually used and no allowance will be made for idle time. This last percentage shown is the net accumulated increase or decrease from the original quantity in the Engineer's Estimate.

Extra Work at Force Account:

As authorized by the Engineer, perform work on premium time by extending daily work shifts and adding weekend work shifts to expedite the fabrication of the hinge pipe beams for the SFOBB East Span Skyway, Bridge Nos. 340006L/R.

The Contractor shall be paid the premium time differential for work performed on premium time.

Estimated cost of Extra Work at Force Account $700,000.00

Estimated Cost: **Increase** ☑ **Decrease** ☐ **$700,000.00**

By reason of this order the time of completion will be adjusted as follows: Deferred

Submitted by		
Signature	**Resident Engineer:** DOUG COE, Supervising Br. Eng.	**Date** 10-6-05
Approval Recommended by		
Signature	**Construction Engineer:** DOUG COE, Supervising Br. Eng.	**Date** 10-6-05
Engineer Approval by		
Signature	**(Print name and title)** PETER SIEGENTHALER - Chief	**Date**

We the undersigned contractor, have given careful consideration to the change proposed and agree, if this proposal is approved, that we will provide all equipment, furnish the materials, except as may otherwise be noted above, and perform all services necessary for the work above specified, and will accept as full payment therefor the prices shown above.

NOTE: If you, the contractor, do not sign acceptance of this order, your attention is directed to the requirements of the specifications as to proceeding with the ordered work and filing a written protest within the time therein specified.

Contractor Acceptance by		
Signature	**(Print name and title)** Lee Zink Project Director	**Date** 12/13/05

CONTRACT CHANGE ORDER

Change Requested by: Engineer

CCO: 165	Suppl. No. 0	Contract No. 04 - 012024	Road 04-SF,Ala-80-13.9/14.3,0.0/1.6	FED. AID LOC.: ACIM-080-1(085)8N

To: **KIEWIT / FCI / MANSON a JV**

You are directed to make the following changes from the plans and specifications or do the following described work not included in the plans and specifications for this contract. ***NOTE: This change order is not effective until approved by the Engineer.***

Description of work to be done, estimate of quantities and prices to be paid. (Segregate between additional work at contract price, agreed price and force account.) Unless otherwise stated, rates for rental of equipment cover only such time as equipment is actually used and no allowance will be made for idle time. This last percentage shown is the net accumulated increase or decrease from the original quantity in the Engineer's Estimate.

Adjustment of Compensation at Lump Sum:

The eighth paragraph of "Inspection and Testing," in the Section entitled "Shop Welding" of Section 10-1.44, "Steel Structures," of the Special Provisions for the SFOBB East Span Skyway, Bridge Nos. 34-0006L/R, is revised to read:

"In addition to the MT requirements for PJP welds, and the UT requirement for CJP welds, all butt welds (PJP and CJP), except for the non-fuse, longitudinal seam welds on the Hinge Pipe Beams, shall be RT inspected by the Contractor as follows:"

The first paragraph of "Acceptance" in the Section entitled "Shop Welding" of Section 10-1.44, "Steel Structures," of the Special Provisions shall be amended by adding the following:

"For purposes of acceptance, all longitudinal welds of the hinge pipe beams except the fuse section shall be considered to sustain shear stress. Ultrasonic testing (UT) of the longitudinal seam welds shall be performed such that longitudinal indications shall be evaluated using the criteria described in Table 9.2 of AWS D1.5, and transverse indications shall be evaluated using the criteria described in Table 9.1 of AWS D1.5."

There shall be no cost or credit to the State by reason of this change.

Adjustment of Compensation at Agreed Lump Sum $0.00

Estimated Cost: **Increase** ☐ **Decrease** ☐ **$0.00**

By reason of this order the time of completion will be adjusted as follows: 0 days

Submitted by

Signature	Resident Engineer: DOUG COE, Supervising Br. Eng.	Date 9-30-05

Approval Recommended by

Signature	Construction Engineer: DOUG COE, Supervising Br. Eng.	Date 9-30-05

Engineer Approval by

Signature	(Print name and title) PETER SIEGENTHALER - Chief	Date 10-3-05

We the undersigned contractor, have given careful consideration to the change proposed and agree, if this proposal is approved, that we will provide all equipment, furnish the materials, except as may otherwise be noted above, and perform all services necessary for the work above specified, and will accept as full payment therefor the prices shown above.

NOTE: If you, the contractor, do not sign acceptance of this order, your attention is directed to the requirements of the specifications as to proceeding with the ordered work and filing a written protest within the time therein specified.

Contractor Acceptance by

Signature	(Print name and title) LEE Zink Project Director	Date 9/20/05

STATE OF CALIFORNIA - DEPARTMENT OF TRANSPORTATION

CONTRACT CHANGE ORDER MEMORANDUM

TO: PETER SIEGENTHALER / DOUG COE, Supervising Br. Eng.	FILE: **E.A.** 04 - 012024
FROM: DOUG COE, Supervising Br. Eng.	**CO-RTE-PM** 04-SF,Ala-80-13.9/14.3,0.0/1.6
	FED. NO. ACIM-080-1(085)8N
CCO#: **165** SUPPLEMENT#: **0** Category Code: **CHSA**	CONTINGENCY BALANCE (incl. this change) **$58,392,565.65**
COST: **$0.00** INCREASE ☐ DECREASE ☐	HEADQUARTERS APPROVAL REQUIRED? ☑ YES ☐ NO
SUPPLEMENTAL FUNDS PROVIDED: **$0.00**	IS THIS REQUEST IN ACCORDANCE WITH ENVIRONMENTAL DOCUMENTS? ☑ YES ☐ NO
CCO DESCRIPTION: Hinge Pipe Beam Weld Insp. Spec. Change	**PROJECT DESCRIPTION:** REPLACE SFOBB EAST SPAN

LOCATION: IN SAN FRANCISCO AND ALAMEDA COUNTIES IN SAN FRANCISCO AND OAKLAND FROM 1.3 KM EAST OF THE YERBA BUENA ISL

THIS CHANGE ORDER PROVIDES FOR:

revising the hinge pipe beam (HPB) longitudinal seam weld ultrasonic acceptance-rejection criteria, as specified in the contract special provisions, from tension criteria to compression criteria; and eliminating the radiographic testing requirement for the longitudinal seam welds except for the fuse.

This change order is needed to minimize additional delays and costs due to recurring toe cracking (separation between the filler metal and the base material) in the longitudinal seam welds in the heat affected zone (HAZ) during the fabrication of the hinge pipe beam. The cracking problem is primarily observed after welding and re-rolling operations. Additional cracks are found after the weld repairs are made. As a consequence, the Contractor's hinge pipe beam supplier, Trans Bay Steel (TBS), is required to perform additional repair work on the seam welds. On October 1, 2004, the Contractor submitted Notice of Potential Claim No. 11 (NOPC 11), "Hinge Pipe Beam Weld Separations," dated September 30, 2004, on behalf of TBS. According to NOPC 11, the Contractor is incurring additional costs. Due to additional weld repairs and inspections, the production of the hinge pipe beam is being delayed, and the project schedule is being impacted. This issue was scheduled to be heard at the Dispute Review Board (DRB), but the State requested a postponement until the Engineer could determine the cause of the problem. To date, modifications to the weld procedure has had minimal success resolving this issue.

The Contractor's July 2005 Critical Path Method (CPM) schedule (C5G0) shows that delivery of the hinge pipe beams for Hinge C are currently scheduled for completion on December 30, 2005, which translates into a 142-day project delay. The delays to the Hinge C pipe beams have placed the completion of all other hinge pipe beams on the critical path. Each of the remaining hinge pipe beams have planned fabrication durations between 40 and 60 days. Delays to the fabrication of any of the remaining hinge pipe beams will cause additional project delay.

In order to expedite the production of the hinge pipe beams, this contract change order will modify the contract specifications regarding the weld requirements for the Hinge Pipe Beam longitudinal seam welds except for the fuse sections. The Designer has determined that because the longitudinal seam welds of the Hinge Pipe Beams are loaded in shear, these welds can be evaluated under ultrasonic testing acceptance-rejection criteria using the compressive stress (also for shear) criteria offered in the AASHTO-AWS D1.5 bridge welding code. Longitudinal indications will be evaluated using compresssion criteria, whereas transverse indications to the weld axis and girth seam welds will be evaluated using tension criteria. To accomplish this, the first paragraph of "Acceptance" in the section entitled "Shop Welding" of Section 10-1.44, "Steel Structures," of the Special Provisions (Revised Page No. 254) which states "For purposes of acceptance, all welds shall be considered to sustain tension," is amended as follows:

> "For purposes of acceptance, all longitudinal welds of the hinge pipe beams except the fuse section shall be considered to sustain shear stress. Therefore, Ultrasonic inspection (UT) of the longitudinal seam welds shall be performed such that longitudinal indications shall be evaluated using the criteria described in Table 9.2 of AWS D1.5, and transverse indications shall be evaluated using the criteria described in Table 9.1 of AWS D1.5."

In addition, because Radiography (RT) is imprecise in such thick sections and its value questionable for purposes of evaluation of the longitudinal seams, the eighth paragraph of "Inspection and Testing," in the Section entitled "Shop Welding" of Section 10-1.44, "Steel Structures," of the Special Provisions is revised to read:

> "In addition to the MT requirements for PJP welds, and the UT requirement for CJP welds, all butt welds (PJP and CJP), except the longitudinal seam welds on the Hinge Pipe Beams, shall be RT inspected by the Contractor as follows:"

The modified specifications apply only to the longitudinal welds in the hinge pipe beam, except for the fuse section.

The contract specifications for inspecting the hinge pipe beam longitudinal seam welds may be inappropriate and overly burdensome. Therefore, the Engineer is directing this change in order to minimize additional delays and costs due to the recurring toe cracking in the longitudinal seam welds. The Contractor has requested additional compensation via NOPC 11. If merit has been determined for the issues related to this NOPC, and entitlement or a settlement has been established or negotiated with the Contractor, the Engineer will issue a change order to resolve NOPC 11. For this change order, the Engineer and the Contractor both agree that there are no recognized costs to either the State or the Contractor, and that this change order results in a zero cost adjustment. The change order will be processed as an Adjustment of Compensation at Agreed Lump Sum.

Mr. Brian Maroney, District Division Chief, Toll Bridge Design, provided Design concurrence for this change on June 30, 2005. A copy of the electronic message indicating concurrence by Mr. Maroney is attached.

Janet Adams, SFOBB Toll Bridge Project Manager, provided concurrence on August 16, 2005. A copy of the concurrence provided by Ms. Adams is attached

Mr. Pete Siegenthaler, SFOBB Construction Manager, Toll Bridge Construction, concurs with this change. A copy of the concurrence signed by Mr. Siegenthaler on July 1, 2005 is attached.

Prior Approval was obtained from Ms. Nancy Bobb, FHWA Bay Bridge Project Manager, via electronic message on July 24, 2005. A printed copy of the prior approval provided by Ms. Bobb is attached.

Concurrence from Maintenance is not required as this change order does not use maintenance funds or affect maintenance facilities or operations.

Authorization to proceed with this change order was issued by Headquarters on July 15, 2005.

Headquarters authorized the District to Issue and Approve the change order on August 19, 2005.

No time adjustment is warranted for this change order as it does not affect the controlling operation.

RECEIVED
OCT 19 2005
96

CONCURRED BY:		
Construction Engineer:	Douglas Coe	Date 8-18-05
Bridge Engineer:	Douglas Coe	Date 8-18-05
FHWA Representative:	Nancy Bobb	Date 7/24/2005
Project Engineer:	Brian Maroney	Date 6/30/2005
Other (specify): Janet Adams		Date 8/16/2005
		Date
		Date
District Prior Approval By:		Date
HQ (Issue Approve) By:	Ken Darby	Date 8/19/2005
Resident Engineer's Signature:		Date 8-18-05

ESTIMATE OF COST

	THIS REQUEST	TOTAL TO DATE
ITEMS	$0.00	$0.00
FORCE ACCOUNT	$0.00	$0.00
AGREED PRICE	$0.00	$0.00
ADJUSTMENT	$0.00	$0.00
TOTAL	$0.00	$0.00

FEDERAL PARTICIPATION

☑ PARTICIPATING ☐ PARTICIPATING IN PART ☐ NONE
☐ NON-PARTICIPATING (MAINTENANCE) ☐ NON-PARTICIPATING

FEDERAL SEGREGATION (if more than one Funding Source or P.I.P. type)
☑ CCO FUNDED PER CONTRACT ☐ CCO FUNDED AS FOLLOWS

FEDERAL FUNDING SOURCE	PERCENT

CONTRACT CHANGE ORDER

Change Requested by: Engineer

CCO: 165	Suppl. No. 1	Contract No. 04 - 012024	Road 04-SF,Ala-80-13.9/14.3,0.0/1.6	FED. AID LOC.: ACIM-080-1(085)8N

To: **KIEWIT / FCI / MANSON a JV**

You are directed to make the following changes from the plans and specifications or do the following described work not included in the plans and specifications for this contract. ***NOTE: This change order is not effective until approved by the Engineer.***

Description of work to be done, estimate of quantities and prices to be paid. (Segregate between additional work at contract price, agreed price and force account.) Unless otherwise stated, rates for rental of equipment cover only such time as equipment is actually used and no allowance will be made for idle time. This last percentage shown is the net accumulated increase or decrease from the original

Adjustment of Compensation at Lump Sum:

1) Delete Note 1 on Contract Plan Sheets 785R2, 791, 813, and 835 of 978, which states, "The pipe beam is fracture critical member (FCM)." The Hinge Pipe Beam (HPB) Fuses shall instead be designated Seismic Performance Critical Members (SPCM).

   The "Seismic Performance Critical Member" designation identifies structural elements, including welds connecting SPCMs to other members, that are critical to the seismic performance of the bridge and that are fabricated and inspected to the requirements of AWS D1.5, Section 12, as modified by this Change Order.

   A) All work associated with the fabrication and inspection of the welds on the HPBs described on sheets 785R2, 791, 813, and 835 of 978 of the contract drawings shall be performed in accordance with the requirements of Section 12 of AWS D1.5, with the exception of Section 12.16.5, "Inspection and Record Keeping," which shall not apply.

   B) The SPCM HPB fuses shall meet the requirements of Section 12.16.5.

   C) Amend the last sentence of the twenty-eight paragraph of sub-section "General" of Special Provisions Section 8-3.0 "WELDING" from "The requalification tests shall comply with Section 5.21.4 and Section 12.8.2." to "The requalification tests shall comply with Section 5.21.4 and Section 12.8.2 with the exception of the Hinge Pipe Beams.

2) Post weld heat treatment (PWHT), described as stress relief in the third paragraph of "Pipe Beams" of the "Fabrication" subsection of Section 10-1.44, "Steel Structures," is not required for any of the cans in fabrication of the HPBs. PWHT shall not be considered an essential variable in fabrication of the HPBs.

3) Liquid Penetrant Testing (PT) required in the eighth paragraph of "Pipe Beams" of the "Fabrication" subsection of Section 10-1.44, "Steel Structures," shall only be required for repairs of the stainless steel overlay and where ordered by the Engineer.

4) Add to the second paragraph of Sub-Section "Pipe Beams" of Special Provisions Section 10-1.44, "STEEL STRUCTURES", Sub-Section "Fabrication", the following sentence, "Out-of roundness tolerance greater than 8 mm, but not to exceed 17 mm, may be permitted if approved by the Engineer.

5) Add to the third paragraph, sub-section B, "Filler Metal Requirements", sub-section 3 (a), "Submerged Arc Welding (SAW) Consumables", of Special Provisions Section 10-1.44, "STEEL STRUCTURES", Sub-Section "Welding of HPS70W Steels for Pipe Beams", the following paragraph, "Lincoln LA85 and MIL800-HPNi wire/flux combination recommended in the AASHTO Guide Specifications for Highway Bridge Fabrication with HPS70W Steel may be used when approved by the Engineer. When the recommended LA85/MIL800 wire/flux combination is used: i) diffusible hydrogen testing at the manufacturer's facility is not required, and ii) qualification testing shall conform to AWS D1.5-1996 instead of the as-formed condition detailed in the fourth paragraph, of sub-section "Pipe Beams", of Special Provisions Section 10-1.44, "STEEL STRUCTURES", Sub-Section "Fabrication".

6) Add to the third paragraph, sub-section B, "Filler Metal Requirements", sub-section 3 (b), "Shielded Metal Arc Welding (SMAW) Consumables", of Special Provisions Section 10-1.44, "STEEL STRUCTURES", Sub-Section "Welding of HPS70W Steels for Pipe Beams", the following sentence, "SMAW E7018-M shall be considered pre-qualified for welding minor repairs except at HPB fuses."

CONTRACT CHANGE ORDER

Change Requested by: Engineer

CCO: 165 Suppl. No. 1 Contract No. 04 - 012024 Road 04-SF,Ala-80-13.9/14.3,0.0/1.6 FED. AID LOC.: ACIM-080-1(085)8N

7) Add to the third paragraph, sub-section B, "Filler Metal Requirements", sub-section 5, "In addition to the requirements for WPS qualifications ..." of Special Provisions Section 10-1.44, "STEEL STRUCTURES", Sub-Section "Welding of HPS70W Steels for Pipe Beams", the following sentence, "Diffusible hydrogen testing at the fabrication facility is not required for fabrication of the HPBs if the diffusible hydrogen testing is performed at the manufacturer's facility, and the consumables are in hermetically sealed packing."

8) Except on HPB fuses weld repairs may not require re-welding. Welded repairs of excavations along the toe of the weld are not required if less than or equal to 5-mm in depth on 100-mm thick hinge pipe beam or 4-mm on 85-mm thick hinge pipe beam sections. Excavation depths up to 12-mm may not need welded repair if approved by the Engineer. The profile of the removal shall be faired to provide a smooth transition with no sharp edges."

There shall be no cost or credit to the State by reason of this change.

Any time impact associated with this Change is included in Contract Change Order 200.

Adjustment of Compensation at Agreed Lump Sum $0.00

Estimated Cost: Increase ☐ Decrease ☐ $0.00

By reason of this order the time of completion will be adjusted as follows: 0 days

Submitted by

Signature	Resident Engineer	Date
	DOUG COE, Supervising Br. Eng.	11-30-07

Approval Recommended by

Signature	Construction Engineer	Date
	DOUG COE	11-30-07

Engineer Approval by

Signature	Construction Manager	Date
Mike Fanna FOR	PETER SIEGENTHALER	1-7-08

We the undersigned contractor, have given careful consideration to the change proposed and agree, if this proposal is approved, that we will provide all equipment, furnish the materials, except as may otherwise be noted above, and perform all services necessary for the work above specified, and will accept as full payment therefor the prices shown above.

NOTE: If you, the contractor, do not sign acceptance of this order, your attention is directed to the requirements of the specifications as to proceeding with the ordered work and filing a written protest within the time therein specified.

Contractor Acceptance by

Signature	(Print name and title)	Date
	Lee Zink Project Director	12/19/07

STATE OF CALIFORNIA - DEPARTMENT OF TRANSPORTATION

CONTRACT CHANGE ORDER MEMORANDUM

TO: PETER SIEGENTHALER / DOUG COE, Supervising Br. Eng.

FROM: DOUG COE, Supervising Br. Eng.

FILE: E.A. 04 - 012024
CO-RTE-PM 04-SF,Ala-80-13.9/14.3,0.0/1.6
FED. NO. ACIM-080-1(085)8N

CCO# **165** SUPPLEMENT#: **1** Category Cod **CHPA**

CONTINGENCY BALANCE (incl. this change **$5,719,410.45**

COST: **$0.00** INCREASE ☐ DECREASE ☐

HEADQUARTERS APPROVAL REQUIRED? ☑ YES ☐ NO

SUPPLEMENTAL FUNDS PROVIDED: **$0.00**

IS THIS REQUEST IN ACCORDANCE WITH ENVIRONMENTAL DOCUMENTS? ☑ YES ☐ NO

CCO DESCRIPTION:
Hinge Pipe Beam Weld Insp. Spec. Change

PROJECT DESCRIPTION:
REPLACE SFOBB EAST SPAN

Original Contract Time:	Time Adj. This Change:	Previously Approved CCO Time Adjustments:	Percentage Time Adjusted: (including this change)	Total # of Unreconciled Deferred Time CCO(s): (including this change)
1000 Day(s)	**0** Day(s)	**424** Day(s)	**42** %	**0**

THIS CHANGE ORDER PROVIDES FOR:

1) Deletion of Note 1 on Contract Plan Sheets 785R2, 791, 813, and 835 of 978, which states, "The pipe beam is fracture critical member (FCM)." The Hinge Pipe Beam (HPB) Fuses shall instead be designated Seismic Performance Critical Members (SPCM).

   The "Seismic Performance Critical Member" designation identifies structural elements, including welds connecting SPCMs to other members, that are critical to the seismic performance of the bridge and that are fabricated and inspected to the requirements of AWS D1.5, Section 12, as modified by this Change Order.

   A) All work associated with the fabrication and inspection of the welds on the HPBs described on sheets 785R2, 791, 813, and 835 of 978 of the contract drawings shall be performed in accordance with the requirements of Section 12 of AWS D1.5, with the exception of Section 12.16.5, "Inspection and Record Keeping," which shall not apply.

   B) The SPCM HPB fuses shall meet the requirements of Section 12.16.5.

2) Post weld heat treatment (PWHT), described as stress relief in the third paragraph of "Pipe Beams" of the "Fabrication" subsection of Section 10-1.44, "Steel Structures," is not required in fabrication of the HPBs. PWHT shall not be considered an essential variable in fabrication of the HPBs.

3) Liquid Penetrant Testing (PT) required in the eighth paragraph of "Pipe Beams" of the "Fabrication" subsection of Section 10-1.44, "Steel Structures," shall only be required for repairs of the stainless steel overlay and where ordered by the Engineer.

This Change Order is needed as a consequence of Contract Change Order 165 Supplement 0 which changed the Ultrasonic Testing (UT) acceptance-rejection criteria for the longitudinal welds of the hinge pipe beams from tensile to compressive stress criteria, except for the fuse segment. The HPB's can no longer be considered FCM's, and the HPB's cannot now be certified by the Contractor as FCM's.

Although the FCM designation of the HPBs is removed by this change order, the fabrication and inspection criteria is to be performed in accordance with the requirements of Section 12 of AWS D1.5 except for Sub-section 12.16.5 which shall only apply to the HPB fuses.

The designation of the Hinge Pipe Beam Fuses will be changed to Seismic Performance Critical Member (SPCM). The term, Seismic Performance Critical Member (SPCM), was created by the Department for use on the SFOBB East Span Seismic Safety Project to identify those structural elements whose performance is critical in case of a seismic event. Fabrication and Inspection of SPCM designated materials shall meet the requirements of AWS D1.5, Section 12, as modified by change order.

Post Weld Heat Treatment (PWHT) for the HPB specified in the Special Provisions was provided to assure dimensional control of the HPB's. Because it was not necessary to use PWHT to obtain the dimensional tolerances required by the Special Provisions and PWHT increased the rolling effort required to form the HPB's, the designer determined that the requirement should be deleted.

Liquid Penetrant Testing (PT) of the Stainless Steel overlay was required in the Special Provisions. Due to the application method used for the stainless steel overlay, and considering that the PT process is just a visual aid, it was determined that the

ADA Notice: For individuals with sensory disabilities, this document is available in alternate formats. For information call: (916) 654-6410 or TDD (916) 654-3880 or write Records and Forms Management, 1120 N Street, MS-89, Sacramento, CA 95814.

use of PT should be limited to repair areas and those areas determined suspicious by the Engineer.

For this change order, the Engineer and the Contractor both agree that there are no recognized costs to either the State or the Contractor, and that this change order results in a zero cost adjustment. The change order will be processed as an Adjustment of Compensation at Agreed Lump Sum.

Mr. Pete Siegenthaler, SFOBB Construction Manager, Toll Bridge Construction, concurs with this change. A copy of the concurrence signed by Mr. Siegenthaler on June 1, 2007 is attached.

Prior Approval was obtained from Ms. Nancy Bobb, FHWA Bay Bridge Project Manager, via electronic message on June 29, 2007. A printed copy of the prior approval provided by Ms. Bobb is attached.

Prior Approval was obtained from Mr. Ken Terpstra, SFOBB Project Manager, via electronic message on June 2, 2007. A printed copy of the prior approval provided by Mr. Terpstra is attached.

Mr. Ade Akinsanya, Supervising Bridge Engineer, provided Design concurrence for this change on June 25, 2007. A copy of the electronic message indicating concurrence by Mr. Akinsanya is attached.

Concurrence from METS-OSM was provided by Mr. Venkatesh Iyer, of MACTEC on June 22, 2007. A copy of the concurrence is attached

Concurrence from Maintenance is not required as this change order does not use maintenance funds or affect maintenance facilities or operations.

No time adjustment is warranted for this change order as it does not affect the controlling operation.

RECEIVED
067051 JAN 28 08

CONCURRED BY:

Construction Engineer:	Douglas Coe	DBC	Date 11-30-07
Bridge Engineer:	Douglas Coe	DBC	Date 11-30-07
Project Engineer:	Ade Akinsanya		Date 6/25/07
Project Manager:	Ken Terpstra		Date 6/2/07
FHWA Rep.:	Nancy Bobb		Date 6/29/07
Environmental:			Date
Other (specify):	METS		Date 6/22/07
Other (specify):			Date
District Prior Approval By:			Date
HQ (Issue Approve) By:	Ken Darby		Date
Resident Engineer's Signature:			Date 11-30-07

ESTIMATE OF COST

	THIS REQUEST	TOTAL TO DATE
ITEMS	$0.00	$0.00
FORCE ACCOUNT	$0.00	$0.00
AGREED PRICE	$0.00	$0.00
ADJUSTMENT	$0.00	$0.00
TOTAL	$0.00	$0.00

FEDERAL PARTICIPATION

☑ PARTICIPATING ☐ PARTICIPATING IN PART ☐ NONE
☐ NON-PARTICIPATING (MAINTENANCE) ☐ NON-PARTICIPATING

FEDERAL SEGREGATION (if more than one Funding Source or P.I.P. type)
☑ CCO FUNDED PER CONTRACT ☐ CCO FUNDED AS FOLLOWS

FEDERAL FUNDING SOURCE PERCENT

ADA Notice: For individuals with sensory disabilities, this document is available in alternate formats. For information call: (916) 654-6410 or TDD (916) 654-3880 or write Records and Forms Management, 1120 N Street, MS-89, Sacramento, CA 95814.

CONTRACT CHANGE ORDER

Change Requested by: Engineer

CCO 166	Suppl. No. 0	Contract No. 04 - 012024	Road 04-SF,Ala-80-13.9/14.3,0.0/1.6	FED. AID LOC.: ACIM-080-1(085)8N

To: **KIEWIT / FCI / MANSON a JV**

You are directed to make the following changes from the plans and specifications or do the following described work not included in the plans and specifications for this contract. ***NOTE: This change order is not effective until approved by the Engineer.***

Description of work to be done, estimate of quantities and prices to be paid. (Segregate between additional work at contract price, agreed price and force account.) Unless otherwise stated, rates for rental of equipment cover only such time as equipment is actually used and no allowance will be made for idle time. This last percentage shown is the net accumulated increase or decrease from the original quantity in the Engineer's Estimate.

Extra Work at Force Account:

Adjust the mechanical pipe supports of the SFOBB East Span Skyway, Bridge Nos. 340006L/R by shortening pipe hangers from the ceiling, and lengthening of pipe supports from the floor to mitigate conflicts with the bridge stucture.

Estimated cost of Extra Work at Force Account $25,000.00

RECEIVED
046331 DEC-2 '05

Estimated Cost: **Increase** ☑ **Decrease** ☐ **$25,000.00**

By reason of this order the time of completion will be adjusted as follows: 0 days

Submitted by		
Signature	**Resident Engineer:** DOUG COE, Supervising Br. Eng.	**Date** 10-14-05
Approval Recommended by		
Signature	**Construction Engineer:** DOUG COE, Supervising Br. Eng.	**Date** 10-14-05
Engineer Approval by		
Signature	**(Print name and title)** PETER SIEGENTHALER - Chief	**Date** 11-15-05

We the undersigned contractor, have given careful consideration to the change proposed and agree, if this proposal is approved, that we will provide all equipment, furnish the materials, except as may otherwise be noted above, and perform all services necessary for the work above specified, and will accept as full payment therefor the prices shown above.

NOTE: If you, the contractor, do not sign acceptance of this order, your attention is directed to the requirements of the specifications as to proceeding with the ordered work and filing a written protest within the time therein specified.

Contractor Acceptance by		
Signature	**(Print name and title)** Lee Zink Project Director	**Date** 11/7/05

STATE OF CALIFORNIA - DEPARTMENT OF TRANSPORTATION

CONTRACT CHANGE ORDER MEMORANDUM

DATE: 10/12/2005 Page 1 of 1

TO: PETER SIEGENTHALER / DOUG COE, Supervising Br. Eng.	FILE: **E.A.** 04 - 012024
FROM: DOUG COE, Supervising Br. Eng.	**CO-RTE-PM** 04-SF,Ala-80-13.9/14.3,0.0/1.6
	FED. NO. ACIM-080-1(085)8N
CCO#: **166** SUPPLEMENT#: **0** Category Code: **CHPV**	CONTINGENCY BALANCE (incl. this change) **$57,428,000.67**
COST: **$25,000.00** INCREASE ☑ DECREASE ☐	HEADQUARTERS APPROVAL REQUIRED? ☐ YES ☑ NO
SUPPLEMENTAL FUNDS PROVIDED: **$0.00**	IS THIS REQUEST IN ACCORDANCE WITH ENVIRONMENTAL DOCUMENTS? ☑ YES ☐ NO
CCO DESCRIPTION: Mechanical Pipe Support Modification	**PROJECT DESCRIPTION:** REPLACE SFOBB EAST SPAN

LOCATION: IN SAN FRANCISCO AND ALAMEDA COUNTIES IN SAN FRANCISCO AND OAKLAND FROM 1.3 KM EAST OF THE YERBA BUENA ISL

THIS CHANGE ORDER PROVIDES FOR:

modifying mechanical pipe supports by shortening the pipe hangers from the ceiling and lengthening pipe supports from the floor to mitigate conflicts with the bridge structure.

The pipe supports shown on the plans will not provide the required vertical clearance between the pipe and the bridge structure, and therefore, the pipe supports need to be revised. This mitigation will arrange supports to follow the bridge profile where required to avoid conflict.

This work will be paid for as Extra Work at Force Account for an estimated cost of $25,000.00, which can be financed from the contingency fund.

Prior approval was obtained from Mr. David Salladay, East Span Skyway District Representative, on August 18, 2005.

Design concurrence was obtained from Michael White on May 20, 2005.

Concurrence from Maintenance was obtained from Kenneth Brown on October 7, 2005.

No time adjustment is warranted for this change as it does not affect the controlling operation.

CONCURRED BY:

Construction Engineer:	Douglas Coe	Date 10-14-05
Bridge Engineer:	Douglas Coe	Date 10-14-05
FHWA Representative:		Date
Project Engineer:		Date
Other (specify): Bill Howe		Date 9/7/2005
Michael White, Mechanical Engr.		Date 5/20/2005
Kenneth Brown		Date 10/7/2005
District Prior Approval By:	David Salladay	Date 8/18/2005
HQ (Issue Approve) By:		Date
Resident Engineer's Signature		Date 10-14-05

ESTIMATE OF COST

	THIS REQUEST	TOTAL TO DATE
ITEMS	$0.00	$0.00
FORCE ACCOUNT	$25,000.00	$25,000.00
AGREED PRICE	$0.00	$0.00
ADJUSTMENT	$0.00	$0.00
TOTAL	$25,000.00	$25,000.00

FEDERAL PARTICIPATION

☑ PARTICIPATING ☐ PARTICIPATING IN PART ☐ NONE
☐ NON-PARTICIPATING (MAINTENANCE) ☐ NON-PARTICIPATING

FEDERAL SEGREGATION (if more than one Funding Source or P.I.P. type)
☑ CCO FUNDED PER CONTRACT ☐ CCO FUNDED AS FOLLOWS

FEDERAL FUNDING SOURCE	PERCENT

CONTRACT CHANGE ORDER

Change Requested by: Engineer

CCO: 166	Suppl. No. 1	Contract No. 04 - 012024	Road 04-SF,Ala-80-13.9/14.3,0.0/1.6	FED. AID LOC.: ACIM-080-1(085)8N

To: **KIEWIT / FCI / MANSON a JV**

You are directed to make the following changes from the plans and specifications or do the following described work not included in the plans and specifications for this contract. ***NOTE: This change order is not effective until approved by the Engineer.***

Description of work to be done, estimate of quantities and prices to be paid. (Segregate between additional work at contract price, agreed price and force account.) Unless otherwise stated, rates for rental of equipment cover only such time as equipment is actually used and no allowance will be made for idle time. This last percentage shown is the net accumulated increase or decrease from the original quantity in the Engineer's Estimate.

Extra Work at Force Account:

Provide additional funds for CCO 166 Supplement 0 for adjusting the mechanical pipe supports of the SFOBB East Span Skyway, Bridge Nos. 340006L/R.

Payment for this work shall be made in accordance with Section 5-1.21, "Force Account Payment," of the Special Provisions, and Section 9-1.03, "Force Account Payment," of the Standard Specifications

Estimated cost of Extra Work at Force Account $100,000.00

Estimated Cost: Increase ☑ Decrease ☐ **$100,000.00**

By reason of this order the time of completion will be adjusted as follows: 0 days

Submitted by

Signature	Resident Engineer: DOUG COE, Supervising Br. Eng.	Date 8-11-06

Approval Recommended by

Signature	Construction Engineer: DOUG COE, Supervising Br. Eng.	Date 8-11-06

Engineer Approval by

Signature	(Print name and title) PETER SIEGENTHALER - Chief	Date 7-13-06

We the undersigned contractor, have given careful consideration to the change proposed and agree, if this proposal is approved, that we will provide all equipment, furnish the materials, except as may otherwise be noted above, and perform all services necessary for the work above specified, and will accept as full payment therefor the prices shown above.

NOTE: If you, the contractor, do not sign acceptance of this order, your attention is directed to the requirements of the specifications as to proceeding with the ordered work and filing a written protest within the time therein specified.

Contractor Acceptance by

Signature	(Print name and title) Lee Zink Project Director	Date 8/25/06

STATE OF CALIFORNIA - DEPARTMENT OF TRANSPORTATION

CONTRACT CHANGE ORDER MEMORANDUM

DATE: 8/9/2006

TO: PETER SIEGENTHALER / DOUG COE, Supervising Br. Eng.	FILE: **E.A.** 04 - 012024
FROM: DOUG COE, Supervising Br. Eng.	**CO-RTE-PM** 04-SF,Ala-80-13.9/14.3,0.0/1.6
	FED. NO. ACIM-080-1(085)8N
CCO#: **166** SUPPLEMENT#: **1** Category Code: **CHPV**	CONTINGENCY BALANCE (incl. this change) **$23,023,087.67**
COST: **$100,000.00** INCREASE ☑ DECREASE ☐	HEADQUARTERS APPROVAL REQUIRED? ☐ YES ☑ NO
SUPPLEMENTAL FUNDS PROVIDED: **$0.00**	IS THIS REQUEST IN ACCORDANCE WITH ENVIRONMENTAL DOCUMENTS? ☑ YES ☐ NO
CCO DESCRIPTION: Mechanical Pipe Support Mod.(Add' Funds)	**PROJECT DESCRIPTION:** REPLACE SFOBB EAST SPAN

LOCATION: IN SAN FRANCISCO AND ALAMEDA COUNTIES IN SAN FRANCISCO AND OAKLAND FROM 1.3 KM EAST OF THE YERBA BUENA ISL

THIS CHANGE ORDER PROVIDES FOR:

additional funds to CCO No. 166 Supplement 0 for modifying mechanical pipe supports by shortening the pipe hangers from the ceiling and lengthening pipe supports from the floor to mitigate conflicts with the bridge structure.

This change order is needed to provide additional funds to complete the modifications to the mechanical pipe supports required in CCO No. 166 Supplement 0. The magnitude of the work exceeded the initial estimate.

This work will be paid for as Extra Work at Force Account for an estimated cost of $100,000.00, which can be financed from the contingency fund.

Prior approval was obtained from Mr. Doug Coe, Acting East Span Skyway District Representative, on August 9, 2006.

Design concurrence for this work was provided for in CCO No. 166 Supplement 0, a copy of the concurrence is attached.

Maintenance concurrence for this work was provided for in CCO No. 166 Supplement 0, a copy of the concurrence is attached.

No time adjustment is warranted for this change as it does not affect the controlling operation.

RECEIVED 056640 OCT -2 '06

CONCURRED BY:		
Construction Engineer:	Douglas Coe	Date 8-11-06
Bridge Engineer:	Douglas Coe	Date 8-4-06
FHWA Representative:		Date
Project Engineer:		Date
Other (specify):		Date
		Date
		Date
District Prior Approval By:	Douglas Coe	Date 8/9/2006
HQ (Issue Approve) By:		Date
Resident Engineer's Signature:		Date 8-11-06

ESTIMATE OF COST

	THIS REQUEST	TOTAL TO DATE
ITEMS	$0.00	$0.00
FORCE ACCOUNT	$100,000.00	$125,000.00
AGREED PRICE	$0.00	$0.00
ADJUSTMENT	$0.00	$0.00
TOTAL	$100,000.00	$125,000.00

FEDERAL PARTICIPATION

☑ PARTICIPATING ☐ PARTICIPATING IN PART ☐ NONE
☐ NON-PARTICIPATING (MAINTENANCE) ☐ NON-PARTICIPATING

FEDERAL SEGREGATION (if more than one Funding Source or P.I.P. type)
☑ CCO FUNDED PER CONTRACT ☐ CCO FUNDED AS FOLLOWS

FEDERAL FUNDING SOURCE	PERCENT

STATE OF CALIFORNIA - DEPARTMENT OF TRANSPORTATION

CONTRACT CHANGE ORDER

Change Requested by: Engineer

CCO: 167	Suppl. No. 0	Contract No. 04 - 012024	Road 04-SF,Ala-80-13.9/14.3,0.0/1.6	FED. AID LOC.: ACIM-080-1(085)8N

To: KIEWIT / FCI / MANSON a JV

You are directed to make the following changes from the plans and specifications or do the following described work not included in the plans and specifications for this contract. ***NOTE: This change order is not effective until approved by the Engineer.***

Description of work to be done, estimate of quantities and prices to be paid. (Segregate between additional work at contract price, agreed price and force account.) Unless otherwise stated, rates for rental of equipment cover only such time as equipment is actually used and no allowance will be made for idle time. This last percentage shown is the net accumulated increase or decrease from the original

Extra Work at Lump Sum:

Perform the following work as authorized by the Engineer, provide Labor, Equipment, and Material needed for removal and subsequent repair of the three Pile Head Connection Plates in accordance with the FHWA investigation of the alleged defective welding of the SFOBB East Span Skyway, Bridge Nos. 34-0006L/R.

Full compensation for all costs, including markups, all direct and indirect costs, all associated project impacts, and all overhead costs are included in the lump sum payment of CCO No. 200 and no further payment will be made as a result of this CCO.

Estimated Cost: Increase ☐ Decrease ☐

By reason of this order the time of completion will be adjusted as follows: 0 days

Submitted by		
Signature	Resident Engineer: DOUG COE, Supervising Br. Eng.	Date 8-24-06
Approval Recommended by		
Signature	Construction Engineer: DOUG COE, Supervising Br. Eng.	Date 8-24-06
Engineer Approval by		
Signature	(Print name and title) PETER SIEGENTHALER - Chief	Date

We the undersigned contractor, have given careful consideration to the change proposed and agree, if this proposal is approved, that we will provide all equipment, furnish the materials, except as may otherwise be noted above, and perform all services necessary for the work above specified, and will accept as full payment therefor the prices shown above.

NOTE: If you, the contractor, do not sign acceptance of this order, your attention is directed to the requirements of the specifications as to proceeding with the ordered work and filing a written protest within the time therein specified.

Contractor Acceptance by		
Signature	(Print name and title) Lee Zink, Project Director	Date 9/5/06

STATE OF CALIFORNIA - DEPARTMENT OF TRANSPORTATION

CONTRACT CHANGE ORDER MEMORANDUM

TO: PETER SIEGENTHALER / DOUG COE, Supervising Br. Eng

FROM: DOUG COE, Supervising Br. Eng.

FILE: E.A. 04 - 012024
CO-RTE-PM 04-SF,Ala-80-13.9/14.3,0.0/1.6
FED. NO. ACIM-080-1(085)8N

CCO# 167 SUPPLEMENT#: 0 Category Cod AXZZ

CONTINGENCY BALANCE (incl. this change

COST: INCREASE ☐ DECREASE ☐

HEADQUARTERS APPROVAL REQUIRED? ☑ YES ☐ NO

SUPPLEMENTAL FUNDS PROVIDED: $0.00

IS THIS REQUEST IN ACCORDANCE WITH ENVIRONMENTAL DOCUMENTS? ☑ YES ☐ NO

CCO DESCRIPTION:
Remove Pile Head Connection

PROJECT DESCRIPTION:
REPLACE SFOBB EAST SPAN

LOCATION: IN SAN FRANCISCO AND ALAMEDA COUNTIES IN SAN FRANCISCO AND OAKLAND FROM 1.3 KM EAST OF THE YERBA BUENA ISL

THIS CHANGE ORDER PROVIDES FOR:

the Labor, Equipment, and Material needed for removal and subsequent repair of three Pile Head Connection Plates at Pier E4W in accordance with the FHWA investigation of the alleged defective welding. This work is to be performed at the direction of the Engineer.

Allegations of defective welding by the Contractor's present and former employees, caused an investigation by the Federal Highway Administration (FHWA). This investigation included the removal of a sample of the Pile Head Connection Plates at Pier E4W for additional testing. Section 8-3.01 "WELDING," of the Special Provisions, allows the Engineer to direct the Contractor to perform additional testing. However if no welding deficiencies are discovered the Contractor is to be compensated for this extra work per Section 4-1.03D "Extra Work," of the Standard Specifications. Additionally, per Section 3-1.16, "Contractor's Responsibility for the Work and Materials," of the Standard Specifications: "Until acceptance of the contract, the Contractor shall have the charge and care of the work and of the materials to be used therein"... "shall bear the risk of injury, loss or damage to any part thereof"... "except for those injuries, losses, or damages that are directly and proximately caused by acts of the Federal Government"...

The additional testing revealed that the sampled welds met or exceeded the required welding standards and specifications for this project.

The agreed compensation for this contract change order is included in the lump sum compensation portion of resolution CCO No. 200. For this work the Contractor will be compensated an agreed lump sum amount of $358,986.00.

A detailed force account analysis prepared by the Engineer for the cost of this change order is on file in the project records.

Mr. Pete Siegenthaler, SFOBB Construction Manager, Toll Bridge Construction, concurs with this change. A copy of the concurrence signed by Mr. Siegenthaler on January 18, 2006 is attached.

Prior Approval was obtained from Ms. Nancy Bobb, FHWA Bay Bridge Project Manager, via electronic message on July 7, 2006. A printed copy of the prior approval provided by Ms. Bobb is attached.

Prior Approval was obtained from Mr. Ken Terpstra, SFOBB Project Manager, via electronic message on July 6, 2006. A printed copy of the prior approval provided by Mr. Terpstra is attached.

Concurrence from Maintenance is not required as this change order does not use maintenance funds or affect maintenance facilities or operations.

No time adjustment is warranted for this change order as it does not affect the controlling operation.

CONCURRED BY:		
Construction Engineer:	Douglas Coe	Date 8-24-06
Bridge Engineer:	Douglas Coe	Date 8-24-06
FHWA Representative:	Nancy Bobb	Date 7/7/2006
Project Engineer:		Date
Other (specify): Ken Terpstra		Date 7/6/2006
		Date
		Date
District Prior Approval By:		Date
HQ (Issue Approve) By:	Ken Darby	Date
Resident Engineer's Signature:		Date 8-24-06

ESTIMATE OF COST

	THIS REQUEST	TOTAL TO DATE
ITEMS	$0.00	$0.00
FORCE ACCOUNT	$0.00	$0.00
AGREED PRICE		
ADJUSTMENT	$0.00	$0.00
TOTAL		

FEDERAL PARTICIPATION

☑ PARTICIPATING ☐ PARTICIPATING IN PART ☐ NONE
☐ NON-PARTICIPATING (MAINTENANCE) ☐ NON-PARTICIPATING

FEDERAL SEGREGATION (if more than one Funding Source or P.I.P. type)
☑ CCO FUNDED PER CONTRACT ☐ CCO FUNDED AS FOLLOWS

FEDERAL FUNDING SOURCE	PERCENT

STATE OF CALIFORNIA - DEPARTMENT OF TRANSPORTATION

CONTRACT CHANGE ORDER

Change Requested by: Engineer

CCO: 168	Suppl. No. 0	Contract No. 04 - 012024	Road 04-SF,Ala-80-13.9/14.3,0.0/1.6	FED. AID LOC.: ACIM-080-1(085)8N

To: **KIEWIT / FCI / MANSON a JV**

You are directed to make the following changes from the plans and specifications or do the following described work not included in the plans and specifications for this contract. ***NOTE: This change order is not effective until approved by the Engineer.***

Description of work to be done, estimate of quantities and prices to be paid. (Segregate between additional work at contract price, agreed price and force account.) Unless otherwise stated, rates for rental of equipment cover only such time as equipment is actually used and no allowance will be made for idle time. This last percentage shown is the net accumulated increase or decrease from the original

Adjustment of Compensation at Lump Sum:

For the costs incurred from the delays caused by the Engineer ordered suspension of all the foundation concrete pours due to the allegations of defective field welding in the foundations of the SFOBB East Span Skyway, Bridge Nos. 34-0006L/R from April 6, 2005 to May 5, 2005.

Full compensation for all costs, including markups, all direct and indirect costs, all associated project impacts, and all overhead costs are included in the lump sum payment of CCO No. 200 and no further payment will be made as a result of this CCO.

Estimated Cost: Increase ☐ Decrease ☐

By reason of this order the time of completion will be adjusted as follows: 0 days

Submitted by

Signature	Resident Engineer: DOUG COE, Supervising Br. Eng.	Date 8-24-06

Approval Recommended by

Signature	Construction Engineer: DOUG COE, Supervising Br. Eng.	Date 8-24-06

Engineer Approval by

Signature	(Print name and title) PETER SIEGENTHALER - Chief	Date

We the undersigned contractor, have given careful consideration to the change proposed and agree, if this proposal is approved, that we will provide all equipment, furnish the materials, except as may otherwise be noted above, and perform all services necessary for the work above specified, and will accept as full payment therefor the prices shown above.

NOTE: If you, the contractor, do not sign acceptance of this order, your attention is directed to the requirements of the specifications as to proceeding with the ordered work and filing a written protest within the time therein specified.

Contractor Acceptance by

Signature	(Print name and title) Lee Zink, Project Director	Date 9/5/06

STATE OF CALIFORNIA - DEPARTMENT OF TRANSPORTATION

CONTRACT CHANGE ORDER MEMORANDUM

TO: PETER SIEGENTHALER / DOUG COE, Supervising Br. Eng.	FILE: E.A. 04 - 012024
FROM: DOUG COE, Supervising Br. Eng.	CO-RTE-PM 04-SF,Ala-80-13.9/14.3,0.0/1.6
	FED. NO. ACIM-080-1(085)8N
CCO# 168 SUPPLEMENT#: 0 Category Cod AXZZ	CONTINGENCY BALANCE (incl. this change
COST: INCREASE ☐ DECREASE ☐	HEADQUARTERS APPROVAL REQUIRED? ☑ YES ☐ NO
SUPPLEMENTAL FUNDS PROVIDED: $0.00	IS THIS REQUEST IN ACCORDANCE WITH ENVIRONMENTAL DOCUMENTS? ☑ YES ☐ NO
CCO DESCRIPTION: Temp. Suspension of Ftg.Work Operations	**PROJECT DESCRIPTION:** REPLACE SFOBB EAST SPAN

LOCATION: IN SAN FRANCISCO AND ALAMEDA COUNTIES IN SAN FRANCISCO AND OAKLAND FROM 1.3 KM EAST OF THE YERBA BUENA ISL

THIS CHANGE ORDER PROVIDES FOR:

compensating the Contractor for the costs incurred from the delays caused by the Engineer ordered suspension of all the foundation concrete pours due to the allegations of defective field welding in the foundations of the SFOBB East Span Skyway, Bridge Nos. 34-0006L/R.

Allegations of defective welding by the Contractor's present and former employees, led to an investigation by the Federal Highway Administration (FHWA). This investigation resulted in a State ordered suspension of all foundation concrete pours from April 6, 2005 to May 5, 2005. Although the investigation did not discover any welding deficiencies, the suspension, removal and repair of weld samples, and subsequent revisions to the weld inspection criteria resulted in delays. The Pile Head welding operation, the placement of pile and footing concrete, the pier construction, and the pier table construction were all affected by the delay. Consequently the Contractor is seeking compensation for the costs incurred due to the delays and resulting inefficiencies.

Section 8-1.05 "Temporary Suspension of Work" gives the Engineer the authority to suspend work. However if the Contractor believes that additional compensation is due as a result of the suspension, the Contractor can submit those costs to the Engineer. The Contractor presented the Engineer with an estimate of $1,782,909.00 on June 1, 2006 for all of the additional cost incurred due to the suspension of work . After extensive reviews and analysis, the Department and the Contractor have agreed on a total cost of $232,124.00.

The agreed compensation for this contract change order is included in the lump sum compensation portion of resolution CCO No. 200. For this work the Contractor will be compensated an agreed lump sum amount of $232,124.00.

A detailed force account analysis prepared by the Engineer for the cost of this change order is on file in the project records.

Mr. Pete Siegenthaler, SFOBB Construction Manager, Toll Bridge Construction, concurs with this change. A copy of the concurrence signed by Mr. Siegenthaler on January 23, 2006 is attached.

Prior Approval was obtained from Ms. Nancy Bobb, FHWA Bay Bridge Project Manager, via electronic message on July 7, 2006. A printed copy of the prior approval provided by Ms. Bobb is attached.

Prior Approval was obtained from Mr. Ken Terpstra, SFOBB Project Manager, via electronic message on July 6, 2006. A printed copy of the prior approval provided by Mr. Terpstra is attached.

Concurrence from Maintenance is not required as this change order does not use maintenance funds or affect maintenance facilities or operations.

No time adjustment is warranted for this change order as it does not affect the controlling operation.

CONCURRED BY:

Construction Engineer:	Douglas Coe	Date 8-24-06
Bridge Engineer:	Douglas Coe	Date 8-24-06
FHWA Representative:	Nancy Bobb	Date 7/7/2006
Project Engineer:		Date
Other (specify): Ken Terpstra		Date 7/6/2006
		Date
		Date
District Prior Approval By:		Date
HQ (Issue Approve) By:	Ken Darby	Date
Resident Engineer's Signature:		Date 8-24-06

ESTIMATE OF COST

	THIS REQUEST	TOTAL TO DATE
ITEMS	$0.00	$0.00
FORCE ACCOUNT	$0.00	$0.00
AGREED PRICE	$0.00	$0.00
ADJUSTMENT		
TOTAL		

FEDERAL PARTICIPATION

☑ PARTICIPATING ☐ PARTICIPATING IN PART ☐ NONE
☐ NON-PARTICIPATING (MAINTENANCE) ☐ NON-PARTICIPATING

FEDERAL SEGREGATION (if more than one Funding Source or P.I.P. type)
☑ CCO FUNDED PER CONTRACT ☐ CCO FUNDED AS FOLLOWS

FEDERAL FUNDING SOURCE	PERCENT

CONTRACT CHANGE ORDER

Change Requested by: Engineer

CCO: 169 Suppl. No. 0 Contract No. 04 - 012024 Road 04-SF,Ala-80-13.9/14.3,0.0/1.6 FED. AID LOC.: ACIM-080-1(085)8N

To: KIEWIT / FCI / MANSON a JV

You are directed to make the following changes from the plans and specifications or do the following described work not included in the plans and specifications for this contract. ***NOTE: This change order is not effective until approved by the Engineer.***

Description of work to be done, estimate of quantities and prices to be paid. (Segregate between additional work at contract price, agreed price and force account.) Unless otherwise stated, rates for rental of equipment cover only such time as equipment is actually used and no allowance will be made for idle time. This last percentage shown is the net accumulated increase or decrease from the original

Adjustment of Compensation at Lump Sum:

As authorized by the Engineer, modify the existing barrier reinforcing bars to accommodate lighting and communication pul boxes for the SFOBB East Span Skyway Bridge Replacement Project, Bridge Nos. 34-0006L/R, as shown on page 2 of 3 and page 3 of 3 of this Change Order.

Full compensation for all costs, including markups, all direct and indirect costs, all associated project impacts, and all overhead cost is included in the lump sum payment of CCO No. 200 and no further payment will be made as a result of this CCO.

Estimated Cost: Increase ☐ Decrease ☐

By reason of this order the time of completion will be adjusted as follows: 0 days

Submitted by

Signature	Resident Engineer: DOUG COE, Supervising Br. Eng.	Date 8-24-00

Approval Recommended by

Signature	Construction Engineer: DOUG COE, Supervising Br. Eng.	Date 8-24-00

Engineer Approval by

Signature	(Print name and title) PETER SIEGENTHALER - Chief	Date

We the undersigned contractor, have given careful consideration to the change proposed and agree, if this proposal is approved, that we will provide all equipment, furnish the materials, except as may otherwise be noted above, and perform all services necessary for the work above specified, and will accept as full payment therefor the prices shown above.

NOTE: If you, the contractor, do not sign acceptance of this order, your attention is directed to the requirements of the specifications as to proceeding with the ordered work and filing a written protest within the time therein specified.

Contractor Acceptance by

Signature	(Print name and title) Lee Zink, Project Director	Date 9/5/00

STATE OF CALIFORNIA - DEPARTMENT OF TRANSPORTATION

CONTRACT CHANGE ORDER MEMORANDUM

TO: PETER SIEGENTHALER / DOUG COE, Supervising Br. Eng.	FILE: E.A. 04 - 012024
FROM: DOUG COE, Supervising Br. Eng.	CO-RTE-PM 04-SF,Ala-80-13.9/14.3,0.0/1.6 FED. NO. ACIM-080-1(085)8N
CCO#: 169 SUPPLEMENT#: 0 Category Code: CKPV	CONTINGENCY BALANCE (incl. this change)
COST: INCREASE ☑ DECREASE ☐	HEADQUARTERS APPROVAL REQUIRED? ☐ YES ☑ NO
SUPPLEMENTAL FUNDS PROVIDED: $0.00	IS THIS REQUEST IN ACCORDANCE WITH ENVIRONMENTAL DOCUMENTS? ☑ YES ☐ NO
CCO DESCRIPTION: Additional Reinforcement at Barrier	**PROJECT DESCRIPTION:** REPLACE SFOBB EAST SPAN

LOCATION: IN SAN FRANCISCO AND ALAMEDA COUNTIES IN SAN FRANCISCO AND OAKLAND FROM 1.3 KM EAST OF THE YERBA BUENA ISL

THIS CHANGE ORDER PROVIDES FOR:

modifying the existing barrier reinforcing bars, as authorized by the Engineer, to accommodate lighting and communication pull boxes for the SFOBB East Span Skyway Bridge Replacement Project, Bridge Nos. 34-0006L/R, as shown on Barrier Sketch 1 and 2.

This change order is necessary for the installation of lighting and communication pull boxes. The contract drawings do not address the reinforcing of the lighting pull boxes, communication pull boxes, and the recessed footholes at the stairs for the service plaforms and substations. The reinforcing bars as shown in the contract drawings are spaced at 200 mm in the front side of the barrier and 400 mm at the back of the barrier. This rebar spacing causes conflict with the lighting and communication pull boxes.

The agreed compensation for this change order is included in the lump sum compensation portion of resolution CCO No. 200. For this change order, the Contractor will be paid an agreed lump sum payment of $36,802.00.

A detailed force account analysis prepared by the Engineer for the cost of this change order is on file in the project records.

Prior approval was obtained from Pete Siegenthaler on September 8, 2005.

FHWA concurrence was obtained from Ms. Nancy Bobb on September 16, 2005.

Design concurrence was obtained from Hasan El-Natur, Senior Bridge Engineer on November 16, 2005.

Concurrence from Maintenance was obtained from Kenneth Brown, Office Chief, Toll Bridge Investigation and Maintenance on September 27, 2005.

Authorization to proceed with this change order was issued by Division of Construction on September 27, 2005.

No time adjustment is warranted for this change order as it does not affect the controlling operation.

CONCURRED BY:		
Construction Engineer:	Douglas Coe	Date 8-24-06
Bridge Engineer:	Douglas Coe	Date
FHWA Representative:	Nancy Bobb	Date 9/16/2005
Project Engineer:		Date
Other (specify): Kenneth Brown, Office Chief, Maintenance		Date 9/27/2005
Hasan El-Natur, Senior Bridge Engineer		Date 1/16/2005
		Date
District Prior Approval By:		Date
HQ (Issue Approve) By:		Date
Resident Engineer's Signature:		Date 8-24-06

ESTIMATE OF COST

	THIS REQUEST	TOTAL TO DATE
ITEMS	$0.00	$0.00
FORCE ACCOUNT	$0.00	$0.00
AGREED PRICE	$0.00	$0.00
ADJUSTMENT		
TOTAL		

FEDERAL PARTICIPATION

☑ PARTICIPATING ☐ PARTICIPATING IN PART ☐ NONE
☐ NON-PARTICIPATING (MAINTENANCE) ☐ NON-PARTICIPATING

FEDERAL SEGREGATION (if more than one Funding Source or P.I.P. type)
☑ CCO FUNDED PER CONTRACT ☐ CCO FUNDED AS FOLLOWS

FEDERAL FUNDING SOURCE	PERCENT

CONTRACT CHANGE ORDER

Change Requested by: Engineer

CCO: 170	Suppl. No. 0	Contract No. 04 - 012024	Road 04-SF,Ala-80-13.9/14.3,0.0/1.6	FED. AID LOC.: ACIM-080-1(085)8N

To: **KIEWIT / FCI / MANSON a JV**

You are directed to make the following changes from the plans and specifications or do the following described work not included in the plans and specifications for this contract. ***NOTE: This change order is not effective until approved by the Engineer.***

Description of work to be done, estimate of quantities and prices to be paid. (Segregate between additional work at contract price, agreed price and force account.) Unless otherwise stated, rates for rental of equipment cover only such time as equipment is actually used and no allowance will be made for idle time. This last percentage shown is the net accumulated increase or decrease from the original

Adjustment of Compensation at Lump Sum:

Revise the contract electrical work for items 101 Traffic Operation System, 102 Camera with Housing, 103 Pan and Tilt Unit, 105 Transmitter Duplex Data, 107 Microwave Vehicle Detection Sensor System, 108 Fiber Optic Data Modem, 109 Fiber Optic Cable (72-Fibers), 110 Fiber Optic Cable (12-Fibers), 111 Fiber Optic Splice Closure and 119 Supervisory Control and Data Acquisition Terminal unit System as follows:

1. Delete the installation of MVDS and their harnesses.
2. Delete Cameras and cable/harnesses.
3. Delete CMS panels and harnesses (State Furnished).
4. Delete Fiber Optic cable.
5. Delete 15 kV cable.
6. Delete PLCs from the RTUs.
7. Test installed components.

Revise the contract electrical work in accordance with the revised contract plan sheet numbers 137R2, 138R2, 139R2, 140R2, 141R2, 142R2, 143R2, 145R2, 146R2, 147R2, 148R2, 149R2, 150R2, 151R2, 152R2, 155R2, 156R2, 157R2, 158R2, 159R2, 160R2, 161R2, 162R2, 163R2, 165R2, 166R2, 167R2, 168R2, 169R2, 170R2, 171R2, 172R2, 173R2, 174R2, 176R1, 177R2, 179R2, 180R2, 181R1,183R2, 185R2, 186R2, 191R3, 192R2, 193R2, 194R1, 196R1, 197R2, 199R2, 200R2, 201R1, 203R2, 205R2, 206R2, 220R1, 224R3, 225R3, 226R1, 227R1, 233R21, 264R1, 268R1, 317R1, 332R1, 351R2, 356R1, 360R1, 365R1, 366R2, 367R2, 368R2, 369R1, 370R2, 371R2, 372R2, 373R1, 374R1, 375R1, 376R2, 379R2, 380R2, 381R2, 384R2, 385R2, 386R1, 388R4, 389R4, 393R1, 394R1, 395R1, 396R1, 397R1, 398R1, 399R1, 400R1, 401R1, 402R1, and 403R1 of 978 (98 sheets, sheets 3 through 100 of this change order), and revised Supplement to the Special Provisions, EE-324D Westbound Circuit Schedule (sheet 101 of this change order, 21 pages), EE325F Westbound Conduit and Tray Schedule (sheet 102 of this change order, 36 pages), EE327D Eastbound Circuit Schedule (sheet 103 of this change order, 20 pages), EE328F Eastbound Conduit Tray Schedule (sheet 104 of this change order, 83 pages), for the SFOBB East Span Skyway, Bridge No. 34-0006L/R.

Full compensation for all costs, including markups, all direct and indirect costs, all associated projects impacts, and all overhead costs are included in the lump sum payment under Contract Change Order No. 200. No further payment will be made as a result of this Change Order.

CONTRACT CHANGE ORDER

Change Requested by: Engineer

CCO: 170	Suppl. No. 0	Contract No. 04 - 012024	Road 04-SF,Ala-80-13.9/14.3,0.0/1.6	FED. AID LOC.: ACIM-080-1(085)8N

Estimated Cost: Increase ☐ Decrease ☐

By reason of this order the time of completion will be adjusted as follows: 0 days

Submitted by

Signature	Resident Engineer: DOUG COE, Supervising Br. Eng.	Date 8-24-06

Approval Recommended by

Signature	Construction Engineer: DOUG COE, Supervising Br. Eng.	Date 8-24-06

Engineer Approval by

Signature	(Print name and title) PETER SIEGENTHALER - Chief	Date

We the undersigned contractor, have given careful consideration to the change proposed and agree, if this proposal is approved, that we will provide all equipment, furnish the materials, except as may otherwise be noted above, and perform all services necessary for the work above specified, and will accept as full payment therefor the prices shown above.

NOTE: If you, the contractor, do not sign acceptance of this order, your attention is directed to the requirements of the specifications as to proceeding with the ordered work and filing a written protest within the time therein specified.

Contractor Acceptance by

Signature	(Print name and title) Lee Zink, Project Director	Date 9/5/06

DIST	COUNTY	ROUTE	KILOMETER POST TOTAL PROJECT	SHEET No	TOTAL SHEETS
04	SF, Ala	80	13.9 / 14.3, 0.0 / 1.6		

Caltrans Metric

REGISTERED ELECTRICAL ENGINEER 02/12/01 DATE

6-4-01
PLANS APPROVAL DATE

REGISTERED PROFESSIONAL ENGINEER JENS ERLINGSSON No. 8249 Exp. 9/30/02 ELECTRICAL STATE OF CALIFORNIA

PB POWER, Inc.
A Parsons Brinckerhoff Company
303 Second St., Suite 700N
San Francisco, CA 94107-1317

The State of California or its officers or agents shall not be responsible for the accuracy or completeness of electronic copies of this plan sheet.

San Francisco - Oakland Bay Bridge East Span Seismic Safety Project

04-012024
04-SF-80KP 12.2/KP 14.3
04-ALA-80 KP 0.0/KP 2.1

SUPPLEMENT TO THE SPECIAL PROVISIONS AND PLANS

Binder 1 of 2 - Westbound

MARK	DATE	DESCRIPTIONS	REV	CK	
2	1/20/06	For description of changes, see Directives for Conduit and Tray Schedules Westbound EE-325F.	GG	EJL	CCO NO. 170
1	1/20/06		GG	EJL	CCO NO. 170

REVISIONS

CONTRACT CHANGE ORDER NO. 170
SHEET 102 OF 104

DETAILS
CONDUIT AND TRAY SCHEDULE WESTBOUND

EE-325F

CALCULATED/DESIGNED BY	PB	DATE 11/99	REVISED BY	CYF	EJL	EJL	EJL	EJL
CHECKED BY	EJL	6/00	DATE REVISED	10/01	9/12/03	4/2/04	1/6/06	1/20/06

DESIGN OVERSIGHT
BEHZAD GOLEMOHAMMADI

STATE OF CALIFORNIA - DEPARTMENT OF TRANSPORTATION
Caltrans

USERNAME => reyesl

LAST REVISION DATE PLOTTED

Directives for Conduit and Tray Schedule Westbound EE-325F

Changes to the Supplement to the Special Provisions and Plans, EE-325 Binder 1 of 2-Westbound, EE-325A Binder 1 of 2-Westbound of Addendum No. 6 dated October 30, 2001.

Item No.	Conduit/ Tray No.	Notation under Notes CCO No. 170			Description of changes to the Conduit and Tray Schedule Westbound
		Mark 1	Mark 2	Mark 3	
1	4002	X			Changed number of conductors ckt. UP131-6 for CCO-120
2	4022	X			Changed number of conductors ckt. UP132-6 for CCO-120
3	4042	X			Changed number of conductors ckt. UP133-6 for CCO-120
4	4072	X			Changed number of conductors ckt. UP134-6 for CCO-120
5	4092	X			Changed number of conductors ckt. UP135-6 for CCO-120
6	4112	X			Changed number of conductors ckt. UP136-6 for CCO-120
7	4132	X			Changed number of conductors ckt. UP137-6 for CCO-120
8	4152	X			Changed number of conductors ckt. UP138-6 for CCO-120
9	4177	X			Changed number of conductors ckt. UP139-6 for CCO-120
10	4202	X			Changed number of conductors ckt. UP140-6 for CCO-120
11	4227	X			Changed number of conductors ckt. UP141-6 for CCO-120
12	4247	X			Changed number of conductors ckt. UP142-6 for CCO-120
13	4267	X X			Changed number of conductors ckt. UP143-4 for CCO-120 Changed number of conductors ckt. UP143-6 for CCO-120

Directives for Conduit and Tray Schedule Westbound EE-325F

Changes to the Supplement to the Special Provisions and Plans, EE-325 Binder 1 of 2-Westbound, EE-325A Binder 1 of 2-Westbound of Addendum No. 6 dated October 30, 2001.

Item No.	Conduit/ Tray No.	Notation under Notes CCO No. 170			Description of changes to the Conduit and Tray Schedule Westbound
		Mark 1	Mark 2	Mark 3	
14	1T40		X		Changed conductor type of Cable/Ckt. #1474-12A, #1474-12B, #1474-14A, 1474-14B
15	1T41		X		Changed conductor type of Cable/Ckt. #1474-14A, #1474-14B, #1474-17A, 1474-17B
16	1T42		X		Changed conductor type of Cable/Ckt. #1474-21A, #1474-21B
17	4047		X		Changed conductor type of Cable/Ckt. #1474-12A, #1474-12B
18	4157		X		Changed conductor type of Cable/Ckt. #1474-17A, #1474-17B
19	4252		X		Changed conductor type of Cable/Ckt. #1474-21A, #1474-21B
20	4680		X		Changed conductor type of Cable/Ckt. #1474-14A, #1474-14B
21	4880		X		Changed conductor type of Cable/Ckt. #1474-12A, #1474-12B
22	4930		X		Changed conductor type of Cable/Ckt. #1474-17A, #1474-17B
23	4970		X		Changed conductor type of Cable/Ckt. #1474-21A, #1474-21B
24	4681			X	Remove 15 kV cable ckt #1391 from contract
25	1T11			X	Removed 15 kV cable ckt #1391and #1392 from contract
26	6532			X	Removed 15 kV cable ckt #1391 from contract

Directives for Conduit and Tray Schedule Westbound EE-325F

Changes to the Supplement to the Special Provisions and Plans, EE-325 Binder 1 of 2-Westbound, EE-325A Binder 1 of 2-Westbound of Addendum No. 6 dated October 30, 2001.

Item No.	Conduit/ Tray No.	Notation under Notes CCO No. 170			Description of changes to the Conduit and Tray Schedule Westbound
		Mark 1	Mark 2	Mark 3	
27	6531			X	Removed 15 kV cable ckt #1391 from contract
28	6530			X	Removed 15 kV cable ckt #1391 from contract
29	1T10			X	Removed 15 kV cable ckt #1391 from contract
30	6504			X	Removed 15 kV cable ckt 1391 from contract
31	4682			X	Removed 15 kV cable ckt 1392 from contract
32	6586			X	Removed 15 kV cable ckt 1392 from contract
33	6587			X	Removed 15 kV cable ckt 1392 from contract
34	6588			X	Removed 15 kV cable ckt 1392 from contract
35	1T12			X	Removed 15 kV cable ckt 1392 from contract
36	6642			X	Removed 15 kV cable ckt 1392 from contract
37	6643			X	Removed 15 kV cable ckt 1392 from contract
38	6644			X	Removed 15 kV cable ckt 1392 from contract
39	1T13			X	Removed 15 kV cable ckt 1392 from contract

Directives for Conduit and Tray Schedule Westbound EE-325F

Changes to the Supplement to the Special Provisions and Plans, EE-325 Binder 1 of 2-Westbound, EE-325A Binder 1 of 2-Westbound of Addendum No. 6 dated October 30, 2001.

Item No.	Conduit/ Tray No.	Notation under Notes CCO No. 170			Description of changes to the Conduit and Tray Schedule Westbound
		Mark 1	Mark 2	Mark 3	
40	6936			X	Removed 15 kV cable ckt 1392 from contract
41	4059			X	Removed TOS cable harnesses ckt #1481-1 and 1481-2 from contract
42	4053			X	Removed TOS cable harnesses ckt #1481-1 and 1481-2 from contract
43	4871			X	Removed TOS cable harnesses ckt #1481-1 and 1481-2 from contract
44	4214			X	Removed TOS cable harnesses ckt #1476-3 and 1476-4 from contract
45	4013			X	Removed TOS cable harnesses ckt #1486 from contract
46	4851			X	Removed TOS cable harnesses ckt #1486 from contract
47	4061			X	Removed TOS cable harnesses ckt #1487 from contract
48	4053			X	Removed TOS cable harnesses ckt #1487 from contract
49	4871			X	Removed TOS cable harnesses ckt #1487 from contract
50	4103			X	Removed TOS cable harnesses ckt #1488 from contract
51	4891			X	Removed TOS cable harnesses ckt #1488 from contract
52	4163			X	Removed TOS cable harnesses ckt #1489 from contract

Directives for Conduit and Tray Schedule Westbound EE-325F

Changes to the Supplement to the Special Provisions and Plans, EE-325 Binder 1 of 2-Westbound, EE-325A Binder 1 of 2-Westbound of Addendum No. 6 dated October 30, 2001.

Item No.	Conduit/ Tray No.	Notation under Notes CCO No. 170			Description of changes to the Conduit and Tray Schedule Westbound
		Mark 1	Mark 2	Mark 3	
53	4921			X	Removed TOS cable harnesses ckt #1489 from contract
54	4214			X	Removed TOS cable harnesses ckt #1490 from contract
55	4941			X	Removed TOS cable harnesses ckt #1490 from contract
56	4277			X	Removed TOS cable harnesses ckt #1491 from contract
57	4971			X	Removed TOS cable harnesses ckt #1491 from contract
58	4033			X	Removed TOS cable harnesses ckt #1496 from contract
60	4861			X	Removed TOS cable harnesses ckt #1496 from contract
61	4083			X	Removed TOS cable harnesses ckt #1498 from contract
62	4143			X	Removed TOS cable harnesses ckt #1499 from contract
63	4911			X	Removed TOS cable harnesses ckt #1499 from contract
64	4188			X	Removed TOS cable harnesses ckt #1500 from contract
65	4258			X	Removed TOS cable harnesses ckt #1501 from contract
66	4961			X	Removed TOS cable harnesses ckt #1501 from contract

Directives for Conduit and Tray Schedule Westbound EE-325F

Changes to the Supplement to the Special Provisions and Plans, EE-325 Binder 1 of 2-Westbound, EE-325A Binder 1 of 2-Westbound of Addendum No. 6 dated October 30, 2001.

Item No.	Conduit/ Tray No.	Notation under Notes CCO No. 170			Description of changes to the Conduit and Tray Schedule Westbound
		Mark 1	Mark 2	Mark 3	
67	4056			X	Removed TOS cable harnesses ckt #UP144-1/3 from contract
68	Wireway 11W			X	Removed TOS cable harnesses ckt #UP144-1/3 from contract
69	4875			X	Removed TOS cable harnesses ckt #UP144-1/3 and #UP144-2 from contract
70	4056			X	Removed TOS cable harnesses ckt #UP144-2 from contract
71	4875			X	Removed TOS cable harnesses ckt #UP144-2 from contract
72	Wireway 18W			X	Removed TOS cable harnesses ckt #1476-1 and #1476-2 from contract
END					

CONDUIT AND TRAY SCHEDULE WESTBOUND

CCO No. 170 dated Jan. 20, 2006

Conduit/Tray No: 1T10 **Ref Dwg(s):** EE-61 thru EE-66
Conduit/Tray Type: 305 mm 6" siderail ladder tray
Total Fill: 2628.48 mm2
Allowable Fill: 8387.08 mm2 CCO-170, Mark 3

Cable/Ckt. No.:	Type:	Cable Area:
1391	3-1/C #4/0, 15 kV, EPR Insulation	2628.4mm2

Conduit/Tray No: 1T11 **Ref Dwg(s):** EE-66 to 71,-12,-255
Conduit/Tray Type: 305 mm 6" siderail ladder tray
Total Fill: 5256.96 mm2
Allowable Fill: 8387.08 mm2 CCO-170, Mark 3

Cable/Ckt. No.:	Type:	Cable Area:
1392	3-1/C #4/0, 15 kV, EPR Insulation	2628.4mm2
1391	3-1/C #4/0, 15 kV, EPR Insulation	2628.4mm2

Conduit/Tray No: 1T12 **Ref Dwg(s):** EE-71 thru EE-76
Conduit/Tray Type: 305 mm 6" siderail ladder tray
Total Fill: 2628.48 mm2
Allowable Fill: 8387.08 mm2 CCO-170, Mark 3

Cable/Ckt. No.:	Type:	Cable Area:
1392	3-1/C #4/0, 15 kV, EPR Insulation	2628.4mm2

Conduit/Tray No: 1T13 **Ref Dwg(s):** EE-76, EE-77
Conduit/Tray Type: 305 mm 6" siderail ladder tray
Total Fill: 2628.48 mm2
Allowable Fill: 8387.08 mm2 Note: See Mark 3

Cable/Ckt. No.:	Type:	Cable Area:
1392	3-1/C #4/0, 15 kV, EPR Insulation	2628.4mm2

CONDUIT AND TRAY SCHEDULE WESTBOUND

CCO No. 170 dated Jan. 20, 2006

Conduit/Tray No: 1T40 **Ref Dwg(s):** EE-61 thru EE-66

Conduit/Tray Type: 305 mm 6" siderail ladder tray

Total Fill: 10925.93 mm2

Allowable Fill: 19354.80 mm2 CCO-170, Mark 2

Cable/Ckt. No.:	Type:	Cable Area:
1475-4A	12 Fiber, single mode fiberoptic cable	30.19 mm2
1475-4	72 Fiber, single mode fiberoptic riser cable	323.65mm2
1477-3	72 Fiber, single mode fiberoptic riser cable	323.65mm2
1475-4C2	12 Fiber, single mode fiberoptic cable	30.19 mm2
1475-4C1	12 Fiber, single mode fiberoptic cable	30.19 mm2
1475-4B	12 Fiber, single mode fiberoptic cable	30.19 mm2
1406	1 - 2 pair, shielded #18 with IS/OA , 600 V, PVC jacket	98.1 mm2
1402	1 - 2 pair, shielded #18 with IS/OA , 600 V, PVC jacket	98.1 mm2
1473-14	50 pair #18, shielded pairs, IS/OS shield 600 V, XLPE insul., PVC jacket	1201.7mm2
1474-13	50 pair #18, shielded pairs, IS/OS shield 600 V, XLPE insul., PVC jacket	1201.7mm2
1474-12B	1 - 6 pair, shielded #18 with overall shield , 600 V, PVC jacket	158.9 mm2
1474-14	50 pair #18, shielded pairs, IS/OS shield 600 V, XLPE insul., PVC jacket	1201.7mm2
1474-12A	1 - 6 pair, shielded #18 with overall shield , 600 V, PVC jacket	158.9 mm2
1474-12	50 pair #18, shielded pairs, IS/OS shield 600 V, XLPE insul., PVC jacket	1201.7mm2
1474-11	50 pair #18, shielded pairs, IS/OS shield 600 V, XLPE insul., PVC jacket	1201.7mm2
1473-12	50 pair #18, shielded pairs, IS/OS shield 600 V, XLPE insul., PVC jacket	1201.7mm2
1473-13	50 pair #18, shielded pairs, IS/OS shield 600 V, XLPE insul., PVC jacket	1201.7mm2
1473-11	50 pair #18, shielded pairs, IS/OS shield 600 V, XLPE insul., PVC jacket	1201.7mm2
1475-4D	12 Fiber, single mode fiberoptic cable	30.19 mm2

CONDUIT AND TRAY SCHEDULE WESTBOUND

CCO No. 170 dated Jan. 20, 2006

Conduit/Tray No: 1T41 **Ref Dwg(s):** EE-66 to 71,-12,-255

Conduit/Tray Type: 305 mm 6" siderail ladder tray

Total Fill: 16192.07 mm2

Allowable Fill: 19354.80 mm2 CCO-170, Mark 2

Cable/Ckt. No.:	Type:	Cable Area:
1477-3	72 Fiber, single mode fiberoptic riser cable	323.65mm2
1411	1 - 2 pair, shielded #18 with IS/OA , 600 V, PVC jacket	98.1 mm2
1416	1 - 2 pair, shielded #18 with IS/OA , 600 V, PVC jacket	98.1 mm2
1475-4E	12 Fiber, single mode fiberoptic cable	30.19 mm2
1475-4F	12 Fiber, single mode fiberoptic cable	30.19 mm2
1475-4G	12 Fiber, single mode fiberoptic cable	30.19 mm2
1396-1	1 triad #16 with overall shield, 600 V, PVC jacket	51.89 mm2
1473-14	50 pair #18, shielded pairs, IS/OS shield 600 V, XLPE insul., PVC jacket	1201.7mm2
1391-1	1 triad #16 with overall shield, 600 V, PVC jacket	51.89 mm2
1473-23	50 pair #18, shielded pairs, IS/OS shield 600 V, XLPE insul., PVC jacket	1201.7mm2
1412	1 - 2 pair, shielded #18 with IS/OA , 600 V, PVC jacket	98.1 mm2
1474-23	50 pair #18, shielded pairs, IS/OS shield 600 V, XLPE insul., PVC jacket	1201.7mm2
1473-17	50 pair #18, shielded pairs, IS/OS shield 600 V, XLPE insul., PVC jacket	1201.7mm2
1475-4	72 Fiber, single mode fiberoptic riser cable	323.65mm2
1473-18	50 pair #18, shielded pairs, IS/OS shield 600 V, XLPE insul., PVC jacket	1201.7mm2
1473-16	50 pair #18, shielded pairs, IS/OS shield 600 V, XLPE insul., PVC jacket	1201.7mm2
1474-14	50 pair #18, shielded pairs, IS/OS shield 600 V, XLPE insul., PVC jacket	1201.7mm2
1474-15	50 pair #18, shielded pairs, IS/OS shield 600 V, XLPE insul., PVC jacket	1201.7mm2
1474-16	50 pair #18, shielded pairs, IS/OS shield 600 V, XLPE insul., PVC jacket	1201.7mm2

1474-18	50 pair #18, shielded pairs, IS/OS shield 600 V, XLPE insul., PVC jacket	1201.7mm2
1474-14A	1 - 6 pair, shielded #18 with overall shield , 600 V, PVC jacket	158.9 mm2
1474-14B	1 - 6 pair, shielded #18 with overall shield , 600 V, PVC jacket	158.9 mm2
1474-17B	1 - 6 pair, shielded #18 with overall shield , 600 V, PVC jacket	158.9 mm2
1474-17A	1 - 6 pair, shielded #18 with overall shield , 600 V, PVC jacket	158.9 mm2
1474-17	50 pair #18, shielded pairs, IS/OS shield 600 V, XLPE insul., PVC jacket	1201.7mm2
1473-15	50 pair #18, shielded pairs, IS/OS shield 600 V, XLPE insul., PVC jacket	1201.7mm2

Conduit/Tray No: 1T42 **Ref Dwg(s):** EE-71 thru EE-76

Conduit/Tray Type: 305 mm 6" siderail ladder tray

Total Fill: 13495.36 mm2

Allowable Fill: 19354.80 mm2 CCO-170, Mark 2

Cable/Ckt. No.:	Type:	Cable Area:
1473-18	50 pair #18, shielded pairs, IS/OS shield 600 V, XLPE insul., PVC jacket	1201.7mm2
1422	1 - 2 pair, shielded #18 with IS/OA , 600 V, PVC jacket	98.1 mm2
1475-4	72 Fiber, single mode fiberoptic riser cable	323.65mm2
1475-4H	12 Fiber, single mode fiberoptic cable	30.19 mm2
1475-4J	12 Fiber, single mode fiberoptic cable	30.19 mm2
1475-4I2	12 Fiber, single mode fiberoptic cable	30.19 mm2
1477-3	72 Fiber, single mode fiberoptic riser cable	323.65mm2
1419	1 - 2 pair, shielded #18 with IS/OA , 600 V, PVC jacket	98.1 mm2
1416	1 - 2 pair, shielded #18 with IS/OA , 600 V, PVC jacket	98.1 mm2
1473-19	50 pair #18, shielded pairs, IS/OS shield 600 V, XLPE insul., PVC jacket	1201.7mm2
1475-4I1	12 Fiber, single mode fiberoptic cable	30.19 mm2
1474-18	50 pair #18, shielded pairs, IS/OS shield 600 V, XLPE insul., PVC jacket	1201.7mm2
1473-22	50 pair #18, shielded pairs, IS/OS shield 600 V, XLPE insul., PVC jacket	1201.7mm2
1473-20	50 pair #18, shielded pairs, IS/OS shield 600 V, XLPE insul., PVC jacket	1201.7mm2
1474-21B	1 - 6 pair, shielded #18 with overall shield , 600 V, PVC jacket	158.9 mm2
1474-21A	1 - 6 pair, shielded #18 with overall shield , 600 V, PVC jacket	158.9 mm2
1474-22	50 pair #18, shielded pairs, IS/OS shield 600 V, XLPE insul., PVC jacket	1201.7mm2
1474-21	50 pair #18, shielded pairs, IS/OS shield 600 V, XLPE insul., PVC jacket	1201.7mm2
1474-20	50 pair #18, shielded pairs, IS/OS shield 600 V, XLPE insul., PVC jacket	1201.7mm2

1474-19	50 pair #18, shielded pairs, IS/OS shield 600 V, XLPE insul., PVC jacket	1201.7mm2
1418	1 - 2 pair, shielded #18 with IS/OA , 600 V, PVC jacket	98.1 mm2
1473-21	50 pair #18, shielded pairs, IS/OS shield 600 V, XLPE insul., PVC jacket	1201.7mm2

Conduit/Tray No: 4002 **Ref Dwg(s):** EE-266

Conduit/Tray Type: 78 mm GRS-PVC coated conduit

Total Fill: 1269.26 mm2

Allowable Fill: 2564.19 mm2 CCO-170, Mark 1

Cable/Ckt. No.:	Type:	Cable Area:
UP131-10	2+1gnd #12,#12, 600 V, RHH/RHW insulation	49.21 mm2
UP131-6	1-3/C #10, 600 V, EPR insulation	126.88mm2
UP131-9	1-3/C #10, 600 V, EPR insulation	126.88mm2
UP131-3A	2+1gnd #8,#10, 600 V, RHH/RHW insulation	96.23 mm2
UP131-1A	1-2/C+gnd #8, 600 V, EPR insulation	227.46mm2
UP131-8	1-2/C+gnd #8, 600 V, EPR insulation	227.46mm2
UP131-7	1-2/C+gnd #8, 600 V, EPR insulation	227.46mm2
UP131-2	1-2/C+gnd #10, 600 V, EPR insulation	126.88mm2
UP131-5	2+1gnd #10,#10, 600 V, RHH/RHW insulation	60.8 mm2

Conduit/Tray No: 4013 **Ref Dwg(s):** EE-266

Conduit/Tray Type: 41 mm GRS-PVC coated conduit

Total Fill: 316.24 mm2

Allowable Fill: 534.55 mm2 CCO-170, Mark 3

Cable/Ckt. No.:	Type:	Cable Area:
1486	10 DLC	316.24mm2

Conduit/Tray No: 4022 **Ref Dwg(s):** EE-267

Conduit/Tray Type: 78 mm GRS-PVC coated conduit

Total Fill: 1168.68 mm2

Allowable Fill: 1935.24 mm2 CCO-170, Mark 1

Cable/Ckt. No.:	Type:	Cable Area:
UP132-3A	2+1gnd #8,#10, 600 V, RHH/RHW insulation	96.23 mm2
UP132-8	1-2/C+gnd #10, 600 V, EPR insulation	126.88mm2
UP132-6	1-3/C #10, 600 V, EPR insulation	126.88mm2
UP132-1A	1-2/C+gnd #8, 600 V, EPR insulation	227.46mm2
UP132-10	2+1gnd #12,#12, 600 V, RHH/RHW insulation	49.21 mm2
UP132-7	1-2/C+gnd #8, 600 V, EPR insulation	227.46mm2
UP132-5	2+1gnd #10,#10, 600 V, RHH/RHW insulation	60.8 mm2
UP132-9	1-3/C #10, 600 V, EPR insulation	126.88mm2
UP132-2	1-2/C+gnd #10, 600 V, EPR insulation	126.88mm2

Conduit/Tray No: 4033 **Ref Dwg(s):** EE-267

Conduit/Tray Type: 41 mm GRS-PVC coated conduit

Total Fill: 150.44 mm2

Allowable Fill: 708.28 mm2 CCO-170, Mark 3

Cable/Ckt. No.:	Type:	Cable Area:
1496	MVDS DLC	150.44mm2

CONDUIT AND TRAY SCHEDULE WESTBOUND

CCO No. 170 dated Jan. 20, 2006

Conduit/Tray No: 4042 **Ref Dwg(s):** EE-268

Conduit/Tray Type: 78 mm GRS-PVC coated conduit

Total Fill: 1570.71 mm2

Allowable Fill: 1935.24 mm2 CCO-170, Mark 1

Cable/Ckt. No.:	Type:	Cable Area:
UP133-4A	2+1gnd #8,#10, 600 V, RHH/RHW insulation	96.23 mm2
UP133-9	1-3/C #12, 600 V, EPR insulation	102.61mm2
UP133-10	2+1gnd #12,#12, 600 V, RHH/RHW insulation	49.21 mm2
UP133-2A	1-2/C+gnd #8, 600 V, EPR insulation	227.46mm2
UP133-6	1-3/C #10, 600 V, EPR insulation	126.88mm2
UP133-7	1-2/C+gnd #8, 600 V, EPR insulation	227.46mm2
UP133-5	2+1gnd #10,#10, 600 V, RHH/RHW insulation	60.8 mm2
UP133-3A	2+1gnd #8,#10, 600 V, RHH/RHW insulation	96.23 mm2
UP133-11	1-3/C #12, 600 V, EPR insulation	102.61mm2
UP133-1A	1-2/C+gnd #8, 600 V, EPR insulation	227.46mm2
UP133-8	1-2/C+gnd #10, 600 V, EPR insulation	126.88mm2
UP133-14	1-2/C+gnd #10, 600 V, EPR insulation	126.88mm2

Conduit/Tray No: 4047 **Ref Dwg(s):** EE-268

Conduit/Tray Type: 78 mm GRS-PVC coated conduit

Total Fill: 710.20 mm2

Allowable Fill: 1935.24 mm2 CCO-170, Mark 2

Cable/Ckt. No.:	Type:	Cable Area:
1408	1 - 2 pair, shielded #18 with IS/OA , 600 V, PVC jacket	98.1 mm2
1474-12A	1 - 6 pair, shielded #18 with overall shield , 600 V, PVC jacket	158.9 mm2
1474-12B	1 - 6 pair, shielded #18 with overall shield , 600 V, PVC jacket	158.9 mm2
1402	1 - 2 pair, shielded #18 with IS/OA , 600 V, PVC jacket	98.1 mm2
1404	1 - 2 pair, shielded #18 with IS/OA , 600 V, PVC jacket	98.1 mm2
1406	1 - 2 pair, shielded #18 with IS/OA , 600 V, PVC jacket	98.1 mm2

Conduit/Tray No: 4053 **Ref Dwg(s):** EE-268

Conduit/Tray Type: 78 mm GRS-PVC coated conduit

Total Fill: 1061.96 mm2

Allowable Fill: 1935.24 mm2 CCO-170, Mark 3

Cable/Ckt. No.:	Type:	Cable Area:
1487	10 DLC	316.24mm2
1481-1	Harness #4	569.34mm2
1481-2	Harness #5	176.38mm2

Conduit/Tray No: 4056 **Ref Dwg(s):** EE-268

Conduit/Tray Type: 78 mm GRS-PVC coated conduit

Total Fill: 489.12 mm2

Allowable Fill: 1935.24 mm2 CCO-170, Mark 3

Cable/Ckt. No.:	Type:	Cable Area:
UP144-1/3	2+1gnd #2,#6, 600 V, RHH/RHW insulation	263.82mm2
UP144-2	2+1gnd #12,#12, 600 V, RHH/RHW insulation	49.21 mm2
UP144-9	1-3/C #10, 600 V, EPR insulation	126.88mm2
UP144-4	2+1gnd #12,#12, 600 V, RHH/RHW insulation	49.21 mm2

Conduit/Tray No: 4059 **Ref Dwg(s):** EE-268
Conduit/Tray Type: 78 mm GRS-PVC coated conduit
Total Fill: 745.72 mm2
Allowable Fill: 1499.81 mm2 CCO-170, Mark 3

Cable/Ckt. No.:	Type:	Cable Area:
1481-1	Harness #4	569.34mm2
1481-2	Harness #5	176.38mm2

Conduit/Tray No: 4061 **Ref Dwg(s):** EE-268
Conduit/Tray Type: 41 mm GRS-PVC coated conduit
Total Fill: 316.24 mm2
Allowable Fill: 708.28 mm2 CCO-170, Mark 3

Cable/Ckt. No.:	Type:	Cable Area:
1487	10 DLC	316.24mm2

Conduit/Tray No: 4072 **Ref Dwg(s):** EE-269
Conduit/Tray Type: 78 mm GRS-PVC coated conduit
Total Fill: 1173.03 mm2
Allowable Fill: 1935.24 mm2 CCO-170, Mark 1

Cable/Ckt. No.:	Type:	Cable Area:
UP134-1A	1-2/C+gnd #8, 600 V, EPR insulation	227.46mm2
UP134-6	1-3/C #10, 600 V, EPR insulation	126.88mm2
UP134-2	1-2/C+gnd #10, 600 V, EPR insulation	126.88mm2
UP134-8	1-2/C+gnd #10, 600 V, EPR insulation	126.88mm2
UP134-3A	1-2/C+gnd #8, 600 V, EPR insulation	227.46mm2
UP134-10	2+1gnd #12,#12, 600 V, RHH/RHW insulation	49.21 mm2
UP134-5	2+1gnd #10,#10, 600 V, RHH/RHW insulation	60.8 mm2
UP134-7	1-2/C+gnd #8, 600 V, EPR insulation	227.46mm2

Conduit/Tray No: 4083 **Ref Dwg(s):** EE-269

Conduit/Tray Type: 41 mm GRS-PVC coated conduit

Total Fill: 150.44 mm2

Allowable Fill: 708.28 mm2 CCO-170, Mark 3

Cable/Ckt. No.:	Type:	Cable Area:
1498	MVDS DLC	150.44mm2

Conduit/Tray No: 4092 **Ref Dwg(s):** EE-270

Conduit/Tray Type: 78 mm GRS-PVC coated conduit

Total Fill: 1041.80 mm2

Allowable Fill: 1935.24 mm2 CCO-170, Mark 1

Cable/Ckt. No.:	Type:	Cable Area:
UP135-3A	2+1gnd #8,#10, 600 V, RHH/RHW insulation	96.23 mm2
UP135-2	1-2/C+gnd #10, 600 V, EPR insulation	126.88mm2
UP135-6	1-3/C #10, 600 V, EPR insulation	126.88mm2
UP135-8	1-2/C+gnd #10, 600 V, EPR insulation	126.88mm2
UP135-5	2+1gnd #10,#10, 600 V, RHH/RHW insulation	60.8 mm2
UP135-1A	1-2/C+gnd #8, 600 V, EPR insulation	227.46mm2
UP135-10	2+1gnd #12,#12, 600 V, RHH/RHW insulation	49.21 mm2
UP135-7	1-2/C+gnd #8, 600 V, EPR insulation	227.46mm2

Conduit/Tray No: 4103 **Ref Dwg(s):** EE-270

Conduit/Tray Type: 41 mm GRS-PVC coated conduit

Total Fill: 316.24 mm2

Allowable Fill: 534.55 mm2 CCO-170, Mark 3

Cable/Ckt. No.:	Type:	Cable Area:
1488	10 DLC	316.24mm2

Conduit/Tray No: 4112 **Ref Dwg(s):** EE-271

Conduit/Tray Type: 78 mm GRS-PVC coated conduit

Total Fill: 992.59 mm2

Allowable Fill: 1935.24 mm2 CCO-170, Mark 1

Cable/Ckt. No.:	Type:	Cable Area:
UP136-8	1-2/C+gnd #10, 600 V, EPR insulation	126.88mm2
UP136-3A	2+1gnd #8,#10, 600 V, RHH/RHW insulation	96.23 mm2
UP136-6	1-3/C #10, 600 V, EPR insulation	126.88mm2
UP136-5	2+1gnd #10,#10, 600 V, RHH/RHW insulation	60.8 mm2
UP136-1A	1-2/C+gnd #8, 600 V, EPR insulation	227.46mm2
UP136-2	1-2/C+gnd #10, 600 V, EPR insulation	126.88mm2
UP136-7	1-2/C+gnd #8, 600 V, EPR insulation	227.46mm2

Conduit/Tray No: 4132 **Ref Dwg(s):** EE-272

Conduit/Tray Type: 78 mm GRS-PVC coated conduit

Total Fill: 1142.38 mm2

Allowable Fill: 1935.24 mm2 CCO-170, Mark 1

Cable/Ckt. No.:	Type:	Cable Area:
UP137-6	1-3/C #10, 600 V, EPR insulation	126.88mm2
UP137-2	1-2/C+gnd #10, 600 V, EPR insulation	126.88mm2
UP137-8	1-2/C+gnd #8, 600 V, EPR insulation	227.46mm2
UP137-7	1-2/C+gnd #8, 600 V, EPR insulation	227.46mm2
UP137-5	2+1gnd #10,#10, 600 V, RHH/RHW insulation	60.8 mm2
UP137-3A	2+1gnd #8,#10, 600 V, RHH/RHW insulation	96.23 mm2
UP137-1A	1-2/C+gnd #8, 600 V, EPR insulation	227.46mm2
UP137-10	2+1gnd #12,#12, 600 V, RHH/RHW insulation	49.21 mm2

Conduit/Tray No: 4143 **Ref Dwg(s):** EE-272

Conduit/Tray Type: 41 mm GRS-PVC coated conduit

Total Fill: 150.44 mm2

Allowable Fill: 708.28 mm2 CCO-170, Mark 3

Cable/Ckt. No.:	Type:	Cable Area:
1499	MVDS DLC	150.44mm2

Conduit/Tray No: 4152 **Ref Dwg(s):** EE-273

Conduit/Tray Type: 78 mm GRS-PVC coated conduit

Total Fill: 1570.71 mm2

Allowable Fill: 1935.24 mm2 CCO-170, Mark 1

Cable/Ckt. No.:	Type:	Cable Area:
UP138-2A	1-2/C+gnd #8, 600 V, EPR insulation	227.46mm2
UP138-10	2+1gnd #12,#12, 600 V, RHH/RHW insulation	49.21 mm2
UP138-11	1-3/C #12, 600 V, EPR insulation	102.61mm2
UP138-1A	1-2/C+gnd #8, 600 V, EPR insulation	227.46mm2
UP138-3A	2+1gnd #8,#10, 600 V, RHH/RHW insulation	96.23 mm2
UP138-5	2+1gnd #10,#10, 600 V, RHH/RHW insulation	60.8 mm2
UP138-7	1-2/C+gnd #8, 600 V, EPR insulation	227.46mm2
UP138-8	1-3/C #10, 600 V, EPR insulation	126.88mm2
UP138-9	1-3/C #12, 600 V, EPR insulation	102.61mm2
UP138-6	1-3/C #10, 600 V, EPR insulation	126.88mm2
UP138-14	1-2/C+gnd #10, 600 V, EPR insulation	126.88mm2
UP138-4A	2+1gnd #8,#10, 600 V, RHH/RHW insulation	96.23 mm2

Conduit/Tray No: 4157 **Ref Dwg(s):** EE-273

Conduit/Tray Type: 78 mm GRS-PVC coated conduit

Total Fill: 710.20 mm2

Allowable Fill: 1935.24 mm2 CCO-170, Mark 2

Cable/Ckt. No.:	Type:	Cable Area:
1474-17A	1 - 6 pair, shielded #18 with overall shield , 600 V, PVC jacket	158.9 mm2
1474-17B	1 - 6 pair, shielded #18 with overall shield , 600 V, PVC jacket	158.9 mm2
1411	1 - 2 pair, shielded #18 with IS/OA , 600 V, PVC jacket	98.1 mm2
1415	1 - 2 pair, shielded #18 with IS/OA , 600 V, PVC jacket	98.1 mm2
1416	1 - 2 pair, shielded #18 with IS/OA , 600 V, PVC jacket	98.1 mm2
1412	1 - 2 pair, shielded #18 with IS/OA , 600 V, PVC jacket	98.1 mm2

Conduit/Tray No: 4163 **Ref Dwg(s):** EE-273

Conduit/Tray Type: 41 mm GRS-PVC coated conduit

Total Fill: 316.24 mm2

Allowable Fill: 534.55 mm2 CCO-170, Mark 3

Cable/Ckt. No.:	Type:	Cable Area:
1489	10 DLC	316.24mm2

Conduit/Tray No: 4177 **Ref Dwg(s):** EE-274

Conduit/Tray Type: 78 mm GRS-PVC coated conduit

Total Fill: 1173.03 mm2

Allowable Fill: 1935.24 mm2 CCO-170, Mark 1

Cable/Ckt. No.:	Type:	Cable Area:
UP139-10	2+1gnd #12,#12, 600 V, RHH/RHW insulation	49.21 mm2
UP139-1A	1-2/C+gnd #8, 600 V, EPR insulation	227.46mm2
UP139-8	1-2/C+gnd #10, 600 V, EPR insulation	126.88mm2
UP139-7	1-2/C+gnd #8, 600 V, EPR insulation	227.46mm2
UP139-5	2+1gnd #10,#10, 600 V, RHH/RHW insulation	60.8 mm2
UP139-6	1-3/C #10, 600 V, EPR insulation	126.88mm2
UP139-3A	1-2/C+gnd #8, 600 V, EPR insulation	227.46mm2
UP139-2	1-2/C+gnd #10, 600 V, EPR insulation	126.88mm2

Conduit/Tray No: 4188 **Ref Dwg(s):** EE-274

Conduit/Tray Type: 41 mm GRS-PVC coated conduit

Total Fill: 150.44 mm2

Allowable Fill: 708.28 mm2 CCO-170, Mark 3

Cable/Ckt. No.:	Type:	Cable Area:
1500	MVDS DLC	150.44mm2

Conduit/Tray No: 4202 **Ref Dwg(s):** EE-275

Conduit/Tray Type: 78 mm GRS-PVC coated conduit

Total Fill: 941.22 mm2

Allowable Fill: 1935.24 mm2 CCO-170, Mark 1

Cable/Ckt. No.:	Type:	Cable Area:
UP140-5	2+1gnd #10,#10, 600 V, RHH/RHW insulation	60.8 mm2
UP140-2	1-2/C+gnd #10, 600 V, EPR insulation	126.88mm2
UP140-6	1-3/C #10, 600 V, EPR insulation	126.88mm2
UP140-7	1-2/C+gnd #10, 600 V, EPR insulation	126.88mm2
UP140-3A	2+1gnd #8,#10, 600 V, RHH/RHW insulation	96.23 mm2
UP140-1A	1-2/C+gnd #8, 600 V, EPR insulation	227.46mm2
UP140-10	2+1gnd #12,#12, 600 V, RHH/RHW insulation	49.21 mm2
UP140-8	1-2/C+gnd #10, 600 V, EPR insulation	126.88mm2

Conduit/Tray No: 4214 **Ref Dwg(s):** EE-275

Conduit/Tray Type: 41 mm GRS-PVC coated conduit

Total Fill: 490.06 mm2

Allowable Fill: 534.55 mm2 CCO-170, Mark 3

Cable/Ckt. No.:	Type:	Cable Area:
1476-4	TVL	42.03 mm2
1490	10 DLC	316.24mm2
1476-3	TVC	131.79mm2

Conduit/Tray No: 4227 **Ref Dwg(s):** EE-276

Conduit/Tray Type: 78 mm GRS-PVC coated conduit

Total Fill: 992.59 mm2

Allowable Fill: 1935.24 mm2 CCO-170, Mark 1

Cable/Ckt. No.:	Type:	Cable Area:
UP141-5	2+1gnd #10,#10, 600 V, RHH/RHW insulation	60.8 mm2
UP141-1A	1-2/C+gnd #8, 600 V, EPR insulation	227.46mm2
UP141-3A	2+1gnd #8,#10, 600 V, RHH/RHW insulation	96.23 mm2
UP141-7	1-2/C+gnd #8, 600 V, EPR insulation	227.46mm2
UP141-6	1-3/C #10, 600 V, EPR insulation	126.88mm2
UP141-2	1-2/C+gnd #10, 600 V, EPR insulation	126.88mm2
UP141-8	1-2/C+gnd #10, 600 V, EPR insulation	126.88mm2

CONDUIT AND TRAY SCHEDULE WESTBOUND

CCO No. 170 dated Jan. 20, 2006

Conduit/Tray No: 4247 **Ref Dwg(s):** EE-277

Conduit/Tray Type: 78 mm GRS-PVC coated conduit

Total Fill: 1470.13 mm2

Allowable Fill: 1935.24 mm2 CCO-170, Mark 1

Cable/Ckt. No.:	Type:	Cable Area:
UP142-6	1-3/C #10, 600 V, EPR insulation	126.88mm2
UP142-10	2+1gnd #12,#12, 600 V, RHH/RHW insulation	49.21 mm2
UP142-14	1-2/C+gnd #10, 600 V, EPR insulation	126.88mm2
UP142-1A	1-2/C+gnd #8, 600 V, EPR insulation	227.46mm2
UP142-4A	2+1gnd #8,#10, 600 V, RHH/RHW insulation	96.23 mm2
UP142-9	1-3/C #12, 600 V, EPR insulation	102.61mm2
UP142-8	1-2/C+gnd #10, 600 V, EPR insulation	126.88mm2
UP142-7	1-2/C+gnd #10, 600 V, EPR insulation	126.88mm2
UP142-5	2+1gnd #10,#10, 600 V, RHH/RHW insulation	60.8 mm2
UP142-3A	2+1gnd #8,#10, 600 V, RHH/RHW insulation	96.23 mm2
UP142-2A	1-2/C+gnd #8, 600 V, EPR insulation	227.46mm2
UP142-11	1-3/C #12, 600 V, EPR insulation	102.61mm2

Conduit/Tray No: 4252 **Ref Dwg(s):** EE-276

Conduit/Tray Type: 78 mm GRS-PVC coated conduit

Total Fill: 710.20 mm2

Allowable Fill: 1935.24 mm2 CCO-170, Mark 2

Cable/Ckt. No.:	Type:	Cable Area:
1419	1 - 2 pair, shielded #18 with IS/OA , 600 V, PVC jacket	98.1 mm2
1418	1 - 2 pair, shielded #18 with IS/OA , 600 V, PVC jacket	98.1 mm2
1422	1 - 2 pair, shielded #18 with IS/OA , 600 V, PVC jacket	98.1 mm2
1474-21A	1 - 6 pair, shielded #18 with overall shield , 600 V, PVC jacket	158.9 mm2
1421	1 - 2 pair, shielded #18 with IS/OA , 600 V, PVC jacket	98.1 mm2
1474-21B	1 - 6 pair, shielded #18 with overall shield , 600 V, PVC jacket	158.9 mm2

Conduit/Tray No: 4258 **Ref Dwg(s):** EE-277

Conduit/Tray Type: 41 mm GRS-PVC coated conduit

Total Fill: 150.44 mm2

Allowable Fill: 708.28 mm2 CCO-170, Mark 3

Cable/Ckt. No.:	Type:	Cable Area:
1501	MVDS DLC	150.44mm2

Conduit/Tray No: 4267 **Ref Dwg(s):** EE-278

Conduit/Tray Type: 78 mm GRS-PVC coated conduit

Total Fill: 1396.14 mm2

Allowable Fill: 1935.24 mm2 CCO-170, Mark 1

Cable/Ckt. No.:	Type:	Cable Area:
UP143-6	1-3/C #10, 600 V, EPR insulation	126.88mm2
UP143-11	1-2/C+gnd #10, 600 V, EPR insulation	126.88mm2
UP143-4	1-3/C #10, 600 V, EPR insulation	126.88mm2
UP143-10	2+1gnd #12,#12, 600 V, RHH/RHW insulation	49.21 mm2
UP143-8	1-2/C+gnd #8, 600 V, EPR insulation	227.46mm2
UP143-3A	2+1gnd #8,#10, 600 V, RHH/RHW insulation	96.23 mm2
UP143-7	1-2/C+gnd #8, 600 V, EPR insulation	227.46mm2
UP143-1A	1-2/C+gnd #8, 600 V, EPR insulation	227.46mm2
UP143-5	2+1gnd #10,#10, 600 V, RHH/RHW insulation	60.8 mm2
UP143-12	1-2/C+gnd #10, 600 V, EPR insulation	126.88mm2

Conduit/Tray No: 4277 **Ref Dwg(s):** EE-278

Conduit/Tray Type: 41 mm GRS-PVC coated conduit

Total Fill: 316.24 mm2

Allowable Fill: 534.55 mm2 CCO-170, Mark 3

Cable/Ckt. No.:	Type:	Cable Area:
1491	10 DLC	316.24mm2

Conduit/Tray No: 4680 **Ref Dwg(s):** EE-12

Conduit/Tray Type: 78 mm GRS conduit

Total Fill: 317.80 mm2

Allowable Fill: 1499.81 mm2 CCO-170, Mark 2

Cable/Ckt. No.:	Type:	Cable Area:
1474-14B	1 - 6 pair, shielded #18 with overall shield , 600 V, PVC jacket	158.9 mm2
1474-14A	1 - 6 pair, shielded #18 with overall shield , 600 V, PVC jacket	158.9 mm2

Conduit/Tray No: 4681 **Ref Dwg(s):** EE-12
Conduit/Tray Type: 103 mm GRS conduit
Total Fill: 2628.48 mm2
Allowable Fill: 3324.51 mm2 CCO-170, Mark 3

Cable/Ckt. No.:	Type:	Cable Area:
1391	3-1/C #4/0, 15 kV, EPR Insulation	2628.4mm2

Conduit/Tray No: 4682 **Ref Dwg(s):** EE-12
Conduit/Tray Type: 103 mm GRS conduit
Total Fill: 2628.48 mm2
Allowable Fill: 3324.51 mm2 CCO-170, Mark 3

Cable/Ckt. No.:	Type:	Cable Area:
1392	3-1/C #4/0, 15 kV, EPR Insulation	2628.4mm2

Conduit/Tray No: 4851 **Ref Dwg(s):** EE-266
Conduit/Tray Type: 78 mm GRS-PVC coated conduit
Total Fill: 316.24 mm2
Allowable Fill: 1935.24 mm2 CCO-170, Mark 3

Cable/Ckt. No.:	Type:	Cable Area:
1486	10 DLC	316.24mm2

Conduit/Tray No: 4861 **Ref Dwg(s):** EE-267
Conduit/Tray Type: 78 mm GRS-PVC coated conduit
Total Fill: 150.44 mm2
Allowable Fill: 1935.24 mm2 CCO-170, Mark 3

Cable/Ckt. No.:	Type:	Cable Area:
1496	MVDS DLC	150.44mm2

Conduit/Tray No: 4871 **Ref Dwg(s):** EE-268
Conduit/Tray Type: 78 mm GRS-PVC coated conduit
Total Fill: 1061.96 mm2
Allowable Fill: 1935.24 mm2 CCO-170, Mark 3

Cable/Ckt. No.:	Type:	Cable Area:
1487	10 DLC	316.24mm2
1481-2	Harness #5	176.38mm2
1481-1	Harness #4	569.34mm2

Conduit/Tray No: 4875 **Ref Dwg(s):** EE-268

Conduit/Tray Type: 78 mm GRS-PVC coated conduit

Total Fill: 1431.89 mm2

Allowable Fill: 1935.24 mm2 CCO-170, Mark 3

Cable/Ckt. No.:	Type:	Cable Area:
1465-2	1-3/C #16, 600 V, EPR insulation	62.07 mm2
UP144-2	2+1gnd #12,#12, 600 V, RHH/RHW insulation	49.21 mm2
UP133-2A	1-2/C+gnd #8, 600 V, EPR insulation	227.46mm2
1465-1	1-3/C #16, 600 V, EPR insulation	62.07 mm2
1461	1-2/C #14, 600 V, EPR insulation	77.07 mm2
1460	1-2/C #14, 600 V, EPR insulation	77.07 mm2
1454	1-7/C #16, 600 V, EPR insulation	102.61mm2
1453	1-2/C #14, 600 V, EPR insulation	77.07 mm2
1452	1-2/C #14, 600 V, EPR insulation	77.07 mm2
1451	1-7/C #16, 600 V, EPR insulation	102.61mm2
1364	1-3/C #10, 600 V, EPR insulation	126.88mm2
UP144-1/3	2+1gnd #2,#6, 600 V, RHH/RHW insulation	263.82mm2
1365	1-3/C #10, 600 V, EPR insulation	126.88mm2

Conduit/Tray No: 4880 **Ref Dwg(s):** EE-268
Conduit/Tray Type: 78 mm GRS-PVC coated conduit
Total Fill: 514.00 mm2
Allowable Fill: 1935.24 mm2 CCO-170, Mark 2

Cable/Ckt. No.:	Type:	Cable Area:
1474-12A	1 - 6 pair, shielded #18 with overall shield , 600 V, PVC jacket	158.9 mm2
1474-12B	1 - 6 pair, shielded #18 with overall shield , 600 V, PVC jacket	158.9 mm2
1402	1 - 2 pair, shielded #18 with IS/OA , 600 V, PVC jacket	98.1 mm2
1406	1 - 2 pair, shielded #18 with IS/OA , 600 V, PVC jacket	98.1 mm2

Conduit/Tray No: 4891 **Ref Dwg(s):** EE-270
Conduit/Tray Type: 78 mm GRS-PVC coated conduit
Total Fill: 316.24 mm2
Allowable Fill: 1935.24 mm2 CCO-170, Mark 3

Cable/Ckt. No.:	Type:	Cable Area:
1488	10 DLC	316.24mm2

Conduit/Tray No: 4911 **Ref Dwg(s):** EE-272
Conduit/Tray Type: 78 mm GRS-PVC coated conduit
Total Fill: 150.44 mm2
Allowable Fill: 1935.24 mm2 CCO-170, Mark 3

Cable/Ckt. No.:	Type:	Cable Area:
1499	MVDS DLC	150.44mm2

Conduit/Tray No: 4921 **Ref Dwg(s):** EE-273
Conduit/Tray Type: 78 mm GRS-PVC coated conduit
Total Fill: 316.24 mm2
Allowable Fill: 1935.24 mm2 CCO-170, Mark 3

Cable/Ckt. No.:	Type:	Cable Area:
1489	10 DLC	316.24mm2

Conduit/Tray No: 4930 **Ref Dwg(s):** EE-273

Conduit/Tray Type: 78 mm GRS-PVC coated conduit

Total Fill: 612.10 mm2

Allowable Fill: 1935.24 mm2 CCO-170, Mark 2

Cable/Ckt. No.:	Type:	Cable Area:
1474-17A	1 - 6 pair, shielded #18 with overall shield , 600 V, PVC jacket	158.9 mm2
1416	1 - 2 pair, shielded #18 with IS/OA , 600 V, PVC jacket	98.1 mm2
1411	1 - 2 pair, shielded #18 with IS/OA , 600 V, PVC jacket	98.1 mm2
1474-17B	1 - 6 pair, shielded #18 with overall shield , 600 V, PVC jacket	158.9 mm2
1412	1 - 2 pair, shielded #18 with IS/OA , 600 V, PVC jacket	98.1 mm2

Conduit/Tray No: 4941 **Ref Dwg(s):** EE-275

Conduit/Tray Type: 78 mm GRS-PVC coated conduit

Total Fill: 316.24 mm2

Allowable Fill: 1935.24 mm2 CCO-170, Mark 3

Cable/Ckt. No.:	Type:	Cable Area:
1490	10 DLC	316.24mm2

Conduit/Tray No: 4961 **Ref Dwg(s):** EE-277

Conduit/Tray Type: 78 mm GRS-PVC coated conduit

Total Fill: 150.44 mm2

Allowable Fill: 1935.24 mm2 CCO-170, Mark 3

Cable/Ckt. No.:	Type:	Cable Area:
1501	MVDS DLC	150.44mm2

Conduit/Tray No: 4970 **Ref Dwg(s):** EE-277

Conduit/Tray Type: 78 mm GRS-PVC coated conduit

Total Fill: 514.00 mm2

Allowable Fill: 1935.24 mm2 CCO-170, Mark 2

Cable/Ckt. No.:	Type:	Cable Area:
1418	1 - 2 pair, shielded #18 with IS/OA , 600 V, PVC jacket	98.1 mm2
1474-21B	1 - 6 pair, shielded #18 with overall shield , 600 V, PVC jacket	158.9 mm2
1419	1 - 2 pair, shielded #18 with IS/OA , 600 V, PVC jacket	98.1 mm2
1474-21A	1 - 6 pair, shielded #18 with overall shield , 600 V, PVC jacket	158.9 mm2

Conduit/Tray No: 4971 **Ref Dwg(s):** EE-278
Conduit/Tray Type: 78 mm GRS-PVC coated conduit
Total Fill: 316.24 mm2
Allowable Fill: 1935.24 mm2 CCO-170, Mark 3

Cable/Ckt. No.:	Type:	Cable Area:
1491	10 DLC	316.24mm2

Conduit/Tray No: 6504 **Ref Dwg(s):** EE-61
Conduit/Tray Type: 103 mm GRS conduit
Total Fill: 2628.48 mm2
Allowable Fill: 3324.51 mm2 Note: See Mark 3

Cable/Ckt. No.:	Type:	Cable Area:
1391	3-1/C #4/0, 15 kV, EPR Insulation	2628.4mm2

Conduit/Tray No: 6530 **Ref Dwg(s):** EE-296A
Conduit/Tray Type: 103 mm Liquidtight flex metal conduit
Total Fill: 2628.48 mm2
Allowable Fill: 3275.44 mm2 Note: See Mark 3

Cable/Ckt. No.:	Type:	Cable Area:
1391	3-1/C #4/0, 15 kV, EPR Insulation	2628.4mm2

Conduit/Tray No: 6531 **Ref Dwg(s):** EE-296A
Conduit/Tray Type: 103 mm GRS conduit
Total Fill: 2628.48 mm2
Allowable Fill: 3324.51 mm2 Note: See Mark 3

Cable/Ckt. No.:	Type:	Cable Area:
1391	3-1/C #4/0, 15 kV, EPR Insulation	2628.4mm2

Conduit/Tray No: 6532 **Ref Dwg(s):** EE-296A
Conduit/Tray Type: 103 mm Liquidtight flex metal conduit
Total Fill: 2628.48 mm2
Allowable Fill: 3275.44 mm2 Note: See Mark 3

Cable/Ckt. No.:	Type:	Cable Area:
1391	3-1/C #4/0, 15 kV, EPR Insulation	2628.4mm2

Conduit/Tray No: 6586 **Ref Dwg(s):** EE-297A
Conduit/Tray Type: 103 mm Liquidtight flex metal conduit
Total Fill: 2628.48 mm2
Allowable Fill: 3275.44 mm2 Note: See Mark 3

Cable/Ckt. No.:	Type:	Cable Area:
1392	3-1/C #4/0, 15 kV, EPR Insulation	2628.4mm2

Conduit/Tray No: 6587 **Ref Dwg(s):** EE-297A
Conduit/Tray Type: 103 mm GRS conduit
Total Fill: 2628.48 mm2
Allowable Fill: 3324.51 mm2 Note: See Mark 3

Cable/Ckt. No.:	Type:	Cable Area:
1392	3-1/C #4/0, 15 kV, EPR Insulation	2628.4mm2

Conduit/Tray No: 6588 **Ref Dwg(s):** EE-297A
Conduit/Tray Type: 103 mm Liquidtight flex metal conduit
Total Fill: 2628.48 mm2
Allowable Fill: 3275.44 mm2 Note: See Mark 3

Cable/Ckt. No.:	Type:	Cable Area:
1392	3-1/C #4/0, 15 kV, EPR Insulation	2628.4mm2

Conduit/Tray No: 6642 **Ref Dwg(s):** EE-298A
Conduit/Tray Type: 103 mm Liquidtight flex metal conduit
Total Fill: 2628.48 mm2
Allowable Fill: 3275.44 mm2 Note: See Mark 3

Cable/Ckt. No.:	Type:	Cable Area:
1392	3-1/C #4/0, 15 kV, EPR Insulation	2628.4mm2

Conduit/Tray No: 6643 **Ref Dwg(s):** EE-298A
Conduit/Tray Type: 103 mm GRS conduit
Total Fill: 2628.48 mm2
Allowable Fill: 3324.51 mm2 Note: See Mark 3

Cable/Ckt. No.:	Type:	Cable Area:
1392	3-1/C #4/0, 15 kV, EPR Insulation	2628.4mm2

Conduit/Tray No: 6644 **Ref Dwg(s):** EE-298A
Conduit/Tray Type: 103 mm Liquidtight flex metal conduit
Total Fill: 2628.48 mm2
Allowable Fill: 3275.44 mm2 Note: See Mark 3

Cable/Ckt. No.:	Type:	Cable Area:
1392	3-1/C #4/0, 15 kV, EPR Insulation	2628.4mm2

Conduit/Tray No: 6936 **Ref Dwg(s):** EE-299A
Conduit/Tray Type: 103 mm GRS conduit
Total Fill: 2628.48 mm2
Allowable Fill: 3324.51 mm2 Note: See Mark 3

Cable/Ckt. No.:	Type:	Cable Area:
1392	3-1/C #4/0, 15 kV, EPR Insulation	2628.4mm2

Conduit/Tray No: WIREWAY 11W **Ref Dwg(s):** EE-268

Conduit/Tray Type: 203.!mm 8"x8" wireway

Total Fill: 4742.19 mm2

Allowable Fill: 8258.05 mm2 CCO-170, Mark 3

Cable/Ckt. No.:	Type:	Cable Area:
UP133-14	1-2/C+gnd #10, 600 V, EPR insulation	126.88mm2
UP133-10	2+1gnd #12,#12, 600 V, RHH/RHW insulation	49.21 mm2
1465-3	1-3/C #16, 600 V, EPR insulation	62.07 mm2
1465-2	1-3/C #16, 600 V, EPR insulation	62.07 mm2
1465-1	1-3/C #16, 600 V, EPR insulation	62.07 mm2
UP133-3A	2+1gnd #8,#10, 600 V, RHH/RHW insulation	96.23 mm2
UP133-11	1-3/C #12, 600 V, EPR insulation	102.61mm2
1462	1-2/C #14, 600 V, EPR insulation	77.07 mm2
UP144-4	2+1gnd #12,#12, 600 V, RHH/RHW insulation	49.21 mm2
1454	1-7/C #16, 600 V, EPR insulation	102.61mm2
UP133-6	1-3/C #10, 600 V, EPR insulation	126.88mm2
1465-4	1-3/C #16, 600 V, EPR insulation	62.07 mm2
UP133-9	1-3/C #12, 600 V, EPR insulation	102.61mm2
UP133-7	1-2/C+gnd #8, 600 V, EPR insulation	227.46mm2
UP133-5	2+1gnd #10,#10, 600 V, RHH/RHW insulation	60.8 mm2
UP144-1/3	2+1gnd #2,#6, 600 V, RHH/RHW insulation	263.82mm2
1456	1-7/C #16, 600 V, EPR insulation	102.61mm2
UP133-4A	2+1gnd #8,#10, 600 V, RHH/RHW insulation	96.23 mm2
1461	1-2/C #14, 600 V, EPR insulation	77.07 mm2

UP133-2A	1-2/C+gnd #8, 600 V, EPR insulation	227.46mm2
UP133-1A	1-2/C+gnd #8, 600 V, EPR insulation	227.46mm2
UP133-8	1-2/C+gnd #10, 600 V, EPR insulation	126.88mm2
1323	1-3/C+gnd #2, 600 V, EPR insulation	527.18mm2
UP144-2	2+1gnd #12,#12, 600 V, RHH/RHW insulation	49.21 mm2
1364	1-3/C #10, 600 V, EPR insulation	126.88mm2
1365	1-3/C #10, 600 V, EPR insulation	126.88mm2
1451	1-7/C #16, 600 V, EPR insulation	102.61mm2
UP144-9	1-3/C #10, 600 V, EPR insulation	126.88mm2
1452	1-2/C #14, 600 V, EPR insulation	77.07 mm2
1453	1-2/C #14, 600 V, EPR insulation	77.07 mm2
1455	1-2/C #14, 600 V, EPR insulation	77.07 mm2
1460	1-2/C #14, 600 V, EPR insulation	77.07 mm2
1332	1-3/C+gnd #2/0, 600 V, EPR insulation	882.89mm2

Conduit/Tray No: WIREWAY 18W **Ref Dwg(s):** EE-275

Conduit/Tray Type: 203.:mm 8"x8" wireway

Total Fill: 1949.87 mm2

Allowable Fill: 8258.05 mm2 CCO-170, Mark 3

Cable/Ckt. No.:	Type:	Cable Area:
UP140-5	2+1gnd #10,#10, 600 V, RHH/RHW insulation	60.8 mm2
UP140-2	1-2/C+gnd #10, 600 V, EPR insulation	126.88mm2
1468-1	1-3/C #16, 600 V, EPR insulation	62.07 mm2
UP140-6	1-3/C #10, 600 V, EPR insulation	126.88mm2
1476-2	TVCP	107.22mm2
1476-1	TVP	85.18 mm2
UP140-7	1-2/C+gnd #10, 600 V, EPR insulation	126.88mm2
UP140-3A	2+1gnd #8,#10, 600 V, RHH/RHW insulation	96.23 mm2
UP140-1A	1-2/C+gnd #8, 600 V, EPR insulation	227.46mm2
UP140-10	2+1gnd #12,#12, 600 V, RHH/RHW insulation	49.21 mm2
1328	1-3/C+gnd #1/0, 600 V, EPR insulation	754.18mm2
UP140-8	1-2/C+gnd #10, 600 V, EPR insulation	126.88mm2

DIST	COUNTY	ROUTE	KILOMETER POST TOTAL PROJECT	SHEET No	TOTAL SHEETS
04	SF, Ala	80	13.9 / 14.3, 0.0 / 1.6		

REGISTERED ELECTRICAL ENGINEER 02/12/01 DATE

6-4-01
PLANS APPROVAL DATE

REGISTERED PROFESSIONAL ENGINEER JENS ERLINGSSON No. 8249 Exp. 9/30/02 ELECTRICAL STATE OF CALIFORNIA

PB POWER, Inc.
A Parsons Brinckerhoff Company
303 Second St., Suite 700N
San Francisco, CA 94107-1317

The State of California or its officers or agents shall not be responsible for the accuracy or completeness of electronic copies of this plan sheet.

Caltrans Metric

San Francisco - Oakland Bay Bridge East Span Seismic Safety Project

04-012024
04-SF-80KP 12.2/KP 14.3
04-ALA-80 KP 0.0/KP 2.1

SUPPLEMENT TO THE SPECIAL PROVISIONS AND PLANS

Binder 2 of 2 - Eastbound

MARK	DATE	DESCRIPTIONS	REV	CK	
3	1/20/06	For description of changes, see Directives for Circuit Schedule Eastbound EE-327D.	GG	EJL	CCO NO. 170
2	1/20/06		GG	EJL	CCO NO. 170
1	1/20/06		GG	EJL	CCO NO. 170

REVISIONS

CONTRACT CHANGE ORDER NO. 170
SHEET 103 OF 104

DETAILS
CIRCUIT SCHEDULE EASTBOUND

EE-327D

CALCULATED/ DESIGNED BY	PB	DATE 11/99	REVISED BY	CYF	EJL	EJL	EJL
CHECKED BY	EJL	6/00	DATE REVISED	10/01	9/12/03	4/2/04	1/20/06

DESIGN OVERSIGHT
BEHZAD GOLEMOHAMMADI

STATE OF CALIFORNIA - DEPARTMENT OF TRANSPORTATION
Caltrans

LAST REVISION DATE PLOTTED => 6/2/2006

CCO No. 170 Removal of Miscellaneous Electrical and TOS Devices and Components
Revised Circuit and Conduit Schedule of Communication Cables
Updated Circuit and Conduit Database related to CCO_120

Directives for Circuit Schedule Eastbound EE-327D

Changes to the Supplement to the Special Provisions and Plans, EE-327 Binder 1 of 2-Eastbound and EE-327A Binder 1 of 2-Eastbound of Addendum No. 6 dated October 30, 2001.

Item No.	Cable/ Ckt. No.	Notation under Notes			Description of changes to the Cable/Ckt. No. Westbound
		CCO No. 170			
		Mark 1	Mark 2	Mark 3	
1	2391	X			Removed Cable from Contract
2	2392	X			Removed Cable from Contract
3	2475-4	X			Removed Cable from Contract
4	2475-4A	X			Removed Cable from Contract
5	2475-4B	X			Removed Cable from Contract
6	2475-4C	X			Removed Cable from Contract
7	2475-4D	X			Removed Cable from Contract
8	2475-4E	X			Removed Cable from Contract
9	2475-4F1	X			Removed Cable from Contract
10	2475-4F2	X			Removed Cable from Contract
11	2475-4G	X			Removed Cable from Contract
12	2475-4H	X			Removed Cable from Contract
13	2475-4I	X			Removed Cable from Contract
14	2475-4J	X			Removed Cable from Contract

Directives for Circuit Schedule Eastbound EE-327D

Changes to the Supplement to the Special Provisions and Plans, EE-327 Binder 1 of 2-Eastbound and EE-327A Binder 1 of 2-Eastbound of Addendum No. 6 dated October 30, 2001.

Item No.	Cable/ Ckt. No.	Notation under Notes			Description of changes to the Cable/Ckt. No. Westbound
		CCO No. 170			
		Mark 1	Mark 2	Mark 3	
15	2475-4K	X			Removed Cable from Contract
16	2477-4L	X			Removed Cable from Contract
17	2476-1	X			Removed Cable from Contract
18	2476-2	X			Removed Cable from Contract
19	2476-3	X			Removed Cable from Contract
20	2476-4	X			Removed Cable from Contract
21	2481-1	X			Removed Cable from Contract
22	2481-2	X			Removed Cable from Contract
23	2486	X			Removed Cable from Contract
24	2487	X			Removed Cable from Contract
25	2488	X			Removed Cable from Contract
26	2489	X			Removed Cable from Contract
27	2490	X			Removed Cable from Contract
28	2491	X			Removed Cable from Contract

Directives for Circuit Schedule Eastbound EE-327D

Changes to the Supplement to the Special Provisions and Plans, EE-327 Binder 1 of 2-Eastbound and EE-327A Binder 1 of 2-Eastbound of Addendum No. 6 dated October 30, 2001.

Item No.	Cable/ Ckt. No.	Notation under Notes			Description of changes to the Cable/Ckt. No. Westbound
		CCO No. 170			
		Mark 1	Mark 2	Mark 3	
29	2496	X			Removed Cable from Contract
30	2497	X			Removed Cable from Contract
31	2498	X			Removed Cable from Contract
32	2499	X			Removed Cable from Contract
33	2500	X			Removed Cable from Contract
34	UP244-1/3	X			Removed Cable from Contract
35	UP244-7	X			Removed Cable from Contract
36	UP231-6		X		Changed 4/C #10 to 3/C #10 for CCO-120
37	UP232-6		X		Changed 4/C #10 to 3/C #10 for CCO-120
38	UP233-12		X		Changed 4/C #10 to 3/C #10 for CCO-120
39	UP234-6		X		Changed 4/C #10 to 3/C #10 for CCO-120
40	UP235-6		X		Changed 4/C #10 to 3/C #10 for CCO-120
41	UP236-6		X		Changed 4/C #10 to 3/C #10 for CCO-120
42	UP237-6		X		Changed 4/C #10 to 3/C #10 for CCO-120

Directives for Circuit Schedule Eastbound EE-327D

Changes to the Supplement to the Special Provisions and Plans, EE-327 Binder 1 of 2-Eastbound and EE-327A Binder 1 of 2-Eastbound of Addendum No. 6 dated October 30, 2001.

Item No.	Cable/ Ckt. No.	Notation under Notes			Description of changes to the Cable/Ckt. No. Westbound
		CCO No. 170			
		Mark 1	Mark 2	Mark 3	
43	UP238-12		X		Changed 4/C #10 to 3/C #10 for CCO-120
44	UP239-6		X		Changed 4/C #10 to 3/C #10 for CCO-120
45	UP240-6		X		Changed 4/C #10 to 3/C #10 for CCO-120
46	UP241-6		X		Changed 4/C #10 to 3/C #10 for CCO-120
47	UP242-12		X		Changed 4/C #10 to 3/C #10 for CCO-120
48	UP243-4		X		Changed 4/C #10 to 3/C #10 for CCO-120
49	UP243-6		X		Changed 4/C #10 to 3/C #10 for CCO-120
50	2474-12A			X	Changed cable rating to 600V
51	2474-12B			X	Changed cable rating to 600V
52	2474-14A			X	Changed cable rating to 600V
53	2474-14B			X	Changed cable rating to 600V
54	2474-17A			X	Changed cable rating to 600V
55	2474-17B			X	Changed cable rating to 600V
56	2474-21A			X	Changed cable rating to 600V

Directives for Circuit Schedule Eastbound EE-327D

Changes to the Supplement to the Special Provisions and Plans, EE-327 Binder 1 of 2-Eastbound and EE-327A Binder 1 of 2-Eastbound of Addendum No. 6 dated October 30, 2001.

Item No.	Cable/ Ckt. No.	Notation under Notes			Description of changes to the Cable/Ckt. No. Westbound
		CCO No. 170			
		Mark 1	Mark 2	Mark 3	
57	2474-21B			X	Changed cable rating to 600V
58	END				

CIRCUIT SCHEDULE EASTBOUND

CCO No. 170 DATED January 20, 2006

Cable/Ckt. No.	Function	Conductor Type	From	To	Ref. Drawing(s)	Route		Notes
2391	12.47 kV Power	3-1/C #4/0, 15 kV, EPR Insulation	12.47 kV Swgr (Bkr 52-14N) Substation - EB	15 kV Splice Box	EE-143, EE-191, EE-129	01	5681	CCO-170, Mark 1
						02	2T11	
						03	2546	
						04	2545	
						05	2544	
						06	2T10	
						07	2494	
2392	12.47 kV Power	3-1/C #4/0, 15 kV, EPR Insulation	12.47 kV Swgr (Bkr 52-15N) Substation - EB	15 kV Splice Box	EE-143, EE-191, EE-129	01	5682	CCO-170, Mark 1
						02	2T11	
						03	2593	
						04	2594	
						05	2595	
						06	2T12	
						07	7926	
						08	7927	
						09	7928	
						10	2T13	
						11	7681	
2474-12A	Scada data com.	1 - 6 pair, shielded #18 with overall shield , 600 V, PVC jacket	RTU-12E	COM-11E	EE-356, EE-372, EE-373	01	5047	CCO-170, Mark 3
						02	5880	
						03	2T40	
						04	FIELD	

Cable/Ckt. No.	Function	Conductor Type	From	To	Ref. Drawing(s)	Route	Notes
2474-12B	Scada data com.	1 - 6 pair, shielded #18 with overall shield , 600 V, PVC jacket	RTU-12E	COM-11E	EE-356, EE-372, EE-373	01 5047 02 5880 03 2T40 04 FIELD	CCO-170, Mark 3
2474-14A	Scada data com.	1 - 6 pair, shielded #18 with overall shield , 600 V, PVC jacket	RTU-13E	COM-Substation EB	EE-358, EE-372, EE-373	01 5680 02 2T41 03 5629	CCO-170, Mark 3
2474-14B	Scada data com.	1 - 6 pair, shielded #18 with overall shield , 600 V, PVC jacket	RTU-13E	COM-Substation EB	EE-358, EE-372, EE-373	01 5680 02 2T41 03 5629	CCO-170, Mark 3
2474-17A	Scada data com.	1 - 6 pair, shielded #18 with overall shield , 600 V, PVC jacket	RTU-14E	COM-16E	EE-359, EE-372, EE-373	01 5162 02 5930 03 2T41 04 FIELD	CCO-170, Mark 3
2474-17B	Scada data com.	1 - 6 pair, shielded #18 with overall shield , 600 V, PVC jacket	RTU-14E	COM-16E	EE-359, EE-372, EE-373	01 5162 02 5930 03 2T41 04 FIELD	CCO-170, Mark 3

CIRCUIT SCHEDULE EASTBOUND

Cable/Ckt. No.	Function	Conductor Type	From	To	Ref. Drawing(s)	Route		Notes
2474-21A	Scada data com.	1 - 6 pair, shielded #18 with overall shield , 600 V, PVC jacket	RTU-15E	COM-20E	EE-360, EE-372, EE-373	01	5247	CCO-170, Mark 3
						02	5970	
						03	2T42	
						04	FIELD	
2474-21B	Scada data com.	1 - 6 pair, shielded #18 with overall shield , 600 V, PVC jacket	RTU-15E	COM-20E	EE-360, EE-372, EE-373	01	5247	CCO-170, Mark 3
						02	5970	
						03	2T42	
						04	FIELD	
2475-4	TOS data	72 Fiber, single mode fiberoptic riser cable	72 to 72 Fiberoptic splice box	72 to 72 Fiberoptic splice box	EE-387	01	2T40	CCO-170, Mark 1
						02	2516	
						03	2521	
						04	2525	
						05	2T41	
						06	2567	
						07	2571	
						08	2575	
						09	2T42	
						10	7897	
						11	7901	
						12	7905	
						13	2T43	

Cable/Ckt. No.	Function	Conductor Type	From	To	Ref. Drawing(s)	Route		Notes
2475-4A	TOS data	12 Fiber, single mode fiberoptic cable	72 to 12 Fiberoptic splice box	TOS-09EA	EE-387	01	FIELD	CCO-170, Mark 1
						02	2T40	
						03	5852	
						04	5011	
2475-4B	TOS data	12 Fiber, single mode fiberoptic cable	72 to 12 Fiberoptic splice box	TOS-10EA	EE-387	01	FIELD	CCO-170, Mark 1
						02	2T40	
						03	5862	
						04	5031	
2475-4C	TOS data	12 Fiber, single mode fiberoptic cable	72 to 12 Fiberoptic splice box	TOS-11EA	EE-387	01	FIELD	CCO-170, Mark 1
						02	2T40	
						03	5872	
						04	5051	
2475-4D	TOS data	12 Fiber, single mode fiberoptic cable	72 to 12 Fiberoptic splice box	TOS-12EA	EE-387	01	FIELD	CCO-170, Mark 1
						02	2T40	
						03	5882	
						04	5076	
2475-4E	TOS data	12 Fiber, single mode fiberoptic cable	72 to 12 Fiberoptic splice box	TOS-13EA	EE-387	01	FIELD	CCO-170, Mark 1
						02	2T41	
						03	5891	
						04	5098	
						05	5105	

CIRCUIT SCHEDULE EASTBOUND

Cable/Ckt. No.	Function	Conductor Type	From	To	Ref. Drawing(s)	Route		Notes
2475-4F1	TOS data	12 Fiber, single mode fiberoptic cable	72 to 12 Fiberoptic splice box	TOS-13EB	EE-387	01	FIELD	CCO-170, Mark 1
						02	2T41	
						03	5891	
						04	5098	
						05	5097	
2475-4F2	TOS data	12 Fiber, single mode fiberoptic cable	72 to 12 Fiberoptic splice box	TOS-13EB	EE-387	01	FIELD	CCO-170, Mark 1
						02	2T41	
						03	5891	
						04	5098	
						05	5097	
2475-4G	TOS data	12 Fiber, single mode fiberoptic cable	72 to 12 Fiberoptic splice box	TOS-15EA	EE-387	01	FIELD	CCO-170, Mark 1
						02	2T41	
						03	5912	
						04	5146	
2475-4H	TOS data	12 Fiber, single mode fiberoptic cable	72 to 12 Fiberoptic splice box	TOS-16EA	EE-387	01	FIELD	CCO-170, Mark 1
						02	2T41	
						03	5922	
						04	5166	

Cable/Ckt. No.	Function	Conductor Type	From	To	Ref. Drawing(s)	Route	Notes
2475-4I	TOS data	12 Fiber, single mode fiberoptic cable	72 to 12 Fiberoptic splice box	TOS-17EA	EE-387	01 FIELD 02 2T42 03 5932 04 5191	CCO-170, Mark 1
2475-4J	TOS data	12 Fiber, single mode fiberoptic cable	72 to 12 Fiberoptic splice box	TOS-18EA	EE-387	01 FIELD 02 2T42 03 5942 04 5211	CCO-170, Mark 1
2475-4K	TOS data	12 Fiber, single mode fiberoptic cable	72 to 12 Fiberoptic splice box	TOS-20EA	EE-387	01 FIELD 02 2T42 03 5962 04 5251	CCO-170, Mark 1
2475-4L	TOS data	12 Fiber, single mode fiberoptic cable	72 to 12 Fiberoptic splice box	TOS-21EA	EE-387	01 FIELD 02 2T43 03 5972 04 5276	CCO-170, Mark 1
2476-1	120 V Power	TVP	TOS-13EA	CCTV-E02	EE-385, EE-285	01 FIELD 02 WIREWAY 13E 03 5892 04 FIELD	CCO-170, Mark 1

Cable/Ckt. No.	Function	Conductor Type	From	To	Ref. Drawing(s)	Route		Notes
2476-2	120 V Control	TVCP	TOS-13EA	CCTV-E02	EE-385, EE-285	01	FIELD	CCO-170, Mark 1
						02	WIREWAY 13E	
						03	5895	
						04	FIELD	
2476-3	low level signal	TVC	TOS-13EA	CCTV-E02	EE-385, EE-285	01	5101	CCO-170, Mark 1
						02	5100	
						03	5900	
						04	FIELD	
2476-4	low level signal	TVL	TOS-13EA	CCTV-E02	EE-385, EE-285	01	5101	CCO-170, Mark 1
						02	5100	
						03	5900	
						04	FIELD	
2481-1	low level signal	Harness #4	TOS-13EA	CMS-E02	EE-385, EE-285	01	5101	CCO-170, Mark 1
						02	5100	
						03	5900	
						04	FIELD	
2481-2	low level signal	Harness #5	TOS-13EA	CMS-E02	EE-385, EE-285	01	5101	CCO-170, Mark 1
						02	5100	
						03	5900	
						04	FIELD	

Cable/Ckt. No.	Function	Conductor Type	From	To	Ref. Drawing(s)	Route		Notes
2486	low level signal	10 DLC	TOS-09EA	PL-E03	EE-385, EE-281	01	5012	CCO-170, Mark 1
						02	5851	
						03	FIELD	
2487	low level signal	10 DLC	TOS-11EA	PL-E04	EE-385, EE-283	01	5052	CCO-170, Mark 1
						02	5871	
						03	FIELD	
2488	low level signal	10 DLC	TOS-13EB	PL-E05	EE-385, EE-285	01	5099	CCO-170, Mark 1
						02	5100	
						03	5892	
						04	FIELD	
2489	low level signal	10 DLC	TOS-16E	PL-E06	EE-385, EE-288	01	5167	CCO-170, Mark 1
						02	5921	
						03	FIELD	
2490	low level signal	10 DLC	TOS-18E	PL-E07	EE-385, EE-290	01	5212	CCO-170, Mark 1
						02	5941	
						03	FIELD	

Cable/Ckt. No.	Function	Conductor Type	From	To	Ref. Drawing(s)	Route		Notes
2491	low level signal	10 DLC	TOS-21E	PL-E08	EE-385, EE-293	01	5277	CCO-170, Mark 1
						02	5971	
						03	FIELD	
2496	low level signal	MVDS DLC	TOS-10EA	JCB of MVDS-E04	EE-385, EE-282	01	5032	
						02	5861	
						03	FIELD	
2497	low level signal	MVDS DLC	TOS-12EA	JCB of MVDS-E05	EE-385, EE-284	01	5077	CCO-170, Mark 1
						02	FIELD	
2498	low level signal	MVDS DLC	TOS-15EA	JCB of MVDS-E06	EE-385, EE-287	01	5147	CCO-170, Mark 1
						02	5911	
						03	FIELD	
2499	low level signal	MVDS DLC	TOS-17EA	JCB of MVDS-E07	EE-385, EE-289	01	5192	CCO-170, Mark 1
						02	FIELD	

Cable/Ckt. No.	Function	Conductor Type	From	To	Ref. Drawing(s)	Route	Notes
2500	low level signal	MVDS DLC	TOS-20EA	JCB of MVDS-E08	EE-385, EE-292	01 5252 02 5961 03 FIELD	CCO-170, Mark 1
UP231-6	120 V Power	1-3/C #10, 600 V, EPR insulation	UP-231	Pier E3E Ltg	EE-99, EE-217, EE-185	01 5002 02 WIREWAY 9E 03 5854 04 2T20 05 5307 06 FIELD	CCO-170, Mark 2
UP232-6	120 V Power	1-3/C #10, 600 V, EPR insulation	UP-232	Pier E4E Ltg	EE-99, EE-217, EE-185	01 5022 02 WIREWAY 10E 03 5864 04 2T20 05 5310 06 FIELD	CCO-170, Mark 2
UP233-12	120 V Power	1-3/C #10, 600 V, EPR insulation	UP-233	Pier E5E Ltg	EE-99, EE-218, EE-185	01 5042 02 WIREWAY 11E 03 5874 04 2T20 05 5314 06 FIELD	CCO-170, Mark 2

CIRCUIT SCHEDULE EASTBOUND

Cable/Ckt. No.	Function	Conductor Type	From	To	Ref. Drawing(s)	Route		Notes
UP234-6	120 V Power	1-3/C #10, 600 V, EPR insulation	UP-234	Pier E6E Ltg	EE-99, EE-226, EE-185	01	5067	CCO-170, Mark 2
						02	WIREWAY 12E	
						03	5884	
						04	2T20	
						05	5319	
						06	FIELD	
UP235-6	120 V Power	1-3/C #10, 600 V, EPR insulation	UP-235	Pier E7E Ltg	EE-99, EE-219, EE-185	01	5087	CCO-170, Mark 2
						02	WIREWAY 13E	
						03	5894	
						04	2T21	
						05	5331	
						06	FIELD	
UP236-6	120 V Power	1-3/C #10, 600 V, EPR insulation	UP-236	Pier E8E Ltg	EE-99, EE-220, EE-185	01	5117	CCO-170, Mark 2
						02	WIREWAY 14E	
						03	5904	
						04	2T22	
						05	5335	
						06	FIELD	

Cable/Ckt. No.	Function	Conductor Type	From	To	Ref. Drawing(s)	Route		Notes
UP237-6	120 V Power	1-3/C #10, 600 V, EPR insulation	UP-237	Pier E9E Ltg	EE-99, EE-220, EE-185	01	5137	CCO-170, Mark 2
						02	WIREWAY 15E	
						03	5914	
						04	2T22	
						05	5341	
						06	FIELD	
UP238-12	120 V Power	1-3/C #10, 600 V, EPR insulation	UP-238	Pier E10E Ltg	EE-99, EE-221, EE-185	01	5157	CCO-170, Mark 2
						02	WIREWAY 16E	
						03	5924	
						04	2T22	
						05	5353	
						06	FIELD	
UP239-6	120 V Power	1-3/C #10, 600 V, EPR insulation	UP-239	Pier E11E Ltg	EE-99, EE-222, EE-185	01	5182	CCO-170, Mark 2
						02	WIREWAY 17E	
						03	5934	
						04	2T23	
						05	5357	
						06	FIELD	

Cable/Ckt. No.	Function	Conductor Type	From	To	Ref. Drawing(s)	Route		Notes
UP240-6	120 V Power	1-3/C #10, 600 V, EPR insulation	UP-240	Pier E12E Ltg	EE-99, EE-222, EE-185	01	5202	CCO-170, Mark 2
						02	WIREWAY 18E	
						03	5944	
						04	2T23.	
						05	5360	
						06	FIELD	
UP241-6	120 V Power	1-3/C #10, 600 V, EPR insulation	UP-241	Pier E13E Ltg	EE-99, EE-223, EE-185	01	5222	CCO-170, Mark 2
						02	WIREWAY 19E	
						03	5954	
						04	2T23..	
						05	5371	
						06	FIELD	
UP242-12	120 V Power	1-3/C #10, 600 V, EPR insulation	UP-242	Pier E14E Ltg	EE-99, EE-224, EE-185	01	5242	CCO-170, Mark 2
						02	WIREWAY 20E	
						03	5964	
						04	2T23...	
						05	5375	
						06	FIELD	

Cable/Ckt. No.	Function	Conductor Type	From	To	Ref. Drawing(s)	Route		Notes
UP243-4	120 V Power	1-3/C #10, 600 V, EPR insulation	UP-243	Pier E16E Ltg	EE-99, EE-227, EE-185	01	5267	CCO-170, Mark 2
						02	WIREWAY 21E	
						03	5974	
						04	2T24	
						05	5386	
						06	FIELD	
UP243-6	120 V Power	1-3/C #10, 600 V, EPR insulation	UP-243	Pier E15E Ltg	EE-99, EE-227, EE-185	01	5267	CCO-170, Mark 2
						02	WIREWAY 21E	
						03	5974	
						04	2T24	
						05	5386	
						06	FIELD	
UP244-1/3	240 V Power	2+1gnd #4,#8, 600 V, RHH/RHW insulation	UP-244	CMS-E02	EE-225	01	5103	CCO-170, Mark 1
						02	WIREWAY 13E	
						03	5895	
						04	FIELD	
UP244-7	120 V Power	2+1gnd #10,#10, 600 V, RHH/RHW insulation	UP-244	CMS-E02	EE-225	01	5103	CCO-170, Mark 1
						02	WIREWAY 13E	
						03	5895	
						04	FIELD	

DIST	COUNTY	ROUTE	TOTAL PROJECT	No	SHEETS
04	SF, Ala	80	13.9 / 14.3, 0.0 / 1.6		

Caltrans Metric

Jens Erlingsson 02/12/01
REGISTERED ELECTRICAL ENGINEER DATE

6-4-01
PLANS APPROVAL DATE

REGISTERED PROFESSIONAL ENGINEER
JENS ERLINGSSON
No. 8249
Exp. 9/30/02
ELECTRICAL
STATE OF CALIFORNIA

PB POWER, Inc.
A Parsons Brinckerhoff Company
303 Second St., Suite 700N
San Francisco, CA 94107-1317

The State of California or its officers or agents shall not be responsible for the accuracy or completeness of electronic copies of this plan sheet.

San Francisco - Oakland Bay Bridge East Span Seismic Safety Project

04-012024
04-SF-80KP 12.2/KP 14.3
04-ALA-80 KP 0.0/KP 2.1

SUPPLEMENT TO THE SPECIAL PROVISIONS AND PLANS

Binder 1 of 2 - Westbound

MARK	DATE	DESCRIPTIONS	REV	CK	
3	1/20/06	For description of changes, see Directives for Circuit Schedule Westbound EE-324D.	GG	EJL	CCO NO. 170
2	1/20/06		GG	EJL	CCO NO. 170
1	1/20/06		GG	EJL	CCO NO. 170

REVISIONS

CONTRACT CHANGE ORDER NO. 170
SHEET 101 OF 104

DETAILS
CIRCUIT SCHEDULE WESTBOUND

EE-324D

CALCULATED/DESIGNED BY	PB	DATE 11/99	REVISED BY	CYF	EJL	EJL	EJL	EJL
CHECKED BY	EJL	6/00	DATE REVISED	10/01	04/03	9/12/03	4/2/04	1/20/06

DESIGN OVERSIGHT
BEHZAD GOLEMOHAMMADI

STATE OF CALIFORNIA - DEPARTMENT OF TRANSPORTATION
Caltrans

USERNAME => reyes1

Directives for Circuit Schedule Westbound EE-324D

Changes to the Supplement to the Special Provisions and Plans, EE-324 Binder 1 of 2-Westbound and EE-324A Binder 1 of 2-Westbound of Addendum No. 6 dated October 30, 2001.

Item No.	Cable/ Ckt. No.	Notation under Notes			Description of changes to the Cable/Ckt. No. Westbound
		CCO No. 170			
		Mark 1	Mark 2	Mark 3	
1	1391	X			Removed Cable from Contract
2	1392	X			Removed Cable from Contract
3	1475-4	X			Removed Cable from Contract
4	1475-4A	X			Removed Cable from Contract
5	1475-4B	X			Removed Cable from Contract
6	1475-4C1	X			Removed Cable from Contract
7	1475-4C2	X			Removed Cable from Contract
8	1475-4D	X			Removed Cable from Contract
9	1475-4E	X			Removed Cable from Contract
10	1475-4F	X			Removed Cable from Contract
11	1475-4G	X			Removed Cable from Contract
12	1475-4H	X			Removed Cable from Contract
13	1475-4I1	X			Removed Cable from Contract
14	1475-4I2	X			Removed Cable from Contract

Directives for Circuit Schedule Westbound EE-324D

Changes to the Supplement to the Special Provisions and Plans, EE-324 Binder 1 of 2-Westbound and EE-324A Binder 1 of 2-Westbound of Addendum No. 6 dated October 30, 2001:

Item No.	Cable/ Ckt. No.	Notation under Notes			Description of changes to the Cable/Ckt. No. Westbound
		CCO No. 170			
		Mark 1	Mark 2	Mark 3	
15	1475-4J	X			Removed Cable from Contract
16	1475-4K	X			Removed Cable from Contract
17	1477-3	X			Removed Cable from Contract
18	1476-1	X			Removed Cable from Contract
19	1476-2	X			Removed Cable from Contract
20	1476-3	X			Removed Cable from Contract
21	1476-4	X			Removed Cable from Contract
22	1481-1	X			Removed Cable from Contract
23	1481-2	X			Removed Cable from Contract
24	1486	X			Removed Cable from Contract
25	1487	X			Removed Cable from Contract
26	1488	X			Removed Cable from Contract
27	1489	X			Removed Cable from Contract

Directives for Circuit Schedule Westbound EE-324D

Changes to the Supplement to the Special Provisions and Plans, EE-324 Binder 1 of 2-Westbound and EE-324A Binder 1 of 2-Westbound of Addendum No. 6 dated October 30, 2001

Item No.	Cable/ Ckt. No.	Notation under Notes			Description of changes to the Cable/Ckt. No. Westbound
		CCO No. 170			
		Mark 1	Mark 2	Mark 3	
28	1490	X			Removed Cable from Contract
29	1491	X			Removed Cable from Contract
30	1496	X			Removed Cable from Contract
31	1498	X			Removed Cable from Contract
32	1499	X			Removed Cable from Contract
33	1500	X			Removed Cable from Contract
34	1501	X			Removed Cable from Contract
35	UP144-1/3	X			Removed Cable from Contract
36	UP144-2	X			Removed Cable from Contract
37	UP131-6		X		Changed 4/C #10 to 3/C #10 for CCO#120
38	UP132-6		X		Changed 4/C #10 to 3/C #10 for CCO#120
39	UP133-6		X		Changed 4/C #10 to 3/C #10 for CCO#120

Directives for Circuit Schedule Westbound EE-324D

Changes to the Supplement to the Special Provisions and Plans, EE-324 Binder 1 of 2-Westbound, and EE-324A Binder 1 of 2-Westbound of Addendum No. 6 dated October 30, 2001.

Item No.	Cable/ Ckt. No.	Notation under Notes			Description of changes to the Cable/Ckt. No. Westbound
		CCO No. 170			
		Mark 1	Mark 2	Mark 3	
40	UP134-6		X		Changed 4/C #10 to 3/C #10 for CCO#120
41	UP135-6		X		Changed 4/C #10 to 3/C #10 for CCO#120
42	UP136-6		X		Changed 4/C #10 to 3/C #10 for CCO#120
43	UP137-6		X		Changed 4/C #10 to 3/C #10 for CCO#120
44	UP138-6		X		Changed 4/C #10 to 3/C #10 for CCO#120
45	UP139-6		X		Changed 4/C #10 to 3/C #10 for CCO#120
46	UP140-6		X		Changed 4/C #10 to 3/C #10 for CCO#120
47	UP141-6		X		Changed 4/C #10 to 3/C #10 for CCO#120
48	UP142-6		X		Changed 4/C #10 to 3/C #10 for CCO#120
49	UP143-4		X		Changed 4/C #10 to 3/C #10 for CCO#120
50	UP143-6		X		Changed 4/C #10 to 3/C #10 for CCO#120
51	1474-12A			X	Changed cable rating to 600V
52	1474-12B			X	Changed cable rating to 600V
53	1474-14A			X	Changed cable rating to 600V

Directives for Circuit Schedule Westbound EE-324D

Changes to the Supplement to the Special Provisions and Plans, EE-324 Binder 1 of 2-Westbound and EE-324A Binder 1 of 2-Westbound of Addendum No. 6 dated October 30, 2001.

Item No.	Cable/ Ckt. No.	Notation under Notes			Description of changes to the Cable/Ckt. No. Westbound
		CCO No. 170			
		Mark 1	Mark 2	Mark 3	
54	1474-14B			X	Changed cable rating to 600V
55	1474-17A			X	Changed cable rating to 600V
56	1474-17B			X	Changed cable rating to 600V
57	1474-21A			X	Changed cable rating to 600V
58	1474-21B			X	Changed cable rating to 600V
END					

CIRCUIT SCHEDULE WESTBOUND

CCO No. 170 DATED January 20, 2006

Cable/Ckt. No.	Function	Conductor Type	From	To	Ref. Drawing(s)	Route	Notes
1391	12.47 kV Power	3-1/C #4/0, 15 kV, EPR Insulation	12.47 kV Swgr (Bkr 52-11N) Substation - WB	15 kV Splice Box	EE-132, EE-186, EE-129	01 4681 02 1T11 03 6532 04 6531 05 6530 06 1T10 07 6504	CCO-170, Mark 1
1392	12.47 kV Power	3-1/C #4/0, 15 kV, EPR Insulation	12.47 kV Swgr (Bkr 52-12N) Substation - WB	15 kV Splice Box	EE-132, EE-186, EE-129	01 4682 02 1T11 03 6586 04 6587 05 6588 06 1T12 07 6642 08 6643 09 6644 10 1T13 11 6936	CCO-170, Mark 1
1474-12A	Scada data com.	1 - 6 pair, shielded #18 with overall shield , 600 V, PVC jacket	COM-11W	RTU-12W	EE-349, EE-372, EE-373	01 FIELD 02 1T40 03 4880 04 4047	CCO-170, Mark 3

CIRCUIT SCHEDULE WESTBOUND

Cable/Ckt. No.	Function	Conductor Type	From	To	Ref. Drawing(s)	Route	Notes
1474-12B	Scada data com.	1 - 6 pair, shielded #18 with overall shield , 600 V, PVC jacket	COM-11W	RTU-12W	EE-349, EE-372, EE-373	01 FIELD 02 1T40 03 4880 04 4047	CCO-170, Mark 3
1474-14A	Scada data com.	1 - 6 pair, shielded #18 with overall shield , 600 V, PVC jacket	COM-Substation WB	RTU-13W	EE-351, EE-372, EE-373	01 FIELD 02 1T41 03 4680	CCO-170, Mark 3
1474-14B	Scada data com.	1 - 6 pair, shielded #18 with overall shield , 600 V, PVC jacket	COM-Substation WB	RTU-13W	EE-351, EE-372, EE-373	01 FIELD 02 1T41 03 4680	CCO-170, Mark 3
1474-17A	Scada data com.	1 - 6 pair, shielded #18 with overall shield , 600 V, PVC jacket	COM-16W	RTU-14W	EE-352, EE-372, EE-373	01 FIELD 02 1T41 03 4930 04 4157	CCO-170, Mark 3
1474-17B	Scada data com.	1 - 6 pair, shielded #18 with overall shield , 600 V, PVC jacket	COM-16W	RTU-14W	EE-352, EE-372, EE-373	01 FIELD 02 1T41 03 4930 04 4157	CCO-170, Mark 3

CIRCUIT SCHEDULE WESTBOUND

Cable/Ckt. No.	Function	Conductor Type	From	To	Ref. Drawing(s)	Route		Notes
1474-21A	Scada data com.	1 - 6 pair, shielded #18 with overall shield , 600 V, PVC jacket	COM-20W	RTU-15W	EE-353, EE-372, EE-373	01	FIELD	CCO-170, Mark 3
						02	1T42	
						03	4970	
						04	4252	
1474-21B	Scada data com.	1 - 6 pair, shielded #18 with overall shield , 600 V, PVC jacket	COM-20W	RTU-15W	EE-353, EE-372, EE-373	01	FIELD	CCO-170, Mark 3
						02	1T42	
						03	4970	
						04	4252	
1475-4	TOS data com.	72 Fiber, single mode fiberoptic riser cable	72 to 72 Fiberoptic splice box	72 to 72 Fiberoptic splice box	EE-387	01	1T40	CCO-170, Mark 1
						02	6554	
						03	6559	
						04	6564	
						05	1T41	
						06	6610	
						07	6615	
						08	6620	
						09	1T42	
						10	6668	
						11	6673	
						12	6678	
						13	1T43	

CIRCUIT SCHEDULE WESTBOUND

Cable/Ckt. No.	Function	Conductor Type	From	To	Ref. Drawing(s)	Route		Notes
1475-4A	TOS data com.	12 Fiber, single mode fiberoptic cable	72 to 12 Fiberoptic splice box	TOS-09WA	EE-387	01	FIELD	CCO-170, Mark 1
						02	1T40	
						03	4852	
						04	4012	
1475-4B	TOS data com.	12 Fiber, single mode fiberoptic cable	72 to 12 Fiberoptic splice box	TOS-10WA	EE-387	01	FIELD	CCO-170, Mark 1
						02	1T40	
						03	4862	
						04	4032	
1475-4C1	TOS data com.	12 Fiber, single mode fiberoptic cable	72 to 12 Fiberoptic splice box	TOS-11WA	EE-387	01	FIELD	CCO-170, Mark 1
						02	1T40	
						03	4872	
						04	4052	
						05	4058	
1475-4C2	TOS data com.	12 Fiber, single mode fiberoptic cable	72 to 12 Fiberoptic splice box	TOS-11WB	EE-387	01	FIELD	CCO-170, Mark 1
						02	1T40	
						03	4872	
						04	4052	
						05	4060	

CIRCUIT SCHEDULE WESTBOUND

Cable/Ckt. No.	Function	Conductor Type	From	To	Ref. Drawing(s)	Route		Notes
1475-4D	TOS data com.	12 Fiber, single mode fiberoptic cable	72 to 12 Fiberoptic splice box	TOS-12WA	EE-387	01	FIELD	CCO-170, Mark 1
						02	1T40	
						03	4881	
						04	4082	
1475-4E	TOS data com.	12 Fiber, single mode fiberoptic cable	72 to 12 Fiberoptic splice box	TOS-13WA	EE-387	01	FIELD	CCO-170, Mark 1
						02	1T41	
						03	4892	
						04	4102	
1475-4F	TOS data com.	12 Fiber, single mode fiberoptic cable	72 to 12 Fiberoptic splice box	TOS-15WA	EE-387	01	FIELD	CCO-170, Mark 1
						02	1T41	
						03	4912	
						04	4142	
1475-4G	TOS data com.	12 Fiber, single mode fiberoptic cable	72 to 12 Fiberoptic splice box	TOS-16WA	EE-387	01	FIELD	CCO-170, Mark 1
						02	1T41	
						03	4922	
						04	4162	
1475-4H	TOS data com.	12 Fiber, single mode fiberoptic cable	72 to 12 Fiberoptic splice box	TOS-17WA	EE-387	01	FIELD	CCO-170, Mark 1
						02	1T42	
						03	4931	
						04	4187	

CIRCUIT SCHEDULE WESTBOUND

Cable/Ckt. No.	Function	Conductor Type	From	To	Ref. Drawing(s)	Route	Notes
1475-4I1	TOS data com.	12 Fiber, single mode fiberoptic cable	72 to 12 Fiberoptic splice box	TOS-18WA	EE-387	01 FIELD 02 1T42 03 4942 04 4213	CCO-170, Mark 1
1475-4I2	TOS data com.	12 Fiber, single mode fiberoptic cable	72 to 12 Fiberoptic splice box	TOS-18WA	EE-387	01 FIELD 02 1T42 03 4942 04 4213	CCO-170, Mark 1
1475-4J	TOS data com.	12 Fiber, single mode fiberoptic cable	72 to 12 Fiberoptic splice box	TOS-20WA	EE-387	01 FIELD 02 1T42 03 4962 04 4257	CCO-170, Mark 1
1475-4K	TOS data com.	12 Fiber, single mode fiberoptic cable	72 to 12 Fiberoptic splice box	TOS-21WA	EE-387	01 FIELD 02 1T43 03 4972 04 4276	CCO-170, Mark 1
1476-1	120 V power	TVP	TOS-18WA	CCTV-W02	EE-385, EE-275	01 FIELD 02 WIREWAY 18W 03 FIELD	CCO-170, Mark 1

CIRCUIT SCHEDULE WESTBOUND

Cable/Ckt. No.	Function	Conductor Type	From	To	Ref. Drawing(s)	Route		Notes
1476-2	120 V control	TVCP	TOS-18WA	CCTV-W02	EE-385, EE-275	01	FIELD	CCO-170, Mark 1
						02	WIREWAY 18W	
						03	FIELD	
1476-3	Low level signal	TVC	TOS-18WA	CCTV-W02	EE-385, EE-275	01	4214	CCO-170, Mark 1
						02	FIELD	
1476-4	Low level signal	TVL	TOS-18WA	CCTV-W02	EE-385, EE-275	01	4214	CCO-170, Mark 1
						02	FIELD	

CIRCUIT SCHEDULE WESTBOUND

Cable/Ckt. No.	Function	Conductor Type	From	To	Ref. Drawing(s)	Route		Notes
1477-3	TOS data com.	72 Fiber, single mode fiberoptic riser cable	72 to 72 Fiberoptic splice box	72 to 72 Fiberoptic splice box	EE-387	01	1T40	CCO-170, Mark 1
						02	6554	
						03	6559	
						04	6564	
						05	1T41	
						06	6610	
						07	6615	
						08	6620	
						09	1T42	
						10	6668	
						11	6673	
						12	6678	
						13	1T43	
1481-1	Low level signal	Harness #4	TOS-11WA	CMS-W02	EE-385, EE-268	01	4059	CCO-170, Mark 1
						02	4053	
						03	4871	
						04	FIELD	
1481-2	Low level signal	Harness #5	TOS-11WA	CMS-W02	EE-385, EE-268	01	4059	CCO-170, Mark 1
						02	4053	
						03	4871	
						04	FIELD	

CIRCUIT SCHEDULE WESTBOUND

Cable/Ckt. No.	Function	Conductor Type	From	To	Ref. Drawing(s)	Route		Notes
1486	Low level signal	10 DLC	TOS-09WA	PL-W02	EE-385, EE-266	01	4013	CCO-170, Mark 1
						02	4851	
						03	FIELD	
1487	Low level signal	10 DLC	TOS-11WB	PL-W03	EE-385, EE-268	01	4061	CCO-170, Mark 1
						02	4053	
						03	4871	
						04	FIELD	
1488	Low level signal	10 DLC	TOS-13WA	PL-W04	EE-385, EE-270	01	4103	CCO-170, Mark 1
						02	4891	
						03	FIELD	
1489	Low level signal	10 DLC	TOS-16WA	PL-W05	EE-385, EE-273	01	4163	CCO-170, Mark 1
						02	4921	
						03	FIELD	
1490	Low level signal	10 DLC	TOS-18WA	PL-W06	EE-385, EE-275	01	4214	CCO-170, Mark 1
						02	4941	
						03	FIELD	

CIRCUIT SCHEDULE WESTBOUND

Cable/Ckt. No.	Function	Conductor Type	From	To	Ref. Drawing(s)	Route		Notes
1491	Low level signal	10 DLC	TOS-21WA	PL-W07	EE-385, EE-278	01	4277	CCO-170, Mark 1
						02	4971	
						03	FIELD	
1496	Low level signal	MVDS DLC	TOS-10WA	JCB of MVDS-W05	EE-385, EE-267	01	4033	CCO-170, Mark 1
						02	4861	
						03	FIELD	
1498	Low level signal	MVDS DLC	TOS-12WA	JCB of MVDS-W06	EE-385, EE-269	01	4083	CCO-170, Mark 1
						02	FIELD	
1499	Low level signal	MVDS DLC	TOS-15WA	JCB of MVDS-W07	EE-385, EE-272	01	4143	CCO-170, Mark 1
						02	4911	
						03	FIELD	
1500	Low level signal	MVDS DLC	TOS-17WA	JCB of MVDS-W08	EE-385, EE-274	01	4188	CCO-170, Mark 1
						02	FIELD	

CIRCUIT SCHEDULE WESTBOUND

Cable/Ckt. No.	Function	Conductor Type	From	To	Ref. Drawing(s)	Route	Notes
1501	Low level signal	MVDS DLC	TOS-20W	JCB of MVDS-W09	EE-385, EE-277	01 4258 02 4961 03 FIELD	CCO-170, Mark 1
UP131-6	120 V Power	1-3/C #10, 600 V, EPR insulation	UP-131	Pier E3W Ltg	EE-79, EE-172, EE-203	01 4002 02 WIREWAY 9W 03 4854 04 1T20 05 4313 06 FIELD	CCO-170, Mark 2
UP132-6	120 V Power	1-3/C #10, 600 V, EPR insulation	UP-132	Pier E4W Ltg	EE-79, EE-172, EE-203	01 4022 02 WIREWAY 10W 03 4864 04 1T20 05 4322 06 FIELD	CCO-170, Mark 2
UP133-6	120 V Power	1-3/C #10, 600 V, EPR insulation	UP-133	Pier E5W Ltg	EE-79, EE-172, EE-204	01 4042 02 WIREWAY 11W 03 4874 04 1T20 05 4332 06 FIELD	CCO-170, Mark 2

CIRCUIT SCHEDULE WESTBOUND

Cable/Ckt. No.	Function	Conductor Type	From	To	Ref. Drawing(s)	Route	Notes
UP134-6	120 V Power	1-3/C #10, 600 V, EPR insulation	UP-134	Pier E6W Ltg	EE-79, EE-172, EE-205	01 4072 02 WIREWAY 12W 03 4884 04 1T20 05 4346 06 FIELD	CCO-170, Mark 2
UP135-6	120 V Power	1-3/C #10, 600 V, EPR insulation	UP-135	Pier E7W Ltg	EE-79, EE-172, EE-205	01 4092 02 WIREWAY 13W 03 4894 04 1T21 05 4371 06 FIELD	CCO-170, Mark 2
UP136-6	120 V Power	1-3/C #10, 600 V, EPR insulation	UP-136	Pier E8W Ltg	EE-79, EE-172, EE-206	01 4112 02 WIREWAY 14W 03 4904 04 1T22 05 4382 06 FIELD	CCO-170, Mark 2

CIRCUIT SCHEDULE WESTBOUND

Cable/Ckt. No.	Function	Conductor Type	From	To	Ref. Drawing(s)	Route	Notes
UP137-6	120 V Power	1-3/C #10, 600 V, EPR insulation	UP-137	Pier E9W Ltg	EE-79, EE-172, EE-206	01 4132 02 WIREWAY 15W 03 4914 04 1T22 05 4392 06 FIELD	CCO-170, Mark 2
UP138-6	120 V Power	1-3/C #10, 600 V, EPR insulation	UP-138	Pier E10W Ltg	EE-79, EE-172, EE-207	01 4152 02 WIREWAY 16W 03 4924 04 1T22 05 4412 06 FIELD	CCO-170, Mark 2
UP139-6	120 V Power	1-3/C #10, 600 V, EPR insulation	UP-139	Pier E11W Ltg	EE-79, EE-172, EE-206	01 4177 02 WIREWAY 17W 03 4934 04 1T23 05 4437 06 FIELD	CCO-170, Mark 2

CIRCUIT SCHEDULE WESTBOUND

Cable/Ckt. No.	Function	Conductor Type	From	To	Ref. Drawing(s)	Route		Notes
UP140-6	120 V Power	1-3/C #10, 600 V, EPR insulation	UP-140	Pier E12W Ltg	EE-79, EE-172, EE-208	01	4202	CCO-170, Mark 2
						02	WIREWAY 18W	
						03	4944	
						04	1T23	
						05	4435	
						06	FIELD	
UP141-6	120 V Power	1-3/C #10, 600 V, EPR insulation	UP-141	Pier E13W Ltg	EE-79, EE-172, EE-209	01	4227	CCO-170, Mark 2
						02	WIREWAY 19W	
						03	4954	
						04	1T23	
						05	4446	
						06	FIELD	
UP142-6	120 V Power	1-3/C #10, 600 V, EPR insulation	UP-142	Pier E14W Ltg	EE-79, EE-172, EE-210	01	4247	CCO-170, Mark 2
						02	WIREWAY 20W	
						03	4964	
						04	1T23	
						05	4465	
						06	FIELD	

CIRCUIT SCHEDULE WESTBOUND

Cable/Ckt. No.	Function	Conductor Type	From	To	Ref. Drawing(s)	Route	Notes
UP143-4	120 V Power	1-3/C #10, 600 V, EPR insulation	UP-143	Pier E16W Ltg	EE-79, EE-172, EE-211	01 4267 02 WIREWAY 21W 03 4974 04 1T24 05 4474 06 FIELD	CCO-170, Mark 2
UP143-6	120 V Power	1-3/C #10, 600 V, EPR insulation	UP-143	Pier E15W Ltg	EE-79, EE-172, EE-211	01 4267 02 WIREWAY 21W 03 4974 04 1T24 05 4474 06 FIELD	CCO-170, Mark 2
UP144-1/3	240 V Power	2+1gnd #2,#6, 600 V, RHH/RHW insulation	UP-144	CMS-W02	EE-212	01 4056 02 WIREWAY 11W 03 4875 05 FIELD	CCO-170, Mark 1
UP144-2	120 V Power	2+1gnd #12,#12, 600 V, RHH/RHW insulation	UP-144	CMS-W02	EE-212	01 4056 02 WIREWAY 11W 03 4875 04 FIELD	CCO-170, Mark 1

CCO #170
Attachment "A"

Caltrans

Caltrans Metric

Link to Table of Contents

STATE OF CALIFORNIA

DEPARTMENT OF TRANSPORTATION

NOTICE TO CONTRACTORS

AND

SPECIAL PROVISIONS

FOR CONSTRUCTION ON STATE HIGHWAY IN

THE CITY AND COUNTY OF SAN FRANCISCO AND ALAMEDA COUNTY IN SAN FRANCISCO AND OAKLAND FROM 1.3 km EAST OF THE YERBA BUENA ISLAND TUNNEL EAST PORTAL

DISTRICT 04, ROUTE 80

For Use in Connection with Standard Specifications Dated JULY 1999, Standard Plans Dated JULY 1999, and Labor Surcharge and Equipment Rental Rates.

CONTRACT NO. 04-012024

04-SF,Ala-80-13.9/14.3,0.0/1.6

Federal Aid Project

*ACIM-080-1(085)8N

Bids Open: December 19, 2001
Dated: July 16, 2001

OSD

REVISED FIELD EDITION
April 19, 2002
Revised by PB on 6-6-06

	Orig.	Rev.
SUBMITTALS	259	292
PRODUCTS	259	292
INSTALLATION	259	292
IDENTIFICATION	259	292
SERVICING	260	293
PAYMENT	260	293
10-1.68 TOILET ACCESSORIES (SUBSTATIONS)	260	293
SUBMITTALS	260	293
PRODUCTS	260	293
INSTALLATION	260	293
PAYMENT	260	294
10-1.69 THERMOPLASTIC TRAFFIC STRIPE	261	294
10-1.70 PAINT TRAFFIC STRIPE	261	294
10-1.71 PAVEMENT MARKERS	261	294
10-1.72 PHOTO SURVEY OF EXISTING NON-HIGHWAY FACILITIES	N/A	294
MEASUREMENT AND PAYMENT	N/A	296
SECTION 10-2. (BLANK)	261	296
SECTION 10-3. ELECTRICAL SYSTEMS	261	296
10-3.01 DESCRIPTION	261	296
10-3.02 ABBREVIATIONS	263	299
10-3.03 COST BREAK-DOWN	264	300
10-3.04 CONSTRUCTION CONTRACT INTERFACE RESPONSIBILITY	269	305
10-3.05 CONDUIT	269	305
GALVANIZED RIGID STEEL CONDUIT, THREADED COUPLINGS, AND ELBOWS	269	305
POLYVINYL CHLORIDE COATED GALVANIZED RIGID STEEL CONDUIT, THREADED COUPLINGS, AND ELBOWS	269	305
POLYVINYL CHLORIDE COATED GALVANIZED RIGID STEEL CONDUIT BODIES	269	305
10-3.06 SUPPORT HARDWARE FOR CONDUITS, CABLE TRAYS AND WIREWAYS	270	306
STAINLESS STEEL POWER-STUD ANCHOR-THREADED VERSION	270	306
BIKE PATH STEEL BOX PENETRATION SEAL JOINT	270	306
EMBED STRUT CHANNEL	270	306
MOUNTING RACKS	270	307
THREADED BOLT SLEEVES AND BOLTS	270	307
ELECTRICAL HARDWARE	271	307
CONDUIT AND TRAY SUPPORTS	271	307
CABLE TRAY LADDER TYPE	271	307
CABLE TRAY SOLID TROUGH TYPE	272	308
NEMA TYPE 4X WIREWAY	272	308
CABLE INSTALLATION IN CABLE TRAY	272	308
10-3.07 PULL BOXES, SPLICE AND JUNCTION BOXES	272	308
BARRIER PULL BOXES (TYPE 9 AND 9A)	272	308
BARRIER PULL BOXES (TYPE PB-1A)	272	308
OUTDOOR BARRIER RECEPTACLES	272	309
NEMA TYPE 4X STAINLESS STEEL PULL BOXES (TYPE PB-1D AND TYPE PB-2B)	272	309
NEMA TYPE 12 PULL BOXES SINGLE DOOR (TYPE PB-2A, PB-3A, AND PB-4D)	272	309
NEMA TYPE 4X ENCLOSURES STAINLESS STEEL (TYPE PB-6C AND 7C)	273	309
NEMA TYPE 12 ENCLOSURES STAINLESS STEEL (TYPE PB-7B and PB-7D)	273	310
NEMA TYPE 4X FIBERGLASS ENCLOSURE (Type 8A)	274	310
15 kV SPLICE BOX	274	310
FIBEROPTIC SPLICE CLOSURE	274	311
10-3.08 CONDUCTORS, CABLES AND WIRING	275	311
600 VOLT SINGLE CONDUCTOR CABLE	275	311
600 VOLT MULTI-CONDUCTOR CABLE	275	312
CLOSED CIRCUIT TELEVISION CABLES	276	313
SHIELDED TWISTED PAIR CABLE	278	315
~~15 kV CABLE~~	279	315
~~FIBER OPTIC OUTSIDE PLANT CABLE~~	280	317

	Orig.	Rev.
10-3.09 SEISMIC ANCHORING	288	326
10-3.10 STRUCTURE GROUNDING	288	326
10-3.11 TRAFFIC OPERATION SYSTEM	288	326
~~TRAFFIC OPERATIONS SYSTEM EQUIPMENT TESTING~~	288	326
~~CLOSED CIRCUIT TELEVISION CAMERA STATION~~	288	326
~~CHANGEABLE MESSAGE SIGN STATION~~	300	340
PREFORMED LOOP DETECTOR STATION	301	340
~~MICROWAVE VEHICLE DETECTION SENSOR SYSTEM~~	302	341
~~FIBER OPTIC DATA MODEM~~	304	343
STATE-FURNISHED CONTROLLER ASSEMBLIES	305	344
~~SERVICE MANUAL REQUIREMENTS~~	305	344
10-3.12 LIGHTING	305	345
ROADWAY LIGHTING ASSEMBLY	305	345
GENERAL	305	345
~~SUBMITTALS~~	305	346
~~INSPECTION~~	306	346
~~CORROSION RESISTANCE~~	306	346
~~POLE~~	306	346
~~LUMINAIRE LOWERING DEVICE~~	306	347
~~ROADWAY LUMINAIRES TYPE SSR~~	308	348
~~POLE MOUNTED MARKER LIGHTS TYPE SAM~~	308	349
BIKE PATH LIGHTS TYPE SSB	310	349
LIGHT PIPES TYPE SAL	310	350
BELVEDERE LIGHTS TYPE SSV	311	350
NAVIGATION LIGHTING	311	351
TYPE E2 EXIT LIGHTS	312	351
10-3.13 FIXTURES	312	352
TYPE A1	312	352
TYPE F1	312	352
TYPE F2	312	352
TYPE F3 AND F4	313	352
TYPE E1	313	352
TYPE H1	313	353
TYPE H2	313	353
10-3.14 SUPERVISORY CONTROL AND DATA ACQUISTION REMOTE TERMINAL UNIT SYSTEM	314	353
GENERAL	314	353
SYSTEM DIAGNOSTICS	317	356
ANALOG INPUT AND OUTPUT	318	358
INSTALLATION REQUIREMENTS	319	359
10-3.15 SUBSTATION ELECTRICAL	320	359
SMOKE DETECTORS	320	359
ELECTRICAL ROOM SECURITY DOOR SWITCHES	320	359
UNIT SUBSTATION	320	359
UNIT SUBSTATION COMPONENTS	322	361
10-3.16 STRONG MOTION DETECTION SYSTEM	337	377
GENERAL	337	377
COORDINATION WITH CALIFORNIA DIVISION OF MINES AND GEOLOGY	337	378
MATERIAL	338	378
TELEPHONE SERVICE	340	380
TESTING	340	381
SUBMITTALS	340	381
CLOSEOUT SUBMITTALS	341	381
10-3.17 FIELD TESTING	341	382
10-3.18 PILE CORROSION MONITORING SYSTEM	341	382
STANDARDS	341	382
SUBMITTALS	342	382

	Orig.	Rev.
10-3.19 PAYMENT	343	384
SECTION 10-4. MECHANICAL	344	385
10-4.01 MECHANICAL WORK	344	385
SUBMITTALS	344	385
SYSTEM IDENTIFICATION	345	386
10-4.02 MONORAIL HOIST	346	387
Monorail design requirements	346	387
SUBMITTALS	346	387
GENERAL	347	388
INSTALLATION	348	389
TESTS	348	389
MEASUREMENT AND PAYMENT	348	389
10-4.03 PIPE, FITTINGS AND VALVES	348	389
Codes and standards	348	390
PIPE AND FITTINGS	349	390
B3.--	349	390
VALVES	349	391
INSTALLATION OF PIPES AND FITTINGS	350	391
MEASUREMENT AND PAYMENT	352	393
10-4.04 CCSF WATER MAIN AND SEWAGE FORCE MAIN	352	394
MATERIALS	353	394
INSTALLATION	354	396
TESTING	355	396
MEASUREMENT AND PAYMENT	355	396
10-4.05 PLUMBING FIXTURES	355	396
PRODUCTS	355	396
INSTALLATION	356	397
FIELD QUALITY CONTROL	356	397
MEASUREMENT AND PAYMENT	356	397
10-4.06 HEATING, VENTILATING AND AIR CONDITIONING EQUIPMENT AND SYSTEMS	356	397
GENERAL	356	397
PRODUCTS	356	398
AUXILIARY HVAC COMPONENTS	357	398
INSTALLATION	358	399
FIELD QUALITY CONTROL	359	400
MEASUREMENT AND PAYMENT	359	401
SECTION 11. MODIFIED STANDARD SPECIFICATION SECTIONS	359	401
SECTION 11-1. (BLANK)	359	401
SECTION 11-2. PORTLAND CEMENT CONCRETE	359	401
11-2.01 GENERAL	359	401
SECTION 90: PORTLAND CEMENT CONCRETE	360	401
90-1 GENERAL	360	401
90-1.01 DESCRIPTION	360	401
90-2 MATERIALS	361	402
90-2.01 CEMENT	361	402
90-2.02 AGGREGATES	361	403
90-2.02A Coarse Aggregate	362	404
90-2.02B Fine Aggregate	363	405
90-2.03 WATER	363	405
90-2.04 ADMIXTURE MATERIALS	364	405
90-3 AGGREGATE GRADINGS	364	406
90-3.01 GENERAL	364	406
90-3.02 COARSE AGGREGATE GRADING	365	407
90-3.03 FINE AGGREGATE GRADING	365	407
90-3.04 COMBINED AGGREGATE GRADINGS	366	408
90-4 ADMIXTURES	366	409
90-4.01 GENERAL	366	409

notified. If the work is halted due to fluctuations in elevation the Contractor shall modify their operations to eliminate future fluctuations in elevations, at no cost to the state.

Within 20 working days after the completion of any impact work, the Contractor shall submit to the Engineer a report documenting the results of the survey. Each facility shall have a separate report. The report shall be signed by a Professional Land Surveyor registered in the State of California. The report shall include the location of the monitoring points, including the address of the facility surveyed and the building layout. A general layout plan shall be included in the report showing the elevations, dimensions and distances of the monitoring locations.

Survey hubs should be surveyed in x, y, and z directions and they should be surveyed every other week and as directed by the Engineer.

The photographs, videotapes, and reports of all observations shall be prepared in triplicate by the Contractor and the authorized representatives of the State and of the Contractor shall sign every document.

The pre-construction survey records and the documentation specified above shall be submitted to the Engineer prior to commencement of any significant impact work as defined above. The Engineer shall have 5 working days to review the submittal for adequacy. No work shall take place until the Engineer approves the pre-construction survey records.

The package of the post-construction survey documents shall be submitted within 10 working days after the impact work has been completed adjacent to each of the specified facilities.

The photo survey package may be submitted in portions based on Stage Construction, if in the opinion of the Engineer, detrimental actions can be avoided in the subsequent stages. The submittal package shall include all records, documents, photos, videotapes, and observations. The Engineer shall have five working days to review the submittal for adequacy.

Records in triplicate of all observations shall be prepared by the Contractor and every document shall be signed by the authorized representatives of the State and of the Contractor. Video tapes and photographs, as deemed advisable by the Engineer will be made by the Contractor and signed in the manner specified above. One signed copy of every document and photograph will be kept on file by the Engineer.

The above referenced records, video tapes, and photographs are intended for use as indisputable evidence in ascertaining the extent of any damage which may occur as a result of the Contractor's operations. The above-referenced records, video tapes, and photographs are for the protection of the adjacent property owners, the Contractor, and the State. These records will be used to determine any damage from the Contractor's operations during the work.

Attention is directed to Sections 7-1.11, "Preservation of Property," and 7-1.12, "Indemnification and Insurance," of the Standard Specifications. The Contractor will immediately inform the Engineer in writing, of any damage to these and other facilities.

MEASUREMENT AND PAYMENT

The contract lump sum price paid for photo survey of existing facilities shall include full compensation for furnishing all labor, materials, tools, equipment, and incidentals, and for doing all the work involved in photo survey and elevation survey of existing facilities, crack monitoring, and survey hubs as specified in the Standard Specifications and these special provisions, and as directed by the Engineer.

The Engineer may order photo surveys, elevation surveys and crack monitoring of existing facilities other than those facilities listed under "Photo and Elevation Survey and Crack Monitoring," Photo surveys, elevation surveys and crack monitoring of existing facilities other than those facilities listed under "Photo and Elevation Survey and Crack Monitoring," will be paid for as extra work as provided in Section 4-1.03D of the Standard Specifications.

SECTION 10-2. (BLANK)

SECTION 10-3. ELECTRICAL SYSTEMS

10-3.01 DESCRIPTION

Traffic operations system, electrical facilities (San Francisco-Oakland Bay Bridge), ~~roadway lighting, sign illumination, call box system~~ and bike path lighting shall conform to the provisions in Section 86, "Signals, Lighting and Electrical Systems," of the Standard Specifications and these special provisions.

The Contractor's attention is directed to the two separate binders as supplements to the special provisions and plans. The binders contain details for the "Circuit Schedule" and "Conduit and Tray Schedule," Binder 1 is for the westbound direction and Binder 2 is for the eastbound direction.

Lighting equipment is included in the "Skyway," San Francisco – Oakland Bay Bridge (Bridge No. 34-0006) structure.

The work to be done, in general, under traffic operations system shall consist of the following as shown on the plans and described elesewher in these special provisions:

~~1. Install and test all camera stations including all associated conduit.~~

~~2. Install State-furnished changeable message sign system.~~
~~3. Install and test microwave vehicle detection sensor systems including associated conduit and junction boxes.~~
4. Install and test preformed loops including associated conduit and junction boxes.
5. Install and test all ~~fiber optic cables,~~ splice closures~~, fiber optic data modems and fiber optic transceivers~~.
6. Install all State-furnished controller cabinet assemblies.

The work to be done, in general, under electrical facilities (San Francisco – Oakland Bay Bridge) shall consist of the following as shown on the plans and described elesewhere in these special provisions:

A. SUBSTATION ARCHITECTURAL WESTBOUND

1. Install lighting, lighting panel, light switches, disconnect switches, receptacles, security door switches and smoke detectors.
2. Install all conduits and junction boxes, including anchors, fittings, and supports.

---------- End of Page 261 in the original Special Provisions ----------

3. Install pull and terminate cable itemized on the plans and cable required for a complete smoke detection system.
4. Conduct a functional test of all equipment.

B. SUBSTATION ARCHITECTURAL EASTBOUND

1. Install lighting, lighting panel, light switches, disconnect switches, receptacles, security door switches and smoke detectors.
2. Install all conduits and junction boxes, including anchors, fittings, and supports.
3. Install pull and terminate cable itemized on the plans and cable required for a complete smoke detection system.
4. Conduct a functional test of all equipment.

C. SUBSTATION WESTBOUND

1. Install unit substation, 480 V Low Voltage Control Center (LVCC)-B, utility panel, transformers, battery charger and rectifier, Distribution Panel (DP)-B, and battery system. Install Remote Terminal Unit (RTU), Supervisory Control and Data Acquisition (SCADA) communication and telephone terminal boxes.
2. Install conduit, cable tray, and junction boxes including anchors, fittings, and supports.
3. Install and terminate conductors and cable itemized under "Cost Break-down" elsewhere in these special provisions.
4. Pull all cable in the conduit and cable tray shown on the plans.
5. Install the equipment grounding, including interface with bridge grounding. Conduct a functional test of all equipment.
6. Install all materials required to interface with the YBI / Main Span contract and the Oakland contract.

D. SUBSTATION EASTBOUND

1. Install unit substation, LVCC-A, utility panel, transformers, battery charger and rectifier, panel DP-A, and battery system. Install RTU, SCADA communication and telephone terminal boxes.
2. Install conduit, cable tray and junction boxes including anchors, fittings, and supports.
3. Install and terminate conductors and cable itemized under "Cost Break-down" elsewhere in these special provisions.
4. Pull all cable in the conduit and cable tray shown on the plans.
5. Install the equipment grounding, including interface with bridge grounding. Conduct a functional test of all equipment.
6. Install all materials required to interface with the YBI / Main Span contract and the Oakland contract.

E. ROADWAY LEVEL WESTBOUND

1. Install ~~roadway electroliers,~~ utility panels, receptacles ~~and call boxes~~.
2. Install SCADA RTU System **(without PLC or FSK modem)**, Navigation Lighting System, and Traffic Operations System components on the service platforms.
3. Install all conduit, pull boxes, wireways and junction boxes, including anchors, fittings and supports.
4. Install and terminate cable itemized under "Cost Break-down" elsewhere in these special provisions.
5. Pull all cable in the conduit as shown on the plans. Terminate equipment ground conductors on the roadway level equipment. Conduct a functional test of all equipment.
6. Install all materials required to interface with the YBI / Main Span contract and the Oakland contract.

1. Install sensor enclosures, down-hole enclosures, down-hole pull boxes, junction boxes, watertight connectors and strong motion detection system conduit, including anchors, fittings and supports, to the cable trays.
2. Install and terminate cable itemized under "Cost Break-down" elsewhere in these special provisions and pull cable through the system conduit and cable trays.
3. Install State-furnished steel casings and caps.

L. PILE CORROSION MONITORING SYSTEM

1. Install transducer test boxes and stainless steel conduit.

10-3.02 ABBREVIATIONS

The following abbreviations are added to those listed in Section 1-1.02, "Abbreviations," of the Standard Specifications:

---------- End of Page 263 in the original Special Provisions ----------

The cost break-down shall be divided in the following categories. Within each category, each item of work shall be broken down, as a minimum, to include the following listed items in addition to those listed in the Standard Specifications:

Substation Architectural Westbound

Substation Architectural Westbound electrical installation is shown on the Substation Architectural Westbound architectural electrical plans with the additional items to include:

a. Cable – list each size and type.
b. Conduit anchors – list each size and type.
c. Conduit clamps and hangers – list each size and type.
d. Exit lights – list each type, model and wattage.
e. Light switches – list each type.
f. Building grounding system – list size and type conductor.
g. Smoke detector system – list each type.
h. Receptacles – list each type.
i. Equipment rental – list each over $500.00 – list size and type.
j. Lighting panel – list size and type.

Substation Architectural Eastbound

Substation Architectural Eastbound electrical installation is shown on the Substation Architectural Eastbound architectural electrical plans with the additional items to include:

a. Cable – list each size and type.
b. Conduit anchors – list each size and type.
c. Conduit clamps and hangers – list each size and type.
d. Exit lights – list each type, model and wattage.
e. Light switches – list each type.
f. Building grounding system – list size and type conductor.
g. Smoke detector system – list each type.
h. Receptacles – list each type.
i. Equipment rental – list each over $500.00 – list size and type.
j. Lighting panel – list size and type.

Substation Westbound

Substation Westbound electrical installation is shown on the Substation Westbound electrical plans with the additional items to include:

a. Cables – list each size and type.
b. Pulling other system cables – list each size and type.
c. Conduit anchors, fittings and supports – list each size and type.
d. Cable trays – list each size and type.
e. Cable tray supports, hangers and anchors – list each size and type.
f. Cable tray straps – list each size and type.
g. Equipment grounding system – list size and type conductor.
h. Termination, splice and junction boxes – list each size and type.
i. Unit substation – list size and type.
j. 480 V Low Voltage Control Center (LVCC-B) – list size and type.
k. Battery charger and rectifier – list size and type.
l. 125 V (dc) battery – list size and type.
m. Safety switch for battery – list size and type.
n. 125 V (dc) panel – list size and type.
o. 30 kVA lighting and utility transformers – list size and type.
p. Utility panel – list size and type.
q. Equipment required for functional testing – list size and type.
r. Equipment rental - list each over $500.00 – list size and type.
s. Electrical hardware – list size and type.
t. 15 kV splice boxes – list each size and type.

i. 30 kVA lighting and utility transformers – list size and type.
j. Utility and lighting panels – list size and type.
k. Equipment required for functional testing – list size and type.
l. Equipment rental - list each over $500.00 – list size and type.

---------- End of Page 266 in the original Special Provisions ----------

m. Electrical hardware – list size and type.
n. Mounting rack – list components and fabrication method.

Girder Level Weastbound

Girder Level Westbound electrical installation is shown on the Girder Level Westbound electrical plans with the additional items to include:

a. Cable – list each size and type.
b. Pulling other system cables - list each size and type.
c. Conduit anchors, fittings and supports – list each size and type.
d. Cable trays – list size and type and installation method.
e. Cable tray anchors, fittings and supports – list each size and type.
f. Hinge connections – list each size, type and installation method.
g. Bridge and equipment grounding system – list size and type.
h. Equipment grounding termination – list size and type.
i. Termination boxes – list each size and type.
j. Junction boxes – list each size and type.
k. 15 kV splice boxes - list each size and type.
l. Receptacles – list size and type.
m. Light switches – list size and type.
n. Equipment required for functional testing – list size and type.
o. Equipment rental - list each over $500.00 – list size and type.
p. Electrical hardware – list size and type.
q. Mounting rack – list components and fabrication method.
r. Embed strut channel – list size and type.

Girder Level Eastbound

Girder Level Eastbound electrical installation is shown on the Girder Level Eastbound electrical plans with the additional items to include:

a. Cable – list each size and type.
b. Pulling other system cables - list each size and type.
c. Conduit anchors, fittings and supports – list each size and type.
d. Cable trays – list size and type and installation method.
e. Cable tray anchors, fittings and supports – list each size and type.
f. Hinge connections – list each size, type and installation method.
g. Bridge and equipment grounding system – list size and type.
h. Equipment grounding termination – list size and type.
i. Termination boxes – list each size and type.
j. Junction boxes – list each size and type.
k. 15 kV splice boxes - list each size and type.
l. Receptacles – list size and type.
m. Light switches – list size and type.
n. Equipment required for functional testing – list size and type.
o. Equipment rental - list each over $500.00 – list size and type.
p. Electrical hardware – list size and type.
q. Mounting rack – list components and fabrication method.
r. Embed strut channel – list size and type.

Navigation Lighting System

h. Sensor and recorder enclosures – list size and type.

Pile Corrosion Monitoring System

Pile Corrosion Monitoring System is shown on the Pile Corrosion Monitoring System electrical plans with the additional items to include:

a. Transducer test box – list size and type.
b. Stainless steel conduit – list by each size and installation method.
c. Telephone cable – list size and type.
d. Conduit anchors, fittings and supports – list each size and type.
e. Down-hole pull boxes – list each size and type.
f. Junction boxes – list each size and type.

---------- End of Page 268 in the original Special Provisions ----------

g. Down-hole enclosures – list each size and type.
h. Sensor and recorder enclosures – list size and type.

10-3.04 CONSTRUCTION CONTRACT INTERFACE RESPONSIBILITY

The Contractor shall complete the intertie construction between the Skyway and the YBI and Main Span Contract, located at Hinge A, and the Skyway and the Oakland Contract, located at Hinge E, as shown on the plans. All mating of conduits, trays and grounding conductors at the two construction split points, including splicing of ~~15 kV cables~~, communications, signal, ~~fiber optic~~ and control cables shall be performed by the Contractor. Sufficient lengths of "pigtails" will be provided by the other two contractors to bridge the construction split points, to the nearest splice box. All cable splices shall be enclosed in termination or splice boxes.

The Contractor shall perform acceptance tests of each termination and splice in accordance with latest applicable ICEA, International Electrical Testing Association Inc. (NETA) and IEEE standards. The tests shall include but not be limited to continuity, backscattering, attenuation and loss measurements of fiber-optic cables, including DC High Potential Tests, continuity and megger tests, as applicable, for each splice performed.

Reference is made to project plan Sheet EE-129, "Details Contract Interface Block Diagrams," for construction details.

10-3.05 CONDUIT

All conduit installed on the bridge shall be Type 2 unless otherwise specified. Conduit within the box girders and detector termination conduit shall be Type 1. All conduit installed in the barrier strip that are embedded into concrete shall be Type 1 or Type 2. Any conduit in the barrier strip that is not fully embedded in concrete shall be Type 2.

When a standard coupling cannot be used for joining Type 1 conduit, a UL listed threaded union coupling conforming to the provisions in Section 86-2.05C, "Installation," of the Standard Specifications, or a concrete-tight split coupling, or concrete-tight set screw coupling shall be used.

Pull ropes for use when installing cables in conduit shall consist of flat, woven, lubricated, soft-fiber polyester tape with a minimum tensile strength of 8000 N and shall have printed sequential measurement markings at least every meter.

After conductors have been installed, the ends of conduits terminating in pull boxes, enclosures, and cabinets shall be sealed with an approved type of sealing compound.

GALVANIZED RIGID STEEL CONDUIT, THREADED COUPLINGS, AND ELBOWS

The galvanized rigid steel (GRS) conduit, threaded couplings, and elbows shall conform to Section 86-2.05, "Conduit," of the Standard Specifications for Type 1 where shown on the plans.

POLYVINYL CHLORIDE COATED GALVANIZED RIGID STEEL CONDUIT, THREADED COUPLINGS, AND ELBOWS

The polyvinyl chloride (PVC) coated galvanized rigid steel (GRS) conduit, threaded couplings, and elbows shall conform to "Galvanized Rigid Steel Conduit, Threaded Couplings, and Elbows" as specified elsewhere in these special provisions shall conform to Section 86-2.05, "Conduit," of the Standard Specifications for Type 2 where shown on the plans.

POLYVINYL CHLORIDE COATED GALVANIZED RIGID STEEL CONDUIT BODIES

The polyvinyl chloride (PVC) coated galvanized rigid steel (GRS) conduit bodies shall conform to the following requirements before the PVC coating is applied:

MOUNTING RACKS

Mounting racks shall be constructed from 12-gage steel channel. The steel shall be fabricated by a formed hot rolled steel method and have a 13 µm electro-galvanizing plating applied after fabrication. All fittings and hardware used for construction of the mounting racks shall be of steel with the same electro-galvanizing plating.

THREADED BOLT SLEEVES AND BOLTS

Threaded bolt sleeves required for the navigation light mounting plate shall conform to the requirements in ASTM Designation: A 36 and shall be installed by the concrete fabricator. The bolts shall conform to the requirements in ASTM Designation: A 37.

---------- End of Page 270 in the original Special Provisions ----------

ELECTRICAL HARDWARE

All electrical hardware, including but not limited to, bolts, nuts, washers, lock washers, fastening screws, expansion anchors, U-bolts and hold-down clamps shall be Type 316L stainless steel unless otherwise noted.

CONDUIT AND TRAY SUPPORTS

The anchoring and supports of trays and conduits as shown on the plans are general for locations and methods only. The Contractor shall determine the metal framing strut support construction methods and details, at each support location, including location and length of support channel. Once determined, the Contractor shall submit to the Engineer for review and approval at least 30 working days prior to ordering or fabrication conduit and tray supports.

The Engineer will consult with the Structural Engineer of Record prior to approving concrete anchors requiring a depth of greater than 40 mm. Therefor it is recommended that support channels be embedded in the pre-fabricated concrete girder sections, during manufacture, for all trays and all major conduit runs. The following tray and conduit weight tables shall be used by the Contractor for determining the spacing of supports. The tables show the maximum probable mass of insulated copper conductors assuming maximum tray and conduit fill.

Conduit size in mm:	41	53	63	78	103
Mass in kg/m:	6.15	9	12.9	18.75	28.5

Tray size in mm:	305	610	762
Mass in kg/m:	37.5	75	93.75

Maximum tray support span shall be 4.9 meters.
Maximum conduit support span shall be 3.0 meters.

CABLE TRAY LADDER TYPE

Cable tray systems are defined to include, but are not limited to straight sections of ladder type cable trays, bends, tees, elbows, dropouts, supports and accessories.

Quality Assurance

The Contractor shall furnish to the Engineer a Certificate of Compliance from the manufacturer in conformance with the provisions in Section 6-1.07, "Certificates of Compliance," for each cable tray ladder types. The certificate shall be signed by the manufacturer's quality control representative and shall state that all materials and workmanship comply with the specifications and approved shop plans. The manufacturer shall be a firm regularly engaged in manufacture of cable trays and fittings of types and capacities required, whose products have been in satisfactory use in similar services. The cable tray ladder types shall comply with the following standards NEMA VE1, NEC Article 318, Underwriters Laboratory and NFPA 70B.

Cable Tray Sections and Components

Straight section and fitting side rails and rungs shall be made of ASTM Designation: A 570 and A 611 steel. The cable tray system shall be hot-dip galvanized after fabrication in conformance with the requirements in ASTM Designation: A 123. The cable tray side rails shall be stamped with the manufacturer's name, part number and material type. Transverse members (rungs) or corrugated bottoms shall be welded to the side rails with steel welding wire.

Ladder type trays shall consist of two longitudinal members (side rails) with transverse members (rungs) welded to the side rails. Rungs shall be spaced 229 mm on center. Rung spacing in fittings shall be 229 mm and measured at the center of

OUTDOOR BARRIER RECEPTACLES

The receptacles to be installed in the barriers outdoor shall be rated 15 A, 120 V, weatherproof and with threaded caps which effectively seal the housing when not in use.

NEMA TYPE 4X STAINLESS STEEL PULL BOXES (TYPE PB-1D AND TYPE PB-2B)

The body and the cover plate of the NEMA Type 4X enclosure shall be made of 14-gage Type 304 or Type 316 stainless steel. The seams shall be continuously welded and ground smooth, no holes or knockouts. It shall have a seamless foam-in-place gasket that assures watertight and dust-tight seal. The gasket and adhesive shall be oil-resistant. All exterior hardware shall be Type 304 or Type 316 stainless steel.

The enclosure shall meet the latest edition of the following industry standards NEMA Type 4X Enclosure, UL870.

The box engraving, physical size and dimensions shall be as shown on the plans. The enclosure shall be manufactured by B-Line Systems, located in Chalfant, California, Hoffman or other approved manufacturer.

NEMA TYPE 12 PULL BOXES SINGLE DOOR (TYPE PB-2A, PB-3A, AND PB-4D)

The NEMA Type 12 single door pull box shall conform to the following:

---------- Approximate End of Page 272 in the original Special Provisions ----------

Construction

a. Enclosure bodies are either 14-gage or 16-gage steel. All doors are 14-gage steel.
b. Seams shall be continuously welded and ground smooth, no holes or knockouts.
c. Shall have external mounting feet or be wall mounted.
d. Door and body stiffeners shall be provided in larger enclosure.
e. Rolled lip around three sides of door and all sides of enclosure opening excludes liquids and contaminants.
f. Door clamps are quick and easy to operate.
g. Door shall be removed by pulling heavy gage continuous hinge pin.
h. Hasp and staple for padlocking shall be provided.
i. Data pocket shall be high-impact thermoplastic.
j. Oil-resistant gasket attached with oil-resistant adhesive and held in place with steel retaining strips shall be provided.
k. Collar studs shall be provided for mounting panels.
l. The box engraving, physical size and dimensions shall be as shown on the plans.
m. Finish shall be white inside with ANSI 61 gray outside finish over phosphatized surfaces. Optional panels shall be white.

Industry Standards

a. UL 508 Type 12.
b. NEMA/EEMAC Type 12.
c. JIC standard EGP-1-1967 (14-gage only).
d. CSA Type 12.
e. IEC 529, IP-65.

NEMA TYPE 4X ENCLOSURES STAINLESS STEEL (TYPE PB-6C AND 7C)

General Enclosure Specification

The body and the door of the NEMA Type 4X enclosure shall be made of 14-gage Type 304 or Type 316 stainless steel. The seams shall be continuously welded and ground smooth, no holes or knockouts. It shall have a seamless foam-in-place gasket that assures watertight and dust-tight seal. It shall have a body stiffener in the larger size enclosures. The gasket and adhesive shall be oil-resistant. Enclosure shall have rolled lip around three sides of the door and all sides of the enclosure to assure a proper seal. All exterior hardware shall be Type 304 or Type 316 stainless steel. Enclosure shall have a hasp and staple for padlocking.

The door shall be removed by pulling stainless steel continuous hinge pin. The enclosure shall meet the latest edition of the following industry standards NEMA Type 4X Enclosure, UL870, and have a 2B finish.

The enclosure engraving, physical size and dimensions shall be as shown on the plans. The enclosure shall be manufactured by B-Line Systems, located in Chalfant, California, Hoffman or other approved manufacturer.

Navigation Lighting Relay Cabinet Enclosure (Type 6C)

FIBEROPTIC SPLICE CLOSURE

The fiber optic splice closure shall consist of an outer closure, an inner closure and splice trays, as specified in these special provisions.

The fiber optic splice closure shall be designed for a temperature range from -30°C to +70°C.

The size of the closure shall allow for all the fibers of the largest fiber optic trunk cable to be spliced to a second cable of the same size, plus 12 additional pigtails. The closures shall be not more than 864 mm in length and not more than 203 mm in diameter. The closures shall be designed for fusion splicing.

All materials in the closures shall be non-reactive and shall not support galvanic cell action. The outer-closure shall be compatible with the other closure components, the inner closure, splice trays, and cables.

The end plate shall consist of two sections and shall have capacity for two fiber optics communication cables and 12 fiber optics pigtails or four fiber optic cables.

The outer-closure shall protect the splices from mechanical damage, shall provide strain relief for the cable, and shall be resistant to salt corrosion.

The outer-closure shall be waterproof, and re-enterable. The outer-closure shall be flash-tested at 103 kPa.

The inner-closure shall be of metallic construction.

The inner-closure shall be compatible with the outer closure and the splice trays and shall allow access to and removal of individual splice trays.

The splice trays shall be compatible with the inner-closure and shall be constructed of rigid plastic or metal.

Adequate splice trays shall be provided to splice all fibers of the communication cable with the greatest fiber count entering the closure, plus 12 pigtails.

The Contractor shall install the fiber optic splice closure on the cable trays where splicing is required. Splices to the distribution cable shall be mid-span access splices, allowing access to individual fibers at selected points without cutting the remaining fibers. The fiber optic splice closures shall be securely fastened to the cable tray using standard hardware found in communications manholes.

The Contractor shall provide all mounting hardware required to securely mount the closures to the cable tray.

---------- End of Page 274 in the original Special Provisions ----------

The fiber optic splice closure shall be mounted horizontally in a manner as shown on the plans that allows the cables to enter at the end of the closure without exceeding any minimum bending radius specification.

Upon completion of the splices, the splice trays shall be secured to the inner closure.

The closure shall be sealed using a procedure recommended by the manufacturer that will provide a waterproof environment for the splices.

Care shall be taken at the cable entry points to ensure a tight salt resistant and waterproof seal is made which will not leak upon aging. It is acceptable to have multiple pigtails enter the fiber optic splice closure through one hole as long as all spaces between the cables are adequately sealed.

10-3.08 CONDUCTORS, CABLES AND WIRING

Splices shall be insulated by heat-shrink tubing of the appropriate size after thoroughly painting the spliced conductors with electrical insulating coating.

The minimum insulation thickness, at any point, for Type USE, RHH or RHW wire shall be 1.0 mm for conductor sizes No. 14 to No. 10, inclusive, and 1.3 mm for No. 8 to No. 2, inclusive. The minimum insulation thickness, at any point, for Type THW and TW wires shall be 0.69 mm for conductor sizes No. 14 to No. 10, inclusive, 1.02 mm for No. 8, and 1.37 mm for No. 6 to No. 2, inclusive.

600 VOLT SINGLE CONDUCTOR CABLE

All 600-volt single conductor cable shall be the following unless otherwise noted on the plans. The cables shall be insulated with a composite EPR/CSPE insulation rated for 600 volts. The cables shall be UL listed as Type RHH, RHW-2, or USE-2, VW-1 600 V. All cables No. 1/0 and larger shall be UL Type TC rated.

The conductor shall be soft annealed uncoated copper Class B stranded per ASTM B-8. The composite EPR/CSPE insulation shall meet the requirements of ICEA S-68-516, NEMA WC-8, and UL Standards 44 and 854. The composite insulation thickness shall be as follows:

CLOSED CIRCUIT TELEVISION CABLES

Television control (TVC) cable shall consist of 15 No. 18 conductors, unshielded and with an outer jacket. Each conductor shall have a minimum of 16 tinned copper strands with a minimum of 400-μm insulation. Individual conductor insulation shall be chrome PVC with a nominal thickness of 1 mm. The outside diameter of the jacket shall not exceed 14 mm.

Color code for TVC cable shall be:

1. Black
2. White
3. Red
4. Green
5. Orange
6. Blue
7. White/ Black
8. Red/ Black
9. Green/ Black
10. Orange/ Black
11. Blue/ Black
12. Black/ White
13. Red/ White
14. Green/ White
15. Blue/ White

Television power (TVP) conductors shall consist of three No. 14 (120 VAC, 120 VAC neutral, equipment ground) individually insulated, stranded copper conductors in conformance with the provisions in Section 86-2.08, "Conductors," of the Standard Specifications. The conductors shall be color coded black, white, and green respectively.

Television control power (TVCP) cable shall consist of twelve No. 18 conductors, unshielded with an outer jacket. Each conductor shall have a minimum of 16 tinned copper strands with a minimum of 400 μm insulation. Individual conductor insulation shall be polyvinyl chloride (PVC), rated for 300 V (see color code below). The jacket shall be chrome PVC with a nominal thickness of 1 mm. The outside diameter of the jacket shall not exceed 12 mm.

Color code for TVCP cable shall be:

---------- Approximate End of Page 276 in the original Special Provisions ----------

1. Black
2. White
3. Red
4. Green
5. Orange
6. Blue
7. White/ Black
8. Red/ Black
9. Green/ Black
10. Orange/ Black
11. Blue/ Black
12. Black/ White

Television video (TVL) cable shall consist of an RG-6/U coaxial cable. Each cable shall be provided with a solid No. 18 copper clad steel center conductor and shall conform to the following requirements:

Testing

Testing of TVL cables and connectors shall be performed in accordance with the provisions in Section 86-2.14B, "Field Testing," of the Standard Specifications and these special provisions.

Cable lengths found to have faults shall be replaced and re-tested. The Contractor shall dispose of the removed faulty cable.

Prior to the beginning of work, each length of coaxial cable shall be tested for attenuation and faults to ensure compliance with specifications contained herein using a time domain reflectometer (TDR). For the purpose of these special provisions, a fault in a long length of cable is defined by one or more of the following:

a. Return loss measurements indicating that attenuation exceeds 3 dB at 5 MHz to 30 MHz in a portion of cable less than 3 m long.
b. A return loss measurement indicating that there is a short in the cable.
c. A return loss measurement indicating a cut or open circuit in the cable.
d. A visual inspection which reveals exposure of or damage to the cable shielding.

SHIELDED TWISTED PAIR CABLE

All shielded twisted pair No. 18 (0.832 mm^2) multi-conductor communication cables (fifty pairs, six pairs and two pairs) shall be solid annealed copper (per ASTM Designations: B 3 and ASTM B 8). The insulated single conductors shall be twisted into pairs. The insulation shall be flame-retardant cross-linked polyethylene with color code in conformance with the requirements in ICEA Method 1. The insulation shall be 0.76 mm nominal.

The cable components are cabled with non-hygroscopic fillers, as necessary, and an overall binder tape. The individual pairs shall be shielded with a 0.19 mm Aluminum/polymer tape with tinned copper drain wire applied helically over the pairs. The overall shield shall be a 0.19 mm Aluminum/polymer tape with tinned copper drain wire applied helically over the cable core.

The overall jacket shall be 2.8 mm Flame-retardant and sunlight resistant polyvinyl chloride (PVC). A nylon ripcord shall be applied longitudinally under the overall jacket to facilitate jacket removal.

The cable shall be suitable for Cable Tray use and have the following ratings and listings:

a. UL Type TC - 600 volt.
b. UL Class XL.
c. UL Subject 13 & 1277.
d. IEEE 383 & 1202.
e. ICEA S-66-524 - 600 volt.

The cable shall be manufactured by Belden Cable, The Okonite Company, BICC Cables, Pirelli, or equal. The manufacturer shall furnish a notarized certificate of compliance to demonstrate cable furnished is in compliance with ICEA S-68-516 and UL 44.

Communication Cable Splices

Splices should be avoided if possible. If necessary, splices for shielded No. 18 multi-conductor, twisted pair cables shall be as recommended by the cable manufacturer and suitable for the environment that the splice is located. The Contractor shall submit the cable manufacturer's recommended splicing method to the Engineer for approval prior to using the method. The Engineer shall approve splice locations.

---------- End of Page 278 in the original Special Provisions ----------

~~**15 kV CABLE**~~

~~The 15 kV shielded single conductor power cable shall be 15 kV, 133 percent insulation rated power cable designed to operate at conductor temperatures of 90°C normal, 130°C emergency, and 250°C short circuit conditions as defined by ICEA S-93-693 (NEMA WC 7) and UL Standard 1072. The cable shall be suitable for installations above or below grade, indoors or outdoors, and in wet or dry locations. The qualifying cable shall be UL labeled as MV-90, Sunlight Resistant and for cable tray (CT) use in accordance with UL Standard 1072.~~

~~**Conductors**~~

~~The conductors shall be compressed, Class B stranded copper and shall be in accordance with the requirements of ICEA S-93-693. The copper conductors shall consist of all bare strands or tin coated strands in the outer layer in conformance with the requirements in ASTM Designations: B-3, B-8 and B-33.~~

~~shall consist of heat shrinkable radiation crosslinked insulation. The outer insulating layer shall be bonded to a conducting layer for shielding. The splice shall be rejacketed with a heavy wall, heat shrinkable sealant lined sleeve to provide a waterproof hot melt adhesive seal. Splices shall contain heat shrinkable radiation cross linked high dielectric constant linear stress relief material. Splices shall contain a high relative permittivity electric stress relief mastic for insulation shield cutback treatment and a heat activated sealant for environmental sealing. Kits shall allow splicing cables with different types of insulation, conductor sizes, and shielding construction. Kits shall accommodate commercially available standard connectors.~~

~~Splices of high voltage cable shall be avoided if possible. Where necessary, because of constructibility reasons, splice locations shall be approved by the Engineer. In general, splices of high voltage cables shall be scheduled so that the length of cable between splices is approximately 400 meters. All 15 kV splices shall be enclosed on a 15 kV splice box (Type PB-3A). A splice shall be scheduled at the construction boundaries. Where possible, longer cable runs are encouraged.~~

~~Cable End Sealing Caps~~

~~The End Seal Caps shall be heat shrinkable crosslinked polymeric end sealing caps capable of sealing cables specified in this section. End caps shall be precoated with a heat activated sealant.~~

~~DC High Potential Test~~

~~Perform DC high potential test of each conductor in accordance with NEMA WC 5.~~

~~FIBER OPTIC OUTSIDE PLANT CABLE~~

~~General~~

~~Each fiber optic outside plant cable (FOP) for this project shall be all dielectric, gel filled, duct type, with loose buffer tubes and shall conform to these special provisions. The fiber optic (SMFO) cables shall interconnect the equipment at the communications hub building with the equipment at the communications nodes. SMFO fibers shall contain singlemode (SM) dual window (1310 nm and 1550 nm) fibers.~~

~~Fiber optic cables shall be supplied in the configurations as shown on the plans and specified in these special provisions.~~

~~The optical fibers shall be contained within loose buffer tubes. The loose buffer tubes shall be stranded around an all dielectric central member. Aramid yarn and fiberglass shall be used as a primary strength member, and a medium or high density polyethylene outside jacket shall provide for overall protection.~~

~~All fiber optic (F/O) cable on this project shall be from the same manufacturer, who is regularly engaged in the production of this material.~~

~~The cable shall be qualified as compliant with Chapter XVII, Title 7, Part 1755.900 of the Code of Federal Regulations, "REA specification for filled fiber optic cables."~~

~~Fiber Characteristics~~

~~Each optical fiber shall be glass and consist of a doped silica core surrounded by concentric silica cladding. All fibers in the buffer tube shall be usable fibers, and shall be sufficiently free of surface imperfections and occlusions to meet the optical, mechanical, and environmental requirements of these specifications.~~

~~The coating shall be a dual layered, ultraviolet (UV) cured acrylate. The coating shall be mechanically or chemically strippable without damaging the fiber.~~

~~The cable shall comply with the optical and mechanical requirements over an operating temperature range from -40°C to +70°C. The cable shall be tested in accordance with EIA 455-3A (FOTP-3), "Procedure to Measure Temperature Cycling Effects on Optical Fiber, Optical Cable, and Other Passive Fiber Optic Components." The change in attenuation at extreme operational temperatures (-40°C to +70°C) for the fiber shall not be greater than 0.20 dB/km, with 80 percent of the measured values no greater than 0.10 dB/km. The attenuation shall be measured at 1310 nm and 1550 nm.~~

~~Fibers within the finished cable shall meet the requirements in the following table:~~

~~End of Page 280 in the original Special Provisions~~

~~End of Page 281 in the original Special Provisions~~

~~The loose buffer tubes shall be extruded from a material having a coefficient of friction sufficiently low to allow free movement of the fibers. The material shall be tough and abrasion resistant to provide mechanical and environmental protection of the fibers, yet designed to permit safe intentional "scoring" and breakout, without damaging or degrading the internal fibers.~~

~~Buffer tube filling compound shall be a homogenous hydrocarbon based gel with anti oxidant additives. It shall be used to prevent water intrusion and migration. The filling compound shall be non-toxic and dermatologically safe to exposed skin. It shall be chemically and mechanically compatible with all cable components, non nutritive to fungus, non hygroscopic and electrically non conductive. The filling compound shall be free from dirt and foreign matter and shall be readily removable with conventional nontoxic solvents.~~

~~Buffer tubes shall be stranded around a central member by a method, such as the reverse oscillation stranding process, that will prevent stress on the fibers when the cable jacket is placed under strain.~~

~~Each buffer tube shall be distinguishable from other buffer tubes in the cable by using the same color coding as specified above for fibers.~~

~~C. Central Member~~

~~The central member, which functions as an anti buckling element, shall be a glass reinforced plastic rod with similar expansion and contraction characteristics as the optical fibers and buffer tubes. To ensure the proper spacing between buffer tubes during stranding, a symmetrical, linear overcoat of polyethylene may be applied to the central member to achieve the optimum diameter.~~

~~D. Filler Rods~~

~~Fillers may be included in the cable cross section. Filler rods shall be either solid medium or high density polyethylene. The diameter of filler rods shall be the same as the outer diameter of the buffer tubes.~~

~~E. Stranding~~

~~Completed buffer tubes shall be stranded around the overcoated central member using stranding methods, lay lengths and positioning such that the cable shall meet mechanical, environmental and performance specifications. A polyester binding shall be applied over the stranded buffer tubes to hold them in place. Binders shall be applied with sufficient tension to secure the buffer tubes to the central member without crushing the buffer tubes. The binders shall be non hygroscopic, non wicking (or rendered so by the flooding compound), and dielectric with low shrinkage.~~

~~F. Core and Cable Flooding~~

~~The cable core interstices shall be filled with a polyolefin based compound to prevent water ingress and migration. The flooding compound shall be homogeneous, non hygroscopic, electrically non conductive, and non nutritive to fungus. The compound shall also be nontoxic, dermatologically safe and compatible with all other cable components.~~

~~G. Tensile Strength Member~~

~~Tensile strength shall be provided by high tensile strength aramid yarns and fiberglass which shall be helically stranded evenly around the cable core and shall not adhere to other cable components.~~

~~H. Ripcord~~

~~The cable shall contain at least one ripcord under the jacket for easy sheath removal.~~

~~I. Outer Jacket~~

~~The jacket shall be free of holes, splits, and blisters and shall be medium or high density polyethylene (PE) with minimum nominal jacket thickness of 37 mils. Jacketing material shall be applied directly over the tensile strength members and flooding compound and shall not adhere to the aramid strength material. The polyethylene shall contain carbon black to provide ultraviolet light protection and shall not promote the growth of fungus.~~

~~The jacket or sheath shall be marked with the manufacturer's name, the words "Optical Cable", the number of fibers, year of manufacture, and sequential measurement markings every meter. The actual length of the cable shall be within ±1 percent of the length marking. The marking shall be in a contrasting color to the cable jacket. The height of the marking shall be approximately 2.5 mm.~~

~~**General Cable Performance Specifications**~~

~~The F/O cable shall withstand water penetration when tested with a one meter static head or equivalent continuous pressure applied at one end of a one meter length of filled cable for one hour. No water shall leak through the open cable~~

~~F/O cable shall be installed using a cable pulling lubricant recommended by the F/O cable and the innerduct manufacturer and a non-abrasive pull tape conforming to the provisions described under "Conduit" elsewhere in these special provisions. The Contractor's personnel shall be stationed at each splice vault and pull box through which the cable is to be pulled to lubricate and prevent kinking or other damage.~~

~~F/O cable shall be installed without splices except where specifically allowed on the plans or described in these special provisions. The 12 SMFO cables used for distribution shall be spliced only at splice vaults associated with cameras or video~~

~~End of Page 283 in the original Special Provisions~~

~~nodes. The trunk cables shall be spliced only at splice closures associated with distribution cables. The slack shall be divided equally on each side of the splice closure.~~

~~A minimum of 18 meters of slack shall be provided for each unspliced cable at each splice vault. A minimum of 9 meters of slack shall be provided for each cable at each fiber optic splice closure.~~

~~Following installation of the cable in duct, all duct entrances in cabinets, pull boxes and vaults shall be sealed with duct sealing compound to prevent the ingress of moisture, foreign materials and rodents.~~

~~Unless shown or provided otherwise, only one F/O cable shall be installed in each innerduct.~~

~~Splicing~~

~~Optical fibers shall be spliced using the fusion type and shall not exceed 0.07 dB loss per splice.~~

~~The completed splices shall be placed in a splice tray. The splice tray shall then be placed in the splice closure.~~

~~Termination splices shall join the fibers in the F/O cable span to the fibers in pigtails. The individual fibers shall be looped one full turn within the splice tray to avoid macro bending. A 254 mm minimum bend radius shall be maintained during installation and after placing in the optical fiber splice tray. Each fiber shall be individually restrained in a splice tray. The optical fibers in buffer tubes and the placement of the optical fibers in the splice tray shall be such that there is no discernable tensile force on the optical fiber.~~

~~All fibers shall be labeled in the splice tray with permanent vinyl markers. Pigtail ends shall also be labeled to identify the destination of the fiber.~~

~~Passive Cable Assemblies and Components~~

~~The F/O cable assemblies and components shall be compatible components, designed for the purpose intended, and manufactured by a company regularly engaged in the production of material for the fiber optic industry. All components or assemblies shall be best quality, non corroding, with a design life of at least 20 years. All components or assemblies of the same type shall be from the same manufacturer.~~

~~Fiber Optic Cable Terminations~~

~~1. General~~

~~Fiber optic cable terminations shall include pigtails and jumpers. Breakout cables shall comply with the specifications for pigtails. Fiber optic outside plant cable entering a building shall be routed through rigid steel conduit as required by the NEC, except where a transition to F/O inside plant (FOIP) cable is shown on the plans. The cable shall continue within the conduit to the designated termination point for distribution "breakout".~~

~~All components shall be the size and type required for the specified fiber.~~

~~All FOIP cable on this project shall be from the same manufacturer, who is regularly engaged in the production of this material.~~

~~2. Distribution Breakout~~

~~Fiber optic cables arrives within the hub building, main or intermediate distribution frame (MDF/IDF) room, shall be routed within conduit to a wall or ceiling mounted cable storage cabinet, as shown on the plans, where a minimum of 6 meter of spare cable shall be coiled for future use. The cable shall be terminated in a fiber distribution frame (FDF).~~

~~The cable jacket, aramid yarn and filler rods shall be removed exposing the buffer tubes. The exposed length of the buffer tubes shall be at least the length recommended by the hardware manufacturer which allows the tubes to be secured to the splice tray. Buffer tubes shall be secured to the splice tray. The remainder of the tubes shall be removed to expose lengths of the individual fibers sufficient for routing on the splice tray, as described in "Splicing" elsewhere in these special provisions. Moisture blocking gel shall be removed from the exposed buffer tubes and fibers. The manufacturer's directions shall be followed to ensure that throughout the specified temperature range gel will not flow from the end of the buffer tube. The individual fibers shall be stripped and prepared for splicing.~~

~~Fiber Optic Cable Assemblies~~

~~Full compensation for fiber distribution unit shall be considered as included in the contract price paid for the item requiring fiber distribution unit and no separate payment will be made therefor.~~

~~**Fiber Optic Testing**~~

~~1. General~~

~~Testing shall include the tests on elements of the passive fiber optic components: (1) at the factory, (2) after delivery to the project site but prior to installation, and (3) after installation but prior to connection to any other portion of the system. The Contractor shall provide all personnel, equipment, instrumentation and materials necessary to perform all testing. The Engineer shall be notified two working days prior to all field tests. The notification shall include the exact location or portion of the system to be tested.~~

~~End of Page 285 in the original Special Provisions~~

~~Documentation of all test results shall be provided to the Engineer within 2 working days after the test involved. The Contractor's attention is directed to "As Builts" elsewhere in these special provisions, regarding the requirements for recording test results.~~

~~A minimum of 15 working days prior to arrival of the cable at the site, the Contractor shall provide detailed test procedures for all field testing for the Engineer's review and approval. The procedures shall include the tests involved and how the tests are to be conducted. Included in the test procedures shall be the model, manufacturer, configuration, calibration and alignment procedures for all proposed test equipment.~~

~~2. Factory Testing~~

~~Documentation of compliance with the fiber specifications as listed in the Fiber Characteristics Table shall be supplied by the original equipment manufacturer. Before shipment, but while on the shipping reel, 100 percent of all fibers shall be tested for attenuation. Copies of the results shall be (1) maintained on file by the manufacturer with a file identification number for a minimum of 7 years, (2) attached to the cable reel in a waterproof pouch, and (3) submitted to the Contractor and to the Engineer.~~

~~3. Arrival On Site~~

~~The cable and reel shall be physically inspected on delivery and the attenuation shall be measured for 100 percent of the fibers. The failure of any single fiber in the cable to comply with these specifications, is cause for rejection of the entire reel. Test results shall be recorded, dated, compared and filed with the copy accompanying the shipping reel in a weather proof envelope. Attenuation deviations from the shipping records of greater than 5 percent shall be brought to the attention of the Engineer. The cable shall not be installed until completion of this test sequence and the Engineer provides written approval. Copies of traces and test results shall be submitted to the Engineer. If the test results are unsatisfactory, the reel of F/O cable shall be considered unacceptable and all records corresponding to that reel of cable shall be marked accordingly. The unsatisfactory reels of cable shall be replaced with new reels of cable at the Contractor's expense. The new reels of cable shall then be tested to demonstrate acceptability. Copies of the test results shall be submitted to the Engineer.~~

~~4. Outdoor Splices~~

~~The Contractor shall verify the insertion loss quality of each splice as provided elsewhere in these special provisions, prior to sealing the splice closure.~~

~~5. Optical Time Domain Reflectometer Testing~~

~~Once the passive cabling system has been installed and is ready for activation, 100 percent of the fiber links shall be tested with the optical time domain reflectometer (OTDR) for attenuation at wavelengths of both 1310 nm and 1550 nm. Test results shall be recorded, dated, compared and filed with previous copies. A hard copy printout and an electronic copy of traces and test results shall be submitted to the Engineer in the format designated by the Engineer.~~

~~The OTDR shall be capable of recording and displaying anomalies of at least 0.02 dB.~~

~~6. Power Meter and Light Source~~

~~At the conclusion of the OTDR testing, 100 percent of the fiber links shall be tested end to end with a power meter and light source, in accordance with EIA Optical Test Procedure 171 and in the same wavelengths specified for the OTDR tests. These tests shall be conducted in both directions and the differential in test results shall not exceed 0.5 dB. Test results shall be recorded, compared, and filed with the other recordings of the same links. Test results shall be submitted to the Engineer.~~

~~7. Cable Verification Worksheet~~

~~APPENDIX A~~
~~Cable Verification Worksheet~~

~~Contract No.~~ _____ ~~Contractor:~~ _____

~~Operator:~~ _____ ~~Date:~~ _____

~~Link Number:~~ _____ ~~Fiber Number:~~ _____

~~Test Wavelength (Circle one): 1310 1550~~

~~Expected Location of fiber ends:~~
~~End 1:~~ _____ ~~End 2:~~ _____

~~OTDR Test Results:~~	_____ ~~dB~~	~~1A~~
~~Forward Loss:~~	_____ ~~dB~~	~~1B~~
~~Reverse Loss: [(1A + 1B)/2]~~	_____ ~~dB~~	~~1C~~
~~Average Loss:~~		
~~Power Meter and Light Source Test Results:~~		
~~Forward Loss:~~	_____ ~~dB~~	~~2A~~
~~Reverse Loss:~~	_____ ~~dB~~	~~2B~~
~~Average Loss [(2A + 2B)/2]:~~	_____ ~~dB~~	~~2C~~
~~Calculated Fiber Loss~~		
~~Length of the link (from OTDR):~~	_____ ~~km~~	~~3A~~
~~Allowed loss per km of fiber:~~	~~0.4 dB/km~~	~~3B~~
~~Total Allowed Loss due to the fiber (3A * 3B):~~	_____ ~~dB~~	~~3C~~
~~Calculated Splice Loss~~		
~~Number of Splices in the Link:~~	_____	~~4A~~
~~Allowed Link Loss per Splice:~~	~~0.10 dB~~	~~4B~~
~~Total Allowed Loss due to Splices (4A * 4B):~~	_____ ~~dB~~	~~4C~~
~~Calculated Link Loss~~		
~~Connector Loss:~~	~~0.9 dB~~	~~5A~~
~~Total Link Loss (5A + 3C + 4C):~~	_____ ~~dB~~	~~5B~~
~~Cable Verification:~~		
~~Compare Power Meter Average Loss to Calculated Link Loss (2C – 5B):~~	_____ ~~dB~~	~~6A~~
~~If the value of 6A is greater than zero, the link has failed the Test. See Test Failures elsewhere in these Special Provisions.~~		

~~To Be Completed by Caltrans:~~

~~Resident Engineer's Signature:~~ _____ ~~Cable Link Accepted:~~ _____

~~End of Page 287 in the original Special Provisions~~

~~Approximate End of Page 288 in the original Special Provisions~~

~~1. Camera Unit With Housing~~

~~Each camera unit shall consist of a camera, lens, environmental housing and camera unit cable assembly. The camera, lens and environmental housing, combined, shall not weigh more than 6.8 kg. Each camera unit shall be interchangeable with the existing camera units already installed on various traffic operations system (TOS) projects without changes or adjustments to either the system or the camera unit.~~

~~Each camera unit shall be assembled, inspected, and tested in accordance with these special provisions prior to delivery to the job site. Installation, operations and maintenance manuals shall also be submitted at the time of delivery.~~

~~Applicable Documents – The following documents of the U.S. Military Specification (MIL-SPEC), Underwriters' Laboratory, Inc. (UL), Electronics Industries Association (EIA) Standards, and other Standards form parts of the specification to the extent specified in these standards. In the event of a conflict between the content of this section and the content of the specification, the standards defined in this section shall supersede.~~

~~Military Specification Documents~~	
~~MIL-I-45208A~~	~~Inspection System Requirements, Dec. 16, 1963~~
~~MIL-C-45662~~	~~Calibration System Requirements, June 10, 1980~~
~~MIL-STD-416A~~	~~Electromagnetic Interface Characteristics Requirements for Equipment, Subsystems & Systems, Aug. 1, 1968~~
~~MIL-E-5400T~~	~~Electronic Equipment, Airborne General Specification~~
~~MIL-STD-810~~	~~Environmental Test Methods, 19 July 1983~~
~~MIL-C-5541~~	~~Chemical Conversion Coatings on Aluminum Alloys, June 3, 1970~~

~~Underwriters' Laboratory, Inc. and other documents~~	
~~UL-796~~	~~Printed Circuit Boards~~
~~EIA-170A~~	~~Electrical Performance Standards Color Television Studio Facilities~~
~~EIA RS-330~~	~~Electrical Performance Standards for Closed Circuit Television (CCTV) Camera 525/60 Interlaced~~

~~A. Camera~~

~~Approved Camera – The cameras listed below have been approved by the Engineer. Further information such as the source of the cameras can be provided upon demand. Any camera submitted by the Contractor that is not one of the approved cameras listed below shall be stringently compared to the specifications set forth in these special provisions before it is approved by the Engineer. Approved cameras are Cohu 8240 and Sony SSC-C374.~~

~~(1) General~~

~~a. Each camera shall be self-contained and designed for continuous unattended 24-hour operation.~~
~~b. Camera performance shall meet or exceed EIA-170A standards.~~
~~c. Each camera shall have automatic sensitivity and black level control so that it operates without further adjustment when illumination ranges from the minimum specified herein to that of full daylight.~~
~~d. Each active electronic device within the camera shall be solid-state.~~
~~e. Each camera shall have a switch selectable electronic shutter. The shutter speed shall range from 1/60 of a second (off) to 1/10,000 of a second in 8 steps. The control of the electronic shutter rate shall be accessible through a side panel opening. Remote on/off control of the shutter shall be accomplished via an output connector on the rear of the environmental housing.~~

~~(2) Light sensitivity – At a scene with 50 percent light reflectivity and with light level on the scene measured to be 10 lux and greater, each camera with its 10:1 zoom lens shall generate a picture on the monitor specified in these special provisions which resolves all 10 shades of gray on the EIA Television Test Chart. Not every camera shall be required to resolve the same gray scale when the light level on the same scene is measured to be less than one lux.~~

~~(3) Electrical Power – Each camera shall operate when the applied voltage is between 95 to 130 VAC, 60 Hz ±0.3 Hz, single phase. The power consumption of camera shall not exceed 10 W. All camera circuitry shall be powered by a regulated, over-voltage protected DC power supply contained in the camera.~~

~~Approximate End of Page 289 in the original Special Provisions~~

~~b. Peak random vibration of 5 g from 60 to 1000 Hz, with camera in operation.~~
~~c. Shock up to 15 g in all axes under non-operating conditions.~~
~~d. Exposure to sand, dust, fungus, and salt atmosphere as per MIL-E-5400T paragraphs 3.2.24.7, 3.2.24.8, 3.2.24.9, and 3.2.24.10.~~
~~e. Up to 100 percent relative humidity as per MIL-E-5400T, paragraph 3.2.24.2.~~

~~End of Page 290 in the original Special Provisions~~

~~(10) Picture Quality~~

~~a. The quality of the picture shall be such that most objects in low light levels can be distinguished without excess interference from undesirable picture attributes.~~
~~b. Undesirable picture attributes include blooming, transfer smear, and vertical register shifting.~~

~~B. Lens~~

~~(1) General~~

~~a. Each lens shall be fully compatible with the camera provided.~~
~~b. Each lens shall have a maximum aperture of no less than F/1.2, and a minimum range of F/1.2 to F/1200.~~
~~c. Each lens shall be a 16-mm C-mount.~~
~~d. Each lens shall have a minimum zoom range of 10 to 1. The lens focal length for a 16.9-mm CCD camera shall be 10-100 mm, 10.5-105 mm or 11-110 mm. The lens focal length for a 12.7-mm CCD camera shall be shall be 8-80 mm. A 1.5 X extender shall be included with the lens.~~
~~e. Each lens shall be equipped with a motorized zoom and focus control.~~
~~f. Each lens shall have an automatic, motor driven iris with manual override. The iris shall be controlled directly through the camera in automatic mode and from the camera control unit in the manual mode. The automatic iris shall provide continuous aperture adjustments of the lens as determined by the amount of light reaching the camera imager. The power supply and electronics for iris motor shall be contained within the environmental housing.~~
~~g. Each lens shall be fitted with an intra-spot neutral density filter.~~
~~h. Each lens must be able to respond to the following inputs from camera control unit (CCU) for lens control:~~

~~Focus near~~	~~+9.0VDC @ 100 mA~~
~~Focus far~~	~~-9.0VDC @ 100 mA~~
~~Zoom in~~	~~+9.0VDC @ 100 mA~~
~~Zoom out~~	~~-9.0VDC @ 100 mA~~
~~Iris closed~~	~~+9.0VDC @ 100 mA~~
~~Iris open~~	~~-9.0VDC @ 100 mA~~

~~i. The travel time for the upper limit stop to the lower limit stop for zoom and focus shall be from 5 seconds minimum to 10 seconds maximum.~~
~~j. Each lens shall have the capability of at least 10 pre-positioning positions.~~

~~(2) Environmental Operation~~

~~Each lens within its pressurized environmental enclosure shall withstand the following requirements:~~

~~a. Operate over an ambient temperature range on -10°C to +50°C with the use of heaters.~~
~~b. Peak random vibration of 5 g from 60 to 1000 Hz, with lens in operation.~~
~~c. Shock up to 15 g in all axes under non-operating conditions.~~
~~d. Exposure to sand, dust, fungus, and salt atmosphere as per MIL-E-5400T paragraphs 3.2.24.7, 3.2.24.8, 3.2.24.9, and 3.2.24.10.~~
~~e. Up to 100 percent relative humidity as per MIL-E-5400T, paragraph 2.24.2.~~

~~C. Environmental Housing~~

~~b. All fasteners and nuts used in attaching the mounting base to the environmental housing shall be of Type 18-8 stainless steel.~~

~~c. Each camera unit shall be provided with three stainless steel hex head bolts to secure the camera unit to the pan and tilt unit.~~

~~D. Camera Unit Cable Assembly~~

~~(1) General. Each camera unit cable assembly shall consist of box mounting socket connector and a wiring harness.~~

~~(2) Box Mounting Socket Connector~~

~~End of Page 292 in the original Special Provisions~~

~~a. Each box mounting socket connector shall be in conformance with Military Part Numbering System Designation: MS 3102E 28-21S-F80.~~

~~b. One full set of crimp contacts shall be provided with each box mounting socket connector.~~

~~c. The pinout of the connector shall be as shown on the plans.~~

~~(3) Wiring Harness~~

~~a. The camera unit cable assembly wiring harness shall be 3 m long and shall be COHU AC27E or other cable approved by the Engineer. The coaxial cables' impedance shall be 75 Ω. One end of each wiring harness shall be Type PT06A 20-39S (SR) and shall mate with the camera connector. It shall have a 90 degree end bell, Bendix 10-25997-203 or equal, for strain relief. The end bell shall be positioned such that the opening is 180 degrees from the main key on the connector. The other end of each wiring harness shall be in conformance with Military Part Numbering System Designation: MS 3106E 28-21P, and shall mate with the box mounting socket connector.~~

~~b. All connectors shall be potted with an appropriate potting compound for environmental sealing.~~

~~c. All connectors' pinout shall be as shown on the plans.~~

~~**2. Pan and Tilt Unit**~~

~~A. General~~

~~(1) Each pan and tilt unit, with camera unit attached, shall pan 355 degrees minimum in either direction, and tilt 60 degrees minimum from horizontal position to either up or down positions.~~

~~(2) Each pan and tilt unit shall be capable of minimum ten preset positions for each pan and tilt operation.~~

~~B. Electrical~~

~~(1) Each pan and tilt unit shall operate with input voltage of 115 VAC, 60 Hz ±0.3 Hz.~~

~~(2) Each pan and tilt unit shall not exceed 200 W power consumption.~~

~~(3) The motors shall be impedance overload protected, two phase induction type, rated for continuous duty and shall be instantaneous reversing.~~

~~(4) The limit switches shall be rated 5 A, 10 million cycles and with external adjustments.~~

~~(5) Each pan and tilt unit shall be provided with box mounting type connector.~~

~~(6) One mating connector with full set of crimp contacts and strain relief shall be provided with the box mounting connector.~~

~~C. Mechanical~~

~~(1) The maximum load shall be 45 kg at 127 mm from tilt table to center of gravity in both upright and inverted position.~~

~~(2) Each pan and tilt unit shall have maximum dimensions of 400 mm high, 355 mm wide and 230 mm deep.~~

~~(3) Each pan and tilt unit shall not exceed the maximum mass of 27 kg.~~

~~(4) Each pan and tilt unit shall be constructed in aluminum casting and plate. All internal parts shall be corrosion protected.~~

~~(5) Each pan and tilt shall have textured semi-gloss beige enamel finish.~~

~~(6) All bearings shall be heavy duty ball or roller bearing.~~

~~(7) All gears shall be hardened steel.~~

~~(8) All gasket seals shall be designed for all weather protection.~~

~~C1~~	~~AMP 206430-1~~
~~C2~~	~~AMP 206043-1~~
~~C3~~	~~AMP 206306-1~~

~~b. The pin and socket contacts for connectors C1-C3 shall be constructed with brass contact body material and with stainless steel spring that are sub-plated with 1.27 µm nickel and plated with 0.762 µm gold. Pin diameter shall be 1.575 mm. Contact size shall be 16.~~

~~c. Each C1, C2 and C3 connector shall use the AMP No. 601105-1 or No. 91002-1 contact insertion and the AMP No. 305183 contact extraction tool.~~

~~d. One mating connector with a full set crimp contacts and strain relief shall be supplied with connectors C1, C2 and C3.~~

~~e. The connectors C4 and C5 shall be a DB-25 socket connector.~~

~~(8) Serial cable assemblies (SCA1 and SCA2) with length of 3 m shall be provided to mate with C4 and C5, respectively.~~

~~(9) Pin and socket contacts for DB-25 connectors shall be copper alloy body; finished with 0.762 µm gold over 1.27 µm nickel.~~

~~(10) The rear and front panel BNC connectors shall be of copper material with bright nickel (tarnish resistant) finish for the body and silver finish for the contact.~~

~~(11) Each printed circuit board shall be vertically installed.~~

~~End of Page 294 in the original Special Provisions~~

~~(12) Each LED shall be equal to Hewlett Packard High Intensity Red Un-tinted, Non-diffused LED (Part Number HLMP-D105). Each LED shall be mounted as shown on the plans.~~

~~(13) A front panel on/off switch shall turn the CCU on/off and shall also control AC power to the rear panel power output connector (C1). The indicator used for AC power shall be green when energized.~~

~~(14) One coaxial cable labeled "AVO" (Analog Video Output) terminated with BNC plug connectors on each end shall be provided. This cable shall be RG-59/U with overall length of one meter.~~

~~B. Electrical~~

~~(1) Each CCU shall have auto iris override.~~

~~(2) Each CCU shall have circuitry to detect the absence and presence of video sync on its video input. Each CCU shall also have circuitry to monitor the low pressure alarm contact closure from the camera unit. A local/remote control switch shall be provided to override the lens and pan and tilt controls through C4 when the switch is in local mode. When in local mode, the local control alarm shall be active. Alarm status shall be constantly monitored and updated. Upon receipt of a "status query" message, the CCU shall send alarm status message with data as follows:~~

~~"0"~~	~~None of the alarms active.~~
~~"1"~~	~~Local Control (LC) alarm active.~~
~~"2"~~	~~Low Pressure (LP) alarm active.~~
~~"3"~~	~~LP/LC alarms active.~~
~~"4"~~	~~Video Sync Absence (VSA) alarm active.~~
~~"5"~~	~~VSA/LC alarms active.~~
~~"6"~~	~~VSA/LP alarms active.~~
~~"7"~~	~~VSA/LP/LC alarms active.~~

~~The front panel alarm light shall be lit if any the alarms are active.~~

~~(3) Each CCU shall have circuitry for a source character generator. The source character generator shall display 16 alphanumeric characters superimposed on the video image. Each character shall be 28 TV lines high and shall be derived from a standard 5 x 7 dot matrix. The programmed characters shall be stored in a non-volatile memory. Upon receipt of "Set ID" message, the CCU shall position from the camera ID in the video image as follows:~~

~~Function~~	~~Hardware~~	~~Indicator~~
~~Zoom (In/Off/Out)~~	~~(ON) OFF (ON)~~	~~2 LED~~
~~Focus (Near/Off/Far)~~	~~(ON) OFF (ON)~~	~~2 LED~~
~~Pan (Left/Off/Right)~~	~~(ON) OFF (ON)~~	~~2 LED~~
~~Tilt (Up/Off/Down)~~	~~(ON) OFF (ON)~~	~~2 LED~~
~~Iris (Open/Off/Close)~~	~~(ON) OFF (ON)~~	~~2 LED~~
~~Iris override (Manual/Auto)~~	~~ON OFF~~	~~1 LED~~
~~Option 1 (On/Off)~~	~~ON OFF~~	~~1 LED~~
~~Option 2 (On/Off)~~	~~ON OFF~~	~~1 LED~~
~~Option 3 (On/Off)~~	~~ON OFF~~	~~1 LED~~
~~Option 4 (On/Off)~~	~~ON OFF~~	~~1 LED~~
~~Option 5 (On/Off)~~	~~ON OFF~~	~~1 LED~~
~~Option 6 (On/Off)~~	~~ON OFF~~	~~1 LED~~
~~Option 7 (On/Off)~~	~~ON OFF~~	~~1 LED~~
~~Option 8 (On/Off)~~	~~ON OFF~~	~~1 LED~~
~~Alarm (On/Off)~~	~~ON OFF~~	~~1 LED~~
~~Control (Local/Remote)~~	~~ON OFF~~	
~~Reset~~	~~(ON) OFF (momentary pushbutton)~~	

~~(11)~~

~~CCU connector assignments~~	
~~C1~~	~~4 contact connector~~
~~C2~~	~~14 contact connector~~
~~C3~~	~~37 contact connector~~
~~C4, C5~~	~~DB-25 connectors~~

~~C1 – AC Power~~	
~~Position~~	~~Function~~
~~1~~	~~AC +~~
~~2~~	~~AC –~~
~~3~~	~~Equipment Ground~~
4	~~NA~~

~~C2 – Pan and Tilt~~			
~~Pos.~~	~~Function~~	~~Pos.~~	~~Function~~
~~1~~	~~Pan right~~	~~8~~	~~Pan feedback~~
~~2~~	~~Pan left~~	~~9~~	~~Tilt feedback~~
~~3~~	~~AC –~~	~~10~~	~~Preset – VDC~~
4	~~Tilt up~~	~~11~~	~~NA~~
~~5~~	~~Tilt down~~	~~12~~	~~AC+~~
~~6~~	~~AC –~~	~~13~~	~~AC –~~
~~7~~	~~Preset + VDC~~	~~14~~	~~Ground~~

~~End of Page 296 in the original Special Provisions~~

~~End of Page 297 in the original Special Provisions~~

~~(2) Each CCU shall conform to MIL-STD-810D 516.1 and MIL-STD-810D 514.1 shock and vibration test.~~

~~D. CCU Messages~~

~~(1) Each CCU shall communicate through the C4 serial port with the following communication message codes:~~

~~DIRECTION~~	~~MESSAGE~~	~~CHARACTER~~		~~DATA~~
		~~1ST CODE~~	~~2ND CODE~~	
~~Transmit~~	~~Alarm status~~	~~A~~	~~space~~	~~"0" "7"~~
~~Receive~~	~~Status query~~	~~Q~~	~~space~~	~~NONE~~
~~Receive~~	~~Pan stop~~	~~p~~	~~space~~	~~NONE~~
~~Receive~~	~~Tilt stop~~	~~t~~	~~space~~	~~NONE~~
~~Receive~~	~~Zoom stop~~	~~z~~	~~space~~	~~NONE~~
~~Receive~~	~~Focus stop~~	~~f~~	~~space~~	~~NONE~~
~~Receive~~	~~Iris stop~~	~~i~~	~~space~~	~~NONE~~
~~Receive~~	~~Pan left~~	~~L~~	~~space~~	~~NONE~~
~~Receive~~	~~Pan right~~	~~R~~	~~space~~	~~NONE~~
~~Receive~~	~~Tilt up~~	~~U~~	~~space~~	~~NONE~~
~~Receive~~	~~Tilt down~~	~~D~~	~~space~~	~~NONE~~
~~Receive~~	~~Zoom in~~	~~I~~	~~space~~	~~NONE~~
~~Receive~~	~~Zoom out~~	~~O~~	~~space~~	~~NONE~~
~~Receive~~	~~Focus near~~	~~N~~	~~space~~	~~NONE~~
~~Receive~~	~~Focus Far~~	~~F~~	~~space~~	~~NONE~~
~~Receive~~	~~Iris open~~	~~J~~	~~space~~	~~NONE~~
~~Receive~~	~~Iris close~~	~~K~~	~~space~~	~~NONE~~
~~Receive~~	~~Iris manual~~	~~M~~	~~space~~	~~NONE~~
~~Receive~~	~~Iris auto~~	~~m~~	~~space~~	~~NONE~~
~~Receive~~	~~Set ID word~~	~~C~~	~~"1" "4"~~	~~16 ASCII char.~~
~~Receive~~	~~Home position 0-9~~	~~H~~	~~"0" "9"~~	~~NONE~~
~~Receive~~	~~Home position program 0-9~~	~~P~~	~~"0" "9"~~	~~NONE~~
~~Receive~~	~~Option on 1-8~~	~~S~~	~~"1" "8"~~	~~NONE~~
~~Receive~~	~~Option off 1-8~~	~~s~~	~~"1" "8"~~	~~NONE~~
~~Receive~~	~~Enter Echo mode~~	~~E~~	~~space~~	~~NONE~~
~~Receive~~	~~Exit Echo mode~~	~~^]C~~	~~This sequence is not in a communication packet~~	

~~(2) After receiving the "enter echo" command the CCU shall pass all characters from C5 to C4 and C4 to C5. The CCU shall disable all camera movement.~~

~~(3) When the "exit echo" mode sequence is received on C4, the CCU shall return to normal operation.~~

~~E. Serial Communications Protocol~~

~~(1) The communication protocol shall consist of 8 data bits, 1 stop bit and no parity.~~

~~(2) Communication handshaking shall use XON/XOFF.~~

~~(3) The communication packet shall contain the following items: ADDRESS, CODE, DATA, CHECKSUM, CR. The packet is sent as a string of ASCII printable characters. The ADDRESS, which has its $80 bit set in order to signal the start of the packet. The CHECKSUM is generated by Exclusive ORing the ADDRESS, CODE, and DATA. The communication byte count shall be as follows:~~

~~ADDRESS~~	~~1~~
~~CODE~~	~~2~~
~~DATA~~	~~≥0~~
~~CHECKSUM~~	~~2~~
~~CR~~	~~1~~

~~K. Adjust limit stops of the pan and tilt unit as directed by the Engineer.~~

~~L. Adjust camera unit to provide the optimum picture for the full range of daylight and night time conditions as directed by the Engineer.~~

~~8. Camera Unit Mounting~~

~~End of Page 299 in the original Special Provisions~~

~~The camera unit shall be secured to the pan and tilt unit using the stainless steel bolts provided with the camera unit. Before each bolt is fastened, a locking type coating shall be applied to the threads. The coating shall lock the bolt and nut in place, making it impossible to turn the bolt or nut without tools. This coating shall last through and be effective through at least ten insertions and withdrawals of the bolt or nut.~~

~~The work to be done between the camera mount and the controller cabinet, as shown on the plans, as a minimum, shall consist of the following:~~

~~Install and terminate TVL, TVC, TVCP, and TVP, in the appropriate conduit, as shown on the plans.~~

~~The work to be done at each CCTV controller cabinet, as shown on the plans, as a minimum, shall consist of the following:~~

~~A. Install CCU.~~
~~B. Connect TVC, TVCP, TVP and TVL to CCU via their respective connectors.~~
~~C. Install the VTDD unit.~~
~~D. Connect CCU to VTDD.~~

~~The Contractor shall furnish all materials necessary to provide a complete and functional camera station in accordance with these special provisions. Miscellaneous equipment, and materials not mentioned but necessary to provide a complete and fully operational camera station shall be furnished by the Contractor as incidental to the work for which no additional compensation will be allowed therefor.~~

~~All items furnished under this contract shall be new and shall be the latest version.~~

~~The Contractor shall be responsible for demonstrating proper operation of the camera station using test software and diagnostics which shall be provided to the Engineer as incidental items at no additional cost. Testing procedures are described elsewhere in these special provisions.~~

~~9. Camera Station Testing~~

~~Upon completion of work, each camera station shall be subjected to post installation tests as outlined herein. All testing shall be performed by the District Electrical Systems Branch personnel, arranged by the Engineer and in the presence of the Contractor. The Contractor shall notify the Engineer in writing fifteen days prior to the scheduled testing. Upon receipt of the notification, the Engineer shall contact the Electrical Systems Branch at Telephone: (510) 286-4770. The Contractor shall provide all necessary equipment required to access the CCTV equipment for testing.~~

~~The testing shall consist of five consecutive days of continuous satisfactory operation of each camera station. If any material and equipment furnished and installed by the Contractor in this project is found defective or otherwise unsuitable, or the workmanship does not conform with the accepted standards, the Contractor shall replace such defective material and equipment at no cost to the State.~~

~~Rejected material or equipment may be offered again by the Contractor for consideration provided all non compliance has been corrected and pre tested by the Contractor. After all defects have been corrected, the camera station shall be re-tested until five consecutive days of continuous satisfactory operation is obtained.~~

~~The post installation tests shall consist of, but not be limited to, inspection and functional testing in accordance with these special provisions.~~

~~Inspection shall consist of, but not be limited to, verification of correct wiring terminations, correct cable interconnections, good workmanship and compliance with these special provisions.~~

~~Functional testing shall include, but not be limited to, the following:~~

~~A. Verification of all local mode CCTV operations using the CCU front panel controls.~~
~~B. Verify video signal output from CCU with a National Television Systems Committee (NTSC) monitor.~~
~~C. Verify the correct operation of the auto/manual iris and power zoom.~~

Preformed inductive loops shall be the type shown on the plans.

The loop shall be 1.8 m circular unless otherwise shown. The loop shall consist of 4 turns of No. 16, or larger, wire with Type THWN or TFFN insulation.

The loop wires shall be encased in Size 10, minimum, Schedule 40 or Schedule 80 PVC or polypropylene conduit. The conduit shall be sealed to prevent the entrance of water and the movement of wires within the conduit.

The loop wires from the preformed loop to the adjacent pull box shall be twisted together into a pair (at least 7 turns per meter) and encased in Schedule 40 or Schedule 80 PVC or polypropylene conduit between the preformed loop and the adjacent pull box. The lead-in conduit shall be sealed to prevent the entrance of water at the pull box end.

The preformed loops shall be secured to the top of the uppermost layer of reinforcing steel within the reinforced concrete structure deck slabs, using nylon wire ties. The loop shall be held parallel to the structure deck by using PVC or polypropylene spacers where necessary. Conduit for lead-in conductors shall be placed between the uppermost 2 layers of reinforcing steel. Lead-in conductors shall be coiled securely within the temporary enclosures with adequate slack as shown on the plans. After slabs are in place, temporary enclosures will be removed, conduit shall be installed, and the loop wire

---------- End of Page 301 in the original Special Provisions ----------

shall be routed through conduit to the preformed loop pull box. Conductors are to be terminated in the pull box and labeled as shown on the plans.

~~MICROWAVE VEHICLE DETECTION SENSOR SYSTEM~~

~~The Contractor shall install the following microwave vehicle detection sensor (MVDS) equipment at each location as described in these special provisions and as shown on the plans:~~

~~1. Microwave detector units, connectors, cables, conduit, pull box, mounting equipment, software, firmware, power supply units and all other support equipment.~~

~~2. One State-furnished Model 334 controller cabinet (described elsewhere in these special provisions).~~

~~3. One fiber optic data modem (described elsewhere in these special provisions).~~

~~Functional Requirements~~

~~The MVDS signal shall emulate the response of an inductive loop detector. The MVDS units shall be tested and found to comply with the limits for a Class A digital device, pursuant to Part 15 of the FCC rules. Each MVDS unit shall operate independently and not interfere with other MVDS units.~~

~~The microwave sensor unit shall operate in the frequency band of 10.525 GHz ± 25 MHz. The transmitter power shall be a maximum of 10 mW.~~

~~The MVDS field of view shall be covered by a maximum detection range defined as follows:~~

~~Elevation beam width~~	~~45 degrees~~
~~Azimuth beam width~~	~~15 degrees~~
~~Range~~	~~3 to 60 meters~~

~~Each MVDS unit shall have the capability of providing a minimum of 8 detection zones within each beam footprint. The size of each zone shall be user definable with a maximum range resolution of 2 meters. The minimum footprint shall be greater than or equal to 1.8 meters.~~

~~The time of events shall be measured in a maximum of 10 ms resolution.~~

~~Measurement accuracy shall be better than 95 percent certainty for vehicle presence.~~

~~Each MVDS unit shall be supplied with a connectorized MVDS cable harness with appropriate cable length for each installation. The MVDS cable shall consist of 15 unshielded twisted pairs of No. 20 conductors with an overall shield. Each conductor shall have a minimum of 19 tinned copper strands with a minimum of 1.60 mm PVC insulation rated for 300 V at 105°C. The outer jacket shall be chrome PVC with minimum thickness of 1.60 mm. The outside diameter of the cable shall not exceed 19.2 mm. A minimum of 4 meter slack of MVDS cable is required in each controller cabinet.~~

~~The connector shall be in conformance with Military Part Numbering System Designation: MS3476W18-32S or equivalent. This connector shall include contacts for powering the sensor unit, RS-232 serial data communications and contact pairs for each detection zone. The connector pinout is as follows:~~

~~End of Page 302 in the original Special Provisions~~

~~End of Page 303 in the original Special Provisions~~

~~Prior to installing any MVDS units, the Contractor shall perform functional tests to verify that all MVDS units comply with these specifications. The MVDS units shall be installed as shown on the plans and in accordance with the manufacturer's recommended installation procedures. The Contractor shall confirm equipment placement with the Engineer before installing any equipment. The Contractor shall test the MVDS units for the following functions:~~

1. ~~Speed, volume and occupancy for all roadway monitoring locations.~~
2. ~~Correct speed and count readings of roadway traffic with a portable detection equipment.~~

~~FIBER OPTIC DATA MODEM~~

~~The fiber optic data modem (FODM) shall be RS-232 compatible fiber optic modem with dual optics for drop and insert capability which can be configured as master or local (slave) in either daisy chain or fault tolerant dual redundant (counter rotating) ring network architecture. These four modes of operations shall be selectable via an external Mode DIP switch. All signals received via an optical port and retransmitted via fiber or via an expansion port shall be retimed to 0.01 percent pulse width accuracy by a crystal controlled timebase, eliminating pulse width distortion and eliminating virtually unlimited repeating. The FODMs shall have anti streaming circuitry for both the optical fiber and the electrical (RS-232) sides. On RS-232 side, when enabled, the anti streaming shall limit the amount of time an external device is allowed to transmit data onto the network for each Request to Send (poll). On the fiber side, the anti streaming shall disable an optical receiver in the event that the receiver output stays high longer than maximum allowable time thus preventing the who fiber network from being disabled by a continuous "on" failure by receiver or optical emitter. External (TIME OUT) DIP switch shall allow user to disable or select the timeouts for both the optical side anti streaming feature and the RS-232 side anti streaming feature as well as to enable or disable the "Fiber Activity CTS Disable" feature. LED indicators to display power "on", anti streaming "Fault" time out and RS-232 fiber optic activity (selectable via dual function switch).~~

~~The FODMs at the field element shall be stand alone type and shall be securely fastened on a EIA 310 rack mount shelf. At the hub location, the FODMs shall be react mount type installed in card cage assembly. The card cage assembly shall be EIA 310 rack mount type with at least 14 slots and with two power supplies for redundancy.~~

~~The FODM shall meet the following requirements:~~

~~Electrical Signaling:~~	~~EIA RS-232 with full handshake control signals~~
~~Electrical Power:~~	~~115 VAC, 60 Hz~~
~~Operating Temperature~~	~~-40 to 70°C~~
~~Operating Mode:~~	~~1. Daisy chain Master mode~~ ~~2. Daisy chain Local mode~~ ~~3. Fault tolerant Master mode~~ ~~4. Fault tolerant Local mode~~
~~Emitter type:~~	~~Laser~~
~~Wavelength~~	~~1310 nm~~
~~Minimum coupled transit power into: 9/125 µm at 25°C (75°C)~~	~~-11 (9.5) dBm~~
~~Output Variation~~	~~-0.015 dB/°C~~
~~Minimum receiver input power for 10^{-9} BER~~	~~-40 dBm~~
~~Maximum receiver input~~	~~-11 dBm~~
~~Optical port type~~	~~ST~~
~~RS-232 connector type~~	~~DB25S~~
~~Data Rates (auto)~~	~~1200 baud to 57.6 kbaud~~
~~Bit Error Rate (BER):~~	~~10^{-9}~~
~~Link Budget (Range) via singlemode 1310 nm~~	~~31 dB for (56 km)~~

~~FODMs shall be tested as follows:~~

a. ~~Each optic modem shall be functionally tested by looping back optical transmit connector to the optical receive connector using a variable optical attenuator with measured optical loss at 31 dB at 1310 nm. A test set shall be connected to the modem and set for RS-232 communication testing. Fifteen minutes bit error rate (BER) test burn-in test shall be error free.~~

~~d. Equipment installation instructions.~~

~~2. Theory of Operations Section~~

~~a. Theory of operation of the standard equipment, with unique or unusual circuitry described in detail.~~
~~b. Theory of operation reflecting any modifications to the standard equipment.~~

~~End of Page 305 in the original Special Provisions~~

~~3. Maintenance Section~~

~~a. Recommended test equipment and fixtures, or minimum operational and performance requirements for appropriate test equipment.~~
~~b. Trouble shooting information and charts.~~
~~c. Removal and installation procedures for replacing assemblies and subassemblies, if not obvious or if improper sequencing of steps may result in component damage.~~

~~4. Replacement Parts Section~~

~~a. Each manual shall contain an equipment replacement parts list including electrical parts, mechanical parts and assemblies.~~
~~b. All semiconductors shall be identified by the supplier's numbers and by JEDEC numbers if applicable.~~

~~5. Diagram Section~~

~~a. Schematic diagrams(s) identifying all circuit components and showing normal test voltages and levels.~~
~~b. An overall functional block diagram.~~
~~c. Detailed interconnecting diagram(s) showing wiring between modules, circuit boards and major components.~~
~~d. Pictorial circuit board layout diagram(s) showing both component placement and printed wiring detail.~~
~~e. Diagram(s) showing location of circuit boards and other subassemblies.~~
~~f. Exploded view diagram(s) of complex mechanical assemblies.~~

~~6. Physical Requirements~~

~~a. All pages, including latest revisions, shall be securely fastened together between protective covers (loose leaf ring binding is acceptable).~~
~~b. No page shall be subject to fading from exposure to any normal source of ambient lighting (diazo reproduced pages are not acceptable).~~

10-3.12 LIGHTING

ROADWAY LIGHTING ASSEMBLY

The roadway lighting assembly shall include the base plate, anchor bolts, pole, luminaries, and, for poles over 12 m in height, a luminaire lowering device system, all as shown on the plans and in conformance with these special provisions. **However, poles, luminaries (including lowering devices) are not included and are to be provided under a different contract.**

GENERAL

~~For roadway lighting poles that incorporate a luminaire lowering device, the installation of the lowering device on each pole shall be made under the supervision of a trained representative of the lowering device manufacturer. Prior to acceptance of the contract, a trained representative of the lowering device manufacturer shall demonstrate that each roadway lighting assembly operates properly. The demonstration shall consist of a minimum of 3 complete cycles of raising and lowering the luminaire carriage (complete with luminaires) the full length of the carriage travel, as designed, within one working day, prior to acceptance of the project.~~

All portions of the roadway lighting assembly shall have a minimum design wind velocity rating of 130 km/h.

~~The pole shall have a reinforced access hole, for poles with lowering devices, this access hole shall allow adequate clearance for maintaining and servicing the lowering device. Other hardware inside the pole shall accommodate the lowering device.~~

~~The access door shall be hinged to the pole, open horizontally 180 degrees, and when in the open position shall not interfere with access to the interior of the pole.~~

~~The pole shall be erected plumb. The vertical axis of the erected pole shall be within 75 mm of the theoretical vertical axis when measured without the action of sunlight or wind.~~

~~An embossed aluminum plate shall be attached with rivets to the outside of each pole approximately 50 mm above the access hole. The nameplate shall indicate the name of the pole manufacturer and the height of the pole.~~

~~A plastic laminated data sheet shall be secured on the inside of the access hole door. The data sheet shall include the names, addresses and telephone numbers of the manufacturers of the pole, luminaire lowering device and luminaires, and the design parameters, including wind velocity, luminaires (number, wattage, model number, mass, projected area and coefficient of drag), and the mass, projected area and coefficient of drag for the pole top lowering mechanism.~~

~~LUMINAIRE LOWERING DEVICE~~

~~The lowering device, along with lighting fixtures and poles shall be manufactured and tested as an integrated system and be provided and warranted by one manufacturer. A prototype system shall be constructed by the manufacturer, for testing of~~

~~End of Page 307 in the original Special Provisions~~

~~the device with the fixture and track assembly shown on the plans. The manufacturer shall submit prototype test analysis and certified test data demonstrating proper performance of the system lowering device, track, fixture and pole assembly for acceptance, prior to fabrication of equipment to be supplied. The lowering device shall consist of three main subassemblies: headframe, lowering channel and track, and the clevis and winch assembly. The lowering device system shall be in conformance with the following requirements:~~

~~Headframe~~

~~The headframes shall be hot rolled steel conforming to the requirements in ASTM Designation: A 36. The headframes shall be hot dipped galvanized in conformance with the provisions, in Section 75-1.05, "Galvanizing," of the Standard Specifications. The headframes shall consist of a hoisting cable sheave, power cable roller assembly, latch barrel and protective support cover. The hoist cable sheave shall be corrosion resistant with hardened surface to prevent cable imprint under load and shall have sintered bronze bushings and a cable keeper. The sheave shall be machined to match the cable diameter. The sheave shall be zinc electroplated and yellow chromate dipped. The hoisting cable shall be stainless steel aircraft cord, manufactured in conformance with the requirements in Military Specification MIL-8320B.~~

~~Power cable roller assemblies shall consist of multiple rollers providing a smooth even bending radius for the cable at each end. The design shall prevent the cables from riding up the sides of the rollers and have keeper bars at each end.~~

~~Latch barrel assemblies shall be cast of gall resistant aluminum. The latch shall support the entire weight of the fixture channel and fixtures on its own. It will support the fixture/channel assembly and unload the cables, clevis and winch when the lowering device is not in operation.~~

~~Luminaire lowering channel assembly shall consist of a latch pin, system status flag, fixture mounting plate, wiring junction box with power cord connection fitting and a stainless steel track system.~~

~~Latch pins shall be fabricated of stainless steel. Latching shall be accomplished by the alternate raising and lowering of the luminaire carriage by the winch and hoisting assembly. When the luminaire carriage is raised to the top of the pole, the carriage shall automatically latch and be secure in a locked position. During the unlatching sequence it shall transfer the load to the winch cable while the operator is away from the base of the pole. The latching and unlatching sequence shall be indicated by reflecting flags visible from the ground. During latching no more than one G of force shall be imparted to the lamps in any direction.~~

~~Winch and Clevis~~

~~Clevis assemblies shall attach the winch cable to the hoisting cable and the main electrical power cord. The clevis shall not allow either the winch cable or the hoist cables to independently rotate and shall have an ultimate breaking strength of at least 408 kg.~~

~~The winch shall have an ultimate strength of five times the lifted load. The winch shall have a 30 to 1 worm gear reduction and shall include an integral drag brake on the worm shaft to prevent free spooling of the winch drum. The drum shall be supported on both ends and shall include a Type 316 stainless steel cable keeper. The winch shall be factory pre-wound with Type 316 stainless steel aircraft cable manufactured in conformance with Military Specification MIL-8320B.~~

~~Drive Motor~~

~~**Mounting**~~

~~Fixtures shall be equipped with a fully adjustable Type 316 stainless steel mounting yoke and Type 316 stainless steel adjustable pivot bracket aiming system. Fixture and ballast shall be suitable for pole mounting. Mounting hardware shall be Type 316 stainless steel.~~

~~**Listings**~~

~~Fixtures shall be UL listed for use in wet locations.~~

~~**POLE MOUNTED MARKER LIGHTS TYPE SAM**~~

~~Pole mounted marker light fixtures shall be a 200 mm diameter decorative lantern for use with twelve high flux LED lighting strips, each containing twelve high flux LED lamps. These fixtures shall be shipped fully assembled, furnished with lamps, power converter, transformer, single piece acrylic lens and gasketed base and fixture cap, and shall comply with the following requirements:~~

~~**Housing**~~

~~Housings shall consist of a gasketed bronze baseplate with an acrylic cylinder/lens and a removable gasketed bronze cap secured to the fixture with a threaded cap anchor.~~

~~**Lens**~~

~~Lens shall be a 200 mm diameter, single piece injection molded acrylic cylinder, held in place by a gasketed fixture base plate and cap assembly.~~

~~End of Page 309 in the original Special Provisions~~

~~**Lamp**~~

~~Lamps shall have a 100,000 hour ±minimum rating, white high flux LED with 120 degree beam spread, installed within 25 mm x 25 mm x 280 mm LED mounting strips. Each strip shall contain LED lamps.~~

~~**Converter**~~

~~Power converter shall be integral with the fixture and shall convert 480 V, 1 phase, AC power to the required DC voltage for the LED lamps.~~

~~**Gaskets**~~

~~Housings shall have weatherproof "O" ring gaskets.~~

~~**Mounting**~~

~~Fixtures shall be equipped with a cast mounting base, suitable for surface mounting to the Roadway Lighting Pole top. Mounting hardware shall be Type 316 stainless steel.~~

~~**Listings**~~

~~Fixtures shall be UL listed for use in wet locations.~~

BIKE PATH LIGHTS TYPE SSB

Bike path lighting fixtures shall be a railing mounted, tubular shaped, compact fluorescent pathway fixture, with a mounting suitable for the locations shown on the plans. Fixtures shall be furnished complete with lamp, ballast, ballast enclosure and fixture support bracket, high impact lens, internal wiring, and shall be in conformance with the following requirements:

Housing

Housings shall be a complete assembly in conformance with the requirements in ASTM Designation: A 36 . Housing shall be furnished to the railing fabricator to be incorporated into the railing structure. The housing shall consist of 89-mm diameter (3" Schedule 40) steel pipe with welded end plates and a welded attached ballast compartment and support bracket. The painted finish shall be applied by the railing fabricator, after the fixture is welded into place.

Reflector

Reflectors shall be 0.81 mm thick specular aluminum sheet.

Poles for mounting Belvedere lights shall be in conformance with the provisions in Section 86-2.04, "Standards Steel Pedestals and Posts," of the Standard Specifications and as shown on the plans. Poles shall be galvanized and painted.

Listings

Fixtures shall be UL listed for use in wet locations. Fixtures shall be C-UL certified.

NAVIGATION LIGHTING

The bridge navigation lights shall be marine signal lanterns conforming to the requirements of Coast Guard Standards 33CFR 118.60, 33CFR84.13 and 33CFR 84.15. The lanterns shall be constructed of painted, anodized, polycarbonate base or fiberglass base, components with a precision-molded, color impregnated, glass, 200 mm Fresnel lens. The lantern shall be hinged for easy access to the lamps and internal assembly. The lantern shall have a bird spike incorporated into the lantern to reduce fouling where post mounted. Lanterns mounted upside down on the bridge structure shall be provided without a bird spike. Closure of the lantern shall be by captive toggle bolts and a watertight gasket. The lantern shall be capable of meeting IP-55 standards. The lantern top shall remain physically connected to the lantern base when opened for servicing. The lantern shall accommodate a 4-place lampchanger with four each S-11 marine signal lamps. Internal shock and vibration isolators are required to extend filament life.

The lantern shall have lens tie rods (astragal) constructed of stainless steel. The tie rods shall be placed at an angle of approximately 27 degrees to allow the light beam to be uniform within 25 percent at all viewing angles. Vertical lens tie rods will not be allowed due to shadowing of the lens, which significantly reduces lantern output. The lantern base shall incorporate a bottom cable entry and four attachment studs on a 120.65 mm bolt circle. Closure bolts and attachment hardware shall be constructed of stainless steel.

In order to operate the lampchanger and marine signal lamps, a transformer shall be fitted within the lantern to accept the supply voltage of 120 VAC and provide 10.0 V to 10.5 V to the lampchanger. Four 3.05 A, 12 V, marine signal lamps shall mount in the automatic lampchanger, which holds the operating lamps at the lens focal point and replaces the operating lamp upon failure. Only the operating lamp shall extend through the focal plane of the optic. Total lamp life for the optic shall exceed 25,000 hours.

---------- End of Page 311 in the original Special Provisions ----------

TYPE E2 EXIT LIGHTS

The exit lights shall be single-face with red letters on gray background and shall be in conformance with the following requirements:

Housing

a. Fast Snap-In connection
b. UL 94V-0 Hi-Impact Thermoplastic
c. Universal top, side, or back mounting
d. Stencil face easily removable
e. Field selectable chevrons

Battery

a. Maintenance free sealed nickel cadmium
b. Rated life of 12 year
c. Operating range from 0°C to 95°C
d. Ideal for high ambient temperature areas

Illumination

a. Long-lasting Light Emitting Diodes (LEDs)
b. Internal light chamber eliminates hot spots
c. Rated life of 25 years for LED's and electronics

Electronics

a. Rated input voltage of 120 V(ac)
b. Surge protection
c. Battery backup
d. Low-voltage disconnect
e. AC lockout and brownout protection

TYPE E1

Self-contained incandescent emergency lighting units. The battery shall be 12 volt, nickel-cadmium type, with 1.5-hour capacity. The battery charger shall be a dual-rated type, with sufficient capacity to recharge a discharged battery to full charge within twelve hours. The lamps shall be two 25 watt minimum, sealed beam type. The housing shall be a fiberglass-reinforced gray polyester enclosure. The Type E1 shall have indicator lamps to indicate AC ON and RECHARGING and a voltmeter to indicate the battery voltage. The TEST switch shall transfer unit from external power supply to integral battery supply. The input voltage shall be 120 V(ac). The electrical connection shall be a conduit connection.

TYPE H1

The fixture shall meet the following standards:

1. UL Standard 1572 for Marine Outside Type (Saltwater).
2. UL Standard 1570/1571 for Wet Location.
3. U.S.C.G. approved.

The fixture shall have brass screws and inserts. The fixture shall be enclosed and gasketed. The fixture shall have an integral metal grounding frame. The globe must be clear heat-treated glass. The fixture shall have an integral high power factor ballast.

Manufacturer:	GE Powr-Gard H9-1-10M-5S-JJ or equal with the same photometrics
Lamp:	MXR 100-U-MED
Ballast:	High Power Factor

TYPE H2

The fixture shall meet the following standards:

1. UL Standard 1572 for Marine Outside Type (Saltwater).
2. UL Standard 1570/1571 for Wet Location.
3. U.S.C.G. approved.

---------- End of Page 313 in the original Special Provisions ----------

The fixture shall have brass screws and inserts. The fixture shall be enclosed and gasketed. The fixture shall have an integral metal grounding frame. The globe must be clear heat-treated glass. The fixture shall have an integral high power factor ballast.

Manufacturer:	GE Powr-Gard H9-1-10M-4T -JJ or equal with the same photometrics
Lamp:	MXR 100-U-MED
Ballast:	High Power Factor

10-3.14 SUPERVISORY CONTROL AND DATA ACQUISTION REMOTE TERMINAL UNIT SYSTEM

GENERAL

The Contractor's attention is directed to "Order of Work" of these special provisions for the timely identification of the supplier of the remote terminal units and products to be used by the Contractor.

The Engineer will arrange for the procurement and installation of a new SCADA Master Programmable Logic Controller (PLC) including workstations. The equipment will be installed in the Administration Building. The communications protocol between all field devices, RTUs and the SCADA PLC will be MODBUS.

The Contractor shall coordinate the procurement of the SCADA remote terminal units (RTUs) with the Engineer prior to procurement to assure compatibility between the SCADA RTUs and the new SCADA Master PLC.

To assure a current SCADA System when the bridge becomes operational, the programmable controller (PLC) and FSK Modem will be installed in the RTU at a future time under a different contract. Therefore, the Contractor will provide the RTU without the programmable controller. However, the RTU shall be designed and furnished to provide for the future installation of the FSK modem and a GE 90-30 PLC or equal.

The RTUs shall consist of rugged components designed specifically for industrial environments. A complete RTU shall be modular in design. There shall be three classes of modules that combine to form a RTU and each class shall contain various subclasses or interchangeable types. Class 1 shall be a bus interface unit; Class 2 shall be an I/O module; and Class 3 shall be an I/O terminal base designed to mount up to two I/O modules. The I/O terminal base shall be designed for DIN rail or panel mount in any orientation. Each RTU shall include a minimum of one bus interface unit, one to four I/O terminal bases and one to eight I/O modules. I/O terminal bases are to be connected to each other and to the bus interface unit via a short backplane extension cable.

10. Packaging

All components shall be housed in structurally secure non-ventilated stainless steel enclosures.

The bus interface unit shall be a high-speed bus.

The I/O modules shall be modular. Each module shall be fully enclosed within a durable shroud. When mounted on the I/O terminal base, each I/O module shall not occupy more than one available slot (except as necessary for some specialty modules).

There shall be at least three types of I/O terminal bases available. Each shall contain mounting space for up to two I/O modules. One type of I/O terminal base shall utilize a box type terminal, another a barrier type terminal; and another a high-density connector. There shall be others as needed by the application.

The I/O terminal bases shall be connected together via a flexible cable using pin and socket connectors. This cable shall provide vibration resistance as well as mounting variations. This cable shall be available in various lengths up to 53.3 mm.

I/O modules shall be retained in the slot by metal screws on the upper and lower edges. Removing the module shall require only a screwdriver.

I/O modules shall be installed in any available slot in one of the minimum of four I/O terminal bases.

I/O modules shall connect electrically to the I/O terminal base via a pin and socket connector.

I/O modules shall be fully enclosed in a covering to protect the electronic circuitry from exposure.

11. Durability

All components within the I/O and control system family, including switches and operator-controlled devices shall be of the size and durability for the intended use for industrial applications in Seismic Zone 4.

All signal cables furnished by the manufacturer shall be constructed so as to withstand, without damage, all normal use and handling.

12. Parts Interchange

In order to minimize spare parts stocking requirements, the I/O and control system family shall have interchange capability. The I/O terminal bases and auxiliary terminals should, as much as possible, all operate equally well regardless of the I/O module being used.

The system shall incorporate a modular design using plug-in assemblies with pin and socket connectors.

All assemblies and sub-assemblies performing similar functions shall be interchangeable.

The system design shall accommodate the replacement of I/O modules without having to disconnect field wiring.

All major assemblies and sub-assemblies, circuit boards, and devices shall be identified using permanent labels or markings each of which indicates the manufacturer's catalog number, product manufacturing date code, CE, UL and C-UL certifications.

---------- End of Page 315 in the original Special Provisions ----------

13. Environmental Conditions

All components of the I/O and control system shall meet the following environmental specifications:

Storage temperature	-40°C o 85°C
Operating temperature	0°C to 55°C
Humidity	5 to 95 percent relative humidity, non-condensing

Bus Interface Unit

The fieldbus interface module shall contain the local power supply, the central processing unit, and the communications link.

14. Power Supply

Interface between the CPU and user supplied input and output field devices shall be provided by I/O modules and I/O terminal bases.

3. Configuration

An expandable I/O system shall be supported by the CPU in the bus interface unit, and shall accommodate up to four I/O terminal bases with a maximum of eight I/O modules. There shall be provision for a 533 mm cable to join any two I/O terminal bases to allow more flexibility in panel layout.

4. I/O Addressing

I/O reference addressing for each I/O module shall be assigned through the use of the PC compatible configuration and programming software or the hand held programmer. There shall be no jumpers or DIP switch settings required to address modules.

The circuit on/off status of each I/O point on a module shall be indicated by a green LED mounted at the top of the module. The circuit faults on a module shall be indicated by a yellow LED mounted at the top of the module. These LED's must be visible through a clear plastic lens.

Addressing of all references including I/O must be represented as a Decimal Based number.

The Contractor shall coordinate I/O addressing and RTU logic with the Engineer prior to procurement of the RTUs.

5. Construction

The I/O modules shall be easily removable from the I/O terminal bases, to allow for convenient pre-wiring of field devices. There shall be a selection of at least three I/O terminal bases to accommodate the requirements of various field devices and enough field terminal positions for all field termination plus 25 percent spare capacity.

The I/O module side label shall have the module field device connection description, and catalog number, and the top label shall have a user legend space to record circuit identification information and a window to allow viewing of the status LEDs.

The top label shall have color coding for quick identification of the module as high voltage (red), low voltage (blue), or signal level (gray) type.

6. Electrical Specifications

I/O modules shall be designed for 1500-volt isolation between the field wiring and the system backplane.

7. Input Specifications

The 120 VAC input module shall accommodate an input voltage range from 0 to 132 volts.

The 24-Volt DC positive and negative logic input modules shall accommodate an input voltage range from -30 to +30 VDC.

8. Availability of Input Modules

Availability of input modules shall be as shown on the plans. As a minimum, the following discrete input modules shall be available:

---------- End of Page 317 in the original Special Provisions ----------

Description	Points/Module
Input Simulator	8
120 VAC Input	16
240 VAC Input	16
24 VDC, Positive/Negative Logic Input	16
24 VDC, Positive/Negative Logic Fast Input	16
5/12 VDC, Positive/Negative Logic Input	16
48 VDC Positive/Negative Logic Input	16
125 VDC Positive/Negative Logic Input	16

9. Output Specifications

Discrete AC output modules shall have separate and independent commons allowing each group to be used on different phases of AC supply.

Each discrete AC output shall be provided with a RC snubber to protect against transient electrical noise on the power line.

The conversion speed per input shall be 230 ms at 50 Hz and 210 ms at 60 Hz per input channel.

6. Current and Voltage Analog Output

The analog current output module shall be capable of converting four channels of digital data to analog outputs in the range from 4 to 20 mA or from 0 to 20 mA selectable by jumper. The module shall also provide simultaneous voltage outputs in the range from 0 to 10 V or from 0 to 12.5 V selected by the same jumper.

Resolution of the converted output signal shall be 12 bits or 1 part in 4096.

All four channels of analog output data shall be updated each scan from a dedicated area of data registers in a 16-bit 2's complement format.

The analog current outputs shall default to 0 volt in the event of a CPU failure.

7. I/O Terminal Base

The I/O terminal bases shall be generic wiring points for the I/O stations. The I/O terminal bases shall provide mounting for up to two I/O modules, backplane communications, and terminals for user connections.

Up to two I/O modules shall be installed on each I/O terminal base. I/O modules shall screw onto the terminal base for vibration resistance.

Removing the I/O module from the I/O terminal base without disturbing the field wiring shall be possible.

Each I/O terminal base shall contain:

1. Two separate sets of module terminals forming an I/O 'slot'.
2. A grounding screw for connecting a ground wire.
3. Two backplane cable connectors.
4. Two spare fuse holders.
5. Provision for Type DIN rail and direct panel mounting.
6. Type DIN rail latches.
7. Two sets of keying slots with 10 slots in each set.
8. Provision for accepting two auxiliary terminal blocks.

I/O terminal bases shall be with barrier-type terminals, for user connections. The barrier-type shall have 37 terminals. Each terminal shall accommodate one or two wires up to No. 14 AWG (average 2.1 mm cross section).

Auxiliary terminal blocks shall be attached to the I/O terminal base when additional tie points are needed for analog and high-density discrete I/O modules. The barrier-type terminal block shall contain 9 terminals. All terminals in each auxiliary terminal block shall be internally tied together and isolated from the power and point terminals. There shall be provision to separate the terminals into groups if desired. An immediate I/O update function shall be provided for the update of all or a portion of the inputs or outputs for one scan while the program is running, or to update I/O during the program in addition to the normal I/O scan.

INSTALLATION REQUIREMENTS

One Remote Terminal Unit (RTU) for the bridge Supervisory Control and Data Acquisition (SCADA) System shall be installed by Contractor. The RTU is to be installed and wired as shown on the plans.

The Contractor will be responsible for making a complete, operational loop check of each circuit installed by the Contractor and connected to the input and output terminals of the RTU. Loop checks will be performed by simulating a contact closure as necessary to prove the operation of each circuit.

---------- End of Page 319 in the original Special Provisions ----------

10-3.15 SUBSTATION ELECTRICAL

SMOKE DETECTORS

The Contractor shall install, where shown on the plans, photoelectric smoke detectors. A normally closed contact in each unit shall be used to supply a status signal to the SCADA Remote Terminal Unit System. It shall be possible to perform a functional test of the sensor without the need of generating smoke for a period sufficient to test the internal circuitry.

The detectors shall be assembled and engineered for surface ceiling mount with a standard outlet box. The detector shall respond to visible smoke particles with a minimum diameter of 3.3 microns.

Smoke sensors shall be Hochiki model ALG-V, Radionics D262, Esl Sentrol 440/445 series or equal.

c. Continuous current
d. Basic impulse level for equipment over 600 volts
e. kVA rating

11. Major component ratings including:

    a. Voltage
    b. Continuous current
    c. Interrupting ratings

12. Cable terminal sizes
13. Transformer impedance.

Where applicable, 10 copies of the key interlock schematic plans and sequence of operations shall be submitted to the Engineer:

Submittals (For Information)
When requested by the Engineer the following product information shall be submitted:

1. Descriptive bulletins
2. Product data sheets.

Submittals (For Final Acceptance)
Ten copies of the following information shall be submitted for record purposes prior to final payment:

1. Final as-built plans and information for secondary unit substation
2. Wiring diagrams
3. Certified production test reports
4. Installation information
5. Seismic certification and equipment anchorage details.

Operation and Maintenance Manuals
Ten copies of the equipment operation and maintenance manuals shall be provided prior to shipment of the equipment. Operation and maintenance manuals shall include the following information:

1. Instruction books or leaflets
2. Recommended renewal parts list

Qualifications
For the primary and secondary equipment specified herein, the manufacturer shall be ISO 9000, 9001 or 9002 certified. The manufacturer of this equipment shall have produced similar electrical equipment. When requested by the Engineer, an acceptable list of installations with similar equipment shall be provided.

The finish of the switchgear shall consist of a coat of thick exterior finish spray of air drying and high-gloss gray enamel and a coat of ANSI-16, cathodic epoxy paint applied by electro-deposition process to the pre-cleaned and phosphatized steel surfaces.

The Contractor shall provide labor and equipment for unloading and installing unit substation, foundations, anchor bolts, connections to all external power and control wiring, field testing and energizing. For mid-span substations, eastbound and westbound, equipment leveling shims shall be providerd. The substation floor may be at a 2.5-degree slope in two directions.

Inspection and Testing
Equipment furnished will be subject to expediting and shop inspection. Units shall be completely assembled, within shipping limitations, all dimensions shall be verified, and circuits shall be checked and tested prior to shipping.

---------- End of Page 321 in the original Special Provisions ----------

The Engineer shall have the option to inspect fabrication and witness the testing of the equipment. The Contractor shall notify the Engineer a minimum of three weeks in advance of the date of scheduled tests. The manufacturer shall include the cost of transportation and lodging for up to three Department's representatives. The cost of meals and incidental expenses

prevent plug-in of the breaker. The electrical and mechanical operating mechanism shall be designed so that it is impossible to close or trip the circuit breakers unless it is in either the racked-in (operating) or the test positions.

Each circuit breaker shall contain three vacuum interrupters separately mounted as a self-contained, self-aligning pole unit which can be removed easily. The vacuum interrupter pole units shall be mounted on glass polyester supports. An integral contact wear gap indicator for each vacuum interrupter shall be easily visible. The breaker front panel shall be removable when the breaker is withdrawn for inspection and maintenance.

The switchgear shall consist of a line-up of standard factory-assembled, metal-clad draw out power circuit breaker cubicles. The switchgear assemblies, including circuit breakers and components, shall be designed and fabricated to withstand, without distortion and damage, all stresses incidental to shipping, installation and operation, including system short-circuits and earthquakes.

4. 15 kV Circuit Breaker Ratings

The 15 kV circuit breakers shall meet or exceed the following ratings:

Continuous Current, A	1200
Nominal Voltage Class, kV	15
Nominal 3-Phase MVA Class, MVA	500
Rated Maximum Voltage, kV rms.	15
Rated Voltage Range Factor, K	1.30
Low Frequency Withstand Voltage, kV rms.	36
Basic Impulse Level, kV rms. Crest (based on a 1.2 x 50 microsecond wave)	95
Rated Short Circuit Current, kA rms. symmetrical (at rated maximum voltage)	18
Maximum Interrupting Capability, kA rms. symmetrical	23
Closing and Latching Capability, kA rms. symmetrical	37
Interrupting Time, Cycles (Max.)	5

5. Current Transformers

The current transformers shall have ratios as shown on the plans and shall be furnished with shorting terminal blocks on their secondaries. The thermal and mechanical ratings of the current transformers shall be coordinated with the circuit breakers. Their ANSI metering accuracy class shall be 0.3, B0.1 through B1.8 and their ANSI relaying accuracy class shall be T200. The line to line voltage shall not exceed the transformer insulation class voltage.

Current transformers shall be designed for the proper voltage operations as required and shall conform to requirements of ANSI Standard C57.13. Current transformers shall be dry or compound-insulated type, with a suitable means for mounting and for grounding the frame. Current transformer ratios, unless otherwise specified, shall be as indicated on the Single Line Diagram drawings and shall be multi-ratio.

6. Potential Transformers

The potential transformers shall be indoor, dry or compound-filled type with minimum insulation class and full-wave basic impulse level as specified elsewhere in these special provisions. The potential transformers shall have high and low voltage fuses and shall be trunnion-mounted in separate compartments. Shutters shall isolate primary bus stabs when drawers are withdrawn. High voltage fuses shall be current-limiting type. Accuracy shall be ANSI metering accuracy (60 Hz) of 0.3 W, X, M, Y, Z and 0.6 ZZ burdens at 120 VAC. The thermal rating for a 55°C rise shall not be less than 400 VA for potential transformers. The line-to-line voltage shall not exceed the transformer insulation class voltage.

7. Protective Relays

The switchgear manufacturer shall furnish and install, in the metal-clad switchgear, the quantity, type and rating of protection relays as shown on the plans and described hereafter in this special provision.

8. Microprocessor Three-Phase Protective Relay

Relays for phase time over-current, instantaneous over-current and ground fault protection, ANSI 50/51, 50/51G, or 50/51N, shall be incorporated into a single device. The relay shall be solid-state microprocessor-based multi-functional type that operates from the 5-ampere secondary output of the current transformers. The relay shall provide ANSI 50/51 protective functions for each of the three phases, and ANSI 50/51G or 50/51N ground fault protection functions. The relay shall be true RMS sensing of each phase and ground. Ground element shall be capable of being utilized in residual, zero sequence, or ground source connection schemes, or deactivated.

D. **Space Heaters** - Space heaters shall be provided with the unit substation to prevent moisture condensation on the inside of each compartment. The space heaters shall be sized to the latest standards and controlled by a thermostat. A terminal block shall be provided adjacent to the thermostat for power source connection. The heaters shall be protected by perforated metal guards to prevent inadvertent contact with the heater elements.

---------- End of Page 324 in the original Special Provisions ----------

Unit Substation Transformer

The transformer is a part of a secondary unit substation and shall conform to the provisions in these special provisions. The unit substation transformer shall be a dry-type transformer with the following requirements:

1. References

The unit substation transformers and all components shall be designed, manufactured and tested in accordance with the latest applicable standards of NEMA and ANSI.

2. Delivery, Storage and Handling

Equipment shall be handled and stored in accordance with manufacturer's instructions. One copy of these instructions shall be included with the equipment at time of shipment.

3. Field Measurements

Primary and secondary voltages shall be measured with appropriate tap adjustments.

4. Operation and Maintenance Manuals

Ten copies of the equipment operation and maintenance manuals shall be provided prior to shipment of the equipment. Operation and maintenance manuals shall include the following information:

A. Instruction books or leaflets
B. Recommended renewal parts list
C. Drawings and information required

5. Ratings

The ratings of the transformer shall be as follows or as shown on the plans:

KVA rating	750 kVA @ AA/80°C, 885 kVA @ AA/115°C, (future) 1180 kVA @ FA/115°C
Impedance	5.75%
HV	12.47 kV Delta
HV BIL	95 kV
HV Taps	Two 2% above & Two 2% below
LV	480/277 V Solidly Grounded Wye
LV BIL	30 kV

6. Construction

Transformer shall be cooled by natural air convection (AA) with provisions for future forced air. The electrical insulation system shall utilize Class H material in a fully rated 220°C system. Transformer design temperature rise shall be based on a 30°C average ambient over a 24-hour period with a maximum of 40°C. Solid insulation in the transformer shall consist of inorganic materials such as porcelain, glass fiber, electrical grade glass polyester, or Nomex. All insulating materials must be rated for continuous 220°C duty. The insulation between the high-and-low-voltage coils shall be more than sufficient for the voltage stress without the need of a varnish.

The transformer shall be designed for a temperature rise from AA/80°C to AA/115°C –future FA/115°C at 750 kVA, 885 kVA and 1180 kVA. The transformer shall be designed to meet the sound level standards for dry-type transformers as defined in NEMA TR1. The transformer shall be UL labeled. The transformer shall be of explosion-resistant, fire-resistant, air-insulated, dry-type construction, and cooled by the natural circulation of air through the windings. High-voltage and low-voltage windings shall be copper. Insulation between layers of the windings shall be by Insuldur paper or equal.

The high-voltage and low-voltage coil assembly shall be vacuum pressure impregnated (VPI) polyester. The high-voltage and low-voltage coil assembly shall be preheated to evaporate any moisture, then placed into a vacuum pressure tank. The air in the tank shall be evacuated; and at extremely low absolute pressure, all air bubbles are to be drawn out of the

manufacturer's representative shall provide technical direction and assistance to the Contractor in general assembly of the equipment, connections and adjustments, and testing of the assembly and components contained herein.

The Contractor shall provide three copies of the manufacturer's field start-up report.

Primary and secondary voltages shall be measured for proper tap settings. The Contractor shall use a magnetometer for proper insulation resistance of the primary and secondary windings.

Adjust taps to deliver appropriate secondary voltage. A qualified factory-trained manufacturer's representative shall certify in writing that the equipment has been installed, adjusted and tested in accordance with the manufacturer's recommendations. The Contractor shall provide three copies of the certification by the representative of the manufacturer.

The Contractor shall provide a training session for up to twelve Department's representatives for three normal workdays at a job site location determined by the Engineer. A qualified manufacturer's representative shall conduct the training session. The training program shall include instructions on the transformer, auxiliary devices and other major components.

---------- End of Page 326 in the original Special Provisions ----------

Unit Substation Low Voltage Switchgear

The low voltage switchgear is a part of a unit substation and shall conform to the provisions in these special provisions. The low voltage switchgear shall consist of standard fabricated vertical sections bolted together to form a complete unit. The enclosures shall be NEMA Type 1.

Each low voltage switchgear shall be single-ended 480 V and consist of one main and feeder breakers as shown on the single-line diagrams. Each of the switchgear sections shall consist of a line-up of standard fabricated metal-enclosed vertical units equipped with electrically operated air circuit breakers.

Each steel unit forming part of the stationary assembly shall be a self-contained housing having one or more individual breaker or instrument compartments and a rear compartment for the busses, and outgoing cable connections. All digital metering devices and electronic data monitoring and communication devices for electrical power management system shall be mounted on the front door of compartments. Each circuit breaker compartment shall be equipped with primary and secondary contacts, rails, stationary levering mechanism parts, and required instrument current transformers. A blank formed steel door equipped with ventilation openings in the lower flange and supported on concealed hinges shall be provided for each circuit breaker compartment. The top of the unit shall be enclosed with removable steel sheets, which include necessary ventilation openings. Each compartment shall include the necessary 3-phase bus and connections between the bus and one set of circuit breaker studs. Solderless type terminals on silver plated copper extensions for the outgoing cables shall be provided on the other set of circuit breaker studs. The main copper busses shall have the same continuous current ratings as the frame size rating of the switchgear main circuit breakers and shall be braced to withstand magnetic stresses developed by current equal to the momentary and interrupting current ratings of the main circuit breakers.

The switchgear busses shall be the isolated type. Shipping breaks and provisions for future bus extensions shall have silver-plated bolted connections. A copper equipment ground bus, 50 mm by 6 mm minimum extending the length of the switchgear and electrically connected to the enclosure in each section, shall be provided. The bus shall have clamp type terminals at each end for connection to external copper ground conductors.

1. Circuit Breakers

Circuit breakers shall be electrically operated, three-pole, air break, metal-enclosed (iron frame) draw out type, mechanically trip free.

The electrically operated breakers shall have stored energy operating mechanisms.

The electrically operated breakers stored energy closing mechanism shall be motor operated. Electrical closing and tripping shall be initiated by means of a release solenoid and shunt trip coils. Control voltage shall be 125 VDC. Provision shall be made for charging the electrically operated breakers manually, on loss of control power. Each breaker shall be equipped with adjustable type solid-state trip device as follows:

A. Current setting
B. Long time delay
C. Instantaneous pick-up unit as per single-line diagram
D. Short time pick-up
E. Short time delay
F. Ground fault pick-up
G. Ground fault delay

The solid-state trip devices shall have indicators to show which element has operated, and shall have digital metering device functions of at least three individual phase current readouts. Operating, test and withdrawn positions shall be provided for each circuit breaker. The main contacts shall be disconnected in the test position, but auxiliary circuit contacts shall be

6. Wiring and Terminals

Secondary wiring in the individual switchgear units and interconnecting wires between various units shall be provided and shall consist of 600 V insulated wire. No. 14 AWG stranded copper for auxiliary wiring and No. 10 AWG stranded copper for current transformer circuits. The insulated wires shall be Type MTW, or SIS as listed in the National Electrical Code. All wiring shall be brought to terminal strips with clamp type, molded plastic terminals, preferably rail-mounted. One additional 8 terminal strip shall be supplied in each unit, for the connection of external auxiliary circuits. Terminal strips shall be preferably mounted vertically. Closed-end, crimp-type terminal lugs shall be used for all wiring connections to instruments, relays and other devices which are not provided with a clamp-type terminal. Instrument transformer secondary circuits shall be grounded at the switchgear. All leads from each individual instrument transformer shall be brought out to terminal blocks. Short circuiting type terminal blocks shall be furnished for all current transformer secondary leads and shall have provision for shorting together all leads from each current transformer without first opening any circuit. Each end of wire shall be provided with Brady sleeve heat-shrink type vinyl marker, fixed permanently to the wire, and imprinted with the wire number and identification letter or symbol corresponding to the Vendor's elementary diagrams. Suitable clamp type terminals shall be provided for all outgoing power feeder cables. All power cable terminals shall be located for both top and bottom entry and connection, and space shall be provided for cable terminations throughout. Number and size of copper conductors are shown on the plans.

---------- End of Page 328 in the original Special Provisions ----------

7. Finish

The unit substation enclosures shall be cleaned of rust and excess weld, and given a minimum of two coats of phosphatizing or rust prevention treatment. Finish coats shall be ANSI Light Gray No. 61.

8. Nameplates

Each major assembly unit, each circuit breaker and each control unit shall be supplied with a nameplate engraved with legend. Nameplates shall be 2 mm thick plastic and shall have a white facing with black characters, and shall be affixed to the equipment.

Nameplates for each switchgear assembly shall be 150 mm long by 50 mm high. Nameplates for each circuit breaker and each control unit shall be a minimum of 100 m x 30 mm. Nameplate schedule shall be submitted to the Engineer for approval before engraving.

9. Accessories

Accessories shall consist of, but not necessarily be limited to, the following items:

A. A manual lifting device, extension rails and crank handle to remove breaker units from compartments.
B. One portable static test set for solid-state trip devices.

10. Inspection and Testing

Equipment furnished will be subject to expediting and shop inspection. Units shall be completely assembled, within shipping limitations, all dimensions shall be verified, and circuits shall be checked and tested prior to shipping.

The Engineer shall have the option to inspect fabrication and witness testing of the equipment. The Contractor shall notify the Engineer a minimum of three weeks in advance of the date of scheduled tests. The manufacturer shall include the cost of transportation and lodging for up to three Department's representatives. The cost of meals and incidental expenses shall be the Department's responsibility. An authorized representative of the Engineer shall have free entry during testing and fabrication of the equipment.

Low Voltage Control Center

The low voltage control center (LVCC) shall be a full-voltage non-reversing motor control center. The power circuit compartment of the LVCC shall be a motor starter unit which shall consist of a line starter which shall be a lighting contactor as specified, and a disconnect device which shall be a circuit breaker Type D as specified elsewhere in these special provisions. Also the power circuit compartment shall consist of circuit breakers Type C only as specified elsewhere in these special provisions. Details of the layout of the LVCC shall be as shown on the plans.

1. General

The Contractor shall furnish and install the LVCCs as specified herein and as shown on the plans. The LVCCs and all components shall be designed, manufactured and tested in accordance with the latest applicable standards of NEMA, ANSI and UL 845.

The manufacturer of the assembly shall be the manufacturer of the major components within the assembly. For the equipment specified herein, the manufacturer shall be ISO 9000, 9001 or 9002 certified.

5. Operation and Maintenance Manuals

Ten copies of the equipment operation and maintenance manuals shall be provided. Operation and maintenance manuals shall include the following information:

A. Instruction books or leaflets.
B. Recommended renewal parts list.
C. Drawings.

6. Ratings

The LVCCs shall be UL listed or recognized and meet NEMA and ANSI relevant standards for a Motor Control Center. The LVCCs shall be 600-V class suitable for operation on a three-phase, 60-Hz system. The system operating voltage and number of wires shall be as indicated on the drawings.

7. Construction

Structures shall be totally enclosed, deadfront, freestanding assemblies. The structures shall be 2,300 mm high and 540 mm deep for front-mounted units. Structures shall contain a horizontal wireway at the top, isolated from the horizontal bus and shall be readily accessible through a hinged cover. Adequate space for conduit and wiring to enter the top or bottom shall be provided without structural interference.

Compartments for mounting control units shall be incrementally arranged such that not more than six size 1 starters can be mounted within each vertical structure. Guide rails shall be provided. A vertical wireway with minimum of 0.025 m^2 of

---------- End of Page 330 in the original Special Provisions ----------

cross sectional area shall be adjacent to each vertical unit and shall be covered by a hinged door. Wireways shall contain steel rod cable supports.

All full voltage starter units through NEMA Size 5 shall be of the draw out type. Draw out provisions shall include positive guide rail system and stab shrouds to absolutely ensure alignment of stabs with the vertical bus. Draw out units shall have a tin-plated stab assembly for connection to the vertical bus. No wiring to these stabs shall extend into the bus compartment. Interior of all units shall be painted white for increased visibility. Units shall be equipped with side-mounted, positive latch pull-apart type control terminal blocks rated for 600 V. Knockouts shall be provided for the addition of future terminal blocks. In addition, a master terminal block, when Type C wiring is specified, shall be draw out and shall be located in the bottom wireway, readily accessible through a hinged cover. All control wire to be 14-gage minimum.

All draw out units shall be secured by a spring-loaded quarter turn indicating type fastening device located at the top front of the unit. Each unit compartment shall be provided with an individual front door.

An operating mechanism shall be mounted on the primary disconnect of each starter unit. It shall be mechanically interlocked with the unit door to prevent access unless the disconnect is in the OFF position. A defeater shall be provided to bypass this interlock. With the door open, an interlock shall be provided to prevent inadvertent closing of the disconnect. A second interlock shall be provided to prevent removal or re-insertion of the unit while in the ON position. Padlocking facilities shall be provided to positively lock the disconnect in the OFF position with one to three padlocks with the door open or closed. In addition, means shall be provided to padlock the unit in a partially withdrawn position with the stabs free of the vertical bus.

8. Bus

Each structure shall contain a main horizontal silver-plated copper bus, with minimum of 800 A or as shown on the plans. The horizontal bus shall be rated at 50°C temperature rise over a 40°C ambient in compliance with UL standards. Vertical busses feeding unit compartments shall be copper and shall be securely bolted to the horizontal main bus. All joints shall be front accessible for ease of maintenance. The vertical bus shall have a minimum rating of 300 A for front mounted units.

The vertical bus shall be completely isolated and insulated by means of a labyrinth design barrier. It shall effectively isolate the vertical busses to prevent any fault generated gases to pass from one phase to another. The vertical bus shall include a shutter mechanism to provide complete isolation of the vertical bus when a unit is removed.

Busses shall be braced for 65,000 A rms symmetrical.

9. Wiring and Terminations

Wiring shall be NEMA Class II, Type C.

19. Examination

The Contractor shall fully inspect shipments for damage. Damage shall be reported to the manufacturer, and a claim shall be filed upon the shipper, if necessary. The Contractor shall verify NEC clearances as dictated on the plans prior to installation. UL labeling of the assembly shall be verified prior to installation.

20. Factory Testing

The Contractor shall have the motor control centers tested in a high-power laboratory to prove adequate mechanical and electrical capabilities. All factory tests required by the latest ANSI, NEMA and UL standards shall be performed. The Contractor shall provide three certified copies of factory test reports.

The Department's representative shall witness the factory tests as outlined above. The manufacturer shall notify the Engineer three weeks prior to the date the tests are to be performed. The manufacturer shall include the cost of transportation and lodging for up to three Department's representatives. The cost of meals and incidental expenses shall be the Department's responsibility.

21. Installation

The Contractor shall supply the Engineer three copies of the installation instructions and follow the installation instructions supplied by the manufacturer. Control wiring shall be as shown on the plans except as modified by the approval and submittal process. All local and remote devices shall be interfaced into the control wiring and operational systems for each load.

22. Field Testing

The requirements as stipulated in the NETA testing procedure for this type of motor control center assembly shall be followed. Generate a field report on tests performed, test values experienced, and make available to Engineer upon request. A qualified factory-trained manufacturer's representative shall certify in writing that the equipment has been installed, adjusted and tested in accordance with the manufacturer's recommendations. Equipment shall be inspected prior to the generation of any reports. The Contractor shall provide three copies of the manufacturer's representative's certification.

---------- End of Page 332 in the original Special Provisions ----------

23. Training

The Contractor shall provide a training session for up to ten State personnel for three work days at the job site or other office location chosen by the Engineer. The Contractor shall arrange for a qualified manufacturer's representative to conduct the training session. The training program shall consist of the following:

A. Review of the MCC one-line drawings and schedules.
B. Review of the factory record shop drawings and placement of the various cells.
C. Review of each type of starter cell, components within, control, and power wiring
D. Review contactor coil replacement and contact replacement procedures.
E. Discuss the maintenance time table and procedures to be followed in an on going maintenance program.
F. Provide three-ring binders to participants complete with copies of drawings and other course material covered.

Utility and Lighting Panels

The utility and lighting panels shall conform to the following requirements and as shown on the plans:

a. The bus shall be copper.
b. Boxes shall be made from code gage galvanized steel.
c. The trim shall be made form code gage steel and painted ANSI 61 gray.
d. Doors 1200 mm or less shall have a single point lock. Doors over 1200 mm shall have a three point catch and lock.
e. The ground bar shall be standard, bolted in box.
f. The enclosure shall be NEMA Type 12. The top and bottom gutters shall be minimum 139 mm and the side gutters shall be 152 mm.

The Contractor shall install single-phase and three-phase general purpose individually mounted panels, self-cooled, as specified herein and as shown on the plans. The panels and all components shall be designed, manufactured and tested in accordance with the latest applicable standards of ANSI and NEMA.

1. Submittals

interrupting ratings in accordance with UL standards. All breaker frames sizes shall have external means for manually tripping the breaker and exercising the mechanism and trip latch member.

The molded case circuit breakers shall have inverse time and instantaneous tripping characteristics. Automatic tripping of the breaker shall be clearly indicated by the handle position. Contacts shall be non-welding silver alloy and arc extinction shall be accomplished by means of arc chutes.

The circuit breaker rating shall be as specified on the plans and as required by the load and coordination studies.

Ground fault protection shall be provided where indicated. Shunt trips, bell alarms and auxiliary switches shall be provided.

Circuit Breaker Type C

The circuit breaker Type C shall be the same as Type B except circuit breaker Type C shall have an auxiliary switch for SCADA.

Circuit Breaker Type D

The circuit breaker Type D shall be the same as Type C except circuit breaker Type D shall have a minimum interrupting capacity of 100 kilo-amperes interrupting current (kAIC) at 600 V and have an auxiliary switch for SCADA.

DC Panel

The DC panel shall conform to the following requirements and as shown on the plans:

a. The bus shall be copper.
b. Boxes shall be made from code gage galvanized steel.
c. The trim shall be made form code gage steel and painted ANSI 61 gray.
d. Doors 1200 mm or less shall have a single point lock. Doors over 1200 mm shall have a three point catch and lock.
e. The ground bar shall be standard, bolted in box.
f. The enclosure shall be NEMA Type 12. The top and bottom gutters shall be minimum 139 mm and the side gutters shall be 152 mm.
g. The panel shall be rated at 125 VDC with a 2 pole main breaker rated for 100 A.
h. The panel shall have a total number of 24 branch circuit poles (space for twelve 2 pole breakers).

Circuit breakers shall be 2 pole, 20 A, 10 kAIC interrupting capacity.

Dry Type Transformer

The Contractor shall install single-phase and three-phase general purpose individually mounted dry-type transformers of the two-winding type, self-cooled as specified herein, and as shown on the contract plans. The transformers and all

---------- End of Page 334 in the original Special Provisions ----------

components shall be designed, manufactured and tested in accordance with the latest applicable standards of ANSI and NEMA.

1. Submittals

The following information shall be submitted to the Engineer for review and approval:

A. Dimension drawing and mass.
B. Technical certification sheet.
C. Conduit entry and exit locations.
D. Transformer ratings.

2. Qualifications

For the equipment specified herein, the manufacturer shall be ISO 9000, 9001 or 9002 certified. The manufacturer of this equipment shall have produced similar electrical equipment. When requested by the Engineer, an acceptable list of installations with similar equipment shall be provided. The transformers shall be suitable for and certified to meet all applicable seismic requirements of the California Building Code (CBC) for Zone 4 application.

3. Ratings

The cell jar shall be made of standard flame retardant polypropylene. The cells shall be designed to be individually removed or installed. Internally each cell shall not have any free electrolyte, but be of an absorbed recombinant design utilizing lead-calcium plates without any cadmium (Cd) component. The pressure relief valve shall be constructed to prevent acid leakage and oxidation. The cell's material must also be thermally stable to withstand cell temperature excursions if battery is exposed to adverse temperature or charging conditions. The pressure rating release of the valve shall be limited to a maximum of 31 kPa to minimize forcing of acid between post seal and cover. The cell post shall be designed with dual seal. The first seal shall be of an 0-ring design allowing the entire seal structure freedom of movement due to changes in internal cell pressure, temperature, aging, shipment and seismic events. Neither seal shall use heat for adhesion.

The modular battery system shall be designed with steel modules with separate cell compartments. A polarized bracket shall be provided to automatically align the individual modules in the proper polarity orientation to each other in horizontal stacking and side by side configuration. A cooling air channel shall be incorporated into the module system design to provide free convection airflow between stacks. The battery system modules shall be bolted to the substation foundation to meet the seismic requirements of these special provisions.

A safety shield shall be designed of a non-conductive material and sized to cover the front of each module. Each safety shield shall be individually removable with a quick connect lift-off.

A drip pan shall be installed under the battery system to catch any leaks from the batteries.

The batteries shall have an expected life of twenty years.

The battery safety switch shall be a heavy-duty low-voltage safety switch and meet the following requirements:

a. Rated for 125 VDC.
b. Terminals shall be copper-aluminum.
c. The enclosure shall be NEMA Type 12 dust-tight and oil-tight for industrial applications.
d. A metal nameplate shall be mounted on the front cover that contains switch information (type, catalog number, electrical ratings V, A, and horsepower rating)
e. Handle whose position is easily recognizable and padlockable in the "Off" position.
f. Visible blades.
g. Reinforced fuse clips.
h. Nonteasible, positive, quick-make quick-break mechanisms.
i. Switch assembly plus operating handle as an integral part of the enclosure.
j. Switch shall be UL listed, horsepower rated, meet Federal Specification WS-885c, and NEMA Specifications KSI-1975.
k. Switch shall have defeatable door interlocks that prevent the door from opening when the operating handle is in the "ON" position.
l. Switch shall have line terminal shields.

8. Battery Charger and Rectifier

The battery charger and rectifier shall provide under normal conditions, full rated output for continuous load and tripping of one of the circuit breakers of the switchgear or charging of the 120 VDC on line battery system described elsewhere in these special provisions.

The charger and rectifier shall meet the following requirements:

a. Input Power: Single phase, 120 V(ac), 60 Hz.
b. Output Power: 120 VDC, 6 A.
c. DC Voltage Regulation: ± 0.5 percent under all conditions of line, load, frequency and temperature variations.
d. DC Output Ripple: 2 percent with battery.

---------- End of Page 336 in the original Special Provisions ----------

e. Automatic current limiting.
f. Overcurrent Protection: AC fuse, DC fuse.
g. Isolation: DC charging circuit isolated from the AC input circuit.
h. Metering: Separate DC voltmeter and DC ammeter, 88 mm rectangular pivot and jewel meters with ± 2 percent full scale accuracy
i. Modes of operation: Switch controlled float and equalize modes.
j. Enclosure: NEMA Type 1 steel case with baked on ANSI 61 gray enamel finish.

b. At normal sensor locations: CDMG will require approximately 30 minutes work time, excluding transit time, at each sensor location on a minimum of two occasions (installation and operational testing) to accomplish their work.
c. At pile-type downhole locations: CDMG will require approximately 14 day access for each pile cap downhole package. In addition, access may be required to the pile cap downhole locations, during the two days required for wiring and testing the recorder.

MATERIAL

1. State-furnished Material
The following materials will be State-furnished as provided under "Materials" of these special provisions:

a. Force Balance Accelerometer (FBA) pigtails
b. Seismic sensor mounting plates
c. Steel downhole casings
d. Sealed caps assemblies

2. State-furnished and Installed Material
The following materials will be furnished and installed by State forces:

a. Down-hole seismic sensors and cable to surface
b. Seismic sensors on bridge
c. Seismic recorders

3. Cables and Conductors

a. **Seismic Sensor Cable**: Seismic sensor cable, SSC, shall be four twisted pairs stranded tinned copper conductors, AWG No. 22 (7 x 30 strands), insulation 0.18 mm thick, individually shielded pairs with an aluminum polyester shield and AWG No. 22 stranded tinned copper drain wire for each pair, overall nominal outside diameter of 7.6 mm or less and outer jacket of 0.23 mm thick. Cable shall be instrument cable, NEC rated CLP2 plenum cable rated for 150°C. Cable shall be similar to Beldon plenum cable, Catalog No. 87778 except with only four pairs and having a color code as specified below:

1st Pair	red, black
2nd Pair	white, brown
3rd Pair	blue, violet
4th Pair	yellow, orange

Seismic sensor cable shall be United Wire and Cable Co., Inc., Consolidated Wire and Cable, or equal. Cable spools shall be of sufficient length to allow cables to be installed without splices from the sensor enclosures to the recorder cabinets as shown on the plans.

b. **Telephone Cable**: Telephone cable shall be waterproof filled-sheath, ISDN rated cable with four twisted pairs, individually shielded stranded conductor, minimum AWG No. 22 tinned copper, polyethylene insulated, with a foil aluminum-polyester shield, and chrome PVC jacket rated for 300 V. Cable spools shall be of sufficient length to allow the cables to be installed without splices from telephone service point to the seismic recorders.

c. **Interconnect Cable**: Interconnect cable, IC, shall be EIA RS-485 applications cable, Plenum type, NEC rated CL2P for temperature of 150°C. Cable shall be similar to Belden cable No. 9844 but plenum rated. The cable shall have eight tinned-copper, insulated conductors (4 twisted pairs). Overall aluminum-polyester shield and 24 AWG stranded tinned copper drain wire. Overall tinned copper braid shield (90 percent coverage). Overall nominal O.D. of 8.9 mm or less, with outer jacket of 0.23 mm thick. Color code should be as specified below:

---------- End of Page 338 in the original Special Provisions ----------

d. **Seismic Sensor Cable Junction Box**: Seismic sensor cable junction boxes shall be NEMA Type 4, 14-gage steel enclosure with lift-off cover of the size as shown on the plans. Finish shall be hot-dip galvanized. A nameplate with the inscription "Seismic Junction Box" shall be installed on the cover of each junction box.

No unused openings shall be left in any box. Two-piece knockout seals shall be installed as required to close openings.

Junction boxes shall be installed at the locations and elevations shown on the plans or specified herein. Adjustments to locations may be made as required by structural conditions and to suit coordination requirements of other trades.

TELEPHONE SERVICE

The Contractor shall make all arrangements and obtain all permits and licenses required for the connection of the Integrated System Digital Network (ISDN) telephone service applicable to this project, shall furnish all labor and materials necessary for such extensions which are not performed or provided by the utility, and shall furnish and install any intermediate equipment required by the serving utilities.

Upon written request by the Contractor, the State will pay all utility permits, licenses, and connection changes directly to the utility. Such request shall be submitted not less than 15 days before service connections are required.

TESTING

After all the seismic sensors and recorders have been installed and connected by the CDMG, the seismic monitoring system shall be tested by the CDMG to insure that the system functions properly. The Contractor shall make necessary repairs and replacements at the Contractor's expense if the source of the problem is determined to be part of the Contractor's scope of work.

After the seismic monitoring system installation work has been completed, the seismic monitoring system shall be tested in the presence of the Engineer to demonstrate that the seismic monitoring system functions properly. The Contractor shall make necessary repairs, replacements, adjustments and re-tests at the Contractor's expense.

SUBMITTALS

A list of materials and equipment to be installed, manufacturer's descriptive data, and such other data as may be requested by the Engineer shall be submitted for approval. The Engineer will require 3 weeks to review the submittal after a complete set has been received, as determined by the Engineer.

Manufacturer's descriptive data shall be submitted for the following:

a. Conduit – list by size and installation method
b. Pull boxes – each type
c. Seismic cable
d. Interconnect cable
e. Telephone cable
f. Cable support
g. Seismic sensor enclosures – each type
h. Seismic sensor cable junction boxes – each type
i. Downhole junction box
j. Downhole protective box

Attention is directed to the provisions in Section 5-1.01, "Authority of the Engineer," of the Standard Specifications. The Engineer may request submittals for materials or products where submittals have not been specified in these special provisions, or may request that additional information be included in the specified submittals, as necessary to determine the quality or acceptability of such materials or products.

The submittals shall be delivered to the Office of Structure Design, Documents Unit, Fourth Floor, 1801 – 30th Street, Sacramento, California 94274-0001.

Each submission of drawings, materials lists, and descriptive data shall consist of at least five copies. Two copies will be returned to the Contractor either approved for use or returned for correction and re-submittal.

Each separate item submitted shall bear a descriptive title, the name of the project, district, county, and contract number. Plans and detailed drawings shall not be larger than 559 mm x 915 mm.

The material list shall be complete as to name of manufacturer, catalog number, size, capacity, finish, all pertinent ratings, and identification symbols used on the plans and in the special provisions for each unit.

Unapproved samples and samples not incorporated in the work shall be removed from State Right of Way, when directed by the Engineer.

1. STDS State of California Standard Specifications
2. NEMA National Electrical Manufacturers Association
3. ASTM American Society for Testing and Materials
4. IEEE Institute of Electrical and Electronic Engineers
5. ANSI American National Standard Institute
6. ICEA Insulated Cable Engineers Association
7. OSHA Occupational Safety and Health Administration
8. NACE National Association of Corrosion Engineers
9. UL Underwriters Laboratories

---------- End of Page 341 in the original Special Provisions ----------

SUBMITTALS

The following manufacturer's data shall be submitted by the Contractor to the Engineer:

1. Catalog cuts, bulletins, brochures or data sheets for all equipment.
2. Certification that the equipment and materials proposed meet the requirements of this special provision.

Corrosion Monitoring System Submittal

The Contractor's corrosion monitoring system working drawings shall include an installation schedule for the ultrasonic thickness probe system and for the electrical resistance probe system.

Prior to installing the ultrasonic thickness probes and electrical resistance probes the Contractor shall provide a corrosion monitoring system submittal for the attachment procedure in conformance with this special provision.

The corrosion system submittal shall be stamped and signed by an engineer who is registered as a Corrosion Engineer in the State of California. The Contractor shall allow the Engineer 30 working days to review the submittal after a complete set has been received, as determined by the Engineer, and prior to installation. Should the Engineer fail to complete his review within the time allowance, and if, in the opinion of the Engineer, the Contractor's controlling operation is delayed or interfered with by reason of the delay in the driving system submittal review, the delay will be considered a right of way delay in conformance with the provisions in Section 8-1.07, "Liquidated Damages," in the Standard Specifications.

Ultrasonic Thickness Probe

The ultrasonic thickness transducers to be installed on the interior surface of the steel pile on Piers E3, E7 and E16 shall be an Accuscan, Immersion, Lemo Connector Type, Transducer Part Number A310-S-SM manufactured by RT transducers distributed by Panametrics, or equal. Cable shall be as supplied by manufacturer for the intended use. The probes are to be installed permanently inside the pile shell and set in epoxy after the reinforcing cage is installed and before the tremie concrete is placed. Wiring shall be set in epoxy on the shell wall, or installed in a small conduit and sealed in silicone gel.

This system is to be installed in one pile at each of three piers at the depths shown on the plans. Specific details of the probe, the required wiring and the associated terminal sockets shall be provided by the corrosion consultant. The length of cable shall be less than 30 meters.

Electrical Resistance Probe

The Probes shall be Model ER0500 Surface Strip Type or equal with cable supplied to the manufacturer's recommendations. The cable shall be terminated in a connector which allows for measurements to be made at the surface by connection to a junction box as shown on the plans.

Probes shall be designed for heavy duty service conditions such as underground and structural monitoring of pipelines, vessels, above and below ground storage tanks and structures whether cathodically protected or not. Probes shall provide good sealing of the reference element and the check element of the corrosion sensor. Probes shall be connected to the structure as shown on the plans. The lead shall be installed at the probe or connector end.

Probe Requirements:

	Surface Strip	Cylindrical
Probe Body	Epoxy Block	All Welded Element
Cable Connection	Heavy Duty Length	Heavy Duty Length with Bonded Heat Shrink Sleeving onto Element

Probe Configuration:

5. Preformed Loop Detector Station
~~6. Microwave Vehicle Detection Sensor System~~
~~7. Fiber Optic Data Modem~~
8. Fiber Optic Splice Closure

~~Quantities of fiber optic cables to be paid for by the meter will be determined from the length designated by the Engineer. Fiber optic cables placed in excess of the lengths designated will not be paid for.~~

~~The contract prices paid per meter for fiber optic cable of various types shall include full compensation for furnishing all labor, materials, tools, equipment, and incidentals, and for doing all the work involved in fiber optic cable of various types complete in place, as shown on the plans, as specified in the Standard Specifications and these special provisions, and as directed by the Engineer.~~

Full compensation for electrical work and equipment associated with substation architectural westbound and substation architectural eastbound, as shown on the architectural electrical drawings, shall be considered as included in the contract lump sum prices paid for substation architectural westbound and substation architectural eastbound and no additional compensation will be allowed therefor.

---------- End of Page 343 in the original Special Provisions ----------

SECTION 10-4. MECHANICAL

10-4.01 MECHANICAL WORK

Mechanical work shall consist of performing mechanical work in accordance with the details shown on the plans and these special provisions. Mechanical work shall include all such work for Substation EB, Substation WB, City and County of San Francisco (CCSF) water main and sewage force main, and domestic water piping and compressed air for Caltrans bridge maintenance.

Mechanical work shall include furnishing all labor, materials, equipment and services required for providing heating, ventilating, air conditioning, plumbing, piping and material handling systems.

Earthwork, foundations, sheet metal, painting, electrical, and such other work incidental and necessary to the proper installation and operation of the mechanical work shall be in accordance with the requirements specified for similar type work elsewhere in these special provisions.

System layouts are generally diagrammatic and location of equipment is approximate. Exact routing of pipes, ducts, etc., and location of equipment is to be governed by structural conditions and obstructions. Equipment requiring maintenance and inspection is to be readily accessible.

SUBMITTALS

A. Product data

A list of materials and equipment to be installed, manufacturer's descriptive data, and such other data as may be requested by the Engineer shall be submitted for approval.

Manufacturer's descriptive data shall include complete description, performance data and installation instructions for the materials and equipment specified herein. Control and wiring diagrams, rough-in dimensions for plumbing fixtures, and component layout shall be included where applicable.

Manufacturer's descriptive data shall be submitted for the following:

1. All piping materials, components, and associated appurtenances
2. Electrical Unit Heaters
3. Cabinet Fans
4. Exhaust Fans
5. Air Filters
6. Thermostats
7. Dampers
8. Diffusers, Grills, and Registers
9. Electric Incinerating Toilets
10. Self-contained Eyewash Units
11. Monorail Hoist

STATE OF CALIFORNIA - DEPARTMENT OF TRANSPORTATION

CONTRACT CHANGE ORDER MEMORANDUM

TO: PETER SIEGENTHALER / DOUG COE, Supervising Br. Eng.	FILE: E.A. 04 - 012024
FROM: DOUG COE, Supervising Br. Eng.	CO-RTE-PM 04-SF,Ala-80-13.9/14.3,0.0/1.6 FED. NO. ACIM-080-1(085)8N
CCO#: 170 SUPPLEMENT#: 0 Category Code: CBPC	CONTINGENCY BALANCE (incl. this change)
COST: INCREASE ☐ DECREASE ☑	HEADQUARTERS APPROVAL REQUIRED? ☑ YES ☐ NO
SUPPLEMENTAL FUNDS PROVIDED: $0.00	IS THIS REQUEST IN ACCORDANCE WITH ENVIRONMENTAL DOCUMENTS? ☑ YES ☐ NO
CCO DESCRIPTION: Deletion of Electrical Equipment	**PROJECT DESCRIPTION:** REPLACE SFOBB EAST SPAN

LOCATION: IN SAN FRANCISCO AND ALAMEDA COUNTIES IN SAN FRANCISCO AND OAKLAND FROM 1.3 KM EAST OF THE YERBA BUENA ISL

THIS CHANGE ORDER PROVIDES FOR:

Revising the contract electrical work for items 101 Traffic Operation System, 102 Camera with Housing, 103 Pan and Tilt Unit, 105 Transmitter Duplex Data, 107 Microwave Vehicle Detection Sensor System, 108 Fiber Optic Data Modem, 109 Fiber Optic Cable (72-Fibers), 110 Fiber Optic Cable (12-Fibers), 111 Fiber Optic Splice Closure and 119 Supervisory Control and Data Acquisition Terminal unit System as follows:

1. Delete the installation of MVDS and their harnesses.
2. Delete Cameras and cable/harnesses.
3. Delete CMS panels and harnesses (State Furnished).
4. Delete Fiber Optic cable.
5. Delete 15 kV cable.
6. Delete PLCs from the RTUs.
7. Test installed components.

The Skyway Project will be completed approximately five to six years ahead of the SAS and Oakland Touchdown Projects due to the revised project delivery schedule. The electrical equipment noted above will sit in non-use for up to 6 years. During this time of non-use, the electronic components will corrode, shortening their useful life. The useful life of the 15 KV cable would be reduced by 16 to 20 percent. Therefore it is deleted from this contract in order to preserve its useful life. This electrical work deleted by this change order will be included in a future contract.

The agreed compensation for this change order is included in the lump sum compensation portion of resolution CCO No. 200. This contract change order results in a net savings in construction costs. The Contractor has agreed to credit the State $1,387,000.00.

Records that support the adjustment in compensation are on file in the project records.

Prior approval was obtained from Pete Siegenthaler, SFOBB Construction Manager, Toll Bridge Construction, on October 27, 2005.

Mr. Ken Terpstra, SFOBB Toll Bridge Project Manager, provided his concurrence on July 18, 2006.

Prior approval from FHWA was obtained from Ms. Nancy Bobb, FHWA Bay Bridge Project Manager, on December 13, 2005.

Toll Bridge Design concurrence was obtained fromTrinh Lai, Transportation Engineer, on April 29, 2005.

Electrical Design concurrence was obtained from Behzad Golemohammadi, Senior Electrical Engineer, on October 12, 2005.

Authorization to proceed with this change order was issued by Division of Construction on November 7, 2005.

No time adjustment is warranted for this change order as it does not affect the controlling operation.

CONCURRED BY:		
Construction Engineer:	Douglas Coe	Date 8-24-06
Bridge Engineer:	Douglas Coe	Date 8-24-06
FHWA Representative:	Nancy Bobb	Date2/13/2005
Project Engineer:		Date
Other (specify):		Date
Trinh Lai, Toll Bridge Design		Date4/29/2005
B. Golemohammadi, Senior Electrical Engineer		Date0/12/2005
District Prior Approval By:		Date
HQ (Issue Approve) By:		Date
Resident Engineer's Signature:		Date 8-24-06

ESTIMATE OF COST

	THIS REQUEST	TOTAL TO DATE
ITEMS	$0.00	$0.00
FORCE ACCOUNT	$0.00	$0.00
AGREED PRICE	$0.00	$0.00
ADJUSTMENT		
TOTAL		

FEDERAL PARTICIPATION

☑ PARTICIPATING ☐ PARTICIPATING IN PART ☐ NONE
☐ NON-PARTICIPATING (MAINTENANCE) ☐ NON-PARTICIPATING

FEDERAL SEGREGATION (if more than one Funding Source or P.I.P. type)
☑ CCO FUNDED PER CONTRACT ☐ CCO FUNDED AS FOLLOWS

FEDERAL FUNDING SOURCE	PERCENT

STATE OF CALIFORNIA - DEPARTMENT OF TRANSPORTATION

CONTRACT CHANGE ORDER

Change Requested by: Engineer

CCO: 174	Suppl. No. 0	Contract No. 04 - 012024	Road 04-SF,Ala-80-13.9/14.3,0.0/1.6	FED. AID LOC.: ACIM-080-1(085)8N

To: KIEWIT / FCI / MANSON a JV

You are directed to make the following changes from the plans and specifications or do the following described work not included in the plans and specifications for this contract. ***NOTE: This change order is not effective until approved by the Engineer.***

Description of work to be done, estimate of quantities and prices to be paid. (Segregate between additional work at contract price, agreed price and force account.) Unless otherwise stated, rates for rental of equipment cover only such time as equipment is actually used and no allowance will be made for idle time. This last percentage shown is the net accumulated increase or decrease from the original

Adjustment of Compensation at Lump Sum:

Section 10-1.08, "TRANSPORTATION OF THE ENGINEER," of the Special Provision shall be revised as follows: "The Contractor shall provide, operate, berth and maintain, throughout the life of the contract, one crew boat for the sole use of the Engineer, the Engineer's staff in performance of their work, and visitors when guided by the public information office staff or Engineer."

Full compensation to the Contractor, including mark ups for all direct and indirect costs, all associated project impacts, all overhead costs, and any and all risks associated with this work are included in the lump sum payment of CCO No. 200 and no further payment will be made as a result of this CCO.

Estimated Cost: Increase ☐ Decrease ☐

By reason of this order the time of completion will be adjusted as follows: 0 days

Submitted by

Signature	Resident Engineer: DOUG COE, Supervising Br. Eng.	Date 8-24-06

Approval Recommended by

Signature	Construction Engineer: DOUG COE, Supervising Br. Eng.	Date 8-24-06

Engineer Approval by

Signature	(Print name and title) PETER SIEGENTHALER - Chief	Date

We the undersigned contractor, have given careful consideration to the change proposed and agree, if this proposal is approved, that we will provide all equipment, furnish the materials, except as may otherwise be noted above, and perform all services necessary for the work above specified, and will accept as full payment therefor the prices shown above.

NOTE: If you, the contractor, do not sign acceptance of this order, your attention is directed to the requirements of the specifications as to proceeding with the ordered work and filing a written protest within the time therein specified.

Contractor Acceptance by

Signature	(Print name and title) Lee Zink, Project Director	Date 9/5/06

STATE OF CALIFORNIA - DEPARTMENT OF TRANSPORTATION

CONTRACT CHANGE ORDER MEMORANDUM

DATE: 7/13/2006 Page 1 of 1

TO: PETER SIEGENTHALER / DOUG COE, Supervising Br. Eng.	FILE: E.A. 04 - 012024
	CO-RTE-PM 04-SF,Ala-80-13.9/14.3,0.0/1.6
FROM: DOUG COE, Supervising Br. Eng.	FED. NO. ACIM-080-1(085)8N
CCO# 174 SUPPLEMENT#: 0 Category Cod CXSA	CONTINGENCY BALANCE (incl. this change
COST: INCREASE ☐ DECREASE ☐	HEADQUARTERS APPROVAL REQUIRED? ☑ YES ☐ NO
SUPPLEMENTAL FUNDS PROVIDED: $0.00	IS THIS REQUEST IN ACCORDANCE WITH ENVIRONMENTAL DOCUMENTS? ☑ YES ☐ NO
CCO DESCRIPTION: Additional Crew Boat Insurance	**PROJECT DESCRIPTION:** REPLACE SFOBB EAST SPAN

LOCATION: IN SAN FRANCISCO AND ALAMEDA COUNTIES IN SAN FRANCISCO AND OAKLAND FROM 1.3 KM EAST OF THE YERBA BUENA ISL

THIS CHANGE ORDER PROVIDES FOR:

Implementing a revision to Special Provisions Section 10-1.08, "Transportation for the Engineer," to include individuals that are not members of the Engineer's staff.

The specifications require the Contractor to provide, operate, berth, and maintain, throughout the life of the contract, a crew boat for the sole use of the Engineer and Engineer's staff in the performance of their work. This contract change order revises the Special Provisions to permit non-Engineer's staff to utilize the crew boat for jobsite visits when guided by the public information office staff or Engineer.

After review of the Contractors insurance policy it was found that the policy currently in place already covers any and all visitors to the site.

The Contractor and the Engineer mutually agree that there will be no cost or credit to the State as a result of this change order. This contract change order is included in the lump sum compensation portion of resolution CCO No. 200.

A detailed cost analysis for this change order is on file in the project records.

Mr. Pete Siegenthaler, SFOBB Construction Manager, Toll Bridge Construction, concurs with this change. A copy of the concurrence signed by Mr. Siegenthaler on December 14, 2005 is attached.

Prior Approval was obtained from Ms. Nancy Bobb, FHWA Bay Bridge Project Manager, via electronic message on July 12, 2006. A printed copy of the prior approval provided by Ms. Bobb is attached.

Prior Approval was obtained from Mr. Ken Terpstra, SFOBB Project Manager, via electronic message on July 6, 2006. A printed copy of the prior approval provided by Mr. Terpstra is attached.

No time adjustment is warranted for this change order as it does not affect the controlling operation.

CONCURRED BY:

Construction Engineer:	Douglas Coe	Date 8-24-06
Bridge Engineer:	Douglas Coe	Date 8-24-06
FHWA Representative:	Nancy Bobb	Date 7/12/2006
Project Engineer:		Date
Other (specify): Ken Terpstra, SFOBB Project Manager		Date 7/6/2006
		Date
		Date
District Prior Approval By:		Date
HQ (Issue Approve) By:	Ken Darby	Date
Resident Engineer's Signature:		Date 8-24-06

ESTIMATE OF COST

	THIS REQUEST	TOTAL TO DATE
ITEMS	$0.00	$0.00
FORCE ACCOUNT	$0.00	$0.00
AGREED PRICE	$0.00	$0.00
ADJUSTMENT		
TOTAL	$0.00	$0.00

FEDERAL PARTICIPATION

☑ PARTICIPATING ☐ PARTICIPATING IN PART ☐ NONE
☐ NON-PARTICIPATING (MAINTENANCE) ☐ NON-PARTICIPATING

FEDERAL SEGREGATION (if more than one Funding Source or P.I.P. type)
☑ CCO FUNDED PER CONTRACT ☐ CCO FUNDED AS FOLLOWS

FEDERAL FUNDING SOURCE	PERCENT

CONTRACT CHANGE ORDER

Change Requested by: Engineer

CCO: 175	Suppl. No. 0	Contract No. 04 - 012024	Road 04-SF,Ala-80-13.9/14.3,0.0/1.6	FED. AID LOC.: ACIM-080-1(085)8N

To: **KIEWIT / FCI / MANSON a JV**

You are directed to make the following changes from the plans and specifications or do the following described work not included in the plans and specifications for this contract. ***NOTE: This change order is not effective until approved by the Engineer.***

Description of work to be done, estimate of quantities and prices to be paid. (Segregate between additional work at contract price, agreed price and force account.) Unless otherwise stated, rates for rental of equipment cover only such time as equipment is actually used and no allowance will be made for idle time. This last percentage shown is the net accumulated increase or decrease from the original quantity in the Engineer's Estimate.

Extra Work at Force Account:

As authorized by the Engineer, grind and snip the washers and recoat the affected areas with the approved primer at each end of the barrier sections of the Steel Transition Structure where the bolt holes are too close to the welds to allow for proper seating of the washers and nuts.

Payment for this work shall be made in accordance with Section 5-1.21, "Force Account Payment," of the Special Provisions, and Section 9-1.03, "Force Account Payment," of the 1999 Standard Specifications.

Estimated cost of Extra Work at Force Account $10,000.00

Estimated Cost: Increase ☑ Decrease ☐ **$10,000.00**

By reason of this order the time of completion will be adjusted as follows: 0 days

Submitted by		
Signature	**Resident Engineer:** DOUG COE, Supervising Br. Eng.	**Date** 2-7-06
Approval Recommended by		
Signature	**Construction Engineer:** DOUG COE, Supervising Br. Eng.	**Date** 2-7-06
Engineer Approval by		
Signature David Sullivan	**(Print name and title)** for PETER SIEGENTHALER - Chief	**Date** 3-14-06

We the undersigned contractor, have given careful consideration to the change proposed and agree, if this proposal is approved, that we will provide all equipment, furnish the materials, except as may otherwise be noted above, and perform all services necessary for the work above specified, and will accept as full payment therefor the prices shown above.

NOTE: If you, the contractor, do not sign acceptance of this order, your attention is directed to the requirements of the specifications as to proceeding with the ordered work and filing a written protest within the time therein specified.

Contractor Acceptance by		
Signature	**(Print name and title)** Deputy Project Director	**Date** 2/27/06

STATE OF CALIFORNIA - DEPARTMENT OF TRANSPORTATION

CONTRACT CHANGE ORDER MEMORANDUM

DATE: 2/6/2006 Page 1 of 1

TO: PETER SIEGENTHALER / DOUG COE, Supervising Br. Eng.	FILE: E.A. 04 - 012024
FROM: DOUG COE, Supervising Br. Eng.	CO-RTE-PM 04-SF,Ala-80-13.9/14.3,0.0/1.6
	FED. NO. ACIM-080-1(085)8N
CCO#: 175 SUPPLEMENT#: 0 Category Code: CHXX	CONTINGENCY BALANCE (incl. this change) $53,893,605.24
COST: $10,000.00 INCREASE ☑ DECREASE ☐	HEADQUARTERS APPROVAL REQUIRED? ☐ YES ☑ NO
SUPPLEMENTAL FUNDS PROVIDED: $0.00	IS THIS REQUEST IN ACCORDANCE WITH ENVIRONMENTAL DOCUMENTS? ☑ YES ☐ NO
CCO DESCRIPTION: Steel Barrier Bolting Conflict	**PROJECT DESCRIPTION:** REPLACE SFOBB EAST SPAN

LOCATION: IN SAN FRANCISCO AND ALAMEDA COUNTIES IN SAN FRANCISCO AND OAKLAND FROM 1.3 KM EAST OF THE YERBA BUENA ISL

THIS CHANGE ORDER PROVIDES FOR:

Grinding and snipping off the washers and recoat the affected areas with the approved primer, in areas of the steel barrier end plates where the bolt holes are too close to the welds.

After fabricating the Steel Barriers of the transition structure in accordance with the contract plans, it was discovered that the bolt holes at each end of a barrier section were too close to the end plate welds. This prevents the washer and nut to seat properly for bolt tensioning.

For this work the Contractor will be paid an estimated amount of $10,000.00, which can be financed through the project contingency funds. The method of payment for this work will be performed as Extra Work at Force Account.

Prior approval was obtained from Mr. David Salladay, East Span Skyway District Representative, on December 16, 2005.

FHWA Prior approval is not required as this is a minor change order.

Design concurrence was obtained from Hasan El-Natur, Senior Bridge Engineer, on February 2, 2006.

Concurrence from Maintenance is not required, as this change order does not affect maintenance facilities or operations.

No time adjustment is warranted for this change as it does not affect the controlling operation.

RECEIVED 050282 MAR 17 '06

CONCURRED BY:			
Construction Engineer:	Douglas Coe		Date2/16/2005
Bridge Engineer:	Douglas Coe		Date2/16/2005
FHWA Representative:			Date
Project Engineer:			Date
Other (specify):			Date
			Date
			Date
District Prior Approval By:	David Salladay		Date2/16/2005
HQ (Issue Approve) By:			Date
Resident Engineer's Signature:		2-7-06	Date

ESTIMATE OF COST

	THIS REQUEST	TOTAL TO DATE
ITEMS	$0.00	$0.00
FORCE ACCOUNT	$10,000.00	$10,000.00
AGREED PRICE	$0.00	$0.00
ADJUSTMENT	$0.00	$0.00
TOTAL	$10,000.00	$10,000.00

FEDERAL PARTICIPATION

☑ PARTICIPATING ☐ PARTICIPATING IN PART ☐ NONE
☐ NON-PARTICIPATING (MAINTENANCE) ☐ NON-PARTICIPATING

FEDERAL SEGREGATION (if more than one Funding Source or P.I.P. type)
☑ CCO FUNDED PER CONTRACT ☐ CCO FUNDED AS FOLLOWS

FEDERAL FUNDING SOURCE	PERCENT

CONTRACT CHANGE ORDER

Change Requested by: Engineer

CCO: 176	Suppl. No. 0	Contract No. 04 - 012024	Road 04-SF,Ala-80-13.9/14.3,0.0/1.6	FED. AID LOC.: ACIM-080-1(085)8N

To: **KIEWIT / FCI / MANSON a JV**

You are directed to make the following changes from the plans and specifications or do the following described work not included in the plans and specifications for this contract. ***NOTE: This change order is not effective until approved by the Engineer.***

Description of work to be done, estimate of quantities and prices to be paid. (Segregate between additional work at contract price, agreed price and force account.) Unless otherwise stated, rates for rental of equipment cover only such time as equipment is actually used and no allowance will be made for idle time. This last percentage shown is the net accumulated increase or decrease from the original

Extra Work at Force Account:

As authorized by the Engineer, install shims at the bottom of the steel barrier rails to ensure that the final alignment of the barrier rail conforms to contract requirements for the SFOBB East Span Skyway Bridge Replacement Project, Bridge Nos. 34-0006L/R. The Engineer will compensate the Contractor for the cost of shimming the barrier up to a height of 3 mm. Adjustments over 3 mm in height will be at the Contractor's expense. Total adjustment shall not exceed 12 mm.

Payment for this work shall be made in accordance with Section 5-1.21, "Force Account Payment," of the Special Provisions, and Section 9-1.03, "Force Account Payment," of the 1999 Standard Specifications.

Estimated cost of Extra Work at Force Account $50,000.00

Estimated Cost: Increase ☑ Decrease ☐ **$50,000.00**

By reason of this order the time of completion will be adjusted as follows: 0 days

Submitted by

Signature	Resident Engineer: DOUG COE, Supervising Br. Eng.	Date 10-4-06

Approval Recommended by

Signature	Construction Engineer: DOUG COE, Supervising Br. Eng.	Date 10-4-06

Engineer Approval by

Signature	(Print name and title) PETER SIEGENTHALER - Chief	Date

We the undersigned contractor, have given careful consideration to the change proposed and agree, if this proposal is approved, that we will provide all equipment, furnish the materials, except as may otherwise be noted above, and perform all services necessary for the work above specified, and will accept as full payment therefor the prices shown above.

NOTE: If you, the contractor, do not sign acceptance of this order, your attention is directed to the requirements of the specifications as to proceeding with the ordered work and filing a written protest within the time therein specified.

Contractor Acceptance by

Signature	(Print name and title) LEE ZINK, PROJECT DIRECTOR	Date 11/3/06

STATE OF CALIFORNIA - DEPARTMENT OF TRANSPORTATION

CONTRACT CHANGE ORDER MEMORANDUM

TO: PETER SIEGENTHALER / DOUG COE, Supervising Br. Eng.	FILE: **E.A.** 04 - 012024
FROM: DOUG COE, Supervising Br. Eng.	**CO-RTE-PM** 04-SF,Ala-80-13.9/14.3,0.0/1.6
	FED. NO. ACIM-080-1(085)8N
CCO# **176** SUPPLEMENT#: **0** Category Cod **CBPC**	CONTINGENCY BALANCE (incl. this change **$23,107,051.71**
COST: **$50,000.00** INCREASE ☑ DECREASE ☐	HEADQUARTERS APPROVAL REQUIRED? ☐ YES ☑ NO
SUPPLEMENTAL FUNDS PROVIDED: **$0.00**	IS THIS REQUEST IN ACCORDANCE WITH ENVIRONMENTAL DOCUMENTS? ☑ YES ☐ NO
CCO DESCRIPTION: Shims at Steel Barrier	**PROJECT DESCRIPTION:** REPLACE SFOBB EAST SPAN

LOCATION: IN SAN FRANCISCO AND ALAMEDA COUNTIES IN SAN FRANCISCO AND OAKLAND FROM 1.3 KM EAST OF THE YERBA BUENA ISL

THIS CHANGE ORDER PROVIDES FOR:

Original Contract Time: 1000 Day(s)
Time Adjustment This Change: 0 Day(s)
Previously Approved CCO Time Adjustments: 424 Day(s)
Percentage Time Adjusted (Including this change): 42.4 %
Total # of Unreconciled Deferred Time CCO's (Including this change): 0

Installing shims at the bottom of the steel barrier rails to ensure that the final alignment of the barrier rail conforms to contract requirements. The Engineer will compensate the Contractor for the cost of shimming the barrier up to a height of 3 mm. Any adjustments over 3 mm in height will be at the Contractor's expense. Total adjustment shall not exceed 12 mm.

As detailed in the contract plans, the steel barrier bolts directly to the steel deck and does not provide for any fabrication tolerance. The accumulated fabrication tolerance causes gaps between the deck plate and the barrier 'feet' when the steel barrier is aligned. Installation of shims will eliminate the gaps.

The American Welding Society (AWS) code D 1.5 per Section 3.5.1.15 allows a maximum offset between steel barrier sections of 3 mm. Although the contract plans and specifications do not provide a fabrication tolerance the Engineer allows for an additional accumulated tolerance of 3 mm and will compensate the Contractor for any adjustments made upto 3 mm. Adjustments up to 12 mm however can be allowed, if needed, according to the Caltrans barrier rail specialist, Mr. Tillat Satter. The cost of adjusting the barrier between 3 mm and 12 mm will be at the Contractor's expense.

This work will be paid for as Extra Work at Force Account for an estimated cost of $50,000.00, which can be financed from the contingency fund.

Prior Approval was obtained from Doug Coe for David Salladay on June 30, 2006.

This is a minor change order and does not require prior approval from FHWA.

Concurrence from maintenance is not required because this change does not affect maintenance facilities or operations.

Design concurrence was obtained from Mr. Tillat Satter, Barrier Rail Specialist at the Division of Engineering Services , on September 14, 2006. A copy of the concurrence is attached.

No adjustment of contract time is warranted, as this change does not affect the controlling operation.

CONCURRED BY:		
Construction Engineer:	Douglas Coe	Date 10-4-06
Bridge Engineer:		Date 10-4-06
FHWA Representative:		Date
Project Engineer:		Date
Other (specify):		Date
		Date
		Date
District Prior Approval By:	Douglas Coe	Date 6/30/2006
HQ (Issue Approve) By:		Date
Resident Engineer's Signature:		Date 10-4-06

ESTIMATE OF COST

	THIS REQUEST	TOTAL TO DATE
ITEMS	$0.00	$0.00
FORCE ACCOUNT	$50,000.00	$50,000.00
AGREED PRICE	$0.00	$0.00
ADJUSTMENT	$0.00	$0.00
TOTAL	$50,000.00	$50,000.00

FEDERAL PARTICIPATION

☑ PARTICIPATING ☐ PARTICIPATING IN PART ☐ NONE
☐ NON-PARTICIPATING (MAINTENANCE) ☐ NON-PARTICIPATING

FEDERAL SEGREGATION (if more than one Funding Source or P.I.P. type)
☑ CCO FUNDED PER CONTRACT ☐ CCO FUNDED AS FOLLOWS

FEDERAL FUNDING SOURCE	PERCENT

CONTRACT CHANGE ORDER

Change Requested by: Engineer

CCO: 177	Suppl. No. 0	Contract No. 04 - 012024	Road 04-SF,Ala-80-13.9/14.3,0.0/1.6	FED. AID LOC.: ACIM-080-1(085)8N

To: **KIEWIT / FCI / MANSON a JV**

You are directed to make the following changes from the plans and specifications or do the following described work not included in the plans and specifications for this contract. ***NOTE: This change order is not effective until approved by the Engineer.***

Description of work to be done, estimate of quantities and prices to be paid. (Segregate between additional work at contract price, agreed price and force account.) Unless otherwise stated, rates for rental of equipment cover only such time as equipment is actually used and no allowance will be made for idle time. This last percentage shown is the net accumulated increase or decrease from the original quantity in the Engineer's Estimate.

Adjustment of Compensation at Lump Sum:

In the Special Provisions, Section 10-3.07 "PULL BOXES, SPLICE AND JUNCTION BOXES" sub-section "Barrier Pull Boxes (Type PB-1A)" the second sentence is revised as follows:
"The pull box size shall be a deep single gang box, sufficient for one outdoor barrier receptacle, and made of steel."

In the Special Provisions, Section 10-3.07 "PULL BOXES, SPLICE AND JUNCTION BOXES" sub-section "Outdoor Barrier Receptacles", is revised as follows:
"The receptacles to be installed in the barriers outdoor shall be rated 20A, 125V, weatherproof and with threaded caps which effectively seal the housing when not in use."

Supply and install barrier receptacle boxes and receptacles in accordance with the revised contract plan sheet numbers 128R1 and 364R1 of 978, attached as page 2 and 3 of this change order, and the here in revised Special Provisions, Section 10-3.07 "PULL BOXES, SPLICE AND JUNCTION BOXES" of the SFOBB East Span Skyway, Bridge No. 34-0006L/R.

There shall be no cost by reason of this change. This agreement constitutes full compensation to the Contractor, all associated project impacts, all overhead costs, and any and all risks associated with the performance of this work.

REGISTERED PROFESSIONAL ENGINEER PARVIZ BOOZARPOUR No. 12735 Exp. 9/30/06 ELECTRICAL STATE OF CALIFORNIA

P. Boozarpour

Estimated Cost: **Increase** ☐ **Decrease** ☐ **$0.00**

By reason of this order the time of completion will be adjusted as follows: 0 days

Submitted by

Signature	Resident Engineer: DOUG COE, Supervising Br. Eng.	Date 3-28-06

Approval Recommended by

Signature	Construction Engineer: DOUG COE, Supervising Br. Eng.	Date 3-28-06

Engineer Approval by

Signature	(Print name and title) PETER SIEGENTHALER - Chief	Date

We the undersigned contractor, have given careful consideration to the change proposed and agree, if this proposal is approved, that we will provide all equipment, furnish the materials, except as may otherwise be noted above, and perform all services necessary for the work above specified, and will accept as full payment therefor the prices shown above.

NOTE: If you, the contractor, do not sign acceptance of this order, your attention is directed to the requirements of the specifications as to proceeding with the ordered work and filing a written protest within the time therein specified.

Contractor Acceptance by

Signature	(Print name and title) LEE ZINK, PROJECT DIRECTOR	Date 10/19/06

STATE OF CALIFORNIA - DEPARTMENT OF TRANSPORTATION

CONTRACT CHANGE ORDER MEMORANDUM

TO: PETER SIEGENTHALER / DOUG COE, Supervising Br. Eng.	FILE: E.A. 04 - 012024
	CO-RTE-PM 04-SF,Ala-80-13.9/14.3,0.0/1.6
FROM: DOUG COE, Supervising Br. Eng.	FED. NO. ACIM-080-1(085)8N
CCO#: **177** SUPPLEMENT#: **0** Category Code: **CBSA**	CONTINGENCY BALANCE (incl. this change) **$29,335,548.62**
COST: **$0.00** INCREASE ☐ DECREASE ☐	HEADQUARTERS APPROVAL REQUIRED? ☑ YES ☐ NO
SUPPLEMENTAL FUNDS PROVIDED: **$0.00**	IS THIS REQUEST IN ACCORDANCE WITH ENVIRONMENTAL DOCUMENTS? ☑ YES ☐ NO
CCO DESCRIPTION: Duplex Receptacles in Barrier Rail	**PROJECT DESCRIPTION:** REPLACE SFOBB EAST SPAN

LOCATION: IN SAN FRANCISCO AND ALAMEDA COUNTIES IN SAN FRANCISCO AND OAKLAND FROM 1.3 KM EAST OF THE YERBA BUENA ISL

THIS CHANGE ORDER PROVIDES FOR:

revising Special Provisions, Section 10-3.07 "PULL BOXES, SPLICE AND JUNCTION BOXES" sub-section "Barrier Pull Boxes (Type PB-1A)" by replacing the second sentence as follows: "The pull box size shall be a deep single gang box, sufficient for one outdoor barrier receptacle, and made of steel." and revising sub-section "Outdoor Barrier Receptacles", with "The receptacles to be installed in the barriers outdoor shall be rated 20A, 125V, weatherproof and with threaded caps which effectively seal the housing when not in use." Also for supplying and installing barrier receptacle boxes and receptacles in accordance with the revised contract plan sheet numbers 128R1, and 364R1 of 978 of the SFOBB East Span Skyway, Bridge No. 34-0006L/R.

This change order is needed to clear up a discrepancy between the Special Provisions and the Contract Plans. Plan sheet No. 128 of 978 calls for duplex receptacles with weatherproof covers rated 20A, 125V, while the Special Provisions, Section 10-3.07 "PULL BOXES, SPLICE AND JUNCTION BOXES" sub-section "Outdoor Barrier Receptacles", calls for 15A, 120V, weatherproof and with threaded caps. In addition District Electrical Maintenance requested changes to the barrier pull boxes from a two gang tandem box to a deep single gang box and the duplex receptacle to a single "household type" receptacle.

For this change order, the Engineer and the Contractor agree that there are no recognized costs to either the State or the Contractor, and that this change order results in a zero cost adjustment. The change order will be processed as an Adjustment of Compensation at Agreed Lump Sum. A cost analysis is on file with the project records.

Mr. Pete Siegenthaler, SFOBB Construction Manager, Toll Bridge Construction, concurs with this change. A copy of the concurrence signed by Mr. Siegenthaler on February 16, 2006 is attached.

Prior Approval was obtained from Ms. Nancy Bobb, FHWA Bay Bridge Project Manager, via electronic message on March 1, 2006. A printed copy of the prior approval provided by Ms. Bobb is attached.

Mr. Ken Terpstra , SFOBB Toll Bridge Project Manager, provided concurrence on March 9, 2006. A copy of the concurrence provided by Mr. Terpstra is attached.

Design concurrence was provided by Mr. Parviz Boozarpour on January 19, 2006, as indicated by his signature on the revised contract plan sheets and on the change order report.

Concurrence from Maintenance was obtained from Mr. Paul Parecadan, Senior Electrical Engineer, on March 1, 2006. A copy of the concurrence provided by Maintenance is attached.

Authorization to proceed with this change order was issued by Headquarters on March 1, 2006.

No time adjustment is warranted for this change order as it does not affect the controlling operation.

CONCURRED BY:		
Construction Engineer:	Douglas Coe	Date 3-28-06
Bridge Engineer:	Douglas Coe	Date 3-28-06
FHWA Representative:	Nancy Bobb	Date 3/1/2006
Project Engineer:		Date
Other (specify): Ken Terpstra, Project Manager		Date 3/9/2006
Paul Parecadan (Maintenance)		Date 3/1/2006
		Date
District Prior Approval By:		Date
HQ (Issue Approve) By:	Ken Darby	Date
Resident Engineer's Signature:		Date 3-28-06

ESTIMATE OF COST

	THIS REQUEST	TOTAL TO DATE
ITEMS	$0.00	$0.00
FORCE ACCOUNT	$0.00	$0.00
AGREED PRICE	$0.00	$0.00
ADJUSTMENT	$0.00	$0.00
TOTAL	$0.00	$0.00

FEDERAL PARTICIPATION

☑ PARTICIPATING ☐ PARTICIPATING IN PART ☐ NONE
☐ NON-PARTICIPATING (MAINTENANCE) ☐ NON-PARTICIPATING

FEDERAL SEGREGATION (if more than one Funding Source or P.I.P. type)
☑ CCO FUNDED PER CONTRACT ☐ CCO FUNDED AS FOLLOWS

FEDERAL FUNDING SOURCE	PERCENT

CONTRACT CHANGE ORDER

Change Requested by: Engineer

CCO: 178	Suppl. No. 0	Contract No. 04 - 012024	Road 04-SF,Ala-80-13.9/14.3,0.0/1.6	FED. AID LOC.: ACIM-080-1(085)8N

To: **KIEWIT / FCI / MANSON a JV**

You are directed to make the following changes from the plans and specifications or do the following described work not included in the plans and specifications for this contract. ***NOTE: This change order is not effective until approved by the Engineer.***

Description of work to be done, estimate of quantities and prices to be paid. (Segregate between additional work at contract price, agreed price and force account.) Unless otherwise stated, rates for rental of equipment cover only such time as equipment is actually used and no allowance will be made for idle time. This last percentage shown is the net accumulated increase or decrease from the original

Extra Work at Lump Sum:

As authorized by the Engineer, fabricate and install the traveler scaffold as shown on revised contract plan sheets 903R2, 904R1, 905R2, 906R2, 908R2, 909R2, 910R2, 911R2, 912R2, 913R2, 914R2, 914A, 915R2, and 916R2 of 978 (pages 2 through 15 of the change order) and the revised contract Special Provisions, Section 10-1.50 "Traveler Scaffold Mechanical" (pages 16 through 20 of the change order) on the SFOBB East Span Skyway project, Bridge No. 34-0006R.

For this work, the Contractor agrees to accept an agreed lump sum amount of $230,800.00. This agreed lump sum constitutes full compensation for all costs, including markups, all direct and indirect costs, all associated project impacts, and all overhead costs.

Extra Work at Agreed Lump Sum $230,800.00

Estimated Cost: Increase ☑ Decrease ☐ $230,800.00

By reason of this order the time of completion will be adjusted as follows: 0 days

Submitted by		
Signature for	Resident Engineer DOUG COE, Supervising Br. Eng.	Date 4-16-07
Approval Recommended by		
Signature For D. Coe	Construction Engineer DOUG COE	Date 4/18/07
Engineer Approval by		
Signature	Construction Manager PETER SIEGENTHALER	Date 6-28-07

We the undersigned contractor, have given careful consideration to the change proposed and agree, if this proposal is approved, that we will provide all equipment, furnish the materials, except as may otherwise be noted above, and perform all services necessary for the work above specified, and will accept as full payment therefor the prices shown above.

NOTE: If you, the contractor, do not sign acceptance of this order, your attention is directed to the requirements of the specifications as to proceeding with the ordered work and filing a written protest within the time therein specified.

Contractor Acceptance by		
Signature	(Print name and title) Lee Zink Project Director	Date 6/20/07

STATE OF CALIFORNIA - DEPARTMENT OF TRANSPORTATION

CONTRACT CHANGE ORDER MEMORANDUM

TO: PETER SIEGENTHALER / DOUG COE, Supervising Br. Eng.	FILE: E.A. 04 - 012024
FROM: DOUG COE, Supervising Br. Eng.	CO-RTE-PM 04-SF,Ala-80-13.9/14.3,0.0/1.6
	FED. NO. ACIM-080-1(085)8N
CCO# 178 SUPPLEMENT#: 0 Category Cod AXZZ	CONTINGENCY BALANCE (incl. this change $6,759,945.59
COST: $230,800.00 INCREASE ☑ DECREASE ☐	HEADQUARTERS APPROVAL REQUIRED? ☑ YES ☐ NO
SUPPLEMENTAL FUNDS PROVIDED: $0.00	IS THIS REQUEST IN ACCORDANCE WITH ENVIRONMENTAL DOCUMENTS? ☑ YES ☐ NO
CCO DESCRIPTION: Refurbish Traveler and Add Trolleys	**PROJECT DESCRIPTION:** REPLACE SFOBB EAST SPAN

Original Contract Time:	Time Adj. This Change:	Previously Approved CCO Time Adjustments:	Percentage Time Adjusted: (including this change)	Total # of Unreconciled Deferred Time CCO(s): (including this change)
1000 Day(s)	0 Day(s)	424 Day(s)	42 %	0

THIS CHANGE ORDER PROVIDES FOR:

Fabricating and installing the traveler scaffold as shown on revised contract plan sheets 903R2, 904R1, 905R2, 906R2, 908R2, 909R2, 910R2, 911R2, 912R2, 913R2, 914R2, 914A, 915R2, and 916R2 of 978 (pages 2 through 15 of the change order) and the revised contract Special Provisions, Section 10-1.50 "Traveler Scaffold Mechanical" (pages 16 through 20 of the change order) on the SFOBB East Span Skyway project, Bridge No. 34-0006R.

The original contract plans and special provisions specified the sole source supplier of the traveler motor trolleys to be Ingersoll-Rand, and provide trolley motor ATE-MR 3/6 with a Factor of Safety (FS) of 5.0. Ingersoll-Rand, however will not recommend their product for use as "Man-Rider" without a Factor of Safety of 10.0. In order to achieve the higher factor of safety, it will be necessary to revise the traveler scaffold design and double the number of motorized trolleys on the outer rail. This will require the purchase of four (4) additional motor trolleys and have the previously purchased motor and brake trolleys refurbished and recertified for use as "Man-Rider" trolleys. Design modifications will be required to connect the additional trolley motors to the traveler platform. Sub-Section "Products" of Section 10-1.05 "Traveler Scaffold Mechanical" of the Special Provisions will be revised to call out the correct Factor of Safety and the correct motor and brake trolleys and the associated controls, and Sub-Section "Marine Grade Epoxy Finish" will be revised to show the use of the standard Ingersoll-Rand paint specification.

For this work, the Contractor will be paid an agreed lump sum amount of $230,800.00. This agreed lump sum constitutes full compensation, including all markups. The method of payment for this work is Extra Work at Agreed Lump Sum. This contract change order will result in a cost increase of $230,800.00 to the project, which can be financed from the contingency funds. A complete cost analysis is on file with the project records.

Mr. Pete Siegenthaler, SFOBB Construction Manager, Toll Bridge Construction, concurs with this change. A copy of the concurrence signed by Mr. Siegenthaler on September 12, 2006 is attached.

Prior Approval was obtained from Ms. Nancy Bobb, FHWA Bay Bridge Project Manager, via electronic message on November 7, 2006. A printed copy of the prior approval provided by Ms. Bobb is attached.

Mr. Ken Terpstra , SFOBB Toll Bridge Project Manager, provided concurrence on November 21, 2006. A copy of the concurrence provided by Mr. Terpstra is attached.

Design concurrence was provided by Mr. Hasan El-Natur, Senior Bridge Engineer, on January 9, 2006, as indicated by his signature on the revised contract plan sheets.

Concurrence from Maintenance was obtained from Mr. Kenneth Brown, Structure Maintenance and Investigation, on January 10, 2007. A copy of the concurrence provided by Maintenance is attached.

Authorization to proceed with this change order was issued by Headquarters on October 26, 2006.

No time adjustment is warranted for this change order as it does not affect the controlling operation.

ADA Notice: For individuals with sensory disabilities, this document is available in alternate formats. For information call: (916) 654-6410 or TDD (916) 654-3880 or write Records and Forms Management, 1120 N Street, MS-89, Sacramento, CA 95814.

RECEIVED
062811 JUL 18

CONCURRED BY:			
Construction Engineer:	for Douglas Coe KB	Date	4-16-07
Bridge Engineer:	for Douglas Coe KB	Date	4-16-07
Project Engineer:		Date	
Project Manager:		Date	
FHWA Rep.:	Nancy Bobb	Date	11/7/06
Environmental:		Date	
Other (specify):	Kenneth Brown, Maintenance	Date	1/10/07
Other (specify):	Hasan El-Natur, Design	Date	1/9/06
District Prior Approval By:	Peter Siegenthaler	Date	9/12/06
HQ (Issue Approve) By:	Ken Darby	Date	10/26/06
Resident Engineer's Signature: Kam Balen		Date	4-16-07

ESTIMATE OF COST

	THIS REQUEST	TOTAL TO DATE
ITEMS	$0.00	$0.00
FORCE ACCOUNT	$0.00	$0.00
AGREED PRICE	$230,800.00	$230,800.00
ADJUSTMENT	$0.00	$0.00
TOTAL	$230,800.00	$230,800.00

FEDERAL PARTICIPATION

☑ PARTICIPATING ☐ PARTICIPATING IN PART ☐ NONE
☐ NON-PARTICIPATING (MAINTENANCE) ☐ NON-PARTICIPATING

FEDERAL SEGREGATION (if more than one Funding Source or P.I.P. type)
☑ CCO FUNDED PER CONTRACT ☐ CCO FUNDED AS FOLLOWS

FEDERAL FUNDING SOURCE	PERCENT

ADA Notice: For individuals with sensory disabilities, this document is available in alternate formats. For information call: (916) 654-6410 or TDD (916) 654-3880 or write Records and Forms Management, 1120 N Street, MS-89, Sacramento, CA 95814.

CONTRACT CHANGE ORDER

Change Requested by: Engineer

CCO: 178	Suppl. No. 1	Contract No. 04 - 012024	Road 04-SF,Ala-80-13.9/14.3,0.0/1.6	FED. AID LOC.: ACIM-080-1(085)8N

To: **KIEWIT / FCI / MANSON a JV**

You are directed to make the following changes from the plans and specifications or do the following described work not included in the plans and specifications for this contract. ***NOTE: This change order is not effective until approved by the Engineer.***

Description of work to be done, estimate of quantities and prices to be paid. (Segregate between additional work at contract price, agreed price and force account.) Unless otherwise stated, rates for rental of equipment cover only such time as equipment is actually used and no allowance will be made for idle time. This last percentage shown is the net accumulated increase or decrease from the original

Delete the sentence "Plywood decking shall be painted on all sides.", of Sub-section "Decking" in Section 10-1.49 "TRAVELER SCAFFOLDS" of the Special Provisions.

Extra Work at Lump Sum:

Fabricate and install access ladders on the traveler scaffolds as shown on revised contract plan sheet 903R3, 905R3, 909R3, and added contract plan sheet 909A of 978 (pages 2 through 5 of this change order). Install the traveler plywood decking per revised Special Provisions Section 10-1.49 "TRAVELER SCAFFOLDS" sub-section "Decking", and fabricate four (4) new, Type 2 steamboat jacks as shown on the attached drawing (page 6 of 6 of this change order), for the SFOBB East Span Skyway, Bridge No. 34-0006R.

Provide payment for traveler platform jumper rail changes, as shown on the revised contract plan sheets submitted with Contract Change Order No. 178 Supplement 0, executed on June 28, 2007, for the SFOBB East Span Skyway, Bridge No. 34-0006R.

For this work, the Contractor agrees to accept an agreed lump sum amount of $56,060.53. This agreed lump sum constitutes full compensation for all costs, including markups, all direct and indirect costs, all associated project impacts, and all overhead costs.

Extra Work at Agreed Lump Sum $56,060.53

Estimated Cost: Increase ☑ Decrease ☐ **$56,060.53**

By reason of this order the time of completion will be adjusted as follows: 0 days

Submitted by

Signature	Resident Engineer DOUG COE, Supervising Br. Eng.	Date 10-26-07

Approval Recommended by

Signature	Construction Engineer DOUG COE	Date 10-26-07

Engineer Approval by

Signature	Construction Manager PETER SIEGENTHALER	Date 11-14-07

We the undersigned contractor, have given careful consideration to the change proposed and agree, if this proposal is approved, that we will provide all equipment, furnish the materials, except as may otherwise be noted above, and perform all services necessary for the work above specified, and will accept as full payment therefor the prices shown above.

NOTE: If you, the contractor, do not sign acceptance of this order, your attention is directed to the requirements of the specifications as to proceeding with the ordered work and filing a written protest within the time therein specified.

Contractor Acceptance by

Signature	(Print name and title) Lee Zink Proj. Director	Date 11/6/07

STATE OF CALIFORNIA - DEPARTMENT OF TRANSPORTATION

CONTRACT CHANGE ORDER MEMORANDUM

TO: PETER SIEGENTHALER / DOUG COE, Supervising Br. Eng.

FROM: DOUG COE, Supervising Br. Eng.

FILE: **E.A.** 04 - 012024
CO-RTE-PM 04-SF,Ala-80-13.9/14.3,0.0/1.6
FED. NO. ACIM-080-1(085)8N

CCO# **178** SUPPLEMENT#: **1** Category Cod **CHPA**

CONTINGENCY BALANCE (incl. this change **$4,585,729.57**

COST: **$56,060.53** INCREASE ☑ DECREASE ☐

HEADQUARTERS APPROVAL REQUIRED? ☑ YES ☐ NO

SUPPLEMENTAL FUNDS PROVIDED: **$0.00**

IS THIS REQUEST IN ACCORDANCE WITH ENVIRONMENTAL DOCUMENTS? ☑ YES ☐ NO

CCO DESCRIPTION:
Traveler Modifications

PROJECT DESCRIPTION:
REPLACE SFOBB EAST SPAN

Original Contract Time:	Time Adj. This Change:	Previously Approved CCO Time Adjustments:	Percentage Time Adjusted: (including this change)	Total # of Unreconciled Deferred Time CCO(s): (including this change)
1000 Day(s)	**0** Day(s)	**424** Day(s)	**42** %	**2**

THIS CHANGE ORDER PROVIDES FOR:

1) Deleting the sentence "Plywood decking shall be painted on all sides.", of Sub-section "Decking" in Section 10-1.49 "TRAVELER SCAFFOLDS" of the Special Provisions.

2) Fabricating and installing an access ladder on the traveler scaffolds as shown on revised contract plan sheet 903R3, 905R3, 909R3, and added contract plan sheet 909A of 978 (pages 2 through 5 of the change order). Installing the traveler plywood decking per revised Special Provisions Section 10-1.49 "TRAVELER SCAFFOLDS" sub-section "Decking", and fabricating four (4) new Type 2 steamboat jacks as shown on the attached drawing (page 6 of 6 of the change order), for the SFOBB East Span Skyway, Bridge No. 34-0006R.

3) A payment method for traveler platform jumper rail changes, made as part of CCO No. 178 Supplement 0 for the SFOBB East Span Skyway, Bridge No. 34-0006R.

The original traveler did not prevent unauthorized access to the travelers. Due to security reasons resulting from the events of 9/11, the original contract plan traveler access ladders were deleted from the contract as part of Contract Change Order No. 20. To provide maintenance access to the traveler and to prevent unauthorized access, the revised design will need to be incorporated in the fabrication of the traveler platform.

OSHA Regulations Standards-29 CFR, General requirements 1926.451(b)(9) and CAL/OSHA California Code of Regulations, Title 8, Section 1637. General Requirements, Sub-section (v), require that wood platforms are not covered with opaque finishes. Therefore, the Special Provisions sentence requiring that the decking be painted will need to be eliminated.

The per contract plan fabricated Type 2 steamboat jacks do not provide for enough stroke after insertion of the split pin. To provide for the required amount of stroke the screw length will need to be increased, the nut length will need to be modified, and the barrel length will need to be shortened from what is shown on the original contract plans without revising the overall extended and retracted lengths.

Revisions to the traveler platform jumper rails were included in contract change order 178 supplement 0, although compensation was not.

For this work, the Contractor will be paid an agreed lump sum amount of $56,060.53. This agreed lump sum constitutes full compensation, including all markups. The method of payment for this work is Extra Work at Agreed Lump Sum. This contract change order will result in a cost increase of $56,060.53 to the project, which can be financed from the contingency funds. A complete cost analysis is on file with the project records.

Mr. Mike Forner, Supervising Transportation Engineer, concurred on behalf of Mr. Pete Siegenthaler, SFOBB Construction Manager, Toll Bridge Construction, with this change. A copy of the concurrence signed by Mr. Forner for Mr. Siegenthaler on July 25, 2007 is attached.

Prior Approval was obtained from Ms. Nancy Bobb, FHWA Bay Bridge Project Manager, via electronic message on September 10, 2007. A printed copy of the prior approval provided by Ms. Bobb is attached.

Mr. Ken Terpstra , SFOBB Toll Bridge Project Manager, provided concurrence on October 6, 2007. A copy of the

ADA Notice: For individuals with sensory disabilities, this document is available in alternate formats. For information call: (916) 654-6410 or TDD (916) 654-3880 or write Records and Forms Management, 1120 N Street, MS-89, Sacramento, CA 95814.

concurrence provided by Mr. Terpstra is attached.

Design concurrence was provided by Mr. Hasan El-Natur, Senior Bridge Engineer, on February 5, 2007, as indicated by his signature on the revised contract plan sheets.

Concurrence from Maintenance was obtained from Mr. Mike Gulli, Rigging Engineer, on October 18, 2007. A copy of the concurrence provided by Maintenance is attached.

Authorization to proceed with this change order was issued by Headquarters on August 21, 2007.

No time adjustment is warranted for this change order as it does not affect the controlling operation.

CONCURRED BY:			
Construction Engineer:	Douglas Coe DBC	Date	10-26-07
Bridge Engineer:	Douglas Coe DBC	Date	10-26-07
Project Engineer:	Hasan El-Natur	Date	2/5/07
Project Manager:	Ken Terpstra	Date	10/6/07
FHWA Rep.:	Nancy Bobb	Date	9/10/07
Environmental:		Date	
Other (specify):	Hasan El-Natur, Design	Date	2/5/07
Other (specify):		Date	
District Prior Approval By:		Date	
HQ (Issue Approve) By:	Ken Darby	Date	
Resident Engineer's Signature:		Date	10-26-07

ESTIMATE OF COST

	THIS REQUEST	TOTAL TO DATE
ITEMS	$0.00	$0.00
FORCE ACCOUNT	$0.00	$0.00
AGREED PRICE	$56,060.53	$286,860.53
ADJUSTMENT	$0.00	$0.00
TOTAL	$56,060.53	$286,860.53

FEDERAL PARTICIPATION

☑ PARTICIPATING ☐ PARTICIPATING IN PART ☐ NONE
☐ NON-PARTICIPATING (MAINTENANCE) ☐ NON-PARTICIPATING

FEDERAL SEGREGATION (if more than one Funding Source or P.I.P. type)
☑ CCO FUNDED PER CONTRACT ☐ CCO FUNDED AS FOLLOWS

FEDERAL FUNDING SOURCE	PERCENT

ADA Notice: For individuals with sensory disabilities, this document is available in alternate formats. For information call: (916) 654-6410 or TDD (916) 654-3880 or write Records and Forms Management, 1120 N Street, MS-89, Sacramento, CA 95814.

STATE OF CALIFORNIA - DEPARTMENT OF TRANSPORTATION

CONTRACT CHANGE ORDER

Change Requested by: Engineer

CCO: 179	Suppl. No. 0	Contract No. 04 - 012024	Road 04-SF,Ala-80-13.9/14.3,0.0/1.6	FED. AID LOC.: ACIM-080-1 (085)8N

To: KIEWIT / FCI / MANSON a JV

You are directed to make the following changes from the plans and specifications or do the following described work not included in the plans and specifications for this contract. ***NOTE: This change order is not effective until approved by the Engineer.***

Description of work to be done, estimate of quantities and prices to be paid (Segregate between additional work at contract price, agreed price and force account.) Unless otherwise stated, rates for rental of equipment cover only such time as equipment is actually used and no allowance will be made for idle time. This last percentage shown is the net accumulated increase or decrease from the original

Adjustment of Compensation at Lump Sum:

As authorized by the Engineer, purchase and deliver additional plate material, 36 flat plates, each 2.4m wide by 7.1m long by 100mm thick, of HPS 70W steel needed for the fabrication of the AE and AW Hinge Pipe Beams for the SFOBB East Span Skyway, Bridge No. 34-0006L/R project to the hinge pipe beam fabricator's facility.

Full compensation for all costs, including markups, all direct and indirect costs, all associated project impacts, and all overhead costs are included in the lump sum payment of CCO No. 200 and no further payment will be made as a result of this CCO.

Estimated Cost: Increase ☐ Decrease ☐

By reason of this order the time of completion will be adjusted as follows: 0 days

Submitted by

Signature	Resident Engineer: DOUG COE, Supervising Br. Eng.	Date 8-24-06

Approval Recommended by

Signature	Construction Engineer: DOUG COE, Supervising Br. Eng.	Date 8-24-06

Engineer Approval by

Signature	(Print name and title) PETER SIEGENTHALER - Chief	Date

We the undersigned contractor, have given careful consideration to the change proposed and agree, if this proposal is approved, that we will provide all equipment, furnish the materials, except as may otherwise be noted above, and perform all services necessary for the work above specified, and will accept as full payment therefor the prices shown above.

NOTE: If you, the contractor, do not sign acceptance of this order, your attention is directed to the requirements of the specifications as to proceeding with the ordered work and filing a written protest within the time therein specified.

Contractor Acceptance by

Signature	(Print name and title) Lee Zink, Project Director	Date 9/5/06

STATE OF CALIFORNIA - DEPARTMENT OF TRANSPORTATION

CONTRACT CHANGE ORDER MEMORANDUM

TO: PETER SIEGENTHALER / DOUG COE, Supervising Br. Eng	FILE: E.A. 04 - 012024
	CO-RTE-PM 04-SF,Ala-80-13.9/14.3,0.0/1.6
FROM: DOUG COE, Supervising Br. Eng.	FED. NO. ACIM-080-1(085)8N
CCO# 179 SUPPLEMENT#: 0 Category Cod AXZZ	CONTINGENCY BALANCE (incl. this change
COST: INCREASE ☐ DECREASE ☐	HEADQUARTERS APPROVAL REQUIRED? ☑ YES ☐ NO
SUPPLEMENTAL FUNDS PROVIDED: $0.00	IS THIS REQUEST IN ACCORDANCE WITH ENVIRONMENTAL DOCUMENTS? ☑ YES ☐ NO
CCO DESCRIPTION: Steel for Hinge Pipe Beams	**PROJECT DESCRIPTION:** REPLACE SFOBB EAST SPAN

LOCATION: IN SAN FRANCISCO AND ALAMEDA COUNTIES IN SAN FRANCISCO AND OAKLAND FROM 1.3 KM EAST OF THE YERBA BUENA ISL

THIS CHANGE ORDER PROVIDES FOR:

the purchase and delivery of 36 flat plates, each 2.4m wide by 7.1m long by 100mm thick, of HPS 70W steel needed for the fabrication of the AE and AW Hinge Pipe Beams to the hinge pipe beam fabricator's facility.

The fabrication of the Hinge Pipe Beams encountered excessive welding repairs due to cracking in the longitudinal seam welds caused by the need to re-roll the material from a "D-shaped" can into the appropriate roundness to meet the specifications. The weld repairs extended the fabrication process, which in turn affected the overall progress schedule. To prevent forming of "D-shaped" cans the material needs to be pre-formed which requires additional length. The Engineer, and the Contractor, determined it to be advantageous to the overall project to substitute the longer AE and AW plates for the BE and CE beams thereby preventing the "D-shaped" can. Although this change in procedure substantially lessened the weld repairs and thereby the duration to fabricate the hinge pipe beams, it does require replacement of the AE and AW plates. Additionally, destructive testing and experimentation ordered in CCO No.160, to determine the cause of the weld failures, rendered several additional plates unusable. To complete fabrication, the fabricator is in need of 36 flat plates with sufficient length to allow for pre-forming of the cans for the AE and AW hinge pipe beams. Additional length is also required to allow for check samples.

Although the plates designated for the BE and CE beams are no longer usable for fabrication of the hinge pipe beams they do represent a salvage value. The Engineer and the Contractor have agreed on a salvage value of $35,700.00, for all of the material being replaced by this change order. This amount has been credited to the agreed to lump sum amount of this change order.

The DRB rendered an adverse ruling of the Hinge Pipe Beam welding issue against the State, but the State has not accepted responsibility for the weld failure at this time. But in the interest of proceeding with the fabrication of the hinge pipe beams and advancing the project it is advisable to compensate the contractor for the purchase of the additional plates.

The agreed compensation for this contract change order is included in the lump sum compensation portion of resolution CCO No. 200. For this purchase, the Contractor will be compensated an agreed lump sum amount of $951,563.00.

A detailed force account analysis prepared by the Engineer for the cost of this change order is on file in the project records.

Mr. Pete Siegenthaler, SFOBB Construction Manager, Toll Bridge Construction, concurs with this change. A copy of the concurrence signed by Mr. Siegenthaler on March 28, 2006 is attached.

Although the FHWA granted approval to proceed, Federal participation can not be granted. A copy of the prior approval provided by Ms. Nancy Bobb, FHWA Bay Bridge Project Manager on May 24, 2006, is attached.

Mr. Ken Terpstra , SFOBB Toll Bridge Project Manager, provided concurrence on July 6, 2006. A copy of the concurrence provided by Mr. Terpstra is attached.

Design concurrence is not required for this change order as it does not modify the design.

Concurrence from Maintenance is not required, as this change order does not affect maintenance facilities or operations.

No time adjustment is warranted for this change as it does not affect the controlling operation.

CONCURRED BY:

Construction Engineer:	Douglas Coe	Date 8-24-06
Bridge Engineer:	Douglas Coe	Date 8-24-06
FHWA Representative:	Nancy Bobb	Date5/24/2006
Project Engineer:		Date
Other (specify): Ken Terpstra, SFOBB Project Manager		Date 7/6/2006
		Date
		Date
District Prior Approval By:		Date
HQ (Issue Approve) By:	Ken Darby	Date
Resident Engineer's Signature:		Date 8-24-06

ESTIMATE OF COST

	THIS REQUEST	TOTAL TO DATE
ITEMS	$0.00	$0.00
FORCE ACCOUNT	$0.00	$0.00
AGREED PRICE	$0.00	$0.00
ADJUSTMENT		
TOTAL		

FEDERAL PARTICIPATION

☐ PARTICIPATING ☐ PARTICIPATING IN PART ☐ NONE
☐ NON-PARTICIPATING (MAINTENANCE) ☑ NON-PARTICIPATING

FEDERAL SEGREGATION (if more than one Funding Source or P.I.P. type)
☑ CCO FUNDED PER CONTRACT ☐ CCO FUNDED AS FOLLOWS

FEDERAL FUNDING SOURCE	PERCENT

STATE OF CALIFORNIA - DEPARTMENT OF TRANSPORTATION

CONTRACT CHANGE ORDER

Change Requested by: Engineer

CCO: 180	Suppl. No. 0	Contract No. 04 - 012024	Road 04-SF,Ala-80-13.9/14.3,0.0/1.6	FED. AID LOC.: ACIM-080-1(085)8N

To: **KIEWIT / FCI / MANSON a JV**

You are directed to make the following changes from the plans and specifications or do the following described work not included in the plans and specifications for this contract. ***NOTE: This change order is not effective until approved by the Engineer.***

Description of work to be done, estimate of quantities and prices to be paid. (Segregate between additional work at contract price, agreed price and force account.) Unless otherwise stated, rates for rental of equipment cover only such time as equipment is actually used and no allowance will be made for idle time. This last percentage shown is the net accumulated increase or decrease from the original

Extra Work at Lump Sum:

As authorized by the Engineer, trim the two (2) existing pipe restrainer brackets at Hinge DE, the two (2) existing pipe restrainer brackets at Hinge DW, in order to negate the interference between the hinge pipe restrainer brackets and the future tendon blisters, and prime coat the trimmed areas on the SFOBB East Span Skyway, Bridge No. 34-0006L/R project

For this work, the Contractor agrees to accept an agreed lump sum amount of $15,161.00. This agreed lump sum constitutes full compensation for all costs, including markups, all direct and indirect costs, all associated project impacts, and all overhead costs.

Extra Work at Agreed Lump Sum $15,161.00

Estimated Cost: Increase ☑ Decrease ☐ **$15,161.00**

By reason of this order the time of completion will be adjusted as follows: 0 days

Submitted by

Signature	Resident Engineer DOUG COE, Supervising Br. Eng.	Date 4-23-07

Approval Recommended by

Signature	Construction Engineer DOUG COE	Date 4-23-07

Engineer Approval by

Signature	Construction Manager PETER SIEGENTHALER	Date 6-26-07

We the undersigned contractor, have given careful consideration to the change proposed and agree, if this proposal is approved, that we will provide all equipment, furnish the materials, except as may otherwise be noted above, and perform all services necessary for the work above specified, and will accept as full payment therefor the prices shown above.

NOTE: If you, the contractor, do not sign acceptance of this order, your attention is directed to the requirements of the specifications as to proceeding with the ordered work and filing a written protest within the time therein specified.

Contractor Acceptance by

Signature	(Print name and title) Lee Zink Project Director	Date 6/14/07

STATE OF CALIFORNIA - DEPARTMENT OF TRANSPORTATION

CONTRACT CHANGE ORDER MEMORANDUM

DATE: 4/23/2007 Page 1 of 1

TO: PETER SIEGENTHALER / DOUG COE, Supervising Br. Eng.	FILE: E.A. 04 - 012024
FROM: DOUG COE, Supervising Br. Eng.	CO-RTE-PM 04-SF,Ala-80-13.9/14.3,0.0/1.6
	FED. NO. ACIM-080-1(085)8N
CCO# **180** SUPPLEMENT#: **0** Category Cod **CHPA**	CONTINGENCY BALANCE (incl. this change **$5,724,409.61**
COST: **$15,161.00** INCREASE ☑ DECREASE ☐	HEADQUARTERS APPROVAL REQUIRED? ☐ YES ☑ NO
SUPPLEMENTAL FUNDS PROVIDED: **$0.00**	IS THIS REQUEST IN ACCORDANCE WITH ENVIRONMENTAL DOCUMENTS? ☑ YES ☐ NO
CCO DESCRIPTION: Hinge Pipe Beam Restrainer Bracket	**PROJECT DESCRIPTION:** REPLACE SFOBB EAST SPAN

Original Contract Time:	Time Adj. This Change:	Previously Approved CCO Time Adjustments:	Percentage Time Adjusted: (including this change)	Total # of Unreconciled Deferred Time CCO(s): (including this change)
1000 Day(s)	**0** Day(s)	**424** Day(s)	**42** %	**0**

THIS CHANGE ORDER PROVIDES FOR:

Trimming the two (2) existing hinge pipe beam restrainer brackets at Hinge DE and at Hinge DW, and prime coating the trimmed areas.

There is an interference between the hinge pipe restrainer brackets at Hinges DE and DW and the future tendon blisters. In order to provide installation clearance for the brackets, the restrainer bracket must be trimmed.

For this extra work, the Contractor will be paid an agreed lump sum amount of $15,161.00. This agreed lump sum constitutes full compensation, including all markups. The method of payment for this work is Extra Work at Agreed Lump Sum. This contract change order will result in a cost increase of $15,161.00 to the project, which can be financed from the contingency funds. A complete cost analysis is on file with the project records.

Prior approval was obtained from Mr. David Salladay, East Span Skyway District Representative, on March 30, 2006. A copy of the prior approval is attached.

FHWA Prior approval is not required as this is a minor change order.

Design concurrence was provided by the designer, Mr. Philip Lang of T.Y. LIN, response to RFI 1639R1. A copy of the response is attached.

Concurrence from Maintenance was obtained from Mr. Kenneth Brown, Chief Structure Maintenance and Investigations, on April 17, 2006. A copy of the concurrence received from Maintenance is attached.

No time adjustment is warranted for this change as it does not affect the controlling operation.

CONCURRED BY:

Construction Engineer:	Douglas Coe DJC	Date 4-23-07
Bridge Engineer:	Douglas Coe DJC	Date 4-23-07
Project Engineer:		Date
Project Manager:		Date
FHWA Rep.:		Date
Environmental:		Date
Other (specify):		Date
Other (specify):		Date
District Prior Approval By:	David Salladay	Date 3/30/06
HQ (Issue Approve) By:		Date
Resident Engineer's Signature:		Date 4-23-07

ESTIMATE OF COST

	THIS REQUEST	TOTAL TO DATE
ITEMS	$0.00	$0.00
FORCE ACCOUNT	$0.00	$0.00
AGREED PRICE	$15,161.00	$15,161.00
ADJUSTMENT	$0.00	$0.00
TOTAL	$15,161.00	$15,161.00

FEDERAL PARTICIPATION

☑ PARTICIPATING ☐ PARTICIPATING IN PART ☐ NONE
☐ NON-PARTICIPATING (MAINTENANCE) ☐ NON-PARTICIPATING

FEDERAL SEGREGATION (if more than one Funding Source or P.I.P. type)
☑ CCO FUNDED PER CONTRACT ☐ CCO FUNDED AS FOLLOWS

FEDERAL FUNDING SOURCE	PERCENT

ADA Notice: For individuals with sensory disabilities, this document is available in alternate formats. For information call: (916) 654-6410 or TDD (916) 654-3880 or write Records and Forms Management, 1120 N Street, MS-89, Sacramento, CA 95814.

STATE OF CALIFORNIA - DEPARTMENT OF TRANSPORTATION

CONTRACT CHANGE ORDER

Change Requested by: Engineer

CCO: 181	Suppl. No. 0	Contract No. 04 - 012024	Road 04-SF,Ala-80-13.9/14.3,0.0/1.6	FED. AID LOC.: ACIM-080-1(085)8N

To: **KIEWIT / FCI / MANSON a JV**

You are directed to make the following changes from the plans and specifications or do the following described work not included in the plans and specifications for this contract. ***NOTE: This change order is not effective until approved by the Engineer.***

Description of work to be done, estimate of quantities and prices to be paid. (Segregate between additional work at contract price, agreed price and force account.) Unless otherwise stated, rates for rental of equipment cover only such time as equipment is actually used and no allowance will be made for idle time. This last percentage shown is the net accumulated increase or decrease from the original

Extra Work at Lump Sum:

Fabricate the belvedere light standards as shown on contract plan sheet 895R1 of 978, which are plumb in the longitudinal and transverse direction, for the SFOBB East Span Skyway, Bridge No. 34-0006R.

For this work, the Contractor will be compensated a lump sum amount of $94,696.00. This lump sum constitutes full compensation for all costs, including markups, all direct and indirect costs, all associated project impacts, and all overhead costs.

Extra Work at Agreed Lump Sum $94,696.00

Estimated Cost: Increase ☑ Decrease ☐ **$94,696.00**

By reason of this order the time of completion will be adjusted as follows: 0 days

Submitted by		
Signature	Resident Engineer DOUG COE, Supervising Br. Eng.	Date 9-20-07
Approval Recommended by		
Signature	Construction Engineer DOUG COE	Date 9-20-07
Engineer Approval by		
Signature	Construction Manager PETER SIEGENTHALER	Date 11/2/07

We the undersigned contractor, have given careful consideration to the change proposed and agree, if this proposal is approved, that we will provide all equipment, furnish the materials, except as may otherwise be noted above, and perform all services necessary for the work above specified, and will accept as full payment therefor the prices shown above.

NOTE: If you, the contractor, do not sign acceptance of this order, your attention is directed to the requirements of the specifications as to proceeding with the ordered work and filing a written protest within the time therein specified.

Contractor Acceptance by		
Signature	(Print name and title) Lee Zank Proj. Director	Date 10/12/07

STATE OF CALIFORNIA - DEPARTMENT OF TRANSPORTATION

CONTRACT CHANGE ORDER MEMORANDUM

TO: PETER SIEGENTHALER / DOUG COE, Supervising Br. Eng.	FILE: E.A. 04 - 012024
FROM: DOUG COE, Supervising Br. Eng.	CO-RTE-PM 04-SF,Ala-80-13.9/14.3,0.0/1.6
	FED. NO. ACIM-080-1(085)8N
CCO# 181 SUPPLEMENT#: 0 Category Cod AWZZ	CONTINGENCY BALANCE (incl. this change $3,522,997.12
COST: $94,696.00 INCREASE ☑ DECREASE ☐	HEADQUARTERS APPROVAL REQUIRED? ☐ YES ☑ NO
SUPPLEMENTAL FUNDS PROVIDED: $0.00	IS THIS REQUEST IN ACCORDANCE WITH ENVIRONMENTAL DOCUMENTS? ☑ YES ☐ NO
CCO DESCRIPTION: Belvedere Light Post Standards	**PROJECT DESCRIPTION:** REPLACE SFOBB EAST SPAN

Original Contract Time:	Time Adj. This Change:	Previously Approved CCO Time Adjustments:	Percentage Time Adjusted: (including this change)	Total # of Unreconciled Deferred Time CCO(s): (including this change)
1000 Day(s)	0 Day(s)	424 Day(s)	42 %	0

THIS CHANGE ORDER PROVIDES FOR:

Fabricating the belvedere light standards shown on contract plan sheet 895R1 of 978 plumb in the longitudinal and transverse direction for the SFOBB East Span Skyway, Bridge No. 34-0006R.

Previously approved shop drawings for the belvedere bike path sections show that the belvedere light standards are plumb in the transverse plane and normal in the longitudinal plane. The Engineer previously approved the shop drawings for fabrication because the bike path incline is only 1.381% to 1.950%, which is less than the Carquinez Bridge approved shop drawings that were also normal in the longitudinal plane. However the bridge architect wants the light standards to be plumb in the longitudinal plane as well as the transverse plane. Therefore, to correct the Engineer's error revisions to the working drawings and modifications to the light standards will be necessary.

The Skyway contract includes five (5) belvedere bike path sections with four (4) light standards on each belvedere. Revised working drawings will need to be developed for each individual belvedere since the incline angle is not consistent.

For this work, the Contractor will be paid a lump sum amount of $94,696.00. This lump sum amount constitutes full compensation, including all markups. The method of payment for this work is Extra Work at Lump Sum, which can be financed from the contingency funds. A complete cost analysis is on file with the project records.

Prior approval was obtained from Mr. Doug Coe, Supervising Project Engineer, on December 8, 2006.

FHWA Prior Approval is not required as this is a minor change order.

Concurrence from Maintenance is not required as this change order does not use maintenance funds or affect maintenance facilities or operations.

Concurrence from Design is not required as this change order does not change the design.

No time adjustment is warranted for this change order as it does not affect the controlling operation.

ADA Notice: For individuals with sensory disabilities, this document is available in alternate formats. For information call: (916) 654-6410 or TDD (916) 654-3880 or write Records and Forms Management, 1120 N Street, MS-89, Sacramento, CA 95814.

CONCURRED BY:			
Construction Engineer:	Douglas Coe	DBC	Date 8-20-07
Bridge Engineer:	Douglas Coe	DBC	Date 8-20-07
Project Engineer:			Date
Project Manager:			Date
FHWA Rep.:			Date
Environmental:			Date
Other (specify):			Date
Other (specify):			Date
District Prior Approval By:	Douglas Coe		Date 12/8/06
HQ (Issue Approve) By:			Date
Resident Engineer's Signature:			Date 9-20-07

ESTIMATE OF COST

	THIS REQUEST	TOTAL TO DATE
ITEMS	$0.00	$0.00
FORCE ACCOUNT	$0.00	$0.00
AGREED PRICE	$94,696.00	$94,696.00
ADJUSTMENT	$0.00	$0.00
TOTAL	$94,696.00	$94,696.00

FEDERAL PARTICIPATION

☑ PARTICIPATING ☐ PARTICIPATING IN PART ☐ NONE
☐ NON-PARTICIPATING (MAINTENANCE) ☐ NON-PARTICIPATING

FEDERAL SEGREGATION (if more than one Funding Source or P.I.P. type)
☑ CCO FUNDED PER CONTRACT ☐ CCO FUNDED AS FOLLOWS

FEDERAL FUNDING SOURCE	PERCENT

ADA Notice: For individuals with sensory disabilities, this document is available in alternate formats. For information call: (916) 654-6410 or TDD (916) 654-3880 or write Records and Forms Management, 1120 N Street, MS-89, Sacramento, CA 95814.

CONTRACT CHANGE ORDER

Change Requested by: Engineer

CCO 182	Suppl. No. 0	Contract No. 04 - 012024	Road 04-SF,Ala-80-13.9/14.3,0.0/1.6	FED. AID LOC.: ACIM-080-1(085)8N

To: **KIEWIT / FCI / MANSON a JV**

You are directed to make the following changes from the plans and specifications or do the following described work not included in the plans and specifications for this contract. ***NOTE: This change order is not effective until approved by the Engineer.***

Description of work to be done, estimate of quantities and prices to be paid. (Segregate between additional work at contract price, agreed price and force account.) Unless otherwise stated, rates for rental of equipment cover only such time as equipment is actually used and no allowance will be made for idle time. This last percentage shown is the net accumulated increase or decrease from the original quantity in the Engineer's Estimate.

Adjustment of Compensation at Lump Sum:

Revise Section 5-1.37 "INDEMNIFICATION," of the Special Provisions, by adding the following three paragraphs:

1. Contractor's liability policies shall be required to name T.Y. Lin International / Moffatt & Nichol Engineers, a Joint Venture, their respective affiliates, parent or affiliated corporations, directors, officers, partners, representatives, employees, consultants, subconsultants and agents, as additional insureds to the extent that the State is named as an additional insured under the Standard Specifications and these Special Provisions with respect to the liability arising from the activities of the Contractor.

2. Certificates of insurance shall provide thirty (30) days advance written notice of cancellation or nonrenewal and shall clearly specify the Contractor's contract number under which services are provided to the State and the name of the project.

3. Certificates of insurance and endorsements as required herein shall be provided by Contractor's insurers to the following address:

T.Y.Lin International / Moffatt & Nichol Engineers, A Joint Venture
c/o Dealey, Renton, & Associates
P.O.Box 12675
Oakland, CA 94604-2675
Attn: Julie Nelson

Adjustment of Compensation at Lump Sum $0.00

Estimated Cost: Increase ☐ **Decrease** ☐ **$0.00**

By reason of this order the time of completion will be adjusted as follows: 0 days

Submitted by

Signature	Resident Engineer: DOUG COE, Supervising Br. Eng.	Date 7-31-06

Approval Recommended by

Signature	Construction Engineer: DOUG COE, Supervising Br. Eng.	Date 7-31-06

Engineer Approval by

Signature	(Print name and title) PETER SIEGENTHALER - Chief	Date

We the undersigned contractor, have given careful consideration to the change proposed and agree, if this proposal is approved, that we will provide all equipment, furnish the materials, except as may otherwise be noted above, and perform all services necessary for the work above specified, and will accept as full payment therefor the prices shown above.

NOTE: If you, the contractor, do not sign acceptance of this order, your attention is directed to the requirements of the specifications as to proceeding with the ordered work and filing a written protest within the time therein specified.

Contractor Acceptance by

Signature	(Print name and title)	Date

CONTRACT CHANGE ORDER

Change Requested by: Engineer

CCO: 183	Suppl. No. 0	Contract No. 04 - 012024	Road 04-SF,Ala-80-13.9/14.3,0.0/1.6	FED. AID LOC.: ACIM-080-1(085)8N

To: KIEWIT / FCI / MANSON a JV

You are directed to make the following changes from the plans and specifications or do the following described work not included in the plans and specifications for this contract. ***NOTE: This change order is not effective until approved by the Engineer.***

Description of work to be done, estimate of quantities and prices to be paid. (Segregate between additional work at contract price, agreed price and force account.) Unless otherwise stated, rates for rental of equipment cover only such time as equipment is actually used and no allowance will be made for idle time. This last percentage shown is the net accumulated increase or decrease from the original

Extra Work at Lump Sum:

Apply epoxy to the exposed anchor/bearing plate for the cantilever tendons at E6E/W of 6E and 6W, E10E/W of 6E and 6W and E14E/W of 4E and 4W for corrosion protection. Also, apply epoxy to the exposed anchor/bearing plate for the top span tendons at expansion joint locations (hinge segments) of the SFOBB East Span Skyway, Bridge No. 34-0006L/R Project.

Full compensation for all costs, including markups, all direct and indirect costs, all associated projects impacts, and all overhead costs are included in the lump sum payment under Contract Change Order No. 200. No further payment will be made as a result of this Change Order.

Estimated Cost: Increase ☐ Decrease ☐

By reason of this order the time of completion will be adjusted as follows: 0 days

Submitted by

Signature	Resident Engineer: DOUG COE, Supervising Br. Eng.	Date 8-24-06

Approval Recommended by

Signature	Construction Engineer: DOUG COE, Supervising Br. Eng.	Date 8-24-06

Engineer Approval by

Signature	(Print name and title) PETER SIEGENTHALER - Chief	Date

We the undersigned contractor, have given careful consideration to the change proposed and agree, if this proposal is approved, that we will provide all equipment, furnish the materials, except as may otherwise be noted above, and perform all services necessary for the work above specified, and will accept as full payment therefor the prices shown above.

NOTE: If you, the contractor, do not sign acceptance of this order, your attention is directed to the requirements of the specifications as to proceeding with the ordered work and filing a written protest within the time therein specified.

Contractor Acceptance by

Signature	(Print name and title) Lee Zink, Project Director	Date 9/5/06

STATE OF CALIFORNIA - DEPARTMENT OF TRANSPORTATION

CONTRACT CHANGE ORDER MEMORANDUM

DATE: 7/27/2006 Page 1 of 1

TO: PETER SIEGENTHALER / DOUG COE, Supervising Br. Eng.	FILE: E.A. 04 - 012024
FROM: DOUG COE, Supervising Br. Eng.	CO-RTE-PM 04-SF,Ala-80-13.9/14.3,0.0/1.6
	FED. NO. ACIM-080-1(085)8N
CCO#: 183 SUPPLEMENT#: 0 Category Code: CHPA	CONTINGENCY BALANCE (incl. this change)
COST: INCREASE ☑ DECREASE ☐	HEADQUARTERS APPROVAL REQUIRED? ☐ YES ☑ NO
SUPPLEMENTAL FUNDS PROVIDED: $0.00	IS THIS REQUEST IN ACCORDANCE WITH ENVIRONMENTAL DOCUMENTS? ☑ YES ☐ NO
CCO DESCRIPTION: Cantilever Tendons Anchorage Protection	**PROJECT DESCRIPTION:** REPLACE SFOBB EAST SPAN

LOCATION: IN SAN FRANCISCO AND ALAMEDA COUNTIES IN SAN FRANCISCO AND OAKLAND FROM 1.3 KM EAST OF THE YERBA BUENA ISL

THIS CHANGE ORDER PROVIDES FOR:

Applying epoxy to the exposed anchor/bearing plate for the cantilever tendons at E6E/W of 6E and 6W, E10E/W of 6E and 6W and E14E/W of 4E and 4W for corrosion protection. Also, applying epoxy to the exposed anchor/bearing plate for the top span tendons at expansion joint locations (hinge segments) of the SFOBB East Span Skyway, Bridge No. 34-0006L/R Project.

Engineer authorized the work due to Department caused delays to the segment erection and wants the anchorages to be protected from extended weather exposure.

The agreed compensation for this change order is included in the lump sum compensation portion of resolution CCO No. 200. For this change, the contractor will receive an agreed lump sum of $26,234.00.

A detailed force account analysis prepared by the Engineer for the cost of this change order is on file in the project records.

Prior approval was obtained from Mr. Pete Siegenthaler, SFOBB Construction Manager, Toll Bridge Construction, on July 28, 2006.

FHWA Prior approval is not required as this is a minor change order.

Concurrence from maintenance is not required because this change does not affect maintenance facilities or operations.

No adjustment of contract time is warranted, as this change does not affect the controlling operation.

CONCURRED BY:		
Construction Engineer:	Douglas Coe	Date 8-24-06
Bridge Engineer:	Douglas Coe	Date 8-24-06
FHWA Representative:		Date
Project Engineer:		Date
Other (specify):		Date
		Date
		Date
District Prior Approval By:		Date
HQ (Issue Approve) By:		Date
Resident Engineer's Signature:		Date 8-24-06

ESTIMATE OF COST

	THIS REQUEST	TOTAL TO DATE
ITEMS	$0.00	$0.00
FORCE ACCOUNT	$0.00	$0.00
AGREED PRICE ADJUSTMENT	$0.00	$0.00
TOTAL		

FEDERAL PARTICIPATION

☑ PARTICIPATING ☐ PARTICIPATING IN PART ☐ NONE
☐ NON-PARTICIPATING (MAINTENANCE) ☐ NON-PARTICIPATING

FEDERAL SEGREGATION (if more than one Funding Source or P.I.P. type)
☑ CCO FUNDED PER CONTRACT ☐ CCO FUNDED AS FOLLOWS

FEDERAL FUNDING SOURCE	PERCENT

CONTRACT CHANGE ORDER

Change Requested by: Contractor

CCO: 184	Suppl. No. 0	Contract No. 04 - 012024	Road 04-SF,Ala-80-13.9/14.3,0.0/1.6	FED. AID LOC.: ACIM-080-1(085)8N

To: KIEWIT / FCI / MANSON a JV

You are directed to make the following changes from the plans and specifications or do the following described work not included in the plans and specifications for this contract. ***NOTE: This change order is not effective until approved by the Engineer.***

Description of work to be done, estimate of quantities and prices to be paid. (Segregate between additional work at contract price, agreed price and force account.) Unless otherwise stated, rates for rental of equipment cover only such time as equipment is actually used and no allowance will be made for idle time. This last percentage shown is the net accumulated increase or decrease from the original

Adjustment of Compensation at Lump Sum:

Grout the spare ducts as authorized by the Engineer per Section 10-1.26, "PRESTRESSING CONCRETE," Subsection, "CONSTRUCTION," of the Special Provision for the SFOBB East Span Skyway, Bridge No. 34-0006L/R Project.

Full compensation for all costs, including markups, all direct and indirect costs, all associated projects impacts, and all overhead costs are included in the lump sum payment under Contract Change Order No. 200. No further payment will be made as a result of this Change Order.

Estimated Cost: Increase ☐ Decrease ☐

By reason of this order the time of completion will be adjusted as follows: 0 days

Submitted by

Signature	Resident Engineer: DOUG COE, Supervising Br. Eng.	Date 8-24-06

Approval Recommended by

Signature	Construction Engineer: DOUG COE, Supervising Br. Eng.	Date 8-24-06

Engineer Approval by

Signature	(Print name and title) PETER SIEGENTHALER - Chief	Date

We the undersigned contractor, have given careful consideration to the change proposed and agree, if this proposal is approved, that we will provide all equipment, furnish the materials, except as may otherwise be noted above, and perform all services necessary for the work above specified, and will accept as full payment therefor the prices shown above.

NOTE: If you, the contractor, do not sign acceptance of this order, your attention is directed to the requirements of the specifications as to proceeding with the ordered work and filing a written protest within the time therein specified.

Contractor Acceptance by

Signature	(Print name and title) Lee Zink, Project Director	Date 9/5/06

STATE OF CALIFORNIA - DEPARTMENT OF TRANSPORTATION

CONTRACT CHANGE ORDER MEMORANDUM

DATE: 7/28/2006 Page 1 of 1

TO: PETER SIEGENTHALER / DOUG COE, Supervising Br. Eng.	FILE: E.A. 04 - 012024
FROM: DOUG COE, Supervising Br. Eng.	CO-RTE-PM 04-SF,Ala-80-13.9/14.3,0.0/1.6
	FED. NO. ACIM-080-1(085)8N
CCO#: 184 SUPPLEMENT#: 0 Category Code: CHPA	CONTINGENCY BALANCE (incl. this change)
COST: INCREASE ☑ DECREASE ☐	HEADQUARTERS APPROVAL REQUIRED? ☐ YES ☑ NO
SUPPLEMENTAL FUNDS PROVIDED: $0.00	IS THIS REQUEST IN ACCORDANCE WITH ENVIRONMENTAL DOCUMENTS? ☑ YES ☐ NO
CCO DESCRIPTION: Spare Duct Grouting	**PROJECT DESCRIPTION:** REPLACE SFOBB EAST SPAN

LOCATION: IN SAN FRANCISCO AND ALAMEDA COUNTIES IN SAN FRANCISCO AND OAKLAND FROM 1.3 KM EAST OF THE YERBA BUENA ISL

THIS CHANGE ORDER PROVIDES FOR:

Grouting the spare ducts as authorized by the Engineer per Section 10-1.26, "PRESTRESSING CONCRETE," Subsection "CONSTRUCTION," of the Special Provision for the SFOBB East Span Skyway, Bridge No. 34-0006L/R Project.

Grouting of spare ducts and protecting spare duct anchorage with pour-backs were not addressed in Section 10-1.26, "Prestressing Concrete," sub-section "Working Drawings and Submittals," of the Special Provisions.

The agreed compensation for this change order is included in the lump sum compensation portion of resolution CCO No. 200. For this change, the contractor will receive an agreed lump sum of $178,648.00.

A detailed force account analysis prepared by the Engineer for the cost of this change order is on file in the project records.

Prior approval was obtained from Mr. Pete Siegenthaler, SFOBB Construction Manager, Toll Bridge Construction, on July 28, 2006.

FHWA Prior approval is not required as this is a minor change order.

Concurrence from maintenance is not required because this change does not affect maintenance facilities or operations.

No adjustment of contract time is warranted, as this change does not affect the controlling operation.

CONCURRED BY:		
Construction Engineer:	Douglas Coe	Date 8-24-06
Bridge Engineer:	Douglas Coe	Date 8-24-06
FHWA Representative:		Date
Project Engineer:		Date
Other (specify):		Date
		Date
		Date
District Prior Approval By:		Date
HQ (Issue. Approve) By:		Date
Resident Engineer's Signature:		Date 8-24-06

ESTIMATE OF COST

	THIS REQUEST	TOTAL TO DATE
ITEMS	$0.00	$0.00
FORCE ACCOUNT	$0.00	$0.00
AGREED PRICE	$0.00	$0.00
ADJUSTMENT		
TOTAL		

FEDERAL PARTICIPATION

☑ PARTICIPATING ☐ PARTICIPATING IN PART ☐ NONE
☐ NON-PARTICIPATING (MAINTENANCE) ☐ NON-PARTICIPATING

FEDERAL SEGREGATION (if more than one Funding Source or P.I.P. type)
☑ CCO FUNDED PER CONTRACT ☐ CCO FUNDED AS FOLLOWS

FEDERAL FUNDING SOURCE	PERCENT

CONTRACT CHANGE ORDER

Change Requested by: Engineer

CCO: 188	Suppl. No. 0	Contract No. 04 - 012024	Road 04-SF,Ala-80-13.9/14.3,0.0/1.6	FED. AID LOC.: ACIM-080-1 (085)8N

To: **KIEWIT / FCI / MANSON a JV**

You are directed to make the following changes from the plans and specifications or do the following described work not included in the plans and specifications for this contract. ***NOTE: This change order is not effective until approved by the Engineer.***

Description of work to be done, estimate of quantities and prices to be paid (Segregate between additional work at contract price, agreed price and force account.) Unless otherwise stated, rates for rental of equipment cover only such time as equipment is actually used and no allowance will be made for idle time. This last percentage shown is the net accumulated increase or decrease from the original

Adjustment of Compensation at Lump Sum:

remove the final pay quantity designation from the Engineer's Estimate, in the Special Provisions, for Item 49 "Furnish Polyester Concrete Overlay (20 MM)" and Item 51 "Furnish Polyester Concrete Overlay (13 MM)" for the SFOBB East Spa Skyway, Bridge Nos. 34-0006L/R.

In addition, modify Section 10-1.36 "POLYESTER CONCRETE OVERLAY (20MM, 13MM)", Sub-Section "CONSTRUCTION", Paragraph 15, of the Special Provisions as follows: "The surface temperature of the area to receive polyester concrete shall be the same as specified above for the prime coat. The finishing equipment used shall strike off the polyester concrete to the grade and cross section agreed to by the Engineer. Finishing equipment shall be fitted with vibrators or other means of consolidating the polyester concrete to the required compaction."

The lump sum payment for this Contract Change Order is included in CCO No. 200 and constitutes full compensation for:

1.) all deck profile grinding and preparation of bridge deck surface, including disposal of materials, water supply and SWPPP control, any and all overtime and standby costs, escalation costs, markups, all direct and indirect costs, all associated project impacts, and all overhead costs,
2.) furnishing and placing polyester concrete overlay, including all quantity overruns, wasted or unused material, any and all overtime and standby costs, escalation costs, markups, all direct and indirect costs, all associated project impacts, and all overhead costs, and
3.) all scheduling risks of this weather sensitive material, and all impact and mitigation costs caused by concurrent delayed operations.

The agreed lump sum payment of Contract Change Order No. 200 constitutes full compensation for all known issues related to Engineer's Bid Items: 19 "Prepare Bridge Deck Surface", 49 "Furnish Polyester Concrete Overlay (20 MM)", 50 "Place Polyester Concrete Overlay (20 MM)", 51 "Furnish Polyester Concrete Overlay (13 MM)", and 52 "Place Polyester Concrete Overlay (13 MM)" and no further payment will be made as a result of this CCO.

Estimated Cost: Increase ☐ Decrease ☐

By reason of this order the time of completion will be adjusted as follows: 0 days

Submitted by

Signature	Resident Engineer: DOUG COE, Supervising Br. Eng.	Date 8-24-06

Approval Recommended by

Signature	Construction Engineer: DOUG COE, Supervising Br. Eng.	Date 8-24-06

Engineer Approval by

Signature	(Print name and title) PETER SIEGENTHALER - Chief	Date

We the undersigned contractor, have given careful consideration to the change proposed and agree, if this proposal is approved, that we will provide all equipment, furnish the materials, except as may otherwise be noted above, and perform all services necessary for the work above specified, and will accept as full payment therefor the prices shown above.

NOTE: If you, the contractor, do not sign acceptance of this order, your attention is directed to the requirements of the specifications as to proceeding with the ordered work and filing a written protest within the time therein specified.

Contractor Acceptance by

Signature	(Print name and title) Lee Zink, Project Director	Date 9/5/06

STATE OF CALIFORNIA - DEPARTMENT OF TRANSPORTATION

CONTRACT CHANGE ORDER MEMORANDUM

TO: PETER SIEGENTHALER / PETER SIEGENTHALER	FILE: E.A. 04 - 012024
	CO-RTE-PM 04-SF,Ala-80-13.9/14.3,0.0/1.6
FROM: DOUG COE, Supervising Br. Eng.	FED. NO. ACIM-080-1(085)8N
CCO# **188** SUPPLEMENT#: **0** Category Cod **CJSA**	CONTINGENCY BALANCE (incl. this change
COST: INCREASE ☐ DECREASE ☐	HEADQUARTERS APPROVAL REQUIRED? ☑ YES ☐ NO
SUPPLEMENTAL FUNDS PROVIDED: **$0.00**	IS THIS REQUEST IN ACCORDANCE WITH ENVIRONMENTAL DOCUMENTS? ☑ YES ☐ NO
CCO DESCRIPTION: Polyester Concrete Overlay	**PROJECT DESCRIPTION:** REPLACE SFOBB EAST SPAN

LOCATION: IN SAN FRANCISCO AND ALAMEDA COUNTIES IN SAN FRANCISCO AND OAKLAND FROM 1.3 KM EAST OF THE YERBA BUENA ISL

THIS CHANGE ORDER PROVIDES FOR:

removing of the final pay quantity designation from the Engineer's Estimate, in the Special Provisions for Item 49 "Furnish Polyester Concrete Overlay (20 MM)", and Item 51 "Furnish Polyester Concrete Overlay (13 MM)" for the SFOBB East Span Skyway, Bridge Nos. 34-0006L/R.

A conflict in the payment method exists between the Engineer's Estimate, and the measurement and payment portion of Section 10-1.36 "POLYESTER CONCRETE OVERLAY (20MM, 13MM)". Bid items 49 and 51, Furnish Polyester Concrete Overlay (20 MM) and (13MM) respectively, are designated as final pay items (F) in accordance with section 9-1.015 "Final Pay Items" of the Standard Specifications, but the measurement and payment portion of Section 10-1.36 of the Special Provisions is written as if the polyester concrete is to be measured and paid at a unit price. Per Section 5-1.04 "Coordination and Interpretation of Plans, Standard Specifications, and Special Provisions" of the Standard Specifications, the Special Provisions shall govern over the Standard Specifications and Plans.

Due to design added deck reinforcing and subsequent decrease in concrete cover over the reinforcing, profile grinding is now limited. An initial profilograph indicates that in order to keep and maintain a consistent line and grade, a substantial overrun in material quantity will be realized. Additionally, the placing of the polyester overlay, which was originally scheduled for 2005 but due to delays of the overall project is now rescheduled for late 2007 is resulting in escalation of labor, material and equipment costs. This will require an adjustment of unit price for the Engineer's Estimate items: 19 "Prepare Bridge Deck Surface", 49 "Furnish Polyester Concrete Overlay (20 MM)", 50 "Place Polyester Concrete Overlay (20 MM)", 51 "Furnish Polyester Concrete Overlay (13 MM)", and 52 "Place Polyester Concrete Overlay (13 MM)"

Instead of adjusting the quantity and the unit price of the before mentioned Engineer's bid items, an agreement was reached to resolve all of the known issues with a lump sum payment. This lump sum payment will provide full compensation for all additional work and costs associated with deck preparation and polyester overlay on both the concrete bridge deck and bike path, including all quantity overruns and labor escalation. Also, additional schedule impacts and mitigations caused by other operations to this weather sensitive material will become the responsibility of the Contractor.

The agreed compensation for this contract change order is included in the lump sum compensation portion of resolution CCO No. 200. For this work, the Contractor will be compensated an agreed lump sum amount of $3,541,706.00.

A detailed force account analysis prepared by the Engineer for the cost of this change order is on file in the project records.

Mr. Pete Siegenthaler, SFOBB Construction Manager, Toll Bridge Construction, concurs with this change. A copy of the concurrence signed by Mr. Siegenthaler on July 7, 2006 is attached.

Prior Approval was obtained from Ms. Nancy Bobb, FHWA Bay Bridge Project Manager, via electronic message on July 20, 2006. A printed copy of the prior approval provided by Ms. Bobb is attached.

Prior Approval was obtained from Mr. Ken Terpstra, SFOBB Project Manager, via electronic message on July 30, 2006. A printed copy of the prior approval provided by Mr. Terpstra is attached.

Design concurrence is not required for this change order as it does not modify the design.

Concurrence from Maintenance is not required as this change order does not use maintenance funds or affect maintenance facilities or operations.

No time adjustment is warranted for this change order as it does not affect the controlling operation.

CONCURRED BY:		
Construction Engineer:	Douglas Coe	Date 8-24-06
Bridge Engineer:	Douglas Coe	Date 8-24-06
FHWA Representative:	Nancy Bobb	Date7/20/2006
Project Engineer:		Date
Other (specify): Ken Terpstra, SFOBB Project Manager		Date7/30/2006
TBPOC		Date8/24/2006
		Date
District Prior Approval By:		Date
HQ (Issue Approve) By:	Ken Darby	Date
Resident Engineer's Signature:		Date 8-24-06

ESTIMATE OF COST

	THIS REQUEST	TOTAL TO DATE
ITEMS	$0.00	$0.00
FORCE ACCOUNT	$0.00	$0.00
AGREED PRICE	$0.00	$0.00
ADJUSTMENT		
TOTAL		

FEDERAL PARTICIPATION

☑ PARTICIPATING ☐ PARTICIPATING IN PART ☐ NONE
☐ NON-PARTICIPATING (MAINTENANCE) ☐ NON-PARTICIPATING

FEDERAL SEGREGATION (If more than one Funding Source or P.I.P. type)
☑ CCO FUNDED PER CONTRACT ☐ CCO FUNDED AS FOLLOWS

FEDERAL FUNDING SOURCE	PERCENT

STATE OF CALIFORNIA - DEPARTMENT OF TRANSPORTATION

CONTRACT CHANGE ORDER MEMORANDUM

TO: PETER SIEGENTHALER / DOUG COE, Supervising Br. Eng.

FROM: DOUG COE, Supervising Br. Eng.

FILE: **E.A.** 04 - 012024
CO-RTE-PM 04-SF,Ala-80-13.9/14.3,0.0/1.6
FED. NO. ACIM-080-1(085)8N

CCO# **189**	SUPPLEMENT#: **0**	Category Cod **CBPA**	CONTINGENCY BALANCE (incl. this change **$4,575,053.10**
COST: **$498,158.00**	INCREASE ☑ DECREASE ☐		HEADQUARTERS APPROVAL REQUIRED? ☑ YES ☐ NO
SUPPLEMENTAL FUNDS PROVIDED: **$0.00**			IS THIS REQUEST IN ACCORDANCE WITH ENVIRONMENTAL DOCUMENTS? ☑ YES ☐ NO

CCO DESCRIPTION:
Pull Boxes and Cover Plates Revisions

PROJECT DESCRIPTION:
REPLACE SFOBB EAST SPAN

Original Contract Time:	Time Adj. This Change:	Previously Approved CCO Time Adjustments:	Percentage Time Adjusted: (including this change)	Total # of Unreconciled Deferred Time CCO(s): (including this change)
1000 Day(s)	**0** Day(s)	**424** Day(s)	**42** %	**0**

THIS CHANGE ORDER PROVIDES FOR:

Cutting 200mm x 500mm holes in the center of the top of the steel barrier at sixteen (16) locations and installing type 9A pull boxes for COM and lighting at the East bound and West bound transition spans of the SFOBB East Span Skyway, Bridge No. 34-0006L/R project. Modifying the nameplates of the 9A pull box covers for the lighting from "COM" to " 600 V Electrical", and labeling the boxes as noted on page 2 and 3 of the change order. Deleting the maintenance platforms shown on contract plan sheet 901 of 978. Installing cover plates and sealing the steel barrier as shown on revised contract plan sheet 889R1 of 978 (page 4 of 4 of the change order).
At the request of the Engineer, sealing the back side of the steel barrier and under the cover plates to the road deck and the top of the cover plates with the same caulking used for the areas to be caulked shown on revised plan sheet 889R1 of 978. Welding a plate of the same dimensions into the no longer needed electrical recepticle openings in the face of the barrier (4 locations). Compensation to pump out the rain water collected in the orthotropic bridge girders during the rainy season.

This Contract Change Order will mitigate a conflict between the pull boxes and mechanical piping on the outside of the metal barrier at the transition spans. The mechanical piping runs over top of the platforms meant for a maintenance worker to stand on while accessing the pull box. To provide maintenance with safe access to the pull boxes, the pull boxes will need to be relocated from the back side of the steel barrier to the top of the steel barrier. Additionally, due to space limitation at the top of the steel barrier, the type 9 lighting pull boxes are being changed to a type 9A at the steel transition spans. The change in location of the pull boxes eliminates the need for maintenance platforms shown on plan sheet 901 of 978. Therefore, the platforms will be removed from the contract.

The contract plans show a 2-mm cover plate to enclose the backside of the transition span steel barrier. In order to prevent moisture penetration, the designer is requesting that the steel barrier be sealed with a 6-mm cover plate, neoprene gaskets, and caulking as shown on revised contract plan sheet 889R1 of 978.

The installation of the 6-mm plates will add considerable scope to this work. Due to the geometry of the barrier railing the majority of the cover plates are fabricated to fit, requiring mutible shop drawings. The additional weight and attachment method, bolts instead of sheet metal screws, will require the design and fabrication of special access platforms. Bolt holes will need to be drilled in the barrier and nuts need to be welded to the inside of the barrier flange so that the cover plates can be attached and removed if needed. Neoprene gaskets will be installed between the barrier and the cover plates to provide for a waterproof seal. Caulking will need to be applied to seal the gap between the barrier and the road deck. The joints between the barrier sections will require a pliable seal which requires the removal of the zinc primer for adhesion of the joint seal to the steel of the barrier and touchup of the primer. Without a liquid tight seal around the barrier, rain water will continue to penetrate into the transition spans. Additionally, this Contract Change Order will compensate the Contractor, for the removal of the rainwater out of the interior of the orthotropic box girders which collected during the 2006/2007 winter, and the removal of the no longer needed traveler rail beams (4) from the bridge deck to a location designated by the Engineer.

The change order includes a credit for the deletion of the maintenance platforms and the original work scope of installing the 2-mm cover plates. No credit is included for the 2-mm cover plates since the plates were already fabricated and delivered to the job site. The change order amount includes a credit of $100,566.00 for the original work scope and a cost of $598,724.00 for the revised work scope for a net increase of $498,158.00

This additional project cost can be financed from the contingency funds provided for this contract. A force account analysis is on file in the project records.

ADA Notice: For individuals with sensory disabilities, this document is available in alternate formats. For information call: (916) 654-6410 or TDD (916) 654-3880 or write Records and Forms Management, 1120 N Street, MS-89, Sacramento, CA 95814.

Mr. Pete Siegenthaler, SFOBB Construction Manager, Toll Bridge Construction, concurs with this change. A copy of the concurrence signed by Mr. Siegenthaler on January 23, 2007 is attached.

Prior Approval was obtained from Ms. Nancy Bobb, FHWA Bay Bridge Project Manager, via electronic message on April 23, 2007. A printed copy of the prior approval provided by Ms. Bobb is attached.

Prior Approval was obtained from Mr. Ken Terpstra, SFOBB Project Manager, via electronic message on May 21, 2007. A printed copy of the prior approval provided by Mr. Terpstra is attached.

Design concurrence for the electrical portion of the contract change order is provided by, Mr. Parviz Boozapour, Transportation Electrical Engineer, on June 19, 2006 as indicated by his signuture on page 2 and 3 of the change order.

Design concurrence for the structural portion of the contract change order is provided by Mr. Hasan El-Natur, Senior Bridge Engineer, on November 15, 2006, as indicated by his signature on the revised contract plan sheet 889R1 of 978.

Concurrence from Maintenance was obtained from Mr. Bill Zanetich, Structure Maintenance and Investigation, on May 23, 2007. A copy of the concurrence provided by Maintenance is attached.

No adjustment of contract time is warranted, as this change does not affect the controlling operation.

CONCURRED BY:			
Construction Engineer:	Douglas Coe	Date	7/25/07
Bridge Engineer:	Douglas Coe	Date	7/25/07
Project Engineer:	HASAN EL-NATUR	Date	11/15/06
Project Manager:	Ken Terpstra	Date	5/21/07
FHWA Rep.:	Nancy Bobb	Date	4/23/07
Environmental:		Date	
Other (specify):	Bill Zanetich, Maintenance	Date	5/23/07
Other (specify):		Date	
District Prior Approval By:		Date	
HQ (Issue Approve) By:	Ken Darby	Date	4/24/07
Resident Engineer's Signature:		Date	7-25-07

ESTIMATE OF COST

	THIS REQUEST	TOTAL TO DATE
ITEMS	$0.00	$0.00
FORCE ACCOUNT	$0.00	$0.00
AGREED PRICE	$598,724.00	$598,724.00
ADJUSTMENT	($100,566.00)	($100,566.00)
TOTAL	$498,158.00	$498,158.00

FEDERAL PARTICIPATION

☑ PARTICIPATING ☐ PARTICIPATING IN PART ☐ NONE
☐ NON-PARTICIPATING (MAINTENANCE) ☐ NON-PARTICIPATING

FEDERAL SEGREGATION (if more than one Funding Source or P.I.P. type)
☑ CCO FUNDED PER CONTRACT ☐ CCO FUNDED AS FOLLOWS

FEDERAL FUNDING SOURCE	PERCENT

ADA Notice: For individuals with sensory disabilities, this document is available in alternate formats. For information call: (916) 654-8410 or TDD (916) 654-3880 or write Records and Forms Management, 1120 N Street, MS-89, Sacramento, CA 95814.

STATE OF CALIFORNIA - DEPARTMENT OF TRANSPORTATION

CONTRACT CHANGE ORDER MEMORANDUM

TO: PETER SIEGENTHALER / DOUG COE, Supervising Br. Eng.

FROM: DOUG COE, Supervising Br. Eng.

FILE: **E.A.** 04 - 012024
CO-RTE-PM 04-SF,Ala-80-13.9/14.3,0.0/1.6
FED. NO. ACIM-080-1(085)8N

CCO# **189** SUPPLEMENT#: **0** Category Cod **CBPA**

CONTINGENCY BALANCE (incl. this change **$4,575,053.10**

COST: **$498,158.00** INCREASE ☑ DECREASE ☐

HEADQUARTERS APPROVAL REQUIRED? ☑ YES ☐ NO

SUPPLEMENTAL FUNDS PROVIDED: **$0.00**

IS THIS REQUEST IN ACCORDANCE WITH ENVIRONMENTAL DOCUMENTS? ☑ YES ☐ NO

CCO DESCRIPTION:
Pull Boxes and Cover Plates Revisions

PROJECT DESCRIPTION:
REPLACE SFOBB EAST SPAN

Original Contract Time:	Time Adj. This Change:	Previously Approved CCO Time Adjustments:	Percentage Time Adjusted: (including this change)	Total # of Unreconciled Deferred Time CCO(s): (including this change)
1000 Day(s)	**0** Day(s)	**424** Day(s)	**42** %	**0**

THIS CHANGE ORDER PROVIDES FOR:

Cutting 200mm x 500mm holes in the center of the top of the steel barrier at sixteen (16) locations and installing type 9A pull boxes for COM and lighting at the East bound and West bound transition spans of the SFOBB East Span Skyway, Bridge No. 34-0006L/R project. Modifying the nameplates of the 9A pull box covers for the lighting from "COM" to " 600 V Electrical", and labeling the boxes as noted on page 2 and 3 of the change order. Deleting the maintenance platforms shown on contract plan sheet 901 of 978. Installing cover plates and sealing the steel barrier as shown on revised contract plan sheet 889R1 of 978 (page 4 of 4 of the change order).
At the request of the Engineer, sealing the back side of the steel barrier and under the cover plates to the road deck and the top of the cover plates with the same caulking used for the areas to be caulked shown on revised plan sheet 889R1 of 978. Welding a plate of the same dimensions into the no longer needed electrical recepticle openings in the face of the barrier (4 locations). Compensation to pump out the rain water collected in the orthotropic bridge girders during the rainy season.

This Contract Change Order will mitigate a conflict between the pull boxes and mechanical piping on the outside of the metal barrier at the transition spans. The mechanical piping runs over top of the platforms meant for a maintenance worker to stand on while accessing the pull box. To provide maintenance with safe access to the pull boxes, the pull boxes will need to be relocated from the back side of the steel barrier to the top of the steel barrier. Additionally, due to space limitation at the top of the steel barrier, the type 9 lighting pull boxes are being changed to a type 9A at the steel transition spans. The change in location of the pull boxes eliminates the need for maintenance platforms shown on plan sheet 901 of 978. Therefore, the platforms will be removed from the contract.

The contract plans show a 2-mm cover plate to enclose the backside of the transition span steel barrier. In order to prevent moisture penetration, the designer is requesting that the steel barrier be sealed with a 6-mm cover plate, neoprene gaskets, and caulking as shown on revised contract plan sheet 889R1 of 978.

The installation of the 6-mm plates will add considerable scope to this work. Due to the geometry of the barrier railing the majority of the cover plates are fabricated to fit, requiring mutible shop drawings. The additional weight and attachment method, bolts instead of sheet metal screws, will require the design and fabrication of special access platforms. Bolt holes will need to be drilled in the barrier and nuts need to be welded to the inside of the barrier flange so that the cover plates can be attached and removed if needed. Neoprene gaskets will be installed between the barrier and the cover plates to provide for a waterproof seal. Caulking will need to be applied to seal the gap between the barrier and the road deck. The joints between the barrier sections will require a pliable seal which requires the removal of the zinc primer for adhesion of the joint seal to the steel of the barrier and touchup of the primer. Without a liquid tight seal around the barrier, rain water will continue to penetrate into the transition spans. Additionally, this Contract Change Order will compensate the Contractor, for the removal of the rainwater out of the interior of the orthotropic box girders which collected during the 2006/2007 winter, and the removal of the no longer needed traveler rail beams (4) from the bridge deck to a location designated by the Engineer.

The change order includes a credit for the deletion of the maintenance platforms and the original work scope of installing the 2-mm cover plates. No credit is included for the 2-mm cover plates since the plates were already fabricated and delivered to the job site. The change order amount includes a credit of $100,566.00 for the original work scope and a cost of $598,724.00 for the revised work scope for a net increase of $498,158.00

This additional project cost can be financed from the contingency funds provided for this contract. A force account analysis is on file in the project records.

ADA Notice: For individuals with sensory disabilities, this document is available in alternate formats. For information call: (916) 654-6410 or TDD (916) 654-3880 or write Records and Forms Management, 1120 N Street, MS-89, Sacramento, CA 95814.

Mr. Pete Siegenthaler, SFOBB Construction Manager, Toll Bridge Construction, concurs with this change. A copy of the concurrence signed by Mr. Siegenthaler on January 23, 2007 is attached.

Prior Approval was obtained from Ms. Nancy Bobb, FHWA Bay Bridge Project Manager, via electronic message on April 23, 2007. A printed copy of the prior approval provided by Ms. Bobb is attached.

Prior Approval was obtained from Mr. Ken Terpstra, SFOBB Project Manager, via electronic message on May 21, 2007. A printed copy of the prior approval provided by Mr. Terpstra is attached.

Design concurrence for the electrical portion of the contract change order is provided by, Mr. Parviz Boozapour, Transportation Electrical Engineer, on June 19, 2006 as indicated by his signuture on page 2 and 3 of the change order.

Design concurrence for the structural portion of the contract change order is provided by Mr. Hasan El-Natur, Senior Bridge Engineer, on November 15, 2006, as indicated by his signature on the revised contract plan sheet 889R1 of 978.

Concurrence from Maintenance was obtained from Mr. Bill Zanetich, Structure Maintenance and Investigation, on May 23, 2007. A copy of the concurrence provided by Maintenance is attached.

No adjustment of contract time is warranted, as this change does not affect the controlling operation.

RECEIVED
06465 | 1 OCT 46

CONCURRED BY:			
Construction Engineer:	Douglas Coe	Date 7/25/07	
Bridge Engineer:	Douglas Coe	Date 7/25/07	
Project Engineer:	HASAN EL-NATUR	Date 11/15/06	
Project Manager:	Ken Terpstra	Date 5/21/07	
FHWA Rep.:	Nancy Bobb	Date 4/23/07	
Environmental:		Date	
Other (specify):	Bill Zanetich, Maintenance	Date 5/23/07	
Other (specify):		Date	
District Prior Approval By:		Date	
HQ (Issue Approve) By:	Ken Darby	Date 4/24/07	
Resident Engineer's Signature:		Date	
		7-25-07	

ESTIMATE OF COST

	THIS REQUEST	TOTAL TO DATE
ITEMS	$0.00	$0.00
FORCE ACCOUNT	$0.00	$0.00
AGREED PRICE	$598,724.00	$598,724.00
ADJUSTMENT	($100,566.00)	($100,566.00)
TOTAL	$498,158.00	$498,158.00

FEDERAL PARTICIPATION

☑ PARTICIPATING ☐ PARTICIPATING IN PART ☐ NONE
☐ NON-PARTICIPATING (MAINTENANCE) ☐ NON-PARTICIPATING

FEDERAL SEGREGATION (If more than one Funding Source or P.I.P. type)
☑ CCO FUNDED PER CONTRACT ☐ CCO FUNDED AS FOLLOWS

FEDERAL FUNDING SOURCE PERCENT

ADA Notice: For individuals with sensory disabilities, this document is available in alternate formats. For information call: (916) 654-6410 or TDD (916) 654-3880 or write Records and Forms Management, 1120 N Street, MS-89, Sacramento, CA 95814.

CONTRACT CHANGE ORDER

Change Requested by: Engineer

CCO: 190	Suppl. No. 0	Contract No. 04 - 012024	Road 04-SF,Ala-80-13.9/14.3,0.0/1.6	FED. AID LOC.: ACIM-080-1(085)8N

To: **KIEWIT / FCI / MANSON a JV**

You are directed to make the following changes from the plans and specifications or do the following described work not included in the plans and specifications for this contract. ***NOTE: This change order is not effective until approved by the Engineer.***

Description of work to be done, estimate of quantities and prices to be paid. (Segregate between additional work at contract price, agreed price and force account.) Unless otherwise stated, rates for rental of equipment cover only such time as equipment is actually used and no allowance will be made for idle time. This last percentage shown is the net accumulated increase or decrease from the original

Extra Work at Force Account:

As authorized by the Engineer, upgrade and maintain the historical documentation camera system now in use on the SFOBB East Span Skyway Project to provide streaming video directly to the Bay Area Toll Authority (BATA) web site. This work consists of: 1) upgrade the TLC Encoder, 2) upgrade the Master Node GUI (Graphical User Interface) software, 3) create a web interface for streaming video to the www.baybridgeinfo.org site, 4) provide hardware upgrades and additions to the Public Information Office (PIO), 5) provide system maintenance, and 6) provide system hardware upgrades and spare parts.

Compensation for this extra work will be provided in accordance with section 4-1.03D "Extra Work", and section 9-1.03 "Force Account Payment" of the Standard Specifications, and section 5-1.21 "Force Account Payment" of the Special provisions.

Estimated cost of Extra Work at Force Account $80,000.00

Estimated Cost: Increase ☑ Decrease ☐ $80,000.00

By reason of this order the time of completion will be adjusted as follows: 0 days

Submitted by

Signature	Resident Engineer: DOUG COE, Supervising Br. Eng.	Date 9/14/06

Approval Recommended by

Signature	Construction Engineer: DOUG COE, Supervising Br. Eng.	Date 9/14/06

Engineer Approval by

Signature	(Print name and title) FOR PETER SIEGENTHALER - Chief	Date 10/17/06

We the undersigned contractor, have given careful consideration to the change proposed and agree, if this proposal is approved, that we will provide all equipment, furnish the materials, except as may otherwise be noted above, and perform all services necessary for the work above specified, and will accept as full payment therefor the prices shown above.

NOTE: If you, the contractor, do not sign acceptance of this order, your attention is directed to the requirements of the specifications as to proceeding with the ordered work and filing a written protest within the time therein specified.

Contractor Acceptance by

Signature	(Print name and title) PROJECT DIRECTOR, LEE ZINK	Date 10-4-06

STATE OF CALIFORNIA - DEPARTMENT OF TRANSPORTATION

CONTRACT CHANGE ORDER MEMORANDUM

TO: PETER SIEGENTHALER / PETER SIEGENTHALER	FILE: E.A. 04 - 012024
FROM: DOUG COE, Supervising Br. Eng.	CO-RTE-PM 04-SF,Ala-80-13.9/14.3,0.0/1.6
	FED. NO. ACIM-080-1(085)8N
CCO# 190 SUPPLEMENT#: 0 Category Cod CXXX	CONTINGENCY BALANCE (incl. this change $7,362,542.10
COST: $80,000.00 INCREASE ☑ DECREASE ☐	HEADQUARTERS APPROVAL REQUIRED? ☐ YES ☑ NO
SUPPLEMENTAL FUNDS PROVIDED: $0.00	IS THIS REQUEST IN ACCORDANCE WITH ENVIRONMENTAL DOCUMENTS? ☑ YES ☐ NO
CCO DESCRIPTION: Camera Link to BATA	**PROJECT DESCRIPTION:** REPLACE SFOBB EAST SPAN

Original Contract Time:	Time Adj. This Change:	Previously Approved CCO Time Adjustments:	Percentage Time Adjusted: (including this change)	Total # of Unreconciled Deferred Time CCO(s): (including this change)
1000 Day(s)	0 Day(s)	424 Day(s)	42 %	0

THIS CHANGE ORDER PROVIDES FOR:

Upgrading and maintaining the historical documentation camera system now in use on the SFOBB East Span Skyway Project to provide streaming video directly to the Bay Area Toll Authority (BATA) web site. This work consists of: 1) upgrading the TLC Encoder, 2) upgrading the Master Node GUI (Graphical User Interface) software, 3) creating a web interface for streaming video to the www.baybridgeinfo.org site, 4) providing hardware upgrades and additions to the Public Information Office (PIO), 5) providing system maintenance, and 6) providing system hardware upgrades and spare parts.

The Bay Area Toll Authority is requesting a direct live feed from the cameras now installed for historical documentation of the project. In order to provide uninterrupted service the current system will need to be upgraded since three years of service and exposure to the elements in the harsh environment of the SFOBB project has taken a toll on the historical documentation cameras and it's components.

The following upgrades and maintenance are needed to ensure continuos operation of the system:

1. The TLC Encoder upgrade will add a component to the current encoder to detect network bandwidth. This component will enable the encoder to restart itself when the network connection is lost. This component is necessary to keep the streaming video online to the web interface, www.baybridgeinfo.org.
2. The Master node GUI software upgrade is a complete re-write of the current software. It is being re-written to simplify many of the dialog boxes presented to the user, add the necessary interface to the web for streaming video, and to add the additional features requested by the Public Information staff.
3. The web interface will allow the live video from four cameras on the bridge to stream to www.baybridgeinfo.org.
4. Hardware upgrades and additions will be implemented to allow the display of more than 300,000 digital photos and numerous time lapse events that will be taken over the life of the project.
5. The camera system units will be taken out of service removed from the bridge as necessary to repair/replace cables, connectors and other components to prepare the system for the upcoming winter.
6. The system upgrades will replace the existing equipment on the bridge with more rugged versions. The new versions will eliminate the need to remove the equipment from the bridge to perform the type of maintenance listed above. Spare parts will be purchased to have on hand for future maintenance.

The method of payment will be Extra Work at Force Account. The anticipated cost for this work is estimated at $80,000.00. A force account analysis for this work is on file in the project records. This work will be funded from the project contingency funds.

Pete Siegenthaler, SFOBB Construction Manager, provided concurrence on September 14, 2006. A copy of the concurrence provided by Mr. Siegenthaler is attached.

FHWA Prior approval is not required as this is a minor change order.

Concurrence from Design is not required because this change does not affect any design issues.

Concurrence from Maintenance is not required because this change does not affect maintenance facilities or operations.

No adjustment of contract time is warranted, as this change does not affect the controlling operation.

ADA Notice: For individuals with sensory disabilities, this document is available in alternate formats. For information call: (916) 654-6410 or TDD (916) 654-3880 or write Records and Forms Management, 1120 N Street, MS-89, Sacramento, CA 95814.

RECEIVED
057383 OCT 26 00

CONCURRED BY:		
Construction Engineer:	Douglas Coe	Date 10-16-00
Bridge Engineer:	Douglas Coe	Date 10-16-00
Project Engineer:		Date
Project Manager:		Date
FHWA Rep.:		Date
Environmental:		Date
Other (specify):		Date
Other (specify):		Date
District Prior Approval By:	Peter Siegenthaler	Date 9/14/06
HQ (Issue Approve) By:		Date
Resident Engineer's Signature		Date 10-16-00

ESTIMATE OF COST

	THIS REQUEST	TOTAL TO DATE
ITEMS	$0.00	$0.00
FORCE ACCOUNT	$80,000.00	$80,000.00
AGREED PRICE	$0.00	$0.00
ADJUSTMENT	$0.00	$0.00
TOTAL	$80,000.00	$80,000.00

FEDERAL PARTICIPATION

☑ PARTICIPATING ☐ PARTICIPATING IN PART ☐ NONE
☐ NON-PARTICIPATING (MAINTENANCE) ☐ NON-PARTICIPATING

FEDERAL SEGREGATION (if more than one Funding Source or P.I.P. type)
☑ CCO FUNDED PER CONTRACT ☐ CCO FUNDED AS FOLLOWS

FEDERAL FUNDING SOURCE	PERCENT

ADA Notice: For individuals with sensory disabilities, this document is available in alternate formats. For information call: (916) 654-6410 or TDD (916) 654-3880 or write Records and Forms Management, 1120 N Street, MS-89, Sacramento, CA 95814.

STATE OF CALIFORNIA - DEPARTMENT OF TRANSPORTATION

CONTRACT CHANGE ORDER

Change Requested by: Engineer

CCO: 190	Suppl. No. 1	Contract No. 04 - 012024	Road 04-SF,Ala-80-13.9/14.3,0.0/1.6	FED. AID LOC.: ACIM-080-1(085)8N

To: **KIEWIT / FCI / MANSON a JV**

You are directed to make the following changes from the plans and specifications or do the following described work not included in the plans and specifications for this contract. ***NOTE: This change order is not effective until approved by the Engineer.***

Description of work to be done, estimate of quantities and prices to be paid. (Segregate between additional work at contract price, agreed price and force account.) Unless otherwise stated, rates for rental of equipment cover only such time as equipment is actually used and no allowance will be made for idle time. This last percentage shown is the net accumulated increase or decrease from the original quantity in the Engineer's Estimate.

Extra Work at Force Account:

As authorized by the Engineer, replace and upgrade the existing three NEMA 4X enclosures now in use on the SFOBB East Span Skyway Project, Bridge Nos. 34-0006L/R.

The upgrading of the new NEMA 4X enclosures shall include:

1. Laptop with a docking station
2. Upgraded video encoders
3. Camera control software
4. External hard drive
5. Ethernet connections
6. Weatherproof twist lock cables

Compensation for this extra work will be provided by in accordance with section 4-1.03D "Extra Work", and section 9-1.03 "Force Account Payment" of the Standard Specifications, and section 5-1.21 " Force Account Payment" of the Special provisions.

Estimated cost of Extra Work at Force Account $115,000.00

Estimated Cost: Increase ☑ **Decrease** ☐ **$115,000.00**

By reason of this order the time of completion will be adjusted as follows: 0 days

Submitted by

Signature	Resident Engineer DOUG COE, Supervising Br. Eng.	Date 7-9-07

Approval Recommended by

Signature	Construction Engineer DOUG COE	Date 7-9-07

Engineer Approved by

Signature	Construction Manager PETER SIEGENTHALER	Date 8/28/07

We the undersigned contractor, have given careful consideration to the change proposed and agree, if this proposal is approved, that we will provide all equipment, furnish the materials, except as may otherwise be noted above, and perform all services necessary for the work above specified, and will accept as full payment therefor the prices shown above.

NOTE: If you, the contractor, do not sign acceptance of this order, your attention is directed to the requirements of the specifications as to proceeding with the ordered work and filing a written protest within the time therein specified.

Contractor Acceptance by

Signature	(Print name and title) Lee Zink Project Director	Date 8/6/07

STATE OF CALIFORNIA - DEPARTMENT OF TRANSPORTATION

CONTRACT CHANGE ORDER MEMORANDUM

TO: PETER SIEGENTHALER / DOUG COE, Supervising Br. Eng.

FROM: DOUG COE, Supervising Br. Eng.

FILE: E.A. 04 - 012024
CO-RTE-PM 04-SF,Ala-80-13.9/14.3,0.0/1.6
FED. NO. ACIM-080-1(085)8N

CCO# **190** SUPPLEMENT#: **1** Category Cod **CXXX**

CONTINGENCY BALANCE (incl. this change **$5,153,211.08**

COST: **$115,000.00** INCREASE ☐ DECREASE ☑

HEADQUARTERS APPROVAL REQUIRED? ☐ YES ☑ NO

SUPPLEMENTAL FUNDS PROVIDED: **$0.00**

IS THIS REQUEST IN ACCORDANCE WITH ENVIRONMENTAL DOCUMENTS? ☑ YES ☐ NO

CCO DESCRIPTION:
Camera Link to BATA

PROJECT DESCRIPTION:
REPLACE SFOBB EAST SPAN

Original Contract Time:	Time Adj. This Change:	Previously Approved CCO Time Adjustments:	Percentage Time Adjusted: (including this change)	Total # of Unreconciled Deferred Time CCO(s): (including this change)
1000 Day(s)	**0** Day(s)	**424** Day(s)	**42** %	**0**

THIS CHANGE ORDER PROVIDES FOR:
Replacing and upgrading the existing three NEMA 4X enclosures now in use on the SFOBB East Span Skyway Project, Bridge Nos. 34-0006L/R.

The upgrading of the new NEMA 4X enclosures will include:
1. Laptop with a docking station
2. Upgraded video encoders
3. Camera control software
4. External hard drive
5. Ethernet connections
6. Weatherproof twist lock cables

The Public Information Offices (PIO) requested a direct live feed from the cameras now installed for historical documentation of the project. The marine environment, has made it necessary to replace the NEMA 4X enclosures with marine grade enclosures and connections because moisture penetration continues to impact the operation of the existing system. The upgraded components within the new enclosures will make the system more functional. System maintenance will also be reduced. These cameras will not only be used for the Skyway project, but will also capture the activities at the SAS and SSD projects. It is expected that through this upgrade the camera system will be functional until at least 2013.

The method of payment will be Extra Work at Force Account. The anticipated cost for this work is estimated at $115,000.00. A force account analysis for this work is on file in the project records. This work will be funded from the project contingency funds.

Pete Siegenthaler, SFOBB Construction Manager, provided concurrence on July 2, 2007, copy of the concurrence provided by Mr. Siegenthaler is attached.

FHWA Prior approval is not required as this is a minor change order.

Concurrence from Design is not required because this change does not affect any design issues.

Concurrence from Maintenance is not required because this change does not affect maintenance facilities or operations.

No adjustment of contract time is warranted, as this change does not affect the controlling operation.

ADA Notice: For individuals with sensory disabilities, this document is available in alternate formats. For information call: (916) 654-6410 or TDD (916) 654-3880 or write Records and Forms Management, 1120 N Street, MS-89, Sacramento, CA 95814.

CONCURRED BY:			
Construction Engineer:	Douglas Coe	DBC	Date 7-9-07
Bridge Engineer:	Douglas Coe	DBC	Date 7-5-07
Project Engineer:			Date
Project Manager:			Date
FHWA Rep.:			Date
Environmental:			Date
Other (specify):			Date
Other (specify):			Date
District Prior Approval By:	Peter Siegenthaler		Date 7/3/07
HQ (Issue Approve) By:			Date
Resident Engineer's Signature:			Date 7-8-07

ESTIMATE OF COST

	THIS REQUEST	TOTAL TO DATE
ITEMS	$0.00	$0.00
FORCE ACCOUNT	$115,000.00	$195,000.00
AGREED PRICE	$0.00	$0.00
ADJUSTMENT	$0.00	$0.00
TOTAL	$115,000.00	$195,000.00

FEDERAL PARTICIPATION

☑ PARTICIPATING ☐ PARTICIPATING IN PART ☐ NONE
☐ NON-PARTICIPATING (MAINTENANCE) ☐ NON-PARTICIPATING

FEDERAL SEGREGATION (if more than one Funding Source or P.I.P. type)
☑ CCO FUNDED PER CONTRACT ☐ CCO FUNDED AS FOLLOWS

FEDERAL FUNDING SOURCE	PERCENT

ADA Notice: For individuals with sensory disabilities, this document is available in alternate formats. For information call: (916) 654-6410 or TDD (916) 654-3880 or write Records and Forms Management, 1120 N Street, MS-89, Sacramento, CA 95814.

STATE OF CALIFORNIA - DEPARTMENT OF TRANSPORTATION

CONTRACT CHANGE ORDER

Change Requested by: Engineer

CCO: 192	Suppl. No. 0	Contract No. 04 - 012024	Road 04-SF,Ala-80-13.9/14.3,0.0/1.6	FED. AID LOC.: ACIM-080-1(085)8N

To: **KIEWIT / FCI / MANSON a JV**

You are directed to make the following changes from the plans and specifications or do the following described work not included in the plans and specifications for this contract. ***NOTE: This change order is not effective until approved by the Engineer.***

Description of work to be done, estimate of quantities and prices to be paid. (Segregate between additional work at contract price, agreed price and force account.) Unless otherwise stated, rates for rental of equipment cover only such time as equipment is actually used and no allowance will be made for idle time. This last percentage shown is the net accumulated increase or decrease from the original

Extra Work at Lump Sum:

Fabricate and install walkway frames and covers at Pier 15 Eastbound and Westbound as shown on contract plan sheet 100 of 978. Fabricate and install walkway frames and covers at Pier 16 Eastbound and Westbound as shown on added contract plan sheet 100A of 978 (page 2 of this change order) of the SFOBB East Span Skyway, Bridge Nos. 34-0006L/R.

For this work, the Contractor agrees to accept an agreed lump sum amount of $50,681.00. This agreed lump sum constitutes full compensation for all costs, including markups, all direct and indirect costs, all associated project impacts, and all overhead costs.

Extra Work at Agreed Lump Sum $50,681.00

Estimated Cost: Increase ☑ Decrease ☐ **$50,681.00**

By reason of this order the time of completion will be adjusted as follows: 0 days

Submitted by

Signature	Resident Engineer DOUG COE, Supervising Br. Eng.	Date 9-27-07

Approval Recommended by

Signature	Construction Engineer DOUG COE	Date 9-27-07

Engineer Approval by

Signature	Construction Manager PETER SIEGENTHALER	Date 6-26-07

We the undersigned contractor, have given careful consideration to the change proposed and agree, if this proposal is approved, that we will provide all equipment, furnish the materials, except as may otherwise be noted above, and perform all services necessary for the work above specified, and will accept as full payment therefor the prices shown above.

NOTE: If you, the contractor, do not sign acceptance of this order, your attention is directed to the requirements of the specifications as to proceeding with the ordered work and filing a written protest within the time therein specified.

Contractor Acceptance by

Signature	(Print name and title) Lee Zink Project Director	Date 6/14/07

STATE OF CALIFORNIA - DEPARTMENT OF TRANSPORTATION

CONTRACT CHANGE ORDER MEMORANDUM

TO: PETER SIEGENTHALER / DOUG COE, Supervising Br. Eng.

FROM: DOUG COE, Supervising Br. Eng.

FILE: **E.A.** 04 - 012024
CO-RTE-PM 04-SF,Ala-80-13.9/14.3,0.0/1.6
FED. NO. ACIM-080-1(085)8N

CCO# **192** SUPPLEMENT#: **0** Category Cod **CHPA**

CONTINGENCY BALANCE (incl. this change **$5,724,409.61**

COST: **$50,681.00** INCREASE ☑ DECREASE ☐

HEADQUARTERS APPROVAL REQUIRED? ☐ YES ☑ NO

SUPPLEMENTAL FUNDS PROVIDED: **$0.00**

IS THIS REQUEST IN ACCORDANCE WITH ENVIRONMENTAL DOCUMENTS? ☑ YES ☐ NO

CCO DESCRIPTION:
Walkway hatch at Pier 15 and 16

PROJECT DESCRIPTION:
REPLACE SFOBB EAST SPAN

Original Contract Time:	Time Adj. This Change:	Previously Approved CCO Time Adjustments:	Percentage Time Adjusted: (including this change)	Total # of Unreconciled Deferred Time CCO(s): (including this change)
1000 Day(s)	**0** Day(s)	**424** Day(s)	**42** %	**0**

THIS CHANGE ORDER PROVIDES FOR:
Fabrication and installation of walkway frames and covers at Pier 15 Eastbound and Westbound as shown on contract plan sheet 100 of 978; and fabrication and installation of walkway frames and covers at Pier 16 Eastbound and Westbound as shown on added contract plan sheet 100A of 978 (page 2 of the change order) of the SFOBB East Span Skyway, Bridge Nos. 34-0006L/R.

Due to a perceived conflict between the Pier access and the walkway hatch covers, the walkway hatches at the Eastbound and Westbound Pier 15 and 16 were previously deleted as part of contract change order no. 24 supplement 2. As-built measurements verified that a typical hatch frame and cover, per contract plan sheet 100 of 978, will work at the Eastbound and Westbound Pier 15 location; however, the hatch frame and cover at Eastbound and Westbound Pier 16 will need to be fabricated and installed per added contract plan sheet 100A of 978, to mitigate the conflict between the pier access cover and the walkway hatch cover.

For this work, the Contractor will be paid an agreed lump sum amount of $50,681.00. This agreed lump sum constitutes full compensation, including all markups. The method of payment for this work is Extra Work at Agreed Lump Sum. This contract change order will result in a cost increase of $50,681.00 to the project, which can be financed from the contingency funds. A complete cost analysis is on file with the project records.

Prior approval was obtained from Mr. Doug Coe, Supervising Project Engineer, on January 4, 2007. A copy of the prior approval is attached.

FHWA Prior approval is not required as this is a minor change order.

Design concurrence was provided by Mr. Bob Zandipour, Senior Transportation Engineer, on April 16, 2007, as indicated by the attached E-mail.

Concurrence from Maintenance was obtained from Mr. Bill Zanetich, Structure Maintenance and Investigation, on April 27, 2007. A copy of the concurrence provided by Maintenance is attached.

No adjustment of contract time is warranted, as this change does not affect the controlling operation.

ADA Notice: For individuals with sensory disabilities, this document is available in alternate formats. For information call: (916) 654-6410 or TDD (916) 654-3880 or write Records and Forms Management, 1120 N Street, MS-89, Sacramento, CA 95814.

CONCURRED BY:			
Construction Engineer:	Douglas Coe DBC.	Date 4-27-07	
Bridge Engineer:	Douglas Coe DBC	Date 4-27-07	
Project Engineer:		Date	
Project Manager:		Date	
FHWA Rep.:		Date	
Environmental:		Date	
Other (specify):		Date	
Other (specify):		Date	
District Prior Approval By:	Douglas Coe, Resident Engineer	Date	1/4/07
HQ (Issue Approve) By:		Date	
Resident Engineer's Signature:		Date	4-27-07

ESTIMATE OF COST

	THIS REQUEST	TOTAL TO DATE
ITEMS	$0.00	$0.00
FORCE ACCOUNT	$0.00	$0.00
AGREED PRICE	$50,681.00	$50,681.00
ADJUSTMENT	$0.00	$0.00
TOTAL	$50,681.00	$50,681.00

FEDERAL PARTICIPATION

☑ PARTICIPATING ☐ PARTICIPATING IN PART ☐ NONE
☐ NON-PARTICIPATING (MAINTENANCE) ☐ NON-PARTICIPATING

FEDERAL SEGREGATION (if more than one Funding Source or P.I.P. type)
☑ CCO FUNDED PER CONTRACT ☐ CCO FUNDED AS FOLLOWS

FEDERAL FUNDING SOURCE	PERCENT

ADA Notice: For individuals with sensory disabilities, this document is available in alternate formats. For information call: (916) 654-6410 or TDD (916) 654-3880 or write Records and Forms Management, 1120 N Street, MS-89, Sacramento, CA 95814.

STATE OF CALIFORNIA - DEPARTMENT OF TRANSPORTATION

CONTRACT CHANGE ORDER

Change Requested by: Engineer

CCO: 193	Suppl. No. 0	Contract No. 04 - 012024	Road 04-SF,Ala-80-13.9/14.3,0.0/1.6	FED. AID LOC.: ACIM-080-1(085)8N

To: **KIEWIT / FCI / MANSON a JV**

You are directed to make the following changes from the plans and specifications or do the following described work not included in the plans and specifications for this contract. ***NOTE: This change order is not effective until approved by the Engineer.***

Description of work to be done, estimate of quantities and prices to be paid. (Segregate between additional work at contract price, agreed price and force account.) Unless otherwise stated, rates for rental of equipment cover only such time as equipment is actually used and no allowance will be made for idle time. This last percentage shown is the net accumulated increase or decrease from the original

Extra Work at Lump Sum:

As authorized by the Engineer, remove the existing inner bike path traveler rail 19 mm A325 bolt assemblies and splice plates, and install new bolt assemblies and splice plates. Also, add stainless steel spherical washers below the splice plate: and tapered shims between the upper flange of the inner traveler rails and the lower flange of the drip fin plate of the bikepath cantilever beams as shown on page 2 of 2 of this change order, for the SFOBB East Span Skyway, Bridge No. 34 0006R.

For this work, the Contractor agrees to accept an agreed lump sum amount of $300,343.00. This agreed lump sum constitutes full compensation for all costs, including markups, all direct and indirect costs, all associated project impacts, and all overhead costs.

Extra Work at Agreed Lump Sum $300,343.00

Estimated Cost: Increase ☑ Decrease ☐ $300,343.00

By reason of this order the time of completion will be adjusted as follows: 0 days

Submitted by

Signature	Resident Engineer DOUG COE, Supervising Br. Eng.	Date 10-26-07

Approval Recommended by

Signature	Construction Engineer DOUG COE	Date 10-26-07

Engineer Approval by

Signature Michael Fraum	Construction Manager PETER SIEGENTHALER	Date 11-14-07

We the undersigned contractor, have given careful consideration to the change proposed and agree, if this proposal is approved, that we will provide all equipment, furnish the materials, except as may otherwise be noted above, and perform all services necessary for the work above specified, and will accept as full payment therefor the prices shown above.

NOTE: If you, the contractor, do not sign acceptance of this order, your attention is directed to the requirements of the specifications as to proceeding with the ordered work and filing a written protest within the time therein specified.

Contractor Acceptance by

Signature	(Print name and title) Lee Zink Proj. Director	Date 11/6/07

STATE OF CALIFORNIA - DEPARTMENT OF TRANSPORTATION

CONTRACT CHANGE ORDER MEMORANDUM

TO: PETER SIEGENTHALER / DOUG COE, Supervising Br. Eng.

FROM: DOUG COE, Supervising Br. Eng.

FILE: **E.A.** 04 - 012024
CO-RTE-PM 04-SF,Ala-80-13.9/14.3,0.0/1.6
FED. NO. ACIM-080-1(085)8N

CCO# **193** SUPPLEMENT#: **0** Category Cod **CHPX**

CONTINGENCY BALANCE (incl. this change **$4,585,386.57**

COST: **$300,343.00** INCREASE ☑ DECREASE ☐

HEADQUARTERS APPROVAL REQUIRED? ☑ YES ☐ NO

SUPPLEMENTAL FUNDS PROVIDED: **$0.00**

IS THIS REQUEST IN ACCORDANCE WITH ENVIRONMENTAL DOCUMENTS? ☑ YES ☐ NO

CCO DESCRIPTION:
Bike Path Traveler Rail Bolts

PROJECT DESCRIPTION:
REPLACE SFOBB EAST SPAN

Original Contract Time:	Time Adj. This Change:	Previously Approved CCO Time Adjustments:	Percentage Time Adjusted: (including this change)	Total # of Unreconciled Deferred Time CCO(s): (including this change)
1000 Day(s)	**0** Day(s)	**424** Day(s)	**42** %	**2**

THIS CHANGE ORDER PROVIDES FOR:

Removing the existing inner bike path traveler rail 19 mm A325 bolt assemblies and splice plates, and installing new bolt assemblies and splice plates; adding stainless steel spherical washers below the splice plates and tapered shims between the upper flange of the inner traveler rails and the lower flange of the drip fin plate of the bike path cantilever beams as shown on page 2 of 2 of the change order, for the SFOBB East Span Skyway, Bridge No. 34-0006R.

The welded upper flange of the inner traveler rail was warped during fabrication. Although it is within the AISC fabrication tolerances, the warpage creates a gap and an uneven bearing surface for the bolt assemblies to the flange. The required torque for the A325 bolt assemblies to close the gap overstresses the bolts if used in this manner. Tapered shims will be necessary between the traveler rail upper flange and the lower flange of the drip fin plate. A spherical washer below the splice plate will be needed to provide for an even bolt assembly contact surface. Also, the per contract plan sheet 911R1 of 978 fabricated splice plates interfere with the web-flange fillet welds. Therefore, smaller splice plates that provide enough clearance to the web-flange fillet welds will need to be fabricated and installed. To access the 250 plus locations under the bike path, the design and fabrication of special work platforms will be necessary.

The repair procedure will include the replacement of four (4) bolt assemblies and two (2) splice plates, the installation of four (4) tapered shims, four (4) washers and four (4) spherical washers at 255 joint locations. Included in the cost is the design and fabrication of specialty platforms to provide access to these locations.

The method of payment will be Extra Work at Force Account. The anticipated cost for this work is estimated at $300,343.00. A force account analysis for this work is on file in the project records. This work will be funded from the project contingency funds.

Mr. Pete Siegenthaler, SFOBB Construction Manager, Toll Bridge Construction, concurs with this change. A copy of the concurrence signed by Mr. Siegenthaler on December 1, 2006 is attached.

Prior Approval was obtained from Ms. Nancy Bobb, FHWA Bay Bridge Project Manager, via electronic message on April 24, 2007. A printed copy of the prior approval provided by Ms. Bobb is attached.

Prior Approval was obtained from Mr. Ken Terpstra, SFOBB Project Manager, via electronic message on May 22, 2007. A printed copy of the prior approval provided by Mr. Terpstra is attached.

Design concurrence was obtained from Mr. Michael White, Mechanical Engineer, Maintenance & Special Projects on August 2, 2007, as indicated by his signature on page 2 of 2 of the change order.

Concurrence from Maintenance is not required, as this change order does not affect maintenance facilities or operations.

Authorization to proceed with this change order was issued by Headquarters on April 3, 2007.

No time adjustment is warranted for this change as it does not affect the controlling operation.

ADA Notice: For individuals with sensory disabilities, this document is available in alternate formats. For information call: (916) 654-6410 or TDD (916) 654-3880 or write Records and Forms Management, 1120 N Street, MS-89, Sacramento, CA 95814.

CONCURRED BY:			
Construction Engineer:	Douglas Coe	DJC	Date 10-26-07
Bridge Engineer:	Douglas Coe	DJC	Date 10-26-07
Project Engineer:			Date
Project Manager:	Ken Terpstra		Date 5/27/07
FHWA Rep.:	Nancy Bobb		Date 4/2/07
Environmental:			Date
Other (specify):	Michael White, Design		Date 8/2/07
Other (specify):			Date
District Prior Approval By:	Peter Siegenthaler		Date 8/15/06
HQ (Issue Approve) By:	Ken Darby		Date 4/3/07
Resident Engineer's Signature:			Date 10-26-07

ESTIMATE OF COST

	THIS REQUEST	TOTAL TO DATE
ITEMS	$0.00	$0.00
FORCE ACCOUNT	$0.00	$0.00
AGREED PRICE	$300,343.00	$300,343.00
ADJUSTMENT	$0.00	$0.00
TOTAL	$300,343.00	$300,343.00

FEDERAL PARTICIPATION

☑ PARTICIPATING ☐ PARTICIPATING IN PART ☐ NONE
☐ NON-PARTICIPATING (MAINTENANCE) ☐ NON-PARTICIPATING

FEDERAL SEGREGATION (if more than one Funding Source or P.I.P. type)
☑ CCO FUNDED PER CONTRACT ☐ CCO FUNDED AS FOLLOWS

FEDERAL FUNDING SOURCE	PERCENT

ADA Notice: For individuals with sensory disabilities, this document is available in alternate formats. For information call: (916) 654-6410 or TDD (916) 654-3880 or write Records and Forms Management, 1120 N Street, MS-89, Sacramento, CA 95814.

CONTRACT CHANGE ORDER

Change Requested by: Engineer

CCO: 194	Suppl. No. 0	Contract No. 04 - 012024	Road 04-SF,Ala-80-13.9/14.3,0.0/1.6	FED. AID LOC.: ACIM-080-1(085)8N

To: **KIEWIT / FCI / MANSON a JV**

You are directed to make the following changes from the plans and specifications or do the following described work not included in the plans and specifications for this contract. ***NOTE: This change order is not effective until approved by the Engineer.***

Description of work to be done, estimate of quantities and prices to be paid. (Segregate between additional work at contract price, agreed price and force account.) Unless otherwise stated, rates for rental of equipment cover only such time as equipment is actually used and no allowance will be made for idle time. This last percentage shown is the net accumulated increase or decrease from the original quantity in the Engineer's Estimate.

Extra Work at Force Account:

Furnish labor, equipment, and material to open and close deck openings at locations as authorized by the Engineer to allow for examination of tendons and to obtain strand samples for destructive testing.

Estimatd cost of Extra Work at Force Account $50,000.00

Estimated Cost: Increase ☑ **Decrease** ☐ **$50,000.00**

By reason of this order the time of completion will be adjusted as follows: 0 days

Submitted by

Signature	Resident Engineer: DOUG COE, Supervising Br. Eng.	Date 8-6-06

Approval Recommended by

Signature	Construction Engineer: DOUG COE, Supervising Br. Eng.	Date 8-6-06

Engineer Approval by

Signature	(Print name and title) PETER SIEGENTHALER - Chief	Date

We the undersigned contractor, have given careful consideration to the change proposed and agree, if this proposal is approved, that we will provide all equipment, furnish the materials, except as may otherwise be noted above, and perform all services necessary for the work above specified, and will accept as full payment therefor the prices shown above.

NOTE: If you, the contractor, do not sign acceptance of this order, your attention is directed to the requirements of the specifications as to proceeding with the ordered work and filing a written protest within the time therein specified.

Contractor Acceptance by

Signature	(Print name and title) LEE ZONK, PROJECT DIRECTOR	Date 8/18/06

STATE OF CALIFORNIA - DEPARTMENT OF TRANSPORTATION

CONTRACT CHANGE ORDER MEMORANDUM

TO: PETER SIEGENTHALER / DOUG COE, Supervising Br. Eng.	FILE: **E.A.** 04 - 012024
FROM: DOUG COE, Supervising Br. Eng.	**CO-RTE-PM** 04-SF,Ala-80-13.9/14.3,0.0/1.6 **FED. NO.** ACIM-080-1(085)8N
CCO#: **194** SUPPLEMENT#: **0** Category Code: **CHPA**	CONTINGENCY BALANCE (incl. this change): **$22,778,087.67**
COST: **$50,000.00** INCREASE ☑ DECREASE ☐	HEADQUARTERS APPROVAL REQUIRED? ☐ YES ☑ NO
SUPPLEMENTAL FUNDS PROVIDED: **$0.00**	IS THIS REQUEST IN ACCORDANCE WITH ENVIRONMENTAL DOCUMENTS? ☑ YES ☐ NO
CCO DESCRIPTION: Tendon Examination	**PROJECT DESCRIPTION:** REPLACE SFOBB EAST SPAN

LOCATION: IN SAN FRANCISCO AND ALAMEDA COUNTIES IN SAN FRANCISCO AND OAKLAND FROM 1.3 KM EAST OF THE YERBA BUENA ISLAN

THIS CHANGE ORDER PROVIDES FOR:

Furnishing labor, equipment, and material to open and close deck openings at locations as authorized by the Engineer to allow for examination of tendons and to obtain strand samples for destructive testing.

The project has ungrouted tendons beyond the contract-specified time due to constructability issues. The Engineer has determined to examine the condition of these ungrouted tendons.

The work will be performed as extra work at force account for an estimated cost of $50,000.00.

FHWA Prior approval is not required, as this is a minor change order.

Concurrence from maintenance is not required because this change does not affect maintenance facilities or operations.

No adjustment of contract time is warranted, as this change does not affect the controlling operation.

CONCURRED BY:

Construction Engineer:	Douglas Coe	Date 9-6-06
Bridge Engineer:	Douglas Coe	Date 9-6-06
FHWA Representative:		Date
Project Engineer:		Date
Other (specify):		Date
		Date
		Date
District Prior Approval By:		Date
HQ (Issue Approve) By:		Date
Resident Engineer's Signature:		Date 9-6-06

ESTIMATE OF COST

	THIS REQUEST	TOTAL TO DATE
ITEMS	$0.00	$0.00
FORCE ACCOUNT	$50,000.00	$50,000.00
AGREED PRICE	$0.00	$0.00
ADJUSTMENT	$0.00	$0.00
TOTAL	$50,000.00	$50,000.00

FEDERAL PARTICIPATION

☑ PARTICIPATING ☐ PARTICIPATING IN PART ☐ NONE
☐ NON-PARTICIPATING (MAINTENANCE) ☐ NON-PARTICIPATING

FEDERAL SEGREGATION (if more than one Funding Source or P.I.P. type)
☑ CCO FUNDED PER CONTRACT ☐ CCO FUNDED AS FOLLOWS

FEDERAL FUNDING SOURCE	PERCENT

STATE OF CALIFORNIA - DEPARTMENT OF TRANSPORTATION

CONTRACT CHANGE ORDER

Change Requested by: Engineer

CCO: 194	Suppl. No. 1	Contract No. 04 - 012024	Road 04-SF,Ala-80-13.9/14.3,0.0/1.6	FED. AID LOC.: ACIM-080-1(085)8N

To: **KIEWIT / FCI / MANSON a JV**

You are directed to make the following changes from the plans and specifications or do the following described work not included in the plans and specifications for this contract. ***NOTE: This change order is not effective until approved by the Engineer.***

Description of work to be done, estimate of quantities and prices to be paid. (Segregate between additional work at contract price, agreed price and force account.) Unless otherwise stated, rates for rental of equipment cover only such time as equipment is actually used and no allowance will be made for idle time. This last percentage shown is the net accumulated increase or decrease from the original

Extra Work at Force Account:

Additional funds to furnish labor, equipment, and material to open and close deck openings at locations as authorized by the Engineer to allow for examination of tendons and to obtain strand samples for destructive testing and to expedite the tendon grouting operation of the SFOBB East Span Skyway, Bridge No. 34-0006L/R project.

Payment for this work shall be made in accordance with Section 5-1.21, "Force Account Payment," of the Special Provisions, and Section 9-1.03, "Force Account Payment," of the Standard Specifications.

Estimated cost of Extra Work at Force Account $650,000.00

Estimated Cost: Increase ☑ Decrease ☐ $650,000.00

By reason of this order the time of completion will be adjusted as follows: 0 days

Submitted by

Signature	Resident Engineer for DOUG COE, Supervising Br. Eng.	Date 3/5/08

Approval Recommended by

Signature	Construction Engineer for DOUG COE	Date 3/5/08

Engineer Approval by

Signature	Construction Manager MIKE FORNER	Date 3/12/08

We the undersigned contractor, have given careful consideration to the change proposed and agree, if this proposal is approved, that we will provide all equipment, furnish the materials, except as may otherwise be noted above, and perform all services necessary for the work above specified, and will accept as full payment therefor the prices shown above.

NOTE: If you, the contractor, do not sign acceptance of this order, your attention is directed to the requirements of the specifications as to proceeding with the ordered work and filing a written protest within the time therein specified.

Contractor Acceptance by

Signature	(Print name and title) Lee Zink Project Director	Date 3/12/08

STATE OF CALIFORNIA - DEPARTMENT OF TRANSPORTATION

CONTRACT CHANGE ORDER MEMORANDUM

TO: MICHAEL FORNER / DOUG COE, Supervising Br. Eng.

FROM: DOUG COE, Supervising Br. Eng.

FILE: E.A. 04 - 012024
CO-RTE-PM 04-SF,Ala-80-13.9/14.3.0.0/1.6
FED. NO. ACIM-080-1(085)8N

CCO# **194** SUPPLEMENT#: **1** Category Cod **CHPA**

CONTINGENCY BALANCE (incl. this change **$1,112,461.97**

COST: **$650,000.00** INCREASE ☑ DECREASE ☐

HEADQUARTERS APPROVAL REQUIRED? ☑ YES ☐ NO

SUPPLEMENTAL FUNDS PROVIDED: **$0.00**

IS THIS REQUEST IN ACCORDANCE WITH ENVIRONMENTAL DOCUMENTS? ☑ YES ☐ NO

CCO DESCRIPTION:
Additional Funds for Tendon Examination

PROJECT DESCRIPTION:
REPLACE SFOBB EAST SPAN

Original Contract Time:	Time Adj. This Change:	Previously Approved CCO Time Adjustments:	Percentage Time Adjusted: (including this change)	Total # of Unreconciled Deferred Time CCO(s): (including this change)
1000 Day(s)	**0** Day(s)	**424** Day(s)	**42** %	**7**

THIS CHANGE ORDER PROVIDES FOR:
additional funds to furnish labor, equipment, and material to open and close deck openings at locations authorized by the Engineer to allow for examination of tendons and to obtain strand samples for destructive testing and to expedite the tendon grouting operation of the SFOBB East Span Skyway, Bridge No. 34-0006L/R project.

This change order is needed to provide additional funds to complete the examination of the project's ungrouted tendons, which have been exposed beyond the contract-specified time due to constructability issues. In addition, the change order will provide compensation for a portion of the incurred cost to expedite the grouting operation.

Since the ungrouted tendons were exposed to environmental conditions past the contract-specified time and early boroscope investigations showed rust on the strands, the Engineer required the removal of the strands in order to perform destructive testing on samples of the removed strands. To minimize the exposure of the remaining ungrouted tendons during the rainy season the Contractor will be required to expedite the grouting operation.

Due to the close proximity of the empty adjacent tendon ducts in the segmental construction of the bridge cross grouting was occurring at the joints between the precast segments. The Special Provisions were modified to allow the Contractor to complete grouting operations beyond the thirty days specified as approved by the Engineer, on a case by case basis. The delay in completion of the grouting operation was further impacted by the delays associated with the hinge pipe beams which prevented the installation of hinge segments. These constructability issues and delays led to a long exposure of stressed ungrouted tendons and the consequent intrusion of moisture into the tendon ducts.

This work will be paid for as Extra Work at Force Account for an estimated cost of $650,000.00, which can be financed from the contingency fund. A force account analysis for this work is on file in the project records.

Mr. Mike Forner, SFOBB Construction Manager, Toll Bridge Construction, concurs with this change. A copy of the concurrence signed by Mr. Forner on November 5, 2007 is attached.

Prior Approval was obtained from Ms. Nancy Bobb, FHWA Bay Bridge Project Manager, via electronic message on March 4, 2008. A printed copy of the prior approval stating that the FHWA will participate with 50% of the total cost was provided by Ms. Bobb and is attached.

Mr. Ken Terpstra, SFOBB Toll Bridge Project Manager, provided concurrence on February 26, 2008. A copy of the concurrence provided by Mr. Terpstra is attached.

The strand corrosion investigation was performed at the request of Mr. Brian Moroney, SFOBB Project Manager and Principal Engineer, as indicated in the "Corrosion Evaluation and tensile Results of Selected Post-Tensioning Strands at the SFOBB Skyway Seismic Replacement Project" report prepared by Mr. Robert A. Reis, Corrosion Specialist, on September 18, 2006.

Concurrence from maintenance is not required because this change does not affect maintenance facilities or operations.

No adjustment of contract time is warranted, as this change does not affect the controlling operation.

ADA Notice: For individuals with sensory disabilities, this document is available in alternate formats. For information call: (916) 654-6410 or TDD (916) 654-3880 or write Records and Forms Management, 1120 N Street, MS-89, Sacramento, CA 95814.

CONCURRED BY:			
Construction Engineer:	Douglas Coe	Date	3/5/08
Bridge Engineer:	Douglas Coe	Date	3/5/08
Project Engineer:		Date	
Project Manager:	Ken Terpstra	Date	2/26/08
FHWA Rep.:	Nancy Bobb	Date	3/4/08
Environmental:		Date	
Other (specify):	Brian Maroney	Date	9/18/06
Other (specify):		Date	
District Prior Approval By:	Mike Forner	Date	11/5/07
HQ (Issue Approve) By:	Ken Darby	Date	2/20/08
Resident Engineer's Signature:		Date	3/5/08

ESTIMATE OF COST

	THIS REQUEST	TOTAL TO DATE
ITEMS	$0.00	$0.00
FORCE ACCOUNT	$650,000.00	$700,000.00
AGREED PRICE	$0.00	$0.00
ADJUSTMENT	$0.00	$0.00
TOTAL	$650,000.00	$700,000.00

FEDERAL PARTICIPATION

☐ PARTICIPATING ☑ PARTICIPATING IN PART ☐ NONE
☐ NON-PARTICIPATING (MAINTENANCE) ☐ NON-PARTICIPATING

FEDERAL SEGREGATION (If more than one Funding Source or P.I.P. type)
☐ CCO FUNDED PER CONTRACT ☑ CCO FUNDED AS FOLLOWS

FEDERAL FUNDING SOURCE	PERCENT

ADA Notice: For individuals with sensory disabilities, this document is available in alternate formats. For information call: (916) 654-6410 or TDD (916) 654-3880 or write Records and Forms Management, 1120 N Street, MS-89, Sacramento, CA 95814.

STATE OF CALIFORNIA - DEPARTMENT OF TRANSPORTATION

CONTRACT CHANGE ORDER

Change Requested by: Engineer

CCO: 195	Suppl. No. 0	Contract No. 04 - 012024	Road 04-SF,Ala-80-13.9/14.3,0.0/1.6	FED. AID LOC.: ACIM-080-1(085)8N

To: **KIEWIT / FCI / MANSON a JV**

You are directed to make the following changes from the plans and specifications or do the following described work not included in the plans and specifications for this contract. ***NOTE: This change order is not effective until approved by the Engineer.***

Description of work to be done, estimate of quantities and prices to be paid. (Segregate between additional work at contract price, agreed price and force account.) Unless otherwise stated, rates for rental of equipment cover only such time as equipment is actually used and no allowance will be made for idle time. This last percentage shown is the net accumulated increase or decrease from the original

Extra Work at Force Account:

As authorized by the Engineer and in accordance with Section 4-1.03D "Extra Work" and Section 9-1.03 "Force Account Payment " of the Standard Specifications and Section 5-1.21 "Force Account Payment" of the Special Provisions, provide the labor, materials, and equipment as necessary to perform all work to resolve minor constructability issues to the electrical system such as, relocating of Scada boxes and minor alterations to the cable trays, that have no effect on contract time during construction of the electrical components of the SFOBB East Span Skyway, Bridge No. 34-0006L/R project.

Estimated cost of Extra Work at Force Account $100,000.00

Estimated Cost: Increase ☑ Decrease ☐ **$100,000.00**

By reason of this order the time of completion will be adjusted as follows: 0 days

Submitted by

Signature	Resident Engineer: DOUG COE, Supervising Br. Eng.	Date 1-26-07

Approval Recommended by

Signature	Construction Engineer: DOUG COE, Supervising Br. Eng.	Date 1-26-07

Engineer Approval by

Signature	(Print name and title) PETER SIEGENTHALER - Chief	Date 4-19-07

We the undersigned contractor, have given careful consideration to the change proposed and agree, if this proposal is approved, that we will provide all equipment, furnish the materials, except as may otherwise be noted above, and perform all services necessary for the work above specified, and will accept as full payment therefor the prices shown above.

NOTE: If you, the contractor, do not sign acceptance of this order, your attention is directed to the requirements of the specifications as to proceeding with the ordered work and filing a written protest within the time therein specified.

Contractor Acceptance by

Signature	(Print name and title) Lee Zink Project Director	Date 4/16/07

STATE OF CALIFORNIA - DEPARTMENT OF TRANSPORTATION

CONTRACT CHANGE ORDER MEMORANDUM

DATE: 1/26/2007

TO: PETER SIEGENTHALER / DOUG COE, Supervising Br. Eng.

FROM: DOUG COE, Supervising Br. Eng.

FILE: E.A. 04 - 012024
CO-RTE-PM 04-SF,Ala-80-13.9/14.3,0.0/1.6
FED. NO. ACIM-080-1(085)8N

CCO# **195** SUPPLEMENT#: **0** Category Cod **AXZZ**

CONTINGENCY BALANCE (incl. this change **$9,054,845.08**

COST: **$100,000.00** INCREASE ☑ DECREASE ☐

HEADQUARTERS APPROVAL REQUIRED? ☐ YES ☑ NO

SUPPLEMENTAL FUNDS PROVIDED: **$0.00**

IS THIS REQUEST IN ACCORDANCE WITH ENVIRONMENTAL DOCUMENTS? ☑ YES ☐ NO

CCO DESCRIPTION:
Electrical Field Conflict Resolution

PROJECT DESCRIPTION:
REPLACE SFOBB EAST SPAN

Original Contract Time:	Time Adj. This Change:	Previously Approved CCO Time Adjustments:	Percentage Time Adjusted: (including this change)	Total # of Unreconciled Deferred Time CCO(s): (including this change)
1000 Day(s)	**0** Day(s)	**424** Day(s)	**42** %	**0**

THIS CHANGE ORDER PROVIDES FOR:
Establishing a method to resolve minor constructability issues that have no effect on contract time during the construction of the electrical system components of the project.

This change order will allow the Engineer to quickly resolve interference issues arising during the construction of the electrical component of the project, before they encroach on the critical-path and delay the contract completion.

Although this work is covered in lump sum contract items, to progress the work without impact to the contract schedule payment for this work will be at Extra Work at Force Account for an estimated cost of $100,000.00, which can be financed from the contingency fund.

Prior approval was obtained from Mr. Doug Coe, Supervising Bridge Engineer, on January 16, 2007. A copy of the prior approval is attached.

FHWA Prior approval is not required, as this is a minor change order.

Concurrence from maintenance is not required because this change does not affect maintenance facilities or operations.

Concurrence from Design is not required because this change does not affect any design issues.

No adjustment of contract time is warranted, as this change does not affect the controlling operation.

CONCURRED BY:

Construction Engineer:	Douglas Coe	Date 1-26-07
Bridge Engineer:	Douglas Coe	Date 1-26-07
Project Engineer:		Date
Project Manager:		Date
FHWA Rep.:		Date
Environmental:		Date
Other (specify):		Date
Other (specify):		Date
District Prior Approval By:	Douglas Coe	Date 1/16/07
HQ (Issue Approve) By:		Date
Resident Engineer's Signature:		Date 1-26-07

ESTIMATE OF COST

	THIS REQUEST	TOTAL TO DATE
ITEMS	$0.00	$0.00
FORCE ACCOUNT	$100,000.00	$100,000.00
AGREED PRICE	$0.00	$0.00
ADJUSTMENT	$0.00	$0.00
TOTAL	$100,000.00	$100,000.00

FEDERAL PARTICIPATION

☑ PARTICIPATING ☐ PARTICIPATING IN PART ☐ NONE
☐ NON-PARTICIPATING (MAINTENANCE) ☐ NON-PARTICIPATING

FEDERAL SEGREGATION (If more than one Funding Source or P.I.P. type)
☑ CCO FUNDED PER CONTRACT ☐ CCO FUNDED AS FOLLOWS

FEDERAL FUNDING SOURCE PERCENT

ADA Notice: For individuals with sensory disabilities, this document is available in alternate formats. For information call: (916) 654-6410 or TDD (916) 654-3880 or write Records and Forms Management, 1120 N Street, MS-89, Sacramento, CA 95814.

STATE OF CALIFORNIA - DEPARTMENT OF TRANSPORTATION

CONTRACT CHANGE ORDER

Change Requested by: Engineer

CCO: 196 Suppl. No. 0 Contract No. 04 - 012024 Road 04-SF,Ala-80-13.9/14.3,0.0/1.6 FED. AID LOC.: ACIM-080-1(085)8N

To: KIEWIT / FCI / MANSON a JV

You are directed to make the following changes from the plans and specifications or do the following described work not included in the plans and specifications for this contract. ***NOTE: This change order is not effective until approved by the Engineer.***

Description of work to be done, estimate of quantities and prices to be paid. (Segregate between additional work at contract price, agreed price and force account.) Unless otherwise stated, rates for rental of equipment cover only such time as equipment is actually used and no allowance will be made for idle time. This last percentage shown is the net accumulated increase or decrease from the original

Adjustment of Compensation at Lump Sum:

As authorized by the Engineer, transport a Straddle Carrier wheel/tire assembly and five (5) construction signs identified by the Engineer, from the Stockton Pre-cast Yard to Pier 7 in Oakland or to a designated area in the vicinity of Pier 7.

For this work, the Contractor agrees to accept an agreed lump sum amount of $2,000.00. This agreed lump sum constitutes full compensation for all costs, including markups, all direct and indirect costs, all associated project impacts, and all overhead costs.

Adjustment of Compensation at Agreed Lump Sum $2,000.00

Estimated Cost: Increase ☑ Decrease ☐ $2,000.00

By reason of this order the time of completion will be adjusted as follows: 0 days

Submitted by

Signature	Resident Engineer: DOUG COE, Supervising Br. Eng.	Date 2-1-07

Approval Recommended by

Signature	Construction Engineer: DOUG COE, Supervising Br. Eng.	Date 2-1-07

Engineer Approval by

Signature	(Print name and title) PETER SIEGENTHALER - Chief	Date 2-21-07

We the undersigned contractor, have given careful consideration to the change proposed and agree, if this proposal is approved, that we will provide all equipment, furnish the materials, except as may otherwise be noted above, and perform all services necessary for the work above specified, and will accept as full payment therefor the prices shown above.

NOTE: If you, the contractor, do not sign acceptance of this order, your attention is directed to the requirements of the specifications as to proceeding with the ordered work and filing a written protest within the time therein specified.

Contractor Acceptance by

Signature	(Print name and title) Lee Zink Project Director	Date 2/9/07

STATE OF CALIFORNIA - DEPARTMENT OF TRANSPORTATION

CONTRACT CHANGE ORDER MEMORANDUM

TO: PETER SIEGENTHALER / DOUG COE, Supervising Br. Eng.	FILE: E.A. 04 - 012024
FROM: DOUG COE, Supervising Br. Eng.	CO-RTE-PM 04-SF,Ala-80-13.9/14.3,0.0/1.6
	FED. NO. ACIM-080-1(085)8N
CCO# **196** SUPPLEMENT#: **0** Category Cod **AXZZ**	CONTINGENCY BALANCE (incl. this change **$8,527,845.09**
COST: **$2,000.00** INCREASE ☑ DECREASE ☐	HEADQUARTERS APPROVAL REQUIRED? ☐ YES ☑ NO
SUPPLEMENTAL FUNDS PROVIDED: **$0.00**	IS THIS REQUEST IN ACCORDANCE WITH ENVIRONMENTAL DOCUMENTS? ☑ YES ☐ NO
CCO DESCRIPTION: Signs and Tire for Project Display	**PROJECT DESCRIPTION:** REPLACE SFOBB EAST SPAN

Original Contract Time:	Time Adj. This Change:	Previously Approved CCO Time Adjustments:	Percentage Time Adjusted: (including this change)	Total # of Unreconciled Deferred Time CCO(s): (including this change)
1000 Day(s)	**0** Day(s)	**0** Day(s)	**0** %	**0**

THIS CHANGE ORDER PROVIDES FOR:

Transporting a Straddle Carrier wheel/tire assembly and five (5) construction signs identified by the Engineer, from the Stockton Pre-cast Yard to Pier 7 in Oakland or to a designated area in the vicinity of Pier 7.

The Metropolitan Transportation Commission (MTC) has requested one of the tires and wheels from the Straddle Carrier, used to move segments at the pre-cast yard, to be displayed at a future project museum. In addition, the MTC has also requested several of the contractor's construction signs, used at the entrance to the Stockton Pre-cast Yard, to be used in the museum. The Contractor (KFM) has agreed to donate the tire and signs to the future museum, provided that the State compensates the contractor for the cost to mount the tire and transport the tire and signs to a storage location at or near Pier 7 in Oakland.

For this work, the Contractor will be paid an agreed lump sum amount of $2,000.00. This agreed lump sum constitutes full compensation, including all markups. The method of payment for this work is Adjustment of Compensation at Agreed Lump Sum. This contract change order will result in a cost increase of $2,000.00 to the project, which can be financed from the contingency funds. A complete cost analysis is on file with the project records.

Prior approval was obtained from Mr. Doug Coe, Supervising Bridge Engineer, on January 31, 2007. A copy of the prior approval is attached.

FHWA Prior approval is not required, as this is a minor change order.

Concurrence from maintenance is not required because this change does not affect maintenance facilities or operations.

Concurrence from Design is not required because this change does not affect any design issues.

A copy of the e-mail request from MTC is on file.

No adjustment of contract time is warranted, as this change does not affect the controlling operation.

RECEIVED
061205 MAR 27 5

ADA Notice: For individuals with sensory disabilities, this document is available in alternate formats. For information call: (916) 654-6410 or TDD (916) 654-3880 or write Records and Forms Management, 1120 N Street, MS-89, Sacramento, CA 95814.

CONCURRED BY:

Construction Engineer:	Douglas Coe DBC	Date 2-1-07	
Bridge Engineer:	Douglas Coe DBC	Date 2-1-07	
Project Engineer:		Date	
Project Manager:		Date	
FHWA Rep.:		Date	
Environmental:		Date	
Other (specify):		Date	
Other (specify):		Date	
District Prior Approval By:	Douglas Coe	Date	1/31/07
HQ (Issue Approve) By:		Date	
Resident Engineer's Signature:		Date	

2-1-07

ESTIMATE OF COST

	THIS REQUEST	TOTAL TO DATE
ITEMS	$0.00	$0.00
FORCE ACCOUNT	$0.00	$0.00
AGREED PRICE	$0.00	$0.00
ADJUSTMENT	$2,000.00	$2,000.00
TOTAL	$2,000.00	$2,000.00

FEDERAL PARTICIPATION

☑ PARTICIPATING ☐ PARTICIPATING IN PART ☐ NONE
☐ NON-PARTICIPATING (MAINTENANCE) ☐ NON-PARTICIPATING

FEDERAL SEGREGATION (if more than one Funding Source or P.I.P. type)

☑ CCO FUNDED PER CONTRACT ☐ CCO FUNDED AS FOLLOWS

FEDERAL FUNDING SOURCE	PERCENT

ADA Notice: For individuals with sensory disabilities, this document is available in alternate formats. For information call: (916) 654-6410 or TDD (916) 654-3880 or write Records and Forms Management, 1120 N Street, MS-89, Sacramento, CA 95814.

STATE OF CALIFORNIA - DEPARTMENT OF TRANSPORTATION

CONTRACT CHANGE ORDER

Change Requested by: Engineer

CCO: 197	Suppl. No. 0	Contract No. 04 - 012024	Road 04-SF,Ala-80-13.9/14.3,0.0/1.6	FED. AID LOC.: ACIM-080-1(085)8N

To: **KIEWIT / FCI / MANSON a JV**

You are directed to make the following changes from the plans and specifications or do the following described work not included in the plans and specifications for this contract. ***NOTE: This change order is not effective until approved by the Engineer.***

Description of work to be done, estimate of quantities and prices to be paid. (Segregate between additional work at contract price, agreed price and force account.) Unless otherwise stated, rates for rental of equipment cover only such time as equipment is actually used and no allowance will be made for idle time. This last percentage shown is the net accumulated increase or decrease from the original

Extra Work at Force Account:

As authorized by the Engineer and in accordance with Section 4-1.03D "Extra Work" and Section 9-1.03 "Force Account Payment " of the Standard Specifications and Section 5-1.21 "Force Account Payment" of the Special Provisions, provide the labor, materials, and equipment necessary to install liquid tight flexible metal conduits and all appropriate fittings, instead of the specified 78C - PVC Coated Rigid Conduit, from the conduit stub out locations at the pier table wings to the termination points on the service platforms of the SFOBB East Span Skyway, Bridge No. 34-0006L/R.

Estimated cost of Extra Work at Force Account $170,000.00

Estimated Cost: Increase ☑ Decrease ☐ $170,000.00

By reason of this order the time of completion will be adjusted as follows: 0 days

Submitted by

Signature	Resident Engineer DOUG COE, Supervising Br. Eng.	Date 9-5-07

Approval Recommended by

Signature	Construction Engineer DOUG COE	Date 9-5-07

Engineer Approved by

Signature	Construction Manager PETER SIEGENTHALER	Date 9-24-07

We the undersigned contractor, have given careful consideration to the change proposed and agree, if this proposal is approved, that we will provide all equipment, furnish the materials, except as may otherwise be noted above, and perform all services necessary for the work above specified, and will accept as full payment therefor the prices shown above.

NOTE: If you, the contractor, do not sign acceptance of this order, your attention is directed to the requirements of the specifications as to proceeding with the ordered work and filing a written protest within the time therein specified.

Contractor Acceptance by

Signature	(Print name and title)	Date

STATE OF CALIFORNIA - DEPARTMENT OF TRANSPORTATION

CONTRACT CHANGE ORDER MEMORANDUM

TO: PETER SIEGENTHALER / DOUG COE, Supervising Br. Eng.	FILE: E.A. 04 - 012024
	CO-RTE-PM 04-SF,Ala-80-13.9/14.3,0.0/1.6
FROM: DOUG COE, Supervising Br. Eng.	FED. NO. ACIM-080-1(085)8N
CCO# 197 SUPPLEMENT#: 0 Category Cod CBPC	CONTINGENCY BALANCE (incl. this change $7,369,480.11
COST: $170,000.00 INCREASE ☑ DECREASE ☐	HEADQUARTERS APPROVAL REQUIRED? ☑ YES ☐ NO
SUPPLEMENTAL FUNDS PROVIDED: $0.00	IS THIS REQUEST IN ACCORDANCE WITH ENVIRONMENTAL DOCUMENTS? ☑ YES ☐ NO
CCO DESCRIPTION: Service Platform Conduit	**PROJECT DESCRIPTION:** REPLACE SFOBB EAST SPAN

Original Contract Time:	Time Adj. This Change:	Previously Approved CCO Time Adjustments:	Percentage Time Adjusted: (including this change)	Total # of Unreconciled Deferred Time CCO(s): (including this change)
1000 Day(s)	0 Day(s)	424 Day(s)	42 %	0

THIS CHANGE ORDER PROVIDES FOR:

Installing liquid tight flexible metal conduits and all appropriate fittings, instead of the specified 78C - PVC Coated Rigid Conduit, from the conduit stub out locations at the pier table wings to the termination points on the service platforms, on the SFOBB East Span Skyway, Bridge Nos. 34-0006L/R.

Redesign of the twenty six (26) service platforms raised the elevation of the platforms approximately 200 MM above the electrical conduit stub out locations at the pier table wings. This prevents the conduits from lining up with the wire way and cabinets on the service platforms as was intended. Due to space restrictions between the platform and stub out locations the use of a 200 MM rigid conduit off-set is not feasible. Therefore, SFOBB electrical design recommends replacement of the PVC coated rigid conduit with liquid tight flexible metal conduit. Approximately 234 conduits are affected by this change (approximately 9 conduits per service platform).

The method of payment will be Extra Work at Force Account. The anticipated cost for this work is estimated at $170,000.00. A force account analysis for this work is on file in the project records. This work will be funded from the project contingency funds.

Prior approval was obtained from Mr. Doug Coe, Supervising Bridge Engineer, on March 6, 2007. A copy of the prior approval is attached.

FHWA Prior approval is not required, as this is a minor change order.

Design concurrence was obtained from Mr. Ellery Lucas, the designer of record, on February 20, 2007. A copy of the E-mail concurrence received from Mr. Ellery Lucas is attached.

Concurrence from Maintenance was obtained from Mr. Renato Fortaleza, Electrical Supervisor, on April 5, 2007. A copy of the E-mail concurrence received from Maintenance is attached.

No time adjustment is warranted for this change as it does not affect the controlling operation.

The change order was forwarded to the Contractor on April 5, 2007. The Contractor returned the Change Order un-signed on April 17, 2007, requested that the contract time adjustment be defered. Therefore, this change order is processed unilaterally by the Engineer.

ADA Notice: For individuals with sensory disabilities, this document is available in alternate formats. For information call: (916) 654-6410 or TDD (916) 654-3880 or write Records and Forms Management, 1120 N Street, MS-89, Sacramento, CA 95814.

CONCURRED BY:			
Construction Engineer:	Douglas Coe	DJC	Date 4-23-07
Bridge Engineer:	Douglas Coe	DJC	Date 4-23-07
Project Engineer:			Date
Project Manager:			Date
FHWA Rep.:			Date
Environmental:			Date
Other (specify):			Date
Other (specify):			Date
District Prior Approval By:	Douglas Coe		Date 3/6/07
HQ (Issue Approve) By:			Date
Resident Engineer's Signature:			Date 4-23-07

ESTIMATE OF COST

	THIS REQUEST	TOTAL TO DATE
ITEMS	$0.00	$0.00
FORCE ACCOUNT	$170,000.00	$170,000.00
AGREED PRICE	$0.00	$0.00
ADJUSTMENT	$0.00	$0.00
TOTAL	$170,000.00	$170,000.00

FEDERAL PARTICIPATION

☑ PARTICIPATING ☐ PARTICIPATING IN PART ☐ NONE
☐ NON-PARTICIPATING (MAINTENANCE) ☐ NON-PARTICIPATING

FEDERAL SEGREGATION (if more than one Funding Source or P.I.P. type)
☑ CCO FUNDED PER CONTRACT ☐ CCO FUNDED AS FOLLOWS

FEDERAL FUNDING SOURCE	PERCENT

ADA Notice: For individuals with sensory disabilities, this document is available in alternate formats. For information call: (916) 654-6410 or TDD (916) 654-3880 or write Records and Forms Management, 1120 N Street, MS-89, Sacramento, CA 95814.

STATE OF CALIFORNIA - DEPARTMENT OF TRANSPORTATION

CONTRACT CHANGE ORDER

Change Requested by: Engineer

CCO: 197	Suppl. No. 1	Contract No. 04 - 012024	Road 04-SF,Ala-80-13.9/14.3,0.0/1.6	FED. AID LOC.: ACIM-080-1(085)8N

To: **KIEWIT / FCI / MANSON a JV**

You are directed to make the following changes from the plans and specifications or do the following described work not included in the plans and specifications for this contract. ***NOTE: This change order is not effective until approved by the Engineer.***

Description of work to be done, estimate of quantities and prices to be paid. (Segregate between additional work at contract price, agreed price and force account.) Unless otherwise stated, rates for rental of equipment cover only such time as equipment is actually used and no allowance will be made for idle time. This last percentage shown is the net accumulated increase or decrease from the original

Extra Work at Force Account:

Additional funds for CCO 197 Supplement 0 to complete the installation of the liquid tight flexible metal conduits and all appropriate fittings, instead of the specified 78C - PVC Coated Rigid Conduit, from the conduit stub out locations at the pier table wings to the termination points on the service platforms of the SFOBB East Span Skyway, Bridge Nos. 340006L/R.

Payment for this work shall be made in accordance with Section 5-1.21, "Force Account Payment," of the Special Provisions, and Section 9-1.03, "Force Account Payment," of the Standard Specifications.

Estimated cost of Extra Work at Force Account $60,000.00

Estimated Cost: Increase ☑ Decrease ☐ $60,000.00

By reason of this order the time of completion will be adjusted as follows: Deferred

Submitted by

Signature	Resident Engineer DOUG COE, Supervising Br. Eng.	Date 10-25-07

Approval Recommended by

Signature	Construction Engineer DOUG COE	Date 10-25-07

Engineer Approval by

Signature	Construction Manager PETER SIEGENTHALER	Date 11/14/07

We the undersigned contractor, have given careful consideration to the change proposed and agree, if this proposal is approved, that we will provide all equipment, furnish the materials, except as may otherwise be noted above, and perform all services necessary for the work above specified, and will accept as full payment therefor the prices shown above.

NOTE: If you, the contractor, do not sign acceptance of this order, your attention is directed to the requirements of the specifications as to proceeding with the ordered work and filing a written protest within the time therein specified.

Contractor Acceptance by

Signature	(Print name and title) Lee Zink Proj. Director	Date 11/06/07

STATE OF CALIFORNIA - DEPARTMENT OF TRANSPORTATION

CONTRACT CHANGE ORDER MEMORANDUM

TO: PETER SIEGENTHALER / DOUG COE, Supervising Br. Eng.

FROM: DOUG COE, Supervising Br. Eng.

CCO# **197** SUPPLEMENT#: **1** Category Cod **CBPC**

COST: **$60,000.00** INCREASE ☑ DECREASE ☐

SUPPLEMENTAL FUNDS PROVIDED: **$0.00**

FILE: **E.A.** 04 - 012024
CO-RTE-PM 04-SF,Ala-80-13.9/14.3.0.0/1.6
FED. NO. ACIM-080-1(085)8N

CONTINGENCY BALANCE (incl. this change **$4,591,776.10**

HEADQUARTERS APPROVAL REQUIRED? ☑ YES ☐ NO

IS THIS REQUEST IN ACCORDANCE WITH ENVIRONMENTAL DOCUMENTS? ☑ YES ☐ NO

CCO DESCRIPTION:
Added Funds for Service Platform Conduit

PROJECT DESCRIPTION:
REPLACE SFOBB EAST SPAN

Original Contract Time:	Time Adj. This Change:	Previously Approved CCO Time Adjustments:	Percentage Time Adjusted: (including this change)	Total # of Unreconciled Deferred Time CCO(s): (including this change)
1000 Day(s)	DEF **.8** Day(s)	**424** Day(s)	**42** %	**0**

THIS CHANGE ORDER PROVIDES FOR:
additional funds to complete CCO 197 Supplement 0 installation of the liquid tight flexible metal conduits and all appropriate fittings, instead of the specified 78C - PVC Coated Rigid Conduit, from the conduit stub out locations at the pier table wings to the termination points on the service platforms of the SFOBB East Span Skyway, Bridge Nos. 340006L/R.

This change order is needed to provide additional funds to complete the installation of liquid tight flexible metal conduits and all appropriate fittings, as required in CCO No. 197 Supplement 0. The Department and the Contractor have agreed on a total cost for this extra work.

This work will be paid for as Extra Work at Force Account for an estimated cost of $60,000.00, which can be financed from the contingency fund.

Mr. Pete Siegenthaler, SFOBB Construction Manager, Toll Bridge Construction, concurs with this change. A copy of the concurrence signed by Mr. Siegenthaler on September 24, 2007 is attached.

Prior Approval was obtained from Ms. Nancy Bobb, FHWA Bay Bridge Project Manager, via electronic message on October 10, 2007. A printed copy of the prior approval provided by Ms. Bobb is attached.

Mr. Ken Terpstra , SFOBB Toll Bridge Project Manager, provided concurrence on October 2, 2007. A copy of the concurrence provided by Mr. Terpstra is attached.

Design concurrence was obtained for Contract Change Order No. 197 Supplement 0.

Maintenance concurrence was obtained for Contract Change Order No. 197 Supplement 0.

The electrical sub-contractor is unsure that all of the electrical change order work can be completed within the current contract time and is therefore unwilling to agree to any contract change orders without deferred time.

The determination of any adjustment to contract time will be deferred until the completion of work associated with this change.

ADA Notice: For individuals with sensory disabilities, this document is available in alternate formats. For information call: (916) 654-6410 or TDD (916) 654-3880 or write Records and Forms Management, 1120 N Street, MS-89, Sacramento, CA 95814.

CONCURRED BY:			
Construction Engineer:	Douglas Coe DBC	Date	10-25-07
Bridge Engineer:	Douglas Coe DBC	Date	10-25-07
Project Engineer:	Ellery Lucas	Date	2/20/07
Project Manager:	Ken Terpstra	Date	10/2/07
FHWA Rep.:	Nancy Bobb	Date	10/9/07
Environmental:		Date	
Other (specify):		Date	
Other (specify):		Date	
District Prior Approval By:	Peter Siegenthaler	Date	9/24/07
HQ (Issue Approve) By:	Ken Darby	Date	10/1/07
Resident Engineer's Signature:		Date	
	Douglas Coe		10-25-07

ESTIMATE OF COST

	THIS REQUEST	TOTAL TO DATE
ITEMS	$0.00	$0.00
FORCE ACCOUNT	$60,000.00	$230,000.00
AGREED PRICE	$0.00	$0.00
ADJUSTMENT	$0.00	$0.00
TOTAL	$60,000.00	$230,000.00

FEDERAL PARTICIPATION

☑ PARTICIPATING ☐ PARTICIPATING IN PART ☐ NONE
☐ NON-PARTICIPATING (MAINTENANCE) ☐ NON-PARTICIPATING

FEDERAL SEGREGATION (if more than one Funding Source or P.I.P. type)
☑ CCO FUNDED PER CONTRACT ☐ CCO FUNDED AS FOLLOWS

FEDERAL FUNDING SOURCE	PERCENT

ADA Notice: For individuals with sensory disabilities, this document is available in alternate formats. For information call: (916) 654-6410 or TDD (916) 654-3880 or write Records and Forms Management, 1120 N Street, MS-89, Sacramento, CA 95814.

STATE OF CALIFORNIA - DEPARTMENT OF TRANSPORTATION

CONTRACT CHANGE ORDER

Change Requested by: Engineer

CCO: 197	Suppl. No. 2	Contract No. 04 - 012024	Road 04-SF,Ala-80-13.9/14.3,0.0/1.6	FED. AID LOC.: ACIM-080-1(085)8N

To: **KIEWIT / FCI / MANSON a JV**

You are directed to make the following changes from the plans and specifications or do the following described work not included in the plans and specifications for this contract. ***NOTE: This change order is not effective until approved by the Engineer.***

Description of work to be done, estimate of quantities and prices to be paid. (Segregate between additional work at contract price, agreed price and force account.) Unless otherwise stated, rates for rental of equipment cover only such time as equipment is actually used and no allowance will be made for idle time. This last percentage shown is the net accumulated increase or decrease from the original

Adjustment of Compensation at Lump Sum:

A determination of the delay in completion of the contract due to the work specified by Contract Change Order No. 197, Supplement 1 has been made in accordance with the provisions of Section 8-1.07, "Liquidated Damages," of the Standard Specifications.

Since all work associated with Contract Change Order No. 197, Supplement 0, and Supplement 1 was completed within the contract time of completion, no additional compensation for project impacts is merited.

Adjustment of Compensation at Agreed Lump Sum $0.00

Estimated Cost: Increase ☐ Decrease ☐ $0.00

By reason of this order the time of completion will be adjusted as follows: 0 days

Submitted by

Signature	Resident Engineer DOUG COE, Supervising Br. Eng.	Date 1-17-08

Approval Recommended by

Signature	Construction Engineer DOUG COE	Date 1-17-08

Engineer Approval by

Signature Mike Forner	Construction Manager MIKE FORNER	Date 2-14-08

We the undersigned contractor, have given careful consideration to the change proposed and agree, if this proposal is approved, that we will provide all equipment, furnish the materials, except as may otherwise be noted above, and perform all services necessary for the work above specified, and will accept as full payment therefor the prices shown above.

NOTE: If you, the contractor, do not sign acceptance of this order, your attention is directed to the requirements of the specifications as to proceeding with the ordered work and filing a written protest within the time therein specified.

Contractor Acceptance by

Signature	(Print name and title) Lee Zink Project Director	Date 2/8/08

STATE OF CALIFORNIA - DEPARTMENT OF TRANSPORTATION

CONTRACT CHANGE ORDER MEMORANDUM

DATE: 1/17/2008

TO: MICHAEL FORNER / DOUG COE, Supervising Br. Eng.

FROM: DOUG COE, Supervising Br. Eng.

FILE: E.A. 04 - 012024
CO-RTE-PM 04-SF,Ala-80-13.9/14.3,0.0/1.6
FED. NO. ACIM-080-1(085)8N

CCO# **197** SUPPLEMENT#: **2** Category Cod **CBPC**

CONTINGENCY BALANCE (Incl. this change **$1,664,001.73**

COST: **$0.00** INCREASE ☐ DECREASE ☐

HEADQUARTERS APPROVAL REQUIRED? ☑ YES ☐ NO

SUPPLEMENTAL FUNDS PROVIDED: **$0.00**

IS THIS REQUEST IN ACCORDANCE WITH ENVIRONMENTAL DOCUMENTS? ☑ YES ☐ NO

CCO DESCRIPTION:
Serv. Platform Conduit Def Time Closeout

PROJECT DESCRIPTION:
REPLACE SFOBB EAST SPAN

Original Contract Time:	Time Adj. This Change:	Previously Approved CCO Time Adjustments:	Percentage Time Adjusted: (including this change)	Total # of Unreconciled Deferred Time CCO(s): (including this change)
1000 Day(s)	**0** Day(s)	**424** Day(s)	**42** %	**8**

THIS CHANGE ORDER PROVIDES FOR:
closing out the deferred time element of Contract Change Order No. 197 Supplement 1, "Added Funds for Service Platform Conduit".

The work has been completed. The Engineer and the Contractor agree that there were no impacts to the controlling operation of work. The time element of this change order is therefore resolved.

For this change order, the Engineer and the Contractor agree that there are no costs to either the State or the Contractor, and that this change order results in a zero cost adjustment.

Mr. Mike Forner, SFOBB Construction Manager, concurs with this change. A copy of the concurrence signed by Mr. Forner on December 13, 2007, is attached.

Prior Approval was obtained from Ms. Nancy Bobb, FHWA Bay Bridge Project Manager, via electronic message on January 15, 2008. A printed copy of the prior approval provided by Ms. Bobb is attached.

Mr. Ken Terpstra , SFOBB Toll Bridge Project Manager, provided concurrence on December 21, 2007. A copy of the concurrence provided by Mr. Terpstra is attached.

Concurrence from Maintenance is not required as this change order does not use maintenance funds or affect maintenance facilities or operations.

A determination has been made that no time adjustment is warranted for this change as it does not affect the controlling operation.

CONCURRED BY:

Construction Engineer:	Douglas Coe DJC	Date 1-17-08	
Bridge Engineer:	Douglas Coe DJC	Date 1-17-08	
Project Engineer:		Date	
Project Manager:	Ken Terpstra	Date 12/21/07	
FHWA Rep.:	Nancy Bobb	Date 1/15/08	
Environmental:		Date	
Other (specify):		Date	
Other (specify):		Date	
District Prior Approval By:	Mike Forner	Date 12/13/07	
HQ (Issue Approve) By:	Ken Darby	Date	
Resident Engineer's Signature:		Date	

1-17-08

ESTIMATE OF COST

	THIS REQUEST	TOTAL TO DATE
ITEMS	$0.00	$0.00
FORCE ACCOUNT	$0.00	$230,000.00
AGREED PRICE	$0.00	$0.00
ADJUSTMENT	$0.00	$0.00
TOTAL	$0.00	$230,000.00

FEDERAL PARTICIPATION

☑ PARTICIPATING ☐ PARTICIPATING IN PART ☐ NONE
☐ NON-PARTICIPATING (MAINTENANCE) ☐ NON-PARTICIPATING

FEDERAL SEGREGATION (if more than one Funding Source or P.I.P. type)
☑ CCO FUNDED PER CONTRACT ☐ CCO FUNDED AS FOLLOWS

FEDERAL FUNDING SOURCE PERCENT

ADA Notice: For individuals with sensory disabilities, this document is available in alternate formats. For information call: (916) 654-6410 or TDD (916) 654-3880 or write Records and Forms Management, 1120 N Street, MS-89, Sacramento, CA 95814.

STATE OF CALIFORNIA - DEPARTMENT OF TRANSPORTATION

CONTRACT CHANGE ORDER

Change Requested by: Engineer

CCO: 198 **Suppl. No. 0** **Contract No. 04 - 012024** **Road** 04-SF,Ala-80-13.9/14.3,0.0/1.6 **FED. AID LOC.:** ACIM-080-1(085)8N

To: **KIEWIT / FCI / MANSON a JV**

You are directed to make the following changes from the plans and specifications or do the following described work not included in the plans and specifications for this contract. ***NOTE: This change order is not effective until approved by the Engineer.***

Description of work to be done, estimate of quantities and prices to be paid. (Segregate between additional work at contract price, agreed price and force account.) Unless otherwise stated, rates for rental of equipment cover only such time as equipment is actually used and no allowance will be made for idle time. This last percentage shown is the net accumulated increase or decrease from the original

Adjustment of Compensation at Lump Sum:

As authorized by the Engineer, delete the installation of the State supplied call box mounting hardware for call box numbers: CB-146A, CB-146B, CB-148A, CB-148B, CB-150A, CB150B, CB-152A, CB-152B, CB154A, CB-154B, CB-246A, CB-246B, CB-248A, CB-248B, CB-250A, CB-250B, CB-252A, CB252B, CB254A, and CB-254B; at the locations were the mounting hardware for the eliminated call boxes is already installed, remove the mounting base, cut off the mounting bolts and conduit low enough to provide for a minumum of 25 MM coverage, and patch the indentation flush with the top of the barrier; delete the recessed call box mounting pockets from the bike path hand railing for the following call box numbers: CB-245C, CB-246C, CB-248C, CB-250C, CB-252C, CB-254C, and CB-255D; at the eliminated call box locations were the bike path handrail recessed mounting pockets have already been fabricated, remove the pockets and re-fabricate as the typical railing for the location.

For this work, the Department agrees to compensate the Contractor a lump sum amount of $23,594.00. This lump sum constitutes full compensation for all costs, including markups, all direct and indirect costs, all associated project impacts, and all overhead costs.

Adjustment of Compensation at Lump Sum $23,594.00

Estimated Cost: **Increase** ☑ **Decrease** ☐ **$23,594.00**

By reason of this order the time of completion will be adjusted as follows: 0 days

Submitted by

Signature	Resident Engineer DOUG COE, Supervising Br. Eng.	Date 12-12-07

Approval Recommended by

Signature	Construction Engineer DOUG COE	Date 12-12-07

Engineer Approval by

Signature	Construction Manager PETER SIEGENTHALER	Date 12-13-07

We the undersigned contractor, have given careful consideration to the change proposed and agree, if this proposal is approved, that we will provide all equipment, furnish the materials, except as may otherwise be noted above, and perform all services necessary for the work above specified, and will accept as full payment therefor the prices shown above.

NOTE: If you, the contractor, do not sign acceptance of this order, your attention is directed to the requirements of the specifications as to proceeding with the ordered work and filing a written protest within the time therein specified.

Contractor Acceptance by

Signature	(Print name and title)	Date

STATE OF CALIFORNIA - DEPARTMENT OF TRANSPORTATION

CONTRACT CHANGE ORDER MEMORANDUM

TO: PETER SIEGENTHALER / DOUG COE, Supervising Br. Eng.	FILE: E.A. 04 - 012024
	CO-RTE-PM 04-SF,Ala-80-13.9/14.3,0.0/1.6
FROM: DOUG COE, Supervising Br. Eng.	FED. NO. ACIM-080-1(085)8N
CCO# 198 SUPPLEMENT#: 0 Category Cod AXZZ	CONTINGENCY BALANCE (incl. this change $4,597,209.10
COST: $23,594.00 INCREASE ☑ DECREASE ☐	HEADQUARTERS APPROVAL REQUIRED? ☐ YES ☑ NO
SUPPLEMENTAL FUNDS PROVIDED: $0.00	IS THIS REQUEST IN ACCORDANCE WITH ENVIRONMENTAL DOCUMENTS? ☑ YES ☐ NO
CCO DESCRIPTION: Eliminate Call Boxes	**PROJECT DESCRIPTION:** REPLACE SFOBB EAST SPAN

Original Contract Time:	Time Adj. This Change:	Previously Approved CCO Time Adjustments:	Percentage Time Adjusted: (including this change)	Total # of Unreconciled Deferred Time CCO(s): (including this change)
1000 Day(s)	0 Day(s)	424 Day(s)	42 %	5

THIS CHANGE ORDER PROVIDES FOR:

Deleting the installation of the State supplied call box mounting hardware for the following call box numbers: CB-146A, CB-146B, CB-148A, CB-148B, CB-150A, CB150B, CB-152A, CB-152B, CB154A, CB-154B, CB-246A, CB-246B, CB-248A, CB-248B, CB-250A, CB-250B, CB-252A, CB252B, CB254A, and CB-254B; at the locations where the mounting hardware for the eliminated call boxes is already installed, remove the mounting base, cut off the mounting bolts and conduit low enough to provide for a minimum of 25 MM coverage, and patch the indentation flush with the top of the barrier. This Change Order also provides for deleting the recessed call box mounting pockets from the bike path hand railing for the following call box numbers: CB-245C, CB-246C, CB-248C, CB-250C, CB-252C, CB-254C, and CB-255D; at the eliminated call box locations where the bike path handrail recessed mounting pockets are already fabricated, remove the pockets and re-fabricate as the typical railing for the location.

Mr. Steven Hulsebus, Office Chief, Toll Bridge Design, is requesting the elimination of every other call box on the concrete barrier rail, every other call box on the bike path handrailing, and the installation of a safety handrail next to the remaining call boxes on the concrete barrier. The Bay Area Transit Authority (BATA) and Caltrans Traffic Safety concurs with this request in order to reduce visual clutter on the bridge while still complying with the maximum spacing requirements.

The contract plans show the call boxes mounted on top of the concrete barrier rails for the Eastbound and Westbound bridge at approximately 185 meter intervals. Since the State supplied call box mounting hardware is already installed on the Eastbound bridge barrier rail, the Contractor will be required to remove the mounting base and repair the top of the concrete barrier rail. The call boxes for the bike path are shown to be installed in a recessed pocket of the handrailing. Since the majority of the handrail panels are already fabricated, the recessed pockets will have to be removed at the locations no longer needed.

The design details for the safety handrailing next to the remaining barrier rail call boxes are not yet known, and will be covered in a subsequent toll program contract.

For this work, the Contractor will be paid a lump sum amount of $23,594.00. This lump sum constitutes full compensation, including all markups. The method of payment for this work is Adjustment of Compensation at Lump Sum. This contract change order will result in a cost increase of $23,594.00 to the project, which can be financed from the contingency funds. A complete cost analysis is on file with the project records.

Prior approval was obtained from Mr. Doug Coe, Supervising Bridge Engineer, on March 13, 2007. A copy of the prior approval is attached.

FHWA Prior approval is not required, as this is a minor change order.

Concurrence from maintenance is not required because this change does not affect maintenance facilities or operations.

Concurrence from Design was provided by the attached memorandum dated February 16, 2007, from Mr. Steven Hulsebus, Office Chief, Office of Toll Bridge Design, requesting the elimination of the call boxes.

The change order was forwarded to the Contractor on October 12, 2007. The Contractor does not agree with the lump sum amount of the CCO and therefore returned the Change Order un-signed on October 26, 2007. The Engineer, requested detailed backup for the railing fabricator incurred cost. Since the Contractor has not complied with this request, this change

ADA Notice: For individuals with sensory disabilities, this document is available in alternate formats. For information call: (916) 654-6410 or TDD (916) 654-3880 or write Records and Forms Management, 1120 N Street, MS-89, Sacramento, CA 95814.

order will be processed unilaterally at the engineers estimated amount.

No adjustment of contract time is warranted, as this change does not affect the controlling operation.

CONCURRED BY:			
Construction Engineer:	Douglas Coe DJC	Date 12-12-07	
Bridge Engineer:	Douglas Coe DJC	Date 12-12-07	
Project Engineer:		Date	
Project Manager:		Date	
FHWA Rep.:		Date	
Environmental:		Date	
Other (specify):	Steven Hulsebus, Design	Date 2/16/07	
Other (specify):		Date	
District Prior Approval By:	Douglas Coe	Date 3/13/07	
HQ (Issue/Approve) By:		Date	
Resident Engineer's Signature:		Date 12-12-07	

ESTIMATE OF COST

	THIS REQUEST	TOTAL TO DATE
ITEMS	$0.00	$0.00
FORCE ACCOUNT	$0.00	$0.00
AGREED PRICE	$0.00	$0.00
ADJUSTMENT	$23,594.00	$23,594.00
TOTAL	$23,594.00	$23,594.00

FEDERAL PARTICIPATION

☑ PARTICIPATING ☐ PARTICIPATING IN PART ☐ NONE
☐ NON-PARTICIPATING (MAINTENANCE) ☐ NON-PARTICIPATING

FEDERAL SEGREGATION (if more than one Funding Source or P.I.P. type)
☑ CCO FUNDED PER CONTRACT ☐ CCO FUNDED AS FOLLOWS

FEDERAL FUNDING SOURCE	PERCENT

ADA Notice: For individuals with sensory disabilities, this document is available in alternate formats. For information call: (916) 654-6410 or TDD (916) 654-3880 or write Records and Forms Management, 1120 N Street, MS-89, Sacramento, CA 95814.

STATE OF CALIFORNIA - DEPARTMENT OF TRANSPORTATION

CONTRACT CHANGE ORDER

Change Requested by: Engineer

CCO: 199	Suppl. No. 0	Contract No. 04 - 012024	Road 04-SF,Ala-80-13.9/14.3,0.0/1.6	FED. AID LOC.: ACIM-080-1(085)8N

To: **KIEWIT / FCI / MANSON a JV**

You are directed to make the following changes from the plans and specifications or do the following described work not included in the plans and specifications for this contract. ***NOTE: This change order is not effective until approved by the Engineer.***

Description of work to be done, estimate of quantities and prices to be paid. (Segregate between additional work at contract price, agreed price and force account.) Unless otherwise stated, rates for rental of equipment cover only such time as equipment is actually used and no allowance will be made for idle time. This last percentage shown is the net accumulated increase or decrease from the original

Adjustment of Compensation at Lump Sum:

In accordance with Section 4-1.03D "Extra Work" of the Standard Specifications, eliminate the redesigned service platform hand railing, of the SFOBB East Span Skyway, Bridge Nos. 34-0006 L/R.

Any materials procured and received for the redesign of the service platform handrail shall be salvaged and the salvage value shall be credited towards this Contract Change Order.

For the cost incurred prior to cancellation of the redesigned service platform hand railing by the Engineer, the Contractor agrees to accept a lump sum amount of $32,393.47. This lump sum constitutes full compensation for all costs, including markups, all direct and indirect costs, all associated project impacts, and all overhead costs.

Adjustment of Compensation at Agreed Lump Sum $32,393.47

Estimated Cost: Increase ☑ Decrease ☐ $32,393.47

By reason of this order the time of completion will be adjusted as follows: 0 days

Submitted by

Signature	Resident Engineer DOUG COE, Supervising Br. Eng.	Date 2-5-08

Approval Recommended by

Signature	Construction Engineer DOUG COE	Date 2-5-08

Engineer Approval by

Signature	Construction Manager MIKE FORNER	Date 2-14-08

We the undersigned contractor, have given careful consideration to the change proposed and agree, if this proposal is approved, that we will provide all equipment, furnish the materials, except as may otherwise be noted above, and perform all services necessary for the work above specified, and will accept as full payment therefor the prices shown above.

NOTE: If you, the contractor, do not sign acceptance of this order, your attention is directed to the requirements of the specifications as to proceeding with the ordered work and filing a written protest within the time therein specified.

Contractor Acceptance by

Signature	(Print name and title) Lee Zink Project Director	Date 2/8/08

STATE OF CALIFORNIA - DEPARTMENT OF TRANSPORTATION

CONTRACT CHANGE ORDER MEMORANDUM

TO: MICHAEL FORNER / DOUG COE, Supervising Br. Eng.

FROM: DOUG COE, Supervising Br. Eng.

FILE: **E.A.** 04 - 012024
CO-RTE-PM 04-SF,Ala-80-13.9/14.3,0.0/1.6
FED. NO. ACIM-080-1(085)8N

CCO# **199** SUPPLEMENT#: **0** Category Cod **CHPD**

CONTINGENCY BALANCE (incl. this change **$2,314,215.94**

COST: **$32,393.47** INCREASE ☑ DECREASE ☐

HEADQUARTERS APPROVAL REQUIRED? ☐ YES ☑ NO

SUPPLEMENTAL FUNDS PROVIDED: **$0.00**

IS THIS REQUEST IN ACCORDANCE WITH ENVIRONMENTAL DOCUMENTS? ☑ YES ☐ NO

CCO DESCRIPTION:
Service Platform Handrail Modification

PROJECT DESCRIPTION:
REPLACE SFOBB EAST SPAN

Original Contract Time:	Time Adj. This Change:	Previously Approved CCO Time Adjustments:	Percentage Time Adjusted: (including this change)	Total # of Unreconciled Deferred Time CCO(s): (including this change)
1000 Day(s)	**0** Day(s)	**424** Day(s)	**42** %	**9**

THIS CHANGE ORDER PROVIDES FOR:
compensating the Contractor for the costs incurred due to the Engineer ordered and subsequently eliminated redesign of the service platform hand railing, of the SFOBB East Span Skyway, Bridge No. 34-0006 L/R.

Mr. Steven Hulsebus, Toll Bridge Design, Office Chief, requested that the handrails for all the service platforms be modified to conform with the contract plans instead of the approved shop drawings.

Since the service platform handrailing was already fabricated per the approved shop drawings, which was not according to the contract plans, and to avoid delaying the installation of equipment on the service platforms, the decision was made to install the platforms with the already fabricated handrailing installed.

The Contractor was unable to procure the grille for the redesigned handrailing without impact to the contract completion date. Consequently, the Engineer cancelled the redesigned handrailing. The handrail replacement will be included in a subsequent toll program contract if deemed necessary.

This change order will compensate the Contractor for all of the actual costs incurred with the redesign of the service platform handrailing. Any materials purchased and received that can not be returned will be salvaged and the salvage amount will be credited to the total cost of this Contract Change Order.

The method of payment will be Adjustment of Compensation at Agreed Lump Sum of $32,393.47. This lump sum constitutes full compensation, including all markups. The method of payment for this work is Adjustment of Compensation at Lump Sum. This contract change order will result in a cost increase of $32,393.47 to the project, which can be financed from the contingency funds. A complete cost analysis is on file with the project records.

Mr. Pete Siegenthaler, SFOBB Construction Manager, Toll Bridge Construction, concurs with this change. A copy of the concurrence signed by Mr. Siegenthaler on March 29, 2007 is attached.

Design concurrence was obtained from Mr. Steven Hulsebus, Office Chief, Toll Bridge Design, on February 1, 2008.

Concurrence from Maintenance is not required, as this change order does not affect maintenance facilities or operations.

No time adjustment is warranted for this change as it does not affect the controlling operation.

ADA Notice: For individuals with sensory disabilities, this document is available in alternate formats. For information call: (916) 654-6410 or TDD (916) 654-3880 or write Records and Forms Management, 1120 N Street, MS-89, Sacramento, CA 95814.

CONCURRED BY:			
Construction Engineer:	Douglas Coe DBC	Date	2-5-08
Bridge Engineer:	Douglas Coe DBC	Date	2-5-08
Project Engineer:		Date	
Project Manager:		Date	
FHWA Rep.:		Date	
Environmental:		Date	
Other (specify):	Steven Hulsebus, Toll Bridge Desig	Date	2/1/08
Other (specify):		Date	
District Prior Approval By:	Pete Siegenthaler	Date	3/29/07
HQ (Issue/Approve) By:		Date	
Resident Engineer's Signature:		Date	2-5-08

ESTIMATE OF COST

	THIS REQUEST	TOTAL TO DATE
ITEMS	$0.00	$0.00
FORCE ACCOUNT	$0.00	$0.00
AGREED PRICE	$0.00	$0.00
ADJUSTMENT	$32,393.47	$32,393.47
TOTAL	$32,393.47	$32,393.47

FEDERAL PARTICIPATION

☑ PARTICIPATING ☐ PARTICIPATING IN PART ☐ NONE
☐ NON-PARTICIPATING (MAINTENANCE) ☐ NON-PARTICIPATING

FEDERAL SEGREGATION (if more than one Funding Source or P.I.P. type)
☑ CCO FUNDED PER CONTRACT ☐ CCO FUNDED AS FOLLOWS

FEDERAL FUNDING SOURCE	PERCENT

ADA Notice: For individuals with sensory disabilities, this document is available in alternate formats. For information call: (916) 654-6410 or TDD (916) 654-3880 or write Records and Forms Management, 1120 N Street, MS-89, Sacramento, CA 95814.

CONTRACT CHANGE ORDER

Change Requested by: Engineer

CCO: 200	Suppl. No. 0	Contract No. 04 - 012024	Road 04-SF,Ala-80-13.9/14.3,0.0/1.6	FED. AID LOC.: ACIM-080-1(085)8N

To: **KIEWIT / FCI / MANSON a JV**

You are directed to make the following changes from the plans and specifications or do the following described work not included in the plans and specifications for this contract. ***NOTE: This change order is not effective until approved by the Engineer.***

Description of work to be done, estimate of quantities and prices to be paid. (Segregate between additional work at contract price, agreed price and force account.) Unless otherwise stated, rates for rental of equipment cover only such time as equipment is actually used and no allowance will be made for idle time. This last percentage shown is the net accumulated increase or decrease from the original

CONTRACT CHANGES

1. This CCO represents complete accord and satisfaction for all issues included in Attachment A (page 4 of 4 of this change order) and, together with the base contract and all previously issued changes prior to August 1, 2006, compensates the Contractor in full for all costs, both direct and indirect, of completing the work as described in the base contract, all previously issued CCO's and this CCO. These costs include, but are not limited to: direct and indirect labor, equipment, materials, home office, general administration costs, onsite and offsite yard costs, fuel, equipment breakdown, price escalation of equipment, materials and labor, loss of productivity, inefficiencies, insurance, contractor-furnished permits, profit, and Time Related Overhead (TRO).

2. The first paragraph under the Measurement and Payment clause of Special Provision 10-1.36 "Polyester Concrete Overlay (20 mm, 13 mm)" is hereby deleted. Furnish Polyester Concrete Overlay is a final pay item as described in Section 9-1.015 of the Standard Specifications.

3. For this CCO the Contractor will be paid $94,394,113.00 in accordance with Standard Specification 4-1.03 "Changes". Payment for this CCO shall be made in accordance with the Measurement and Payment section of this CCO.

4. Unless otherwise stated herein, all other terms and conditions as stated in the Contract Documents and previously executed change orders remain unchanged and in full effect.

5. All outstanding extra work bills for CCO 160 and CCO 164 are considered included in the lump sum amount of this CCO. CCO 160 and CCO 164 will be closed and no further compensation will be provided.

TIME OF COMPLETION AND OVERHEAD

6. Contract time will be extended by 220 working days (Extended Date of Completion of December 4, 2007), bringing the total number of contract days to 1,424 working days. The extension of time granted in this CCO resolves all CCO's and NOPC's prior to August 1, 2006, for which time was originally deferred, including but not limited to CCO's 58, 83S1, 148, and 149.

7. Time Related Overhead (TRO) will be compensated at the following rates:
   Work Day 1 through Work Day 403 - $208,000.00 per day
   Work Day 404 through Work Day 431 - (Payment in accordance with CCO 115)
   Work Day 432 through Work Day 1,280 - $208,000.00 per day
   Work Day 1,281 through Work Day 1,380 - $130,000.00 per day
   Work Day 1,381 through Work Day 1,424 - (Payment in accordance with CCO 7).

8. Extended Equipment, Personnel and all escalation costs including subcontractor costs (TRO+) will be compensated at the following rates:
   Work Day 1,205 through Work Day 1,324 - $92,000.00 per day (Total due $11,040,000)
   Work Day 1,325 through Work Day 1,424 - $22,979.71 per day (Total due $ 2,297,971)

9. Contractor acknowledges and represents that the 220 working day time extension granted in this CCO is a mutually agreed upon final number of days. It is based on a combination of already experienced delays and estimated future delays, relating to all issues affecting contract time, which are known as of August 1, 2006. This time extension will not be adjusted, even if the actual delays and impacts differ from the time extension granted by this change.

10. Contractor agrees that Time Related Overhead (TRO) for any State-caused delay arising after August 1, 2006, which will increase the contract time beyond 1,424 working days, will be reimbursed at the rate of $43,500.00 per day.

CONTRACT CHANGE ORDER

Change Requested by: Engineer

CCO: 200	Suppl. No. 0	Contract No. 04 - 012024	Road 04-SF,Ala-80-13.9/14.3,0.0/1.6	FED. AID LOC.: ACIM-080-1(085)8N

CLAIMS

11. This CCO represents complete accord and satisfaction for Notice of Potential Claim (NOPC) No. 7, No. 9, No. 11 and No. 26. The Contractor agrees to waive any and all claims, including subcontractor claims, for additional compensation or time adjustment for the performance of the contract by reason of the changes and additions included in this change order and all CCO's issued prior to August 1, 2006. NOPC's filed on behalf of Universal Structural, Inc. (USI), and KFM's costs of managing USI NOPC's and completing Item 65 "Furnishing Structural Steel (Orthotropic Box Girder)" are specifically excluded from this CCO. However, all field related impacts and costs associated with USI's NOPC's are included in this Change Order. The determination of merit for USI's NOPC's is still pending.

12. This Change Order Resolves all Time Impact Analysis (TIA's) submitted by the Contractor prior to August 1, 2006.

13. This change order resolves KFM's request for additional compensation for the "Transition Span Deck Tension" issue #36 submitted with KFM issue resolution list on June 20, 2006, and KFM letter on May 5, 2006. Proposed CCO 108S1 will not be issued.

14. This change order resolves KFM's request for additional compensation for the "exterior closure struts" issue #39 submitted with KFM issue resolution list on June 20, 2006, and KFM letter on August 21, 2004. Proposed CCO 185 will not be issued.

15. This change order resolves KFM's request for additional compensation for the "the additional stiffening due to the increased dead load reaction at temporary tower B" issue #45 submitted with KFM issue resolution list on June 20, 2006, and KFM letter on January 25, 2005. Proposed CCO 108S1 will not be issued.

16. This change order resolves KFM's request for additional compensation for the "extra No. 16 epoxy coated reinforcement for the barrier rail" issue #50 submitted with KFM issue resolution list on June 20, 2006, and KFM letter on March 10, 2006. Proposed CCO 191 will not be issued.

17. This change order resolves KFM's request for additional compensation for the "Bike Railing installation changes" issue #31 submitted with KFM issue resolution list on June 20, 2006. Proposed CCO 128S1 will not be issued.

18. This change order resolves KFM's request for additional compensation for the "24 hour grout driving restriction" and "Tendon interconnection/grout sequence change" issues #46 and #48 submitted with KFM issue resolution list on June 20, 2006, and State Letter 8321 on August 18, 2005. Proposed CCO 186 will not be issued.

MEASUREMENT AND PAYMENT

Payment for this Change Order will be provided in the following installments:

19. Adjustment of Compensation at Lump Sum Payment $39,554,436.00.

20. Time Related Overhead payments will be compensated in accordance with Bid Item 7 on a monthly basis.

21. Extended equipment, personnel, escalation and subcontractor costs will be compensated in accordance with paragraph 8 and in accordance with Bid Item 7 on a monthly basis. It is important that the Contractor diligently prosecute the contract work without delay in order to achieve Seismic Safety of the Structure. If the Contractor completes hinge pipe beam BW alignment and grouting activities prior to April 30, 2007, the remaining payment for the extended equipment will be provided as a Lump Sum on the next progress pay estimate.

22. An Adjustment of Compensation at Lump Sum Payment of $3,307,627.00 will be provided in addition to the Contract Item Payment for Contract Bid Item 19, Prepare Bridge Deck Surface, Bid Item 49, Furnish Polyester Concrete Overlay (20mm), and Bid Item 50, Place Polyester Concrete Overlay (20 MM). A schedule of values for this payment will be mutually determined by the Contractor and Engineer prior to item placement.

CCO 200 Sheet 4 of 4

Attachment A -
Contract Change Orders included
in CCO 200 Resolution

Item #	Description	CCO 200 Amounts
TRO	**Time Related Issues**	
CCO 200	Extended Equip cost (TRO+)	$ 13,337,971
Bid Item 7	TRO 120 days @ $208,000/day (Contract Rate)	$ 24,960,000
CCO 200	TRO 100 days @ $130,000/day (Agreed Rate)	$ 13,000,000
CCOs	**Change Orders**	
CCO 24S3	Walkway installation issues	
CCO 48S1	Conduit routing	
CCO 45	P tendon changes	
CCO 55	Hinge modifications	
CCO 56	Future light pipe	
CCO 59	Ladder at deck MH	
CCO 65S1	Closure pour rebars	
CCO 74	Pier tables	
CCO 75S1	Substation redesign field conflicts	
CCO 79	Tranverse Rib & continuity tendon profiles	
CCO 80	Jacking/creep coefficient	
CCO 81	Deck ties	
CCO 82	Precast panel/diaphram	
CCO 88	Transition span revisions	
CCO 90S3	Bike path installation	
CCO 97S1	Turbidity control	
CCO 99S2	Pier table composite drawings	
CCO 103S1	Pipe beam temperary support	
CCO 108	Temp Tower B	
CCO 108S1	Ortho tub soffit stiffening / Transistion Span Deck Tension	
CCO 109S2	Bike path post tensioning bar	
CCO 121	Mech pipe loops at hinges	
CCO 127S2	Hinge delay TRO+	
CCO 128	Bike path railing changes (fabrication)	
CCO 128S1	Bike path railing changes (installation)	
CCO 135	Butt splice	
CCO 138	Segment foundation modification	
CCO 143	Temporary power for electrical	
CCO 151	Cormorant nest spec change	
CCO 152	Pier table panel	
CCO 153	Stockton panel warping	
CCO 154S1	Hinge delay TRO+	
CCO 156S1	Modular joints	
CCO 167	FHWA weld inspection (weld removal)	
CCO 168	Pile work shutdown due to FBI investigation	
CCO 169	Barrier rebar mod/pull box	
CCO 170	Deletion of electrical equip	
CCO 174	Crew boat	
CCO 179	Additional HPS70W steel for pipe beams	
CCO 183	Canteliver tendons: protect anchorage	
CCO 184	Spare duct grouting	
CCO 185	Exterior closure struts	
CCO 186	Grout sequence and restriction change	
CCO 188	Polyester concrete quantity overrun	
CCO 191	Barrier issues	
NOPCs	**Notice of Potential Claims**	
NOPC # 11	Hinge Pipe Beam repair issues (TBS & KFM)	
NOPC # 9	Stockton Yard Slowdown /Hinge Modification Delays	
NOPC # 7	Pacific Cement MOE costs	
NOPC # 26	Pier Table Precast Panel	
Total Settlement CCO 200		**$ 94,394,113**

CONTRACT CHANGE ORDER

Change Requested by: Engineer

CCO 24	Suppl. No. 3	Contract No 04 - 012024	Road 04-SF,Ala-80-13.9/14.3,0.0/1.6	FED. AID LOC.: ACIM-080-1(085)8N

To: **KIEWIT / FCI / MANSON a JV**

You are directed to make the following changes from the plans and specifications or do the following described work not included in the plans and specifications for this contract. ***NOTE: This change order is not effective until approved by the Engineer.***

Description of work to be done, estimate of quantities and prices to be paid. (Segregate between additional work at contract price, agreed price and force account.) Unless otherwise stated, rates for rental of equipment cover only such time as equipment is actually used and no allowance will be made for idle time. This last percentage shown is the net accumulated increase or decrease from the original quantity in the Engineer's Estimate.

Adjustment of Compensation at Lump Sum:

Furnish additional labor, equipment, and material, to install the revised walkways (Bid Item No. 87) in the precast segments in accordance with the revised plan sheets submitted with Contract Change Order No. 24 S0, 24 S1, and 24S2 for the SFOBB East Span Skyway, Bridge Nos. 34-0006L/R.

This Contract Change Order resolves all known issues related to Bid Item No. 87 "Walkways", as of August 1, 2006.

Full compensation, including all markups, for all direct and indirect costs, all associated impact costs, and all overhead costs are included in the lump sum payment of CCO No. 200 and no further payment will be made as a result of this CCO.

Estimated Cost: Increase ☐ **Decrease** ☐

By reason of this order the time of completion will be adjusted as follows: 0 days

Submitted by

Signature	Resident Engineer: DOUG COE, Supervising Br. Eng.	Date 8-24-06

Approval Recommended by

Signature	Construction Engineer: DOUG COE, Supervising Br. Eng.	Date 8-24-06

Engineer Approval by

Signature	(Print name and title) PETER SIEGENTHALER - Chief	Date

We the undersigned contractor, have given careful consideration to the change proposed and agree, if this proposal is approved, that we will provide all equipment, furnish the materials, except as may otherwise be noted above, and perform all services necessary for the work above specified, and will accept as full payment therefor the prices shown above.

NOTE: If you, the contractor, do not sign acceptance of this order, your attention is directed to the requirements of the specifications as to proceeding with the ordered work and filing a written protest within the time therein specified.

Contractor Acceptance by

Signature	(Print name and title)	Date

CONTRACT CHANGE ORDER

Change Requested by: Contractor

CCO 45	Suppl. No. 0	Contract No. 04 - 012024	Road 04-SF,Ala-80-13.9/14.3,0.0/1.6	FED. AID LOC.: ACIM-080-1(085)8N

To: **KIEWIT / FCI / MANSON a JV**

You are directed to make the following changes from the plans and specifications or do the following described work not included in the plans and specifications for this contract. ***NOTE: This change order is not effective until approved by the Engineer.***

Description of work to be done, estimate of quantities and prices to be paid. (Segregate between additional work at contract price, agreed price and force account.) Unless otherwise stated, rates for rental of equipment cover only such time as equipment is actually used and no allowance will be made for idle time. This last percentage shown is the net accumulated increase or decrease from the original quantity in the Engineer's Estimate.

Adjustment of Compensation at Lump Sum:

Extend tendons P11 and P12 to the mid-span closure of cantilevers E16E and W for the SFOBB East Span Skyway, Bridge Numbers 34-0006L/R as shown on revised contract plan sheets 623R2, 624R3, 625R3, 626R3, 627R3, 628R3, 629R3, 630R3, 631R3, 632R3, 633R3, 634R3, 635R3, 636R3, 637R2, 638R2, 639R3, 640R3, 641R3, 642R3, 643R3, 644R3, 645R3, 646R3, 647R3, 648R3, 649R3, 650R3, 651R3, 652R2, 688R3, 688AR2, and 688BR2 of 978 (sheets 2 through 34 of this change order). At other locations, provide block-outs (floor access) in the bottom slab to install tendons P11 and P12 after erection of the cantilever. In addition, at all cantilevers, do not stress tendons P1 to P4 and P11 & P12 (except for Cantilevers E14E & W, where P4 is stressed and P7 is not stressed) and install without anchorage hardware.

Full compensation for all costs, including markups, all direct and indirect costs, all associated projects impacts, and all overhead costs are included in the lump sum payment under Contract Change Order No. 200. No further payment will be made as a result of this Change Order.

Estimated Cost: **Increase** ☐ **Decrease** ☐

By reason of this order the time of completion will be adjusted as follows: 0 days

Submitted by

Signature	Resident Engineer: DOUG COE, Supervising Br. Eng.	Date 8-24-06

Approval Recommended by

Signature	Construction Engineer: DOUG COE, Supervising Br. Eng.	Date 8-24-06

Engineer Approval by

Signature	(Print name and title) PETER SIEGENTHALER - Chief	Date

We the undersigned contractor, have given careful consideration to the change proposed and agree, if this proposal is approved, that we will provide all equipment, furnish the materials, except as may otherwise be noted above, and perform all services necessary for the work above specified, and will accept as full payment therefor the prices shown above.

NOTE: If you, the contractor, do not sign acceptance of this order, your attention is directed to the requirements of the specifications as to proceeding with the ordered work and filing a written protest within the time therein specified.

Contractor Acceptance by

Signature	(Print name and title)	Date

CONTRACT CHANGE ORDER

Change Requested by: Engineer

CCO: 48	Suppl. No. 1	Contract No. 04 - 012024	Road 04-SF,Ala-80-13.9/14.3,0.0/1.6	FED. AID LOC.: ACIM-080-1(085)8N

To: **KIEWIT / FCI / MANSON a JV**

You are directed to make the following changes from the plans and specifications or do the following described work not included in the plans and specifications for this contract. ***NOTE: This change order is not effective until approved by the Engineer.***

Description of work to be done, estimate of quantities and prices to be paid. (Segregate between additional work at contract price, agreed price and force account.) Unless otherwise stated, rates for rental of equipment cover only such time as equipment is actually used and no allowance will be made for idle time. This last percentage shown is the net accumulated increase or decrease from the original

Adjustment of Compensation at Lump Sum:

Implement the following changes:

1) Add a face plate between the pipe beam conduit supports and the ring stiffeners,
2) Eliminate the flex conduit connections at Hinge A,
3) Revise electrical conduit system between the hinge pipe beams and the cable trays at Hinges B, C, and D, in accordance with the revised drawings.
4) Re-route the conduits through the wing sections at Hinge E, as shown on revised contract plan sheets,109GR3, 109YR1 171R2, 187R2, 188R1, 191R2, 207R1, 208R1, 224R2, 225R2, 250R1, 262R1, 313R1, 340AR1, 340A0R2, 340A1R4, 340A2, 340BR1, 340B0, 340B1R2, 340CR1, 340C0, 340C1R2, 340DR1, 340D0, 340D1R2, 340ER2, 340E0R1, 340E1R2, 341R1, 341A, 341A0R2, 341A1R4, 341A2, 341B, 342R2, 342A, 342BR2, 343R2, 343A, 343BR2, 344R2, 344A, 344BR2, 345R2, 345AR2, 345BR2, 346R2, 346AR2, 346BR3, 347R2, 347AR1, 347BR2, 347CR2, 347DR2, 347ER2, 355R2, 355A, 355B, 388R3, 389R3, and 405R1 (sheets 2 through 63 of 67 of this change order), and
5) Provide payment for cable tray support changes in the steel transition span, as shown on the revised contract plan sheet submitted with Contract Change Order No. 48 Supplement 0, executed on May 25, 2005 for the SFOBB East Span Skyway, Bridge Nos. 34-0006L/R.

Also, add to the Supplement To The Special Provisions and Plans, Binder 1 of 2 - Westbound, Circuit Schedule Westbound, Sheet EE-324E (6 pages), Conduit and Tray Schedule Westbound, Sheet EE-325G (60 pages); and add to Binder 2 of 2 - Eastbound, Circuit Schedule Eastbound, Sheet EE-327E (5 pages), Conduit and Tray Schedule Eastbound, Sheet EE-328G (67 pages) provided herein (sheets 64 through 67 of this change order).

Full compensation for all costs, including markups, all direct and indirect costs, all associated project impacts, all overhead expenses, and all risk associated with this work is included in the lump sum payment of CCO No. 200 and no further payment will be made as a result of this CCO.

Estimated Cost: Increase ☐ Decrease ☐

By reason of this order the time of completion will be adjusted as follows: 0 days

Submitted by

Signature	Resident Engineer: DOUG COE, Supervising Br. Eng.	Date 8-24-06

Approval Recommended by

Signature	Construction Engineer: DOUG COE, Supervising Br. Eng.	Date 8-24-06

Engineer Approval by

Signature	(Print name and title) PETER SIEGENTHALER - Chief	Date

We the undersigned contractor, have given careful consideration to the change proposed and agree, if this proposal is approved, that we will provide all equipment, furnish the materials, except as may otherwise be noted above, and perform all services necessary for the work above specified, and will accept as full payment therefor the prices shown above.

NOTE: If you, the contractor, do not sign acceptance of this order, your attention is directed to the requirements of the specifications as to proceeding with the ordered work and filing a written protest within the time therein specified.

Contractor Acceptance by

Signature	(Print name and title)	Date

CONTRACT CHANGE ORDER

Change Requested by: Engineer

CCO: 55	Suppl. No. 0	Contract No. 04 - 012024	Road 04-SF,Ala-80-13.9/14.3,0.0/1.6	FED. AID LOC.: ACIM-080-1(085)8N

To: **KIEWIT / FCI / MANSON a JV**

You are directed to make the following changes from the plans and specifications or do the following described work not included in the plans and specifications for this contract. ***NOTE: This change order is not effective until approved by the Engineer.***

Description of work to be done, estimate of quantities and prices to be paid. (Segregate between additional work at contract price, agreed price and force account.) Unless otherwise stated, rates for rental of equipment cover only such time as equipment is actually used and no allowance will be made for idle time. This last percentage shown is the net accumulated increase or decrease from the original

Adjustment of Compensation at Lump Sum:

Furnish all labor, materials, tools, equipment and incidentals to construct the permanent counterweights for the fully precas hinge segments, as shown on revised plan sheets 733R1, 734R1, 734A, 734B and 734C of 978 (Page 2 through 6 of this change order) for the SFOBB East Span Skyway, Bridge Nos. 34-0006L/R.

Furnish all labor, materials, tools, equipment and incidentals to construct the precast hinge segments B, C, D, and E, as shown on revised plan sheets 786R3, 787R4, 788R2, 789R2, 790R2, 791R2, 792R3, 793R3, 794R3, 795R4, 796R3, 797R3, 797AR1, 798R4, 799R2, 799AR1, 799BR1, 800R3, 801R3, 802R3, 803R3, 804R3, 805R3, 806R3, 807R3, 807AR1, 807BR1, 808R3, 809R3, 810R2, 811R3, 812R2, 813R1, 814R3, 815R2, 816R3, 817R4, 818R3, 819R1, 820R3, 821R2, 822R3, 823R3, 824R3, 825R3, 825AR1, 826R3, 827R3, 828R3, 829R1, 830R2, 831R2, 832R1, 833R2, 834R2, 835R2, 836R3, 837R3, 838R3, 839R4, 840R3, 841R2, 842R3, 843R2, 843A, 844R4, 845R3, 846R3, 847R3, 848R3, 849R3, 850R3, 851R2, and 851AR1 of 978 (Page 7 through 80 of this change order) for the SFOBB East Span Skyway, Bridge Nos. 34-0006L/R.

Revise the grout pockets to continuous circular grout pockets as shown on revised plan sheets 879R2, 880R2 and 881AR2 of 978 (Page 81 through 83 of this change order) for the SFOBB East Span Skyway, Bridge Nos. 34-0006L/R.

Revise the blockout dimensions for the modular joint seal assemblies as shown on revised plan sheets 885R1, and 885AR2 of 978 (Page 84 and 85 of this change order) for the SFOBB East Span Skyway, Bridge Nos. 34-0006L/R.

Full and complete compensation for providing all labor, material, equipment, tools and incidentals, including markups, for a direct and indirect costs, and all associated project impacts for this work is included in the lump sum payment of CCO No. 200 and no further payment will be made as a result of this CCO.

Estimated Cost: Increase ☐ Decrease ☐

By reason of this order the time of completion will be adjusted as follows: 0 days

Submitted by

Signature	Resident Engineer: DOUG COE, Supervising Br. Eng.	Date 8-24-06

Approval Recommended by

Signature	Construction Engineer: DOUG COE, Supervising Br. Eng.	Date 8-24-06

Engineer Approval by

Signature	(Print name and title) PETER SIEGENTHALER - Chief	Date

We the undersigned contractor, have given careful consideration to the change proposed and agree, if this proposal is approved, that we will provide all equipment, furnish the materials, except as may otherwise be noted above, and perform all services necessary for the work above specified, and will accept as full payment therefor the prices shown above.

NOTE: If you, the contractor, do not sign acceptance of this order, your attention is directed to the requirements of the specifications as to proceeding with the ordered work and filing a written protest within the time therein specified.

Contractor Acceptance by

Signature	(Print name and title)	Date

CONTRACT CHANGE ORDER

Change Requested by: Engineer

CCO: 56	Suppl. No. 0	Contract No. 04 - 012024	Road 04-SF,Ala-80-13.9/14.3,0.0/1.6	FED. AID LOC.: ACIM-080-1(085)8N

To: **KIEWIT / FCI / MANSON a JV**

You are directed to make the following changes from the plans and specifications or do the following described work not included in the plans and specifications for this contract. ***NOTE: This change order is not effective until approved by the Engineer.***

Description of work to be done, estimate of quantities and prices to be paid. (Segregate between additional work at contract price, agreed price and force account.) Unless otherwise stated, rates for rental of equipment cover only such time as equipment is actually used and no allowance will be made for idle time. This last percentage shown is the net accumulated increase or decrease from the original

Adjustment of Compensation at Lump Sum:

As shown on Detail A of revised contract plan sheet number 423R2 of 978, (page 2 of this change order) install the conduit pipe sleeves (total of 7) in lieu of the conduit stub-outs (as shown on plan sheet 423) for the future light pipe in the west bound steel transition section, and eliminate the PVC conduit sleeves in the west bound concrete bridge sections (as shown on plan sheet 423 R1) of the SFOBB East Span Skyway, Bridge No. 34-0006L/R.

Full compensation for all costs, including markups, all direct and indirect costs, all associated projects impacts, and all overhead costs are included in the lump sum payment under Contract Change Order No. 200. No further payment will be made as a result of this Change Order.

Estimated Cost: Increase ☐ Decrease ☐

By reason of this order the time of completion will be adjusted as follows: 0 days

Submitted by

Signature	Resident Engineer: DOUG COE, Supervising Br. Eng.	Date 8-24-06

Approval Recommended by

Signature	Construction Engineer: DOUG COE, Supervising Br. Eng.	Date 8-24-06

Engineer Approval by

Signature	(Print name and title) DOUG COE, Supervising Br. Eng. - Construction Engin	Date

We the undersigned contractor, have given careful consideration to the change proposed and agree, if this proposal is approved, that we will provide all equipment, furnish the materials, except as may otherwise be noted above, and perform all services necessary for the work above specified, and will accept as full payment therefor the prices shown above.

NOTE: If you, the contractor, do not sign acceptance of this order, your attention is directed to the requirements of the specifications as to proceeding with the ordered work and filing a written protest within the time therein specified.

Contractor Acceptance by

Signature	(Print name and title)	Date

CONTRACT CHANGE ORDER

Change Requested by: Engineer

CCO: 59	Suppl. No. 0	Contract No. 04 - 012024	Road 04-SF,Ala-80-13.9/14.3,0.0/1.6	FED. AID LOC.: ACIM-080-1(085)8N

To: **KIEWIT / FCI / MANSON a JV**

You are directed to make the following changes from the plans and specifications or do the following described work not included in the plans and specifications for this contract. ***NOTE: This change order is not effective until approved by the Engineer.***

Description of work to be done, estimate of quantities and prices to be paid. (Segregate between additional work at contract price, agreed price and force account.) Unless otherwise stated, rates for rental of equipment cover only such time as equipment is actually used and no allowance will be made for idle time. This last percentage shown is the net accumulated increase or decrease from the original

Adjustment of Compensation at Lump Sum:

Revise all ladders at deck manholes (32 locations) and revise the electrical girder-access lighting fixtures at the deck manholes of spans E15W/E, E16W/E, and E17W/E as shown on revised contract plan sheet numbers 93BR3, 93CR5, 93ER2, 94R4, 97BR4, 97CR5, 97ER1, 98R6, 102R6, 102C, 190R2, 210R2, and 310R2 of 978 of the SFOBB East Span Skyway, Bridge Nos. 34-0006L/R (page 2 through 14 of this change order).

Full compensation for providing all labor, material, equipment, tools and incidentals, including markups, for all direct and indirect costs, and all associated project impacts for this work is included in the lump sum payment of CCO No. 200 and nc further payment will be made as a result of this CCO.

Estimated Cost: Increase ☐ Decrease ☐

By reason of this order the time of completion will be adjusted as follows: 0 days

Submitted by

Signature	Resident Engineer: DOUG COE, Supervising Br. Eng.	Date 8-24-06

Approval Recommended by

Signature	Construction Engineer: DOUG COE, Supervising Br. Eng.	Date 8-24-06

Engineer Approval by

Signature	(Print name and title) DOUG COE, Supervising Br. Eng. - Construction Engin	Date

We the undersigned contractor, have given careful consideration to the change proposed and agree, if this proposal is approved, that we will provide all equipment, furnish the materials, except as may otherwise be noted above, and perform all services necessary for the work above specified, and will accept as full payment therefor the prices shown above.

NOTE: If you, the contractor, do not sign acceptance of this order, your attention is directed to the requirements of the specifications as to proceeding with the ordered work and filing a written protest within the time therein specified.

Contractor Acceptance by

Signature	(Print name and title)	Date

CONTRACT CHANGE ORDER

Change Requested by: Engineer

CCO: 65	Suppl. No. 1	Contract No. 04 - 012024	Road 04-SF,Ala-80-13.9/14.3,0.0/1.6	FED. AID LOC.: ACIM-080-1(085)8N

To: **KIEWIT / FCI / MANSON a JV**

You are directed to make the following changes from the plans and specifications or do the following described work not included in the plans and specifications for this contract. ***NOTE: This change order is not effective until approved by the Engineer.***

Description of work to be done, estimate of quantities and prices to be paid. (Segregate between additional work at contract price, agreed price and force account.) Unless otherwise stated, rates for rental of equipment cover only such time as equipment is actually used and no allowance will be made for idle time. This last percentage shown is the net accumulated increase or decrease from the original

Extra Work at Lump Sum:

Supply and install additional transverse reinforcement at the mid-frame closure pours at the superstructure jacking locations as shown on revised plan sheet 857R3 of 978, (page 2 of this change order) of the SFOBB East Span Skyway, Bridge Numbers 34-0006L/R.

This change order also closes the deferred time element of Contract Change Order No. 65 Supplement 0 of the SFOBB East Span Skyway, Bridge Numbers 34-0006L/R.

The deferred time associated with Contract Change Order No. 65, Supplement 0, was resolved by executing Contract Change Orders No. 107, Supplement 0 through Supplement 3.

Full compensation for all costs, including markups, all direct and indirect costs, all associated projects impacts, and all overhead costs are included in the lump sum payment under Contract Change Order No. 200. No further payment will be made as a result of this Change Order.

Estimated Cost: Increase ☐ Decrease ☐

By reason of this order the time of completion will be adjusted as follows: 0 days

Submitted by

Signature	Resident Engineer: DOUG COE, Supervising Br. Eng.	Date 8-24-06

Approval Recommended by

Signature	Construction Engineer: DOUG COE, Supervising Br. Eng.	Date 8-24-06

Engineer Approval by

Signature	(Print name and title) PETER SIEGENTHALER - Chief	Date

We the undersigned contractor, have given careful consideration to the change proposed and agree, if this proposal is approved, that we will provide all equipment, furnish the materials, except as may otherwise be noted above, and perform all services necessary for the work above specified, and will accept as full payment therefor the prices shown above.

NOTE: If you, the contractor, do not sign acceptance of this order, your attention is directed to the requirements of the specifications as to proceeding with the ordered work and filing a written protest within the time therein specified.

Contractor Acceptance by

Signature	(Print name and title)	Date

CONTRACT CHANGE ORDER

Change Requested by: Engineer

CCO: 74	Suppl. No. 0	Contract No. 04 - 012024	Road 04-SF,Ala-80-13.9/14.3,0.0/1.6	FED. AID LOC.: ACIM-080-1(085)8N

To: **KIEWIT / FCI / MANSON a JV**

You are directed to make the following changes from the plans and specifications or do the following described work not included in the plans and specifications for this contract. ***NOTE: This change order is not effective until approved by the Engineer.***

Description of work to be done, estimate of quantities and prices to be paid. (Segregate between additional work at contract price, agreed price and force account.) Unless otherwise stated, rates for rental of equipment cover only such time as equipment is actually used and no allowance will be made for idle time. This last percentage shown is the net accumulated increase or decrease from the original

Adjustment of Compensation at Lump Sum:

Furnish additional labor, supervision, equipment, material, supplies, and other resources as required to construct the pier and pier tables as shown on revised contract plan sheet numbers 502R3, 503R3, 504R3, 505R4, 736R3, 737R1, 738R3, 739R1, 740R1, 741R1, 742R1, 743R1, 744R1, 745R1, 746R1, 748R3, 749R1, 750R3, 751R1, 752R2, 753R1, 754R1, 755R1, and 756R1 of 978 (sheets 2 through 25 of this change order) for the SFOBB East Span Skyway, Bridge No. 34-0006L/R.

Full compensation for all costs, including markups, all direct and indirect costs, escalation caused by the delay in completion of the revised contract plan sheets, all inefficiencies created by the numerous field issues, all overhead costs, a associated project impacts, and all risks associated with this change is included in the lump sum payment of CCO No. 200 and no further payment will be made as a result of this CCO.

Estimated Cost: **Increase** ☐ **Decrease** ☐

By reason of this order the time of completion will be adjusted as follows: 0 days

Submitted by

Signature	Resident Engineer: DOUG COE, Supervising Br. Eng.	Date 8-24-06

Approval Recommended by

Signature	Construction Engineer: DOUG COE, Supervising Br. Eng.	Date 8-24-06

Engineer Approval by

Signature	(Print name and title) PETER SIEGENTHALER - Chief	Date

We the undersigned contractor, have given careful consideration to the change proposed and agree, if this proposal is approved, that we will provide all equipment, furnish the materials, except as may otherwise be noted above, and perform all services necessary for the work above specified, and will accept as full payment therefor the prices shown above.

NOTE: If you, the contractor, do not sign acceptance of this order, your attention is directed to the requirements of the specifications as to proceeding with the ordered work and filing a written protest within the time therein specified.

Contractor Acceptance by

Signature	(Print name and title)	Date

CONTRACT CHANGE ORDER

Change Requested by: Engineer

CCO: 75	Suppl. No. 1	Contract No. 04 - 012024	Road 04-SF,Ala-80-13.9/14.3,0.0/1.6	FED. AID LOC.: ACIM-080-1(085)8N

To: **KIEWIT / FCI / MANSON a JV**

You are directed to make the following changes from the plans and specifications or do the following described work not included in the plans and specifications for this contract. ***NOTE: This change order is not effective until approved by the Engineer.***

Description of work to be done, estimate of quantities and prices to be paid. (Segregate between additional work at contract price, agreed price and force account.) Unless otherwise stated, rates for rental of equipment cover only such time as equipment is actually used and no allowance will be made for idle time. This last percentage shown is the net accumulated increase or decrease from the original

Extra Work at Lump Sum:

Furnish labor, supervision, and equipment to modify the Eastbound and Westbound electrical substation in accordance witl the revised contract plan sheets provided with contract change order no. 75 supplement 0, executed on February 16, 2006. Supply and install additional items as shown on revised contract plan sheets 109R4 and 897R4 of 978 (sheets 2 and 3 of 8 of this change order), install the substation exterior stairs per revised contract plan sheet 89R1 of 978 (sheet 4 of 8 of this change order), and install the monorail in the substations as modified per revised contract plan sheet 91R1 of 978 (sheet 5 of 8 of this change order) and State letters no. 8865, no. 8986, and no.8998, (attached as sheet 6 through 8 of 8 of this change order) for the SFOBB East Span Skyway, Bridge Nos. 34-0006L/R.

In addition to the work above, perform the following work as authorized by the Engineer:

1.) Raise the equipment and materials into the substation through the hatch as necessary.
2.) Install embed plates at walls at midspan closure E7E-E8E in the eastbound Substation.
3.) Install angles to the substation walls in the eastbound span for substation grating wall connection.
4.) Perform load test on angles installed to the substation wall in the eastbound span.
5.) Install substation end walls from top of diaphragm to ceiling and adjust the substation floor to match.
6.) Install R-13 insulation batting in the substation walls.
7.) Increase specified vent size, revise ventilation routing and termination for electric incinerating toilets.
8.) Supply Hilman roller system, equipped to move substation flooring, for each substation.
9.) Install scissor lifts shown on revised contract plan sheet 897R4 in the substations.

Full compensation for all costs, including markups, all direct and indirect costs, all associated project impacts, and all overhead costs are included in the lump sum payment of CCO No. 200 and no further payment will be made as a result of this CCO.

Estimated Cost: **Increase** ☐ **Decrease** ☐

By reason of this order the time of completion will be adjusted as follows: 0 days

Submitted by

Signature	Resident Engineer: DOUG COE, Supervising Br. Eng.	Date 8-14-06

Approval Recommended by

Signature	Construction Engineer: DOUG COE, Supervising Br. Eng.	Date 8-14-06

Engineer Approval by

Signature	(Print name and title) PETER SIEGENTHALER - Chief	Date

We the undersigned contractor, have given careful consideration to the change proposed and agree, if this proposal is approved, that we will provide all equipment, furnish the materials, except as may otherwise be noted above, and perform all services necessary for the work above specified, and will accept as full payment therefor the prices shown above.

NOTE: If you, the contractor, do not sign acceptance of this order, your attention is directed to the requirements of the specifications as to proceeding with the ordered work and filing a written protest within the time therein specified.

Contractor Acceptance by

Signature	(Print name and title)	Date

CONTRACT CHANGE ORDER

Change Requested by: Engineer

CCO: 200	Suppl. No. 0	Contract No. 04 - 012024	Road 04-SF,Ala-80-13.9/14.3,0.0/1.6	FED. AID LOC.: ACIM-080-1(085)8N

To: **KIEWIT / FCI / MANSON a JV**

You are directed to make the following changes from the plans and specifications or do the following described work not included in the plans and specifications for this contract. ***NOTE: This change order is not effective until approved by the Engineer.***

Description of work to be done, estimate of quantities and prices to be paid. (Segregate between additional work at contract price, agreed price and force account.) Unless otherwise stated, rates for rental of equipment cover only such time as equipment is actually used and no allowance will be made for idle time. This last percentage shown is the net accumulated increase or decrease from the original

CONTRACT CHANGES

1. This CCO represents complete accord and satisfaction for all issues included in Attachment A (page 4 of 4 of this change order) and, together with the base contract and all previously issued changes prior to August 1, 2006, compensates the Contractor in full for all costs, both direct and indirect, of completing the work as described in the base contract, all previously issued CCO's and this CCO. These costs include, but are not limited to: direct and indirect labor, equipment, materials, home office, general administration costs, onsite and offsite yard costs, fuel, equipment breakdown, price escalation of equipment, materials and labor, loss of productivity, inefficiencies, insurance, contractor-furnished permits, profit, and Time Related Overhead (TRO).

2. The first paragraph under the Measurement and Payment clause of Special Provision 10-1.36 "Polyester Concrete Overlay (20 mm, 13 mm)" is hereby deleted. Furnish Polyester Concrete Overlay is a final pay item as described in Section 9-1.015 of the Standard Specifications.

3. For this CCO the Contractor will be paid $94,394,113.00 in accordance with Standard Specification 4-1.03 "Changes". Payment for this CCO shall be made in accordance with the Measurement and Payment section of this CCO.

4. Unless otherwise stated herein, all other terms and conditions as stated in the Contract Documents and previously executed change orders remain unchanged and in full effect.

5. All outstanding extra work bills for CCO 160 and CCO 164 are considered included in the lump sum amount of this CCO. CCO 160 and CCO 164 will be closed and no further compensation will be provided.

TIME OF COMPLETION AND OVERHEAD

6. Contract time will be extended by 220 working days (Extended Date of Completion of December 4, 2007), bringing the total number of contract days to 1,424 working days. The extension of time granted in this CCO resolves all CCO's and NOPC's prior to August 1, 2006, for which time was originally deferred, including but not limited to CCO's 58, 83S1, 148, and 149.

7. Time Related Overhead (TRO) will be compensated at the following rates:
   Work Day 1 through Work Day 403 - $208,000.00 per day
   Work Day 404 through Work Day 431 - (Payment in accordance with CCO 115)
   Work Day 432 through Work Day 1,280 - $208,000.00 per day
   Work Day 1,281 through Work Day 1,380 - $130,000.00 per day
   Work Day 1,381 through Work Day 1,424 - (Payment in accordance with CCO 7).

8. Extended Equipment, Personnel and all escalation costs including subcontractor costs (TRO+) will be compensated at the following rates:
   Work Day 1,205 through Work Day 1,324 - $92,000.00 per day (Total due $11,040,000)
   Work Day 1,325 through Work Day 1,424 - $22,979.71 per day (Total due $ 2,297,971)

9. Contractor acknowledges and represents that the 220 working day time extension granted in this CCO is a mutually agreed upon final number of days. It is based on a combination of already experienced delays and estimated future delays, relating to all issues affecting contract time, which are known as of August 1, 2006. This time extension will not be adjusted, even if the actual delays and impacts differ from the time extension granted by this change.

10. Contractor agrees that Time Related Overhead (TRO) for any State-caused delay arising after August 1, 2006, which will increase the contract time beyond 1,424 working days, will be reimbursed at the rate of $43,500.00 per day.

CONTRACT CHANGE ORDER

Change Requested by: Engineer

CCO: 200	Suppl. No. 0	Contract No. 04 - 012024	Road 04-SF,Ala-80-13.9/14.3,0.0/1.6	FED. AID LOC.: ACIM-080-1(085)8N

CLAIMS

11. This CCO represents complete accord and satisfaction for Notice of Potential Claim (NOPC) No. 7, No. 9, No. 11 and No. 26. The Contractor agrees to waive any and all claims, including subcontractor claims, for additional compensation or time adjustment for the performance of the contract by reason of the changes and additions included in this change order and all CCO's issued prior to August 1, 2006. NOPC's filed on behalf of Universal Structural, Inc. (USI), and KFM's costs of managing USI NOPC's and completing Item 65 "Furnishing Structural Steel (Orthotropic Box Girder)" are specifically excluded from this CCO. However, all field related impacts and costs associated with USI's NOPC's are included in this Change Order. The determination of merit for USI's NOPC's is still pending.

12. This Change Order Resolves all Time Impact Analysis (TIA's) submitted by the Contractor prior to August 1, 2006.

13. This change order resolves KFM's request for additional compensation for the "Transition Span Deck Tension" issue #36 submitted with KFM issue resolution list on June 20, 2006, and KFM letter on May 5, 2006. Proposed CCO 108S1 will not be issued.

14. This change order resolves KFM's request for additional compensation for the "exterior closure struts" issue #39 submitted with KFM issue resolution list on June 20, 2006, and KFM letter on August 21, 2004. Proposed CCO 185 will not be issued.

15. This change order resolves KFM's request for additional compensation for the "the additional stiffening due to the increased dead load reaction at temporary tower B" issue #45 submitted with KFM issue resolution list on June 20, 2006, and KFM letter on January 25, 2005. Proposed CCO 108S1 will not be issued.

16. This change order resolves KFM's request for additional compensation for the "extra No. 16 epoxy coated reinforcement for the barrier rail" issue #50 submitted with KFM issue resolution list on June 20, 2006, and KFM letter on March 10, 2006. Proposed CCO 191 will not be issued.

17. This change order resolves KFM's request for additional compensation for the "Bike Railing installation changes" issue #31 submitted with KFM issue resolution list on June 20, 2006. Proposed CCO 128S1 will not be issued.

18. This change order resolves KFM's request for additional compensation for the "24 hour grout driving restriction" and "Tendon interconnection/grout sequence change" issues #46 and #48 submitted with KFM issue resolution list on June 20, 2006, and State Letter 8321 on August 18, 2005. Proposed CCO 186 will not be issued.

MEASUREMENT AND PAYMENT

Payment for this Change Order will be provided in the following installments:

19. Adjustment of Compensation at Lump Sum Payment $39,554,436.00.

20. Time Related Overhead payments will be compensated in accordance with Bid Item 7 on a monthly basis.

21. Extended equipment, personnel, escalation and subcontractor costs will be compensated in accordance with paragraph 8 and in accordance with Bid Item 7 on a monthly basis. It is important that the Contractor diligently prosecute the contract work without delay in order to achieve Seismic Safety of the Structure. If the Contractor completes hinge pipe beam BW alignment and grouting activities prior to April 30, 2007, the remaining payment for the extended equipment will be provided as a Lump Sum on the next progress pay estimate.

22. An Adjustment of Compensation at Lump Sum Payment of $3,307,627.00 will be provided in addition to the Contract Item Payment for Contract Bid Item 19, Prepare Bridge Deck Surface, Bid Item 49, Furnish Polyester Concrete Overlay (20mm), and Bid Item 50, Place Polyester Concrete Overlay (20 MM). A schedule of values for this payment will be mutually determined by the Contractor and Engineer prior to item placement.

Attachment A - Contract Change Orders included in CCO 200 Resolution

Item #	Description	CCO 200 Amounts
TRO	**Time Related Issues**	
CCO 200	Extended Equip cost (TRO+)	$ 13,337,971
Bid Item 7	TRO 120 days @ $208,000/day (Contract Rate)	$ 24,960,000
CCO 200	TRO 100 days @ $130,000/day (Agreed Rate)	$ 13,000,000
CCOs	**Change Orders**	
CCO 24S3	Walkway installation issues	
CCO 48S1	Conduit routing	
CCO 45	P tendon changes	
CCO 55	Hinge modifications	
CCO 56	Future light pipe	
CCO 59	Ladder at deck MH	
CCO 65S1	Closure pour rebars	
CCO 74	Pier tables	
CCO 75S1	Substation redesign field conflicts	
CCO 79	Tranverse Rib & continuity tendon profiles	
CCO 80	Jacking/creep coefficient	
CCO 81	Deck ties	
CCO 82	Precast panel/diaphram	
CCO 88	Transition span revisions	
CCO 90S3	Bike path installation	
CCO 97S1	Turbidity control	
CCO 99S2	Pier table composite drawings	
CCO 103S1	Pipe beam temperary support	
CCO 108	Temp Tower B	
CCO 108S1	Ortho tub soffit stiffening / Transistion Span Deck Tension	
CCO 109S2	Bike path post tensioning bar	
CCO 121	Mech pipe loops at hinges	
CCO 127S2	Hinge delay TRO+	
CCO 128	Bike path railing changes (fabrication)	
CCO 128S1	Bike path railing changes (installation)	
CCO 135	Butt splice	
CCO 138	Segment foundation modification	
CCO 143	Temporary power for electrical	
CCO 151	Cormorant nest spec change	
CCO 152	Pier table panel	
CCO 153	Stockton panel warping	
CCO 154S1	Hinge delay TRO+	
CCO 156S1	Modular joints	
CCO 167	FHWA weld inspection (weld removal)	
CCO 168	Pile work shutdown due to FBI investigation	
CCO 169	Barrier rebar mod/pull box	
CCO 170	Deletion of electrical equip	
CCO 174	Crew boat	
CCO 179	Additional HPS70W steel for pipe beams	
CCO 183	Canteliver tendons: protect anchorage	
CCO 184	Spare duct grouting	
CCO 185	Exterior closure struts	
CCO 186	Grout sequence and restriction change	
CCO 188	Polyester concrete quantity overrun	
CCO 191	Barrier issues	
NOPCs	**Notice of Potential Claims**	
NOPC # 11	Hinge Pipe Beam repair issues (TBS & KFM)	
NOPC # 9	Stockton Yard Slowdown /Hinge Modification Delays	
NOPC # 7	Pacific Cement MOE costs	
NOPC # 26	Pier Table Precast Panel	
Total Settlement CCO 200		**$ 94,394,113**

CONTRACT CHANGE ORDER

Change Requested by: Engineer

CCO 24	Suppl. No. 3	Contract No. 04 - 012024	Road 04-SF,Ala-80-13.9/14.3,0.0/1.6	FED. AID LOC.: ACIM-080-1(085)8N

To: **KIEWIT / FCI / MANSON a JV**

You are directed to make the following changes from the plans and specifications or do the following described work not included in the plans and specifications for this contract. ***NOTE: This change order is not effective until approved by the Engineer.***

Description of work to be done, estimate of quantities and prices to be paid. (Segregate between additional work at contract price, agreed price and force account.) Unless otherwise stated, rates for rental of equipment cover only such time as equipment is actually used and no allowance will be made for idle time. This last percentage shown is the net accumulated increase or decrease from the original quantity in the Engineer's Estimate.

Adjustment of Compensation at Lump Sum:

Furnish additional labor, equipment, and material, to install the revised walkways (Bid Item No. 87) in the precast segments in accordance with the revised plan sheets submitted with Contract Change Order No. 24 S0, 24 S1, and 24S2 for the SFOBB East Span Skyway, Bridge Nos. 34-0006L/R.

This Contract Change Order resolves all known issues related to Bid Item No. 87 "Walkways", as of August 1, 2006.

Full compensation, including all markups, for all direct and indirect costs, all associated impact costs, and all overhead costs are included in the lump sum payment of CCO No. 200 and no further payment will be made as a result of this CCO.

Estimated Cost: **Increase** ☐ **Decrease** ☐

By reason of this order the time of completion will be adjusted as follows: 0 days

Submitted by

Signature	Resident Engineer: DOUG COE, Supervising Br. Eng.	Date 8-24-06

Approval Recommended by

Signature	Construction Engineer: DOUG COE, Supervising Br. Eng.	Date 8-24-06

Engineer Approval by

Signature	(Print name and title) PETER SIEGENTHALER - Chief	Date

We the undersigned contractor, have given careful consideration to the change proposed and agree, if this proposal is approved, that we will provide all equipment, furnish the materials, except as may otherwise be noted above, and perform all services necessary for the work above specified, and will accept as full payment therefor the prices shown above.

NOTE: If you, the contractor, do not sign acceptance of this order, your attention is directed to the requirements of the specifications as to proceeding with the ordered work and filing a written protest within the time therein specified.

Contractor Acceptance by

Signature	(Print name and title)	Date

CONTRACT CHANGE ORDER

Change Requested by: Contractor

CCO 45	Suppl. No. 0	Contract No. 04 - 012024	Road 04-SF,Ala-80-13.9/14.3,0.0/1.6	FED. AID LOC.: ACIM-080-1(085)8N

To: **KIEWIT / FCI / MANSON a JV**

You are directed to make the following changes from the plans and specifications or do the following described work not included in the plans and specifications for this contract. ***NOTE: This change order is not effective until approved by the Engineer.***

Description of work to be done, estimate of quantities and prices to be paid. (Segregate between additional work at contract price, agreed price and force account.) Unless otherwise stated, rates for rental of equipment cover only such time as equipment is actually used and no allowance will be made for idle time. This last percentage shown is the net accumulated increase or decrease from the original quantity in the Engineer's Estimate.

Adjustment of Compensation at Lump Sum:

Extend tendons P11 and P12 to the mid-span closure of cantilevers E16E and W for the SFOBB East Span Skyway, Bridge Numbers 34-0006L/R as shown on revised contract plan sheets 623R2, 624R3, 625R3, 626R3, 627R3, 628R3, 629R3, 630R3, 631R3, 632R3, 633R3, 634R3, 635R3, 636R3, 637R2, 638R2, 639R3, 640R3, 641R3, 642R3, 643R3, 644R3, 645R3, 646R3, 647R3, 648R3, 649R3, 650R3, 651R3, 652R2, 688R3, 688AR2, and 688BR2 of 978 (sheets 2 through 34 of this change order). At other locations, provide block-outs (floor access) in the bottom slab to install tendons P11 and P12 after erection of the cantilever. In addition, at all cantilevers, do not stress tendons P1 to P4 and P11 & P12 (except for Cantilevers E14E & W, where P4 is stressed and P7 is not stressed) and install without anchorage hardware.

Full compensation for all costs, including markups, all direct and indirect costs, all associated projects impacts, and all overhead costs are included in the lump sum payment under Contract Change Order No. 200. No further payment will be made as a result of this Change Order.

Estimated Cost: **Increase** ☐ **Decrease** ☐

By reason of this order the time of completion will be adjusted as follows: 0 days

Submitted by

Signature	Resident Engineer: DOUG COE, Supervising Br. Eng.	Date 8-24-06

Approval Recommended by

Signature	Construction Engineer: DOUG COE, Supervising Br. Eng.	Date 8-24-06

Engineer Approval by

Signature	(Print name and title) PETER SIEGENTHALER - Chief	Date

We the undersigned contractor, have given careful consideration to the change proposed and agree, if this proposal is approved, that we will provide all equipment, furnish the materials, except as may otherwise be noted above, and perform all services necessary for the work above specified, and will accept as full payment therefor the prices shown above.

NOTE: If you, the contractor, do not sign acceptance of this order, your attention is directed to the requirements of the specifications as to proceeding with the ordered work and filing a written protest within the time therein specified.

Contractor Acceptance by

Signature	(Print name and title)	Date

CONTRACT CHANGE ORDER

Change Requested by: Engineer

CCO: 48	Suppl. No. 1	Contract No. 04 - 012024	Road 04-SF,Ala-80-13.9/14.3,0.0/1.6	FED. AID LOC.: ACIM-080-1(085)8N

To: **KIEWIT / FCI / MANSON a JV**

You are directed to make the following changes from the plans and specifications or do the following described work not included in the plans and specifications for this contract. ***NOTE: This change order is not effective until approved by the Engineer.***

Description of work to be done, estimate of quantities and prices to be paid. (Segregate between additional work at contract price, agreed price and force account.) Unless otherwise stated, rates for rental of equipment cover only such time as equipment is actually used and no allowance will be made for idle time. This last percentage shown is the net accumulated increase or decrease from the original

Adjustment of Compensation at Lump Sum:

Implement the following changes:

1) Add a face plate between the pipe beam conduit supports and the ring stiffeners,
2) Eliminate the flex conduit connections at Hinge A,
3) Revise electrical conduit system between the hinge pipe beams and the cable trays at Hinges B, C, and D, in accordance with the revised drawings.
4) Re-route the conduits through the wing sections at Hinge E, as shown on revised contract plan sheets,109GR3, 109YR1 171R2, 187R2, 188R1, 191R2, 207R1, 208R1, 224R2, 225R2, 250R1, 262R1, 313R1, 340AR1, 340A0R2, 340A1R4, 340A2, 340BR1, 340B0, 340B1R2, 340CR1, 340C0, 340C1R2, 340DR1, 340D0, 340D1R2, 340ER2, 340E0R1, 340E1R2, 341R1, 341A, 341A0R2, 341A1R4, 341A2, 341B, 342R2, 342A, 342BR2, 343R2, 343A, 343BR2, 344R2, 344A, 344BR2, 345R2, 345AR2, 345BR2, 346R2, 346AR2, 346BR3, 347R2, 347AR1, 347BR2, 347CR2, 347DR2, 347ER2, 355R2, 355A, 355B, 388R3, 389R3, and 405R1 (sheets 2 through 63 of 67 of this change order), and
5) Provide payment for cable tray support changes in the steel transition span, as shown on the revised contract plan sheet submitted with Contract Change Order No. 48 Supplement 0, executed on May 25, 2005 for the SFOBB East Span Skyway, Bridge Nos. 34-0006L/R.

Also, add to the Supplement To The Special Provisions and Plans, Binder 1 of 2 - Westbound, Circuit Schedule Westbound, Sheet EE-324E (6 pages), Conduit and Tray Schedule Westbound, Sheet EE-325G (60 pages); and add to Binder 2 of 2 - Eastbound, Circuit Schedule Eastbound, Sheet EE-327E (5 pages), Conduit and Tray Schedule Eastbound, Sheet EE-328G (67 pages) provided herein (sheets 64 through 67 of this change order).

Full compensation for all costs, including markups, all direct and indirect costs, all associated project impacts, all overhead expenses, and all risk associated with this work is included in the lump sum payment of CCO No. 200 and no further payment will be made as a result of this CCO.

Estimated Cost: Increase ☐ Decrease ☐

By reason of this order the time of completion will be adjusted as follows: 0 days

Submitted by

Signature	Resident Engineer: DOUG COE, Supervising Br. Eng.	Date 8-24-06

Approval Recommended by

Signature	Construction Engineer: DOUG COE, Supervising Br. Eng.	Date 8-24-06

Engineer Approval by

Signature	(Print name and title) PETER SIEGENTHALER - Chief	Date

We the undersigned contractor, have given careful consideration to the change proposed and agree, if this proposal is approved, that we will provide all equipment, furnish the materials, except as may otherwise be noted above, and perform all services necessary for the work above specified, and will accept as full payment therefor the prices shown above.

NOTE: If you, the contractor, do not sign acceptance of this order, your attention is directed to the requirements of the specifications as to proceeding with the ordered work and filing a written protest within the time therein specified.

Contractor Acceptance by

Signature	(Print name and title)	Date

CONTRACT CHANGE ORDER

Change Requested by: Engineer

CCO: 55	Suppl. No. 0	Contract No. 04 - 012024	Road 04-SF,Ala-80-13.9/14.3,0.0/1.6	FED. AID LOC.: ACIM-080-1(085)8N

To: **KIEWIT / FCI / MANSON a JV**

You are directed to make the following changes from the plans and specifications or do the following described work not included in the plans and specifications for this contract. ***NOTE: This change order is not effective until approved by the Engineer.***

Description of work to be done, estimate of quantities and prices to be paid. (Segregate between additional work at contract price, agreed price and force account.) Unless otherwise stated, rates for rental of equipment cover only such time as equipment is actually used and no allowance will be made for idle time. This last percentage shown is the net accumulated increase or decrease from the original

Adjustment of Compensation at Lump Sum:

Furnish all labor, materials, tools, equipment and incidentals to construct the permanent counterweights for the fully precas hinge segments, as shown on revised plan sheets 733R1, 734R1, 734A, 734B and 734C of 978 (Page 2 through 6 of this change order) for the SFOBB East Span Skyway, Bridge Nos. 34-0006L/R.

Furnish all labor, materials, tools, equipment and incidentals to construct the precast hinge segments B, C, D, and E, as shown on revised plan sheets 786R3, 787R4, 788R2, 789R2, 790R2, 791R2, 792R3, 793R3, 794R3, 795R4, 796R3, 797R3, 797AR1, 798R4, 799R2, 799AR1, 799BR1, 800R3, 801R3, 802R3, 803R3, 804R3, 805R3, 806R3, 807R3, 807AR1, 807BR1, 808R3, 809R3, 810R2, 811R3, 812R2, 813R1, 814R3, 815R2, 816R3, 817R4, 818R3, 819R1, 820R3, 821R2, 822R3, 823R3, 824R3, 825R3, 825AR1, 826R3, 827R3, 828R3, 829R1, 830R2, 831R2, 832R1, 833R2, 834R2, 835R2, 836R3, 837R3, 838R3, 839R4, 840R3, 841R2, 842R3, 843R2, 843A, 844R4, 845R3, 846R3, 847R3, 848R3, 849R3, 850R3, 851R2, and 851AR1 of 978 (Page 7 through 80 of this change order) for the SFOBB East Span Skyway, Bridge Nos. 34-0006L/R.

Revise the grout pockets to continuous circular grout pockets as shown on revised plan sheets 879R2, 880R2 and 881AR2 of 978 (Page 81 through 83 of this change order) for the SFOBB East Span Skyway, Bridge Nos. 34-0006L/R.

Revise the blockout dimensions for the modular joint seal assemblies as shown on revised plan sheets 885R1, and 885AR2 of 978 (Page 84 and 85 of this change order) for the SFOBB East Span Skyway, Bridge Nos. 34-0006L/R.

Full and complete compensation for providing all labor, material, equipment, tools and incidentals, including markups, for a direct and indirect costs, and all associated project impacts for this work is included in the lump sum payment of CCO No. 200 and no further payment will be made as a result of this CCO.

Estimated Cost: Increase ☐ Decrease ☐

By reason of this order the time of completion will be adjusted as follows: 0 days

Submitted by

Signature	Resident Engineer: DOUG COE, Supervising Br. Eng.	Date 8-24-06

Approval Recommended by

Signature	Construction Engineer: DOUG COE, Supervising Br. Eng.	Date 8-24-06

Engineer Approval by

Signature	(Print name and title) PETER SIEGENTHALER - Chief	Date

We the undersigned contractor, have given careful consideration to the change proposed and agree, if this proposal is approved, that we will provide all equipment, furnish the materials, except as may otherwise be noted above, and perform all services necessary for the work above specified, and will accept as full payment therefor the prices shown above.

NOTE: If you, the contractor, do not sign acceptance of this order, your attention is directed to the requirements of the specifications as to proceeding with the ordered work and filing a written protest within the time therein specified.

Contractor Acceptance by

Signature	(Print name and title)	Date

CONTRACT CHANGE ORDER

Change Requested by: Engineer

CCO: 56	Suppl. No. 0	Contract No. 04 - 012024	Road 04-SF,Ala-80-13.9/14.3,0.0/1.6	FED. AID LOC.: ACIM-080-1(085)8N

To: **KIEWIT / FCI / MANSON a JV**

You are directed to make the following changes from the plans and specifications or do the following described work not included in the plans and specifications for this contract. ***NOTE: This change order is not effective until approved by the Engineer.***

Description of work to be done, estimate of quantities and prices to be paid. (Segregate between additional work at contract price, agreed price and force account.) Unless otherwise stated, rates for rental of equipment cover only such time as equipment is actually used and no allowance will be made for idle time. This last percentage shown is the net accumulated increase or decrease from the original

Adjustment of Compensation at Lump Sum:

As shown on Detail A of revised contract plan sheet number 423R2 of 978, (page 2 of this change order) install the conduit pipe sleeves (total of 7) in lieu of the conduit stub-outs (as shown on plan sheet 423) for the future light pipe in the west bound steel transition section, and eliminate the PVC conduit sleeves in the west bound concrete bridge sections (as shown on plan sheet 423 R1) of the SFOBB East Span Skyway, Bridge No. 34-0006L/R.

Full compensation for all costs, including markups, all direct and indirect costs, all associated projects impacts, and all overhead costs are included in the lump sum payment under Contract Change Order No. 200. No further payment will be made as a result of this Change Order.

Estimated Cost: Increase ☐ Decrease ☐

By reason of this order the time of completion will be adjusted as follows: 0 days

Submitted by

Signature	Resident Engineer: DOUG COE, Supervising Br. Eng.	Date 8-24-06

Approval Recommended by

Signature	Construction Engineer: DOUG COE, Supervising Br. Eng.	Date 8-24-06

Engineer Approval by

Signature	(Print name and title) DOUG COE, Supervising Br. Eng. - Construction Engin	Date

We the undersigned contractor, have given careful consideration to the change proposed and agree, if this proposal is approved, that we will provide all equipment, furnish the materials, except as may otherwise be noted above, and perform all services necessary for the work above specified, and will accept as full payment therefor the prices shown above.

NOTE: If you, the contractor, do not sign acceptance of this order, your attention is directed to the requirements of the specifications as to proceeding with the ordered work and filing a written protest within the time therein specified.

Contractor Acceptance by

Signature	(Print name and title)	Date

CONTRACT CHANGE ORDER

Change Requested by: Engineer

CCO: 59	Suppl. No. 0	Contract No. 04 - 012024	Road 04-SF,Ala-80-13.9/14.3,0.0/1.6	FED. AID LOC.: ACIM-080-1(085)8N

To: **KIEWIT / FCI / MANSON a JV**

You are directed to make the following changes from the plans and specifications or do the following described work not included in the plans and specifications for this contract. ***NOTE: This change order is not effective until approved by the Engineer.***

Description of work to be done, estimate of quantities and prices to be paid. (Segregate between additional work at contract price, agreed price and force account.) Unless otherwise stated, rates for rental of equipment cover only such time as equipment is actually used and no allowance will be made for idle time. This last percentage shown is the net accumulated increase or decrease from the original

Adjustment of Compensation at Lump Sum:

Revise all ladders at deck manholes (32 locations) and revise the electrical girder-access lighting fixtures at the deck manholes of spans E15W/E, E16W/E, and E17W/E as shown on revised contract plan sheet numbers 93BR3, 93CR5, 93ER2, 94R4, 97BR4, 97CR5, 97ER1, 98R6, 102R6, 102C, 190R2, 210R2, and 310R2 of 978 of the SFOBB East Span Skyway, Bridge Nos. 34-0006L/R (page 2 through 14 of this change order).

Full compensation for providing all labor, material, equipment, tools and incidentals, including markups, for all direct and indirect costs, and all associated project impacts for this work is included in the lump sum payment of CCO No. 200 and no further payment will be made as a result of this CCO.

Estimated Cost: Increase ☐ Decrease ☐

By reason of this order the time of completion will be adjusted as follows: 0 days

Submitted by

Signature	Resident Engineer: DOUG COE, Supervising Br. Eng.	Date 8-24-06

Approval Recommended by

Signature	Construction Engineer: DOUG COE, Supervising Br. Eng.	Date 8-24-06

Engineer Approval by

Signature	(Print name and title) DOUG COE, Supervising Br. Eng. - Construction Engin	Date

We the undersigned contractor, have given careful consideration to the change proposed and agree, if this proposal is approved, that we will provide all equipment, furnish the materials, except as may otherwise be noted above, and perform all services necessary for the work above specified, and will accept as full payment therefor the prices shown above.

NOTE: If you, the contractor, do not sign acceptance of this order, your attention is directed to the requirements of the specifications as to proceeding with the ordered work and filing a written protest within the time therein specified.

Contractor Acceptance by

Signature	(Print name and title)	Date

CONTRACT CHANGE ORDER

Change Requested by: Engineer

CCO: 65	Suppl. No. 1	Contract No. 04 - 012024	Road 04-SF,Ala-80-13.9/14.3,0.0/1.6	FED. AID LOC.: ACIM-080-1(085)8N

To: **KIEWIT / FCI / MANSON a JV**

You are directed to make the following changes from the plans and specifications or do the following described work not included in the plans and specifications for this contract. ***NOTE: This change order is not effective until approved by the Engineer.***

Description of work to be done, estimate of quantities and prices to be paid. (Segregate between additional work at contract price, agreed price and force account.) Unless otherwise stated, rates for rental of equipment cover only such time as equipment is actually used and no allowance will be made for idle time. This last percentage shown is the net accumulated increase or decrease from the original

Extra Work at Lump Sum:

Supply and install additional transverse reinforcement at the mid-frame closure pours at the superstructure jacking locations as shown on revised plan sheet 857R3 of 978, (page 2 of this change order) of the SFOBB East Span Skyway, Bridge Numbers 34-0006L/R.

This change order also closes the deferred time element of Contract Change Order No. 65 Supplement 0 of the SFOBB East Span Skyway, Bridge Numbers 34-0006L/R.

The deferred time associated with Contract Change Order No. 65, Supplement 0, was resolved by executing Contract Change Orders No. 107, Supplement 0 through Supplement 3.

Full compensation for all costs, including markups, all direct and indirect costs, all associated projects impacts, and all overhead costs are included in the lump sum payment under Contract Change Order No. 200. No further payment will be made as a result of this Change Order.

Estimated Cost: Increase ☐ Decrease ☐

By reason of this order the time of completion will be adjusted as follows: 0 days

Submitted by

Signature	Resident Engineer: DOUG COE, Supervising Br. Eng.	Date 8-24-06

Approval Recommended by

Signature	Construction Engineer: DOUG COE, Supervising Br. Eng.	Date 8-24-06

Engineer Approval by

Signature	(Print name and title) PETER SIEGENTHALER - Chief	Date

We the undersigned contractor, have given careful consideration to the change proposed and agree, if this proposal is approved, that we will provide all equipment, furnish the materials, except as may otherwise be noted above, and perform all services necessary for the work above specified, and will accept as full payment therefor the prices shown above.

NOTE: If you, the contractor, do not sign acceptance of this order, your attention is directed to the requirements of the specifications as to proceeding with the ordered work and filing a written protest within the time therein specified.

Contractor Acceptance by

Signature	(Print name and title)	Date

CONTRACT CHANGE ORDER

Change Requested by: Engineer

CCO: 74	Suppl. No. 0	Contract No. 04 - 012024	Road 04-SF,Ala-80-13.9/14.3,0.0/1.6	FED. AID LOC.: ACIM-080-1(085)8N

To: **KIEWIT / FCI / MANSON a JV**

You are directed to make the following changes from the plans and specifications or do the following described work not included in the plans and specifications for this contract. ***NOTE: This change order is not effective until approved by the Engineer.***

Description of work to be done, estimate of quantities and prices to be paid. (Segregate between additional work at contract price, agreed price and force account.) Unless otherwise stated, rates for rental of equipment cover only such time as equipment is actually used and no allowance will be made for idle time. This last percentage shown is the net accumulated increase or decrease from the original

Adjustment of Compensation at Lump Sum:

Furnish additional labor, supervision, equipment, material, supplies, and other resources as required to construct the pier and pier tables as shown on revised contract plan sheet numbers 502R3, 503R3, 504R3, 505R4, 736R3, 737R1, 738R3, 739R1, 740R1, 741R1, 742R1, 743R1, 744R1, 745R1, 746R1, 748R3, 749R1, 750R3, 751R1, 752R2, 753R1, 754R1, 755R1, and 756R1 of 978 (sheets 2 through 25 of this change order) for the SFOBB East Span Skyway, Bridge No. 34-0006L/R.

Full compensation for all costs, including markups, all direct and indirect costs, escalation caused by the delay in completion of the revised contract plan sheets, all inefficiencies created by the numerous field issues, all overhead costs, a associated project impacts, and all risks associated with this change is included in the lump sum payment of CCO No. 200 and no further payment will be made as a result of this CCO.

Estimated Cost: **Increase** ☐ **Decrease** ☐

By reason of this order the time of completion will be adjusted as follows: 0 days

Submitted by

Signature	Resident Engineer: DOUG COE, Supervising Br. Eng.	Date 8-24-06

Approval Recommended by

Signature	Construction Engineer: DOUG COE, Supervising Br. Eng.	Date 8-24-06

Engineer Approval by

Signature	(Print name and title) PETER SIEGENTHALER - Chief	Date

We the undersigned contractor, have given careful consideration to the change proposed and agree, if this proposal is approved, that we will provide all equipment, furnish the materials, except as may otherwise be noted above, and perform all services necessary for the work above specified, and will accept as full payment therefor the prices shown above.

NOTE: If you, the contractor, do not sign acceptance of this order, your attention is directed to the requirements of the specifications as to proceeding with the ordered work and filing a written protest within the time therein specified.

Contractor Acceptance by

Signature	(Print name and title)	Date

CONTRACT CHANGE ORDER

Change Requested by: Engineer

CCO: 75	Suppl. No. 1	Contract No. 04 - 012024	Road 04-SF,Ala-80-13.9/14.3,0.0/1.6	FED. AID LOC.: ACIM-080-1(085)8N

To: **KIEWIT / FCI / MANSON a JV**

You are directed to make the following changes from the plans and specifications or do the following described work not included in the plans and specifications for this contract. ***NOTE: This change order is not effective until approved by the Engineer.***

Description of work to be done, estimate of quantities and prices to be paid. (Segregate between additional work at contract price, agreed price and force account.) Unless otherwise stated, rates for rental of equipment cover only such time as equipment is actually used and no allowance will be made for idle time. This last percentage shown is the net accumulated increase or decrease from the original

Extra Work at Lump Sum:

Furnish labor, supervision, and equipment to modify the Eastbound and Westbound electrical substation in accordance witl the revised contract plan sheets provided with contract change order no. 75 supplement 0, executed on February 16, 2006. Supply and install additional items as shown on revised contract plan sheets 109R4 and 897R4 of 978 (sheets 2 and 3 of 8 of this change order), install the substation exterior stairs per revised contract plan sheet 89R1 of 978 (sheet 4 of 8 of this change order), and install the monorail in the substations as modified per revised contract plan sheet 91R1 of 978 (sheet 5 of 8 of this change order) and State letters no. 8865, no. 8986, and no.8998, (attached as sheet 6 through 8 of 8 of this change order) for the SFOBB East Span Skyway, Bridge Nos. 34-0006L/R.

In addition to the work above, perform the following work as authorized by the Engineer:

1.) Raise the equipment and materials into the substation through the hatch as necessary.
2.) Install embed plates at walls at midspan closure E7E-E8E in the eastbound Substation.
3.) Install angles to the substation walls in the eastbound span for substation grating wall connection.
4.) Perform load test on angles installed to the substation wall in the eastbound span.
5.) Install substation end walls from top of diaphragm to ceiling and adjust the substation floor to match.
6.) Install R-13 insulation batting in the substation walls.
7.) Increase specified vent size, revise ventilation routing and termination for electric incinerating toilets.
8.) Supply Hilman roller system, equipped to move substation flooring, for each substation.
9.) Install scissor lifts shown on revised contract plan sheet 897R4 in the substations.

Full compensation for all costs, including markups, all direct and indirect costs, all associated project impacts, and all overhead costs are included in the lump sum payment of CCO No. 200 and no further payment will be made as a result of this CCO.

Estimated Cost: Increase ☐ Decrease ☐

By reason of this order the time of completion will be adjusted as follows: 0 days

Submitted by

Signature	Resident Engineer: DOUG COE, Supervising Br. Eng.	Date 8-24-06

Approval Recommended by

Signature	Construction Engineer: DOUG COE, Supervising Br. Eng.	Date 8-24-06

Engineer Approval by

Signature	(Print name and title) PETER SIEGENTHALER - Chief	Date

We the undersigned contractor, have given careful consideration to the change proposed and agree, if this proposal is approved, that we will provide all equipment, furnish the materials, except as may otherwise be noted above, and perform all services necessary for the work above specified, and will accept as full payment therefor the prices shown above.

NOTE: If you, the contractor, do not sign acceptance of this order, your attention is directed to the requirements of the specifications as to proceeding with the ordered work and filing a written protest within the time therein specified.

Contractor Acceptance by

Signature	(Print name and title)	Date

CONTRACT CHANGE ORDER

Change Requested by: Engineer

CCO: 79	Suppl. No. 0	Contract No. 04 - 012024	Road 04-SF,Ala-80-13.9/14.3,0.0/1.6	FED. AID LOC.: ACIM-080-1(085)8N

To: **KIEWIT / FCI / MANSON a JV**

You are directed to make the following changes from the plans and specifications or do the following described work not included in the plans and specifications for this contract. ***NOTE: This change order is not effective until approved by the Engineer.***

Description of work to be done, estimate of quantities and prices to be paid. (Segregate between additional work at contract price, agreed price and force account.) Unless otherwise stated, rates for rental of equipment cover only such time as equipment is actually used and no allowance will be made for idle time. This last percentage shown is the net accumulated increase or decrease from the original

Extra Work at Lump Sum:

Modify the transverse tendons, cut off girder reinforcement and add No. 13 U-bars at the manholes as shown on revised contract plan sheet numbers 699R3, 700R3, 701R2, and 702R3 of 978 (sheets 2 through 5 of this change order) for the SFOBB East Span Skyway, Bridge Numbers 34-0006L/R.

Full compensation for all costs, including markups, all direct and indirect costs, all associated project impacts, and all overhead costs are included in the lump sum payment of CCO No. 200 and no further payment will be made as a result of this CCO.

Estimated Cost: Increase ☐ Decrease ☐

By reason of this order the time of completion will be adjusted as follows: 0 days

Submitted by

Signature	Resident Engineer: DOUG COE, Supervising Br. Eng.	Date 8-24-06

Approval Recommended by

Signature	Construction Engineer: DOUG COE, Supervising Br. Eng.	Date 8-24-06

Engineer Approval by

Signature	(Print name and title) PETER SIEGENTHALER - Chief	Date

We the undersigned contractor, have given careful consideration to the change proposed and agree, if this proposal is approved, that we will provide all equipment, furnish the materials, except as may otherwise be noted above, and perform all services necessary for the work above specified, and will accept as full payment therefor the prices shown above.

NOTE: If you, the contractor, do not sign acceptance of this order, your attention is directed to the requirements of the specifications as to proceeding with the ordered work and filing a written protest within the time therein specified.

Contractor Acceptance by

Signature	(Print name and title)	Date

CONTRACT CHANGE ORDER

Change Requested by: Engineer

CCO: 80	Suppl. No. 0	Contract No. 04 - 012024	Road 04-SF,Ala-80-13.9/14.3,0.0/1.6	FED. AID LOC.: ACIM-080-1(085)8N

To: **KIEWIT / FCI / MANSON a JV**

You are directed to make the following changes from the plans and specifications or do the following described work not included in the plans and specifications for this contract. ***NOTE: This change order is not effective until approved by the Engineer.***

Description of work to be done, estimate of quantities and prices to be paid. (Segregate between additional work at contract price, agreed price and force account.) Unless otherwise stated, rates for rental of equipment cover only such time as equipment is actually used and no allowance will be made for idle time. This last percentage shown is the net accumulated increase or decrease from the original

Extra Work at Lump Sum:

Apply incremental frame jacking and install counterweight at Frame 3 to control long term moments and to mitigate impacts of using a creep coefficient of 2.35, instead of a lower value for the work done on the SFOBB East Span Skyway, Bridge Nos. 34-0006L/R.

Full compensation for all costs, including markups, all direct and indirect costs, all associated project impacts, and all overhead costs are included in the lump sum payment of CCO No. 200 and no further payment will be made as a result of this CCO.

Estimated Cost: Increase ☐ Decrease ☐

By reason of this order the time of completion will be adjusted as follows: 0 days

Submitted by

Signature	Resident Engineer: DOUG COE, Supervising Br. Eng.	Date 8-24-06

Approval Recommended by

Signature	Construction Engineer: DOUG COE, Supervising Br. Eng.	Date 8-24-06

Engineer Approval by

Signature	(Print name and title) PETER SIEGENTHALER - Chief	Date

We the undersigned contractor, have given careful consideration to the change proposed and agree, if this proposal is approved, that we will provide all equipment, furnish the materials, except as may otherwise be noted above, and perform all services necessary for the work above specified, and will accept as full payment therefor the prices shown above.

NOTE: If you, the contractor, do not sign acceptance of this order, your attention is directed to the requirements of the specifications as to proceeding with the ordered work and filing a written protest within the time therein specified.

Contractor Acceptance by

Signature	(Print name and title)	Date

CONTRACT CHANGE ORDER

Change Requested by: Engineer

CCO: 81	Suppl. No. 0	Contract No. 04 - 012024	Road 04-SF,Ala-80-13.9/14.3,0.0/1.6	FED. AID LOC.: ACIM-080-1(085)8N

To: **KIEWIT / FCI / MANSON a JV**

You are directed to make the following changes from the plans and specifications or do the following described work not included in the plans and specifications for this contract. ***NOTE: This change order is not effective until approved by the Engineer.***

Description of work to be done, estimate of quantities and prices to be paid. (Segregate between additional work at contract price, agreed price and force account.) Unless otherwise stated, rates for rental of equipment cover only such time as equipment is actually used and no allowance will be made for idle time. This last percentage shown is the net accumulated increase or decrease from the original

Adjustment of Compensation at Lump Sum:

Modify the bar reinforcing steel deck ties as shown on revised contract plan sheet number 852R3 of 978 (sheet 2 of this change order) for the SFOBB East Span Skyway, Bridge Numbers 34-0006L/R.

Full compensation for all direct and indirect costs, and all associated project impacts is included in the lump sum payment of CCO No. 200 and no further payment will be made as a result of this CCO.

Estimated Cost: **Increase** ☐ **Decrease** ☐

By reason of this order the time of completion will be adjusted as follows: 0 days

Submitted by

Signature	Resident Engineer: DOUG COE, Supervising Br. Eng.	Date 8-24-06

Approval Recommended by

Signature	Construction Engineer: DOUG COE, Supervising Br. Eng.	Date 8-24-06

Engineer Approval by

Signature	(Print name and title) PETER SIEGENTHALER - Chief	Date

We the undersigned contractor, have given careful consideration to the change proposed and agree, if this proposal is approved, that we will provide all equipment, furnish the materials, except as may otherwise be noted above, and perform all services necessary for the work above specified, and will accept as full payment therefor the prices shown above.

NOTE: If you, the contractor, do not sign acceptance of this order, your attention is directed to the requirements of the specifications as to proceeding with the ordered work and filing a written protest within the time therein specified.

Contractor Acceptance by

Signature	(Print name and title)	Date

CONTRACT CHANGE ORDER

Change Requested by: Engineer

CCO: 82	Suppl. No. 0	Contract No. 04 - 012024	Road 04-SF,Ala-80-13.9/14.3,0.0/1.6	FED. AID LOC.: ACIM-080-1(085)8N

To: **KIEWIT / FCI / MANSON a JV**

You are directed to make the following changes from the plans and specifications or do the following described work not included in the plans and specifications for this contract. ***NOTE: This change order is not effective until approved by the Engineer.***

Description of work to be done, estimate of quantities and prices to be paid. (Segregate between additional work at contract price, agreed price and force account.) Unless otherwise stated, rates for rental of equipment cover only such time as equipment is actually used and no allowance will be made for idle time. This last percentage shown is the net accumulated increase or decrease from the original

Adjustment of Compensation at Lump Sum:

Modify the diaphragm rebars and the precast panel to diaphragm connection details on the SFOBB East Span Skyway, Bridge Nos. 34-0006 L/R, as shown on the revised contract plan sheets 730R2, 731R2, 732R2, and 762R1 of 978 (pages 2 through 5 of this change order).

Full compensation for all costs, including markups, all direct and indirect costs, all associated project impacts, and all overhead costs is included in the lump sum payment of CCO No. 200 and no further payment will be made as a result of this CCO.

Estimated Cost: **Increase** ☐ **Decrease** ☐

By reason of this order the time of completion will be adjusted as follows: 0 days

Submitted by

Signature	Resident Engineer: DOUG COE, Supervising Br. Eng.	Date 8-24-06

Approval Recommended by

Signature	Construction Engineer: DOUG COE, Supervising Br. Eng.	Date 8-24-06

Engineer Approval by

Signature	(Print name and title) PETER SIEGENTHALER - Chief	Date

We the undersigned contractor, have given careful consideration to the change proposed and agree, if this proposal is approved, that we will provide all equipment, furnish the materials, except as may otherwise be noted above, and perform all services necessary for the work above specified, and will accept as full payment therefor the prices shown above.

NOTE: If you, the contractor, do not sign acceptance of this order, your attention is directed to the requirements of the specifications as to proceeding with the ordered work and filing a written protest within the time therein specified.

Contractor Acceptance by

Signature	(Print name and title)	Date

CONTRACT CHANGE ORDER

Change Requested by: Engineer

CCO: 88	Suppl. No. 0	Contract No. 04 - 012024	Road 04-SF,Ala-80-13.9/14.3,0.0/1.6	FED. AID LOC.: ACIM-080-1(085)8N

To: **KIEWIT / FCI / MANSON a JV**

You are directed to make the following changes from the plans and specifications or do the following described work not included in the plans and specifications for this contract. ***NOTE: This change order is not effective until approved by the Engineer.***

Description of work to be done, estimate of quantities and prices to be paid. (Segregate between additional work at contract price, agreed price and force account.) Unless otherwise stated, rates for rental of equipment cover only such time as equipment is actually used and no allowance will be made for idle time. This last percentage shown is the net accumulated increase or decrease from the original

Adjustment of Compensation at Lump Sum:

Modify the Transition Span Structure to resolve conflicts between the reinforcing steel and post-tensioning bars, and incorporate design detailing changes in the structural steel work as shown on revised contract plan sheet numbers 712R3, 713R3, 714R2, 717R2, 718R3, 722R3, 723R3, 724R4, 725R4, 726R4, 727R1, and 728R2 of 978 (sheets 2 through 13 of this change order) for the SFOBB East Span Skyway, Bridge Nos. 34-0006L/R.

This change order compensates the Contractor for the additional work performed in the field as dictated by the above listec revised contract plan sheets. The costs to implement the changes to the steel transition span shown in the revised contrac plans listed above will be compensated in a supplement change order.

Full compensation for all costs, including markups, all direct and indirect costs, all associated project impacts, all overhead expenses, and all risk associated with the field work is included in the lump sum payment of CCO No. 200 and no further payment will be made as a result of this CCO.

Estimated Cost: Increase ☐ Decrease ☐

By reason of this order the time of completion will be adjusted as follows: 0 days

Submitted by

Signature	Resident Engineer: DOUG COE, Supervising Br. Eng.	Date 8-24-06

Approval Recommended by

Signature	Construction Engineer: DOUG COE, Supervising Br. Eng.	Date 8-24-06

Engineer Approval by

Signature	(Print name and title) PETER SIEGENTHALER - Chief	Date

We the undersigned contractor, have given careful consideration to the change proposed and agree, if this proposal is approved, that we will provide all equipment, furnish the materials, except as may otherwise be noted above, and perform all services necessary for the work above specified, and will accept as full payment therefor the prices shown above.

NOTE: If you, the contractor, do not sign acceptance of this order, your attention is directed to the requirements of the specifications as to proceeding with the ordered work and filing a written protest within the time therein specified.

Contractor Acceptance by

Signature	(Print name and title)	Date

CONTRACT CHANGE ORDER

Change Requested by: Engineer

CCO: 90	Suppl. No. 3	Contract No. 04 - 012024	Road 04-SF,Ala-80-13.9/14.3,0.0/1.6	FED. AID LOC.: ACIM-080-1(085)8N

To: **KIEWIT / FCI / MANSON a JV**

You are directed to make the following changes from the plans and specifications or do the following described work not included in the plans and specifications for this contract. ***NOTE: This change order is not effective until approved by the Engineer.***

Description of work to be done, estimate of quantities and prices to be paid. (Segregate between additional work at contract price, agreed price and force account.) Unless otherwise stated, rates for rental of equipment cover only such time as equipment is actually used and no allowance will be made for idle time. This last percentage shown is the net accumulated increase or decrease from the original

Extra Work at Lump Sum:

Provide additional labor, material and equipment to install the Bike Path (Bid Item No. 72) in accordance with revised plan sheets 3 through 28 of Contract Change Order No. 90 supplement 0, "Bike Path Tolerance," executed on November 3, 2004, for the SFOBB East Span Skyway, Bridge Nos. 34-0006L/R.

Full compensation for all costs, including markups, all direct and indirect costs, all associated project impacts, and all overhead costs are included in the lump sum payment of CCO No. 200 and no further payment will be made as a result of this CCO.

Estimated Cost: Increase ☐ Decrease ☐

By reason of this order the time of completion will be adjusted as follows: 0 days

Submitted by

Signature	Resident Engineer: DOUG COE, Supervising Br. Eng.	Date

Approval Recommended by

Signature	Construction Engineer: DOUG COE, Supervising Br. Eng.	Date

Engineer Approval by

Signature	(Print name and title) PETER SIEGENTHALER - Chief	Date

We the undersigned contractor, have given careful consideration to the change proposed and agree, if this proposal is approved, that we will provide all equipment, furnish the materials, except as may otherwise be noted above, and perform all services necessary for the work above specified, and will accept as full payment therefor the prices shown above.

NOTE: If you, the contractor, do not sign acceptance of this order, your attention is directed to the requirements of the specifications as to proceeding with the ordered work and filing a written protest within the time therein specified.

Contractor Acceptance by

Signature	(Print name and title)	Date

CONTRACT CHANGE ORDER

Change Requested by: Engineer

CCO: 97	Suppl. No. 1	Contract No. 04 - 012024	Road 04-SF,Ala-80-13.9/14.3,0.0/1.6	FED. AID LOC.: ACIM-080-1(085)8N

To: **KIEWIT / FCI / MANSON a JV**

You are directed to make the following changes from the plans and specifications or do the following described work not included in the plans and specifications for this contract. ***NOTE: This change order is not effective until approved by the Engineer.***

Description of work to be done, estimate of quantities and prices to be paid. (Segregate between additional work at contract price, agreed price and force account.) Unless otherwise stated, rates for rental of equipment cover only such time as equipment is actually used and no allowance will be made for idle time. This last percentage shown is the net accumulated increase or decrease from the original quantity in the Engineer's Estimate.

Adjustment of Compensation at Lump Sum:

Modify Section 10-1.03, "Non-Storm Water Discharge" of the Special Provisions as follows:

1. Add the following sentence at the end of the second paragraph under "Pile and Cofferdam Dewater: "Sampling of the discharge will be conducted at 3 meters maximum from the outfall of the dewatering system."

2. In lieu of the location specified for the background in the third sentence of the second paragraph under "Pile and Cofferdam Dewater," sampling location of the background (receiving water) will be upgradient (upstream) of the cofferdams at a distance of 274 meters.

There shall be no cost to the state by reason of this clarification and change.

Estimated Cost: **Increase** ☐ **Decrease** ☐ **$0.00**

By reason of this order the time of completion will be adjusted as follows: 0 days

Submitted by

Signature	Resident Engineer: COE D.	Date 2-4-04

Approval Recommended by

Signature	Construction Engineer: COE D.	Date 2-4-04

Engineer Approval by

Signature	(Print name and title) PETER SIEGENTHALER - Chief	Date 05/07/04

We the undersigned contractor, have given careful consideration to the change proposed and agree, if this proposal is approved, that we will provide all equipment, furnish the materials, except as may otherwise be noted above, and perform all services necessary for the work above specified, and will accept as full payment therefor the prices shown above.

NOTE: If you, the contractor, do not sign acceptance of this order, your attention is directed to the requirements of the specifications as to proceeding with the ordered work and filing a written protest within the time therein specified.

Contractor Acceptance by

Signature	(Print name and title)	Date

CONTRACT CHANGE ORDER

Change Requested by: Engineer

CCO: 99	Suppl. No. 2	Contract No. 04 - 012024	Road 04-SF,Ala-80-13.9/14.3,0.0/1.6	FED. AID LOC.: ACIM-080-1(085)8N

To: **KIEWIT / FCI / MANSON a JV**

You are directed to make the following changes from the plans and specifications or do the following described work not included in the plans and specifications for this contract. ***NOTE: This change order is not effective until approved by the Engineer.***

Description of work to be done, estimate of quantities and prices to be paid. (Segregate between additional work at contract price, agreed price and force account.) Unless otherwise stated, rates for rental of equipment cover only such time as equipment is actually used and no allowance will be made for idle time. This last percentage shown is the net accumulated increase or decrease from the original

Adjustment of Compensation at Lump Sum:

This change order shall close the deferred time element of Contract Change Order No. 99, Supplement Nos. 0 and 1, for the SFOBB East Span Skyway, Bridge No. 34-0006L/R.

Full compensation to the Contractor, including mark ups for all direct and indirect costs, all associated project impacts, all overhead costs, and any and all risks associated with this work are included in the lump sum payment of CCO No. 200 and no further payment will be made as a result of this CCO.

Estimated Cost: Increase ☐ Decrease ☐

By reason of this order the time of completion will be adjusted as follows: 0 days

Submitted by

Signature	Resident Engineer: DOUG COE, Supervising Br. Eng.	Date 8-24-06

Approval Recommended by

Signature	Construction Engineer: DOUG COE, Supervising Br. Eng.	Date 8-24-06

Engineer Approval by

Signature	(Print name and title) PETER SIEGENTHALER - Chief	Date

We the undersigned contractor, have given careful consideration to the change proposed and agree, if this proposal is approved, that we will provide all equipment, furnish the materials, except as may otherwise be noted above, and perform all services necessary for the work above specified, and will accept as full payment therefor the prices shown above.

NOTE: If you, the contractor, do not sign acceptance of this order, your attention is directed to the requirements of the specifications as to proceeding with the ordered work and filing a written protest within the time therein specified.

Contractor Acceptance by

Signature	(Print name and title)	Date

CONTRACT CHANGE ORDER

Change Requested by: Engineer

CCO: 103	Suppl. No. 1	Contract No. 04 - 012024	Road 04-SF,Ala-80-13.9/14.3,0.0/1.6	FED. AID LOC.: ACIM-080-1(085)8N

To: **KIEWIT / FCI / MANSON a JV**

You are directed to make the following changes from the plans and specifications or do the following described work not included in the plans and specifications for this contract. ***NOTE: This change order is not effective until approved by the Engineer.***

Description of work to be done, estimate of quantities and prices to be paid. (Segregate between additional work at contract price, agreed price and force account.) Unless otherwise stated, rates for rental of equipment cover only such time as equipment is actually used and no allowance will be made for idle time. This last percentage shown is the net accumulated increase or decrease from the original

Extra Work at Lump Sum:

furnish additional labor, supervision, equipment, and material, to install and remove the temporary supports at locations necessary to eliminate over-stressing the precast segment diaphragms during the installation of the hinge pipe beams for the SFOBB East Span Skyway, Bridge Nos. 34-0006L/R.

This Contract Change Order resolves all impacts related to the installation of Hinge Pipe Beams B, C, and D, Eastbound and Westbound.

Full compensation, including all markups, for all direct and indirect costs, all associated impact costs, and all overhead costs are included in the lump sum payment of CCO No. 200 and no further payment will be made as a result of this CCO.

Estimated Cost: Increase ☐ Decrease ☐

By reason of this order the time of completion will be adjusted as follows: 0 days

Submitted by

Signature	Resident Engineer: DOUG COE, Supervising Br. Eng.	Date 8-24-06

Approval Recommended by

Signature	Construction Engineer: DOUG COE, Supervising Br. Eng.	Date 8-24-06

Engineer Approval by

Signature	(Print name and title) PETER SIEGENTHALER - Chief	Date

We the undersigned contractor, have given careful consideration to the change proposed and agree, if this proposal is approved, that we will provide all equipment, furnish the materials, except as may otherwise be noted above, and perform all services necessary for the work above specified, and will accept as full payment therefor the prices shown above.

NOTE: If you, the contractor, do not sign acceptance of this order, your attention is directed to the requirements of the specifications as to proceeding with the ordered work and filing a written protest within the time therein specified.

Contractor Acceptance by

Signature	(Print name and title)	Date

CONTRACT CHANGE ORDER

Change Requested by: Engineer

CCO: 108	Suppl. No. 0	Contract No. 04 - 012024	Road 04-SF,Ala-80-13.9/14.3,0.0/1.6	FED. AID LOC.: ACIM-080-1(085)8N

To: **KIEWIT / FCI / MANSON a JV**

You are directed to make the following changes from the plans and specifications or do the following described work not included in the plans and specifications for this contract. ***NOTE: This change order is not effective until approved by the Engineer.***

Description of work to be done, estimate of quantities and prices to be paid. (Segregate between additional work at contract price, agreed price and force account.) Unless otherwise stated, rates for rental of equipment cover only such time as equipment is actually used and no allowance will be made for idle time. This last percentage shown is the net accumulated increase or decrease from the original

Adjustment of Compensation at Lump Sum:

The Contractor shall redesign Temporary Tower B for the SFOBB East Span Skyway, Bridge Nos. 34-0006L/R, to accommodate a higher dead load reaction demand, and shall incorporate the following requirements:

1.) Provide a strongback at the closure between the EB transition span and segment E3E-5W and at the closure between the WB transition span and segment E3W-5W;

2.) Provide additional temporary post-tensioning (PT) across the transition span closure;

3.) Provide additional soffit stiffening due to increased dead load reaction, if required:

4.) Use 0.1g for the seismic design criteria for the interim stage construction; and

5.) Substitute the vessel impact requirement at Tower B with tugboat protection 24 hours per day, 7 days per week for the period the transition span is supported on Tower B.

Full compensation for all costs, including markups, all direct and indirect costs, all associated projects impacts, and all overhead costs are included in the lump sum payment under Contract Change Order No. 200. No further payment will be made as a result of this Change Order.

Estimated Cost: **Increase** ☐ **Decrease** ☐

By reason of this order the time of completion will be adjusted as follows: 0 days

Submitted by

Signature	Resident Engineer: DOUG COE, Supervising Br. Eng.	Date 8-24-06

Approval Recommended by

Signature	Construction Engineer: DOUG COE, Supervising Br. Eng.	Date 8-24-06

Engineer Approval by

Signature	(Print name and title) PETER SIEGENTHALER - Chief	Date

We the undersigned contractor, have given careful consideration to the change proposed and agree, if this proposal is approved, that we will provide all equipment, furnish the materials, except as may otherwise be noted above, and perform all services necessary for the work above specified, and will accept as full payment therefor the prices shown above.

NOTE: If you, the contractor, do not sign acceptance of this order, your attention is directed to the requirements of the specifications as to proceeding with the ordered work and filing a written protest within the time therein specified.

Contractor Acceptance by

Signature	(Print name and title)	Date

CONTRACT CHANGE ORDER

Change Requested by: Engineer

CCO: 109	Suppl. No. 2	Contract No. 04 - 012024	Road 04-SF,Ala-80-13.9/14.3,0.0/1.6	FED. AID LOC.: ACIM-080-1(085)8N

To: **KIEWIT / FCI / MANSON a JV**

You are directed to make the following changes from the plans and specifications or do the following described work not included in the plans and specifications for this contract. ***NOTE: This change order is not effective until approved by the Engineer.***

Description of work to be done, estimate of quantities and prices to be paid. (Segregate between additional work at contract price, agreed price and force account.) Unless otherwise stated, rates for rental of equipment cover only such time as equipment is actually used and no allowance will be made for idle time. This last percentage shown is the net accumulated increase or decrease from the original

Adjustment of Compensation at Lump Sum:

Revise the 36-mm diameter high-strength (HS) bars that connect the bike path cantilever beams to the bridge from coarse threaded bars to fine threaded bars. The fine threaded bars shall be stressed to 700 kN after seating using a calibrated torque wrench as approved by the Engineer. For the coarse threaded bars that have already been cast into the bridge, the bars shall be stressed to 700 kN by repeatedly stressing and tightening the nuts to refusal and releasing the bars. The bar forces shall be confirmed by the Engineer. Modify the cast-in place bearing plates (dead end) to 7" x 7" size with 50 ksi material. Modification of high-strength (HS) bars shall be in accordance with revised Contract Plan sheets 870R5, 871R5, 874R4, and 875R4 of 978 (pages 2 to 5 of this Change Order).

Full compensation for all costs, including markups, all direct and indirect costs, all associated project impacts, and all overhead costs are included in the lump sum payment of CCO No. 200 and no further payment will be made as a result of this CCO.

Estimated Cost: Increase ☐ Decrease ☐

By reason of this order the time of completion will be adjusted as follows: 0 days

Submitted by

Signature	Resident Engineer: DOUG COE, Supervising Br. Eng.	Date 8-24-06

Approval Recommended by

Signature	Construction Engineer: DOUG COE, Supervising Br. Eng.	Date 8-24-06

Engineer Approval by

Signature	(Print name and title) PETER SIEGENTHALER - Chief	Date

We the undersigned contractor, have given careful consideration to the change proposed and agree, if this proposal is approved, that we will provide all equipment, furnish the materials, except as may otherwise be noted above, and perform all services necessary for the work above specified, and will accept as full payment therefor the prices shown above.

NOTE: If you, the contractor, do not sign acceptance of this order, your attention is directed to the requirements of the specifications as to proceeding with the ordered work and filing a written protest within the time therein specified.

Contractor Acceptance by

Signature	(Print name and title)	Date

CONTRACT CHANGE ORDER

Change Requested by: Engineer

CCO: 121	Suppl. No. 0	Contract No. 04 - 012024	Road 04-SF,Ala-80-13.9/14.3,0.0/1.6	FED. AID LOC.: ACIM-080-1(085)8N

To: **KIEWIT / FCI / MANSON a JV**

You are directed to make the following changes from the plans and specifications or do the following described work not included in the plans and specifications for this contract. ***NOTE: This change order is not effective until approved by the Engineer.***

Description of work to be done, estimate of quantities and prices to be paid. (Segregate between additional work at contract price, agreed price and force account.) Unless otherwise stated, rates for rental of equipment cover only such time as equipment is actually used and no allowance will be made for idle time. This last percentage shown is the net accumulated increase or decrease from the original

Adjustment of Compensation at Lump Sum:

Move the hinge expansion loops on Hinges B, C, D, and E for the 12 NPS CCSF Water, the NPS CCSF Reclaim Water, the 10 NPS CCSF Sewer with 18 NPS Casing, the 4 NPS Compressed Air, and the 2 1/2 NPS Domestic Water from the hinge minus 1 segment location to the hinge minus 2 segment for the Skyway Bridge Replacement Project, Bridge No. 340006 L/R, as shown on the revised contract plans 54R1, 58R1, 59R3, 63R2, 64R1, 65R2, 67R2, and 68R3 (sheets 2 to 9 of this Change Order).

Full compensation for all costs, including markups, all direct and indirect costs, all associated project impacts, and all overhead costs are included in the lump sum payment of CCO No. 200 and no further payment will be made as a result of this CCO.

Estimated Cost: Increase ☒ Decrease ☐

By reason of this order the time of completion will be adjusted as follows: 0 days

Submitted by

Signature	Resident Engineer: DOUG COE, Supervising Br. Eng.	Date 8-24-06

Approval Recommended by

Signature	Construction Engineer: DOUG COE, Supervising Br. Eng.	Date 8-24-06

Engineer Approval by

Signature	(Print name and title) PETER SIEGENTHALER - Chief	Date

We the undersigned contractor, have given careful consideration to the change proposed and agree, if this proposal is approved, that we will provide all equipment, furnish the materials, except as may otherwise be noted above, and perform all services necessary for the work above specified, and will accept as full payment therefor the prices shown above.

NOTE: If you, the contractor, do not sign acceptance of this order, your attention is directed to the requirements of the specifications as to proceeding with the ordered work and filing a written protest within the time therein specified.

Contractor Acceptance by

Signature	(Print name and title)	Date

CONTRACT CHANGE ORDER

Change Requested by: Engineer

CCO: 127	Suppl. No. 2	Contract No. 04 - 012024	Road 04-SF,Ala-80-13.9/14.3,0.0/1.6	FED. AID LOC.: ACIM-080-1(085)8N

To: **KIEWIT / FCI / MANSON a JV**

You are directed to make the following changes from the plans and specifications or do the following described work not included in the plans and specifications for this contract. ***NOTE: This change order is not effective until approved by the Engineer.***

Description of work to be done, estimate of quantities and prices to be paid. (Segregate between additional work at contract price, agreed price and force account.) Unless otherwise stated, rates for rental of equipment cover only such time as equipment is actually used and no allowance will be made for idle time. This last percentage shown is the net accumulated increase or decrease from the original

Adjustment of Compensation at Lump Sum:

This change order provides full and final payment for all extended labor, equipment, and escalation costs as a result of disruptions associated with the construction of precast hinges E16E-4E (Hinge EE) and E15E-6W (Hinge DE). This delay resulted in an agreed 72 working day project extension (CCO 127 S0 & S1), which extended contract completion from August 15, 2006 (WD 363), to November 29, 2006 (WD 435), exclusive of future weather days.

This Change Order resolves the Contractor's protest to CCO 127 S0 and 127 S1 as outlined in KFM Letter No. 829 dated June 7, 2004.

Full compensation, including all markups, all direct and indirect costs, all overhead costs not covered in Bid Item 7 (Time Related Overhead), and all associated project impacts is included in the lump sum payment of CCO 200 and no further payment will be made as a result of this CCO.

Estimated Cost: Increase ☐ Decrease ☐

By reason of this order the time of completion will be adjusted as follows: 0 days

Submitted by

Signature	Resident Engineer: DOUG COE, Supervising Br. Eng.	Date 8-24-06

Approval Recommended by

Signature	Construction Engineer: DOUG COE, Supervising Br. Eng.	Date 8-24-06

Engineer Approval by

Signature	(Print name and title) PETER SIEGENTHALER - Chief	Date

We the undersigned contractor, have given careful consideration to the change proposed and agree, if this proposal is approved, that we will provide all equipment, furnish the materials, except as may otherwise be noted above, and perform all services necessary for the work above specified, and will accept as full payment therefor the prices shown above.

NOTE: If you, the contractor, do not sign acceptance of this order, your attention is directed to the requirements of the specifications as to proceeding with the ordered work and filing a written protest within the time therein specified.

Contractor Acceptance by

Signature	(Print name and title)	Date

CONTRACT CHANGE ORDER

Change Requested by: Engineer

CCO 128	Suppl. No. 0	Contract No. 04 - 012024	Road 04-SF,Ala-80-13.9/14.3,0.0/1.6	FED. AID LOC.: ACIM-080-1(085)8N

To: **KIEWIT / FCI / MANSON a JV**

You are directed to make the following changes from the plans and specifications or do the following described work not included in the plans and specifications for this contract. ***NOTE: This change order is not effective until approved by the Engineer.***

Description of work to be done, estimate of quantities and prices to be paid. (Segregate between additional work at contract price, agreed price and force account.) Unless otherwise stated, rates for rental of equipment cover only such time as equipment is actually used and no allowance will be made for idle time. This last percentage shown is the net accumulated increase or decrease from the original quantity in the Engineer's Estimate.

Adjustment of Compensation at Lump Sum:

Furnishing and installing bike path railings per revised contract plan sheets 867R4, 868R4, 869R4, 891R4, 892R3, 893R4 894R4, 896AR3, and 896R2 (Pages 2 to 10 of this Change Order).

Full compensation for all costs, including markups, all direct and indirect costs, all associated projects impacts, and all overhead costs are included in the lump sum payment under Contract Change Order No. 200. No further payment will be made as a result of this Change Order.

Estimated Cost: Increase ☐ **Decrease** ☐

By reason of this order the time of completion will be adjusted as follows: 0 days

Submitted by

Signature	Resident Engineer: DOUG COE, Supervising Br. Eng.	Date 8-24-06

Approval Recommended by

Signature	Construction Engineer: PETER SIEGENTHALER	Date 8-24-06

Engineer Approval by

Signature	(Print name and title) PETER SIEGENTHALER - Chief	Date

We the undersigned contractor, have given careful consideration to the change proposed and agree, if this proposal is approved, that we will provide all equipment, furnish the materials, except as may otherwise be noted above, and perform all services necessary for the work above specified, and will accept as full payment therefor the prices shown above.

NOTE: If you, the contractor, do not sign acceptance of this order, your attention is directed to the requirements of the specifications as to proceeding with the ordered work and filing a written protest within the time therein specified.

Contractor Acceptance by

Signature	(Print name and title)	Date

CONTRACT CHANGE ORDER

Change Requested by: Engineer

CCO: 135	Suppl. No. 0	Contract No. 04 - 012024	Road 04-SF,Ala-80-13.9/14.3,0.0/1.6	FED. AID LOC.: ACIM-080-1(085)8N

To: KIEWIT / FCI / MANSON a JV

You are directed to make the following changes from the plans and specifications or do the following described work not included in the plans and specifications for this contract. ***NOTE: This change order is not effective until approved by the Engineer.***

Description of work to be done, estimate of quantities and prices to be paid. (Segregate between additional work at contract price, agreed price and force account.) Unless otherwise stated, rates for rental of equipment cover only such time as equipment is actually used and no allowance will be made for idle time. This last percentage shown is the net accumulated increase or decrease from the original quantity in the Engineer's Estimate.

Modify Section 10-1.37, "Reinforcement" of the Special Provisions, for ultimate butt splices by:

1. Deleting the requirements that production tests be performed "in the presence of either the Engineer or the Engineer's authorized representative," and

2. Deleting the requirements that "The Engineer or the Engineer's authorized representative will be at the independent qualified testing laboratory within a maximum of 5 working days after receiving written notification that the samples are at the laboratory and ready for testing. Should the Engineer or the Engineer's authorized representative fail to be at the laboratory within this time allowance, and if, in the opinion of the Engineer, the Contractor's controlling operation is delayed or interfered with by reason of this action, the delay will be considered a right of way delay in conformance with the provisions in Section 8-1.09, 'Right of Way Delays,' of the Standard Specifications," and

3. Including the requirements that, "At least one week before testing, the Contractor shall notify the Engineer in writing of the date when and the location where the testing of the samples willl be performed."

Adjustment of Compensation at Lump Sum:

There shall be no cost or credit to the State as a result of this change order.

Adjustment of Compensation at Lump Sum $0.00

Estimated Cost: Increase ☐ Decrease ☐ **$0.00**

By reason of this order the time of completion will be adjusted as follows: 0 days

Submitted by

Signature	Resident Engineer: DOUG COE, Supervising Br. Eng.	Date 3-23-05

Approval Recommended by

Signature	Construction Engineer: DOUG COE, Supervising Br. Eng.	Date 3-23-05

Engineer Approval by

Signature David Sibley	(Print name and title) For PETER SIEGENTHALER - Chief	Date 3-25-05

We the undersigned contractor, have given careful consideration to the change proposed and agree, if this proposal is approved, that we will provide all equipment, furnish the materials, except as may otherwise be noted above, and perform all services necessary for the work above specified, and will accept as full payment therefor the prices shown above.

NOTE: If you, the contractor, do not sign acceptance of this order, your attention is directed to the requirements of the specifications as to proceeding with the ordered work and filing a written protest within the time therein specified.

Contractor Acceptance by

Signature	(Print name and title)	Date

CONTRACT CHANGE ORDER

Change Requested by: Engineer

CCO: 138	Suppl. No. 0	Contract No. 04 - 012024	Road 04-SF,Ala-80-13.9/14.3,0.0/1.6	FED. AID LOC.: ACIM-080-1(085)8N

To: **KIEWIT / FCI / MANSON a JV**

You are directed to make the following changes from the plans and specifications or do the following described work not included in the plans and specifications for this contract. ***NOTE: This change order is not effective until approved by the Engineer.***

Description of work to be done, estimate of quantities and prices to be paid. (Segregate between additional work at contract price, agreed price and force account.) Unless otherwise stated, rates for rental of equipment cover only such time as equipment is actually used and no allowance will be made for idle time. This last percentage shown is the net accumulated increase or decrease from the original

Extra Work at Lump Sum:

Modify as necessary, eleven (11) pre-cast segment storage foundations designed for the smaller (lighter) segments to support the larger (heavier) pre-cast segments and provide compensation for all double handling of segments at the Stockton Pre-cast Yard.

The Contractor shall accept any and all risk associated with the design and modification of the storage foundations.

Full and complete compensation for providing all labor, material, equipment, tools and incidentals, including markups, for a direct and indirect costs, and all associated project impacts for this work are included in the lump sum payment of CCO No 200 and no further payment will be made as a result of this CCO.

Estimated Cost: Increase ☐ Decrease ☐

By reason of this order the time of completion will be adjusted as follows: 0 days

Submitted by

Signature	Resident Engineer: DOUG COE, Supervising Br. Eng.	Date 8-24-06

Approval Recommended by

Signature	Construction Engineer: DOUG COE, Supervising Br. Eng.	Date 8-24-06

Engineer Approval by

Signature	(Print name and title) DOUG COE, Supervising Br. Eng. - Construction Engin	Date

We the undersigned contractor, have given careful consideration to the change proposed and agree, if this proposal is approved, that we will provide all equipment, furnish the materials, except as may otherwise be noted above, and perform all services necessary for the work above specified, and will accept as full payment therefor the prices shown above.

NOTE: If you, the contractor, do not sign acceptance of this order, your attention is directed to the requirements of the specifications as to proceeding with the ordered work and filing a written protest within the time therein specified.

Contractor Acceptance by

Signature	(Print name and title)	Date

CONTRACT CHANGE ORDER

Change Requested by: Engineer

CCO: 143	Suppl. No. 0	Contract No. 04 - 012024	Road 04-SF,Ala-80-13.9/14.3,0.0/1.6	FED. AID LOC.: ACIM-080-1(085)8N

To: **KIEWIT / FCI / MANSON a JV**

You are directed to make the following changes from the plans and specifications or do the following described work not included in the plans and specifications for this contract. ***NOTE: This change order is not effective until approved by the Engineer.***

Description of work to be done, estimate of quantities and prices to be paid. (Segregate between additional work at contract price, agreed price and force account.) Unless otherwise stated, rates for rental of equipment cover only such time as equipment is actually used and no allowance will be made for idle time. This last percentage shown is the net accumulated increase or decrease from the original

Adjustment of Compensation at Lump Sum:

Install temporary power to energize the electrical equipment for the Skyway Project by utilizing the existing KFM temporary power supply for the SFOBB East Span Skyway Bridge Replacement Project, Bridge Nos. 34-0006L/R as shown and specified on plan sheets 2 to 15 of this Change Order. The use of generators is not required and KFM will be released from maintaining the power supply after contract acceptance.

Full compensation for all costs, including markups, all direct and indirect costs, all associated projects impacts, and all overhead costs are included in the lump sum payment under Contract Change Order No. 200. No further payment will be made as a result of this Change Order.

Estimated Cost: Increase ☐ Decrease ☐

By reason of this order the time of completion will be adjusted as follows: 0 days

Submitted by

Signature	Resident Engineer: DOUG COE, Supervising Br. Eng.	Date 8-24-06

Approval Recommended by

Signature	Construction Engineer: DOUG COE, Supervising Br. Eng.	Date 8-24-06

Engineer Approval by

Signature	(Print name and title) PETER SIEGENTHALER - Chief	Date

We the undersigned contractor, have given careful consideration to the change proposed and agree, if this proposal is approved, that we will provide all equipment, furnish the materials, except as may otherwise be noted above, and perform all services necessary for the work above specified, and will accept as full payment therefor the prices shown above.

NOTE: If you, the contractor, do not sign acceptance of this order, your attention is directed to the requirements of the specifications as to proceeding with the ordered work and filing a written protest within the time therein specified.

Contractor Acceptance by

Signature	(Print name and title)	Date

CONTRACT CHANGE ORDER

Change Requested by: Engineer

CCO: 151	Suppl. No. 0	Contract No. 04 - 012024	Road 04-SF,Ala-80-13.9/14.3,0.0/1.6	FED. AID LOC.: ACIM-080-1(085)8N

To: **KIEWIT / FCI / MANSON a JV**

You are directed to make the following changes from the plans and specifications or do the following described work not included in the plans and specifications for this contract. ***NOTE: This change order is not effective until approved by the Engineer.***

Description of work to be done, estimate of quantities and prices to be paid. (Segregate between additional work at contract price, agreed price and force account.) Unless otherwise stated, rates for rental of equipment cover only such time as equipment is actually used and no allowance will be made for idle time. This last percentage shown is the net accumulated increase or decrease from the original

Adjustment of Compensation at Lump Sum:

In the Special Provisions, Section 10-1.44A, "Cormorant Nesting Habitat," sub-section "Materials," ;

revise the second sentence as follows:
"Pipe shall be fabricated in conformance with the requirements of ASTM Designation: A312.",

revise the third sentence as follows:
"Pipe fittings shall be fabricated in conformance with the requirements of ASTM Designation: A312",

and revise the sixth sentence as follows:
" Welded wire mesh, fabricated from 10 mm diameter deformed stainless steel Type 316 L rebar, and pipe straps shall be of commercial quality."

Supply and install 13mm diameter stainless steel U-bolts with a plate at 600mm on center, approximately halfway between the already specified stainless steel pipe straps, to secure the wire mesh to the pipe frames.

Full compensation for all costs, including markups, all direct and indirect costs, all associated projects impacts, and all overhead costs are included in the lump sum payment under Contract Change Order No. 200. No further payment will be made as a result of this Change Order.

Estimated Cost: Increase ☐ Decrease ☐

By reason of this order the time of completion will be adjusted as follows: 0 days

Submitted by

Signature	Resident Engineer: DOUG COE, Supervising Br. Eng.	Date 8-24-06

Approval Recommended by

Signature	Construction Engineer: DOUG COE, Supervising Br. Eng.	Date 8-24-06

Engineer Approval by

Signature	(Print name and title) PETER SIEGENTHALER - Chief	Date

We the undersigned contractor, have given careful consideration to the change proposed and agree, if this proposal is approved, that we will provide all equipment, furnish the materials, except as may otherwise be noted above, and perform all services necessary for the work above specified, and will accept as full payment therefor the prices shown above.

NOTE: If you, the contractor, do not sign acceptance of this order, your attention is directed to the requirements of the specifications as to proceeding with the ordered work and filing a written protest within the time therein specified.

Contractor Acceptance by

Signature	(Print name and title)	Date

CONTRACT CHANGE ORDER

Change Requested by: Engineer

CCO: 152	Suppl. No. 0	Contract No. 04 - 012024	Road 04-SF,Ala-80-13.9/14.3,0.0/1.6	FED. AID LOC.: ACIM-080-1(085)8N

To: **KIEWIT / FCI / MANSON a JV**

You are directed to make the following changes from the plans and specifications or do the following described work not included in the plans and specifications for this contract. ***NOTE: This change order is not effective until approved by the Engineer.***

Description of work to be done, estimate of quantities and prices to be paid. (Segregate between additional work at contract price, agreed price and force account.) Unless otherwise stated, rates for rental of equipment cover only such time as equipment is actually used and no allowance will be made for idle time. This last percentage shown is the net accumulated increase or decrease from the original

Adjustment of Compensation at Lump Sum:

Warp Precast Concrete Panels for Pier Tables No. 5, 13, 14, 15, and 16 as shown on the approved pier table composite drawings (CCO No. 99).

Furnish additional labor, supervision, equipment, material, supplies, other resources as required, and provide compensatio for the escalation costs caused by the delays and disruptions to Bid Item No. 41 "Furnish Precast Concrete Panel (Pier Table, Lightweight)" as a result of:

1. the late completion of pier table composite drawings as required by CCO No. 99, and
2. the procurement of new service platform embeds required as part of the CCO No. 83 service platform redesign.

Precast Concrete Panel Types I and III may be used for the Pier Table Precast Concrete Panels in place of Type II or Type IIA, shown on Contract Plan Sheets 763 through 770 of 978 of the SFOBB East Span Skyway Bridge Replacement Project Bridge Nos. 34-0006L/R.

Full compensation for all costs, including markups, all direct and indirect costs, all associated projects impacts, and all overhead costs are included in the lump sum payment under Contract Change Order No. 200. No further payment will be made as a result of this Change Order.

Estimated Cost: Increase ☐ Decrease ☐

By reason of this order the time of completion will be adjusted as follows: 0 days

Submitted by

Signature	Resident Engineer: DOUG COE, Supervising Br. Eng.	Date 8-24-06

Approval Recommended by

Signature	Construction Engineer: DOUG COE, Supervising Br. Eng.	Date 8-24-06

Engineer Approval by

Signature	(Print name and title) PETER SIEGENTHALER - Chief	Date

We the undersigned contractor, have given careful consideration to the change proposed and agree, if this proposal is approved, that we will provide all equipment, furnish the materials, except as may otherwise be noted above, and perform all services necessary for the work above specified, and will accept as full payment therefor the prices shown above.

NOTE: If you, the contractor, do not sign acceptance of this order, your attention is directed to the requirements of the specifications as to proceeding with the ordered work and filing a written protest within the time therein specified.

Contractor Acceptance by

Signature	(Print name and title)	Date

CONTRACT CHANGE ORDER

Change Requested by: Engineer

CCO: 153	Suppl. No. 0	Contract No. 04 - 012024	Road 04-SF,Ala-80-13.9/14.3,0.0/1.6	FED. AID LOC.: ACIM-080-1(085)8N

To: **KIEWIT / FCI / MANSON a JV**

You are directed to make the following changes from the plans and specifications or do the following described work not included in the plans and specifications for this contract. ***NOTE: This change order is not effective until approved by the Engineer.***

Description of work to be done, estimate of quantities and prices to be paid. (Segregate between additional work at contract price, agreed price and force account.) Unless otherwise stated, rates for rental of equipment cover only such time as equipment is actually used and no allowance will be made for idle time. This last percentage shown is the net accumulated increase or decrease from the original

Extra Work at Lump Sum:

Furnish all labor, supervision, equipment, material, supplies, and other resources as required to Warp two hundred and fourteen (214) of the precast lightweight concrete panels for the precast segments as indicated on the precast segment composite drawings for the East Span Skyway, Bridge No. 34-0006L/R.

Full compensation for all costs, including markups, all direct and indirect costs, all associated project impacts, all overhead costs, and all risks associated with this change is included in the lump sum payment of CCO No. 200 and no further payment will be made as a result of this CCO..

Estimated Cost: Increase ☐ Decrease ☐

By reason of this order the time of completion will be adjusted as follows: 0 days

Submitted by

Signature	Resident Engineer: DOUG COE, Supervising Br. Eng.	Date 8-24-06

Approval Recommended by

Signature	Construction Engineer: DOUG COE, Supervising Br. Eng.	Date 8-24-06

Engineer Approval by

Signature	(Print name and title) PETER SIEGENTHALER - Chief	Date

We the undersigned contractor, have given careful consideration to the change proposed and agree, if this proposal is approved, that we will provide all equipment, furnish the materials, except as may otherwise be noted above, and perform all services necessary for the work above specified, and will accept as full payment therefor the prices shown above.

NOTE: If you, the contractor, do not sign acceptance of this order, your attention is directed to the requirements of the specifications as to proceeding with the ordered work and filing a written protest within the time therein specified.

Contractor Acceptance by

Signature	(Print name and title)	Date

CONTRACT CHANGE ORDER

Change Requested by: Engineer

CCO: 154	Suppl. No. 1	Contract No. 04 - 012024	Road 04-SF,Ala-80-13.9/14.3,0.0/1.6	FED. AID LOC.: ACIM-080-1(085)8N

To: **KIEWIT / FCI / MANSON a JV**

You are directed to make the following changes from the plans and specifications or do the following described work not included in the plans and specifications for this contract. ***NOTE: This change order is not effective until approved by the Engineer.***

Description of work to be done, estimate of quantities and prices to be paid. (Segregate between additional work at contract price, agreed price and force account.) Unless otherwise stated, rates for rental of equipment cover only such time as equipment is actually used and no allowance will be made for idle time. This last percentage shown is the net accumulated increase or decrease from the original

Adjustment of Compensation at Lump Sum:

This change order provides full and final payment for all extended labor, equipment, and escalation costs as a result of disruptions associated with the construction of the following five (5) Cantilevers: E5E, E6E, E7E, E8E, and E9E. These disruptions resulted in delays which resulted in an agreed 11 working day project extension (CCO 154 S0), extending contract completion from December 29, 2006 (WD 455) to January 17, 2007 (WD 467) exclusive of future weather days.

Combined with Change Order No. 127 Supplement 2, this Change Order resolves the Contractor's Time Impact Analyses (TIA) Numbers 10, 11, 12, 13R0, 13R1, 13R2, 13R3, 13R4, 14, 15, and 17.

Full compensation, including all markups, all direct and indirect costs, all overhead costs not covered in Bid Item 7 (Time Related Overhead), and all associated project impacts is included in the lump sum payment of CCO 200 and no further payment will be made as a result of this CCO.

Estimated Cost: Increase ☐ Decrease ☐

By reason of this order the time of completion will be adjusted as follows: 0 days

Submitted by

Signature	Resident Engineer: DOUG COE, Supervising Br. Eng.	Date 8-24-06

Approval Recommended by

Signature	Construction Engineer: DOUG COE, Supervising Br. Eng.	Date 8-24-06

Engineer Approval by

Signature	(Print name and title) PETER SIEGENTHALER - Chief	Date

We the undersigned contractor, have given careful consideration to the change proposed and agree, if this proposal is approved, that we will provide all equipment, furnish the materials, except as may otherwise be noted above, and perform all services necessary for the work above specified, and will accept as full payment therefor the prices shown above.

NOTE: If you, the contractor, do not sign acceptance of this order, your attention is directed to the requirements of the specifications as to proceeding with the ordered work and filing a written protest within the time therein specified.

Contractor Acceptance by

Signature	(Print name and title)	Date

CONTRACT CHANGE ORDER

Change Requested by: Engineer

CCO: 156	Suppl. No. 1	Contract No. 04 - 012024	Road 04-SF,Ala-80-13.9/14.3,0.0/1.6	FED. AID LOC.: ACIM-080-1(085)8N

To: **KIEWIT / FCI / MANSON a JV**

You are directed to make the following changes from the plans and specifications or do the following described work not included in the plans and specifications for this contract. ***NOTE: This change order is not effective until approved by the Engineer.***

Description of work to be done, estimate of quantities and prices to be paid. (Segregate between additional work at contract price, agreed price and force account.) Unless otherwise stated, rates for rental of equipment cover only such time as equipment is actually used and no allowance will be made for idle time. This last percentage shown is the net accumulated increase or decrease from the original

Adjustment of Compensation at Lump Sum:

Fabricate the Modular Joint Seal Assemblies joint BW, BE, CW, CE, DW, and DE as shown on revised detail sheets 1 through 27 (pages 3 through 29 of this change order) and material sheet (page 30 of this change order). For the joint seal assemblies at hinge location DE, DW, and BE waive section "B" of paragraph 9, of subsection "Proof Testing" of the Special Provisions Section 10-1.33 "Modular Joint Seal Assemblies". Perform additional Proof Testing to comply with "Fit for Purpose" approval criteria as specified by the Engineer and described below for the Modular joint seal assemblies at hinge locations DE, DW, and BE. No further dynamic testing of the prototype assembly will be required as a result of the added proof testing procedures and parameters.

As specified by the Engineer, perform revised proof testing for 7- cell modular joint seal assembly DE and DW as follows:
Test 1, run proof test criteria 2 of the special provisions
Test 2, run proof test criteria 3 of the special provisions
Test 3, run proof test criteria 1 of the special provisions
Test 4, start joint at mid-opening position (use 50 mm spacers) - run test of 5.5 cycles of +/- 100 mm with speed of 5mm/sec
Test 5, start joint at mid-opening position (use 25 mm spacers) - run test of 5.5 cycles of +/- 100 mm with speed of 5mm/sec
Test 6, start joint at mid-opening position (use 50 mm spacers) - run test of 25.5 cycles of +/- 100 mm with speed of 25mm/sec
Test 7, start joint at mid-opening position (use 50 mm spacers) - run test of +/- 4.5 cycles of +/- 165 mm with speed of 50mm/sec

As specified by the Engineer, perform revised proof testing for 13 - cell modular joint seal assembly BE as follows:
Test 1, run proof test criteria 2 of the special provisions
Test 2, run proof test criteria 3 of the special provisions
Test 3, run proof test criteria 1 of the special provisions
Test 4, start joint at mid-opening position (use 50 mm spacers) - run test of 5.5 cycles of +/- 200 mm with speed of 5mm/sec
Test 5, start joint at mid-opening position (use 25 mm spacers) - run test of 5.5 cycles of +/- 200 mm with speed of 5mm/sec
Test 6, start joint at mid-opening position (use 50 mm spacers) - run test of 5.5 cycles of +/- 610 mm with speed of 25mm/sec
Test 7, start joint at mid-opening position (use 50 mm spacers) - run test of 18.5 cycles of +/- 200 mm with speed of 25mm/sec
Test 8, start joint at mid-opening position (use 50 mm spacers) - run test of +/- 2.5 cycles of +/- 200 mm with speed of 50mm/sec

Full compensation for all costs, including markups, all direct and indirect costs, all associated project impacts, and all overhead costs are included in the lump sum payment of CCO No. 200 and no further payment will be made as a result of this CCO.

CONTRACT CHANGE ORDER

Change Requested by: Engineer

CCO: 156	Suppl. No. 1	Contract No. 04 - 012024	Road 04-SF,Ala-80-13.9/14.3,0.0/1.6	FED. AID LOC.: ACIM-080-1(085)8N

Estimated Cost: Increase ☐ Decrease ☐

By reason of this order the time of completion will be adjusted as follows: 0 days

Submitted by

Signature	Resident Engineer: DOUG COE, Supervising Br. Eng.	Date 8-24-06

Approval Recommended by

Signature	Construction Engineer: DOUG COE, Supervising Br. Eng.	Date 8-24-06

Engineer Approval by

Signature	(Print name and title) PETER SIEGENTHALER - Chief	Date

We the undersigned contractor, have given careful consideration to the change proposed and agree, if this proposal is approved, that we will provide all equipment, furnish the materials, except as may otherwise be noted above, and perform all services necessary for the work above specified, and will accept as full payment therefor the prices shown above.

NOTE: If you, the contractor, do not sign acceptance of this order, your attention is directed to the requirements of the specifications as to proceeding with the ordered work and filing a written protest within the time therein specified.

Contractor Acceptance by

Signature	(Print name and title)	Date

STATE OF CALIFORNIA - DEPARTMENT OF TRANSPORTATION

CONTRACT CHANGE ORDER

Change Requested by: Engineer

CCO: 167	Suppl. No. 0	Contract No. 04 - 012024	Road 04-SF,Ala-80-13.9/14.3,0.0/1.6	FED. AID LOC.: ACIM-080-1(085)8N

To: **KIEWIT / FCI / MANSON a JV**

You are directed to make the following changes from the plans and specifications or do the following described work not included in the plans and specifications for this contract. ***NOTE: This change order is not effective until approved by the Engineer.***

Description of work to be done, estimate of quantities and prices to be paid. (Segregote between additional work at contract price, agreed price and force account.) Unless otherwise stated, rates for rental of equipment cover only such time as equipment is actually used and no allowance will be made for idle time. This last percentage shown is the net accumulated increase or decrease from the original

Extra Work at Lump Sum:

Perform the following work as authorized by the Engineer, provide Labor, Equipment, and Material needed for removal anc subsequent repair of the three Pile Head Connection Plates in accordance with the FHWA investigation of the alleged defective welding of the SFOBB East Span Skyway, Bridge Nos. 34-0006L/R.

Full compensation for all costs, including markups, all direct and indirect costs, all associated project impacts, and all overhead costs are included in the lump sum payment of CCO No. 200 and no further payment will be made as a result of this CCO.

Estimated Cost: **Increase** ☐ **Decrease** ☐

By reason of this order the time of completion will be adjusted as follows: 0 days

Submitted by

Signature	Resident Engineer: DOUG COE, Supervising Br. Eng.	Date 8-24-00

Approval Recommended by

Signature	Construction Engineer: DOUG COE, Supervising Br. Eng.	Date 8-24-00

Engineer Approval by

Signature	(Print name and title) PETER SIEGENTHALER - Chief	Date

We the undersigned contractor, have given careful consideration to the change proposed and agree, if this proposal is approved, that we will provide all equipment, furnish the materials, except as may otherwise be noted above, and perform all services necessary for the work above specified, and will accept as full payment therefor the prices shown above.

NOTE: If you, the contractor, do not sign acceptance of this order, your attention is directed to the requirements of the specifications as to proceeding with the ordered work and filing a written protest within the time therein specified.

Contractor Acceptance by

Signature	(Print name and title)	Date

CONTRACT CHANGE ORDER

Change Requested by: Engineer

CCO: 168	Suppl. No. 0	Contract No. 04 - 012024	Road 04-SF,Ala-80-13.9/14.3,0.0/1.6	FED. AID LOC.: ACIM-080-1(085)8N

To: **KIEWIT / FCI / MANSON a JV**

You are directed to make the following changes from the plans and specifications or do the following described work not included in the plans and specifications for this contract. ***NOTE: This change order is not effective until approved by the Engineer.***

Description of work to be done, estimate of quantities and prices to be paid. (Segregate between additional work at contract price, agreed price and force account.) Unless otherwise stated, rates for rental of equipment cover only such time as equipment is actually used and no allowance will be made for idle time. This last percentage shown is the net accumulated increase or decrease from the original

Adjustment of Compensation at Lump Sum:

For the costs incurred from the delays caused by the Engineer ordered suspension of all the foundation concrete pours due to the allegations of defective field welding in the foundations of the SFOBB East Span Skyway, Bridge Nos. 34-0006L/R from April 6, 2005 to May 5, 2005.

Full compensation for all costs, including markups, all direct and indirect costs, all associated project impacts, and all overhead costs are included in the lump sum payment of CCO No. 200 and no further payment will be made as a result of this CCO.

Estimated Cost: **Increase** ☐ **Decrease** ☐

By reason of this order the time of completion will be adjusted as follows: 0 days

Submitted by

Signature	Resident Engineer: DOUG COE, Supervising Br. Eng.	Date 8-24-06

Approval Recommended by

Signature	Construction Engineer: DOUG COE, Supervising Br. Eng.	Date 8-24-06

Engineer Approval by

Signature	(Print name and title) PETER SIEGENTHALER - Chief	Date

We the undersigned contractor, have given careful consideration to the change proposed and agree, if this proposal is approved, that we will provide all equipment, furnish the materials, except as may otherwise be noted above, and perform all services necessary for the work above specified, and will accept as full payment therefor the prices shown above.

NOTE: If you, the contractor, do not sign acceptance of this order, your attention is directed to the requirements of the specifications as to proceeding with the ordered work and filing a written protest within the time therein specified.

Contractor Acceptance by

Signature	(Print name and title)	Date

CONTRACT CHANGE ORDER

Change Requested by: Engineer

CCO: 169	Suppl. No. 0	Contract No. 04 - 012024	Road 04-SF,Ala-80-13.9/14.3,0.0/1.6	FED. AID LOC.: ACIM-080-1(085)8N

To: **KIEWIT / FCI / MANSON a JV**

You are directed to make the following changes from the plans and specifications or do the following described work not included in the plans and specifications for this contract. ***NOTE: This change order is not effective until approved by the Engineer.***

Description of work to be done, estimate of quantities and prices to be paid. (Segregate between additional work at contract price, agreed price and force account.) Unless otherwise stated, rates for rental of equipment cover only such time as equipment is actually used and no allowance will be made for idle time. This last percentage shown is the net accumulated increase or decrease from the original

Adjustment of Compensation at Lump Sum:

As authorized by the Engineer, modify the existing barrier reinforcing bars to accommodate lighting and communication pul boxes for the SFOBB East Span Skyway Bridge Replacement Project, Bridge Nos. 34-0006L/R, as shown on page 2 of 3 and page 3 of 3 of this Change Order.

Full compensation for all costs, including markups, all direct and indirect costs, all associated project impacts, and all overhead cost is included in the lump sum payment of CCO No. 200 and no further payment will be made as a result of this CCO.

Estimated Cost: Increase ☐ Decrease ☐

By reason of this order the time of completion will be adjusted as follows: 0 days

Submitted by

Signature	Resident Engineer: DOUG COE, Supervising Br. Eng.	Date 8-24-06

Approval Recommended by

Signature	Construction Engineer: DOUG COE, Supervising Br. Eng.	Date 8-24-06

Engineer Approval by

Signature	(Print name and title) PETER SIEGENTHALER - Chief	Date

We the undersigned contractor, have given careful consideration to the change proposed and agree, if this proposal is approved, that we will provide all equipment, furnish the materials, except as may otherwise be noted above, and perform all services necessary for the work above specified, and will accept as full payment therefor the prices shown above.

NOTE: If you, the contractor, do not sign acceptance of this order, your attention is directed to the requirements of the specifications as to proceeding with the ordered work and filing a written protest within the time therein specified.

Contractor Acceptance by

Signature	(Print name and title)	Date

CONTRACT CHANGE ORDER

Change Requested by: Engineer

CCO: 170	Suppl. No. 0	Contract No. 04 - 012024	Road 04-SF,Ala-80-13.9/14.3,0.0/1.6	FED. AID LOC.: ACIM-080-1(085)8N

To: **KIEWIT / FCI / MANSON a JV**

You are directed to make the following changes from the plans and specifications or do the following described work not included in the plans and specifications for this contract. ***NOTE: This change order is not effective until approved by the Engineer.***

Description of work to be done, estimate of quantities and prices to be paid. (Segregate between additional work at contract price, agreed price and force account.) Unless otherwise stated, rates for rental of equipment cover only such time as equipment is actually used and no allowance will be made for idle time. This last percentage shown is the net accumulated increase or decrease from the original

Adjustment of Compensation at Lump Sum:

Revise the contract electrical work for items 101 Traffic Operation System, 102 Camera with Housing, 103 Pan and Tilt Unit, 105 Transmitter Duplex Data, 107 Microwave Vehicle Detection Sensor System, 108 Fiber Optic Data Modem, 109 Fiber Optic Cable (72-Fibers), 110 Fiber Optic Cable (12-Fibers), 111 Fiber Optic Splice Closure and 119 Supervisory Control and Data Acquisition Terminal unit System as follows:

1. Delete the installation of MVDS and their harnesses.
2. Delete Cameras and cable/harnesses.
3. Delete CMS panels and harnesses (State Furnished).
4. Delete Fiber Optic cable.
5. Delete 15 kV cable.
6. Delete PLCs from the RTUs.
7. Test installed components.

Revise the contract electrical work in accordance with the revised contract plan sheet numbers 137R2, 138R2, 139R2, 140R2, 141R2, 142R2, 143R2, 145R2, 146R2, 147R2, 148R2, 149R2, 150R2, 151R2, 152R2, 155R2, 156R2, 157R2, 158R2, 159R2, 160R2, 161R2, 162R2, 163R2, 165R2, 166R2, 167R2, 168R2, 169R2, 170R2, 171R2, 172R2, 173R2, 174R2, 176R1, 177R2, 179R2, 180R2, 181R1,183R2, 185R2, 186R2, 191R3, 192R2, 193R2, 194R1, 196R1, 197R2, 199R2, 200R2, 201R1, 203R2, 205R2, 206R2, 220R1, 224R3, 225R3, 226R1, 227R1, 233R21, 264R1, 268R1, 317R1, 332R1, 351R2, 356R1, 360R1, 365R1, 366R2, 367R2, 368R2, 369R1, 370R2, 371R2, 372R2, 373R1, 374R1, 375R1, 376R2, 379R2, 380R2, 381R2, 384R2, 385R2, 386R1, 388R4, 389R4, 393R1, 394R1, 395R1, 396R1, 397R1, 398R1, 399R1, 400R1, 401R1, 402R1, and 403R1 of 978 (98 sheets, sheets 3 through 100 of this change order), and revised Supplement to the Special Provisions, EE-324D Westbound Circuit Schedule (sheet 101 of this change order, 21 pages), EE325F Westbound Conduit and Tray Schedule (sheet 102 of this change order, 36 pages), EE327D Eastbound Circuit Schedule (sheet 103 of this change order, 20 pages), EE328F Eastbound Conduit Tray Schedule (sheet 104 of this change order, 83 pages), for the SFOBB East Span Skyway, Bridge No. 34-0006L/R.

Full compensation for all costs, including markups, all direct and indirect costs, all associated projects impacts, and all overhead costs are included in the lump sum payment under Contract Change Order No. 200. No further payment will be made as a result of this Change Order.

CONTRACT CHANGE ORDER

Change Requested by: Engineer

CCO: 170	Suppl. No. 0	Contract No. 04 - 012024	Road 04-SF,Ala-80-13.9/14.3,0.0/1.6	FED. AID LOC.: ACIM-080-1(085)8N

Estimated Cost: Increase ☐ Decrease ☐

By reason of this order the time of completion will be adjusted as follows: 0 days

Submitted by

Signature	Resident Engineer: DOUG COE, Supervising Br. Eng.	Date 8-24-06

Approval Recommended by

Signature	Construction Engineer: DOUG COE, Supervising Br. Eng.	Date 8-24-06

Engineer Approval by

Signature	(Print name and title) PETER SIEGENTHALER - Chief	Date

We the undersigned contractor, have given careful consideration to the change proposed and agree, if this proposal is approved, that we will provide all equipment, furnish the materials, except as may otherwise be noted above, and perform all services necessary for the work above specified, and will accept as full payment therefor the prices shown above.

NOTE: If you, the contractor, do not sign acceptance of this order, your attention is directed to the requirements of the specifications as to proceeding with the ordered work and filing a written protest within the time therein specified.

Contractor Acceptance by

Signature	(Print name and title)	Date

CONTRACT CHANGE ORDER

Change Requested by: Engineer

CCO: 174	Suppl. No. 0	Contract No. 04 - 012024	Road 04-SF,Ala-80-13.9/14.3,0.0/1.6	FED. AID LOC.: ACIM-080-1(085)8N

To: **KIEWIT / FCI / MANSON a JV**

You are directed to make the following changes from the plans and specifications or do the following described work not included in the plans and specifications for this contract. ***NOTE: This change order is not effective until approved by the Engineer.***

Description of work to be done, estimate of quantities and prices to be paid. (Segregate between additional work at contract price, agreed price and force account.) Unless otherwise stated, rates for rental of equipment cover only such time as equipment is actually used and no allowance will be made for idle time. This last percentage shown is the net accumulated increase or decrease from the original

Adjustment of Compensation at Lump Sum:

Section 10-1.08, "TRANSPORTATION OF THE ENGINEER," of the Special Provision shall be revised as follows: "The Contractor shall provide, operate, berth and maintain, throughout the life of the contract, one crew boat for the sole use of the Engineer, the Engineer's staff in performance of their work, and visitors when guided by the public information office staff or Engineer."

Full compensation to the Contractor, including mark ups for all direct and indirect costs, all associated project impacts, all overhead costs, and any and all risks associated with this work are included in the lump sum payment of CCO No. 200 and no further payment will be made as a result of this CCO.

Estimated Cost: Increase ☐ Decrease ☐

By reason of this order the time of completion will be adjusted as follows: 0 days

Submitted by

Signature	Resident Engineer: DOUG COE, Supervising Br. Eng.	Date 8-24-06

Approval Recommended by

Signature	Construction Engineer: DOUG COE, Supervising Br. Eng.	Date 8-24-06

Engineer Approval by

Signature	(Print name and title) PETER SIEGENTHALER - Chief	Date

We the undersigned contractor, have given careful consideration to the change proposed and agree, if this proposal is approved, that we will provide all equipment, furnish the materials, except as may otherwise be noted above, and perform all services necessary for the work above specified, and will accept as full payment therefor the prices shown above.

NOTE: If you, the contractor, do not sign acceptance of this order, your attention is directed to the requirements of the specifications as to proceeding with the ordered work and filing a written protest within the time therein specified.

Contractor Acceptance by

Signature	(Print name and title)	Date

CONTRACT CHANGE ORDER

Change Requested by: Engineer

CCO: 179	Suppl. No. 0	Contract No. 04 - 012024	Road 04-SF,Ala-80-13.9/14.3,0.0/1.6	FED. AID LOC.: ACIM-080-1(085)8N

To: **KIEWIT / FCI / MANSON a JV**

You are directed to make the following changes from the plans and specifications or do the following described work not included in the plans and specifications for this contract. ***NOTE: This change order is not effective until approved by the Engineer.***

Description of work to be done, estimate of quantities and prices to be paid. (Segregate between additional work at contract price, agreed price and force account.) Unless otherwise stated, rates for rental of equipment cover only such time as equipment is actually used and no allowance will be made for idle time. This last percentage shown is the net accumulated increase or decrease from the original

Adjustment of Compensation at Lump Sum:

As authorized by the Engineer, purchase and deliver additional plate material, 36 flat plates, each 2.4m wide by 7.1m long by 100mm thick, of HPS 70W steel needed for the fabrication of the AE and AW Hinge Pipe Beams for the SFOBB East Span Skyway, Bridge No. 34-0006L/R project to the hinge pipe beam fabricator's facility.

Full compensation for all costs, including markups, all direct and indirect costs, all associated project impacts, and all overhead costs are included in the lump sum payment of CCO No. 200 and no further payment will be made as a result of this CCO.

Estimated Cost: Increase ☐ Decrease ☐

By reason of this order the time of completion will be adjusted as follows: 0 days

Submitted by

Signature	Resident Engineer: DOUG COE, Supervising Br. Eng.	Date 8-24-06

Approval Recommended by

Signature	Construction Engineer: DOUG COE, Supervising Br. Eng.	Date 8-24-06

Engineer Approval by

Signature	(Print name and title) PETER SIEGENTHALER - Chief	Date

We the undersigned contractor, have given careful consideration to the change proposed and agree, if this proposal is approved, that we will provide all equipment, furnish the materials, except as may otherwise be noted above, and perform all services necessary for the work above specified, and will accept as full payment therefor the prices shown above.

NOTE: If you, the contractor, do not sign acceptance of this order, your attention is directed to the requirements of the specifications as to proceeding with the ordered work and filing a written protest within the time therein specified.

Contractor Acceptance by

Signature	(Print name and title)	Date

CONTRACT CHANGE ORDER

Change Requested by: Engineer

CCO: 183	Suppl. No. 0	Contract No. 04 - 012024	Road 04-SF,Ala-80-13.9/14.3,0.0/1.6	FED. AID LOC.: ACIM-080-1(085)8N

To: **KIEWIT / FCI / MANSON a JV**

You are directed to make the following changes from the plans and specifications or do the following described work not included in the plans and specifications for this contract. ***NOTE: This change order is not effective until approved by the Engineer.***

Description of work to be done, estimate of quantities and prices to be paid. (Segregate between additional work at contract price, agreed price and force account.) Unless otherwise stated, rates for rental of equipment cover only such time as equipment is actually used and no allowance will be made for idle time. This last percentage shown is the net accumulated increase or decrease from the original

Extra Work at Lump Sum:

Apply epoxy to the exposed anchor/bearing plate for the cantilever tendons at E6E/W of 6E and 6W, E10E/W of 6E and 6W and E14E/W of 4E and 4W for corrosion protection. Also, apply epoxy to the exposed anchor/bearing plate for the top span tendons at expansion joint locations (hinge segments) of the SFOBB East Span Skyway, Bridge No. 34-0006L/R Project.

Full compensation for all costs, including markups, all direct and indirect costs, all associated projects impacts, and all overhead costs are included in the lump sum payment under Contract Change Order No. 200. No further payment will be made as a result of this Change Order.

Estimated Cost: Increase ☐ Decrease ☐

By reason of this order the time of completion will be adjusted as follows: 0 days

Submitted by

Signature	Resident Engineer: DOUG COE, Supervising Br. Eng.	Date 8-24-06

Approval Recommended by

Signature	Construction Engineer: DOUG COE, Supervising Br. Eng.	Date 8-24-06

Engineer Approval by

Signature	(Print name and title) PETER SIEGENTHALER - Chief	Date

We the undersigned contractor, have given careful consideration to the change proposed and agree, if this proposal is approved, that we will provide all equipment, furnish the materials, except as may otherwise be noted above, and perform all services necessary for the work above specified, and will accept as full payment therefor the prices shown above.

NOTE: If you, the contractor, do not sign acceptance of this order, your attention is directed to the requirements of the specifications as to proceeding with the ordered work and filing a written protest within the time therein specified.

Contractor Acceptance by

Signature	(Print name and title)	Date

CONTRACT CHANGE ORDER

Change Requested by: Contractor

CCO: 184	Suppl. No. 0	Contract No. 04 - 012024	Road 04-SF,Ala-80-13.9/14.3,0.0/1.6	FED. AID LOC.: ACIM-080-1(085)8N

To: **KIEWIT / FCI / MANSON a JV**

You are directed to make the following changes from the plans and specifications or do the following described work not included in the plans and specifications for this contract. ***NOTE: This change order is not effective until approved by the Engineer.***

Description of work to be done, estimate of quantities and prices to be paid. (Segregate between additional work at contract price, agreed price and force account.) Unless otherwise stated, rates for rental of equipment cover only such time as equipment is actually used and no allowance will be made for idle time. This last percentage shown is the net accumulated increase or decrease from the original

Adjustment of Compensation at Lump Sum:

Grout the spare ducts as authorized by the Engineer per Section 10-1.26, "PRESTRESSING CONCRETE," Subsection, "CONSTRUCTION," of the Special Provision for the SFOBB East Span Skyway, Bridge No. 34-0006L/R Project.

Full compensation for all costs, including markups, all direct and indirect costs, all associated projects impacts, and all overhead costs are included in the lump sum payment under Contract Change Order No. 200. No further payment will be made as a result of this Change Order.

Estimated Cost: Increase ☐ Decrease ☐

By reason of this order the time of completion will be adjusted as follows: 0 days

Submitted by

Signature	Resident Engineer: DOUG COE, Supervising Br. Eng.	Date 8-24-06

Approval Recommended by

Signature	Construction Engineer: DOUG COE, Supervising Br. Eng.	Date 8-24-06

Engineer Approval by

Signature	(Print name and title) PETER SIEGENTHALER - Chief	Date

We the undersigned contractor, have given careful consideration to the change proposed and agree, if this proposal is approved, that we will provide all equipment, furnish the materials, except as may otherwise be noted above, and perform all services necessary for the work above specified, and will accept as full payment therefor the prices shown above.

NOTE: If you, the contractor, do not sign acceptance of this order, your attention is directed to the requirements of the specifications as to proceeding with the ordered work and filing a written protest within the time therein specified.

Contractor Acceptance by

Signature	(Print name and title)	Date

CONTRACT CHANGE ORDER

Change Requested by: Engineer

CCO: 188	Suppl. No. 0	Contract No. 04 - 012024	Road 04-SF,Ala-80-13.9/14.3,0.0/1.6	FED. AID LOC.: ACIM-080-1(085)8N

To: **KIEWIT / FCI / MANSON a JV**

You are directed to make the following changes from the plans and specifications or do the following described work not included in the plans and specifications for this contract. ***NOTE: This change order is not effective until approved by the Engineer.***

Description of work to be done, estimate of quantities and prices to be paid. (Segregate between additional work at contract price, agreed price and force account.) Unless otherwise stated, rates for rental of equipment cover only such time as equipment is actually used and no allowance will be made for idle time. This last percentage shown is the net accumulated increase or decrease from the original

Adjustment of Compensation at Lump Sum:

remove the final pay quantity designation from the Engineer's Estimate, in the Special Provisions, for Item 49 "Furnish Polyester Concrete Overlay (20 MM)" and Item 51 "Furnish Polyester Concrete Overlay (13 MM)" for the SFOBB East Spar Skyway, Bridge Nos. 34-0006L/R.

In addition, modify Section 10-1.36 "POLYESTER CONCRETE OVERLAY (20MM, 13MM)", Sub-Section "CONSTRUCTION", Paragraph 15, of the Special Provisions as follows: "The surface temperature of the area to receive polyester concrete shall be the same as specified above for the prime coat. The finishing equipment used shall strike off the polyester concrete to the grade and cross section agreed to by the Engineer. Finishing equipment shall be fitted with vibrators or other means of consolidating the polyester concrete to the required compaction."

The lump sum payment for this Contract Change Order is included in CCO No. 200 and constitutes full compensation for:

1.) all deck profile grinding and preparation of bridge deck surface, including disposal of materials, water supply and SWPPP control, any and all overtime and standby costs, escalation costs, markups, all direct and indirect costs, all associated project impacts, and all overhead costs,
2.) furnishing and placing polyester concrete overlay, including all quantity overruns, wasted or unused material, any and all overtime and standby costs, escalation costs, markups, all direct and indirect costs, all associated project impacts, and all overhead costs, and
3.) all scheduling risks of this weather sensitive material, and all impact and mitigation costs caused by concurrent delayed operations.

The agreed lump sum payment of Contract Change Order No. 200 constitutes full compensation for all known issues related to Engineer's Bid Items: 19 "Prepare Bridge Deck Surface", 49 "Furnish Polyester Concrete Overlay (20 MM)", 50 "Place Polyester Concrete Overlay (20 MM)", 51 "Furnish Polyester Concrete Overlay (13 MM)", and 52 "Place Polyester Concrete Overlay (13 MM)" and no further payment will be made as a result of this CCO.

Estimated Cost: **Increase** ☐ **Decrease** ☐

By reason of this order the time of completion will be adjusted as follows: 0 days

Submitted by

Signature	Resident Engineer: DOUG COE, Supervising Br. Eng.	Date 8-24-06

Approval Recommended by

Signature	Construction Engineer: DOUG COE, Supervising Br. Eng.	Date 8-24-06

Engineer Approval by

Signature	(Print name and title) PETER SIEGENTHALER - Chief	Date

We the undersigned contractor, have given careful consideration to the change proposed and agree, if this proposal is approved, that we will provide all equipment, furnish the materials, except as may otherwise be noted above, and perform all services necessary for the work above specified, and will accept as full payment therefor the prices shown above.

NOTE: If you, the contractor, do not sign acceptance of this order, your attention is directed to the requirements of the specifications as to proceeding with the ordered work and filing a written protest within the time therein specified.

Contractor Acceptance by

Signature	(Print name and title)	Date

CONTRACT CHANGE ORDER

Change Requested by: Engineer

CCO: 201	Suppl. No. 0	Contract No. 04 - 012024	Road 04-SF,Ala-80-13.9/14.3,0.0/1.6	FED. AID LOC.: ACIM-080-1(085)8N

To: **KIEWIT / FCI / MANSON a JV**

You are directed to make the following changes from the plans and specifications or do the following described work not included in the plans and specifications for this contract. ***NOTE: This change order is not effective until approved by the Engineer.***

Description of work to be done, estimate of quantities and prices to be paid. (Segregate between additional work at contract price, agreed price and force account.) Unless otherwise stated, rates for rental of equipment cover only such time as equipment is actually used and no allowance will be made for idle time. This last percentage shown is the net accumulated increase or decrease from the original

Transfer ownership of the North Skyway Access Trestle and the ACROW cross-over Bridge to the Department at acceptance of the SFOBB East Span Skyway Project, Contract No. 04-012024, at which point KFM will be released of all maintenance and liability of the temporary trestle and cross over bridge. Trestle purchase will include the no longer used access trestle support piles. Eliminate the preparation of the Concrete Deck Surface (Bid Item 19) from Station 82+95.000 to Station 82+43.000 on the Westbound bridge and from Station 82+66.311 to Station 82+38.614 on the Eastbound bridge, eliminate the furnishing and placing of Polyester Concrete Overlay (20 MM) (Bid Item 49 and 50) from Station 82+95.000 to Station 82+38.000 on the Westbound bridge and from Station 82+66.311 to Station 82+33.614 on the Eastbound bridge, and eliminate the Concrete Barrier (Type 732 Modified) (Bid Item 90) from Station 82+68.000 to Station 82+48.000 on the right side of the Westbound bridge, and eliminate the Luminaire support at the right side of Pier E16W of the SFOBB East Span Skyway, Bridge Nos. 34-0006L/R.

Estimate of Decrease in Contract Item at Contract Price:

Item No. 19: PREPARE CONCRETE BRIDGE DECK SURFACE
-1912.728 M2 (-1.96%) @ $4.00 /M2 = -$7,650.91 (-1.96%)

Item No. 49: FURNISH POLYESTER CONCRETE OVERLAY
-43.055 M3 (-2.21%) @ $2,000.00 /M3 = -$86,110.00 (-2.21%)

Item No. 50: PLACE POLYESTER CONCRETE OVERLAY
-2152.728 M2 (-2.21%) @ $18.00 /M2 = -$38,749.10 (-2.21%)

Item No. 90: CONCRETE BARRIER (TYPE 732 MODIFIED)
-20 M (-0.25%) @ $260.00 /M = -$5,200.00 (-0.25%)

Estimated total cost for Decrease in Contract Item.....~~($137,719.02)~~ (137,710.01) KB

Adjustment of Compensation at Lump Sum:

For the purchase of the North Skyway Access Trestle and the ACROW cross-over Bridge, the Contractor agrees to accept an agreed lump sum amount of $540,133.94. This agreed lump sum constitutes full compensation for all costs, including markups, all direct and indirect costs, all associated project impacts, and all overhead costs.

Adjustment of Compensation at Agreed Lump Sum $540,133.94

CONTRACT CHANGE ORDER

Change Requested by: Engineer

CCO: 201	Suppl. No. 0	Contract No. 04 - 012024	Road 04-SF,Ala-80-13.9/14.3,0.0/1.6	FED. AID LOC.: ACIM-080-1(085)8N

Estimated Cost: Increase ☑ Decrease ☐ $402,423.93 KB ~~$402,423.92~~

By reason of this order the time of completion will be adjusted as follows: 0 days

Submitted by		
Signature	Resident Engineer DOUG COE, Supervising Br. Eng.	Date 5-31-07
Approval Recommended by		
Signature	Construction Engineer DOUG COE	Date 5-31-07
Engineer Approval by		
Signature	Construction Manager PETER SIEGENTHALER	Date 6-26-07

We the undersigned contractor, have given careful consideration to the change proposed and agree, if this proposal is approved, that we will provide all equipment, furnish the materials, except as may otherwise be noted above, and perform all services necessary for the work above specified, and will accept as full payment therefor the prices shown above.

NOTE: If you, the contractor, do not sign acceptance of this order, your attention is directed to the requirements of the specifications as to proceeding with the ordered work and filing a written protest within the time therein specified.

Contractor Acceptance by		
Signature	(Print name and title) Lee Zink Project Director	Date 6/14/07

STATE OF CALIFORNIA - DEPARTMENT OF TRANSPORTATION

CONTRACT CHANGE ORDER MEMORANDUM

TO: PETER SIEGENTHALER / DOUG COE, Supervising Br. Eng.	FILE: E.A. 04 - 012024
FROM: DOUG COE, Supervising Br. Eng.	CO-RTE-PM 04-SF,Ala-80-13.9/14.3,0.0/1.6
	FED. NO. ACIM-080-1(085)8N
CCO# 201 SUPPLEMENT#: 0 Category Cod CXTX	CONTINGENCY BALANCE (incl. this change $5,751,985.69
COST: $402,423.93 KB INCREASE ☑ DECREASE ☐	HEADQUARTERS APPROVAL REQUIRED? ☑ YES ☐ NO
SUPPLEMENTAL FUNDS PROVIDED: $0.00	IS THIS REQUEST IN ACCORDANCE WITH ENVIRONMENTAL DOCUMENTS? ☑ YES ☐ NO
CCO DESCRIPTION: Temp. Trestle and ACROW Bridge	**PROJECT DESCRIPTION:** REPLACE SFOBB EAST SPAN

Original Contract Time:	Time Adj. This Change:	Previously Approved CCO Time Adjustments:	Percentage Time Adjusted: (including this change)	Total # of Unreconciled Deferred Time CCO(s): (including this change)
1000 Day(s)	0 Day(s)	424 Day(s)	42 %	0

THIS CHANGE ORDER PROVIDES FOR:

Purchasing the North Skyway Access Trestle and the ACROW cross-over Bridge at acceptance of the SFOBB East Span Skyway Project, Contract No. 04-012024. Trestle purchase will include the no longer used access trestle support piles. Elimination of the preparation of the Concrete Deck Surface (Bid Item 19) from Station 82+95.000 to Station 82+43.000 on the Westbound bridge and from Station 82+66.311 to Station 82+38.614 on the Eastbound bridge, elimination of the furnishing and placing of Polyester Concrete Overlay (20 MM) (Bid Item 49 and 50) from Station 82+95.000 to Station 82+38.000 on the Westbound bridge and from Station 82+66.311 to Station 82+33.614 on the Eastbound bridge, elimination of the Concrete Barrier (Type 732 Modified) (Bid Item 90) from Station 82+68.000 to Station 82+48.000 on the right side of the Westbound bridge, and elimination of the Luminaire support at the right side of Pier E16W of the SFOBB East Span Skyway, Bridge No. 34-0006 L/R.

The Department is acquiring the North Trestle and the ACROW bridge to provide access to the Skyway Project after acceptance. The Director has requested the access to the Skyway which is needed for project promotional events and site visits. The Access Trestle will have to be removed before the Eastbound Oakland Touch Down can be completed. The Toll Bridge Program Oversight Committee (TBPOC) concurred with this request in their April 6, 2007 meeting.

The purchase includes the steel support piling left over from the access trestle location during the early stages of construction. This area is inaccessible for pile removal until after removal of the access trestle from its current location.

This Contract Change Order will also modify the limits of the concrete deck surfacing, the polyester concrete overlay (20 MM), the concrete barrier, and the luminaire support at pier E16W, because the placement of the ACROW bridge prevents this work. This work will be completed via a subsequent toll program contract.

Transfer of ownership will be at formal acceptance of the contract, at which point the Contractor will be released of all maintenance and liability of the temporary trestle and cross over bridge.

Maintenance, removal, and salvage of the Trestle and ACROW Bridge will be included in a subsequent toll program contract.

A credit amount of $137,710.01 KB for the reduction in item work of item 19, 49, 50, and 90 is included in this Contract Change Order.

For the purchase of the trestle and the bridge, the Contractor will be paid an agreed lump sum amount of $540,133.94. This agreed lump sum constitutes full compensation, including all markups. The method of payment for this purchase is Adjustment of Compensation at Agreed Lump Sum.

This contract change order will result in a cost increase of $402,423.93 KB ($540,133.94 - $137,710.01 KB) to the project, which can be financed from the contingency funds. A complete Force Account cost analysis is on file with the project records.

Mr. Pete Siegenthaler, SFOBB Construction Manager, Toll Bridge Construction, concurs with this change. A copy of the concurrence signed by Mr. Siegenthaler on April 16, 2007 is attached.

Prior Approval was obtained from Ms. Nancy Bobb, FHWA Bay Bridge Project Manager, via electronic message on May 7, 2007. A printed copy of the prior approval provided by Ms. Bobb is attached.

ADA Notice: For individuals with sensory disabilities, this document is available in alternate formats. For information call: (916) 654-6410 or TDD (916) 654-3880 or write Records and Forms Management, 1120 N Street, MS-89, Sacramento, CA 95814.

Prior Approval was obtained from Mr. Ken Terpstra, SFOBB Project Manager, via electronic message on April 26, 2007. A printed copy of the prior approval provided by Mr. Terpstra is attached.

Design concurrence was obtained from Mr. Steven Hulsebus, Office Chief, Toll Bridge Design, on May 2, 2007.

Concurrence from Maintenance was obtained from Mr. Bill Zanetich, Structure Maintenance and Investigation, on May 3, 2007. A copy of the concurrence provided by Maintenance is attached.

No time adjustment is warranted for this change as it does not affect the controlling operation.

RECEIVED
062807 JUL 18

CONCURRED BY:			
Construction Engineer:	Douglas Coe DJC	Date 5-31-07	
Bridge Engineer:	Douglas Coe DJC	Date 5-31-07	
Project Engineer:		Date	
Project Manager:	Ken Terpstra	Date	4/26/07
FHWA Rep.:	Nancy Bobb	Date	5/7/07
Environmental:		Date	
Other (specify):	Bill Zanetich, Maintenance	Date	5/3/07
Other (specify):	TBPOC	Date	4/6/07
District Prior Approval By:		Date	
HQ (Issue, Approve) By:	Ken Darby	Date	5/3/07
Resident Engineer's Signature:		Date	
		5-31-07	

ESTIMATE OF COST

	THIS REQUEST	TOTAL TO DATE
ITEMS	($137,710.01) KB	($137,710.01) KB
FORCE ACCOUNT	$0.00	$0.00
AGREED PRICE	$0.00	$0.00
ADJUSTMENT	$540,133.94	$540,133.94
TOTAL	$402,423.93 KB	$402,423.93 KB

FEDERAL PARTICIPATION

☑ PARTICIPATING ☐ PARTICIPATING IN PART ☐ NONE
☐ NON-PARTICIPATING (MAINTENANCE) ☐ NON-PARTICIPATING

FEDERAL SEGREGATION (if more than one Funding Source or P.I.P. type)
☑ CCO FUNDED PER CONTRACT ☐ CCO FUNDED AS FOLLOWS

FEDERAL FUNDING SOURCE	PERCENT

ADA Notice: For individuals with sensory disabilities, this document is available in alternate formats. For information call: (916) 654-6410 or TDD (916) 654-3880 or write Records and Forms Management, 1120 N Street, MS-89, Sacramento, CA 95814.

STATE OF CALIFORNIA - DEPARTMENT OF TRANSPORTATION

CONTRACT CHANGE ORDER

Change Requested by: Engineer

CCO: 202	Suppl. No. 0	Contract No. 04 - 012024	Road 04-SF,Ala-80-13.9/14.3,0.0/1.6	FED. AID LOC.: ACIM-080-1(085)8N

To: **KIEWIT / FCI / MANSON a JV**

You are directed to make the following changes from the plans and specifications or do the following described work not included in the plans and specifications for this contract. ***NOTE: This change order is not effective until approved by the Engineer.***

Description of work to be done, estimate of quantities and prices to be paid. (Segregate between additional work at contract price, agreed price and force account.) Unless otherwise stated, rates for rental of equipment cover only such time as equipment is actually used and no allowance will be made for idle time. This last percentage shown is the net accumulated increase or decrease from the original

The eighteenth paragraph of Sub-section "Construction" in Section 10-1.36 "Polyester Concrete Overlay (20MM, 13MM)" of the Special Provisions is replaced by the following: " The finished surface of the polyester concrete overlay for the pedestrian and bikepath surfaces (13 mm) shall receive a uniformly applied abrasive sand finish by broadcasting 600/400 um quartz sand to provide for a coefficient of friction of not less than 0.35 as measured by California Test 342."

Replace the first sentence of paragraph twenty: "Polyester concrete surfaces shall receive an abrasive sand finish." of Sub-section "Construction" of Section 10-1.36 "Polyester Concrete Overlay (20MM, 13MM)" of the Special Provisions with: "Polyester concrete surface (20MM) shall receive an abrasive sand finish."

Adjustment of Compensation at Force Account:

As authorized by the Engineer and in accordance with Section 4-1.03D "Extra Work" and Section 9-1.03 "Force Account Payment " of the Standard Specifications and Section 5-1.21 "Force Account Payment" of the Special Provisions, furnish and place the pedestrian and bike path polyester concrete overlay (13 mm) per revised Special Provisions Section 10-1.36 "POLYESTER CONCRETE OVERLAY (20MM, 13MM)" of the SFOBB East Span Skyway, Bridge Nos. 34-0006L/R.

Estimated cost of Adjustment of Compensation at Force Account $50,000.00

Estimated Cost: Increase ☑ Decrease ☐ **$50,000.00**

By reason of this order the time of completion will be adjusted as follows: 0 days

Submitted by

Signature Kamu Balan	Resident Engineer for DOUG COE, Supervising Br. Eng.	Date 6/4/07

Approval Recommended by

Signature Kamu Balan	Construction Engineer for DOUG COE	Date 6/4/07

Engineer Approved by

Signature P. Siegenthaler	Construction Manager PETER SIEGENTHALER	Date 7/16/07

We the undersigned contractor, have given careful consideration to the change proposed and agree, if this proposal is approved, that we will provide all equipment, furnish the materials, except as may otherwise be noted above, and perform all services necessary for the work above specified, and will accept as full payment therefor the prices shown above.

NOTE: If you, the contractor, do not sign acceptance of this order, your attention is directed to the requirements of the specifications as to proceeding with the ordered work and filing a written protest within the time therein specified.

Contractor Acceptance by

Signature	(Print name and title) Lee Zink Project Director	Date 6/14/07

STATE OF CALIFORNIA - DEPARTMENT OF TRANSPORTATION

CONTRACT CHANGE ORDER MEMORANDUM

TO: PETER SIEGENTHALER / DOUG COE, Supervising Br. Eng.	FILE: E.A. 04 - 012024
	CO-RTE-PM 04-SF,Ala-80-13.9/14.3,0.0/1.6
FROM: DOUG COE, Supervising Br. Eng.	FED. NO. ACIM-080-1(085)8N
CCO# **202** SUPPLEMENT#: **0** Category Cod **CHSA**	CONTINGENCY BALANCE (incl. this change **$5,724,409.61**
COST: **$50,000.00** INCREASE ☑ DECREASE ☐	HEADQUARTERS APPROVAL REQUIRED? ☑ YES ☐ NO
SUPPLEMENTAL FUNDS PROVIDED: **$0.00**	IS THIS REQUEST IN ACCORDANCE WITH ENVIRONMENTAL DOCUMENTS? ☑ YES ☐ NO
CCO DESCRIPTION: Bike Path Polyester Overlay	**PROJECT DESCRIPTION:** REPLACE SFOBB EAST SPAN

Original Contract Time:	Time Adj. This Change:	Previously Approved CCO Time Adjustments:	Percentage Time Adjusted: (including this change)	Total # of Unreconciled Deferred Time CCO(s): (including this change)
1000 Day(s)	**0** Day(s)	**424** Day(s)	**42** %	**0**

THIS CHANGE ORDER PROVIDES FOR:

1.) Replacing paragraph eighteen: "The finished surface of the polyester concrete overlay for the pedestrian and bikepath surfaces (13 mm) ..." of Sub-section "Construction" of Section 10-1.36 "Polyester Concrete Overlay (20MM, 13MM)" of the Special Provisions with: " The finished surface of the polyester concrete overlay for the pedestrian and bikepath surfaces (13 mm) shall receive a uniformly applied abrasive sand finish by broadcasting 600/400 um quartz sand to provide for a coefficient of friction of not less than 0.35 as measured by California Test 342."

2.) Replacing the first sentence of paragraph twenty: "Polyester concrete surfaces shall receive an abrasive sand finish." of Sub-section "Construction" of Section 10-1.36 "Polyester Concrete Overlay (20MM, 13MM)" of the Special Provisions with: "Polyester concrete surface (20MM) shall receive an abrasive sand finish."

3.) Furnishing and placing the pedestrian and bike path polyester concrete overlay (13 mm) per revised Special Provisions Section 10-1.36, "POLYESTER CONCRETE OVERLAY (20MM, 13MM) of the SFOBB East Span Skyway, Bridge Nos. 34-0006L/R.

Construction Requested.

A TransLab prepared test panel with the specified broom finish for the 13 mm polyester concrete overlay for the pedestrian and bikepath surface did not provide the required coefficient of friction. An additional test panel using quartz sand, broadcasted immediately after strike-off, provided the required coeffficient of friction while also maintaining the specified color and contrast for the pedestrian and bikepath polyester concrete overlay. Therefore, the broom finish requirement will be removed from the Special Provisions and the broadcasting of quartz sand will be included.

The method of payment will be Extra Work at Force Account. The anticipated cost for this work is estimated at $50,000.00. A force account analysis for this work is on file in the project records. This work will be funded from the project contingency funds.

Mr. Pete Siegenthaler, SFOBB Construction Manager, Toll Bridge Construction, concurs with this change. A copy of the concurrence signed by Mr. Siegenthaler on April 10, 2007 is attached.

Prior Approval was obtained from Ms. Nancy Bobb, FHWA Bay Bridge Project Manager, via electronic message on May 31, 2007. A printed copy of the prior approval provided by Ms. Bobb is attached.

Prior Approval was obtained from Mr. Ken Terpstra, SFOBB Project Manager, via electronic message on May 10, 2007. A printed copy of the prior approval provided by Mr. Terpstra is attached.

Design concurrence was obtained from Mr. Phil Lang, of TYLin / Moffat & Nichol, the designer of record, on June 4, 2007. A printed copy of the concurrence provided by Mr. Lang is attached.

Concurrence from Maintenance was obtained from Mr. Bill Zanetich, Structure Maintenance and Investigation, on May 14, 2007. A copy of the concurrence provided by Maintenance is attached.

No time adjustment is warranted for this change as it does not affect the controlling operation.

ADA Notice: For individuals with sensory disabilities, this document is available in alternate formats. For information call: (916) 654-6410 or TDD (916) 654-3880 or write Records and Forms Management, 1120 N Street, MS-89, Sacramento, CA 95814.

CONCURRED BY:			
Construction Engineer:	for Douglas Coe KB	Date	6/4/07
Bridge Engineer:	for Douglas Coe KB	Date	6/4/07
Project Engineer:		Date	
Project Manager:	Ken Terpstra	Date	5/10/07
FHWA Rep.:	Nancy Bobb	Date	5/31/07
Environmental:		Date	
Other (specify):	Design	Date	
Other (specify):	Bill Zanetich, Maintenance	Date	5/14/07
District Prior Approval By:		Date	
HQ (Issue Approve) By:	Ken Darby	Date	5/4/07
Resident Engineer's Signature:	Karen Belau for Doug Coe	Date	6/4/07

ESTIMATE OF COST

	THIS REQUEST	TOTAL TO DATE
ITEMS	$0.00	$0.00
FORCE ACCOUNT	$0.00	$0.00
AGREED PRICE	$0.00	$0.00
ADJUSTMENT	$50,000.00	$50,000.00
TOTAL	$50,000.00	$50,000.00

FEDERAL PARTICIPATION

☑ PARTICIPATING ☐ PARTICIPATING IN PART ☐ NONE
☐ NON-PARTICIPATING (MAINTENANCE) ☐ NON-PARTICIPATING

FEDERAL SEGREGATION (if more than one Funding Source or P.I.P. type)
☑ CCO FUNDED PER CONTRACT ☐ CCO FUNDED AS FOLLOWS

FEDERAL FUNDING SOURCE	PERCENT

ADA Notice: For individuals with sensory disabilities, this document is available in alternate formats. For information call: (916) 654-6410 or TDD (916) 654-3880 or write Records and Forms Management, 1120 N Street, MS-89, Sacramento, CA 95814.

STATE OF CALIFORNIA - DEPARTMENT OF TRANSPORTATION

CONTRACT CHANGE ORDER

Change Requested by: Engineer

CCO: 202	Suppl. No. 1	Contract No. 04 - 012024	Road 04-SF,Ala-80-13.9/14.3,0.0/1.6	FED. AID LOC.: ACIM-080-1(085)8N

To: **KIEWIT / FCI / MANSON a JV**

You are directed to make the following changes from the plans and specifications or do the following described work not included in the plans and specifications for this contract. ***NOTE: This change order is not effective until approved by the Engineer.***

Description of work to be done, estimate of quantities and prices to be paid. (Segregate between additional work at contract price, agreed price and force account.) Unless otherwise stated, rates for rental of equipment cover only such time as equipment is actually used and no allowance will be made for idle time. This last percentage shown is the net accumulated increase or decrease from the original

Extra Work at Force Account:

Additional funds for Contract Change Order No. 202, Supplement 0, to complete the changes to the surface finish of the Bike Path 13mm Polyester Overlay, of the SFOBB East Span Skyway, Bridge Nos. 340006L/R.

Payment for this work shall be made in accordance with Section 5-1.21, "Force Account Payment," of the Special Provisions, and Section 9-1.03, "Force Account Payment," of the Standard Specifications.

Estimated cost of Extra Work at Force Account $20,000.00

Estimated Cost: Increase ☑ Decrease ☐ **$20,000.00**

By reason of this order the time of completion will be adjusted as follows: 0 days

Submitted by

Signature	Resident Engineer DOUG COE, Supervising Br. Eng.	Date 2-15-08

Approval Recommended by

Signature	Construction Engineer DOUG COE	Date 2-15-08

Engineer Approval by

Signature	Construction Manager MIKE FORNER	Date 3-18-08

We the undersigned contractor, have given careful consideration to the change proposed and agree, if this proposal is approved, that we will provide all equipment, furnish the materials, except as may otherwise be noted above, and perform all services necessary for the work above specified, and will accept as full payment therefor the prices shown above.

NOTE: If you, the contractor, do not sign acceptance of this order, your attention is directed to the requirements of the specifications as to proceeding with the ordered work and filing a written protest within the time therein specified.

Contractor Acceptance by

Signature	(Print name and title) Lee Zink Project Director	Date 3/14/08

STATE OF CALIFORNIA - DEPARTMENT OF TRANSPORTATION

CONTRACT CHANGE ORDER MEMORANDUM

DATE: 2/15/2008 Page 1 of 1

TO: MICHAEL FORNER / DOUG COE, Supervising Br. Eng.

FROM: DOUG COE, Supervising Br. Eng.

FILE: E.A. 04 - 012024
CO-RTE-PM 04-SF,Ala-80-13.9/14.3,0.0/1.6
FED. NO. ACIM-080-1(085)8N

CCO# **202** | SUPPLEMENT#: **1** | Category Cod **CHSA**

CONTINGENCY BALANCE (incl. this change **$2,259,170.95**

COST: **$20,000.00** INCREASE ☑ DECREASE ☐

HEADQUARTERS APPROVAL REQUIRED? ☐ YES ☑ NO

SUPPLEMENTAL FUNDS PROVIDED: **$0.00**

IS THIS REQUEST IN ACCORDANCE WITH ENVIRONMENTAL DOCUMENTS? ☑ YES ☐ NO

CCO DESCRIPTION:
Added Funds for 13mm Polyester Overlay

PROJECT DESCRIPTION:
REPLACE SFOBB EAST SPAN

Original Contract Time:	Time Adj. This Change:	Previously Approved CCO Time Adjustments:	Percentage Time Adjusted: (including this change)	Total # of Unreconciled Deferred Time CCO(s): (including this change)
1000 Day(s)	**0** Day(s)	**424** Day(s)	**42** %	**7**

THIS CHANGE ORDER PROVIDES FOR:
additional funds for Contract Change Order No. 202, Supplement 0, to complete the changes to the surface finish of the Bike Path 13mm Polyester Overlay, of the SFOBB East Span Skyway, Bridge Nos. 340006L/R.

This change order is needed to provide additional funds to complete the change of the surface texture finish of the 13 mm Polyester Overlay from the transversely broomed finish to the broadcast quartz sand finish as required in CCO No. 202 Supplement 0. The magnitude of the work exceeded the initial estimate.

This work will be paid for as Extra Work at Force Account for an estimated cost of $20,000.00, which can be financed from the contingency fund.

Prior approval was obtained from Mr. Doug Coe, Supervising Bridge Engineer, on February 15, 2007. A copy of the prior approval is attached.

FHWA Prior approval is not required, as this is a minor change order.

Design concurrence for this work was provided for in CCO No. 202 Supplement 0.

Maintenance concurrence for this work was provided for in CCO No. 202 Supplement 0.

No time adjustment is warranted for this change as it does not affect the controlling operation.

CONCURRED BY:

Construction Engineer:	Douglas Coe	Date 2-15-08
Bridge Engineer:	Douglas Coe	Date 2-15-08
Project Engineer:		Date
Project Manager:		Date
FHWA Rep.:		Date
Environmental:		Date
Other (specify):		Date
Other (specify):		Date
District Prior Approval By:	Douglas Coe	Date 2/15/08
HQ (Issue Approve) By:		Date
Resident Engineer's Signature:		Date 2-15-08

ESTIMATE OF COST

	THIS REQUEST	TOTAL TO DATE
ITEMS	$0.00	$0.00
FORCE ACCOUNT	$20,000.00	$20,000.00
AGREED PRICE	$0.00	$0.00
ADJUSTMENT	$0.00	$50,000.00
TOTAL	$20,000.00	$70,000.00

FEDERAL PARTICIPATION

☑ PARTICIPATING ☐ PARTICIPATING IN PART ☐ NONE
☐ NON-PARTICIPATING (MAINTENANCE) ☐ NON-PARTICIPATING

FEDERAL SEGREGATION (if more than one Funding Source or P.I.P. type)
☑ CCO FUNDED PER CONTRACT ☐ CCO FUNDED AS FOLLOWS

FEDERAL FUNDING SOURCE PERCENT

ADA Notice: For individuals with sensory disabilities, this document is available in alternate formats. For information call: (916) 654-6410 or TDD (916) 654-3880 or write Records and Forms Management, 1120 N Street, MS-89, Sacramento, CA 95814.

STATE OF CALIFORNIA - DEPARTMENT OF TRANSPORTATION

CONTRACT CHANGE ORDER

Change Requested by: Engineer

CCO: 203	Suppl. No. 0	Contract No. 04 - 012024	Road 04-SF,Ala-80-13.9/14.3,0.0/1.6	FED. AID LOC.: ACIM-080-1(085)8N

To: **KIEWIT / FCI / MANSON a JV**

You are directed to make the following changes from the plans and specifications or do the following described work not included in the plans and specifications for this contract. ***NOTE: This change order is not effective until approved by the Engineer.***

Description of work to be done, estimate of quantities and prices to be paid. (Segregate between additional work at contract price, agreed price and force account.) Unless otherwise stated, rates for rental of equipment cover only such time as equipment is actually used and no allowance will be made for idle time. This last percentage shown is the net accumulated increase or decrease from the original

Extra Work at Lump Sum:

As authorized by the Engineer, install the Type D-2 (Mod) deck drain, as shown on plan sheet 886R2 of 978, on the north side of the closure pour between Segment E13W-8E and Segment E14W-7W, of the SFOBB East Span Skyway, Bridge No. 34-0006L.

For this Extra Work, the Contractor agrees to accept an agreed lump sum amount of $8,918.00. This agreed lump sum constitutes full compensation for all costs, including markups, all direct and indirect costs, all associated project impacts, and all overhead costs.

Extra Work at Agreed Lump Sum $8,918.00

Estimated Cost: Increase ☑ Decrease ☐ $8,918.00

By reason of this order the time of completion will be adjusted as follows: 0 days

Submitted by		
Signature	Resident Engineer DOUG COE, Supervising Br. Eng.	Date 6-15-07
Approval Recommended by		
Signature	Construction Engineer DOUG COE	Date 6-15-07
Engineer Approval by		
Signature	Construction Manager PETER SIEGENTHALER	Date 6-28-07

We the undersigned contractor, have given careful consideration to the change proposed and agree, if this proposal is approved, that we will provide all equipment, furnish the materials, except as may otherwise be noted above, and perform all services necessary for the work above specified, and will accept as full payment therefor the prices shown above.

NOTE: If you, the contractor, do not sign acceptance of this order, your attention is directed to the requirements of the specifications as to proceeding with the ordered work and filing a written protest within the time therein specified.

Contractor Acceptance by		
Signature	(Print name and title) Lee Zink Project Director	Date 6/20/07

STATE OF CALIFORNIA - DEPARTMENT OF TRANSPORTATION

CONTRACT CHANGE ORDER MEMORANDUM

TO: PETER SIEGENTHALER / DOUG COE, Supervising Br. Eng.

FROM: DOUG COE, Supervising Br. Eng.

FILE: **E.A.** 04 - 012024
CO-RTE-PM 04-SF,Ala-80-13.9/14.3,0.0/1.6
FED. NO. ACIM-080-1(085)8N

CCO# **203** SUPPLEMENT#: **0** Category Cod ~~CHPX~~ CCPX

CONTINGENCY BALANCE (incl. this change **$5,482,400.08**

COST: **$8,918.00** INCREASE ☑ DECREASE ☐

HEADQUARTERS APPROVAL REQUIRED? ☐ YES ☑ NO

SUPPLEMENTAL FUNDS PROVIDED: **$0.00**

IS THIS REQUEST IN ACCORDANCE WITH ENVIRONMENTAL DOCUMENTS? ☑ YES ☐ NO

CCO DESCRIPTION:
Install Deck Drain

PROJECT DESCRIPTION:
REPLACE SFOBB EAST SPAN

Original Contract Time:	Time Adj. This Change:	Previously Approved CCO Time Adjustments:	Percentage Time Adjusted: (including this change)	Total # of Unreconciled Deferred Time CCO(s): (including this change)
1000 Day(s)	**0** Day(s)	**424** Day(s)	**42** %	**0**

THIS CHANGE ORDER PROVIDES FOR:

The installation of the Type D-2 (Mod) deck drain, as shown on plan sheet 886R2 of 978, on the north side of the closure pour between Segment E13W-8E and Segment E14W-7W, of the SFOBB East Span Skyway, Bridge No. 34-0006L.

A Mission Control Session identified a design conflict with the deck drain located at Station 79+90.365 L. However, the approved composite drawings for Segment E14W-7W inadvertently omitted the deck drain. As a result, the deck drain was not cast into the Segment. To prevent runoff from infringing into the live traffic lane during heavy rains the deck drain will be cast into the closure pour between Segment E13W-8E and Segment E14W-7W.

In order to prevent delays to the project, the Engineer directed the Contractor to procede with construction using composite drawings and would accept responsibility for all future impacts if the composite drawings were not yet revised with the design conflict resolutions of Mission Control.

For this extra work, the Contractor will be paid an agreed lump sum amount of $8,918.00. This agreed lump sum constitutes full compensation, including all markups. The method of payment for this work is Extra Work at Agreed Lump Sum. This contract change order will result in a cost increase of $8,918.00 to the project, which can be financed from the contingency funds. A complete Force Account cost analysis is on file with the project records.

Prior approval was obtained from Mr. Doug Coe, Supervising Bridge Engineer, on April 27, 2007. A copy of the prior approval is attached.

FHWA Prior approval is not required, as this is a minor change order.

Concurrence from maintenance is not required because this change does not affect maintenance facilities or operations.

Concurrence from Design was provided by the attached Mission Control Construction Resolution Session, dated February 27, 2007, initialed by Mr. Phillip Lang, of TY Lin, the designer of record. A copy of the Mission Control Construction Resolution Session is attached.

No adjustment of contract time is warranted, as this change does not affect the controlling operation.

ADA Notice: For individuals with sensory disabilities, this document is available in alternate formats. For information call: (916) 654-6410 or TDD (916) 654-3880 or write Records and Forms Management, 1120 N Street, MS-89, Sacramento, CA 95814.

CONCURRED BY:		
Construction Engineer:	Douglas Coe	Date 6-15-07
Bridge Engineer:	Douglas Coe	Date 6-15-07
Project Engineer:		Date
Project Manager:		Date
FHWA Rep.:		Date
Environmental:		Date
Other (specify):		Date
Other (specify):		Date
District Prior Approval By:	Douglas Coe	Date 4/27/07
HQ (Issue, Approve) By:		Date
Resident Engineer's Signature		Date 6-15-07

ESTIMATE OF COST

	THIS REQUEST	TOTAL TO DATE
ITEMS	$0.00	$0.00
FORCE ACCOUNT	$0.00	$0.00
AGREED PRICE	$8,918.00	$8,918.00
ADJUSTMENT	$0.00	$0.00
TOTAL	$8,918.00	$8,918.00

FEDERAL PARTICIPATION

☑ PARTICIPATING ☐ PARTICIPATING IN PART ☐ NONE
☐ NON-PARTICIPATING (MAINTENANCE) ☐ NON-PARTICIPATING

FEDERAL SEGREGATION (if more than one Funding Source or P.I.P. type)
☑ CCO FUNDED PER CONTRACT ☐ CCO FUNDED AS FOLLOWS

FEDERAL FUNDING SOURCE	PERCENT

ADA Notice: For individuals with sensory disabilities, this document is available in alternate formats. For information call: (916) 654-6410 or TDD (916) 654-3880 or write Records and Forms Management, 1120 N Street, MS-89, Sacramento, CA 95814.

STATE OF CALIFORNIA - DEPARTMENT OF TRANSPORTATION

CONTRACT CHANGE ORDER

Change Requested by: Engineer

CCO: 204	Suppl. No. 0	Contract No. 04 - 012024	Road 04-SF,Ala-80-13.9/14.3,0.0/1.6	FED. AID LOC.: ACIM-080-1(085)8N

To: **KIEWIT / FCI / MANSON a JV**

You are directed to make the following changes from the plans and specifications or do the following described work not included in the plans and specifications for this contract. ***NOTE: This change order is not effective until approved by the Engineer.***

Description of work to be done, estimate of quantities and prices to be paid. (Segregate between additional work at contract price, agreed price and force account.) Unless otherwise stated, rates for rental of equipment cover only such time as equipment is actually used and no allowance will be made for idle time. This last percentage shown is the net accumulated increase or decrease from the original

Extra Work at Lump Sum:

Install the transverse walkway on the east side of the Eastbound substation as shown on contract plan sheet 95R2, install the transverse walkway on the east and west side of the Westbound substation as shown on contract plan sheet 99R2, remove and reinstall the the transverse walkway on the west side of the Eastbound substation as shown on contract plan sheet 95R2.

Fabricate and install walkways at hinges as shown on revised contract plan sheet 109AR2 of 978, and added plan sheet 109B1 of 978 (page 2 and 3 of this Change Order), for the SFOBB East Span Skyway, Bridge Nos. 34-0006L/R.

For this Extra Work, the Contractor agrees to accept an agreed lump sum amount of $99,418.00. This agreed lump sum constitutes full compensation for all costs, including markups, all direct and indirect costs, all associated project impacts, and all overhead costs.

Extra Work at Agreed Lump Sum $99,418.00

Estimated Cost: Increase ☑ Decrease ☐ $99,418.00

By reason of this order the time of completion will be adjusted as follows: 0 days

Submitted by

Signature	Resident Engineer	Date
Ramu Balan	for DOUG COE, Supervising Br. Eng.	8/14/07

Approval Recommended by

Signature	Construction Engineer	Date
Gary Purcell	~~DOUG COE~~ GARY PURSELL	8/14/07

Engineer Approval by

Signature	Construction Manager	Date
Michael Forner	MIKE FORNER PETER SIEGENTHALER	11/14/07

We the undersigned contractor, have given careful consideration to the change proposed and agree, if this proposal is approved, that we will provide all equipment, furnish the materials, except as may otherwise be noted above, and perform all services necessary for the work above specified, and will accept as full payment therefor the prices shown above.

NOTE: If you, the contractor, do not sign acceptance of this order, your attention is directed to the requirements of the specifications as to proceeding with the ordered work and filing a written protest within the time therein specified.

Contractor Acceptance by

Signature	(Print name and title)	Date
	Lee Zink Proj. Director	11/6/07

STATE OF CALIFORNIA - DEPARTMENT OF TRANSPORTATION

CONTRACT CHANGE ORDER MEMORANDUM

TO: PETER SIEGENTHALER / DOUG COE, Supervising Br. Eng.	FILE: E.A. 04 - 012024
	CO-RTE-PM 04-SF,Ala-80-13.9/14.3,0.0/1.6
FROM: DOUG COE, Supervising Br. Eng.	FED. NO. ACIM-080-1(085)8N
CCO# **204** SUPPLEMENT#: **0** Category Cod **CHPA**	CONTINGENCY BALANCE (incl. this change **$4,574,449.00**
COST: **$99,418.00** INCREASE ☑ DECREASE ☐	HEADQUARTERS APPROVAL REQUIRED? ☐ YES ☑ NO
SUPPLEMENTAL FUNDS PROVIDED: **$0.00**	IS THIS REQUEST IN ACCORDANCE WITH ENVIRONMENTAL DOCUMENTS? ☑ YES ☐ NO
CCO DESCRIPTION: Walkways at Hinges and Substations	**PROJECT DESCRIPTION:** REPLACE SFOBB EAST SPAN

Original Contract Time:	Time Adj. This Change:	Previously Approved CCO Time Adjustments:	Percentage Time Adjusted: (including this change)	Total # of Unreconciled Deferred Time CCO(s): (including this change)
1000 Day(s)	**0** Day(s)	**424** Day(s)	**42** %	**0**

THIS CHANGE ORDER PROVIDES FOR:

1.) Installing the transverse walkway on the east side of the Eastbound substation as shown on contract plan sheet 95R2, installing the transverse walkway on the east and west side of the Westbound substation as shown on contract plan sheet 99R2, removing and reinstalling the the transverse walkway on the west side of the Eastbound substation as shown on contract plan sheet 95R2.

2.) Fabricating and installing walkways at hinges as shown on revised contract plan sheet 109AR2 of 978, and added plan sheet 109B1 of 978 (page 2 and 3 of this Change Order), for the SFOBB East Span Skyway, Bridge Nos. 34-0006L/R.

The Engineer directed the Contractor to install all transverse walkways level due to issues associated with the landings at the manhole ladders. After installing the transverse walkway at the west side of the Eastbound substation level, the walkway interfered with the substation access door since the substation floor is at a 2% transverse slope. Therefore, this walkway will have to be re-installed and the remaining transverse walkways at the substations will be installed to match the raised substation floor as shown on plan sheet 95R2 for the Eastbound substation and plan sheet 99R2 for the Westbound substation.

The original contract plans show the walkways at the hinges supported on the soffit of the hinge segments over open water. A ladder from the access hole in the hinge diaphragm provided access to the hinge walkway. This created a safety hazard at the ladder because the handrail of the hinge walkway is to low to provide fall protection. To address this safety issue the hinge walkway will be raised to the bottom of the hinge diaphragm access hole, thereby creating a level passage through the hinges.

For this extra work, the Contractor will be paid an agreed lump sum amount of $99,418.00. This agreed lump sum constitutes full compensation, including all markups. The method of payment for this work is Extra Work at Agreed Lump Sum. This contract change order will result in a cost increase of $99,418.00 to the project, which can be financed from the contingency funds. A complete Force Account cost analysis is on file with the project records.

Prior approval was obtained from Mr. Doug Coe, Supervising Bridge Engineer, on April 26, 2007. A copy of the prior approval is attached.

FHWA Prior approval is not required, as this is a minor change order.

Concurrence from Maintenance was obtained from Mr. Bill Zanetich, Structure Maintenance and Investigation, on May 29, 2007. A copy of the concurrence provided by Maintenance is attached.

Design concurrence was provided by Hasan El-Natur on September 11, 2006, and May 10, 2007, as indicated by his signature on the revised contract plan sheets.

No adjustment of contract time is warranted, as this change does not affect the controlling operation.

ADA Notice: For individuals with sensory disabilities, this document is available in alternate formats. For information call: (916) 654-6410 or TDD (916) 654-3880 or write Records and Forms Management, 1120 N Street, MS-89, Sacramento, CA 95814.

CONCURRED BY:			
Construction Engineer:	Douglas Coe	Date	8/14/07
Bridge Engineer:	Douglas Coe	Date	8/14/07
Project Engineer:		Date	
Project Manager:		Date	
FHWA Rep.:		Date	
Environmental:		Date	
Other (specify):	Hasan El-Natur, Design	Date	5/10/07
Other (specify):	Bill Zanetich, Maintenance	Date	5/29/07
District Prior Approval By:	Douglas Coe	Date	4/26/07
HQ (Issue Approve) By:		Date	
Resident Engineer's Signature:		Date	8-14-07

ESTIMATE OF COST

	THIS REQUEST	TOTAL TO DATE
ITEMS	$0.00	$0.00
FORCE ACCOUNT	$0.00	$0.00
AGREED PRICE	$99,418.00	$99,418.00
ADJUSTMENT	$0.00	$0.00
TOTAL	$99,418.00	$99,418.00

FEDERAL PARTICIPATION

☑ PARTICIPATING ☐ PARTICIPATING IN PART ☐ NONE
☐ NON-PARTICIPATING (MAINTENANCE) ☐ NON-PARTICIPATING

FEDERAL SEGREGATION (if more than one Funding Source or P.I.P. type)
☑ CCO FUNDED PER CONTRACT ☐ CCO FUNDED AS FOLLOWS

FEDERAL FUNDING SOURCE	PERCENT

ADA Notice: For individuals with sensory disabilities, this document is available in alternate formats. For information call: (916) 654-6410 or TDD (916) 654-3880 or write Records and Forms Management, 1120 N Street, MS-89, Sacramento, CA 95814.

STATE OF CALIFORNIA - DEPARTMENT OF TRANSPORTATION

CONTRACT CHANGE ORDER

Change Requested by: Engineer

CCO: 205	Suppl. No. 0	Contract No. 04 - 012024	Road 04-SF,Ala-80-13.9/14.3,0.0/1.6	FED. AID LOC.: ACIM-080-1(085)8N

To: **KIEWIT / FCI / MANSON a JV**

You are directed to make the following changes from the plans and specifications or do the following described work not included in the plans and specifications for this contract. ***NOTE: This change order is not effective until approved by the Engineer.***

Description of work to be done, estimate of quantities and prices to be paid. (Segregate between additional work at contract price, agreed price and force account.) Unless otherwise stated, rates for rental of equipment cover only such time as equipment is actually used and no allowance will be made for idle time. This last percentage shown is the net accumulated increase or decrease from the original

Extra Work at Lump Sum:

Extend the precast segment testing for creep as provided in the Special Provisions Section 10-1.27, "Concrete Structures," subsection "Superstructure Concrete," Paragraph three, Article B, from the specified 90 days to 365 days in accordance with the requirements of ASTM Designation: C 512, "Standard Test Method for Creep of Concrete in Compression," for the SFOBB East Span Skyway, Bridge Nos. 34-0006L/R.

For this Extra Work, the Contractor agrees to accept an agreed lump sum amount of $108,022.62. This agreed lump sum constitutes full compensation for all costs, including markups, all direct and indirect costs, all associated project impacts, and all overhead costs.

Cost of Extra Work at Agreed Lump Sum $108,022.62

Estimated Cost: Increase ☑ Decrease ☐ **$108,022.62**

By reason of this order the time of completion will be adjusted as follows: 0 days

Submitted by		
Signature	Resident Engineer DOUG COE, Supervising Br. Eng.	Date 7-17-07
Approval Recommended by		
Signature	Construction Engineer DOUG COE	Date 7-17-07
Engineer Approval by		
Signature	Construction Manager PETER SIEGENTHALER	Date 8/16/07

We the undersigned contractor, have given careful consideration to the change proposed and agree, if this proposal is approved, that we will provide all equipment, furnish the materials, except as may otherwise be noted above, and perform all services necessary for the work above specified, and will accept as full payment therefor the prices shown above.

NOTE: If you, the contractor, do not sign acceptance of this order, your attention is directed to the requirements of the specifications as to proceeding with the ordered work and filing a written protest within the time therein specified.

Contractor Acceptance by		
Signature	(Print name and title) Lee Zink Project Director	Date 7/27/07

STATE OF CALIFORNIA - DEPARTMENT OF TRANSPORTATION

CONTRACT CHANGE ORDER MEMORANDUM

TO: PETER SIEGENTHALER / DOUG COE, Supervising Br. Eng.

FROM: DOUG COE, Supervising Br. Eng.

FILE: **E.A.** 04 - 012024
CO-RTE-PM 04-SF,Ala-80-13.9/14.3,0.0/1.6
FED. NO. ACIM-080-1(085)8N

CCO# **205**	SUPPLEMENT#: **0**	Category Cod **AXZZ**	CONTINGENCY BALANCE (incl. this change **$5,466,318.08**
COST: **$108,022.62**	INCREASE ☑	DECREASE ☐	HEADQUARTERS APPROVAL REQUIRED? ☐ YES ☑ NO
SUPPLEMENTAL FUNDS PROVIDED:		**$0.00**	IS THIS REQUEST IN ACCORDANCE WITH ENVIRONMENTAL DOCUMENTS? ☑ YES ☐ NO

CCO DESCRIPTION:
Extended Creep Test Duration

PROJECT DESCRIPTION:
REPLACE SFOBB EAST SPAN

Original Contract Time:	Time Adj. This Change:	Previously Approved CCO Time Adjustments:	Percentage Time Adjusted: (including this change)	Total # of Unreconciled Deferred Time CCO(s): (including this change)
1000 Day(s)	**0** Day(s)	**424** Day(s)	**42** %	**0**

THIS CHANGE ORDER PROVIDES FOR:

Extending the precast segment testing for creep as provided in the Special Provisions Section 10-1.27, "Concrete Structures," subsection "Superstructure Concrete," Paragraph three, Article B, from the specified 90 days to 365 days in accordance with the requirements of ASTM Designation: C 512, "Standard Test Method for Creep of Concrete in Compression," for the SFOBB East Span Skyway, Bridge Nos. 34-0006L/R.

The contract specifications required the Contractor's indedependent test laboratory to perform testing for creep on seventeen (17) precast segments. The Special Provisions specified that the coefficients after 28, 56, and 90 days be used to predict the 365 day coefficient for the precast bridge segments. Due to the conflicting data received after the first 90 day tests and the critical aspect of this data, the Engineer, did not want to rely on projected data and therefore required the Contractor to extend the testing to 365 days.

Extending the test duration required the Contractor's independent testing laboratory to procure additional creep testing equipment, extend the climate controlled room used for the creep testing, and expend additional technician time and overhead.

For this extra work, the Contractor will be paid an agreed lump sum amount of $108,022.62. This agreed lump sum constitutes full compensation, including all markups. The method of payment for this work is Extra Work at Agreed Lump Sum. This contract change order will result in a cost increase of $108,022.62 to the project, which can be financed from the contingency funds. A complete Force Account cost analysis is on file with the project records.

Prior approval was obtained from Mr. Doug Coe, Supervising Bridge Engineer, on April 26, 2007. A copy of the prior approval is attached.

FHWA Prior approval is not required, as this is a minor change order.

Concurrence from maintenance is not required because this change does not affect maintenance facilities or operations.

Design concurrence was provided by Mr. Hasan El-Natur, Design Oversight, on June 29, 2007. A copy of the concurrence provided by Mr. El-Natur is attached.

No adjustment of contract time is warranted, as this change does not affect the controlling operation.

ADA Notice: For individuals with sensory disabilities, this document is available in alternate formats. For information call: (916) 654-6410 or TDD (916) 654-3880 or write Records and Forms Management, 1120 N Street, MS-89, Sacramento, CA 95814.

CONCURRED BY:			
Construction Engineer:	Douglas Coe DBC	Date 7-17-07	
Bridge Engineer:	Douglas Coe DBC	Date 7-17-07	
Project Engineer:		Date	
Project Manager:		Date	
FHWA Rep.:		Date	
Environmental:		Date	
Other (specify):		Date	
Other (specify):		Date	
District Prior Approval By:	Douglas Coe	Date	5/23/07
HQ (Issue Approve) By:		Date	
Resident Engineer's Signature:		Date 7-17-07	

ESTIMATE OF COST

	THIS REQUEST	TOTAL TO DATE
ITEMS	$0.00	$0.00
FORCE ACCOUNT	$0.00	$0.00
AGREED PRICE	$108,022.62	$108,022.62
ADJUSTMENT	$0.00	$0.00
TOTAL	$108,022.62	$108,022.62

FEDERAL PARTICIPATION

☑ PARTICIPATING ☐ PARTICIPATING IN PART ☐ NONE
☐ NON-PARTICIPATING (MAINTENANCE) ☐ NON-PARTICIPATING

FEDERAL SEGREGATION (If more than one Funding Source or P.I.P. type)
☑ CCO FUNDED PER CONTRACT ☐ CCO FUNDED AS FOLLOWS

FEDERAL FUNDING SOURCE	PERCENT

ADA Notice: For individuals with sensory disabilities, this document is available in alternate formats. For information call: (916) 654-6410 or TDD (916) 654-3880 or write Records and Forms Management, 1120 N Street, MS-89, Sacramento, CA 95814.

STATE OF CALIFORNIA - DEPARTMENT OF TRANSPORTATION

CONTRACT CHANGE ORDER MEMORANDUM

TO: MICHAEL FORNER / DOUG COE, Supervising Br. Eng.

FROM: DOUG COE, Supervising Br. Eng.

FILE: E.A. 04 - 012024
CO-RTE-PM 04-SF,Ala-80-13.9/14.3,0.0/1.6
FED. NO. ACIM-080-1(085)8N

CCO# **206** SUPPLEMENT#: **0** Category Code **CHPX**

CONTINGENCY BALANCE (Incl. this change **$2,021,753.72**

COST: **$111,627.72** INCREASE ☑ DECREASE ☐

HEADQUARTERS APPROVAL REQUIRED? ☐ YES ☑ NO

SUPPLEMENTAL FUNDS PROVIDED: **$0.00**

IS THIS REQUEST IN ACCORDANCE WITH ENVIRONMENTAL DOCUMENTS? ☑ YES ☐ NO

CCO DESCRIPTION:
Bird Screening at Hinges

PROJECT DESCRIPTION:
REPLACE SFOBB EAST SPAN

Original Contract Time:	Time Adj. This Change:	Previously Approved CCO Time Adjustments:	Percentage Time Adjusted: (including this change)	Total # of Unreconciled Deferred Time CCO(s): (including this change)
1000 Day(s)	**DEF** Day(s)	**424** Day(s)	**42** %	**4**

THIS CHANGE ORDER PROVIDES FOR:
Supplying and installing "Bird Screening" at the hinge locations as shown on added plan sheets 902C, 902D, 902E, and 902F of 978 (page 2 through 5 of the Change Order), for the SFOBB East Span Skyway, Bridge Nos. 34-0006L/R.

The Skyway Structure consists of four Eastbound and four Westbound frames. Every two frames are connected by two hinge pipe beams, leaving a gap between the frames of approximately 900-mm to allow for movement. Wings of the hinge segments are open which will allow birds to enter and nest in the bridge cells. This creates a potential health and safety hazard for personnel performing maintenance inside the stucture. Therefore, Structure Maintenance and Investigations (SMI) is requesting that all openings across the hinges be closed of with 19mm bird netting.

The bird screening design, provided by Structure Maintenance and Investigation, elimates the health and safety hazard while still allowing for natural ventilation within the structure.

Bird screening was not considered in the original scope of the contract and will therefore be compensated as Extra Work at Agreed Lump Sum.

For this extra work, the Contractor will be paid an agreed lump sum amount of $111,627.72. This agreed lump sum constitutes full compensation, including all markups. The method of payment for this work is Extra Work at Agreed Lump Sum. This contract change order will result in a cost increase of $111,627.72 to the project, which can be financed from the contingency funds. A complete Force Account cost analysis is on file with the project records.

Mr. Pete Siegenthaler, SFOBB Construction Manager, Toll Bridge Construction, concurs with this change. A copy of the concurrence signed by Mr. Siegenthaler on May 29, 2007 is attached.

FHWA Prior approval is not required, as this is a minor change order.

Design concurrence was provided by Mr. Ruben Quitoriano, of Structure Maintenance and Investigations, on May 29, 2007 by his signature on the added plan sheets.

Concurrence from Maintenance was obtained from Mrs. Lina Ellis, Structure Maintenance and Investigation, on October 4, 2007. A copy of the concurrence provided by Maintenance is attached.

The contractor is unsure that all of the change order work can be completed within the current contract time and is therefore unwilling to agree to any contract change orders without deferred time.

The determination of any adjustment to contract time will be deferred until the completion of work associated with this change.

ADA Notice: For individuals with sensory disabilities, this document is available in alternate formats. For information call: (916) 654-6410 or TDD (916) 654-3880 or write Records and Forms Management, 1120 N Street, MS-89, Sacramento, CA 95814.

CONCURRED BY:			
Construction Engineer:	Douglas Coe DBC	Date	11-15-07
Bridge Engineer:	Douglas Coe DBC	Date	11-15-07
Project Engineer:		Date	
Project Manager:		Date	
FHWA Rep.:		Date	
Environmental:		Date	
Other (specify):	Lina Ellis, Maintenance	Date	10/4/07
Other (specify):	Ruben Quitoriano, Design	Date	5/29/07
District Prior Approval By:	Pete Siegenthaler	Date	5/29/07
HQ (Issue Approve) By:		Date	
Resident Engineer's Signature:		Date	11-15-07

ESTIMATE OF COST

	THIS REQUEST	TOTAL TO DATE
ITEMS	$0.00	$0.00
FORCE ACCOUNT	$0.00	$0.00
AGREED PRICE	$111,627.72	$111,627.72
ADJUSTMENT	$0.00	$0.00
TOTAL	$111,627.72	$111,627.72

FEDERAL PARTICIPATION

☑ PARTICIPATING ☐ PARTICIPATING IN PART ☐ NONE
☐ NON-PARTICIPATING (MAINTENANCE) ☐ NON-PARTICIPATING

FEDERAL SEGREGATION (if more than one Funding Source or P.I.P. type)
☑ CCO FUNDED PER CONTRACT ☐ CCO FUNDED AS FOLLOWS

FEDERAL FUNDING SOURCE	PERCENT

ADA Notice: For individuals with sensory disabilities, this document is available in alternate formats. For information call: (916) 654-6410 or TDD (916) 654-3880 or write Records and Forms Management, 1120 N Street, MS-89, Sacramento, CA 95814.

STATE OF CALIFORNIA - DEPARTMENT OF TRANSPORTATION

CONTRACT CHANGE ORDER

Change Requested by: Engineer

CCO: 207	Suppl. No. 0	Contract No. 04 - 012024	Road 04-SF,Ala-80-13.9/14.3,0.0/1.6	FED. AID LOC.: ACIM-080-1(085)8N

To: **KIEWIT / FCI / MANSON a JV**

You are directed to make the following changes from the plans and specifications or do the following described work not included in the plans and specifications for this contract. ***NOTE: This change order is not effective until approved by the Engineer.***

Description of work to be done, estimate of quantities and prices to be paid. (Segregate between additional work at contract price, agreed price and force account.) Unless otherwise stated, rates for rental of equipment cover only such time as equipment is actually used and no allowance will be made for idle time. This last percentage shown is the net accumulated increase or decrease from the original

Extra Work at Lump Sum:

As authorized by the Engineer, provide labor and equipment to cut the cross bar of the bike path grating at the 306 locations were the PVC coated flex conduit, feeding the bike path railing and belvedere lights, passes through the grating. Create an opening large enough for the conduit, grind smooth any sharp edges, and touch-up all affected areas with brush-on galvanizing, for the SFOBB East Span Skyway, Bridge Nos. 34-0006L/R.

For this Extra Work, the Contractor agrees to accept an agreed lump sum amount of $31,174.00. This agreed lump sum constitutes full compensation for all costs, including markups, all direct and indirect costs, and all overhead costs.

Extra Work at Agreed Lump Sum $31,174.00

Estimated Cost: Increase ☑ Decrease ☐ $31,174.00

By reason of this order the time of completion will be adjusted as follows: Deferred

Submitted by		
Signature	Resident Engineer DOUG COE, Supervising Br. Eng.	Date 10-15-07
Approval Recommended by		
Signature	Construction Engineer DOUG COE	Date 10-15-07
Engineer Approval by		
Signature	Construction Manager PETER SIEGENTHALER	Date 11/14/07

We the undersigned contractor, have given careful consideration to the change proposed and agree, if this proposal is approved, that we will provide all equipment, furnish the materials, except as may otherwise be noted above, and perform all services necessary for the work above specified, and will accept as full payment therefor the prices shown above.

NOTE: If you, the contractor, do not sign acceptance of this order, your attention is directed to the requirements of the specifications as to proceeding with the ordered work and filing a written protest within the time therein specified.

Contractor Acceptance by		
Signature	(Print name and title) Lee Zink Proj. Director	Date 11/6/07

STATE OF CALIFORNIA - DEPARTMENT OF TRANSPORTATION

CONTRACT CHANGE ORDER MEMORANDUM

TO: PETER SIEGENTHALER / DOUG COE, Supervising Br. Eng.

FROM: DOUG COE, Supervising Br. Eng.

FILE: **E.A.** 04 - 012024
CO-RTE-PM 04-SF,Ala-80-13.9/14.3,0.0/1.6
FED. NO. ACIM-080-1(085)8N

CCO# **207** SUPPLEMENT#: **0** Category Cod **AXZZ**

CONTINGENCY BALANCE (incl. this change **$3,522,999.12**

COST: **$31,174.00** INCREASE ☑ DECREASE ☐

HEADQUARTERS APPROVAL REQUIRED? ☐ YES ☑ NO

SUPPLEMENTAL FUNDS PROVIDED: **$0.00**

IS THIS REQUEST IN ACCORDANCE WITH ENVIRONMENTAL DOCUMENTS? ☑ YES ☐ NO

CCO DESCRIPTION:
Grating Penetration at Bike Path

PROJECT DESCRIPTION:
REPLACE SFOBB EAST SPAN

Original Contract Time:	Time Adj. This Change:	Previously Approved CCO Time Adjustments:	Percentage Time Adjusted: (including this change)	Total # of Unreconciled Deferred Time CCO(s): (including this change)
1000 Day(s)	**DEF** Day(s)	**424** Day(s)	**42** %	**1**

THIS CHANGE ORDER PROVIDES FOR:
at the authorization of the Engineer, provide additional labor and equipment to cut the cross bar of the bike path grating at the 306 locations were the PVC coated flex conduit, feeding the bike path railing and belvedere lights, passes through the grating. Create an opening large enough for the conduit, grind smooth any sharp edges, and touch-up all affected areas with brush-on galvanizing, for the SFOBB East Span Skyway, Bridge Nos. 34-0006L/R.

The contract plans show that the conduits providing power to the bike path railing lights and the belvedere lights, penetrate the grating panels covering the gap between the concrete barrier and the bike path. Installation of the conduits through the grating would make it impossible to remove the grating panel without disconnecting the conduit and wiring from the light fixture. In order to provide access to the electrical junction boxes and the air and water risers located below the grating, Toll Bridge Structure Maintenance and Investigations, is requesting that slots be cut in the grating.

For this extra work, the Contractor will be paid an agreed lump sum amount of $31,174.00. This agreed lump sum constitutes full compensation, including all markups. The method of payment for this work is Extra Work at Agreed Lump Sum. This contract change order will result in a cost increase of $31,174.00 to the project, which can be financed from the contingency funds. A complete Force Account cost analysis is on file with the project records.

Prior approval was obtained from Mr. Doug Coe, Supervising Bridge Engineer, on May 24, 2007. A copy of the prior approval is attached.

FHWA Prior approval is not required, as this is a minor change order.

Design concurrence was provided by Mr. Hasan El-Natur, Design Oversight, on July 26, 2007. A copy of the concurrence provided by Mr. El-Natur is attached.

Concurrence from Maintenance was obtained from Mr. Jeff Yang, Structure Maintenance and Investigation, on June 29, 2007. A copy of the concurrence provided by Maintenance is attached.

The electrical sub-contractor is unsure that all of the electrical change order work can be completed within the current contract time and is therefore unwilling to agree to any contract change orders without deferred time.

The determination of any adjustment to contract time will be deferred until the completion of work associated with this change.

ADA Notice: For individuals with sensory disabilities, this document is available in alternate formats. For information call: (916) 654-6410 or TDD (916) 654-3880 or write Records and Forms Management, 1120 N Street, MS-89, Sacramento, CA 95814.

CONCURRED BY:			
Construction Engineer:	Douglas Coe	DBC	Date 10-15-07
Bridge Engineer:	Douglas Coe	DBC	Date 10-15-07
Project Engineer:			Date
Project Manager:			Date
FHWA Rep.:			Date
Environmental:			Date
Other (specify):			Date
Other (specify):			Date
District Prior Approval By:	Douglas Coe		Date 5/24/07
HQ (Issue Approve) By:			Date
Resident Engineer's Signature:			Date 10-15-07

ESTIMATE OF COST

	THIS REQUEST	TOTAL TO DATE
ITEMS	$0.00	$0.00
FORCE ACCOUNT	$0.00	$0.00
AGREED PRICE	$31,174.00	$31,174.00
ADJUSTMENT	$0.00	$0.00
TOTAL	$31,174.00	$31,174.00

FEDERAL PARTICIPATION

☑ PARTICIPATING ☐ PARTICIPATING IN PART ☐ NONE
☐ NON-PARTICIPATING (MAINTENANCE) ☐ NON-PARTICIPATING

FEDERAL SEGREGATION (if more than one Funding Source or P.I.P. type)
☑ CCO FUNDED PER CONTRACT ☐ CCO FUNDED AS FOLLOWS

FEDERAL FUNDING SOURCE	PERCENT

ADA Notice: For individuals with sensory disabilities, this document is available in alternate formats. For information call: (916) 654-6410 or TDD (916) 654-3880 or write Records and Forms Management, 1120 N Street, MS-89, Sacramento, CA 95814.

STATE OF CALIFORNIA - DEPARTMENT OF TRANSPORTATION

CONTRACT CHANGE ORDER

Change Requested by: Engineer

CCO: 207	Suppl. No. 1	Contract No. 04 - 012024	Road 04-SF,Ala-80-13.9/14.3,0.0/1.6	FED. AID LOC.: ACIM-080-1(085)8N

To: **KIEWIT / FCI / MANSON a JV**

You are directed to make the following changes from the plans and specifications or do the following described work not included in the plans and specifications for this contract. ***NOTE: This change order is not effective until approved by the Engineer.***

Description of work to be done, estimate of quantities and prices to be paid. (Segregate between additional work at contract price, agreed price and force account.) Unless otherwise stated, rates for rental of equipment cover only such time as equipment is actually used and no allowance will be made for idle time. This last percentage shown is the net accumulated increase or decrease from the original

Adjustment of Compensation at Lump Sum:

A determination of the delay in completion of the contract due to the work specified by Contract Change Order No. 207, Supplement 0 has been made in accordance with the provisions of Section 8-1.07, "Liquidated Damages," of the Standard Specifications.

Since all work associated with Contract Change Order No. 207, Supplement 0 was completed within the contract time of completion, no additional compensation for project impacts is merited.

Adjustment of Compensation at Lump Sum $0.00

Estimated Cost: Increase ☐ Decrease ☐ **$0.00**

By reason of this order the time of completion will be adjusted as follows: 0 days

Submitted by

Signature	Resident Engineer DOUG COE, Supervising Br. Eng.	Date 1-7-08

Approval Recommended by

Signature	Construction Engineer DOUG COE	Date 1-7-08

Engineer Approval by

Signature Mike Forner	Construction Manager MIKE FORNER	Date 1-7-08

We the undersigned contractor, have given careful consideration to the change proposed and agree, if this proposal is approved, that we will provide all equipment, furnish the materials, except as may otherwise be noted above, and perform all services necessary for the work above specified, and will accept as full payment therefor the prices shown above.

NOTE: If you, the contractor, do not sign acceptance of this order, your attention is directed to the requirements of the specifications as to proceeding with the ordered work and filing a written protest within the time therein specified.

Contractor Acceptance by

Signature	(Print name and title)	Date

STATE OF CALIFORNIA - DEPARTMENT OF TRANSPORTATION

CONTRACT CHANGE ORDER MEMORANDUM

TO: MICHAEL FORNER / DOUG COE, Supervising Br. Eng.

FROM: DOUG COE, Supervising Br. Eng.

FILE: E.A. 04 - 012024
CO-RTE-PM 04-SF,Ala-80-13.9/14.3,0.0/1.6
FED. NO. ACIM-080-1(085)8N

CCO# **207** SUPPLEMENT#: **1** Category Cod **AXZZ**

CONTINGENCY BALANCE (incl. this change **$1,664,001.73**

COST: **$0.00** INCREASE ☐ DECREASE ☐

HEADQUARTERS APPROVAL REQUIRED? ☐ YES ☑ NO

SUPPLEMENTAL FUNDS PROVIDED: **$0.00**

IS THIS REQUEST IN ACCORDANCE WITH ENVIRONMENTAL DOCUMENTS? ☑ YES ☐ NO

CCO DESCRIPTION:
Grating Penetration Def Time Closeout

PROJECT DESCRIPTION:
REPLACE SFOBB EAST SPAN

Original Contract Time:	Time Adj. This Change:	Previously Approved CCO Time Adjustments:	Percentage Time Adjusted: (including this change)	Total # of Unreconciled Deferred Time CCO(s): (including this change)
1000 Day(s)	**0** Day(s)	**424** Day(s)	**42** %	**5**

THIS CHANGE ORDER PROVIDES FOR:
closing out the deferred time element of Contract Change Order No. 207 Supplement 0, "Grating Penetration at Bike Path".

The work has been completed. The Engineer determined that there were no impacts to the controlling operation from the extra work performed in Contract Change Order No. 207 Supplement 0. The deferred time element of the change order is therefore resolved.

For this change order, the Engineer determined that there are no costs to either the State or the Contractor, and that this change order results in a zero cost adjustment.

Prior approval was obtained from Mr. Doug Coe, Supervising Bridge Engineer, on December 13, 2007. A copy of the prior approval is attached.

FHWA Prior approval is not required, as this is a minor change order.

Concurrence from Design is not required because this change does not affect any design issues.

Concurrence from Maintenance is not required as this change order does not use maintenance funds or affect maintenance facilities or operations.

The change order was forwarded to the Contractor on December 14, 2007. The Contractor is requesting the removal of "no compensation for project impacts is merited" from the change order and therefore returned the change order un-signed on December 18, 2007. The Engineer, finds that the language is appropriate for this change order and will process the change order unilateral.

A determination has been made that no time adjustment is warranted for this change as it does not affect the controlling operation.

ADA Notice: For individuals with sensory disabilities, this document is available in alternate formats. For information call: (916) 654-6410 or TDD (916) 654-3880 or write Records and Forms Management, 1120 N Street, MS-89, Sacramento, CA 95814.

CONCURRED BY:			
Construction Engineer:	Douglas Coe	DSC	Date 1-7-08
Bridge Engineer:	Douglas Coe	DSC	Date 1-7-08
Project Engineer:			Date
Project Manager:			Date
FHWA Rep.:			Date
Environmental:			Date
Other (specify):			Date
Other (specify):			Date
District Prior Approval By:	Douglas Coe		Date 12/13/07
HQ (Issue Approve) By:			Date
Resident Engineer's Signature:			Date 1-7-08

ESTIMATE OF COST

	THIS REQUEST	TOTAL TO DATE
ITEMS	$0.00	$0.00
FORCE ACCOUNT	$0.00	$0.00
AGREED PRICE	$0.00	$31,174.00
ADJUSTMENT	$0.00	$0.00
TOTAL	$0.00	$31,174.00

FEDERAL PARTICIPATION

☑ PARTICIPATING ☐ PARTICIPATING IN PART ☐ NONE
☐ NON-PARTICIPATING (MAINTENANCE) ☐ NON-PARTICIPATING

FEDERAL SEGREGATION (if more than one Funding Source or P.I.P. type)
☑ CCO FUNDED PER CONTRACT ☐ CCO FUNDED AS FOLLOWS

FEDERAL FUNDING SOURCE	PERCENT

ADA Notice: For individuals with sensory disabilities, this document is available in alternate formats. For information call: (916) 654-6410 or TDD (916) 654-3880 or write Records and Forms Management, 1120 N Street, MS-89, Sacramento, CA 95814.

STATE OF CALIFORNIA - DEPARTMENT OF TRANSPORTATION

CONTRACT CHANGE ORDER

Change Requested by: Engineer

CCO: 208	Suppl. No. 0	Contract No. 04 - 012024	Road 04-SF,Ala-80-13.9/14.3,0.0/1.6	FED. AID LOC.: ACIM-080-1(085)8N

To: **KIEWIT / FCI / MANSON a JV**

You are directed to make the following changes from the plans and specifications or do the following described work not included in the plans and specifications for this contract. ***NOTE: This change order is not effective until approved by the Engineer.***

Description of work to be done, estimate of quantities and prices to be paid. (Segregate between additional work at contract price, agreed price and force account.) Unless otherwise stated, rates for rental of equipment cover only such time as equipment is actually used and no allowance will be made for idle time. This last percentage shown is the net accumulated increase or decrease from the original

Adjustment of Compensation at Lump Sum:

At the completion of the contract and as authorized by the Engineer, leave-in-place the currently installed cable safety rails at the top of the north and south concrete barriers of the westbound bridge and eastbound bridge, of the SFOBB East Spar Skyway, Bridge Nos. 34-0006L/R. Also at the concrete barrier locations where the cross over walkways are removed, install cable safety rail that matches the existing safety rail. Install matching cable safety railing at the top of the steel barrier rail on the north and south barriers of the westbound and eastbound orthotropic box girder, using 3 x 3 x 3/8 inch galvanized angle bolted to the back side of the barrier making use of the existing bolts. Place thirteen (13) additional K-rail and twenty-six (26) - 42" high Orange plastic Safety Barriers at the locations shown on pages 2 and 3 of 3 attached to this change order, and install a matching cable safety rail at the top of the K-rail. After placement of the K-rail, paint the K-rail with white paint. Install twenty-one (21) - 460mm by 610mm metal fall protection, warning signs as shown on pages 2 and 3 of 3 attached to this CCO. Install 42" high safety railings at both ends of the bike path on the east bound bridge. All safety rail, K-rail, signs, and Orange plastic Safety Barriers will become the property of the Department at contract acceptance.

For this work, the Contractor agrees to accept an agreed lump sum amount of $105,864.92. This agreed lump sum constitutes full compensation for all costs, including markups, all direct and indirect costs, and all overhead costs.

Adjustment of Compensation at Agreed Lump Sum $105,864.92

Estimated Cost: Increase ☑ Decrease ☐ $105,864.92

By reason of this order the time of completion will be adjusted as follows: Deferred

Submitted by		
Signature	Resident Engineer DOUG COE, Supervising Br. Eng.	Date 12-13-07
Approval Recommended by		
Signature	Construction Engineer DOUG COE	Date 12-13-07
Engineer Approval by		
Signature Mike Forner	Construction Manager MIKE FORNER	Date 1-9-08

We the undersigned contractor, have given careful consideration to the change proposed and agree, if this proposal is approved, that we will provide all equipment, furnish the materials, except as may otherwise be noted above, and perform all services necessary for the work above specified, and will accept as full payment therefor the prices shown above.

NOTE: If you, the contractor, do not sign acceptance of this order, your attention is directed to the requirements of the specifications as to proceeding with the ordered work and filing a written protest within the time therein specified.

Contractor Acceptance by		
Signature	(Print name and title) Lee Zink Project Director	Date 1/4/08

STATE OF CALIFORNIA - DEPARTMENT OF TRANSPORTATION

CONTRACT CHANGE ORDER MEMORANDUM

TO: MICHAEL FORNER / DOUG COE, Supervising Br. Eng.

FROM: DOUG COE, Supervising Br. Eng.

FILE: **E.A.** 04 - 012024
CO-RTE-PM 04-SF,Ala-80-13.9/14.3,0.0/1.6
FED. NO. ACIM-080-1(085)8N

CCO# **208** SUPPLEMENT#: **0** Category Cod **CXTX**

CONTINGENCY BALANCE (incl. this change **$4,552,299.65**

COST: **$105,864.92** INCREASE ☑ DECREASE ☐

HEADQUARTERS APPROVAL REQUIRED? ☐ YES ☑ NO

SUPPLEMENTAL FUNDS PROVIDED: **$0.00**

IS THIS REQUEST IN ACCORDANCE WITH ENVIRONMENTAL DOCUMENTS? ☑ YES ☐ NO

CCO DESCRIPTION:
Purchase Barrier Safety Rail

PROJECT DESCRIPTION:
REPLACE SFOBB EAST SPAN

Original Contract Time:	Time Adj. This Change:	Previously Approved CCO Time Adjustments:	Percentage Time Adjusted: (including this change)	Total # of Unreconciled Deferred Time CCO(s): (including this change)
1000 Day(s)	**DEF** Day(s)	**424** Day(s)	**42** %	**5**

THIS CHANGE ORDER PROVIDES FOR:

At the completion of the contract and as authorized by the Engineer, leave-in-place the currently installed cable safety rails at the top of the north and south concrete barriers of the westbound bridge and eastbound bridge, of the SFOBB East Span Skyway, Bridge Nos. 34-0006L/R. Also at the concrete barrier locations where the cross over walkways are removed, install cable safety rail that matches the existing safety rail. Install matching cable safety railing at the top of the steel barrier rail on the north and south barriers of the westbound and eastbound orthotropic box girder, using 3 x 3 x 3/8 inch galvanized angle bolted to the back side of the barrier making use of the existing bolts. Place thirteen (13) additional K-rail and twenty-six (26) - 42" high Orange plastic Safety Barriers at the locations shown on pages 2 and 3 of 3 attached to the change order, and install a matching cable safety rail at the top of the K-rail. After placement of the K-rail, paint the K-rail with white paint. Install twenty-one (21) - 460mm by 610mm metal fall protection warning signs as shown on pages 2 and 3 of 3 attached to the change order. Install 42" high safety railings at both ends of the bike path on the east bound bridge. All safety rail, K-rail, signs, and Orange plastic Safety Barriers will become the property of the Department at contract acceptance.

After completion of the Skyway contract of the SFOBB seismic retrofit project, the bridge decks are anticipated to be used by the other construction contracts, promotional events, and site visits. In order to secure the bridge deck for fall protection after contract completion and to comply with CAL/OSHA requirements, Mr. Steven Hulsebus, Office Chief of Toll Bridge Design, is requesting that the currently utilized fall protection be continued and that additional fall protection work to secure the bridge decks will also be performed, if needed.

Maintenance, removal, and salvage of the fall protection system will be included in a subsequent toll program contract.

For this work, the Contractor will be paid an agreed lump sum amount of $105,864.92 This agreed lump sum constitutes full compensation, including all markups. The method of payment for this work is Adjustment of Compensation at Agreed Lump Sum. This contract change order will result in a cost increase of $105,864.92 to the project, which can be financed from the contingency funds. A complete cost analysis is on file with the project records.

Prior approval was obtained from Mr. Doug Coe, Supervising Bridge Engineer, on June 21, 2007. A copy of the prior approval is attached.

FHWA Prior approval is not required, as this is a minor change order.

Design concurrence was provided by Mr. Steven Hulsebus, Office Chief, Toll Bridge Design, on March 9, 2007. A copy of the memorandum provided by Mr. Hulsebus is attached.

Concurrence from Maintenance was obtained from Mr. Bill Zanetich, Structure Maintenance and Investigation, on September 10, 2007. A copy of the concurrence provided by Maintenance is attached.

The contractor is unsure that all of the change order work can be completed within the current contract time and is therefore unwilling to agree to any contract change orders without deferred time.

The determination of any adjustment to contract time will be deferred until the completion of work associated with this change.

ADA Notice: For individuals with sensory disabilities, this document is available in alternate formats. For information call: (916) 654-6410 or TDD (916) 654-3880 or write Records and Forms Management, 1120 N Street, MS-89, Sacramento, CA 95814.

CONCURRED BY:			
Construction Engineer:	Douglas Coe DGC	Date	12-13-07
Bridge Engineer:	Douglas Coe DGC	Date	12-13-07
Project Engineer:		Date	
Project Manager:		Date	
FHWA Rep.:		Date	
Environmental:		Date	
Other (specify):	Bill Zanetich, Maintenance	Date	9/10/07
Other (specify):		Date	
District Prior Approval By:	Douglas Coe	Date	6/21/07
HQ (Issue Approve) By:		Date	
Resident Engineer's Signature:		Date	12-13-07

ESTIMATE OF COST

	THIS REQUEST	TOTAL TO DATE
ITEMS	$0.00	$0.00
FORCE ACCOUNT	$0.00	$0.00
AGREED PRICE	$0.00	$0.00
ADJUSTMENT	$105,864.92	$105,864.92
TOTAL	$105,864.92	$105,864.92

FEDERAL PARTICIPATION

☑ PARTICIPATING ☐ PARTICIPATING IN PART ☐ NONE
☐ NON-PARTICIPATING (MAINTENANCE) ☐ NON-PARTICIPATING

FEDERAL SEGREGATION (If more than one Funding Source or P.I.P. type)
☑ CCO FUNDED PER CONTRACT ☐ CCO FUNDED AS FOLLOWS

FEDERAL FUNDING SOURCE	PERCENT

ADA Notice: For individuals with sensory disabilities, this document is available in alternate formats. For information call: (916) 654-6410 or TDD (916) 654-3880 or write Records and Forms Management, 1120 N Street, MS-89, Sacramento, CA 95814.

STATE OF CALIFORNIA - DEPARTMENT OF TRANSPORTATION

CONTRACT CHANGE ORDER

Change Requested by: Engineer

CCO: 208	Suppl. No. 1	Contract No. 04 - 012024	Road 04-SF,Ala-80-13.9/14.3,0.0/1.6	FED. AID LOC.: ACIM-080-1(085)8N

To: **KIEWIT / FCI / MANSON a JV**

You are directed to make the following changes from the plans and specifications or do the following described work not included in the plans and specifications for this contract. ***NOTE: This change order is not effective until approved by the Engineer.***

Description of work to be done, estimate of quantities and prices to be paid. (Segregate between additional work at contract price, agreed price and force account.) Unless otherwise stated, rates for rental of equipment cover only such time as equipment is actually used and no allowance will be made for idle time. This last percentage shown is the net accumulated increase or decrease from the original

Extra Work at Lump Sum:

As authorized by the Engineer, install 42" high orange plastic safety barrier on the Westbound Bridge deck from the Accrow Bridge to the East end to secure the remainder of the SFOBB East Span Skyway, Bridge No. 34-0006L for fall protection. All orange plastic safety barriers will become the property of the Department at contract acceptance.

For this Extra Work, the Contractor agrees to accept an agreed lump sum amount of $16,356.00. This agreed lump sum constitutes full compensation for all costs, including markups, all direct and indirect costs, and all overhead costs.

Extra Work at Agreed Lump Sum $16,356.00

Estimated Cost: Increase ☑ Decrease ☐ $16,356.00

By reason of this order the time of completion will be adjusted as follows: 0 days

Submitted by

Signature	Resident Engineer DOUG COE, Supervising Br. Eng.	Date 2-19-08

Approval Recommended by

Signature	Construction Engineer DOUG COE	Date 2-19-08

Engineer Approval by

Signature Michael Forner	Construction Manager MIKE FORNER	Date 3-7-08

We the undersigned contractor, have given careful consideration to the change proposed and agree, if this proposal is approved, that we will provide all equipment, furnish the materials, except as may otherwise be noted above, and perform all services necessary for the work above specified, and will accept as full payment therefor the prices shown above.

NOTE: If you, the contractor, do not sign acceptance of this order, your attention is directed to the requirements of the specifications as to proceeding with the ordered work and filing a written protest within the time therein specified.

Contractor Acceptance by

Signature	(Print name and title) Lee Zink Project Director	Date 3/5/08

STATE OF CALIFORNIA - DEPARTMENT OF TRANSPORTATION

CONTRACT CHANGE ORDER MEMORANDUM

TO: MICHAEL FORNER / DOUG COE, Supervising Br. Eng.	FILE: **E.A.** 04 - 012024
FROM: DOUG COE, Supervising Br. Eng.	**CO-RTE-PM** 04-SF,Ala-80-13.9/14.3.0.0/1.6
	FED. NO. ACIM-080-1(085)8N
CCO# **208** SUPPLEMENT#: **1** Category Cod **CXTX**	CONTINGENCY BALANCE (incl. this change **$2,242,814.95**
COST: **$16,356.00** INCREASE ☑ DECREASE ☐	HEADQUARTERS APPROVAL REQUIRED? ☐ YES ☑ NO
SUPPLEMENTAL FUNDS PROVIDED: **$0.00**	IS THIS REQUEST IN ACCORDANCE WITH ENVIRONMENTAL DOCUMENTS? ☑ YES ☐ NO
CCO DESCRIPTION: Purchase Additional Safety Barrier	**PROJECT DESCRIPTION:** REPLACE SFOBB EAST SPAN

Original Contract Time:	Time Adj. This Change:	Previously Approved CCO Time Adjustments:	Percentage Time Adjusted: (including this change)	Total # of Unreconciled Deferred Time CCO(s): (including this change)
1000 Day(s)	**0** Day(s)	**424** Day(s)	**42** %	**7**

THIS CHANGE ORDER PROVIDES FOR:

At the authorization of the Engineer, install 42" high orange plastic safety barrier on the Westbound Bridge deck from the Accrow Bridge to the East end to secure the remainder of the SFOBB East Span Skyway, Bridge No. 34-0006L for fall protection.

Contract Change Order No. 208, Supplement 0 secured the bridge deck for fall protection except for the Westbound Bridge area East of the Accrow Cross Over Bridge. This Contract Change Order will provide fall protection to the remaining portion of the Westbound Bridge by installing 42" high orange safety barrier along the North and South side from the Accrow Bridge to the most eastern end and across. All orange plastic safety barriers will become the property of the Department at contract acceptance.

Maintenance, removal, and salvage of the fall protection system will be included in a subsequent toll program contract.

For this work, the Contractor will be paid an agreed lump sum amount of $16,356.00. This agreed lump sum constitutes full compensation, including all markups. The method of payment for this work is Extra Work at Agreed Lump Sum. This contract change order will result in a cost increase of $16,356.00 to the project, which can be financed from the contingency funds. A complete cost analysis is on file with the project records.

Prior approval was obtained from Mr. Doug Coe, Supervising Bridge Engineer, on February 14, 2008. A copy of the prior approval is attached.

FHWA Prior approval is not required, as this is a minor change order.

Design concurrence was provided in CCO 208 Supplement 0, by Mr. Steven Hulsebus, Office Chief, Toll Bridge Design, on March 9, 2007.

Concurrence from Maintenance was obtained in CCO 208 Supplement 0, from Mr. Bill Zanetich, Structure Maintenance and Investigation, on September 10, 2007.

No adjustment of contract time is warranted, as this change does not affect the controlling operation.

ADA Notice: For individuals with sensory disabilities, this document is available in alternate formats. For information call: (916) 654-6410 or TDD (916) 654-3880 or write Records and Forms Management, 1120 N Street, MS-89, Sacramento, CA 95814.

CONCURRED BY:			
Construction Engineer:	Douglas Coe	DSC	Date 2-19-08
Bridge Engineer:	Douglas Coe	DSC	Date 2-19-2008
Project Engineer:			Date
Project Manager:			Date
FHWA Rep.:			Date
Environmental:			Date
Other (specify):			Date
Other (specify):			Date
District Prior Approval By:	Douglas Coe		Date 2/14/08
HQ (Issue Approve) By:			Date
Resident Engineer's Signature:			Date
			2-19-08

ESTIMATE OF COST

	THIS REQUEST	TOTAL TO DATE
ITEMS	$0.00	$0.00
FORCE ACCOUNT	$0.00	$0.00
AGREED PRICE	$16,356.00	$16,356.00
ADJUSTMENT	$0.00	$105,864.92
TOTAL	$16,356.00	$122,220.92

FEDERAL PARTICIPATION

☑ PARTICIPATING ☐ PARTICIPATING IN PART ☐ NONE
☐ NON-PARTICIPATING (MAINTENANCE) ☐ NON-PARTICIPATING

FEDERAL SEGREGATION (If more than one Funding Source or P.I.P. type)
☑ CCO FUNDED PER CONTRACT ☐ CCO FUNDED AS FOLLOWS

FEDERAL FUNDING SOURCE	PERCENT

ADA Notice: For individuals with sensory disabilities, this document is available in alternate formats. For information call: (916) 654-6410 or TDD (916) 654-3880 or write Records and Forms Management, 1120 N Street, MS-89, Sacramento, CA 95814.

STATE OF CALIFORNIA - DEPARTMENT OF TRANSPORTATION

CONTRACT CHANGE ORDER

Change Requested by: Engineer

CCO: 209 | **Suppl. No. 0** | **Contract No. 04 - 012024** | **Road** 04-SF,Ala-80-13.9/14.3,0.0/1.6 | **FED. AID LOC.:** ACIM-080-1(085)8N

To: **KIEWIT / FCI / MANSON a JV**

You are directed to make the following changes from the plans and specifications or do the following described work not included in the plans and specifications for this contract. ***NOTE: This change order is not effective until approved by the Engineer.***

Description of work to be done, estimate of quantities and prices to be paid. (Segregate between additional work at contract price, agreed price and force account.) Unless otherwise stated, rates for rental of equipment cover only such time as equipment is actually used and no allowance will be made for idle time. This last percentage shown is the net accumulated increase or decrease from the original

Extra Work at Lump Sum:

As authorized by the Engineer, cover all low voltage splices of the multi-conductor cables located in the open cable trays with heat shrink tubing and rigid conduit large enough to fit the length and diameter of the splice. Identify the circuit number and the corresponding service platform on the rigid conduit. Ground the rigid conduit to the cable tray with a minimum of 1830 mm of number 6 wire and protect the end of the conduit with plastic bushings.

For this Extra Work, the Contractor agrees to accept an agreed lump sum amount of $103,416.00. This agreed lump sum constitutes full compensation for all costs, including markups, all direct and indirect costs, and all overhead costs.

Extra Work at Agreed Lump Sum $103,416.00

Estimated Cost: Increase ☑ Decrease ☐ **$103,416.00**

By reason of this order the time of completion will be adjusted as follows: Deferred

Submitted by

Signature	Resident Engineer DOUG COE, Supervising Br. Eng.	Date 10-16-07

Approval Recommended by

Signature	Construction Engineer DOUG COE	Date 10-16-07

Engineer Approval by

Signature	Construction Manager PETER SIEGENTHALER	Date 11/14/07

We the undersigned contractor, have given careful consideration to the change proposed and agree, if this proposal is approved, that we will provide all equipment, furnish the materials, except as may otherwise be noted above, and perform all services necessary for the work above specified, and will accept as full payment therefor the prices shown above.

NOTE: If you, the contractor, do not sign acceptance of this order, your attention is directed to the requirements of the specifications as to proceeding with the ordered work and filing a written protest within the time therein specified.

Contractor Acceptance by

Signature	(Print name and title) Lee Zink Proj. Director	Date 11/6/07

STATE OF CALIFORNIA - DEPARTMENT OF TRANSPORTATION

CONTRACT CHANGE ORDER MEMORANDUM

TO: PETER SIEGENTHALER / DOUG COE, Supervising Br. Eng.

FROM: DOUG COE, Supervising Br. Eng.

FILE: **E.A.** 04 - 012024
CO-RTE-PM 04-SF,Ala-80-13.9/14.3,0.0/1.6
FED. NO. ACIM-080-1(085)8N

CCO# **209** SUPPLEMENT#: **0** Category Cod **AXZZ**

CONTINGENCY BALANCE (incl. this change **$3,516,951.12**

COST: **$103,416.00** INCREASE ☑ DECREASE ☐

HEADQUARTERS APPROVAL REQUIRED? ☐ YES ☑ NO

SUPPLEMENTAL FUNDS PROVIDED: **$0.00**

IS THIS REQUEST IN ACCORDANCE WITH ENVIRONMENTAL DOCUMENTS? ☑ YES ☐ NO

CCO DESCRIPTION:
Cable Tray Splicing

PROJECT DESCRIPTION:
REPLACE SFOBB EAST SPAN

Original Contract Time:	Time Adj. This Change:	Previously Approved CCO Time Adjustments:	Percentage Time Adjusted: (including this change)	Total # of Unreconciled Deferred Time CCO(s): (including this change)
1000 Day(s)	**DEF** Day(s)	**424** Day(s)	**42** %	**1**

THIS CHANGE ORDER PROVIDES FOR:
protecting the cable splices by covering all low voltage splices of the multi-conductor cables located in the open cable trays with heat shrink tubing and rigid conduit large enough to fit the length and diameter of the splice. Identifying the circuit number and the corresponding service platform on the rigid conduit. Grounding the rigid conduit to the cable tray with a minimum of 1830 mm of number 6 wire and protect the end of the conduit with plastic bushings, for the SFOBB East Span Skyway, Bridge Nos. 34-0006L/R.

Splice locations for the multi-conductor cables in the open cable trays, feeding power from the sub-stations to the service platforms, are not included in the contract plans and specifications. The designer, Mr. Behzad Golemuhammadi, Senior Transportation Electrical Engineer, requires that the splices be enclosed and approved this splice design. The cable cannot be pulled as one complete run from the sub-station through the hinges to the service platforms and will therefore need to be spliced at one side of the hinges. Approxiamately 155 splices will be required. The rigid conduit splice covers will need to be marked with the circuit number and the service platform for easy identification.

For this extra work, the Contractor will be paid an agreed lump sum amount of $103,416.00. This agreed lump sum constitutes full compensation, including all markups. The method of payment for this work is Extra Work at Agreed Lump Sum. This contract change order will result in a cost increase of $103,416.00 to the project, which can be financed from the contingency funds. A complete Force Account cost analysis is on file with the project records.

Prior approval was obtained from Mr. Doug Coe, Supervising Bridge Engineer, on June 22, 2007. A copy of the prior approval is attached.

FHWA Prior approval is not required, as this is a minor change order.

Design concurrence was provided by Mr. Behzad Golemuhammadi, Senior Transportation Electrical Engineer, on September 27, 2007. A copy of the concurrence provided by Mr. Golemuhammadi is attached.

Concurrence from Maintenance was obtained from Mr. Gregory Klein, Maintenance Manager II, on July 25, 2007. A copy of the concurrence provided by Mr. Klein is attached.

The electrical sub-contractor is unsure that all of the electrical change order work can be completed within the current contract time and is therefore unwilling to agree to any contract change orders without deferred time.

The determination of any adjustment to contract time will be deferred until the completion of work associated with this change.

ADA Notice: For individuals with sensory disabilities, this document is available in alternate formats. For information call: (916) 654-6410 or TDD (916) 654-3880 or write Records and Forms Management, 1120 N Street, MS-89, Sacramento, CA 95814.

CONCURRED BY:			
Construction Engineer:	Douglas Coe DJC	Date	10-16-07
Bridge Engineer:	Douglas Coe DJC	Date	10-16-07
Project Engineer:		Date	
Project Manager:		Date	
FHWA Rep.:		Date	
Environmental:		Date	
Other (specify):	Behzad Golemuhammadi, Elec. De	Date	9/27/07
Other (specify):	Gregory Klein, Elec. Maintenance	Date	7/25/07
District Prior Approval By:	Douglas Coe	Date	6/22/07
HQ (Issue Approve) By:		Date	
Resident Engineer's Signature:		Date	10-16-07

ESTIMATE OF COST

	THIS REQUEST	TOTAL TO DATE
ITEMS	$0.00	$0.00
FORCE ACCOUNT	$0.00	$0.00
AGREED PRICE	$103,416.00	$103,416.00
ADJUSTMENT	$0.00	$0.00
TOTAL	$103,416.00	$103,416.00

FEDERAL PARTICIPATION

☑ PARTICIPATING ☐ PARTICIPATING IN PART ☐ NONE
☐ NON-PARTICIPATING (MAINTENANCE) ☐ NON-PARTICIPATING

FEDERAL SEGREGATION (if more than one Funding Source or P.I.P. type)
☑ CCO FUNDED PER CONTRACT ☐ CCO FUNDED AS FOLLOWS

FEDERAL FUNDING SOURCE	PERCENT

ADA Notice: For individuals with sensory disabilities, this document is available in alternate formats. For information call: (916) 654-6410 or TDD (916) 654-3880 or write Records and Forms Management, 1120 N Street, MS-89, Sacramento, CA 95814.

STATE OF CALIFORNIA - DEPARTMENT OF TRANSPORTATION

CONTRACT CHANGE ORDER

Change Requested by: Engineer

CCO: 209	Suppl. No. 1	Contract No. 04 - 012024	Road 04-SF,Ala-80-13.9/14.3,0.0/1.6	FED. AID LOC.: ACIM-080-1(085)8N

To: **KIEWIT / FCI / MANSON a JV**

You are directed to make the following changes from the plans and specifications or do the following described work not included in the plans and specifications for this contract. ***NOTE: This change order is not effective until approved by the Engineer.***

Description of work to be done, estimate of quantities and prices to be paid. (Segregate between additional work at contract price, agreed price and force account.) Unless otherwise stated, rates for rental of equipment cover only such time as equipment is actually used and no allowance will be made for idle time. This last percentage shown is the net accumulated increase or decrease from the original

Adjustment of Compensation at Lump Sum:

A determination of the delay in completion of the contract due to the work specified by Contract Change Order No. 209, Supplement 0 has been made in accordance with the provisions of Section 8-1.07, "Liquidated Damages," of the Standard Specifications.

Since all work associated with Contract Change Order No. 209, Supplement 0 was completed within the contract time of completion, no additional compensation for project impacts is merited.

Adjustment of Compensation at Lump Sum $0.00

Estimated Cost: Increase ☐ Decrease ☐ $0.00

By reason of this order the time of completion will be adjusted as follows: 0 days

Submitted by

Signature	Resident Engineer DOUG COE, Supervising Br. Eng.	Date 1-7-08

Approval Recommended by

Signature	Construction Engineer DOUG COE	Date 1-7-08

Engineer Approval by

Signature Mike Forner	Construction Manager MIKE FORNER	Date 1-7-08

We the undersigned contractor, have given careful consideration to the change proposed and agree, if this proposal is approved, that we will provide all equipment, furnish the materials, except as may otherwise be noted above, and perform all services necessary for the work above specified, and will accept as full payment therefor the prices shown above.

NOTE: If you, the contractor, do not sign acceptance of this order, your attention is directed to the requirements of the specifications as to proceeding with the ordered work and filing a written protest within the time therein specified.

Contractor Acceptance by

Signature	(Print name and title)	Date

STATE OF CALIFORNIA - DEPARTMENT OF TRANSPORTATION

CONTRACT CHANGE ORDER MEMORANDUM

TO: MICHAEL FORNER / DOUG COE, Supervising Br. Eng.

FROM: DOUG COE, Supervising Br. Eng.

FILE: **E.A.** 04 - 012024
CO-RTE-PM 04-SF,Ala-80-13.9/14.3,0.0/1.6
FED. NO. ACIM-080-1(085)8N

CCO# **209** SUPPLEMENT#: **1** Category Cod **AXZZ**

CONTINGENCY BALANCE (incl. this change **$1,738,600.70**

COST: **$0.00** INCREASE ☐ DECREASE ☐

HEADQUARTERS APPROVAL REQUIRED? ☐ YES ☑ NO

SUPPLEMENTAL FUNDS PROVIDED: **$0.00**

IS THIS REQUEST IN ACCORDANCE WITH ENVIRONMENTAL DOCUMENTS? ☑ YES ☐ NO

CCO DESCRIPTION:
Cable Tray Splicing Del Time Closeout

PROJECT DESCRIPTION:
REPLACE SFOBB EAST SPAN

Original Contract Time:	Time Adj. This Change:	Previously Approved CCO Time Adjustments:	Percentage Time Adjusted: (including this change)	Total # of Unreconciled Deferred Time CCO(s): (including this change)
1000 Day(s)	**0** Day(s)	**424** Day(s)	**42** %	**0**

THIS CHANGE ORDER PROVIDES FOR:
closing out the deferred time element of Contract Change Order No. 209, Supplement 0, "Cable Tray Splicing".

The work has been completed. The Engineer determined that there were no impacts to the controlling operation from the extra work performed in Contract Change Order No. 209, Supplement 0. The deferred time element of the change order is therefore resolved.

For this change order, the Engineer determined that there are no costs to either the State or the Contractor, and that this change order results in a zero cost adjustment.

Prior approval was obtained from Mr. Doug Coe, Supervising Bridge Engineer, on December 14, 2007. A copy of the prior approval is attached.

FHWA Prior approval is not required, as this is a minor change order.

Concurrence from Design is not required because this change does not affect any design issues.

Concurrence from Maintenance is not required as this change order does not use maintenance funds or affect maintenance facilities or operations.

The change order was forwarded to the Contractor on December 14, 2007. The Contractor is requesting the removal of "no compensation for project impacts is merited" from the change order and therefore returned the change order un-signed on December 18, 2007. The Engineer, finds that the language is appropriate for this change order and will process the change order unilateral.

A determination has been made that no time adjustment is warranted for this change as it does not affect the controlling operation.

ADA Notice: For individuals with sensory disabilities, this document is available in alternate formats. For information call: (916) 654-6410 or TDD (916) 654-3880 or write Records and Forms Management, 1120 N Street, MS-89, Sacramento, CA 95814.

CONCURRED BY:		
Construction Engineer:	Douglas Coe DSC	Date 1-7-08
Bridge Engineer:	Douglas Coe DSC	Date 1-7-08
Project Engineer:		Date
Project Manager:		Date
FHWA Rep.:		Date
Environmental:		Date
Other (specify):		Date
Other (specify):		Date
District Prior Approval By:	Douglas Coe	Date 12/14/07
HQ (Issue-Approve) By:		Date
Resident Engineer's Signature:		Date 1-7-08

ESTIMATE OF COST

	THIS REQUEST	TOTAL TO DATE
ITEMS	$0.00	$0.00
FORCE ACCOUNT	$0.00	$0.00
AGREED PRICE	$0.00	$103,416.00
ADJUSTMENT	$0.00	$0.00
TOTAL	$0.00	$103,416.00

FEDERAL PARTICIPATION

☑ PARTICIPATING ☐ PARTICIPATING IN PART ☐ NONE
☐ NON-PARTICIPATING (MAINTENANCE) ☐ NON-PARTICIPATING

FEDERAL SEGREGATION (if more than one Funding Source or P.I.P. type)
☑ CCO FUNDED PER CONTRACT ☐ CCO FUNDED AS FOLLOWS

FEDERAL FUNDING SOURCE	PERCENT

ADA Notice: For individuals with sensory disabilities, this document is available in alternate formats. For information call: (916) 654-6410 or TDD (916) 654-3880 or write Records and Forms Management, 1120 N Street, MS-89, Sacramento, CA 95814.

STATE OF CALIFORNIA - DEPARTMENT OF TRANSPORTATION

CONTRACT CHANGE ORDER

Change Requested by: Engineer

CCO: 210	Suppl. No. 0	Contract No. 04 - 012024	Road 04-SF,Ala-80-13.9/14.3,0.0/1.6	FED. AID LOC.: ACIM-080-1(085)8N

To: **KIEWIT / FCI / MANSON a JV**

You are directed to make the following changes from the plans and specifications or do the following described work not included in the plans and specifications for this contract. ***NOTE: This change order is not effective until approved by the Engineer.***

Description of work to be done, estimate of quantities and prices to be paid. (Segregate between additional work at contract price, agreed price and force account.) Unless otherwise stated, rates for rental of equipment cover only such time as equipment is actually used and no allowance will be made for idle time. This last percentage shown is the net accumulated increase or decrease from the original

Adjustment of Compensation at Lump Sum:

Furnish additional labor, equipment, material, supplies, supervision, and other resources required to mitigate all delays caused by all known changes to the bike path railing as of June 26, 2007, by completing the installation of the railing on or before September 28, 2007, for the SFOBB East Span Skyway, Bridge Nos. 34-0006R.

For this mitigation effort, the Contractor agrees to accept an agreed lump sum amount of $64,189.00. This agreed lump sum constitutes full compensation for all costs, including markups, all direct and indirect costs, all associated project impacts, and all overhead costs.

Adjustment of Compensation at Agreed Lump Sum $64,189.00

Estimated Cost: Increase ☑ Decrease ☐ $64,189.00

By reason of this order the time of completion will be adjusted as follows: 0 days

Submitted by

Signature	Resident Engineer	Date
Kanu Balan	for DOUG COE, Supervising Br. Eng.	6-28-07

Approval Recommended by

Signature	Construction Engineer	Date
Doug Purcell	DOUG COE	6/28/07

Engineer Approved by

Signature	Construction Manager	Date
P Siegenthaler	PETER SIEGENTHALER	8/28/07

We the undersigned contractor, have given careful consideration to the change proposed and agree, if this proposal is approved, that we will provide all equipment, furnish the materials, except as may otherwise be noted above, and perform all services necessary for the work above specified, and will accept as full payment therefor the prices shown above.

NOTE: If you, the contractor, do not sign acceptance of this order, your attention is directed to the requirements of the specifications as to proceeding with the ordered work and filing a written protest within the time therein specified.

Contractor Acceptance by

Signature	(Print name and title)	Date
	Lee Zink Project Director	8/8/07

STATE OF CALIFORNIA - DEPARTMENT OF TRANSPORTATION

CONTRACT CHANGE ORDER MEMORANDUM

DATE: 6/28/2007 Page 1 of 1

TO: PETER SIEGENTHALER / DOUG COE, Supervising Br. Eng.

FROM: DOUG COE, Supervising Br. Eng.

FILE: E.A. 04 - 012024
CO-RTE-PM 04-SF,Ala-80-13.9/14.3,0.0/1.6
FED. NO. ACIM-080-1(085)8N

CCO# **210** SUPPLEMENT#: **0** Category Cod **BZZZ**

CONTINGENCY BALANCE (incl. this change **$5,268,211.08**

COST: **$64,189.00** INCREASE ☑ DECREASE ☐

HEADQUARTERS APPROVAL REQUIRED? ☐ YES ☑ NO

SUPPLEMENTAL FUNDS PROVIDED: **$0.00**

IS THIS REQUEST IN ACCORDANCE WITH ENVIRONMENTAL DOCUMENTS? ☑ YES ☐ NO

CCO DESCRIPTION:
Mitigate Bike Path Railing Delay

PROJECT DESCRIPTION:
REPLACE SFOBB EAST SPAN

Original Contract Time:	Time Adj. This Change:	Previously Approved CCO Time Adjustments:	Percentage Time Adjusted: (including this change)	Total # of Unreconciled Deferred Time CCO(s): (including this change)
1000 Day(s)	**0** Day(s)	**424** Day(s)	**42** %	**0**

THIS CHANGE ORDER PROVIDES FOR:
furnishing additional labor, equipment, material, supplies, supervision, and other resources required to mitigate all delays caused by all known changes to the bike path railing as of June 26, 2007, by completing the installation of the railing on or before September 28, 2007, for the SFOBB East Span Skyway, Bridge Nos. 34-0006R.

This change order is needed to mitigate delay issues. Due to a potential safety issue with the grating connection design of the one meter sections of the bike path railing, which was not noted until final submittal of the shop drawings, and the delay in obtaining a revised design has delayed the fabrication of these panels and subsequently their installation. This work is now the critical path controlling operation and affecting the contract completion date. To mitigate the delay, the contractors fabricator and installer will need to work overtime on a daily bases and on Saturdays.

This Contract Change Order will compensate the contractor for the premium labor costs of the overtime.

For this mitigation effort, the Contractor will be paid an agreed lump sum amount of $64,189.00. This sum constitutes full compensation, including all markups. The method of payment will be Adjustment Of Compensation At Agreed Lump Sum. A force account cost analysis for this change is on file in the project records.

Prior approval was obtained from Mr. Pete Siegenthaler, Principal Construction Engineer, on June 28, 2007. A copy of the prior approval is attached.

FHWA prior approval is not required as this is a minor change order.

Concurrence from Maintenance is not required as this change does not use maintenance funds or affect maintenance facilities or operations.

No time adjustment is warranted for this change as it does not affect the controlling operation.

CONCURRED BY:

Construction Engineer:	Douglas Coe	DC	Date 6/28/07
Bridge Engineer:	Douglas Coe	DC	Date 6/28/07
Project Engineer:			Date
Project Manager:			Date
FHWA Rep.:			Date
Environmental:			Date
Other (specify):			Date
Other (specify):			Date
District Prior Approval By:	Pete Siegenthaler		Date 6/28/07
HQ (Issue Approve) By:			Date
Resident Engineer's Signature:			Date
Karen Baker			6-28-07

ESTIMATE OF COST

	THIS REQUEST	TOTAL TO DATE
ITEMS	$0.00	$0.00
FORCE ACCOUNT	$0.00	$0.00
AGREED PRICE	$0.00	$0.00
ADJUSTMENT	$64,189.00	$64,189.00
TOTAL	$64,189.00	$64,189.00

FEDERAL PARTICIPATION

☑ PARTICIPATING ☐ PARTICIPATING IN PART ☐ NONE
☐ NON-PARTICIPATING (MAINTENANCE) ☐ NON-PARTICIPATING

FEDERAL SEGREGATION (if more than one Funding Source or P.I.P. type)
☑ CCO FUNDED PER CONTRACT ☐ CCO FUNDED AS FOLLOWS

FEDERAL FUNDING SOURCE	PERCENT

ADA Notice: For individuals with sensory disabilities, this document is available in alternate formats. For information call: (916) 654-6410 or TDD (916) 654-3880 or write Records and Forms Management, 1120 N Street, MS-89, Sacramento, CA 95814.

STATE OF CALIFORNIA - DEPARTMENT OF TRANSPORTATION

CONTRACT CHANGE ORDER MEMORANDUM

DATE: 4/14/2008 Page 1 of 1

TO: MICHAEL FORNER / DOUG COE, Supervising Br. Eng.

FROM: DOUG COE, Supervising Br. Eng.

FILE: E.A. 04 - 012024
CO-RTE-PM 04-SF,Ala-80-13.9/14.3,0.0/1.6
FED. NO. ACIM-080-1(085)8N

CCO# **210** SUPPLEMENT#: **1** Category Cod **BZZZ**

CONTINGENCY BALANCE (incl. this change **$1,208,272.97**

COST: **($64,189.00)** INCREASE ☐ DECREASE ☑

HEADQUARTERS APPROVAL REQUIRED? ☐ YES ☑ NO

SUPPLEMENTAL FUNDS PROVIDED: **$0.00**

IS THIS REQUEST IN ACCORDANCE WITH ENVIRONMENTAL DOCUMENTS? ☑ YES ☐ NO

CCO DESCRIPTION:
Cancel CCO 210 Supplement 0

PROJECT DESCRIPTION:
REPLACE SFOBB EAST SPAN

Original Contract Time:	Time Adj. This Change:	Previously Approved CCO Time Adjustments:	Percentage Time Adjusted: (including this change)	Total # of Unreconciled Deferred Time CCO(s): (including this change)
1000 Day(s)	**0** Day(s)	**424** Day(s)	**42** %	**0**

THIS CHANGE ORDER PROVIDES FOR:
rescinding Contract Change Order No. 210 Supplement 0, of the SFOBB East Span Skyway, Bridge No. 34-0006R, issued on August 28, 2007 which due to the contractors inability to complete the bike path railing by September 28, 2007, as specified in contract change order no. 210 supplement 0 is no longer valid.

Contract change order no. 210 supplement 0, was issued to compensate the contractor for the additional resources required to complete the bike path railing by September 28, 2007 thereby mitigating all delays caused by all known changes to the bike path railing as of June 26, 2007.

The Contractor was unable to fulfill the obligation set forth in change order no. 210 supplement 0. Therefore, the Department is under no obligation to compensate the Contractor for a failed attempt at mitigating the delay.

This change order will be issued as an agreed lump sum credit amount of $64,189.00 thereby offsetting the agreed lump sum amount of $64,189.00 of change order no. 210 supplement 0, resulting in zero cost or credit to the State and the Contractor.

Prior approval was obtained from Mr. Kannu Balan, Acting Supervising Bridge Engineer, on April 14, 2008. A copy of the prior approval is attached.

FHWA Prior approval is not required, as this is a minor change order.

Concurrence from Design is not required because the design will not be changed.

Concurrence from Maintenance is not required as this change does not use maintenance funds or affect maintenance facilities or operations.

No time adjustment is warranted for this change as it does not affect the controlling operation.

CONCURRED BY:

Construction Engineer:	Douglas Coe	Date 4-14-08
Bridge Engineer:	Douglas Coe	Date 4-14-08
Project Engineer:		Date
Project Manager:		Date
FHWA Rep.:		Date
Environmental:		Date
Other (specify):		Date
Other (specify):		Date
District Prior Approval By:	Kanu Balan for Douglas Coe	Date 4/14/08
HQ (Issue Approve) By:		Date
Resident Engineer's Signature:	Kanu Balan	Date 4-14-08

ESTIMATE OF COST

	THIS REQUEST	TOTAL TO DATE
ITEMS	$0.00	$0.00
FORCE ACCOUNT	$0.00	$0.00
AGREED PRICE	$0.00	$0.00
ADJUSTMENT	($64,189.00)	$0.00
TOTAL	($64,189.00)	$0.00

FEDERAL PARTICIPATION

☑ PARTICIPATING ☐ PARTICIPATING IN PART ☐ NONE
☐ NON-PARTICIPATING (MAINTENANCE) ☐ NON-PARTICIPATING

FEDERAL SEGREGATION (if more than one Funding Source or P.I.P. type)
☑ CCO FUNDED PER CONTRACT ☐ CCO FUNDED AS FOLLOWS

FEDERAL FUNDING SOURCE	PERCENT

ADA Notice: For individuals with sensory disabilities, this document is available in alternate formats. For information call: (916) 654-6410 or TDD (916) 654-3880 or write Records and Forms Management, 1120 N Street, MS-89, Sacramento, CA 95814.

STATE OF CALIFORNIA - DEPARTMENT OF TRANSPORTATION

CONTRACT CHANGE ORDER

Change Requested by: Engineer

CCO: 210	Suppl. No. 1	Contract No. 04 - 012024	Road 04-SF,Ala-80-13.9/14.3,0.0/1.6	FED. AID LOC.: ACIM-080-1(085)8N

To: **KIEWIT / FCI / MANSON a JV**

You are directed to make the following changes from the plans and specifications or do the following described work not included in the plans and specifications for this contract. ***NOTE: This change order is not effective until approved by the Engineer.***

Description of work to be done, estimate of quantities and prices to be paid. (Segregate between additional work at contract price, agreed price and force account.) Unless otherwise stated, rates for rental of equipment cover only such time as equipment is actually used and no allowance will be made for idle time. This last percentage shown is the net accumulated increase or decrease from the original

Adjustment of Compensation at Lump Sum:

Rescind Contract Change Order No. 210 Supplement 0, of the SFOBB East Span Skyway, Bridge No. 34-0006R, issued on August 28, 2007 which due to the contractors inability to complete the bike path railing by September 28, 2007, as specified in contract change order no. 210 supplement 0 is no longer valid.

Contract Change Order No. 210 Supplement 0 and Supplement 1 are issued for off-setting amounts resulting in zero cost to the State and the Contractor.

Adjustment of Compensation at Agreed Lump Sum .....($64,189.00)

Estimated Cost: Increase ☐ Decrease ☑ ($64,189.00)

By reason of this order the time of completion will be adjusted as follows: 0 days

Submitted by

Signature	Resident Engineer	Date
[signature]	for DOUG COE, Supervising Br. Eng.	4-14-08

Approval Recommended by

Signature	Construction Engineer	Date
[signature]	FOR DOUG COE	4-14-08

Engineer Approval by

Signature	Construction Manager	Date
[signature] for:	MIKE FORNER	4/20/08

We the undersigned contractor, have given careful consideration to the change proposed and agree, if this proposal is approved, that we will provide all equipment, furnish the materials, except as may otherwise be noted above, and perform all services necessary for the work above specified, and will accept as full payment therefor the prices shown above.

NOTE: If you, the contractor, do not sign acceptance of this order, your attention is directed to the requirements of the specifications as to proceeding with the ordered work and filing a written protest within the time therein specified.

Contractor Acceptance by

Signature	(Print name and title)	Date
[signature]	Lee Zink Proj. Director	4/18/08

CONTRACT CHANGE ORDER

Change Requested by: Engineer

CCO: 211	Suppl. No. 0	Contract No. 04 - 012024	Road 04-SF,Ala-80-13.9/14.3,0.0/1.6	FED. AID LOC.: ACIM-080-1(085)8N

To: **KIEWIT / FCI / MANSON a JV**

You are directed to make the following changes from the plans and specifications or do the following described work not included in the plans and specifications for this contract. ***NOTE: This change order is not effective until approved by the Engineer.***

Description of work to be done, estimate of quantities and prices to be paid. (Segregate between additional work at contract price, agreed price and force account.) Unless otherwise stated, rates for rental of equipment cover only such time as equipment is actually used and no allowance will be made for idle time. This last percentage shown is the net accumulated increase or decrease from the original

Extra Work at Lump Sum:

Revise the electrical cabinet mounting racks on service platform 11W, 16W, 20W, 11E, 12E, 16E, 19E, and 20E; reconfigure the layout of the electrical cabinets on service platform 9W, 10W, 12W, 13W, 15W, 17W, 18W, 21W, 9E, 10E, 13E, 15E, 17E, 18E, and 21E, so that the doors on the cabinets can be fully opened; install two (2) 82 mm by 41 mm stainless steel strut channel supports to raise the wireways on all of the service platforms as shown on page 2 of 2 of this change order for the SFOBB East Span Skyway, Bridge Nos. 34-0006L/R.

For this Extra Work, the Contractor agrees to accept an agreed lump sum amount of $86,980.00. This agreed lump sum constitutes full compensation for all costs, including markups, all direct and indirect costs, and all overhead costs.

Extra Work at Agreed Lump Sum $86,980.00

Estimated Cost: Increase ☑ Decrease ☐ **$86,980.00**

By reason of this order the time of completion will be adjusted as follows: 0 days

Submitted by

Signature	Resident Engineer	Date
	DOUG COE, Supervising Br. Eng.	1-7-08

Approval Recommended by

Signature	Construction Engineer	Date
	DOUG COE	1-7-08

Engineer Approval by

Signature	Construction Manager	Date
Michael Forner	MIKE FORNER	1-23-08

We the undersigned contractor, have given careful consideration to the change proposed and agree, if this proposal is approved, that we will provide all equipment, furnish the materials, except as may otherwise be noted above, and perform all services necessary for the work above specified, and will accept as full payment therefor the prices shown above.

NOTE: If you, the contractor, do not sign acceptance of this order, your attention is directed to the requirements of the specifications as to proceeding with the ordered work and filing a written protest within the time therein specified.

Contractor Acceptance by

Signature	(Print name and title)	Date
	Lee Zink Project Director	1/15/08

STATE OF CALIFORNIA - DEPARTMENT OF TRANSPORTATION

CONTRACT CHANGE ORDER MEMORANDUM

TO: MICHAEL FORNER / DOUG COE, Supervising Br. Eng.

FROM: DOUG COE, Supervising Br. Eng.

FILE: **E.A.** 04 - 012024
CO-RTE-PM 04-SF,Ala-80-13.9/14.3,0.0/1.6
FED. NO. ACIM-080-1(085)8N

CCO# **211** SUPPLEMENT#: **0** Category Cod **AXZZ**

CONTINGENCY BALANCE (incl. this change **$3,486,017.12**

COST: **$86,980.00** INCREASE ☑ DECREASE ☐

HEADQUARTERS APPROVAL REQUIRED? ☐ YES ☑ NO

SUPPLEMENTAL FUNDS PROVIDED: **$0.00**

IS THIS REQUEST IN ACCORDANCE WITH ENVIRONMENTAL DOCUMENTS? ☑ YES ☐ NO

CCO DESCRIPTION:
Relocate Service Platform Cabinets

PROJECT DESCRIPTION:
REPLACE SFOBB EAST SPAN

Original Contract Time:	Time Adj. This Change:	Previously Approved CCO Time Adjustments:	Percentage Time Adjusted: (including this change)	Total # of Unreconciled Deferred Time CCO(s): (including this change)
1000 Day(s)	**0** Day(s)	**424** Day(s)	**42** %	**5**

THIS CHANGE ORDER PROVIDES FOR:
revising the electrical cabinet mounting racks on service platform 11W, 16W, 20W, 11E, 12E, 16E, 19E, and 20E; reconfiguring the layout of the electrical cabinets on service platform 9W, 10W, 12W, 13W, 15W, 17W, 18W, 21W, 9E, 10E, 13E, 15E, 17E, 18E, and 21E, so that the doors on the cabinets can be fully opened; install two (2) 82 mm by 41 mm stainless steel strut channel supports to raise the wireways on all of the service platforms as shown on page 2 of 2 of the change order for the SFOBB East Span Skyway, Bridge Nos. 34-0006L/R.

The contract specified utility panels on the service platforms are larger than what is shown on the service platform equipment arrangement plan. If installed per plan the access doors on the panels can not be fully opened. Smaller panels that still conform to the contract requirements are not available. Although, rearranging of the panels on the mounting racks will avert the conflict on the majority of the platforms, eight (8) cabinet mounting racks will need to be redesigned and relocated to avoid conflict. The conflict was not realized until after installation of a number of the mounting racks, panels, and cabinets. The wireway on the service platforms needs to be raised to facilitate the wiring connections to the cabinets and to provide sufficient room for the relocated conduit runs.

For this extra work, the Contractor will be paid an agreed lump sum amount of $86,980.00. This agreed lump sum constitutes full compensation, including all markups. The method of payment for this work is Extra Work at Agreed Lump Sum. This contract change order will result in a cost increase of $86,980.00 to the project, which can be financed from the contingency funds. A complete Force Account cost analysis is on file with the project records.

Prior approval was obtained from Mr. Kannu Balan for Mr. Doug Coe, Supervising Bridge Engineer, on June 28, 2007. A copy of the prior approval is attached.

FHWA Prior approval is not required, as this is a minor change order.

Design concurrence was provided by Mr. Parviz Boozarpour, Senior Transportation Electrical Engineer, on November 15, 2007. A copy of the concurrence provided by Mr. Boozarpour is attached.

Concurrence from Maintenance was obtained from Mr. Gregory Klein, Maintenance Manager II, on November 28, 2007. A copy of the concurrence provided by Mr. Klein is attached.

The change order was forwarded to the Contractor on December 13, 2007. The Contractor is requesting the removal of "all associated project impacts" from the change order and therefore returned the change order un-signed on December 18, 2007. In order to lock in the agreed to direct cost of this CCO, the Engineer has removed the objectionable language from the CCO.

No time adjustment is warranted for this change as it does not affect the controlling operation.

ADA Notice: For individuals with sensory disabilities, this document is available in alternate formats. For information call: (916) 654-6410 or TDD (916) 654-3880 or write Records and Forms Management, 1120 N Street, MS-89, Sacramento, CA 95814.

CONCURRED BY:			
Construction Engineer:	Douglas Coe	DBC	Date 1-7-08
Bridge Engineer:	Douglas Coe	DBC	Date 1-7-08
Project Engineer:			Date
Project Manager:			Date
FHWA Rep.:			Date
Environmental:			Date
Other (specify):	Parviz Boozarpour, Design		Date 11/15/07
Other (specify):	Gregory Klein, Elect Maintenance		Date 11/28/07
District Prior Approval By:	Douglas Coe		Date 6/28/07
HQ (Issue Approve) By:			Date
Resident Engineer's Signature:			Date
			1-7-08

ESTIMATE OF COST

	THIS REQUEST	TOTAL TO DATE
ITEMS	$0.00	$0.00
FORCE ACCOUNT	$0.00	$0.00
AGREED PRICE	$86,980.00	$86,980.00
ADJUSTMENT	$0.00	$0.00
TOTAL	$86,980.00	$86,980.00

FEDERAL PARTICIPATION

☑ PARTICIPATING ☐ PARTICIPATING IN PART ☐ NONE
☐ NON-PARTICIPATING (MAINTENANCE) ☐ NON-PARTICIPATING

FEDERAL SEGREGATION (if more than one Funding Source or P.I.P. type)
☑ CCO FUNDED PER CONTRACT ☐ CCO FUNDED AS FOLLOWS

FEDERAL FUNDING SOURCE PERCENT

ADA Notice: For individuals with sensory disabilities, this document is available in alternate formats. For information call: (916) 654-6410 or TDD (916) 654-3880 or write Records and Forms Management, 1120 N Street, MS-89, Sacramento, CA 95814.

STATE OF CALIFORNIA - DEPARTMENT OF TRANSPORTATION

CONTRACT CHANGE ORDER

Change Requested by: Engineer

CCO: 212	Suppl. No. 0	Contract No. 04 - 012024	Road 04-SF,Ala-80-13.9/14.3,0.0/1.6	FED. AID LOC.: ACIM-080-1(085)8N

To: **KIEWIT / FCI / MANSON a JV**

You are directed to make the following changes from the plans and specifications or do the following described work not included in the plans and specifications for this contract. ***NOTE: This change order is not effective until approved by the Engineer.***

Description of work to be done, estimate of quantities and prices to be paid. (Segregate between additional work at contract price, agreed price and force account.) Unless otherwise stated, rates for rental of equipment cover only such time as equipment is actually used and no allowance will be made for idle time. This last percentage shown is the net accumulated increase or decrease from the original

Extra Work at Lump Sum:

Furnish and install a cover plate over the bike path expansion joints at hinges B, C, and D, as shown on revised contract plan sheet 874R4 of 978 (attached as page 2 of 2 of this change order), for the SFOBB East Span Skyway, Bridge Nos. 34 0006L/R.

For this Extra Work, the Contractor agrees to accept an agreed lump sum amount of $22,744.00. This agreed lump sum constitutes full compensation for all costs, including markups, all direct and indirect costs, all associated project impacts, and all overhead costs.

Extra Work at Agreed Lump Sum $22,744.00

Estimated Cost: Increase ☑ Decrease ☐ **$22,744.00**

By reason of this order the time of completion will be adjusted as follows: 0 days

Submitted by		
Signature	Resident Engineer DOUG COE, Supervising Br. Eng.	Date 9-20-07
Approval Recommended by		
Signature	Construction Engineer DOUG COE	Date 9-20-07
Engineer Approval by		
Signature	Construction Manager PETER SIEGENTHALER	Date 11-14-07

We the undersigned contractor, have given careful consideration to the change proposed and agree, if this proposal is approved, that we will provide all equipment, furnish the materials, except as may otherwise be noted above, and perform all services necessary for the work above specified, and will accept as full payment therefor the prices shown above.

NOTE: If you, the contractor, do not sign acceptance of this order, your attention is directed to the requirements of the specifications as to proceeding with the ordered work and filing a written protest within the time therein specified.

Contractor Acceptance by		
Signature	(Print name and title) Lex Zink Proj. Director	Date 10/12/07

STATE OF CALIFORNIA - DEPARTMENT OF TRANSPORTATION

CONTRACT CHANGE ORDER MEMORANDUM

TO: PETER SIEGENTHALER / DOUG COE, Supervising Br. Eng.	FILE: E.A. 04 - 012024
	CO-RTE-PM 04-SF,Ala-80-13.9/14.3,0.0/1.6
FROM: DOUG COE, Supervising Br. Eng.	FED. NO. ACIM-080-1(085)8N
CCO#: 212 SUPPLEMENT#: 0 Category Code: CHPA	CONTINGENCY BALANCE (incl. this change): $3,582,279.12
COST: $22,744.00 INCREASE ☑ DECREASE ☐	HEADQUARTERS APPROVAL REQUIRED? ☐ YES ☑ NO
SUPPLEMENTAL FUNDS PROVIDED: $0.00	IS THIS REQUEST IN ACCORDANCE WITH ENVIRONMENTAL DOCUMENTS? ☑ YES ☐ NO
CCO DESCRIPTION: Cover Plate at Bike Path Hinges	**PROJECT DESCRIPTION:** REPLACE SFOBB EAST SPAN

Original Contract Time:	Time Adj. This Change:	Previously Approved CCO Time Adjustments:	Percentage Time Adjusted: (including this change)	Total # of Unreconciled Deferred Time CCO(s): (including this change)
1000 Day(s)	0 Day(s)	424 Day(s)	42 %	0

THIS CHANGE ORDER PROVIDES FOR:

furnishing and installing a cover plate over the bike path expansion joints at hinges B, C, and D, as shown on revised contract plan sheet 874R4 of 978 (attached as page 2 of 2 of the change order), for the SFOBB East Span Skyway, Bridge Nos. 34-0006L/R.

The expansion joints at the hinges of the bike path have a variable length gap with a sudden drop-off of about 20-mm at the riding surface. This creates a potential fall hazard to bike riders crossing over the expansion joint. To eliminate this fall hazard, the Engineer is requesting the installation of a 10 mm thick cover plate with tapered ends to provide for a smooth riding surface over the variable length gaps as shown on the revised contract plan sheet.

Design concurrence was provided by Hasan El-Natur on May 10, 2007, as indicated by his signature on the revised contract plan sheet.

For this extra work, the Contractor will be paid an agreed lump sum amount of $22,744.00. This agreed lump sum constitutes full compensation, including all markups. The method of payment for this work is Extra Work at Agreed Lump Sum. This contract change order will result in a cost increase of $22,744.00 to the project, which can be financed from the contingency funds. A complete Force Account cost analysis is on file with the project records.

Prior approval was obtained from Mr. Kannu Balan for Mr. Doug Coe, Supervising Bridge Engineer, on June 28, 2007. A copy of the prior approval is attached.

FHWA Prior approval is not required, as this is a minor change order.

Concurrence from Maintenance was obtained from Mr. Bill Zanetich, Structure Maintenance and Investigation, on September 17, 2007. A copy of the concurrence provided by Maintenance is attached.

No time adjustment is warranted for this change as it does not affect the controlling operation.

ADA Notice: For individuals with sensory disabilities, this document is available in alternate formats. For information call: (916) 654-6410 or TDD (916) 654-3880 or write Records and Forms Management, 1120 N Street, MS-89, Sacramento, CA 95814.

CONCURRED BY:		
Construction Engineer:	Douglas Coe DBC	Date 9-20-07
Bridge Engineer:	Douglas Coe DBC	Date 9-20-07
Project Engineer:		Date
Project Manager:		Date
FHWA Rep.:		Date
Environmental:		Date
Other (specify):		Date
Other (specify):		Date
District Prior Approval By:	Douglas Coe	Date 6/28/07
HQ (Issue Approve) By:		Date
Resident Engineer's Signature:		Date 9-20-07

ESTIMATE OF COST

	THIS REQUEST	TOTAL TO DATE
ITEMS	$0.00	$0.00
FORCE ACCOUNT	$0.00	$0.00
AGREED PRICE	$22,744.00	$22,744.00
ADJUSTMENT	$0.00	$0.00
TOTAL	$22,744.00	$22,744.00

FEDERAL PARTICIPATION

☑ PARTICIPATING ☐ PARTICIPATING IN PART ☐ NONE
☐ NON-PARTICIPATING (MAINTENANCE) ☐ NON-PARTICIPATING

FEDERAL SEGREGATION (if more than one Funding Source or P.I.P. type)
☑ CCO FUNDED PER CONTRACT ☐ CCO FUNDED AS FOLLOWS

FEDERAL FUNDING SOURCE	PERCENT

ADA Notice: For individuals with sensory disabilities, this document is available in alternate formats. For information call: (916) 654-6410 or TDD (916) 654-3880 or write Records and Forms Management, 1120 N Street, MS-89, Sacramento, CA 95814.

STATE OF CALIFORNIA - DEPARTMENT OF TRANSPORTATION

CONTRACT CHANGE ORDER

Change Requested by: Engineer

CCO: 213	Suppl. No. 0	Contract No. 04 - 012024	Road 04-SF,Ala-80-13.9/14.3,0.0/1.6	FED. AID LOC.: ACIM-080-1(085)8N

To: **KIEWIT / FCI / MANSON a JV**

You are directed to make the following changes from the plans and specifications or do the following described work not included in the plans and specifications for this contract. ***NOTE: This change order is not effective until approved by the Engineer.***

Description of work to be done, estimate of quantities and prices to be paid. (Segregate between additional work at contract price, agreed price and force account.) Unless otherwise stated, rates for rental of equipment cover only such time as equipment is actually used and no allowance will be made for idle time. This last percentage shown is the net accumulated increase or decrease from the original

Revise the Special Provision:

The ninth paragraph of Sub-section "Construction" in Section 10-1.25 "TEMPORARY TOWERS" of the Special Provisions is replaced by the following: "No more than 400 mm of shimming will be permitted at any jacking location."

Extra Work at Force Account:

As authorized by the Engineer, in accordance with Section 4-1.03D "Extra Work" and Section 9-1.03 "Force Account Payment " of the Standard Specifications and Section 5-1.21 "Force Account Payment" of the Special Provisions, modify the bearing supports and external shear keys at the temporary Orthotropic Box Girder (OBG) support Towers AE and AW of the SFOBB East Span Skyway, Bridge Nos. 34-0006L/R, to allow for the maximum shimming of 400 mm. Assist the Engineer in the taking of survey points and measuring the stiffness of the OBG cantilever. Return the OBG to the elevatior specified by the Engineer, after completion of the work described above.

Estimated cost of Extra Work at Force Account $350,000.00

Estimated Cost: Increase ☑ Decrease ☐ $350,000.00

By reason of this order the time of completion will be adjusted as follows: 0 days

Submitted by

Signature	Resident Engineer	Date
[signature]	for DOUG COE, Supervising Br. Eng.	8/14/07

Approval Recommended by

Signature	Construction Engineer	Date
[signature]	~~DOUG~~ COE GARY PURSELL	8/14/07

Engineer Approval by

Signature	Construction Manager	Date
[signature]	MIKE FORNER ~~PETER SIEGENTHALER~~	11/14/07

We the undersigned contractor, have given careful consideration to the change proposed and agree, if this proposal is approved, that we will provide all equipment, furnish the materials, except as may otherwise be noted above, and perform all services necessary for the work above specified, and will accept as full payment therefor the prices shown above.

NOTE: If you, the contractor, do not sign acceptance of this order, your attention is directed to the requirements of the specifications as to proceeding with the ordered work and filing a written protest within the time therein specified.

Contractor Acceptance by

Signature	(Print name and title)	Date
[signature]	Lee Zirk Proj. Director	11/6/07

STATE OF CALIFORNIA - DEPARTMENT OF TRANSPORTATION

CONTRACT CHANGE ORDER MEMORANDUM

TO: PETER SIEGENTHALER / DOUG COE, Supervising Br. Eng.	FILE: E.A. 04 - 012024
	CO-RTE-PM 04-SF,Ala-80-13.9/14.3,0.0/1.6
FROM: DOUG COE, Supervising Br. Eng.	FED. NO. ACIM-080-1(085)8N
CCO# **213** SUPPLEMENT#: **0** Category Cod **CHSA**	CONTINGENCY BALANCE (incl. this change **$4,573,112.10**
COST: **$350,000.00** INCREASE ☑ DECREASE ☐	HEADQUARTERS APPROVAL REQUIRED? ☑ YES ☐ NO
SUPPLEMENTAL FUNDS PROVIDED: **$0.00**	IS THIS REQUEST IN ACCORDANCE WITH ENVIRONMENTAL DOCUMENTS? ☑ YES ☐ NO
CCO DESCRIPTION: Modify Supports at Tower AE & AW	**PROJECT DESCRIPTION:** REPLACE SFOBB EAST SPAN

Original Contract Time:	Time Adj. This Change:	Previously Approved CCO Time Adjustments:	Percentage Time Adjusted: (including this change)	Total # of Unreconciled Deferred Time CCO(s): (including this change)
1000 Day(s)	**0** Day(s)	**424** Day(s)	**42** %	**0**

THIS CHANGE ORDER PROVIDES FOR:

1) Replacing the ninth paragraph of Sub-section "Construction" in Section 10-1.25 "TEMPORARY TOWERS" of the Special Provisions is replaced by the following: "Shimming to approximately 400 mm will be permitted at any jacking location."

2) Authorizing the Engineer, in accordance with Section 4-1.03D "Extra Work" and Section 9-1.03 "Force Account Payment " of the Standard Specifications and Section 5-1.21 "Force Account Payment" of the Special Provisions, to modify the bearing supports and external shear keys at the temporary Orthotropic Box Girder (OBG) support Towers AE and AW to the maximum allowed for shimming of 400 mm. Assist the Engineer in the taking of survey points and measuring the stiffness of the OBG cantilever of the SFOBB East Span Skyway, Bridge Nos. 34-0006L/R. Returning the OBG to elevation specified by the Engineer, after completion of the work described above.

Mr. Hasan El-Natur, Skyway Design Oversight Senior Bridge Engineer, is requesting that reactions at temporary tower AE and AW be measured and that the geometric control points be surveyed on the OBG at various elevations by gradually lowering the OBG by approximately 400 mm. In order to gradually lower the OBG the bearing supports and the shear keys will need to be modified. The stiffness information will be used for the correct alignment of the Self Anchoring Suspension Span (SAS). The SAS contract requires the State to provide this information to the SAS Contractor.

After completion of the measurements and surveys the OBG will need to be returned to the elevation specified by the Engineer. The modified temporary support system will need to be designed to maintain the structural integrity of the support system.

This work is beyond the scope of the original contract work and will be compensated as Extra Work at Force Account. The anticipated cost for this work is estimated at $350,000.00. A force account analysis for this work is on file in the project records. This work will be funded from the project contingency funds.

Mr. Jason Tom, Supervising Bridge Engineer, concurred on behalf of Mr. Pete Siegenthaler, SFOBB Construction Manager, Toll Bridge Construction, with this change. A copy of the concurrence signed by Mr. Tom on July 20, 2007 is attached.

Prior Approval was obtained from Ms. Nancy Bobb, FHWA Bay Bridge Project Manager, via electronic message on August 1, 2007. A printed copy of the prior approval provided by Ms. Bobb is attached.

Prior Approval was obtained from Mr. Ken Terpstra, SFOBB Project Manager, via electronic message on August 8, 2007. A printed copy of the prior approval provided by Mr. Terpstra is attached.

Design concurrence was obtained from Mr. Hasan El-Natur, Skyway Design Oversight, on July 24, 2007. A printed copy of the concurrence provided by Mr. El-Natur is attached.

No time adjustment is warranted for this change as it does not affect the controlling operation.

ADA Notice: For individuals with sensory disabilities, this document is available in alternate formats. For information call: (916) 654-6410 or TDD (916) 654-3880 or write Records and Forms Management, 1120 N Street, MS-89, Sacramento, CA 95814.

CONCURRED BY:			
Construction Engineer:	Douglas Coe	Date	8/14/07
Bridge Engineer:	Douglas Coe	Date	8/14/07
Project Engineer:	Hasan El-Natur	Date	7/24/07
Project Manager:	Ken Terpstra	Date	8/8/07
FHWA Rep.:	Nancy Bobb	Date	8/1/07
Environmental:		Date	
Other (specify):	Hasan El-Natur, Design	Date	7/24/07
Other (specify):		Date	
District Prior Approval By:		Date	
HQ (Issue Approve) By:	Ken Darby	Date	8/14/07
Resident Engineer's Signature:		Date	8-14-07

ESTIMATE OF COST

	THIS REQUEST	TOTAL TO DATE
ITEMS	$0.00	$0.00
FORCE ACCOUNT	$350,000.00	$350,000.00
AGREED PRICE	$0.00	$0.00
ADJUSTMENT	$0.00	$0.00
TOTAL	$350,000.00	$350,000.00

FEDERAL PARTICIPATION

☑ PARTICIPATING ☐ PARTICIPATING IN PART ☐ NONE
☐ NON-PARTICIPATING (MAINTENANCE) ☐ NON-PARTICIPATING

FEDERAL SEGREGATION (if more than one Funding Source or P.I.P. type)
☑ CCO FUNDED PER CONTRACT ☐ CCO FUNDED AS FOLLOWS

FEDERAL FUNDING SOURCE	PERCENT

ADA Notice: For individuals with sensory disabilities, this document is available in alternate formats. For information call: (916) 654-6410 or TDD (916) 654-3880 or write Records and Forms Management, 1120 N Street, MS-89, Sacramento, CA 95814.

STATE OF CALIFORNIA - DEPARTMENT OF TRANSPORTATION

CONTRACT CHANGE ORDER

Change Requested by: Engineer

CCO: 213	Suppl. No. 1	Contract No. 04 - 012024	Road 04-SF,Ala-80-13.9/14.3,0.0/1.6	FED. AID LOC.: ACIM-080-1(085)8N

To: **KIEWIT / FCI / MANSON a JV**

You are directed to make the following changes from the plans and specifications or do the following described work not included in the plans and specifications for this contract. ***NOTE: This change order is not effective until approved by the Engineer.***

Description of work to be done, estimate of quantities and prices to be paid. (Segregate between additional work at contract price, agreed price and force account.) Unless otherwise stated, rates for rental of equipment cover only such time as equipment is actually used and no allowance will be made for idle time. This last percentage shown is the net accumulated increase or decrease from the original

Extra Work at Force Account:

Provide additional funds for CCO 213 Supplement 0 to modify the supports and external shear keys at the temporary Orthotropic Box Girder (OBG) support Towers AE and AW of the SFOBB East Span Skyway, Bridge Nos. 340006L/R.

Payment for this work shall be made in accordance with Section 5-1.21, "Force Account Payment," of the Special Provisions, and Section 9-1.03, "Force Account Payment," of the Standard Specifications

Estimated cost of Extra Work at Force Account $400,000.00

Estimated Cost: Increase ☑ Decrease ☐ **$400,000.00**

By reason of this order the time of completion will be adjusted as follows: 0 days

Submitted by

Signature	Resident Engineer DOUG COE, Supervising Br. Eng.	Date 1-17-08

Approval Recommended by

Signature	Construction Engineer DOUG COE	Date 1-17-08

Engineer Approval by

Signature Mike Forner	Construction Manager MIKE FORNER	Date 2-14-08

We the undersigned contractor, have given careful consideration to the change proposed and agree, if this proposal is approved, that we will provide all equipment, furnish the materials, except as may otherwise be noted above, and perform all services necessary for the work above specified, and will accept as full payment therefor the prices shown above.

NOTE: If you, the contractor, do not sign acceptance of this order, your attention is directed to the requirements of the specifications as to proceeding with the ordered work and filing a written protest within the time therein specified.

Contractor Acceptance by

Signature	(Print name and title) Lee Zink Project Director	Date 2/14/08

STATE OF CALIFORNIA - DEPARTMENT OF TRANSPORTATION

CONTRACT CHANGE ORDER MEMORANDUM

DATE: 1/16/2007 Page 1 of 1

TO: MICHAEL FORNER / DOUG COE, Supervising Br. Eng.

FROM: DOUG COE, Supervising Br. Eng.

FILE: E.A. 04 - 012024
CO-RTE-PM 04-SF,Ala-80-13.9/14.3,0.0/1.6
FED. NO. ACIM-080-1(085)8N

CCO# **213** SUPPLEMENT#: **1** Category Cod **CHSA**

CONTINGENCY BALANCE (incl. this change **$1,508,610.72**

COST: **$400,000.00** INCREASE ☑ DECREASE ☐

HEADQUARTERS APPROVAL REQUIRED? ☑ YES ☐ NO

SUPPLEMENTAL FUNDS PROVIDED: **$0.00**

IS THIS REQUEST IN ACCORDANCE WITH ENVIRONMENTAL DOCUMENTS? ☑ YES ☐ NO

CCO DESCRIPTION:
Additional Funds for Tower AE & AW Mod.

PROJECT DESCRIPTION:
REPLACE SFOBB EAST SPAN

Original Contract Time:	Time Adj. This Change:	Previously Approved CCO Time Adjustments:	Percentage Time Adjusted: (including this change)	Total # of Unreconciled Deferred Time CCO(s): (including this change)
1000 Day(s)	**0** Day(s)	**424** Day(s)	**42** %	**8**

THIS CHANGE ORDER PROVIDES FOR:
additional funds for CCO No. 213 Supplement 0 for modifying the supports and external shearkeys of the temporary Orthotropic Box Girder support towers AE and AW.

This change order is needed to provide additional funds to complete the modifications to the support towers required in CCO No. 213 Supplement 0. Design changes to the scope of CCO No. 213, Supplement 0 exceeded the initial estimate.

This work will be paid for as Extra Work at Force Account for an estimated cost of $400,000.00, which can be financed from the contingency fund.

Prior approval was obtained from Mr. Mike Forner, SFOBB Construction Manager, on January 10, 2008.

Prior Approval was obtained from Ms. Nancy Bobb, FHWA Bay Bridge Project Manager, via electronic message on January 15, 2008. A printed copy of the prior approval provided by Ms. Bobb is attached.

Prior Approval was obtained from Mr. Ken Terpstra, SFOBB Project Manager, via electronic message on January 15, 2008. A printed copy of the prior approval provided by Mr. Terpstra is attached.

Design concurrence for this work was provided for in CCO No. 213 Supplement 0.

Maintenance concurrence for this work was provided for in CCO No. 213 Supplement 0.

No time adjustment is warranted for this change as it does not affect the controlling operation.

CONCURRED BY:

Construction Engineer:	Douglas Coe DBC	Date 1-17-08
Bridge Engineer:	Douglas Coe DBC	Date 1-17-08
Project Engineer:		Date
Project Manager:	Ken Terpstra	Date 1/15/08
FHWA Rep.:	Nancy Bobb	Date 1/15/08
Environmental:		Date
Other (specify):		Date
Other (specify):		Date
District Prior Approval By:	Mike Forner	Date 1/10/08
HQ (Issue Approval By:	Ken Darby	Date
Resident Engineer's Signature:		Date 1-17-08

ESTIMATE OF COST

	THIS REQUEST	TOTAL TO DATE
ITEMS	$0.00	$0.00
FORCE ACCOUNT	$400,000.00	$750,000.00
AGREED PRICE	$0.00	$0.00
ADJUSTMENT	$0.00	$0.00
TOTAL	$400,000.00	$750,000.00

FEDERAL PARTICIPATION

☑ PARTICIPATING ☐ PARTICIPATING IN PART ☐ NONE
☐ NON-PARTICIPATING (MAINTENANCE) ☐ NON-PARTICIPATING

FEDERAL SEGREGATION (if more than one Funding Source or P.I.P. type)
☑ CCO FUNDED PER CONTRACT ☐ CCO FUNDED AS FOLLOWS

FEDERAL FUNDING SOURCE PERCENT

ADA Notice: For individuals with sensory disabilities, this document is available in alternate formats. For information call: (916) 654-6410 or TDD (916) 654-3880 or write Records and Forms Management, 1120 N Street, MS-89, Sacramento, CA 95814.

STATE OF CALIFORNIA - DEPARTMENT OF TRANSPORTATION

CONTRACT CHANGE ORDER

Change Requested by: Engineer

CCO: 213	Suppl. No. 1	Contract No. 04 - 012024	Road 04-SF,Ala-80-13.9/14.3,0.0/1.6	FED. AID LOC.: ACIM-080-1(085)8N

To: **KIEWIT / FCI / MANSON a JV**

You are directed to make the following changes from the plans and specifications or do the following described work not included in the plans and specifications for this contract. ***NOTE: This change order is not effective until approved by the Engineer.***

Description of work to be done, estimate of quantities and prices to be paid. (Segregate between additional work at contract price, agreed price and force account.) Unless otherwise stated, rates for rental of equipment cover only such time as equipment is actually used and no allowance will be made for idle time. This last percentage shown is the net accumulated increase or decrease from the original

Extra Work at Force Account:

Provide additional funds for CCO 213 Supplement 0 to modify the supports and external shear keys at the temporary Orthotropic Box Girder (OBG) support Towers AE and AW of the SFOBB East Span Skyway, Bridge Nos. 340006L/R.

Payment for this work shall be made in accordance with Section 5-1.21, "Force Account Payment," of the Special Provisions, and Section 9-1.03, "Force Account Payment," of the Standard Specifications

Estimated cost of Extra Work at Force Account $400,000.00

Estimated Cost: Increase ☑ Decrease ☐ $400,000.00

By reason of this order the time of completion will be adjusted as follows: 0 days

Submitted by

Signature	Resident Engineer	Date
	DOUG COE, Supervising Br. Eng.	1-17-08

Approval Recommended by

Signature	Construction Engineer	Date
	DOUG COE	1-17-08

Engineer Approval by

Signature	Construction Manager	Date
	MIKE FORNER	2-14-08

We the undersigned contractor, have given careful consideration to the change proposed and agree, if this proposal is approved, that we will provide all equipment, furnish the materials, except as may otherwise be noted above, and perform all services necessary for the work above specified, and will accept as full payment therefor the prices shown above.

NOTE: If you, the contractor, do not sign acceptance of this order, your attention is directed to the requirements of the specifications as to proceeding with the ordered work and filing a written protest within the time therein specified.

Contractor Acceptance by

Signature	(Print name and title)	Date
	Lee Zink Project Director	2/14/08

STATE OF CALIFORNIA - DEPARTMENT OF TRANSPORTATION

CONTRACT CHANGE ORDER MEMORANDUM

TO: PETER SIEGENTHALER / DOUG COE, Supervising Br. Eng.

FROM: DOUG COE, Supervising Br. Eng.

FILE: **E.A.** 04 - 012024
CO-RTE-PM 04-SF,Ala-80-13.9/14.3,0.0/1.6
FED. NO. ACIM-080-1(085)8N

CCO# **214** SUPPLEMENT#: **0** Category Cod **AAZZ**

CONTINGENCY BALANCE (incl. this change **$1,943,381.44**

COST: **$7,894.00** INCREASE ☑ DECREASE ☐

HEADQUARTERS APPROVAL REQUIRED? ☐ YES ☑ NO

SUPPLEMENTAL FUNDS PROVIDED: **$0.00**

IS THIS REQUEST IN ACCORDANCE WITH ENVIRONMENTAL DOCUMENTS? ☑ YES ☐ NO

CCO DESCRIPTION:
Additional Rebar at Modular Joints

PROJECT DESCRIPTION:
REPLACE SFOBB EAST SPAN

Original Contract Time:	Time Adj. This Change:	Previously Approved CCO Time Adjustments:	Percentage Time Adjusted: (including this change)	Total # of Unreconciled Deferred Time CCO(s): (including this change)
1000 Day(s)	**0** Day(s)	**424** Day(s)	**42** %	**0**

THIS CHANGE ORDER PROVIDES FOR:

Furnishing and installing two (2) additional no. 16 reinforcing bars secured to the nelson studs between the modular joint seal assembly support boxes and one (1) additional no. 13 reinforcing bar through the eyelets over the support boxes in the modular joint closure pours of modular joint seal assemblies BE, CE, DE, BW, CW, and DW as shown on the attached sketch (Page 2 of 2 of the change order), of the SFOBB East Span Skyway, Bridge Nos. 34-0006L/R.

The per contract plan installed reinforcing in the modular joint closure pours left a void between 400 to 600 mm without reinforcing. The Engineer, required the installation of additional reinforcing in the void as shown on the sketch attached to the change order at Modular Joint Seal Assemblies BE, CE, DE, BW, CW, and DW, resulting in an increase of 1,740 KG to bid item number 62.

In accordance with Section 4-1.03B, "Increased or Decreased Quantities," of the Standard Specifications, the additional reinforcing will be measured and paid for by increasing the quantities of Contract Item No. 62, "BAR REINFORCING (BRIDGE)."

Since the dimensions between the support boxes varies, the additional reinforcing required custom fabrication. The labor costs required for the custom fabrication are not fully covered by the adjustment at contract item price. Therefore, the Contractor will be compensated for the additional labor at an agreed lump sum.

For the additional labor cost, and in addition to the increase in contract item at contract price compensation, the Contractor will be paid an agreed lump sum amount of $5,371.00. This agreed lump sum constitutes full compensation, including all markups. The method of payment for this work is Extra Work at Agreed Lump Sum. A complete Force Account cost analysis is on file with the project records.

This contract change order will result in a cost increase of $7,894.00 ($2,523.00 + $5,371.00) to the project, which can be financed from the contingency funds.

Prior approval was obtained from Mr. Kannu Balan for Mr. Doug Coe, Supervising Bridge Engineer, on July 25, 2007. A copy of the prior approval is attached.

FHWA Prior approval is not required, as this is a minor change order.

Design concurrence was obtained from Mr. Jason Fan, Transportation Engineer, Office of Structure Contract Management, on August 21, 2007. A printed copy of the concurrence provided by Mr. Fan is attached.

Concurrence from Maintenance is not required as this change does not use maintenance funds or affect maintenance facilities or operations.

No time adjustment is warranted for this change as it does not affect the controlling operation.

ADA Notice: For individuals with sensory disabilities, this document is available in alternate formats. For information call: (916) 654-6410 or TDD (916) 654-3880 or write Records and Forms Management, 1120 N Street, MS-89, Sacramento, CA 95814.

CONCURRED BY:			
Construction Engineer:	Douglas Coe	DBC	Date 11-13-07
Bridge Engineer:	Douglas Coe	DBC	Date 11-13-07
Project Engineer:			Date
Project Manager:			Date
FHWA Rep.:			Date
Environmental:			Date
Other (specify):	Jason Fan, Design		Date 8/21/07
Other (specify):			Date
District Prior Approval By:	Douglas Coe		Date 7/25/07
HQ (Issue Approve) By:			Date
Resident Engineer's Signature:			Date 11-13-07

ESTIMATE OF COST

	THIS REQUEST	TOTAL TO DATE
ITEMS	$2,523.00	$2,523.00
FORCE ACCOUNT	$0.00	$0.00
AGREED PRICE	$5,371.00	$5,371.00
ADJUSTMENT	$0.00	$0.00
TOTAL	$7,894.00	$7,894.00

FEDERAL PARTICIPATION

☑ PARTICIPATING ☐ PARTICIPATING IN PART ☐ NONE
☐ NON-PARTICIPATING (MAINTENANCE) ☐ NON-PARTICIPATING

FEDERAL SEGREGATION (if more than one Funding Source or P.I.P. type)
☑ CCO FUNDED PER CONTRACT ☐ CCO FUNDED AS FOLLOWS

FEDERAL FUNDING SOURCE	PERCENT

ADA Notice: For individuals with sensory disabilities, this document is available in alternate formats. For information call: (916) 654-6410 or TDD (916) 654-3880 or write Records and Forms Management, 1120 N Street, MS-89, Sacramento, CA 95814.

Department of Transportation
EAST SPAN SEISMIC SAFETY PROJECT
CONCURRENCE FOR CHANGE ORDERS (08/04)
Contract No. 04-012024
Co. & Rte Ala-80-13.9/14.3, 0.0/1.6

CCO No.: S#: 0 214
Title: Additional Rebar at Modular Joints
Date: 7/25/07

To: DOUGLAS COE, Resident Engineer

Requested By: DAVE WU, Senior Engineer (initials DWW)

Description of Work:
Furnish and install additional reinforcing as authorized by the Engineer in the modular joint closure pours.

Reason for Change:
During the installation of the reinforcing in the modular joint closure pours, the CT field forces noted that reinforcing between the support boxes of the modular joint was not shown on the design or shop drawings. A Field Issue Resolution (FIR) was issued to add reinforcing to the closure pours at Modular Joint BE, CE, DE, BW, CW, and DW.

Approvals Required By:
- ☐ Division of Construction, HQ
- ☐ FHWA
- ☒ District

Concurrence Required By:
- ☒ Design
- ☐ Maintenance

Discussed with persons noted below:

FHWA:	Date	Br. Design: Tim Delis	Date 4/7/07
District:	Date	Br. Geology:	Date
Other:	Date	Br. Maintenance:	Date

Estimated Cost: $15,000.00

Recommended Method of Payment:
- ☐ Contract Items
- ☒ Agreed Price (LS or UP)
- ☐ Extra Work at Force Account
- ☐ Other:

Recommended Time Adjustment: 0

Prior Approvals:
- ☒ This represents Prior Approval to proceed with the work.
- ☐ This represents an acknowledgement that the individuals below are in concurrence with this change order, which requires Division of Construction approval before proceeding with the work.

Comments:

7-25-07

Douglas Coe, Resident Engineer — Date

Pete Siegenthaler, Principal Construction Engineer — Date

Patrick Treacy, Construction Coordinator — Date

STATE OF CALIFORNIA - DEPARTMENT OF TRANSPORTATION

CONTRACT CHANGE ORDER

Change Requested by: Engineer

CCO: 214	Suppl. No. 0	Contract No. 04 - 012024	Road 04-SF,Ala-80-13.9/14.3,0.0/1.6	FED. AID LOC.: ACIM-080-1(085)8N

To: **KIEWIT / FCI / MANSON a JV**

You are directed to make the following changes from the plans and specifications or do the following described work not included in the plans and specifications for this contract. ***NOTE: This change order is not effective until approved by the Engineer.***

Description of work to be done, estimate of quantities and prices to be paid. (Segregate between additional work at contract price, agreed price and force account.) Unless otherwise stated, rates for rental of equipment cover only such time as equipment is actually used and no allowance will be made for idle time. This last percentage shown is the net accumulated increase or decrease from the original

As authorized by the Engineer, furnish and install two (2) additional no. 16 reinforcing bars secured to the nelson studs between the modular joint seal assembly support boxes and one (1) additional no. 13 reinforcing bar through the eyelets over the support boxes in the modular joint closure pours of modular joint seal assemblies BE, CE, DE, BW, CW, and DW as shown on the attached sketch (Page 2 of 2 of the change order), of the SFOBB East Span Skyway, Bridge Nos. 34-0006L/R.

Estimate of Increase in Contract Item at Contract Price:

Item No. 62: BAR REINFORCING STEEL (BRIDGE)

1740 KG (+0.01%) @ $1.45 /KG = +$2.523.00 (+0.01%)

Estimated total cost for Increase in Contract Item.....$2,523.00

The quantity increase shown here for Contact Item No. 62, "BAR REINFORCING STEEL (BRIDGE)," when combined with quantities shown in the engineer's estimate, and as modified by any previous change orders, will be the final quantities for which payment will be made for this contract item.

Extra Work at Lump Sum:

Compensation for the additional labor cost to custom fabricate the additional reinforcing between the modular joint seal assembly support boxes.

For this Extra Work and in addition to the increase in contract item at contract price compensation, the Contractor agrees to accept an agreed lump sum amount of $5,371.00. This agreed lump sum in conjuction with the increase in contract item at contract price constitutes full compensation for all costs, including markups, all direct and indirect costs, all associated project impacts, and all overhead costs.

Extra Work at Agreed Lump Sum $5,371.00

Estimated Cost: Increase ☑ Decrease ☐ **$7,894.00**

By reason of this order the time of completion will be adjusted as follows: 0 days

Submitted by

Signature	Resident Engineer DOUG COE, Supervising Br. Eng.	Date 11-13-07

Approval Recommended by

Signature	Construction Engineer DOUG COE	Date 11-13-07

Engineer Approval by

Signature	Construction Manager PETER SIEGENTHALER	Date 12-6-07

We the undersigned contractor, have given careful consideration to the change proposed and agree, if this proposal is approved, that we will provide all equipment, furnish the materials, except as may otherwise be noted above, and perform all services necessary for the work above specified, and will accept as full payment therefor the prices shown above.

NOTE: If you, the contractor, do not sign acceptance of this order, your attention is directed to the requirements of the specifications as to proceeding with the ordered work and filing a written protest within the time therein specified.

Contractor Acceptance by

Signature	(Print name and title) Lee Zink Project Director	Date 11/16/07

SKYWAY PROJECT - General Field Issue Resolution Form

DATE: 7/2/07

ISSUE NUMBER:

SUBJECT: VOID IN REBAR DESIGN

LOCATION(S): EXPANSION JOINTS BE CE, DE, BW, CW, DW

ATTENDING: K. BASKER/

RESOLVED: Y / N

Description of issue:

A VOID IN THE REBAR OCCURRED BETWEEN THE SUPPORT BOXES OF THE EXPANSION JOINT. FROM THAT VOID, THERE WAS A SUBSTANTIAL AMOUNT OF MASS CONCRETE FROM THE VERTICAL INSIDE FACE TO THE INNER MOST NELSON STUDS.

Picture or sketch of issue and/or resolution: (attach additional sheets if needed)

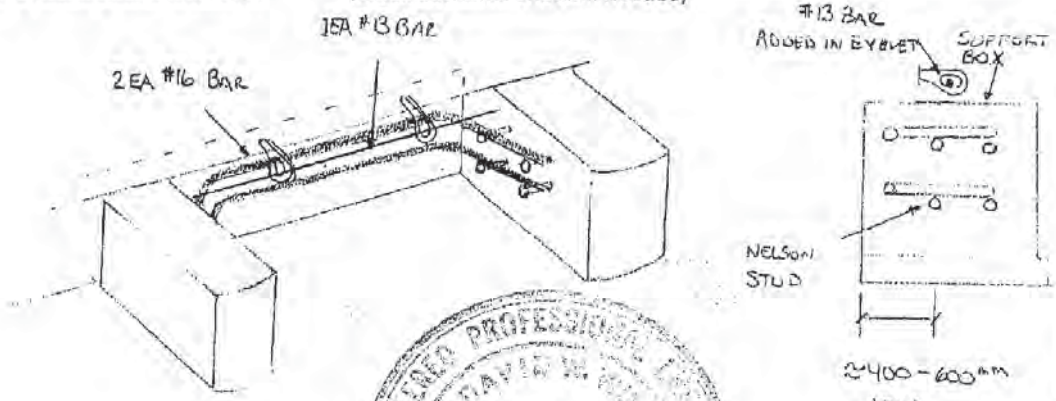

REGISTERED PROFESSIONAL ENGINEER DAVID W. [illegible] No. [illegible] 3/31/09 CIVIL STATE OF CALIFORNIA

Resolution

CALTRANS DIRECTED KFM TO ADD 2 EA #16 REBAR AS SHOWN. THIS ELIMINATED THE 400mm - 600mm VOID IN THOSE AREAS. ALSO A #13 BAR WAS ADDED INSIDE THE EYELETS BETWEEN THE SUPPORT BOXES.

CONTRACT NO. 04-012024
CCO NO. 214
PAGE 2 OF 2

Follow Up Action By:

SEE CALTRANS' COMMENTS 7/11/07

Signatures:	KFM	Caltrans
	KYLE D BASKER	

STATE OF CALIFORNIA - DEPARTMENT OF TRANSPORTATION

CONTRACT CHANGE ORDER MEMORANDUM

TO: PETER SIEGENTHALER / DOUG COE, Supervising Br. Eng.

FROM: DOUG COE, Supervising Br. Eng.

FILE: E.A. 04 - 012024
CO-RTE-PM 04-SF,Ala-80-13.9/14.3,0.0/1.6
FED. NO. ACIM-080-1(085)8N

CCO# **214** SUPPLEMENT#: **0** Category Cod **AAZZ**

CONTINGENCY BALANCE (incl. this change **$1,943,381.44**

COST: **$7,894.00** INCREASE ☑ DECREASE ☐

HEADQUARTERS APPROVAL REQUIRED? ☐ YES ☑ NO

SUPPLEMENTAL FUNDS PROVIDED: **$0.00**

IS THIS REQUEST IN ACCORDANCE WITH ENVIRONMENTAL DOCUMENTS? ☑ YES ☐ NO

CCO DESCRIPTION:
Additional Rebar at Modular Joints

PROJECT DESCRIPTION:
REPLACE SFOBB EAST SPAN

Original Contract Time:	Time Adj. This Change:	Previously Approved CCO Time Adjustments:	Percentage Time Adjusted: (including this change)	Total # of Unreconciled Deferred Time CCO(s): (including this change)
1000 Day(s)	**0** Day(s)	**424** Day(s)	**42** %	**0**

THIS CHANGE ORDER PROVIDES FOR:

Furnishing and installing two (2) additional no. 16 reinforcing bars secured to the nelson studs between the modular joint seal assembly support boxes and one (1) additional no. 13 reinforcing bar through the eyelets over the support boxes in the modular joint closure pours of modular joint seal assemblies BE, CE, DE, BW, CW, and DW as shown on the attached sketch (Page 2 of 2 of the change order), of the SFOBB East Span Skyway, Bridge Nos. 34-0006L/R.

The per contract plan installed reinforcing in the modular joint closure pours left a void between 400 to 600 mm without reinforcing. The Engineer, required the installation of additional reinforcing in the void as shown on the sketch attached to the change order at Modular Joint Seal Assemblies BE, CE, DE, BW, CW, and DW, resulting in an increase of 1,740 KG to bid item number 62.

In accordance with Section 4-1.03B, "Increased or Decreased Quantities," of the Standard Specifications, the additional reinforcing will be measured and paid for by increasing the quantities of Contract Item No. 62, "BAR REINFORCING (BRIDGE)."

Since the dimensions between the support boxes varies, the additional reinforcing required custom fabrication. The labor costs required for the custom fabrication are not fully covered by the adjustment at contract item price. Therefore, the Contractor will be compensated for the additional labor at an agreed lump sum.

For the additional labor cost, and in addition to the increase in contract item at contract price compensation, the Contractor will be paid an agreed lump sum amount of $5,371.00. This agreed lump sum constitutes full compensation, including all markups. The method of payment for this work is Extra Work at Agreed Lump Sum. A complete Force Account cost analysis is on file with the project records.

This contract change order will result in a cost increase of $7,894.00 ($2,523.00 + $5,371.00) to the project, which can be financed from the contingency funds.

Prior approval was obtained from Mr. Kannu Balan for Mr. Doug Coe, Supervising Bridge Engineer, on July 25, 2007. A copy of the prior approval is attached.

FHWA Prior approval is not required, as this is a minor change order.

Design concurrence was obtained from Mr. Jason Fan, Transportation Engineer, Office of Structure Contract Management, on August 21, 2007. A printed copy of the concurrence provided by Mr. Fan is attached.

Concurrence from Maintenance is not required as this change does not use maintenance funds or affect maintenance facilities or operations.

No time adjustment is warranted for this change as it does not affect the controlling operation.

ADA Notice: For individuals with sensory disabilities, this document is available in alternate formats. For information call: (916) 654-6410 or TDD (916) 654-3880 or write Records and Forms Management, 1120 N Street, MS-89, Sacramento, CA 95814.

RECEIVED
066348 JAN -2 80

CONCURRED BY:			
Construction Engineer:	Douglas Coe DJC	Date 11-13-07	
Bridge Engineer:	Douglas Coe DJC	Date 11-13-07	
Project Engineer:		Date	
Project Manager:		Date	
FHWA Rep.:		Date	
Environmental:		Date	
Other (specify):	Jason Fan, Design	Date	8/21/07
Other (specify):		Date	
District Prior Approval By:	Douglas Coe	Date	7/25/07
HQ (Issue Approve) By:		Date	
Resident Engineer's Signature:		Date	
		11-13-07	

ESTIMATE OF COST

	THIS REQUEST	TOTAL TO DATE
ITEMS	$2,523.00	$2,523.00
FORCE ACCOUNT	$0.00	$0.00
AGREED PRICE	$5,371.00	$5,371.00
ADJUSTMENT	$0.00	$0.00
TOTAL	$7,894.00	$7,894.00

FEDERAL PARTICIPATION

☑ PARTICIPATING ☐ PARTICIPATING IN PART ☐ NONE
☐ NON-PARTICIPATING (MAINTENANCE) ☐ NON-PARTICIPATING

FEDERAL SEGREGATION (if more than one Funding Source or P.I.P. type)
☑ CCO FUNDED PER CONTRACT ☐ CCO FUNDED AS FOLLOWS

FEDERAL FUNDING SOURCE	PERCENT

ADA Notice: For individuals with sensory disabilities, this document is available in alternate formats. For information call: (916) 654-6410 or TDD (916) 654-3880 or write Records and Forms Management, 1120 N Street, MS-89, Sacramento, CA 95814.

STATE OF CALIFORNIA - DEPARTMENT OF TRANSPORTATION

CONTRACT CHANGE ORDER

Change Requested by: Engineer

CCO: 214	Suppl. No. 0	Contract No. 04 - 012024	Road 04-SF,Ala-80-13.9/14.3,0.0/1.6	FED. AID LOC.: ACIM-080-1(085)8N

To: **KIEWIT / FCI / MANSON a JV**

You are directed to make the following changes from the plans and specifications or do the following described work not included in the plans and specifications for this contract. ***NOTE: This change order is not effective until approved by the Engineer.***

Description of work to be done, estimate of quantities and prices to be paid. (Segregate between additional work at contract price, agreed price and force account.) Unless otherwise stated, rates for rental of equipment cover only such time as equipment is actually used and no allowance will be made for idle time. This last percentage shown is the net accumulated increase or decrease from the original

As authorized by the Engineer, furnish and install two (2) additional no. 16 reinforcing bars secured to the nelson studs between the modular joint seal assembly support boxes and one (1) additional no. 13 reinforcing bar through the eyelets over the support boxes in the modular joint closure pours of modular joint seal assemblies BE, CE, DE, BW, CW, and DW as shown on the attached sketch (Page 2 of 2 of the change order), of the SFOBB East Span Skyway, Bridge Nos. 34-0006L/R.

Estimate of Increase in Contract Item at Contract Price:

Item No. 62: BAR REINFORCING STEEL (BRIDGE)

1740 KG (+0.01%) @ $1.45 /KG = +$2,523.00 (+0.01%)

Estimated total cost for Increase in Contract Item.....$2,523.00

The quantity increase shown here for Contact Item No. 62, "BAR REINFORCING STEEL (BRIDGE)," when combined with quantities shown in the engineer's estimate, and as modified by any previous change orders, will be the final quantities for which payment will be made for this contract item.

Extra Work at Lump Sum:

Compensation for the additional labor cost to custom fabricate the additional reinforcing between the modular joint seal assembly support boxes.

For this Extra Work and in addition to the increase in contract item at contract price compensation, the Contractor agrees to accept an agreed lump sum amount of $5,371.00. This agreed lump sum in conjuction with the increase in contract item at contract price constitutes full compensation for all costs, including markups, all direct and indirect costs, all associated project impacts, and all overhead costs.

Extra Work at Agreed Lump Sum $5,371.00

Estimated Cost: Increase ☑ Decrease ☐ $7,894.00

By reason of this order the time of completion will be adjusted as follows: 0 days

Submitted by

Signature	Resident Engineer DOUG COE, Supervising Br. Eng.	Date 11-13-07

Approval Recommended by

Signature	Construction Engineer DOUG COE	Date 11-13-07

Engineer Approval by

Signature	Construction Manager PETER SIEGENTHALER	Date 11-6-07

We the undersigned contractor, have given careful consideration to the change proposed and agree, if this proposal is approved, that we will provide all equipment, furnish the materials, except as may otherwise be noted above, and perform all services necessary for the work above specified, and will accept as full payment therefor the prices shown above.

NOTE: If you, the contractor, do not sign acceptance of this order, your attention is directed to the requirements of the specifications as to proceeding with the ordered work and filing a written protest within the time therein specified.

Contractor Acceptance by

Signature	(Print name and title) Lee Zink Project Director	Date 11/16/07

SKYWAY PROJECT - General Field Issue Resolution Form

DATE: 7/2/07

ISSUE NUMBER:

SUBJECT: VOID IN REBAR DESIGN

LOCATION(S): EXPANSION JOINTS BE CE, DE, BW, CW, DW

ATTENDING: K. BASKER/

RESOLVED: Y / N

Description of issue:

A VOID IN THE REBAR OCCURRED BETWEEN THE SUPPORT BOXES OF THE EXPANSION JOINT. FROM THAT VOID, THERE WAS A SUBSTANTIAL AMOUNT OF MASS CONCRETE FROM THE VERTICAL INSIDE FACE TO THE INNER MOST NELSON STUDS.

Picture or sketch of issue and/or resolution (attach additional sheets if needed)

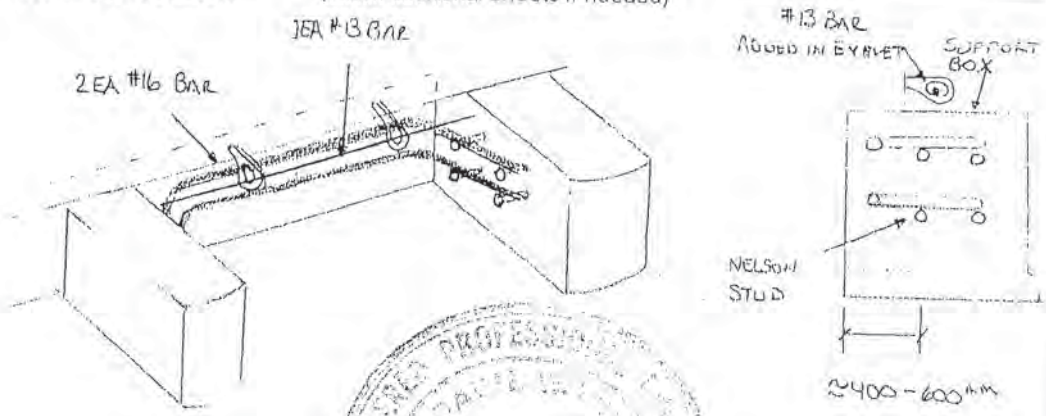

3/31/09

Resolution

CALTRANS DIRECTED KFM TO ADD 2 EA #16 REBAR AS SHOWN. THIS ELIMINATED THE 400mm - 600mm VOID IN THOSE AREAS. ALSO A #13 BAR WAS ADDED INSIDE THE EYELETS BETWEEN THE SUPPORT BOXES.

CONTRACT NO. 04-012024
CCO NO. 214
PAGE 2 OF 2

Follow Up Action By:

SEE CALTRANS' COMMENTS 7/11/07

Signatures:	KFM	Caltrans
	KYLE D BASKER	

STATE OF CALIFORNIA - DEPARTMENT OF TRANSPORTATION

CONTRACT CHANGE ORDER MEMORANDUM

DATE: 8/27/2007 Page 1 of 1

TO: PETER SIEGENTHALER / DOUG COE, Supervising Br. Eng.

FROM: DOUG COE, Supervising Br. Eng.

FILE: **E.A.** 04 - 012024
CO-RTE-PM 04-SF,Ala-80-13.9/14.3,0.0/1.6
FED. NO. ACIM-080-1(085)8N

CCO# **215** SUPPLEMENT#: **0** Category Cod **CXSA**

CONTINGENCY BALANCE (Incl. this change **$4,073,112.11**

COST: **$0.00** INCREASE ☐ DECREASE ☐

HEADQUARTERS APPROVAL REQUIRED? ☐ YES ☑ NO

SUPPLEMENTAL FUNDS PROVIDED: **$0.00**

IS THIS REQUEST IN ACCORDANCE WITH ENVIRONMENTAL DOCUMENTS? ☑ YES ☐ NO

CCO DESCRIPTION:
Delete Section 14-VI of the Special Prov

PROJECT DESCRIPTION:
REPLACE SFOBB EAST SPAN

Original Contract Time:	Time Adj. This Change:	Previously Approved CCO Time Adjustments:	Percentage Time Adjusted: (including this change)	Total # of Unreconciled Deferred Time CCO(s): (including this change)
1000 Day(s)	**0** Day(s)	**424** Day(s)	**42** %	**0**

THIS CHANGE ORDER PROVIDES FOR:
Deleting SECTION 14-VI, "RECORD OF MATERIAL, SUPPLIES, AND LABOR," of the contract special provisions, in accordance with CPB 07-4, Federal Highway Administration FormFHWA-47M.

This change has received FHWA's prior approval by Jason Dietz on May 22, 2007.

No adjustment in compensation or contract time is warranted by reason of this change.

CONCURRED BY:

Construction Engineer:	Douglas Coe	DBC	Date 8-27-07
Bridge Engineer:	Douglas Coe	DBC	Date 8-27-07
Project Engineer:			Date
Project Manager:			Date
FHWA Rep.:	Jason Dietz		Date 5/22/07
Environmental:			Date
Other (specify):			Date
Other (specify):			Date
District Prior Approval By:			Date
HQ (Issue Approval By:			Date
Resident Engineer's Signature:			Date 8-27-07

ESTIMATE OF COST

	THIS REQUEST	TOTAL TO DATE
ITEMS	$0.00	$0.00
FORCE ACCOUNT	$0.00	$0.00
AGREED PRICE	$0.00	$0.00
ADJUSTMENT	$0.00	$0.00
TOTAL	$0.00	$0.00

FEDERAL PARTICIPATION

☑ PARTICIPATING ☐ PARTICIPATING IN PART ☐ NONE
☐ NON-PARTICIPATING (MAINTENANCE) ☐ NON-PARTICIPATING

FEDERAL SEGREGATION (if more than one Funding Source or P.I.P. type)
☑ CCO FUNDED PER CONTRACT ☐ CCO FUNDED AS FOLLOWS

FEDERAL FUNDING SOURCE PERCENT

ADA Notice: For individuals with sensory disabilities, this document is available in alternate formats. For information call: (916) 654-6410 or TDD (916) 654-3880 or write Records and Forms Management, 1120 N Street, MS-89, Sacramento, CA 95814.

Construction Policy Bulletin

CPB 07-4 Federal Highway Administration Form FHWA-47M

References: *Construction Manual*, Section 3-911 "Payment of a Progress Estimate After Contract Acceptance"
Construction Manual, Section 3-914A "Material to Submit"
Construction Manual, Section 5-101E "Federal Forms"

Effective Date: August 22, 2007

Approved: Mark Leja
Acting Chief
Division of Construction

Approval Date: August 21, 2007

Background

For several years, Caltrans and other state Departments of Transportation (DOT) have commented that Federal Highway Administration (FHWA) reports generated from data collected through Federal Form FHWA-47M, "Statement of Materials and Labor Used by Contractors on Highway Construction Involving Federal Funds," were of little use, since statistical limitations and accuracy of the data could result in misleading information. The DOTs suggested eliminating reporting requirements altogether. FHWA conducted a review of state DOT highway construction costs and cost data collection requirements and determined it was appropriate to discontinue certain reporting requirements.

Existing Procedure

Before payment of a final estimate, the Division of Construction's progress pay staff must ensure that administrative details have been completed. When special provisions require, the district must submit the original and two copies of the Federal Form FHWA-47M, which is prepared by the prime contractor.

New Procedure

Effective August 2, 2007, prime contractors will no longer be required to submit Federal Form FHWA-47M before receiving final payment. On all ongoing federal-aid contracts, resident engineers must execute a contract change order (CCO) to eliminate this requirement. **Resident engineers have authority to approve this CCO.** The cost to complete FHWA-47M is negligible, so the CCO will be zero cost. A sample CCO and memorandum are attached.

For questions regarding this new procedure, please contract Rick Gifford, Division of Construction, at 916-657-5211.

Attachments

STATE OF CALIFORNIA - DEPARTMENT OF TRANSPORTATION

CONTRACT CHANGE ORDER

Change Requested by: Engineer

CCO: 215	Suppl. No. 0	Contract No. 04 - 012024	Road 04-SF,Ala-80-13.9/14.3,0.0/1.6	FED. AID LOC.: ACIM-080-1(085)8N

To: **KIEWIT / FCI / MANSON a JV**

You are directed to make the following changes from the plans and specifications or do the following described work not included in the plans and specifications for this contract. ***NOTE: This change order is not effective until approved by the Engineer.***

Description of work to be done, estimate of quantities and prices to be paid. (Segregate between additional work at contract price, agreed price and force account.) Unless otherwise stated, rates for rental of equipment cover only such time as equipment is actually used and no allowance will be made for idle time. This last percentage shown is the net accumulated increase or decrease from the original

Delete SECTION 14-VI, "RECORD OF MATERIALS, SUPPLIES, AND LABOR," of the Contract Special Provisions.

Adjustment of Compensation at Lump Sum:

There shall be no cost by reason of this change to the Special Provisions. This agreement constitutes full compensation to the Contractor, all associated project impacts, all overhead costs, and any and all risks associated with the performance of this change.

Estimated Cost: Increase ☐ Decrease ☐ $0.00

By reason of this order the time of completion will be adjusted as follows: 0 days

Submitted by

Signature	Resident Engineer DOUG COE, Supervising Br. Eng.	Date 8-27-07

Approval Recommended by

Signature	Construction Engineer DOUG COE	Date 8-27-07

Engineer Approval by

Signature	Construction Manager PETER SIEGENTHALER	Date 12-6-07

We the undersigned contractor, have given careful consideration to the change proposed and agree, if this proposal is approved, that we will provide all equipment, furnish the materials, except as may otherwise be noted above, and perform all services necessary for the work above specified, and will accept as full payment therefor the prices shown above.

NOTE: If you, the contractor, do not sign acceptance of this order, your attention is directed to the requirements of the specifications as to proceeding with the ordered work and filing a written protest within the time therein specified.

Contractor Acceptance by

Signature	(Print name and title) Lee Zink Project Director	Date 11/30/07

STATE OF CALIFORNIA - DEPARTMENT OF TRANSPORTATION

CONTRACT CHANGE ORDER MEMORANDUM

TO: PETER SIEGENTHALER / DOUG COE, Supervising Br. Eng.

FROM: DOUG COE, Supervising Br. Eng.

FILE: **E.A.** 04 - 012024
CO-RTE-PM 04-SF,Ala-80-13.9/14.3,0.0/1.6
FED. NO. ACIM-080-1(085)8N

CCO# **215** SUPPLEMENT#: **0** Category Cod **CXSA**

CONTINGENCY BALANCE (incl. this change **$4,073,112.11**

COST: **$0.00** INCREASE ☐ DECREASE ☐

HEADQUARTERS APPROVAL REQUIRED? ☐ YES ☑ NO

SUPPLEMENTAL FUNDS PROVIDED: **$0.00**

IS THIS REQUEST IN ACCORDANCE WITH ENVIRONMENTAL DOCUMENTS? ☑ YES ☐ NO

CCO DESCRIPTION:
Delete Section 14-VI of the Special Prov

PROJECT DESCRIPTION:
REPLACE SFOBB EAST SPAN

Original Contract Time:	Time Adj. This Change:	Previously Approved CCO Time Adjustments:	Percentage Time Adjusted: (including this change)	Total # of Unreconciled Deferred Time CCO(s): (including this change)
1000 Day(s)	**0** Day(s)	**424** Day(s)	**42** %	**0**

THIS CHANGE ORDER PROVIDES FOR:

Deleting SECTION 14-VI, "RECORD OF MATERIAL, SUPPLIES, AND LABOR," of the contract special provisions, in accordance with CPB 07-4, Federal Highway Administration FormFHWA-47M.

This change has received FHWA's prior approval by Jason Dietz on May 22, 2007.

No adjustment in compensation or contract time is warranted by reason of this change.

RECEIVED 066349 JAN-2 08

CONCURRED BY:

Construction Engineer:	Douglas Coe	DBC	Date 8-27-07
Bridge Engineer:	Douglas Coe	DBC	Date 8-27-07
Project Engineer:			Date
Project Manager:			Date
FHWA Rep.:	Jason Dietz		Date 5/22/07
Environmental:			Date
Other (specify):			Date
Other (specify):			Date
District Prior Approval By:			Date
HQ (Issue Approve) By:			Date
Resident Engineer's Signature:			Date 8-27-07

ESTIMATE OF COST

	THIS REQUEST	TOTAL TO DATE
ITEMS	$0.00	$0.00
FORCE ACCOUNT	$0.00	$0.00
AGREED PRICE	$0.00	$0.00
ADJUSTMENT	$0.00	$0.00
TOTAL	$0.00	$0.00

FEDERAL PARTICIPATION

☑ PARTICIPATING ☐ PARTICIPATING IN PART ☐ NONE
☐ NON-PARTICIPATING (MAINTENANCE) ☐ NON-PARTICIPATING

FEDERAL SEGREGATION (if more than one Funding Source or P.I.P. type)
☑ CCO FUNDED PER CONTRACT ☐ CCO FUNDED AS FOLLOWS

FEDERAL FUNDING SOURCE PERCENT

ADA Notice: For individuals with sensory disabilities, this document is available in alternate formats. For information call: (916) 654-6410 or TDD (916) 654-3880 or write Records and Forms Management, 1120 N Street, MS-89, Sacramento, CA 95814.

STATE OF CALIFORNIA - DEPARTMENT OF TRANSPORTATION

CONTRACT CHANGE ORDER

Change Requested by: Engineer

CCO: 215	Suppl. No. 0	Contract No. 04 - 012024	Road 04-SF,Ala-80-13.9/14.3,0.0/1.6	FED. AID LOC.: ACIM-080-1(085)8N

To: **KIEWIT / FCI / MANSON a JV**

You are directed to make the following changes from the plans and specifications or do the following described work not included in the plans and specifications for this contract. ***NOTE: This change order is not effective until approved by the Engineer.***

Description of work to be done, estimate of quantities and prices to be paid. (Segregate between additional work at contract price, agreed price and force account.) Unless otherwise stated, rates for rental of equipment cover only such time as equipment is actually used and no allowance will be made for idle time. This last percentage shown is the net accumulated increase or decrease from the original

Delete SECTION 14-VI, "RECORD OF MATERIALS, SUPPLIES, AND LABOR," of the Contract Special Provisions.

Adjustment of Compensation at Lump Sum:

There shall be no cost by reason of this change to the Special Provisions. This agreement constitutes full compensation to the Contractor, all associated project impacts, all overhead costs, and any and all risks associated with the performance of this change.

Estimated Cost: Increase ☐ Decrease ☐ **$0.00**

By reason of this order the time of completion will be adjusted as follows: 0 days

Submitted by

Signature	Resident Engineer DOUG COE, Supervising Br. Eng.	Date 8-27-07

Approval Recommended by

Signature	Construction Engineer DOUG COE	Date 8-27-07

Engineer Approval by

Signature	Construction Manager PETER SIEGENTHALER	Date 12-6-07

We the undersigned contractor, have given careful consideration to the change proposed and agree, if this proposal is approved, that we will provide all equipment, furnish the materials, except as may otherwise be noted above, and perform all services necessary for the work above specified, and will accept as full payment therefor the prices shown above.

NOTE: If you, the contractor, do not sign acceptance of this order, your attention is directed to the requirements of the specifications as to proceeding with the ordered work and filing a written protest within the time therein specified.

Contractor Acceptance by

Signature	(Print name and title) Lee Zink Project Director	Date 11/30/07

STATE OF CALIFORNIA - DEPARTMENT OF TRANSPORTATION

CONTRACT CHANGE ORDER MEMORANDUM

TO: PETER SIEGENTHALER / DOUG COE, Supervising Br. Eng.	FILE: E.A. 04 - 012024
FROM: DOUG COE, Supervising Br. Eng.	CO-RTE-PM 04-SF,Ala-80-13.9/14.3,0.0/1.6
	FED. NO. ACIM-080-1(085)8N
CCO# **216** SUPPLEMENT#: **0** Category Cod **CXSX**	CONTINGENCY BALANCE (incl. this change **$4,073,111.11**
COST: **$1.00** INCREASE ☑ DECREASE ☐	HEADQUARTERS APPROVAL REQUIRED? ☑ YES ☐ NO
SUPPLEMENTAL FUNDS PROVIDED: **$0.00**	IS THIS REQUEST IN ACCORDANCE WITH ENVIRONMENTAL DOCUMENTS? ☑ YES ☐ NO
CCO DESCRIPTION: Temporary Release of Liability	**PROJECT DESCRIPTION:** REPLACE SFOBB EAST SPAN

Original Contract Time:	Time Adj. This Change:	Previously Approved CCO Time Adjustments:	Percentage Time Adjusted: (including this change)	Total # of Unreconciled Deferred Time CCO(s): (including this change)
1000 Day(s)	**0** Day(s)	**424** Day(s)	**42** %	**0**

THIS CHANGE ORDER PROVIDES FOR:

the release of KFM's liability in order for the Department to provide access and water transportation for the Coast Guard employees between Pier 7 and the Coast Guard facility on Yerba Buena Island during the closure of the San Francisco - Oakland Bay Bridge from 8:00 PM on August 31, 2007, untill 5:00 AM on September 4, 2007.

During the closure of the Bay Bridge the Department is obligated to provide transportation for the employees of the Coast Guard station on Yerba Buena Island between Pier 7 and the Island. In order to provide this over-water transportation the Department is requesting the use of the water access owned and operated by the Skyway contract Contractor, Kiewit/FCI/Manson, a J.V (KFM).

To grand the Department public use of the water access, KFM requires the release of liability during the time of the Event discribed above and that the Department and KFM agree to the following:

1. The Event is for the benefit of the Department and was not contemplated in the Agreement between the Department and KFM.

2. The Department recognizes that the bridge and Berth areas will still be a construction site at the time of the Event and that KFM is not expected to have responsibility for the project site as a public place. The Department acknowledges that it understands that a construction site is not normally maintained for public access and notwithstanding the risks of such construction site; the Department issues this change order for public access to the site on the date(s) of the Event.

3. The Department shall be responsible for the planning, execution and any consequences of the project site being open to the Coast Guard employees for the Event. Notwithstanding the standard specifications, special provisions and other related contract documents, the Department shall provide for a safe environment for the public and workers, shall have responsibility for appointing a safety and security manager for the site to act with respect to safety, security and health matters, and shall provide security for the Project during the times of the above discribed Event, and for initiating maintaining and providing supervision of safety precautions and programs during the Event. KFM will look to the Department for directions pertinent to KFM's support of the Department in preparing and maintaining the jobsite for public use and public safety. The Department shall bear the risk of physical loss of or damage to the Project and shall be obligated to promptly repair, replace or reconstruct all or any portion of the Project which is lost, damaged or destroyed as a result of the Event, and KFM is relieved of the risk of loss to the Project addressed in the Agreement, to the extent said loss arises out of the Event.

4. The Department shall have responsibility for all aspects of the Event, including but not limited to traffic control, parking, transportation, pedestrian access, security, sanitation, cleanup, emergency services, communications and publicity.

5. To the extent allowed by law, the Department shall indemnify, defend and hold harmless KFM, its individual partners, subcontractors, and the agents, officers and employees of each from and against all losses and expenses (including without limitation losses arising from bodily injury, personal injury and/or damage to property, including legal expenses and attorneys' fees) incurred because of civil suits, claims and all other damages arising out of the Event.

   Provided that this indemnification does not apply to any losses or claims that are caused by or result from the sole negligence of the KFM, its partners, subcontractors, agents or employees; and

ADA Notice: For individuals with sensory disabilities, this document is available in alternate formats. For information call: (916) 654-6410 or TDD (916) 654-3880 or write Records and Forms Management, 1120 N Street, MS-89, Sacramento, CA 95814.

Solely for purposes of this indemnity obligation, Caltrans specifically and expressly waives any immunity that may be granted whether under contract or law.

6. The term "KFM" means Kiewit/FCI/Manson, a Joint Venture, and each of its individual joint venture partners.

7. The terms and conditions in this change order shall supersede and take precedence notwithstanding other terms in the Agreement to the contrary. Unless expressly provided herein, all provisions of the Agreement shall remain in full force and effect during the Event.

For allowing public access to the jobsite for the duration of the Event, the Contractor will be paid an agreed lump sum amount of $1.00. This sum constitutes full compensation, including all markups. The method of payment will be Adjustment Of Compensation At Agreed Lump Sum.

Prior approval was obtained from Mr. Pete Siegenthaler, Principal Construction Engineer, on August 29, 2007. A copy of the prior approval is attached.

Verbal Approval was obtained from Ms. Nancy Bobb, FHWA Bay Bridge Project Manager, by Mr. Kannu Balan on August 30, 2007. An electronic message is to follow. A printed copy of the prior approval to be provided by Ms. Bobb will be attached.

Prior Approval was obtained from Mr. Ken Terpstra, SFOBB Project Manager, via electronic message on August 30, 2007. A printed copy of the prior approval provided by Mr. Terpstra is attached.

Concurrence from Design is not required because this change does not affect any design issues.

Concurrence from Maintenance is not required as this change does not use maintenance funds or affect maintenance facilities or operations.

No time adjustment is warranted for this change as it does not affect the controlling operation.

CONCURRED BY:			
Construction Engineer:	Douglas Coe DJC	Date 8-30-07	
Bridge Engineer:	Douglas Coe DJC	Date 8-30-07	
Project Engineer:		Date	
Project Manager:	Ken Terpstra	Date	8/30/07
FHWA Rep.:	Nancy Bobb	Date	8/30/07
Environmental:		Date	
Other (specify):		Date	
Other (specify):		Date	
District Prior Approval By:	Peter Siegenthaler	Date	8/29/07
HQ (Issue Approve) By:	Ken Darby	Date	
Resident Engineer's Signature:		Date 8-30-07	

ESTIMATE OF COST

	THIS REQUEST	TOTAL TO DATE
ITEMS	$0.00	$0.00
FORCE ACCOUNT	$0.00	$0.00
AGREED PRICE	$0.00	$0.00
ADJUSTMENT	$1.00	$1.00
TOTAL	$1.00	$1.00

FEDERAL PARTICIPATION

☑ PARTICIPATING ☐ PARTICIPATING IN PART ☐ NONE
☐ NON-PARTICIPATING (MAINTENANCE) ☐ NON-PARTICIPATING

FEDERAL SEGREGATION (If more than one Funding Source or P.I.P. type)
☑ CCO FUNDED PER CONTRACT ☐ CCO FUNDED AS FOLLOWS

FEDERAL FUNDING SOURCE	PERCENT

ADA Notice: For individuals with sensory disabilities, this document is available in alternate formats. For information call: (916) 654-6410 or TDD (916) 654-3880 or write Records and Forms Management, 1120 N Street, MS-89, Sacramento, CA 95814.

216

Department of Transportation
EAST SPAN SEISMIC SAFETY PROJECT
CONCURRENCE FOR CHANGE ORDERS (08/04)
Contract No. 04-012024
Co. & Rte Ala-80-13.9/14.3, 0.0/1.6

CCO No.: / S#: 0
Title: Temporary release of liability
Date: 8/28/07

To: DOUGLAS COE, Resident Engineer

Requested By: KANNU BALAN, Senior Engineer (initials KB)

Description of Work:
Release the Skyway Contractor, KFM a J.V., from all liability associated with opening of the construction site to the public in order to provide water access from Pier 7 to the Coast Guard location on the Yerba Buena Island for Coast Guard employees during the closure of the San Francisco/Oakland Bay Bridge from 8/31/07, 8:00 PM to 9/4/07, 5:00 AM.

Reason for Change:
The Department will provide transportation for Coast Guard employees from the Pier 7 site to the Coast Guard facility on Yerba Buena facility during the Bay Bridge closure. In order to use KFM's water access, the Contractor is requiring release of contract liability during this period, which is outside of the contractors normal working hours.

Approvals Required By:
- ☒ Division of Construction, HQ
- ☒ FHWA
- ☐ District

Concurrence Required By:
- ☐ Design
- ☐ Maintenance

Discussed with persons noted below:

FHWA:	Date	Br. Design:	Date
District:	Date	Br. Geology:	Date
Other:	Date	Br. Maintenance:	Date

Estimated Cost: $1.00

Recommended Method of Payment:
- ☐ Contract Items
- ☒ Agreed Price (LS or UP)
- ☐ Extra Work at Force Account
- ☐ Other:

Recommended Time Adjustment: 0

Prior Approvals:
- ☐ This represents Prior Approval to proceed with the work.
- ☒ This represents an acknowledgement that the individuals below are in concurrence with this change order, which requires Division of Construction approval before proceeding with the work.

Comments:

8-29-07
Douglas Coe, Resident Engineer — Date

8/29/07
Pete Siegenthaler, Principal Construction Engineer — Date

8/29/07
Patrick Treacy, Construction Coordinator — Date

TELECOPY

California Department of Transportation

CONSTRUCTION DIVISION

TO: District 4 CCO Desk

Date: 8/31/2007

Contract No.: 4 - 012024

Road: SF, ALA-80-13.9/14.3, 0.0/1.6

FED. No.: ACIM-080-1(085)8N

To: SARTIPI - 04

Attention: 04 - SARWARY

HQ Direction: TO ISSUE AND APPROVE

CCO No. 216 **Sup. No.** 0 **Rev. No.** 0

Per Your Submittal Dated: 8/30/2007 **CCO Category Code:** C - X - S - X

PROVIDES FOR CONTRACTOR'S RELEASE OF LIABILITY FOR DEPARTMENT TO PROVIDE ACCESS AND WATER TRANSPORTATION FOR THE COAST GUARD EMPLOYEES BETWEEN PIER 7 AND THE COAST GUARD FACILITY ON YERBA BUENA ISLAND FROM 8:00 PM ON AUGUST 31, 2007 AND 5:00 AM ON SEPTEMBER 4, 2007.

ISSUE AND APPROVE IS CONDITIONAL ON THE FOLLOWING:

1. OBTAINING THE CONTRACTOR'S SIGNATURE ON THE CCO.

THE TOTAL COST OF THIS CHANGE IS SHOWN AS $1.00 WITH NO TIME ADJUSTMENT.

Items:	$0.00
Force Account:	$0.00
Agreed Price:	$0.00
Adj. of Comp.	$1.00
Total:	**$1.00**
Time:	**(NONE)**

ELIZABETH DOOHER,
Acting Assistant Division Chief, by: Ken Darby

Ken Darby

Division of Construction
1120 "N" Street, MS-44, Sacramento, CA 95814
Fax Number: (916) 654-5735
To Confirm Transmission, Call (916) 654-5259

U.S. DEPARTMENT OF TRANSPORTATION FEDERAL HIGHWAY ADMINISTRATION CALIFORNIA DIVISION OFFICE

RECORD OF PRIOR APPROVAL FOR MAJOR CONTRACT CHANGE ORDERS

PROJECT NO.	CCO NO.	CONTRACT NO.	DIST-CO-RTE-PM
ACIM -080-1(085)8N	216	04-012024	04-SF,Ala-80-13.9/14.3,0.0/1.6

REQUESTED BY:	CALTRANS HQ	DATE
Jake VanEnckevort	X RE/DISTRICT	8/29/07

PROPOSED CHANGE:

This change order provides for the release of KFM's liability in order for the Department to provide public access and water transportation for the Coast Guard employees betweei7 Pier 7 and the Coast Guard facility on Yerba Buena island during the closure of the San Francisco - Oakland Bay Bridge from *8:00* PM on August 31, *2007*, until1 *5:00* AM on September 4, *2007*.

REASON FOR CHANGE:

Because of the closure of I-80, Coast Guard employees will not be able to reach the Coast Guard facility on Yerba Buena Island. Caltrans is therefore providing over-water transportation during the time of the closure between Pier *7* and the Island.

For allowing public access to the jobsite for the duration of the event, the Contractor will be paid an agreed lump sum nominal amount of $1.00

TIME EXTENSIONS	ACTIVITY ON CRITICAL PATH AFFECTED BY CCO (IF TIME EXTENSION INVOLVED)
_NONE __ DAYS __ DEFERRED	

ESTIMATE OF COST:	CCO:	METHOD OF PAYMENT
$ 1.00 INCREASE $__ DECREASE	CONTRACT ITEM AGREED PRICE	X ADJUSTMENT OF COMPENSATION EXTRA WORK AT FORCE ACCOUNT

THE WORK COVERED BY THE PROPOSED REVISION AS DESCRIBED ABOVE IS APPROVED SUBJECT TO SUBMISSION OF SUPPORTING DOCUMENTATION INCLUDING COST EVALUATION AND JUSTIFICATION OF TIME EXTENSIONS.

OTHER CONDITIONS:

PRIOR APPROVAL TO PROCEED GRANTED BY:	DATE OF AUTHORIZATION:
Nancy E. Bobb	8/30/07

Form FHWA 7-358(c) Rev 3/93 (**Copy to CT**)

CONTRACT CHANGE ORDER

Change Requested by: Engineer

CCO: 216	Suppl. No. 0	Contract No. 04 - 012024	Road 04-SF,Ala-80-13.9/14.3,0.0/1.6	FED. AID LOC.: ACIM-080-1(085)8N

To: **KIEWIT / FCI / MANSON a JV**

You are directed to make the following changes from the plans and specifications or do the following described work not included in the plans and specifications for this contract. ***NOTE: This change order is not effective until approved by the Engineer.***

Description of work to be done, estimate of quantities and prices to be paid. (Segregate between additional work at contract price, agreed price and force account.) Unless otherwise stated, rates for rental of equipment cover only such time as equipment is actually used and no allowance will be made for idle time. This last percentage shown is the net accumulated increase or decrease from the original

Release KFM's liability in order for the Department to provide access and water transportation for the Coast Guard employees between Pier 7 and the Coast Guard facility on Yerba Buena Island during the closure of the San Francisco - Oakland Bay Bridge from 8:00 PM on August 31, 2007, untill 5:00 AM on September 4, 2007.

With respect to the above described Event, the Department and Kiewit/FCI/Manson, a J.V. agree as follows:

1. The Event is for the benefit of the Department and was not contemplated in the Agreement between the Department and KFM.

2. The Department recognizes that the bridge and Berth areas will still be a construction site at the time of the Event and that KFM is not expected to have responsibility for the project site as a public place. The Department acknowledges that it understands that a construction site is not normally maintained for public access and notwithstanding the risks of such construction site; the Department issues this change order for public access to the site on the date(s) of the Event.

3. The Department shall be responsible for the planning, execution and any consequences of the project site being open to the Coast Guard employees for the Event. Notwithstanding the standard specifications, special provisions and other related contract documents, the Department shall provide for a safe environment for the public and workers, shall have responsibility for appointing a safety and security manager for the site to act with respect to safety, security and health matters, and shall provide security for the Project during the times of the above discribed Event, and for initiating maintaining and providing supervision of safety precautions and programs during the Event. KFM will look to the Department for directions pertinent to KFM's support of the Department in preparing and maintaining the jobsite for public use and public safety. The Department shall bear the risk of physical loss of or damage to the Project and shall be obligated to promptly repair, replace or reconstruct all or any portion of the Project which is lost, damaged or destroyed as a result of the Event, and KFM is relieved of the risk of loss to the Project addressed in the Agreement, to the extent said loss arises out of the Event.

4. The Department shall have responsibility for all aspects of the Event, including but not limited to traffic control, parking, transportation, pedestrian access, security, sanitation, cleanup, emergency services, communications and publicity.

5. To the extent allowed by law, the Department shall indemnify, defend and hold harmless KFM, its individual partners, subcontractors, and the agents, officers and employees of each from and against all losses and expenses (including without limitation losses arising from bodily injury, personal injury and/or damage to property, including legal expenses and attorneys' fees) incurred because of civil suits, claims and all other damages arising out of the Event.

   Provided that this indemnification does not apply to any losses or claims that are caused by or result from the sole negligence of the KFM, its partners, subcontractors, agents or employees; and

   Solely for purposes of this indemnity obligation, Caltrans specifically and expressly waives any immunity that may be granted whether under contract or law.

6. The term "KFM" means Kiewit/FCI/Manson, a Joint Venture, and each of its individual joint venture partners.

7. The terms and conditions in this change order shall supersede and take precedence notwithstanding other terms in the Agreement to the contrary. Unless expressly provided herein, all provisions of the Agreement shall remain in full force and effect during the Event.

CONTRACT CHANGE ORDER

Change Requested by: Engineer

CCO: 216	Suppl. No. 0	Contract No. 04 - 012024	Road 04-SF,Ala-80-13.9/14.3,0.0/1.6	FED. AID LOC.: ACIM-080-1(085)8N

Adjustment of Compensation at Lump Sum:

For allowing public access to the jobsite for the duration of the Event, the Contractor agrees to accept an agreed lump sum amount of $1.00. This agreed lump sum constitutes full compensation for all costs, including markups, all direct and indirect costs, all associated project impacts, and all overhead costs.

Estimated Cost: Increase ☑ Decrease ☐ $1.00

By reason of this order the time of completion will be adjusted as follows: 0 days

Submitted by

Signature	Resident Engineer DOUG COE, Supervising Br. Eng.	Date 8-30-07

Approval Recommended by

Signature	Construction Engineer DOUG COE	Date 8-30-07

Engineer Approval by

Signature	Construction Manager PETER SIEGENTHALER	Date 8/31/07

We the undersigned contractor, have given careful consideration to the change proposed and agree, if this proposal is approved, that we will provide all equipment, furnish the materials, except as may otherwise be noted above, and perform all services necessary for the work above specified, and will accept as full payment therefor the prices shown above.

NOTE: If you, the contractor, do not sign acceptance of this order, your attention is directed to the requirements of the specifications as to proceeding with the ordered work and filing a written protest within the time therein specified.

Contractor Acceptance by

Signature	(Print name and title) FERNANDO DELEON PROJECT MANAGER	Date 8/31/07

STATE OF CALIFORNIA - DEPARTMENT OF TRANSPORTATION

CONTRACT CHANGE ORDER MEMORANDUM

TO: PETER SIEGENTHALER / DOUG COE, Supervising Br. Eng.

FROM: DOUG COE, Supervising Br. Eng.

FILE: E.A. 04 - 012024
CO-RTE-PM 04-SF, Ala-80-13.9/14.3,0.0/1.6
FED. NO. ACIM-080-1(085)8N

CCO# **216** SUPPLEMENT#: **0** Category Cod **CXSX**

CONTINGENCY BALANCE (incl. this change **$4,073,111.11**

COST: **$1.00** INCREASE ☑ DECREASE ☐

HEADQUARTERS APPROVAL REQUIRED? ☑ YES ☐ NO

SUPPLEMENTAL FUNDS PROVIDED: **$0.00**

IS THIS REQUEST IN ACCORDANCE WITH ENVIRONMENTAL DOCUMENTS? ☑ YES ☐ NO

CCO DESCRIPTION:
Temporary Release of Liability

PROJECT DESCRIPTION:
REPLACE SFOBB EAST SPAN

Original Contract Time:	Time Adj. This Change:	Previously Approved CCO Time Adjustments:	Percentage Time Adjusted: (including this change)	Total # of Unreconciled Deferred Time CCO(s): (including this change)
1000 Day(s)	**0** Day(s)	**424** Day(s)	**42** %	**0**

THIS CHANGE ORDER PROVIDES FOR:
the release of KFM's liability in order for the Department to provide access and water transportation for the Coast Guard employees between Pier 7 and the Coast Guard facility on Yerba Buena Island during the closure of the San Francisco - Oakland Bay Bridge from 8:00 PM on August 31, 2007, untill 5:00 AM on September 4, 2007.

During the closure of the Bay Bridge the Department is obligated to provide transportation for the employees of the Coast Guard station on Yerba Buena Island between Pier 7 and the Island. In order to provide this over-water transportation the Department is requesting the use of the water access owned and operated by the Skyway contract Contractor, Kiewit/FCI/Manson, a J.V (KFM).

To grand the Department public use of the water access, KFM requires the release of liability during the time of the Event discribed above and that the Department and KFM agree to the following:

1. The Event is for the benefit of the Department and was not contemplated in the Agreement between the Department and KFM.

2. The Department recognizes that the bridge and Berth areas will still be a construction site at the time of the Event and that KFM is not expected to have responsibility for the project site as a public place. The Department acknowledges that it understands that a construction site is not normally maintained for public access and notwithstanding the risks of such construction site; the Department issues this change order for public access to the site on the date(s) of the Event.

3. The Department shall be responsible for the planning, execution and any consequences of the project site being open to the Coast Guard employees for the Event. Notwithstanding the standard specifications, special provisions and other related contract documents, the Department shall provide for a safe environment for the public and workers, shall have responsibility for appointing a safety and security manager for the site to act with respect to safety, security and health matters, and shall provide security for the Project during the times of the above discribed Event, and for initiating maintaining and providing supervision of safety precautions and programs during the Event. KFM will look to the Department for directions pertinent to KFM's support of the Department in preparing and maintaining the jobsite for public use and public safety. The Department shall bear the risk of physical loss of or damage to the Project and shall be obligated to promptly repair, replace or reconstruct all or any portion of the Project which is lost, damaged or destroyed as a result of the Event, and KFM is relieved of the risk of loss to the Project addressed in the Agreement, to the extent said loss arises out of the Event.

4. The Department shall have responsibility for all aspects of the Event, including but not limited to traffic control, parking, transportation, pedestrian access, security, sanitation, cleanup, emergency services, communications and publicity.

5. To the extent allowed by law, the Department shall indemnify, defend and hold harmless KFM, its individual partners, subcontractors, and the agents, officers and employees of each from and against all losses and expenses (including without limitation losses arising from bodily injury, personal injury and/or damage to property, including legal expenses and attorneys' fees) incurred because of civil suits, claims and all other damages arising out of the Event.

   Provided that this indemnification does not apply to any losses or claims that are caused by or result from the sole negligence of the KFM, its partners, subcontractors, agents or employees; and

ADA Notice: For individuals with sensory disabilities, this document is available in alternate formats. For information call: (916) 654-6410 or TDD (916) 654-3880 or write Records and Forms Management, 1120 N Street, MS-89, Sacramento, CA 95814.

Solely for purposes of this indemnity obligation, Caltrans specifically and expressly waives any immunity that may be granted whether under contract or law.

6. The term "KFM" means Kiewit/FCI/Manson, a Joint Venture, and each of its individual joint venture partners.

7. The terms and conditions in this change order shall supersede and take precedence notwithstanding other terms in the Agreement to the contrary. Unless expressly provided herein, all provisions of the Agreement shall remain in full force and effect during the Event.

For allowing public access to the jobsite for the duration of the Event, the Contractor will be paid an agreed lump sum amount of $1.00. This sum constitutes full compensation, including all markups. The method of payment will be Adjustment Of Compensation At Agreed Lump Sum.

Prior approval was obtained from Mr. Pete Siegenthaler, Principal Construction Engineer, on August 29, 2007. A copy of the prior approval is attached.

Verbal Approval was obtained from Ms. Nancy Bobb, FHWA Bay Bridge Project Manager, by Mr. Kannu Balan on August 30, 2007. An electronic message is to follow. A printed copy of the prior approval to be provided by Ms. Bobb will be attached.

Prior Approval was obtained from Mr. Ken Terpstra, SFOBB Project Manager, via electronic message on August 30, 2007. A printed copy of the prior approval provided by Mr. Terpstra is attached.

Concurrence from Design is not required because this change does not affect any design issues.

Concurrence from Maintenance is not required as this change does not use maintenance funds or affect maintenance facilities or operations.

No time adjustment is warranted for this change as it does not affect the controlling operation.

RECEIVED

CONCURRED BY:

Construction Engineer:	Douglas Coe DJC	Date	8-30-07
Bridge Engineer:	Douglas Coe DJC	Date	8-30-07
Project Engineer:		Date	
Project Manager:	Ken Terpstra	Date	8/30/07
FHWA Rep.:	Nancy Bobb	Date	8/30/07
Environmental:		Date	
Other (specify):		Date	
Other (specify):		Date	
District Prior Approval By:	Peter Siegenthaler	Date	8/29/07
HQ (Issue Approve) By:	Ken Darby	Date	
Resident Engineer's Signature:		Date	8-30-07

ESTIMATE OF COST

	THIS REQUEST	TOTAL TO DATE
ITEMS	$0.00	$0.00
FORCE ACCOUNT	$0.00	$0.00
AGREED PRICE	$0.00	$0.00
ADJUSTMENT	$1.00	$1.00
TOTAL	$1.00	$1.00

FEDERAL PARTICIPATION

☑ PARTICIPATING ☐ PARTICIPATING IN PART ☐ NONE
☐ NON-PARTICIPATING (MAINTENANCE) ☐ NON-PARTICIPATING

FEDERAL SEGREGATION (if more than one Funding Source or P.I.P. type)
☑ CCO FUNDED PER CONTRACT ☐ CCO FUNDED AS FOLLOWS

FEDERAL FUNDING SOURCE	PERCENT

ADA Notice: For individuals with sensory disabilities, this document is available in alternate formats. For information call: (916) 654-6410 or TDD (916) 654-3880 or write Records and Forms Management, 1120 N Street, MS-89, Sacramento, CA 95814.

CONTRACT CHANGE ORDER

Change Requested by: Engineer

CCO: 216	Suppl. No. 0	Contract No. 04 - 012024	Road 04-SF,Ala-80-13.9/14.3,0.0/1.6	FED. AID LOC.: ACIM-080-1(085)8N

To: **KIEWIT / FCI / MANSON a JV**

You are directed to make the following changes from the plans and specifications or do the following described work not included in the plans and specifications for this contract. ***NOTE: This change order is not effective until approved by the Engineer.***

Description of work to be done, estimate of quantities and prices to be paid. (Segregate between additional work at contract price, agreed price and force account.) Unless otherwise stated, rates for rental of equipment cover only such time as equipment is actually used and no allowance will be made for idle time. This last percentage shown is the net accumulated increase or decrease from the original

Release KFM's liability in order for the Department to provide access and water transportation for the Coast Guard employees between Pier 7 and the Coast Guard facility on Yerba Buena Island during the closure of the San Francisco - Oakland Bay Bridge from 8:00 PM on August 31, 2007, untill 5:00 AM on September 4, 2007.

With respect to the above described Event, the Department and Kiewit/FCI/Manson, a J.V. agree as follows:

1. The Event is for the benefit of the Department and was not contemplated in the Agreement between the Department and KFM.

2. The Department recognizes that the bridge and Berth areas will still be a construction site at the time of the Event and that KFM is not expected to have responsibility for the project site as a public place. The Department acknowledges that it understands that a construction site is not normally maintained for public access and notwithstanding the risks of such construction site; the Department issues this change order for public access to the site on the date(s) of the Event.

3. The Department shall be responsible for the planning, execution and any consequences of the project site being open to the Coast Guard employees for the Event. Notwithstanding the standard specifications, special provisions and other related contract documents, the Department shall provide for a safe environment for the public and workers, shall have responsibility for appointing a safety and security manager for the site to act with respect to safety, security and health matters, and shall provide security for the Project during the times of the above discribed Event, and for initiating maintaining and providing supervision of safety precautions and programs during the Event. KFM will look to the Department for directions pertinent to KFM's support of the Department in preparing and maintaining the jobsite for public use and public safety. The Department shall bear the risk of physical loss of or damage to the Project and shall be obligated to promptly repair, replace or reconstruct all or any portion of the Project which is lost, damaged or destroyed as a result of the Event, and KFM is relieved of the risk of loss to the Project addressed in the Agreement, to the extent said loss arises out of the Event.

4. The Department shall have responsibility for all aspects of the Event, including but not limited to traffic control, parking, transportation, pedestrian access, security, sanitation, cleanup, emergency services, communications and publicity.

5. To the extent allowed by law, the Department shall indemnify, defend and hold harmless KFM, its individual partners, subcontractors, and the agents, officers and employees of each from and against all losses and expenses (including without limitation losses arising from bodily injury, personal injury and/or damage to property, including legal expenses and attorneys' fees) incurred because of civil suits, claims and all other damages arising out of the Event.

   Provided that this indemnification does not apply to any losses or claims that are caused by or result from the sole negligence of the KFM, its partners, subcontractors, agents or employees; and

   Solely for purposes of this indemnity obligation, Caltrans specifically and expressly waives any immunity that may be granted whether under contract or law.

6. The term "KFM" means Kiewit/FCI/Manson, a Joint Venture, and each of its individual joint venture partners.

7. The terms and conditions in this change order shall supersede and take precedence notwithstanding other terms in the Agreement to the contrary. Unless expressly provided herein, all provisions of the Agreement shall remain in full force and effect during the Event.

CONTRACT CHANGE ORDER

Change Requested by: Engineer

CCO: 216	Suppl. No. 0	Contract No. 04 - 012024	Road 04-SF,Ala-80-13.9/14.3,0.0/1.6	FED. AID LOC.: ACIM-080-1(085)8N

Adjustment of Compensation at Lump Sum:

For allowing public access to the jobsite for the duration of the Event, the Contractor agrees to accept an agreed lump sum amount of $1.00. This agreed lump sum constitutes full compensation for all costs, including markups, all direct and indirect costs, all associated project impacts, and all overhead costs.

Estimated Cost: Increase ☑ Decrease ☐ $1.00

By reason of this order the time of completion will be adjusted as follows: 0 days

Submitted by

Signature	Resident Engineer DOUG COE, Supervising Br. Eng.	Date 8-30-07

Approval Recommended by

Signature	Construction Engineer DOUG COE	Date 8-30-07

Engineer Approval by

Signature	Construction Manager PETER SIEGENTHALER	Date 8/31/07

We the undersigned contractor, have given careful consideration to the change proposed and agree, if this proposal is approved, that we will provide all equipment, furnish the materials, except as may otherwise be noted above, and perform all services necessary for the work above specified, and will accept as full payment therefor the prices shown above.

NOTE: If you, the contractor, do not sign acceptance of this order, your attention is directed to the requirements of the specifications as to proceeding with the ordered work and filing a written protest within the time therein specified.

Contractor Acceptance by

Signature	(Print name and title) FERNANDO DELEON PROJECT MANAGER	Date 8/31/07

STATE OF CALIFORNIA - DEPARTMENT OF TRANSPORTATION

CONTRACT CHANGE ORDER MEMORANDUM

TO: MICHAEL FORNER / DOUG COE, Supervising Br. Eng.	FILE: **E.A.** 04 - 012024
	CO-RTE-PM 04-SF,Ala-80-13.9/14.3,0.0/1.6
FROM: DOUG COE, Supervising Br. Eng.	**FED. NO.** ACIM-080-1(085)8N
CCO# **217** SUPPLEMENT#: **0** Category Cod **AXZZ**	CONTINGENCY BALANCE (incl. this change **$1,738,600.70**
COST: **$21,284.63** INCREASE ☑ DECREASE ☐	HEADQUARTERS APPROVAL REQUIRED? ☐ YES ☑ NO
SUPPLEMENTAL FUNDS PROVIDED: **$0.00**	IS THIS REQUEST IN ACCORDANCE WITH ENVIRONMENTAL DOCUMENTS? ☑ YES ☐ NO
CCO DESCRIPTION: Temporary Navigation Lights	**PROJECT DESCRIPTION:** REPLACE SFOBB EAST SPAN

Original Contract Time:	Time Adj. This Change:	Previously Approved CCO Time Adjustments:	Percentage Time Adjusted: (including this change)	Total # of Unreconciled Deferred Time CCO(s): (including this change)
1000 Day(s)	**DEF** Day(s)	**424** Day(s)	**42** %	**5**

THIS CHANGE ORDER PROVIDES FOR:

supplying and installing temporary solar powered navigation lights on the north side of piers E6W, E7W, and E8W and on the south side of piers E6E, E7E, and E8E (Total of 6 lights), for the SFOBB East Span Skyway, Bridge Nos. 34-0006L/R.

The United States Coast Guard (USCG) requires that permanent navigation lights for piers E3 through E8 be operational at completion of the Skyway contract. The Skyway contract includes permanent navigation lights for piers E3 through E5 which will be operational at completion of the contract.

Due to time constrains on the Skyway contract, Mr. Steven Hulsebus of the Office of Toll Bridge Design, is recommending that temporary lights, similar to those utilized on the E2/T1 contract, be used until such time that permanent navigation lights can be installed under a subsequent seismic retrofit contract.

For this extra work, the Contractor will be paid an agreed lump sum amount of $21,284.63. This agreed lump sum constitutes full compensation, including all markups. The method of payment for this work is Extra Work at Agreed Lump Sum. This contract change order will result in a cost increase of $21,284.63 to the project, which can be financed from the contingency funds. A complete Force Account cost analysis is on file with the project records.

Prior approval was obtained from Mr. Doug Coe, Supervising Bridge Engineer, on September 7, 2007. A copy of the prior approval is attached.

FHWA Prior approval is not required, as this is a minor change order.

Design concurrence was provided by Mr. Steven Hulsebus on September 6, 2007. A copy of the memorandum provided by Mr. Hulsebus is attached.

Concurrence from Maintenance was obtained from Mrs. Lina Ellis, Structure Maintenance and Investigation, on November 14, 2007. A copy of the concurrence provided by Mrs. Ellis is attached.

Since it is not feasible at this time to determine the effect this change will have on the Contractor's operations, it is proposed to defer the determination of any contract time adjustment until completion of the work specified in this change order.

ADA Notice: For individuals with sensory disabilities, this document is available in alternate formats. For information call: (916) 654-6410 or TDD (916) 654-3880 or write Records and Forms Management, 1120 N Street, MS-89, Sacramento, CA 95814.

CONCURRED BY:			
Construction Engineer:	Douglas Coe	Date	12-14-07
Bridge Engineer:	Douglas Coe	Date	12 14 07
Project Engineer:	Steven Hulsebus	Date	9/6/07
Project Manager:		Date	
FHWA Rep.:		Date	
Environmental:		Date	
Other (specify):	Steven Hulsebus, Design	Date	9/6/07
Other (specify):	Lina Ellis, Maintenance	Date	11/14/07
District Prior Approval By:	Douglas Coe	Date	9/7/07
HQ (Issue Approve) By:		Date	
Resident Engineer's Signature:		Date	12-14-07

ESTIMATE OF COST

	THIS REQUEST	TOTAL TO DATE
ITEMS	$0.00	$0.00
FORCE ACCOUNT	$0.00	$0.00
AGREED PRICE	$21,284.63	$21,284.63
ADJUSTMENT	$0.00	$0.00
TOTAL	$21,284.63	$21,284.63

FEDERAL PARTICIPATION

☑ PARTICIPATING ☐ PARTICIPATING IN PART ☐ NONE
☐ NON-PARTICIPATING (MAINTENANCE) ☐ NON-PARTICIPATING

FEDERAL SEGREGATION (If more than one Funding Source or P.I.P. type)
☑ CCO FUNDED PER CONTRACT ☐ CCO FUNDED AS FOLLOWS

FEDERAL FUNDING SOURCE	PERCENT

ADA Notice: For individuals with sensory disabilities, this document is available in alternate formats. For information call: (916) 654-6410 or TDD (916) 654-3880 or write Records and Forms Management, 1120 N Street, MS-89, Sacramento, CA 95814.

Department of Transportation
EAST SPAN SEISMIC SAFETY PROJECT
CONCURRENCE FOR CHANGE ORDERS (08/04)

CCO#: 217 **S#:**
Title: Navigation Lights
Date: 09/06/07

Contract No. 04-012024
Co. & Rte Ala-80-13.9/14.3, 0.0/1.6

To: DOUGLAS COE, Resident Engineer

Requested By: BILL HOWE, Senior Engineer (initials KB) Karen Brown

Description of Work:
Supply and install a total of six temporary navigation lights at piers E6 through E8 at the north side of the westbound pier and at the south side of the eastbound pier.

Reason for Change:
USCG requires that permanent navigation lights for piers E3 to E8 be operational at the end of the Skyway contract. The Skyway contract provides permanent navigation lights for piers E3 through E5, but due to time constrains on the Skyway contract, the Office of Toll Bridge Design has requested (letter dated September 6, 2007) that temporary navigation lights for piers E6 through E8 be included in the Skyway contract. Permanent navigation lights will be added in a subsequent seismic retrofit contract.

Approvals Required By:
- ☐ Division of Construction, HQ
- ☐ FHWA
- ☒ District

Concurrence Required By:
- ☒ Design
- ☒ Maintenance
- ☐

Discussed with persons noted below:

FHWA:	Date	Br. Design:	Date
District: Steve Hulsebus	Date 9/6/07		
	Br. Geology:		Date
Other:	Date	Br. Maintenance:	Date

Estimated Cost: $100,000

Recommended Method of Payment:
- ☐ Contract Items
- ☒ Agreed Price (LS or UP)
- ☐ Extra Work at Force Account
- ☐ Other:

Recommended Time Adjustment: 0 Working Days

Prior Approvals:
- ☒ This represents Prior Approval to proceed with the work.
- ☐ This represents an acknowledgement that the individuals below are in concurrence with this change order, which requires Division of Construction approval before proceeding with the work.

Comments:

9-7-07

Douglas Coe, Resident Engineer — Date

Pete Siegenthaler, Principal Construction Engineer — Date

STATE OF CALIFORNIA - DEPARTMENT OF TRANSPORTATION

CONTRACT CHANGE ORDER

Change Requested by: Engineer

CCO: 217	Suppl. No. 0	Contract No. 04 - 012024	Road 04-SF,Ala-80-13.9/14.3,0.0/1.6	FED. AID LOC.: ACIM-080-1(085)8N

To: **KIEWIT / FCI / MANSON a JV**

You are directed to make the following changes from the plans and specifications or do the following described work not included in the plans and specifications for this contract. ***NOTE: This change order is not effective until approved by the Engineer.***

Description of work to be done, estimate of quantities and prices to be paid. (Segregate between additional work at contract price, agreed price and force account.) Unless otherwise stated, rates for rental of equipment cover only such time as equipment is actually used and no allowance will be made for idle time. This last percentage shown is the net accumulated increase or decrease from the original

Extra Work at Lump Sum:

As authorized by the Engineer, supply and install temporary solar powered navigation lights for the north side of piers E6W E7W, and E8W and on the south side of piers E6E, E7E, and E8E (Total of 6 lights), for the SFOBB East Span Skyway, Bridge Nos. 34-0006L/R.

For this Extra Work, the Contractor agrees to accept an agreed lump sum amount of $21,284.63. This agreed lump sum constitutes full compensation for all costs, including markups, all direct and indirect costs, and all overhead costs.

Extra Work at Agreed Lump Sum $21,284.63

Estimated Cost: Increase ☑ Decrease ☐ $21,284.63

By reason of this order the time of completion will be adjusted as follows: Deferred

Submitted by

Signature	Resident Engineer DOUG COE, Supervising Br. Eng.	Date 12-14-07

Approval Recommended by

Signature	Construction Engineer DOUG COE	Date 12-14-07

Engineer Approval by

Signature Mike Forner	Construction Manager MIKE FORNER	Date 1-7-08

We the undersigned contractor, have given careful consideration to the change proposed and agree, if this proposal is approved, that we will provide all equipment, furnish the materials, except as may otherwise be noted above, and perform all services necessary for the work above specified, and will accept as full payment therefor the prices shown above.

NOTE: If you, the contractor, do not sign acceptance of this order, your attention is directed to the requirements of the specifications as to proceeding with the ordered work and filing a written protest within the time therein specified.

Contractor Acceptance by

Signature	(Print name and title) Lee Zink Project Director	Date 12/19/07

STATE OF CALIFORNIA - DEPARTMENT OF TRANSPORTATION

CONTRACT CHANGE ORDER MEMORANDUM

TO: MICHAEL FORNER / DOUG COE, Supervising Br. Eng.

FROM: DOUG COE, Supervising Br. Eng.

FILE: E.A. 04 - 012024
CO-RTE-PM 04-SF,Ala-80-13.9/14.3,0.0/1.6
FED. NO. ACIM-080-1(085)8N

CCO# **217** SUPPLEMENT#: **0** Category Cod **AXZZ**

CONTINGENCY BALANCE (incl. this change **$1,738,600.70**

COST: **$21,284.63** INCREASE ☑ DECREASE ☐

HEADQUARTERS APPROVAL REQUIRED? ☐ YES ☑ NO

SUPPLEMENTAL FUNDS PROVIDED: **$0.00**

IS THIS REQUEST IN ACCORDANCE WITH ENVIRONMENTAL DOCUMENTS? ☑ YES ☐ NO

CCO DESCRIPTION:
Temporary Navigation Lights

PROJECT DESCRIPTION:
REPLACE SFOBB EAST SPAN

Original Contract Time:	Time Adj. This Change:	Previously Approved CCO Time Adjustments:	Percentage Time Adjusted: (including this change)	Total # of Unreconciled Deferred Time CCO(s): (including this change)
1000 Day(s)	**DEF** Day(s)	**424** Day(s)	**42** %	**5**

THIS CHANGE ORDER PROVIDES FOR:
supplying and installing temporary solar powered navigation lights on the north side of piers E6W, E7W, and E8W and on the south side of piers E6E, E7E, and E8E (Total of 6 lights), for the SFOBB East Span Skyway, Bridge Nos. 34-0006L/R.

The United States Coast Guard (USCG) requires that permanent navigation lights for piers E3 through E8 be operational at completion of the Skyway contract. The Skyway contract includes permanent navigation lights for piers E3 through E5 which will be operational at completion of the contract.

Due to time constrains on the Skyway contract, Mr. Steven Hulsebus of the Office of Toll Bridge Design, is recommending that temporary lights, similar to those utilized on the E2/T1 contract, be used until such time that permanent navigation lights can be installed under a subsequent seismic retrofit contract.

For this extra work, the Contractor will be paid an agreed lump sum amount of $21,284.63. This agreed lump sum constitutes full compensation, including all markups. The method of payment for this work is Extra Work at Agreed Lump Sum. This contract change order will result in a cost increase of $21,284.63 to the project, which can be financed from the contingency funds. A complete Force Account cost analysis is on file with the project records.

Prior approval was obtained from Mr. Doug Coe, Supervising Bridge Engineer, on September 7, 2007. A copy of the prior approval is attached.

FHWA Prior approval is not required, as this is a minor change order.

Design concurrence was provided by Mr. Steven Hulsebus on September 6, 2007. A copy of the memorandum provided by Mr. Hulsebus is attached.

Concurrence from Maintenance was obtained from Mrs. Lina Ellis, Structure Maintenance and Investigation, on November 14, 2007. A copy of the concurrence provided by Mrs. Ellis is attached.

Since it is not feasible at this time to determine the effect this change will have on the Contractor's operations, it is proposed to defer the determination of any contract time adjustment until completion of the work specified in this change order.

RECEIVED
067056 JAN 28 '08

ADA Notice: For individuals with sensory disabilities, this document is available in alternate formats. For information call: (916) 654-6410 or TDD (916) 654-3880 or write Records and Forms Management, 1120 N Street, MS-89, Sacramento, CA 95814.

CONCURRED BY:

Construction Engineer:	Douglas Coe DBC	Date	12-14-07
Bridge Engineer:	Douglas Coe DBC	Date	12-14-07
Project Engineer:	Steven Hulsebus	Date	9/6/07
Project Manager:		Date	
FHWA Rep.:		Date	
Environmental:		Date	
Other (specify):	Steven Hulsebus, Design	Date	9/6/07
Other (specify):	Lina Ellis, Maintenance	Date	11/14/07
District Prior Approval By:	Douglas Coe	Date	9/7/07
HQ (Issue Approve) By:		Date	
Resident Engineer's Signature:		Date	12-14-07

ESTIMATE OF COST

	THIS REQUEST	TOTAL TO DATE
ITEMS	$0.00	$0.00
FORCE ACCOUNT	$0.00	$0.00
AGREED PRICE	$21,284.63	$21,284.63
ADJUSTMENT	$0.00	$0.00
TOTAL	$21,284.63	$21,284.63

FEDERAL PARTICIPATION

☑ PARTICIPATING ☐ PARTICIPATING IN PART ☐ NONE
☐ NON-PARTICIPATING (MAINTENANCE) ☐ NON-PARTICIPATING

FEDERAL SEGREGATION (if more than one Funding Source or P.I.P. type)
☑ CCO FUNDED PER CONTRACT ☐ CCO FUNDED AS FOLLOWS

FEDERAL FUNDING SOURCE	PERCENT

ADA Notice: For individuals with sensory disabilities, this document is available in alternate formats. For information call: (916) 654-6410 or TDD (916) 654-3880 or write Records and Forms Management, 1120 N Street, MS-89, Sacramento, CA 95814.

STATE OF CALIFORNIA - DEPARTMENT OF TRANSPORTATION

CONTRACT CHANGE ORDER

Change Requested by: Engineer

CCO: 217 **Suppl. No. 0** **Contract No. 04 - 012024** **Road** 04-SF,Ala-80-13.9/14.3,0.0/1.6 **FED. AID LOC.:** ACIM-080-1(085)8N

To: **KIEWIT / FCI / MANSON a JV**

You are directed to make the following changes from the plans and specifications or do the following described work not included in the plans and specifications for this contract. ***NOTE: This change order is not effective until approved by the Engineer.***

Description of work to be done, estimate of quantities and prices to be paid. (Segregate between additional work at contract price, agreed price and force account.) Unless otherwise stated, rates for rental of equipment cover only such time as equipment is actually used and no allowance will be made for idle time. This last percentage shown is the net accumulated increase or decrease from the original

Extra Work at Lump Sum:

As authorized by the Engineer, supply and install temporary solar powered navigation lights for the north side of piers E6W E7W, and E8W and on the south side of piers E6E, E7E, and E8E (Total of 6 lights), for the SFOBB East Span Skyway, Bridge Nos. 34-0006L/R.

For this Extra Work, the Contractor agrees to accept an agreed lump sum amount of $21,284.63. This agreed lump sum constitutes full compensation for all costs, including markups, all direct and indirect costs, and all overhead costs.

Extra Work at Agreed Lump Sum $21,284.63

Estimated Cost: Increase ☑ Decrease ☐ **$21,284.63**

By reason of this order the time of completion will be adjusted as follows: Deferred

Submitted by

Signature	Resident Engineer	Date
	DOUG COE, Supervising Br. Eng.	12-14-07

Approval Recommended by

Signature	Construction Engineer	Date
	DOUG COE	12-14-07

Engineer Approval by

Signature	Construction Manager	Date
Mike Forner	MIKE FORNER	1-7-08

We the undersigned contractor, have given careful consideration to the change proposed and agree, if this proposal is approved, that we will provide all equipment, furnish the materials, except as may otherwise be noted above, and perform all services necessary for the work above specified, and will accept as full payment therefor the prices shown above.

NOTE: If you, the contractor, do not sign acceptance of this order, your attention is directed to the requirements of the specifications as to proceeding with the ordered work and filing a written protest within the time therein specified.

Contractor Acceptance by

Signature	(Print name and title)	Date
	Lee Zink Project Director	12/19/07

STATE OF CALIFORNIA - DEPARTMENT OF TRANSPORTATION

CONTRACT CHANGE ORDER MEMORANDUM

DATE: 12/14/2007 Page 1 of 1

TO: MICHAEL FORNER / DOUG COE, Supervising Br. Eng.

FROM: DOUG COE, Supervising Br. Eng.

FILE: E.A. 04 - 012024
CO-RTE-PM 04-SF,Ala-80-13.9/14.3,0.0/1.6
FED. NO. ACIM-080-1(085)8N

CCO# **218** SUPPLEMENT#: **0** Category Cod **AXZZ**

CONTINGENCY BALANCE (incl. this change **$1,863,600.70**

COST: **$25,000.00** INCREASE ☑ DECREASE ☐

HEADQUARTERS APPROVAL REQUIRED? ☐ YES ☑ NO

SUPPLEMENTAL FUNDS PROVIDED: **$0.00**

IS THIS REQUEST IN ACCORDANCE WITH ENVIRONMENTAL DOCUMENTS? ☑ YES ☐ NO

CCO DESCRIPTION:
Sandblast Pier Cap Concrete

PROJECT DESCRIPTION:
REPLACE SFOBB EAST SPAN

Original Contract Time:	Time Adj. This Change:	Previously Approved CCO Time Adjustments:	Percentage Time Adjusted: (including this change)	Total # of Unreconciled Deferred Time CCO(s): (including this change)
1000 Day(s)	**0** Day(s)	**424** Day(s)	**42** %	**7**

THIS CHANGE ORDER PROVIDES FOR:
sandblasting the top surface of the pier caps at Piers E3 through E6 of the Eastbound and Westbound bridge to improve the aesthetics of this visible top surface of the pier caps, for the SFOBB East Span Skyway, Bridge Nos. 34-0006L/R.

The per contract specifications specified epoxy injection repairs of surface cracks has resulted in a "fractured egg" like appearance of the visible top surface of the pier caps at Piers E3 through E6 of the Eastbound and Westbound Bridges. The Engineer is requesting that the top surfaces be sandblasted to improve the aesthetics of these repairs.

The method of payment will be Adjustment of Compensation at Force Account. The anticipated cost for this work is estimated at $25,000.00. A force account analysis for this work is on file in the project records. This work will be funded from the project contingency funds.

Prior approval was obtained from Mr. Doug Coe, Supervising Bridge Engineer, on September 7, 2007. A copy of the prior approval is attached.

FHWA Prior approval is not required, as this is a minor change order.

Concurrence from Design is not required because this change does not affect any design issues.

Concurrence from Maintenance is not required as this change does not use maintenance funds or affect maintenance facilities or operations.

No time adjustment is warranted for this change as it does not affect the controlling operation.

CONCURRED BY:

Construction Engineer:	Douglas Coe DBC	Date 12-17-07
Bridge Engineer:	Douglas Coe DBC	Date 12-17-07
Project Engineer:		Date
Project Manager:		Date
FHWA Rep.:		Date
Environmental:		Date
Other (specify):		Date
Other (specify):		Date
District Prior Approval By:	Douglas Coe	Date 9/7/07
HQ (Issue Approve) By:		Date
Resident Engineer's Signature:		Date 12-17-07

ESTIMATE OF COST

	THIS REQUEST	TOTAL TO DATE
ITEMS	$0.00	$0.00
FORCE ACCOUNT	$25,000.00	$25,000.00
AGREED PRICE	$0.00	$0.00
ADJUSTMENT	$0.00	$0.00
TOTAL	$25,000.00	$25,000.00

FEDERAL PARTICIPATION

☑ PARTICIPATING ☐ PARTICIPATING IN PART ☐ NONE
☐ NON-PARTICIPATING (MAINTENANCE) ☐ NON-PARTICIPATING

FEDERAL SEGREGATION (if more than one Funding Source or P.I.P. type)
☑ CCO FUNDED PER CONTRACT ☐ CCO FUNDED AS FOLLOWS

FEDERAL FUNDING SOURCE	PERCENT

ADA Notice: For individuals with sensory disabilities, this document is available in alternate formats. For information call: (916) 654-6410 or TDD (916) 654-3880 or write Records and Forms Management, 1120 N Street, MS-89, Sacramento, CA 95814.

Department of Transportation
EAST SPAN SEISMIC SAFETY PROJECT
CONCURRENCE FOR CHANGE ORDERS (08/04)
Contract No. 04-012024
Co. & Rte Ala-80-13.9/14.3, 0.0/1.6

CCO No.: 218 **S#:** 0
Title: Seal Pier Cap Concrete
Date: 9/7/07

To: DOUGLAS COE, Resident Engineer

Requested By: WILLIAM S. CASEY, Senior Engineer (initials WS) Karen Bowen

Description of Work:
Sandblast, clean, apply methacrylate, and hand-broadcast light colored sand to the top surface of the pier caps at Piers E3 through E6 of the Eastbound and Westbound Bridge to provide for a smooth even surface finish of uniform texture and appearance.

Reason for Change:
Surface cracks in the pier caps at Piers E3 through E6 of the Eastbound and Westbound Bridges have been repaired per contract specifications with epoxy injection, which has resulted in a "fractured egg" like appearance. The Engineer is requesting the application of methacrylate and light colored sand to improve the aesthetics of these repairs as well as seal any hairline cracks to provide a watertight finish, thereby aiding in preventive maintenance.

Approvals Required By:
- ☐ Division of Construction, HQ
- ☐ FHWA
- ☒ District

Concurrence Required By:
- ☒ Design
- ☒ Maintenance

Discussed with persons noted below:

FHWA:	Date	Br. Design:	Date
District:	Date	Br. Geology:	Date
Other: Clive Endress (Architect)	Date	Br. Maintenance:	Date

Estimated Cost: $150,000.00

Recommended Method of Payment:
- ☐ Contract Items
- ☒ Agreed Price (LS or UP)
- ☐ Extra Work at Force Account
- ☐ Other:

Recommended Time Adjustment: 0

Prior Approvals:
- ☒ This represents Prior Approval to proceed with the work.
- ☐ This represents an acknowledgement that the individuals below are in concurrence with this change order, which requires Division of Construction approval before proceeding with the work.

Comments:

9-7-07

Douglas Coe, Resident Engineer — Date

Pete Siegenthaler, Principal Construction Engineer — Date

Patrick Treacy, Construction Coordinator — Date

STATE OF CALIFORNIA - DEPARTMENT OF TRANSPORTATION

CONTRACT CHANGE ORDER

Change Requested by: Engineer

CCO: 218	Suppl. No. 0	Contract No. 04 - 012024	Road 04-SF,Ala-80-13.9/14.3,0.0/1.6	FED. AID LOC.: ACIM-080-1(085)8N

To: **KIEWIT / FCI / MANSON a JV**

You are directed to make the following changes from the plans and specifications or do the following described work not included in the plans and specifications for this contract. ***NOTE: This change order is not effective until approved by the Engineer.***

Description of work to be done, estimate of quantities and prices to be paid. (Segregate between additional work at contract price, agreed price and force account.) Unless otherwise stated, rates for rental of equipment cover only such time as equipment is actually used and no allowance will be made for idle time. This last percentage shown is the net accumulated increase or decrease from the original

Extra Work at Force Account:

As authorized by the Engineer and in accordance with Section 4-1.03D "Extra Work" and Section 9-1.03 "Force Account Payment " of the Standard Specifications and Section 5-1.21 "Force Account Payment" of the Special Provisions, sandblast the top surface of the pier caps at Piers E3 through E6 of the Eastbound and Westbound bridge to improve the aesthetics of this visible top surface of the pier caps, for the SFOBB East Span Skyway, Bridge Nos. 34-0006L/R.

This compensation at force account constitutes full compensation for all costs, including markups, all direct and indirect costs, all associated impacts, and all overhead costs.

Estimated cost of Extra Work at Force Account $25,000.00

Estimated Cost: Increase ☑ Decrease ☐ **$25,000.00**

By reason of this order the time of completion will be adjusted as follows: 0 days

Submitted by

Signature	Resident Engineer DOUG COE, Supervising Br. Eng.	Date 12-17-07

Approval Recommended by

Signature	Construction Engineer DOUG COE	Date 12-17-07

Engineer Approval by

Signature Mike Forner	Construction Manager MIKE FORNER	Date 1-7-08

We the undersigned contractor, have given careful consideration to the change proposed and agree, if this proposal is approved, that we will provide all equipment, furnish the materials, except as may otherwise be noted above, and perform all services necessary for the work above specified, and will accept as full payment therefor the prices shown above.

NOTE: If you, the contractor, do not sign acceptance of this order, your attention is directed to the requirements of the specifications as to proceeding with the ordered work and filing a written protest within the time therein specified.

Contractor Acceptance by

Signature	(Print name and title) Lee Zink Project Director	Date 12/19/07

STATE OF CALIFORNIA - DEPARTMENT OF TRANSPORTATION

CONTRACT CHANGE ORDER MEMORANDUM

DATE: 12/14/2007 Page 1 of 1

TO: MICHAEL FORNER / DOUG COE, Supervising Br. Eng.

FROM: DOUG COE, Supervising Br. Eng.

FILE: E.A. 04 - 012024
CO-RTE-PM 04-SF,Ala-80-13.9/14.3,0.0/1.6
FED. NO. ACIM-080-1(085)8N

CCO# **218** SUPPLEMENT#: **0** Category Cod **AXZZ**

CONTINGENCY BALANCE (incl. this change **$1,863,600.70**

COST: **$25,000.00** INCREASE ☑ DECREASE ☐

HEADQUARTERS APPROVAL REQUIRED? ☐ YES ☑ NO

SUPPLEMENTAL FUNDS PROVIDED: **$0.00**

IS THIS REQUEST IN ACCORDANCE WITH ENVIRONMENTAL DOCUMENTS? ☑ YES ☐ NO

CCO DESCRIPTION:
Sandblast Pier Cap Concrete

PROJECT DESCRIPTION:
REPLACE SFOBB EAST SPAN

Original Contract Time:	Time Adj. This Change:	Previously Approved CCO Time Adjustments:	Percentage Time Adjusted: (including this change)	Total # of Unreconciled Deferred Time CCO(s): (including this change)
1000 Day(s)	**0** Day(s)	**424** Day(s)	**42** %	**7**

THIS CHANGE ORDER PROVIDES FOR:
sandblasting the top surface of the pier caps at Piers E3 through E6 of the Eastbound and Westbound bridge to improve the aesthetics of this visible top surface of the pier caps, for the SFOBB East Span Skyway, Bridge Nos. 34-0006L/R.

The per contract specifications specified epoxy injection repairs of surface cracks has resulted in a "fractured egg" like appearance of the visible top surface of the pier caps at Piers E3 through E6 of the Eastbound and Westbound Bridges. The Engineer is requesting that the top surfaces be sandblasted to improve the aesthetics of these repairs.

The method of payment will be Adjustment of Compensation at Force Account. The anticipated cost for this work is estimated at $25,000.00. A force account analysis for this work is on file in the project records. This work will be funded from the project contingency funds.

Prior approval was obtained from Mr. Doug Coe, Supervising Bridge Engineer, on September 7, 2007. A copy of the prior approval is attached.

FHWA Prior approval is not required, as this is a minor change order.

Concurrence from Design is not required because this change does not affect any design issues.

Concurrence from Maintenance is not required as this change does not use maintenance funds or affect maintenance facilities or operations.

RECEIVED JAN 28 2008 067057

No time adjustment is warranted for this change as it does not affect the controlling operation.

CONCURRED BY:

Construction Engineer:	Douglas Coe DBC	Date 12-17-07
Bridge Engineer:	Douglas Coe DBC	Date 12-17-07
Project Engineer:		Date
Project Manager:		Date
FHWA Rep.:		Date
Environmental:		Date
Other (specify):		Date
Other (specify):		Date
District Prior Approval By:	Douglas Coe	Date 9/7/07
HQ (Issue Approve) By:		Date
Resident Engineer's Signature:		Date 12-17-07

ESTIMATE OF COST

	THIS REQUEST	TOTAL TO DATE
ITEMS	$0.00	$0.00
FORCE ACCOUNT	$25,000.00	$25,000.00
AGREED PRICE	$0.00	$0.00
ADJUSTMENT	$0.00	$0.00
TOTAL	$25,000.00	$25,000.00

FEDERAL PARTICIPATION

☑ PARTICIPATING ☐ PARTICIPATING IN PART ☐ NONE
☐ NON-PARTICIPATING (MAINTENANCE) ☐ NON-PARTICIPATING

FEDERAL SEGREGATION (if more than one Funding Source or P.I.P. type)
☑ CCO FUNDED PER CONTRACT ☐ CCO FUNDED AS FOLLOWS

FEDERAL FUNDING SOURCE PERCENT

ADA Notice: For individuals with sensory disabilities, this document is available in alternate formats. For information call: (916) 654-6410 or TDD (916) 654-3880 or write Records and Forms Management, 1120 N Street, MS-89, Sacramento, CA 95814.

STATE OF CALIFORNIA - DEPARTMENT OF TRANSPORTATION

CONTRACT CHANGE ORDER

Change Requested by: Engineer

CCO: 218 **Suppl. No. 0** **Contract No. 04 - 012024** **Road** 04-SF,Ala-80-13.9/14.3,0.0/1.6 **FED. AID LOC.:** ACIM-080-1(085)8N

To: **KIEWIT / FCI / MANSON a JV**

You are directed to make the following changes from the plans and specifications or do the following described work not included in the plans and specifications for this contract. ***NOTE: This change order is not effective until approved by the Engineer.***

Description of work to be done, estimate of quantities and prices to be paid. (Segregate between additional work at contract price, agreed price and force account.) Unless otherwise stated, rates for rental of equipment cover only such time as equipment is actually used and no allowance will be made for idle time. This last percentage shown is the net accumulated increase or decrease from the original

Extra Work at Force Account:

As authorized by the Engineer and in accordance with Section 4-1.03D "Extra Work" and Section 9-1.03 "Force Account Payment " of the Standard Specifications and Section 5-1.21 "Force Account Payment" of the Special Provisions, sandblast the top surface of the pier caps at Piers E3 through E6 of the Eastbound and Westbound bridge to improve the aesthetics of this visible top surface of the pier caps, for the SFOBB East Span Skyway, Bridge Nos. 34-0006L/R.

This compensation at force account constitutes full compensation for all costs, including markups, all direct and indirect costs, all associated impacts, and all overhead costs.

Estimated cost of Extra Work at Force Account $25,000.00

Estimated Cost: Increase ☑ Decrease ☐ **$25,000.00**

By reason of this order the time of completion will be adjusted as follows: 0 days

Submitted by

Signature	Resident Engineer	Date
	DOUG COE, Supervising Br. Eng.	12-17-07

Approval Recommended by

Signature	Construction Engineer	Date
	DOUG COE	12-17-07

Engineer Approval by

Signature	Construction Manager	Date
Mike Forner	MIKE FORNER	1-7-08

We the undersigned contractor, have given careful consideration to the change proposed and agree, if this proposal is approved, that we will provide all equipment, furnish the materials, except as may otherwise be noted above, and perform all services necessary for the work above specified, and will accept as full payment therefor the prices shown above.

NOTE: If you, the contractor, do not sign acceptance of this order, your attention is directed to the requirements of the specifications as to proceeding with the ordered work and filing a written protest within the time therein specified.

Contractor Acceptance by

Signature	(Print name and title)	Date
	Lee Zink Project Director	12/19/07

STATE OF CALIFORNIA - DEPARTMENT OF TRANSPORTATION

CONTRACT CHANGE ORDER MEMORANDUM

TO: PETER SIEGENTHALER / DOUG COE, Supervising Br. Eng.	FILE: E.A. 04 - 012024
	CO-RTE-PM 04-SF,Ala-80-13.9/14.3,0.0/1.6
FROM: DOUG COE, Supervising Br. Eng.	FED. NO. ACIM-080-1(085)8N
CCO# **219** SUPPLEMENT#: **0** Category Cod **BZZZ**	CONTINGENCY BALANCE (incl. this change **$4,746,017.09**
COST: **$250,000.00** INCREASE ☑ DECREASE ☐	HEADQUARTERS APPROVAL REQUIRED? ☑ YES ☐ NO
SUPPLEMENTAL FUNDS PROVIDED: **$0.00**	IS THIS REQUEST IN ACCORDANCE WITH ENVIRONMENTAL DOCUMENTS? ☑ YES ☐ NO
CCO DESCRIPTION: Mitigate Electrical Delays	**PROJECT DESCRIPTION:** REPLACE SFOBB EAST SPAN

Original Contract Time:	Time Adj. This Change:	Previously Approved CCO Time Adjustments:	Percentage Time Adjusted: (including this change)	Total # of Unreconciled Deferred Time CCO(s): (including this change)
1000 Day(s)	**0** Day(s)	**424** Day(s)	**42** %	**0**

THIS CHANGE ORDER PROVIDES FOR:

compensating the premium portion of the overtime hours incurred by the electrical sub-contractor Eward Scott Electric to complete the remaining contract work within the remaining contract time in order to mitigate the impact of the service platform redesign on the contract electrical work, of the SFOBB East Span Skyway, Bridge Nos. 34-0006L/R.

The redesign of the service platforms has impacted the completion of the contract specified electrical work. The electrical sub-contractor is unable to complete all of the remaining contract electrical work in the remaining contract time without working a substantial amount of overtime. This overtime work was not contemplated at bid time. The Contract Change Order will compensate the contractor for the premium portion of the overtime, plus the appropriate markup allowed under the contract, to complete the electrical work within the remaining contract time, thereby mitigating the impact of the redesigned service platforms on the contract electrical work.

The method of payment will be Adjustment of Compensation at Force Account. The anticipated cost for this work is estimated at $250,000.00. A force account analysis for this work is on file in the project records. This work will be funded from the project contingency funds.

Prior approval was obtained from Mr. Pete Siegenthaler, Principal Construction Engineer, on September 24, 2007. A copy of the prior approval is attached.

Prior Approval was obtained from Ms. Nancy Bobb, FHWA Bay Bridge Project Manager, via electronic message on October 9, 2007. A printed copy of the prior approval provided by Ms. Bobb is attached.

Prior Approval was obtained from Mr. Ken Terpstra, SFOBB Project Manager, via electronic message on October 6, 2007. A printed copy of the prior approval provided by Mr. Terpstra is attached.

Concurrence from Design is not required because this change does not affect any design issues.

Concurrence from Maintenance is not required as this change does not use maintenance funds or affect maintenance facilities or operations.

No time adjustment is warranted for this change as it does not affect the controlling operation.

ADA Notice: For individuals with sensory disabilities, this document is available in alternate formats. For information call: (916) 654-6410 or TDD (916) 654-3880 or write Records and Forms Management, 1120 N Street, MS-89, Sacramento, CA 95814.

CONCURRED BY:			
Construction Engineer:	Douglas Coe DBC	Date	10-31-07
Bridge Engineer:	Douglas Coe DBC	Date	10-31-07
Project Engineer:		Date	
Project Manager:	Ken Terpstra	Date	10/6/07
FHWA Rep.:	Nancy Bobb	Date	10/9/07
Environmental:		Date	
Other (specify):		Date	
Other (specify):		Date	
District Prior Approval By:	Peter Siegenthaler	Date	9/24/07
HQ (Issue, Approve) By:	Ken Darby	Date	10/1/07
Resident Engineer's Signature:		Date	
			10-31-07

ESTIMATE OF COST

	THIS REQUEST	TOTAL TO DATE
ITEMS	$0.00	$0.00
FORCE ACCOUNT	$0.00	$0.00
AGREED PRICE	$0.00	$0.00
ADJUSTMENT	$250,000.00	$250,000.00
TOTAL	$250,000.00	$250,000.00

FEDERAL PARTICIPATION

☑ PARTICIPATING ☐ PARTICIPATING IN PART ☐ NONE
☐ NON-PARTICIPATING (MAINTENANCE) ☐ NON-PARTICIPATING

FEDERAL SEGREGATION (if more than one Funding Source or P.I.P. type)
☑ CCO FUNDED PER CONTRACT ☐ CCO FUNDED AS FOLLOWS

FEDERAL FUNDING SOURCE	PERCENT

ADA Notice: For individuals with sensory disabilities, this document is available in alternate formats. For information call: (916) 654-6410 or TDD (916) 654-3880 or write Records and Forms Management, 1120 N Street, MS-89, Sacramento, CA 95814.

Department of Transportation
EAST SPAN SEISMIC SAFETY PROJECT
CONCURRENCE FOR CHANGE ORDERS (08/04)
Contract No. 04-012024
Co. & Rte Ala-80-13.9/14.3, 0.0/1.6

CCO No.: 219 **S#:** 0
Title: Mitigate Electrical Delays
Date: 09/18/07

To: DOUGLAS COE, Resident Engineer

Requested By: WILLIAM B HOWE, Senior Engineer (initials WBH)

Description of Work:
Compensate KFM for the premium portion of the overtime hours incurred by the electrical sub-contractor Edward Scott Electric (ESE) in order to complete the remaining electric contract work, impacted by the service platform redesign, within the remaining contract time.

Reason for Change:
Due to the redesign of the service platforms and the consequential delay to the electrical work, the electrical sub-contractor is unable to complete all of the contract work within the contract time remaining without working a substantial amount of overtime. This CCO will compensate the Contractor for the premium portion of the overtime worked plus the markup specified in the Special Provisions.

Approvals Required By:
- ☒ Division of Construction, HQ
- ☒ FHWA
- ☐ District

Concurrence Required By:
- ☐ Design
- ☐ Maintenance

Discussed with persons noted below:

FHWA:	Date	Br. Design:	Date
District:	Date	Br. Geology:	Date
Other:	Date	Br. Maintenance:	Date

Estimated Cost: $250,000.00

Recommended Method of Payment:
- ☐ Contract Items
- ☐ Agreed Price (LS or UP)
- ☒ Extra Work at Force Account
- ☐ Other:

Recommended Time Adjustment: 0

Prior Approvals:
- ☐ This represents Prior Approval to proceed with the work.
- ☒ This represents an acknowledgement that the individuals below are in concurrence with this change order, which requires Division of Construction approval before proceeding with the work.

Comments:

9-19-07
Douglas Coe, Resident Engineer — Date

9/24/07
Pete Siegenthaler, Principal Construction Engineer — Date

For 9/19/07
Patrick Treacy, Construction Coordinator — Date

9/26/07

U.S. DEPARTMENT OF TRANSPORTATION FEDERAL HIGHWAY ADMINISTRATION CALIFORNIA DIVISION OFFICE

RECORD OF PRIOR APPROVAL FOR MAJOR CONTRACT CHANGE ORDERS

PROJECT NO.	CCO NO.	CONTRACT NO.	DIST-CO-RTE-PM
ACIM -080-1(085)8N	219	04-012024	04-SF,Ala-80-13.9/14.3,0.0/1.6

REQUESTED BY:	CALTRANS HQ	DATE
Jake VanEnckevort	X RE/DISTRICT	9/28/07

PROPOSED CHANGE:

This change order provides for compensating the premium portion of the overtime hours incurred by the electrical sub-contractor Eward Scott Electric to complete the remaining contract work within the remaining contract time in eider to mitigate the impact of the service platform redesign on the contract electrical work, of the SFOBB East Span Skyway, Bridge Nos. 34-0006UR.

REASON FOR CHANGE:

The redesign of the service platforms has impacted the completion of the contract specified electrical work. The electrical sub-contractor is unable to complete all of the remaining contract electrical work in the remaining contract time without working a substantial amount of overtime. This overtime work was not contemplated at bid time. The Contract Change Order will compensate the contractor for the premium portion of the overtime, plus the appropriate markup allowed under the contract, to complete the electrical work within the remaining contract time, thereby mitigating the impact of the redesigned service platforms on the contract electrical work.

TIME EXTENSIONS	ACTIVITY ON CRITICAL PATH AFFECTED BY CCO (IF TIME EXTENSION INVOLVED)
_NONE __ DAYS __ DEFERRED	

ESTIMATE OF COST:	CCO:	METHOD OF PAYMENT
$ 250,000 INCREASE $__ DECREASE	CONTRACT ITEM AGREED PRICE	X ADJUSTMENT OF COMPENSATION EXTRA WORK AT FORCE ACCOUNT

THE WORK COVERED BY THE PROPOSED REVISION AS DESCRIBED ABOVE IS APPROVED SUBJECT TO SUBMISSION OF SUPPORTING DOCUMENTATION INCLUDING COST EVALUATION AND JUSTIFICATION OF TIME EXTENSIONS.

OTHER CONDITIONS:

PRIOR APPROVAL TO PROCEED GRANTED BY:	DATE OF AUTHORIZATION:
Nancy E. Bobb	10/9/07

Kannu Balan/D03/Caltrans/CAGov
10/08/2007 09:41 AM

To Jake VanEnckevort/D04/Caltrans/CAGov@DOT
cc
bcc
Subject Fw: CCO 219S0 - C93, Report and Memo for PM's concurrence

Kannu Balan
Senior Transportation Engineer
CCO/Claims/Schedule
SFOBB - Skyway
(510) 622-5151
Cell# (510) 867-6774
****
This e-mail, including attachments, is intended for the exclusive use of the person or entity to which it is addressed, and may contain confidential or privileged information. If the reader of this e-mail is not the intended recipient, or his or her authorized agent, the reader is hereby notified that any dissemination, distribution or copying of this e-mail is prohibited. If you think you have received this e-mail in error, please advise the sender by reply e-mail of the error, and then delete this e-mail immediately.
****

----- Forwarded by Kannu Balan/D03/Caltrans/CAGov on 10/08/2007 09:39 AM -----

Ken Terpstra/D04/Caltrans/CAGov
10/06/2007 10:56 AM

To Kannu Balan/D03/Caltrans/CAGov@DOT
cc
Subject Re: Fw: CCO 219S0 - C93, Report and Memo for PM's concurrence

concur
Kannu Balan/D03/Caltrans/CAGov

Kannu Balan/D03/Caltrans/CAGov
10/05/2007 02:07 PM

To Ken Terpstra/D04/Caltrans/CAGov@DOT
cc
Subject Fw: CCO 219S0 - C93, Report and Memo for PM's concurrence

Ken,
Friendly reminder..

Pending Concurrence

Kannu Balan
Senior Transportation Engineer
CCO/Claims/Schedule
SFOBB - Skyway

(510) 622-5151
Cell# (510) 867-6774
****
This e-mail, including attachments, is intended for the exclusive use of the person or entity to which it is addressed, and may contain confidential or privileged information. If the reader of this e-mail is not the intended recipient, or his or her authorized agent, the reader is hereby notified that any dissemination, distribution or copying of this e-mail is prohibited. If you think you have received this e-mail in error, please advise the sender by reply e-mail of the error, and then delete this e-mail immediately.
****

---- Forwarded by Kannu Balan/D03/Caltrans/CAGov on 10/05/2007 02:05 PM ----

Kannu Balan/D03/Caltrans/CAGov
10/02/2007 01:30 PM

To Ken Terpstra/D04/Caltrans/CAGov
cc Mike Forner/D04/Caltrans/CAGov@DOT, Doug Coe/D04/Caltrans/CAGov@DOT, Peter Siegenthaler/D04/Caltrans/CAGov@DOT
Subject CCO 219S0 - C93, Report and Memo for PM's concurrence

Ken, attached are the CCO # 219S0 "Mitigate Electrical Delays"- C93, Report, and Memo for your concurrence. Pete concurred with this CCO.

Thanks

CCO_219_S0_C-93.pdf CCO_219_S0_PM_Memo.pdf CCO_219_S0_PM_Report.pdf Kannu Balan
Senior Transportation Engineer
CCO/Claims/Schedule
SFOBB - Skyway
(510) 622-5151
Cell# (510) 867-6774
****
This e-mail, including attachments, is intended for the exclusive use of the person or entity to which it is addressed, and may contain confidential or privileged information. If the reader of this e-mail is not the intended recipient, or his or her authorized agent, the reader is hereby notified that any dissemination, distribution or copying of this e-mail is prohibited. If you think you have received this e-mail in error, please advise the sender by reply e-mail of the error, and then delete this e-mail immediately.
****

TELECOPY

California Department of Transportation

CONSTRUCTION DIVISION

TO: District 4 CCO Desk

Date: 10/1/2007

Contract No.: 4 - 012024

Road: SF, ALA-80-13.9/14.3, 0.0/1.6

FED. No.: ACIM-080-1(085)8N

To: SARTIPI - 04

Attention: 04 - SARWARY

HQ Direction: TO PROCEED WITH THE WORK

CCO No. 219 **Sup. No.** 0 **Rev. No.** 0

Per Your Submittal Dated: 9/28/2007 **CCO Category Code:** B - Z - Z - Z

PROVIDES FOR PAYMENT OF PREMIUM PORTION OF OVERTIME HOURS INCURRED BY THE ELECTRICAL SUB-CONTRACTOR TO COMPLETE THE REMAINING CONTRACT WORK WITHIN THE REMAINING CONTRACT TIME IN ORDER TO MITIGATE THE IMPACT OF THE SERVICE PLATFORM REDESIGN ON THE CONTRACT ELECTRICAL WORK.

AUTHORIZATION TO PROCEED IS CONDITIONAL ON THE FOLLOWING:

1. THE COMPLETE I&A REQUEST SUBMITTAL TO DIVISION OF CONSTRUCTION BY NOVEMBER 1, 2007.

THE TOTAL COST OF THIS CHANGE IS SHOWN AS $250,000.00 WITH NO TIME ADJUSTMENT.

Items:	$0.00
Force Account:	$250,000.00
Agreed Price:	$0.00
Adj. of Comp.	$0.00
Total:	**$250,000.00**
Time:	**(NONE)**

ELIZABETH DOOHER,
Acting Assistant Division Chief, by:

Ken Darby

Ken Darby

Division of Construction
1120 "N" Street, MS-44, Sacramento, CA 95814
Fax Number: (916) 654-5735
To Confirm Transmission, Call (916) 654-5259

TELECOPY

California Department of Transportation

CONSTRUCTION DIVISION

TO: District 4 CCO Desk

Date: 10/31/2007

Contract No.: 4 - 012024

Road: SF, ALA-80-13.9/14.3, 0.0/1.6

FED. No.: ACIM-080-1(085)8N

To: SARTIPI - 04

Attention: 04 - SARWARY

HQ Direction: **TO ISSUE AND APPROVE**

CCO No. 219 **Sup. No.** 0 **Rev. No.** 1

Per Your Submittal Dated: 10/31/2007 **CCO Category Code:** B - Z - Z - Z

PROVIDES FOR PAYMENT OF PREMIUM PORTION OF OVERTIME HOURS INCURRED BY THE ELECTRICAL SUB-CONTRACTOR TO COMPLETE THE REMAINING CONTRACT WORK WITHIN THE REMAINING CONTRACT TIME IN ORDER TO MITIGATE THE IMPACT OF THE SERVICE PLATFORM REDESIGN ON THE CONTRACT ELECTRICAL WORK.

NOTE:

THE TOTAL COST OF THIS CHANGE IS SHOWN AS $250,000.00 WITH NO TIME ADJUSTMENT.

Items:	$0.00
Force Account:	$250,000.00
Agreed Price:	$0.00
Adj. of Comp.	$0.00
Total:	**$250,000.00**
Time:	**(NONE)**

ELIZABETH DOOHER,
Acting Assistant Division Chief, by:

Ken Darby

Ken Darby

Division of Construction
1120 "N" Street, MS-44, Sacramento, CA 95814
Fax Number: (916) 654-5735
To Confirm Transmission, Call (916) 654-5259

STATE OF CALIFORNIA - DEPARTMENT OF TRANSPORTATION

CONTRACT CHANGE ORDER

Change Requested by: Engineer

CCO: 219	Suppl. No. 0	Contract No. 04 - 012024	Road 04-SF,Ala-80-13.9/14.3,0.0/1.6	FED. AID LOC.: ACIM-080-1(085)8N

To: **KIEWIT / FCI / MANSON a JV**

You are directed to make the following changes from the plans and specifications or do the following described work not included in the plans and specifications for this contract. ***NOTE: This change order is not effective until approved by the Engineer.***

Description of work to be done, estimate of quantities and prices to be paid. (Segregate between additional work at contract price, agreed price and force account.) Unless otherwise stated, rates for rental of equipment cover only such time as equipment is actually used and no allowance will be made for idle time. This last percentage shown is the net accumulated increase or decrease from the original

Adjustment of Compensation at Force Account:

As authorized by the Engineer and in accordance with Section 4-1.03D "Extra Work" and Section 9-1.03 "Force Account Payment " of the Standard Specifications and Section 5-1.21 "Force Account Payment" of the Special Provisions, provide compensation for the premium portion of the overtime hours incurred by the electrical sub-contractor Edward Scott Electric to complete the remaining contract work within the remaining contract time in order to mitigate the impact of the service platform redesign on the contract electrical work, of the SFOBB East Span Skyway, Bridge Nos. 34-0006L/R.

This compensation at force account constitutes full compensation for all costs, including markups, all direct and indirect costs, all associated impacts, and all overhead costs.

Estimated cost of Adjustment of Compensation at Force Account $250,000.00

Estimated Cost: Increase ☑ Decrease ☐ **$250,000.00**

By reason of this order the time of completion will be adjusted as follows: 0 days

Submitted by

Signature	Resident Engineer DOUG COE, Supervising Br. Eng.	Date 10-31-07

Approval Recommended by

Signature	Construction Engineer DOUG COE	Date 10-31-07

Engineer Approval by

Signature	Construction Manager PETER SIEGENTHALER	Date 11-14-07

We the undersigned contractor, have given careful consideration to the change proposed and agree, if this proposal is approved, that we will provide all equipment, furnish the materials, except as may otherwise be noted above, and perform all services necessary for the work above specified, and will accept as full payment therefor the prices shown above.

NOTE: If you, the contractor, do not sign acceptance of this order, your attention is directed to the requirements of the specifications as to proceeding with the ordered work and filing a written protest within the time therein specified.

Contractor Acceptance by

Signature	(Print name and title) Lee Zink Proj. Director	Date 11/6/07

STATE OF CALIFORNIA - DEPARTMENT OF TRANSPORTATION

CONTRACT CHANGE ORDER MEMORANDUM

TO: PETER SIEGENTHALER / DOUG COE, Supervising Br. Eng.

FROM: DOUG COE, Supervising Br. Eng.

FILE: E.A. 04 - 012024
CO-RTE-PM 04-SF,Ala-80-13.9/14.3,0.0/1.6
FED. NO. ACIM-080-1(085)8N

CCO# **219** SUPPLEMENT#: **0** Category Cod **BZZZ**

CONTINGENCY BALANCE (incl. this change **$4,746,017.09**

COST: **$250,000.00** INCREASE ☑ DECREASE ☐

HEADQUARTERS APPROVAL REQUIRED? ☑ YES ☐ NO

SUPPLEMENTAL FUNDS PROVIDED: **$0.00**

IS THIS REQUEST IN ACCORDANCE WITH ENVIRONMENTAL DOCUMENTS? ☑ YES ☐ NO

CCO DESCRIPTION:
Mitigate Electrical Delays

PROJECT DESCRIPTION:
REPLACE SFOBB EAST SPAN

Original Contract Time:	Time Adj. This Change:	Previously Approved CCO Time Adjustments:	Percentage Time Adjusted: (including this change)	Total # of Unreconciled Deferred Time CCO(s): (including this change)
1000 Day(s)	**0** Day(s)	**424** Day(s)	**42** %	**0**

THIS CHANGE ORDER PROVIDES FOR:
compensating the premium portion of the overtime hours incurred by the electrical sub-contractor Eward Scott Electric to complete the remaining contract work within the remaining contract time in order to mitigate the impact of the service platform redesign on the contract electrical work, of the SFOBB East Span Skyway, Bridge Nos. 34-0006L/R.

The redesign of the service platforms has impacted the completion of the contract specified electrical work. The electrical sub-contractor is unable to complete all of the remaining contract electrical work in the remaining contract time without working a substantial amount of overtime. This overtime work was not contemplated at bid time. The Contract Change Order will compensate the contractor for the premium portion of the overtime, plus the appropriate markup allowed under the contract, to complete the electrical work within the remaining contract time, thereby mitigating the impact of the redesigned service platforms on the contract electrical work.

The method of payment will be Adjustment of Compensation at Force Account. The anticipated cost for this work is estimated at $250,000.00. A force account analysis for this work is on file in the project records. This work will be funded from the project contingency funds.

Prior approval was obtained from Mr. Pete Siegenthaler, Principal Construction Engineer, on September 24, 2007. A copy of the prior approval is attached.

Prior Approval was obtained from Ms. Nancy Bobb, FHWA Bay Bridge Project Manager, via electronic message on October 9, 2007. A printed copy of the prior approval provided by Ms. Bobb is attached.

Prior Approval was obtained from Mr. Ken Terpstra, SFOBB Project Manager, via electronic message on October 6, 2007. A printed copy of the prior approval provided by Mr. Terpstra is attached.

Concurrence from Design is not required because this change does not affect any design issues.

Concurrence from Maintenance is not required as this change does not use maintenance funds or affect maintenance facilities or operations.

No time adjustment is warranted for this change as it does not affect the controlling operation.

RECEIVED
06190 DEC 17 5

ADA Notice: For individuals with sensory disabilities, this document is available in alternate formats. For information call: (916) 654-6410 or TDD (916) 654-3880 or write Records and Forms Management, 1120 N Street, MS-89, Sacramento, CA 95814.

CONCURRED BY:

Construction Engineer:	Douglas Coe DBC	Date	10-31-07
Bridge Engineer:	Douglas Coe DBC	Date	10-31-07
Project Engineer:		Date	
Project Manager:	Ken Terpstra	Date	10/6/07
FHWA Rep.:	Nancy Bobb	Date	10/9/07
Environmental:		Date	
Other (specify):		Date	
Other (specify):		Date	
District Prior Approval By:	Peter Siegenthaler	Date	9/24/07
HQ (Issue Approve) By:	Ken Darby	Date	10/1/07
Resident Engineer's Signature:		Date	10-31-07

ESTIMATE OF COST

	THIS REQUEST	TOTAL TO DATE
ITEMS	$0.00	$0.00
FORCE ACCOUNT	$0.00	$0.00
AGREED PRICE	$0.00	$0.00
ADJUSTMENT	$250,000.00	$250,000.00
TOTAL	$250,000.00	$250,000.00

FEDERAL PARTICIPATION

☑ PARTICIPATING ☐ PARTICIPATING IN PART ☐ NONE
☐ NON-PARTICIPATING (MAINTENANCE) ☐ NON-PARTICIPATING

FEDERAL SEGREGATION (if more than one Funding Source or P.I.P. type)
☑ CCO FUNDED PER CONTRACT ☐ CCO FUNDED AS FOLLOWS

FEDERAL FUNDING SOURCE	PERCENT

ADA Notice: For individuals with sensory disabilities, this document is available in alternate formats. For information call: (916) 654-6410 or TDD (916) 654-3880 or write Records and Forms Management, 1120 N Street, MS-89, Sacramento, CA 95814.

STATE OF CALIFORNIA - DEPARTMENT OF TRANSPORTATION

CONTRACT CHANGE ORDER

Change Requested by: Engineer

CCO: 219	Suppl. No. 0	Contract No. 04 - 012024	Road 04-SF,Ala-80-13.9/14.3,0.0/1.6	FED. AID LOC.: ACIM-080-1(085)8N

To: **KIEWIT / FCI / MANSON a JV**

You are directed to make the following changes from the plans and specifications or do the following described work not included in the plans and specifications for this contract. ***NOTE: This change order is not effective until approved by the Engineer.***

Description of work to be done, estimate of quantities and prices to be paid. (Segregate between additional work at contract price, agreed price and force account.) Unless otherwise stated, rates for rental of equipment cover only such time as equipment is actually used and no allowance will be made for idle time. This last percentage shown is the net accumulated increase or decrease from the original

Adjustment of Compensation at Force Account:

As authorized by the Engineer and in accordance with Section 4-1.03D "Extra Work" and Section 9-1.03 "Force Account Payment " of the Standard Specifications and Section 5-1.21 "Force Account Payment" of the Special Provisions, provide compensation for the premium portion of the overtime hours incurred by the electrical sub-contractor Edward Scott Electric to complete the remaining contract work within the remaining contract time in order to mitigate the impact of the service platform redesign on the contract electrical work, of the SFOBB East Span Skyway, Bridge Nos. 34-0006L/R.

This compensation at force account constitutes full compensation for all costs, including markups, all direct and indirect costs, all associated impacts, and all overhead costs.

Estimated cost of Adjustment of Compensation at Force Account $250,000.00

Estimated Cost: Increase ☑ Decrease ☐ $250,000.00

By reason of this order the time of completion will be adjusted as follows: 0 days

Submitted by

Signature	Resident Engineer DOUG COE, Supervising Br. Eng.	Date 10-31-07

Approval Recommended by

Signature	Construction Engineer DOUG COE	Date 10-31-07

Engineer Approval by

Signature Michael Fromm	Construction Manager PETER SIEGENTHALER	Date 11-14-07

We the undersigned contractor, have given careful consideration to the change proposed and agree, if this proposal is approved, that we will provide all equipment, furnish the materials, except as may otherwise be noted above, and perform all services necessary for the work above specified, and will accept as full payment therefor the prices shown above.

NOTE: If you, the contractor, do not sign acceptance of this order, your attention is directed to the requirements of the specifications as to proceeding with the ordered work and filing a written protest within the time therein specified.

Contractor Acceptance by

Signature	(Print name and title) Lee Zink Proj. Director	Date 11/6/07

STATE OF CALIFORNIA - DEPARTMENT OF TRANSPORTATION

CONTRACT CHANGE ORDER MEMORANDUM

TO: PETER SIEGENTHALER / DOUG COE, Supervising Br. Eng.

FROM: DOUG COE, Supervising Br. Eng.

FILE: **E.A.** 04 - 012024
CO-RTE-PM 04-SF,Ala-80-13.9/14.3,0.0/1.6
FED. NO. ACIM-080-1(085)8N

CCO# **220** SUPPLEMENT#: **0** Category Cod **AXZZ**

CONTINGENCY BALANCE (incl. this change **$4,591,790.10**

COST: **$34,507.00** INCREASE ☑ DECREASE ☐

HEADQUARTERS APPROVAL REQUIRED? ☐ YES ☑ NO

SUPPLEMENTAL FUNDS PROVIDED: **$0.00**

IS THIS REQUEST IN ACCORDANCE WITH ENVIRONMENTAL DOCUMENTS? ☑ YES ☐ NO

CCO DESCRIPTION:
Rework Modular Joint Support Boxes

PROJECT DESCRIPTION:
REPLACE SFOBB EAST SPAN

Original Contract Time:	Time Adj. This Change:	Previously Approved CCO Time Adjustments:	Percentage Time Adjusted: (including this change)	Total # of Unreconciled Deferred Time CCO(s): (including this change)
1000 Day(s)	**0** Day(s)	**424** Day(s)	**42** %	**0**

THIS CHANGE ORDER PROVIDES FOR:
modifying the North and South end support boxes (4 total) of modular joint assembly BE to allow placement of the modular joint into the existing blockout locations at hinge BE.

Hinge segment composite drawings developed in "Mission Control" did not make allowances for the strand anchor heads protruding into the block-out locations for the modular joints. Field measurements taken before shipment of modular joint "BE", which was fabricated to contract specifications, revealed that the outer most support boxes would interfere with the anchor heads. This interference will require the modular joint fabricator to redesign the two North-end and two South-end support boxes and fabricate smaller support boxes.

For this extra work, the Contractor will be paid an agreed lump sum amount of $34,507.00. This agreed lump sum constitutes full compensation, including all markups. The method of payment for this work is Extra Work at Agreed Lump Sum. This contract change order will result in a cost increase of $34,507.00 to the project, which can be financed from the contingency funds. A complete Force Account cost analysis is on file with the project records.

Prior approval was obtained from Mr. Doug Coe, Supervising Bridge Engineer, on October 5, 2007. A copy of the prior approval is attached.

FHWA Prior approval is not required, as this is a minor change order.

Design concurrence was provided by Mr. Tim Delis, Modular Joint Bearing specialist, on October 11, 2007. A copy of the concurrence provided by Mr. Delis is attached.

Concurrence from Maintenance is not required as this change does not use maintenance funds or affect maintenance facilities or operations.

No time adjustment is warranted for this change as it does not affect the controlling operation.

ADA Notice: For individuals with sensory disabilities, this document is available in alternate formats. For information call: (916) 654-6410 or TDD (916) 654-3880 or write Records and Forms Management, 1120 N Street, MS-89, Sacramento, CA 95814.

CONCURRED BY:		
Construction Engineer:	Douglas Coe DBC	Date 10-25-07
Bridge Engineer:	Douglas Coe DBC	Date 10-25-07
Project Engineer:	Tim Delis	Date 10/11/07
Project Manager:		Date
FHWA Rep.:		Date
Environmental:		Date
Other (specify):	Tim Delis, Design	Date 10/11/07
Other (specify):		Date
District Prior Approval By:	Douglas Coe	Date 10/5/07
HQ (Issue Approve) By:		Date
Resident Engineer's Signature:		Date 10-25-07

ESTIMATE OF COST

	THIS REQUEST	TOTAL TO DATE
ITEMS	$0.00	$0.00
FORCE ACCOUNT	$0.00	$0.00
AGREED PRICE	$34,507.00	$34,507.00
ADJUSTMENT	$0.00	$0.00
TOTAL	$34,507.00	$34,507.00

FEDERAL PARTICIPATION

☑ PARTICIPATING ☐ PARTICIPATING IN PART ☐ NONE
☐ NON-PARTICIPATING (MAINTENANCE) ☐ NON-PARTICIPATING

FEDERAL SEGREGATION (if more than one Funding Source or P.I.P. type)
☑ CCO FUNDED PER CONTRACT ☐ CCO FUNDED AS FOLLOWS

FEDERAL FUNDING SOURCE	PERCENT

ADA Notice: For individuals with sensory disabilities, this document is available in alternate formats. For information call: (916) 654-6410 or TDD (916) 654-3880 or write Records and Forms Management, 1120 N Street, MS-89, Sacramento, CA 95814.

Department of Transportation
EAST SPAN SEISMIC SAFETY PROJECT
CONCURRENCE FOR CHANGE ORDERS (08/04)
Contract No. 04-012024
Co. & Rte Ala-80-13.9/14.3, 0.0/1.6

CCO No.: S#: 0 220
Title: Rework Modular Joint Support Boxes
Date: 10/2/07

To: DOUGLAS COE, Resident Engineer

Requested By: DAVE WU, Senior Engineer (initials KB SW

Description of Work:
Re-fabricate the North and South end support boxes (4 total) of modular joint assembly BE to allow for placement into the existing block-out area.

Reason for Change:
During the "Mission Control" development of composite drawings for the hinge segments no allowance was made for the strand anchor heads protruding into the block-out locations for the modular joints. Field measurements taken before shipment of modular joint "BE", which was fabricated to contract specifications, revealed that the outer most support boxes would interfere with the anchor heads. This required the modular joint fabricator to redesign and fabricate smaller support boxes for the two North-end and two South-end support boxes.

Approvals Required By:
- ☐ Division of Construction, HQ
- ☐ FHWA
- ☒ District

Concurrence Required By:
- ☒ Design
- ☐ Maintenance

Discussed with persons noted below:

FHWA:	Date	Br. Design: Tim Delis, Mod. Joint Specialist	Date
District:	Date	Br. Geology:	Date
Other:	Date	Br. Maintenance:	Date

Estimated Cost: $40,000.00

Recommended Method of Payment:
- ☐ Contract Items
- ☒ Agreed Price (LS or UP)
- ☐ Extra Work at Force Account
- ☐ Other:

Recommended Time Adjustment: 0

Prior Approvals:
- ☒ This represents Prior Approval to proceed with the work.
- ☐ This represents an acknowledgement that the individuals below are in concurrence with this change order, which requires Division of Construction approval before proceeding with the work.

Comments:

10-5-07
Douglas Coe, Resident Engineer — Date

Pete Siegenthaler, Principal Construction Engineer — Date

Patrick Treacy, Construction Coordinator — Date

Tim Delis/HQ/Caltrans/CAGov
10/11/2007 11:06 AM

To Dave Wu/D04/Caltrans/CAGov@DOT, Michelle Chui/D04/Caltrans/CAGov@DOT, Hasan El-Natur/HQ/Caltrans/CAGov@DOT
cc Jake VanEnckevort/D04/Caltrans/CAGov@DOT, Kannu Balan/D03/Caltrans/CAGov@DOT, Tim Delis/HQ/Caltrans/CAGov@DOT
bcc
Subject Re: Fw: Design Concurrence for Modular Joint Rework

Dave:

Because of a construction mistake some of the strand anchor heads were protruding into the block-out area dedicated to swivel joint.
When the conflict problem between the anchor heads and swivel joint was identified, a telephone conference was held with participants myself, DS Brown, CT construction, the contractor and the designer of the Skyway structure TY Lin.

At the meeting I questioned whether the service and the seismic demands at the joint locations would be accommodated by the trimmed swivel joint. Both contractor and TY Lin said they had run their numbers and said yes. With that understanding and as the CT joint specialist, I advised CT construction to accept the modified joint design. In any case, the ultimate joint approval and its associated cost belongs to CT construction who manages and executes the contract

Tim Delis
Joint Seals & Bearings Specialist

Dave Wu/D04/Caltrans/CAGov

Dave Wu/D04/Caltrans/CAGov
10/11/2007 10:07 AM

To Tim Delis/HQ/Caltrans/CAGov@DOT
cc Kannu Balan/D03/Caltrans/CAGov@DOT, Jake VanEnckevort/D04/Caltrans/CAGov@DOT
Subject Fw: Design Concurrence for Modular Joint Rework

Tim:
need your concurrence on the modification to support box due to conflict with anchorages

d
---- Forwarded by Dave Wu/D04/Caltrans/CAGov on 10/11/2007 10:04 AM ----

Jake VanEnckevort/D04/Caltrans/CAGov
Sent by: Jake VanEnckevort
10/10/2007 02:47 PM

To Dave Wu/D04/Caltrans/CAGov@DOT
cc Kannu Balan/D03/Caltrans/CAGov@DOT
Subject Design Concurrence for Modular Joint Rework

Mr. Wu,

Can you please provide us with the design concurrence for the attached CCO.
I believe it needs to come from Mr. Tim Delis but I am not sure.

Thanks

Jake

CCO_220_S0_Design_Report.pdf CCO_220_S0_Design_Memo.pdf

STATE OF CALIFORNIA - DEPARTMENT OF TRANSPORTATION

CONTRACT CHANGE ORDER

Change Requested by: Engineer

CCO: 220	Suppl. No. 0	Contract No. 04 - 012024	Road 04-SF,Ala-80-13.9/14.3,0.0/1.6	FED. AID LOC.: ACIM-080-1(085)8N

To: **KIEWIT / FCI / MANSON a JV**

You are directed to make the following changes from the plans and specifications or do the following described work not included in the plans and specifications for this contract. ***NOTE: This change order is not effective until approved by the Engineer.***

Description of work to be done, estimate of quantities and prices to be paid. (Segregate between additional work at contract price, agreed price and force account.) Unless otherwise stated, rates for rental of equipment cover only such time as equipment is actually used and no allowance will be made for idle time. This last percentage shown is the net accumulated increase or decrease from the original

Extra Work at Lump Sum:

As authorized by the Engineer, modify the North and South end support boxes (4 total) of modular joint assembly BE to allow placement of the modular joint into the existing blockout locations at hinge BE, for the SFOBB East Span Skyway, Bridge No. 34-0006R.

For this Extra Work, the Contractor agrees to accept an agreed lump sum amount of $34,507.00. This agreed lump sum constitutes full compensation for all costs, including markups, all direct and indirect costs, all associated project impacts, and all overhead costs.

Extra Work at Agreed Lump Sum $34,507.00

Estimated Cost: Increase ☑ Decrease ☐ **$34,507.00**

By reason of this order the time of completion will be adjusted as follows: 0 days

Submitted by

Signature	Resident Engineer DOUG COE, Supervising Br. Eng.	Date 10-25-07

Approval Recommended by

Signature	Construction Engineer DOUG COE	Date 10-25-07

Engineer Approval by

Signature Michael Frame	Construction Manager PETER SIEGENTHALER	Date 11-14-07

We the undersigned contractor, have given careful consideration to the change proposed and agree, if this proposal is approved, that we will provide all equipment, furnish the materials, except as may otherwise be noted above, and perform all services necessary for the work above specified, and will accept as full payment therefor the prices shown above.

NOTE: If you, the contractor, do not sign acceptance of this order, your attention is directed to the requirements of the specifications as to proceeding with the ordered work and filing a written protest within the time therein specified.

Contractor Acceptance by

Signature	(Print name and title) Lee Zink Proj. Director	Date 11/6/07

STATE OF CALIFORNIA - DEPARTMENT OF TRANSPORTATION

CONTRACT CHANGE ORDER MEMORANDUM

TO: PETER SIEGENTHALER / DOUG COE, Supervising Br. Eng.

FROM: DOUG COE, Supervising Br. Eng.

FILE: E.A. 04 - 012024
CO-RTE-PM 04-SF,Ala-80-13.9/14.3,0.0/1.6
FED. NO. ACIM-080-1(085)8N

CCO# **220** SUPPLEMENT#: **0** Category Cod **AXZZ**

CONTINGENCY BALANCE (incl. this change **$4,591,790.10**

COST: **$34,507.00** INCREASE ☑ DECREASE ☐

HEADQUARTERS APPROVAL REQUIRED? ☐ YES ☑ NO

SUPPLEMENTAL FUNDS PROVIDED: **$0.00**

IS THIS REQUEST IN ACCORDANCE WITH ENVIRONMENTAL DOCUMENTS? ☑ YES ☐ NO

CCO DESCRIPTION:
Rework Modular Joint Support Boxes

PROJECT DESCRIPTION:
REPLACE SFOBB EAST SPAN

Original Contract Time:	Time Adj. This Change:	Previously Approved CCO Time Adjustments:	Percentage Time Adjusted: (including this change)	Total # of Unreconciled Deferred Time CCO(s): (including this change)
1000 Day(s)	**0** Day(s)	**424** Day(s)	**42** %	**0**

THIS CHANGE ORDER PROVIDES FOR:
modifying the North and South end support boxes (4 total) of modular joint assembly BE to allow placement of the modular joint into the existing blockout locations at hinge BE.

Hinge segment composite drawings developed in "Mission Control" did not make allowances for the strand anchor heads protruding into the block-out locations for the modular joints. Field measurements taken before shipment of modular joint "BE", which was fabricated to contract specifications, revealed that the outer most support boxes would interfere with the anchor heads. This interference will require the modular joint fabricator to redesign the two North-end and two South-end support boxes and fabricate smaller support boxes.

For this extra work, the Contractor will be paid an agreed lump sum amount of $34,507.00. This agreed lump sum constitutes full compensation, including all markups. The method of payment for this work is Extra Work at Agreed Lump Sum. This contract change order will result in a cost increase of $34,507.00 to the project, which can be financed from the contingency funds. A complete Force Account cost analysis is on file with the project records.

Prior approval was obtained from Mr. Doug Coe, Supervising Bridge Engineer, on October 5, 2007. A copy of the prior approval is attached.

FHWA Prior approval is not required, as this is a minor change order.

Design concurrence was provided by Mr. Tim Delis, Modular Joint Bearing specialist, on October 11, 2007. A copy of the concurrence provided by Mr. Delis is attached.

Concurrence from Maintenance is not required as this change does not use maintenance funds or affect maintenance facilities or operations.

No time adjustment is warranted for this change as it does not affect the controlling operation.

RECEIVED
DEC 17 2007
061991

ADA Notice: For individuals with sensory disabilities, this document is available in alternate formats. For information call: (916) 654-6410 or TDD (916) 654-3880 or write Records and Forms Management, 1120 N Street, MS-89, Sacramento, CA 95814.

CONCURRED BY:

Construction Engineer:	Douglas Coe DBC	Date 10-25-07
Bridge Engineer:	Douglas Coe DBC	Date 10-25-07
Project Engineer:	Tim Delis	Date 10/11/07
Project Manager:		Date
FHWA Rep.:		Date
Environmental:		Date
Other (specify):	Tim Delis, Design	Date 10/11/07
Other (specify):		Date
District Prior Approval By:	Douglas Coe	Date 10/5/07
HQ (Issue Approve) By:		Date
Resident Engineer's Signature:		Date 10-25-07

ESTIMATE OF COST

	THIS REQUEST	TOTAL TO DATE
ITEMS	$0.00	$0.00
FORCE ACCOUNT	$0.00	$0.00
AGREED PRICE	$34,507.00	$34,507.00
ADJUSTMENT	$0.00	$0.00
TOTAL	$34,507.00	$34,507.00

FEDERAL PARTICIPATION

☑ PARTICIPATING ☐ PARTICIPATING IN PART ☐ NONE
☐ NON-PARTICIPATING (MAINTENANCE) ☐ NON-PARTICIPATING

FEDERAL SEGREGATION (if more than one Funding Source or P.I.P. type)
☑ CCO FUNDED PER CONTRACT ☐ CCO FUNDED AS FOLLOWS

FEDERAL FUNDING SOURCE	PERCENT

ADA Notice: For individuals with sensory disabilities, this document is available in alternate formats. For information call: (916) 654-6410 or TDD (916) 654-3880 or write Records and Forms Management, 1120 N Street, MS-89, Sacramento, CA 95814.

STATE OF CALIFORNIA - DEPARTMENT OF TRANSPORTATION

CONTRACT CHANGE ORDER

Change Requested by: Engineer

CCO: 220	Suppl. No. 0	Contract No. 04 - 012024	Road 04-SF,Ala-80-13.9/14.3,0.0/1.6	FED. AID LOC.: ACIM-080-1(085)8N

To: **KIEWIT / FCI / MANSON a JV**

You are directed to make the following changes from the plans and specifications or do the following described work not included in the plans and specifications for this contract. ***NOTE: This change order is not effective until approved by the Engineer.***

Description of work to be done, estimate of quantities and prices to be paid. (Segregate between additional work at contract price, agreed price and force account.) Unless otherwise stated, rates for rental of equipment cover only such time as equipment is actually used and no allowance will be made for idle time. This last percentage shown is the net accumulated increase or decrease from the original

Extra Work at Lump Sum:

As authorized by the Engineer, modify the North and South end support boxes (4 total) of modular joint assembly BE to allow placement of the modular joint into the existing blockout locations at hinge BE, for the SFOBB East Span Skyway, Bridge No. 34-0006R.

For this Extra Work, the Contractor agrees to accept an agreed lump sum amount of $34,507.00. This agreed lump sum constitutes full compensation for all costs, including markups, all direct and indirect costs, all associated project impacts, and all overhead costs.

Extra Work at Agreed Lump Sum $34,507.00

Estimated Cost: Increase ☑ Decrease ☐ $34,507.00

By reason of this order the time of completion will be adjusted as follows: 0 days

Submitted by

Signature	Resident Engineer DOUG COE, Supervising Br. Eng.	Date 10-25-07

Approval Recommended by

Signature	Construction Engineer DOUG COE	Date 10-25-07

Engineer Approval by

Signature	Construction Manager PETER SIEGENTHALER	Date 11-14-07

We the undersigned contractor, have given careful consideration to the change proposed and agree, if this proposal is approved, that we will provide all equipment, furnish the materials, except as may otherwise be noted above, and perform all services necessary for the work above specified, and will accept as full payment therefor the prices shown above.

NOTE: If you, the contractor, do not sign acceptance of this order, your attention is directed to the requirements of the specifications as to proceeding with the ordered work and filing a written protest within the time therein specified.

Contractor Acceptance by

Signature	(Print name and title) Lee Zink Proj. Director	Date 11/6/07

STATE OF CALIFORNIA - DEPARTMENT OF TRANSPORTATION

CONTRACT CHANGE ORDER MEMORANDUM

TO: MICHAEL FORNER / DOUG COE, Supervising Br. Eng.	FILE: E.A. 04 - 012024
	CO-RTE-PM 04-SF,Ala-80-13.9/14.3,0.0/1.6
FROM: DOUG COE, Supervising Br. Eng.	FED. NO. ACIM-080-1(085)8N
CCO# **221** SUPPLEMENT#: **0** Category Cod **CBPX**	CONTINGENCY BALANCE (incl. this change **$4,605,803.10**
COST: **$69,288.00** INCREASE ☑ DECREASE ☐	HEADQUARTERS APPROVAL REQUIRED? ☐ YES ☑ NO
SUPPLEMENTAL FUNDS PROVIDED: **$0.00**	IS THIS REQUEST IN ACCORDANCE WITH ENVIRONMENTAL DOCUMENTS? ☑ YES ☐ NO
CCO DESCRIPTION: Rework of Electrical at Hinge Pipe Beams	**PROJECT DESCRIPTION:** REPLACE SFOBB EAST SPAN

Original Contract Time:	Time Adj. This Change:	Previously Approved CCO Time Adjustments:	Percentage Time Adjusted: (including this change)	Total # of Unreconciled Deferred Time CCO(s): (including this change)
1000 Day(s)	**0** Day(s)	**424** Day(s)	**42** %	**5**

THIS CHANGE ORDER PROVIDES FOR:

replacing 64 of the 36" electrical conduit elbows with 24" elbows (or 45-degree connectors) at hinge pipe beams BE, BW, CE, CW, DE, and DW; at hinge EE, and EW replacing the 48, 90-degree elbows with 45-degree connectors and add a strain relief grip at each flex conduit connection, and relocating the cable trays at the northwest side of hinge BE, and CE, of the SFOBB East Span Skyway, Bridge Nos. 34-0006L/R.

The electrical conduit elbows at the hinge pipe beams all have the same radius. This is creating an installation and orientation problem. To alleviate this problem several of these elbows will need to be replaced with 24" elbows or 45-degree connectors. The hinge EE, and EW contract plan specified 90-degree elbows did not leave enough room for connecting to the flex conduit. The elbows will need to be replaced with 45-degree connectors and strain relief grips. The cable trays on the northwest side of hinge BE, and CE are creating a conflict with the web manholes and will need to be relocated.

For this extra work, the Contractor will be paid an agreed lump sum amount of $69,288.00. This agreed lump sum constitutes full compensation, including all markups. The method of payment for this work is Extra Work at Lump Sum. This contract change order will result in a cost increase of $69,288.00 to the project, which can be financed from the contingency funds. A complete Force Account cost analysis is on file with the project records.

Prior approval was obtained from Mr. Doug Coe, Supervising Bridge Engineer, on October 5, 2007. A copy of the prior approval is attached.

FHWA Prior approval is not required, as this is a minor change order.

Design concurrence was provided by Mr. Parviz Boozarpour, Senior Transportation Electrical Engineer, on December 4, 2007. A copy of the concurrence provided by Mr. Boozarpour is attached.

Concurrence from Maintenance was obtained from Mr. Gregory Klein, Maintenance Manager II, on November 28, 2007. A copy of the concurrence provided by Mr. Klein is attached.

The change order was forwarded to the Contractor on December 12, 2007. The Contractor is requesting the removal of "all associated project impacts" from the change order and therefore returned the change order un-signed on December 18, 2007. In order to lock in the agreed to direct cost of this CCO, the Engineer has removed the objectionable language from the CCO.

No time adjustment is warranted for this change as it does not affect the controlling operation.

ADA Notice: For individuals with sensory disabilities, this document is available in alternate formats. For information call: (916) 654-6410 or TDD (916) 654-3880 or write Records and Forms Management, 1120 N Street, MS-89, Sacramento, CA 95814.

CONCURRED BY:			
Construction Engineer:	Douglas Coe	DBC	Date 1-7-08
Bridge Engineer:	Douglas Coe	DBC	Date 1-7-08
Project Engineer:			Date
Project Manager:			Date
FHWA Rep.:			Date
Environmental:			Date
Other (specify):	Gregory Klein, Maintenance		Date 11/28/07
Other (specify):	Parviz Boozarpour, Elect. Design		Date 12/4/07
District Prior Approval By:	Douglas Coe		Date 10/5/07
HQ (Issue Approve) By:			Date
Resident Engineer's Signature:			Date 1-7-08

ESTIMATE OF COST

	THIS REQUEST	TOTAL TO DATE
ITEMS	$0.00	$0.00
FORCE ACCOUNT	$0.00	$0.00
AGREED PRICE	$69,288.00	$69,288.00
ADJUSTMENT	$0.00	$0.00
TOTAL	$69,288.00	$69,288.00

FEDERAL PARTICIPATION

☑ PARTICIPATING ☐ PARTICIPATING IN PART ☐ NONE
☐ NON-PARTICIPATING (MAINTENANCE) ☐ NON-PARTICIPATING

FEDERAL SEGREGATION (if more than one Funding Source or P.I.P. type)
☑ CCO FUNDED PER CONTRACT ☐ CCO FUNDED AS FOLLOWS

FEDERAL FUNDING SOURCE	PERCENT

ADA Notice: For individuals with sensory disabilities, this document is available in alternate formats. For information call: (916) 654-6410 or TDD (916) 654-3880 or write Records and Forms Management, 1120 N Street, MS-89, Sacramento, CA 95814.

Parviz Boozarpour/D04/Caltrans/CAGov
12/04/2007 10:34 AM

To Bill Howe/D04/Caltrans/CAGov@DOT
cc Jake VanEnckevort/D04/Caltrans/CAGov@DOT
bcc
Subject Re: Fw: Contract 04-012024, Re: concurrence on CCO 211

I concur with CCO 221 for rework on the connection between the hinge pipe beam conduit frame and the cable trays.

Thanks,
Parviz

Bill Howe/D04/Caltrans/CAGov

Bill Howe/D04/Caltrans/CAGov
12/03/2007 04:22 PM

To Parviz Boozarpour/D04/Caltrans/CAGov@DOT
cc Jake VanEnckevort/D04/Caltrans/CAGov@DOT
Subject Re: Fw: Contract 04-012024, Re: concurrence on CCO 211

Parvis: Take another look at the e-mail I sent below. CCO 221 was some re work of the connection at the hinge pipe beam, not relocation of equipment (that was CCO 211). We're seeking concurrence on both CCOs. Thanks.

William Howe, P.E.
Senior Transportation Engineer
Electrical/Mechanical/Safety/SWPPP
SFOBB East Span Replacement-Skyway
Cell: (510) 385-7084

Parviz Boozarpour/D04/Caltrans/CAGov

Parviz Boozarpour/D04/Caltrans/CAGov
11/29/2007 10:33 AM

To Bill Howe/D04/Caltrans/CAGov@DOT
cc
Subject Re: Fw: Contract 04-012024, Re: concurrence on CCO 211

I concur with Skyway service platform equipment relocation of CCO 221.

Thanks,
Parviz

Bill Howe/D04/Caltrans/CAGov

Bill Howe/D04/Caltrans/CAGov
12/03/2007 04:17 PM

To Jake VanEnckevort/D04/Caltrans/CAGov@DOT
cc
bcc
Subject Fw: Contract 04-012024, Re: concurrence on CCO 211

I finally have some info. Sorry for the delay.

William Howe, P.E.
Senior Transportation Engineer
Electrical/Mechanical/Safety/SWPPP
SFOBB East Span Replacement-Skyway
Cell: (510) 385-7084

----- Forwarded by Bill Howe/D04/Caltrans/CAGov on 12/03/2007 04:09 PM -----

Gregory Klein/D04/Caltrans/CAGov
11/28/2007 02:34 PM

To Bill Howe/D04/Caltrans/CAGov@DOT
cc
Subject Fw: Contract 04-012024, Re: concurrence on CCO 211

Good with us

Gregory E. Klein
Region Manager II
Specialty Region
415-330-6500 (Office)
415-330-6515 (Fax)

----- Forwarded by Gregory Klein/D04/Caltrans/CAGov on 11/28/2007 02:34 PM -----

Renato Fortaleza/D04/Caltrans/CAGov
11/28/2007 02:28 PM

To Gregory Klein/D04/Caltrans/CAGov@DOT
cc
Subject Re: Fw: Contract 04-012024, Re: concurrence on CCO 211

This is OK I concurr
Gregory Klein/D04/Caltrans/CAGov

Gregory Klein/D04/Caltrans/CAGov
11/28/2007 12:05 PM

To Renato Fortaleza/D04/Caltrans/CAGov@DOT
cc
Subject Fw: Contract 04-012024, Re: concurrence on CCO 211

Are you OK with the changes?

Gregory E. Klein
Region Manager II
Specialty Region
415-330-6500 (Office)
415-330-6515 (Fax)
----- Forwarded by Gregory Klein/D04/Caltrans/CAGov on 11/28/2007 12:05 PM -----

Bill Howe/D04/Caltrans/CAGov
11/28/2007 11:28 AM

To Gregory Klein/D04/Caltrans/CAGov@DOT, Parviz Boozarpour/D04/Caltrans/CAGov@DOT
cc Jake VanEnckevort/D04/Caltrans/CAGov@DOT
Subject Fw: Contract 04-012024, Re: concurrence on CCO 211

Greg and Parvis: I need to get some concurrences on CCOs. CCO 211 rearranged a rack on the Skyway service platforms so that all the cabinets would fit. CCO 221 did some rework on the connection between the hinge pipe beam conduit frame and the cable trays in order for them to fit properly. Greg, I think Rene is familiar with this work and I need your concurrence on both 211 and 221. Parvis, I need your concurrence on CCO 221. Thanks.

William Howe, P.E.
Senior Transportation Engineer
Electrical/Mechanical/Safety/SWPPP
SFOBB East Span Replacement-Skyway
Cell: (510) 385-7084

----- Forwarded by Bill Howe/D04/Caltrans/CAGov on 11/28/2007 11:10 AM -----

Jake VanEnckevort/D04/Caltrans/CAGov
Sent by: Jake VanEnckevort

11/28/2007 10:13 AM

To Bill Howe/D04/Caltrans/CAGov@DOT
cc Kannu Balan/D03/Caltrans/CAGov@DOT
Subject Fw: Contract 04-012024, Re: concurrence on CCO 211

Bill,
Please let me know what the status is on the concurrences for these CCO's.

Thanks
Jake
----- Forwarded by Jake VanEnckevort/D04/Caltrans/CAGov on 11/28/2007 10:11 AM -----

Jake VanEnckevort/D04/Caltrans/CAGov
Sent by: Jake VanEnckevort

11/16/2007 08:19 AM

To Bill Howe/D04/Caltrans/CAGov
cc
Subject Re: Fw: Contract 04-012024, Re: concurrence on CCO 211

Department of Transportation
EAST SPAN SEISMIC SAFETY PROJECT
CONCURRENCE FOR CHANGE ORDERS (08/04)
Contract No. 04-012024
Co. & Rte Ala-80-13.9/14.3, 0.0/1.6

CCO No.: S#: 0 221
Title: Rework of Electrical at Hinge Pipe Beams
Date: 10/2/07

To: DOUGLAS COE, Resident Engineer

Requested By: WILLIAM B HOWE, Senior Engineer (initials WBH)

Description of Work:
As authorized by the Engineer, at hinge pipe beams BE, BW, CE, CW, DE, and DW replace several of the 36" electrical conduit elbows with 24" elbows or 45-degree connectors. At hinge EE, and EW, replace the 90-degree elbows with 45-degree connectors and add a strain relief grip at each flex conduit connection. At the northwest side of hinge BE, and CE, relocate the cable trays.

Reason for Change:
The electrical conduit elbows at the hinge pipe beams all have the same radius. This is creating an installation and orientation problem. To alleviate this problem several of these elbows will need to be replaced with 24" elbows or 45-degree connectors. The contract plans for the flex conduit connections at hinge EE, and EW did not provide for the needed strain relief grips. The cable trays on the northwest side of hinge BE, and CE are creating a conflict with the web manholes and will need to be relocated.

Approvals Required By:
- ☐ Division of Construction, HQ
- ☐ FHWA
- ☒ District

Concurrence Required By:
- ☒ Design
- ☒ Maintenance

Discussed with persons noted below:

FHWA:	Date	Br. Design:	Date
District:	Date	Br. Geology:	Date
Other:	Date	Br. Maintenance:	Date

Estimated Cost: $70,000.00

Recommended Method of Payment:
- ☐ Contract Items
- ☒ Agreed Price (LS or UP)
- ☐ Extra Work at Force Account
- ☐ Other:

Recommended Time Adjustment: 0

Prior Approvals:
- ☒ This represents Prior Approval to proceed with the work.
- ☐ This represents an acknowledgement that the individuals below are in concurrence with this change order, which requires Division of Construction approval before proceeding with the work.

Comments:

10-5-07
Douglas Coe, Resident Engineer — Date

Pete Siegenthaler, Principal Construction Engineer — Date

Patrick Treacy, Construction Coordinator — Date

STATE OF CALIFORNIA - DEPARTMENT OF TRANSPORTATION

CONTRACT CHANGE ORDER

Change Requested by: Engineer

CCO: 221	Suppl. No. 0	Contract No. 04 - 012024	Road 04-SF,Ala-80-13.9/14.3,0.0/1.6	FED. AID LOC.: ACIM-080-1(085)8N

To: **KIEWIT / FCI / MANSON a JV**

You are directed to make the following changes from the plans and specifications or do the following described work not included in the plans and specifications for this contract. ***NOTE: This change order is not effective until approved by the Engineer.***

Description of work to be done, estimate of quantities and prices to be paid. (Segregate between additional work at contract price, agreed price and force account.) Unless otherwise stated, rates for rental of equipment cover only such time as equipment is actually used and no allowance will be made for idle time. This last percentage shown is the net accumulated increase or decrease from the original

Extra Work at Lump Sum:

As authorized by the Engineer, replace 64 of the 36" electrical conduit elbows with 24" elbows (or 45-degree connectors) at hinge pipe beams BE, BW, CE, CW, DE, and DW; at hinge EE, and EW replace the 48, 90-degree elbows with 45-degree connectors and add a strain relief grip at each flex conduit connection; and relocate the cable trays at the northwest side of hinge BE, and CE, of the SFOBB East Span Skyway, Bridge Nos. 34-0006L/R.

For this Extra Work, the Contractor agrees to accept an agreed lump sum amount of $69,288.00. This agreed lump sum constitutes full compensation for all costs, including markups, all direct and indirect costs, and all overhead costs.

Extra Work at Agreed Lump Sum $69,288.00

Estimated Cost: Increase ☑ Decrease ☐ **$69,288.00**

By reason of this order the time of completion will be adjusted as follows: 0 days

Submitted by

Signature	Resident Engineer DOUG COE, Supervising Br. Eng.	Date 1-7-08

Approval Recommended by

Signature	Construction Engineer DOUG COE	Date 1-7-08

Engineer Approval by

Signature Michael Forner	Construction Manager MIKE FORNER	Date 1-23-08

We the undersigned contractor, have given careful consideration to the change proposed and agree, if this proposal is approved, that we will provide all equipment, furnish the materials, except as may otherwise be noted above, and perform all services necessary for the work above specified, and will accept as full payment therefor the prices shown above.

NOTE: If you, the contractor, do not sign acceptance of this order, your attention is directed to the requirements of the specifications as to proceeding with the ordered work and filing a written protest within the time therein specified.

Contractor Acceptance by

Signature	(Print name and title) Lee Zink Project Director	Date 1/15/08

STATE OF CALIFORNIA - DEPARTMENT OF TRANSPORTATION

CONTRACT CHANGE ORDER MEMORANDUM

TO: MICHAEL FORNER / DOUG COE, Supervising Br. Eng.

FROM: DOUG COE, Supervising Br. Eng.

FILE: **E.A.** 04 - 012024
CO-RTE-PM 04-SF,Ala-80-13.9/14.3,0.0/1.6
FED. NO. ACIM-080-1(085)8N

CCO# **221** SUPPLEMENT#: **0** Category Cod **CBPX**

CONTINGENCY BALANCE (incl. this change **$4,605,803.10**

COST: **$69,288.00** INCREASE ☑ DECREASE ☐

HEADQUARTERS APPROVAL REQUIRED? ☐ YES ☑ NO

SUPPLEMENTAL FUNDS PROVIDED: **$0.00**

IS THIS REQUEST IN ACCORDANCE WITH ENVIRONMENTAL DOCUMENTS? ☑ YES ☐ NO

CCO DESCRIPTION:
Rework of Electrical at Hinge Pipe Beams

PROJECT DESCRIPTION:
REPLACE SFOBB EAST SPAN

Original Contract Time:	Time Adj. This Change:	Previously Approved CCO Time Adjustments:	Percentage Time Adjusted: (including this change)	Total # of Unreconciled Deferred Time CCO(s): (including this change)
1000 Day(s)	**0** Day(s)	**424** Day(s)	**42** %	**5**

THIS CHANGE ORDER PROVIDES FOR:
replacing 64 of the 36" electrical conduit elbows with 24" elbows (or 45-degree connectors) at hinge pipe beams BE, BW, CE, CW, DE, and DW; at hinge EE, and EW replacing the 48, 90-degree elbows with 45-degree connectors and add a strain relief grip at each flex conduit connection, and relocating the cable trays at the northwest side of hinge BE, and CE, of the SFOBB East Span Skyway, Bridge Nos. 34-0006L/R.

The electrical conduit elbows at the hinge pipe beams all have the same radius. This is creating an installation and orientation problem. To alleviate this problem several of these elbows will need to be replaced with 24" elbows or 45-degree connectors. The hinge EE, and EW contract plan specified 90-degree elbows did not leave enough room for connecting to the flex conduit. The elbows will need to be replaced with 45-degree connectors and strain relief grips. The cable trays on the northwest side of hinge BE, and CE are creating a conflict with the web manholes and will need to be relocated.

For this extra work, the Contractor will be paid an agreed lump sum amount of $69,288.00. This agreed lump sum constitutes full compensation, including all markups. The method of payment for this work is Extra Work at Lump Sum. This contract change order will result in a cost increase of $69,288.00 to the project, which can be financed from the contingency funds. A complete Force Account cost analysis is on file with the project records.

Prior approval was obtained from Mr. Doug Coe, Supervising Bridge Engineer, on October 5, 2007. A copy of the prior approval is attached.

FHWA Prior approval is not required, as this is a minor change order.

Design concurrence was provided by Mr. Parviz Boozarpour, Senior Transportation Electrical Engineer, on December 4, 2007. A copy of the concurrence provided by Mr. Boozarpour is attached.

Concurrence from Maintenance was obtained from Mr. Gregory Klein, Maintenance Manager II, on November 28, 2007. A copy of the concurrence provided by Mr. Klein is attached.

The change order was forwarded to the Contractor on December 12, 2007. The Contractor is requesting the removal of "all associated project impacts" from the change order and therefore returned the change order un-signed on December 18, 2007. In order to lock in the agreed to direct cost of this CCO, the Engineer has removed the objectionable language from the CCO.

No time adjustment is warranted for this change as it does not affect the controlling operation.

ADA Notice: For individuals with sensory disabilities, this document is available in alternate formats. For information call: (916) 654-6410 or TDD (916) 654-3880 or write Records and Forms Management, 1120 N Street, MS-89, Sacramento, CA 95814.

STATE OF CALIFORNIA - DEPARTMENT OF TRANSPORTATION

CONTRACT CHANGE ORDER MEMORANDUM

DATE: 1/16/2007 Page 1 of 1

TO: MICHAEL FORNER / DOUG COE, Supervising Br. Eng.

FROM: DOUG COE, Supervising Br. Eng.

FILE: E.A. 04 - 012024
CO-RTE-PM 04-SF,Ala-80-13.9/14.3,0.0/1.6
FED. NO. ACIM-080-1(085)8N

CCO# **213** | SUPPLEMENT#: **1** | Category Cod **CHSA**

CONTINGENCY BALANCE (incl. this change **$1,508,610.72**

COST: **$400,000.00** INCREASE ☑ DECREASE ☐

HEADQUARTERS APPROVAL REQUIRED? ☑ YES ☐ NO

SUPPLEMENTAL FUNDS PROVIDED: **$0.00**

IS THIS REQUEST IN ACCORDANCE WITH ENVIRONMENTAL DOCUMENTS? ☑ YES ☐ NO

CCO DESCRIPTION:
Additional Funds for Tower AE & AW Mod.

PROJECT DESCRIPTION:
REPLACE SFOBB EAST SPAN

Original Contract Time:	Time Adj. This Change:	Previously Approved CCO Time Adjustments:	Percentage Time Adjusted: (including this change)	Total # of Unreconciled Deferred Time CCO(s): (including this change)
1000 Day(s)	**0** Day(s)	**424** Day(s)	**42** %	**8**

THIS CHANGE ORDER PROVIDES FOR:
additional funds for CCO No. 213 Supplement 0 for modifying the supports and external shearkeys of the temporary Orthotropic Box Girder support towers AE and AW.

This change order is needed to provide additional funds to complete the modifications to the support towers required in CCO No. 213 Supplement 0. Design changes to the scope of CCO No. 213, Supplement 0 exceeded the initial estimate.

This work will be paid for as Extra Work at Force Account for an estimated cost of $400,000.00, which can be financed from the contingency fund.

Prior approval was obtained from Mr. Mike Forner, SFOBB Construction Manager, on January 10, 2008.

Prior Approval was obtained from Ms. Nancy Bobb, FHWA Bay Bridge Project Manager, via electronic message on January 15, 2008. A printed copy of the prior approval provided by Ms. Bobb is attached.

Prior Approval was obtained from Mr. Ken Terpstra, SFOBB Project Manager, via electronic message on January 15, 2008. A printed copy of the prior approval provided by Mr. Terpstra is attached.

Design concurrence for this work was provided for in CCO No. 213 Supplement 0.

Maintenance concurrence for this work was provided for in CCO No. 213 Supplement 0.

No time adjustment is warranted for this change as it does not affect the controlling operation.

CONCURRED BY:

Construction Engineer:	Douglas Coe DBC	Date 1-17-08
Bridge Engineer:	Douglas Coe DBC	Date 1-17-08
Project Engineer:		Date
Project Manager:	Ken Terpstra	Date 1/15/08
FHWA Rep.:	Nancy Bobb	Date 1/15/08
Environmental:		Date
Other (specify):		Date
Other (specify):		Date
District Prior Approval By:	Mike Forner	Date 1/10/08
HQ (Issue Approval) By:	Ken Darby	Date
Resident Engineer's Signature:		Date 1-17-08

ESTIMATE OF COST

	THIS REQUEST	TOTAL TO DATE
ITEMS	$0.00	$0.00
FORCE ACCOUNT	$400,000.00	$750,000.00
AGREED PRICE	$0.00	$0.00
ADJUSTMENT	$0.00	$0.00
TOTAL	$400,000.00	$750,000.00

FEDERAL PARTICIPATION

☑ PARTICIPATING ☐ PARTICIPATING IN PART ☐ NONE
☐ NON-PARTICIPATING (MAINTENANCE) ☐ NON-PARTICIPATING

FEDERAL SEGREGATION (If more than one Funding Source or P.I.P. type)
☑ CCO FUNDED PER CONTRACT ☐ CCO FUNDED AS FOLLOWS

FEDERAL FUNDING SOURCE PERCENT

ADA Notice: For individuals with sensory disabilities, this document is available in alternate formats. For information call: (916) 654-6410 or TDD (916) 654-3880 or write Records and Forms Management, 1120 N Street, MS-89, Sacramento, CA 95814.

STATE OF CALIFORNIA - DEPARTMENT OF TRANSPORTATION

CONTRACT CHANGE ORDER

Change Requested by: Engineer

CCO: 214	Suppl. No. 0	Contract No. 04 - 012024	Road 04-SF,Ala-80-13.9/14.3,0.0/1.6	FED. AID LOC.: ACIM-080-1(085)8N

To: **KIEWIT / FCI / MANSON a JV**

You are directed to make the following changes from the plans and specifications or do the following described work not included in the plans and specifications for this contract. ***NOTE: This change order is not effective until approved by the Engineer.***

Description of work to be done, estimate of quantities and prices to be paid. (Segregate between additional work at contract price, agreed price and force account.) Unless otherwise stated, rates for rental of equipment cover only such time as equipment is actually used and no allowance will be made for idle time. This last percentage shown is the net accumulated increase or decrease from the original

As authorized by the Engineer, furnish and install two (2) additional no. 16 reinforcing bars secured to the nelson studs between the modular joint seal assembly support boxes and one (1) additional no. 13 reinforcing bar through the eyelets over the support boxes in the modular joint closure pours of modular joint seal assemblies BE, CE, DE, BW, CW, and DW as shown on the attached sketch (Page 2 of 2 of the change order), of the SFOBB East Span Skyway, Bridge Nos. 34-0006L/R.

Estimate of Increase in Contract Item at Contract Price:

Item No. 62: BAR REINFORCING STEEL (BRIDGE)

1740 KG (+0.01%) @ $1.45 /KG = +$2.523.00 (+0.01%)

Estimated total cost for Increase in Contract Item.....$2,523.00

The quantity increase shown here for Contact Item No. 62, "BAR REINFORCING STEEL (BRIDGE)," when combined with quantities shown in the engineer's estimate, and as modified by any previous change orders, will be the final quantities for which payment will be made for this contract item.

Extra Work at Lump Sum:

Compensation for the additional labor cost to custom fabricate the additional reinforcing between the modular joint seal assembly support boxes.

For this Extra Work and in addition to the increase in contract item at contract price compensation, the Contractor agrees to accept an agreed lump sum amount of $5,371.00. This agreed lump sum in conjuction with the increase in contract item at contract price constitutes full compensation for all costs, including markups, all direct and indirect costs, all associated project impacts, and all overhead costs.

Extra Work at Agreed Lump Sum $5,371.00

Estimated Cost: Increase ☑ Decrease ☐ **$7,894.00**

By reason of this order the time of completion will be adjusted as follows: 0 days

Submitted by

Signature	Resident Engineer DOUG COE, Supervising Br. Eng.	Date 11-13-07

Approval Recommended by

Signature	Construction Engineer DOUG COE	Date 11-13-07

Engineer Approval by

Signature	Construction Manager PETER SIEGENTHALER	Date 12-6-07

We the undersigned contractor, have given careful consideration to the change proposed and agree, if this proposal is approved, that we will provide all equipment, furnish the materials, except as may otherwise be noted above, and perform all services necessary for the work above specified, and will accept as full payment therefor the prices shown above.

NOTE: If you, the contractor, do not sign acceptance of this order, your attention is directed to the requirements of the specifications as to proceeding with the ordered work and filing a written protest within the time therein specified.

Contractor Acceptance by

Signature	(Print name and title) Lee Zink Project Director	Date 11/16/07

SKYWAY PROJECT - General Field Issue Resolution Form

DATE: 7/2/07

ISSUE NUMBER:

SUBJECT: VOID IN REBAR DESIGN

LOCATION(S): EXPANSION JOINTS BE CE, DE, BW, CW, DW

ATTENDING: K. BASKER/

RESOLVED: Y / N

Description of issue:

A VOID IN THE REBAR OCCURRED BETWEEN THE SUPPORT BOXES OF THE EXPANSION JOINT. FROM THAT VOID, THERE WAS A SUBSTANTIAL AMOUNT OF MASS CONCRETE FROM THE VERTICAL INSIDE FACE TO THE INNER MOST NELSON STUDS.

Picture or sketch of issue and/or resolution: (attach additional sheets if needed)

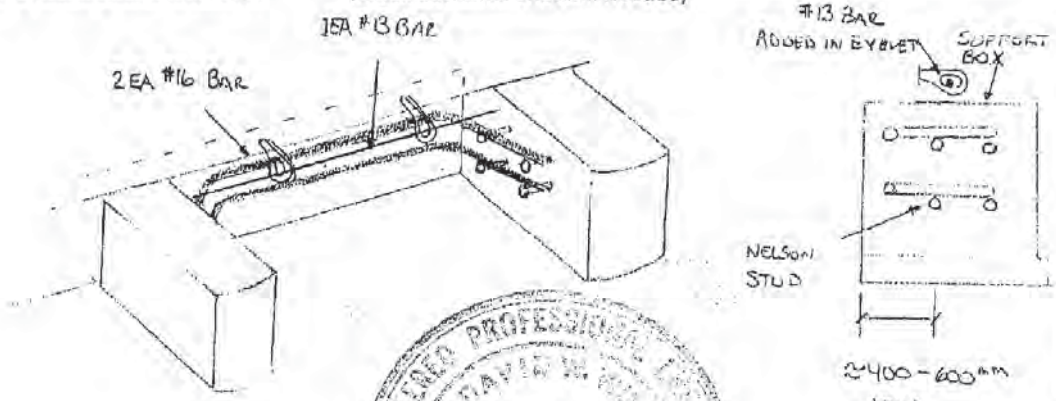

REGISTERED PROFESSIONAL ENGINEER DAVID W. [illegible] No. [illegible] 3/31/09 CIVIL STATE OF CALIFORNIA

Resolution

CALTRANS DIRECTED KFM TO ADD 2 EA #16 REBAR AS SHOWN. THIS ELIMINATED THE 400mm - 600mm VOID IN THOSE AREAS. ALSO A #13 BAR WAS ADDED INSIDE THE EYELETS BETWEEN THE SUPPORT BOXES.

CONTRACT NO. 04-012024
CCO NO. 214
PAGE 2 OF 2

Follow Up Action By:

SEE CALTRANS' COMMENTS 7/11/07

Signatures:	KFM	Caltrans
	KYLE D BASKER	

STATE OF CALIFORNIA - DEPARTMENT OF TRANSPORTATION

CONTRACT CHANGE ORDER MEMORANDUM

TO: PETER SIEGENTHALER / DOUG COE, Supervising Br. Eng.

FROM: DOUG COE, Supervising Br. Eng.

FILE: **E.A.** 04 - 012024
CO-RTE-PM 04-SF,Ala-80-13.9/14.3,0.0/1.6
FED. NO. ACIM-080-1(085)8N

CCO# **214** SUPPLEMENT#: **0** Category Cod **AAZZ**

CONTINGENCY BALANCE (incl. this change **$1,943,381.44**

COST: **$7,894.00** INCREASE ☑ DECREASE ☐

HEADQUARTERS APPROVAL REQUIRED? ☐ YES ☑ NO

SUPPLEMENTAL FUNDS PROVIDED: **$0.00**

IS THIS REQUEST IN ACCORDANCE WITH ENVIRONMENTAL DOCUMENTS? ☑ YES ☐ NO

CCO DESCRIPTION:
Additional Rebar at Modular Joints

PROJECT DESCRIPTION:
REPLACE SFOBB EAST SPAN

Original Contract Time:	Time Adj. This Change:	Previously Approved CCO Time Adjustments:	Percentage Time Adjusted: (including this change)	Total # of Unreconciled Deferred Time CCO(s): (including this change)
1000 Day(s)	**0** Day(s)	**424** Day(s)	**42** %	**0**

THIS CHANGE ORDER PROVIDES FOR:

Furnishing and installing two (2) additional no. 16 reinforcing bars secured to the nelson studs between the modular joint seal assembly support boxes and one (1) additional no. 13 reinforcing bar through the eyelets over the support boxes in the modular joint closure pours of modular joint seal assemblies BE, CE, DE, BW, CW, and DW as shown on the attached sketch (Page 2 of 2 of the change order), of the SFOBB East Span Skyway, Bridge Nos. 34-0006L/R.

The per contract plan installed reinforcing in the modular joint closure pours left a void between 400 to 600 mm without reinforcing. The Engineer, required the installation of additional reinforcing in the void as shown on the sketch attached to the change order at Modular Joint Seal Assemblies BE, CE, DE, BW, CW, and DW, resulting in an increase of 1,740 KG to bid item number 62.

In accordance with Section 4-1.03B, "Increased or Decreased Quantities," of the Standard Specifications, the additional reinforcing will be measured and paid for by increasing the quantities of Contract Item No. 62, "BAR REINFORCING (BRIDGE)."

Since the dimensions between the support boxes varies, the additional reinforcing required custom fabrication. The labor costs required for the custom fabrication are not fully covered by the adjustment at contract item price. Therefore, the Contractor will be compensated for the additional labor at an agreed lump sum.

For the additional labor cost, and in addition to the increase in contract item at contract price compensation, the Contractor will be paid an agreed lump sum amount of $5,371.00. This agreed lump sum constitutes full compensation, including all markups. The method of payment for this work is Extra Work at Agreed Lump Sum. A complete Force Account cost analysis is on file with the project records.

This contract change order will result in a cost increase of $7,894.00 ($2,523.00 + $5,371.00) to the project, which can be financed from the contingency funds.

Prior approval was obtained from Mr. Kannu Balan for Mr. Doug Coe, Supervising Bridge Engineer, on July 25, 2007. A copy of the prior approval is attached.

FHWA Prior approval is not required, as this is a minor change order.

Design concurrence was obtained from Mr. Jason Fan, Transportation Engineer, Office of Structure Contract Management, on August 21, 2007. A printed copy of the concurrence provided by Mr. Fan is attached.

Concurrence from Maintenance is not required as this change does not use maintenance funds or affect maintenance facilities or operations.

No time adjustment is warranted for this change as it does not affect the controlling operation.

ADA Notice: For individuals with sensory disabilities, this document is available in alternate formats. For information call: (916) 654-6410 or TDD (916) 654-3880 or write Records and Forms Management, 1120 N Street, MS-89, Sacramento, CA 95814.

CONCURRED BY:			
Construction Engineer:	Douglas Coe	DBC	Date 11-13-07
Bridge Engineer:	Douglas Coe	DBC	Date 11-13-07
Project Engineer:			Date
Project Manager:			Date
FHWA Rep.:			Date
Environmental:			Date
Other (specify):	Jason Fan, Design		Date 8/21/07
Other (specify):			Date
District Prior Approval By:	Douglas Coe		Date 7/25/07
HQ (Issue Approve) By:			Date
Resident Engineer's Signature:			Date 11-13-07

ESTIMATE OF COST

	THIS REQUEST	TOTAL TO DATE
ITEMS	$2,523.00	$2,523.00
FORCE ACCOUNT	$0.00	$0.00
AGREED PRICE	$5,371.00	$5,371.00
ADJUSTMENT	$0.00	$0.00
TOTAL	$7,894.00	$7,894.00

FEDERAL PARTICIPATION

☑ PARTICIPATING ☐ PARTICIPATING IN PART ☐ NONE
☐ NON-PARTICIPATING (MAINTENANCE) ☐ NON-PARTICIPATING

FEDERAL SEGREGATION (if more than one Funding Source or P.I.P. type)
☑ CCO FUNDED PER CONTRACT ☐ CCO FUNDED AS FOLLOWS

FEDERAL FUNDING SOURCE	PERCENT

ADA Notice: For individuals with sensory disabilities, this document is available in alternate formats. For information call: (916) 654-6410 or TDD (916) 654-3880 or write Records and Forms Management, 1120 N Street, MS-89, Sacramento, CA 95814.

STATE OF CALIFORNIA - DEPARTMENT OF TRANSPORTATION

CONTRACT CHANGE ORDER

Change Requested by: Engineer

CCO: 215	Suppl. No. 0	Contract No. 04 - 012024	Road 04-SF,Ala-80-13.9/14.3,0.0/1.6	FED. AID LOC.: ACIM-080-1(085)8N

To: **KIEWIT / FCI / MANSON a JV**

You are directed to make the following changes from the plans and specifications or do the following described work not included in the plans and specifications for this contract. ***NOTE: This change order is not effective until approved by the Engineer.***

Description of work to be done, estimate of quantities and prices to be paid. (Segregate between additional work at contract price, agreed price and force account.) Unless otherwise stated, rates for rental of equipment cover only such time as equipment is actually used and no allowance will be made for idle time. This last percentage shown is the net accumulated increase or decrease from the original

Delete SECTION 14-VI, "RECORD OF MATERIALS, SUPPLIES, AND LABOR," of the Contract Special Provisions.

Adjustment of Compensation at Lump Sum:

There shall be no cost by reason of this change to the Special Provisions. This agreement constitutes full compensation to the Contractor, all associated project impacts, all overhead costs, and any and all risks associated with the performance of this change.

Estimated Cost: Increase ☐ Decrease ☐ $0.00

By reason of this order the time of completion will be adjusted as follows: 0 days

Submitted by

Signature	Resident Engineer DOUG COE, Supervising Br. Eng.	Date 8-27-07

Approval Recommended by

Signature	Construction Engineer DOUG COE	Date 8-27-07

Engineer Approval by

Signature	Construction Manager PETER SIEGENTHALER	Date 12-6-07

We the undersigned contractor, have given careful consideration to the change proposed and agree, if this proposal is approved, that we will provide all equipment, furnish the materials, except as may otherwise be noted above, and perform all services necessary for the work above specified, and will accept as full payment therefor the prices shown above.

NOTE: If you, the contractor, do not sign acceptance of this order, your attention is directed to the requirements of the specifications as to proceeding with the ordered work and filing a written protest within the time therein specified.

Contractor Acceptance by

Signature	(Print name and title) Lee Zink Project Director	Date 11/30/07

STATE OF CALIFORNIA - DEPARTMENT OF TRANSPORTATION

CONTRACT CHANGE ORDER MEMORANDUM

DATE: 8/27/2007 Page 1 of 1

TO: PETER SIEGENTHALER / DOUG COE, Supervising Br. Eng.

FROM: DOUG COE, Supervising Br. Eng.

FILE: **E.A.** 04 - 012024
CO-RTE-PM 04-SF,Ala-80-13.9/14.3,0.0/1.6
FED. NO. ACIM-080-1(085)8N

CCO# **215** SUPPLEMENT#: **0** Category Cod **CXSA**

CONTINGENCY BALANCE (Incl. this change **$4,073,112.11**

COST: **$0.00** INCREASE ☐ DECREASE ☐

HEADQUARTERS APPROVAL REQUIRED? ☐ YES ☑ NO

SUPPLEMENTAL FUNDS PROVIDED: **$0.00**

IS THIS REQUEST IN ACCORDANCE WITH ENVIRONMENTAL DOCUMENTS? ☑ YES ☐ NO

CCO DESCRIPTION:
Delete Section 14-VI of the Special Prov

PROJECT DESCRIPTION:
REPLACE SFOBB EAST SPAN

Original Contract Time:	Time Adj. This Change:	Previously Approved CCO Time Adjustments:	Percentage Time Adjusted: (including this change)	Total # of Unreconciled Deferred Time CCO(s): (including this change)
1000 Day(s)	**0** Day(s)	**424** Day(s)	**42** %	**0**

THIS CHANGE ORDER PROVIDES FOR:
Deleting SECTION 14-VI, "RECORD OF MATERIAL, SUPPLIES, AND LABOR," of the contract special provisions, in accordance with CPB 07-4, Federal Highway Administration FormFHWA-47M.

This change has received FHWA's prior approval by Jason Dietz on May 22, 2007.

No adjustment in compensation or contract time is warranted by reason of this change.

CONCURRED BY:

Construction Engineer:	Douglas Coe	DBC	Date 8-27-07
Bridge Engineer:	Douglas Coe	DBC	Date 8-27-07
Project Engineer:			Date
Project Manager:			Date
FHWA Rep.:	Jason Dietz		Date 5/22/07
Environmental:			Date
Other (specify):			Date
Other (specify):			Date
District Prior Approval By:			Date
HQ (Issue Approval By:			Date
Resident Engineer's Signature:			Date 8-27-07

ESTIMATE OF COST

	THIS REQUEST	TOTAL TO DATE
ITEMS	$0.00	$0.00
FORCE ACCOUNT	$0.00	$0.00
AGREED PRICE	$0.00	$0.00
ADJUSTMENT	$0.00	$0.00
TOTAL	$0.00	$0.00

FEDERAL PARTICIPATION

☑ PARTICIPATING ☐ PARTICIPATING IN PART ☐ NONE
☐ NON-PARTICIPATING (MAINTENANCE) ☐ NON-PARTICIPATING

FEDERAL SEGREGATION (if more than one Funding Source or P.I.P. type)
☑ CCO FUNDED PER CONTRACT ☐ CCO FUNDED AS FOLLOWS

FEDERAL FUNDING SOURCE PERCENT

ADA Notice: For individuals with sensory disabilities, this document is available in alternate formats. For information call: (916) 654-6410 or TDD (916) 654-3880 or write Records and Forms Management, 1120 N Street, MS-89, Sacramento, CA 95814.

CONTRACT CHANGE ORDER

Change Requested by: Engineer

CCO: 216	Suppl. No. 0	Contract No. 04 - 012024	Road 04-SF,Ala-80-13.9/14.3,0.0/1.6	FED. AID LOC.: ACIM-080-1(085)8N

To: **KIEWIT / FCI / MANSON a JV**

You are directed to make the following changes from the plans and specifications or do the following described work not included in the plans and specifications for this contract. ***NOTE: This change order is not effective until approved by the Engineer.***

Description of work to be done, estimate of quantities and prices to be paid. (Segregate between additional work at contract price, agreed price and force account.) Unless otherwise stated, rates for rental of equipment cover only such time as equipment is actually used and no allowance will be made for idle time. This last percentage shown is the net accumulated increase or decrease from the original

Release KFM's liability in order for the Department to provide access and water transportation for the Coast Guard employees between Pier 7 and the Coast Guard facility on Yerba Buena Island during the closure of the San Francisco - Oakland Bay Bridge from 8:00 PM on August 31, 2007, untill 5:00 AM on September 4, 2007.

With respect to the above described Event, the Department and Kiewit/FCI/Manson, a J.V. agree as follows:

1. The Event is for the benefit of the Department and was not contemplated in the Agreement between the Department and KFM.

2. The Department recognizes that the bridge and Berth areas will still be a construction site at the time of the Event and that KFM is not expected to have responsibility for the project site as a public place. The Department acknowledges that it understands that a construction site is not normally maintained for public access and notwithstanding the risks of such construction site; the Department issues this change order for public access to the site on the date(s) of the Event.

3. The Department shall be responsible for the planning, execution and any consequences of the project site being open to the Coast Guard employees for the Event. Notwithstanding the standard specifications, special provisions and other related contract documents, the Department shall provide for a safe environment for the public and workers, shall have responsibility for appointing a safety and security manager for the site to act with respect to safety, security and health matters, and shall provide security for the Project during the times of the above discribed Event, and for initiating maintaining and providing supervision of safety precautions and programs during the Event. KFM will look to the Department for directions pertinent to KFM's support of the Department in preparing and maintaining the jobsite for public use and public safety. The Department shall bear the risk of physical loss of or damage to the Project and shall be obligated to promptly repair, replace or reconstruct all or any portion of the Project which is lost, damaged or destroyed as a result of the Event, and KFM is relieved of the risk of loss to the Project addressed in the Agreement, to the extent said loss arises out of the Event.

4. The Department shall have responsibility for all aspects of the Event, including but not limited to traffic control, parking, transportation, pedestrian access, security, sanitation, cleanup, emergency services, communications and publicity.

5. To the extent allowed by law, the Department shall indemnify, defend and hold harmless KFM, its individual partners, subcontractors, and the agents, officers and employees of each from and against all losses and expenses (including without limitation losses arising from bodily injury, personal injury and/or damage to property, including legal expenses and attorneys' fees) incurred because of civil suits, claims and all other damages arising out of the Event.

   Provided that this indemnification does not apply to any losses or claims that are caused by or result from the sole negligence of the KFM, its partners, subcontractors, agents or employees; and

   Solely for purposes of this indemnity obligation, Caltrans specifically and expressly waives any immunity that may be granted whether under contract or law.

6. The term "KFM" means Kiewit/FCI/Manson, a Joint Venture, and each of its individual joint venture partners.

7. The terms and conditions in this change order shall supersede and take precedence notwithstanding other terms in the Agreement to the contrary. Unless expressly provided herein, all provisions of the Agreement shall remain in full force and effect during the Event.

CONTRACT CHANGE ORDER

Change Requested by: Engineer

CCO: 216	Suppl. No. 0	Contract No. 04 - 012024	Road 04-SF,Ala-80-13.9/14.3,0.0/1.6	FED. AID LOC.: ACIM-080-1(085)8N

Adjustment of Compensation at Lump Sum:

For allowing public access to the jobsite for the duration of the Event, the Contractor agrees to accept an agreed lump sum amount of $1.00. This agreed lump sum constitutes full compensation for all costs, including markups, all direct and indirect costs, all associated project impacts, and all overhead costs.

Estimated Cost: Increase ☑ Decrease ☐ $1.00

By reason of this order the time of completion will be adjusted as follows: 0 days

Submitted by

Signature	Resident Engineer DOUG COE, Supervising Br. Eng.	Date 8-30-07

Approval Recommended by

Signature	Construction Engineer DOUG COE	Date 8-30-07

Engineer Approval by

Signature	Construction Manager PETER SIEGENTHALER	Date 8/31/07

We the undersigned contractor, have given careful consideration to the change proposed and agree, if this proposal is approved, that we will provide all equipment, furnish the materials, except as may otherwise be noted above, and perform all services necessary for the work above specified, and will accept as full payment therefor the prices shown above.

NOTE: If you, the contractor, do not sign acceptance of this order, your attention is directed to the requirements of the specifications as to proceeding with the ordered work and filing a written protest within the time therein specified.

Contractor Acceptance by

Signature	(Print name and title) FERNANDO DELEON PROJECT MANAGER	Date 8/31/07

STATE OF CALIFORNIA - DEPARTMENT OF TRANSPORTATION

CONTRACT CHANGE ORDER MEMORANDUM

TO: PETER SIEGENTHALER / DOUG COE, Supervising Br. Eng.	FILE: E.A. 04 - 012024
FROM: DOUG COE, Supervising Br. Eng.	CO-RTE-PM 04-SF,Ala-80-13.9/14.3,0.0/1.6
	FED. NO. ACIM-080-1(085)8N
CCO# **216** SUPPLEMENT#: **0** Category Cod **CXSX**	CONTINGENCY BALANCE (incl. this change **$4,073,111.11**
COST: **$1.00** INCREASE ☑ DECREASE ☐	HEADQUARTERS APPROVAL REQUIRED? ☑ YES ☐ NO
SUPPLEMENTAL FUNDS PROVIDED: **$0.00**	IS THIS REQUEST IN ACCORDANCE WITH ENVIRONMENTAL DOCUMENTS? ☑ YES ☐ NO
CCO DESCRIPTION: Temporary Release of Liability	**PROJECT DESCRIPTION:** REPLACE SFOBB EAST SPAN

Original Contract Time:	Time Adj. This Change:	Previously Approved CCO Time Adjustments:	Percentage Time Adjusted: (including this change)	Total # of Unreconciled Deferred Time CCO(s): (including this change)
1000 Day(s)	**0** Day(s)	**424** Day(s)	**42** %	**0**

THIS CHANGE ORDER PROVIDES FOR:

the release of KFM's liability in order for the Department to provide access and water transportation for the Coast Guard employees between Pier 7 and the Coast Guard facility on Yerba Buena Island during the closure of the San Francisco - Oakland Bay Bridge from 8:00 PM on August 31, 2007, untill 5:00 AM on September 4, 2007.

During the closure of the Bay Bridge the Department is obligated to provide transportation for the employees of the Coast Guard station on Yerba Buena Island between Pier 7 and the Island. In order to provide this over-water transportation the Department is requesting the use of the water access owned and operated by the Skyway contract Contractor, Kiewit/FCI/Manson, a J.V (KFM).

To grand the Department public use of the water access, KFM requires the release of liability during the time of the Event discribed above and that the Department and KFM agree to the following:

1. The Event is for the benefit of the Department and was not contemplated in the Agreement between the Department and KFM.

2. The Department recognizes that the bridge and Berth areas will still be a construction site at the time of the Event and that KFM is not expected to have responsibility for the project site as a public place. The Department acknowledges that it understands that a construction site is not normally maintained for public access and notwithstanding the risks of such construction site; the Department issues this change order for public access to the site on the date(s) of the Event.

3. The Department shall be responsible for the planning, execution and any consequences of the project site being open to the Coast Guard employees for the Event. Notwithstanding the standard specifications, special provisions and other related contract documents, the Department shall provide for a safe environment for the public and workers, shall have responsibility for appointing a safety and security manager for the site to act with respect to safety, security and health matters, and shall provide security for the Project during the times of the above discribed Event, and for initiating maintaining and providing supervision of safety precautions and programs during the Event. KFM will look to the Department for directions pertinent to KFM's support of the Department in preparing and maintaining the jobsite for public use and public safety. The Department shall bear the risk of physical loss of or damage to the Project and shall be obligated to promptly repair, replace or reconstruct all or any portion of the Project which is lost, damaged or destroyed as a result of the Event, and KFM is relieved of the risk of loss to the Project addressed in the Agreement, to the extent said loss arises out of the Event.

4. The Department shall have responsibility for all aspects of the Event, including but not limited to traffic control, parking, transportation, pedestrian access, security, sanitation, cleanup, emergency services, communications and publicity.

5. To the extent allowed by law, the Department shall indemnify, defend and hold harmless KFM, its individual partners, subcontractors, and the agents, officers and employees of each from and against all losses and expenses (including without limitation losses arising from bodily injury, personal injury and/or damage to property, including legal expenses and attorneys' fees) incurred because of civil suits, claims and all other damages arising out of the Event.

   Provided that this indemnification does not apply to any losses or claims that are caused by or result from the sole negligence of the KFM, its partners, subcontractors, agents or employees; and

ADA Notice: For individuals with sensory disabilities, this document is available in alternate formats. For information call: (916) 654-6410 or TDD (916) 654-3880 or write Records and Forms Management, 1120 N Street, MS-89, Sacramento, CA 95814.

Solely for purposes of this indemnity obligation, Caltrans specifically and expressly waives any immunity that may be granted whether under contract or law.

6. The term "KFM" means Kiewit/FCI/Manson, a Joint Venture, and each of its individual joint venture partners.

7. The terms and conditions in this change order shall supersede and take precedence notwithstanding other terms in the Agreement to the contrary. Unless expressly provided herein, all provisions of the Agreement shall remain in full force and effect during the Event.

For allowing public access to the jobsite for the duration of the Event, the Contractor will be paid an agreed lump sum amount of $1.00. This sum constitutes full compensation, including all markups. The method of payment will be Adjustment Of Compensation At Agreed Lump Sum.

Prior approval was obtained from Mr. Pete Siegenthaler, Principal Construction Engineer, on August 29, 2007. A copy of the prior approval is attached.

Verbal Approval was obtained from Ms. Nancy Bobb, FHWA Bay Bridge Project Manager, by Mr. Kannu Balan on August 30, 2007. An electronic message is to follow. A printed copy of the prior approval to be provided by Ms. Bobb will be attached.

Prior Approval was obtained from Mr. Ken Terpstra, SFOBB Project Manager, via electronic message on August 30, 2007. A printed copy of the prior approval provided by Mr. Terpstra is attached.

Concurrence from Design is not required because this change does not affect any design issues.

Concurrence from Maintenance is not required as this change does not use maintenance funds or affect maintenance facilities or operations.

No time adjustment is warranted for this change as it does not affect the controlling operation.

CONCURRED BY:			
Construction Engineer:	Douglas Coe DJC	Date 8-30-07	
Bridge Engineer:	Douglas Coe DJC	Date 8-30-07	
Project Engineer:		Date	
Project Manager:	Ken Terpstra	Date	8/30/07
FHWA Rep.:	Nancy Bobb	Date	8/30/07
Environmental:		Date	
Other (specify):		Date	
Other (specify):		Date	
District Prior Approval By:	Peter Siegenthaler	Date	8/29/07
HQ (Issue Approve) By:	Ken Darby	Date	
Resident Engineer's Signature:		Date 8-30-07	

ESTIMATE OF COST

	THIS REQUEST	TOTAL TO DATE
ITEMS	$0.00	$0.00
FORCE ACCOUNT	$0.00	$0.00
AGREED PRICE	$0.00	$0.00
ADJUSTMENT	$1.00	$1.00
TOTAL	$1.00	$1.00

FEDERAL PARTICIPATION

☑ PARTICIPATING ☐ PARTICIPATING IN PART ☐ NONE
☐ NON-PARTICIPATING (MAINTENANCE) ☐ NON-PARTICIPATING

FEDERAL SEGREGATION (If more than one Funding Source or P.I.P. type)
☑ CCO FUNDED PER CONTRACT ☐ CCO FUNDED AS FOLLOWS

FEDERAL FUNDING SOURCE	PERCENT

ADA Notice: For individuals with sensory disabilities, this document is available in alternate formats. For information call: (916) 654-6410 or TDD (916) 654-3880 or write Records and Forms Management, 1120 N Street, MS-89, Sacramento, CA 95814.

STATE OF CALIFORNIA - DEPARTMENT OF TRANSPORTATION

CONTRACT CHANGE ORDER

Change Requested by: Engineer

CCO: 217	Suppl. No. 0	Contract No. 04 - 012024	Road 04-SF,Ala-80-13.9/14.3,0.0/1.6	FED. AID LOC.: ACIM-080-1(085)8N

To: **KIEWIT / FCI / MANSON a JV**

You are directed to make the following changes from the plans and specifications or do the following described work not included in the plans and specifications for this contract. ***NOTE: This change order is not effective until approved by the Engineer.***

Description of work to be done, estimate of quantities and prices to be paid. (Segregate between additional work at contract price, agreed price and force account.) Unless otherwise stated, rates for rental of equipment cover only such time as equipment is actually used and no allowance will be made for idle time. This last percentage shown is the net accumulated increase or decrease from the original

Extra Work at Lump Sum:

As authorized by the Engineer, supply and install temporary solar powered navigation lights for the north side of piers E6W E7W, and E8W and on the south side of piers E6E, E7E, and E8E (Total of 6 lights), for the SFOBB East Span Skyway, Bridge Nos. 34-0006L/R.

For this Extra Work, the Contractor agrees to accept an agreed lump sum amount of $21,284.63. This agreed lump sum constitutes full compensation for all costs, including markups, all direct and indirect costs, and all overhead costs.

Extra Work at Agreed Lump Sum $21,284.63

Estimated Cost: Increase ☑ Decrease ☐ $21,284.63

By reason of this order the time of completion will be adjusted as follows: Deferred

Submitted by

Signature	Resident Engineer DOUG COE, Supervising Br. Eng.	Date 12-14-07

Approval Recommended by

Signature	Construction Engineer DOUG COE	Date 12-14-07

Engineer Approval by

Signature Mike Forner	Construction Manager MIKE FORNER	Date 1-7-08

We the undersigned contractor, have given careful consideration to the change proposed and agree, if this proposal is approved, that we will provide all equipment, furnish the materials, except as may otherwise be noted above, and perform all services necessary for the work above specified, and will accept as full payment therefor the prices shown above.

NOTE: If you, the contractor, do not sign acceptance of this order, your attention is directed to the requirements of the specifications as to proceeding with the ordered work and filing a written protest within the time therein specified.

Contractor Acceptance by

Signature	(Print name and title) Lee Zink Project Director	Date 12/19/07

STATE OF CALIFORNIA - DEPARTMENT OF TRANSPORTATION

CONTRACT CHANGE ORDER MEMORANDUM

TO: MICHAEL FORNER / DOUG COE, Supervising Br. Eng.	FILE: **E.A.** 04 - 012024
	CO-RTE-PM 04-SF,Ala-80-13.9/14.3,0.0/1.6
FROM: DOUG COE, Supervising Br. Eng.	**FED. NO.** ACIM-080-1(085)8N
CCO# **217** SUPPLEMENT#: **0** Category Cod **AXZZ**	CONTINGENCY BALANCE (incl. this change **$1,738,600.70**
COST: **$21,284.63** INCREASE ☑ DECREASE ☐	HEADQUARTERS APPROVAL REQUIRED? ☐ YES ☑ NO
SUPPLEMENTAL FUNDS PROVIDED: **$0.00**	IS THIS REQUEST IN ACCORDANCE WITH ENVIRONMENTAL DOCUMENTS? ☑ YES ☐ NO
CCO DESCRIPTION: Temporary Navigation Lights	**PROJECT DESCRIPTION:** REPLACE SFOBB EAST SPAN

Original Contract Time:	Time Adj. This Change:	Previously Approved CCO Time Adjustments:	Percentage Time Adjusted: (including this change)	Total # of Unreconciled Deferred Time CCO(s): (including this change)
1000 Day(s)	**DEF** Day(s)	**424** Day(s)	**42** %	**5**

THIS CHANGE ORDER PROVIDES FOR:

supplying and installing temporary solar powered navigation lights on the north side of piers E6W, E7W, and E8W and on the south side of piers E6E, E7E, and E8E (Total of 6 lights), for the SFOBB East Span Skyway, Bridge Nos. 34-0006L/R.

The United States Coast Guard (USCG) requires that permanent navigation lights for piers E3 through E8 be operational at completion of the Skyway contract. The Skyway contract includes permanent navigation lights for piers E3 through E5 which will be operational at completion of the contract.

Due to time constrains on the Skyway contract, Mr. Steven Hulsebus of the Office of Toll Bridge Design, is recommending that temporary lights, similar to those utilized on the E2/T1 contract, be used until such time that permanent navigation lights can be installed under a subsequent seismic retrofit contract.

For this extra work, the Contractor will be paid an agreed lump sum amount of $21,284.63. This agreed lump sum constitutes full compensation, including all markups. The method of payment for this work is Extra Work at Agreed Lump Sum. This contract change order will result in a cost increase of $21,284.63 to the project, which can be financed from the contingency funds. A complete Force Account cost analysis is on file with the project records.

Prior approval was obtained from Mr. Doug Coe, Supervising Bridge Engineer, on September 7, 2007. A copy of the prior approval is attached.

FHWA Prior approval is not required, as this is a minor change order.

Design concurrence was provided by Mr. Steven Hulsebus on September 6, 2007. A copy of the memorandum provided by Mr. Hulsebus is attached.

Concurrence from Maintenance was obtained from Mrs. Lina Ellis, Structure Maintenance and Investigation, on November 14, 2007. A copy of the concurrence provided by Mrs. Ellis is attached.

Since it is not feasible at this time to determine the effect this change will have on the Contractor's operations, it is proposed to defer the determination of any contract time adjustment until completion of the work specified in this change order.

ADA Notice: For individuals with sensory disabilities, this document is available in alternate formats. For information call: (916) 654-6410 or TDD (916) 654-3880 or write Records and Forms Management, 1120 N Street, MS-89, Sacramento, CA 95814.

CONCURRED BY:			
Construction Engineer:	Douglas Coe	Date	12-14-07
Bridge Engineer:	Douglas Coe	Date	12 14 07
Project Engineer:	Steven Hulsebus	Date	9/6/07
Project Manager:		Date	
FHWA Rep.:		Date	
Environmental:		Date	
Other (specify):	Steven Hulsebus, Design	Date	9/6/07
Other (specify):	Lina Ellis, Maintenance	Date	11/14/07
District Prior Approval By:	Douglas Coe	Date	9/7/07
HQ (Issue Approve) By:		Date	
Resident Engineer's Signature:		Date	12-14-07

ESTIMATE OF COST

	THIS REQUEST	TOTAL TO DATE
ITEMS	$0.00	$0.00
FORCE ACCOUNT	$0.00	$0.00
AGREED PRICE	$21,284.63	$21,284.63
ADJUSTMENT	$0.00	$0.00
TOTAL	$21,284.63	$21,284.63

FEDERAL PARTICIPATION

☑ PARTICIPATING ☐ PARTICIPATING IN PART ☐ NONE
☐ NON-PARTICIPATING (MAINTENANCE) ☐ NON-PARTICIPATING

FEDERAL SEGREGATION (If more than one Funding Source or P.I.P. type)
☑ CCO FUNDED PER CONTRACT ☐ CCO FUNDED AS FOLLOWS

FEDERAL FUNDING SOURCE	PERCENT

ADA Notice: For individuals with sensory disabilities, this document is available in alternate formats. For information call: (916) 654-6410 or TDD (916) 654-3880 or write Records and Forms Management, 1120 N Street, MS-89, Sacramento, CA 95814.

STATE OF CALIFORNIA - DEPARTMENT OF TRANSPORTATION

CONTRACT CHANGE ORDER

Change Requested by: Engineer

CCO: 218	Suppl. No. 0	Contract No. 04 - 012024	Road 04-SF,Ala-80-13.9/14.3,0.0/1.6	FED. AID LOC.: ACIM-080-1(085)8N

To: **KIEWIT / FCI / MANSON a JV**

You are directed to make the following changes from the plans and specifications or do the following described work not included in the plans and specifications for this contract. ***NOTE: This change order is not effective until approved by the Engineer.***

Description of work to be done, estimate of quantities and prices to be paid. (Segregate between additional work at contract price, agreed price and force account.) Unless otherwise stated, rates for rental of equipment cover only such time as equipment is actually used and no allowance will be made for idle time. This last percentage shown is the net accumulated increase or decrease from the original

Extra Work at Force Account:

As authorized by the Engineer and in accordance with Section 4-1.03D "Extra Work" and Section 9-1.03 "Force Account Payment " of the Standard Specifications and Section 5-1.21 "Force Account Payment" of the Special Provisions, sandblast the top surface of the pier caps at Piers E3 through E6 of the Eastbound and Westbound bridge to improve the aesthetics of this visible top surface of the pier caps, for the SFOBB East Span Skyway, Bridge Nos. 34-0006L/R.

This compensation at force account constitutes full compensation for all costs, including markups, all direct and indirect costs, all associated impacts, and all overhead costs.

Estimated cost of Extra Work at Force Account $25,000.00

Estimated Cost: Increase ☑ Decrease ☐ **$25,000.00**

By reason of this order the time of completion will be adjusted as follows: 0 days

Submitted by

Signature	Resident Engineer DOUG COE, Supervising Br. Eng.	Date 12-17-07

Approval Recommended by

Signature	Construction Engineer DOUG COE	Date 12-17-07

Engineer Approval by

Signature Mike Forner	Construction Manager MIKE FORNER	Date 1-7-08

We the undersigned contractor, have given careful consideration to the change proposed and agree, if this proposal is approved, that we will provide all equipment, furnish the materials, except as may otherwise be noted above, and perform all services necessary for the work above specified, and will accept as full payment therefor the prices shown above.

NOTE: If you, the contractor, do not sign acceptance of this order, your attention is directed to the requirements of the specifications as to proceeding with the ordered work and filing a written protest within the time therein specified.

Contractor Acceptance by

Signature	(Print name and title) Lee Zink Project Director	Date 12/19/07

STATE OF CALIFORNIA - DEPARTMENT OF TRANSPORTATION

CONTRACT CHANGE ORDER MEMORANDUM

DATE: 12/14/2007 Page 1 of 1

TO: MICHAEL FORNER / DOUG COE, Supervising Br. Eng.

FROM: DOUG COE, Supervising Br. Eng.

FILE: E.A. 04 - 012024
CO-RTE-PM 04-SF,Ala-80-13.9/14.3,0.0/1.6
FED. NO. ACIM-080-1(085)8N

CCO# **218** SUPPLEMENT#: **0** Category Cod **AXZZ**

CONTINGENCY BALANCE (incl. this change **$1,863,600.70**

COST: **$25,000.00** INCREASE ☑ DECREASE ☐

HEADQUARTERS APPROVAL REQUIRED? ☐ YES ☑ NO

SUPPLEMENTAL FUNDS PROVIDED: **$0.00**

IS THIS REQUEST IN ACCORDANCE WITH ENVIRONMENTAL DOCUMENTS? ☑ YES ☐ NO

CCO DESCRIPTION:
Sandblast Pier Cap Concrete

PROJECT DESCRIPTION:
REPLACE SFOBB EAST SPAN

Original Contract Time:	Time Adj. This Change:	Previously Approved CCO Time Adjustments:	Percentage Time Adjusted: (including this change)	Total # of Unreconciled Deferred Time CCO(s): (including this change)
1000 Day(s)	**0** Day(s)	**424** Day(s)	**42** %	**7**

THIS CHANGE ORDER PROVIDES FOR:
sandblasting the top surface of the pier caps at Piers E3 through E6 of the Eastbound and Westbound bridge to improve the aesthetics of this visible top surface of the pier caps, for the SFOBB East Span Skyway, Bridge Nos. 34-0006L/R.

The per contract specifications specified epoxy injection repairs of surface cracks has resulted in a "fractured egg" like appearance of the visible top surface of the pier caps at Piers E3 through E6 of the Eastbound and Westbound Bridges. The Engineer is requesting that the top surfaces be sandblasted to improve the aesthetics of these repairs.

The method of payment will be Adjustment of Compensation at Force Account. The anticipated cost for this work is estimated at $25,000.00. A force account analysis for this work is on file in the project records. This work will be funded from the project contingency funds.

Prior approval was obtained from Mr. Doug Coe, Supervising Bridge Engineer, on September 7, 2007. A copy of the prior approval is attached.

FHWA Prior approval is not required, as this is a minor change order.

Concurrence from Design is not required because this change does not affect any design issues.

Concurrence from Maintenance is not required as this change does not use maintenance funds or affect maintenance facilities or operations.

No time adjustment is warranted for this change as it does not affect the controlling operation.

CONCURRED BY:

Construction Engineer:	Douglas Coe DBC	Date 12-17-07
Bridge Engineer:	Douglas Coe DBC	Date 12-17-07
Project Engineer:		Date
Project Manager:		Date
FHWA Rep.:		Date
Environmental:		Date
Other (specify):		Date
Other (specify):		Date
District Prior Approval By:	Douglas Coe	Date 9/7/07
HQ (Issue Approve) By:		Date
Resident Engineer's Signature:		Date 12-17-07

ESTIMATE OF COST

	THIS REQUEST	TOTAL TO DATE
ITEMS	$0.00	$0.00
FORCE ACCOUNT	$25,000.00	$25,000.00
AGREED PRICE	$0.00	$0.00
ADJUSTMENT	$0.00	$0.00
TOTAL	$25,000.00	$25,000.00

FEDERAL PARTICIPATION

☑ PARTICIPATING ☐ PARTICIPATING IN PART ☐ NONE
☐ NON-PARTICIPATING (MAINTENANCE) ☐ NON-PARTICIPATING

FEDERAL SEGREGATION (if more than one Funding Source or P.I.P. type)
☑ CCO FUNDED PER CONTRACT ☐ CCO FUNDED AS FOLLOWS

FEDERAL FUNDING SOURCE	PERCENT

ADA Notice: For individuals with sensory disabilities, this document is available in alternate formats. For information call: (916) 654-6410 or TDD (916) 654-3880 or write Records and Forms Management, 1120 N Street, MS-89, Sacramento, CA 95814.

STATE OF CALIFORNIA - DEPARTMENT OF TRANSPORTATION

CONTRACT CHANGE ORDER

Change Requested by: Engineer

CCO: 219	Suppl. No. 0	Contract No. 04 - 012024	Road 04-SF,Ala-80-13.9/14.3,0.0/1.6	FED. AID LOC.: ACIM-080-1(085)8N

To: **KIEWIT / FCI / MANSON a JV**

You are directed to make the following changes from the plans and specifications or do the following described work not included in the plans and specifications for this contract. ***NOTE: This change order is not effective until approved by the Engineer.***

Description of work to be done, estimate of quantities and prices to be paid. (Segregate between additional work at contract price, agreed price and force account.) Unless otherwise stated, rates for rental of equipment cover only such time as equipment is actually used and no allowance will be made for idle time. This last percentage shown is the net accumulated increase or decrease from the original

Adjustment of Compensation at Force Account:

As authorized by the Engineer and in accordance with Section 4-1.03D "Extra Work" and Section 9-1.03 "Force Account Payment " of the Standard Specifications and Section 5-1.21 "Force Account Payment" of the Special Provisions, provide compensation for the premium portion of the overtime hours incurred by the electrical sub-contractor Edward Scott Electric to complete the remaining contract work within the remaining contract time in order to mitigate the impact of the service platform redesign on the contract electrical work, of the SFOBB East Span Skyway, Bridge Nos. 34-0006L/R.

This compensation at force account constitutes full compensation for all costs, including markups, all direct and indirect costs, all associated impacts, and all overhead costs.

Estimated cost of Adjustment of Compensation at Force Account $250,000.00

Estimated Cost: Increase ☑ Decrease ☐ **$250,000.00**

By reason of this order the time of completion will be adjusted as follows: 0 days

Submitted by

Signature	Resident Engineer DOUG COE, Supervising Br. Eng.	Date 10-31-07

Approval Recommended by

Signature	Construction Engineer DOUG COE	Date 10-31-07

Engineer Approval by

Signature	Construction Manager PETER SIEGENTHALER	Date 11-14-07

We the undersigned contractor, have given careful consideration to the change proposed and agree, if this proposal is approved, that we will provide all equipment, furnish the materials, except as may otherwise be noted above, and perform all services necessary for the work above specified, and will accept as full payment therefor the prices shown above.

NOTE: If you, the contractor, do not sign acceptance of this order, your attention is directed to the requirements of the specifications as to proceeding with the ordered work and filing a written protest within the time therein specified.

Contractor Acceptance by

Signature	(Print name and title) Lee Zink Proj. Director	Date 11/6/07

STATE OF CALIFORNIA - DEPARTMENT OF TRANSPORTATION

CONTRACT CHANGE ORDER MEMORANDUM

TO: PETER SIEGENTHALER / DOUG COE, Supervising Br. Eng.	FILE: E.A. 04 - 012024
	CO-RTE-PM 04-SF,Ala-80-13.9/14.3,0.0/1.6
FROM: DOUG COE, Supervising Br. Eng.	FED. NO. ACIM-080-1(085)8N
CCO# **219** SUPPLEMENT#: **0** Category Cod **BZZZ**	CONTINGENCY BALANCE (incl. this change **$4,746,017.09**
COST: **$250,000.00** INCREASE ☑ DECREASE ☐	HEADQUARTERS APPROVAL REQUIRED? ☑ YES ☐ NO
SUPPLEMENTAL FUNDS PROVIDED: **$0.00**	IS THIS REQUEST IN ACCORDANCE WITH ENVIRONMENTAL DOCUMENTS? ☑ YES ☐ NO
CCO DESCRIPTION: Mitigate Electrical Delays	**PROJECT DESCRIPTION:** REPLACE SFOBB EAST SPAN

Original Contract Time:	Time Adj. This Change:	Previously Approved CCO Time Adjustments:	Percentage Time Adjusted: (including this change)	Total # of Unreconciled Deferred Time CCO(s): (including this change)
1000 Day(s)	**0** Day(s)	**424** Day(s)	**42** %	**0**

THIS CHANGE ORDER PROVIDES FOR:

compensating the premium portion of the overtime hours incurred by the electrical sub-contractor Eward Scott Electric to complete the remaining contract work within the remaining contract time in order to mitigate the impact of the service platform redesign on the contract electrical work, of the SFOBB East Span Skyway, Bridge Nos. 34-0006L/R.

The redesign of the service platforms has impacted the completion of the contract specified electrical work. The electrical sub-contractor is unable to complete all of the remaining contract electrical work in the remaining contract time without working a substantial amount of overtime. This overtime work was not contemplated at bid time. The Contract Change Order will compensate the contractor for the premium portion of the overtime, plus the appropriate markup allowed under the contract, to complete the electrical work within the remaining contract time, thereby mitigating the impact of the redesigned service platforms on the contract electrical work.

The method of payment will be Adjustment of Compensation at Force Account. The anticipated cost for this work is estimated at $250,000.00. A force account analysis for this work is on file in the project records. This work will be funded from the project contingency funds.

Prior approval was obtained from Mr. Pete Siegenthaler, Principal Construction Engineer, on September 24, 2007. A copy of the prior approval is attached.

Prior Approval was obtained from Ms. Nancy Bobb, FHWA Bay Bridge Project Manager, via electronic message on October 9, 2007. A printed copy of the prior approval provided by Ms. Bobb is attached.

Prior Approval was obtained from Mr. Ken Terpstra, SFOBB Project Manager, via electronic message on October 6, 2007. A printed copy of the prior approval provided by Mr. Terpstra is attached.

Concurrence from Design is not required because this change does not affect any design issues.

Concurrence from Maintenance is not required as this change does not use maintenance funds or affect maintenance facilities or operations.

No time adjustment is warranted for this change as it does not affect the controlling operation.

ADA Notice: For individuals with sensory disabilities, this document is available in alternate formats. For information call: (916) 654-6410 or TDD (916) 654-3880 or write Records and Forms Management, 1120 N Street, MS-89, Sacramento, CA 95814.

CONCURRED BY:			
Construction Engineer:	Douglas Coe DBC	Date	10-31-07
Bridge Engineer:	Douglas Coe DBC	Date	10-31-07
Project Engineer:		Date	
Project Manager:	Ken Terpstra	Date	10/6/07
FHWA Rep.:	Nancy Bobb	Date	10/9/07
Environmental:		Date	
Other (specify):		Date	
Other (specify):		Date	
District Prior Approval By:	Peter Siegenthaler	Date	9/24/07
HQ (Issue, Approve) By:	Ken Darby	Date	10/1/07
Resident Engineer's Signature:		Date	
			10-31-07

ESTIMATE OF COST

	THIS REQUEST	TOTAL TO DATE
ITEMS	$0.00	$0.00
FORCE ACCOUNT	$0.00	$0.00
AGREED PRICE	$0.00	$0.00
ADJUSTMENT	$250,000.00	$250,000.00
TOTAL	$250,000.00	$250,000.00

FEDERAL PARTICIPATION

☑ PARTICIPATING ☐ PARTICIPATING IN PART ☐ NONE
☐ NON-PARTICIPATING (MAINTENANCE) ☐ NON-PARTICIPATING

FEDERAL SEGREGATION (if more than one Funding Source or P.I.P. type)
☑ CCO FUNDED PER CONTRACT ☐ CCO FUNDED AS FOLLOWS

FEDERAL FUNDING SOURCE	PERCENT

ADA Notice: For individuals with sensory disabilities, this document is available in alternate formats. For information call: (916) 654-6410 or TDD (916) 654-3880 or write Records and Forms Management, 1120 N Street, MS-89, Sacramento, CA 95814.

STATE OF CALIFORNIA - DEPARTMENT OF TRANSPORTATION

CONTRACT CHANGE ORDER

Change Requested by: Engineer

CCO: 220	Suppl. No. 0	Contract No. 04 - 012024	Road 04-SF,Ala-80-13.9/14.3,0.0/1.6	FED. AID LOC.: ACIM-080-1(085)8N

To: **KIEWIT / FCI / MANSON a JV**

You are directed to make the following changes from the plans and specifications or do the following described work not included in the plans and specifications for this contract. ***NOTE: This change order is not effective until approved by the Engineer.***

Description of work to be done, estimate of quantities and prices to be paid. (Segregate between additional work at contract price, agreed price and force account.) Unless otherwise stated, rates for rental of equipment cover only such time as equipment is actually used and no allowance will be made for idle time. This last percentage shown is the net accumulated increase or decrease from the original

Extra Work at Lump Sum:

As authorized by the Engineer, modify the North and South end support boxes (4 total) of modular joint assembly BE to allow placement of the modular joint into the existing blockout locations at hinge BE, for the SFOBB East Span Skyway, Bridge No. 34-0006R.

For this Extra Work, the Contractor agrees to accept an agreed lump sum amount of $34,507.00. This agreed lump sum constitutes full compensation for all costs, including markups, all direct and indirect costs, all associated project impacts, and all overhead costs.

Extra Work at Agreed Lump Sum $34,507.00

Estimated Cost: Increase ☑ Decrease ☐ **$34,507.00**

By reason of this order the time of completion will be adjusted as follows: 0 days

Submitted by

Signature	Resident Engineer DOUG COE, Supervising Br. Eng.	Date 10-25-07

Approval Recommended by

Signature	Construction Engineer DOUG COE	Date 10-25-07

Engineer Approval by

Signature Michael Frame	Construction Manager PETER SIEGENTHALER	Date 11-14-07

We the undersigned contractor, have given careful consideration to the change proposed and agree, if this proposal is approved, that we will provide all equipment, furnish the materials, except as may otherwise be noted above, and perform all services necessary for the work above specified, and will accept as full payment therefor the prices shown above.

NOTE: If you, the contractor, do not sign acceptance of this order, your attention is directed to the requirements of the specifications as to proceeding with the ordered work and filing a written protest within the time therein specified.

Contractor Acceptance by

Signature	(Print name and title) Lee Zink Proj. Director	Date 11/6/07

STATE OF CALIFORNIA - DEPARTMENT OF TRANSPORTATION

CONTRACT CHANGE ORDER MEMORANDUM

TO: PETER SIEGENTHALER / DOUG COE, Supervising Br. Eng.

FROM: DOUG COE, Supervising Br. Eng.

FILE: **E.A.** 04 - 012024
CO-RTE-PM 04-SF,Ala-80-13.9/14.3,0.0/1.6
FED. NO. ACIM-080-1(085)8N

CCO# **220** SUPPLEMENT#: **0** Category Cod **AXZZ**

CONTINGENCY BALANCE (incl. this change **$4,591,790.10**

COST: **$34,507.00** INCREASE ☑ DECREASE ☐

HEADQUARTERS APPROVAL REQUIRED? ☐ YES ☑ NO

SUPPLEMENTAL FUNDS PROVIDED: **$0.00**

IS THIS REQUEST IN ACCORDANCE WITH ENVIRONMENTAL DOCUMENTS? ☑ YES ☐ NO

CCO DESCRIPTION:
Rework Modular Joint Support Boxes

PROJECT DESCRIPTION:
REPLACE SFOBB EAST SPAN

Original Contract Time:	Time Adj. This Change:	Previously Approved CCO Time Adjustments:	Percentage Time Adjusted: (including this change)	Total # of Unreconciled Deferred Time CCO(s): (including this change)
1000 Day(s)	**0** Day(s)	**424** Day(s)	**42** %	**0**

THIS CHANGE ORDER PROVIDES FOR:
modifying the North and South end support boxes (4 total) of modular joint assembly BE to allow placement of the modular joint into the existing blockout locations at hinge BE.

Hinge segment composite drawings developed in "Mission Control" did not make allowances for the strand anchor heads protruding into the block-out locations for the modular joints. Field measurements taken before shipment of modular joint "BE", which was fabricated to contract specifications, revealed that the outer most support boxes would interfere with the anchor heads. This interference will require the modular joint fabricator to redesign the two North-end and two South-end support boxes and fabricate smaller support boxes.

For this extra work, the Contractor will be paid an agreed lump sum amount of $34,507.00. This agreed lump sum constitutes full compensation, including all markups. The method of payment for this work is Extra Work at Agreed Lump Sum. This contract change order will result in a cost increase of $34,507.00 to the project, which can be financed from the contingency funds. A complete Force Account cost analysis is on file with the project records.

Prior approval was obtained from Mr. Doug Coe, Supervising Bridge Engineer, on October 5, 2007. A copy of the prior approval is attached.

FHWA Prior approval is not required, as this is a minor change order.

Design concurrence was provided by Mr. Tim Delis, Modular Joint Bearing specialist, on October 11, 2007. A copy of the concurrence provided by Mr. Delis is attached.

Concurrence from Maintenance is not required as this change does not use maintenance funds or affect maintenance facilities or operations.

No time adjustment is warranted for this change as it does not affect the controlling operation.

ADA Notice: For individuals with sensory disabilities, this document is available in alternate formats. For information call: (916) 654-6410 or TDD (916) 654-3880 or write Records and Forms Management, 1120 N Street, MS-89, Sacramento, CA 95814.

CONCURRED BY:		
Construction Engineer:	Douglas Coe DBC	Date 10-25-07
Bridge Engineer:	Douglas Coe DBC	Date 10-25-07
Project Engineer:	Tim Delis	Date 10/11/07
Project Manager:		Date
FHWA Rep.:		Date
Environmental:		Date
Other (specify):	Tim Delis, Design	Date 10/11/07
Other (specify):		Date
District Prior Approval By:	Douglas Coe	Date 10/5/07
HQ (Issue Approve) By:		Date
Resident Engineer's Signature:		Date 10-25-07

ESTIMATE OF COST

	THIS REQUEST	TOTAL TO DATE
ITEMS	$0.00	$0.00
FORCE ACCOUNT	$0.00	$0.00
AGREED PRICE	$34,507.00	$34,507.00
ADJUSTMENT	$0.00	$0.00
TOTAL	$34,507.00	$34,507.00

FEDERAL PARTICIPATION

☑ PARTICIPATING ☐ PARTICIPATING IN PART ☐ NONE
☐ NON-PARTICIPATING (MAINTENANCE) ☐ NON-PARTICIPATING

FEDERAL SEGREGATION (if more than one Funding Source or P.I.P. type)
☑ CCO FUNDED PER CONTRACT ☐ CCO FUNDED AS FOLLOWS

FEDERAL FUNDING SOURCE	PERCENT

ADA Notice: For individuals with sensory disabilities, this document is available in alternate formats. For information call: (916) 654-6410 or TDD (916) 654-3880 or write Records and Forms Management, 1120 N Street, MS-89, Sacramento, CA 95814.

STATE OF CALIFORNIA - DEPARTMENT OF TRANSPORTATION

CONTRACT CHANGE ORDER

Change Requested by: Engineer

CCO: 221	Suppl. No. 0	Contract No. 04 - 012024	Road 04-SF,Ala-80-13.9/14.3,0.0/1.6	FED. AID LOC.: ACIM-080-1(085)8N

To: **KIEWIT / FCI / MANSON a JV**

You are directed to make the following changes from the plans and specifications or do the following described work not included in the plans and specifications for this contract. ***NOTE: This change order is not effective until approved by the Engineer.***

Description of work to be done, estimate of quantities and prices to be paid. (Segregate between additional work at contract price, agreed price and force account.) Unless otherwise stated, rates for rental of equipment cover only such time as equipment is actually used and no allowance will be made for idle time. This last percentage shown is the net accumulated increase or decrease from the original

Extra Work at Lump Sum:

As authorized by the Engineer, replace 64 of the 36" electrical conduit elbows with 24" elbows (or 45-degree connectors) at hinge pipe beams BE, BW, CE, CW, DE, and DW; at hinge EE, and EW replace the 48, 90-degree elbows with 45-degree connectors and add a strain relief grip at each flex conduit connection; and relocate the cable trays at the northwest side of hinge BE, and CE, of the SFOBB East Span Skyway, Bridge Nos. 34-0006L/R.

For this Extra Work, the Contractor agrees to accept an agreed lump sum amount of $69,288.00. This agreed lump sum constitutes full compensation for all costs, including markups, all direct and indirect costs, and all overhead costs.

Extra Work at Agreed Lump Sum $69,288.00

Estimated Cost: Increase ☑ Decrease ☐ **$69,288.00**

By reason of this order the time of completion will be adjusted as follows: 0 days

Submitted by

Signature	Resident Engineer DOUG COE, Supervising Br. Eng.	Date 1-7-08

Approval Recommended by

Signature	Construction Engineer DOUG COE	Date 1-7-08

Engineer Approval by

Signature Michael Forner	Construction Manager MIKE FORNER	Date 1-23-08

We the undersigned contractor, have given careful consideration to the change proposed and agree, if this proposal is approved, that we will provide all equipment, furnish the materials, except as may otherwise be noted above, and perform all services necessary for the work above specified, and will accept as full payment therefor the prices shown above.

NOTE: If you, the contractor, do not sign acceptance of this order, your attention is directed to the requirements of the specifications as to proceeding with the ordered work and filing a written protest within the time therein specified.

Contractor Acceptance by

Signature	(Print name and title) Lee Zink Project Director	Date 1/15/08

STATE OF CALIFORNIA - DEPARTMENT OF TRANSPORTATION

CONTRACT CHANGE ORDER MEMORANDUM

TO: MICHAEL FORNER / DOUG COE, Supervising Br. Eng.

FROM: DOUG COE, Supervising Br. Eng.

FILE: **E.A.** 04 - 012024
CO-RTE-PM 04-SF,Ala-80-13.9/14.3,0.0/1.6
FED. NO. ACIM-080-1(085)8N

CCO# **221** SUPPLEMENT#: **0** Category Cod **CBPX**

CONTINGENCY BALANCE (incl. this change **$4,605,803.10**

COST: **$69,288.00** INCREASE ☑ DECREASE ☐

HEADQUARTERS APPROVAL REQUIRED? ☐ YES ☑ NO

SUPPLEMENTAL FUNDS PROVIDED: **$0.00**

IS THIS REQUEST IN ACCORDANCE WITH ENVIRONMENTAL DOCUMENTS? ☑ YES ☐ NO

CCO DESCRIPTION:
Rework of Electrical at Hinge Pipe Beams

PROJECT DESCRIPTION:
REPLACE SFOBB EAST SPAN

Original Contract Time:	Time Adj. This Change:	Previously Approved CCO Time Adjustments:	Percentage Time Adjusted: (including this change)	Total # of Unreconciled Deferred Time CCO(s): (including this change)
1000 Day(s)	**0** Day(s)	**424** Day(s)	**42** %	**5**

THIS CHANGE ORDER PROVIDES FOR:
replacing 64 of the 36" electrical conduit elbows with 24" elbows (or 45-degree connectors) at hinge pipe beams BE, BW, CE, CW, DE, and DW; at hinge EE, and EW replacing the 48, 90-degree elbows with 45-degree connectors and add a strain relief grip at each flex conduit connection, and relocating the cable trays at the northwest side of hinge BE, and CE, of the SFOBB East Span Skyway, Bridge Nos. 34-0006L/R.

The electrical conduit elbows at the hinge pipe beams all have the same radius. This is creating an installation and orientation problem. To alleviate this problem several of these elbows will need to be replaced with 24" elbows or 45-degree connectors. The hinge EE, and EW contract plan specified 90-degree elbows did not leave enough room for connecting to the flex conduit. The elbows will need to be replaced with 45-degree connectors and strain relief grips. The cable trays on the northwest side of hinge BE, and CE are creating a conflict with the web manholes and will need to be relocated.

For this extra work, the Contractor will be paid an agreed lump sum amount of $69,288.00. This agreed lump sum constitutes full compensation, including all markups. The method of payment for this work is Extra Work at Lump Sum. This contract change order will result in a cost increase of $69,288.00 to the project, which can be financed from the contingency funds. A complete Force Account cost analysis is on file with the project records.

Prior approval was obtained from Mr. Doug Coe, Supervising Bridge Engineer, on October 5, 2007. A copy of the prior approval is attached.

FHWA Prior approval is not required, as this is a minor change order.

Design concurrence was provided by Mr. Parviz Boozarpour, Senior Transportation Electrical Engineer, on December 4, 2007. A copy of the concurrence provided by Mr. Boozarpour is attached.

Concurrence from Maintenance was obtained from Mr. Gregory Klein, Maintenance Manager II, on November 28, 2007. A copy of the concurrence provided by Mr. Klein is attached.

The change order was forwarded to the Contractor on December 12, 2007. The Contractor is requesting the removal of "all associated project impacts" from the change order and therefore returned the change order un-signed on December 18, 2007. In order to lock in the agreed to direct cost of this CCO, the Engineer has removed the objectionable language from the CCO.

No time adjustment is warranted for this change as it does not affect the controlling operation.

ADA Notice: For individuals with sensory disabilities, this document is available in alternate formats. For information call: (916) 654-6410 or TDD (916) 654-3880 or write Records and Forms Management, 1120 N Street, MS-89, Sacramento, CA 95814.

STATE OF CALIFORNIA - DEPARTMENT OF TRANSPORTATION

CONTRACT CHANGE ORDER MEMORANDUM

TO: MICHAEL FORNER / DOUG COE, Supervising Br. Eng.	FILE: E.A. 04 - 012024
	CO-RTE-PM 04-SF,Ala-80-13.9/14.3,0.0/1.6
FROM: DOUG COE, Supervising Br. Eng.	FED. NO. ACIM-080-1(085)8N
CCO# **221** SUPPLEMENT#: **0** Category Cod **CBPX**	CONTINGENCY BALANCE (incl. this change **$4,605,803.10**
COST: **$69,288.00** INCREASE ☑ DECREASE ☐	HEADQUARTERS APPROVAL REQUIRED? ☐ YES ☑ NO
SUPPLEMENTAL FUNDS PROVIDED: **$0.00**	IS THIS REQUEST IN ACCORDANCE WITH ENVIRONMENTAL DOCUMENTS? ☑ YES ☐ NO
CCO DESCRIPTION: Rework of Electrical at Hinge Pipe Beams	**PROJECT DESCRIPTION:** REPLACE SFOBB EAST SPAN

Original Contract Time:	Time Adj. This Change:	Previously Approved CCO Time Adjustments:	Percentage Time Adjusted: (including this change)	Total # of Unreconciled Deferred Time CCO(s): (including this change)
1000 Day(s)	**0** Day(s)	**424** Day(s)	**42** %	**5**

THIS CHANGE ORDER PROVIDES FOR:

replacing 64 of the 36" electrical conduit elbows with 24" elbows (or 45-degree connectors) at hinge pipe beams BE, BW, CE, CW, DE, and DW; at hinge EE, and EW replacing the 48, 90-degree elbows with 45-degree connectors and add a strain relief grip at each flex conduit connection, and relocating the cable trays at the northwest side of hinge BE, and CE, of the SFOBB East Span Skyway, Bridge Nos. 34-0006L/R.

The electrical conduit elbows at the hinge pipe beams all have the same radius. This is creating an installation and orientation problem. To alleviate this problem several of these elbows will need to be replaced with 24" elbows or 45-degree connectors. The hinge EE, and EW contract plan specified 90-degree elbows did not leave enough room for connecting to the flex conduit. The elbows will need to be replaced with 45-degree connectors and strain relief grips. The cable trays on the northwest side of hinge BE, and CE are creating a conflict with the web manholes and will need to be relocated.

For this extra work, the Contractor will be paid an agreed lump sum amount of $69,288.00. This agreed lump sum constitutes full compensation, including all markups. The method of payment for this work is Extra Work at Lump Sum. This contract change order will result in a cost increase of $69,288.00 to the project, which can be financed from the contingency funds. A complete Force Account cost analysis is on file with the project records.

Prior approval was obtained from Mr. Doug Coe, Supervising Bridge Engineer, on October 5, 2007. A copy of the prior approval is attached.

FHWA Prior approval is not required, as this is a minor change order.

Design concurrence was provided by Mr. Parviz Boozarpour, Senior Transportation Electrical Engineer, on December 4, 2007. A copy of the concurrence provided by Mr. Boozarpour is attached.

Concurrence from Maintenance was obtained from Mr. Gregory Klein, Maintenance Manager II, on November 28, 2007. A copy of the concurrence provided by Mr. Klein is attached.

The change order was forwarded to the Contractor on December 12, 2007. The Contractor is requesting the removal of "all associated project impacts" from the change order and therefore returned the change order un-signed on December 18, 2007. In order to lock in the agreed to direct cost of this CCO, the Engineer has removed the objectionable language from the CCO.

No time adjustment is warranted for this change as it does not affect the controlling operation.

ADA Notice: For individuals with sensory disabilities, this document is available in alternate formats. For information call: (916) 654-6410 or TDD (916) 654-3880 or write Records and Forms Management, 1120 N Street, MS-89, Sacramento, CA 95814.

CONCURRED BY:			
Construction Engineer:	Douglas Coe	DBC	Date 1-7-08
Bridge Engineer:	Douglas Coe	DBC	Date 1-7-08
Project Engineer:			Date
Project Manager:			Date
FHWA Rep.:			Date
Environmental:			Date
Other (specify):	Gregory Klein, Maintenance		Date 11/28/07
Other (specify):	Parviz Boozarpour, Elect. Design		Date 12/4/07
District Prior Approval By:	Douglas Coe		Date 10/5/07
HQ (Issue Approve) By:			Date
Resident Engineer's Signature:			Date 1-7-08

ESTIMATE OF COST

	THIS REQUEST	TOTAL TO DATE
ITEMS	$0.00	$0.00
FORCE ACCOUNT	$0.00	$0.00
AGREED PRICE	$69,288.00	$69,288.00
ADJUSTMENT	$0.00	$0.00
TOTAL	$69,288.00	$69,288.00

FEDERAL PARTICIPATION

☑ PARTICIPATING ☐ PARTICIPATING IN PART ☐ NONE
☐ NON-PARTICIPATING (MAINTENANCE) ☐ NON-PARTICIPATING

FEDERAL SEGREGATION (if more than one Funding Source or P.I.P. type)
☑ CCO FUNDED PER CONTRACT ☐ CCO FUNDED AS FOLLOWS

FEDERAL FUNDING SOURCE	PERCENT

ADA Notice: For individuals with sensory disabilities, this document is available in alternate formats. For information call: (916) 654-6410 or TDD (916) 654-3880 or write Records and Forms Management, 1120 N Street, MS-89, Sacramento, CA 95814.

STATE OF CALIFORNIA - DEPARTMENT OF TRANSPORTATION

CONTRACT CHANGE ORDER

Change Requested by: Engineer

CCO: 222	Suppl. No. 0	Contract No. 04 - 012024	Road 04-SF,Ala-80-13.9/14.3,0.0/1.6	FED. AID LOC.: ACIM-080-1(085)8N

To: **KIEWIT / FCI / MANSON a JV**

You are directed to make the following changes from the plans and specifications or do the following described work not included in the plans and specifications for this contract. ***NOTE: This change order is not effective until approved by the Engineer.***

Description of work to be done, estimate of quantities and prices to be paid. (Segregate between additional work at contract price, agreed price and force account.) Unless otherwise stated, rates for rental of equipment cover only such time as equipment is actually used and no allowance will be made for idle time. This last percentage shown is the net accumulated increase or decrease from the original

Extra Work at Force Account:

As authorized by the Engineer and in accordance with Section 4-1.03D "Extra Work" and Section 9-1.03 "Force Account Payment " of the Standard Specifications and Section 5-1.21 "Force Account Payment" of the Special Provisions, modify the access doors at hinges BE, BW, CE, CW, DE, DW, EE, and EW as shown on added contract plan sheet 109B2 of 978 (attached as page 2 of 2 of this change order), for the SFOBB East Span Skyway, Bridge Nos. 34-0006L/R.

This compensation at force account constitutes full compensation for all costs, including markups, all direct and indirect costs, and all overhead costs.

Estimated cost of Extra Work at Force Account $60,000.00

Estimated Cost: Increase ☑ Decrease ☐ **$60,000.00**

By reason of this order the time of completion will be adjusted as follows: Deferred

Submitted by

Signature	Resident Engineer DOUG COE, Supervising Br. Eng.	Date 12/14/07

Approval Recommended by

Signature	Construction Engineer DOUG COE	Date 12/14/07

Engineer Approved by

Signature Mike Forner	Construction Manager MIKE FORNER	Date 1-7-08

We the undersigned contractor, have given careful consideration to the change proposed and agree, if this proposal is approved, that we will provide all equipment, furnish the materials, except as may otherwise be noted above, and perform all services necessary for the work above specified, and will accept as full payment therefor the prices shown above.

NOTE: If you, the contractor, do not sign acceptance of this order, your attention is directed to the requirements of the specifications as to proceeding with the ordered work and filing a written protest within the time therein specified.

Contractor Acceptance by

Signature	(Print name and title) Lee Zink Project Director	Date 12/19/07

STATE OF CALIFORNIA - DEPARTMENT OF TRANSPORTATION

CONTRACT CHANGE ORDER MEMORANDUM

TO: MICHAEL FORNER / DOUG COE, Supervising Br. Eng.

FROM: DOUG COE, Supervising Br. Eng.

FILE: **E.A.** 04 - 012024
CO-RTE-PM 04-SF,Ala-80-13.9/14.3,0.0/1.6
FED. NO. ACIM-080-1(085)8N

CCO# **222** SUPPLEMENT#: **0** Category Cod **CHPA**

CONTINGENCY BALANCE (incl. this change **$5,682,455.22**

COST: **$60,000.00** INCREASE ☑ DECREASE ☐

HEADQUARTERS APPROVAL REQUIRED? ☐ YES ☑ NO

SUPPLEMENTAL FUNDS PROVIDED: **$0.00**

IS THIS REQUEST IN ACCORDANCE WITH ENVIRONMENTAL DOCUMENTS? ☑ YES ☐ NO

CCO DESCRIPTION:
Modify Hinge Access Doors

PROJECT DESCRIPTION:
REPLACE SFOBB EAST SPAN

Original Contract Time:	Time Adj. This Change:	Previously Approved CCO Time Adjustments:	Percentage Time Adjusted: (including this change)	Total # of Unreconciled Deferred Time CCO(s): (including this change)
1000 Day(s)	**DEF** Day(s)	**424** Day(s)	**42** %	**7**

THIS CHANGE ORDER PROVIDES FOR:
modifying the access doors at hinge BE, BW, CE, CW, DE, DW, EE, and EW as shown on added contract plan sheet 109B2 of 978 (attached as page 2 of 2 of the change order), for the SFOBB East Span Skyway, Bridge Nos. 34-0006L/R.

The 3-mm hinge access doors shown on the contract plans are flimsy and have a tendency to warp. They do not provide for a secure closure of the walkway opening through the diaphragm at the hinges. Added plan sheet 109B2 will add a rigid steel frame around the outside edge and two stiffeners across at the hand hole and a new hasps to provide for secure closure of the door.

The method of payment will be Adjustment of Compensation at Force Account. The anticipated cost for this work is estimated at $60,000.00. A force account analysis for this work is on file in the project records. This work will be funded from the project contingency funds.

Prior approval was obtained from Mr. Doug Coe, Supervising Bridge Engineer, on October 5, 2007. A copy of the prior approval is attached.

FHWA Prior approval is not required, as this is a minor change order.

Design concurrence was provided by Mr. Hasan El-Natur, Design Oversight, on October 3, 2007 as indicated by his signature on the added plan sheet.

Concurrence from Maintenance was obtained from Mrs. Lina Ellis, Structure Maintenance and Investigation, on November 14, 2007. A copy of the concurrence provided by Mrs. Ellis is attached.

Since it is not feasible at this time to determine the effect this change will have on the Contractor's operations, it is proposed to defer the determination of any contract time adjustment until completion of the work specified in this change order.

CONCURRED BY:

Construction Engineer:	Douglas Coe	DJC	Date 12-17-07
Bridge Engineer:	Douglas Coe	DJC	Date 12-17-07
Project Engineer:	Hasan El-Natur		Date 10/3/07
Project Manager:			Date
FHWA Rep.:			Date
Environmental:			Date
Other (specify):	Hasan El-Natur, Design		Date 10/3/07
Other (specify):	Lina Ellis, Maintenance		Date 12/14/07
District Prior Approval By:	Douglas Coe		Date 10/5/07
HQ (Issue Approve) By:			Date
Resident Engineer's Signature:			Date 12-17-07

ESTIMATE OF COST

	THIS REQUEST	TOTAL TO DATE
ITEMS	$0.00	$0.00
FORCE ACCOUNT	$60,000.00	$60,000.00
AGREED PRICE	$0.00	$0.00
ADJUSTMENT	$0.00	$0.00
TOTAL	$60,000.00	$60,000.00

FEDERAL PARTICIPATION

☑ PARTICIPATING ☐ PARTICIPATING IN PART ☐ NONE
☐ NON-PARTICIPATING (MAINTENANCE) ☐ NON-PARTICIPATING

FEDERAL SEGREGATION (if more than one Funding Source or P.I.P. type)
☑ CCO FUNDED PER CONTRACT ☐ CCO FUNDED AS FOLLOWS

FEDERAL FUNDING SOURCE	PERCENT

ADA Notice: For individuals with sensory disabilities, this document is available in alternate formats. For information call: (916) 654-6410 or TDD (916) 654-3880 or write Records and Forms Management, 1120 N Street, MS-89, Sacramento, CA 95814.

STATE OF CALIFORNIA - DEPARTMENT OF TRANSPORTATION

CONTRACT CHANGE ORDER

Change Requested by: Engineer

CCO: 222	Suppl. No. 1	Contract No. 04 - 012024	Road 04-SF,Ala-80-13.9/14.3,0.0/1.6	FED. AID LOC.: ACIM-080-1(085)8N

To: **KIEWIT / FCI / MANSON a JV**

You are directed to make the following changes from the plans and specifications or do the following described work not included in the plans and specifications for this contract. ***NOTE: This change order is not effective until approved by the Engineer.***

Description of work to be done, estimate of quantities and prices to be paid. (Segregate between additional work at contract price, agreed price and force account.) Unless otherwise stated, rates for rental of equipment cover only such time as equipment is actually used and no allowance will be made for idle time. This last percentage shown is the net accumulated increase or decrease from the original

Extra Work at Force Account:

Provide additional funds for CCO 222 Supplement 0 for modifying the Hinge Access Doors of the SFOBB East Span Skyway, Bridge Nos. 340006L/R.

Payment for this work shall be made in accordance with Section 5-1.21, "Force Account Payment," of the Special Provisions, and Section 9-1.03, "Force Account Payment," of the Standard Specifications

Estimated cost of Extra Work at Force Account $20,000.00

Estimated Cost: Increase ☑ Decrease ☐ $20,000.00

By reason of this order the time of completion will be adjusted as follows: 0 days

Submitted by

Signature	Resident Engineer	Date
Kam Bach	for DOUG COE, Supervising Br. Eng.	4-1-08

Approval Recommended by

Signature	Construction Engineer	Date
Kam Bach	for DOUG COE	4-1-08

Engineer Approval by

Signature	Construction Manager	Date
Gary Purcell	~~MIKE FORNER~~ GARY PURCELL	4/25/08

We the undersigned contractor, have given careful consideration to the change proposed and agree, if this proposal is approved, that we will provide all equipment, furnish the materials, except as may otherwise be noted above, and perform all services necessary for the work above specified, and will accept as full payment therefor the prices shown above.

NOTE: If you, the contractor, do not sign acceptance of this order, your attention is directed to the requirements of the specifications as to proceeding with the ordered work and filing a written protest within the time therein specified.

Contractor Acceptance by

Signature	(Print name and title)	Date
	Lee Zink Proj. Director	4/23/08

STATE OF CALIFORNIA - DEPARTMENT OF TRANSPORTATION

CONTRACT CHANGE ORDER MEMORANDUM

DATE: 3/31/2008 Page 1 of 1

TO: MICHAEL FORNER / DOUG COE, Supervising Br. Eng.

FROM: DOUG COE, Supervising Br. Eng.

FILE: **E.A.** 04 - 012024
CO-RTE-PM 04-SF,Ala-80-13.9/14.3,0.0/1.6
FED. NO. ACIM-080-1(085)8N

CCO# **222** SUPPLEMENT#: **1** Category Cod **CHPA**

CONTINGENCY BALANCE (incl. this change **$1,063,078.97**

COST: **$20,000.00** INCREASE ☑ DECREASE ☐

HEADQUARTERS APPROVAL REQUIRED? ☐ YES ☑ NO

SUPPLEMENTAL FUNDS PROVIDED: **$0.00**

IS THIS REQUEST IN ACCORDANCE WITH ENVIRONMENTAL DOCUMENTS? ☑ YES ☐ NO

CCO DESCRIPTION:
Additional Funds to Modify Hinge Doors

PROJECT DESCRIPTION:
REPLACE SFOBB EAST SPAN

Original Contract Time:	Time Adj. This Change:	Previously Approved CCO Time Adjustments:	Percentage Time Adjusted: (including this change)	Total # of Unreconciled Deferred Time CCO(s): (including this change)
1000 Day(s)	**0** Day(s)	**424** Day(s)	**42** %	**9**

THIS CHANGE ORDER PROVIDES FOR:
additional funds to CCO No. 222 Supplement 0 for modifying the Hinge Access Doors of the SFOBB East Span Skyway, Bridge Nos. 340006L/R.

This change order is needed to provide additional funds to complete the modifications to the Hinge Access Doors required in CCO No. 222 Supplement 0. The magnitude of the work exceeded the initial estimate.

This work will be paid for as Extra Work at Force Account for an estimated cost of $20,000.00, which can be financed from the contingency fund.

Prior approval was obtained from Mr. Kannu Balan, Acting Supervising Bridge Engineer, on March 31, 2008.

Design concurrence for this work was provided for in CCO No. 222 Supplement 0.

Maintenance concurrence for this work was provided for in CCO No. 222 Supplement 0.

CONCURRED BY:

Construction Engineer:	Douglas Coe	Date 4-1-08
Bridge Engineer:	Douglas Coe	Date 4-1-08
Project Engineer:		Date
Project Manager:		Date
FHWA Rep.:		Date
Environmental:		Date
Other (specify):		Date
Other (specify):		Date
District Prior Approval By:	Douglas Coe	Date
HQ (Issue Approve) By:		Date
Resident Engineer's Signature:		Date 4-1-08

ESTIMATE OF COST

	THIS REQUEST	TOTAL TO DATE
ITEMS	$0.00	$0.00
FORCE ACCOUNT	$20,000.00	$80,000.00
AGREED PRICE	$0.00	$0.00
ADJUSTMENT	$0.00	$0.00
TOTAL	$20,000.00	$80,000.00

FEDERAL PARTICIPATION

☑ PARTICIPATING ☐ PARTICIPATING IN PART ☐ NONE
☐ NON-PARTICIPATING (MAINTENANCE) ☐ NON-PARTICIPATING

FEDERAL SEGREGATION (if more than one Funding Source or P.I.P. type)
☑ CCO FUNDED PER CONTRACT ☐ CCO FUNDED AS FOLLOWS

FEDERAL FUNDING SOURCE PERCENT

ADA Notice: For individuals with sensory disabilities, this document is available in alternate formats. For information call: (916) 654-6410 or TDD (916) 654-3880 or write Records and Forms Management, 1120 N Street, MS-89, Sacramento, CA 95814.

STATE OF CALIFORNIA - DEPARTMENT OF TRANSPORTATION

CONTRACT CHANGE ORDER

Change Requested by: Engineer

CCO: 223	Suppl. No. 0	Contract No. 04 - 012024	Road 04-SF,Ala-80-13.9/14.3,0.0/1.6	FED. AID LOC.: ACIM-080-1(085)8N

To: **KIEWIT / FCI / MANSON a JV**

You are directed to make the following changes from the plans and specifications or do the following described work not included in the plans and specifications for this contract. ***NOTE: This change order is not effective until approved by the Engineer.***

Description of work to be done, estimate of quantities and prices to be paid. (Segregate between additional work at contract price, agreed price and force account.) Unless otherwise stated, rates for rental of equipment cover only such time as equipment is actually used and no allowance will be made for idle time. This last percentage shown is the net accumulated increase or decrease from the original

Extra Work at Lump Sum:

Re-mobilize to the girder cable trays at the pier tables and the service platforms, remove the cabling from the temporary locations in the cable trays, and complete the installation of the electrical and communication cabling from inside the girder cable trays to the as planned locations on the service platforms, for the SFOBB East Span Skyway, Bridge Nos. 34-0006L/R.

For this Extra Work, the Contractor agrees to accept an agreed lump sum amount of $119,989.98. This lump sum constitutes full compensation for all costs, including markups, all direct and indirect costs, and all overhead costs.

Extra Work at Lump Sum $119,989.98

Estimated Cost: Increase ☑ Decrease ☐ **$119,989.98**

By reason of this order the time of completion will be adjusted as follows: 0 days

Submitted by

Signature	Resident Engineer DOUG COE, Supervising Br. Eng.	Date 1-7-08

Approval Recommended by

Signature	Construction Engineer DOUG COE	Date 1-7-08

Engineer Approval by

Signature	Construction Manager MIKE FORNER	Date 1-23-08

We the undersigned contractor, have given careful consideration to the change proposed and agree, if this proposal is approved, that we will provide all equipment, furnish the materials, except as may otherwise be noted above, and perform all services necessary for the work above specified, and will accept as full payment therefor the prices shown above.

NOTE: If you, the contractor, do not sign acceptance of this order, your attention is directed to the requirements of the specifications as to proceeding with the ordered work and filing a written protest within the time therein specified.

Contractor Acceptance by

Signature	(Print name and title) Lee Zink Project Director	Date 1/15/08

STATE OF CALIFORNIA - DEPARTMENT OF TRANSPORTATION

CONTRACT CHANGE ORDER MEMORANDUM

TO: MICHAEL FORNER / DOUG COE, Supervising Br. Eng.

FROM: DOUG COE, Supervising Br. Eng.

FILE: E.A. 04 - 012024
CO-RTE-PM 04-SF,Ala-80-13.9/14.3,0.0/1.6
FED. NO. ACIM-080-1(085)8N

CCO# **223** SUPPLEMENT#: **0** Category Cod **AXZZ**

CONTINGENCY BALANCE (incl. this change **$1,908,610.71**

COST: **$119,989.98** INCREASE ☑ DECREASE ☐

HEADQUARTERS APPROVAL REQUIRED? ☐ YES ☑ NO

SUPPLEMENTAL FUNDS PROVIDED: **$0.00**

IS THIS REQUEST IN ACCORDANCE WITH ENVIRONMENTAL DOCUMENTS? ☑ YES ☐ NO

CCO DESCRIPTION:
Re-pulling of Service Platforms Cables

PROJECT DESCRIPTION:
REPLACE SFOBB EAST SPAN

Original Contract Time:	Time Adj. This Change:	Previously Approved CCO Time Adjustments:	Percentage Time Adjusted: (including this change)	Total # of Unreconciled Deferred Time CCO(s): (including this change)
1000 Day(s)	**0** Day(s)	**424** Day(s)	**42** %	**7**

THIS CHANGE ORDER PROVIDES FOR:
re-mobilizing to the girder cable trays at the pier tables and the service platforms, removing the cabling from the temporary locations in the cable trays, and completing the installation of the electrical and communication cabling from inside the girder cable trays to the as planned locations on the service platforms, for the SFOBB East Span Skyway, Bridge Nos. 34-0006L/R.

Service platform installation delays associated with continued design changes prevented the electrical sub-contractor from installing the power and communication cables from the source to the termination locations on the service platforms in one operation as was anticipated. To prevent delays to the cable installation the Contractor was forced to temporary place the cable in the girder cable trays for termination to the service platforms at a later date. This will require the Contractor to re-mobilize to each service platform and pier table girder location, remove the extra cable from the girder cable trays, and complete the termination on the service platforms.

For this extra work, the Contractor will be paid an agreed lump sum amount of $119,989.98. This agreed lump sum constitutes full compensation, including all markups. The method of payment for this work is Extra Work at Lump Sum. This contract change order will result in a cost increase of $119,989.98 to the project, which can be financed from the contingency funds. A complete Force Account cost analysis is on file with the project records.

Prior approval was obtained from Mr. Doug Coe, Supervising Bridge Engineer, on November 16, 2007. A copy of the prior approval is attached.

FHWA Prior approval is not required, as this is a minor change order.

Concurrence from Design is not required because this change does not affect any design issues.

Concurrence from Maintenance is not required as this change does not use maintenance funds or affect maintenance facilities or operations.

The change order was forwarded to the Contractor on December 17, 2007. The Contractor is requesting the removal of "all associated project impacts" from the change order and therefore returned the change order un-signed on December 18, 2007. In order to lock in the agreed to direct cost of this CCO, the Engineer has removed the objectionable language from the CCO.

No time adjustment is warranted for this change as it does not affect the controlling operation.

ADA Notice: For individuals with sensory disabilities, this document is available in alternate formats. For information call: (916) 654-6410 or TDD (916) 654-3880 or write Records and Forms Management, 1120 N Street, MS-89, Sacramento, CA 95814.

CONCURRED BY:		
Construction Engineer:	Douglas Coe DJC	Date 1-7-08
Bridge Engineer:	Douglas Coe DJC	Date 1-7-08
Project Engineer:		Date
Project Manager:		Date
FHWA Rep.:		Date
Environmental:		Date
Other (specify):		Date
Other (specify):		Date
District Prior Approval By:	Douglas Coe	Date 11/16/07
HQ (Issue Approve) By:		Date
Resident Engineer's Signature:		Date 1-7-08

ESTIMATE OF COST

	THIS REQUEST	TOTAL TO DATE
ITEMS	$0.00	$0.00
FORCE ACCOUNT	$0.00	$0.00
AGREED PRICE	$119,989.98	$119,989.98
ADJUSTMENT	$0.00	$0.00
TOTAL	$119,989.98	$119,989.98

FEDERAL PARTICIPATION

☑ PARTICIPATING ☐ PARTICIPATING IN PART ☐ NONE
☐ NON-PARTICIPATING (MAINTENANCE) ☐ NON-PARTICIPATING

FEDERAL SEGREGATION (If more than one Funding Source or P.I.P. type)
☑ CCO FUNDED PER CONTRACT ☐ CCO FUNDED AS FOLLOWS

FEDERAL FUNDING SOURCE	PERCENT

ADA Notice: For individuals with sensory disabilities, this document is available in alternate formats. For information call: (916) 654-6410 or TDD (916) 654-3880 or write Records and Forms Management, 1120 N Street, MS-89, Sacramento, CA 95814.

STATE OF CALIFORNIA - DEPARTMENT OF TRANSPORTATION

CONTRACT CHANGE ORDER

Change Requested by: Engineer

CCO: 224	Suppl. No. 0	Contract No. 04 - 012024	Road 04-SF,Ala-80-13.9/14.3,0.0/1.6	FED. AID LOC.: ACIM-080-1(085)8N

To: **KIEWIT / FCI / MANSON a JV**

You are directed to make the following changes from the plans and specifications or do the following described work not included in the plans and specifications for this contract. ***NOTE: This change order is not effective until approved by the Engineer.***

Description of work to be done, estimate of quantities and prices to be paid. (Segregate between additional work at contract price, agreed price and force account.) Unless otherwise stated, rates for rental of equipment cover only such time as equipment is actually used and no allowance will be made for idle time. This last percentage shown is the net accumulated increase or decrease from the original

Extra Work at Lump Sum:

Furnish and install a 6-mm galvanized steel cover plate across the expansion joint openings of the grating between the south barrier of the Eastbound bridge and the Bike Path at hinges B, C, and D as shown on the sketch attached as page 2 of 2 of this change order, for the SFOBB East Span Skyway, Bridge No. 34-0006R.

For this Extra Work, the Contractor agrees to accept an agreed lump sum amount of $6,116.40. This agreed lump sum constitutes full compensation for all costs, including markups, all direct and indirect costs, and all overhead costs.

Extra Work at Agreed Lump Sum $6,116.40

Estimated Cost: Increase ☑ Decrease ☐ $6,116.40

By reason of this order the time of completion will be adjusted as follows: Deferred

Submitted by

Signature	Resident Engineer DOUG COE, Supervising Br. Eng.	Date 12-21-07

Approval Recommended by

Signature	Construction Engineer DOUG COE	Date 12-21-07

Engineer Approval by

Signature Michael Forner	Construction Manager MIKE FORNER	Date 1-23-08

We the undersigned contractor, have given careful consideration to the change proposed and agree, if this proposal is approved, that we will provide all equipment, furnish the materials, except as may otherwise be noted above, and perform all services necessary for the work above specified, and will accept as full payment therefor the prices shown above.

NOTE: If you, the contractor, do not sign acceptance of this order, your attention is directed to the requirements of the specifications as to proceeding with the ordered work and filing a written protest within the time therein specified.

Contractor Acceptance by

Signature	(Print name and title) Lee Zink Project Director	Date 1/15/08

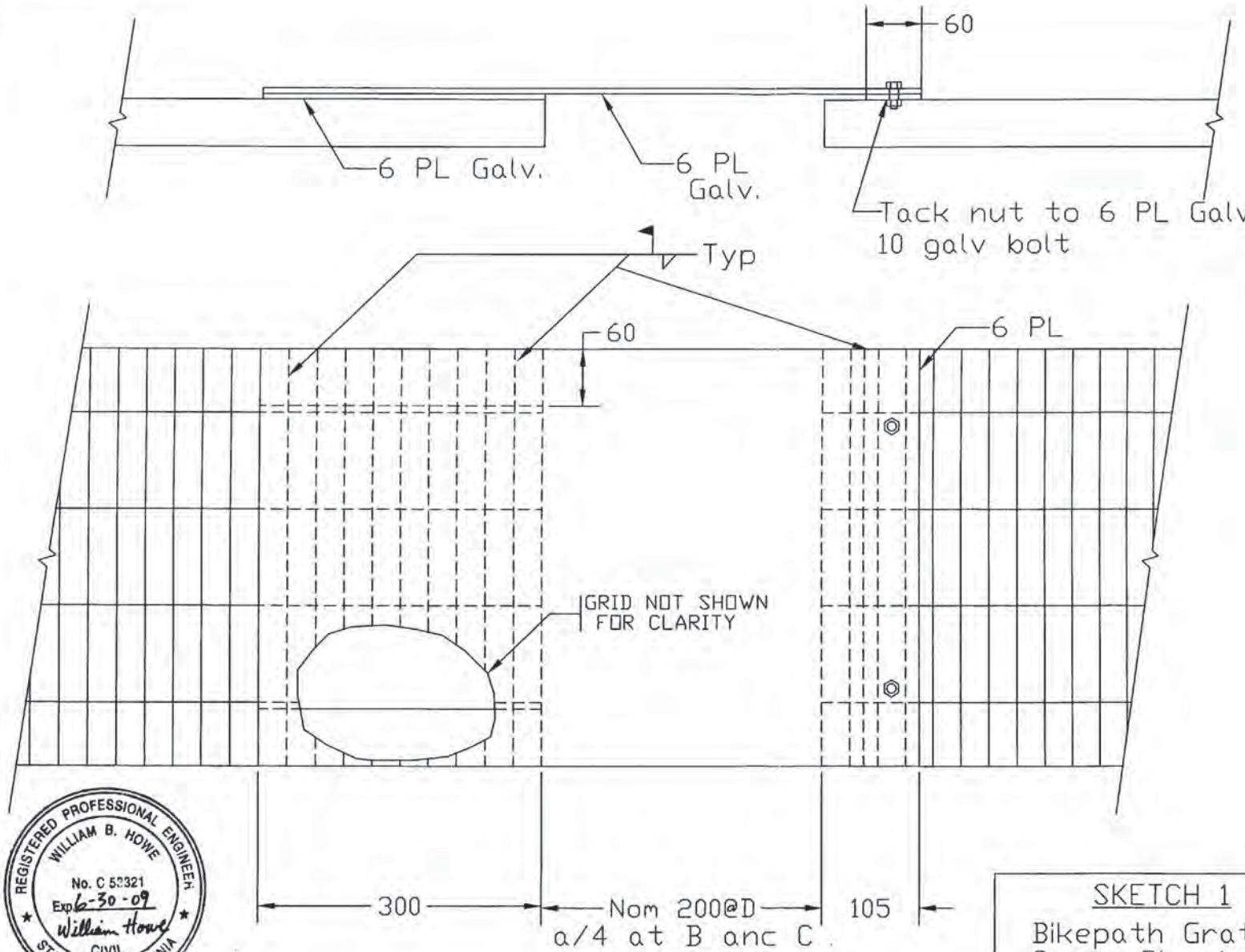

REGISTERED PROFESSIONAL ENGINEER
WILLIAM B. HOWE
No. C 53321
Exp 6-30-09
William Howe
CIVIL
STATE OF CALIFORNIA

SKETCH 1

Bikepath Grating Cover PL at Hinges B, C, D

CONTRACT NO. 04-012024
PROJ NO. 224
PAGE 2 OF 2

STATE OF CALIFORNIA - DEPARTMENT OF TRANSPORTATION

CONTRACT CHANGE ORDER MEMORANDUM

TO: MICHAEL FORNER / DOUG COE, Supervising Br. Eng.

FROM: DOUG COE, Supervising Br. Eng.

FILE: **E.A.** 04 - 012024
CO-RTE-PM 04-SF,Ala-80-13.9/14.3,0.0/1.6
FED. NO. ACIM-080-1(085)8N

CCO# **224** SUPPLEMENT#: **0** Category Cod **CHPX**

CONTINGENCY BALANCE (incl. this change **$1,660,358.73**

COST: **$6,116.40** INCREASE ☑ DECREASE ☐

HEADQUARTERS APPROVAL REQUIRED? ☐ YES ☑ NO

SUPPLEMENTAL FUNDS PROVIDED: **$0.00**

IS THIS REQUEST IN ACCORDANCE WITH ENVIRONMENTAL DOCUMENTS? ☑ YES ☐ NO

CCO DESCRIPTION:
Bike Path Grating at Expansion Joints

PROJECT DESCRIPTION:
REPLACE SFOBB EAST SPAN

Original Contract Time:	Time Adj. This Change:	Previously Approved CCO Time Adjustments:	Percentage Time Adjusted: (including this change)	Total # of Unreconciled Deferred Time CCO(s): (including this change)
1000 Day(s)	**DEF** Day(s)	**424** Day(s)	**42** %	**8**

THIS CHANGE ORDER PROVIDES FOR:
Furnishing and installing a 6-mm galvanized steel cover plate across the expansion joint openings of the grating between the south barrier of the Eastbound bridge and the Bike Path at hinges B, C, and D as shown on the sketch attached as page 2 of 2 of the change order, for the SFOBB East Span Skyway, Bridge No. 34-0006R.

Movement of the bike path grating at the expansion joints was not addressed in the contract plan sheets. After the Contractor submitted a Request for Information (RFI), the designer of record T.Y.Lin / Moffatt and Nichol a JV, provided the attached sketch addressing the grating issue at the expansion joints. The Contractor will be required to install a 6-mm thick galvanized steel plate over the expansion joint opening between the grating panels, with one side bolted to the grating and the other side resting on two 60-mm wide x 300-mm long wear strips welded to the grating.

For this extra work, the Contractor will be paid an agreed lump sum amount of $6,116.40. This agreed lump sum constitutes full compensation, including all markups. The method of payment for this work is Extra Work at Agreed Lump Sum. This contract change order will result in a cost increase of $6,116.40 to the project, which can be financed from the contingency funds. A complete Force Account cost analysis is on file with the project records.

Prior approval was obtained from Mr. Doug Coe, Supervising Bridge Engineer, on November 16, 2007. A copy of the prior approval is attached.

FHWA Prior approval is not required, as this is a minor change order.

Concurrence from Design is not required because this change does not affect any design issues.

Concurrence from Maintenance was obtained from Mr. Bill Zanetich, Structure Maintenance and Investigation, on December 20, 2007. A copy of the concurrence provided by Mr. Zanetich is attached.

Since it is not feasible at this time to determine the effect this change will have on the Contractor's operations, it is proposed to defer the determination of any contract time adjustment until completion of the work specified in this change order.

ADA Notice: For individuals with sensory disabilities, this document is available in alternate formats. For information call: (916) 654-6410 or TDD (916) 654-3880 or write Records and Forms Management, 1120 N Street, MS-89, Sacramento, CA 95814.

CONCURRED BY:			
Construction Engineer:	Douglas Coe	DJC	Date 12-21-07
Bridge Engineer:	Douglas Coe	DJC	Date 12-21-07
Project Engineer:			Date
Project Manager:			Date
FHWA Rep.:			Date
Environmental:			Date
Other (specify):	Bill Zanetich, Maintenance		Date 12/20/07
Other (specify):			Date
District Prior Approval By:	Douglas Coe		Date 11/16/07
HQ (Issue Approve) By:			Date
Resident Engineer's Signature:			Date 12-21-07

ESTIMATE OF COST

	THIS REQUEST	TOTAL TO DATE
ITEMS	$0.00	$0.00
FORCE ACCOUNT	$0.00	$0.00
AGREED PRICE	$6,116.40	$6,116.40
ADJUSTMENT	$0.00	$0.00
TOTAL	$6,116.40	$6,116.40

FEDERAL PARTICIPATION

☑ PARTICIPATING ☐ PARTICIPATING IN PART ☐ NONE
☐ NON-PARTICIPATING (MAINTENANCE) ☐ NON-PARTICIPATING

FEDERAL SEGREGATION (if more than one Funding Source or P.I.P. type)
☑ CCO FUNDED PER CONTRACT ☐ CCO FUNDED AS FOLLOWS

FEDERAL FUNDING SOURCE	PERCENT

ADA Notice: For individuals with sensory disabilities, this document is available in alternate formats. For information call: (916) 654-6410 or TDD (916) 654-3880 or write Records and Forms Management, 1120 N Street, MS-89, Sacramento, CA 95814.

STATE OF CALIFORNIA - DEPARTMENT OF TRANSPORTATION

CONTRACT CHANGE ORDER

Change Requested by: Engineer

CCO: 225 | **Suppl. No. 0** **Contract No. 04 - 012024** **Road** 04-SF,Ala-80-13.9/14.3,0.0/1.6 **FED. AID LOC.:** ACIM-080-1(085)8N

To: **KIEWIT / FCI / MANSON a JV**

You are directed to make the following changes from the plans and specifications or do the following described work not included in the plans and specifications for this contract. ***NOTE: This change order is not effective until approved by the Engineer.***

Description of work to be done, estimate of quantities and prices to be paid. (Segregate between additional work at contract price, agreed price and force account.) Unless otherwise stated, rates for rental of equipment cover only such time as equipment is actually used and no allowance will be made for idle time. This last percentage shown is the net accumulated increase or decrease from the original

Extra Work at Lump Sum:

As authorized by the Engineer, fabricate the bike path railing panels for the five (5) Belvedere locations as noted:

1) The second railing panel before and after the belvedere on both sides of the bike path with the posts and pickets transitioning from normal to plumb.
2) The railing panels right next to the belvedere with the posts and pickets in the plumb position to match the light standards on the belvederes.
3) All of the railing panels on the belvedere with the posts and pickets in the plumb position to match the light standards.

Re- fabricate the twelve (12) bike path railing panels fabricated for and adjacent to the first belvedere with posts and pickets in the normal position with posts and pickets as noted above.

Revise the affected shop drawings for the revised bike path railing panels noted above.

For this Extra Work, the Contractor agrees to accept an agreed lump sum amount of $126,468.00. This agreed lump sum constitutes full compensation for all costs, including markups, all direct and indirect costs, all associated project impacts, and all overhead costs.

Extra Work at Agreed Lump Sum $126,468.00

Estimated Cost: **Increase** ☑ **Decrease** ☐ **$126,468.00**

By reason of this order the time of completion will be adjusted as follows: 0 days

Submitted by

Signature	Resident Engineer	Date
	DOUG COE, Supervising Br. Eng	2-22-08

Approval Recommended by

Signature	Construction Engineer	Date
	DOUG COE	2-22-08

Engineer Approval by

Signature	Construction Manager	Date
Michael Forner	MIKE FORNER	3-7-08

We the undersigned contractor, have given careful consideration to the change proposed and agree, if this proposal is approved, that we will provide all equipment, furnish the materials, except as may otherwise be noted above, and perform all services necessary for the work above specified, and will accept as full payment therefor the prices shown above.

NOTE: If you, the contractor, do not sign acceptance of this order, your attention is directed to the requirements of the specifications as to proceeding with the ordered work and filing a written protest within the time therein specified.

Contractor Acceptance by

Signature	(Print name and title)	Date
	Lee Zink Project Director	3/5/08

STATE OF CALIFORNIA - DEPARTMENT OF TRANSPORTATION

CONTRACT CHANGE ORDER MEMORANDUM

TO: MICHAEL FORNER / DOUG COE, Supervising Br. Eng

FROM: DOUG COE Supervising Br. Eng.

FILE: **E.A.** 04 - 012024
CO-RTE-PM 04-SF,Ala-80-13.9/14.3,0.0/1.6
FED. NO. ACIM-080-1(085)8N

CCO# **225** SUPPLEMENT# **0** Category Cod **AXZZ**

CONTINGENCY BALANCE (incl. this change **$2,114,343.95**

COST: **$126,468.00** INCREASE ☑ DECREASE ☐

HEADQUARTERS APPROVAL REQUIRED? ☐ YES ☑ NO

SUPPLEMENTAL FUNDS PROVIDED: **$0.00**

IS THIS REQUEST IN ACCORDANCE WITH ENVIRONMENTAL DOCUMENTS? ☑ YES ☐ NO

CCO DESCRIPTION:
Bike Path Handrail Changes at Belvedere

PROJECT DESCRIPTION:
REPLACE SFOBB EAST SPAN

Original Contract Time:	Time Adj. This Change:	Previously Approved CCO Time Adjustments:	Percentage Time Adjusted: (including this change)	Total # of Unreconciled Deferred Time CCO(s): (including this change)
1000 Day(s)	**0** Day(s)	**424** Day(s)	**42** %	**7**

THIS CHANGE ORDER PROVIDES FOR:
fabricating the bike path railing panels for the five Belvedere locations as noted:

1) The second railing panel before and after the belvedere on both sides of the bike path with the posts and pickets transitioning from normal to plumb.
2) The railing panels right next to the belvedere with the posts and pickets in the plumb position to match the light standards on the belvederes.
3) All of the railing panels on the belvedere with the posts and pickets in the plumb position to match the light standards.

Re- fabricating the twelve (12) bike path railing panels fabricated for and adjacent to the first belvedere with posts and pickets in the normal position with posts and pickets as noted above.

Revising the affected shop drawings for the revised bike path railing panels noted above.

The shop drawings for the bike path railings were approved with the railing elements plumb in the transverse plane and normal in the longitudinal plane although the contract documents require the railings to be plumb in both directions.

The majority of the railing is already fabricated per the approved shop drawings. In order to match the light standards on the belvederes, which are plumb in both directions, the railing panels on the belvederes and right next to the belvederes will be fabricated plumb in the transverse plane as well as the longitudinal plane. The next panels over will be fabricate to provide for a smooth transition from normal to plumb. Twelve railing panels already fabricated for locations next to the belvederes with the post and pickets normal in the longitudinal plane will need to be re-fabricated. Additionally, the shop drawings will need to be revised to show the changes to the railing.

For the revisions to the shop drawings and the re-fabrication of the affected handrailing panels, the Contractor, will be paid an agreed lump sum amount of $126,468.00. This agreed lump sum constitutes full compensation, including all markups. The method of payment for this work is Extra Work at Agreed Lump Sum. This contract change order will result in a cost increase of $126,468.00 to the project, which can be financed from the contingency funds. A complete Force Account cost analysis is on file with the project records.

Prior approval was obtained from Mr. Doug Coe, Supervising Bridge Engineer, on February 19, 2008. A copy of the prior approval is attached.

FHWA Prior approval is not required, as this is a minor change order.

Concurrence from Design is not required because this change does not affect any design issues.

Concurrence from Maintenance is not required as this change does not use maintenance funds or affect maintenance facilities or operations.

No time adjustment is warranted for this change as it does not affect the controlling operation.

ADA Notice: For individuals with sensory disabilities, this document is available in alternate formats. For information call: (916) 654-6410 or TDD (916) 654-3880 or write Records and Forms Management, 1120 N Street, MS-89, Sacramento, CA 95814.

CONCURRED BY:

Construction Engineer:	Douglas Coe DJC	Date 2-22-08
Bridge Engineer:	Douglas Coe DJC	Date 2-22-08
Project Engineer:		Date
Project Manager:		Date
FHWA Rep.:		Date
Environmental:		Date
Other (specify):		Date
Other (specify):		Date
District Prior Approval By:	Douglas Coe	Date 2/19/08
HQ (Issue Approval) By:		Date
Resident Engineer's Signature:		Date 2-22-08

ESTIMATE OF COST

	THIS REQUEST	TOTAL TO DATE
ITEMS	$0.00	$0.00
FORCE ACCOUNT	$0.00	$0.00
AGREED PRICE	$126,468.00	$126,468.00
ADJUSTMENT	$0.00	$0.00
TOTAL	$126,468.00	$126,468.00

FEDERAL PARTICIPATION

☑ PARTICIPATING ☐ PARTICIPATING IN PART ☐ NONE
☐ NON-PARTICIPATING (MAINTENANCE) ☐ NON-PARTICIPATING

FEDERAL SEGREGATION (if more than one Funding Source or P.I.P. type)

☑ CCO FUNDED PER CONTRACT ☐ CCO FUNDED AS FOLLOWS

FEDERAL FUNDING SOURCE PERCENT

ADA Notice: For individuals with sensory disabilities, this document is available in alternate formats. For information call: (916) 654-6410 or TDD (916) 654-3880 or write Records and Forms Management, 1120 N Street, MS-89, Sacramento, CA 95814.

STATE OF CALIFORNIA - DEPARTMENT OF TRANSPORTATION

CONTRACT CHANGE ORDER

Change Requested by: Engineer

CCO: 226	Suppl. No. 0	Contract No. 04 - 012024	Road 04-SF,Ala-80-13.9/14.3,0.0/1.6	FED. AID LOC.: ACIM-080-1(085)8N

To: **KIEWIT / FCI / MANSON a JV**

You are directed to make the following changes from the plans and specifications or do the following described work not included in the plans and specifications for this contract. ***NOTE: This change order is not effective until approved by the Engineer.***

Description of work to be done, estimate of quantities and prices to be paid. (Segregate between additional work at contract price, agreed price and force account.) Unless otherwise stated, rates for rental of equipment cover only such time as equipment is actually used and no allowance will be made for idle time. This last percentage shown is the net accumulated increase or decrease from the original

In accordance with Section 4-1.03B(3), of the Standard Specifications, eliminate the following items of work; Item 4, "Temporary Fence (Type ESA)," and item 14, "Construction Area Signs," from the SFOBB East Span Skyway, Bridge Nos. 34-0006L/R.

Estimate of Decrease in Contract Item at Contract Price:

Item No. 4: TEMPORARY FENCE (TYPE ESA)
-200 M (-100.00%) @ $10.00 /M = -$2,000.00 (-100.00%)

Item No. 14: CONSTRUCTION AREA SIGNS
-1 LS (-100.00%) @ $20,000.00 /LS = -$20,000.00 (-100.00%)

Estimated total cost for Decrease in Contract Item.....($22,000.00)

Estimated Cost: Increase ☐ Decrease ☑ **($22,000.00)**

By reason of this order the time of completion will be adjusted as follows: 0 days

Submitted by

Signature	Resident Engineer DOUG COE, Supervising Br. Eng.	Date 2-15-08

Approval Recommended by

Signature	Construction Engineer DOUG COE	Date 2-15-08

Engineer Approval by

Signature Michael Forner	Construction Manager MIKE FORNER	Date 3-7-08

We the undersigned contractor, have given careful consideration to the change proposed and agree, if this proposal is approved, that we will provide all equipment, furnish the materials, except as may otherwise be noted above, and perform all services necessary for the work above specified, and will accept as full payment therefor the prices shown above.

NOTE: If you, the contractor, do not sign acceptance of this order, your attention is directed to the requirements of the specifications as to proceeding with the ordered work and filing a written protest within the time therein specified.

Contractor Acceptance by

Signature	(Print name and title) Lee Zink Project Director	Date 3/5/08

STATE OF CALIFORNIA - DEPARTMENT OF TRANSPORTATION

CONTRACT CHANGE ORDER MEMORANDUM

TO: MICHAEL FORNER / DOUG COE, Supervising Br. Eng.

FROM: DOUG COE, Supervising Br. Eng.

FILE: **E.A.** 04 - 012024
CO-RTE-PM 04-SF,Ala-80-13.9/14.3,0.0/1.6
FED. NO. ACIM-080-1(085)8N

CCO# **226** SUPPLEMENT#: **0** Category Cod **AXZZ**

CONTINGENCY BALANCE (Incl. this change **$2,331,560.94**

COST: **($22,000.00)** INCREASE ☐ DECREASE ☑

HEADQUARTERS APPROVAL REQUIRED? ☐ YES ☑ NO

SUPPLEMENTAL FUNDS PROVIDED: **$0.00**

IS THIS REQUEST IN ACCORDANCE WITH ENVIRONMENTAL DOCUMENTS? ☑ YES ☐ NO

CCO DESCRIPTION:
Elimination of Bid Items

PROJECT DESCRIPTION:
REPLACE SFOBB EAST SPAN

Original Contract Time:	Time Adj. This Change:	Previously Approved CCO Time Adjustments:	Percentage Time Adjusted: (including this change)	Total # of Unreconciled Deferred Time CCO(s): (including this change)
1000 Day(s)	**0** Day(s)	**424** Day(s)	**42** %	**7**

THIS CHANGE ORDER PROVIDES FOR:

Eliminating the following items of work; Item 4, "Temporary Fence (Type ESA)," and item 14, "Construction Area Signs," from the SFOBB East Span Skyway, Bridge Nos. 34-0006L/R in accordance with Section 4-1.03B(3), of the Standard Specifications.

The land-based, environmentally sensitive areas designated as Non-Tidal Wetlands on plan sheet 27 of 978 and discribed in Section 5-1.26, of the Special Provisions are well outside of the contract limits for the Skyway Project. The area in which the Non-Tidal Wetlands are located is already separated by a chain link fence and a locked gate across Burma Road and is also outside the limits of the area set aside for Contractor and State use on Pier 7. Therefore, the temporary ESA type fencing is not needed.

The contract limits for the Skyway Project are over water and are not readily visible to highway users. Land-based areas for locating construction project information signs are not indicated on the Contract Plans or Special Provisions. Therefore, the construction area signs are eliminated from this project.

This change order decreases the quantity of Contract Item Nos. 4, "Temporary Fence (Type ESA)", and 14, "Construction Area Signs", to zero, resulting in a credit to the contract of $22,000.00.

Prior approval was obtained from Mr. Doug Coe, Supervising Bridge Engineer, on February 5, 2008. A copy of the prior approval is attached.

FHWA Prior approval is not required, as this is a minor change order.

Concurrence from Environmental was provided by Mr. Charles Smith, Office of Environmental Engineering, on February 15, 2008. A copy of the E-mail concurrence provided by Mr. Smith is attached.

Concurrence from Maintenance is not required as this change does not use maintenance funds or affect maintenance facilities or operations.

No time adjustment is warranted for this change as it does not affect the controlling operation.

ADA Notice: For individuals with sensory disabilities, this document is available in alternate formats. For information call: (916) 654-6410 or TDD (916) 654-3880 or write Records and Forms Management, 1120 N Street, MS-89, Sacramento, CA 95814.

CONCURRED BY:			
Construction Engineer:	Douglas Coe	DBC	Date 2-15-08
Bridge Engineer:	Douglas Coe	DBC	Date 2-15-08
Project Engineer:			Date
Project Manager:			Date
FHWA Rep.:			Date
Environmental:	Charles Smith		Date
Other (specify):			Date
Other (specify):			Date
District Prior Approval By:	Douglas Coe		Date 2/5/08
HQ (Issue Approval) By:			Date
Resident Engineer's Signature:			Date 2-15-08

ESTIMATE OF COST

	THIS REQUEST	TOTAL TO DATE
ITEMS	($22,000.00)	($22,000.00)
FORCE ACCOUNT	$0.00	$0.00
AGREED PRICE	$0.00	$0.00
ADJUSTMENT	$0.00	$0.00
TOTAL	($22,000.00)	($22,000.00)

FEDERAL PARTICIPATION

☑ PARTICIPATING ☐ PARTICIPATING IN PART ☐ NONE
☐ NON-PARTICIPATING (MAINTENANCE) ☐ NON-PARTICIPATING

FEDERAL SEGREGATION (if more than one Funding Source or P.I.P. type)
☑ CCO FUNDED PER CONTRACT ☐ CCO FUNDED AS FOLLOWS

FEDERAL FUNDING SOURCE	PERCENT

ADA Notice: For individuals with sensory disabilities, this document is available in alternate formats. For information call: (916) 654-6410 or TDD (916) 654-3880 or write Records and Forms Management, 1120 N Street, MS-89, Sacramento, CA 95814.

STATE OF CALIFORNIA - DEPARTMENT OF TRANSPORTATION

CONTRACT CHANGE ORDER

Change Requested by: Engineer

CCO: 228	Suppl. No. 0	Contract No. 04 - 012024	Road 04-SF,Ala-80-13.9/14.3,0.0/1.6	FED. AID LOC.: ACIM-080-1(085)8N

To: **KIEWIT / FCI / MANSON a JV**

You are directed to make the following changes from the plans and specifications or do the following described work not included in the plans and specifications for this contract. ***NOTE: This change order is not effective until approved by the Engineer.***

Description of work to be done, estimate of quantities and prices to be paid. (Segregate between additional work at contract price, agreed price and force account.) Unless otherwise stated, rates for rental of equipment cover only such time as equipment is actually used and no allowance will be made for idle time. This last percentage shown is the net accumulated increase or decrease from the original

Eliminate in accordance with Section 4-1.03B(3), of the Standard Specifications, the following items of work; Item 93, "100 MM Thermoplastic Traffic Stripe", item 94, "75 MM Paint Traffic Stripe (Black, 1-Coat)", item 95, "Paint Traffic Stripe (2-Coat)", item 96, "Paint Pavement Markings (2-Coat), item 97, "Pavement Marker (Non-Reflective), and item 98, "Pavement Marker (Retroreflective)", from the SFOBB East Span Skyway, Bridge Nos. 34-0006L/R.

Estimate of Decrease in Contract Item at Contract Price:

Item No. 93: 100 MM THERMOPLASTIC TRAFFIC STRIPE
-25150 M (-100.00%) @ $1.00 /M = -$25,150.00 (-100.00%)

Item No. 94: 75 MM PAINT TRAFFIC STRIPE
-8400 M (-100.00%) @ $0.25 /M = -$2,100.00 (-100.00%)

Item No. 95: PAINT TRAFFIC STRIPE (2-COAT)
-2030 M (-100.00%) @ $0.65 /M = -$1,319.50 (-100.00%)

Item No. 96: PAINT PAVEMENT MARKING (2-COAT)
-26 M2 (-100.00%) @ $22.00 /M2 = -$572.00 (-100.00%)

Item No. 97: PAVEMENT MARKER (NON-REFLECTIVE)
-4600 EA (-100.00%) @ $2.00 /EA = -$9,200.00 (-100.00%)

Item No. 98: PAVEMENT MARKER (RETROREFLECTIVE)
-1450 EA (-100.00%) @ $3.75 /EA = -$5,437.50 (-100.00%)

Total cost for Decrease in Contract Item.....($43,779.00)

Estimated Cost: Increase ☐ Decrease ☑ ($43,779.00)

By reason of this order the time of completion will be adjusted as follows: 0 days

Submitted by

Signature	Resident Engineer DOUG COE, Supervising Br. Eng.	Date 1-18-08

Approval Recommended by

Signature	Construction Engineer DOUG COE	Date 1-18-08

Engineer Approval by

Signature Mike Forner	Construction Manager MIKE FORNER	Date 2-14-08

We the undersigned contractor, have given careful consideration to the change proposed and agree, if this proposal is approved, that we will provide all equipment, furnish the materials, except as may otherwise be noted above, and perform all services necessary for the work above specified, and will accept as full payment therefor the prices shown above.

NOTE: If you, the contractor, do not sign acceptance of this order, your attention is directed to the requirements of the specifications as to proceeding with the ordered work and filing a written protest within the time therein specified.

Contractor Acceptance by

Signature	(Print name and title) Lee Zink Project Director	Date 2/4/08

STATE OF CALIFORNIA - DEPARTMENT OF TRANSPORTATION

CONTRACT CHANGE ORDER MEMORANDUM

TO: MICHAEL FORNER / DOUG COE, Supervising Br. Eng.	FILE: E.A. 04 - 012024
FROM: DOUG COE, Supervising Br. Eng.	CO-RTE-PM 04-SF,Ala-80-13.9/14.3,0.0/1.6
	FED. NO. ACIM-080-1(085)8N
CCO# **228** SUPPLEMENT#: **0** Category Cod **AAZZ**	CONTINGENCY BALANCE (incl. this change **$1,502,389.73**
COST: **($43,779.00)** INCREASE ☐ DECREASE ☑	HEADQUARTERS APPROVAL REQUIRED? ☐ YES ☑ NO
SUPPLEMENTAL FUNDS PROVIDED: **$0.00**	IS THIS REQUEST IN ACCORDANCE WITH ENVIRONMENTAL DOCUMENTS? ☑ YES ☐ NO
CCO DESCRIPTION: Delete Pavement Delineation	**PROJECT DESCRIPTION:** REPLACE SFOBB EAST SPAN

Original Contract Time:	Time Adj. This Change:	Previously Approved CCO Time Adjustments:	Percentage Time Adjusted: (including this change)	Total # of Unreconciled Deferred Time CCO(s): (including this change)
1000 Day(s)	**0** Day(s)	**424** Day(s)	**42** %	**8**

THIS CHANGE ORDER PROVIDES FOR:

Eliminating in accordance with Section 4-1.03B(3), of the Standard Specifications, the following items of work; Item 93, "100 MM Thermoplastic Traffic Stripe", item 94, "75 MM Paint Traffic Stripe (Black, 1-Coat)", item 95, "Paint Traffic Stripe (2-Coat)", item 96, "Paint Pavement Markings (2-Coat), item 97, "Pavement Marker (Non-Reflective), and item 98, "Pavement Marker (Retroreflective)", from the SFOBB East Span Skyway, Bridge Nos. 34-0006L/R.

The SFOBB East Span Replacement Project will not be completed until 2013. Ongoing contracts will be accessing the Skyway portion of the bridge for the next six years which could disturb the striping and pavement markers requiring restriping before the skyway can be openend to traffic. Performing all the pavement delineation and marker work toward the end of the project would also result in having new striping and pavement markings on the entire project prior to traffic on the new bridge. Eliminating the pavement delineation and pavement markers from this contract is recommended by Mr. Steven Hulsebus, Office Chief, Toll Bridge Design.

This change order decreases the quantity of Contract Item Nos. 93, "100 MM Thermoplastic Traffic Stripe", 94, "75 MM Paint Traffic Stripe (Black, 1-Coat)", 95, "Paint Traffic Stripe (2-Coat)", 96, "Paint Pavement Markings (2-Coat), 97, "Pavement Marker (Non-Reflective), and 98, "Pavement Marker (Retroreflective) to zero, resulting in a credit to the contract of $43,779.00.

Prior approval was obtained from Mr. Doug Coe, Supervising Bridge Engineer, on January 15, 2008. A copy of the prior approval is attached.

FHWA Prior approval is not required, as this is a minor change order.

Design concurrence was provided by Mr. Steven Hulsebus, Office Chief, Toll Bridge Design, on November 9, 2007. A copy of the E-mail recommendation to eliminate the striping and markings provided by Mr. Hulsebus is attached.

Concurrence from Maintenance is not required as this change does not use maintenance funds or affect maintenance facilities or operations.

No time adjustment is warranted for this change as it does not affect the controlling operation.

ADA Notice: For individuals with sensory disabilities, this document is available in alternate formats. For information call: (916) 654-6410 or TDD (916) 654-3880 or write Records and Forms Management, 1120 N Street, MS-89, Sacramento, CA 95814.

CONCURRED BY:			
Construction Engineer:	Douglas Coe DJC	Date	1-18-08
Bridge Engineer:	Douglas Coe DJC	Date	1-18-08
Project Engineer:		Date	
Project Manager:		Date	
FHWA Rep.:		Date	
Environmental:		Date	
Other (specify):	Steven Hulsebus, Design	Date	11/9/07
Other (specify):		Date	
District Prior Approval By:	Douglas Coe	Date	1/15/08
HQ (Issue Approve) By:		Date	
Resident Engineer's Signature:		Date	1-18-08

ESTIMATE OF COST

	THIS REQUEST	TOTAL TO DATE
ITEMS	($43,779.00)	($43,779.00)
FORCE ACCOUNT	$0.00	$0.00
AGREED PRICE	$0.00	$0.00
ADJUSTMENT	$0.00	$0.00
TOTAL	($43,779.00)	($43,779.00)

FEDERAL PARTICIPATION

☑ PARTICIPATING ☐ PARTICIPATING IN PART ☐ NONE
☐ NON-PARTICIPATING (MAINTENANCE) ☐ NON-PARTICIPATING

FEDERAL SEGREGATION (if more than one Funding Source or P.I.P. type)
☑ CCO FUNDED PER CONTRACT ☐ CCO FUNDED AS FOLLOWS

FEDERAL FUNDING SOURCE	PERCENT

ADA Notice: For individuals with sensory disabilities, this document is available in alternate formats. For information call: (916) 654-6410 or TDD (916) 654-3880 or write Records and Forms Management, 1120 N Street, MS-89, Sacramento, CA 95814.

STATE OF CALIFORNIA - DEPARTMENT OF TRANSPORTATION

CONTRACT CHANGE ORDER

Change Requested by: Engineer

CCO: 229	Suppl. No. 0	Contract No. 04 - 012024	Road 04-SF,Ala-80-13.9/14.3,0.0/1.6	FED. AID LOC.: ACIM-080-1(085)8N

To: **KIEWIT / FCI / MANSON a JV**

You are directed to make the following changes from the plans and specifications or do the following described work not included in the plans and specifications for this contract. ***NOTE: This change order is not effective until approved by the Engineer.***

Description of work to be done, estimate of quantities and prices to be paid. (Segregate between additional work at contract price, agreed price and force account.) Unless otherwise stated, rates for rental of equipment cover only such time as equipment is actually used and no allowance will be made for idle time. This last percentage shown is the net accumulated increase or decrease from the original

Extra Work at Lump Sum:

As authorized by the Engineer, install cable type support hangers to support the mechanical pipe ball joints on the 6, and 12 NPS pipes at hinges B, C, and D of the Westbound Bridge and the 10 NPS pipe at hinges B, C, and D of the Eastbound Bridge, for the SFOBB East Span Skyway, Bridge Nos. 34-0006L/R.

Extra Work at Agreed Lump Sum $33,952.00

Adjustment of Compensation at Lump Sum:

Delete the contract requirement to flush the water piping system as specified in Sub-Section "Flushing" of Special Provisions Section 10-4.03 "Pipe, Fittings, and Valves" and delete the contract requirement to air blow the compressed air system as specified in Sub-Section "Air Blowing" of Special Provisions Section 10-4.03 "Pipe, Fittings, and Valves", of the SFOBB East Span Skyway, Bridge Nos. 34-0006L/R.

Adjustment of Compensation at Agreed Lump Sum .....($34,137.00)<Credit>

Estimated Cost: Increase ☐ Decrease ☑ **($185.00)**

By reason of this order the time of completion will be adjusted as follows: 0 days

Submitted by

Signature	Resident Engineer DOUG COE, Supervising Br. Eng.	Date 2-13-08

Approval Recommended by

Signature	Construction Engineer DOUG COE	Date 2-13-08

Engineer Approval by

Signature	Construction Manager MIKE FORNER	Date 3-3-08

We the undersigned contractor, have given careful consideration to the change proposed and agree, if this proposal is approved, that we will provide all equipment, furnish the materials, except as may otherwise be noted above, and perform all services necessary for the work above specified, and will accept as full payment therefor the prices shown above.

NOTE: If you, the contractor, do not sign acceptance of this order, your attention is directed to the requirements of the specifications as to proceeding with the ordered work and filing a written protest within the time therein specified.

Contractor Acceptance by

Signature	(Print name and title) Lee Zink Project Director	Date 2/20/08

STATE OF CALIFORNIA - DEPARTMENT OF TRANSPORTATION

CONTRACT CHANGE ORDER MEMORANDUM

TO: MICHAEL FORNER / DOUG COE, Supervising Br. Eng.

FROM: DOUG COE, Supervising Br. Eng.

FILE: E.A. 04 - 012024
CO-RTE-PM 04-SF,Ala-80-13.9/14.3,0.0/1.6
FED. NO. ACIM-080-1(085)8N

CCO# **229** SUPPLEMENT#: **0** Category Cod **AWZZ**

CONTINGENCY BALANCE (incl. this change **$2,298,808.94**

COST: **($185.00)** INCREASE ☐ DECREASE ☑

HEADQUARTERS APPROVAL REQUIRED? ☐ YES ☑ NO

SUPPLEMENTAL FUNDS PROVIDED: **$0.00**

IS THIS REQUEST IN ACCORDANCE WITH ENVIRONMENTAL DOCUMENTS? ☑ YES ☐ NO

CCO DESCRIPTION:
Pipe supports at Hinges, Del. Pipe Flush

PROJECT DESCRIPTION:
REPLACE SFOBB EAST SPAN

Original Contract Time:	Time Adj. This Change:	Previously Approved CCO Time Adjustments:	Percentage Time Adjusted: (including this change)	Total # of Unreconciled Deferred Time CCO(s): (including this change)
1000 Day(s)	**0** Day(s)	**424** Day(s)	**42** %	**8**

THIS CHANGE ORDER PROVIDES FOR:
installing cable type support hangers to support the mechanical pipe ball joints on the 6, and 12 NPS pipes at hinges B, C, and D of the Westbound Bridge and the 10 NPS pipe at hinges B, C, and D of the Eastbound Bridge, for the SFOBB East Span Skyway, Bridge Nos. 34-0006L/R.

Deleting the contract requirement to flush the water piping system as specified in Sub-Section "Flushing" of Special Provisions Section 10-4.03 "Pipe, Fittings, and Valves" and deleting the contract requirement to air blow the compressed air system as specified in Sub-Section "Air Blowing" of Special Provisions Section 10-4.03 "Pipe, Fittings, and Valves", of the SFOBB East Span Skyway, Bridge Nos. 34-0006L/R.

The contract plans do not show supports at the hinge expansion loop ball joints of the 6, 10, and 12 NPS mechanical piping. This is causing the ball joints to sag and bind, restricting their movement during a seismic event. To alleviate this condition within the current time constrains of the project a temporary cable type support hanger will be added to keep the ball joints in a neutral position while still allowing for movement. Prior to the system being placed in service a permanent hanger system will need to be developed and implemented on a future SFOBB East Span Replacement Contract. This will improve the performance during a seismic event and extend the useful life of the joints.

The Skyway mechanical piping will remain disconnected at each end until the remaining SFOBB East Span Replacement contracts are completed. Prior to being put in service the entire piping system will need to be tested and flushed. This would make the flushing and air blowing of the mechanical piping under this contract redundant. Deletion of the flushing and air blowing from this contract will result in a credit to the State.

For the extra work of installing temporary support hangers, the Contractor will be paid an agreed lump sum amount of $33,952.00. This agreed lump sum constitutes full compensation, including all markups. The method of payment for this work is Extra Work at Agreed Lump Sum.

For the deletion of flushing and air blowing from the contract, the State will be credited an agreed lump sum amount of ($34,137.00). This agreed lump sum constitutes full compensation, including all markups. The method of payment for this deletion of work is Adjustment of Compensation at Agreed Lump Sum.

This contract change order will result in a net cost decrease of $185.00 to the project. A complete Force Account cost analysis is on file with the project records.

Prior approval was obtained from Mr. Doug Coe, Supervising Bridge Engineer, on January 15, 2008. A copy of the prior approval is attached.

FHWA Prior approval is not required, as this is a minor change order.

Design concurrence for the deletion of the flushing and air blowing was provided by Mr. Michael White, Mechanical Engineer, Maintenance and Special Projects, on January 8, 2008. A copy of the E-mail recommendation to delete the flushing and air blowing from this contract provided by Mr. White is attached.

Design concurrence for the temporary support hangers was provided by Mr. Michael White, Mechanical Engineer, Maintenance and Special Projects, on February 13, 2008. A copy of the E-mail concurrence provided by Mr. White is

ADA Notice: For individuals with sensory disabilities, this document is available in alternate formats. For information call: (916) 654-6410 or TDD (916) 654-3880 or write Records and Forms Management, 1120 N Street, MS-89, Sacramento, CA 95814.

attached.

Concurrence from Maintenance is not required as this change does not use maintenance funds or affect maintenance facilities or operations.

No time adjustment is warranted for this change as it does not affect the controlling operation.

CONCURRED BY:			
Construction Engineer:	Douglas Coe	Date	2-13-08
Bridge Engineer:	Douglas Coe	Date	2-13-08
Project Engineer:		Date	
Project Manager:		Date	
FHWA Rep.:		Date	
Environmental:		Date	
Other (specify):	Michael White	Date	2/13/08
Other (specify):		Date	
District Prior Approval By:	Douglas Coe	Date	1/15/08
HQ (Issue Approve) By:		Date	
Resident Engineer's Signature:		Date	2-13-08

ESTIMATE OF COST

	THIS REQUEST	TOTAL TO DATE
ITEMS	$0.00	$0.00
FORCE ACCOUNT	$0.00	$0.00
AGREED PRICE	$33,952.00	$33,952.00
ADJUSTMENT	($34,137.00)	($34,137.00)
TOTAL	($185.00)	($185.00)

FEDERAL PARTICIPATION

☑ PARTICIPATING ☐ PARTICIPATING IN PART ☐ NONE
☐ NON-PARTICIPATING (MAINTENANCE) ☐ NON-PARTICIPATING

FEDERAL SEGREGATION (if more than one Funding Source or P.I.P. type)
☑ CCO FUNDED PER CONTRACT ☐ CCO FUNDED AS FOLLOWS

FEDERAL FUNDING SOURCE	PERCENT

ADA Notice: For individuals with sensory disabilities, this document is available in alternate formats. For information call: (916) 654-6410 or TDD (916) 654-3880 or write Records and Forms Management, 1120 N Street, MS-89, Sacramento, CA 95814.

STATE OF CALIFORNIA - DEPARTMENT OF TRANSPORTATION

CONTRACT CHANGE ORDER

Change Requested by: Engineer

CCO: 230	Suppl. No. 0	Contract No. 04 - 012024	Road 04-SF,Ala-80-13.9/14.3,0.0/1.6	FED. AID LOC.: ACIM-080-1(085)8N

To: **KIEWIT / FCI / MANSON a JV**

You are directed to make the following changes from the plans and specifications or do the following described work not included in the plans and specifications for this contract. ***NOTE: This change order is not effective until approved by the Engineer.***

Description of work to be done, estimate of quantities and prices to be paid. (Segregate between additional work at contract price, agreed price and force account.) Unless otherwise stated, rates for rental of equipment cover only such time as equipment is actually used and no allowance will be made for idle time. This last percentage shown is the net accumulated increase or decrease from the original

This Contract Change Order represents complete accord and satisfaction for Notices of Potential Claim (NOPC) Nos. 15, 16, 17, 18, 19, 20, 21, 22, 23, 24, 25, 27, 29, filed on behalf of Universal Structural, Inc., and the outstanding Contract Change Order Nos. 88 S1, 171, 172, 187, and resolves all other outstanding issues, disruptions, and impacts, concerning the fabrication of the Orthotropic Box Girder. The Contractor agrees to waive any and all current or future claims, including but not limited to sub-contractor claims, sub-supplier claims, and surety claims, related to the above NOPCs, Change Orders, and Item 65 "Furnishing Structural Steel (Orthotropic Box Girder)".

Adjustment of Compensation at Lump Sum:

For this CCO the Contractor will be paid $19,900,000.00 in accordance with Standard Specification 4-1.03 "Changes". This agreed lump sum amount constitutes full compensation, including all markups, all direct and indirect costs. All overhead costs, and all project impacts associated with the above NOPCs, Change Orders, and Item 65 "Furnishing Structural Steel (Orthotropic Box Girder)" have been collectively resolved by way of this Contract Change Order and Contract Change Order No. 200.

Adjustment of Compensation at Agreed Lump Sum $19,900,000.00

Estimated Cost: Increase ☑ Decrease ☐ **$19,900,000.00**

By reason of this order the time of completion will be adjusted as follows: 0 days

Submitted by

Signature	Resident Engineer	Date
Doug Coe	DOUG COE, Supervising Br. Eng.	1-31-08

Approval Recommended by

Signature	Construction Manager	Date
Michael Forner	MIKE FORNER	1-31-08

Engineer Approval by

Signature	Construction Manager	Date
Michael Forner	MIKE FORNER	2/7/08

We the undersigned contractor, have given careful consideration to the change proposed and agree, if this proposal is approved, that we will provide all equipment, furnish the materials, except as may otherwise be noted above, and perform all services necessary for the work above specified, and will accept as full payment therefor the prices shown above.

NOTE: If you, the contractor, do not sign acceptance of this order, your attention is directed to the requirements of the specifications as to proceeding with the ordered work and filing a written protest within the time therein specified.

Contractor Acceptance by

Signature	(Print name and title)	Date
	A. T. Skoro, Vice President	2/5/08

STATE OF CALIFORNIA - DEPARTMENT OF TRANSPORTATION

CONTRACT CHANGE ORDER MEMORANDUM

TO: MICHAEL FORNER / DOUG COE, Supervising Br. Eng.	FILE: **E.A.** 04 - 012024
FROM: DOUG COE, Supervising Br. Eng.	**CO-RTE-PM** 04-SF,Ala-80-13.9/14.3,0.0/1.6
	FED. NO. ACIM-080-1(085)8N
CCO# **230** SUPPLEMENT#: **0** Category Cod **ERCD**	CONTINGENCY BALANCE (incl. this change **$2,315,352.94**
COST: **$19,900,000.00** INCREASE ☑ DECREASE ☐	HEADQUARTERS APPROVAL REQUIRED? ☑ YES ☐ NO
SUPPLEMENTAL FUNDS PROVIDED: **$0.00**	IS THIS REQUEST IN ACCORDANCE WITH ENVIRONMENTAL DOCUMENTS? ☑ YES ☐ NO
CCO DESCRIPTION: CSR # 3, USI Settlement	**PROJECT DESCRIPTION:** REPLACE SFOBB EAST SPAN

Original Contract Time:	Time Adj. This Change:	Previously Approved CCO Time Adjustments:	Percentage Time Adjusted: (including this change)	Total # of Unreconciled Deferred Time CCO(s): (including this change)
1000 Day(s)	**0** Day(s)	**424** Day(s)	**42** %	**9**

THIS CHANGE ORDER PROVIDES FOR:

the resolution of all NOPC's, issues, disruptions, impacts, and outstanding contract change orders associated with the fabrication of the Orthotropic Box Girders by Universal Structural, Inc. (USI), a material supplier to Kiewit/FCI/Manson, a JV (KFM), and any and all current or future claims, including but not limited to sub-contractor claims, sub-supplier claims, and surety claims, related to Item 65 "Furnishing Structural Steel (Orthotropic Box Girder)".

This contract change order is written in accordance with the Claim Settlement Report (CSR) No. 3, "USI Fabrication of Othotropic Box Girders" dated December 18, 2007, and approved by Richard Land, Chief Engineer, on January 23, 2008.

All field related impacts and costs associated with this Contract Change Order have been collectively resolved by way of this Contract Change Order and Contract Change Order No. 200 (CSR # 2-Global Settlement).

The CSR approves a payment of $19,900,000.00 to resolve the Issues.

The method of payment for this change order will be adjustment of compensation at agreed lump sum in the amount of $19,900.000.00. This agreed lump sum constitutes full compensation, including all markups. This CCO can be financed from the project's contingency funds. A summary of the total costs agreed on by both the Engineer and the Contractor, and the detailed cost analysis is provided in the CSR and the project records.

Ms. Nancy Bobb, FHWA Bay Bridge Project Manager, provided Prior Approval via an electronic message on January 26, 2008. A printed copy of the prior approval provided by Ms. Bobb is attached.

Ken Terpstra, SFOBB Project Manager, is in concurrence with this change. Mr. Terpstra provided concurrence by signing the CSR on January 4, 2008.

District Prior Approval was obtained by Mr. Mike Forner, SFOBB Construction Manager, by signing the CSR on January 4, 2008.

Patrick Treacy, Headquarters Construction Coordinator, provided concurrence on January 22, 2008.

Maintenance concurrence is not required as this change order does not affect maintenance facilities or operations and does not include maintenance funds.

Contract Change Order No. 200 (CSR # 2-Global Settlement) resolved all impacts to the contract time for this change order.

ADA Notice: For individuals with sensory disabilities, this document is available in alternate formats. For information call: (916) 654-6410 or TDD (916) 654-3880 or write Records and Forms Management, 1120 N Street, MS-89, Sacramento, CA 95814.

CONCURRED BY:			
Construction Engineer:	Mike Forner	Date	1/31/08
Bridge Engineer:	Douglas Coe DJC	Date	1/31/08
Project Engineer:		Date	
Project Manager:	Ken Terpstra	Date	1/4/08
FHWA Rep.:	Nancy Bobb	Date	1/26/08
Environmental:		Date	
Other (specify):	TPOC	Date	12/11/07
Other (specify):		Date	
District Prior Approval By:	Mike Forner	Date	1/4/08
HQ (Issue Approve) By:	Ken Darby	Date	
Resident Engineer's Signature:		Date	1-31-08

ESTIMATE OF COST

	THIS REQUEST	TOTAL TO DATE
ITEMS	$0.00	$0.00
FORCE ACCOUNT	$0.00	$0.00
AGREED PRICE	$0.00	$0.00
ADJUSTMENT	$19,900,000.00	$19,900,000.00
TOTAL	$19,900,000.00	$19,900,000.00

FEDERAL PARTICIPATION

☑ PARTICIPATING ☐ PARTICIPATING IN PART ☐ NONE
☐ NON-PARTICIPATING (MAINTENANCE) ☐ NON-PARTICIPATING

FEDERAL SEGREGATION (if more than one Funding Source or P.I.P. type)
☑ CCO FUNDED PER CONTRACT ☐ CCO FUNDED AS FOLLOWS

FEDERAL FUNDING SOURCE	PERCENT

ADA Notice: For individuals with sensory disabilities, this document is available in alternate formats. For information call: (916) 654-6410 or TDD (916) 654-3880 or write Records and Forms Management, 1120 N Street, MS-89, Sacramento, CA 95814.

STATE OF CALIFORNIA - DEPARTMENT OF TRANSPORTATION

CONTRACT CHANGE ORDER

Change Requested by: Engineer

CCO: 231	Suppl. No. 0	Contract No. 04 - 012024	Road 04-SF,Ala-80-13.9/14.3,0.0/1.6	FED. AID LOC.: ACIM-080-1(085)8N

To: **KIEWIT / FCI / MANSON a JV**

You are directed to make the following changes from the plans and specifications or do the following described work not included in the plans and specifications for this contract. ***NOTE: This change order is not effective until approved by the Engineer.***

Description of work to be done, estimate of quantities and prices to be paid. (Segregate between additional work at contract price, agreed price and force account.) Unless otherwise stated, rates for rental of equipment cover only such time as equipment is actually used and no allowance will be made for idle time. This last percentage shown is the net accumulated increase or decrease from the original

Extra Work at Lump Sum:

As authorized by the Engineer, remove the outer bike path traveler rail connection plate, install a 5/8" doubler plate, and install a new connection plate at bike path hinges B and C to align the outer traveler rail, of the SFOBB East Span Skyway, Bridge No. 34-0006R.

For this Extra Work, the Contractor agrees to accept an agreed lump sum amount of $196,524.44. This agreed lump sum constitutes full compensation for all costs, including markups, all direct and indirect costs, and all overhead costs.

This Contract Change Order also represents complete accord and satisfaction for Notice of Potential Claim (NOPC) No. 30, "Inner and Outer Rails", dated December 6, 2007. The Contractor agrees to waive any and all claims, including subcontractor claims, for additional compensation or time adjustment related to NOPC 30.

Extra Work at Agreed Lump Sum $196,524.44

Estimated Cost: Increase ☑ Decrease ☐ $196,524.44

By reason of this order the time of completion will be adjusted as follows: Deferred

Submitted by		
Signature	Resident Engineer DOUG COE, Supervising Br. Eng.	Date 3-12-08
Approval Recommended by		
Signature	Construction Engineer DOUG COE	Date 3-12-08
Engineer Approval by		
Signature Michael Forner	Construction Manager MIKE FORNER	Date 4-1-08

We the undersigned contractor, have given careful consideration to the change proposed and agree, if this proposal is approved, that we will provide all equipment, furnish the materials, except as may otherwise be noted above, and perform all services necessary for the work above specified, and will accept as full payment therefor the prices shown above.

NOTE: If you, the contractor, do not sign acceptance of this order, your attention is directed to the requirements of the specifications as to proceeding with the ordered work and filing a written protest within the time therein specified.

Contractor Acceptance by		
Signature	(Print name and title) Lee Zink Project Director	Date 3/20/08

STATE OF CALIFORNIA - DEPARTMENT OF TRANSPORTATION

CONTRACT CHANGE ORDER MEMORANDUM

TO: MICHAEL FORNER / DOUG COE, Supervising Br. Eng.

FROM: DOUG COE, Supervising Br. Eng.

FILE: **E.A.** 04 - 012024
CO-RTE-PM 04-SF,Ala-80-13.9/14.3,0.0/1.6
FED. NO. ACIM-080-1(085)8N

CCO# **231** SUPPLEMENT#: **0** Category Cod **FHBD**

CONTINGENCY BALANCE (incl. this change **$1,105,937.97**

COST: **$196,524.44** INCREASE ☑ DECREASE ☐

HEADQUARTERS APPROVAL REQUIRED? ☐ YES ☑ NO

SUPPLEMENTAL FUNDS PROVIDED: **$0.00**

IS THIS REQUEST IN ACCORDANCE WITH ENVIRONMENTAL DOCUMENTS? ☑ YES ☐ NO

CCO DESCRIPTION:
Traveler Rail Alignment at Hinges

PROJECT DESCRIPTION:
REPLACE SFOBB EAST SPAN

Original Contract Time:	Time Adj. This Change:	Previously Approved CCO Time Adjustments:	Percentage Time Adjusted: (including this change)	Total # of Unreconciled Deferred Time CCO(s): (including this change)
1000 Day(s)	**DEF** Day(s)	**424** Day(s)	**42** %	**8**

THIS CHANGE ORDER PROVIDES FOR:
removing the outer bike path traveler rail connection plate, installing a 5/8" doubler plate, and installing a new connection plate at bike path hinges B and C to align the outer traveler rail, of the SFOBB East Span Skyway, Bridge No. 34-0006R. The Contract Change Order also represents complete accord and satisfaction for Notice of Potential Claim (NOPC) No. 30, "Inner and Outer Rails", dated December 6, 2007.

The alignment of the traveler rails is critical for operation of the traveler. The attachment method of the bike path cantilever beams to the concrete bridge structure, the placement of the bike path panels on the cantilever beams, and the outer traveler rail "plate to plate" connection do not provide for any adjustments. Mis-alignment of the bridge across the expansion joints, although within the tolerances provided for in the Special Provisions, resulted in an off-set of the outer traveler rail across hinge B and C. The misalignment of the outer traveler rail was a direct result of the connection design not including a method of adjustment for the tolerances allowed in the construction of the segmental bridge.

To provide for the necessary alignment, the Contractor will be required to remove the bike path panel traveler rail connection plate; weld an approximately 23" wide by 5/8" thick stiffener plate along the connection plate for the length of a standard bike path box panel and a bike path hinge panel; and weld a new connection plate to the stiffener plate in order to allow for a smooth transition across the joint.

For the extra work of aligning the traveler rails across the bike path hinges, the Contractor will be paid an agreed lump sum amount of $196,524.44. This agreed lump sum constitutes full compensation, including all markups and will result in the Contractor withdrawing the NOPC. The method of payment for this work is Extra Work at Agreed Lump Sum.

This contract change order will result in a cost increase of $196,524.44 to the project. A complete Force Account cost analysis is on file with the project records.

Prior approval was obtained from Mr. Doug Coe, Supervising Bridge Engineer, on February 13, 2008. A copy of the prior approval is attached.

FHWA Prior approval is not required, as this is a minor change order.

Design concurrence was provided by Mr. Satinder Singh, of TY Linn, Moffatt, and Nichol, the designer of record, with the response to the contractors submittal no. 7610, revision 4, dated January 16, 2008. A copy of the response is attached.

Concurrence from Maintenance is not required as this change does not use maintenance funds or affect maintenance facilities or operations.

Since it is not feasible at this time to determine the effect this change will have on the Contractor's operations, it is proposed to defer the determination of any contract time adjustment until completion of the work specified in this change order.

ADA Notice: For individuals with sensory disabilities, this document is available in alternate formats. For information call: (916) 654-6410 or TDD (916) 654-3880 or write Records and Forms Management, 1120 N Street, MS-89, Sacramento, CA 95814.

CONCURRED BY:			
Construction Engineer:	Douglas Coe DJC	Date 3-12-08	
Bridge Engineer:	Douglas Coe DJC	Date 3-12-08	
Project Engineer:		Date	
Project Manager:		Date	
FHWA Rep.:		Date	
Environmental:		Date	
Other (specify):	Satinder Singh - TYLIN	Date	1/16/08
Other (specify):		Date	
District Prior Approval By:	Douglas Coe	Date	2/5/08
HQ (Issue Approve) By:		Date	
Resident Engineer's Signature:		Date	

ESTIMATE OF COST

	THIS REQUEST	TOTAL TO DATE
ITEMS	$0.00	$0.00
FORCE ACCOUNT	$0.00	$0.00
AGREED PRICE	$196,524.44	$196,524.44
ADJUSTMENT	$0.00	$0.00
TOTAL	$196,524.44	$196,524.44

FEDERAL PARTICIPATION

☑ PARTICIPATING ☐ PARTICIPATING IN PART ☐ NONE
☐ NON-PARTICIPATING (MAINTENANCE) ☐ NON-PARTICIPATING

FEDERAL SEGREGATION (if more than one Funding Source or P.I.P. type)
☑ CCO FUNDED PER CONTRACT ☐ CCO FUNDED AS FOLLOWS

FEDERAL FUNDING SOURCE	PERCENT

ADA Notice: For individuals with sensory disabilities, this document is available in alternate formats. For information call: (916) 654-6410 or TDD (916) 654-3880 or write Records and Forms Management, 1120 N Street, MS-89, Sacramento, CA 95814.

STATE OF CALIFORNIA - DEPARTMENT OF TRANSPORTATION

CONTRACT CHANGE ORDER

Change Requested by: Engineer

CCO: 232	Suppl. No. 0	Contract No. 04 - 012024	Road 04-SF,Ala-80-13.9/14.3,0.0/1.6	FED. AID LOC.: ACIM-080-1(085)8N

To: **KIEWIT / FCI / MANSON a JV**

You are directed to make the following changes from the plans and specifications or do the following described work not included in the plans and specifications for this contract. ***NOTE: This change order is not effective until approved by the Engineer.***

Description of work to be done, estimate of quantities and prices to be paid. (Segregate between additional work at contract price, agreed price and force account.) Unless otherwise stated, rates for rental of equipment cover only such time as equipment is actually used and no allowance will be made for idle time. This last percentage shown is the net accumulated increase or decrease from the original

Extra Work at Lump Sum:

As authorized by the Engineer, fabricate and install shims between the hinge pipe beam restraint brackets and the hinge pipe beam diaphragms to provide for an even gap, of the SFOBB East Span Skyway, Bridge Nos. 34-0006L/R.

For this Extra Work, the Contractor agrees to accept an agreed lump sum amount of $176,106.00. This agreed lump sum constitutes full compensation for all costs, including markups, all direct and indirect costs, and all overhead costs.

This Contract Change Order also represents complete accord and satisfaction for Notice of Potential Claim (NOPC) No. 31 "Additional Shimming", dated January 2, 2008. The Contractor agrees to waive any and all claims, including subcontractor claims, for additional compensation or time adjustment related to NOPC 31.

Extra Work at Agreed Lump Sum $176,106.00

Estimated Cost: Increase ☑ Decrease ☐ **$176,106.00**

By reason of this order the time of completion will be adjusted as follows: 0 days

Submitted by

Signature	Resident Engineer DOUG COE, Supervising Br. Eng.	Date 2-28-08

Approval Recommended by

Signature	Construction Engineer DOUG COE	Date 2-28-08

Engineer Approval by

Signature Mike Forner	Construction Manager MIKE FORNER	Date 3-7-08

We the undersigned contractor, have given careful consideration to the change proposed and agree, if this proposal is approved, that we will provide all equipment, furnish the materials, except as may otherwise be noted above, and perform all services necessary for the work above specified, and will accept as full payment therefor the prices shown above.

NOTE: If you, the contractor, do not sign acceptance of this order, your attention is directed to the requirements of the specifications as to proceeding with the ordered work and filing a written protest within the time therein specified.

Contractor Acceptance by

Signature	(Print name and title) Lee Zink Project Director	Date 3/5/08

STATE OF CALIFORNIA - DEPARTMENT OF TRANSPORTATION

CONTRACT CHANGE ORDER MEMORANDUM

TO: MICHAEL FORNER / DOUG COE, Supervising Br. Eng.	FILE: **E.A.** 04 - 012024
FROM: DOUG COE, Supervising Br. Eng.	**CO-RTE-PM** 04-SF,Ala-80-13.9/14.3,0.0/1.6
	FED. NO. ACIM-080-1(085)8N
CCO# **232** SUPPLEMENT#: **0** Category Cod **FHBB**	CONTINGENCY BALANCE (incl. this change **$1,112,461.97**
COST: **$176,106.00** INCREASE ☑ DECREASE ☐	HEADQUARTERS APPROVAL REQUIRED? ☐ YES ☑ NO
SUPPLEMENTAL FUNDS PROVIDED: **$0.00**	IS THIS REQUEST IN ACCORDANCE WITH ENVIRONMENTAL DOCUMENTS? ☑ YES ☐ NO
CCO DESCRIPTION: Hinge Pipe Restraint Shimming	**PROJECT DESCRIPTION:** REPLACE SFOBB EAST SPAN

Original Contract Time:	Time Adj. This Change:	Previously Approved CCO Time Adjustments:	Percentage Time Adjusted: (including this change)	Total # of Unreconciled Deferred Time CCO(s): (including this change)
1000 Day(s)	**0** Day(s)	**424** Day(s)	**42** %	**8**

THIS CHANGE ORDER PROVIDES FOR:

fabricating and installing shims between the hinge pipe beam restraint bracket and the hinge pipe beam diaphragms to provide for an even gap, of the SFOBB East Span Skyway, Bridge Nos. 34-0006L/R. The Contract Change Order also represents complete accord and satisfaction for Notice of Potential Claim (NOPC) No. 31, "Additional Shimming", dated January 2, 2008

The hinge detail sheets show the hinge pipe beam horizontal and the diaphragm perpendicular, whereas the deck contour shows a 1.9% grade. This resulted in the hinge pipe beam diaphragms to be placed plumb within the segments instead of perpendicular to the bridge deck. The Hinge Pipe Beams are installed parallel to the bridge deck, which results in a variance of approximately 56 mm between the top and bottom hinge pipe beam restraint brackets and the diaphragm wall.

To create even bearing all around the diaphragm the Contractor will be required to shim the restraint brackets to provide for an even gap between the diaphragm and the hinge pipe restraint brackets.

For the extra work of shimming the restraint brackets, the Contractor will be paid an agreed lump sum amount of $176,106.00. This agreed lump sum constitutes full compensation, including all markups and will result in the Contractor withdrawing the NOPC. The method of payment for this work is Extra Work at Agreed Lump Sum.

This contract change order will result in a cost increase of $176,106.00 to the project, which can be financed from the contingency funds. A complete Force Account cost analysis is on file with the project records.

Prior approval was obtained from Mr. Doug Coe, Supervising Bridge Engineer, on February 27, 2008. A copy of the prior approval is attached.

FHWA Prior approval is not required, as this is a minor change order.

Design concurrence was provided by Mr. Hasan El-Natur, Design Oversight, on February 27, 2008. A copy of the concurrence provided by Mr. El-Natur is attached.

Concurrence from Maintenance is not required as this change does not use maintenance funds or affect maintenance facilities or operations.

No time adjustment is warranted for this change as it does not affect the controlling operation.

RECEIVED
067912 MAR 17 08

ADA Notice: For individuals with sensory disabilities, this document is available in alternate formats. For information call: (916) 654-6410 or TDD (916) 654-3880 or write Records and Forms Management, 1120 N Street, MS-89, Sacramento, CA 95814.

CONTRACT CHANGE ORDER MEMORANDUM

EA: 012024 CCO: 232 - 0 DATE: 2/27/2008

CONCURRED BY:			
Construction Engineer:	Douglas Coe DBC	Date	2-28-08
Bridge Engineer:	Douglas Coe DBC	Date	2-28-08
Project Engineer:		Date	
Project Manager:		Date	
FHWA Rep.:		Date	
Environmental:		Date	
Other (specify):	Hasan El-Natur, Design	Date	2/27/08
Other (specify):		Date	
District Prior Approval By:	Douglas Coe	Date	2/27/08
HQ (Issue Approve) By:		Date	
Resident Engineer's Signature:		Date	2-28-08

ESTIMATE OF COST

	THIS REQUEST	TOTAL TO DATE
ITEMS	$0.00	$0.00
FORCE ACCOUNT	$0.00	$0.00
AGREED PRICE	$176,106.00	$176,106.00
ADJUSTMENT	$0.00	$0.00
TOTAL	$176,106.00	$176,106.00

FEDERAL PARTICIPATION

☑ PARTICIPATING ☐ PARTICIPATING IN PART ☐ NONE
☐ NON-PARTICIPATING (MAINTENANCE) ☐ NON-PARTICIPATING

FEDERAL SEGREGATION (if more than one Funding Source or P.I.P. type)
☑ CCO FUNDED PER CONTRACT ☐ CCO FUNDED AS FOLLOWS

FEDERAL FUNDING SOURCE	PERCENT

ADA Notice: For individuals with sensory disabilities, this document is available in alternate formats. For information call: (916) 654-6410 or TDD (916) 654-3880 or write Records and Forms Management, 1120 N Street, MS-89, Sacramento, CA 95814.

STATE OF CALIFORNIA - DEPARTMENT OF TRANSPORTATION

CONTRACT CHANGE ORDER

Change Requested by: Engineer

CCO: 233 Suppl. No. 0 Contract No. 04 - 012024 Road 04-SF,Ala-80-13.9/14.3,0.0/1.6 FED. AID LOC.: ACIM-080-1(085)8N

To: KIEWIT / FCI / MANSON a JV

You are directed to make the following changes from the plans and specifications or do the following described work not included in the plans and specifications for this contract. ***NOTE: This change order is not effective until approved by the Engineer.***

Description of work to be done, estimate of quantities and prices to be paid. (Segregate between additional work at contract price, agreed price and force account.) Unless otherwise stated, rates for rental of equipment cover only such time as equipment is actually used and no allowance will be made for idle time. This last percentage shown is the net accumulated increase or decrease from the original

Adjustment of Compensation at Lump Sum:

Compensate the electrical sub-contractor Edward W. Scott Electric, Inc. (ESE) for additional field supervision and labor inefficiencies to complete the contract electrical work of the SFOBB East Span Skyway, Bridge Nos. 34-0006L/R.

For the impacts to the contract electrical work, the Contractor agrees to accept an agreed lump sum amount of $178,888.00. This agreed lump sum constitutes full compensation for all costs, including markups, all direct and indirect costs, all associated project impacts, and all overhead costs.

Adjustment of Compensation at Agreed Lump Sum $178,888.00

Estimated Cost: Increase ☑ Decrease ☐ $178,888.00

By reason of this order the time of completion will be adjusted as follows: 0 days

Submitted by

Signature	Resident Engineer	Date
	DOUG COE, Supervising Br. Eng	2-27-08

Approval Recommended by

Signature	Construction Engineer	Date
	DOUG COE	2-27-08

Engineer Approval by

Signature	Construction Manager	Date
	MIKE FORNER	4-1-08

We the undersigned contractor, have given careful consideration to the change proposed and agree, if this proposal is approved, that we will provide all equipment, furnish the materials, except as may otherwise be noted above, and perform all services necessary for the work above specified, and will accept as full payment therefor the prices shown above.

NOTE: If you, the contractor, do not sign acceptance of this order, your attention is directed to the requirements of the specifications as to proceeding with the ordered work and filing a written protest within the time therein specified.

Contractor Acceptance by

Signature	(Print name and title)	Date
	Lee Zink Project Director	3/5/08

STATE OF CALIFORNIA - DEPARTMENT OF TRANSPORTATION

CONTRACT CHANGE ORDER MEMORANDUM

TO: MICHAEL FORNER / DOUG COE, Supervising Br. Eng.

FROM: DOUG COE, Supervising Br. Eng.

FILE: E.A. 04 - 012024
CO-RTE-PM 04-SF,Ala-80-13.9/14.3,0.0/1.6
FED. NO. ACIM-080-1(085)8N

CCO# **233** SUPPLEMENT#: **0** Category Cod **AXZZ**

CONTINGENCY BALANCE (incl. this change **$1,809,349.96**

COST: **$178,888.00** INCREASE ☑ DECREASE

HEADQUARTERS APPROVAL REQUIRED? ☐ YES ☑ NO

SUPPLEMENTAL FUNDS PROVIDED: **$0.00**

IS THIS REQUEST IN ACCORDANCE WITH ENVIRONMENTAL DOCUMENTS? ☑ YES ☐ NO

CCO DESCRIPTION:
Ed Scott Electrical Impacts

PROJECT DESCRIPTION:
REPLACE SFOBB EAST SPAN

Original Contract Time:	Time Adj. This Change	Previously Approved CCO Time Adjustments:	Percentage Time Adjusted: (including this change)	Total # of Unreconciled Deferred Time CCO(s): (including this change)
1000 Day(s)	**0** Day(s)	**424** Day(s)	**42** %	**8**

THIS CHANGE ORDER PROVIDES FOR:
compensating the electrical sub-contractor Edward W. Scott Electric, Inc. (ESE) for additional field supervision and labor inefficiencies to complete the contract electrical work, of the SFOBB East Span Skyway, Bridge Nos. 34-0006L/R.

Design changes and conflicts during the service platform installation delayed the completion thereby affecting the time allotted for the remaining electrical work. Design conflicts with the electrical equipment and connections on the service platforms further compressed the electrical work into a smaller time frame. To complete the electrical work within the contract constrains, ESE was forced to assign additional labor and supervision forces to the project and work overtime.

The Contract Change Order will compensate ESE for additional supervision, the learning curve for the additional labor forces unfamiliar with the work, and inefficiencies related to overtime work.

For the impacts to the contract electrical work, the Contractor will be paid an agreed lump sum amount of $178,888.00. This agreed lump sum constitutes full compensation, including all markups. The method of payment will be Adjustment of Compensation At Agreed Lump Sum.

This contract change order will result in a cost increase of $178,888.00 to the project, which can be financed from the contingency funds. A complete Force Account cost analysis is on file with the project records.

Prior approval was obtained from Mr. Doug Coe, Supervising Bridge Engineer, on February 13, 2008. A copy of the prior approval is attached.

FHWA Prior approval is not required, as this is a minor change order.

Concurrence from Design is not required because this change does not affect any design issues.

Concurrence from Maintenance is not required as this change does not use maintenance funds or affect maintenance facilities or operations.

No time adjustment is warranted for this change as it does not affect the controlling operation.

RECEIVED
068339 APR 11 08

ADA Notice: For individuals with sensory disabilities, this document is available in alternate formats. For information call: (916) 654-6410 or TDD (916) 654-3880 or write Records and Forms Management, 1120 N Street, MS-89, Sacramento, CA 95814.

CONCURRED BY:

Construction Engineer:	Douglas Coe		Date 2-27-08
Bridge Engineer:	Douglas Coe		Date 2-27-08
Project Engineer:			Date
Project Manager:			Date
FHWA Rep.:			Date
Environmental:			Date
Other (specify):			Date
Other (specify):			Date
District Prior Approval By:	Douglas Coe		Date 2/25/08
HQ (Issue Approve) By:			Date
Resident Engineer's Signature:			Date

2-27-08

ESTIMATE OF COST

	THIS REQUEST	TOTAL TO DATE
ITEMS	$0.00	$0.00
FORCE ACCOUNT	$0.00	$0.00
AGREED PRICE	$0.00	$0.00
ADJUSTMENT	$178,888.00	$178,888.00
TOTAL	$178,888.00	$178,888.00

FEDERAL PARTICIPATION

☑ PARTICIPATING ☐ PARTICIPATING IN PART ☐ NONE
☐ NON-PARTICIPATING (MAINTENANCE) ☐ NON-PARTICIPATING

FEDERAL SEGREGATION (if more than one Funding Source or P.I.P. type)

☑ CCO FUNDED PER CONTRACT ☐ CCO FUNDED AS FOLLOWS

FEDERAL FUNDING SOURCE PERCENT

ADA Notice: For individuals with sensory disabilities, this document is available in alternate formats. For information call: (916) 654-6410 or TDD (916) 654-3880 or write Records and Forms Management, 1120 N Street, MS-89, Sacramento, CA 95814

STATE OF CALIFORNIA - DEPARTMENT OF TRANSPORTATION

CONTRACT CHANGE ORDER

Change Requested by: Engineer

CCO: 234	Suppl. No. 0	Contract No. 04 - 012024	Road 04-SF,Ala-80-13.9/14.3,0.0/1.6	FED. AID LOC.: ACIM-080-1(085)8N

To: **KIEWIT / FCI / MANSON a JV**

You are directed to make the following changes from the plans and specifications or do the following described work not included in the plans and specifications for this contract. ***NOTE: This change order is not effective until approved by the Engineer.***

Description of work to be done, estimate of quantities and prices to be paid. (Segregate between additional work at contract price, agreed price and force account.) Unless otherwise stated, rates for rental of equipment cover only such time as equipment is actually used and no allowance will be made for idle time. This last percentage shown is the net accumulated increase or decrease from the original

Extra Work at Lump Sum:

As authorized by the Engineer, install stainless steel shim plates of various thickness between the bike path railing post and the connection plate on the bike path panel to smooth out the railing profile, of the SFOBB East Span Skyway, Bridge No. 34-0006R.

For this Extra Work, the Contractor agrees to accept an agreed lump sum amount of $196,210.00. This agreed lump sum constitutes full compensation for all costs, including markups, all direct and indirect costs, and all overhead costs.

Extra Work at Agreed Lump Sum $196,210.00

Estimated Cost: Increase ☑ Decrease ☐ $196,210.00

By reason of this order the time of completion will be adjusted as follows: 0 days

Submitted by		
Signature	Resident Engineer DOUG COE, Supervising Br. Eng.	Date 2-27-08
Approval Recommended by		
Signature	Construction Engineer DOUG COE	Date 2-27-08
Engineer Approval by		
Signature	Construction Manager MIKE FORNER	Date 3/7/08

We the undersigned contractor, have given careful consideration to the change proposed and agree, if this proposal is approved, that we will provide all equipment, furnish the materials, except as may otherwise be noted above, and perform all services necessary for the work above specified, and will accept as full payment therefor the prices shown above.

NOTE: If you, the contractor, do not sign acceptance of this order, your attention is directed to the requirements of the specifications as to proceeding with the ordered work and filing a written protest within the time therein specified.

Contractor Acceptance by		
Signature	(Print name and title) Lee Zink Project Director	Date 3/5/08

STATE OF CALIFORNIA - DEPARTMENT OF TRANSPORTATION

CONTRACT CHANGE ORDER MEMORANDUM

TO: MICHAEL FORNER / DOUG COE, Supervising Br. Eng.	FILE: E.A. 04 - 012024
FROM: DOUG COE, Supervising Br. Eng.	CO-RTE-PM 04-SF,Ala-80-13.9/14.3,0.0/1.6
	FED. NO. ACIM-080-1(085)8N
CCO# **234** SUPPLEMENT#: **0** Category Cod **AXZZ**	CONTINGENCY BALANCE (incl. this change **$1,976,148.95**
COST: **$196,210.00** INCREASE ☑ DECREASE ☐	HEADQUARTERS APPROVAL REQUIRED? ☐ YES ☑ NO
SUPPLEMENTAL FUNDS PROVIDED: **$0.00**	IS THIS REQUEST IN ACCORDANCE WITH ENVIRONMENTAL DOCUMENTS? ☑ YES ☐ NO
CCO DESCRIPTION: Bike Path Handrail Shimming	**PROJECT DESCRIPTION:** REPLACE SFOBB EAST SPAN

Original Contract Time:	Time Adj. This Change:	Previously Approved CCO Time Adjustments:	Percentage Time Adjusted: (including this change)	Total # of Unreconciled Deferred Time CCO(s): (including this change)
1000 Day(s)	**0** Day(s)	**424** Day(s)	**42** %	**8**

THIS CHANGE ORDER PROVIDES FOR:

installing stainless steel shim plates of various thickness between the bike path railing post and the connection plate on the bike path panel to smooth out the railing profile, of the SFOBB East Span Skyway, Bridge No. 34-0006R.

The attachment method of the steel cantilever beams to the concrete segmental bridge and the bike path panels to the cantilever beams did not include adjustments to compensate for the tolerances allowed in segmental bridge construction. This resulted in an uneven profile of the bike path panels.

The Engineer, developed a "best fit" profile from the Contractor supplied survey data allowing fills up to 40 mm while maintaining the maximum allowable gap between the bottom rail and panel surface and the minimum bolt thread engagement shown on the Contract Plans.

The amount of adjustment required to provide for a smooth and uniform appearance of the bike path railing was far more than what could have been anticipated at bid time.

For the additional shimming work, the Contractor will be paid an agreed lump sum amount of $196,210.00. This agreed lump sum constitutes full compensation, including all markups. The method of payment for this work is Extra Work at Agreed Lump Sum. This contract change order will result in a cost increase of $196,210.00 to the project, which can be financed from the contingency funds. A complete Force Account cost analysis is on file with the project records.

Prior approval was obtained from Mr. Doug Coe, Supervising Bridge Engineer, on February 13, 2008. A copy of the prior approval is attached.

FHWA Prior approval is not required, as this is a minor change order.

Concurrence from Design is not required because this change does not affect any design issues.

Concurrence from Maintenance is not required as this change does not use maintenance funds or affect maintenance facilities or operations.

No time adjustment is warranted for this change as it does not affect the controlling operation.

ADA Notice: For individuals with sensory disabilities, this document is available in alternate formats. For information call: (916) 654-6410 or TDD (916) 654-3880 or write Records and Forms Management, 1120 N Street, MS-89, Sacramento, CA 95814.

CONCURRED BY:			
Construction Engineer:	Douglas Coe DBC	Date	2-27-08
Bridge Engineer:	Douglas Coe DBC	Date	2-27-08
Project Engineer:		Date	
Project Manager:		Date	
FHWA Rep.:		Date	
Environmental:		Date	
Other (specify):		Date	
Other (specify):		Date	
District Prior Approval By:	Douglas Coe	Date	2/22/08
HQ (Issue Approve) By:		Date	
Resident Engineer's Signature:		Date	2-27-08

ESTIMATE OF COST

	THIS REQUEST	TOTAL TO DATE
ITEMS	$0.00	$0.00
FORCE ACCOUNT	$0.00	$0.00
AGREED PRICE	$196,210.00	$196,210.00
ADJUSTMENT	$0.00	$0.00
TOTAL	$196,210.00	$196,210.00

FEDERAL PARTICIPATION

☑ PARTICIPATING ☐ PARTICIPATING IN PART ☐ NONE
☐ NON-PARTICIPATING (MAINTENANCE) ☐ NON-PARTICIPATING

FEDERAL SEGREGATION (if more than one Funding Source or P.I.P. type)
☑ CCO FUNDED PER CONTRACT ☐ CCO FUNDED AS FOLLOWS

FEDERAL FUNDING SOURCE	PERCENT

ADA Notice: For individuals with sensory disabilities, this document is available in alternate formats. For information call: (916) 654-6410 or TDD (916) 654-3880 or write Records and Forms Management, 1120 N Street, MS-89, Sacramento, CA 95814.

STATE OF CALIFORNIA - DEPARTMENT OF TRANSPORTATION

CONTRACT CHANGE ORDER

Change Requested by: Engineer

CCO: 235	Suppl. No. 0	Contract No. 04 - 012024	Road 04-SF,Ala-80-13.9/14.3,0.0/1.6	FED. AID LOC.: ACIM-080-1(085)8N

To: **KIEWIT / FCI / MANSON a JV**

You are directed to make the following changes from the plans and specifications or do the following described work not included in the plans and specifications for this contract. ***NOTE: This change order is not effective until approved by the Engineer.***

Description of work to be done, estimate of quantities and prices to be paid. (Segregate between additional work at contract price, agreed price and force account.) Unless otherwise stated, rates for rental of equipment cover only such time as equipment is actually used and no allowance will be made for idle time. This last percentage shown is the net accumulated increase or decrease from the original

Extra Work at Lump Sum:

As authorized by the Engineer, fabricate the 1-Meter bike path railing grills main and frame bars out of 25 mm x 4 mm (1" x 3/16") material and the cross bars out of 19 mm x 3 mm (3/4" x 1/8") material; space the main bars at 60 mm (2 3/8") on center and the cross bars at 102 mm (4") on center; and install the grills in the field instead of the fabrication shop of the SFOBB East Span Skyway, Bridge No. 34-0006R.

For this Extra Work, the Contractor agrees to accept an agreed lump sum amount of $168,687.00. This agreed lump sum constitutes full compensation for all costs, including markups, all direct and indirect costs, and all overhead costs.

Estimated cost of Extra Work at Lump Sum $168,687.00

Estimated Cost: Increase ☑ Decrease ☐ **$168,687.00**

By reason of this order the time of completion will be adjusted as follows: Deferred

Submitted by:

Signature	Resident Engineer DOUG COE, Supervising Br. Eng.	Date 3-7-08

Approval Recommended by:

Signature	Construction Engineer DOUG COE	Date 3-7-08

Engineer Approval by:

Signature	Construction Manager MIKE FORNER	Date 3-19-08

We the undersigned contractor, have given careful consideration to the change proposed and agree, if this proposal is approved, that we will provide all equipment, furnish the materials, except as may otherwise be noted above, and perform all services necessary for the work above specified, and will accept as full payment therefor the prices shown above.

NOTE: If you, the contractor, do not sign acceptance of this order, your attention is directed to the requirements of the specifications as to proceeding with the ordered work and filing a written protest within the time therein specified.

Contractor Acceptance by:

Signature	(Print name and title) Lee Zink Project Director	Date 3/14/08

STATE OF CALIFORNIA - DEPARTMENT OF TRANSPORTATION

CONTRACT CHANGE ORDER MEMORANDUM

TO: MICHAEL FORNER / DOUG COE, Supervising Br. Eng.	FILE: E.A. 04 - 012024
	CO-RTE-PM 04-SF,Ala-80-13.9/14.3,0.0/1.6
FROM: DOUG COE, Supervising Br. Eng.	FED. NO. ACIM-080-1(085)8N
CCO# **235** SUPPLEMENT#: **0** Category Cod **AXZZ**	CONTINGENCY BALANCE (incl. this change **$1,112,461.97**
COST: **$168,687.00** INCREASE ☑ DECREASE ☐	HEADQUARTERS APPROVAL REQUIRED? ☐ YES ☑ NO
SUPPLEMENTAL FUNDS PROVIDED: **$0.00**	IS THIS REQUEST IN ACCORDANCE WITH ENVIRONMENTAL DOCUMENTS? ☑ YES ☐ NO
CCO DESCRIPTION: Bike Path Grillage Changes	**PROJECT DESCRIPTION:** REPLACE SFOBB EAST SPAN

Original Contract Time:	Time Adj. This Change:	Previously Approved CCO Time Adjustments:	Percentage Time Adjusted: (including this change)	Total # of Unreconciled Deferred Time CCO(s): (including this change)
1000 Day(s)	**DEF** Day(s)	**424** Day(s)	**42** %	**9**

THIS CHANGE ORDER PROVIDES FOR:

fabricating the 1-Meter bike path railing grills main and frame bars out of 25 mm x 4 mm (1" x 3/16") material and the cross bars out of 19 mm x 3 mm (3/4" x 1/8") material; spacing the main bars at 60 mm (2 3/8") on center and the cross bars at 102 mm (4") on center; and installing the grills in the field instead of the fabrication shop of the SFOBB East Span Skyway, Bridge No. 34-0006R.

The fabricator requested substitution of larger gage material after stating that the contract specified material would not stay flat during fabrication and galvanizing. Design concurred with the use of the larger gage material. The last minute material change delayed the procurement of the grills. To prevent delays to the installation of the bike path lighting the 1-Meter railing sections will need to be installed without the grills.

The bike path railing fabricator and installer anticipated to install the grills in the 1-meter sections during the fabrication process, using shop labor instead of the higher priced field labor. The Contract Change Order will compensate the Contractor for the additional handeling and installation costs.

For the field installation of the bike path railing grill sections, the Contractor will be paid an agreed lump sum amount of $168,687.00. This agreed lump sum constitutes full compensation, including all markups. The method of payment for this work is Extra Work at Agreed Lump Sum. This contract change order will result in a cost increase of $168,687.00 to the project, which can be financed from the contingency funds. A complete Force Account cost analysis is on file with the project records.

Prior approval was obtained from Mr. Doug Coe, Supervising Bridge Engineer, on February 29, 2008. A copy of the prior approval is attached.

FHWA Prior approval is not required, as this is a minor change order.

Design concurrence was provided by Mr. Steven Hulsebus, Office Chief, Toll Bridge Design, on March 5, 2008. A copy of the concurrence provided by Mr. Hulsebus is attached.

Concurrence from Maintenance is not required as this change does not use maintenance funds or affect maintenance facilities or operations.

Since it is not feasible at this time to determine the effect this change will have on the Contractor's operations, it is proposed to defer the determination of any contract time adjustment until completion of the work specified in this change order.

ADA Notice: For individuals with sensory disabilities, this document is available in alternate formats. For information call: (916) 654-6410 or TDD (916) 654-3880 or write Records and Forms Management, 1120 N Street, MS-89, Sacramento, CA 95814.

CONCURRED BY:			
Construction Engineer:	Douglas Coe	Date 3-7-08	
Bridge Engineer:	Douglas Coe	Date 3-7-08	
Project Engineer:		Date	
Project Manager:		Date	
FHWA Rep.:		Date	
Environmental:		Date	
Other (specify):	Steven Hulsebus, Design	Date	3/5/08
Other (specify):		Date	
District Prior Approval By:	Douglas Coe	Date	2/28/08
HQ (Issue Approve) By:		Date	
Resident Engineer's Signature:		Date 3-7-08	

ESTIMATE OF COST

	THIS REQUEST	TOTAL TO DATE
ITEMS	$0.00	$0.00
FORCE ACCOUNT	$0.00	$0.00
AGREED PRICE	$168,687.00	$168,687.00
ADJUSTMENT	$0.00	$0.00
TOTAL	$168,687.00	$168,687.00

FEDERAL PARTICIPATION

☑ PARTICIPATING ☐ PARTICIPATING IN PART ☐ NONE
☐ NON-PARTICIPATING (MAINTENANCE) ☐ NON-PARTICIPATING

FEDERAL SEGREGATION (if more than one Funding Source or P.I.P. type)
☑ CCO FUNDED PER CONTRACT ☐ CCO FUNDED AS FOLLOWS

FEDERAL FUNDING SOURCE	PERCENT

ADA Notice: For individuals with sensory disabilities, this document is available in alternate formats. For information call: (916) 654-6410 or TDD (916) 654-3880 or write Records and Forms Management, 1120 N Street, MS-89, Sacramento, CA 95814.

STATE OF CALIFORNIA - DEPARTMENT OF TRANSPORTATION

CONTRACT CHANGE ORDER

Change Requested by: Engineer

CCO: 235	Suppl. No. 1	Contract No. 04 - 012024	Road 04-SF,Ala-80-13.9/14.3,0.0/1.6	FED. AID LOC.: ACIM-080-1(085)8N

To: KIEWIT / FCI / MANSON a JV

You are directed to make the following changes from the plans and specifications or do the following described work not included in the plans and specifications for this contract. ***NOTE: This change order is not effective until approved by the Engineer.***

Description of work to be done, estimate of quantities and prices to be paid. (Segregate between additional work at contract price, agreed price and force account.) Unless otherwise stated, rates for rental of equipment cover only such time as equipment is actually used and no allowance will be made for idle time. This last percentage shown is the net accumulated increase or decrease from the original

In accordance with Section 8-1.07, "Liquidated Damages," of the Standard Specifications; and Sections 10-1.11, "Overhead" and 10-1.10, "Progress Schedule (Critical Path)" of the Special Provisions, a contract time extension of 68 working days is hereby granted for Time Impact Analysis (TIA) 24.

This contract time extension closes out the deferred time portion of Contract Change Order Nos. 206 "Bird Screening at Hinges", 207 "Grating Penetration at Bike Path", 208 "Purchase Barrier Safety Rail", 209 "Cable Tray Splicing", 217 "Temporary Navigation Lights", 222 "Modify Hinge Access Doors", 224 "Bike Path Grating at Expansion Joints", 231 "Traveler Rail Alignment at Hinges", and 235 "Bike Path Grillage Changes", and resolves the remaining unilaterally processed Contract Change Order Nos. 182 "Indemnification Clause Revision in SSP", 197 "Service Platform Conduit", 198 "Eliminate Call Boxes", 207 Supplement 1 "Grating Penetration Resolution of Deferred Time", and 209 Supplement 1 "Cable Tray Splicing Resolution of DeferredTime", of the SFOBB East Span Skyway, Bridge Nos. 34-0006L/R.

Adjustment of Compensation at Lump Sum:

Due to the concurrent delays shown in Time Impact Analysis (TIA) No. 24, the Department and the Contractor mutually agree that the Department will be relieved of any delay damages and that the Contractor will be relieved of any liquidated damages for the 68 day contract time extension in accordance with Section 10-1.10, and Section 10-1.11 of the Special Provisions and Section 8-1.07 of the Standard Specifications.

This change order constitutes a Zero cost adjustment for both the Contractor and the State.

Estimated Cost: Increase ☐ Decrease ☐ $0.00

By reason of this order the time of completion will be adjusted as follows: 68 days

Submitted by

Signature	Resident Engineer	Date
Kam Bed	for DOUG COE, Supervising Br. Eng.	4-9-08

Approval Recommended by

Signature	Construction Engineer	Date
Amer Baka	for DOUG COE	4-9-08

Engineer Approval by

Signature	Construction Manager	Date
Gary Pursell	~~MIKE FORNER~~ GARY PURSELL	4/25/08

We the undersigned contractor, have given careful consideration to the change proposed and agree, if this proposal is approved, that we will provide all equipment, furnish the materials, except as may otherwise be noted above, and perform all services necessary for the work above specified, and will accept as full payment therefor the prices shown above.

NOTE: If you, the contractor, do not sign acceptance of this order, your attention is directed to the requirements of the specifications as to proceeding with the ordered work and filing a written protest within the time therein specified.

Contractor Acceptance by

Signature	(Print name and title)	Date
	Lee Zink Proj. Director	4/23/08

STATE OF CALIFORNIA - DEPARTMENT OF TRANSPORTATION

CONTRACT CHANGE ORDER MEMORANDUM

TO: MICHAEL FORNER / DOUG COE, Supervising Br. Eng.	FILE: E.A. 04 - 012024
	CO-RTE-PM 04-SF,Ala-80-13.9/14.3,0.0/1.6
FROM: DOUG COE, Supervising Br. Eng.	FED. NO. ACIM-080-1(085)8N
CCO# **235** SUPPLEMENT#: **1** Category Cod **AFZZ**	CONTINGENCY BALANCE (incl. this change **$1,133,078.97**
COST: **$0.00** INCREASE ☐ DECREASE ☐	HEADQUARTERS APPROVAL REQUIRED? ☑ YES ☐ NO
SUPPLEMENTAL FUNDS PROVIDED: **$0.00**	IS THIS REQUEST IN ACCORDANCE WITH ENVIRONMENTAL DOCUMENTS? ☑ YES ☐ NO
CCO DESCRIPTION: Closeout Deffered Time CCO's	**PROJECT DESCRIPTION:** REPLACE SFOBB EAST SPAN

Original Contract Time:	Time Adj. This Change:	Previously Approved CCO Time Adjustments:	Percentage Time Adjusted: (including this change)	Total # of Unreconciled Deferred Time CCO(s): (including this change)
1000 Day(s)	**68** Day(s)	**424** Day(s)	**49** %	**0**

THIS CHANGE ORDER PROVIDES FOR:
a contract time extension of 68 working days in accordance with Section 8-1.07, "Liquidated Damages," of the Standard Specifications; and Sections 10-1.11, "Overhead" and 10-1.10, "Progress Schedule (Critical Path)" of the Special Provisions for Time Impact Analysis (TIA) 24 thereby, closing out the deferred time portion of Contract Change Order Nos. 206 "Bird Screening at Hinges", 207 "Grating Penetration at Bike Path", 208 "Purchase Barrier Safety Rail", 209 "Cable Tray Splicing", 217 "Temporary Navigation Lights", 222 "Modify Hinge Access Doors", 224 "Bike Path Grating at Expansion Joints", 231 "Traveler Rail Alignment at Hinges", and 235 "Bike Path Grillage Changes", and resolving the remaining unilaterally processed Contract Change Order Nos. 182 "Indemnification Clause Revision in SSP", 197 "Service Platform Conduit", 198 "Eliminate Call Boxes", 207 Supplement 1 "Grating Penetration Resolution of Deferred Time", and 209 Supplement 1 "Cable Tray Splicing Resolution of DeferredTime", of the SFOBB East Span Skyway, Bridge Nos. 34-0006L/R.

The Contractor refused to accept late lump sum contract change orders without the contract time of completion deferred since the impact to the contract work and contract completion date could not be determined at date of issue. The Department issued nine (9) change orders with the time of completion deferred. Additionally, continued design interferences were disrupting the ongoing contract work and impacting the contract completion date.

The Contractor submitted Time Impact Analysis (TIA) No. 24 on March 27, 2008, indicating that the the contract completion date was delayed by 68 days. The last minute changes to the bike path grillage (CCO 235) impacted the procurement and installation of the grills. The installation of bird screening at the hinges (CCO 206) and the modifications to the hinge access doors (CCO 222) stressed the already limited resources in the performance of contract work. Interference of the bikepath grating at the expansion joints (CCO 224) required a redesign of the grating at the hinge locations, procurement of the materials, fabrication and installation impacted the completion date. Required modifications to the outer traveler support rail attachment at hinge B and C (CCO 231) further impacted the completion date. Conflicts in the contract plans between the sign structure base plate and the conduit size and locations impacted the erection of the sign structures (CCO 195).

Even though the contract completion date was impacted by late change orders and design conflicts, the completion date was also impacted by the Contractor's inabillity to complete the contract work by the scheduled completion date. The bike path grillage and overhead sign structures were delayed due to longer than anticipated fabrication and installation durations.

The Engineer and the Contractor agree that the delays shown on TIA No. 24 are concurrent delays. The delay did not affect subsequent SFOBB East Span Replacement contracts and by granting the 68 day contract extension the Contractor will be relieved of liquidated damages and the Department will be relieved of delay damages resulting in Zero cost or credit for this Contract Change Order.

Prior approval was obtained from Mr. Mike Forner, Principal Construction Engineer, on April 1, 2008. A copy of the prior approval is attached.

Prior Approval was obtained from Ms. Nancy Bobb, FHWA Bay Bridge Project Manager, via electronic message on April 9, 2008. A printed copy of the prior approval provided by Ms. Bobb is attached.

Concurrence was obtained from Mr. Alec Melkonians for Mr. Ken Terpstra, SFOBB Project Manager, via electronic message on April 8, 2008. A printed copy of the concurrence provided by Mr. Melkonians is attached.

Concurrence from Design is not required

ADA Notice: For individuals with sensory disabilities, this document is available in alternate formats. For information call: (916) 654-6410 or TDD (916) 654-3880 or write Records and Forms Management, 1120 N Street, MS-89, Sacramento, CA 95814.

Concurrence from Maintenance is not required as this change does not use maintenance funds or affect maintenance facilities or operations.

CONCURRED BY:			
Construction Engineer:	Douglas Coe	Date 4-9-08	
Bridge Engineer:	for Douglas Coe	Date 4-9-08	
Project Engineer:		Date	
Project Manager:	Ken Terpstra	Date	4/8/08
FHWA Rep.:	Nancy Bobb	Date	4/9/08
Environmental:		Date	
Other (specify):		Date	
Other (specify):		Date	
District Prior Approval By:	Mike Forner	Date	4/1/08
HQ (Issue Approve) By:	Ken Darby	Date	
Resident Engineer's Signature:		Date 4-9-08	

ESTIMATE OF COST

	THIS REQUEST	TOTAL TO DATE
ITEMS	$0.00	$0.00
FORCE ACCOUNT	$0.00	$0.00
AGREED PRICE	$0.00	$168,687.00
ADJUSTMENT	$0.00	$0.00
TOTAL	$0.00	$168,687.00

FEDERAL PARTICIPATION

☑ PARTICIPATING ☐ PARTICIPATING IN PART ☐ NONE
☐ NON-PARTICIPATING (MAINTENANCE) ☐ NON-PARTICIPATING

FEDERAL SEGREGATION (if more than one Funding Source or P.I.P. type)
☑ CCO FUNDED PER CONTRACT ☐ CCO FUNDED AS FOLLOWS

FEDERAL FUNDING SOURCE	PERCENT

ADA Notice: For individuals with sensory disabilities, this document is available in alternate formats. For information call: (916) 654-6410 or TDD (916) 654-3880 or write Records and Forms Management, 1120 N Street, MS-89, Sacramento, CA 95814.

CONTRACT CHANGE ORDER

Change Requested by: Engineer

CCO: 236	Suppl. No. 0	Contract No. 04 - 012024	Road 04-SF,Ala-80-13.9/14.3,0.0/1.6	FED. AID LOC.: ACIM-080-1(085)8N

To: **KIEWIT / FCI / MANSON a JV**

You are directed to make the following changes from the plans and specifications or do the following described work not included in the plans and specifications for this contract. ***NOTE: This change order is not effective until approved by the Engineer.***

Description of work to be done, estimate of quantities and prices to be paid. (Segregate between additional work at contract price, agreed price and force account.) Unless otherwise stated, rates for rental of equipment cover only such time as equipment is actually used and no allowance will be made for idle time. This last percentage shown is the net accumulated increase or decrease from the original

As authorized by the Engineer, delete the fabrication and installation of the walkway grating, fold down safety railing, light fixture mounting channel, and safety chain, for the three (3) Overhead Sign Structures of the SFOBB East Span Skyway, Bridge Nos. 34-0006L/R.

Estimate of Decrease in Contract Item at Contract Price:

Item No. 78: FURNISH SIGN STRUCTURE (TRUSS)
-1131 KG (-3.90%) @ $3.00 /KG = -$3,393.00 (-3.90%)

Item No. 79: INSTALL SIGN STRUCTURE (TRUSS)
-1131 KG (-3.90%) @ $1.00 /KG = -$1,131.00 (-3.90%)

Estimated total cost for Decrease in Contract Item.....($4,524.00)

The quantity decrease shown here for Contact Item No. 78, "FURNISH SIGN STRUCTURE (TRUSS)," and Contact Item No. 79, "INSTALL SIGN STRUCTURE (TRUSS)," when combined with quantities shown in the engineer's estimate, and as modified by any previous change orders, will be the final quantities for which payment will be made for this contract item

Adjustment of Compensation at Lump Sum:

Credit the State for the additional labor and material cost to custom fabricate and field install the walkway grating, fold dowr railing, llight fixture mounting channel, and safety chain for the Overhead Sign Structures.

For the additional costs and in addition to the decrease in contract item at contract price credit, the Contractor agrees to credit the State an agreed lump sum amount of $20,000.00. This agreed lump sum credit in conjuction with the decrease in contract item at contract price constitutes full credit for all costs, including markups, all direct and indirect costs all associated project impacts, and all overhead costs.

Adjustment of Compensation at Agreed Lump Sum .....($16,351.89)<Credit>

CONTRACT CHANGE ORDER

Change Requested by: Engineer

CCO: 236	Suppl. No. 0	Contract No. 04 - 012024	Road 04-SF,Ala-80-13.9/14.3,0.0/1.6	FED. AID LOC.: ACIM-080-1(085)8N

Estimated Cost: Increase ☐ Decrease ☑ ($20,875.89)

By reason of this order the time of completion will be adjusted as follows: 0 days

Submitted by

Signature	Resident Engineer	Date
Karen Baker	for DOUG COE, Supervising Br. Eng.	3-20-08

Approval Recommended by

Signature	Construction Engineer	Date
Karen Baker	for DOUG COE	3-20-08

Engineer Approval by

Signature	Construction Manager	Date
Michael Forner	MIKE FORNER	4-10-08

We the undersigned contractor, have given careful consideration to the change proposed and agree, if this proposal is approved, that we will provide all equipment, furnish the materials, except as may otherwise be noted above, and perform all services necessary for the work above specified, and will accept as full payment therefor the prices shown above.

NOTE: If you, the contractor, do not sign acceptance of this order, your attention is directed to the requirements of the specifications as to proceeding with the ordered work and filing a written protest within the time therein specified.

Contractor Acceptance by

Signature	(Print name and title)	Date
[signature]	Lee Zink Project Director	3/25/08

STATE OF CALIFORNIA - DEPARTMENT OF TRANSPORTATION

CONTRACT CHANGE ORDER MEMORANDUM

TO: MICHAEL FORNER / DOUG COE, Supervising Br. Eng.	FILE: E.A. 04 - 012024
FROM: DOUG COE, Supervising Br. Eng.	CO-RTE-PM 04-SF,Ala-80-13.9/14.3,0.0/1.6
	FED. NO. ACIM-080-1(085)8N
CCO# **236** SUPPLEMENT#: **0** Category Cod **AAZZ**	CONTINGENCY BALANCE (incl. this change **$1,129,813.97**
COST: **($20,875.89)** INCREASE ☐ DECREASE ☑	HEADQUARTERS APPROVAL REQUIRED? ☐ YES ☑ NO
SUPPLEMENTAL FUNDS PROVIDED: **$0.00**	IS THIS REQUEST IN ACCORDANCE WITH ENVIRONMENTAL DOCUMENTS? ☑ YES ☐ NO
CCO DESCRIPTION: Sign Structure Grating and Railing	**PROJECT DESCRIPTION:** REPLACE SFOBB EAST SPAN

Original Contract Time:	Time Adj. This Change:	Previously Approved CCO Time Adjustments:	Percentage Time Adjusted: (including this change)	Total # of Unreconciled Deferred Time CCO(s): (including this change)
1000 Day(s)	**0** Day(s)	**424** Day(s)	**42** %	**9**

THIS CHANGE ORDER PROVIDES FOR:

Deleting the furnishing and installing of the walkway grating, fold down safety railing, light fixture mounting channel, and safety chain, for the three (3) Overhead Sign Structures of the SFOBB East Span Skyway, Bridge Nos. 34-0006L/R.

The Contractor received the Overhead Sign Structures without the walkway grating, fold down safety railing, light fixture mounting channel. During assembly of the sign structure it was noted that the above items were missing. Further inquiry revealed that the fabricator did not fabricate the missed components. Fabrication and installation of the missed components will delay the contract completion date. Therefore, the missed components will be deleted from the sign structure scope in this contract and included in a future SFOBB East Span Replacement contract.

In accordance with Section 4-1.03B, "Increased or Decreased Quantities," of the Standard Specifications, the decrease in fabrication and installation will be measured and credited for by decreasing the quantities of Contact Item No. 78, "FURNISH SIGN STRUCTURE (TRUSS)," and Contact Item No. 79, "INSTALL SIGN STRUCTURE (TRUSS)".

Since the decrease in item quantity price does not fully cover the fabrication and field installation cost the State will be credited an additional lump sum amount.

For the additional costs, and in addition to the decrease in contract item at contract price compensation, the Contractor will credit the State an agreed lump sum amount of $16,351.89. This agreed lump sum constitutes full compensation, including all markups. The method of credit for this work is Adjustment of Compensation at Agreed Lump Sum. A complete Force Account cost analysis is on file with the project records.

This contract change order will result in a cost decrease of $20,875.89 ($4,524.00 + $16,351.89) to the project, which will be included in the contingency funds.

Prior approval was obtained from Mr. Kannu Balan for Mr. Doug Coe, Supervising Bridge Engineer, on March 18, 2008. A copy of the prior approval is attached.

FHWA Prior approval is not required, as this is a minor change order.

Concurrence from Design is not required because the design will not be changed.

Concurrence from Maintenance is not required as this change does not use maintenance funds or affect maintenance facilities or operations.

No time adjustment is warranted for this change as it does not affect the controlling operation.

ADA Notice: For individuals with sensory disabilities, this document is available in alternate formats. For information call: (916) 654-6410 or TDD (916) 654-3880 or write Records and Forms Management, 1120 N Street, MS-89, Sacramento, CA 95814.

CONCURRED BY:			
Construction Engineer:	Douglas Coe	Date 3/20/08	
Bridge Engineer:	Douglas Coe	Date 3/20/08	
Project Engineer:		Date	
Project Manager:		Date	
FHWA Rep.:		Date	
Environmental:		Date	
Other (specify):		Date	
Other (specify):		Date	
District Prior Approval By:	Kannu Balan for Douglas Coe	Date 3/18/08	
HQ (Issue Approve) By:		Date	
Resident Engineer's Signature:		Date	
Kam Bal		3/20/08	

ESTIMATE OF COST

	THIS REQUEST	TOTAL TO DATE
ITEMS	($4,524.00)	($4,524.00)
FORCE ACCOUNT	$0.00	$0.00
AGREED PRICE	$0.00	$0.00
ADJUSTMENT	($16,351.89)	($16,351.89)
TOTAL	($20,875.89)	($20,875.89)

FEDERAL PARTICIPATION

☑ PARTICIPATING ☐ PARTICIPATING IN PART ☐ NONE
☐ NON-PARTICIPATING (MAINTENANCE) ☐ NON-PARTICIPATING

FEDERAL SEGREGATION (If more than one Funding Source or P.I.P. type)
☑ CCO FUNDED PER CONTRACT ☐ CCO FUNDED AS FOLLOWS

FEDERAL FUNDING SOURCE	PERCENT

ADA Notice: For individuals with sensory disabilities, this document is available in alternate formats. For information call: (916) 654-6410 or TDD (916) 654-3880 or write Records and Forms Management, 1120 N Street, MS-89, Sacramento, CA 95814.

STATE OF CALIFORNIA - DEPARTMENT OF TRANSPORTATION

CONTRACT CHANGE ORDER

Change Requested by: Engineer

CCO: 237	Suppl. No. 0	Contract No. 04 - 012024	Road 04-SF,Ala-80-13.9/14.3,0.0/1.6	FED. AID LOC.: ACIM-080-1(085)8N

To: **KIEWIT / FCI / MANSON a JV**

You are directed to make the following changes from the plans and specifications or do the following described work not included in the plans and specifications for this contract. ***NOTE: This change order is not effective until approved by the Engineer.***

Description of work to be done, estimate of quantities and prices to be paid. (Segregate between additional work at contract price, agreed price and force account.) Unless otherwise stated, rates for rental of equipment cover only such time as equipment is actually used and no allowance will be made for idle time. This last percentage shown is the net accumulated increase or decrease from the original

Revise the Special Provisions for the SFOBB East Span Skyway Bridge Replacement Project, Bridge Nos. 340006L/R as follows:

1) Revise the second sentence of Sub-section "General requirements" of Section 10-1.50 "Traveler Scaffold Mechanical", Sub-section "Testing and Adjusting System" from "The Contractor shall follow the equipment manufacturer's break-in procedure before full load testing for all equipment." to "The Contractor shall follow the equipment manufacturer's break-in procedure for all equipment."

2) Delete the Sub-section "Project completion tests" of Section 10-1.50 "Traveler Scaffold Mechanical", Sub-section "Testing and Adjusting System".

Adjustment of Compensation at Lump Sum:

For the revisions to the "Testing and Adjusting System" procedure of the Bike Path Traveler, the Contractor agrees to compensate the State an agreed lump sum amount of $6,265.00. This agreed lump sum constitutes full compensation for all costs, including markups, all direct and indirect costs, all associated project impacts, and all overhead costs.

Adjustment of Compensation at Agreed Lump Sum .....($6,265.00)<Credit>

Estimated Cost: Increase ☐ Decrease ☑ ($6,265.00)

By reason of this order the time of completion will be adjusted as follows: 0 days

Submitted by

Signature	Resident Engineer	Date
[signature]	DOUG COE, Supervising Br. Eng.	4-9-08

Approval Recommended by

Signature	Construction Engineer	Date
[signature] Amer Bata for	DOUG COE	4-9-08

Engineer Approval by

Signature	Construction Manager	Date
[signature]	~~MIKE FORNER~~ GARY PURSELL	4/25/08

We the undersigned contractor, have given careful consideration to the change proposed and agree, if this proposal is approved, that we will provide all equipment, furnish the materials, except as may otherwise be noted above, and perform all services necessary for the work above specified, and will accept as full payment therefor the prices shown above.

NOTE: If you, the contractor, do not sign acceptance of this order, your attention is directed to the requirements of the specifications as to proceeding with the ordered work and filing a written protest within the time therein specified.

Contractor Acceptance by

Signature	(Print name and title)	Date
[signature]	Lee Zink Proj. Director	4/23/08

STATE OF CALIFORNIA - DEPARTMENT OF TRANSPORTATION

CONTRACT CHANGE ORDER MEMORANDUM

TO: MICHAEL FORNER / DOUG COE, Supervising Br. Eng.	FILE: E.A. 04 - 012024
FROM: DOUG COE, Supervising Br. Eng.	CO-RTE-PM 04-SF,Ala-80-13.9/14.3,0.0/1.6
	FED. NO. ACIM-080-1(085)8N
CCO# **237** SUPPLEMENT#: **0** Category Cod **CHSA**	CONTINGENCY BALANCE (incl. this change **$1,133,078.97**
COST: **($6,265.00)** INCREASE ☐ DECREASE ☑	HEADQUARTERS APPROVAL REQUIRED? ☑ YES ☐ NO
SUPPLEMENTAL FUNDS PROVIDED: **$0.00**	IS THIS REQUEST IN ACCORDANCE WITH ENVIRONMENTAL DOCUMENTS? ☑ YES ☐ NO
CCO DESCRIPTION: Revise Traveler Testing Specifications	**PROJECT DESCRIPTION:** REPLACE SFOBB EAST SPAN

Original Contract Time:	Time Adj. This Change:	Previously Approved CCO Time Adjustments:	Percentage Time Adjusted: (including this change)	Total # of Unreconciled Deferred Time CCO(s): (including this change)
1000 Day(s)	**0** Day(s)	**424** Day(s)	**42** %	**9**

THIS CHANGE ORDER PROVIDES FOR:

Revising the Special Provisions for the SFOBB East Span Skyway Bridge Replacement Project, Bridge Nos. 340006L/R as follows:

1) Revise the second sentence of Sub-section "General requirements" of Section 10-1.50 "Traveler Scaffold Mechanical", Sub-section "Testing and Adjusting System" from "The Contractor shall follow the equipment manufacturer's break-in procedure before full load testing for all equipment." to "The Contractor shall follow the equipment manufacturer's break-in procedure for all equipment."

2) Delete the Sub-section "Project completion tests" of Section 10-1.50 "Traveler Scaffold Mechanical", Sub-section "Testing and Adjusting System".

A last minute request by the designer of record, Mr. Sajid Abbas of TYLIN/MOFFAT & NICHOL a JV, to add bolts to the outer traveler rail prior to full load testing prevented the Contractor from performing the March 21, 2008 scheduled "full load testing". Due to time constraints, the additional bolts cannot be installed under this contract.

During the performance of the "Project completion tests" procedure an interference between the outer rail traveler motor and the "Enlargement at Belvedere" was discovered. The "Enlargement at Belvedere" prevents the traveler to pass by the belvederes, effectively locking the position of the Bike Path Travelers between two belvederes. Due to time constraints, the required modifications to the belvederes to allow the traveler to pass by cannot be performed under this contract.

Therefore, the "full load testing" and the "Project completion tests" requirement cannot be completed. The testing requirements and the modifications to the belvederes will need to be included in a subsequent SFOBB East Span Replacement contract.

For deleting the "full load testing" and the "Project completion tests" requirement from the contract the Contractor will credit the State an agreed lump sum amount $6,265.00. This agreed lump sum constitutes full compensation, including all markups. The method of payment for this deletion of work is Adjustment of Compensation at Agreed Lump Sum. This contract change order will result in a cost decrease of $6,265.00 to the project. A complete Force Account cost analysis is on file with the project records.

Prior approval was obtained from Mr. Mike Forner, Principal Construction Engineer, on March 17, 2008. A copy of the prior approval is attached.

Prior Approval was obtained from Ms. Nancy Bobb, FHWA Bay Bridge Project Manager, via electronic message on March 26, 2008. A printed copy of the prior approval provided by Ms. Bobb is attached.

Concurrence was obtained from Mr. Alec Melkonians for Mr. Ken Terpstra, SFOBB Project Manager, via electronic message on April 8, 2008. A printed copy of the concurrence provided by Mr. Melkonians is attached.

Concurrence from Design was provided by Mr. Hasan El-Natur, via the attached e-mail dated March 20, 2008.

Concurrence from Maintenance is not required as this change does not use maintenance funds or affect maintenance facilities or operations.

ADA Notice: For individuals with sensory disabilities, this document is available in alternate formats. For information call: (916) 654-6410 or TDD (916) 654-3880 or write Records and Forms Management, 1120 N Street, MS-89, Sacramento, CA 95814.

No time adjustment is warranted for this change as it does not affect the controlling operation.

CONCURRED BY:			
Construction Engineer:	Douglas Coe	Date	4/9/08
Bridge Engineer:	For Douglas Coe	Date	4/9/08
Project Engineer:		Date	
Project Manager:	Ken Terpstra	Date	4/8/08
FHWA Rep.:	Nancy Bobb	Date	3/26/08
Environmental:		Date	
Other (specify):		Date	
Other (specify):		Date	
District Prior Approval By:	Mike Fomer	Date	3/17/08
HQ (Issue Approve) By:	Ken Darby	Date	
Resident Engineer's Signature:		Date	4-9-08

ESTIMATE OF COST

	THIS REQUEST	TOTAL TO DATE
ITEMS	$0.00	$0.00
FORCE ACCOUNT	$0.00	$0.00
AGREED PRICE	$0.00	$0.00
ADJUSTMENT	($6,265.00)	($6,265.00)
TOTAL	($6,265.00)	($6,265.00)

FEDERAL PARTICIPATION

☑ PARTICIPATING ☐ PARTICIPATING IN PART ☐ NONE
☐ NON-PARTICIPATING (MAINTENANCE) ☐ NON-PARTICIPATING

FEDERAL SEGREGATION (if more than one Funding Source or P.I.P. type)
☑ CCO FUNDED PER CONTRACT ☐ CCO FUNDED AS FOLLOWS

FEDERAL FUNDING SOURCE	PERCENT

ADA Notice: For individuals with sensory disabilities, this document is available in alternate formats. For information call: (916) 654-6410 or TDD (916) 654-3880 or write Records and Forms Management, 1120 N Street, MS-89, Sacramento, CA 95814.

STATE OF CALIFORNIA - DEPARTMENT OF TRANSPORTATION

CONTRACT CHANGE ORDER

Change Requested by: Engineer

CCO: 238	Suppl. No. 0	Contract No. 04 - 012024	Road 04-SF,Ala-80-13.9/14.3,0.0/1.6	FED. AID LOC.: ACIM-080-1(085)8N

To: **KIEWIT / FCI / MANSON a JV**

You are directed to make the following changes from the plans and specifications or do the following described work not included in the plans and specifications for this contract. ***NOTE: This change order is not effective until approved by the Engineer.***

Description of work to be done, estimate of quantities and prices to be paid. (Segregate between additional work at contract price, agreed price and force account.) Unless otherwise stated, rates for rental of equipment cover only such time as equipment is actually used and no allowance will be made for idle time. This last percentage shown is the net accumulated increase or decrease from the original

Adjustment of Compensation at Lump Sum:

Leave in place the Kiewit/FCI/Manson, a JV, modular office complex located on Pier 7 at 220 Burma Road, Oakland, California, credit the State an agreed lump sum amount of $80,000.00 for saving the cost to de-mobilize the office complex and credit the State an agreed lump sum amount of $1,005.00 for the salvage value of the 6", 10", and 12" bituminous coated mechanical piping, resulting in a total credit of $81,005.00 for this change order of the SFOBB East Span Skyway, Bridge Nos. 34-0006L/R.

This agreed credit lump sum constitutes full compensation for all costs, including markups, all direct and indirect costs, all associated project impacts, and all overhead costs.

Adjustment of Compensation at Agreed Lump Sum .....($81,005.00)<Credit>

Estimated Cost: Increase ☐ Decrease ☑ ($81,005.00)

By reason of this order the time of completion will be adjusted as follows: 0 days

Submitted by

Signature	Resident Engineer	Date
	For DOUG COE, Supervising Br. Eng.	4-11-08

Approval Recommended by

Signature	Construction Engineer	Date
	FOR DOUG COE	4-11-08

Engineer Approval by

Signature	Construction Manager	Date
	MIKE FORNER	4/25/08

We the undersigned contractor, have given careful consideration to the change proposed and agree, if this proposal is approved, that we will provide all equipment, furnish the materials, except as may otherwise be noted above, and perform all services necessary for the work above specified, and will accept as full payment therefor the prices shown above.

NOTE: If you, the contractor, do not sign acceptance of this order, your attention is directed to the requirements of the specifications as to proceeding with the ordered work and filing a written protest within the time therein specified.

Contractor Acceptance by

Signature	(Print name and title)	Date
	Lee Zink Project Director	4/23/08

STATE OF CALIFORNIA - DEPARTMENT OF TRANSPORTATION

CONTRACT CHANGE ORDER MEMORANDUM

TO: MICHAEL FORNER / DOUG COE, Supervising Br. Eng.	FILE: E.A. 04 - 012024
FROM: DOUG COE, Supervising Br. Eng.	CO-RTE-PM 04-SF,Ala-80-13.9/14.3,0.0/1.6
	FED. NO. ACIM-080-1(085)8N
CCO# 238 SUPPLEMENT#: 0 Category Cod AXZZ	CONTINGENCY BALANCE (incl. this change $1,144,083.97
COST: ($81,005.00) INCREASE ☐ DECREASE ☑	HEADQUARTERS APPROVAL REQUIRED? ☐ YES ☑ NO
SUPPLEMENTAL FUNDS PROVIDED: $0.00	IS THIS REQUEST IN ACCORDANCE WITH ENVIRONMENTAL DOCUMENTS? ☑ YES ☐ NO
CCO DESCRIPTION: Modular Office Credit	**PROJECT DESCRIPTION:** REPLACE SFOBB EAST SPAN

Original Contract Time:	Time Adj. This Change:	Previously Approved CCO Time Adjustments:	Percentage Time Adjusted: (including this change)	Total # of Unreconciled Deferred Time CCO(s): (including this change)
1000 Day(s)	0 Day(s)	424 Day(s)	42 %	0

THIS CHANGE ORDER PROVIDES FOR:
leaving in place the Kiewit/FCI/Manson, a JV, modular office complex located on Pier 7 at 220 Burma Road, Oakland, California, crediting the State an agreed lump sum amount of $80,000.00 for saving the cost to de-mobilize the office complex, and for crediting the State an agreed lump sum amount of $1,005.00 for the salvage value of the 6", 10", and 12" bituminous coated mechanical piping, resulting in a total credit of $81,005.00 for this change order of the SFOBB East Span Skyway, Bridge Nos. 34-0006L/R.

Due to ongoing SFOBB East Span Replacement project contracts and the condemning of the "Warehouse" offices due to seismic instability the Department is in need of additional field office space at Pier 7. The Skyway project Contractors field office, adjacent to the Department Skyway contract office, was recently vacated and slated for removal. To fill the void in available office space the Department negotiated a take over of the lease on the vacated office facility thereby sparing the cost of mobilizing a new modular office facility. Additionally the Contractor is saving the cost of demobilizing. Therefore, the Contractor will credit the Department a negotiated amount of $80,000.00.

The bituminous coated mechanical piping on the outside of the orthotropic bridge girders was replaced with zinc primer coated mechanical piping. State Letter No.5.03.1-011585, dated December 19, 2007, required the Contractor to credit the salvage value of the original pipe to the Department. The salvage value is estimated at $120.00 per metric ton at 8.38 metric tones for a total agreed to salvage value of $1,005.00.

For release of de-mobilization the office complex and the salvage value of the mechanical piping the Contractor will credit the State an agreed lump sum amount $81,005.00. This agreed lump sum constitutes full compensation, including all markups. The method of payment for this deletion of work is Adjustment of Compensation at Agreed Lump Sum. This contract change order will result in a cost decrease of $81,005.00 to the project. A complete Force Account cost analysis is on file with the project records.

Prior approval was obtained from Mr. Kannu Balan, Acting Supervising Bridge Engineer, on April 10, 2008. A copy of the prior approval is attached.

FHWA Prior approval is not required, as this is a minor change order.

Concurrence from Design is not required because the design will not be changed.

Concurrence from Maintenance is not required as this change does not use maintenance funds or affect maintenance facilities or operations.

No time adjustment is warranted for this change as it does not affect the controlling operation.

ADA Notice: For individuals with sensory disabilities, this document is available in alternate formats. For information call: (916) 654-6410 or TDD (916) 654-3880 or write Records and Forms Management, 1120 N Street, MS-89, Sacramento, CA 95814.

CONCURRED BY:			
Construction Engineer:	Douglas Coe		Date 4-11-08
Bridge Engineer:	Douglas Coe		Date 4-11-08
Project Engineer:			Date
Project Manager:			Date
FHWA Rep.:			Date
Environmental:			Date
Other (specify):			Date
Other (specify):			Date
District Prior Approval By:	Kannu Balan for Douglas Coe		Date 4/10/08
HQ (Issue Approve) By:			Date
Resident Engineer's Signature:			Date 4-11-08

ESTIMATE OF COST

	THIS REQUEST	TOTAL TO DATE
ITEMS	$0.00	$0.00
FORCE ACCOUNT	$0.00	$0.00
AGREED PRICE	$0.00	$0.00
ADJUSTMENT	($81,005.00)	($81,005.00)
TOTAL	($81,005.00)	($81,005.00)

FEDERAL PARTICIPATION

☐ PARTICIPATING ☐ PARTICIPATING IN PART ☑ NONE
☐ NON-PARTICIPATING (MAINTENANCE) ☐ NON-PARTICIPATING

FEDERAL SEGREGATION (if more than one Funding Source or P.I.P. type)
☑ CCO FUNDED PER CONTRACT ☐ CCO FUNDED AS FOLLOWS

FEDERAL FUNDING SOURCE	PERCENT

ADA Notice: For individuals with sensory disabilities, this document is available in alternate formats. For information call: (916) 654-6410 or TDD (916) 654-3880 or write Records and Forms Management, 1120 N Street, MS-89, Sacramento, CA 95814.