CONTRACT CHANGE ORDER

Change Requested by: Engineer

CCO: 43 **Suppl. No. 0** **Contract No. 04 – 0120F4** **Road** SF-80-13.2/13.9 **FED. AID LOC.:**

To: **AMERICAN BRIDGE/FLUOR ENTERPRISES INC A JOINT VENTURE**

You are directed to make the following changes from the plans and specifications or do the following described work not included in the plans and specifications for this contract. ***NOTE: This change order is not effective until approved by the Engineer.***

Description of work to be done, estimate of quantities and prices to be paid. (Segregate between additional work at contract price, agreed price and force account.) Unless otherwise stated, rates for rental of equipment cover only such time as equipment is actually used and no allowance will be made for idle time. This last percentage shown is the net accumulated increase or decrease from the original quantity in the Engineer's Estimate.

Adjustment of Compensation at Lump Sum:

ITEM 1.

- Revise lighting pole and main tower lighting fixture schedules.
- Revise luminaire pull boxes and associated conduit routing into pull boxes.
- Add in-line fuses to luminaires.

Add Special Provisions Section 10-3.105 "FUSED SPLICE CONNECTORS," as shown on sheet 3.

Adjustment of Compensation at Lump Sum..... $642,646.00

Estimate of Increase in Contract Item at Contract Price:

ITEM 2.

Modify deck mounted lighting brackets.

Item No. 55: FURNISH STRUCTURAL STEEL (BRIDGE) (BOX GIRDER)
101 KG (+0.00%) @ $9.00 /KG =+$ 909.00 (+0.00%)

Item No. 56: ERECT STRUCTURAL STEEL (BRIDGE) (BOX GIRDER)
101 KG (+0.00%) @ $1.00 /KG =+$ 101.00 (+0.00%)

The quantity increases shown herein for Items #55 and 56, when combined with the quantity shown in the Engineer's Estimate, and as modified by any previous change orders or revisions to dimensions made by the Engineer, shall be the final quantity for which payment will be made.

Total Cost for Increase in Contract Item..... $1,010.00

The following revised plan sheets detail the changes addressed in this change order: 93R4, 118R3, 119R2, 123R2, 124R2, 125R1, 132R4, 132S1, 132S2, 141R2, 189R4, 194R2, 195R2, 196R1, 197R2, 198R1, 208R4, 208S1, 208S2, 211R2, 244R2, 247R3, 248R3, 249R2, 250R2, 251R1, 252R2, 253R1, 254R1, 255R1, 256R1, 257R2, 258R1, 259R1, 260R1, 268R1, 276R2, 299R2, and 906R1 (of 1204) as shown on sheets 4 through 42 of this change order.

This change order resolves the costs associated with Contractor Request for Information (RFI) numbers 415, 464, 465, 466, 467, 1100R0 and 1100R1 with respect to changes listed above.

CONTRACT CHANGE ORDER

Change Requested by: Engineer

CCO: 43 **Suppl. No.** 0 **Contract No.** 04 – 0120F4 **Road** SF-80-13.2/13.9 **FED. AID LOC.:**

CHANGE ORDER COST AND TIME SUMMARY

(ITEM 1) Adjustment of Compensation at Lump Sum	$642,646.00
(ITEM 2) Increase in Contract Items at Contract Prices	$1,010.00
Total net pay for this change order	$643,656.00

This sum constitutes full and complete compensation for furnishing all labor, material, tools and incidentals including all markups by reason of this change.

Estimated Cost: **Increase** ☒ **Decrease** ☐ **$643,656.00**

By reason of this order the time of completion will be adjusted as follows: **0 Days**

Submitted by

Signature **Resident Engineer** Kannu Balan, Senior T.E. **Date** 12-14-11

Approval Recommended by

Signature **Supervising Transportation Engineer** William Casey, Sup. T.E. **Date** 12-20-11

Engineer Approval by

Signature **Supervising Transportation Engineer** William Casey, Sup.T.E. **Date** 1-6-12

We the undersigned contractor, have given careful consideration to the change proposed and agree, if this proposal is approved, that we will provide all equipment, furnish the materials, except as otherwise be noted above, and perform all services necessary for the work above specified, and will accept as full payment therefor the prices shown above.

NOTE: If you, the contractor, do not sign acceptance of this order, your attention is directed to the requirements of the specifications as to proceeding with the ordered work and filing a written protest within the time therein specified.

Contractor Acceptance by

Signature (Print name and title) BRIAN A. PETERSEN - PROJECT DIRECTOR **Date** 03JAN12

STATE OF CALIFORNIA - DEPARTMENT OF TRANSPORTATION

CONTRACT CHANGE ORDER MEMORANDUM

TO: Tony Anziano, Program Manager /	FILE: **E.A.** 04 - 0120F4
	CO-RTE-PM SF-80-13.2/13.9
FROM: Kannu Balan, Senior TE	**FED. NO.**
CCO#: **43** SUPPLEMENT#: **0** Category Code: **CBPC**	CONTINGENCY BALANCE (incl. this change) **$144,287,088.58**
COST: **$643,656.00** INCREASE ☑ DECREASE ☐	HEADQUARTERS APPROVAL REQUIRED? ☑ YES ☐ NO
SUPPLEMENTAL FUNDS PROVIDED: **$0.00**	IS THIS REQUEST IN ACCORDANCE WITH ENVIRONMENTAL DOCUMENTS? ☑ YES ☐ NO
CCO DESCRIPTION: Lighting Revisions	**PROJECT DESCRIPTION:** CONSTRUCT SELF-ANCHORED SUSPENSION BRIDGE

Original Contract Time:	Time Adj. This Change:	Previously Approved CCO Time Adjustments:	Percentage Time Adjusted: (including this change)	Total # of Unreconciled Deferred Time CCO(s): (including this change)
2490 Day(s)	**0** Day(s)	**501** Day(s)	**20** %	**3**

THIS CHANGE ORDER PROVIDES FOR:

Revising lighting pole and main tower lighting fixture schedules. Modifying deck mounted lighting brackets. Revising luminaire pull boxes and associated conduit routing into pull boxes. Adding in-line fuses to luminaires.

Adding Special Provisions Section 10-3.105 "FUSED SPLICE CONNECTORS."

Lighting pedestals that were located on crossbeams were relocated to avoid overhanging the edge and constructability issues due to limited space. Deck and wall mounted Tower aesthetic lights did not have enough information in the plan sheets to determine placement. Mounting brackets and pull boxes are revised to avoid interferences with piping and conduits. In-line fuses were added to individually connect luminaires to the power feed. Each luminaire has a dedicated fuse so that one blown fuse will not blow the entire line.

This change order resolves the costs associated with Contractor Request For Information (RFI) numbers 415, 464, 465, 466, 467, 1100R0 and 1100R1 with respect to changes listed above.

The total cost of this change order is $642,646.00 lump sum and $1,010.00 increase in contract items for a total of $643,656.00 for this change, which can be financed from the contingency fund. A detailed cost analysis is on file.

No time adjustment is warranted as this change order does not affect the controlling operation.

This change order has concurrence from William Casey (Supervising TE), Ken Terpstra (Project Manager), Rich Foley (HQ Oversight), Wenyi Long (Bridge Design), Lina Ellis (Maintenance), and Jing Chen (District Design).

CONCURRED BY:			
Construction Engineer:	William Casey, Sup TE	Date	3/11/11
Bridge Engineer:	CT Oversight, Wenyi Long, P.E.	Date	1/9/09
Project Engineer:	District Design, Jing Chen	Date	1/15/09
Project Manager:	Proj Manager, Ken Terpstra	Date	3/26/11
FHWA Rep.:		Date	
Environmental:		Date	
Other (specify):	HQ, Rich Foley	Date	3/14/11
Other (specify):	Struct. Maint, Lina Ellis	Date	1/28/11
District Prior Approval By:	HQ, Bob Molera	Date	1/22/09
HQ (Issue Approve) By:		Date	
Resident Engineer's Signature:		Date	12-14-11

ESTIMATE OF COST	THIS REQUEST	TOTAL TO DATE
ITEMS	$1,010.00	$1,010.00
FORCE ACCOUNT	$0.00	$0.00
AGREED PRICE	$0.00	$0.00
ADJUSTMENT	$642,646.00	$642,646.00
TOTAL	$643,656.00	$643,656.00

FEDERAL PARTICIPATION

☐ PARTICIPATING ☐ PARTICIPATING IN PART ☑ NONE
☐ NON-PARTICIPATING (MAINTENANCE) ☐ NON-PARTICIPATING

FEDERAL SEGREGATION (if more than one Funding Source or P.I.P. type)
☐ CCO FUNDED PER CONTRACT ☐ CCO FUNDED AS FOLLOWS

FEDERAL FUNDING SOURCE	PERCENT

ADA Notice: For individuals with sensory disabilities, this document is available in alternate formats. For information call: (916) 654-6410 or TDD (916) 654-3880 or write Records and Forms Management, 1120 N Street, MS-89, Sacramento, CA 95814.

DIST	COUNTY	ROUTE	KILOMETER POST TOTAL PROJECT	SHEET No.	TOTAL SHEETS
04	SF	80	13.2/13.9	93 R4	1204

James Erlingsson 12/19/02
REGISTERED ELECTRICAL ENGINEER DATE

12-6-04
PLANS APPROVAL DATE

REGISTERED PROFESSIONAL ENGINEER JENS ERLINGSSON No. 8249 Exp. 9/30/06 ELECTRICAL STATE OF CALIFORNIA

PB POWER, Inc.
A Parsons Brinckerhoff Company
303 Second St., Suite 700N
San Francisco, CA 94107-1317

The State of California or its officers or agents shall not be responsible for the accuracy or completeness of electronic copies of this plan sheet.

Caltrans now has a web site! To get to the web site, go to http://www.dot.ca.gov

Caltrans Metric

REQUEST FOR INFORMATION NOT ADDRESSED IN THIS CCO REMAIN IN FORCE					
4	10/10/08	LIGHTING REVISIONS	RY AG	RG FW	43
3	03/05/08	CABLE ELECTRICAL	RR AG	RG SE	72
2	02/25/08	CABLE TRAY CHANGES	RG	SE	42S1
1	02/19/08	ELECTRICAL MODIFICATIONS	MP EL	RR	42
MARK	DATE	DESCRIPTIONS REVISIONS	BY	CH'D	CCO#

CONTRACT CHANGE ORDER NO. 43 SO
SHEET 4 OF 42

REGISTERED PROFESSIONAL ENGINEER FADI WALJEDDINE No. 11465 Exp. 12/31/2009 ELECTRICAL STATE OF CALIFORNIA

FOR REVISION ONLY

TRAFFIC OPERATIONS SYSTEMS (TOS)

AVO	Analog Video Output
CCR	Camera Control Receiver
CCU	Camera Control Unit
CIA	Controller Interface Assembly
COMM	Communication
FDU	Fiber Distribution Unit
F/O	Fiber Optic
FODM	Fiber Optic Data Modem
FDC	Fiber Optic Drop Cable
FPC	Fiber Optic Pigtail Cable
FSC	Fiber Splice Closure
FTC	Fiber Optic Trunkline Cable
IF	Input File
MVDS	Microwave Vehicle Detection Sensor
PDA	Power Distribution Assembly
PL	Preformed Loop Detection Station
SCA	Serial Cable Assembly
SMFO	Single Mode Fiber Optic
TB	Terminal Box
TSC	Trunkline Splice Closure
TVCP	CCTV Camera Control Power Cable
TVC	CCTV Camera Control Cable
TVL	CCTV Camera Video Cable
TVP	CCTV Camera Power Cable
VTDD	Video Transmitter Duplex Data

PROJECT NOTES

1. 27C, 2#12 + #12 G.
2. 27C, 2#10 + #10 G.
3. 27C, 4#10 + #10 G.
4. 27C, 3#10 + #10 G.
5. 27C (Type 4), 2#12 + #12 G.
6. 27C (Type 4), 2#10 + #10 G.
7. 41C, 2-6 pairs #18, IS/OA.
8. 78C, 50 Pairs #18, IS/OA.
9. 27C, 3/C #6 + #8G.
10. 21C, 2-1 pair #18 (for Call Box signal) shielded pairs and overall shield.
11. 21C, 3#12 (for Call Box power).
12. 21C, (4) 1 pair #18 (for Call Box signal). Part of (2) 1-2 pairs #18, shielded pairs and overall shield.
13. 78C, 2#2 + #6 G and 2#10 + #10 G (for CMS Power).
14. 78C, Harness #4 and Harness #5 (for CMS Signal).
15. 41C, Cable type TVP and TVCP (for CCTV Power).
16. 41C, Cable type TVC and TVL (for CCTV Control Signal).
18. 41C, Cable type MVDS DLC (for MVDS Signal).
20. 78C, Cable type 10 DLC (for Preformed Loop Signal).
21. 27C (Liquidtight flexible metal conduit) 6#10 + #10 G.
22. 27C (Liquidtight flexible metal conduit) 3#10 + #10 G.
23. 27C, 7#10 + #10 G.
24. 27C, 6#10 + #10 G.

PROJECT NOTES (Continuation)

25. 27C, 7#10 + #10 G.
26. 41C, 3#6 + #8 G.
27. 41C, 3#8 + #10 G.
28. 21C, PVC coated - 2#10 + #10 G.
29. 21C, PVC coated, 3#12 (for Call Box Power).
30. 500 kcmil Bare Copper Wire.
31. 250 kcmil Bare Copper Wire.
32. #4/0 Bare Copper Wire.
33. #2 Bare Copper Wire.
34. 41C, 3#6 + #8 G, 3#8 + #10 G.
35. 41C, 6#8 + #10 G.
36. 21C, PVC coated, 1-2 pairs #18 (For Call Box signal).
37. Metal clad type cable with PVC overall jacket 3/C #10 (for Bike Path lighting).
38. Metal clad type cable with PVC overall jacket 1-2 pairs #18, shielded pairs and overall shield (for Call Box signal).
39. Metal clad type cable with PVC overall jacket 3/C #12 (for Call Box signal).
40. 78C, Cable Type A Fiber Optic.
41. 21C, (Liquidtight flexible metal conduit) 2#10 + 10 G.
42. 27C, 2#12 + #12G, 2#10 + #10G.
43. 21C, (Liquidtight flexible metal conduit) 2#12 + 12 G.
44. 41C, 2#12 + #12 G, 6#10 + #10 G.
45. 27C, 2#12 + #12 G, 4#10 + #10 G.
46. 27C, Liquidtight flexible metal conduit, 4#10 + #10 G.
47. 41C, Liquidtight flexible metal conduit, (MVDS DLC).
48. 27C, 3#6 + #8G. Liquidtight flexible metal conduit.
49. 21C, PVC coated, 2#10 + #10 G & 2/C #14
50. 21C Liquidtight flexible metal conduit 2#10 + #10G, 2/C #14
51. 41C Liquidtight flexible metal conduit 3#6 + #8G, 2/C #14
52. 41C, Liquidtight flexible metal conduit 4#10 + 2#10 G
53. 41C, PVC coated 4#10 + 2#10 G

4

GENERAL NOTES

1. Conduit routing is diagrammatic. Pull box locations shall be located as shown on plan drawings. The Contractor shall provide additional pull boxes as required. Exact locations of equipment and devices may be adjusted depending on field conditions or by the Engineer.
2. Minimum size of conduits shall be 21 mm. Exposed conduits shall be PVC coated rigid galvanized steel, and conduits located inside girder shall be rigid galvanized steel.
3. Conduit fittings for 78 mm conduits and larger shall have a 610 mm minimum bending radius.
4. All conduits, including spares, shall be provided with pull wires prior to cable installations.
5. All equipment and devices shall be provided with nameplate tags per drawings.
6. All feeders and branch circuits shall be provided with ground wire.
7. 15 kV splice boxes shall be installed as shown and permanently marked "DANGER-HIGH VOLTAGE-KEEP OUT". The letters shall be block type and at least 50 mm in height.
8. The Contractor shall label all conductors and cables per wiring diagrams.
9. Padlocks shall be installed on all cabinets located on the platforms to prevent unauthorized access.
10. Call boxes will be State-furnished. (The Contractor shall install and terminate conductors per wiring diagram.
11. Ladder type cable trays shall be installed for each 15 kV and 600 V systems.
12. Solid bottom cable trays shall be installed for each low level signals, CALTRANS communications, fiber optic systems, and for Non-Caltrans utilities.
13. For Strong Motion Detection System general notes, see sheet E-361.
14. All E sheets are accurate for electrical work only.
15. All dimensions are in millimeters unless otherwise shown.
16. All unused conductors inside pull boxes shall be taped and coiled.
17. "Similar" when shown on the plans means this detail is applicable to different structure and conduit sizes.
18. Electrical fixtures shall not be field welded to the box girders or crossbeams. All welding to the box girders and crossbeams shall be shown on the box girder and crossbeam shop drawings for review and approval by the Engineer.
19. All welding of electrical fixtures to the tower shall be shown on the tower shop drawings for review and approval by the Engineer.
20. All connections to steel elements of the self-anchored suspension bridge superstructure of electrical equipment and fixtures, including conduits, pull boxes, lighting fixtures, messenger cables and others, shall be shop welded or bolted. All connection details shall appear on the working drawings for review and approval by the Engineer.
21. Prior to ordering any cable tray support structures, the Contractor shall:
    - o Refer to Structural sheets to determine the locations of cable tray support structures.
    - o Determine, based upon field conditions, when and where to use cable tray vertical or horizontal bends, horizontal tees or reducers.
    - o Refer to AS-sheets to determine the type of cable tray support to use based on field conditions.
    - o Cable tray support structures shown on the AS-sheets are generic and may have to be adapted to suit field conditions.
    - o All modifications to the cable tray support structures as shown on the AS-sheets shall be approved by the Resident Engineer.
22. All installation of electrical conduit, equipment or pull boxes shall be either shop welded or bolted.
23. All cable trays shall be anchored to support. Appropriate type of anchors shall be used based on the cable tray location and support type.

ELECTRICAL NOTES AND ABBREVIATIONS

E-8

DESIGN OVERSIGHT	CALCULATED/ DESIGNED BY	DATE 08/02	REVISED BY	DATE REVISED
BEHZAD GOLEMOHAMMADI	CHECKED BY	AB	JW	09/02
			IAH	3/04

STATE OF CALIFORNIA - DEPARTMENT OF TRANSPORTATION
Caltrans

FOR REDUCED PLANS ORIGINAL SCALE IS IN MILLIMETERS 0 20 40 60 80

DGN FILE =>T:\13103\MS\pse\SAS Struc\CCO\SAS CC043\2008-10-10_Issued for Submittal\04-0120f1_0093R04.dgn
USERNAME =>florico

CU 04251 EA 0120F1

DATE PLOTTED => 10/9/2008
TIME PLOTTED => 5:28:12 PM

LAST REVISION	00-00-00

DIST	COUNTY	ROUTE	KILOMETER POST TOTAL PROJECT	SHEET No	TOTAL SHEETS
04	SF	80	13.2/13.9	118 R3	1204

12/19/02
REGISTERED ELECTRICAL ENGINEER DATE

REGISTERED PROFESSIONAL ENGINEER — JENS ERLINGSSON No. 8249 Exp. 9/30/06 ELECTRICAL — STATE OF CALIFORNIA

12-6-04
PLANS APPROVAL DATE

PB POWER, Inc.
A Parsons Brinckerhoff Company
303 Second St., Suite 700N
San Francisco, CA 94107-1317

The State of California or its officers or agents shall not be responsible for the accuracy or completeness of electronic copies of this plan sheet.

Caltrans now has a web site! To get to the web site, go to http://www.dot.ca.gov

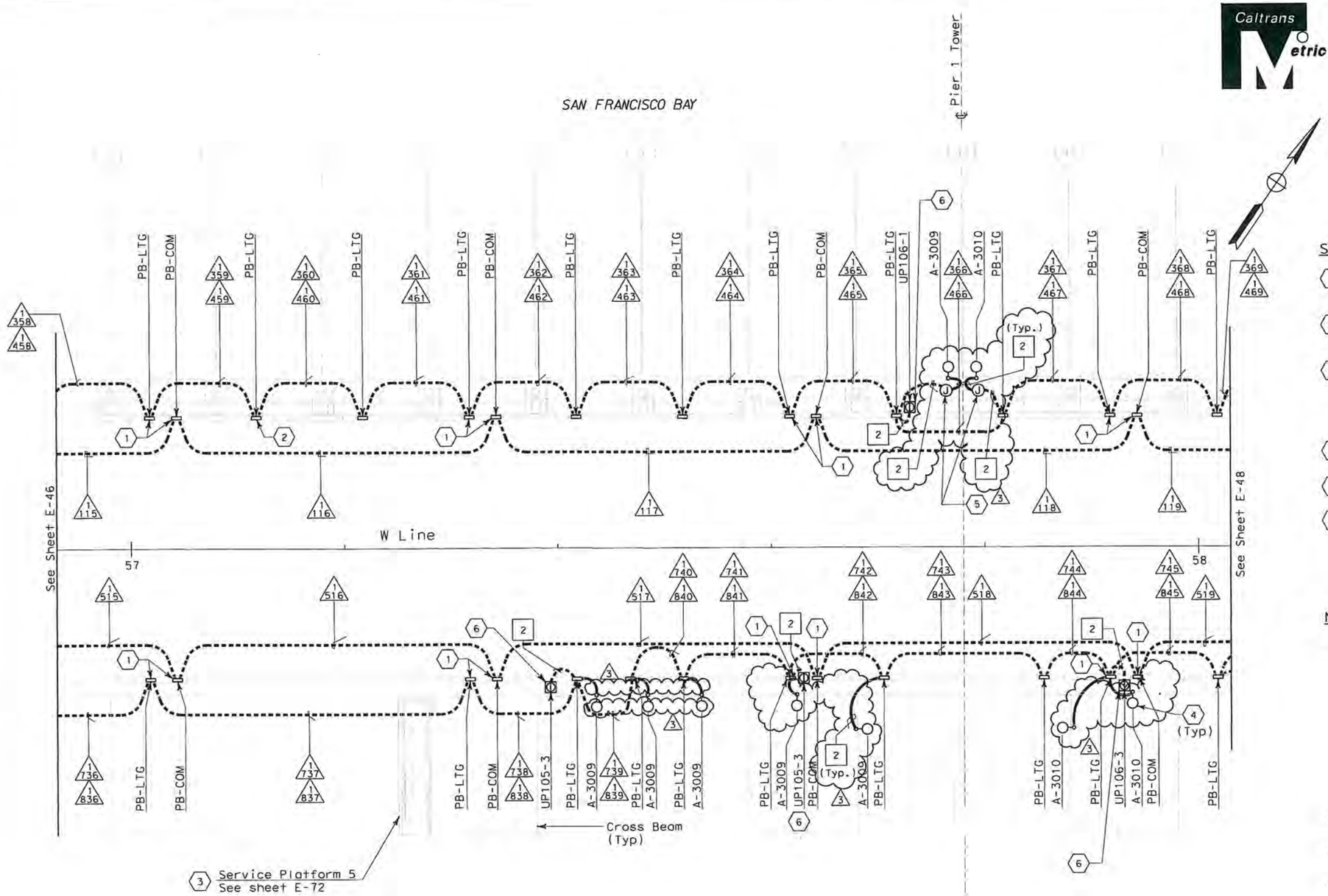

SHEET NOTES:

1. Conduit from barrier pullbox or other equipment down into Girder, See sheet E-97.
2. For conduit to Suspend Lighting, See sheet E-227. Typ for all PB-LTG located on the north side of the roadway.
3. Contractor shall furnish and install UP-105 per sheet E-72. For complete scope of work on platform and other related work not shown on this sheet, see Electrical Special Provisions.
4. See sheet E-67A for pylon floodlight conduit location.
5. Type PB-1B junction box is used on suspender brackets.
6. Roadway Barrier Receptacle, see Detail 1, sheet E-68.

NOTES:

1. References:
   - For typical details and locations of conduit connections to light poles, barrier outlet boxes, call boxes, overhead sign lighting, CCTV and MVDS, see sheets E-67, E-68 and E-68.
   - TOS equipment is shown for conduit routing only. For typical details of TOS controller and devices, see sheets E-344 through E-357.
   - For types of pullboxes, splice boxes and enclosures, see sheet E-83.
   - For circuit and conduit/cable tray schedules, see sheets starting at E-401.
2. For Roadway Call Boxes, refer to sheet E-396.
3. For Roadway Level Lighting Pole Schedule, see sheet E-82.
4. For Roadway Level Call Box Schedule, see sheet E-397.
5. For number of lighting fixtures (main tower lights), see lighting schedule sheets E-271 and E-272.

REGISTERED PROFESSIONAL ENGINEER — FADI WALIEDDINE No. 11465 Exp. 12/31/2009 ELECTRICAL — STATE OF CALIFORNIA

FOR REVISION ONLY

REQUEST FOR INFORMATION NOT ADDRESSED IN THIS CCO REMAIN IN FORCE					
3	10/10/08	LIGHTING REVISIONS	RY AG	RG FW	43
2	03/04/08	BARRIER MODIFICATIONS	JS BM	RG SE	44
1	02/19/08	ELECTRICAL MODIFICATIONS	MP EL	RR	42
MARK	DATE	DESCRIPTIONS REVISIONS	BY	CH'D	CCO#

CONTRACT CHANGE ORDER NO. 43 SO
SHEET 5 OF 42

CONDUIT PLAN

SAS SUPERSTRUCTURE ROADWAY WESTBOUND
LIGHTING AND ELECTRICAL SYSTEMS

SCALE 1:200

E-47

DATE PLOTTED => 10/16/2008
TIME PLOTTED => 11:14:23 AM
LAST REVISION 00-00-00

STATE OF CALIFORNIA - DEPARTMENT OF TRANSPORTATION
Caltrans

	CALCULATED/ DESIGNED BY	CHECKED BY	DESIGN OVERSIGHT
FK	IAH		BEHZAD GOLEMOHAMMADI

	DATE	REVISED BY	DATE REVISED
	8/02		8/02

THIS PLAN IS ACCURATE FOR ELECTRICAL WORK ONLY.

FOR REDUCED PLANS ORIGINAL SCALE IS IN MILLIMETERS 0 20 40 60 80

DGN FILE =>T:\13103\MS\pse\SAS Struc\CCO\SAS CC043\2008-10-10_Issued for Submittal\04-0120F1_0118R03.dgn
USERNAME =>garciar

CU 04251 EA 0120F1

DIST	COUNTY	ROUTE	KILOMETER POST TOTAL PROJECT	SHEET No	TOTAL SHEETS
04	SF	80	13.2/13.9	119 R2	1204

REGISTERED ELECTRICAL ENGINEER — 12/19/02 — DATE

12-6-04
PLANS APPROVAL DATE

REGISTERED PROFESSIONAL ENGINEER — JENS ERLINGSSON — No. 8249 — Exp. 9/30/06 ELECTRICAL — STATE OF CALIFORNIA

PB POWER, Inc.
A Parsons Brinckerhoff Company
303 Second St., Suite 700N
San Francisco, CA 94107-1317

The State of California or its officers or agents shall not be responsible for the accuracy or completeness of electronic copies of this plan sheet.

Caltrans now has a web site! To get to the web site, go to http://www.dot.ca.gov

	DATE	REVISED BY
FK	8/02	REVISED
IAH	8/02	DATE REVISED
CALCULATED/ DESIGNED BY		
CHECKED BY		

DESIGN OVERSIGHT — BEHZAD GOLEMOHAMMADI

STATE OF CALIFORNIA - DEPARTMENT OF TRANSPORTATION — Caltrans

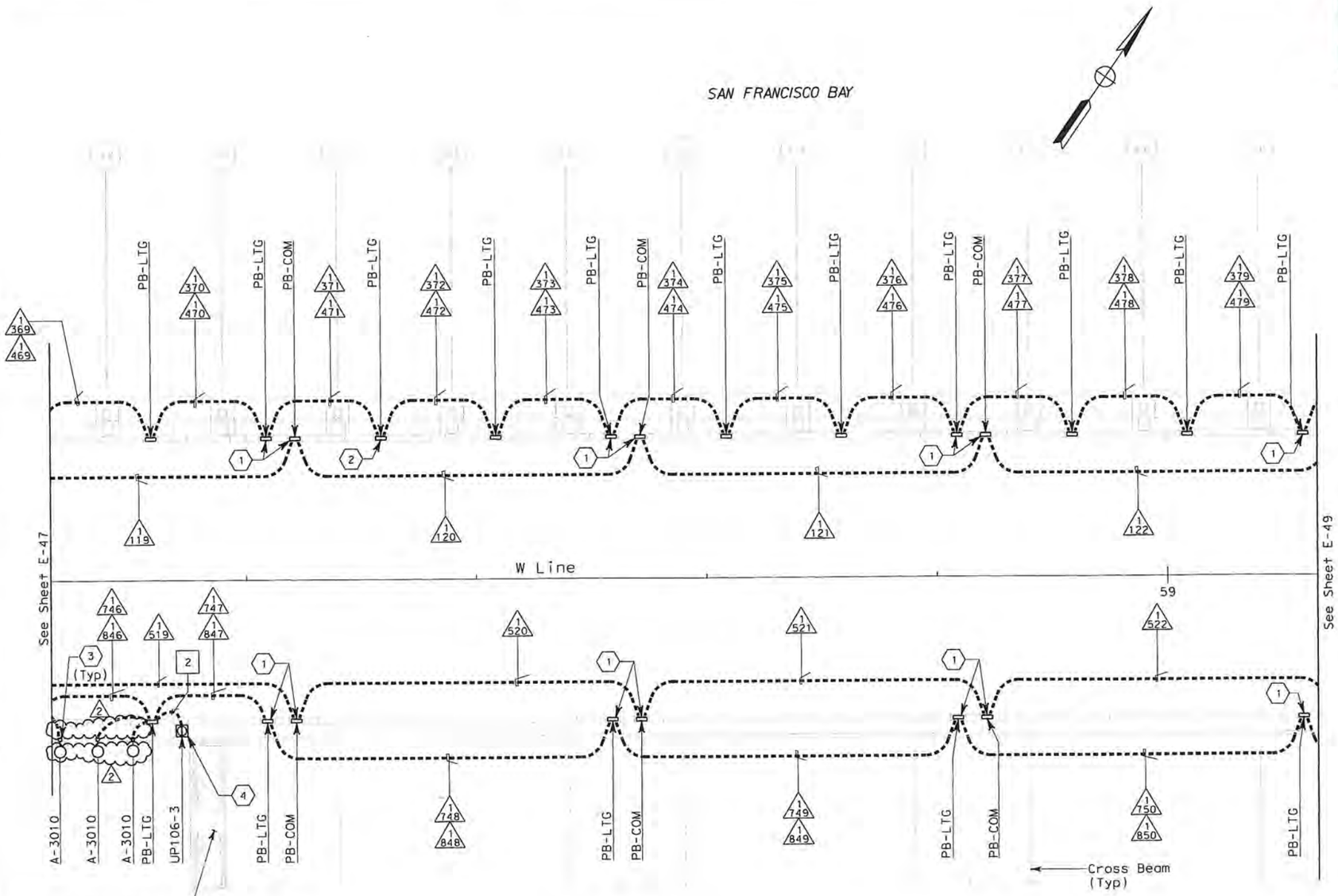

CONDUIT PLAN

SHEET NOTES:

1. Conduit from barrier pullbox or other equipment down into Girder, See sheet E-98.
2. For conduit to Suspend Lighting, see sheet E-228. Typ for all PB-LTG located on the north side of the roadway.
3. See sheet E-67A (2) pylon floodlight conduit location.
4. Roadway Barrier Receptacle, see Detail 1, sheet E-68.

NOTES:

1. References:
   - For typical details and locations of conduit connections to light poles, barrier outlet boxes, call boxes, overhead sign lighting, CCTV and MVDS, see sheets E-66, E-67 and E-68.
   - TOS equipment is shown for conduit routing only. For typical details of TOS controller and devices, see sheets E-344 through E-357.
   - For types of pullboxes, splice boxes and enclosures, see sheet E-83.
   - For circuit and conduit/cable tray schedules, see sheets starting at E-401.
2. For Roadway Level Light Pole Schedule, see sheet E-82.
3. For number of lighting fixtures (main tower lights), see lighting schedule sheets E-271 and E-272.

REGISTERED PROFESSIONAL ENGINEER — FADI WALIEDDINE — No. 11465 — Exp. 12/31/2009 ELECTRICAL — STATE OF CALIFORNIA

FOR REVISION ONLY

REQUEST FOR INFORMATION NOT ADDRESSED IN THIS CCO REMAIN IN FORCE					
2	10/10/08	LIGHTING REVISIONS	RY AG	RG FW	43
1	02/19/08	ELECTRICAL MODIFICATIONS	MP EL	RR	42
MARK	DATE	DESCRIPTIONS	BY	CH'D	CCO#
		REVISIONS			

CONTRACT CHANGE ORDER NO. 43 SO
SHEET 6 OF 42

THIS PLAN IS ACCURATE FOR ELECTRICAL WORK ONLY.

SAS SUPERSTRUCTURE ROADWAY WESTBOUND
LIGHTING AND ELECTRICAL SYSTEMS

SCALE 1:200

E-48

LAST REVISION 00-00-00 — DATE PLOTTED => 10/15/2008 — TIME PLOTTED => 10:24:59 AM

FOR REDUCED PLANS ORIGINAL SCALE IS IN MILLIMETERS — 0 20 40 60 80

DGN FILE =>T:\13103\WS\pse\SAS Struc\CCO\SAS CC043\2008-10-10_Issued for Submittal\04-0120f1_0119R02.dgn
USERNAME =>garciar

CU 04251 — EA 0120F1

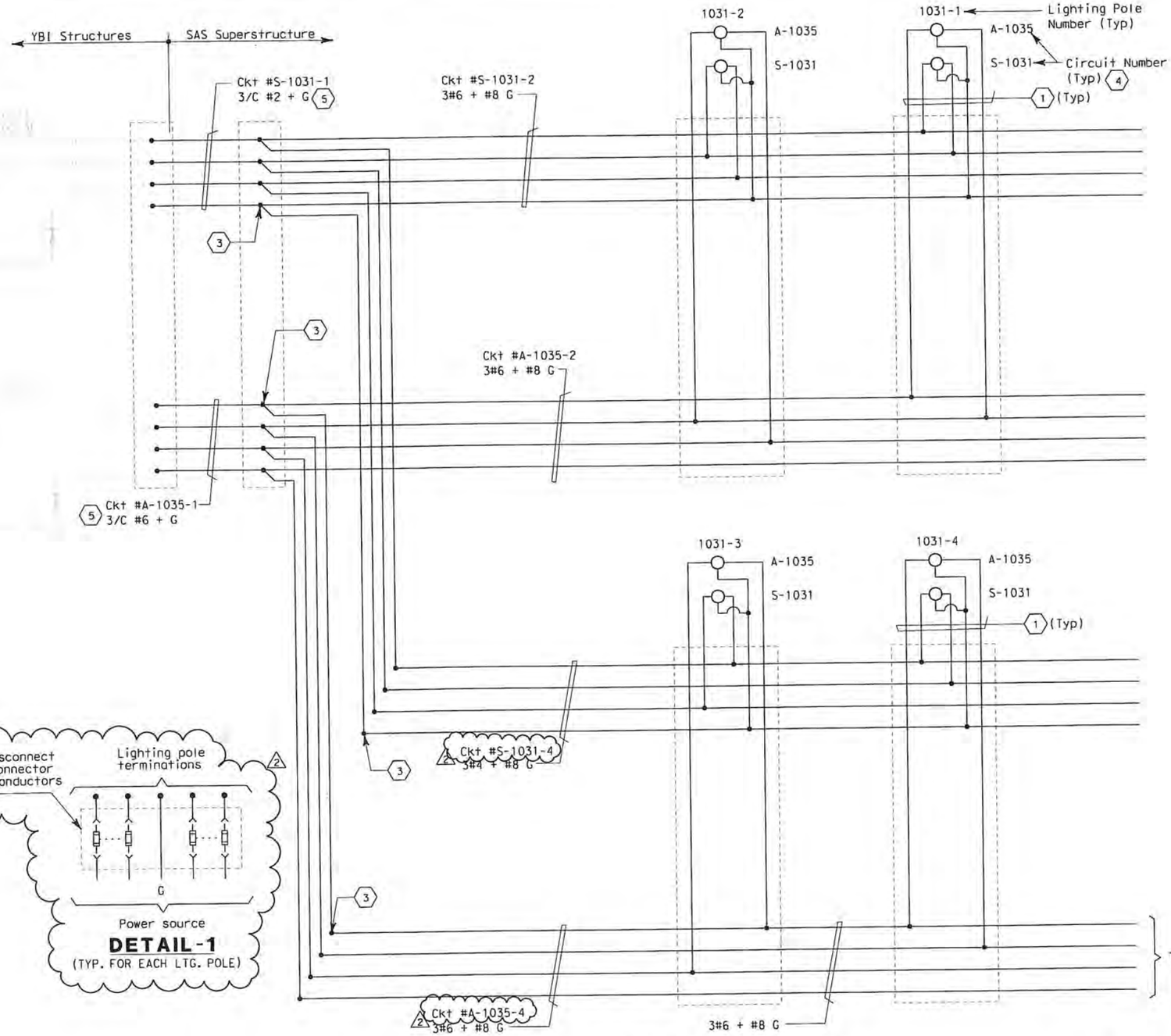

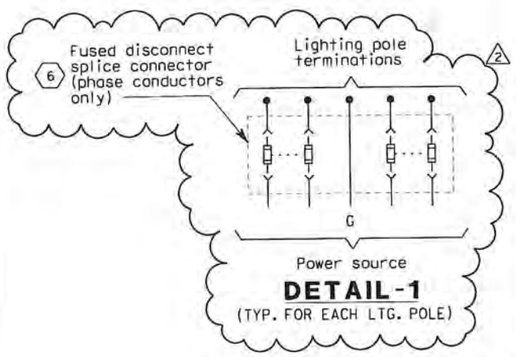

480 V LIGHTING POLE 2

Caltrans Metric

DIST	COUNTY	ROUTE	KILOMETER POST TOTAL PROJECT	SHEET No	TOTAL SHEETS
04	SF	80	13.2/13.9	123 R2	1204

James Erlingsson 12/19/02
REGISTERED ELECTRICAL ENGINEER DATE

12-6-04
PLANS APPROVAL DATE

REGISTERED PROFESSIONAL ENGINEER — JENS ERLINGSSON No. 8249 Exp. 9/30/06 ELECTRICAL — STATE OF CALIFORNIA

PB POWER, Inc.
A Parsons Brinckerhoff Company
303 Second St., Suite 700N
San Francisco, CA 94107-1317

The State of California or its officers or agents shall not be responsible for the accuracy or completeness of electronic copies of this plan sheet.

Caltrans now has a web site! To get to the web site, go to http://www.dot.ca.gov

SHEET NOTES:

1. 4#10 + #10 G single conductors. See Detail 1. 2
2. Deleted.
3. Conductors spliced inside junction box PB-2A located inside girder.
4. For SAS Superstructure roadway westbound lighting schedule, see sheet E-82.
5. The Contractor shall extend and coil 5 meters of cable in manhole 25. All cables shall be tagged with circuit numbers as shown. For location of manhole 25, see sheet E-11.
2 6. Install 10A (ckt S-1031) and 5A (ckt A-1035) in-line fuse inside each light pole.

NOTES:

1. References:
   - For pull box schedule, see sheet E-83. 2
   - For circuit and conduit/cable tray schedules, see sheets starting at E-401.

REGISTERED PROFESSIONAL ENGINEER — FADI WALIEDDINE No. 11465 Exp. 12/31/2009 ELECTRICAL — STATE OF CALIFORNIA

FOR REVISION ONLY

REQUEST FOR INFORMATION NOT ADDRESSED IN THIS CCO REMAIN IN FORCE

MARK	DATE	REVISIONS DESCRIPTIONS	BY	CH'D	CCO#
2	10/10/08	LIGHTING REVISIONS	RY AG	RG FW	43
1	02/19/08	ELECTRICAL MODIFICATIONS	MP EL	RR	42

CONTRACT CHANGE ORDER NO. 43 SO
SHEET 7 OF 42

DETAILS
SAS SUPERSTRUCTURE ROADWAY WESTBOUND 480 V ROADWAY LIGHTING WIRING DIAGRAM

NO SCALE

E-54

STATE OF CALIFORNIA - DEPARTMENT OF TRANSPORTATION
Caltrans
DESIGN OVERSIGHT
BEHZAD GOLEMOHAMMADI
CALCULATED/DESIGNED BY JP
CHECKED BY JE
DATE 08/01 REVISED BY
12/01 DATE REVISED
LAST REVISION 00-00-00
DATE PLOTTED => 10/16/2008
TIME PLOTTED => 10:39:45 AM

FOR REDUCED PLANS ORIGINAL SCALE IS IN MILLIMETERS 0 20 40 60 80

DGN FILE =>T:\13103\WS\pse\SAS Struc\CCO\SAS CCO43\2008-10-10_Issued for Submittal\04-0120F1_0123R02.dgn
USERNAME =>garciar

CU 04251 EA 0120F1

DIST	COUNTY	ROUTE	KILOMETER POST TOTAL PROJECT	SHEET No	TOTAL SHEETS
04	SF	80	13.2/13.9	124 R2	1204

12/19/02
REGISTERED ELECTRICAL ENGINEER DATE

12-6-04
PLANS APPROVAL DATE

REGISTERED PROFESSIONAL ENGINEER — JENS ERLINGSSON No. 8249 Exp. 9/30/06 ELECTRICAL — STATE OF CALIFORNIA

PB POWER, Inc.
A Parsons Brinckerhoff Company
303 Second St., Suite 700N
San Francisco, CA 94107-1317

The State of California or its officers or agents shall not be responsible for the accuracy or completeness of electronic copies of this plan sheet.

Caltrans now has a web site! To get to the web site, go to http://www.dot.ca.gov

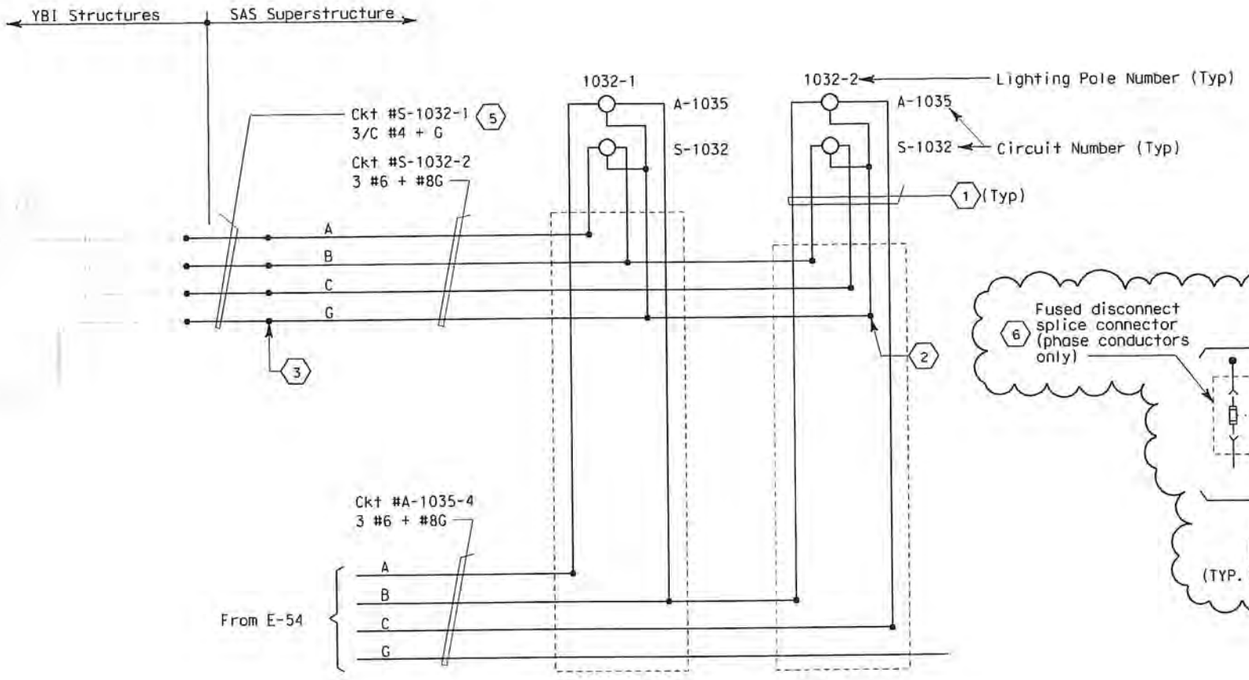

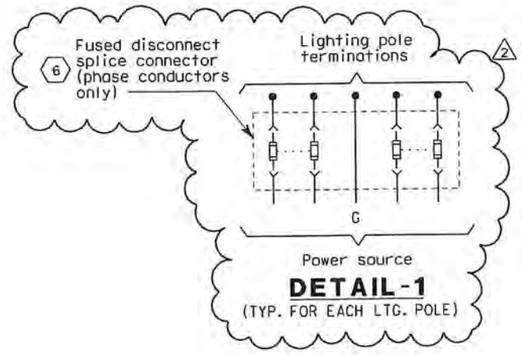

DETAIL-1
(TYP. FOR EACH LTG. POLE)

SHEET NOTES:

1. 4#10 + #10 G single conductors. See Detail 1.
2. Conductors spliced inside pull box PB-LTG. (Pole #1032-2 only).
3. Conductors spliced inside junction box PB-2A located inside girder.
4. For SAS superstructure roadway westbound lighting schedule, see sheet E-82.
5. The Contractor shall extend and coil 5 meters of cable in manhole 25. All cables shall be tagged with circuit numbers as shown. For location of manhole 25, see sheet E-11.
6. Install 10A (ckt S-1032) and 5A (ckt A-1035) in-line fuse inside each light pole.

NOTES:

1. References:
   - For pull box schedule, see sheet E-83.
   - For circuit and conduit/cable tray schedules, see sheets starting at E-401.
   - For single line diagram, see sheets E-29 through E-34.

480 V LIGHTING POLE

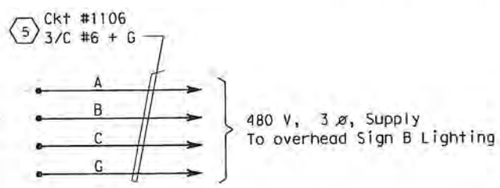

480 V OVERHEAD SIGN

REGISTERED PROFESSIONAL ENGINEER — FADI WALIEDDINE No. 11465 Exp. 12/31/2009 ELECTRICAL — STATE OF CALIFORNIA

FOR REVISION ONLY

REQUEST FOR INFORMATION NOT ADDRESSED IN THIS CCO REMAIN IN FORCE					
2	10/10/08	LIGHTING REVISIONS	RY AG	RG FW	43
1	02/19/08	ELECTRICAL MODIFICATIONS	MP EL	RR	42
MARK	DATE	DESCRIPTIONS	BY	CH'D	CCO#
		REVISIONS			

CONTRACT CHANGE ORDER NO. 43 SO
SHEET 8 OF 42

DETAILS
SAS SUPERSTRUCTURE ROADWAY WESTBOUND
480 V ROADWAY LIGHTING WIRING DIAGRAM
NO SCALE

E-55

DESIGN OVERSIGHT	CALCULATED/ DESIGNED BY	DATE	REVISED BY
BEHZAD GOLEMOHAMMADI	JP	08/01	
	CHECKED BY	DATE	REVISED
	JE	12/01	

STATE OF CALIFORNIA - DEPARTMENT OF TRANSPORTATION
Caltrans

FOR REDUCED PLANS ORIGINAL SCALE IS IN MILLIMETERS 0 20 40 60 80

DGN FILE =>T:\13103\WS\pse\SAS Struc\CCO\SAS CC043\2008-10-10_Issued for Submittal\04-0120F1_0124R02.dgn
USERNAME =>florica

CU 04251 | EA 0120F1

LAST REVISION 00-00-00 | DATE PLOTTED => 10/9/2008 | TIME PLOTTED => 5:29:32 PM

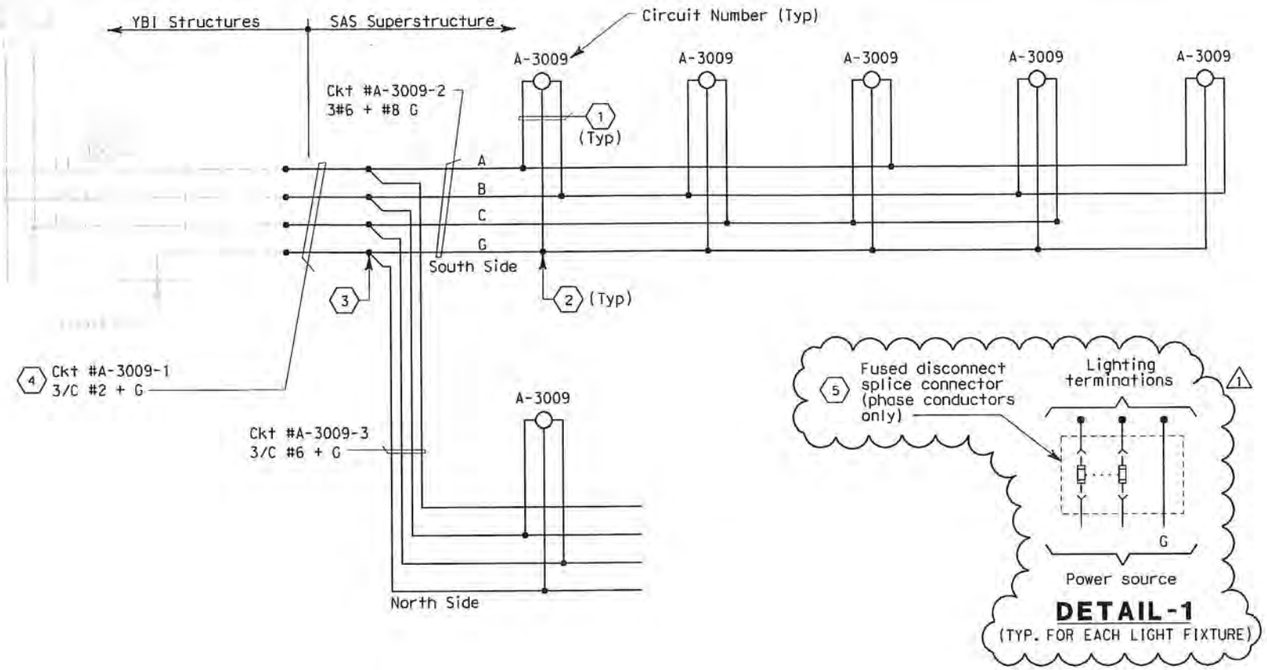

DETAIL-1
(TYP. FOR EACH LIGHT FIXTURE)

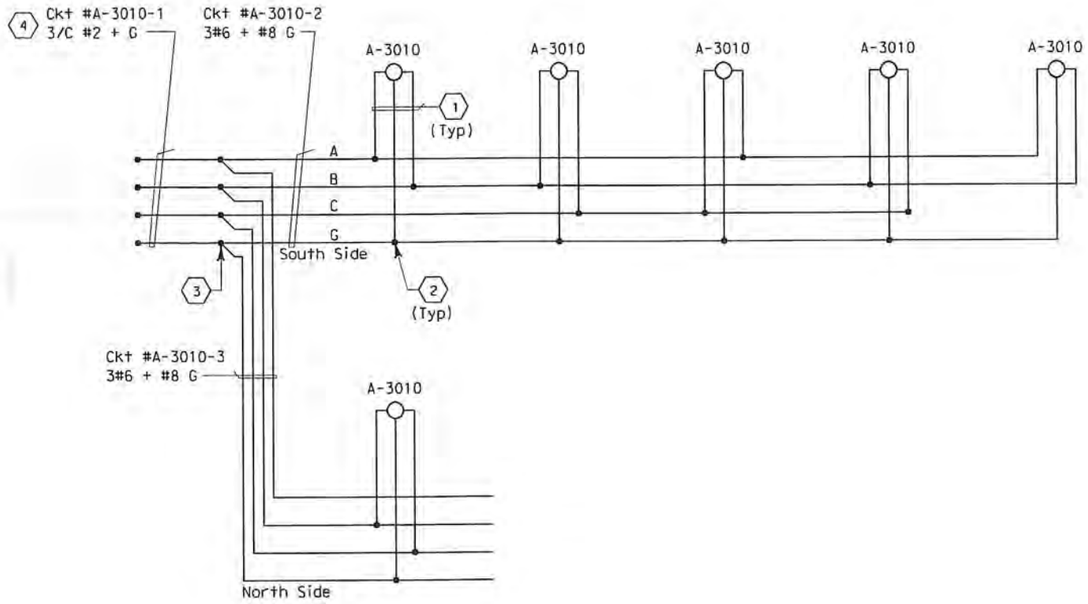

480 V MAIN TOWER LIGHTING

DIST	COUNTY	ROUTE	KILOMETER POST TOTAL PROJECT	SHEET NO	TOTAL SHEETS
04	SF	80	13.2/13.9	125 RT	1204

Jens Erlingsson 12/19/02
REGISTERED ELECTRICAL ENGINEER DATE

12-6-04
PLANS APPROVAL DATE

REGISTERED PROFESSIONAL ENGINEER
JENS ERLINGSSON
No. 8249
Exp. 9/30/06
ELECTRICAL
STATE OF CALIFORNIA

PB POWER, Inc.
A Parsons Brinckerhoff Company
303 Second St., Suite 700N
San Francisco, CA 94107-1317

The State of California or its officers or agents shall not be responsible for the accuracy or completeness of electronic copies of this plan sheet.

Caltrans now has a web site! To get to the web site, go to http://www.dot.ca.gov

SHEET NOTES:

1. 2#10 + #10 G single conductors (See Detail 1.)
2. Conductors spliced inside pull box PB-1B.
3. Conductors spliced inside junction box PB-2A located inside girder.
4. The Contractor shall extend and coil 5 meters of cable in manhole 25. All cables shall be tagged with circuit numbers as shown. For location of manhole 25, see sheet E-11.
5. Install 10A (1000W fixture) and 5A (250W fixture) in-line fuse per light fixture, inside the remote ballast housing.

NOTES:

1. Use multi-conductor cable if circuit is routed via trays.
2. References:
   - For typical pull box schedule, see sheet E-83.
   - For circuit and conduit/cable tray schedules, see sheets starting at E-401.
3. For lighting fixtures schedule see sheet E-82.

REGISTERED PROFESSIONAL ENGINEER
FADI WALIEDDINE
No. 11465
Exp. 12/31/2009
ELECTRICAL
STATE OF CALIFORNIA

FOR REVISION ONLY

REQUEST FOR INFORMATION NOT ADDRESSED IN THIS CCO REMAIN IN FORCE					
1	10/10/08	LIGHTING REVISIONS	RY AG	RG FW	43
MARK	DATE	DESCRIPTIONS	BY	CH'D	CCO#
		REVISIONS			

CONTRACT CHANGE ORDER NO. 43 SO
SHEET 9 OF 42

DETAILS
SAS SUPERSTRUCTURE ROADWAY WESTBOUND
480 V ROADWAY LIGHTING WIRING DIAGRAM
NO SCALE

E-56

DATE	REVISED BY	CALCULATED/ DESIGNED BY	CHECKED BY
8/01	JP	JP	JE
11/01	JE		

STATE OF CALIFORNIA - DEPARTMENT OF TRANSPORTATION
Caltrans
DESIGN OVERSIGHT
BEHZAD GOLEMOHAMMADI

LAST REVISION 00-00-00
DATE PLOTTED => 10/9/2008
TIME PLOTTED => 5:29:45 PM

FOR REDUCED PLANS ORIGINAL SCALE IS IN MILLIMETERS 0 20 40 60 80

DGN FILE =>T:\13103\MS\pse\SAS Struc\CCO\SAS CCO43\2008-10-10_Issued for Submittal\04-0120f1_0125R01.dgn
USERNAME =>florico
CU 04251
EA 0120F1

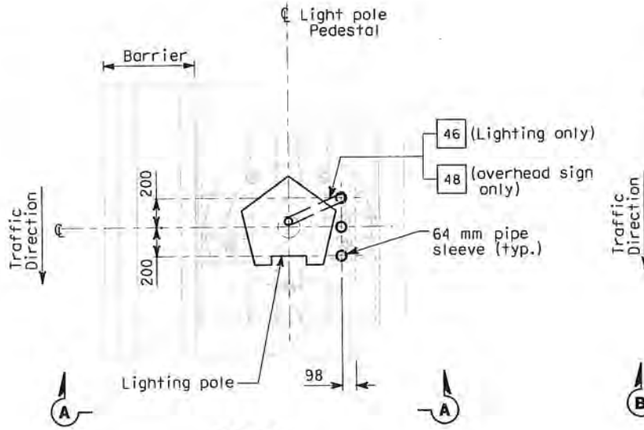

PLAN

CONDUIT STUB-UP PLAN FOR ROADWAY LIGHTING ON A METAL BASE
(SIMILAR FOR OVERHEAD SIGN ON A METAL BASE EXCEPT AS NOTED)
SCALE 1:20

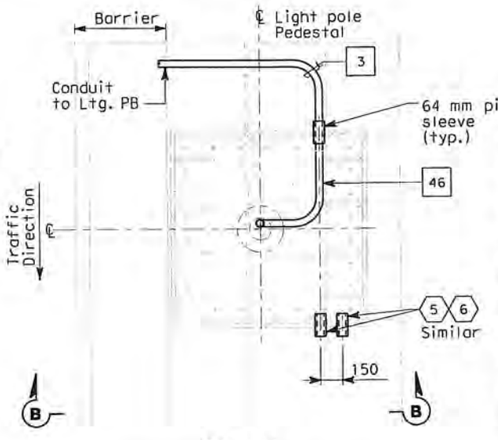

PLAN

CONDUIT STUB-UP PLAN FOR ROADWAY LIGHTING ON A METAL BASE AT PIER E2 ONLY
SCALE 1:20

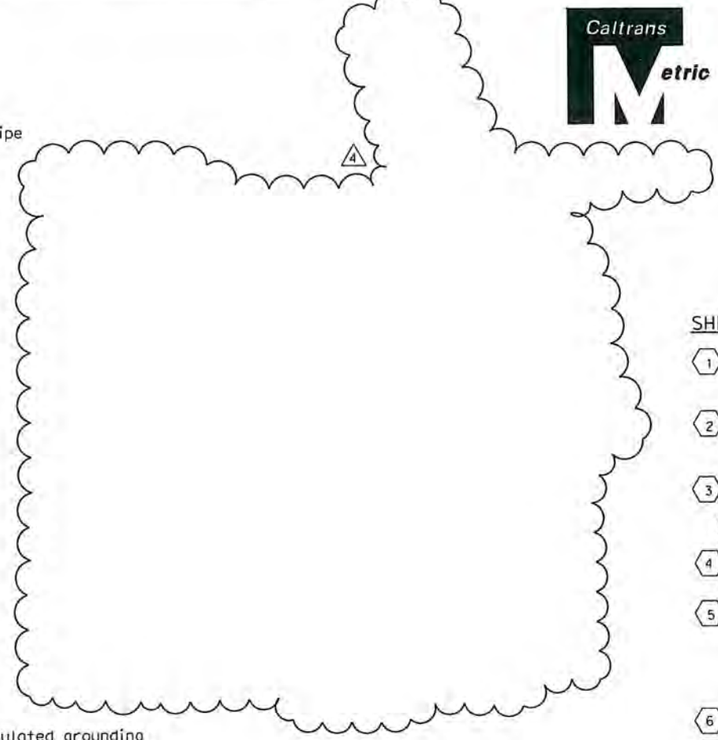

DIST	COUNTY	ROUTE	KILOMETER POST TOTAL PROJECT	SHEET No	TOTAL SHEETS
04	SF	80	13.2/13.9	132 R4	1204

Jens Ellingsson 12/19/02
REGISTERED ELECTRICAL ENGINEER DATE

12-6-04
PLANS APPROVAL DATE

REGISTERED PROFESSIONAL ENGINEER — JENS ERLINGSSON No. 8249 Exp. 9/30/06 ELECTRICAL — STATE OF CALIFORNIA

PB POWER, Inc.
A Parsons Brinckerhoff Company
303 Second St., Suite 700N
San Francisco, CA 94107-1317

The State of California or its officers or agents shall not be responsible for the accuracy or completeness of electronic copies of this plan sheet.

Caltrans now has a web site! To get to the web site, go to http://www.dot.ca.gov

SHEET NOTES:

1. Bond grounding bushing to ground lug of lighting pole with #6 bare copper wire.
2. Conduits for future light pipe shall continue from this pull box.
3. Deleted.
4. Deleted.
5. See Utility Detail No. 1 (Sheet No. 965 of 1204) for conduit penetration through girder plate and lighting pole metal base. The Contractor shall install sealant between the sleeve and conduit to prevent water or moisture from passing inside the sleeve.
6. Cap spare sleeves for future use where noted.
7. Ensure that the maximum of three conduits passing through the 150 mm ø pedestal plate opening are separated as much as possible from each other.

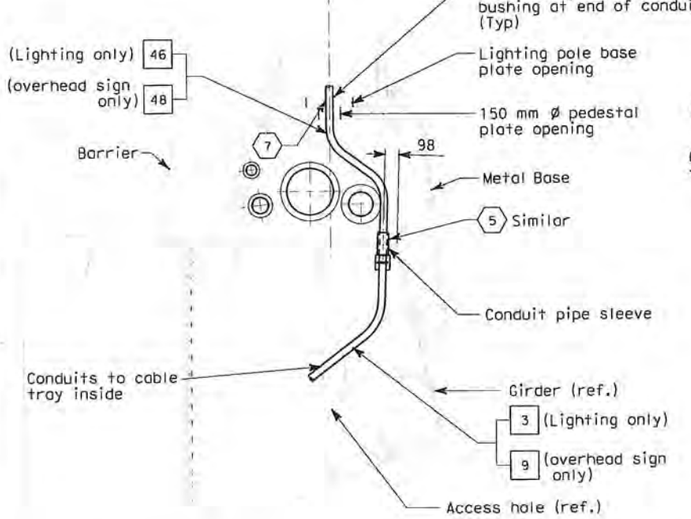

SECTION A-A

LIGHT POLE METAL PEDESTAL
CONDUIT TYPICAL INSTALLATION
SCALE 1:20

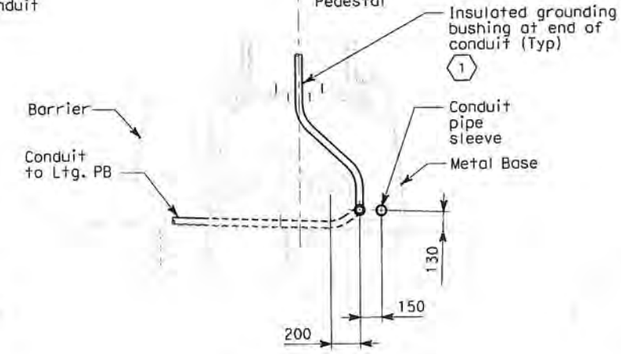

SECTION B-B

SCALE 1:20

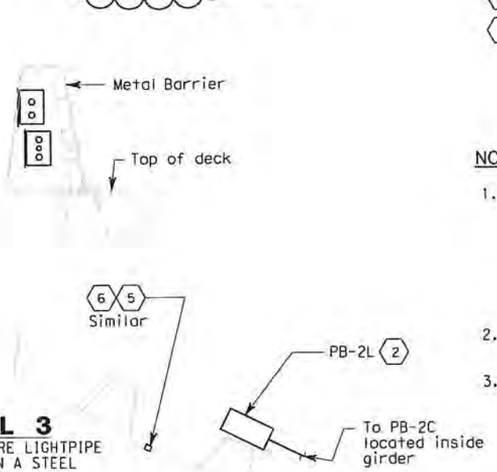

DETAIL 3

CONDUIT FOR FUTURE LIGHTPIPE CONNECTIONS ON A STEEL STRUCTURE
SCALE: 1:20

NOTES:

1. References:
   - For lighting pole schedule, see sheet E-82.
   - For location of pull boxes inside girder, see sheets E-96 thru E-101.
   - For luminaire support details, see structural sheets.
   - For pull box schedule, see sheet E-83.
2. Roadway Barrier Receptacle, see Detail 1, sheet E-68.
3. For conduit and pull box details in steel barrier, see drawings E-66 and E-66A.

REGISTERED PROFESSIONAL ENGINEER — FADI WALIEDDIN No. 11465 Exp. 12/31/2009 ELECTRICAL — STATE OF CALIFORNIA

FOR REVISION ONLY

REQUEST FOR INFORMATION NOT ADDRESSED IN THIS CCO REMAIN IN FORCE

MARK	DATE	DESCRIPTIONS	BY	CH'D	CCO#
		REVISIONS			
4	10/10/08	LIGHTING REVISIONS	RY AG	RG FW	43
3	03/04/08	BARRIER MODIFICATIONS	JS BM	SE RG	44
2	02/19/08	ELECTRICAL MODIFICATIONS	MP EL RG	RR	42
1	10/16/06	REVISED SHEET NOTES	LR	MG	11

CONTRACT CHANGE ORDER NO. 43 SO
SHEET 10 OF 42

DETAILS
SAS SUPERSTRUCTURE ROADWAY WESTBOUND CONDUIT LOCATIONS

SCALE AS NOTED

E-67

CALCULATED/ DESIGNED BY	DATE	REVISED BY	DATE REVISED
KG	10/01		
CHECKED BY	AB	11/01	

STATE OF CALIFORNIA - DEPARTMENT OF TRANSPORTATION
Caltrans
DESIGN OVERSIGHT
BEHZAD GOLEMOHAMMADI

THIS PLAN IS ACCURATE FOR ELECTRICAL WORK ONLY.

ALL DIMENSIONS ARE IN MILLIMETERS UNLESS OTHERWISE SHOWN.

FOR REDUCED PLANS ORIGINAL SCALE IS IN MILLIMETERS 0 20 40 60 80

DGN FILE =>T:\13103\MS\pse\SAS Struc\CCO\SAS CC043\2008-10-10_Issued for Submittal\04-0120F1_0132R04.dgn
USERNAME =>garcior

CU 04251 EA 0120F1

LAST REVISION 00-00-00
DATE PLOTTED => 10/10/2008
TIME PLOTTED => 7:56:48 AM

DIST	COUNTY	ROUTE	KILOMETER POST TOTAL PROJECT	SHEET No	TOTAL SHEETS
04	SF	80	13.2/13.9	132 S1	1204

REGISTERED ELECTRICAL ENGINEER — 10/10/08 DATE

REGISTERED PROFESSIONAL ENGINEER — FADI WALIEDDINE No. 11465 Exp. 12/31/2009 ELECTRICAL — STATE OF CALIFORNIA

PLANS APPROVAL DATE

PB AMERICAS, Inc.
A Parsons Brinckerhoff Company
303 Second St., Suite 700N
San Francisco, CA 94107-1317

The State of California or its officers or agents shall not be responsible for the accuracy or completeness of electronic copies of this plan sheet.

Caltrans now has a web site! To get to the web site, go to http://www.dot.ca.gov

DATE	REVISED BY	DATE REVISED
CALCULATED/ DESIGNED BY	CHECKED BY	
DESIGN OVERSIGHT	BEHZAD GOLEMOHAMMADI	

STATE OF CALIFORNIA - DEPARTMENT OF TRANSPORTATION — Caltrans

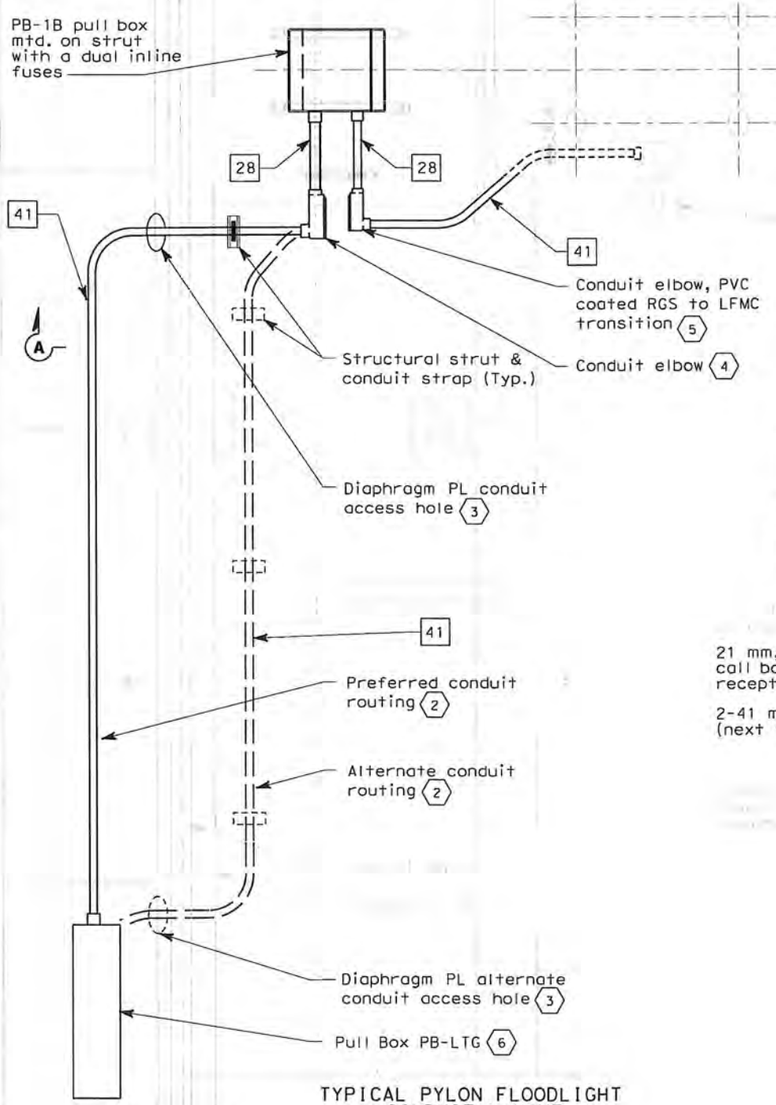

TYPICAL PYLON FLOODLIGHT CONDUIT LAYOUT

DETAIL 1

SCALE 1:20

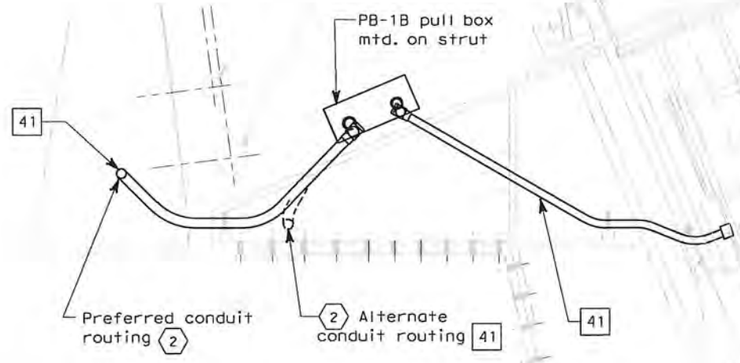

SECTION A-A

SCALE 1:20

REQUEST FOR INFORMATION NOT ADDRESSED IN THIS CCO REMAIN IN FORCE					
0	10/10/08	LIGHTING REVISIONS	RY AG	RG FW	43
MARK	DATE	DESCRIPTIONS	BY	CH'D	CCO#
		REVISIONS			

CONTRACT CHANGE ORDER NO. 43 SO

SHEET 11 OF 42

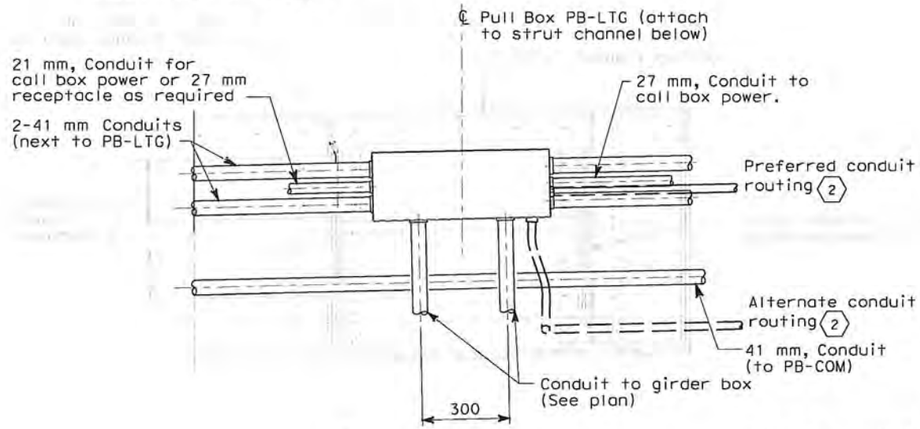

DETAIL 2

TYPICAL CONDUIT SUPPORT PULL BOX PB-LTG MOUNTING

SCALE 1:10

SHEET NOTES:

1. Attach all structural strut to steel surface using 10mm self-tapping screws avoiding drilling within 25 mm of stiffeners or edge of steel plate.
2. The preferred conduit routing shall be utilized where possible. At locations where there is no space through the barrier diaphragm plate route conduit to PB-LTG pull box outside the barrier using the alternate path.
3. Conduit access hole per Sheet 472R2, Section A-A, Note 8.
4. Conduit elbow, Appleton Form 8 type, cat # "LB38" or equal.
5. Conduit elbow, Appleton Form 8 type, cat # "LB28" or equal. This is the transition point from PVC coated Rigid Galvanized Steel conduit and Liquidtight Flexible Metal Conduit.
6. Splice point for Pylon Floodlight circuit. Install fused splice connector, double pole, water resistant 600V non-time delay.

DETAILS
SAS SUPERSTRUCTURE ROADWAY WESTBOUND CONDUIT LOCATIONS

SCALE AS NOTED

E-67A

LAST REVISION 00-00-00 — DATE PLOTTED => 10/10/2008 TIME PLOTTED => 8:16:24 AM

THIS PLAN ACCURATE FOR ELECTRICAL WORK ONLY.

FOR REDUCED PLANS ORIGINAL SCALE IS IN MILLIMETERS 0 20 40 60 80

DGN FILE =>T:\13103\MS\pse\SAS Struc\CCO\SAS CC043\2008-10-10_Issued for Submittal\04-0120F1_0132S01.dgn
USERNAME =>garciar

CU 04251 | EA 0120F1

DIST	COUNTY	ROUTE	KILOMETER POST TOTAL PROJECT	SHEET No	TOTAL SHEETS
04	SF	80	13.2/13.9	132 S2	1204

10/10/08
REGISTERED ELECTRICAL ENGINEER DATE

REGISTERED PROFESSIONAL ENGINEER
FADI WALIEDDINE
No. 11465
Exp. 12/31/2009
ELECTRICAL
STATE OF CALIFORNIA

PLANS APPROVAL DATE

PB AMERICAS, Inc.
A Parsons Brinckerhoff Company
303 Second St., Suite 700N
San Francisco, CA 94107-1317

The State of California or its officers or agents shall not be responsible for the accuracy or completeness of electronic copies of this plan sheet.

Caltrans now has a web site! To get to the web site, go to http://www.dot.ca.gov

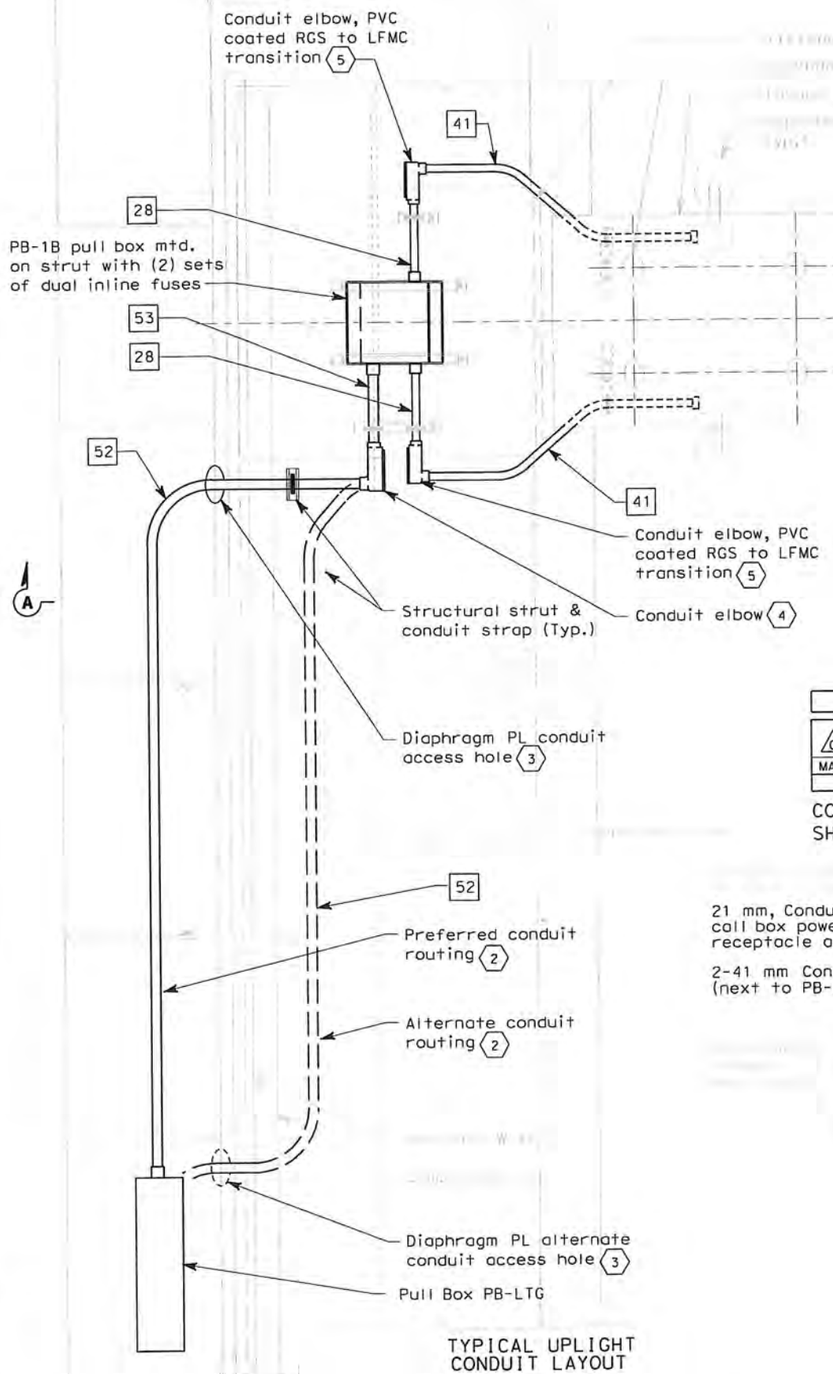

TYPICAL UPLIGHT CONDUIT LAYOUT

DETAIL 1

SCALE 1:20

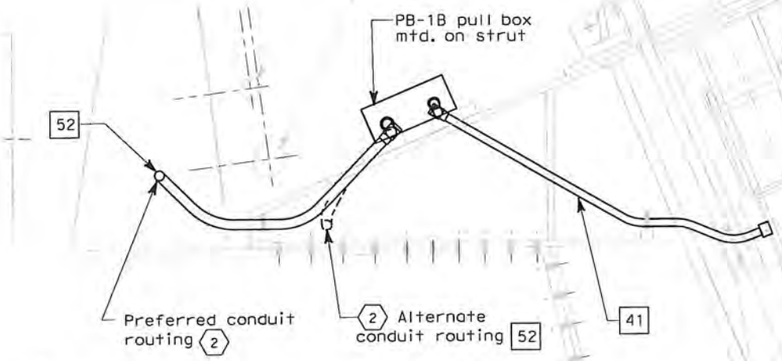

SECTION A-A

SCALE: 1:20

REQUEST FOR INFORMATION NOT ADDRESSED IN THIS CCO REMAIN IN FORCE					
MARK	DATE	REVISIONS DESCRIPTIONS	BY	CH'D	CCO#
0	10/10/08	LIGHTING REVISIONS	RY AG	RG FW	43

CONTRACT CHANGE ORDER NO. 43 SO
SHEET 12 OF 42

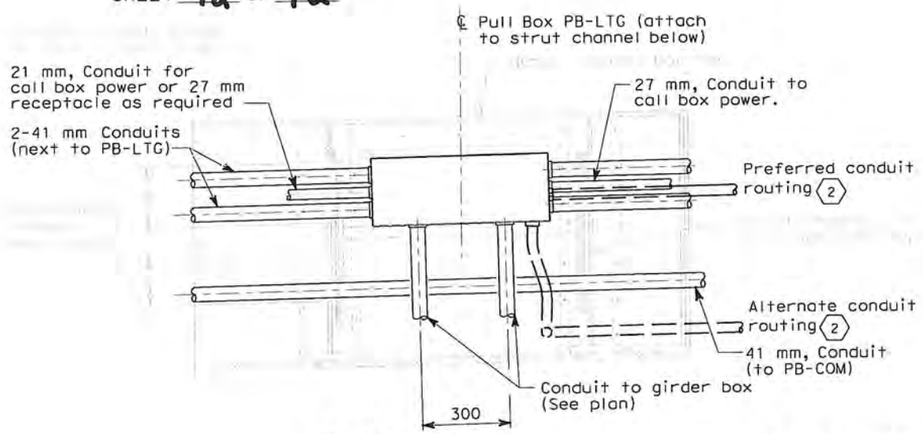

DETAIL 2

TYPICAL CONDUIT SUPPORT
PULL BOX PB-LTG MOUNTING
SCALE 1:10

SHEET NOTES:

1. Attach all structural strut to steel surface using 10mm self-tapping screws avoiding drilling within 25 mm of stiffeners or edge of steel plate.
2. The preferred conduit routing shall be utilized where possible. At locations where there is no space through the barrier diaphragm plate route conduit to PB-LTG pull box outside the barrier using the alternate path.
3. Conduit access hole per Sheet 472R2, Section A-A, Note 8.
4. Conduit elbow, Appleton Form 8 type, cat # "LB38" or equal.
5. Conduit elbow, Appleton Form 8 type, cat # "LB28" or equal. This is the transition point from PVC coated Rigid Galvanized Steel conduit and Liquidtight Flexible Metal Conduit.

DETAILS
SAS SUPERSTRUCTURE ROADWAY WESTBOUND CONDUIT LOCATIONS

SCALE AS NOTED

E-67B

STATE OF CALIFORNIA - DEPARTMENT OF TRANSPORTATION
Caltrans
DESIGN OVERSIGHT: BEHZAD GOLEMOHAMMADI
CALCULATED/DESIGNED BY
CHECKED BY
DATE | REVISED BY | DATE REVISED

LAST REVISION 00-00-00
DATE PLOTTED => 10/10/2008
TIME PLOTTED => 8:15:37 AM

THIS PLAN ACCURATE FOR ELECTRICAL WORK ONLY.

ALL DIMENSIONS ARE IN MILLIMETERS UNLESS OTHERWISE SHOWN

FOR REDUCED PLANS ORIGINAL SCALE IS IN MILLIMETERS 0 20 40 60 80

DGN FILE =>T:\13103\MS\pse\SAS Struc\CCO\SAS CC043\2008-10-10_Issued for Submittal\04-0120F1_0132S02.dgn
USERNAME =>garcior

CU 04251 | EA 0120F1

480 V MAIN TOWER LIGHTING FIXTURE SCHEDULE (ROADWAY LEVEL)

Circuit Number	Station	Location: Roadway side	Location: Suspend at Panel Point	Mounting	Ltg. Fixture Type	Number/ Wattage	Remarks
			PYLON LIGHTING				
A-3009	57+42	South	PP-35 - 1m	Bridge deck	MAT-1B-D	1-1000 W	with Remote Ballast
A-3009	57+44	South	PP-35 + 1m	Bridge deck	MAT-1B-D	1-1000 W	with Remote Ballast
A-3009	57+45	South	PP-35 + 2m	Bridge deck	MAT-1C-D	1-1000 W	with Remote Ballast
A-3009	57+48	South	PP-37 - 2m	Bridge deck	MAT-1A-D	1-1000 W	with Remote Ballast
A-3009	57+49	South	PP-37 - 3m	Bridge deck	MAT-1A-D	1-1000 W	with Remote Ballast
A-3009	57+62.915	South	PP-39 - 1.085m	Crossbeam top	MAT-3-D	1-250 W	with Remote Ballast
A-3009	57+65.085	South	PP-39 + 1.085m	Crossbeam top	MAT-3-D	1-250 W	with Remote Ballast
A-3009	57+68	South	PP-40	Crossbeam side	MAT-3-RC	2-250 W	with Remote Ballast
A-3009	57+74.73	North	PP-42 - 3.3m	Bridge deck	MAT-1A-D	1-1000 W	with Remote Ballast
A-3009	57+76.33	North	PP-42 - 1.7m	Bridge deck	MAT-1A-D	1-1000 W	with Remote Ballast
A-3010	58+12	South	PP-49 - 1m	Bridge deck	MAT-1B-D	1-1000 W	with Remote Ballast
A-3010	58+14	South	PP-49 + 1m	Bridge deck	MAT-1B-D	1-1000 W	with Remote Ballast
A-3010	58+11	South	PP-49 - 2m	Bridge deck	MAT-1C-D	1-1000 W	with Remote Ballast
A-3010	58+06	South	PP-47 + 3m	Bridge deck	MAT-1A-D	1-1000 W	with Remote Ballast
A-3010	58+05	South	PP-47 + 2m	Bridge deck	MAT-1A-D	1-1000 W	with Remote Ballast
A-3010	57+91.915	South	PP-45 - 1.085m	Crossbeam top	MAT-3-D	1-250 W	with Remote Ballast
A-3010	57+94.085	South	PP-45 + 1.085m	Crossbeam top	MAT-3-D	1-250 W	with Remote Ballast
A-3010	57+88	South	PP-44	Crossbeam side	MAT-3-RC	2-250 W	with Remote Ballast
A-3010	57+80.6	North	PP-42 + 2.6m	Bridge deck	MAT-1A-D	1-1000 W	with Remote Ballast
A-3010	57+79.7	North	PP-42 + 1.7m	Bridge deck	MAT-1A-D	1-1000 W	with Remote Ballast

480 V LIGHTING POLE FIXTURE SCHEDULE

Circuit Number	Pole Number	Station	Location: Roadway side	Location: Suspend at Panel Point	Mounting Height (M) (1)	Ltg. Fixture Type	Number/ Wattage	Remarks (Mounting Provisions) (1)
S-1031	1031-1	55+98	South	-	20	MSR-2B-L	3-400 W	Pole mounted
A-1035						MAM-3	1-250 W	
S-1031	1031-2	56+36.18	South	-	20	MSR-2B-L	3-400 W	Pole mounted
A-1035						MAM-3	1-250 W	
S-1031	1031-3	60+09.82	South	-	20	MSR-2-L	2-400 W	Pole mounted
S-1031						MSR-2B-L	3-400 W	
A-1035						MAM-3	1-250 W	
S-1031	1031-4	60+56.18	South	-	20	MSR-2-L	2-400 W	Pole mounted
S-1031						MSR-2B-L	2-400 W	
A-1035						MAM-3	1-250 W	
S-1032	1032-1	61+10	South	-	20	MSR-2-L	2-400 W	Pole mounted
S-1032						MSR-2B-L	2-400 W	
A-1035						MAM-3	1-250 W	
S-1032	1032-2	61+63	South	-	20	MSR-2-L	2-400 W	Pole mounted
S-1032						MSR-2B-L	2-400 W	
A-1035						MAM-3	1-250 W	

LIGHTING FIXTURE TYPE DESIGNATION

Example: MSR-2B-C (See Special provisions for additional information)
MSR = SAS Safety light
-2B = 400 Watts
-C Beam Angles

Location (Letter)		Function (Letter)	
M	SAS	A	Aesthetic light
		S	Safety light

Application (Letter)	
D	Downward flood light
U	Upward flood light
R	Roadway light
T	Pylon flood light
M	Marker light
P	Pylon marker light
B	Bike path light
V	Belvedere light
L	Light pipe

Number/ Lamp Wattage	
1	1000 W
2	400 W
3	250 W
4	175 W
5	100 W
6	50 W

Beam Angles (Letter)
A
B
C

Mounting Type (Letter)	
C	Cable
D	Roadway deck
PB	Pier Base/ Pole mount
RC	Roadway at Cross beam
P	Pole mounted without lower/raiser
L	Pole mounted with lower/raiser

Caltrans Metric

DIST	COUNTY	ROUTE	KILOMETER POST TOTAL PROJECT	SHEET No	TOTAL SHEETS
04	SF	80	13.2/13.9	141 R2	1204

12/19/02
REGISTERED ELECTRICAL ENGINEER DATE

12-6-04
PLANS APPROVAL DATE

REGISTERED PROFESSIONAL ENGINEER — JENS ERLINGSSON No. 8249 Exp. 9/30/06 ELECTRICAL — STATE OF CALIFORNIA

PB POWER, Inc.
A Parsons Brinckerhoff Company
303 Second St., Suite 700N
San Francisco, CA 94107-1317

The State of California or its officers or agents shall not be responsible for the accuracy or completeness of electronic copies of this plan sheet.

Caltrans now has a web site! To get to the web site, go to http://www.dot.ca.gov

SHEET NOTE:

(1) Pole mounted lighting fixture 12 m and higher is provided with lowering device.

NOTES:

1. For Roadway Level Lighting Wiring Diagrams see sheets E-54 thru E-55.
2. For Roadway Level Lighting Conduit Plan see sheets E-46 thru E-51.
3. For type of Roadway poles. Refer to Sheets E-85 thru E-89.

REGISTERED PROFESSIONAL ENGINEER — FADI WALIEDDINE No. 11465 Exp. 12/31/2009 ELECTRICAL — STATE OF CALIFORNIA

FOR REVISION ONLY

REQUEST FOR INFORMATION NOT ADDRESSED IN THIS CCO REMAIN IN FORCE

MARK	DATE	DESCRIPTIONS	BY	CH'D	CCO#
		REVISIONS			
2	10/10/08	LIGHTING REVISIONS.	SPO MP	RG ES	43
1	02/19/08	ELECTRICAL MODIFICATIONS.	MP EL	RR	42

CONTRACT CHANGE ORDER NO. 43 SO
SHEET 13 OF 42

DETAILS
SAS SUPERSTRUCTURE ROADWAY WESTBOUND LIGHTING SCHEDULES

E-82

DESIGN OVERSIGHT	CALCULATED/ DESIGNED BY	DATE	REVISED BY	DATE REVISED
BEHZAD GOLEMOHAMMADI	JP	8/01	BL	12/01
	CHECKED BY			

STATE OF CALIFORNIA - DEPARTMENT OF TRANSPORTATION
Caltrans

LAST REVISION 00-00-00 — DATE PLOTTED => 10/10/2008 — TIME PLOTTED => 7:59:17 AM

FOR REDUCED PLANS ORIGINAL SCALE IS IN MILLIMETERS 0 20 40 60 80

DGN FILE =>T:\13103\MS\pse\SAS Struc\CCO\SAS CC043\2008-10-10_Issued for Submittal\04-0120F1_0141R02.dgn
USERNAME =>garciar

CU 04251 | EA 0120F1

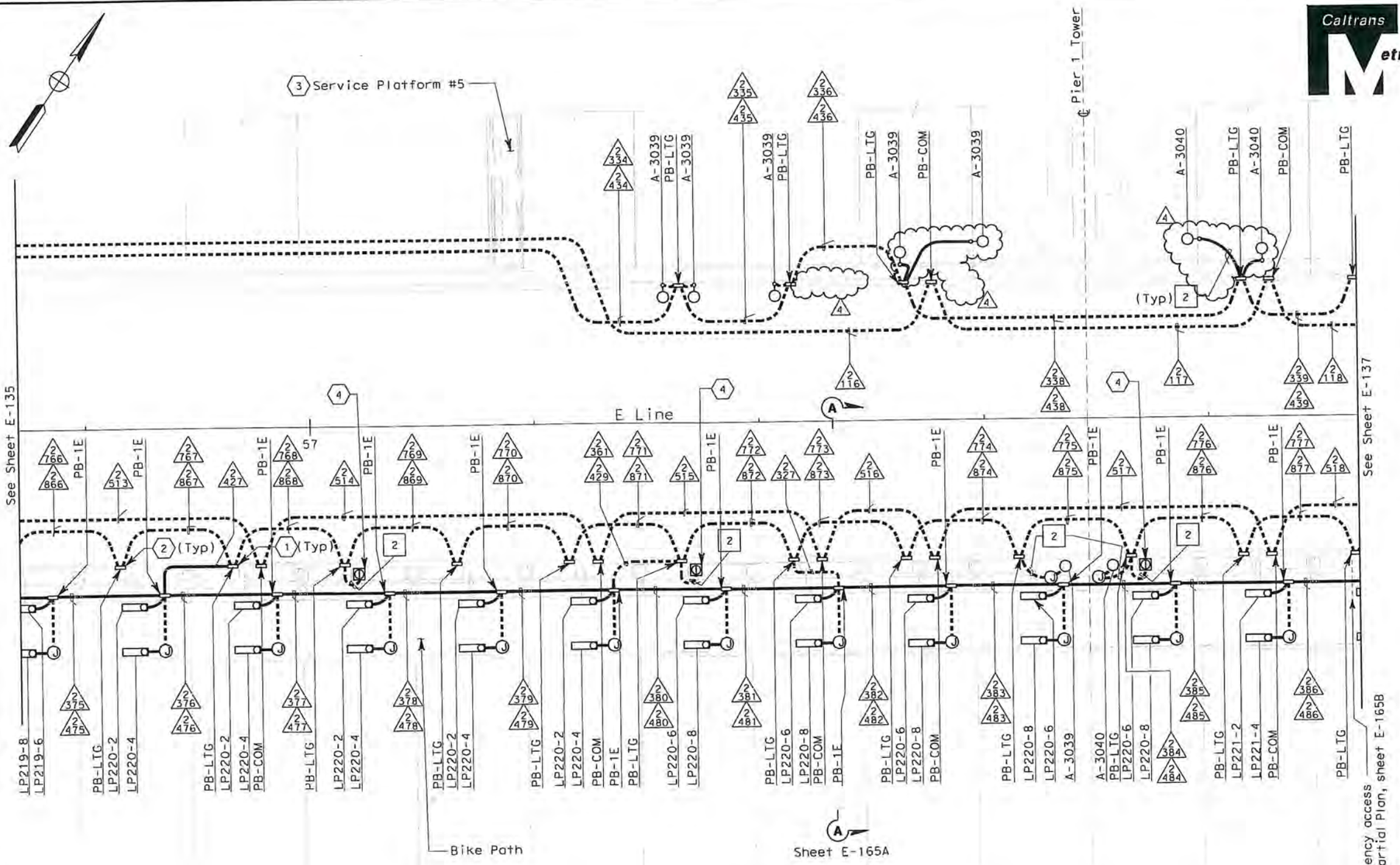

SAS SUPERSTRUCTURE CONDUIT - PLAN

DIST	COUNTY	ROUTE	KILOMETER POST TOTAL PROJECT	SHEET No	TOTAL SHEETS
04	SF	80	13.2/13.9	189 R4	1204

James Erlingsson 12/19/02
REGISTERED ELECTRICAL ENGINEER DATE

12-6-04
PLANS APPROVAL DATE

REGISTERED PROFESSIONAL ENGINEER — JENS ERLINGSSON No. 8249 Exp. 9/30/06 ELECTRICAL — STATE OF CALIFORNIA

PB POWER, Inc.
A Parsons Brinckerhoff Company
303 Second St., Suite 700N
San Francisco, CA 94107-1317

The State of California or its officers or agents shall not be responsible for the accuracy or completeness of electronic copies of this plan sheet.

Caltrans now has a web site! To get to the web site, go to: http://www.dot.ca.gov

SHEET NOTES:

1. Conduit from barrier pullbox or other equipment down into Girder Box, see sheet E-182.
2. For conduit to tower and suspension cable lighting see sheet E-227.
3. Contractor shall furnish and install UP-205 and LP-220 per sheet E-72. For complete scope of work on platform and other related work not shown on this sheet, see Electrical Special Provisions.
4. Roadway Barrier Receptacle, see Detail 1, sheet E-162.

NOTES:

1. References:
   - For typical details and locations of conduit connections to light poles, barrier outlet boxes, call boxes, overhead sign lighting, CMS, CCTV and MVDS, see sheets E-160 thru E-162 and E-169.
   - TOS equipment is shown for conduit routing only. For typical details of TOS controller and devices, see sheets E-344 through E-357.
   - For types of pull boxes, splice boxes and enclosures, see sheet E-169.
   - For circuit and conduit/cable tray schedules, see sheets starting at E-401.
2. For Roadway Level Call Boxes, refer to sheet E-396.
3. For Roadway level, Bike Path and Belvedere Lighting Fixture Schedules, see sheets E-146, E-147 and E-165.
4. For Roadway level and Bike Path Call Box Schedule, see sheet E-397.
5. For number of lighting fixtures (main tower lights) see lighting schedule sheets E-271 and E-272.
6. All conduits and fittings routed exposed between the Bike Path and the roadway shall be galvanized rigid steel, PVC coated.
7. See sheets E-160 thru E-165 for conduit locations.

REGISTERED PROFESSIONAL ENGINEER — FADI WALIEDDINE No. 11465 Exp. 12/31/2009 ELECTRICAL — STATE OF CALIFORNIA

FOR REVISION ONLY

THIS PLAN ACCURATE FOR ELECTRICAL WORK ONLY.

REQUEST FOR INFORMATION NOT ADDRESSED IN THIS CCO REMAIN IN FORCE					
4	10/01/08	LIGHTING REVISIONS	RY AG	RG FW	43
3	10/01/08	BIKE PATH PLATFORM EMERGENCY ACCESS	TW	RG FW	99
2	03/04/08	BARRIER MODIFICATIONS	JS BM	RG SE	44
1	02/19/08	ELECTRICAL MODIFICATIONS	MP EL	RR	42
MARK	DATE	DESCRIPTIONS REVISIONS	BY	CH'D	CCO#

CONTRACT CHANGE ORDER NO. 43 50
SHEET 14 OF 42

SAS SUPERSTRUCTURE ROADWAY EASTBOUND
LIGHTING AND ELECTRICAL SYSTEMS

SCALE 1:200

E-136

STATE OF CALIFORNIA - DEPARTMENT OF TRANSPORTATION	DESIGN OVERSIGHT	BEHZAD GOLEMOHAMMADI
Caltrans	CALCULATED/ DESIGNED BY	EDC
	CHECKED BY	CYF

DATE	REVISED BY	DATE REVISED
08/02		08/02

LAST REVISION 00-00-00 — DATE PLOTTED => 10/16/2008 — TIME PLOTTED => 3:41:04 PM

FOR REDUCED PLANS ORIGINAL SCALE IS IN MILLIMETERS 0 20 40 60 80

DGN FILE =>T:\13103\WS\pse\SAS Struc\CCO\SAS CC043\2008-10-10_Issued for Submittal\04-0120f1_0189R04.dgn
USERNAME =>garclar

CU 04251 EA 0120F1

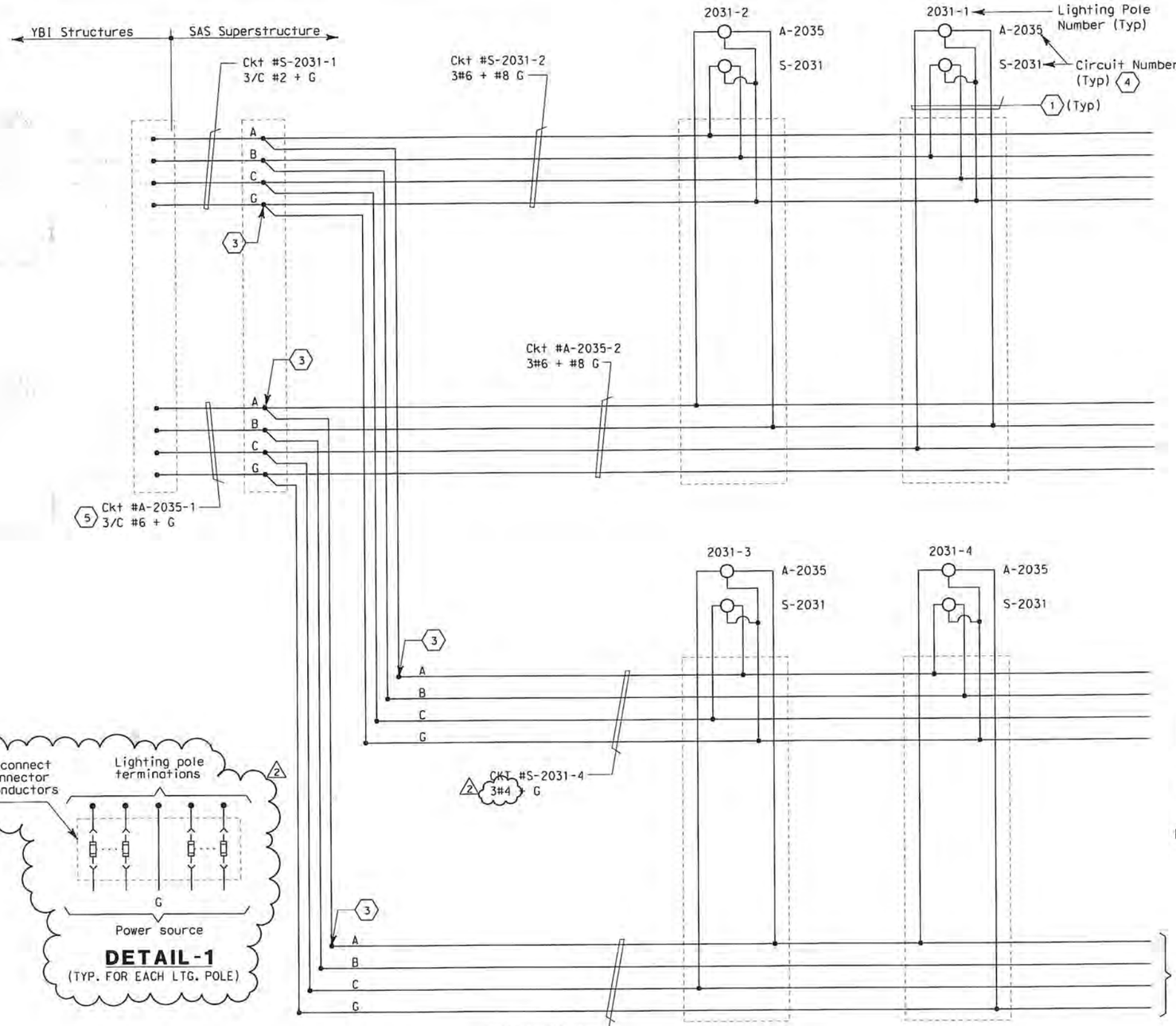

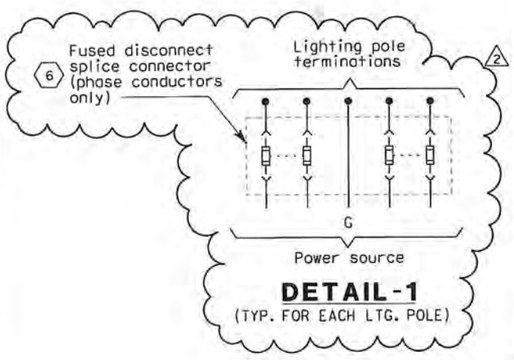

480 V LIGHTING POLE 2

DIST	COUNTY	ROUTE	KILOMETER POST TOTAL PROJECT	SHEET No	TOTAL SHEETS
04	SF	80	13.2/13.9	194 R2	1204

Jens Erlingsson 12/19/02
REGISTERED ELECTRICAL ENGINEER DATE

12-6-04
PLANS APPROVAL DATE

REGISTERED PROFESSIONAL ENGINEER — JENS ERLINGSSON No. 8249 Exp. 9/30/06 ELECTRICAL — STATE OF CALIFORNIA

PB POWER, Inc.
A Parsons Brinckerhoff Company
303 Second St., Suite 700N
San Francisco, CA 94107-1317

The State of California or its officers or agents shall not be responsible for the accuracy or completeness of electronic copies of this plan sheet.

Caltrans now has a web site! To get to the web site, go to http://www.dot.ca.gov

SHEET NOTES:

1. ~~#4N0 - #10 G~~ single conductors. See Detail 1. 2
2. Deleted.
3. Conductors spliced inside junction box located inside girder.
4. For Main Span Roadway Eastbound lighting schedule, see sheet E-168.
5. The Contractor shall extend and coil 5 meters of cable in manhole 25. All cables shall be tagged with circuit numbers as shown.
2 6. Install 10A (ckt S-2031) and 5A (ckt A-2035) in-line fuse inside each light pole.

NOTES:

1. Use multi-conductor cable if circuit is routed via cable trays.
2. References:
   - For LVCC-B single line diagrams, see sheets E-32 to E-34
   - For circuit and conduit/cable tray schedules, see sheets starting at E-401.
3. For SAS Superstructure Roadway Eastbound 480 V Roadway Lighting, see sheets E-135 thru E-140.

REGISTERED PROFESSIONAL ENGINEER — FADI WALIEDDINE No. 11465 Exp. 12/31/2009 ELECTRICAL — STATE OF CALIFORNIA

FOR REVISION ONLY

REQUEST FOR INFORMATION NOT ADDRESSED IN THIS CCO REMAIN IN FORCE

MARK	DATE	DESCRIPTIONS	BY	CH'D	CCO#
		REVISIONS			
1	02/19/08	ELECTRICAL MODIFICATIONS	MP EL	RR	42
2	10/10/08	LIGHTING REVISIONS	RY AG	RG FW	43

CONTRACT CHANGE ORDER NO. 43 SO
SHEET 15 OF 42

DETAILS
SAS SUPERSTRUCTURE ROADWAY EASTBOUND 480 V ROADWAY LIGHTING WIRING DIAGRAM

NO SCALE

E-143

STATE OF CALIFORNIA - DEPARTMENT OF TRANSPORTATION	DESIGN OVERSIGHT	CALCULATED/ DESIGNED BY	CHECKED BY	DATE	REVISED BY	DATE REVISED
Caltrans	BEHZAD GOLEMOHAMMADI	JP	BL	09/01	11/01	

LAST REVISION 00-00-00 — DATE PLOTTED => 10/16/2008 — TIME PLOTTED => 10:43:43 AM

FOR REDUCED PLANS ORIGINAL SCALE IS IN MILLIMETERS 0 20 40 60 80

DGN FILE =>T:\13103\MS\pse\SAS Struc\CCO\SAS CC043\2008-10-10_Issued for Submittal\04-0120f1_0194R02.dgn
USERNAME =>garciar

CU 04251 EA 0120F1

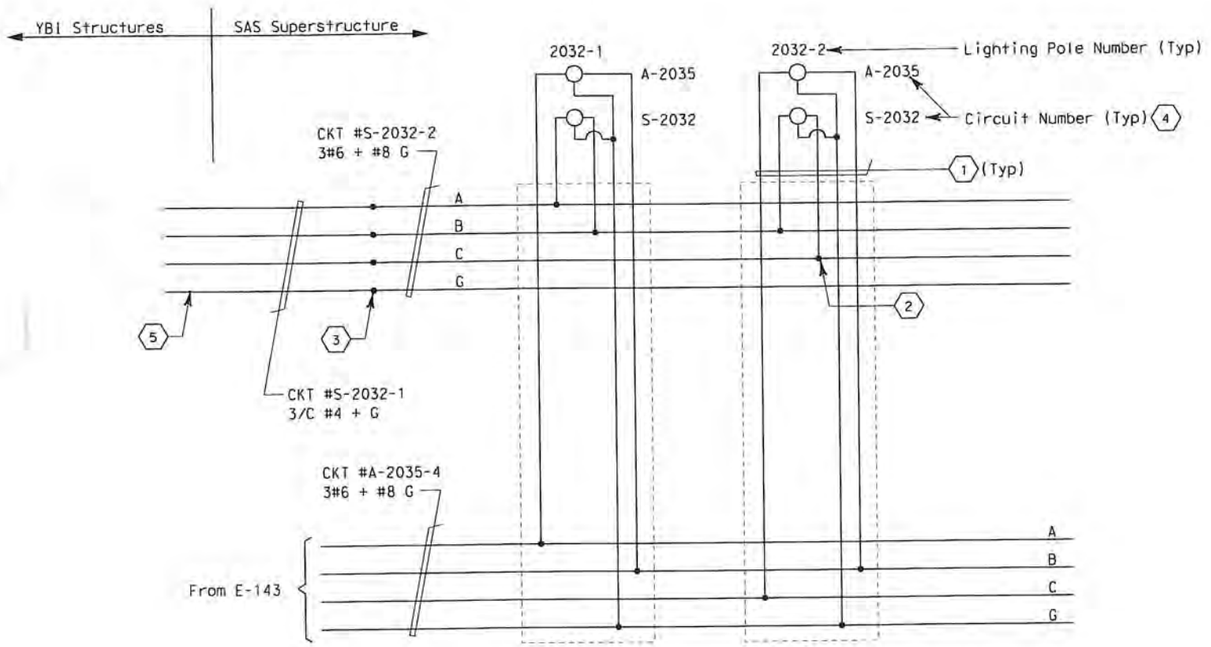

480 V LIGHTING POLE

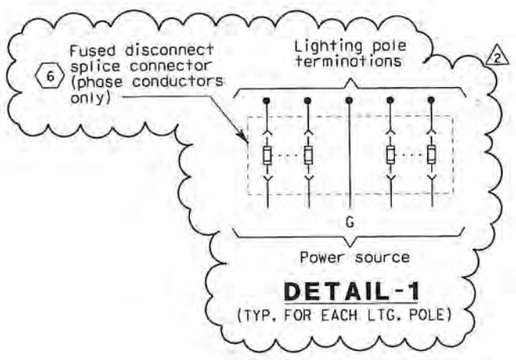

DETAIL-1
(TYP. FOR EACH LTG. POLE)

REGISTERED PROFESSIONAL ENGINEER
FADI WALIEDDINE
No. 11465
Exp. 12/31/2009
ELECTRICAL
STATE OF CALIFORNIA

FOR REVISION ONLY

REQUEST FOR INFORMATION NOT ADDRESSED IN THIS CCO REMAIN IN FORCE					
2	10/10/08	LIGHTING REVISIONS	RY AG	RG FW	43
1	02/19/08	ELECTRICAL MODIFICATIONS	MP EL	RR	42
MARK	DATE	DESCRIPTIONS REVISIONS	BY	CH'D	CCO#

CONTRACT CHANGE ORDER NO. 43 SO
SHEET 16 OF 42

Caltrans Metric

DIST	COUNTY	ROUTE	KILOMETER POST TOTAL PROJECT	SHEET No	TOTAL SHEETS
04	SF	80	13.2/13.9	195 R2	1204

Jens Erlingsson 12/19/02
REGISTERED ELECTRICAL ENGINEER DATE

12-6-04
PLANS APPROVAL DATE

REGISTERED PROFESSIONAL ENGINEER
JENS ERLINGSSON
No. 8249
Exp. 9/30/06
ELECTRICAL
STATE OF CALIFORNIA

PB POWER, Inc.
A Parsons Brinckerhoff Company
303 Second St., Suite 700N
San Francisco, CA 94107-1317

The State of California or its officers or agents shall not be responsible for the accuracy or completeness of electronic copies of this plan sheet.

Caltrans now has a web site! To get to the web site, go to http://www.dot.ca.gov

SHEET NOTES:

2 See Detail 1.

1. 4#10 + #10 G single conductors.
2. Tape and coil conductors spliced inside pull box PB-LTG. (Pole #2032-2 only).
3. Conductors spliced inside junction box located inside girder.
4. For SAS Superstructure Roadway Eastbound lighting schedule, see sheet E-168.
5. The Contractor shall extend and coil 5 meters of cable in manhole 25. All cables shall be tagged with circuit numbers as shown.
2 6. Install 10A (ckt S-2032) and 5A (ckt A-2035) in-line fuse inside each light pole.

NOTES:

1. Use multi-conductor cable if circuit is routed via cable trays.
2. References:
   - For LVCC-B single line diagrams, see sheets E-32 to E-34
   - For pull box schedules, see sheet E-169
   - For circuit and conduit/cable tray schedules, see sheets starting at E-401.
3. For SAS Superstructure Roadway Eastbound 480 V Roadway Lighting, see sheets E-139 and E-140.

DETAILS
SAS SUPERSTRUCTURE ROADWAY EASTBOUND 480 V ROADWAY LIGHTING WIRING DIAGRAM

NO SCALE

E-144

STATE OF CALIFORNIA - DEPARTMENT OF TRANSPORTATION
Caltrans
DESIGN OVERSIGHT
BEHZAD GOLEMOHAMMADI

CALCULATED/ DESIGNED BY	CHECKED BY	DATE	REVISED BY	DATE REVISED
JP	BL	09/01		11/01

LAST REVISION 00-00-00
DATE PLOTTED => 10/10/2008
TIME PLOTTED => 8:02:58 AM

FOR REDUCED PLANS ORIGINAL SCALE IS IN MILLIMETERS 0 20 40 60 80

DGN FILE =>T:\13103\MS\pse\SAS Struc\CCO\SAS CC043\2008-10-10_Issued for Submittal\04-0120F1_0195R02.dgn
USERNAME =>garcior
CU 04251
EA 0120F1

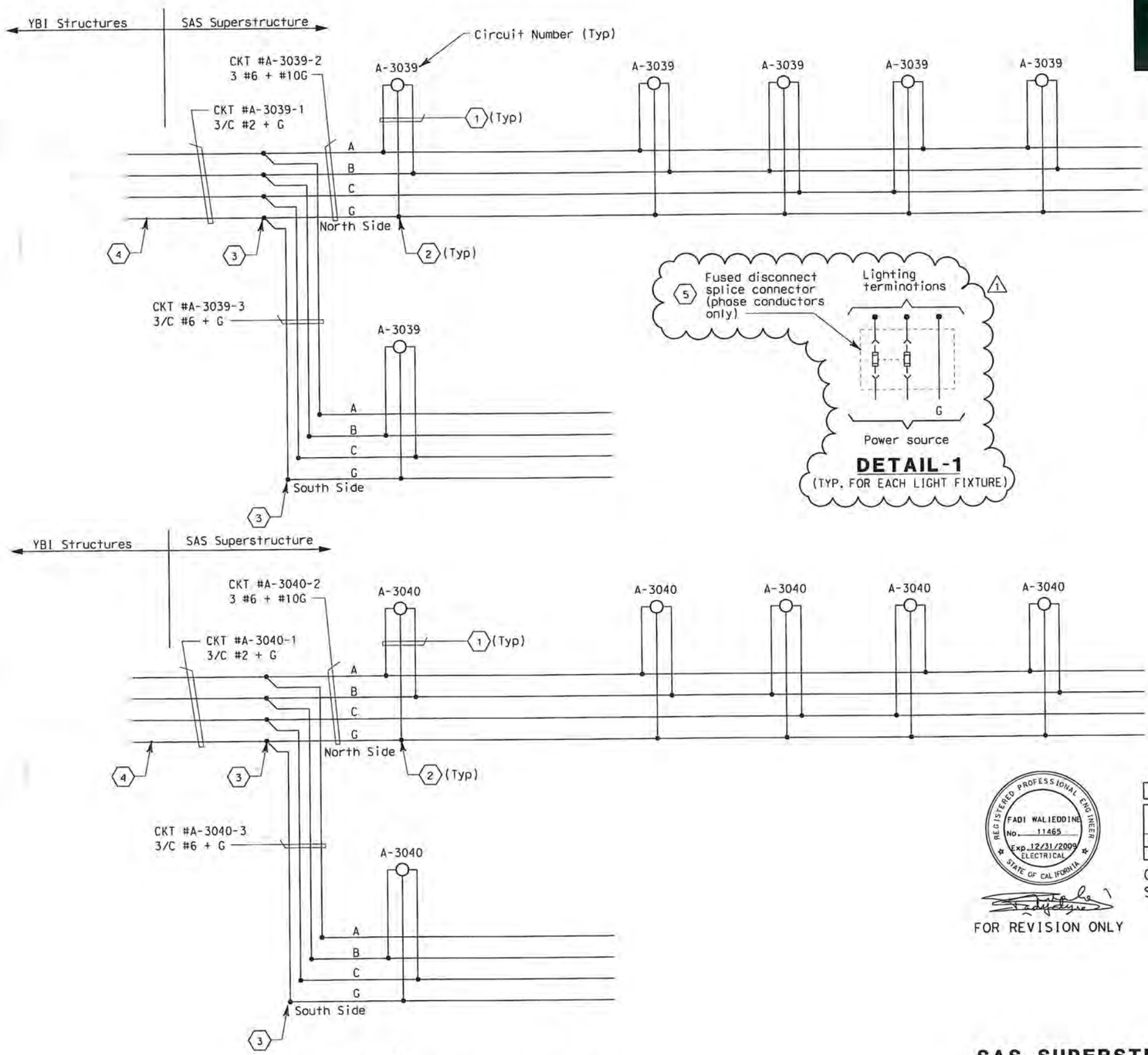

480 V MAIN (1) TOWER LIGHTING

SHEET NOTES:

(1) 2#10 + #10 G single conductors. (1) See Detail 1.

(2) Conductors spliced inside pull box PB-LTG.

(3) Conductors spliced inside junction box located inside girder.

(4) The Contractor shall extend and coil 5 meters of cable in manhole 25. All cables shall be tagged with circuit numbers as shown.

(1) (5) Install 10A (1000W fixture) and 5A (250W fixture) in-line fuse per light fixture, inside the remote ballast housing.

NOTES:

1. Use multi-conductor cable if circuit is routed via cable trays.
2. References:
   - For LVCC-B single line diagrams, see sheets E-32 to E-34.
   - For pull box schedules, see sheet E-169.
   - For circuit and conduit/cable tray schedules, see sheets starting at E-401.
3. For lighting schedule see sheet E-168.

FOR REVISION ONLY

REQUEST FOR INFORMATION NOT ADDRESSED IN THIS CCO REMAIN IN FORCE					
MARK	DATE	DESCRIPTIONS	BY	CH'D	CCO#
		REVISIONS			
1	10/10/08	LIGHTING REVISIONS	RY AG	RG FW	43

CONTRACT CHANGE ORDER NO. 43 SO
SHEET 17 OF 42

DETAILS
SAS SUPERSTRUCTURE ROADWAY EASTBOUND
480 V ROADWAY LIGHTING WIRING DIAGRAM

NO SCALE

E-145

DIST	COUNTY	ROUTE	KILOMETER POST TOTAL PROJECT	SHEET No	TOTAL SHEETS
04	SF	80	13.2/13.9	196 RT	1204

REGISTERED ELECTRICAL ENGINEER — DATE 12/19/02

12-6-04
PLANS APPROVAL DATE

REGISTERED PROFESSIONAL ENGINEER — JENS ERLINGSSON No. 8249 Exp. 9/30/06 ELECTRICAL — STATE OF CALIFORNIA

PB POWER, Inc.
A Parsons Brinckerhoff Company
303 Second St., Suite 700N
San Francisco, CA 94107-1317

The State of California or its officers or agents shall not be responsible for the accuracy or completeness of electronic copies of this plan sheet.

Caltrans now has a web site! To get to the web site, go to http://www.dot.ca.gov

REGISTERED PROFESSIONAL ENGINEER — FADI WALIEDDINE No. 11465 Exp. 12/31/2009 ELECTRICAL — STATE OF CALIFORNIA

REVISED BY	DATE REVISED
JP	09/01
BL	11/01

CALCULATED/DESIGNED BY
CHECKED BY

STATE OF CALIFORNIA - DEPARTMENT OF TRANSPORTATION
Caltrans

DESIGN OVERSIGHT
BEHZAD GOLEMOHAMMADI

DATE PLOTTED => 10/10/2008
TIME PLOTTED => 8:04:01 AM
LAST REVISION 00-00-00

FOR REDUCED PLANS ORIGINAL SCALE IS IN MILLIMETERS 0 20 40 60 80

DGN FILE =>T:\13103\MS\pse\SAS Struc\CCO\SAS CC043\2008-10-10_Issued for Submittal\04-0120F1_0196R01.dgn
USERNAME =>garcior

CU 04251 | EA 0120F1

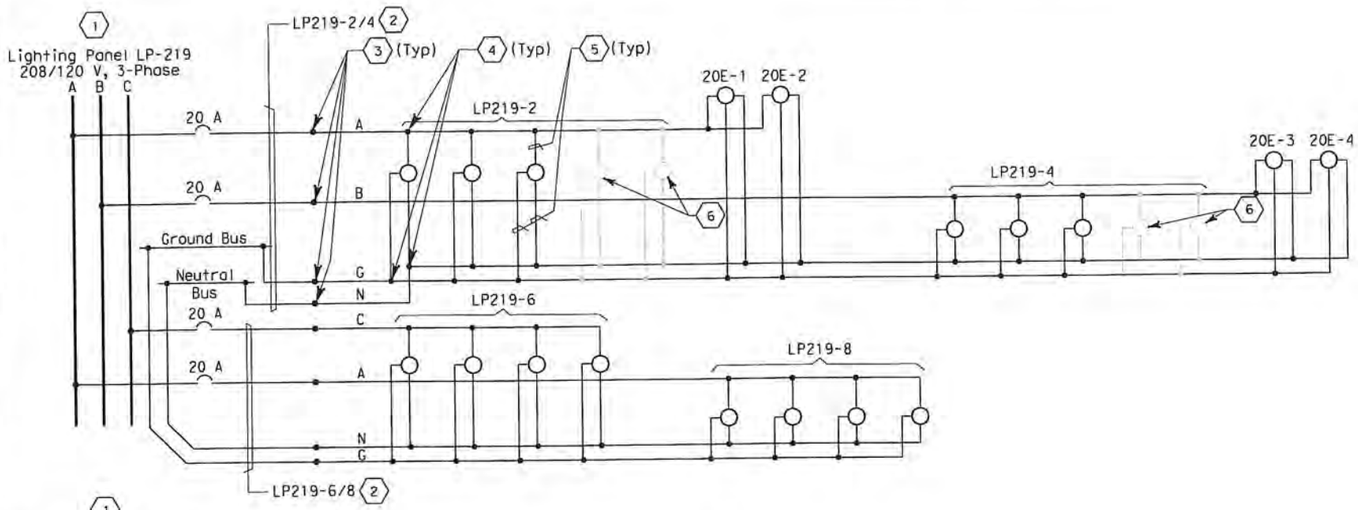

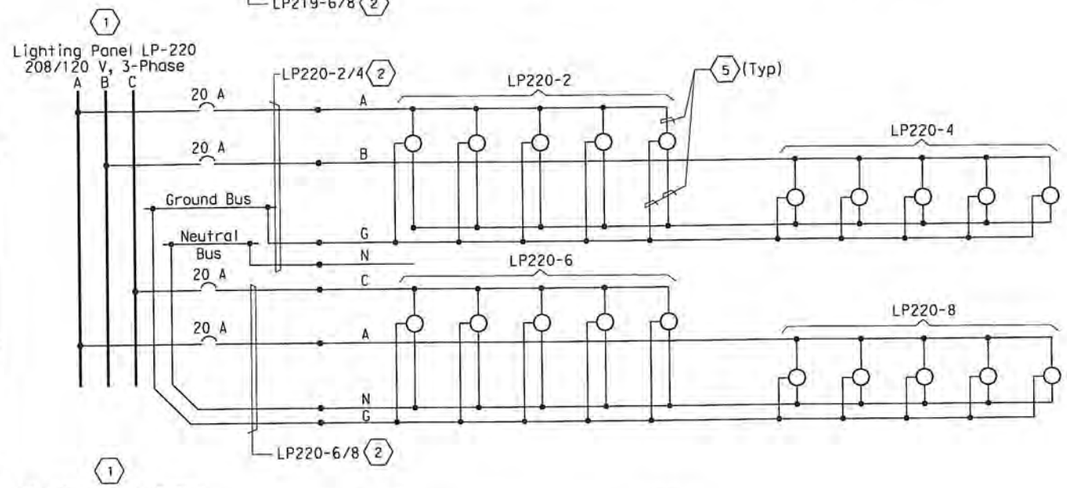

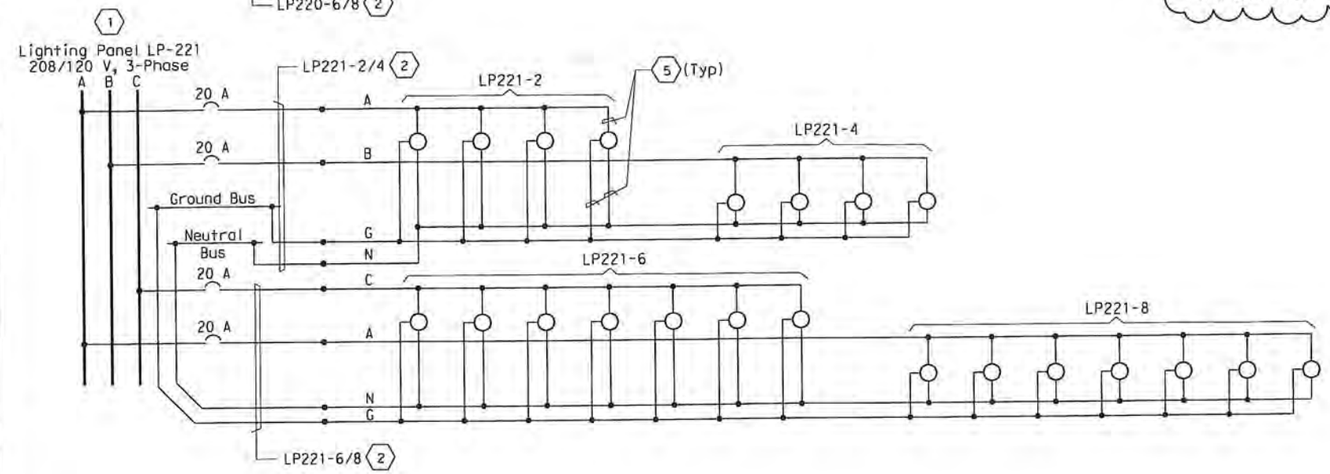

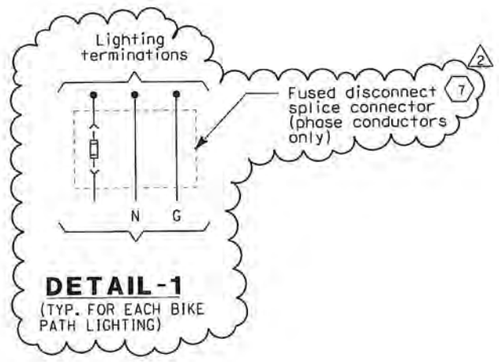

DETAIL-1
(TYP. FOR EACH BIKE PATH LIGHTING)

Caltrans Metric

DIST	COUNTY	ROUTE	KILOMETER POST TOTAL PROJECT	SHEET No	TOTAL SHEETS
04	SF	80	13.2/13.9	197 R2	1204

12/19/02
REGISTERED ELECTRICAL ENGINEER DATE

12-6-04
PLANS APPROVAL DATE

REGISTERED PROFESSIONAL ENGINEER — JENS ERLINGSSON No. 6249 Exp. 9/30/06 ELECTRICAL — STATE OF CALIFORNIA

PB POWER, Inc.
A Parsons Brinckerhoff Company
303 Second St., Suite 700N
San Francisco, CA 94107-1317

The State of California or its officers or agents shall not be responsible for the accuracy or completeness of electronic copies of this plan sheet.

Caltrans now has a web site! To get to the web site, go to http://www.dot.ca.gov

SHEET NOTES:

1. For lighting panel schedule LP-219, LP-220, LP-221, see sheets E-155 and E-156.
2. Lighting feeder cable is 3/C #6 + G.
3. Conductors spliced inside PB-LTG located in barrier.
4. Conductors spliced inside PB-LTG (PB-9A) located next to bike path.
5. 2#10 + #10 G single conductors. See Detail 1. (2)
6. Railing lights are contractor furnished and installed by others.
7. (2) Install 5A in-line fuse per light fixture, inside the light pole access box for 20E-1 through 20E-4 and inside PB-1E for LP219-2 through LP221-8.

NOTE:

1. For circuit and conduit/cable tray schedules, see sheets starting at E-401.

REGISTERED PROFESSIONAL ENGINEER — FADI WALIEDDINE No. 11465 Exp. 12/31/2009 ELECTRICAL — STATE OF CALIFORNIA

FOR REVISION ONLY

REQUEST FOR INFORMATION NOT ADDRESSED IN THIS CCO REMAIN IN FORCE					
2	10/10/08	LIGHTING REVISIONS	RY AG	RG FW	43
1	02/19/08	ELECTRICAL MODIFICATIONS	MP EL	RR	42
MARK	DATE	DESCRIPTIONS (REVISIONS)	BY	CH'D	CCO#

CONTRACT CHANGE ORDER NO. 43 SO
SHEET 18 OF 42

DETAILS
SAS SUPERSTRUCTURE ROADWAY EASTBOUND
120 V BIKE PATH LIGHTING WIRING DIAGRAMS
NO SCALE

E-146

STATE OF CALIFORNIA - DEPARTMENT OF TRANSPORTATION
Caltrans
DESIGN OVERSIGHT: BEHZAD GOLEMOHAMMADI
CALCULATED/DESIGNED BY: JP
CHECKED BY: BL
DATE: 9/01 REVISED BY
11/01 DATE REVISED
LAST REVISION: 00-00-00
DATE PLOTTED => 10/10/2008
TIME PLOTTED => 8:05:06 AM

FOR REDUCED PLANS ORIGINAL SCALE IS IN MILLIMETERS 0 20 40 60 80

DGN FILE =>T:\I3103\MS\pse\SAS Struc\CCO\SAS CC043\2008-10-10_Issued for Submittal\04-0120F1_0197R02.dgn
USERNAME =>garciar
CU 04251
EA 0120F1

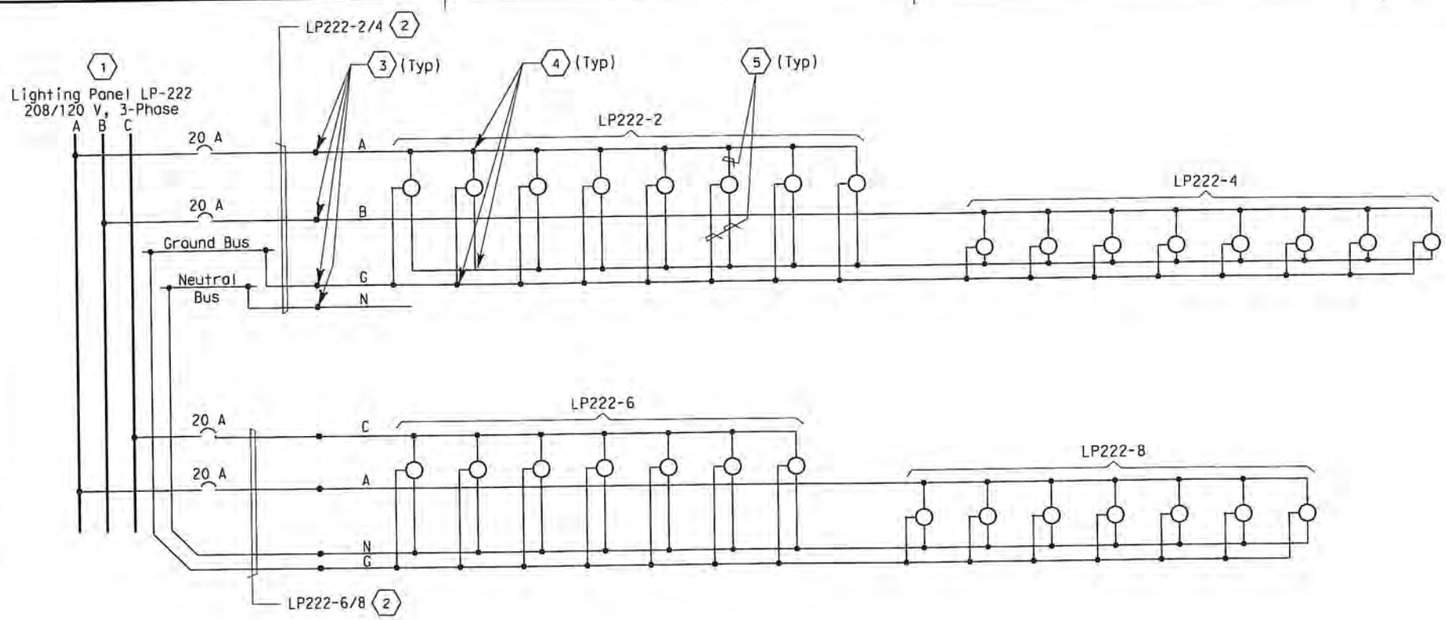

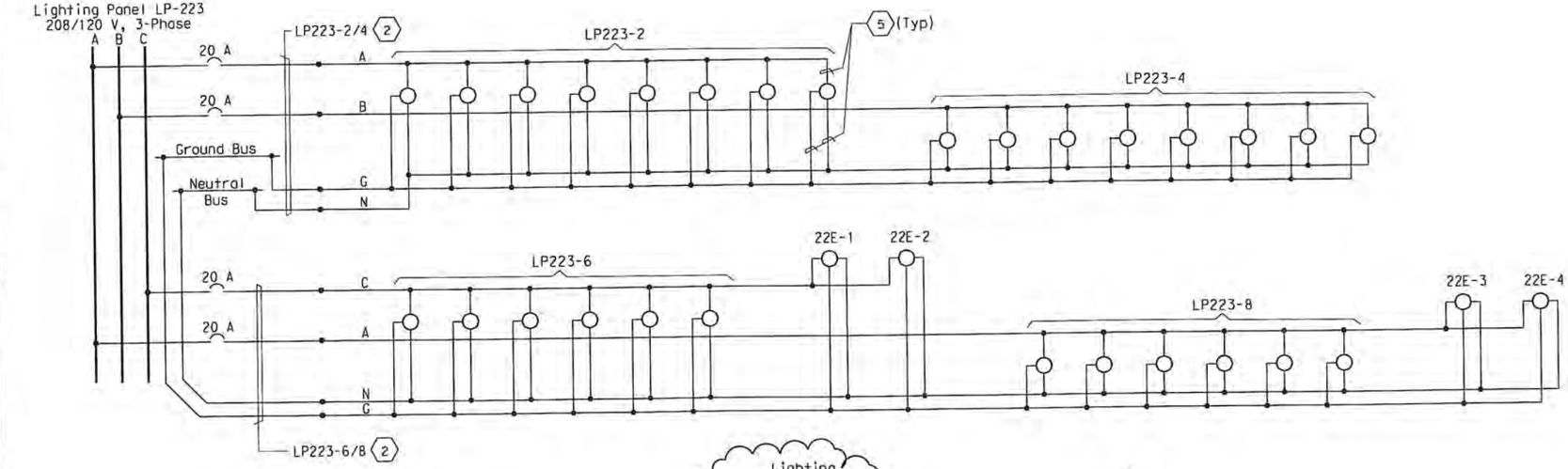

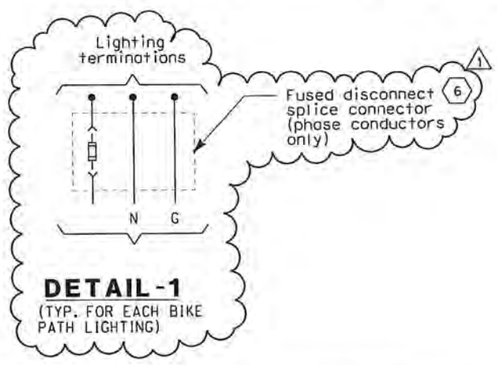

DETAIL-1
(TYP. FOR EACH BIKE PATH LIGHTING)

Caltrans Metric

DIST	COUNTY	ROUTE	KILOMETER POST TOTAL PROJECT	SHEET No	TOTAL SHEETS
04	SF	80	13.2/13.9	198 R1	1204

James Erlingsson 12/19/02
REGISTERED ELECTRICAL ENGINEER DATE

12-6-04
PLANS APPROVAL DATE

REGISTERED PROFESSIONAL ENGINEER
JENS ERLINGSSON
No. 8249
Exp. 9/30/06
ELECTRICAL
STATE OF CALIFORNIA

PB POWER, Inc.
A Parsons Brinckerhoff Company
303 Second St., Suite 700N
San Francisco, CA 94107-1317

The State of California or its officers or agents shall not be responsible for the accuracy or completeness of electronic copies of this plan sheet.

Caltrans now has a web site! To get to the web site, go to Http://www.dot.ca.gov

SHEET NOTES:

1. For lighting panel schedule LP-222, LP-223, see sheet E-157.
2. Lighting feeder cable is 3/C #6 + G.
3. Conductors spliced inside PB-LTG (PB-9A) located in barrier.
4. Conductors spliced inside PB-LTG located next to bike path.
5. 2 #10 + #10 G single conductors. See Detail 1.
6. Install 5A in-line fuse per light fixture, inside PB-1E.

NOTE:

1. For circuit and conduit/cable tray schedules, see sheets starting at E-401.

REGISTERED PROFESSIONAL ENGINEER
FADI WALIEDDINE
No. 11465
Exp. 12/31/2009
ELECTRICAL
STATE OF CALIFORNIA

FOR REVISION ONLY

REQUEST FOR INFORMATION NOT ADDRESSED IN THIS CCO REMAIN IN FORCE

MARK	DATE	DESCRIPTIONS / REVISIONS	BY	CH'D	CCO#
1	10/10/08	LIGHTING REVISIONS	RY AG	RG FW	43

CONTRACT CHANGE ORDER NO. 4350
SHEET 19 OF 42

DETAILS
SAS SUPERSTRUCTURE ROADWAY EASTBOUND
120 V BIKE PATH LIGHTING WIRING DIAGRAMS

NO SCALE

E-147

REVISED BY	DATE REVISED
KG	11/01
AB	12/01

CALCULATED/DESIGNED BY
CHECKED BY

DESIGN OVERSIGHT
BEHZAD GOLEMOHAMMADI

STATE OF CALIFORNIA - DEPARTMENT OF TRANSPORTATION
Caltrans

LAST REVISION 00-00-00
DATE PLOTTED => 10/10/2008
TIME PLOTTED => 8:05:43 AM

FOR REDUCED PLANS ORIGINAL SCALE IS IN MILLIMETERS 0 20 40 60 80

DGN FILE =>T:\13103\MS\pse\SAS Struc\CCO\SAS CC043\2008-10-10_Issued for Submittal\04-0120F1_0198R01.dgn
USERNAME =>garciar

CU 04251 EA 0120F1

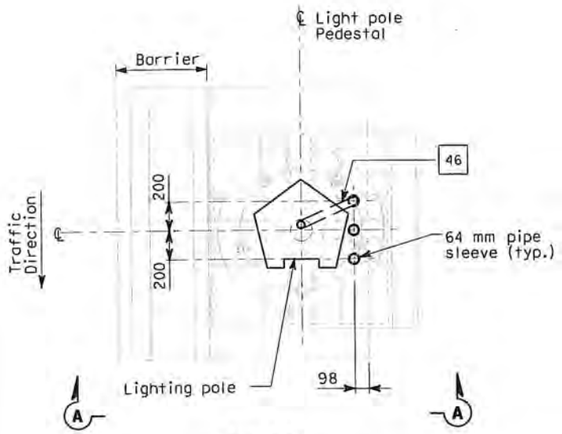

PLAN

CONDUIT STUB-UP PLAN FOR ROADWAY
LIGHTING ON A METAL BASE
SCALE 1:20

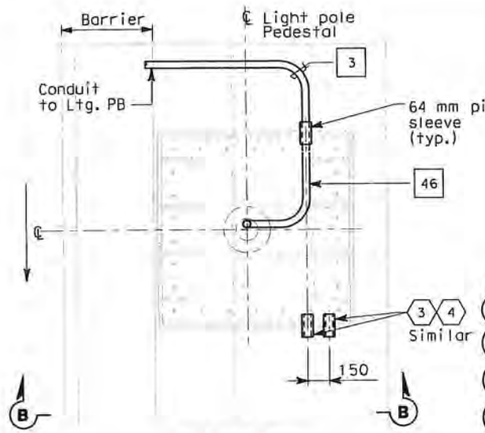

PLAN

CONDUIT STUB-UP PLAN FOR ROADWAY
LIGHTING ON A METAL BASE
AT PIER E2 ONLY
SCALE 1:20

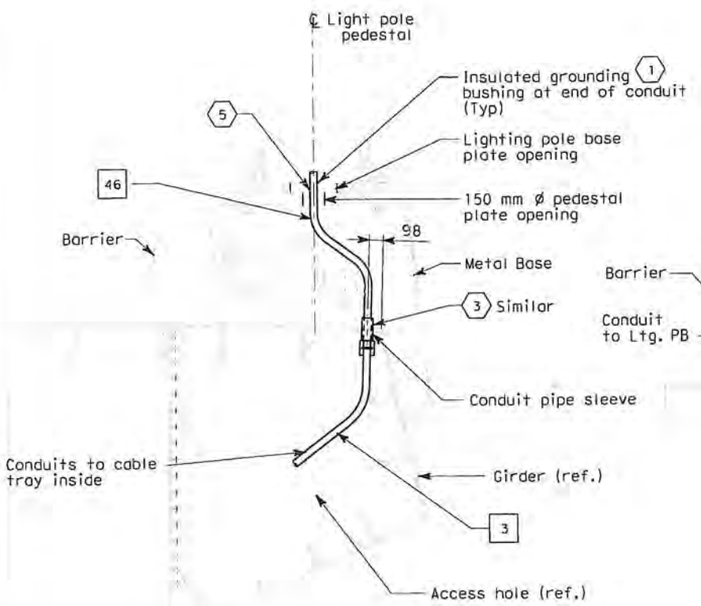

SECTION A-A

LIGHT POLE METAL PEDESTAL
CONDUIT TYPICAL INSTALLATION
SCALE 1:20

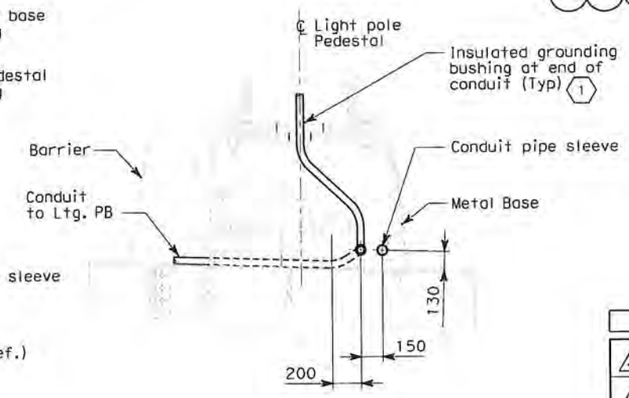

SECTION B-B

SCALE 1:20

Caltrans Metric

DIST	COUNTY	ROUTE	KILOMETER POST TOTAL PROJECT	SHEET No.	TOTAL SHEETS
04	SF	80	13.2/13.9	208 R4	1204

Jens Erlingsson 12/19/02
REGISTERED ELECTRICAL ENGINEER DATE

12-6-04
PLANS APPROVAL DATE

REGISTERED PROFESSIONAL ENGINEER
JENS ERLINGSSON
No. 6249
Exp. 9/30/06
ELECTRICAL
STATE OF CALIFORNIA

PB POWER, Inc.
A Parsons Brinckerhoff Company
303 Second St., Suite 700N
San Francisco, CA 94107-1317

The State of California or its officers or agents shall not be responsible for the accuracy or completeness of electronic copies of this plan sheet.

Caltrans now has a web site! To get to the web site, go to http://www.dot.ca.gov

SHEET NOTES:

1. Bond grounding bushing to ground lug of lighting pole with #6 bare copper wire.
2. Deleted.
3. See Utility Detail No. 1 (Sheet No. 965 of 1204) for conduit penetration through girder plate and lighting pole metal base. The Contractor shall install sealant between the sleeve and conduit to prevent water or moisture from passing inside the sleeve.
4. Cap spare sleeves for future use where noted.
5. Ensure that the maximum of three conduits passing through the 150 mm ø pedestal plate opening are separated as much as possible from each other.

NOTES:

1. References:
   - For lighting pole schedule, see sheet E-82.
   - For location of pull boxes inside girder, see sheets E-96 thru E-101.
   - For luminaire support details, see structural sheets.
2. Roadway Barrier Receptacle, see Detail 1, sheet E-68.
3. For conduit and pull box details in steel barrier, see drawings E-160 and E-160A.

REGISTERED PROFESSIONAL ENGINEER
FADI WALIEDDINE
No. 11465
Exp. 12/31/2009
ELECTRICAL
STATE OF CALIFORNIA

FOR REVISION ONLY

REQUEST FOR INFORMATION NOT ADDRESSED IN THIS CCO REMAIN IN FORCE

MARK	DATE	DESCRIPTIONS	BY	CH'D	CCO#
		REVISIONS			
4	10/10/08	LIGHTING REVISIONS	RY AG	RG FW	43
3	03/04/08	BARRIER MODIFICATIONS	JS BM	SE RG	44
2	02/19/08	ELECTRICAL MODIFICATIONS	MP EL RG	RR	42
1	10/16/06	REVISED SHEET NOTES	LR	MG	11

CONTRACT CHANGE ORDER NO. 43 SO
SHEET 20 OF 42

DETAILS
SAS SUPERSTRUCTURE ROADWAY EASTBOUND CONDUIT LOCATIONS

SCALE AS NOTED

E-161

STATE OF CALIFORNIA - DEPARTMENT OF TRANSPORTATION
Caltrans
DESIGN OVERSIGHT: BEHZAD GOLEMOHAMMADI
CALCULATED/DESIGNED BY: KG
CHECKED BY: AB
DATE: 10/01
REVISED BY: II/01
DATE REVISED: 00-00-00

LAST REVISION: DATE PLOTTED => 10/10/2008
TIME PLOTTED => 8:06:31 AM

THIS PLAN IS ACCURATE FOR ELECTRICAL WORK ONLY.

ALL DIMENSIONS ARE IN MILLIMETERS UNLESS OTHERWISE SHOWN.

FOR REDUCED PLANS ORIGINAL SCALE IS IN MILLIMETERS 0 20 40 60 80

DGN FILE =>T:\13103\MS\pse\SAS Struc\CCO\SAS CCO43\2008-10-10_Issued for Submittal\04-0120F1_D208R04.dgn
USERNAME =>garcior

CU 04251 | EA 0120F1

DIST	COUNTY	ROUTE	KILOMETER POST TOTAL PROJECT	SHEET No	TOTAL SHEETS
04	SF	80	13.2/13.9	208 S1	1204

REGISTERED ELECTRICAL ENGINEER — 10/10/08 DATE

REGISTERED PROFESSIONAL ENGINEER — FADI WALIEDDINE No. 11465 Exp. 12/31/2009 ELECTRICAL — STATE OF CALIFORNIA

PLANS APPROVAL DATE

PB AMERICAS, Inc.
A Parsons Brinckerhoff Company
303 Second St., Suite 700N
San Francisco, CA 94107-1317

The State of California or its officers or agents shall not be responsible for the accuracy or completeness of electronic copies of this plan sheet.

Caltrans now has a web site! To get to the web site, go to http://www.dot.ca.gov

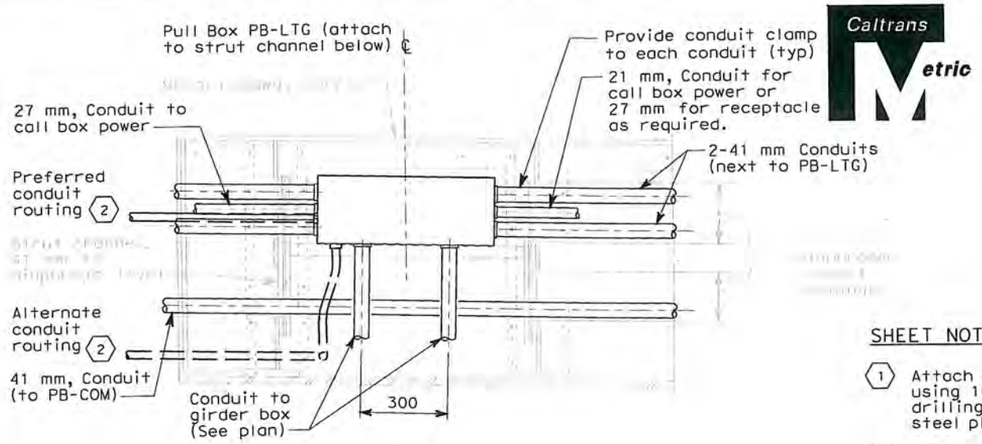

DETAIL 2

TYPICAL CONDUIT SUPPORT
PULL BOX PB-LTG MOUNTING
SCALE 1:10

SHEET NOTES:

1. Attach all structural strut to steel surface using 10mm self-tapping screws avoiding drilling within 25 mm of stiffeners or edge of steel plate.
2. The preferred conduit routing shall be utilized where possible. At locations where there is no space through the barrier diaphragm plate route conduit to PB-LTG pull box outside the barrier using the alternate path.
3. Conduit access hole per Sheet 472R2, Section A-A, Note 8.
4. Conduit elbow, Appleton Form 8 type, cat # "LB38" or equal.
5. Conduit elbow, Appleton Form 8 type, cat # "LB28" or equal. This is the transition point from PVC coated Rigid Galvanized Steel conduit and Liquidtight Flexible Metal Conduit.
6. Splice point for Pylon Floodlight circuit. Install fused splice connector, double pole, water resistant 600V non-time delay.

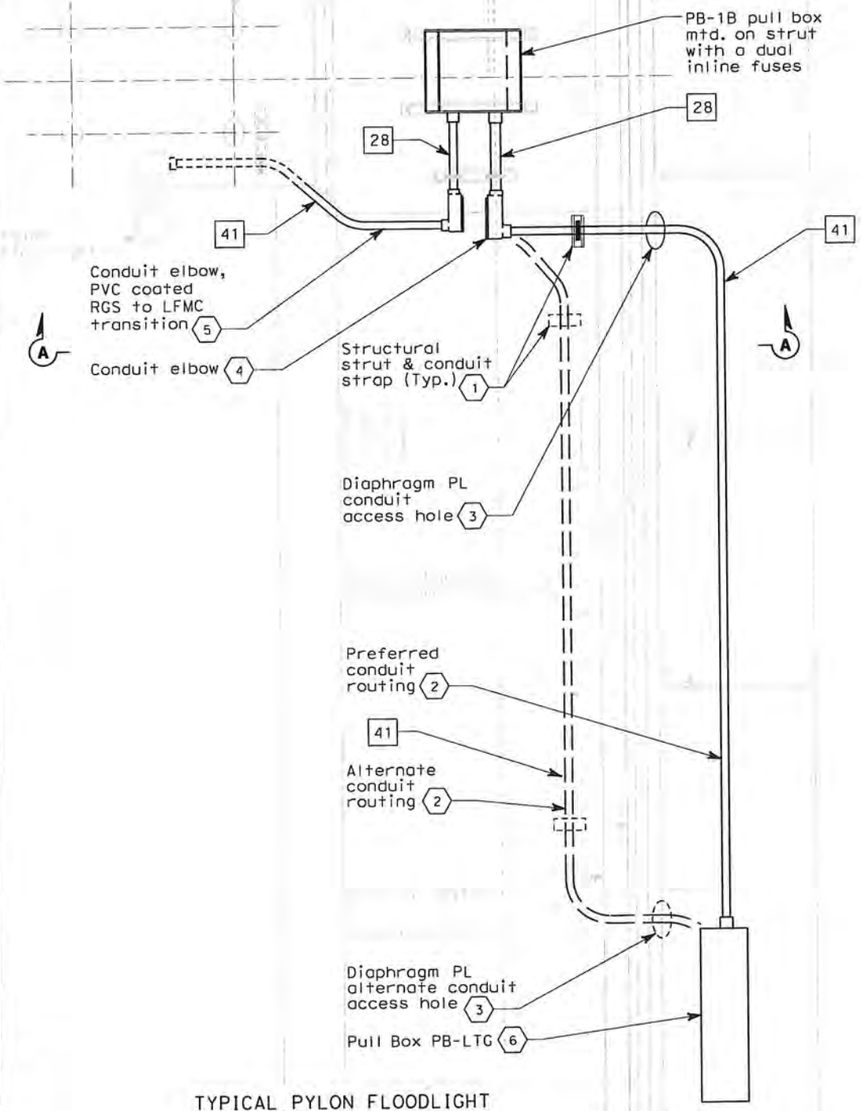

TYPICAL PYLON FLOODLIGHT
CONDUIT LAYOUT

DETAIL 1

1:20

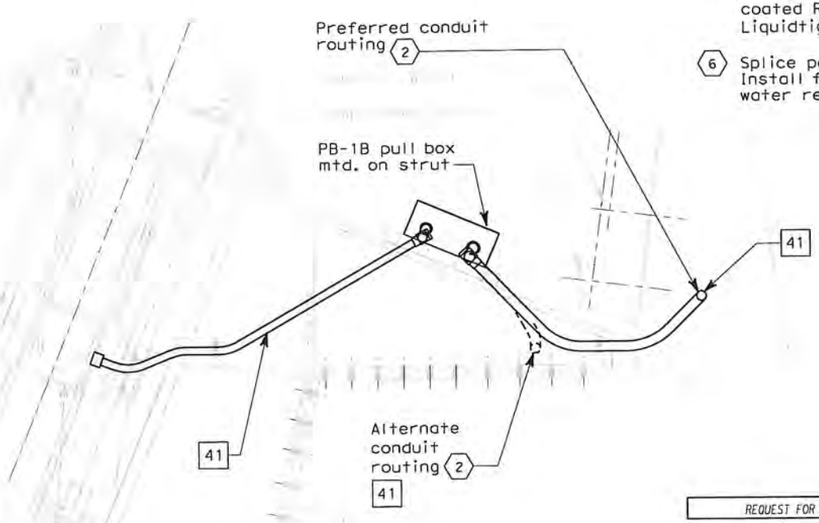

SECTION A-A

SCALE: 1:20

REQUEST FOR INFORMATION NOT ADDRESSED IN THIS CCO REMAIN IN FORCE					
0	10/10/08	LIGHTING REVISIONS	RY AG	RG FW	43
MARK	DATE	DESCRIPTIONS	BY	CH'D	CCO#
		REVISIONS			

CONTRACT CHANGE ORDER NO. 43 SO
SHEET 21 OF 42

DETAILS
SAS SUPERSTRUCTURE ROADWAY EASTBOUND CONDUIT LOCATIONS

SCALE AS NOTED

E-161A

STATE OF CALIFORNIA - DEPARTMENT OF TRANSPORTATION
Caltrans

DESIGN OVERSIGHT
BEHZAD GOLEMOHAMMADI

CALCULATED/ DESIGNED BY
CHECKED BY

DATE | REVISED BY | DATE REVISED

LAST REVISION 00-00-00
DATE PLOTTED => 10/10/2008
TIME PLOTTED => 8:11:01 AM

THIS PLAN ACCURATE FOR ELECTRICAL WORK ONLY.

ALL DIMENSIONS ARE IN MILLIMETERS UNLESS OTHERWISE SHOWN

FOR REDUCED PLANS ORIGINAL SCALE IS IN MILLIMETERS 0 20 40 60 80

DGN FILE =>T:\13103\MS\pse\SAS Struc\CCO\SAS CC043\2008-10-10_Issued for Submittal\04-0120f1_0208S01.dgn
USERNAME =>garciar

CU 04251 | EA 0120F1

DIST	COUNTY	ROUTE	KILOMETER POST TOTAL PROJECT	SHEET No	TOTAL SHEETS
04	SF	80	13.2/13.9	208 S2	1204

REGISTERED ELECTRICAL ENGINEER — DATE 10/10/08

REGISTERED PROFESSIONAL ENGINEER — FADI WALIEDDINE — No. 11465 — Exp. 12/31/2009 — ELECTRICAL — STATE OF CALIFORNIA

PLANS APPROVAL DATE

PB AMERICAS, Inc.
A Parsons Brinckerhoff Company
303 Second St., Suite 700N
San Francisco, CA 94107-1317

The State of California or its officers or agents shall not be responsible for the accuracy or completeness of electronic copies of this plan sheet.

Caltrans now has a web site! To get to the web site, go to http://www.dot.ca.gov

Caltrans Metric

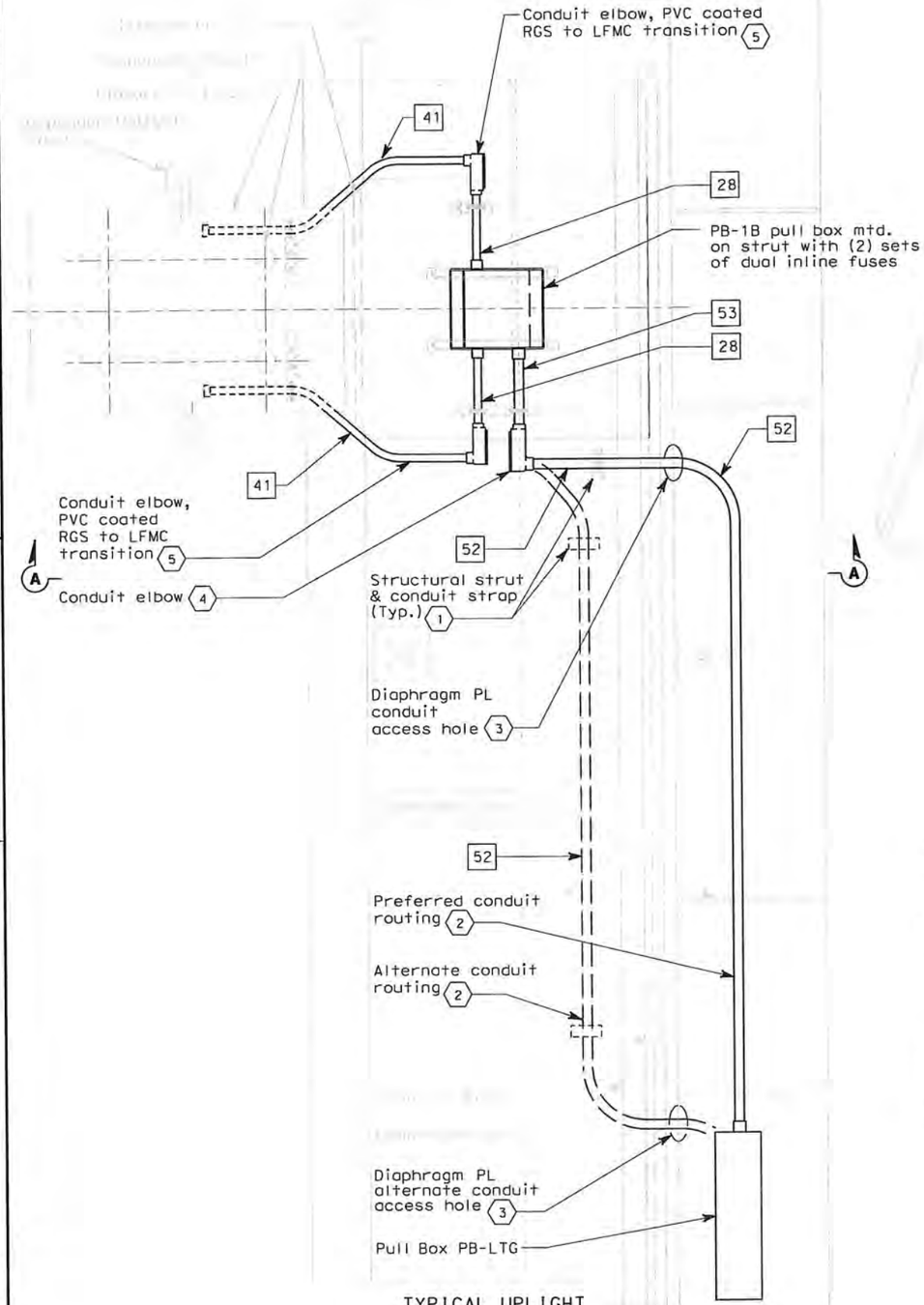

TYPICAL UPLIGHT CONDUIT LAYOUT

DETAIL 1

SCALE 1:20

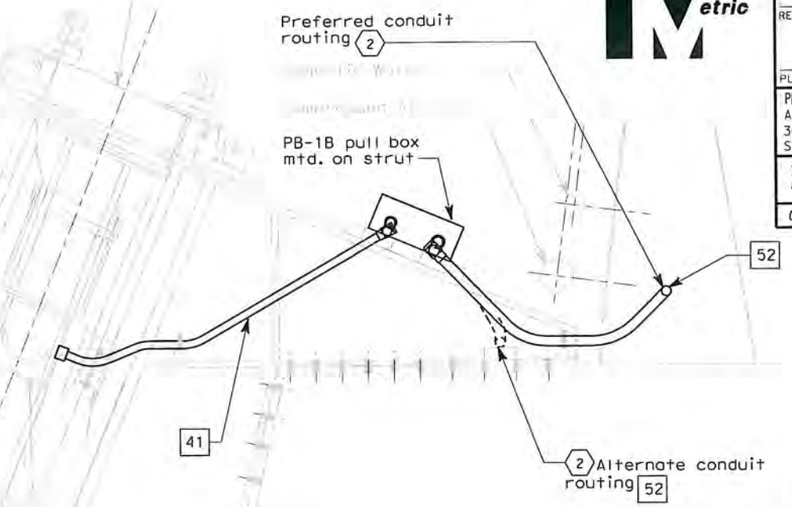

SECTION A-A

SCALE 1:20

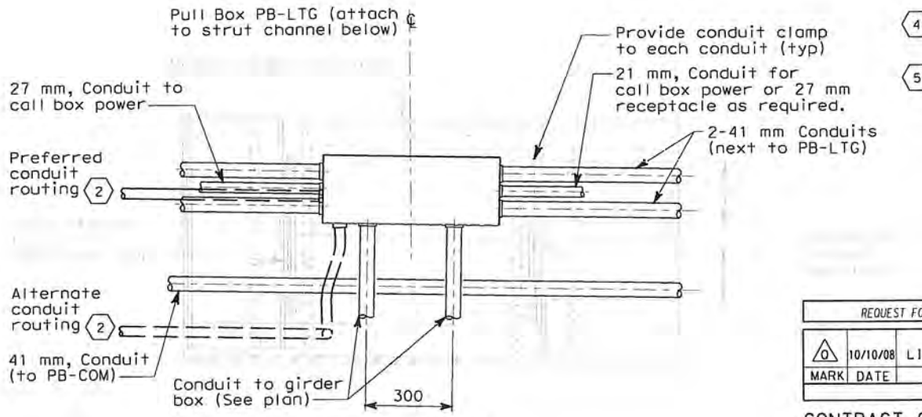

DETAIL 2

TYPICAL CONDUIT SUPPORT
PULL BOX PB-LTG MOUNTING
SCALE 1:10

SHEET NOTES:

1. Attach all structural strut to steel surface using 10 mm self-tapping screws avoiding drilling within 25 mm of stiffeners or edge of steel plate.
2. The preferred conduit routing shall be utilized where possible. At locations where there is no space through the barrier diaphragm plate route conduit to PB-LTG pull box outside the barrier using the alternate path.
3. Conduit access hole per Sheet 472R2, Section A-A, Note 8.
4. Conduit elbow, Appleton Form 8 type, cat # "LB38" or equal.
5. Conduit elbow, Appleton Form 8 type, cat # "LB28" or equal. This is the transition point from PVC coated Rigid Galvanized Steel conduit and Liquidtight Flexible Metal Conduit.

REQUEST FOR INFORMATION NOT ADDRESSED IN THIS CCO REMAIN IN FORCE					
MARK	DATE	REVISIONS DESCRIPTIONS	BY	CH'D	CCO#
0	10/10/08	LIGHTING REVISIONS	RY AG	RG FW	43

CONTRACT CHANGE ORDER NO. 43 S0
SHEET 22 OF 42

DETAILS
SAS SUPERSTRUCTURE ROADWAY EASTBOUND CONDUIT LOCATIONS

SCALE AS NOTED

E-161B

STATE OF CALIFORNIA - DEPARTMENT OF TRANSPORTATION — Caltrans

DESIGN OVERSIGHT — BEHZAD GOLEMOHAMMADI

DATE	REVISED BY	DATE REVISED
CALCULATED/ DESIGNED BY		CHECKED BY

LAST REVISION 00-00-00 — DATE PLOTTED => 10/10/2008 — TIME PLOTTED => 8:19:14 AM

THIS PLAN ACCURATE FOR ELECTRICAL WORK ONLY.

ALL DIMENSIONS ARE IN MILLIMETERS UNLESS OTHERWISE SHOWN

FOR REDUCED PLANS ORIGINAL SCALE IS IN MILLIMETERS 0 20 40 60 80

DGN FILE =>T:\13103\WS\pse\SAS Struc\CCO\SAS CC043\2008-10-10_Issued for Submittal\04-0120F1_0208S02.dgn
USERNAME =>garciar

CU 04251 | EA 0120F1

2 480 V LIGHTING POLE FIXTURE 2 SCHEDULE

Circuit Number	Pole Number	Station	Location: Roadway side	Mounting Height (M)	Ltg. Fixture Type	Number/ Wattage	Remarks (Mounting Provisions)
S-2031	2031-1	55+89	North	20	MSR-2B-L	3-400 W	Pole mounted
A-2035					MAM-3	1-250 W	
S-2031	2031-2	56+27.18	North	20	MSR-2B-L	3-400 W	Pole mounted
A-2035					MAM-3	1-250 W	
S-2031	2031-3	60+00.82	North	20	MSR-2-L	2-400 W	Pole mounted
					MSR-2B-L	2-400 W	
A-2035					MAM-3	1-250 W	
S-2031	2031-4	60+47.18	North 2	20	MSR-2-L	2-400 W	Pole mounted
S-2031					MSR-2B-L	2-400 W	
A-2035					MAM-3	1-250 W	
S-2032	2032-1	61+01	North	20	MSR-2-L	2-400 W	Pole mounted
					MSR-2B-L	2-400 W	
A-2035					MAM-3	1-250 W	
S-2032	2032-2	61+54	North	20	MSR-2-L	2-400 W	Pole mounted
					MSR-2B-L	2-400 W	
A-2035					MAM-3	1-250 W	

2 480 V MAIN TOWER LIGHTING FIXTURE SCHEDULE (ROADWAY LEVEL)

Circuit Number	Station	Location: Roadway side	Location: Suspend at Panel Point	Mounting	Ltg. Fixture Type	Number/ Wattage	Remarks
			PYLON LIGHTING				
A-3039	57+33	North	PP-35 - 1m	Bridge deck	MAT-1B-D	1-1000 W	with Remote Ballast
A-3039	57+35	North	PP-35 + 1m	Bridge deck	MAT-1B-D	1-1000 W	with Remote Ballast
A-3039	57+36	North	PP-35 + 2m	Bridge deck	MAT-1B-D	1-1000 W	with Remote Ballast
A-3039	57+41	North	PP-37 - 3m	Bridge deck	MAT-1A-D	1-1000 W	with Remote Ballast
A-3039	57+42	North	PP-37 - 2m	Bridge deck	MAT-1A-D	1-1000 W	with Remote Ballast
A-3039	57+52.915	North	PP-39 - 1.085m	Bridge deck	MAT-3-D 2	1-250 W	with Remote Ballast
A-3039	57+55.085	North	PP-39 + 1.085m	Bridge deck	MAT-3-D	1-250 W	with Remote Ballast
A-3039	57+59	North	PP-40	Bridge deck	MAT-3-RC 2	2-250 W	with Remote Ballast
A-3039	57+66.3	South	PP-42 - 2.7m 2	Bridge deck	MAT-1A-D	1-1000 W	with Remote Ballast
A-3039	57+68	South	PP-42 - 1m	Bridge deck	MAT-1A-D 2	1-1000 W	with Remote Ballast
A-3040	58+03	North	PP-49 - 1m 2	Bridge deck	MAT-1B-D	1-1000 W	with Remote Ballast
A-3040	58+05	North	PP-49 + 1m	Bridge deck	MAT-1B-D	1-1000 W	with Remote Ballast
A-3040	58+02	North	PP-49 - 2m	Bridge deck	MAT-1B-D 2	1-1000 W	with Remote Ballast
A-3040	57+95	North	PP-47 + 2m	Bridge deck	MAT-1A-D	1-1000 W	with Remote Ballast
A-3040	57+96	North	PP-47 + 3m	Bridge deck	MAT-1A-D	1-1000 W	with Remote Ballast
A-3040	57+82.915	North	PP-45 - 1.085m	Bridge deck	MAT-3-D	1-250 W	with Remote Ballast
A-3040	57+85.085	North	PP-45 + 1.085m	Bridge deck	MAT-3-D 2	1-250 W	with Remote Ballast
A-3040	57+79	North	PP-44	Bridge deck	MAT-3-RC	2-250 W	with Remote Ballast
A-3040	57+70	South	PP-42 + 1m	Bridge deck	MAT-1A-D	1-1000 W	with Remote Ballast
A-3040	57+71.3	South	PP-42 + 2.3m	Bridge deck	MAT-1A-D 2	1-1000 W	with Remote Ballast

LIGHTING FIXTURE TYPE DESIGNATION

Example: MSR-2B-C (See Special provisions for additional information)
MSR = SAS Safety light
-2B = 400 Watts
-C Beam Angles

Location (Letter)		Function (Letter)	
M	SAS	A	Aesthetic light
		S	Safety light

Application (Letter)	
D	Downward flood light
U	Upward flood light
R	Roadway light
T	Pylon flood light
M	Marker light
P	Pylon marker light
B	Bike path light
V	Belvedere light
L	Light pipe

Number/ Lamp Wattage	
1	1000 W
2	400 W
3	250 W
4	175 W
5	100 W
6	50 W

Beam Angles (Letter)
A
B
C

Mounting Type (Letter)	
C	Cable
D	Roadway deck
PB	Pier Base/ Pole mount
RC	Roadway at Cross beam
P	Pole mounted without lower/raiser
L	Pole mounted with lower/raiser

BIKE PATH FIXTURE SCHEDULE

Location	Mounting	Ltg. Fixture Type	Number/ Wattage	Remarks
Bike Path Structure	Bike Path Railway	MSB	1-40 W	Compact Fluorescent

BELVEDERE LIGHTING POLE AND FIXTURE SCHEDULE

Circuit Number	Pole Number	Location	Mounting Height (M)	Ltg. Fixture Type	Number/ Wattage
LP219-2	20E-1	Belvedere 20E	4.3	MSV	2-35 W
LP219-2	20E-2		4.3	MSV	2-35 W
LP219-4	20E-3		4.3	MSV	2-35 W
LP219-4	20E-4		4.3	MSV	2-35 W
LP223-6	22E-1	Belvedere 22E	4.3	MSV	2-35 W
LP223-6	22E-2		4.3	MSV	2-35 W
LP223-8	22E-3		4.3	MSV	2-35 W
LP223-8	22E-4		4.3	MSV	2-35 W

Caltrans Metric

DIST	COUNTY	ROUTE	KILOMETER POST TOTAL PROJECT	SHEET No	TOTAL SHEETS
04	SF	80	13.2/13.9	211 R2	1204

12/19/02
REGISTERED ELECTRICAL ENGINEER DATE

REGISTERED PROFESSIONAL ENGINEER — JENS ERLINGSSON No. 8249 Exp. 9/30/06 ELECTRICAL — STATE OF CALIFORNIA

12-6-04
PLANS APPROVAL DATE

PB POWER, Inc.
A Parsons Brinckerhoff Company
303 Second St., Suite 700N
San Francisco, CA 94107-1317

The State of California or its officers or agents shall not be responsible for the accuracy or completeness of electronic copies of this plan sheet.

Caltrans now has a web site! To get to the web site, go to http://www.dot.ca.gov

NOTES:

1. References:
   - For roadway level lighting wiring diagram, see sheets E-143 thru E-145.
   - For roadway level lighting conduit diagram, see sheets E-135 thru E-140.

REGISTERED PROFESSIONAL ENGINEER — FADI WALIEDDINE No. 11465 Exp. 12/31/2009 ELECTRICAL — STATE OF CALIFORNIA

FOR REVISION ONLY

REQUEST FOR INFORMATION NOT ADDRESSED IN THIS CCO REMAIN IN FORCE

MARK	DATE	DESCRIPTIONS	BY	CH'D	CCO#
		REVISIONS			
2	10/10/08	LIGHTING REVISIONS	SPO	RG SE	43
1	02/19/08	ELECTRICAL MODIFICATIONS	MP EL	RR	42

CONTRACT CHANGE ORDER NO. 43 SO
SHEET 23 OF 42

DETAILS
SAS SUPERSTRUCTURE ROADWAY EASTBOUND LIGHTING SCHEDULES

NO SCALE

E-168

REVISED BY	DATE REVISED
JP	09/01
BL	10/01

CALCULATED/ DESIGNED BY
CHECKED BY

DESIGN OVERSIGHT
BEHZAD GOLEMOHAMMADI

STATE OF CALIFORNIA - DEPARTMENT OF TRANSPORTATION
Caltrans

DATE PLOTTED => 10/10/2008
TIME PLOTTED => 8:19:58 AM
LAST REVISION 00-00-00

FOR REDUCED PLANS ORIGINAL SCALE IS IN MILLIMETERS 0 20 40 60 80

DGN FILE =>T:\13103\WS\pse\SAS Struc\CCO\SAS CC043\2008-10-10_Issued for Submittal\04-0120f1_0211R02.dgn
USERNAME =>garciar

CU 04251 EA 0120F1

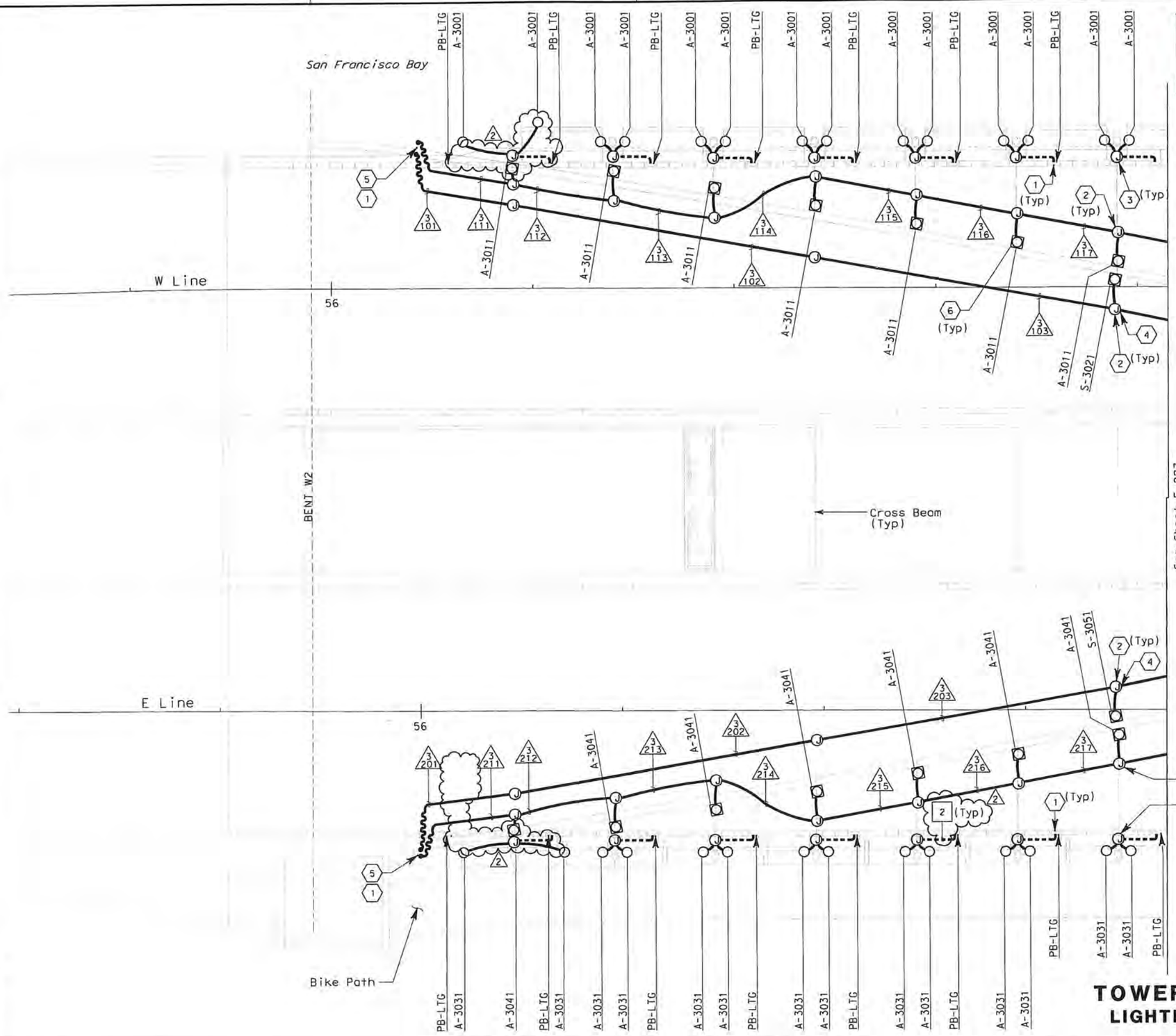

SAS SUPERSTRUCTURE

THIS PLAN IS ACCURATE FOR ELECTRICAL WORK ONLY.

Caltrans Metric

DIST	COUNTY	ROUTE	KILOMETER POST TOTAL PROJECT	SHEET No	TOTAL SHEETS
04	SF	80	13.2/13.9	244 R2	1204

Jens Erlingsson 12/19/02
REGISTERED ELECTRICAL ENGINEER DATE

12-6-04
PLANS APPROVAL DATE

REGISTERED PROFESSIONAL ENGINEER — JENS ERLINGSSON No. 8249 Exp. 9/30/06 ELECTRICAL — STATE OF CALIFORNIA

PB POWER, Inc.
A Parsons Brinckerhoff Company
303 Second St., Suite 700N
San Francisco, CA 94107-1317

The State of California or its officers or agents shall not be responsible for the accuracy or completeness of electronic copies of this plan sheet.

Caltrans now has a web site! To get to the web site, go to http://www.dot.ca.gov

SHEET NOTES:

1. For additional conduits and actual location from PB-LTG, see SAS Superstructure Roadway Plans:
   E-46 (Westbound)
   E-135 (Eastbound)
2. Type PB-1F junction box is mounted on main suspension cable.
3. Type PB-1B junction box is mounted on suspender brackets.
4. For additional conduits from noted junction box, see Aviation Lighting Plans sheet E-291.
5. Flexible conduits attached to suspender cables. See SAS Superstructure Roadway Plans for continuation.
6. For tower and suspension cable lighting mounting details, see sheets E-251 and E-257 to E-261.
7. Deleted.

NOTES:

1. For tower and suspension cable lighting schedule see sheets E-271 to E-272.
2. For pull box schedule see sheets E-83 & E-169.
3. For 480 V main suspension cable lighting wiring diagrams, see sheets E-236 through E-240 and E-243 through E-247.
4. For circuit and conduit/cable tray schedules, see sheets starting at E-401.
5. For other related work not shown on this sheet, see Electrical Special Provisions.

FOR REVISION ONLY

REGISTERED PROFESSIONAL ENGINEER — FADI WALIEDDINE No. 11465 Exp. 12/31/2009 ELECTRICAL — STATE OF CALIFORNIA

REQUEST FOR INFORMATION NOT ADDRESSED IN THIS CCO REMAIN IN FORCE					
2	10/10/08	LIGHTING REVISIONS	JH	RG FW	43
1	09/24/08	CABLE ELECTRICAL	RR AG	RG FW	72
MARK	DATE	DESCRIPTIONS	BY	CH'D	CCO#
REVISIONS					

CONTRACT CHANGE ORDER NO. 43 SO
SHEET 24 OF 42

TOWER AND SUSPENSION CABLE LIGHTING AND ELECTRICAL SYSTEMS

SCALE 1:200

E-226

CALCULATED/ DESIGNED BY	JP	DATE 08/01	REVISED BY
CHECKED BY	EDC	09/01	DATE REVISED

STATE OF CALIFORNIA - DEPARTMENT OF TRANSPORTATION
Caltrans
DESIGN OVERSIGHT
BEHZAD GOLEMOHAMMADI

ALL DIMENSIONS ARE IN MILLIMETERS UNLESS OTHERWISE SHOWN

FOR REDUCED PLANS ORIGINAL SCALE IS IN MILLIMETERS 0 20 40 60 80

DGN FILE =>T:\13103\WS\pse\SAS Struc\CCO\SAS CC043\2008-10-10_Issued for Submittal\04-0120f1_D244R02.dgn
USERNAME =>garciar

CU 04251 EA 0120F1

LAST REVISION 00-00-00
DATE PLOTTED => 10/15/2008
TIME PLOTTED => 10:13:17 AM

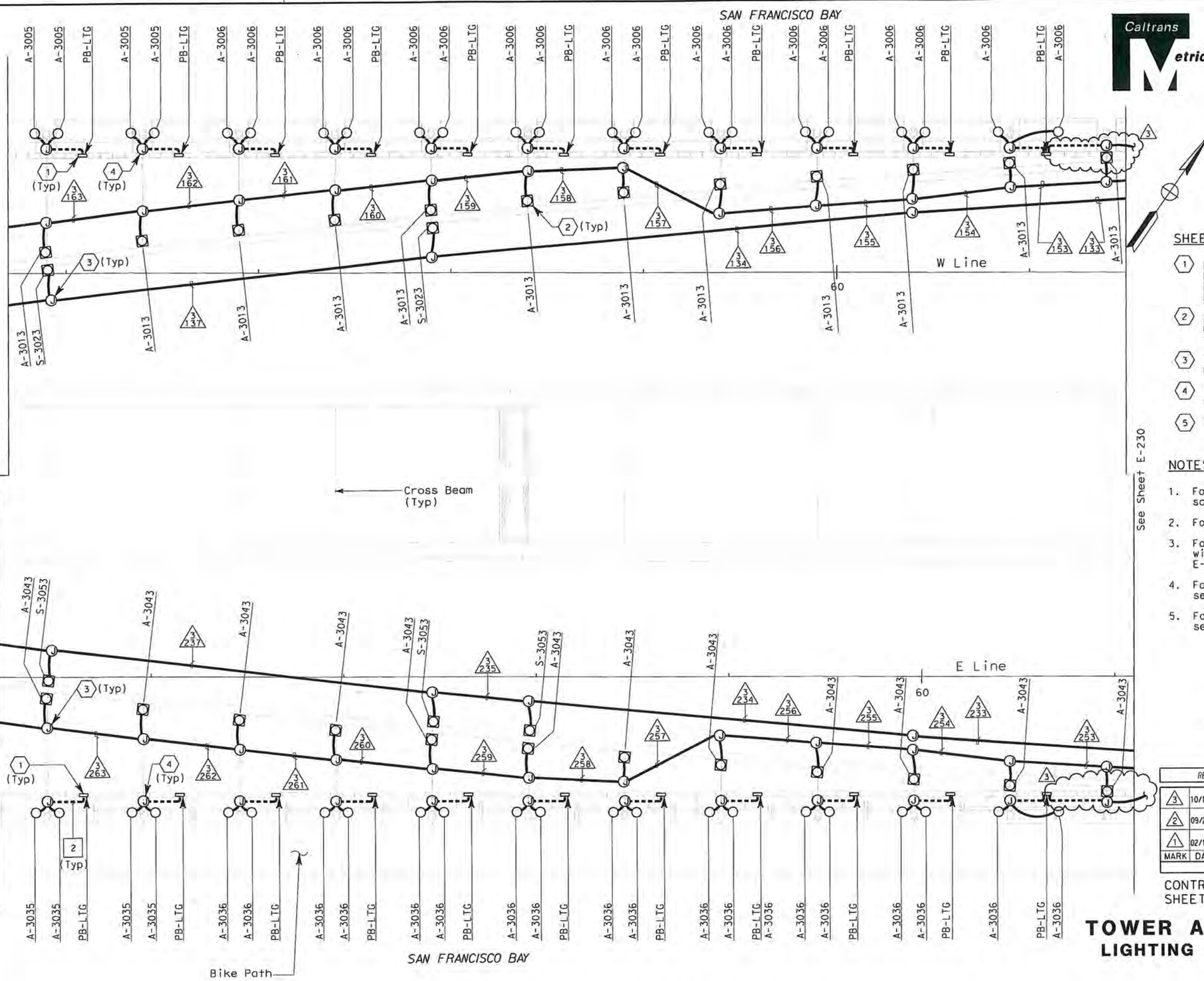

DIST	COUNTY	ROUTE	KILOMETER POST TOTAL PROJECT	SHEET No.	TOTAL SHEETS
04	SF	80	13.2/13.9	247 R3	1204

12/19/02
REGISTERED ELECTRICAL ENGINEER DATE

12-6-04
PLANS APPROVAL DATE

REGISTERED PROFESSIONAL ENGINEER — JENS ERLINGSSON No. 8249 Exp. 9/30/06 ELECTRICAL — STATE OF CALIFORNIA

PB POWER, Inc.
A Parsons Brinckerhoff Company
303 Second St., Suite 700N
San Francisco, CA 94107-1317

The State of California or its officers or agents shall not be responsible for the accuracy or completeness of electronic copies of this plan sheet.

Caltrans now has a web site! To get to the web site, go to http://www.dot.ca.gov

SHEET NOTES:

1. For additional conduits and actual location from PB-LTG, see SAS Superstructure Roadway Plans: E-49 (Westbound) E-138 (Eastbound)
2. For tower and suspension cable lighting mounting details, see sheets E-251 and E-257 to E-261.
3. Type PB-1F junction box is mounted on main suspension cable.
4. Type PB-1B junction box is mounted on suspender brackets.
5. Deleted.

NOTES:

1. For tower and suspension cable lighting schedule see sheets E-271 to E-272.
2. For pull box schedule see sheets E-83 & E-169.
3. For 480 V main suspension cable lighting wiring diagrams, see sheets E-236 through E-240 and E-243 through E-247.
4. For circuit and conduit/cable tray schedules, see sheets starting at E-401.
5. For other related work not shown on this sheet, see Electrical Special Provisions.

FOR REVISION ONLY

REGISTERED PROFESSIONAL ENGINEER — FADI WALIEDDINE No. 11465 Exp. 12/31/2009 ELECTRICAL — STATE OF CALIFORNIA

REQUEST FOR INFORMATION NOT ADDRESSED IN THIS CCO REMAIN IN FORCE

MARK	DATE	DESCRIPTIONS	BY	CH'D	CCO#
		REVISIONS			
3	10/10/08	LIGHTING REVISIONS	JH	RG FW	43
2	09/24/08	CABLE ELECTRICAL	RG	SE	72
1	02/19/08	ELECTRICAL MODIFICATIONS	MP EL	RR	42

CONTRACT CHANGE ORDER NO. 43 SO
SHEET 25 OF 42

TOWER AND SUSPENSION CABLE LIGHTING AND ELECTRICAL SYSTEMS

SCALE 1:200

SAS SUPERSTRUCTURE

E-229

CALCULATED/ DESIGNED BY	JP	DATE 08/01	REVISED BY
CHECKED BY	EDC	09/01	DATE REVISED

STATE OF CALIFORNIA - DEPARTMENT OF TRANSPORTATION
Caltrans
DESIGN OVERSIGHT
BEHZAD GOLEMOHAMMADI

THIS PLAN IS ACCURATE FOR ELECTRICAL WORK ONLY.

ALL DIMENSIONS ARE IN MILLIMETERS UNLESS OTHERWISE SHOWN

FOR REDUCED PLANS ORIGINAL SCALE IS IN MILLIMETERS 0 20 40 60 80

DGN FILE =>T:\13103\MS\pse\SAS Struc\CCO\SAS CC043\2008-10-10_Issued for Submittal\04-0120F1_0247R03.dgn
USERNAME =>garciar

CU 04251 | EA 0120F1

LAST REVISION 00-00-00
DATE PLOTTED => 10/10/2008
TIME PLOTTED => 8:21:19 AM

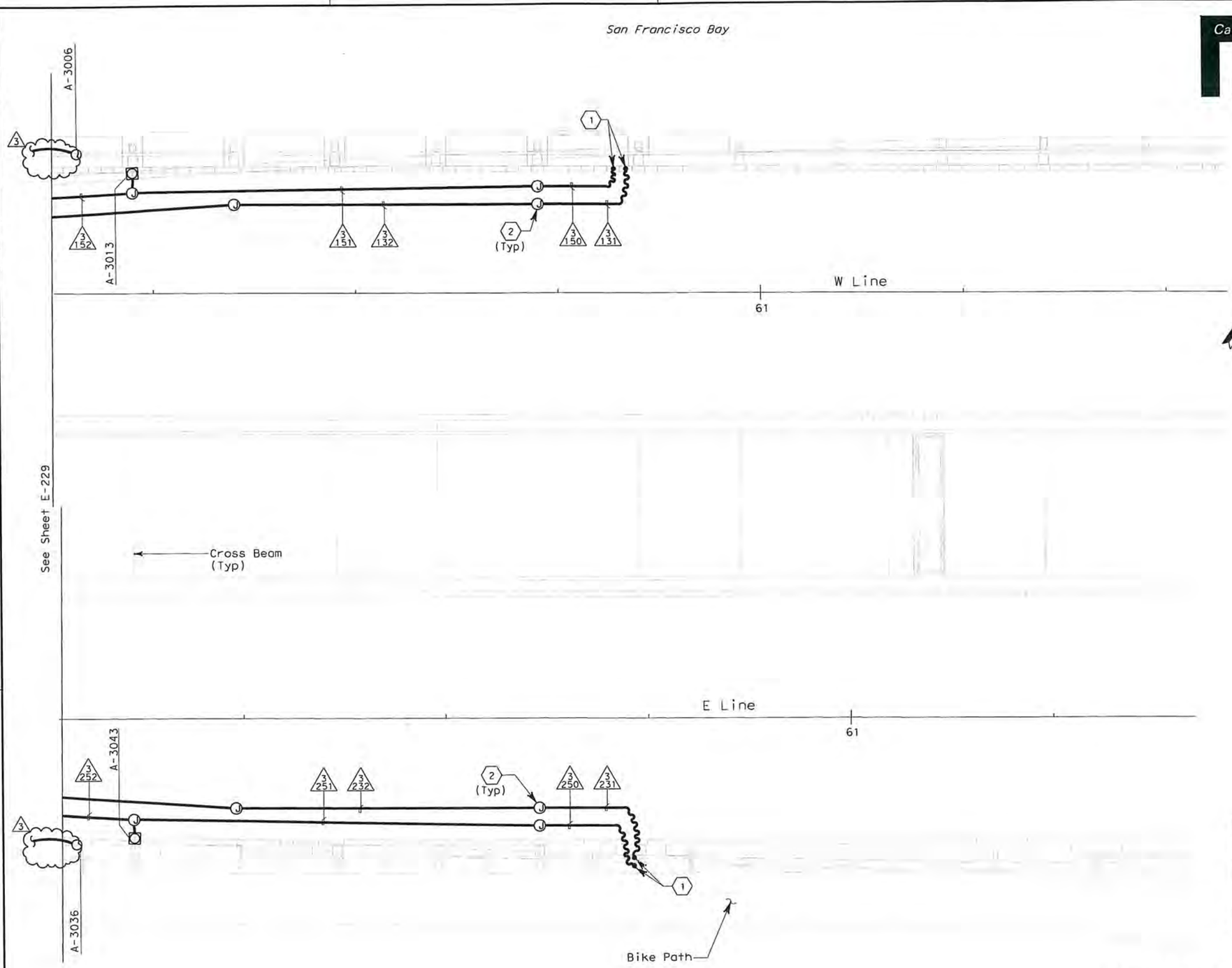

SAS SUPERSTRUCTURE

THIS PLAN IS ACCURATE FOR ELECTRICAL WORK ONLY.

DIST	COUNTY	ROUTE	KILOMETER POST TOTAL PROJECT	SHEET No	TOTAL SHEETS
04	SF	80	13.2/13.9	248 R3	1204

Jens Erlingsson 12/19/02
REGISTERED ELECTRICAL ENGINEER DATE

12-6-04
PLANS APPROVAL DATE

REGISTERED PROFESSIONAL ENGINEER — JENS ERLINGSSON No. 8249 Exp. 9/30/06 ELECTRICAL — STATE OF CALIFORNIA

PB POWER, Inc.
A Parsons Brinckerhoff Company
303 Second St., Suite 700N
San Francisco, CA 94107-1317

The State of California or its officers or agents shall not be responsible for the accuracy or completeness of electronic copies of this plan sheet.

Caltrans now has a web site! To get to the web site, go to http://www.dot.ca.gov

SHEET NOTES:

(1) Flexible conduits attached to suspender cables. See SAS Superstructure Roadway Plans:
E-50 (Westbound)
E-139 (Eastbound)

(2) Type PB-1F junction box is mounted on main suspension cable.

(3) Deleted.

NOTES:

1. For tower and suspension cable lighting schedule see sheets E-271 to E-272.
2. For pull box schedule see sheets E-83 & E-169.
3. For 480 V main suspension cable lighting wiring diagrams, see sheets E-236 through E-240 and E-243 through E-247.
4. For circuit and conduit/cable tray schedules, see sheets starting at E-401.
5. For other related work not shown on this sheet, see Electrical Special Provisions.

FOR REVISION ONLY

REGISTERED PROFESSIONAL ENGINEER — FADI WALIEDDINE No. 11465 Exp. 12/31/2009 ELECTRICAL — STATE OF CALIFORNIA

REQUEST FOR INFORMATION NOT ADDRESSED IN THIS CCO REMAIN IN FORCE

MARK	DATE	DESCRIPTIONS (REVISIONS)	BY	CH'D	CCO#
3	10/10/08	LIGHTING REVISIONS	JH	RG FW	43
2	09/24/08	CABLE ELECTRICAL	RG	SE	72
1	02/19/08	ELECTRICAL MODIFICATIONS	MP EL	RR	42

CONTRACT CHANGE ORDER NO. 43 SO
SHEET 26 OF 42

TOWER AND SUSPENSION CABLE LIGHTING AND ELECTRICAL SYSTEMS

SCALE 1:200

E-230

STATE OF CALIFORNIA - DEPARTMENT OF TRANSPORTATION — Caltrans

DESIGN OVERSIGHT: BEHZAD GOLEMOHAMMADI

CALCULATED/DESIGNED BY: JP
CHECKED BY: EDC

DATE	REVISED BY	DATE REVISED
08/01		09/01

LAST REVISION 00-00-00 — DATE PLOTTED => 10/10/2008 — TIME PLOTTED => 8:21:52 AM

FOR REDUCED PLANS ORIGINAL SCALE IS IN MILLIMETERS 0 20 40 60 80

DGN FILE =>T:\13103\MS\pse\SAS Struc\CCO\SAS CC043\2008-10-10_Issued for Submittal\04-0120F1_D248R03.dgn
USERNAME =>garciar

CU 04251 — EA 0120F1

DIST	COUNTY	ROUTE	KILOMETER POST TOTAL PROJECT	SHEET No	TOTAL SHEETS
04	SF	80	13.2/13.9	249 R2	1204

12/19/02
REGISTERED ELECTRICAL ENGINEER DATE

12-6-04
PLANS APPROVAL DATE

REGISTERED PROFESSIONAL ENGINEER — JENS ERLINGSSON No. 8249 Exp. 9/30/06 ELECTRICAL — STATE OF CALIFORNIA

PB POWER, Inc.
A Parsons Brinckerhoff Company
303 Second St., Suite 700N
San Francisco, CA 94107-1317

The State of California or its officers or agents shall not be responsible for the accuracy or completeness of electronic copies of this plan sheet.

Caltrans now has a web site! To get to the web site, go to http://www.dot.ca.gov

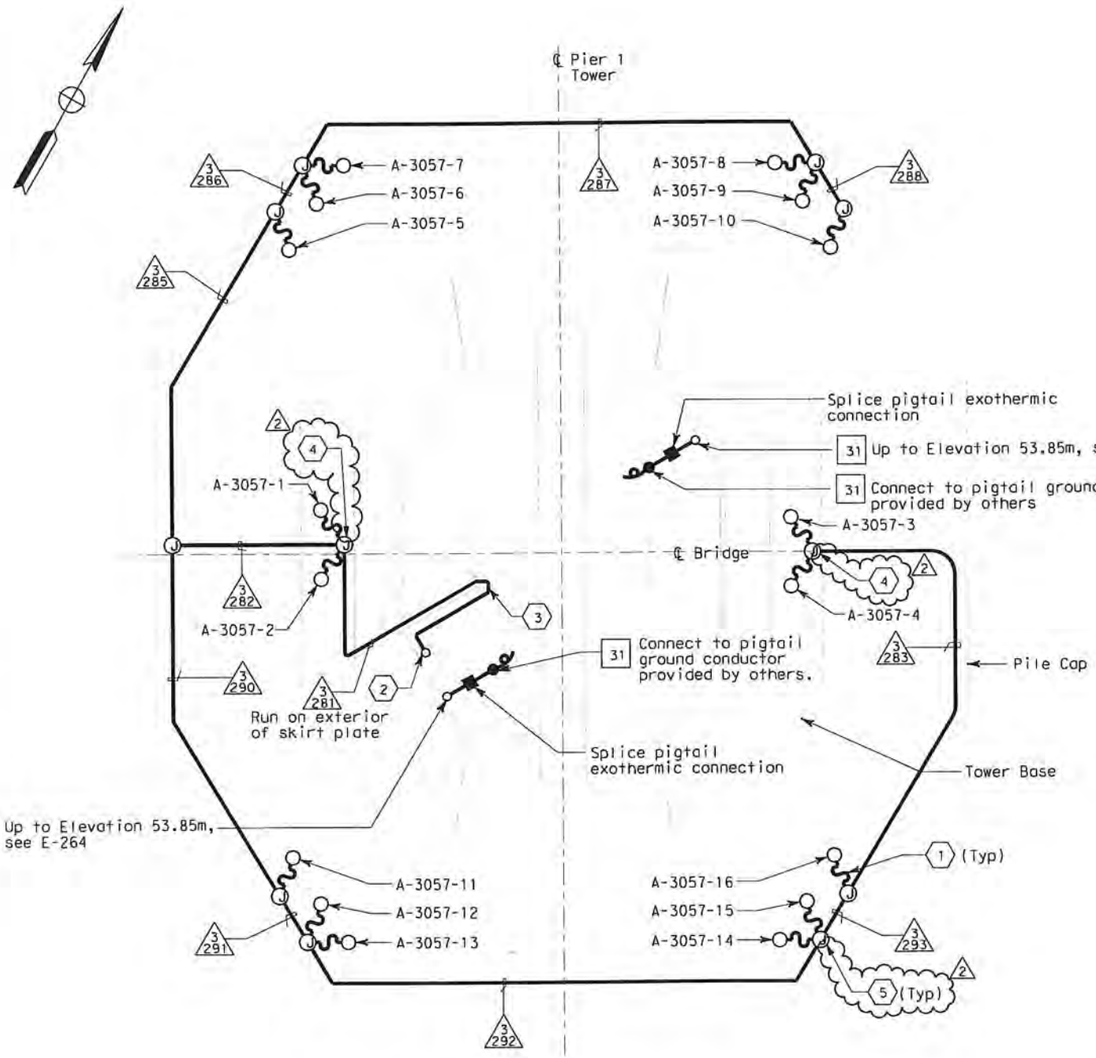

PLAN AT ELEV. 3.0

SCALE 1:125

NOTES:

1. References:
   - For 480 V Pier 1 tower lighting wiring diagram, see sheet E-250.
2. For circuit and conduit/cable tray schedules, see sheets starting at E-401.
3. For location plan of marker lights type MAP, see sheet E-227.
4. For other related work not shown on this sheet, see Electrical Special Provisions.

SHEET NOTES:

(1) Supplied with lighting fixture assembly.

(2) Up to cable tray 3/724A in SW shaft at 13.5 m elevation.

(3) Penetrate skin Plate A of SW shaft at 13.5 m elevation.

(4) Type PB-1B Box with 5A in-line fuse.

(5) Floodlight fixtures 5A in-line fuse located inside the remote ballast housing.

480 V MAIN TOWER (BASE) LIGHTING FIXTURE SCHEDULE

Fixture Number	Location	Light Fixture Type	Number/ Wattage	Remarks
A-3057-1	Inside Pylon	MAU-2A	1-400 W	With Remote Ballast
A-3057-2	Inside Pylon	MAU-2A	1-400 W	With Remote Ballast
A-3057-3	Inside Pylon	MAU-2A	1-400 W	With Remote Ballast
A-3057-4	Inside Pylon	MAU-2A	1-400 W	With Remote Ballast
A-3057-5	Base (North)	MAR-2A-PB	1-400 W	
A-3057-6	Base (North)	MAR-2-PB	1-400 W	
A-3057-7	Base (North)	MAR-2A-PB	1-400 W	
A-3057-8	Base (North)	MAR-2A-PB	1-400 W	
A-3057-9	Base (North)	MAR-2-PB	1-400 W	
A-3057-10	Base (North)	MAR-2A-PB	1-400 W	
A-3057-11	Base (South)	MAR-2A-PB	1-400 W	
A-3057-12	Base (South)	MAR-2-PB	1-400 W	
A-3057-13	Base (South)	MAR-2A-PB	1-400 W	
A-3057-14	Base (South)	MAR-2A-PB	1-400 W	
A-3057-15	Base (South)	MAR-2-PB	1-400 W	
A-3057-16	Base (South)	MAR-2A-PB	1-400 W	
A-3008	Top of Pylon	MAP	2-250 W max. at 120 V, w/ lamp changer	

TOWER AND SUSPENSION CABLE LIGHTING AND ELECTRICAL SYSTEMS

SCALE AS NOTED

E-231

REGISTERED PROFESSIONAL ENGINEER — FADI WALIEDDIN No. 11465 Exp. 12/31/2009 ELECTRICAL — STATE OF CALIFORNIA

FOR REVISION ONLY

REQUEST FOR INFORMATION NOT ADDRESSED IN THIS CCO REMAIN IN FORCE					
2	10/10/08	LIGHTING REVISIONS	RY AG	RG FW	43
1	02/19/08	ELECTRICAL MODIFICATIONS	MP EL	RR	42
MARK	DATE	DESCRIPTIONS	BY	CH'D	CCO#
		REVISIONS			

CONTRACT CHANGE ORDER NO. 43 SO
SHEET 27 OF 42

THIS PLAN IS ACCURATE FOR ELECTRICAL WORK ONLY.

ALL DIMENSIONS ARE IN MILLIMETERS UNLESS OTHERWISE SHOWN.

FOR REDUCED PLANS ORIGINAL SCALE IS IN MILLIMETERS 0 20 40 60 80

DGN FILE =>T:\13103\MS\pse\SAS Struc\CCO\SAS CC043\2008-10-10_Issued for Submittal\04-0120F1_0249R02.dgn
USERNAME =>garciar

CU 04251 | EA 0120F1

LAST REVISION 00-00-00 | DATE PLOTTED => 10/10/2008 | TIME PLOTTED => 8:23:14 AM

STATE OF CALIFORNIA - DEPARTMENT OF TRANSPORTATION
Caltrans

DESIGN OVERSIGHT
BEHZAD GOLEMOHAMMADI

CALCULATED/ DESIGNED BY		DATE	REVISED BY	AB
CHECKED BY	EDC	11/01	DATE REVISED	2/04

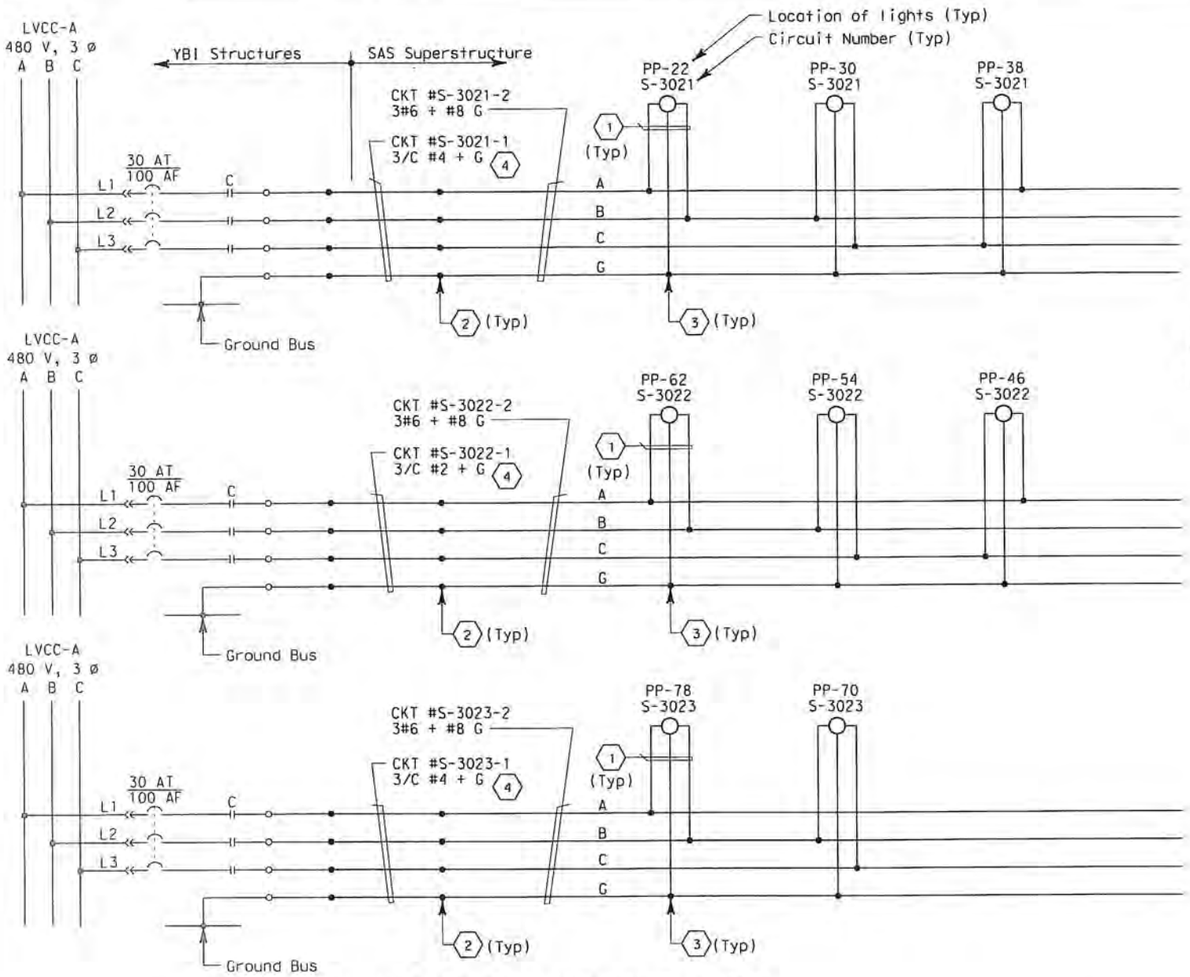

480 V ROADWAY LIGHTING - WB

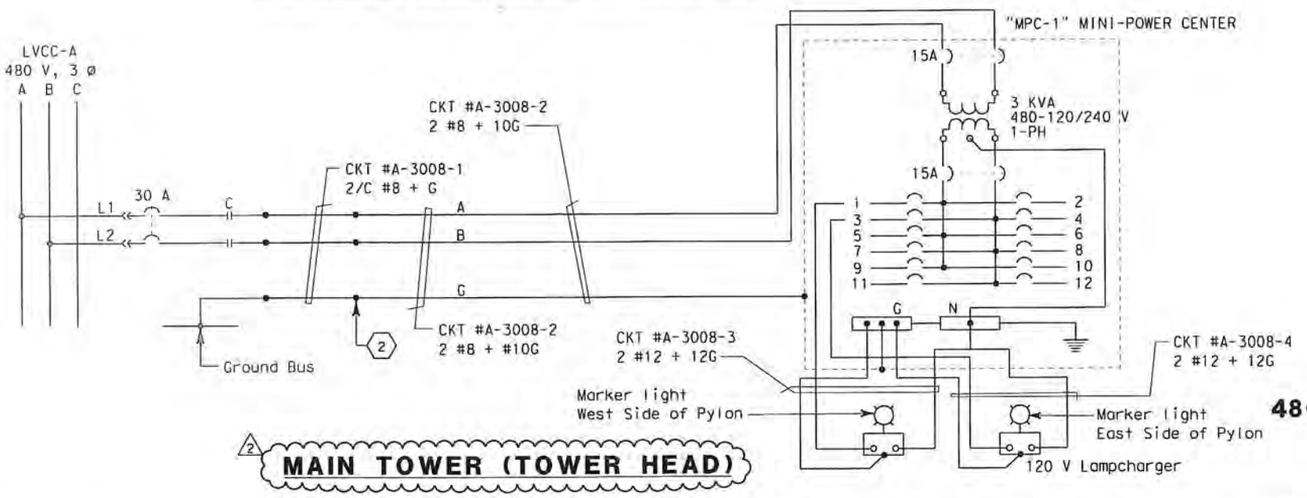

MAIN TOWER (TOWER HEAD)

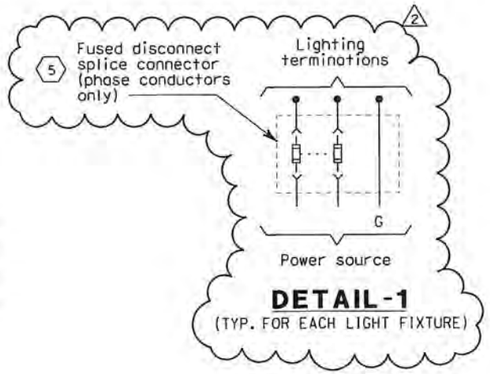

DETAIL-1
(TYP. FOR EACH LIGHT FIXTURE)

SHEET NOTES:

1. 2/C #10 + G (See Detail 1.)
2. Conductors spliced inside junction box PB-2A located inside girder.
3. Conductors spliced inside junction box PB-1F located suspender main cable.
4. The Contractor shall extend and coil 5 meters of cable in manhole 25. All cables shall be tagged with circuits numbers as shown.
5. Install 5A in-line fuse per light fixture, inside PB-1F.

NOTES:

1. Use multi-conductor cable if circuit is routed via trays.
2. References:
   - For typical pull box schedule, see sheets E-83 and E-169.
   - For circuit and conduit/cable tray schedules, see sheets starting at E-401.
3. For number of lighting fixtures see Lighting Fixture Schedule sheets E-271 and E-272.

DIST	COUNTY	ROUTE	KILOMETER POST TOTAL PROJECT	SHEET No	TOTAL SHEETS
04	SF	80	13.2/13.9	250 R2	1204

Jens Erlingsson 12/19/02
REGISTERED ELECTRICAL ENGINEER DATE

12-6-04
PLANS APPROVAL DATE

REGISTERED PROFESSIONAL ENGINEER
JENS ERLINGSSON
No. 8249
Exp. 9/30/06
ELECTRICAL
STATE OF CALIFORNIA

PB POWER, Inc.
A Parsons Brinckerhoff Company
303 Second St., Suite 700N
San Francisco, CA 94107-1317

The State of California or its officers or agents shall not be responsible for the accuracy or completeness of electronic copies of this plan sheet.

Caltrans now has a web site! To get to the web site, go to http://www.dot.ca.gov

REGISTERED PROFESSIONAL ENGINEER
FADI WALIEDDINE
No. 11465
Exp. 12/31/2005
ELECTRICAL
STATE OF CALIFORNIA

FOR REVISION ONLY

REQUEST FOR INFORMATION NOT ADDRESSED IN THIS CCO REMAIN IN FORCE					
2	10/10/08	LIGHTING REVISIONS	RY AG	RG FW	43
1	09/24/08	CABLE ELECTRICAL	RR AG	RG SE	72
MARK	DATE	REVISIONS DESCRIPTIONS	BY	CH'D	CCO#

CONTRACT CHANGE ORDER NO. 43 SO
SHEET 28 OF 42

DETAILS
TOWER AND SUSPENSION CABLE
480 V MAIN SUSPENSION CABLE LIGHTING WIRING DIAGRAM

NO SCALE

E-236

CALCULATED/ DESIGNED BY	CHECKED BY	JP	EDC	DATE 8/01	11/01	REVISED BY	DATE REVISED
DESIGN OVERSIGHT	BEHZAD GOLEMOHAMMADI						

STATE OF CALIFORNIA - DEPARTMENT OF TRANSPORTATION
Caltrans

FOR REDUCED PLANS ORIGINAL SCALE IS IN MILLIMETERS 0 20 40 60 80

DGN FILE =>T:\13103\MS\pse\SAS Struc\CCO\SAS CC043\2008-10-10_Issued for Submittal\04-0120F1_0250R02.dgn
USERNAME =>garciar
CU 04251
EA 0120F1

LAST REVISION 00-00-00
DATE PLOTTED => 10/10/2008
TIME PLOTTED => 8:23:50 AM

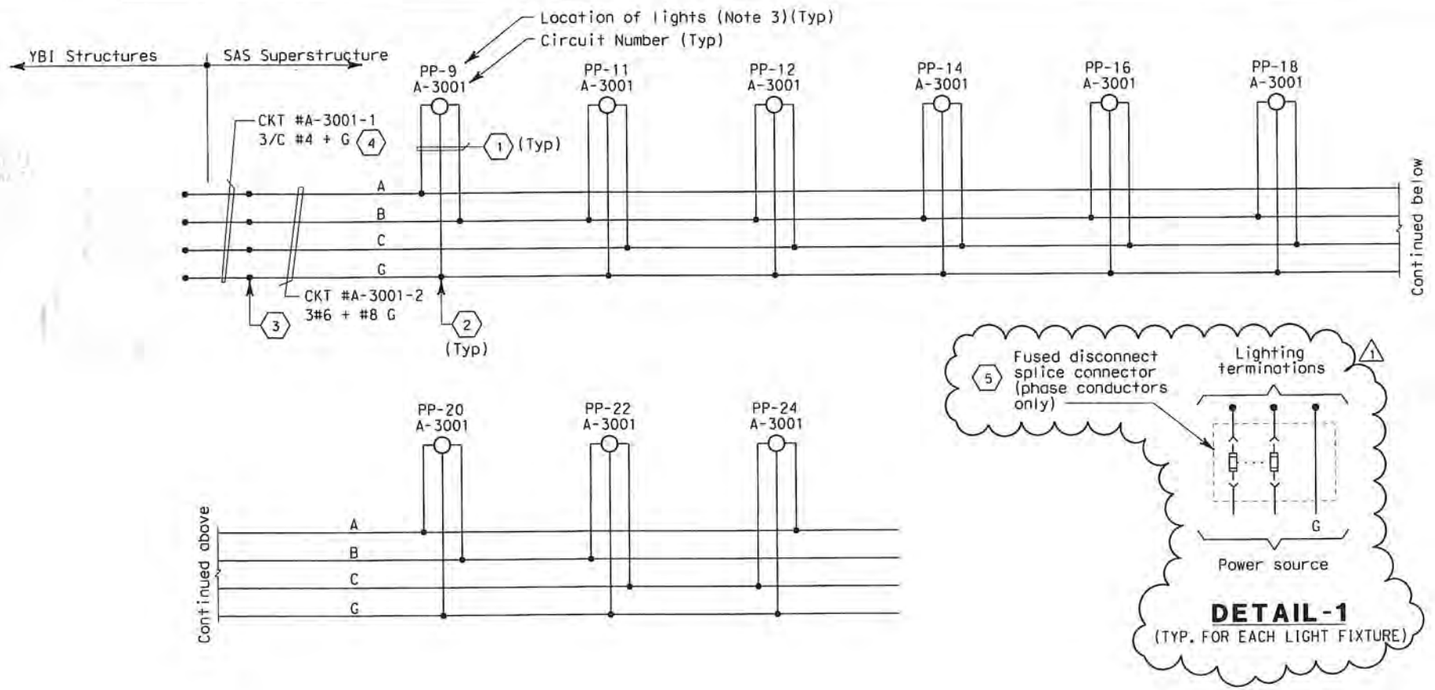

480 V SUSPENDER UPLIGHT LIGHTING

Caltrans Metric

DIST	COUNTY	ROUTE	KILOMETER POST TOTAL PROJECT	SHEET No	TOTAL SHEETS
04	SF	80	13.2/13.9	251 R1	1204

Jens Erlingsson 12/19/02
REGISTERED ELECTRICAL ENGINEER DATE

12-6-04
PLANS APPROVAL DATE

REGISTERED PROFESSIONAL ENGINEER — JENS ERLINGSSON No. 8249 Exp. 9/30/06 ELECTRICAL — STATE OF CALIFORNIA

PB POWER, Inc.
A Parsons Brinckerhoff Company
303 Second St., Suite 700N
San Francisco, CA 94107-1317

The State of California or its officers or agents shall not be responsible for the accuracy or completeness of electronic copies of this plan sheet.

Caltrans now has a web site! To get to the web site, go to http://www.dot.ca.gov

SHEET NOTES:

1. 2/C #10 + G See Detail 1 (1)
2. Conductors spliced inside pull box PB-1B (1)
3. Conductors spliced inside junction box PB-2A located inside girder.
4. The Contractor shall extend and coil 5 meters of cable in manhole 25. All cables shall be tagged with circuits numbers as shown.
5. (1) Install 5A in-line fuse per light fixture, inside PB-1B.

NOTES:

1. Use multi-conductor cable if circuit is routed via trays.
2. References:
   - For typical pull box schedule, see sheets E-83 and E-169.
   - For circuit and conduit/cable tray schedules, see sheets starting at E-401.
3. For number of lighting fixtures see Lighting Fixture Schedule sheets E-271 and E-272.

REGISTERED PROFESSIONAL ENGINEER — FADI WALIEDDINE No. 11465 Exp. 12/31/2009 ELECTRICAL — STATE OF CALIFORNIA

FOR REVISION ONLY

REQUEST FOR INFORMATION NOT ADDRESSED IN THIS CCO REMAIN IN FORCE

MARK	DATE	DESCRIPTIONS	BY	CH'D	CCO#
		REVISIONS			
1	10/10/08	LIGHTING REVISIONS	RY AG	RG FW	43

CONTRACT CHANGE ORDER NO. 43 SO
SHEET 29 OF 42

DETAILS
TOWER AND SUSPENSION CABLE
480 V MAIN SUSPENSION CABLE LIGHTING WIRING DIAGRAM

NO SCALE

E-237

CALCULATED/ DESIGNED BY	JP	DATE 8/01	REVISED BY
CHECKED BY	EDC	11/01	DATE REVISED

STATE OF CALIFORNIA - DEPARTMENT OF TRANSPORTATION
Caltrans
DESIGN OVERSIGHT
BEHZAD GOLEMOHAMMADI

LAST REVISION 00-00-00
DATE PLOTTED => 10/10/2008
TIME PLOTTED => 8:24:34 AM

FOR REDUCED PLANS ORIGINAL SCALE IS IN MILLIMETERS 0 20 40 60 80

DGN FILE =>T:\13103\MS\pse\SAS Struc\CCO\SAS CC043\2008-10-10_Issued for Submittal\04-0120F1_0251R01.dgn
USERNAME =>garciar
CU 04251
EA 0120F1

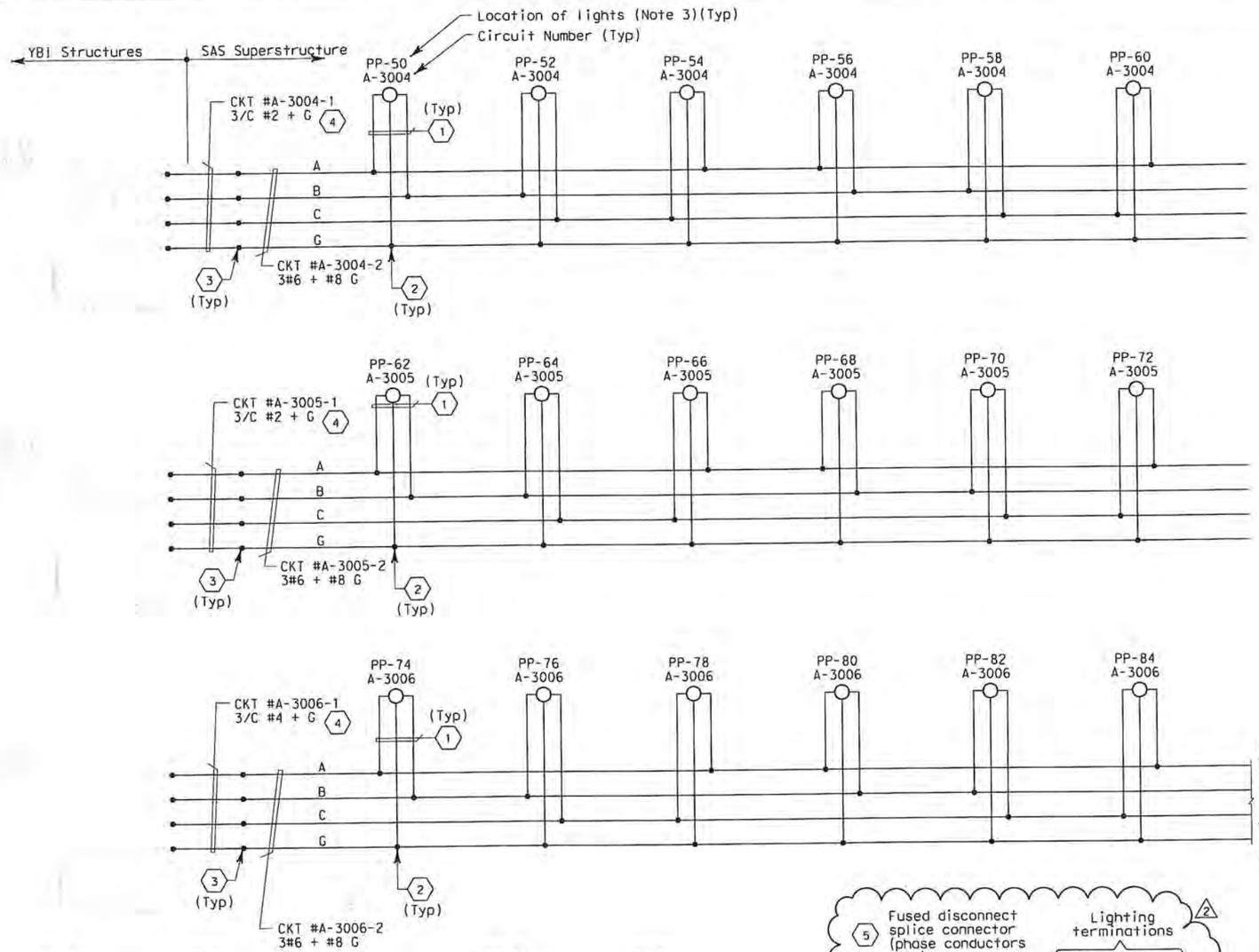

480 V SUSPENDER UPLIGHT LIGHTING

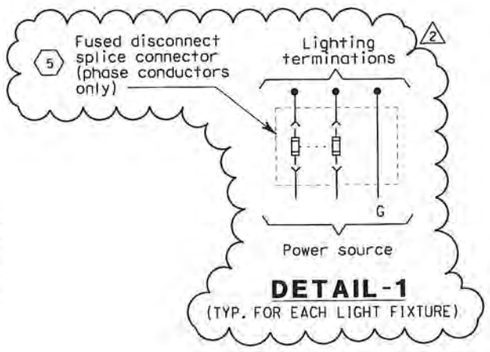

Caltrans Metric

DIST	COUNTY	ROUTE	KILOMETER POST TOTAL PROJECT	SHEET No	TOTAL SHEETS
04	SF	80	13.2/13.9	252 R2	1204

12/19/02
REGISTERED ELECTRICAL ENGINEER DATE

12-6-04
PLANS APPROVAL DATE

REGISTERED PROFESSIONAL ENGINEER — JENS ERLINGSSON No. 8249 Exp. 9/30/06 ELECTRICAL — STATE OF CALIFORNIA

PB POWER, Inc.
A Parsons Brinckerhoff Company
303 Second St., Suite 700N
San Francisco, CA 94107-1317

The State of California or its officers or agents shall not be responsible for the accuracy or completeness of electronic copies of this plan sheet.

Caltrans now has a web site! To get to the web site, go to http://www.dot.ca.gov

SHEET NOTES:

1. 2/C #10 + G (See Detail 1.) (2)
2. Conductors spliced inside pull box PB-1B. (2)
3. Conductors spliced inside junction box PB-2A located inside girder.
4. The Contractor shall extend and coil 5 meters of cable in manhole 25. All cables shall be tagged with circuits numbers as shown.
5. (2) Install 5A in-line fuse per light fixture, inside PB-1B.

NOTES:

1. Use multi-conductor cable if circuit is routed via trays.
2. References:
   - For typical pull box schedule, see sheets E-83 and E-169.
   - For circuit and conduit/cable tray schedules, see sheets starting at E-401.
3. For number of lighting fixtures see Lighting Fixture Schedule sheets E-271 and E-272.

REGISTERED PROFESSIONAL ENGINEER — FADI WALIEDDINE No. 11465 Exp. 12/31/2008 ELECTRICAL — STATE OF CALIFORNIA

FOR REVISION ONLY

REQUEST FOR INFORMATION NOT ADDRESSED IN THIS CCO REMAIN IN FORCE

MARK	DATE	DESCRIPTIONS	BY	CH'D	CCO#
		REVISIONS			
2	10/10/08	LIGHTING REVISIONS	RY AG	RG FW	43
1	02/19/08	ELECTRICAL MODIFICATIONS	MP EL	RR	42

CONTRACT CHANGE ORDER NO. 43 SO
SHEET 30 OF 42

DETAILS
TOWER AND SUSPENSION CABLE
480 V MAIN SUSPENSION CABLE LIGHTING WIRING DIAGRAM

NO SCALE

E-238

CALCULATED/ DESIGNED BY	CHECKED BY	DATE	REVISED BY	DATE REVISED
JP	EDC	8/01		11/01

STATE OF CALIFORNIA - DEPARTMENT OF TRANSPORTATION
Caltrans
DESIGN OVERSIGHT
BEHZAD GOLEMOHAMMADI

LAST REVISION 00-00-00
DATE PLOTTED => 10/10/2008
TIME PLOTTED => 8:25:09 AM

FOR REDUCED PLANS ORIGINAL SCALE IS IN MILLIMETERS 0 20 40 60 80

DGN FILE =>T:\13103\MS\pse\SAS Struc\CCO\SAS CC043\2008-10-10_Issued for Submittal\04-0120F1_0252R02.dgn
USERNAME =>garciar
CU 04251
EA 0120F1

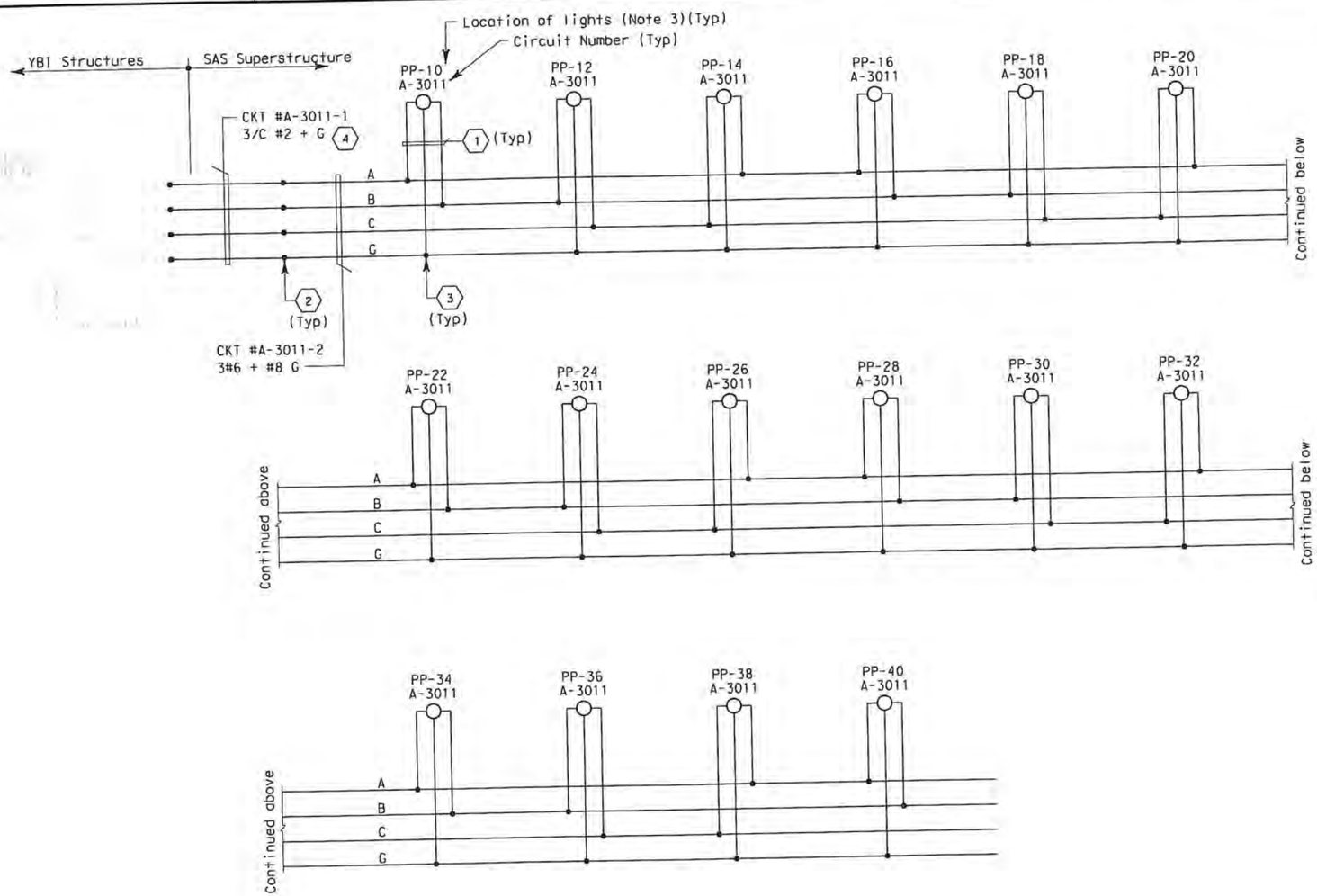

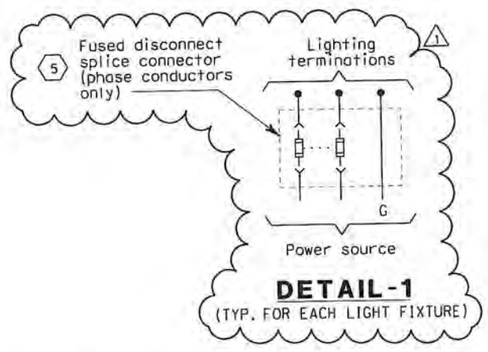

480 V MAIN CABLE DOWNLIGHT LIGHTING

Caltrans Metric

DIST	COUNTY	ROUTE	KILOMETER POST TOTAL PROJECT	SHEET No	TOTAL SHEETS
04	SF	80	13.2/13.9	253 R1	1204

12/19/02
REGISTERED ELECTRICAL ENGINEER DATE

JENS ERLINGSSON No. 8249 Exp. 9/30/06 ELECTRICAL — REGISTERED PROFESSIONAL ENGINEER — STATE OF CALIFORNIA

12-6-04
PLANS APPROVAL DATE

PB POWER, Inc.
A Parsons Brinckerhoff Company
303 Second St., Suite 700N
San Francisco, CA 94107-1317

The State of California or its officers or agents shall not be responsible for the accuracy or completeness of electronic copies of this plan sheet.

Caltrans now has a web site! To get to the web site, go to http://www.dot.ca.gov

SHEET NOTES:

1. 2/C #10 + G. See Detail 1. (1)
2. Conductors spliced inside junction box PB-2A located inside girder.
3. Conductors spliced inside junction box PB-1F located at suspender main cable. (1)
4. The Contractor shall extend and coil 5 meters of cable in manhole 25. All cables shall be tagged with circuits numbers as shown.
5. (1) Install 5A in-line fuse per light fixture, inside PB-1F.

NOTES:

1. Use multi-conductor cable if circuit is routed via trays.
2. References:
   - For typical pull box schedule, see sheets E-83 and E-169.
   - For circuit and conduit/cable tray schedules, see sheets starting at E-401.
3. For number of lighting fixtures see Lighting Fixture Schedule sheets E-271 and E-272.

REGISTERED PROFESSIONAL ENGINEER — FADI WALJEDDINE No. 11465 Exp. 12/31/2009 ELECTRICAL — STATE OF CALIFORNIA

FOR REVISION ONLY

REQUEST FOR INFORMATION NOT ADDRESSED IN THIS CCO REMAIN IN FORCE					
MARK	DATE	REVISIONS / DESCRIPTIONS	BY	CH'D	CCO#
1	10/10/08	LIGHTING REVISIONS	RY AG	RG FW	43

CONTRACT CHANGE ORDER NO. 43 SO
SHEET 31 OF 42

DETAILS
TOWER AND SUSPENSION CABLE
480 V MAIN SUSPENSION CABLE LIGHTING WIRING DIAGRAM

NO SCALE

E-239

STATE OF CALIFORNIA - DEPARTMENT OF TRANSPORTATION
Caltrans

	CALCULATED/ DESIGNED BY	CHECKED BY
JP	EDC	
DATE 8/01	11/01	
REVISED BY	DATE REVISED	

DESIGN OVERSIGHT
BEHZAD GOLEMOHAMMADI

LAST REVISION 00-00-00
DATE PLOTTED => 10/10/2008
TIME PLOTTED => 8:25:50 AM

FOR REDUCED PLANS ORIGINAL SCALE IS IN MILLIMETERS 0 20 40 60 80

DGN FILE =>T:\13103\MS\pse\SAS Struc\CCO\SAS CC043\2008-10-10_Issued for Submittal\04-0120F1_0253R01.dgn
USERNAME =>garciar

CU 04251 | EA 0120F1

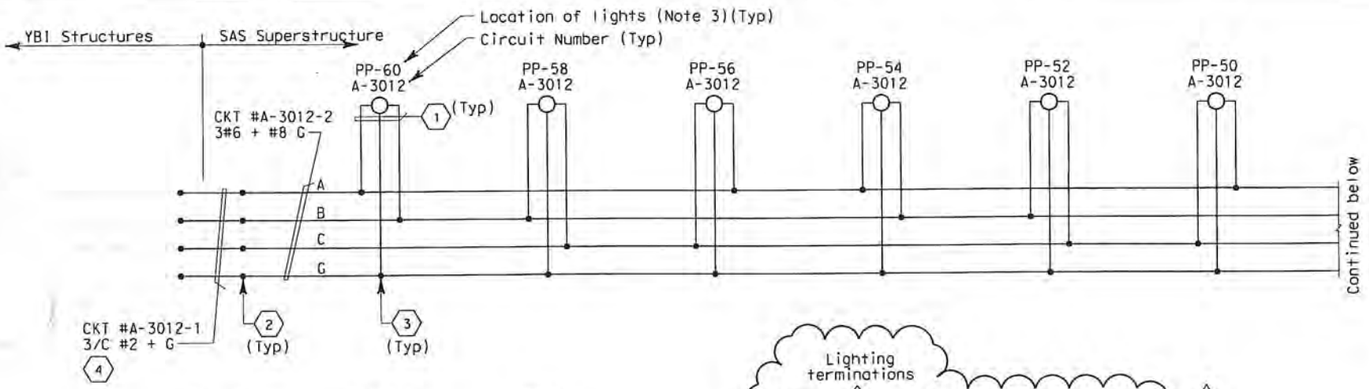

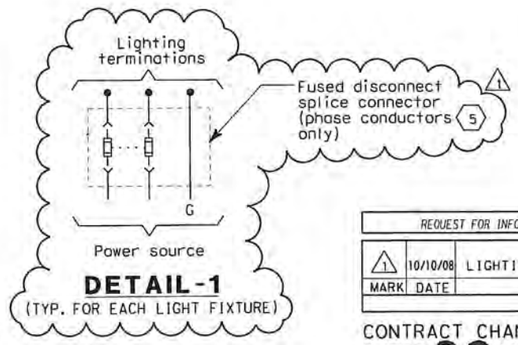

DETAIL-1
(TYP. FOR EACH LIGHT FIXTURE)

FOR REVISION ONLY

REQUEST FOR INFORMATION NOT ADDRESSED IN THIS CCO REMAIN IN FORCE

MARK	DATE	DESCRIPTIONS REVISIONS	BY	CH'D	CCO#
1	10/10/08	LIGHTING REVISIONS	RY AG	RG FW	43

CONTRACT CHANGE ORDER NO. 4350
SHEET 32 OF 48

SHEET NOTES:

1. 2/C #10 + G (see Detail 1.) 1
2. Conductors spliced inside junction box PB-2A located inside girder.
3. Conductors spliced inside junction box PB-1F located at suspender main cable. 1
4. The Contractor shall extend and coil 5 meters of cable in manhole 25. All cables shall be tagged with circuits numbers as shown.
5. 1 Install 5A in-line fuse per light fixture, inside PB-1F.

NOTES:

1. Use multi-conductor cable if circuit is routed via trays.
2. References:
   - For typical pull box schedule, see sheets E-83 and E-169.
   - For circuit and conduit/cable tray schedules, see sheets starting at E-401.
3. For number of lighting fixtures see Lighting Fixture Schedule sheets E-271 and E-272.

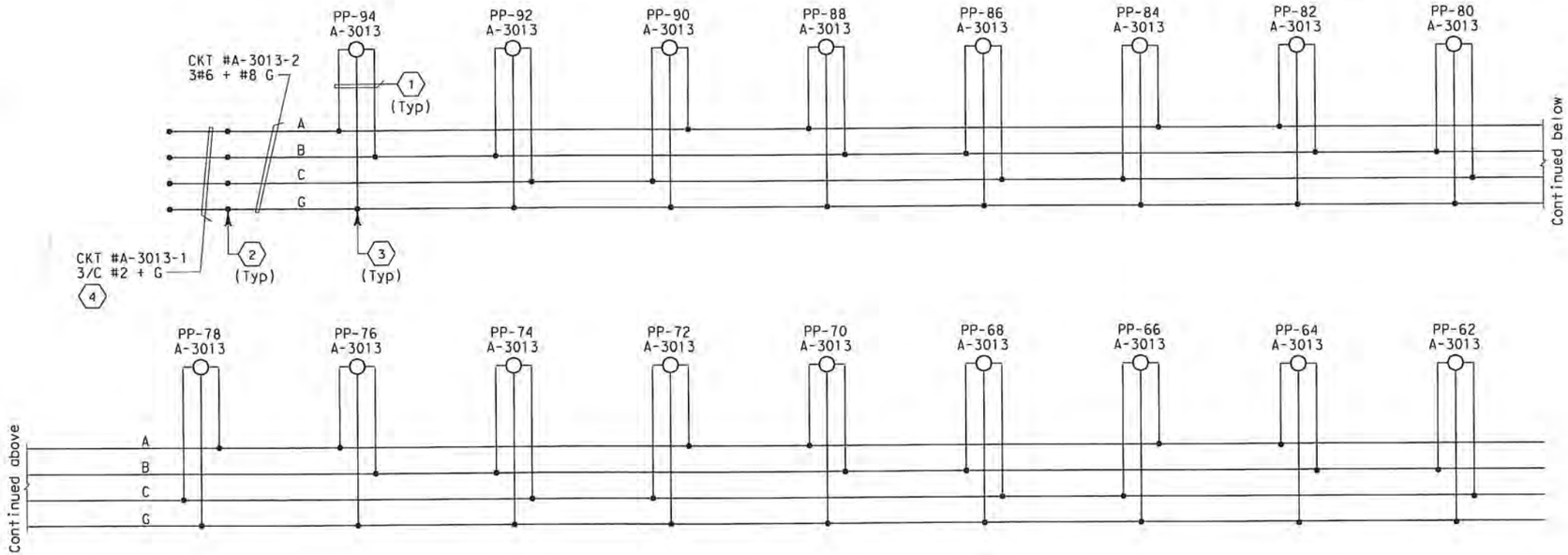

480 V MAIN CABLE DOWNLIGHT LIGHTING

DETAILS
TOWER AND SUSPENSION CABLE
480 V MAIN SUSPENSION CABLE LIGHTING WIRING DIAGRAM

NO SCALE

E-240

DIST	COUNTY	ROUTE	KILOMETER POST TOTAL PROJECT	SHEET No	TOTAL SHEETS
04	SF	80	13.2/13.9	254 R1	1204

REGISTERED ELECTRICAL ENGINEER — 12/19/02 DATE

12-6-04
PLANS APPROVAL DATE

REGISTERED PROFESSIONAL ENGINEER — JENS ERLINGSSON No. 8249 Exp. 9/30/06 ELECTRICAL — STATE OF CALIFORNIA

PB POWER, Inc.
A Parsons Brinckerhoff Company
303 Second St., Suite 700N
San Francisco, CA 94107-1317

The State of California or its officers or agents shall not be responsible for the accuracy or completeness of electronic copies of this plan sheet.

Caltrans now has a web site! To get to the web site, go to http://www.dot.ca.gov

REGISTERED PROFESSIONAL ENGINEER — FADI WALIEDDINE No. 11465 Exp. 12/31/2009 ELECTRICAL — STATE OF CALIFORNIA

DATE	REVISED BY	DATE REVISED
8/01	JP	11/01

CALCULATED/DESIGNED BY
CHECKED BY
EDC

STATE OF CALIFORNIA - DEPARTMENT OF TRANSPORTATION
Caltrans

DESIGN OVERSIGHT
BEHZAD GOLEMOHAMMADI

LAST REVISION 00-00-00
DATE PLOTTED => 10/10/2008
TIME PLOTTED => 8:26:23 AM

FOR REDUCED PLANS ORIGINAL SCALE IS IN MILLIMETERS 0 20 40 60 80

DGN FILE =>T:\I3103\WS\pse\SAS Struc\CCO\SAS CC043\2008-10-10_Issued for Submittal\04-0120f1_0254R01.dgn
USERNAME =>garciar

CU 04251 EA 0120F1

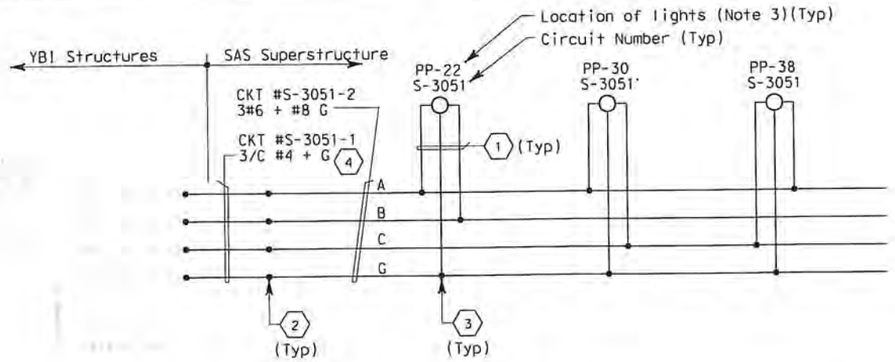

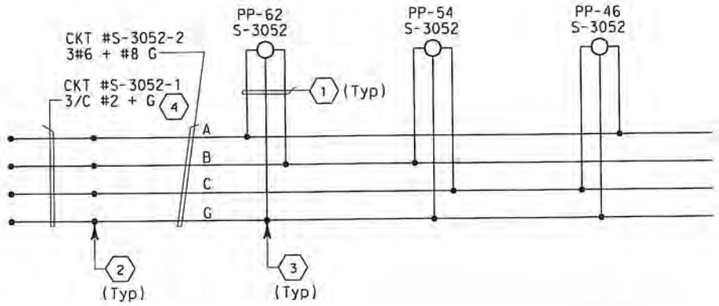

480 V ROADWAY LIGHTING-EB

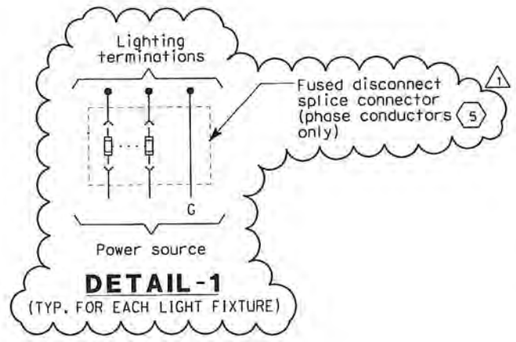

SHEET NOTES:

1. 2/C #10 + G. See Detail 1. (1)
2. Conductors spliced inside junction box PB-2A located inside girder.
3. Conductors spliced inside junction box PB-1F located at suspender main cable. (1)
4. The Contractor shall extend and coil 5 meters of cable in manhole 25. All cables shall be tagged with circuits numbers as shown.
5. (1) Install 5A in-line fuse per light fixture, inside PB-1F.

NOTES:

1. Use multi-conductor cable if circuit is routed via trays.
2. References:
   - For typical pull box schedule, see sheets E-83 and E-169.
   - For circuit and conduit/cable troy schedules, see sheets starting at E-401.
3. For number of lighting fixtures see Lighting Fixture Schedule sheets E-271 and E-272.

DIST	COUNTY	ROUTE	KILOMETER POST TOTAL PROJECT	SHEET No	TOTAL SHEETS
04	SF	80	13.2/13.9	255 R1	1204

12/19/02
REGISTERED ELECTRICAL ENGINEER DATE

12-6-04
PLANS APPROVAL DATE

REGISTERED PROFESSIONAL ENGINEER — JENS ERLINGSSON No. 8249 Exp. 9/30/06 ELECTRICAL — STATE OF CALIFORNIA

PB POWER, Inc.
A Parsons Brinckerhoff Company
303 Second St., Suite 700N
San Francisco, CA 94107-1317

The State of California or its officers or agents shall not be responsible for the accuracy or completeness of electronic copies of this plan sheet.

Caltrans now has a web site! To get to the web site, go to http://www.dot.ca.gov

REGISTERED PROFESSIONAL ENGINEER — FADI WALIEDDINE No. 11465 Exp. 12/31/2009 ELECTRICAL — STATE OF CALIFORNIA

FOR REVISION ONLY

REQUEST FOR INFORMATION NOT ADDRESSED IN THIS CCO REMAIN IN FORCE

MARK	DATE	DESCRIPTIONS (REVISIONS)	BY	CH'D	CCO#
1	10/10/08	LIGHTING REVISIONS	RY AG	RG FW	43

CONTRACT CHANGE ORDER NO. 43 SO
SHEET 33 OF 42

DETAILS
TOWER AND SUSPENSION CABLE
480 V MAIN SUSPENSION CABLE LIGHTING WIRING DIAGRAM
NO SCALE

E-243

STATE OF CALIFORNIA - DEPARTMENT OF TRANSPORTATION	DESIGN OVERSIGHT	CALCULATED/ DESIGNED BY	DATE	REVISED BY
Caltrans	BEHZAD GOLEMOHAMMADI	CHECKED BY EDC	8/01 11/01	DATE REVISED

LAST REVISION 00-00-00 — DATE PLOTTED => 10/10/2008 TIME PLOTTED => 8:27:03 AM

FOR REDUCED PLANS ORIGINAL SCALE IS IN MILLIMETERS 0 20 40 60 80

DGN FILE =>T:\13103\MS\pse\SAS Struc\CCO\SAS CC043\2008-10-10_Issued for Submittal\04-0120F1_0255R01.dgn
USERNAME =>garciar

CU 04251 EA 0120F1

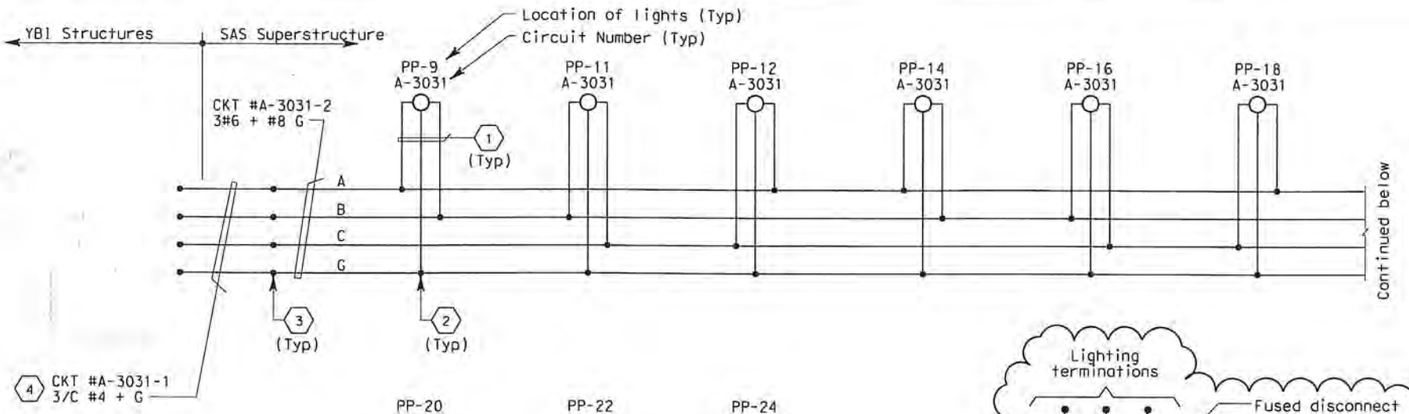

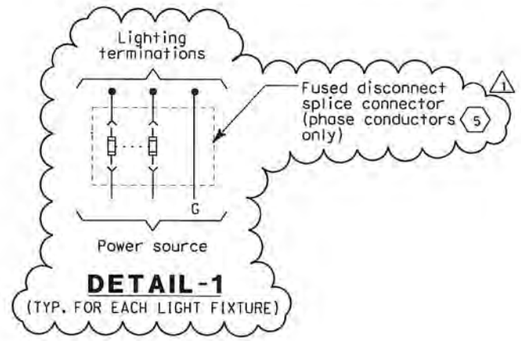

DETAIL-1
(TYP. FOR EACH LIGHT FIXTURE)

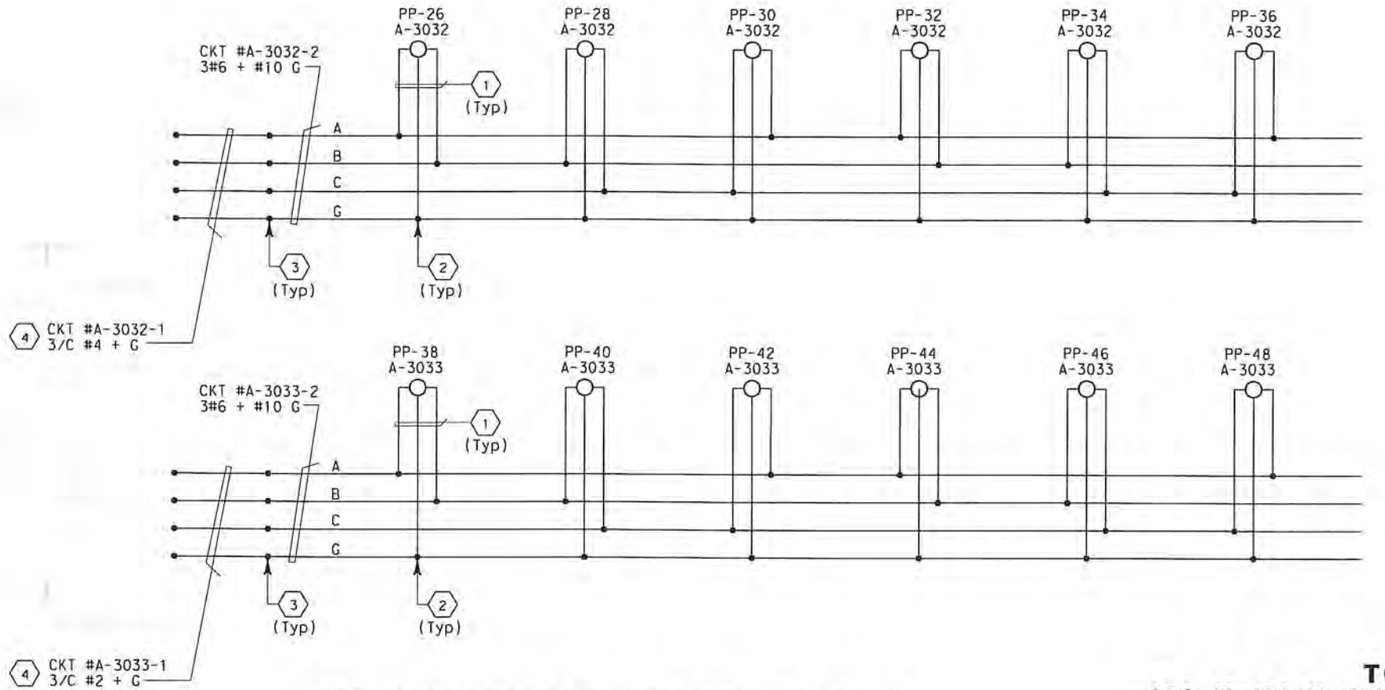

480 V SUSPENDER UPLIGHT LIGHTING

SHEET NOTES:

1. 2/C #10 + G (See Detail 1.) (1)
2. Conductors spliced inside pull box PB-1B. (1)
3. Conductors spliced inside junction box PB-2A located inside girder.
4. The Contractor shall extend and coil 5 meters of cable in manhole 25. All cables shall be tagged with circuits numbers as shown.
5. (1) Install 5A in-line fuse per light fixture, inside PB-1B.

NOTES:

1. Use multi-conductor cable if circuit is routed via trays.
2. References:
   - For typical pull box schedule, see sheets E-83 and E-169.
   - For circuit and conduit/cable tray schedules, see sheets starting at E-401.
3. For number of lighting fixtures see Lighting Fixture Schedule sheets E-271 and E272.

FOR REVISION ONLY

REQUEST FOR INFORMATION NOT ADDRESSED IN THIS CCO REMAIN IN FORCE					
1	10/10/08	LIGHTING REVISIONS	RY AG	RG FW	43
MARK	DATE	DESCRIPTIONS REVISIONS	BY	CH'D	CCO#

CONTRACT CHANGE ORDER NO. 43 SO
SHEET 34 OF 42

DETAILS
TOWER AND SUSPENSION CABLE
480 V MAIN SUSPENSION CABLE LIGHTING WIRING DIAGRAM
NO SCALE

E-244

DIST	COUNTY	ROUTE	KILOMETER POST TOTAL PROJECT	SHEET No	TOTAL SHEETS
04	SF	80	13.2/13.9	256 R1	1204

REGISTERED ELECTRICAL ENGINEER — 12/19/02 DATE
JENS ERLINGSSON No. 8249 Exp. 9/30/06 ELECTRICAL — REGISTERED PROFESSIONAL ENGINEER — STATE OF CALIFORNIA
12-6-04
PLANS APPROVAL DATE

PB POWER, Inc.
A Parsons Brinckerhoff Company
303 Second St., Suite 700N
San Francisco, CA 94107-1317

The State of California or its officers or agents shall not be responsible for the accuracy or completeness of electronic copies of this plan sheet.

Caltrans now has a web site! To get to the web site, go to http://www.dot.ca.gov

FADI WALIEDDINE No. 11465 Exp. 12/31/2009 ELECTRICAL — REGISTERED PROFESSIONAL ENGINEER — STATE OF CALIFORNIA

STATE OF CALIFORNIA - DEPARTMENT OF TRANSPORTATION	DESIGN OVERSIGHT	CALCULATED/ DESIGNED BY	DATE	REVISED BY
Caltrans	BEHZAD GOLEMOHAMMADI	CHECKED BY	11/01	DATE REVISED
		EDC	JP	8/01

LAST REVISION 00-00-00 — DATE PLOTTED => 10/10/2008 — TIME PLOTTED => 8:27:47 AM

FOR REDUCED PLANS ORIGINAL SCALE IS IN MILLIMETERS 0 20 40 60 80

DGN FILE =>T:\13103\MS\pse\SAS Struc\CCO\SAS CC043\2008-10-10_Issued for Submittal\04-0120F1_0256R01.dgn
USERNAME =>garciar

CU 04251 EA 0120F1

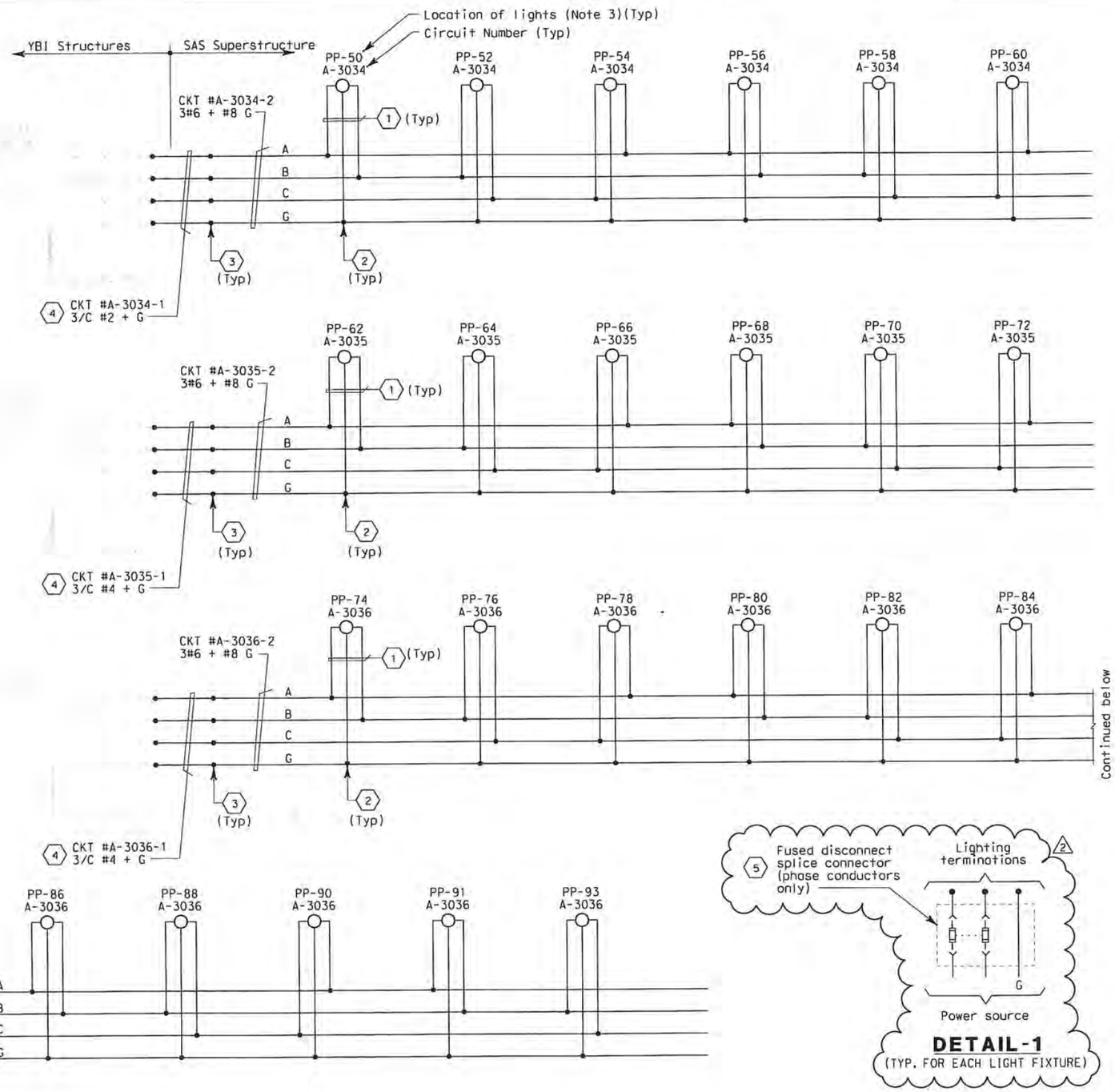

480 V SUSPENDER UPLIGHT LIGHTING

DETAIL-1
(TYP. FOR EACH LIGHT FIXTURE)

SHEET NOTES:

(1) 2/C #10 + G See Detail 1. (2)

(2) Conductors spliced inside pull box PB-1B. (2)

(3) Conductors spliced inside junction box PB-2A located inside girder.

(4) The Contractor shall extend and coil 5 meters of cable in manhole 25. All cables shall be tagged with circuits numbers as shown.

(2) (5) Install 5A in-line fuse per light fixture, inside PB-1B.

NOTES:

1. Use multi-conductor cable if circuit is routed via trays.
2. References:
   - For typical pull box schedule, see sheets E-83 and E-169.
   - For circuit and conduit/cable tray schedules, see sheets starting at E-401.
3. For number of lighting fixtures see Lighting Fixture Schedule sheets E-271 and E-272.

FOR REVISION ONLY

REQUEST FOR INFORMATION NOT ADDRESSED IN THIS CCO REMAIN IN FORCE					
MARK	DATE	DESCRIPTIONS REVISIONS	BY	CH'D	CCO#
2	10/10/08	LIGHTING REVISIONS	RY AG	RG FW	43
1	02/19/08	ELECTRICAL MODIFICATIONS	MP EL	RR	42

CONTRACT CHANGE ORDER NO. 43 SO
SHEET 35 OF 42

DETAILS
TOWER AND SUSPENSION CABLE
480 V MAIN SUSPENSION CABLE LIGHTING WIRING DIAGRAM
NO SCALE

E-245

DIST	COUNTY	ROUTE	KILOMETER POST TOTAL PROJECT	SHEET No	TOTAL SHEETS
04	SF	80	13.2/13.9	257 R2	1204

REGISTERED ELECTRICAL ENGINEER — 12/19/02 DATE
12-6-04
PLANS APPROVAL DATE

REGISTERED PROFESSIONAL ENGINEER — JENS ERLINGSSON No. 8249 Exp. 9/30/06 ELECTRICAL — STATE OF CALIFORNIA

PB POWER, Inc.
A Parsons Brinckerhoff Company
303 Second St., Suite 700N
San Francisco, CA 94107-1317

The State of California or its officers or agents shall not be responsible for the accuracy or completeness of electronic copies of this plan sheet.

Caltrans now has a web site! To get to the web site, go to http://www.dot.ca.gov

REGISTERED PROFESSIONAL ENGINEER — FADI WALIEDDINE No. 11465 Exp. 12/31/2008 ELECTRICAL — STATE OF CALIFORNIA

CALCULATED/ DESIGNED BY	DATE	BY	REVISED BY	DATE REVISED
CHECKED BY	09/01	JP		
EDC	11/01			

STATE OF CALIFORNIA - DEPARTMENT OF TRANSPORTATION
Caltrans
DESIGN OVERSIGHT
BEHZAD GOLEMOHAMMADI

LAST REVISION 00-00-00
DATE PLOTTED => 10/10/2008
TIME PLOTTED => 8:31:03 AM

FOR REDUCED PLANS ORIGINAL SCALE IS IN MILLIMETERS 0 20 40 60 80

DGN FILE =>T:\13103\MS\pse\SAS Struc\CCO\SAS CC043\2008-10-10_Issued for Submittal\04-0120f1_0257R02.dgn
USERNAME =>garciar
CU 04251
EA 0120F1

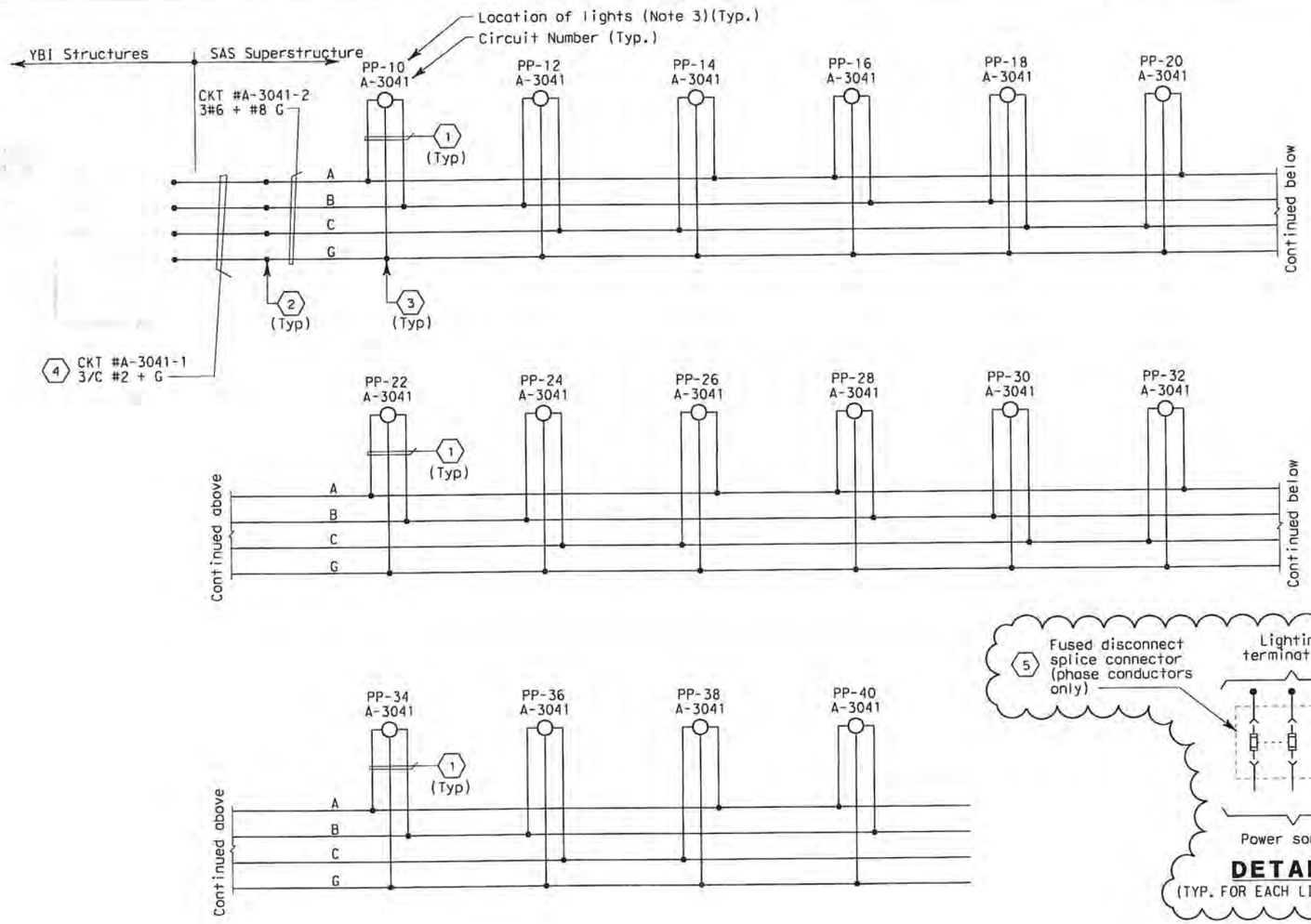

480 V SUSPENDER DOWNLIGHT LIGHTING

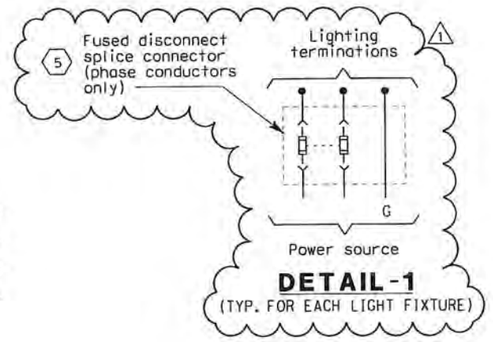

DETAIL-1
(TYP. FOR EACH LIGHT FIXTURE)

SHEET NOTES:

1. 2/C #10 + G (See Detail 1.) 1
2. Conductors spliced inside junction box PB-2A located inside girder.
3. Conductors spliced inside junction box PB-1F located at suspender main cable. 1
4. The Contractor shall extend and coil 5 meters of cable in manhole 25. All cables shall be tagged with circuits numbers as shown.
5. (1) Install 5A in-line fuse per light fixture, inside PB-1F.

NOTES:

1. Use multi-conductor cable if circuit is routed via trays.
2. References:
   - For typical pull box schedule, see sheets E-83 and E-169.
   - For circuit and conduit/cable tray schedules, see sheets starting at E-401.
3. For number of lighting fixtures see Lighting Fixture Schedule sheets E-271 and E-272.

DIST	COUNTY	ROUTE	KILOMETER POST TOTAL PROJECT	SHEET No	TOTAL SHEETS
04	SF	80	13.2/13.9	258 R1	1204

REGISTERED ELECTRICAL ENGINEER — 12/19/02 DATE

JENS ERLINGSSON No. 8249 Exp. 9/30/06 ELECTRICAL — REGISTERED PROFESSIONAL ENGINEER — STATE OF CALIFORNIA

12-6-04
PLANS APPROVAL DATE

PB POWER, Inc.
A Parsons Brinckerhoff Company
303 Second St., Suite 700N
San Francisco, CA 94107-1317

The State of California or its officers or agents shall not be responsible for the accuracy or completeness of electronic copies of this plan sheet.

Caltrans now has a web site! To get to the web site, go to http://www.dot.ca.gov

FADI WALIEDDINE No. 11465 Exp. 12/31/2009 ELECTRICAL — REGISTERED PROFESSIONAL ENGINEER — STATE OF CALIFORNIA

FOR REVISION ONLY

REQUEST FOR INFORMATION NOT ADDRESSED IN THIS CCO REMAIN IN FORCE

MARK	DATE	DESCRIPTIONS / REVISIONS	BY	CH'D	CCO#
1	10/10/08	LIGHTING REVISIONS	RY AG	RG FW	43

CONTRACT CHANGE ORDER NO. 43 SO
SHEET 36 OF 42

DETAILS
TOWER AND SUSPENSION CABLE
480 V MAIN SUSPENSION CABLE LIGHTING WIRING DIAGRAM

NO SCALE

E-246

STATE OF CALIFORNIA - DEPARTMENT OF TRANSPORTATION	DESIGN OVERSIGHT	BEHZAD GOLEMOHAMMADI	
Caltrans	CALCULATED/DESIGNED BY	JP	DATE 09/01	REVISED BY	DATE REVISED
	CHECKED BY	EDC	11/01		

LAST REVISION 00-00-00 — DATE PLOTTED => 10/10/2008 — TIME PLOTTED => 8:31:36 AM

FOR REDUCED PLANS ORIGINAL SCALE IS IN MILLIMETERS 0 20 40 60 80

DGN FILE =>T:\13103\MS\pse\SAS Struc\CCO\SAS CC043\2008-10-10_Issued for Submittal\04-0120F1_0258R01.dgn
USERNAME =>garciar

CU 04251 | EA 0120F1

DIST	COUNTY	ROUTE	KILOMETER POST TOTAL PROJECT	SHEET No	TOTAL SHEETS
04	SF	80	13.2/13.9	259 R1	1204

REGISTERED ELECTRICAL ENGINEER — 12/19/02 DATE

12-6-04
PLANS APPROVAL DATE

REGISTERED PROFESSIONAL ENGINEER — JENS ERLINGSSON No. 8249 Exp. 9/30/06 ELECTRICAL — STATE OF CALIFORNIA

PB POWER, Inc.
A Parsons Brinckerhoff Company
303 Second St., Suite 700N
San Francisco, CA 94107-1317

The State of California or its officers or agents shall not be responsible for the accuracy or completeness of electronic copies of this plan sheet.

Caltrans now has a web site! To get to the web site, go to http://www.dot.ca.gov

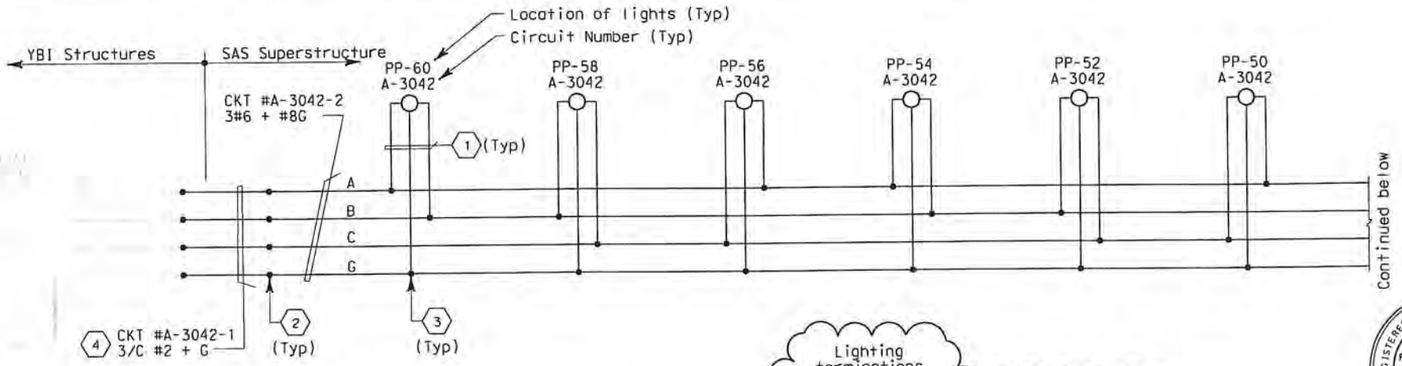

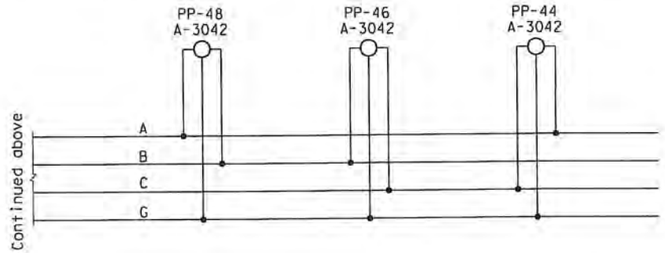

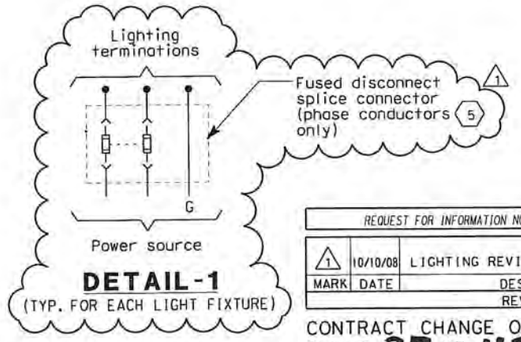

DETAIL-1
(TYP. FOR EACH LIGHT FIXTURE)

REGISTERED PROFESSIONAL ENGINEER — FADI WALIEDDINE No. 11465 Exp. 12/31/2009 ELECTRICAL — STATE OF CALIFORNIA

FOR REVISION ONLY

REQUEST FOR INFORMATION NOT ADDRESSED IN THIS CCO REMAIN IN FORCE

MARK	DATE	REVISIONS DESCRIPTIONS	BY	CH'D	CCO#
1	10/10/08	LIGHTING REVISIONS	RY AG	RG FW	43

CONTRACT CHANGE ORDER NO. 43 50
SHEET 37 OF 42

SHEET NOTES:

(1) 2/C #10 + G (See Detail 1.) (1)

(2) Conductors spliced inside junction box PB-2A located inside girder.

(3) Conductors spliced inside junction box PB-1F located at suspender main cable. (1)

(4) The Contractor shall extend and coil 5 meters of cable in manhole 25. All cables shall be tagged with circuits numbers as shown.

(1) (5) Install 5A in-line fuse per light fixture, inside PB-1F.

NOTES:

1. Use multi-conductor cable if circuit is routed via trays.
2. References:
   - For typical pull box schedule, see sheets E-83 and E-169.
   - For circuit and conduit/cable tray schedules, see sheets starting at E-401.
3. For number of lighting fixtures see Lighting Fixture Schedule sheets E-271 and E-272.

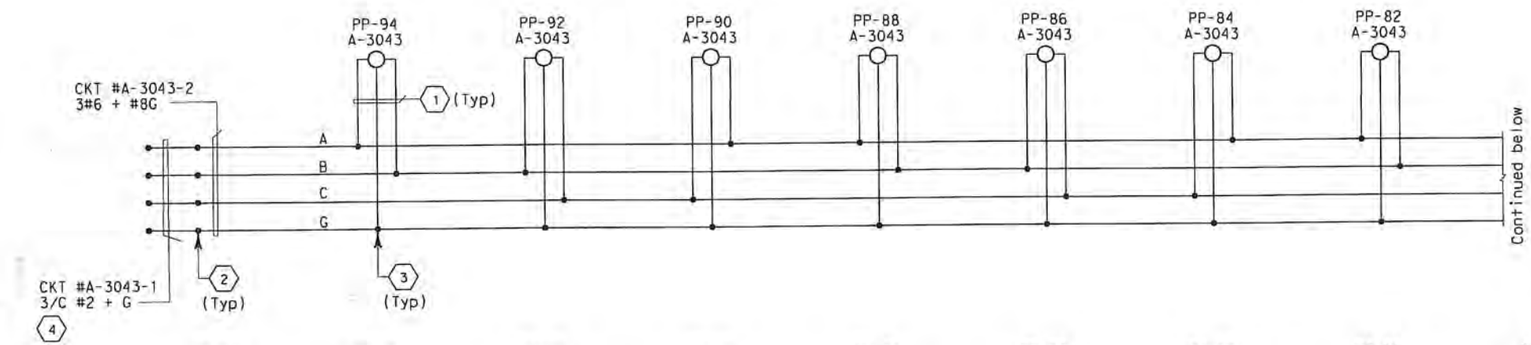

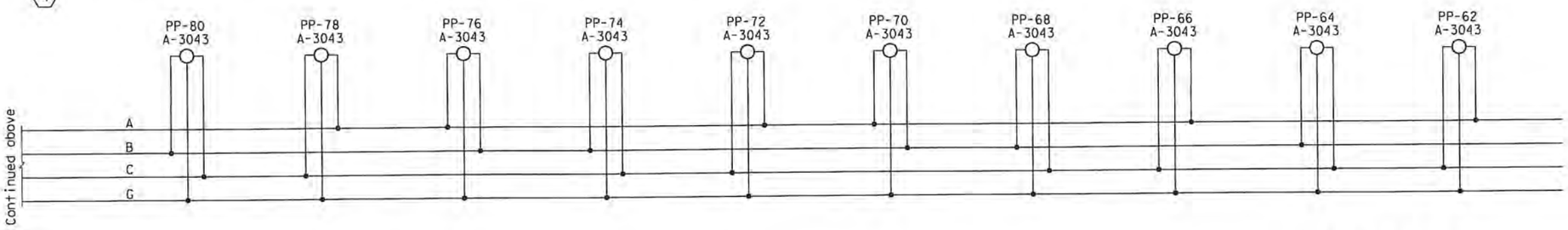

480 V MAIN CABLE DOWNLIGHT LIGHTING

DETAILS
TOWER AND SUSPENSION CABLE
480 V MAIN SUSPENSION CABLE LIGHTING WIRING DIAGRAM

NO SCALE

E-247

CALCULATED/ DESIGNED BY	JP	DATE 09/01	REVISED BY
CHECKED BY	EDC	11/01	DATE REVISED

STATE OF CALIFORNIA - DEPARTMENT OF TRANSPORTATION
Caltrans

DESIGN OVERSIGHT
BEHZAD GOLEMOHAMMADI

LAST REVISION 00-00-00
DATE PLOTTED => 10/10/2008
TIME PLOTTED => 8:32:21 AM

FOR REDUCED PLANS ORIGINAL SCALE IS IN MILLIMETERS 0 20 40 60 80

DGN FILE =>T:\13103\MS\pse\SAS Struc\CCO\SAS CC043\2008-10-10_Issued for Submittal\04-0120F1_0259R01.dgn
USERNAME =>garcior

CU 04251 EA 0120F1

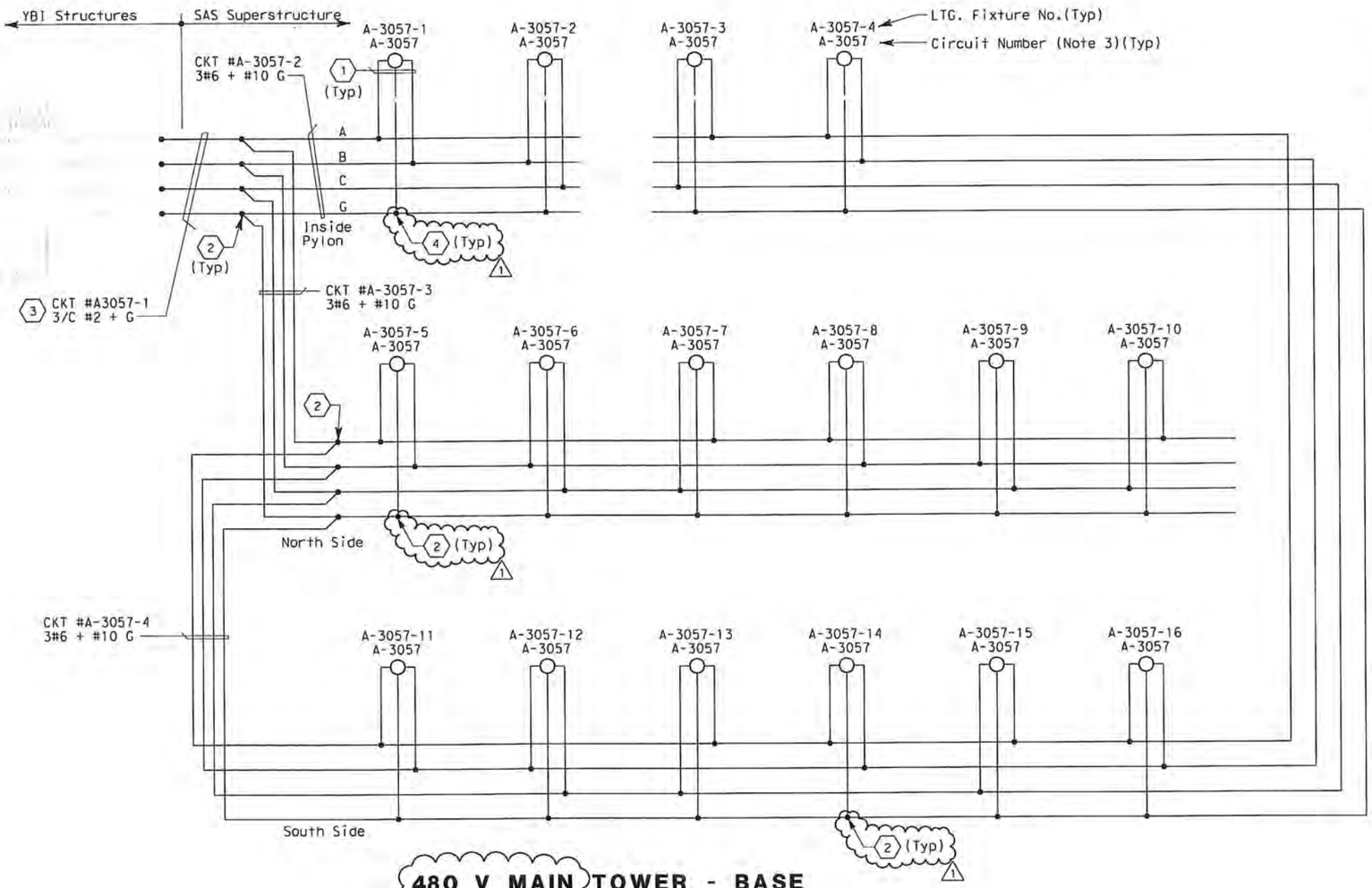

480 V MAIN TOWER - BASE

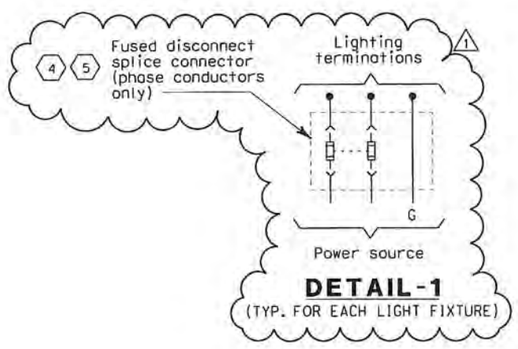

DETAIL-1
(TYP. FOR EACH LIGHT FIXTURE)

DIST	COUNTY	ROUTE	KILOMETER POST TOTAL PROJECT	SHEET No	TOTAL SHEETS
04	SF	80	13.2/13.9	260 R1	1204

James Erlingsson 12/19/02
REGISTERED ELECTRICAL ENGINEER DATE

12-6-04
PLANS APPROVAL DATE

REGISTERED PROFESSIONAL ENGINEER — JENS ERLINGSSON No. 8249 Exp. 9/30/06 ELECTRICAL — STATE OF CALIFORNIA

PB POWER, Inc.
A Parsons Brinckerhoff Company
303 Second St., Suite 700N
San Francisco, CA 94107-1317

The State of California or its officers or agents shall not be responsible for the accuracy or completeness of electronic copies of this plan sheet.

Caltrans now has a web site! To get to the web site, go to http://www.dot.ca.gov

SHEET NOTES:

(1) 2/C #10 + G See Detail 1. 1

(2) Conductors spliced inside junction box located at tower base.

(3) The Contractor shall extend and coil 5 meters of cable in manhole 25. All cables shall be tagged with circuits numbers as shown.

1
(4) Splice conductor and install 5A in-line fuse per light fixture, inside PB-1B for A-3057-1 through A-3057-4.

(5) Install 5A in-line fuse per light fixture, inside the remote ballast housing for A-3057-5 through A-3057-16.

NOTES:

1. Use multi-conductor cable if circuit is routed via cable trays.
2. References:
   - For circuit and conduit/cable tray schedules, see sheets starting at E-401.
3. For lighting schedule see sheet E-231.

REGISTERED PROFESSIONAL ENGINEER — FADI WALIEDDINE No. 11465 Exp. 12/31/2009 ELECTRICAL — STATE OF CALIFORNIA

FOR REVISION ONLY

REQUEST FOR INFORMATION NOT ADDRESSED IN THIS CCO REMAIN IN FORCE

MARK	DATE	DESCRIPTIONS	BY	CH'D	CCO#
		REVISIONS			
1	10/10/08	LIGHTING REVISIONS	RY AG	RG FW	43

CONTRACT CHANGE ORDER NO. 43 SO
SHEET 38 OF 42

DETAILS
TOWER AND SUSPENSION CABLE
480 V TOWER BASE LIGHTING WIRING DIAGRAM
NO SCALE

E-250

CALCULATED/ DESIGNED BY	CHECKED BY	REVISED BY	DATE REVISED
FK	EDC		
DATE 09/01	11/01		

DESIGN OVERSIGHT — BEHZAD GOLEMOHAMMADI

STATE OF CALIFORNIA - DEPARTMENT OF TRANSPORTATION — Caltrans

FOR REDUCED PLANS ORIGINAL SCALE IS IN MILLIMETERS 0 20 40 60 80

DGN FILE =>T:\13103\WS\pse\SAS Struc\CCO\SAS CC043\2008-10-10_Issued for Submittal\04-0120F1_0260R01.dgn
USERNAME =>garciar
CU 04251 | EA 0120F1

LAST REVISION 00-00-00 — DATE PLOTTED => 10/10/2008 TIME PLOTTED => 8:33:33 AM

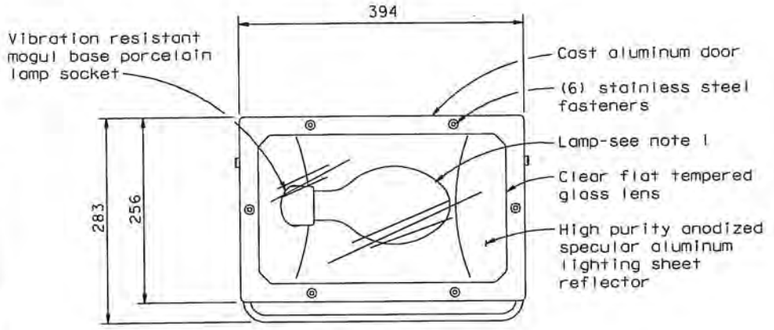

LIGHTING FIXTURE DETAIL

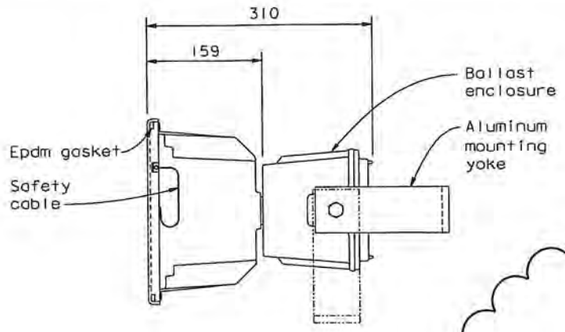

END VIEW

Not to scale

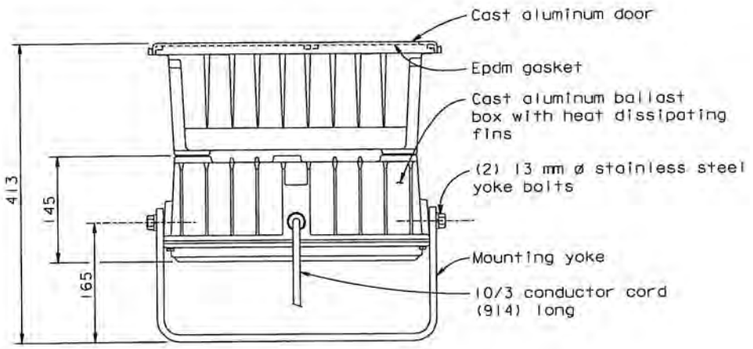

BOTTOM VIEW

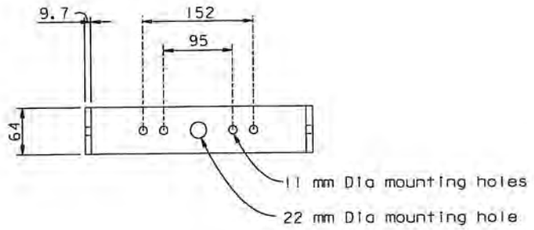

MOUNTING YOKE DETAIL

Not to scale

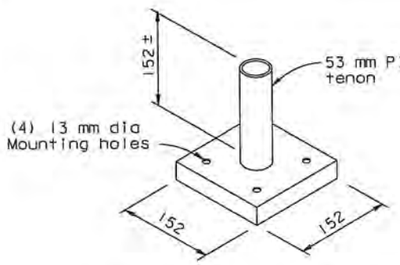

TENON BASE DETAIL

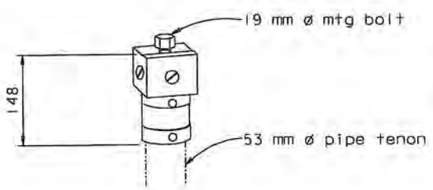

TENON BRACKET DETAIL

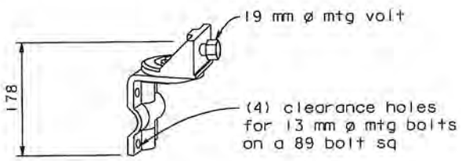

WALL BRACKET DETAIL

(For wall & beam mounted fixtures)

Notes

1. Lamps shall be ed-28 metal halide pulse-start , wattage as indicated on electrical plans.
2. Fixture and components shall be U.L. listed for wet location.

DIST	COUNTY	ROUTE	KILOMETER POST TOTAL PROJECT	SHEET NO.	TOTAL SHEETS
04	SF	80	13.2/13.9	268R1	1204

REGISTERED ENGINEER-CIVIL

12-6-04

PLANS APPROVAL DATE

REGISTERED PROFESSIONAL ENGINEER — T. W. SPARKS — No. E16039 — Exp. 9-30-05 — ELECTRICAL — STATE OF CALIFORNIA

The State of California or its officers or agents shall not be responsible for the accuracy or completeness of electronic copies of this plan sheet.

T.Y. LIN / MOFFATT & NICHOL
825 BATTERY STREET
SAN FRANCISCO, CA 94111

Caltrans now has a web site! To get to the web site, go to: http://www.dot.ca.gov

REGISTERED PROFESSIONAL ENGINEER — Tien Hung Ho — No. C 43990 — Exp. 06/30/09 — CIVIL — STATE OF CALIFORNIA

FOR REVISIONS ONLY

REQUESTS FOR INFORMATION NOT ADDRESSED IN THIS CCO REMAIN IN FORCE

MARK	DATE	REVISIONS DESCRIPTIONS	BY	CH'D	CCO#
1	08/25/08	LIGHTING REVISIONS	TH	MN	43

CONTRACT CHANGE ORDER NO. 43 SO
SHEET 39 OF 42

DETAILS
TOWER AND SUSPENSION CABLE
SAS STRUCTURE TOWER LIGHTING NO. 2

SCALE AS NOTED

E-260

	DATE	REVISED BY
CALCULATED/ DESIGNED BY	GAM	10/00
CHECKED BY	TYL	10/00
	DATE	REVISED

DESIGN OVERSIGHT — BOB ZANDIPOUR

STATE OF CALIFORNIA - DEPARTMENT OF TRANSPORTATION — Caltrans

SAS STRUCTURE

LAST REVISION 04-19-00 — DATE PLOTTED => 26 AUG 2008 — TIME PLOTTED => 15:40:26

FOR REDUCED PLANS ORIGINAL SCALE IN MILLIMETERS 0 20 40 60 80

FILE => I:\bb\04-01201\sas\contract plans and cco\cco\in progress\cco#43\update 08-25-08\dgn\40_20fig260.dgn
USERNAME => dwinrow

CU 04251 — EA 01201

DIST	COUNTY	ROUTE	KILOMETER POST TOTAL PROJECT	SHEET No.	TOTAL SHEETS
04	SF	80	13.2/13.9	276 R2	1204

REGISTERED ELECTRICAL ENGINEER — 12/19/02

12-6-04
PLANS APPROVAL DATE

JENS ERLINGSSON No. 8249 Exp. 9/30/06 ELECTRICAL — REGISTERED PROFESSIONAL ENGINEER — STATE OF CALIFORNIA

PB POWER, Inc.
A Parsons Brinckerhoff Company
303 Second St., Suite 700N
San Francisco, CA 94107-1317

The State of California or its officers or agents shall not be responsible for the accuracy or completeness of electronic copies of this plan sheet.

Caltrans now has a web site! To get to the web site, go to http://www.dot.ca.gov

Caltrans Metric

FADI WALIEDDINE — REGISTERED PROFESSIONAL ENGINEER — No. 11465 Exp. 12/31/2009 ELECTRICAL — STATE OF CALIFORNIA

FOR REVISION ONLY

REQUEST FOR INFORMATION NOT ADDRESSED IN THIS CCO REMAIN IN FORCE

MARK	DATE	DESCRIPTIONS	BY	CH'D	CCO#
		REVISIONS			
2	10/10/08	LIGHTING REVISIONS.	SPO MP	RG ES	43
1	02/19/08	ELECTRICAL MODIFICATIONS.	MP EL	RR	42

CONTRACT CHANGE ORDER NO. 4350
SHEET 40 OF 42

MAIN CABLE ROADWAY AND DOWNLIGHT LIGHTING SCHEDULE

Circuit Number	Station	Location: Roadway side	Location: Suspend at Panel Point	Mounting	Ltg. Fixture Type	Number/ Wattage	Remarks
S-3021	56+78	-	PP-22	Main Cable	MSR-2B-C	2-400 W	with Remote Ballast
S-3021				Main Cable	MSR-2A-C	1-400 W	with Remote Ballast
S-3021	57+18	-	PP-30	Main Cable	MSR-2B-C	2-400 W	with Remote Ballast
S-3021				Main Cable	MSR-2A-C	1-400 W	with Remote Ballast
S-3021	57+58	-	PP-38	Main Cable	MSR-2-C	3-400 W	with Remote Ballast
S-3022	57+98	-	PP-46	Main Cable	MSR-2-C	3-400 W	with Remote Ballast
S-3022	58+38	-	PP-54	Main Cable	MSR-2-C	3-400 W	with Remote Ballast
S-3022	58+78	-	PP-62	Main Cable	MSR-2-C	3-400 W	with Remote Ballast
S-3023	59+18	-	PP-70	Main Cable	MSR-2-C	3-400 W	with Remote Ballast
S-3023	59+58	-	PP-78	Main Cable	MSR-2B-C	3-400 W	with Remote Ballast
A-3011	56+18	-	PP-10	Main Cable	MAD-4-C	1-175 W	with Remote Ballast
A-3011	56+28	-	PP-12	Main Cable	MAD-4-C	1-175 W	with Remote Ballast
A-3011	56+38	-	PP-14	Main Cable	MAD-4-C	1-175 W	with Remote Ballast
A-3011	56+48	-	PP-16	Main Cable	MAD-3-C	1-250 W	with Remote Ballast
A-3011	56+58	-	PP-18	Main Cable	MAD-3-C	1-250 W	with Remote Ballast
A-3011	56+68	-	PP-20	Main Cable	MAD-3-C	1-250 W	with Remote Ballast
A-3011	56+78	-	PP-22	Main Cable	MAD-3-C	1-250 W	with Remote Ballast
A-3011	56+88	-	PP-24	Main Cable	MAD-2-C	1-400 W	with Remote Ballast
A-3011	56+98	-	PP-26	Main Cable	MAD-2-C	1-400 W	with Remote Ballast
A-3011	57+08	-	PP-28	Main Cable	MAD-2-C	1-400 W	with Remote Ballast
A-3011	57+18	-	PP-30	Main Cable	MAD-2-C	1-400 W	with Remote Ballast
A-3011	57+28	-	PP-32	Main Cable	MAD-2-C	1-400 W	with Remote Ballast
A-3011	57+38	-	PP-34	Main Cable	MAD-2-C	1-400 W	with Remote Ballast
A-3011	57+48	-	PP-36	Main Cable	MAD-2-C	1-400 W	with Remote Ballast
A-3011	57+58	-	PP-38	Main Cable	MAD-2-C	1-400 W	with Remote Ballast
A-3011	57+68	-	PP-40	Main Cable	MAD-2-C	1-400 W	with Remote Ballast
A-3012	57+88	-	PP-44	Main Cable	MAD-2-C	1-400 W	with Remote Ballast
A-3012	57+98	-	PP-46	Main Cable	MAD-2-C	1-400 W	with Remote Ballast
A-3012	58+08	-	PP-48	Main Cable	MAD-2-C	1-400 W	with Remote Ballast
A-3012	58+18	-	PP-50	Main Cable	MAD-2-C	1-400 W	with Remote Ballast
A-3012	58+28	-	PP-52	Main Cable	MAD-2-C	1-400 W	with Remote Ballast
A-3012	58+38	-	PP-54	Main Cable	MAD-2-C	1-400 W	with Remote Ballast
A-3012	58+48	-	PP-56	Main Cable	MAD-2-C	1-400 W	with Remote Ballast
A-3012	58+58	-	PP-58	Main Cable	MAD-2-C	1-400 W	with Remote Ballast
A-3012	58+68	-	PP-60	Main Cable	MAD-2-C	1-400 W	with Remote Ballast
A-3013	58+78	-	PP-62	Main Cable	MAD-2-C	1-400 W	with Remote Ballast
A-3013	58+88	-	PP-64	Main Cable	MAD-2-C	1-400 W	with Remote Ballast
A-3013	58+98	-	PP-66	Main Cable	MAD-2-C	1-400 W	with Remote Ballast
A-3013	59+08	-	PP-68	Main Cable	MAD-3-C	1-250 W	with Remote Ballast
A-3013	59+18	-	PP-70	Main Cable	MAD-3-C	1-250 W	with Remote Ballast
A-3013	59+28	-	PP-72	Main Cable	MAD-3-C	1-250 W	with Remote Ballast
A-3013	59+38	-	PP-74	Main Cable	MAD-3-C	1-250 W	with Remote Ballast
A-3013	59+48	-	PP-76	Main Cable	MAD-3-C	1-250 W	with Remote Ballast
A-3013	59+58	-	PP-78	Main Cable	MAD-3-C	1-250 W	with Remote Ballast
A-3013	59+68	-	PP-80	Main Cable	MAD-3-C	1-250 W	with Remote Ballast
A-3013	59+78	-	PP-82	Main Cable	MAD-3-C	1-250 W	with Remote Ballast
A-3013	59+88	-	PP-84	Main Cable	MAD-4-C	1-175 W	with Remote Ballast
A-3013	59+98	-	PP-86	Main Cable	MAD-4-C	1-175 W	with Remote Ballast
A-3013	60+08	-	PP-88	Main Cable	MAD-4-C	1-175 W	with Remote Ballast
A-3013	60+18	-	PP-90	Main Cable	MAD-4-C	1-175 W	with Remote Ballast
A-3013	60+28	-	PP-92	Main Cable	MAD-4-C	1-175 W	with Remote Ballast
A-3013	60+38	-	PP-94	Main Cable	MAD-4-C	1-175 W	with Remote Ballast

SUSPENDER UPLIGHT LIGHTING SCHEDULE

Circuit Number	Station	Location: Roadway side	Location: Suspend at Panel Point	Mounting	Ltg. Fixture Type	Number/ Wattage	Remarks
A-3001	56+16	North	Near PP-9	Bridge Deck	MAU-5-D	1-100 W	with Remote Ballast
A-3001	(56+20.6)	North	(PP10+2.6 m)	Bridge Deck	MAU-5-D	1-100 W	with Remote Ballast
A-3001	2 56+28	North	2 PP-12	Suspender Base	MAU-4-D	2-175 W	with Remote Ballast
A-3001	56+38	North	2 PP-14	Suspender Base	MAU-4-D	2-175 W	with Remote Ballast
A-3001	56+48	North	PP-16	Suspender Base	MAU-3-D	2-250 W	with Remote Ballast
A-3001	56+58	North	PP-18	Suspender Base	MAU-3-D	2-250 W	with Remote Ballast
A-3001	56+68	North	PP-20	Suspender Base	MAU-3-D	2-250 W	with Remote Ballast
A-3001	56+78	North	PP-22	Suspender Base	MAU-3-D	2-250 W	with Remote Ballast
A-3001	56+88	North	PP-24	Suspender Base	MAU-2-D	2-400 W	with Remote Ballast
A-3002	56+98	North	PP-26	Suspender Base	MAU-2-D	2-400 W	with Remote Ballast
A-3002	57+08	North	PP-28	Suspender Base	MAU-2-D	2-400 W	with Remote Ballast
A-3002	57+18	North	PP-30	Suspender Base	MAU-2-D	2-400 W	with Remote Ballast
A-3002	57+28	North	PP-32	Suspender Base	MAU-2-D	2-400 W	with Remote Ballast
A-3002	57+38	North	PP-34	Suspender Base	MAU-2-D	2-400 W	with Remote Ballast
A-3002	57+48	North	PP-36	Suspender Base	MAU-2-D	2-400 W	with Remote Ballast
A-3003	57+58	North	PP-38	Suspender Base	MAU-2-D	2-400 W	with Remote Ballast
A-3003	57+68	North	PP-40	Suspender Base	MAU-2-D	2-400 W	with Remote Ballast
A-3003	57+78	North	PP-42	Suspender Base	MAU-2-D	2-400 W	with Remote Ballast
A-3003	57+88	North	PP-44	Suspender Base	MAU-2-D	2-400 W	with Remote Ballast
A-3003	57+98	North	PP-46	Suspender Base	MAU-2-D	2-400 W	with Remote Ballast
A-3003	58+08	North	PP-48	Suspender Base	MAU-2-D	2-400 W	with Remote Ballast
A-3004	58+18	North	PP-50	Suspender Base	MAU-2-D	2-400 W	with Remote Ballast
A-3004	58+28	North	PP-52	Suspender Base	MAU-2-D	2-400 W	with Remote Ballast
A-3004	58+38	North	PP-54	Suspender Base	MAU-2-D	2-400 W	with Remote Ballast
A-3004	58+48	North	PP-56	Suspender Base	MAU-2-D	2-400 W	with Remote Ballast
A-3004	58+58	North	PP-58	Suspender Base	MAU-2-D	2-400 W	with Remote Ballast
A-3004	58+68	North	PP-60	Suspender Base	MAU-2-D	2-400 W	with Remote Ballast
A-3005	58+78	North	PP-62	Suspender Base	MAU-2-D	2-400 W	with Remote Ballast
A-3005	58+88	North	PP-64	Suspender Base	MAU-3-D	2-250 W	with Remote Ballast
A-3005	58+98	North	PP-66	Suspender Base	MAU-3-D	2-250 W	with Remote Ballast
A-3005	59+08	North	PP-68	Suspender Base	MAU-3-D	2-250 W	with Remote Ballast
A-3005	59+18	North	PP-70	Suspender Base	MAU-3-D	2-250 W	with Remote Ballast
A-3005	59+28	North	PP-72	Suspender Base	MAU-3-D	2-250 W	with Remote Ballast
A-3006	59+38	North	PP-74	Suspender Base	MAU-3-D	2-250 W	with Remote Ballast
A-3006	59+48	North	PP-76	Suspender Base	MAU-3-D	2-250 W	with Remote Ballast
A-3006	59+58	North	PP-78	Suspender Base	MAU-3-D	2-250 W	with Remote Ballast
A-3006	59+68	North	PP-80	Suspender Base	MAU-4-D	2-175 W	with Remote Ballast
A-3006	59+78	North	PP-82	Suspender Base	MAU-4-D	2-175 W	with Remote Ballast
A-3006	59+88	North	PP-84	Suspender Base	MAU-4-D	2-175 W	with Remote Ballast
A-3006	59+98	North	PP-86	Suspender Base	MAU-4-D	2-175 W	with Remote Ballast
A-3006	60+08	North	PP-88	Suspender Base	MAU-4-D	2-175 W	with Remote Ballast
A-3006	60+18	North	West PP-90	Suspender Base	MAU-4-D	1-175 W	with Remote Ballast
A-3006	60+23	North	Near PP-91	Bridge Deck	MAU-5-D	1-100 W	with Remote Ballast
A-3006	60+33	North	PP-93	Bridge Deck	MAU-5-D	1-100 W	with Remote Ballast

NOTE:

1. For Roadway and Suspender lightning wiring diagrams see sheets E-236 to E-240.

SAS SUPERSTRUCTURE - WB

DETAILS
TOWER AND SUSPENSION CABLE LIGHTING SCHEDULES

NO SCALE

E-271

STATE OF CALIFORNIA - DEPARTMENT OF TRANSPORTATION	DESIGN OVERSIGHT	CALCULATED/ DESIGNED BY	CHECKED BY	DATE	REVISED BY	DATE REVISED
Caltrans	BEHZAD GOLEMOHAMMADI	JP	EDC	09/01	II/01	

LAST REVISION 00-00-00 — DATE PLOTTED => 10/10/2008 — TIME PLOTTED => 8:34:17 AM

FOR REDUCED PLANS ORIGINAL SCALE IS IN MILLIMETERS 0 20 40 60 80

DGN FILE =>T:\13103\MS\pse\SAS Struc\CCO\SAS CC043\2008-10-10_Issued for Submittal\04-0120F1_0276R02.dgn
USERNAME =>garciar

CU 04251 | EA 0120F1

REQUEST FOR INFORMATION NOT ADDRESSED IN THIS CCO REMAIN IN FORCE					
2	10/10/08	LIGHTING REVISIONS	RY AG	RG FW	43
1	09/24/08	CABLE ELECTRICAL	RR AG	RG SE	72
MARK	DATE	DESCRIPTIONS REVISIONS	BY	CH'D	CCO#

CONTRACT CHANGE ORDER NO. 43 S0
SHEET 41 OF 42

REGISTERED PROFESSIONAL ENGINEER
FADI WALIEDDINE
No. 11465
Exp. 12/31/2009
ELECTRICAL
STATE OF CALIFORNIA

FOR REVISION ONLY

Caltrans Metric

DIST	COUNTY	ROUTE	KILOMETER POST TOTAL PROJECT	SHEET No	TOTAL SHEETS
04	SF	80	13.2/13.9	299 R2	1204

12/19/02
REGISTERED ELECTRICAL ENGINEER DATE

12-6-04
PLANS APPROVAL DATE

REGISTERED PROFESSIONAL ENGINEER
JENS ERLINGSSON
No. 8249
Exp. 9/30/06
ELECTRICAL
STATE OF CALIFORNIA

PB POWER, Inc.
A Parsons Brinckerhoff Company
303 Second St., Suite 700N
San Francisco, CA 94107-1317

The State of California or its officers or agents shall not be responsible for the accuracy or completeness of electronic copies of this plan sheet.

Caltrans now has a web site! To get to the web site, go to http://www.dot.ca.gov

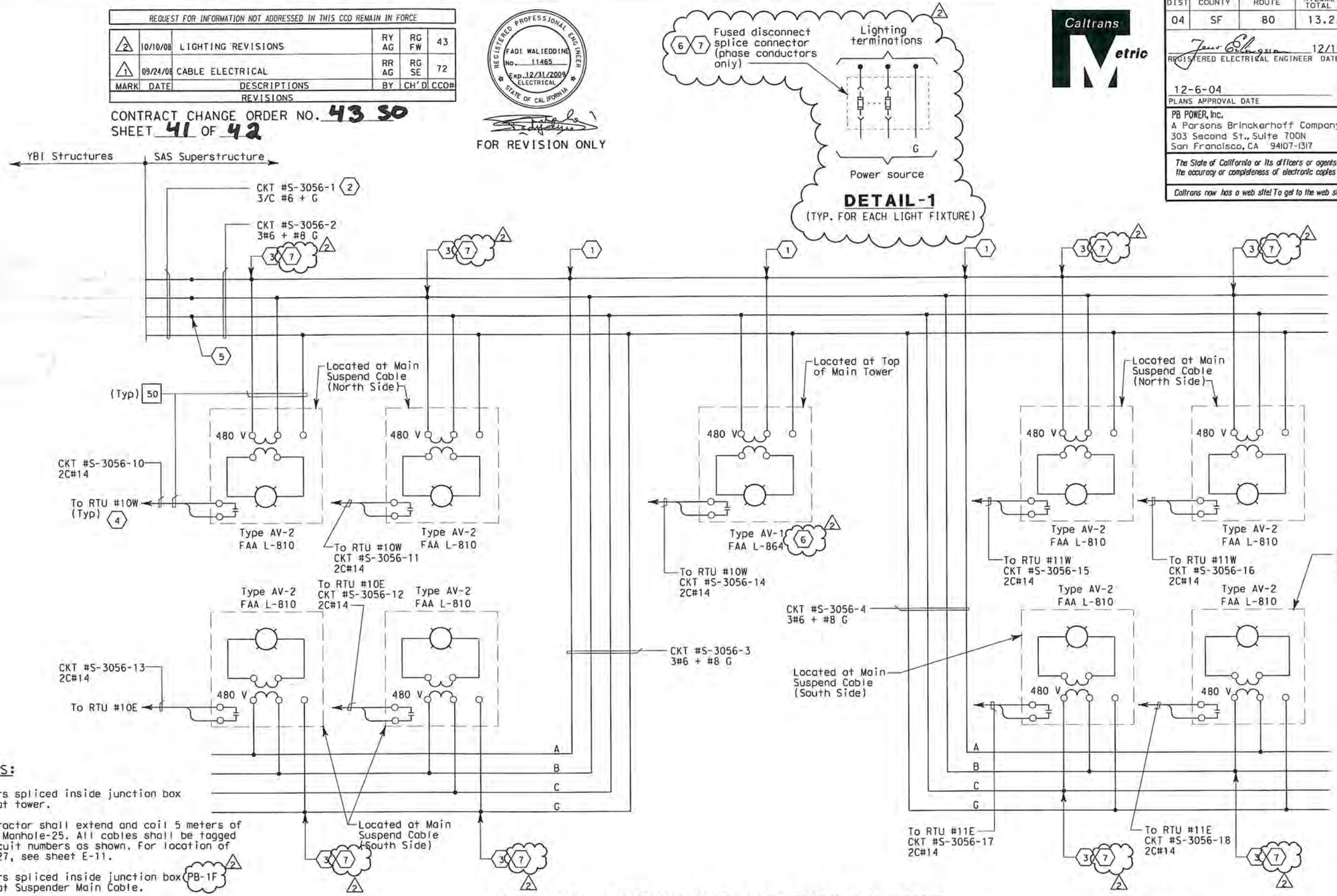

SHEET NOTES:

1. Conductors spliced inside junction box located at tower.
2. The Contractor shall extend and coil 5 meters of cable in Manhole-25. All cables shall be tagged with circuit numbers as shown. For location of Manhole-27, see sheet E-11.
3. Conductors spliced inside junction box PB-1F located at Suspender Main Cable.
4. For connection to RTU #10W, #10E, #11W and #11E, see sheets E-330, E-331, E-332 and E-333 respectively.
5. Conductors spliced inside junction box PB-2A located inside girder.
6. Install 5A in-line fuse for AV-1 light fixture, inside PB-1B. PB-1B is located inside main tower NW quadrant at elev. 156.750, see Detail 1.
7. Install 5A in-line fuse per AV-2 light fixture, inside PB-1F located along the Suspender main cable, see Detail 1.

NOTES:

1. References:
   - For Aviation and Navigation Lighting Fixture Schedule, see sheet E-297.
   - For circuit and conduit/cable tray schedules, see sheets starting at E-401.

SAS SUPERSTRUCTURE AVIATION LIGHTING

DETAILS
NAVIGATION AND AVIATION WARNING SYSTEMS
AVIATION LIGHTING WIRING DIAGRAM

NO SCALE

E-301

DATE	REVISED BY	DATE REVISED
10/08	EDC	11/01
	KG	

CALCULATED/DESIGNED BY
CHECKED BY

DESIGN OVERSIGHT
BEHZAD GOLEMOHAMMADI

STATE OF CALIFORNIA - DEPARTMENT OF TRANSPORTATION
Caltrans

LAST REVISION 00-00-00
DATE PLOTTED => 10/10/2008
TIME PLOTTED => 8:39:22 AM

FOR REDUCED PLANS ORIGINAL SCALE IS IN MILLIMETERS 0 20 40 60 80

DGN FILE =>T:\13103\MS\pse\SAS Struc\CCO\SAS CC043\2008-10-10_Issued for Submittal\04-0120F1_0299R02.dgn
USERNAME =>garciar

CU 04251 EA 0120F1

Caltrans now has a web site! To get to the web site, go to: http://www.dot.ca.gov

DIST.	COUNTY	ROUTE	KILOMETER POST TOTAL PROJECT	SHEET NO.	TOTAL SHEETS
04	SF	80	13.2/13.9	906RI	1204

Caltrans Metric

George Baker
REGISTERED ENGINEER - CIVIL

12-6-04
PLANS APPROVAL DATE

REGISTERED PROFESSIONAL ENGINEER — George S. Baker — No. C 57112 — Exp. 12/31/09 — CIVIL — STATE OF CALIFORNIA

The State of California or its officers or agents shall not be responsible for the accuracy or completeness of electronic copies of this plan sheet.

T.Y. LIN / MOFFATT & NICHOL
825 BATTERY STREET
SAN FRANCISCO, CA 94111

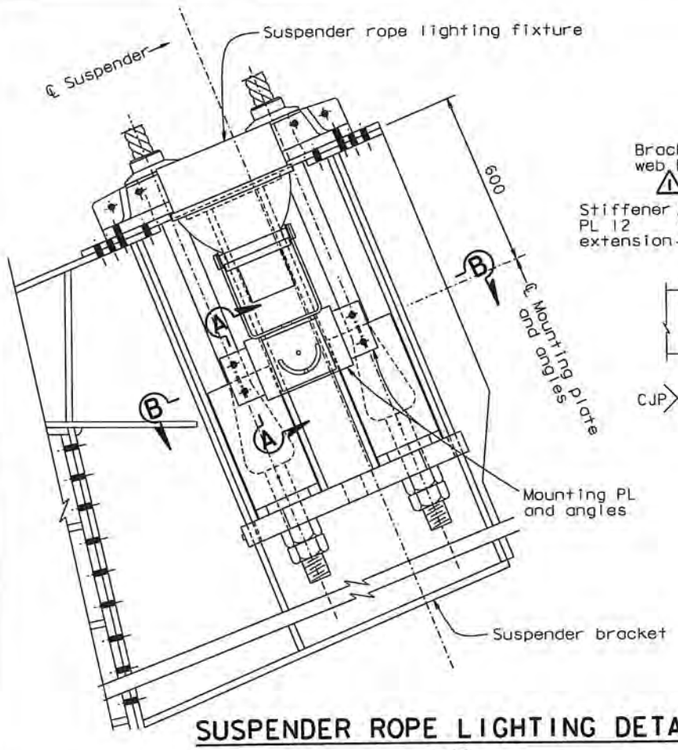

SUSPENDER ROPE LIGHTING DETAIL
1:10

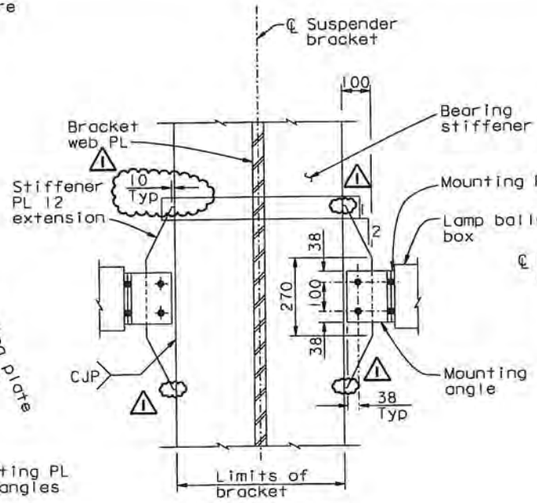

SECTION A-A
1:10

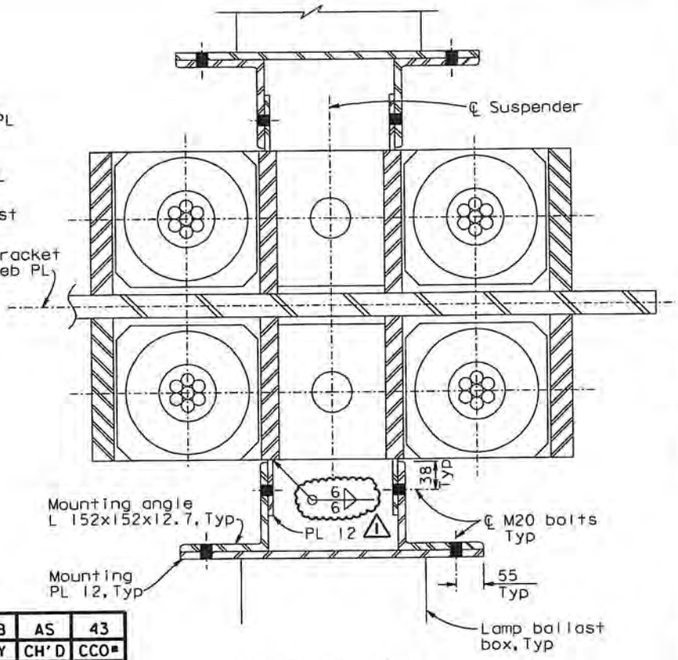

SECTION B-B
1:5

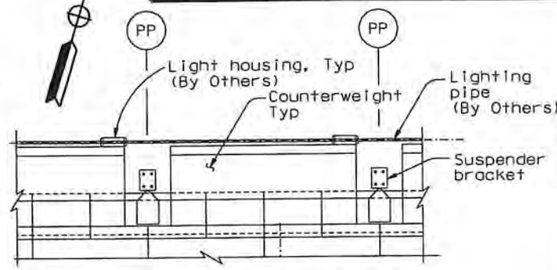

"W" LINE LIGHT PIPE
1:5

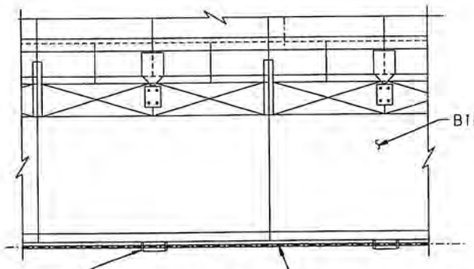

"E" LINE LIGHT PIPE
1:5

FUTURE LIGHT PIPE PLAN

NOTES:

1. For bracket details not shown, see "Suspender Bracket Details" sheets.
2. For lamp and ballast box details, see "Road Plans".
3. Deck mounting bracket is to be used to support lamps placed on crossbeam, box girder, or bikepath faces.
4. For future light pipe details, see "Lighting Details No.2" sheet.
5. The contractor shall detail tenon base mounting holes to fit the fixture provided.

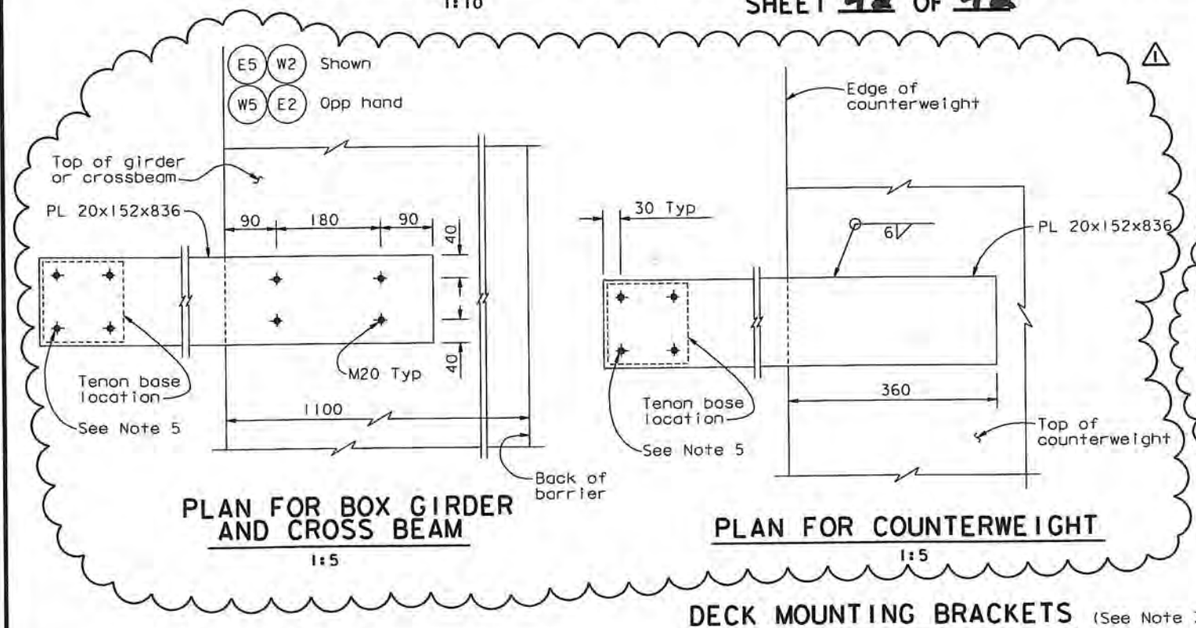

PLAN FOR BOX GIRDER AND CROSS BEAM
1:5

PLAN FOR COUNTERWEIGHT
1:5

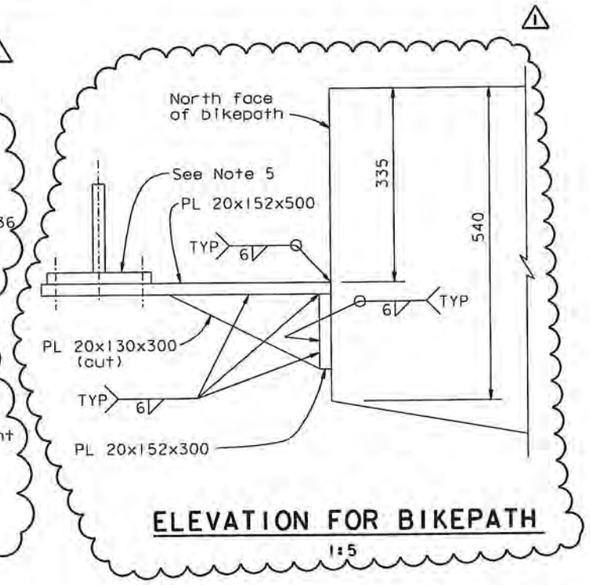

ELEVATION FOR BIKEPATH
1:5

DECK MOUNTING BRACKETS (See Note 3)

ALL DIMENSIONS ARE IN MILLIMETERS UNLESS OTHERWISE SHOWN

MARK	DATE	DESCRIPTIONS	BY	CH'D	CCO#
1	08/25/08	LIGHTING REVISIONS	GB	AS	43
		REVISIONS			

CONTRACT CHANGE ORDER NO. 4350
SHEET 42 OF 42

100 % PS&E

DATE PLOTTED => 26 AUG 2008 TIME PLOTTED => 15:42:01
USERNAME => GWinrow

R. Valizadeh/V. Toan/Y.L./W.L./F.C.	DESIGN	G. Baker	T. Ho
DESIGN OVERSIGHT	DETAILS	S. Cama	T. Ho
STGN OFF DATE 08/25/08	QUANTITIES	C. Mauch	N. Vo

PREPARED FOR THE STATE OF CALIFORNIA DEPARTMENT OF TRANSPORTATION

R. Manzanarez
PROJECT ENGINEER

BRIDGE NO. 34-0006L/R
KILOMETER POST 13.2/13.9

CU 04
EA 0120F1

DISREGARD PRINTS BEARING EARLIER REVISION DATES

REVISION DATES (PRELIMINARY STAGE ONLY): 08/22/99 | 05/21/01 | 04/30/02 | 07/29/02 | 12/15/02

SHEET 489RI OF

SAN FRANCISCO OAKLAND BAY BRIDGE
EAST SPAN SEISMIC SAFETY PROJECT
SELF-ANCHORED SUSPENSION BRIDGE
(SUPERSTRUCTURE & TOWER)

LIGHTING DETAILS NO. 1

Rev. Date: 5-18-98

ORIGINAL SCALE IN MILLIMETERS FOR REDUCED PLANS 0 10 20 30 40 50 60 70 80 90 100

FILE => I:\bb\04-012001\sas\contract plans and cco\cco\in progress\cco#43\update 08-25-08\dgn\akint06.dgn

CONTRACT CHANGE ORDER

Change Requested by: Engineer

CCO: 43 Suppl. No. 1 Contract No. 04 – 0120F4 Road SF-80-13.2/13.9 **FED. AID LOC.:**

To: **AMERICAN BRIDGE/FLUOR ENTERPRISES INC A JOINT VENTURE**

You are directed to make the following changes from the plans and specifications or do the following described work not included in the plans and specifications for this contract. ***NOTE: This change order is not effective until approved by the Engineer.***

Description of work to be done, estimate of quantities and prices to be paid. (Segregate between additional work at contract price, agreed price and force account.) Unless otherwise stated, rates for rental of equipment cover only such time as equipment is actually used and no allowance will be made for idle time. This last percentage shown is the net accumulated increase or decrease from the original quantity in the Engineer's Estimate.

Adjustment of Compensation at Lump Sum:

Eliminate the furnishing of roadway and belvedere lighting poles from the SAS Project. The Department will furnish twelve (12) roadway light poles (20 M each) and eight (8) belvedere light poles (3.5 M each) for the Contractor to install per Contract. The pole fixtures are included in CCO 167 S0/S1 and are also to be installed per Contract. All work is to be performed per the Contract Special Provisions, Standard Specifications, and Standard Plans.

The following revised plan sheets detail the changes addressed in this change order: 143R1, 144R1, 145R1, 146R1, 147R1, 148R1, 214R1, and 318R1 (of 1204) as shown on sheets 2 through 9 of this change order.

For this reduction, the Contractor agrees to credit the Department a lump sum of ($517,753.00). This sum constitutes full and complete compensation, including all markups for this change.

Adjustment of Compensation at Lump Sum..... ($517,753.00)

Extra Work at Force Account:

For any additional work as directed by the Engineer, necessary for installation of the poles or attachment of any components to the poles that are not shown on the contract plans, that has cost not covered by the lump sum amount above and the original scope of the contract.

Labor, equipment and material authorized by the Engineer, as necessary, will be paid in accordance with the provisions of Section 4-1.03D, "Extra Work" of the Standard Specifications and Section 5-1.24, "Force Account Payment" of the Special Provisions.

Estimated Cost of Extra Work at Force Account..... $100,000.00

Estimated Cost: Increase ☐ Decrease ☒ ($417,753.00)

By reason of this order the time of completion will be adjusted as follows: 0 Days

Submitted by

Signature	**Resident Engineer** Kannu Balan, Senior T.E.	**Date** 1-23-12

Approval Recommended by

Signature	**Supervising Transportation Engineer** William Casey, Sup. T.E.	**Date** 1-31-12

Engineer Approval by

Signature	**Supervising Transportation Engineer** William Casey, Sup. T.E.	**Date** 2-3-12

We the undersigned contractor, have given careful consideration to the change proposed and agree, if this proposal is approved, that we will provide all equipment, furnish the materials, except as otherwise be noted above, and perform all services necessary for the work above specified, and will accept as full payment therefor the prices shown above.

NOTE: If you, the contractor, do not sign acceptance of this order, your attention is directed to the requirements of the specifications as to proceeding with the ordered work and filing a written protest within the time therein specified.

Contractor Acceptance by

Signature	(Print name and title) BRIAN A. PETERSEN - PROJECT DIRECTOR	**Date** 02FEB12

STATE OF CALIFORNIA - DEPARTMENT OF TRANSPORTATION

CONTRACT CHANGE ORDER MEMORANDUM

DATE: 1/19/2012 Page 1 of 1

TO: Tony Anziano, Program Manager /	FILE: **E.A.** 04 - 0120F4
	CO-RTE-PM SF-80-13.2/13.9
FROM: William Casey, Supervising TE	**FED. NO.**
CCO#: **43** SUPPLEMENT#: **1** Category Code: **CBPC**	CONTINGENCY BALANCE (incl. this change) **$115,372,445.58**
COST: **($417,753.00)** INCREASE ☐ DECREASE ☑	HEADQUARTERS APPROVAL REQUIRED? ☑ YES ☐ NO
SUPPLEMENTAL FUNDS PROVIDED: **$0.00**	IS THIS REQUEST IN ACCORDANCE WITH ENVIRONMENTAL DOCUMENTS? ☑ YES ☐ NO
CCO DESCRIPTION: State Furnished Light Poles	**PROJECT DESCRIPTION:** CONSTRUCT SELF-ANCHORED SUSPENSION BRIDGE

Original Contract Time:	Time Adj. This Change:	Previously Approved CCO Time Adjustments:	Percenlage Time Adjusted: (including this change)	Total # of Unreconciled Deferred Time CCO(s): (including this change)
2490 Day(s)	**0** Day(s)	**501** Day(s)	**20** %	**3**

THIS CHANGE ORDER PROVIDES FOR:

Eliminating the furnishing of roadway and belvedere lighting poles from the SAS Project. The Department will furnish twelve roadway light poles and eight belvedere light poles for the Contractor to install per Contract. Force account will compensate for any additional work necessary for installing the poles or attaching components to the poles that are not shown on the contract plans.

The pentagonal light poles on the new SFOBB East Span are unique to the new Bay Bridge and as part of the original design each individual contract was to furnish and install the poles in their project limits. Due to the uniqueness of the poles and for architectural and functional consistency of the poles, they were eliminated from all contracts so that one fabricator under a separate contract can fabricate them. Bay Area Toll Authority (BATA) has awarded a procurement contract to purchase all of the poles and provide them as State furnished.

This change order is ($517,743.00) credit lump sum and $100,000.00 force account for a total credit of ($417,753.00), which can be returned to the contingency fund. A detailed cost analysis is on file. The cumulative total of CCO 43S0 and 43S1 is $225,903.00.

No time adjustment is warranted as this change order does not affect the controlling operation.

This change order has concurrence from Pete Siegenthaler (Prin. TE), Ken Terpstra (Project Manager), Rich Foley (HQ Oversight), and Wenyi Long (Design Oversight). Maintenance concurrence is not required.

CONCURRED BY:			
Construction Engineer:	PCE, Pete Siegenthaler, Prin TE	Date	4/25/11
Bridge Engineer:		Date	
Project Engineer:	CT Oversight, Wenyi Long, P.E.	Date	4/28/11
Project Manager:	Proj Manager, Ken Terpstra	Date	4/25/11
FHWA Rep.:		Date	
Environmental:		Date	
Other (specify):	HQ, Rich Foley	Date	4/26/11
Other (specify):		Date	
District Prior Approval By:		Date	
HQ (Issue Approve) By:		Date	
Resident Engineer's Signature:		Date	1-23-12

ESTIMATE OF COST

	THIS REQUEST	TOTAL TO DATE
ITEMS	$0.00	$1,010.00
FORCE ACCOUNT	$100,000.00	$100,000.00
AGREED PRICE	$0.00	$0.00
ADJUSTMENT	($517,753.00)	$124,893.00
TOTAL	($417,753.00)	$225,903.00

FEDERAL PARTICIPATION

☐ PARTICIPATING ☐ PARTICIPATING IN PART ☑ NONE
☐ NON-PARTICIPATING (MAINTENANCE) ☐ NON-PARTICIPATING

FEDERAL SEGREGATION (if more than one Funding Source or P.I.P. type)
☐ CCO FUNDED PER CONTRACT ☐ CCO FUNDED AS FOLLOWS

FEDERAL FUNDING SOURCE	PERCENT

ADA Notice: For individuals with sensory disabilities, this document is available in alternate formats. For information call: (916) 654-6410 or TDD (916) 654-3880 or write Records and Forms Management, 1120 N Street, MS-89, Sacramento, CA 95814.

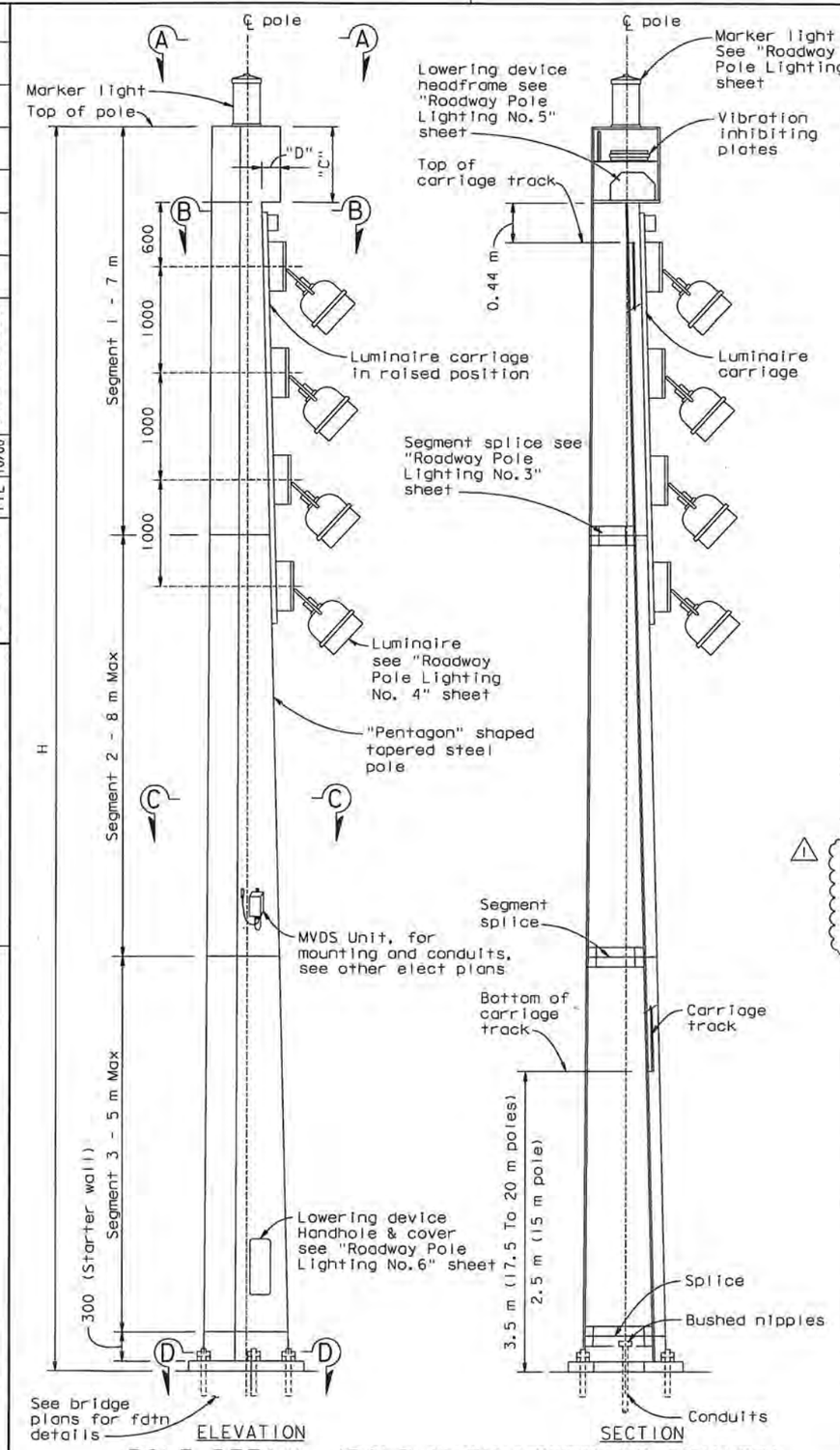

POLE DETAIL (POLE WITH LOWERING DEVICE)
Not to scale

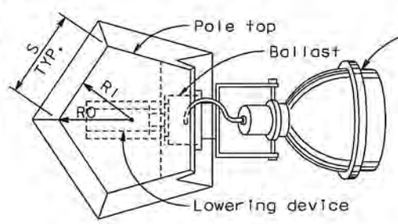

SECTION A-A
Not to scale

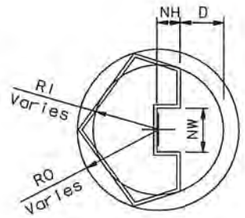

SECTION B-B
Not to scale

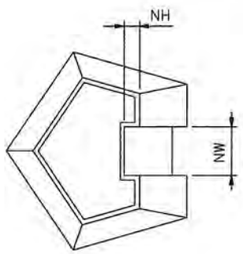

SECTION C-C
Not to scale

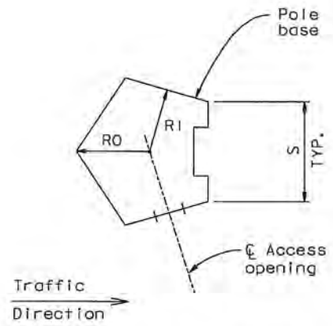

SECTION D-D
Not to scale

⚠ * * * POLES WILL BE STATE FURNISHED * * *
DETAILS ARE SHOWN IN CONTRACT NO. BATA 007

POLE DIMENSIONS											WALL THICKNESS (mm)				
POLE HEIGHT "H"	"C" (mm)	"D" (mm)	"NH" (mm)	"NW" (mm)	POLE TOP (mm)			POLE BASE (mm)			SEGMENT 1	SEGMENT 2	SEGMENT 3	STARTER WALL	NO. OF LUMINAIRES
					"S"	"RI"	"RO"	"S"	"RI"	"RO"					
15 m	565	130	75	150	290	200	247	390	268	332	6.4	9.5	N/A	25.4	3-4
17.5 m	640	140	75	150	310	213	264	420	289	357	6.4	7.9	12.7	34.9	4
20 m	715	150	75	150	355	244	302	480	330	408	6.4	7.9	12.7	34.9	4

GENERAL NOTES:

SPECIFICATIONS
Design: AASHTO standard specifications for structural supports for highway signs, luminaires and traffic signals 1994 as revised by interim Specifications-bridges 1986-1989, 1991, 1993 and 1994.

LOADING:
Wind Loading: 190 km/h velocity (at bridge deck) AASHTO

UNIT STRESS
Structural Steel: fy = 345 MPa tapered steel tube and base plate
fy = 248 MPa unless noted otherwise
Stainless steel: ASTM A666, type 316N, fy = 240 MPa
Stainless steel bolts and studs: ASTM F593, group 316L, fy = 205 MPa

WELDING
All welding continuous unless otherwise noted on the plans. All welding to be done in accordance with the standard specifications.

Notes

1. Pole details shall suit the lowering device. Pole details shall be submitted to the engineer for approval.
2. For pole finish see Special Provisions.

CONTRACT CHANGE ORDER NO. 43SI
SHEET 2 OF 9

REQUESTS FOR INFORMATION NOT ADDRESSED IN THIS CCO REMAIN IN FORCE

MARK	DATE	DESCRIPTIONS	BY	CH'D	CCO#
		REVISIONS			
⚠	04/22/11	STATE FURNISHED LIGHT POLES	JB	TS	43SI

DETAILS
SAS SUPERSTRUCTURE ROADWAY WESTBOUND TYPICAL ROADWAY POLE 1
SCALE AS NOTED

ALL DIMENSIONS ARE IN MILLIMETERS UNLESS OTHERWISE SHOWN.

E-84

DIST	COUNTY	ROUTE	KILOMETER POST TOTAL PROJECT	SHEET NO.	TOTAL SHEETS
04	SF	80	13.2/13.9	143RI	1204

Tyler Sparks
REGISTERED ENGINEER-CIVIL
12-6-04
PLANS APPROVAL DATE
REGISTERED PROFESSIONAL ENGINEER — T. W. SPARKS — No. E16039 — Exp. 9-30-11 — ELECTRICAL — STATE OF CALIFORNIA
The State of California or its officers or agents shall not be responsible for the accuracy or completeness of electronic copies of this plan sheet.

T.Y. LIN / MOFFATT & NICHOL
825 BATTERY STREET
SAN FRANCISCO, CA 94111

Caltrans now has a web site! To get to the web site, go to: http://www.dot.ca.gov

DESIGN OVERSIGHT	CALCULATED/ DESIGNED BY	DATE	REVISED BY	DATE REVISED
BOB ZANDIPOUR	GAM	10/00		
	CHECKED BY	TYL	10/00	

STATE OF CALIFORNIA - DEPARTMENT OF TRANSPORTATION
SAS STRUCTURE
Caltrans

LAST REVISION 04-19-00 | DATE PLOTTED => 21 APR 2011 | TIME PLOTTED => 11:26:54

FOR REDUCED PLANS ORIGINAL SCALE IN MILLIMETERS 0 20 40 60 80

FILE => I:\DD\04-012001\SAS\contract plans and cco\cco\cco#43si\2-update 04-22-11\dgn\40120fuo084.dgn
USERNAME => DWinrow

CU 04251 | EA 0120F1

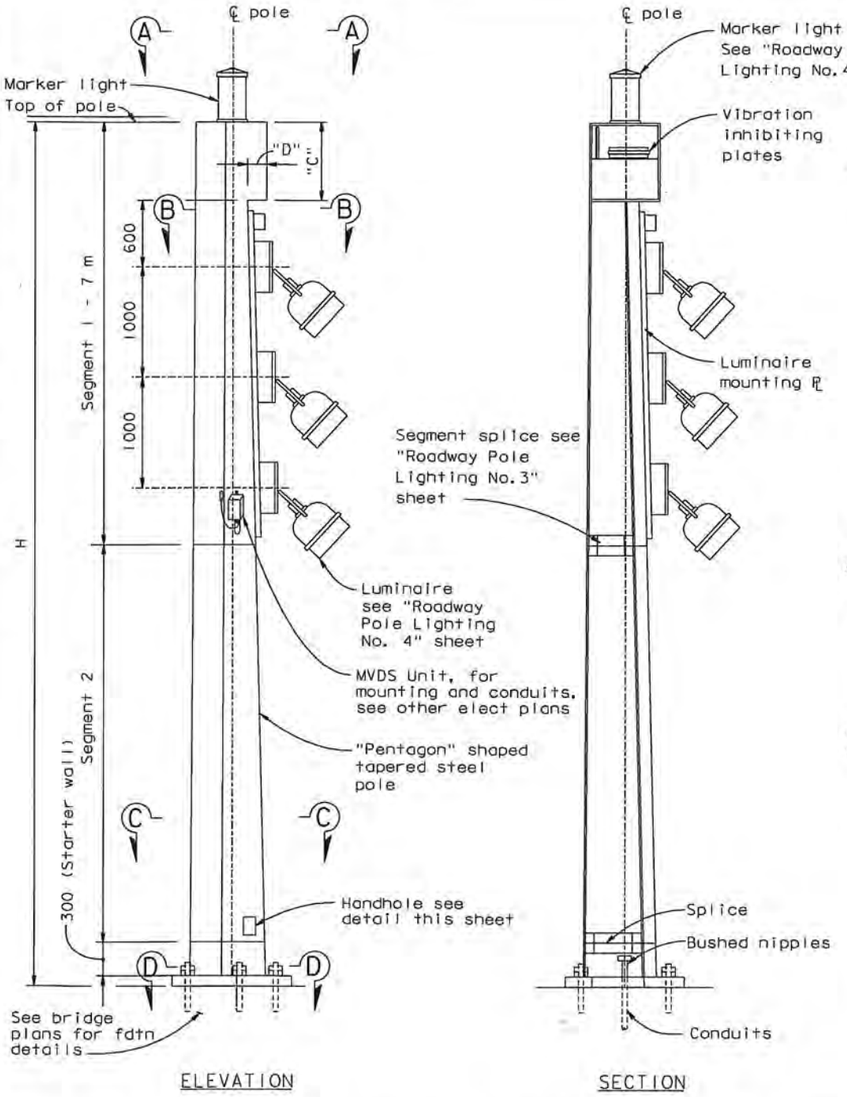

ELEVATION

SECTION

POLE DETAIL (POLE WITHOUT LOWERING DEVICE)

Not to scale

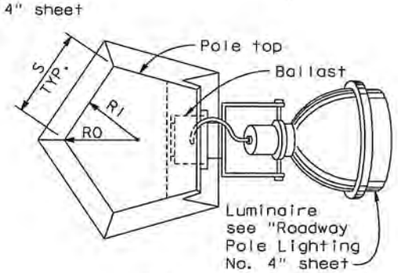

SECTION A-A

Not to scale

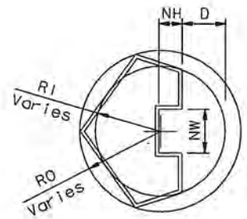

SECTION B-B

Not to scale

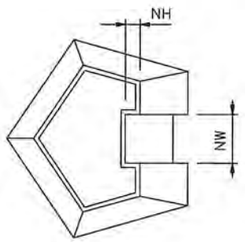

SECTION C-C

Not to scale

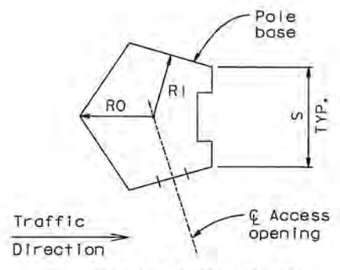

SECTION D-D

Not to scale

⚠ * * * POLES WILL BE STATE FURNISHED * * *
DETAILS ARE SHOWN IN CONTRACT NO. BATA 007

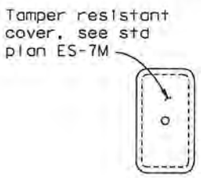

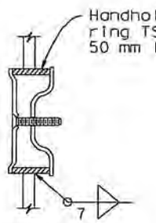

HANDHOLE DETAIL

Not to scale

Note:
For general notes see
"Roadway Pole Lighting
No. 1" sheet

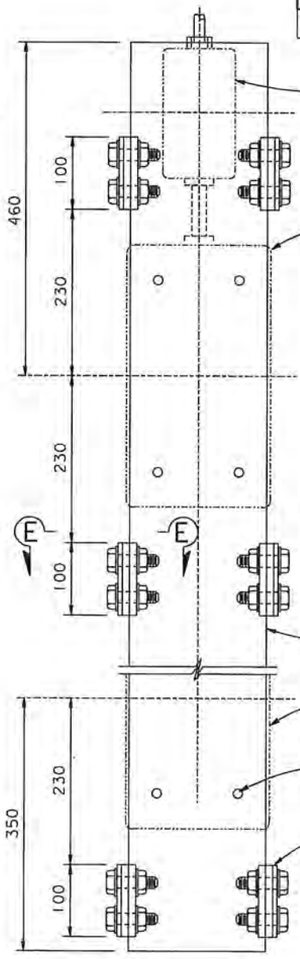

ELEVATION

LUMINAIRE MOUNTING PLATE

1:4

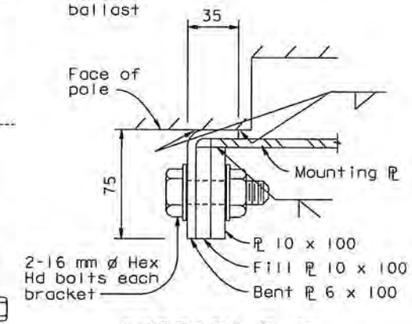

SECTION E-E

1:2

POLE DIMENSIONS											WALL THICKNESS (mm)			
POLE HEIGHT "H"	"C" (mm)	"D" (mm)	"NH" (mm)	"NW" (mm)	POLE TOP (mm) "S"	POLE TOP (mm) "RI"	POLE TOP (mm) "RO"	POLE BASE (mm) "S"	POLE BASE (mm) "RI"	POLE BASE (mm) "RO"	SEGMENT 1	SEGMENT 2	STARTER WALL	NO. OF LUMINAIRES
7 m	325	75	40	75	170	117	145	215	148	183	6.4	N/A	15.9	1
10 m	415	100	50	100	200	138	170	270	186	230	6.4	6.4	15.9	2
12 m	475	120	60	120	245	169	208	330	227	281	6.4	7.9	22.2	3

CONTRACT CHANGE ORDER NO. 4351
SHEET 3 OF 9

REQUESTS FOR INFORMATION NOT ADDRESSED IN THIS CCO REMAIN IN FORCE

MARK	DATE	DESCRIPTIONS	BY	CH'D	CCO#
		REVISIONS			
⚠	04/22/11	STATE FURNISHED LIGHT POLES	JB	TS	4351

ALL DIMENSIONS ARE IN MILLIMETERS UNLESS OTHERWISE SHOWN.

DETAILS
SAS SUPERSTRUCTURE ROADWAY WESTBOUND
TYPICAL ROADWAY POLE 2

SCALE AS NOTED

E-85

DIST	COUNTY	ROUTE	KILOMETER POST TOTAL PROJECT	SHEET NO.	TOTAL SHEETS
04	SF	80	13.2/13.9	144R1	1204

Caltrans Metric

REGISTERED ENGINEER-CIVIL

12-6-04
PLANS APPROVAL DATE

REGISTERED PROFESSIONAL ENGINEER — T. W. SPARKS — No. E16039 — Exp. 9-30-11 — ELECTRICAL — STATE OF CALIFORNIA

The State of California or its officers or agents shall not be responsible for the accuracy or completeness of electronic copies of this plan sheet.

T.Y. LIN / MOFFATT & NICHOL
825 BATTERY STREET
SAN FRANCISCO, CA 94111

Caltrans now has a web site! To get to the web site, go to: http://www.dot.ca.gov

	DATE	REVISED BY
CALCULATED/ DESIGNED BY	10/00	GAM
CHECKED BY	10/00	TYL
	DATE REVISED	

DESIGN OVERSIGHT — BOB ZANDIPOUR

STATE OF CALIFORNIA - DEPARTMENT OF TRANSPORTATION
SAS STRUCTURE
Caltrans

FOR REDUCED PLANS ORIGINAL SCALE IN MILLIMETERS 0 20 40 60 80

FILE => I:\bb\04-012001\sas\contract plans and cco\cco\cco#4351\2-update 04-22-11\dgn\40120fuo085.dgn
USERNAME => DWinrow

CU 0425I | EA 0120F1

LAST REVISION 04-19-00 | DATE PLOTTED => 21 APR 2011 | TIME PLOTTED => 11:28:26

DIST	COUNTY	ROUTE	KILOMETER POST TOTAL PROJECT	SHEET NO.	TOTAL SHEETS
04	SF	80	13.2/13.9	145R1	1204

Caltrans Metric

Tyler Sparks
REGISTERED ENGINEER-CIVIL

12-6-04
PLANS APPROVAL DATE

REGISTERED PROFESSIONAL ENGINEER — T. W. SPARKS — No. E16039 — Exp. 9-30-11 — ELECTRICAL — STATE OF CALIFORNIA

The State of California or its officers or agents shall not be responsible for the accuracy or completeness of electronic copies of this plan sheet.

T.Y. LIN / MOFFATT & NICHOL
825 BATTERY STREET
SAN FRANCISCO, CA 94111

Caltrans now has a web site! To get to the web site, go to: http://www.dot.ca.gov

DATE	REVISED BY	DATE REVISED
10/00	GAM	10/00
	TYL	

CALCULATED/DESIGNED BY
CHECKED BY

DESIGN OVERSIGHT
BOB ZANDIPOUR

STATE OF CALIFORNIA - DEPARTMENT OF TRANSPORTATION
Caltrans

SAS STRUCTURE

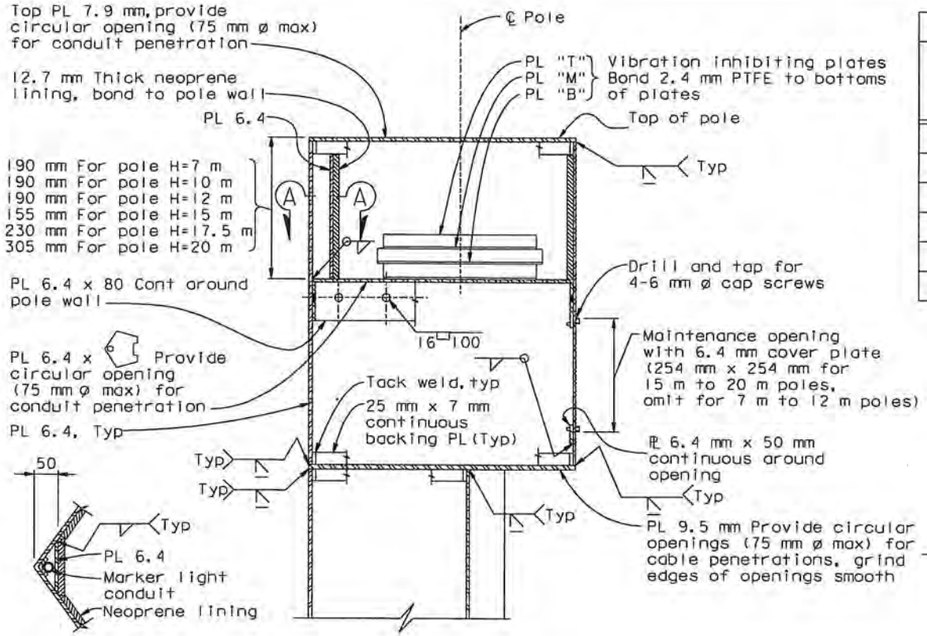

SECTION A-A

DETAIL AT TOP OF POLE

Not to scale

VIBRATION INHIBITING PLATES						
POLE HEIGHT "H"	PLATE "T"		PLATE "M"		PLATE "B"	
	DIAM. (mm)	THICK (mm)	DIAM. (mm)	THICK (mm)	DIAM. (mm)	THICK (mm)
7 m	110	38.1	140	47.6	110	38.1
10 m	140	41.3	180	50.8	140	41.3
12 m	190	31.8	240	41.3	190	31.8
15 m	260	25.4	310	34.9	260	25.4
17.5 m	240	31.8	290	41.3	240	31.8
20 m	300	25.4	350	38.1	300	25.4

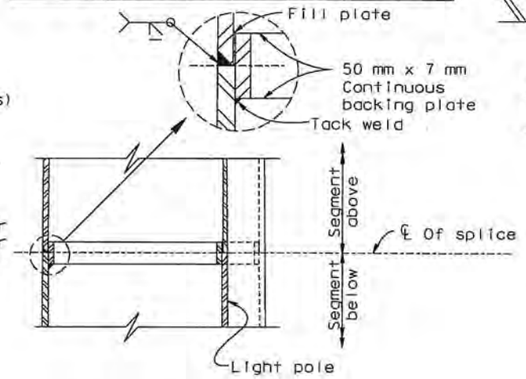

POLE SPLICE

Not to scale

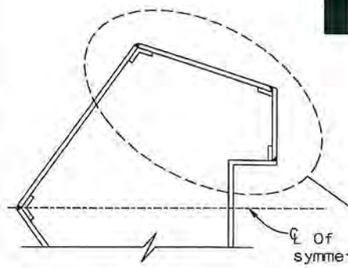

POLE SECTION WELD DETAILS

Not to scale

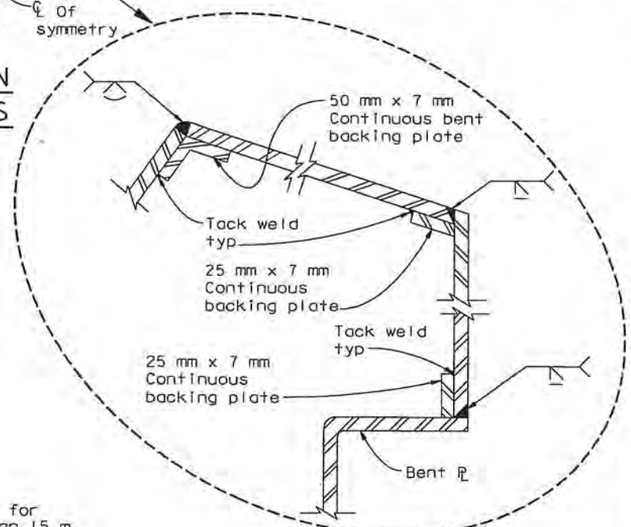

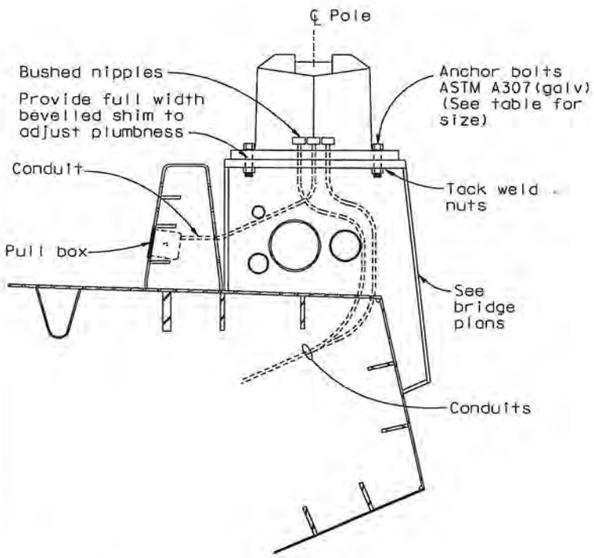

ANCHORAGE DETAIL

Not to scale

⚠1

* * * POLES WILL BE STATE FURNISHED * * *
DETAILS ARE SHOWN IN CONTRACT NO. BATA 007

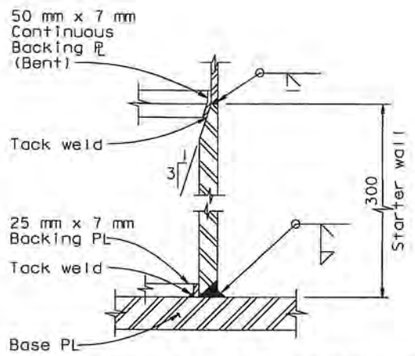

POLE/BASE PLATE CONNECTION

Not to scale

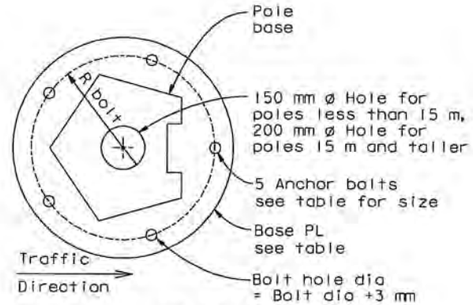

BASE PLATE

Not to scale

CONTRACT CHANGE ORDER NO. 4351
SHEET 4 OF 9

REQUESTS FOR INFORMATION NOT ADDRESSED IN THIS CCO REMAIN IN FORCE

MARK	DATE	DESCRIPTIONS	BY	CH'D	CCO#
⚠1	04/22/11	STATE FURNISHED LIGHT POLES	JB	TS	4351
REVISIONS					

	ANCHORAGE		
POLE HEIGHT "H"	ANCHOR BOLT CIRCLE RADIUS= R (mm)	BASE PLATE DIA (mm) x THICKNESS (mm)	ANCHOR BOLTS NUMBER (EA) x DIA (mm)
7 m	240	600 x 38	5-28
10 m	275	700 x 45	5-32
12 m	320	790 x 48	5-38
15 m	360	915 x 48	5-45
17.5 m	380	1015 x 51	5-51
20 m	420	1150 x 60	5-57

DETAILS
SAS SUPERSTRUCTURE ROADWAY WESTBOUND
TYPICAL ROADWAY POLE 3

SCALE AS NOTED

ALL DIMENSIONS ARE IN MILLIMETERS UNLESS OTHERWISE SHOWN.

E-86

LAST REVISION 04-19-00 | DATE PLOTTED => 21 APR 2011 | TIME PLOTTED => 11:29:09

FOR REDUCED PLANS ORIGINAL SCALE IN MILLIMETERS 0 20 40 60 80

FILE => I:\bb\04-012001\sas\contract plans and cco\cco\cco#4351\2-update 04-22-11\dgn\40120fua086.dgn
USERNAME => DWinrow

CU 04231 | EA 0120F1

Caltrans now has a web site! To get to the web site, go to: http://www.dot.ca.gov

Caltrans Metric

DIST	COUNTY	ROUTE	KILOMETER POST TOTAL PROJECT	SHEET NO.	TOTAL SHEETS
04	SF	80	13.2/13.9	146R1	1204

Tyler Sparks
REGISTERED ENGINEER-CIVIL

12-6-04
PLANS APPROVAL DATE

REGISTERED PROFESSIONAL ENGINEER — T. W. SPARKS — No. E16039 — Exp. 9-30-11 — ELECTRICAL — STATE OF CALIFORNIA

The State of California or its officers or agents shall not be responsible for the accuracy or completeness of electronic copies of this plan sheet.

T.Y. LIN / MOFFATT & NICHOL
825 BATTERY STREET
SAN FRANCISCO, CA 94111

DATE	REVISED BY	DATE REVISED
10/00	GAM	10/00
	TYL	

CALCULATED/DESIGNED BY
CHECKED BY

DESIGN OVERSIGHT
BOB ZANDIPOUR

STATE OF CALIFORNIA - DEPARTMENT OF TRANSPORTATION
SAS STRUCTURE

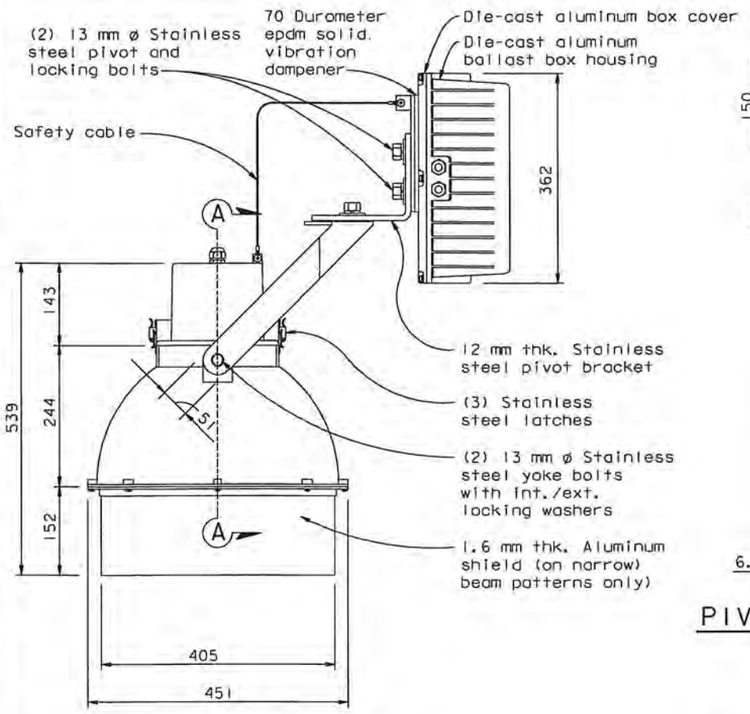

ROADWAY LIGHT FIXTURE DETAIL
1:5

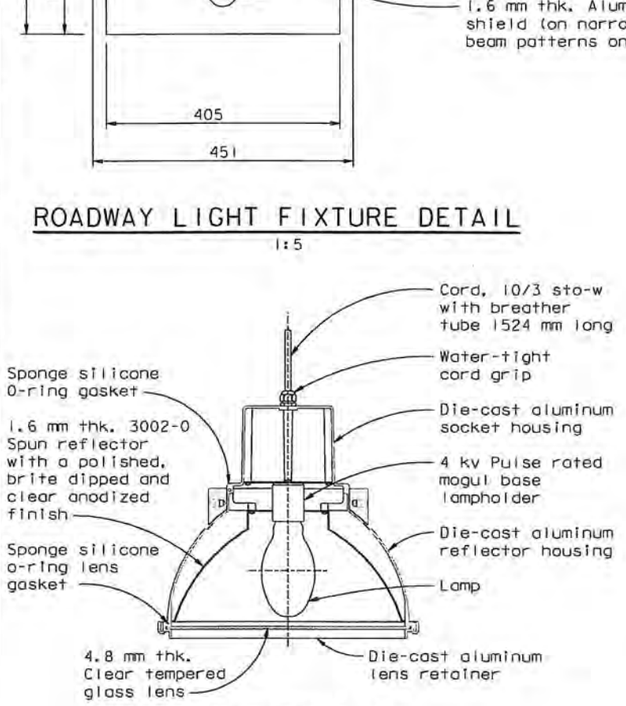

SECTION A-A
1:5

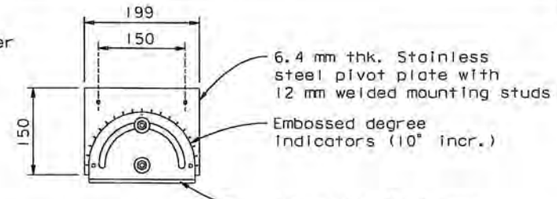

PIVOT BRACKET ELEVATION
1:5

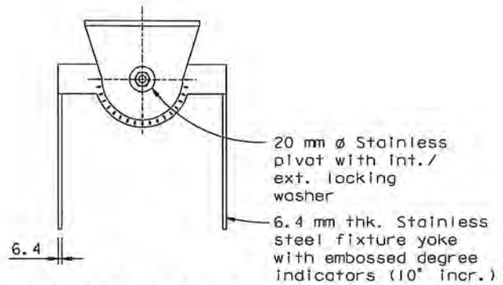

PIVOT BRACKET PLAN
1:5

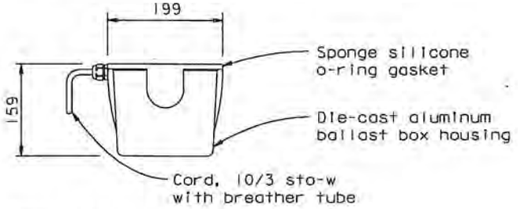

BALLAST ELEVATION
1:5

Notes (roadway light fixture):

1. Lamps shall be ed-28 metal halide pulse start, 175, 250 and 400 wattage as indicated on electrical plans.
2. Fixture and components shall be U.L. listed for wet location.

Notes (marker light fixture):

1. All mounting hardware shall be marine grade stainless steel.
2. Lamps shall be 100,000 hr + white high flux leds.
3. Fixture shall be suitable for mounting on top of roadway lighting pole.
4. Fixture and components shall be U.L. listed for wet locations.

1 * * * POLES WILL BE STATE FURNISHED * * *
DETAILS ARE SHOWN IN CONTRACT NO. BATA 007

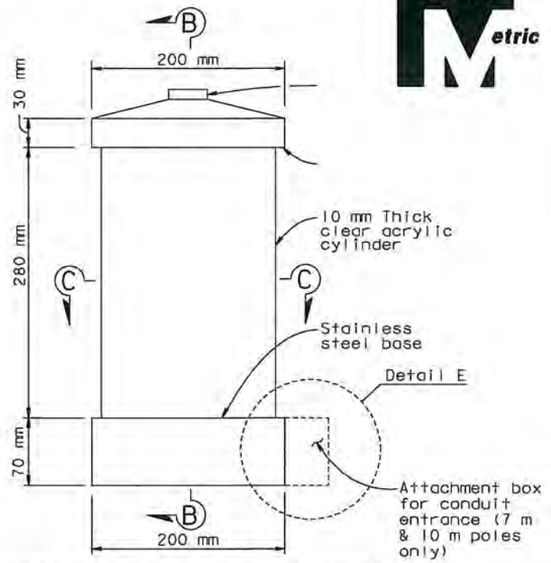

MARKER LIGHT FIXTURE DETAIL
1:3

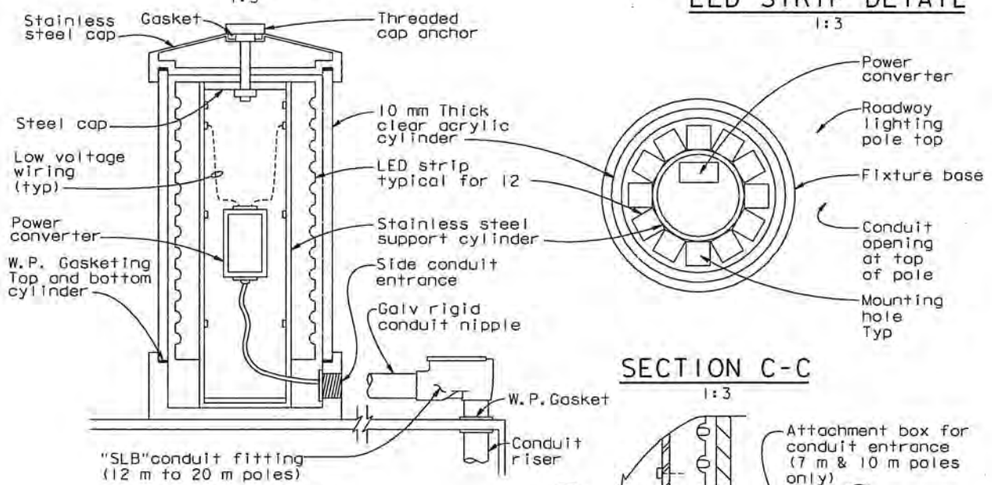

SECTION C-C
1:3

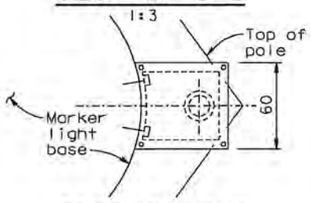

SECTION B-B
1:3

SECTION D-D
1:2

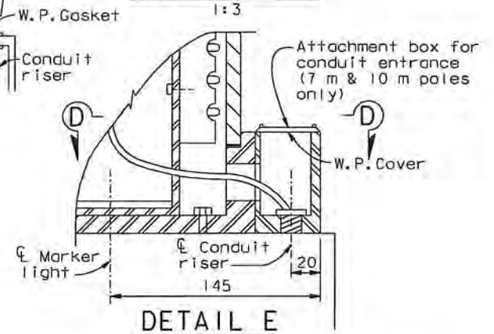

DETAIL E
1:2

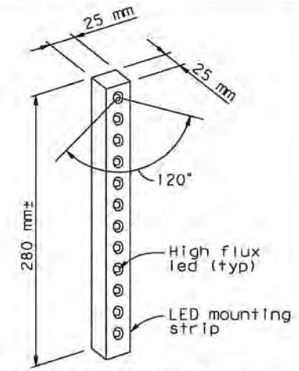

LED STRIP DETAIL
1:3

CONTRACT CHANGE ORDER NO. 43 SI
SHEET 5 OF 9

REQUESTS FOR INFORMATION NOT ADDRESSED IN THIS CCO REMAIN IN FORCE

MARK	DATE	DESCRIPTIONS	BY	CH'D	CCO#
		REVISIONS			
1	04/22/11	STATE FURNISHED LIGHT POLES	JB	TS	43SI

DETAILS
SAS SUPERSTRUCTURE ROADWAY WESTBOUND
TYPICAL ROADWAY POLE 4

SCALE AS NOTED

ALL DIMENSIONS ARE IN MILLIMETERS UNLESS OTHERWISE SHOWN.

E-87

LAST REVISION 04-19-00
DATE PLOTTED => 21 APR 2011
TIME PLOTTED => 11:29:38

FOR REDUCED PLANS ORIGINAL SCALE IN MILLIMETERS 0 20 40 60 80

FILE => I:\bb\04-01200\sas\contract plans and cco\cco\cco*43si\2update 04-22-11\dgn\40120f1a087.dgn
USERNAME => DWinrow

CU 04251 EA 0120F1

DIST	COUNTY	ROUTE	KILOMETER POST TOTAL PROJECT	SHEET NO.	TOTAL SHEETS
04	SF	80	13.2/13.9	147R1	1204

Caltrans Metric

REGISTERED ENGINEER-CIVIL

12-6-04

PLANS APPROVAL DATE

REGISTERED PROFESSIONAL ENGINEER — T. W. SPARKS — No. E16039 — Exp. 9-30-11 — ELECTRICAL — STATE OF CALIFORNIA

The State of California or its officers or agents shall not be responsible for the accuracy or completeness of electronic copies of this plan sheet.

T.Y. LIN / MOFFATT & NICHOL
825 BATTERY STREET
SAN FRANCISCO, CA 94111

Caltrans now has a web site! To get to the web site, go to: http://www.dot.ca.gov

DATE	REVISED BY	DATE REVISED
10/00	GAM	10/00
	TYL	

CALCULATED/ DESIGNED BY
CHECKED BY

DESIGN OVERSIGHT
BOB ZANDIPOUR

STATE OF CALIFORNIA - DEPARTMENT OF TRANSPORTATION
Caltrans

SAS STRUCTURE

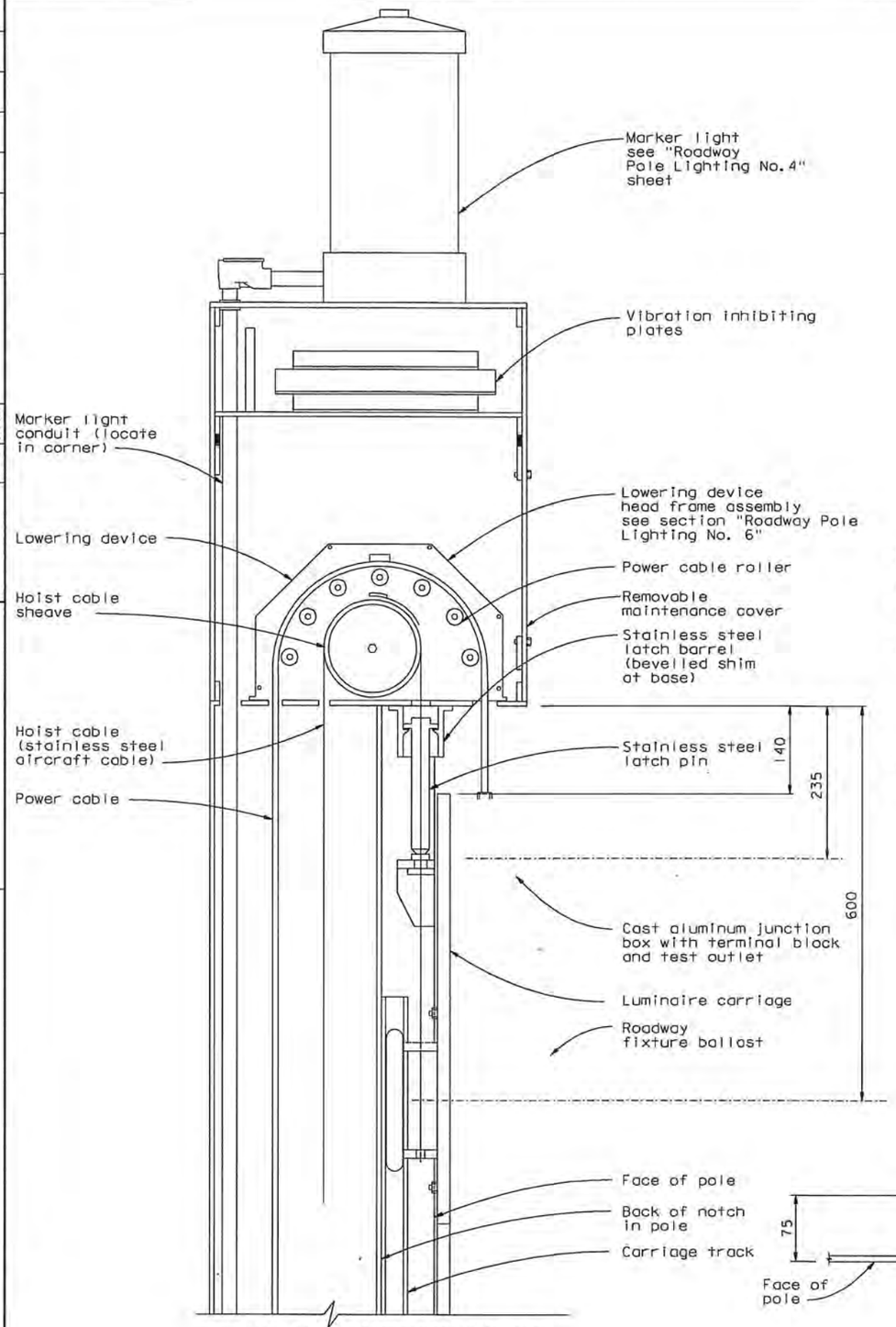

HEAD FRAME MOUNTING & CARRIAGE ASSEMBLY
Not to scale

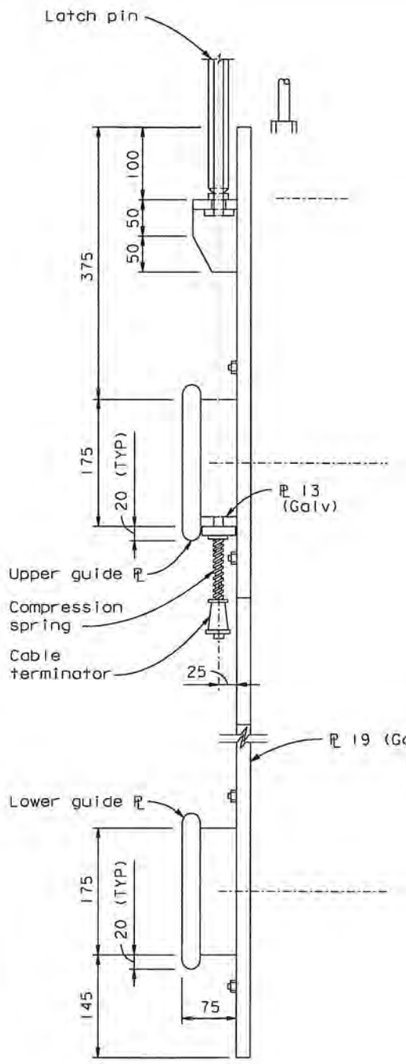

SECTION

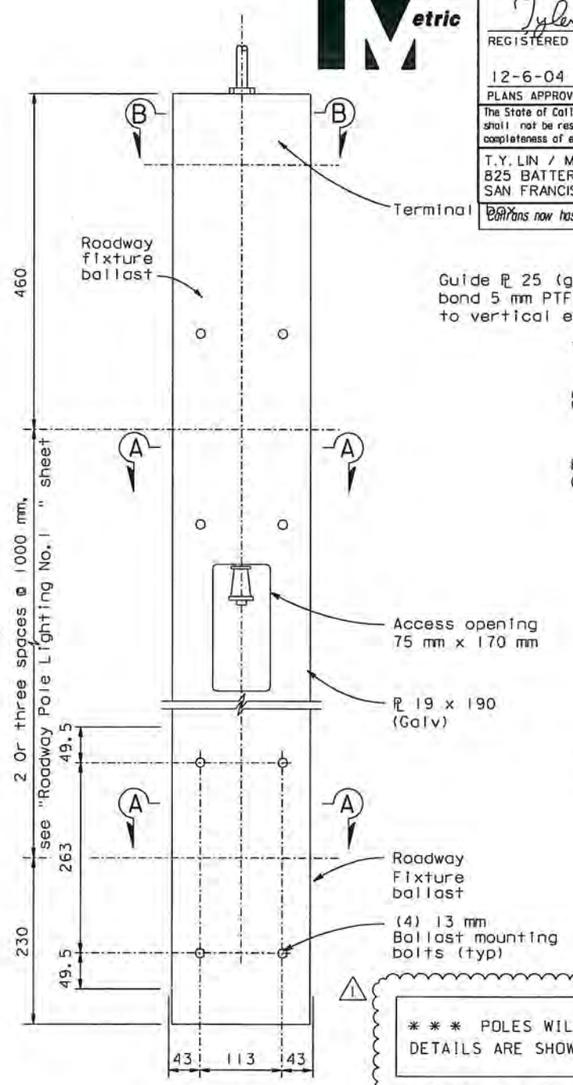

ELEVATION

LUMINAIRE FIXTURE CARRIAGE
1:4

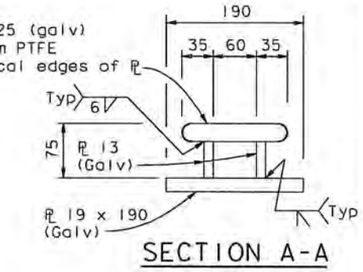

SECTION A-A
1:4

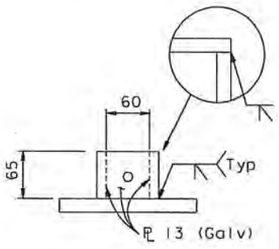

SECTION B-B
1:4

⚠ * * * POLES WILL BE STATE FURNISHED * * *
DETAILS ARE SHOWN IN CONTRACT NO. BATA 007

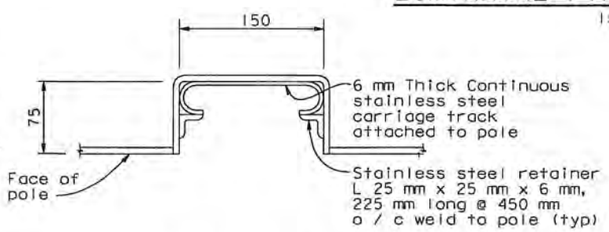

CARRIAGE TRACK
1:3

CONTRACT CHANGE ORDER NO. 4351
SHEET 6 OF 9

REQUESTS FOR INFORMATION NOT ADDRESSED IN THIS CCO REMAIN IN FORCE

MARK	DATE	DESCRIPTIONS	BY	CH'D	CCO#
		REVISIONS			
1	04/22/11	STATE FURNISHED LIGHT POLES	JB	TS	4351

DETAILS
SAS SUPERSTRUCTURE ROADWAY WESTBOUND
TYPICAL ROADWAY POLE 5

SCALE AS NOTED

ALL DIMENSIONS ARE IN MILLIMETERS UNLESS OTHERWISE SHOWN.

E-88

LAST REVISION 04-19-00
DATE PLOTTED => 21 APR 2011
TIME PLOTTED => 11:30:44

FOR REDUCED PLANS ORIGINAL SCALE IN MILLIMETERS 0 20 40 60 80

FILE => I:\bb\04-01200I\sas\contract plans and cco\cco\cco*43sI2update 04-22-11\dgn\40120f0a088.dgn
USERNAME => DWinrow

CU 04251 EA 0120F1

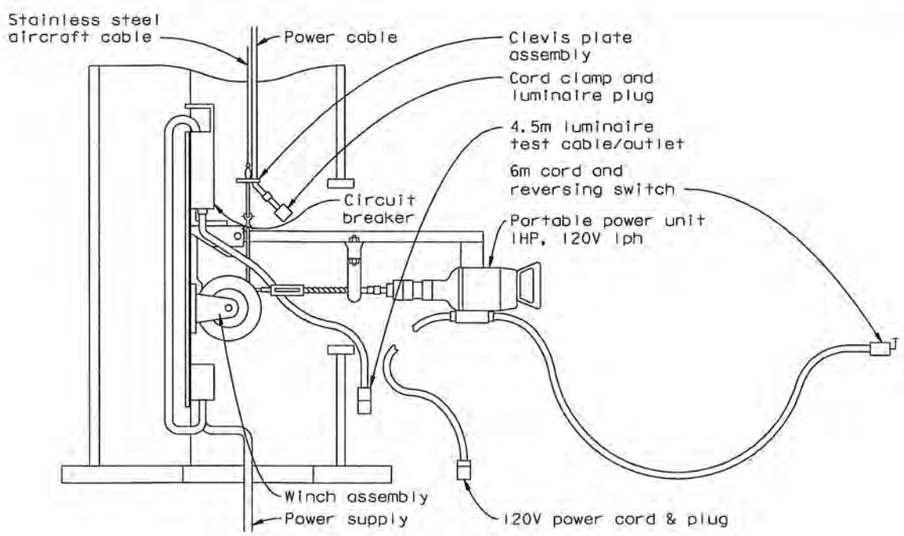

POLE BASE DETAIL
Not to scale

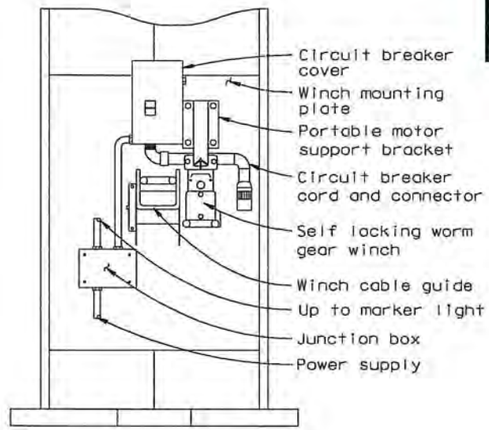

BASE-SECTION VIEW
Not to scale

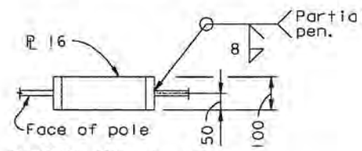

SECTION A-A
Not to scale

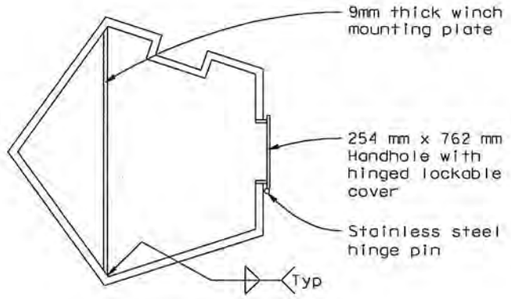

MOUNTING PLATE ARRANGEMENT
Not to scale

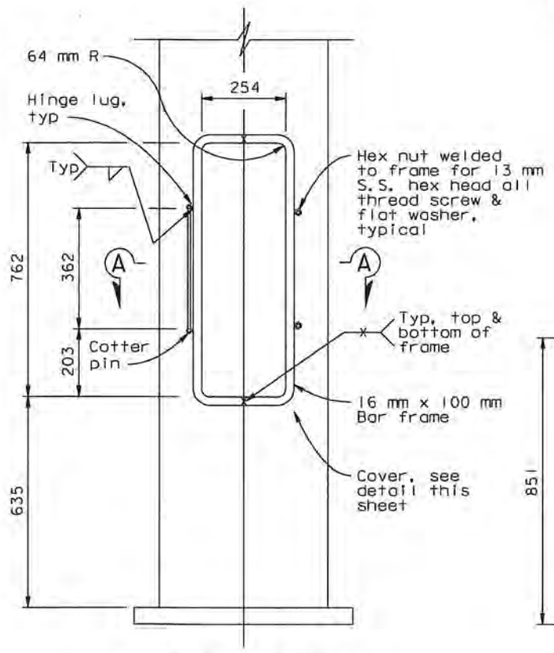

HANDHOLE DETAIL
Not to scale

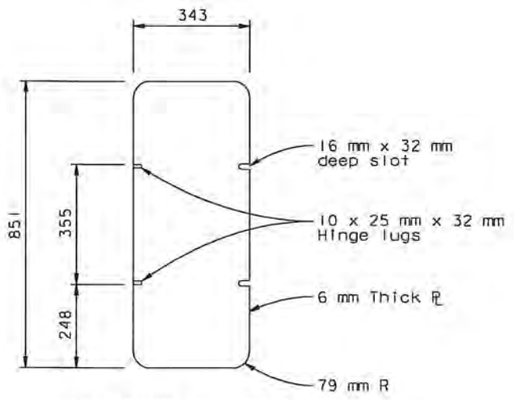

HANDHOLE COVER
Not to scale

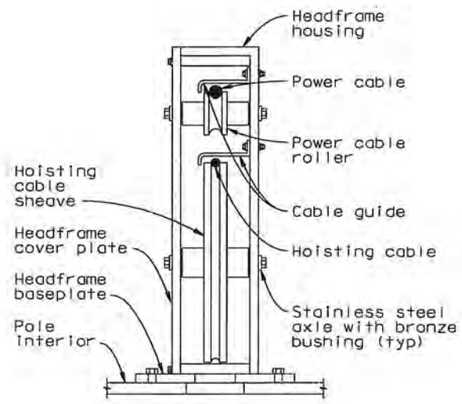

LOWERING DEVICE HEADFRAME SECTION
Not to scale

DIST	COUNTY	ROUTE	KILOMETER POST TOTAL PROJECT	SHEET NO.	TOTAL SHEETS
04	SF	80	13.2/13.9	148R1	1204

Caltrans Metric

REGISTERED ENGINEER-CIVIL
12-6-04
PLANS APPROVAL DATE

REGISTERED PROFESSIONAL ENGINEER — T. W. SPARKS — No. E16039 — Exp. 9-30-11 — ELECTRICAL — STATE OF CALIFORNIA

The State of California or its officers or agents shall not be responsible for the accuracy or completeness of electronic copies of this plan sheet.

T.Y. LIN / MOFFATT & NICHOL
825 BATTERY STREET
SAN FRANCISCO, CA 94111

Caltrans now has a web site! To get to the web site, go to: http://www.dot.ca.gov

CONTRACT CHANGE ORDER NO. 43S1
SHEET 7 OF 9

REQUESTS FOR INFORMATION NOT ADDRESSED IN THIS CCO REMAIN IN FORCE.

MARK	DATE	DESCRIPTIONS	BY	CH'D	CCO#
1	04/22/11	STATE FURNISHED LIGHT POLES	JB	TS	43S1

REVISIONS

⚠1 * * * POLES WILL BE STATE FURNISHED * * *
DETAILS ARE SHOWN IN CONTRACT NO. BATA 007

DETAILS
SAS SUPERSTRUCTURE ROADWAY WESTBOUND
TYPICAL ROADWAY POLE 6
SCALE AS NOTED

ALL DIMENSIONS ARE IN MILLIMETERS UNLESS OTHERWISE SHOWN.

E-89

CALCULATED/ DESIGNED BY	GAM	DATE 11/00	REVISED BY
CHECKED BY	TYL	11/00	DATE REVISED

DESIGN OVERSIGHT: BOB ZANDIPOUR

STATE OF CALIFORNIA - DEPARTMENT OF TRANSPORTATION
SAS STRUCTURE

LAST REVISION 04-19-00 | DATE PLOTTED => 21 APR 2011 | TIME PLOTTED => 11:31:47

FOR REDUCED PLANS ORIGINAL SCALE IN MILLIMETERS 0 20 40 60 80

FILE => I:\bb\04-012001\sas\contract plans and cco\cco\cco-43s1\2update 04-22-11\dgn\40120f1a089.dgn
USERNAME => DWinrow

CU 04251 | EA 0120F1

DIST	COUNTY	ROUTE	KILOMETER POST TOTAL PROJECT	SHEET NO.	TOTAL SHEETS
04	SF	80	13.2/13.9	214R1	1204

REGISTERED ENGINEER-CIVIL — T. W. SPARKS, No. E16039, Exp. 9-30-11, ELECTRICAL, REGISTERED PROFESSIONAL ENGINEER, STATE OF CALIFORNIA

12-6-04
PLANS APPROVAL DATE

The State of California or its officers or agents shall not be responsible for the accuracy or completeness of electronic copies of this plan sheet.

T.Y. LIN / MOFFATT & NICHOL
825 BATTERY STREET
SAN FRANCISCO, CA 94111

Caltrans Metric

DATE	REVISED BY	DATE REVISED
10/00	GAM	10/00
	TYL	

CALCULATED/DESIGNED BY
CHECKED BY
DESIGN OVERSIGHT — BOB ZANDIPOUR

STATE OF CALIFORNIA - DEPARTMENT OF TRANSPORTATION
Caltrans

SAS STRUCTURE

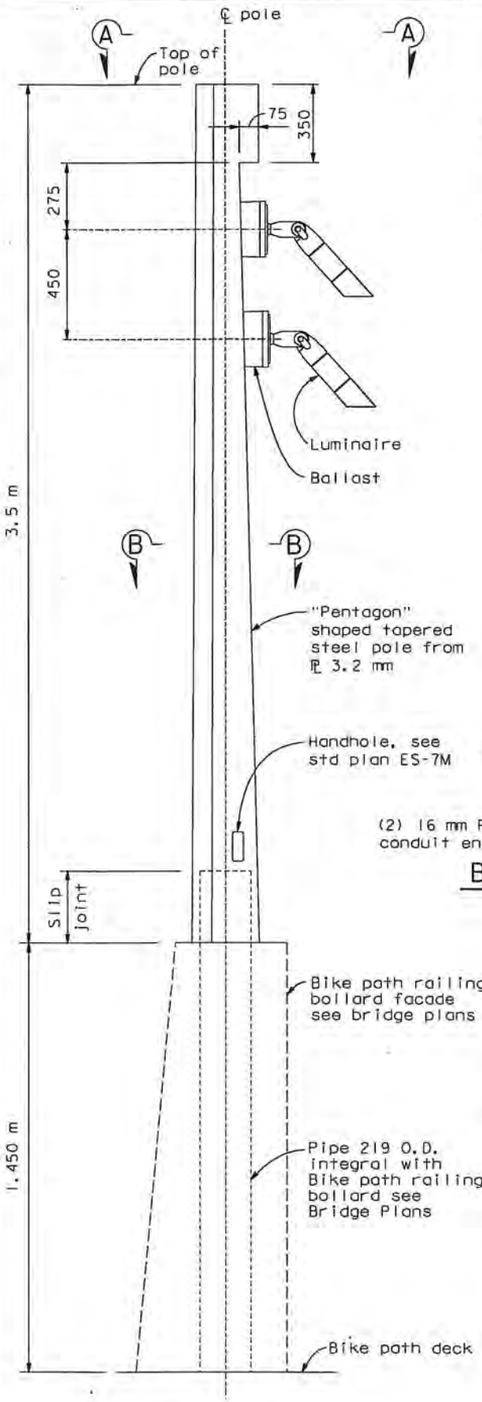

ELEVATION
POLE DETAIL
Not to scale

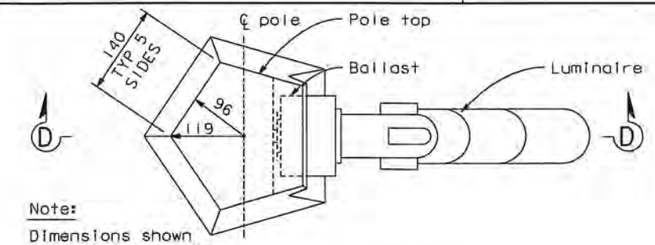

Note:
Dimensions shown are at top of pole.

SECTION A-A
Not to scale

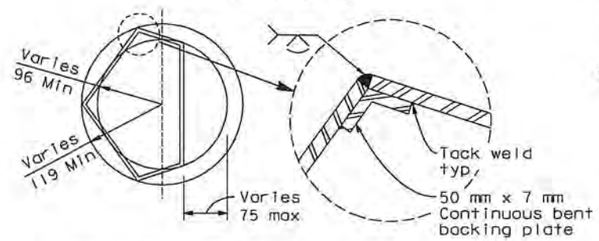

SECTION B-B
Not to scale

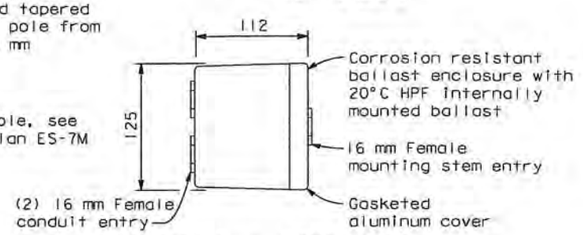

BALLAST - TOP VIEW
Not to scale

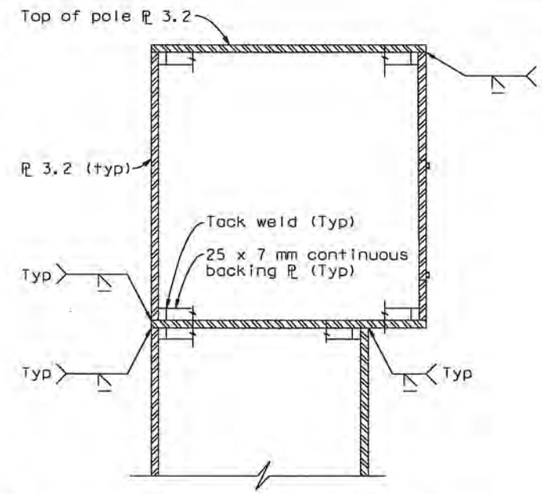

DETAIL AT TOP OF POLE
Not to scale

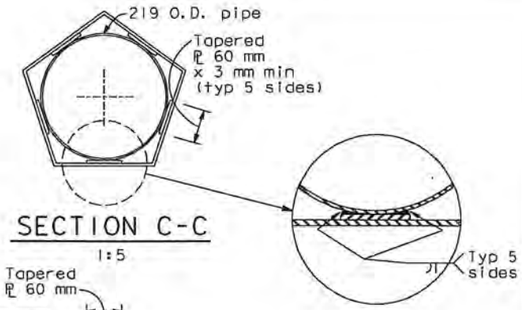

SECTION C-C
1:5

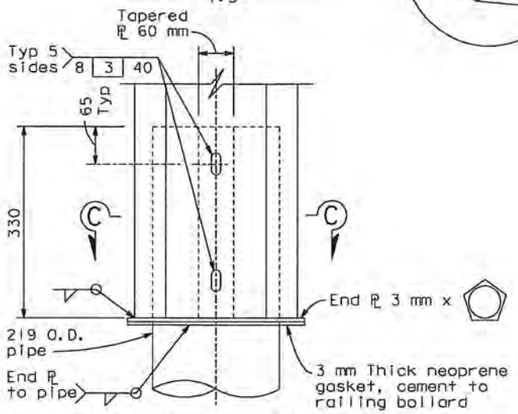

SLIP JOINT DETAIL
(Verify fit with Bike path railing bollard fabricator)
1:5

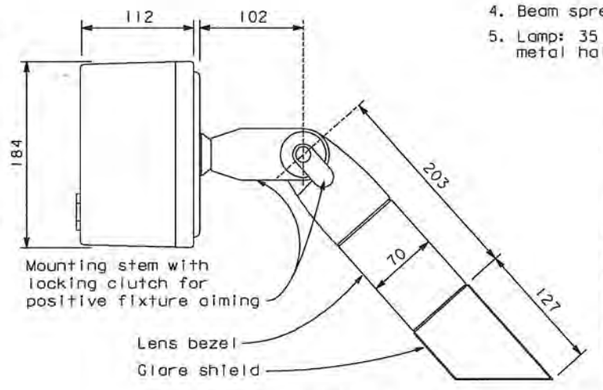

FIXTURE DETAIL
Not to scale

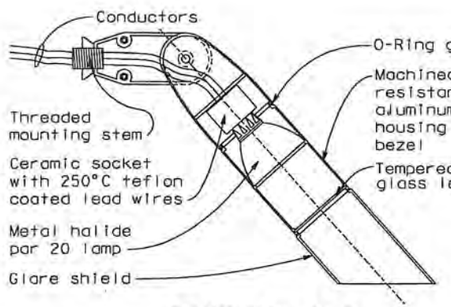

SECTION D-D
Not to scale

Pole notes:

1. Wind Loading: 190 km/h velocity (at bridge deck) AASHTO
2. All welding continuous unless otherwise noted on the plans. All welding to be done in accordance with the standard specifications.
3. Pole details shall be submitted to the engineer for approval.
4. For pole finish see special provisions.
5. For additional notes see std plan ES-7M.

Luminaire fixture notes:

1. Finish: Double chromate conversion undercoating with thermoplastic polyester powder coat finish.
2. Hardware: Stainless steel corrosion resistant.
3. U.L. Listed wet location.
4. Beam spread: 30°
5. Lamp: 35 watt, par 20 metal halide

⚠ *** POLES WILL BE STATE FURNISHED ***
DETAILS ARE SHOWN IN CONTRACT NO. BATA 007

CONTRACT CHANGE ORDER NO. 43S1
SHEET 8 OF 9

REQUESTS FOR INFORMATION NOT ADDRESSED IN THIS CCO REMAIN IN FORCE

MARK	DATE	REVISIONS	BY	CH'D	CCO#
⚠1	04/22/11	STATE FURNISHED LIGHT POLES	JB	TS	43S1

DETAILS
SAS SUPERSTRUCTURE ROADWAY EASTBOUND
TYPICAL BELVEDERE LIGHTING

SCALE AS NOTED

E-173

ALL DIMENSIONS ARE IN MILLIMETERS UNLESS OTHERWISE SHOWN.

LAST REVISION 04-19-00
DATE PLOTTED => 21 APR 2011
TIME PLOTTED => 11:32:22

FOR REDUCED PLANS ORIGINAL SCALE IN MILLIMETERS 0 20 40 60 80

FILE => I:\DD\04-012001\sas\contract plans and cco\cco\cco*43s1 2update 04-22-11\dgn\40120fw173.dgn
USERNAME => DWinrow

CU 04251 EA 0120F1

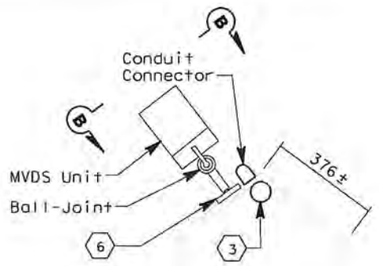

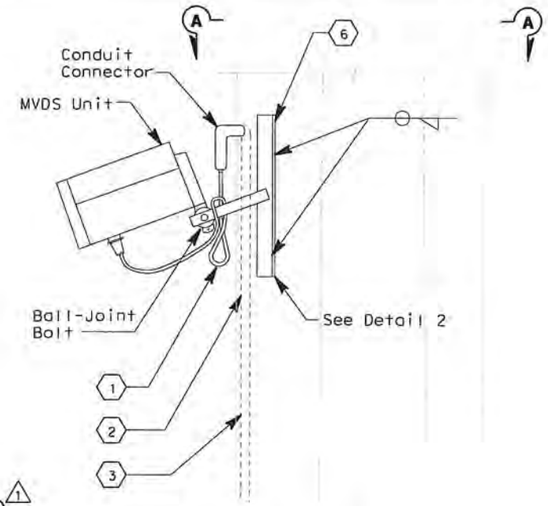

SECTION A-A

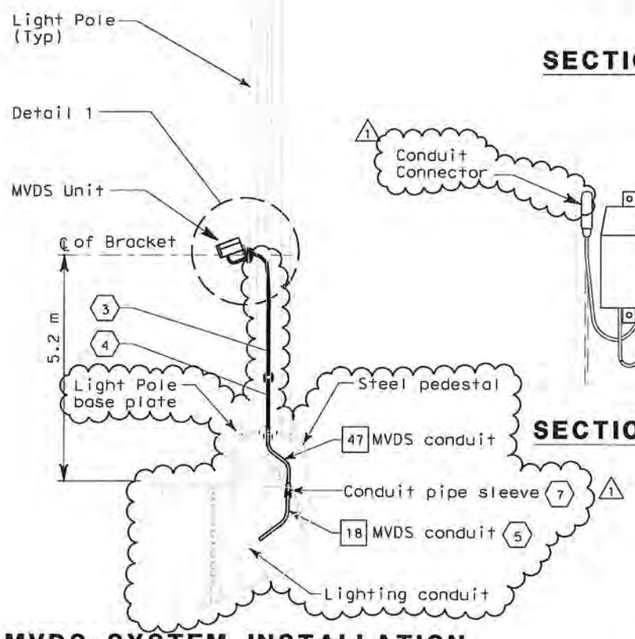

MVDS SYSTEM INSTALLATION

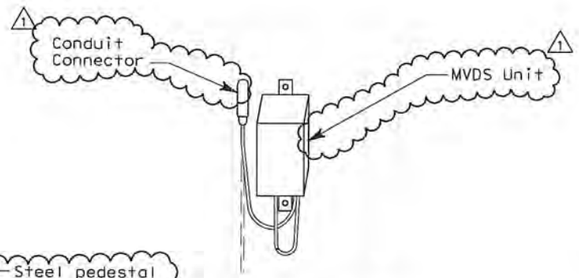

SECTION B-B

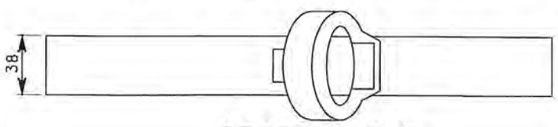

SECTION D-D

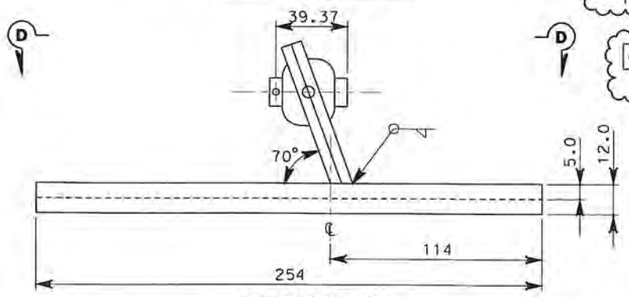

DETAIL 2
MVDS BRACKET

DETAIL 1

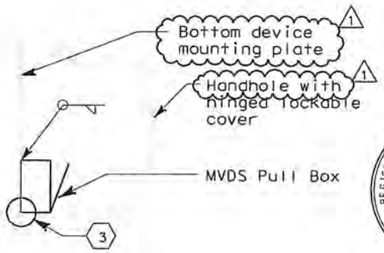

SECTION C-C

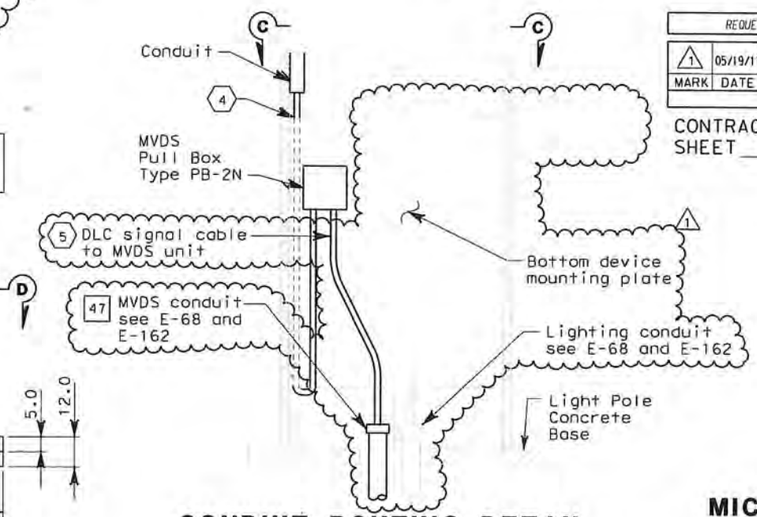

CONDUIT ROUTING DETAIL
PROFILE VIEW

DIST	COUNTY	ROUTE	KILOMETER POST TOTAL PROJECT	SHEET No	TOTAL SHEETS
04	SF	80	13.2/13.9	318R1	1204

REGISTERED CIVIL ENGINEER — DATE 12/19/02

Michael Dahlin, No. 47186, Exp. 12/31/05 CIVIL, REGISTERED PROFESSIONAL ENGINEER, STATE OF CALIFORNIA

12-6-04
PLANS APPROVAL DATE

PB Farradyne
A Parsons Brinckerhoff Company
303 Second St., Suite 700N
San Francisco, CA 94107-1317

The State of California or its officers or agents shall not be responsible for the accuracy or completeness of electronic copies of this plan sheet.

Caltrans now has a web site! To get to the web site, go to: http://www.dot.ca.gov

SHEET NOTES:

1. Drape 2 meter excess MVDS cable over mounting bracket as shown.
2. Install MVDS DLC in conduit.
3. Install 78C conduit. May be installed during lightpole construction at the Contractor's discretion.
4. Install MVDS cable from MVDS Unit to termination within MVDS Junction Box. MVDS cable shall be routed through conduit and behind mounting plate as shown on details. 1
5. Install MVDS cable from MVDS Junction Box through conduits shown on designated Roadway Level Reference Sheet to termination in controller cabinet on designated Service Platform.
6. Exact lateral position of MVDS bracket on lightpole shall be determined by Engineer.
7. Contractor shall install sealant between the sleeve and conduit to prevent water or moisture from passing inside the sleeve. 1

1 * * * POLES WILL BE STATE FURNISHED * * * DETAILS ARE SHOWN IN CONTRACT NO. BATA 007

M.P. Lee, No. 13435, Exp. 9-30-12 ELECT, REGISTERED PROFESSIONAL ENGINEER, STATE OF CALIFORNIA

FOR REVISION ONLY

REQUEST FOR INFORMATION NOT ADDRESSED IN THIS CCO REMAIN IN FORCE

MARK	DATE	REVISIONS DESCRIPTIONS	BY	CH'D	CCO#
1	05/19/11	STATE FURNISHED LIGHT POLES	RG	ML	43S1

CONTRACT CHANGE ORDER NO. 43 S1
SHEET 9 OF 9

NOTE:

1. Minimum size of all fillet welds shall be 5 mm, except that the weld size need not exceed the thickness of the thinner member joined.

MVDS SCHEDULE

ID #	ELEMENT STATION	LIGHTPOLE ID	OFFSET m	CABINET ID #	SERVICE PLATFORM REFERENCE SHEET	ROADWAY REFERENCE SHEET
MVDS-E01	E 56+29	2031-2	L 12.2	TOS-04EA	E-71	E-135
MVDS-W02	W 56+38	1031-2	R 12.2	TOS-04WA	E-71	E-46
MVDS-E03	E 59+99	2031-3	L 12.2	TOS-07EA	E-74	E-138
MVDS-W04	W 60+08	1031-3	R 12.2	TOS-07WA	E-74	E-49

DETAILS
TRAFFIC OPERATIONS SYSTEM
MICROWAVE VEHICLE DETECTION SENSOR SYSTEM INSTALLATION

NO SCALE

E-344

THIS PLAN ACCURATE FOR ELECTRICAL WORK ONLY.

ALL DIMENSIONS IN MILLIMETERS UNLESS OTHERWISE SHOWN.

FOR REDUCED PLANS ORIGINAL SCALE IS IN MILLIMETERS 0 20 40 60 80

DGN FILE =>T:\13103\MS\pse\SAS Struc\CCO\SAS CC043S1\2011.05.19 Issued for Submittal Draft 3]\04-0120f1_0318R01.dgn
USERNAME =>garciar

04-0120F4

CONTRACT CHANGE ORDER

Change Requested by: Engineer

CCO: 43 **Suppl. No. 0** **Contract No. 04 – 0120F4** **Road** SF-80-13.2/13.9 **FED. AID LOC.:**

To: **AMERICAN BRIDGE/FLUOR ENTERPRISES INC A JOINT VENTURE**

You are directed to make the following changes from the plans and specifications or do the following described work not included in the plans and specifications for this contract. ***NOTE: This change order is not effective until approved by the Engineer.***

Description of work to be done, estimate of quantities and prices to be paid. (Segregate between additional work at contract price, agreed price and force account.) Unless otherwise stated, rates for rental of equipment cover only such time as equipment is actually used and no allowance will be made for idle time. This last percentage shown is the net accumulated increase or decrease from the original quantity in the Engineer's Estimate.

Adjustment of Compensation at Lump Sum:

ITEM 1.

- Revise lighting pole and main tower lighting fixture schedules.
- Revise luminaire pull boxes and associated conduit routing into pull boxes.
- Add in-line fuses to luminaires.

Add Special Provisions Section 10-3.105 "FUSED SPLICE CONNECTORS," as shown on sheet 3.

Adjustment of Compensation at Lump Sum..... $642,646.00

Estimate of Increase in Contract Item at Contract Price:

ITEM 2.

Modify deck mounted lighting brackets.

Item No. 55: FURNISH STRUCTURAL STEEL (BRIDGE) (BOX GIRDER)
101 KG (+0.00%) @ $9.00 /KG =+$ 909.00 (+0.00%)

Item No. 56: ERECT STRUCTURAL STEEL (BRIDGE) (BOX GIRDER)
101 KG (+0.00%) @ $1.00 /KG =+$ 101.00 (+0.00%)

The quantity increases shown herein for Items #55 and 56, when combined with the quantity shown in the Engineer's Estimate, and as modified by any previous change orders or revisions to dimensions made by the Engineer, shall be the final quantity for which payment will be made.

Total Cost for Increase in Contract Item..... $1,010.00

The following revised plan sheets detail the changes addressed in this change order: 93R4, 118R3, 119R2, 123R2, 124R2, 125R1, 132R4, 132S1, 132S2, 141R2, 189R4, 194R2, 195R2, 196R1, 197R2, 198R1, 208R4, 208S1, 208S2, 211R2, 244R2, 247R3, 248R3, 249R2, 250R2, 251R1, 252R2, 253R1, 254R1, 255R1, 256R1, 257R2, 258R1, 259R1, 260R1, 268R1, 276R2, 299R2, and 906R1 (of 1204) as shown on sheets 4 through 42 of this change order.

This change order resolves the costs associated with Contractor Request for Information (RFI) numbers 415, 464, 465, 466, 467, 1100R0 and 1100R1 with respect to changes listed above.

CONTRACT CHANGE ORDER

Change Requested by: Engineer

CCO: 43 **Suppl. No.** 0 **Contract No.** 04 – 0120F4 **Road** SF-80-13.2/13.9 **FED. AID LOC.:**

CHANGE ORDER COST AND TIME SUMMARY

(ITEM 1) Adjustment of Compensation at Lump Sum	$642,646.00
(ITEM 2) Increase in Contract Items at Contract Prices	$1,010.00
Total net pay for this change order	$643,656.00

This sum constitutes full and complete compensation for furnishing all labor, material, tools and incidentals including all markups by reason of this change.

Estimated Cost: **Increase** ☒ **Decrease** ☐ **$643,656.00**

By reason of this order the time of completion will be adjusted as follows: **0 Days**

Submitted by

Signature **Resident Engineer** Kannu Balan, Senior T.E. **Date** 12-14-11

Approval Recommended by

Signature **Supervising Transportation Engineer** William Casey, Sup. T.E. **Date** 12-20-11

Engineer Approval by

Signature **Supervising Transportation Engineer** William Casey, Sup.T.E. **Date** 1-6-12

We the undersigned contractor, have given careful consideration to the change proposed and agree, if this proposal is approved, that we will provide all equipment, furnish the materials, except as otherwise be noted above, and perform all services necessary for the work above specified, and will accept as full payment therefor the prices shown above.

NOTE: If you, the contractor, do not sign acceptance of this order, your attention is directed to the requirements of the specifications as to proceeding with the ordered work and filing a written protest within the time therein specified.

Contractor Acceptance by

Signature (Print name and title) BRIAN A. PETERSEN - PROJECT DIRECTOR **Date** 03JAN12

STATE OF CALIFORNIA - DEPARTMENT OF TRANSPORTATION

CONTRACT CHANGE ORDER MEMORANDUM

TO: Tony Anziano, Program Manager /	FILE: **E.A.** 04 - 0120F4
	CO-RTE-PM SF-80-13.2/13.9
FROM: Kannu Balan, Senior TE	**FED. NO.**
CCO#: **43** SUPPLEMENT#: **0** Category Code: **CBPC**	CONTINGENCY BALANCE (incl. this change) **$144,287,088.58**
COST: **$643,656.00** INCREASE ☑ DECREASE ☐	HEADQUARTERS APPROVAL REQUIRED? ☑ YES ☐ NO
SUPPLEMENTAL FUNDS PROVIDED: **$0.00**	IS THIS REQUEST IN ACCORDANCE WITH ENVIRONMENTAL DOCUMENTS? ☑ YES ☐ NO
CCO DESCRIPTION: Lighting Revisions	**PROJECT DESCRIPTION:** CONSTRUCT SELF-ANCHORED SUSPENSION BRIDGE

Original Contract Time:	Time Adj. This Change:	Previously Approved CCO Time Adjustments:	Percentage Time Adjusted: (including this change)	Total # of Unreconciled Deferred Time CCO(s): (including this change)
2490 Day(s)	**0** Day(s)	**501** Day(s)	**20** %	**3**

THIS CHANGE ORDER PROVIDES FOR:

Revising lighting pole and main tower lighting fixture schedules. Modifying deck mounted lighting brackets. Revising luminaire pull boxes and associated conduit routing into pull boxes. Adding in-line fuses to luminaires.

Adding Special Provisions Section 10-3.105 "FUSED SPLICE CONNECTORS."

Lighting pedestals that were located on crossbeams were relocated to avoid overhanging the edge and constructability issues due to limited space. Deck and wall mounted Tower aesthetic lights did not have enough information in the plan sheets to determine placement. Mounting brackets and pull boxes are revised to avoid interferences with piping and conduits. In-line fuses were added to individually connect luminaires to the power feed. Each luminaire has a dedicated fuse so that one blown fuse will not blow the entire line.

This change order resolves the costs associated with Contractor Request For Information (RFI) numbers 415, 464, 465, 466, 467, 1100R0 and 1100R1 with respect to changes listed above.

The total cost of this change order is $642,646.00 lump sum and $1,010.00 increase in contract items for a total of $643,656.00 for this change, which can be financed from the contingency fund. A detailed cost analysis is on file.

No time adjustment is warranted as this change order does not affect the controlling operation.

This change order has concurrence from William Casey (Supervising TE), Ken Terpstra (Project Manager), Rich Foley (HQ Oversight), Wenyi Long (Bridge Design), Lina Ellis (Maintenance), and Jing Chen (District Design).

CONCURRED BY:			
Construction Engineer:	William Casey, Sup TE	Date	3/11/11
Bridge Engineer:	CT Oversight, Wenyi Long, P.E.	Date	1/9/09
Project Engineer:	District Design, Jing Chen	Date	1/15/09
Project Manager:	Proj Manager, Ken Terpstra	Date	3/26/11
FHWA Rep.:		Date	
Environmental:		Date	
Other (specify):	HQ, Rich Foley	Date	3/14/11
Other (specify):	Struct. Maint, Lina Ellis	Date	1/28/11
District Prior Approval By:	HQ, Bob Molera	Date	1/22/09
HQ (Issue Approve) By:		Date	
Resident Engineer's Signature:		Date	12-14-11

ESTIMATE OF COST	THIS REQUEST	TOTAL TO DATE
ITEMS	$1,010.00	$1,010.00
FORCE ACCOUNT	$0.00	$0.00
AGREED PRICE	$0.00	$0.00
ADJUSTMENT	$642,646.00	$642,646.00
TOTAL	$643,656.00	$643,656.00

FEDERAL PARTICIPATION

☐ PARTICIPATING ☐ PARTICIPATING IN PART ☑ NONE
☐ NON-PARTICIPATING (MAINTENANCE) ☐ NON-PARTICIPATING

FEDERAL SEGREGATION (if more than one Funding Source or P.I.P. type)
☐ CCO FUNDED PER CONTRACT ☐ CCO FUNDED AS FOLLOWS

FEDERAL FUNDING SOURCE	PERCENT

ADA Notice: For individuals with sensory disabilities, this document is available in alternate formats. For information call: (916) 654-6410 or TDD (916) 654-3880 or write Records and Forms Management, 1120 N Street, MS-89, Sacramento, CA 95814.

STATE OF CALIFORNIA - DEPARTMENT OF TRANSPORTATION

CONTRACT CHANGE ORDER

Change Requested by: Engineer

CCO: 43 Suppl. No. 1 Contract No. 04 – 0120F4 Road SF-80-13.2/13.9 **FED. AID LOC.:**

To: **AMERICAN BRIDGE/FLUOR ENTERPRISES INC A JOINT VENTURE**

You are directed to make the following changes from the plans and specifications or do the following described work not included in the plans and specifications for this contract. ***NOTE: This change order is not effective until approved by the Engineer.***

Description of work to be done, estimate of quantities and prices to be paid. (Segregate between additional work at contract price, agreed price and force account.) Unless otherwise stated, rates for rental of equipment cover only such time as equipment is actually used and no allowance will be made for idle time. This last percentage shown is the net accumulated increase or decrease from the original quantity in the Engineer's Estimate.

Adjustment of Compensation at Lump Sum:

Eliminate the furnishing of roadway and belvedere lighting poles from the SAS Project. The Department will furnish twelve (12) roadway light poles (20 M each) and eight (8) belvedere light poles (3.5 M each) for the Contractor to install per Contract. The pole fixtures are included in CCO 167 S0/S1 and are also to be installed per Contract. All work is to be performed per the Contract Special Provisions, Standard Specifications, and Standard Plans.

The following revised plan sheets detail the changes addressed in this change order: 143R1, 144R1, 145R1, 146R1, 147R1, 148R1, 214R1, and 318R1 (of 1204) as shown on sheets 2 through 9 of this change order.

For this reduction, the Contractor agrees to credit the Department a lump sum of ($517,753.00). This sum constitutes full and complete compensation, including all markups for this change.

Adjustment of Compensation at Lump Sum..... ($517,753.00)

Extra Work at Force Account:

For any additional work as directed by the Engineer, necessary for installation of the poles or attachment of any components to the poles that are not shown on the contract plans, that has cost not covered by the lump sum amount above and the original scope of the contract.

Labor, equipment and material authorized by the Engineer, as necessary, will be paid in accordance with the provisions of Section 4-1.03D, "Extra Work" of the Standard Specifications and Section 5-1.24, "Force Account Payment" of the Special Provisions.

Estimated Cost of Extra Work at Force Account..... $100,000.00

Estimated Cost: Increase ☐ Decrease ☒ ($417,753.00)

By reason of this order the time of completion will be adjusted as follows: 0 Days

Submitted by

Signature	**Resident Engineer** Kannu Balan, Senior T.E.	**Date** 1-23-12

Approval Recommended by

Signature	**Supervising Transportation Engineer** William Casey, Sup. T.E.	**Date** 1-31-12

Engineer Approval by

Signature	**Supervising Transportation Engineer** William Casey, Sup. T.E.	**Date** 2-3-12

We the undersigned contractor, have given careful consideration to the change proposed and agree, if this proposal is approved, that we will provide all equipment, furnish the materials, except as otherwise be noted above, and perform all services necessary for the work above specified, and will accept as full payment therefor the prices shown above.

NOTE: If you, the contractor, do not sign acceptance of this order, your attention is directed to the requirements of the specifications as to proceeding with the ordered work and filing a written protest within the time therein specified.

Contractor Acceptance by

Signature	(Print name and title) BRIAN A. PETERSEN - PROJECT DIRECTOR	**Date** 02FEB12

History Copy

STATE OF CALIFORNIA - DEPARTMENT OF TRANSPORTATION

CONTRACT CHANGE ORDER MEMORANDUM

DATE: 1/19/2012 Page 1 of 1

TO: Tony Anziano, Program Manager /	FILE: **E.A.** 04 - 0120F4
	CO-RTE-PM SF-80-13.2/13.9
FROM: William Casey, Supervising TE	**FED. NO.**
CCO#: **43** SUPPLEMENT#: **1** Category Code: **CBPC**	CONTINGENCY BALANCE (incl. this change) **$115,372,445.58**
COST: **($417,753.00)** INCREASE ☐ DECREASE ☑	HEADQUARTERS APPROVAL REQUIRED? ☑ YES ☐ NO
SUPPLEMENTAL FUNDS PROVIDED: **$0.00**	IS THIS REQUEST IN ACCORDANCE WITH ENVIRONMENTAL DOCUMENTS? ☑ YES ☐ NO
CCO DESCRIPTION: State Furnished Light Poles	**PROJECT DESCRIPTION:** CONSTRUCT SELF-ANCHORED SUSPENSION BRIDGE

Original Contract Time:	Time Adj. This Change:	Previously Approved CCO Time Adjustments:	Percentage Time Adjusted: (including this change)	Total # of Unreconciled Deferred Time CCO(s): (including this change)
2490 Day(s)	**0** Day(s)	**501** Day(s)	**20** %	**3**

THIS CHANGE ORDER PROVIDES FOR:

Eliminating the furnishing of roadway and belvedere lighting poles from the SAS Project. The Department will furnish twelve roadway light poles and eight belvedere light poles for the Contractor to install per Contract. Force account will compensate for any additional work necessary for installing the poles or attaching components to the poles that are not shown on the contract plans.

The pentagonal light poles on the new SFOBB East Span are unique to the new Bay Bridge and as part of the original design each individual contract was to furnish and install the poles in their project limits. Due to the uniqueness of the poles and for architectural and functional consistency of the poles, they were eliminated from all contracts so that one fabricator under a separate contract can fabricate them. Bay Area Toll Authority (BATA) has awarded a procurement contract to purchase all of the poles and provide them as State furnished.

This change order is ($517,743.00) credit lump sum and $100,000.00 force account for a total credit of ($417,753.00), which can be returned to the contingency fund. A detailed cost analysis is on file. The cumulative total of CCO 43S0 and 43S1 is $225,903.00.

No time adjustment is warranted as this change order does not affect the controlling operation.

This change order has concurrence from Pete Siegenthaler (Prin. TE), Ken Terpstra (Project Manager), Rich Foley (HQ Oversight), and Wenyi Long (Design Oversight). Maintenance concurrence is not required.

CONCURRED BY:			
Construction Engineer:	PCE, Pete Siegenthaler, Prin TE	Date	4/25/11
Bridge Engineer:		Date	
Project Engineer:	CT Oversight, Wenyi Long, P.E.	Date	4/28/11
Project Manager:	Proj Manager, Ken Terpstra	Date	4/25/11
FHWA Rep.:		Date	
Environmental:		Date	
Other (specify):	HQ, Rich Foley	Date	4/26/11
Other (specify):		Date	
District Prior Approval By:		Date	
HQ (Issue Approve) By:		Date	
Resident Engineer's Signature:		Date	1-23-12

ESTIMATE OF COST

	THIS REQUEST	TOTAL TO DATE
ITEMS	$0.00	$1,010.00
FORCE ACCOUNT	$100,000.00	$100,000.00
AGREED PRICE	$0.00	$0.00
ADJUSTMENT	($517,753.00)	$124,893.00
TOTAL	($417,753.00)	$225,903.00

FEDERAL PARTICIPATION

☐ PARTICIPATING ☐ PARTICIPATING IN PART ☑ NONE
☐ NON-PARTICIPATING (MAINTENANCE) ☐ NON-PARTICIPATING

FEDERAL SEGREGATION (if more than one Funding Source or P.I.P. type)
☐ CCO FUNDED PER CONTRACT ☐ CCO FUNDED AS FOLLOWS

FEDERAL FUNDING SOURCE	PERCENT

ADA Notice: For individuals with sensory disabilities, this document is available in alternate formats. For information call: (916) 654-6410 or TDD (916) 654-3880 or write Records and Forms Management, 1120 N Street, MS-89, Sacramento, CA 95814.

STATE OF CALIFORNIA - DEPARTMENT OF TRANSPORTATION

CONTRACT CHANGE ORDER MEMORANDUM

TO: Tony Anziano, Program Manager /	FILE: **E.A.** 04 - 0120F4
FROM: Darryl Schram, Senior TE	**CO-RTE-PM** SF-80-13.2/13.9
	FED. NO. No
CCO#: **43** SUPPLEMENT#: **2** Category Code: **CBPC**	CONTINGENCY BALANCE (incl. this change) **$47,392,053.62**
COST: **$70,000.00** INCREASE ☑ DECREASE ☐	HEADQUARTERS APPROVAL REQUIRED? ☑ YES ☐ NO
SUPPLEMENTAL FUNDS PROVIDED: **$0.00**	IS THIS REQUEST IN ACCORDANCE WITH ENVIRONMENTAL DOCUMENTS? ☑ YES ☐ NO
CCO DESCRIPTION: Add. Funds State Furnished Light Poles	**PROJECT DESCRIPTION:** CONSTRUCT SELF-ANCHORED SUSPENSION BRIDGE

Original Contract Time:	Time Adj. This Change:	Previously Approved CCO Time Adjustments:	Percentage Time Adjusted: (including this change)	Total # of Unreconciled Deferred Time CCO(s): (including this change)
2490 Day(s)	**0** Day(s)	**0** Day(s)	**0** %	**22**

THIS CHANGE ORDER PROVIDES FOR:
Providing additional funds for installation of the roadway light poles.

Contract Change Order (CCO) 43 S0 "Lighting Revisions" modified mounting brackets and pull boxes for Tower lights. CCO 43 S1 "State Furnished Light Poles" eliminated furnishing of roadway and belvedere lighting poles from the SAS Project so that one fabricator under a separate contract could fabricate them for the entire bridge but left installation of the poles under the SAS contract. Bay Area Toll Authority (BATA) awarded a procurement contract to purchase all of the poles and provide them as State furnished.

Most of the light poles are mounted on concrete pedestals; however ten SAS roadway light poles are mounted on steel pedestals. Steel poles mounted on steel pedestals require a mill-to-bear tolerance specification, which was omitted from the BATA contract specifications. The poles were delivered and mounted on the SAS steel pedestals before it was discovered that the bearing surfaces of ten of the poles and pedestals did not completely bear over the entire area. In order to ensure a proper fit up, these ten poles were removed from the SAS steel pedestals and the shipped to the fabricator for the necessary milling process, which was compensated under a separate BATA change order. When the poles returned, fixtures, cameras and MVDS units were reattached and the poles were re-erected.

As part of CCO 43 S1, force account funds were provided for any additional work necessary to install the state furnished poles due to changes from the contract plans. This change order provides the remainder of the expected cost to remove and disassemble the poles, handle and load onto trucks, and unload, reassemble, and reinstall after their return from the fabricator.

The total cost of this change order is $70,000.00 force account, which can be financed from the contingency fund. A detailed cost analysis is on file. The cumulative total of CCO 43 S0, S1, and S2 is $295,903.00.

No time adjustment is warranted as this change order does not affect the controlling operation.

This change order will obtain concurrence from William Casey (Supervising TE), Rich Foley (HQ Oversight), Wenyi Long (Bridge Design), Lina Ellis (Maintenance), and Jing Chen (District Design).

ADA Notice: For individuals with sensory disabilities, this document is available in alternate formats. For information call: (916) 654-6410 or TDD (916) 654-3880 or write Records and Forms Management, 1120 N Street, MS-89, Sacramento, CA 95814.

CONCURRED BY:		
Construction Engineer:	William Casey, Sup TE	Date 11/7/13
Bridge Engineer:	CT Oversight, Wenyi Long, P.E.	Date 11/14/13
Project Engineer:	District Design, Jing Chen	Date 11/14/13
Project Manager:	Proj Manager, Ken Terpstra	Date 11/25/13
FHWA Rep.:		Date
Environmental:		Date
Other (specify):	HQ, Rich Foley	Date 11/12/13
Other (specify):	Struct. Maint, Lina Ellis	Date 11/19/13
District Prior Approval By:		Date
HQ (Issue Approve) By:		Date
Resident Engineer's Signature:		Date 12/6/13

ESTIMATE OF COST

	THIS REQUEST	TOTAL TO DATE
ITEMS	$0.00	$1,010.00
FORCE ACCOUNT	$70,000.00	$170,000.00
AGREED PRICE	$0.00	$0.00
ADJUSTMENT	$0.00	$124,893.00
TOTAL	$70,000.00	$295,903.00

FEDERAL PARTICIPATION

☐ PARTICIPATING ☐ PARTICIPATING IN PART ☑ NONE
☐ NON-PARTICIPATING (MAINTENANCE) ☐ NON-PARTICIPATING

FEDERAL SEGREGATION (if more than one Funding Source or P.I.P. type)
☑ CCO FUNDED PER CONTRACT ☐ CCO FUNDED AS FOLLOWS

FEDERAL FUNDING SOURCE	PERCENT

ADA Notice: For individuals with sensory disabilities, this document is available in alternate formats. For information call: (916) 654-6410 or TDD (916) 654-3880 or write Records and Forms Management, 1120 N Street, MS-89, Sacramento, CA 95814.

CONTRACT CHANGE ORDER

Change Requested by: Engineer

CCO: 44 Suppl. No. 0 Contract No. 04 – 0120F4 Road SF-80-13.2/13.9 **FED. AID LOC.:**

To: **AMERICAN BRIDGE/FLUOR ENTERPRISES INC A JOINT VENTURE**

You are directed to make the following changes from the plans and specifications or do the following described work not included in the plans and specifications for this contract. ***NOTE: This change order is not effective until approved by the Engineer.***

Description of work to be done, estimate of quantities and prices to be paid. (Segregate between additional work at contract price, agreed price and force account.) Unless otherwise stated, rates for rental of equipment cover only such time as equipment is actually used and no allowance will be made for idle time. This last percentage shown is the net accumulated increase or decrease from the original quantity in the Engineer's Estimate.

Adjustment of Compensation at Lump Sum:

ITEM 1.

Modify the steel barriers including, but not limited to, the following:

- Revise pipe connector for the barrier mounted sign support
- Modify call boxes, pull boxes, utility panels, lighting panels, and conduit supports and routing in the barriers
- Change barrier connection types
- Revise deck drainage details
- Revise barrier and connection details
- Provide receptacle mounting detail
- Revise sign supports
- Provide cut out details for utility penetrations
- Modify luminaire support boxes
- Modify railings attached at call box locations on the barrier
- In lieu of caulk, provide seal welds at the barrier base plate

Revise Special Provisions Section 10-3.08 "SUPPORT HARDWARE FOR CONDUITS, CABLE TRAYS AND WIREWAYS," subsection "CONDUIT AND TRAY SUPPORTS" as shown on sheet 3 of this change order.

The following revised plan sheets detail the changes addressed in this change order: 32R1, 72R1, 83R1, 118R2, 121R2, 127R1, 130R1, 131R1, 131S1, 132R3, 133R3, 189R2, 190R2, 192R2, 193R2, 200R2, 203R1, 207R1, 207S1, 207S2, 208R3, 209R2, 210R2, 217R1, 218R2, 311R1, 312R1, 313R1, 314R1, 351R2, 352R2, 353R1, 354R2, 355R1, 358R1, 360R2, 361R2, 362R1, 363R1, 364R1, 367R1, 367S1, 368R1, 369R1, 370R2, 371R2, 373R1, 374R1, 375R1, 376R1, 386R1, 387R1, 388R1, 389R1, 390R2, 391R1, 392R2, 393R2, 394R1, 395R1, 396R2, 397R2, 398R1, 399R2, 400R1, 622R1, 636R1, 638R2, 669R2, 671R1, 673R1, 742R2, 876R2, 877R1, 878R2, 889R5, 889S1, 890R6, 890S1R5, 890S2R2, 890S3R2, 895R1, 903R1, 903S1R1, 904R3, 905R4, 908R1, 965R1 and 966R2 (of 1204) as shown on sheets 4 through 92 of this change order.

This change order resolves the costs associated with Contractor Request for Information (RFI) numbers 102, 103, 104R1, 157R0, 157R1, 202, 207, 217R2, 222, 242, 301, 302, 334R0, 334R1, 432R0, 464, 490, 530R0, 565R2, 565R3, 565R4, 611, 612, 613, 678R0, 678R1, 681, 743, 839, 897R0, 897R1, 933R0, 933R1, 1064, 1092R0, 1168, 1985R1, 2042, 2292, 2302, TC-RFI-0040R1, TC-RFI-0068R0, TC-RFI-0104R0, and TC-RFI-0130R0 with respect to changes listed above.

Adjustment of Compensation at Lump Sum..... $1,688,826.00

ITEM 2.

The items identified above in this change order have been paid as part of CCO 108S1 resolution. Therefore, the amount due under this change order will be adjusted by the amount paid under CCO 108S1 to prevent a double payment. Total amount paid under CCO 108S1, and to be credited to this change, is $300,000.00.

Adjustment of Compensation at Lump Sum Price..... <$300,000.00>

CONTRACT CHANGE ORDER

Change Requested by: Engineer

CCO: 44 **Suppl. No. 0** **Contract No. 04 – 0120F4** **Road** SF-80-13.2/13.9 **FED. AID LOC.:**

CHANGE ORDER COST AND TIME SUMMARY

(ITEM 1) Adjustment of Compensation at Lump Sum.....	$1,688,826.00
(ITEM 2) Amount paid under CCO 108S1 for this change order	<$300,000.00>
Total net pay for this change order	$1,388,826.00

This sum constitutes full and complete compensation for furnishing all labor, material, tools and incidentals including all markups by reason of this change.

Estimated Cost: Increase ☒ **Decrease** ☐ **$1,388,826.00**

By reason of this order the time of completion will be adjusted as follows: 0 Days

Submitted by

Signature Kannu Balan **Resident Engineer** Kannu Balan, Senior T.E. **Date** 12-6-4

Approval Recommended by

Signature **Program Manager** Jim Tapping for Tony Anziano, Program Manager **Date** 12/7/11

Engineer Approval by

Signature Tony Anziano **Program Manager** Tony Anziano, Program Manager **Date** 1/5/12

We the undersigned contractor, have given careful consideration to the change proposed and agree, if this proposal is approved, that we will provide all equipment, furnish the materials, except as otherwise be noted above, and perform all services necessary for the work above specified, and will accept as full payment therefor the prices shown above.

NOTE: If you, the contractor, do not sign acceptance of this order, your attention is directed to the requirements of the specifications as to proceeding with the ordered work and filing a written protest within the time therein specified.

Contractor Acceptance by

Signature (Print name and title) BRIAN A. PETERSEN - PROJECT DIRECTOR **Date** 03JAN12

STATE OF CALIFORNIA - DEPARTMENT OF TRANSPORTATION

CONTRACT CHANGE ORDER MEMORANDUM

TO: Tony Anziano, Program Manager /	FILE: **E.A.** 04 - 0120F4
	CO-RTE-PM SF-80-13.2/13.9
FROM: Kannu Balan, Senior TE	**FED. NO.**
CCO#: **44** SUPPLEMENT#: **0** Category Code: **CKSA**	CONTINGENCY BALANCE (incl. this change) **$145,034,281.58**
COST: **$1,388,826.00** INCREASE ☑ DECREASE ☐	HEADQUARTERS APPROVAL REQUIRED? ☑ YES ☐ NO
SUPPLEMENTAL FUNDS PROVIDED: **$0.00**	IS THIS REQUEST IN ACCORDANCE WITH ENVIRONMENTAL DOCUMENTS? ☑ YES ☐ NO
CCO DESCRIPTION: Barrier Modifications	**PROJECT DESCRIPTION:** CONSTRUCT SELF-ANCHORED SUSPENSION BRIDGE

Original Contract Time:	Time Adj. This Change:	Previously Approved CCO Time Adjustments:	Percentage Time Adjusted: (including this change)	Total # of Unreconciled Deferred Time CCO(s): (including this change)
2490 Day(s)	**0** Day(s)	**501** Day(s)	**20** %	**3**

THIS CHANGE ORDER PROVIDES FOR:

Modifying the steel barriers including:

- Revising the pipe connector for the barrier mounted sign support
- Modifying call boxes, pull boxes, utility panels, lighting panels, conduit supports and routing in the barriers
- Changing barrier connection types
- Revising deck drainage details
- Revising barrier and connection details
- Providing receptacle mounting detail
- Revising sign supports
- Providing cut out details for utility penetrations
- Modifying luminaire support boxes
- Modifying railings attached at call box locations on the barrier
- In lieu of caulk, providing seal welds at the barrier base plate

Revising Special Provisions Section 10-3.08 "SUPPORT HARDWARE FOR CONDUITS, CABLE TRAYS AND WIREWAYS," subsection "CONDUIT AND TRAY SUPPORTS."

Sign pipe connectors are modified due to interference with water piping. Conflicting plan sheets are resolved and missing details are provided. Conduit routing through the barrier is improved. Barrier connection types are modified to accommodate fabrication tolerances and edge distance issues. Barriers, deck drainage, and luminaire support boxes are revised to resolve interference and clearance issues. Barrier dimensions vary due to variable floorbeam spacing and bolt spacing is changed to clear welds. The barrier to flume bolted connection is revised for proper fit-up. Tensioning of the luminaire support anchor rods is revised due to the short length of the rods. Seal welds will provide better water resistance and protect against corrosion.

This change order resolves the costs associated with Contractor Request for Information (RFI) numbers 102, 103, 104R1, 157R0, 157R1, 202, 207, 217R2, 222, 242, 301, 302, 334R0, 334R1, 432R0, 464, 490, 530R0, 565R2, 565R3, 565R4, 611, 612, 613, 678R0, 678R1, 681, 743, 839, 897R0, 897R1, 933R0, 933R1, 1064, 1092R0, 1168, 1985R1, 2042, 2292, 2302, TC-RFI-0040R1, TC-RFI-0068R0, TC-RFI-0104R0, and TC-RFI-0130R0 with respect to changes listed above.

The amount of $300,000.00 for changes prior to November 17, 2009, was paid in CCO 108S1 (Fabrication Recovery). The additional cost of this change order is $1,388,826.00 for changes that occurred after November 17, 2009, which can be financed from the contingency fund. A detailed cost analysis is on file.

No time adjustment is warranted as this change order does not affect the controlling operation.

This change order has concurrence from Peter Siegenthaler (Principal TE), William Casey (Sup. TE), Rich Foley (HQ Oversight), Ken Terpstra (Project Manager), Wenyi Long (Bridge Design), Lina Ellis (Maintenance), and Jing Chen (District Design) August 30, 2011.

Toll Bridge Program Oversight Committee (TBPOC) approved CCOs 44 S0 and S1 on December 1, 2011, for a value of

ADA Notice: For individuals with sensory disabilities, this document is available in alternate formats. For information call: (916) 654-6410 or TDD (916) 654-3880 or write Records and Forms Management, 1120 N Street, MS-89, Sacramento, CA 95814.

$1,413,028.

CONCURRED BY:			
Construction Engineer:	PCE, Pete Siegenthaler, Prin TE	Date	8/31/11
Bridge Engineer:	William Casey, Sup TE	Date	8/30/11
Project Engineer:	CT Oversight, Wenyi Long, P.E.	Date	8/24/11
Project Manager:	Proj Manager, Ken Terpstra	Date	9/1/11
FHWA Rep.:		Date	
Environmental:		Date	
Other (specify):	HQ, Rich Foley	Date	8/30/11
Other (specify):	Struct. Maint, Lina Ellis	Date	8/25/11
District Prior Approval By:	HQ, Ken Darby	Date	8/31/11
HQ (Issue Approve) By:		Date	
Resident Engineer's Signature:		Date	12-6-11

ESTIMATE OF COST

	THIS REQUEST	TOTAL TO DATE
ITEMS	$0.00	$0.00
FORCE ACCOUNT	$0.00	$0.00
AGREED PRICE	$0.00	$0.00
ADJUSTMENT	$1,388,826.00	$1,388,826.00
TOTAL	$1,388,826.00	$1,388,826.00

FEDERAL PARTICIPATION

☐ PARTICIPATING ☐ PARTICIPATING IN PART ☑ NONE
☐ NON-PARTICIPATING (MAINTENANCE) ☐ NON-PARTICIPATING

FEDERAL SEGREGATION (if more than one Funding Source or P.I.P. type)
☐ CCO FUNDED PER CONTRACT ☐ CCO FUNDED AS FOLLOWS

FEDERAL FUNDING SOURCE	PERCENT

ADA Notice: For individuals with sensory disabilities, this document is available in alternate formats. For information call: (916) 654-6410 or TDD (916) 654-3880 or write Records and Forms Management, 1120 N Street, MS-89, Sacramento, CA 95814.

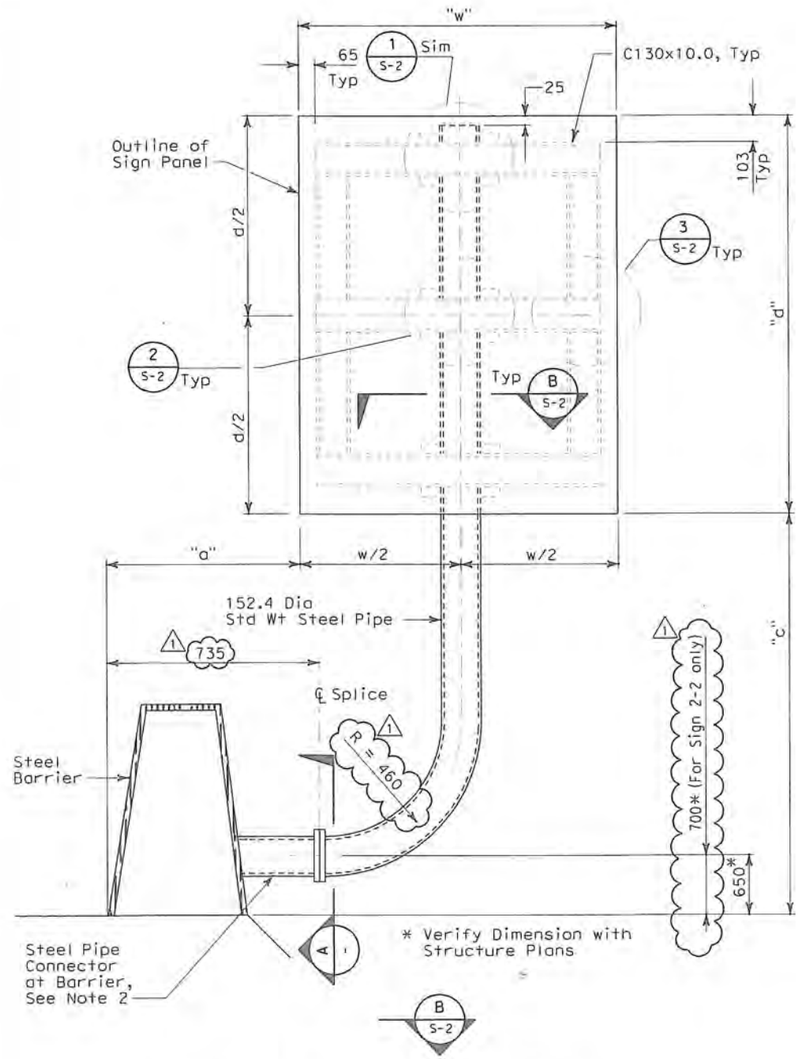

BARRIER MOUNTED SIGNS (TYPE D) DETAILS

Right Side
Left Side Opposite Hand

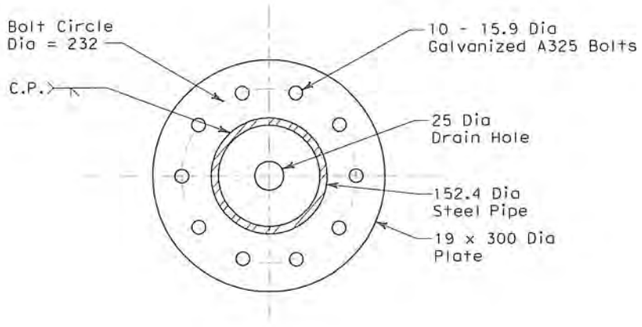

SPLICE

SECTION A -

GENERAL STRUCTURAL NOTES:

1. See S sheets, and "Barrier Mounted Signs" Table" for sign locations and sign panel dimensions.
2. For barrier details and steel pipe connectors at steel barriers, see Structures Plans.
3. Cap top of Steel Pipe. See Detail 1 sheet S-2.
4. All steel shall be galvanized
5. Sign Panels are State furnished.

BARRIER MOUNTED SIGNS

Sign	Sheet	Station (M)	Side	Barrier	Type	"a" (mm)	"c" (mm)	"d" (mm)	"e" (mm)	"w" (mm)
2-1	PD-2	W 57+90	Lt	Steel	D	610	2100	1524	-	1219
2-2	PD-2	W 57+90	Rt	Steel	D	610	2100	1524	-	1219
2-3	PD-2	E 57+50	Rt	Steel	D	610	2100	1524	-	1219
2-4	PD-2	E 57+50	Lt	Steel	D	610	2100	1524	-	1219

SIGN DETAILS
NO SCALE

S-1

DIST	COUNTY	ROUTE	KILOMETER POST TOTAL PROJECT	SHEET No	TOTAL SHEETS
04	SF	80	13.2/13.9	32R1	1204

REGISTERED CIVIL ENGINEER — 12/19/02 DATE

12-6-04
PLANS APPROVAL DATE

REGISTERED PROFESSIONAL ENGINEER — LAWRENCE M. JOHNSON No. C 44006 Exp. 6/30/05 CIVIL — STATE OF CALIFORNIA

PARSONS BRINCKERHOFF QUADE & DOUGLAS, INC.
A Parsons Brinckerhoff Company
303 Second St., Suite 700N
San Francisco, CA 94107-1317

The State of California or its officers or agents shall not be responsible for the accuracy or completeness of electronic copies of this plan sheet.

Caltrans now has a web site! To get to the web site, go to http://www.dot.ca.gov

DESIGN OVERSIGHT	CALCULATED/ DESIGNED BY	CHECKED BY	DRAWN BY	DATE	REVISED BY	DATE REVISED
Bob Zandipour	LJ	GVL	LJ	11/02		

STATE OF CALIFORNIA - DEPARTMENT OF TRANSPORTATION
Caltrans

REQUEST FOR INFORMATION NOT ADDRESSED IN THIS CCO REMAIN IN FORCE					
1	03/04/08	BARRIER MODIFICATIONS	RG	LJ SE	44
MARK	DATE	DESCRIPTIONS	BY	CH'D	CCO#
REVISIONS					

CONTRACT CHANGE ORDER NO. 44 SO
SHEET 4 OF 92

REGISTERED PROFESSIONAL ENGINEER — LAWRENCE M. JOHNSON No. C 44006 Exp. 6/30/09 CIVIL — STATE OF CALIFORNIA

FOR REVISION ONLY

ALL DIMENSIONS ARE IN MILLIMETERS UNLESS OTHERWISE SHOWN

FOR REDUCED PLANS ORIGINAL SCALE IS IN MILLIMETERS 0 20 40 60 80

DGN FILE =>t:\13103\MS\pse\SAS Struc\CCO\SAS CC044\04-0120f1_0032R01.dgn
USERNAME =>florico

CU 04251 EA 0120F1

LAST REVISION 00-00-00
DATE PLOTTED => 6/20/2008
TIME PLOTTED => 5:01:46 PM

DIST	COUNTY	ROUTE	KILOMETER POST TOTAL PROJECT	SHEET No	TOTAL SHEETS
04	SF	80	13.2/13.9	72R1	1204

Caltrans Metric.

REGISTERED STRUCTURAL ENGINEER — 12/19/02 DATE

12-6-04 PLANS APPROVAL DATE

REGISTERED PROFESSIONAL ENGINEER — Mee Shing Owyang — No. 24960 — Exp. 12/31/05 — CIVIL — STATE OF CALIFORNIA

PARSONS BRINCKERHOFF QUADE & DOUGLAS, INC.
303 SECOND STREET, SUITE 700 N
SAN FRANCISCO, CA 94107

The State of California or its officers or agents shall not be responsible for the accuracy or completeness of electronic copies of this plan sheet.

Caltrans now has a web site! To get to the web site, go to http://www.dot.ca.gov

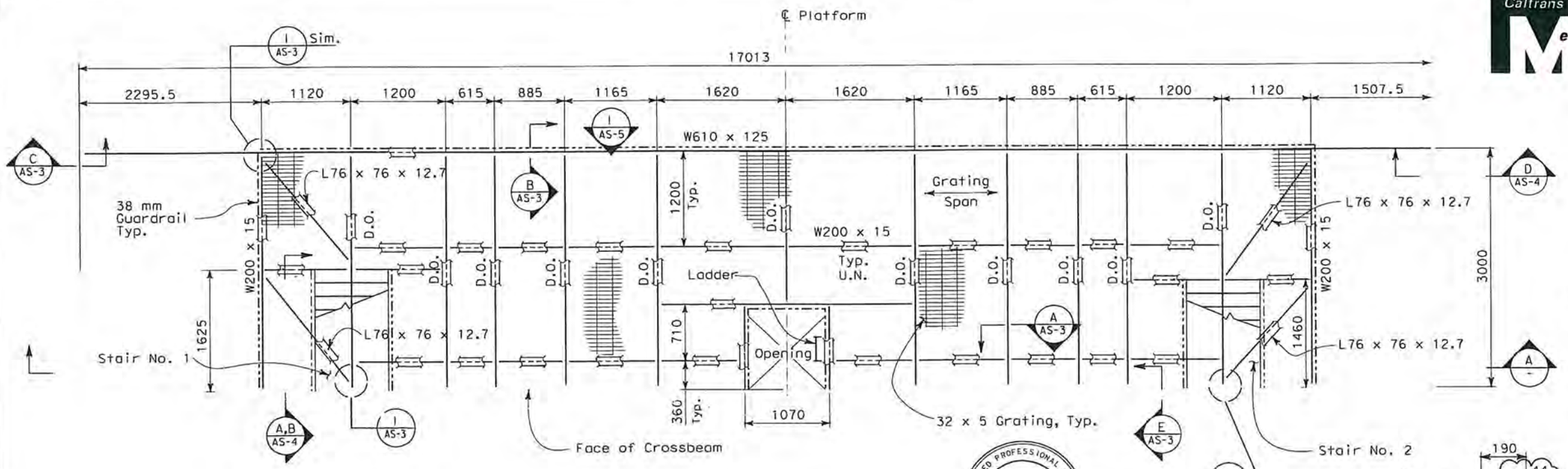

FRAMING PLAN
SCALE: 1:30

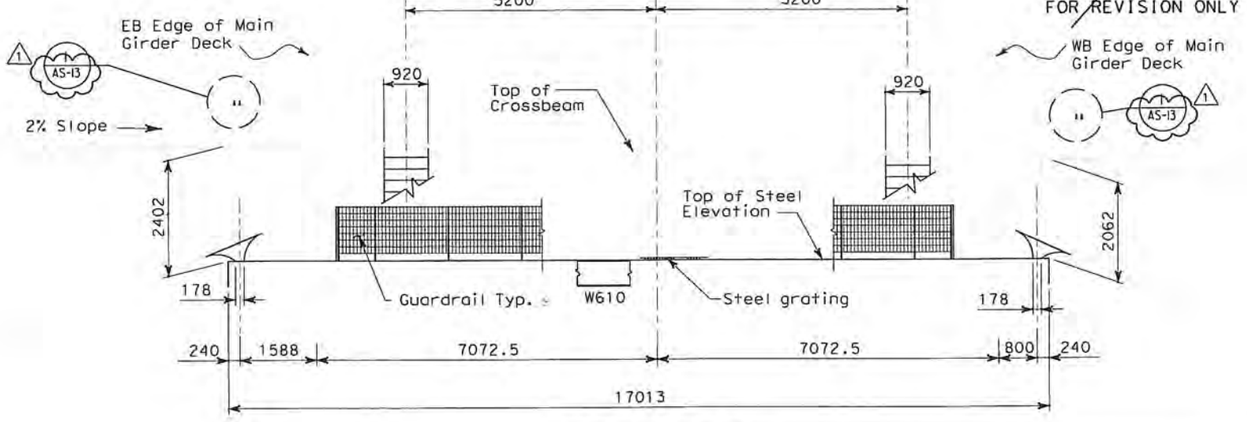

REGISTERED PROFESSIONAL ENGINEER — Mee Shing Owyang — No. 24960 — Exp. 12/31/09 — CIVIL — STATE OF CALIFORNIA

FOR REVISION ONLY

SECTION A
SCALE: 1:60

NOTES:

1. Total weight of platform 5987 kg
2. The Contractor shall verify all controlling field dimensions before ordering or fabricating any materials.
3. For platform locations, see electrical plans.
4. For anchor bolt locations, spacing and other requirements, see electrical plan.
5. For Call Box locations, see 1 electrical plan (sheet E-397.) Bolt hole size and spacings shown are for information only contractor to verify the actual bolt hole size and spacings.

REQUEST FOR INFORMATION NOT ADDRESSED IN THIS CCO REMAIN IN FORCE					
1	03/04/08	BARRIER MODIFICATIONS.	EL	MI	44
MARK	DATE	DESCRIPTIONS	BY	CH'D	CCO#
REVISIONS					

CONTRACT CHANGE ORDER NO. 44 SO
SHEET 5 OF 92

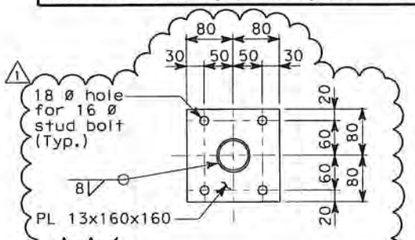

SECTION C
SCALE: 1:5

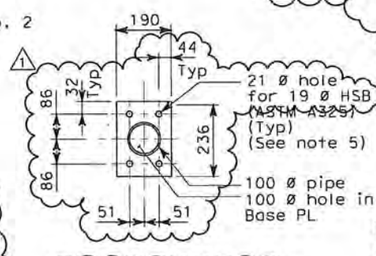

SECTION B
SCALE: 1:10

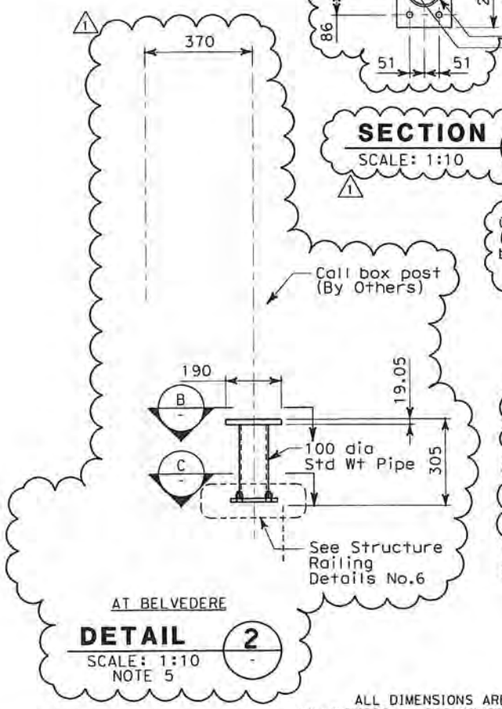

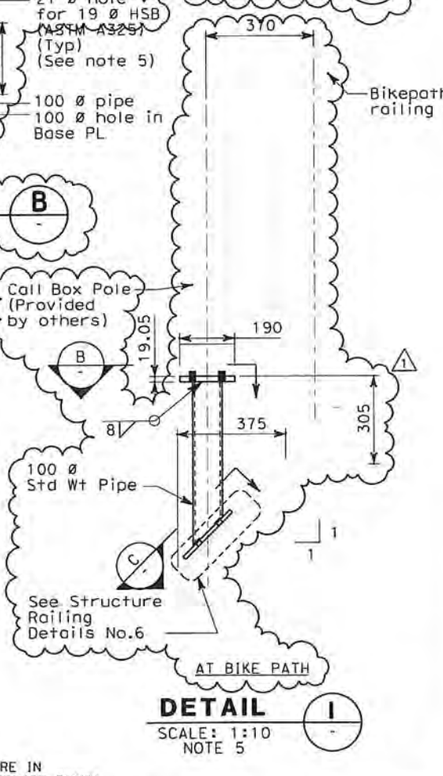

ALL DIMENSIONS ARE IN MILLIMETERS UNLESS OTHERWISE SHOWN

Bob Zandipour, DESIGN OVERSIGHT, 4-4-04, SIGN OFF DATE		DESIGN	A. Van Felten	M. S. Owyang	PREPARED FOR THE STATE OF CALIFORNIA DEPARTMENT OF TRANSPORTATION
		DETAILS	A. Van Felten	M. S. Owyang	
		QUANTITIES	M.S. Owyang	R. Parrino	
Gene Lusherovich, PROJECT ENGINEER		BRIDGE NO. 34-0006	KILOMETER POST 13.2/13.9	SAS SUPERSTRUCTURE	SERVICE PLATFORM FRAMING PLAN — AS-2

DESIGN DETAIL SHEET (METRIC) (REV. 3/1/98)

ORIGINAL SCALE IN MILLIMETERS FOR REDUCED PLANS 0 10 20 30 40 50 60 70 80 90 100

CU 04251 EA 0120F1

DISREGARD PRINTS BEARING EARLIER REVISION DATES →

REVISION DATES (PRELIMINARY STAGE ONLY) | SHEET | OF

FILE => t:\13103\MS\pse\SAS Struc\CCO\SAS CC044\2008-05-22_Resubmittal\04-0120f1_0072R01.dgn

USERNAME => tlorico DATE PLOTTED => 6/26/2008 TIME PLOTTED => 5:17:52 PM

SF REQUEST

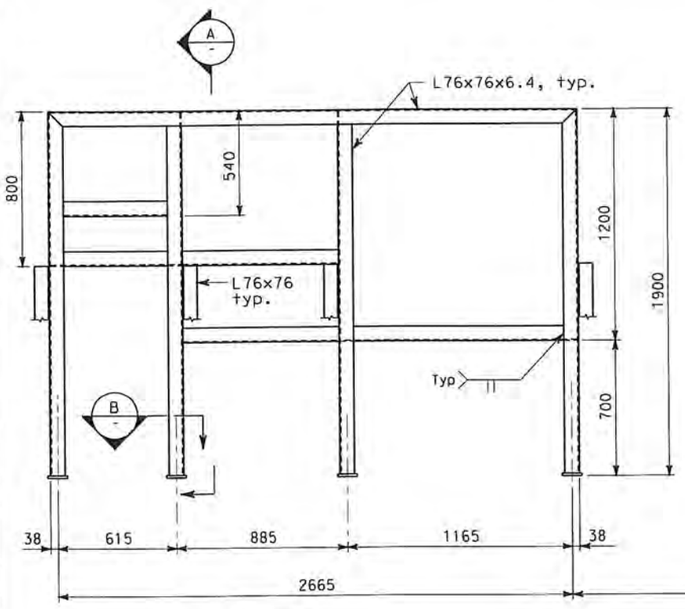

TYPE I

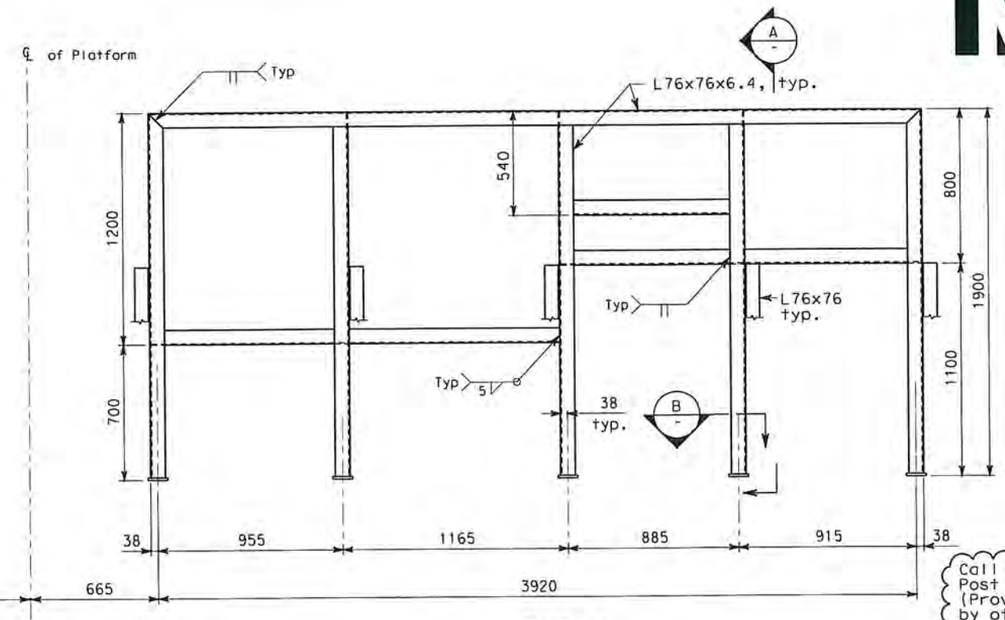

TYPE II

ELECTRICAL PANEL SUPPORT

SCALE: 1:15

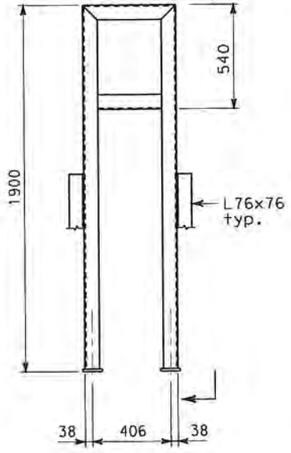

TYPE III

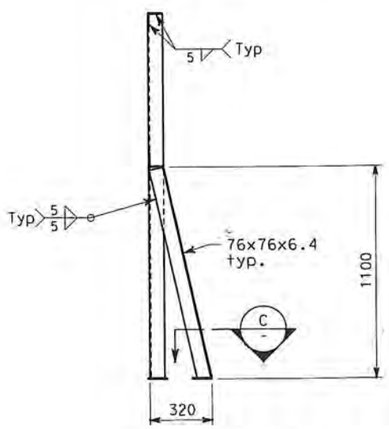

TYP @ EACH LEG

A SECTION
SCALE: 1:15

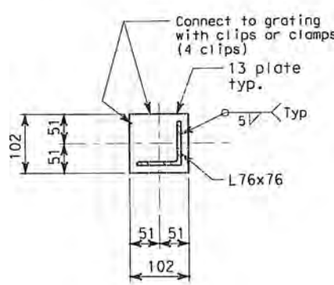

B SECTION
SCALE: 1:5

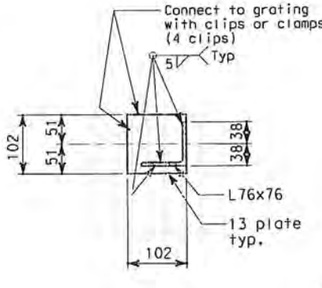

C SECTION
SCALE: 1:5

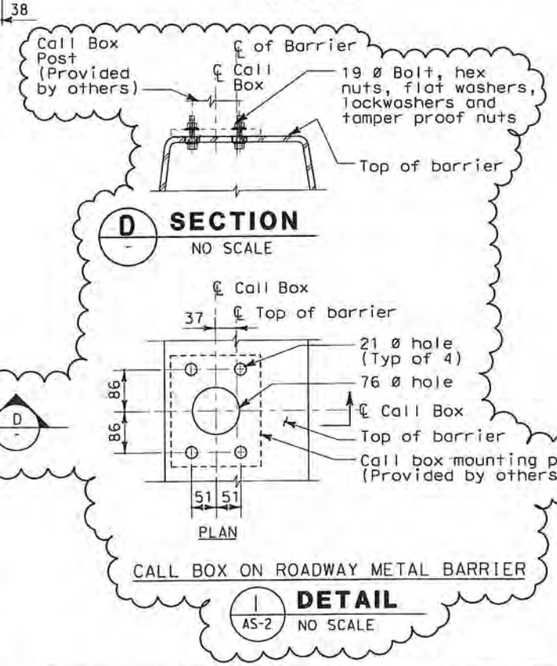

NOTES:

1. The contractor shall verify all controlling field dimensions before ordering or fabricating any material.
2. For structural notes, see sheet AS-1.
3. For electrical panel support locations, see electrical plans.
4. For call box locations, see electrical sheet E-397. 1

FOR REVISION ONLY

ALL DIMENSIONS ARE IN MILLIMETERS UNLESS OTHERWISE SHOWN

Caltrans Metric.

DIST	COUNTY	ROUTE	KILOMETER POST TOTAL PROJECT	SHEET No	TOTAL SHEETS
04	SF	80	13.2/13.9	83R1	1204

REGISTERED STRUCTURAL ENGINEER — DATE 12/19/02

REGISTERED PROFESSIONAL ENGINEER — Mee Shing Owyang — No. 24960 — Exp. 12/31/05 — CIVIL — STATE OF CALIFORNIA

12-6-04
PLANS APPROVAL DATE

PARSONS BRINCKERHOFF QUADE & DOUGLAS, INC.
303 SECOND STREET, SUITE 700 N
SAN FRANCISCO, CA 94107

The State of California or its officers or agents shall not be responsible for the accuracy or completeness of electronic copies of this plan sheet.

Caltrans now has a web site! To get to the web site, go to http://www.dot.ca.gov

REGISTERED PROFESSIONAL ENGINEER — Mee Shing Owyang — No. 24960 — Exp. 12/31/09 — CIVIL — STATE OF CALIFORNIA

REQUEST FOR INFORMATION NOT ADDRESSED IN THIS CCO REMAIN IN FORCE					
1	03/04/08	BARRIER MODIFICATIONS.	EL	MI	44
MARK	DATE	DESCRIPTIONS	BY	CH'D	CCO#
REVISIONS					

CONTRACT CHANGE ORDER NO. 44 SO
SHEET 6 OF 92

Bob Zandipour — DESIGN OVERSIGHT	DESIGN	BY I. Horton	CHECKED M. S. Owyang	PREPARED FOR THE STATE OF CALIFORNIA DEPARTMENT OF TRANSPORTATION	Gene Lusherovich — PROJECT ENGINEER
4-14-04 — SIGN OFF DATE	DETAILS	BY D. Chin	CHECKED M. S. Owyang		
DESIGN DETAIL SHEET (METRIC) REV. 3/1/98	QUANTITIES	BY I. Horton	CHECKED P. McNamee		

ORIGINAL SCALE IN MILLIMETERS FOR REDUCED PLANS 0 10 20 30 40 50 60 70 80 90 100

CU 04251
EA 0120F1

BRIDGE NO.	SAS SUPERSTRUCTURE	
34-0006	ELECTRICAL PANEL SUPPORT & SECTIONS	AS-13
KILOMETER POST 13.2/13.9	DISREGARD PRINTS BEARING EARLIER REVISION DATES →	REVISION DATES (PRELIMINARY STAGE ONLY) — SHEET — OF

FILE => f:\13103\WS\pse\SAS Struc\CCO\SAS CC044\2008-05-22_Resubmittal\04-0120f1_0083R01.dgn

USERNAME => ttorico DATE PLOTTED => 6/20/2008 TIME PLOTTED => 5:18:49 PM

$FREQUEST

DIST	COUNTY	ROUTE	KILOMETER POST TOTAL PROJECT	SHEET No	TOTAL SHEETS
04	SF	80	13.2/13.9	118 R2	1204

Jens Erlingsson 12/19/02
REGISTERED ELECTRICAL ENGINEER DATE

12-6-04
PLANS APPROVAL DATE

REGISTERED PROFESSIONAL ENGINEER — JENS ERLINGSSON No. 8249 Exp. 9/30/06 ELECTRICAL — STATE OF CALIFORNIA

PB POWER, Inc.
A Parsons Brinckerhoff Company
303 Second St., Suite 700N
San Francisco, CA 94107-1317

The State of California or its officers or agents shall not be responsible for the accuracy or completeness of electronic copies of this plan sheet.

Caltrans now has a web site! To get to the web site, go to http://www.dot.ca.gov

Caltrans Metric

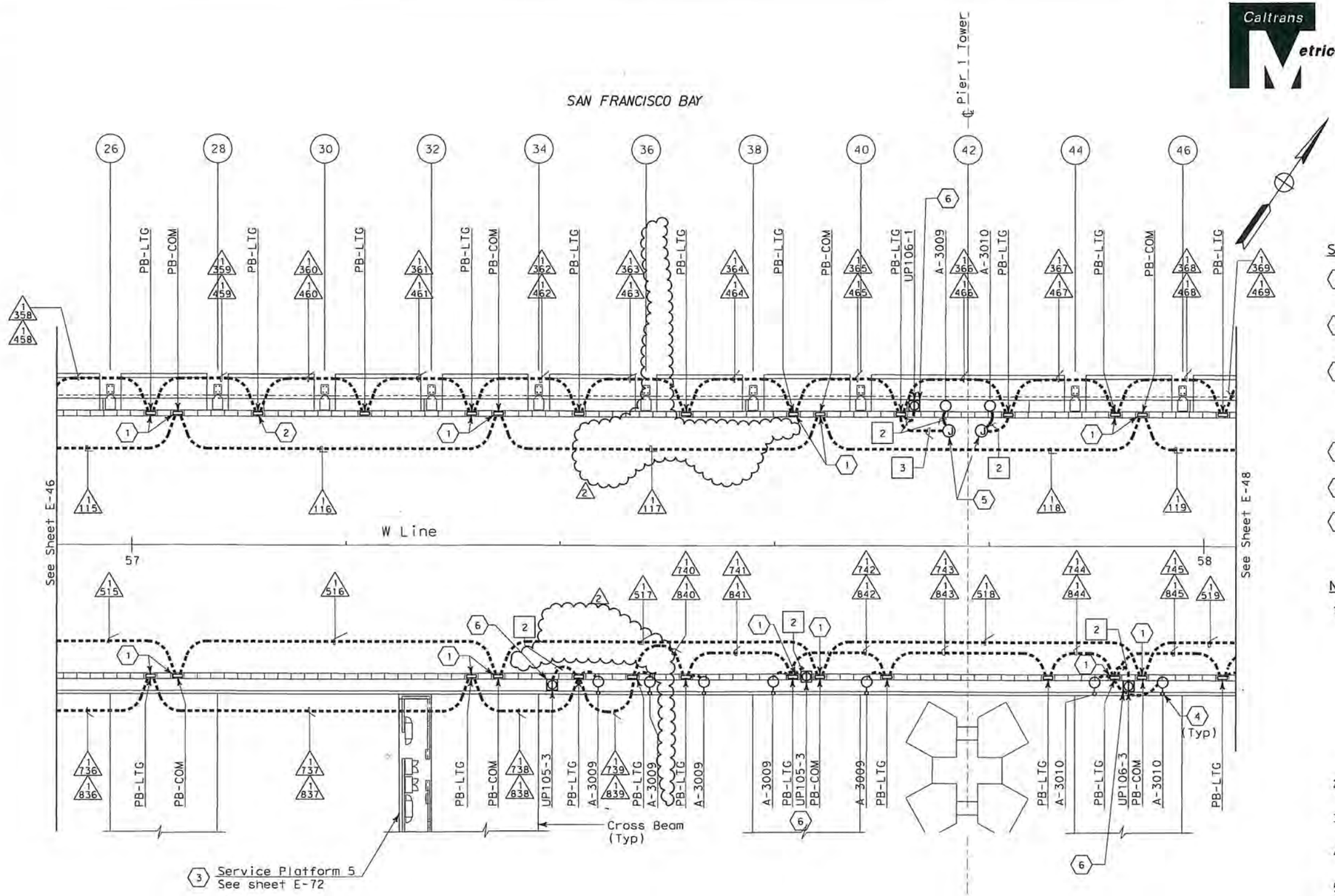

SHEET NOTES:

(1) Conduit from barrier pullbox or other equipment down into Girder, See sheet E-97.

(2) For conduit to Suspend Lighting, See sheet E-227. Typ for all PB-LTG located on the north side of the roadway.

(3) Contractor shall furnish and install UP-105 per sheet E-72. For complete scope of work on platform and other related work not shown on this sheet, see Electrical Special Provisions.

(4) See sheet E-67 for pylon floodlight conduit location.

(5) Type PB-1C junction box is used on suspender brackets.

(6) Roadway Barrier Receptacle, see Detail 1, sheet E-68.

NOTES:

1. References:
   - For typical details and locations of conduit connections to light poles, barrier outlet boxes, call boxes, overhead sign lighting, CCTV and MVDS, see sheets E-67, E-68 and E-68.
   - TOS equipment is shown for conduit routing only. For typical details of TOS controller and devices, see sheets E-344 through E-357.
   - For types of pullboxes, splice boxes and enclosures, see sheet E-83.
   - For circuit and conduit/cable tray schedules, see sheets starting at E-401.
2. For Roadway Call Boxes, refer to sheet E-396.
3. For Roadway Level Lighting Pole Schedule, see sheet E-82.
4. For Roadway Level Call Box Schedule, see sheet E-397.
5. For number of lighting fixtures (main tower lights), see lighting schedule sheets E-271 and E-272.

REGISTERED PROFESSIONAL ENGINEER — S. A. ESTOQUE, JR. No. E-10151 Exp. 12/31/2009 ELECTRICAL — STATE OF CALIFORNIA

FOR REVISION ONLY

REQUEST FOR INFORMATION NOT ADDRESSED IN THIS CCO REMAIN IN FORCE					
2	03/04/08	BARRIER MODIFICATIONS	JS BM	RG SE	44
1	02/19/08	ELECTRICAL MODIFICATIONS	MP EL	RR	42
MARK	DATE	DESCRIPTIONS REVISIONS	BY	CH'D	CCO#

CONTRACT CHANGE ORDER NO. 44 SO
SHEET 7 OF 92

CONDUIT PLAN

SAS SUPERSTRUCTURE ROADWAY WESTBOUND
LIGHTING AND ELECTRICAL SYSTEMS

SCALE 1:200

E-47

THIS PLAN IS ACCURATE FOR ELECTRICAL WORK ONLY.

CALCULATED/ DESIGNED BY	FK	DATE 8/02	REVISED BY
CHECKED BY	IAH	8/02	DATE REVISED

STATE OF CALIFORNIA - DEPARTMENT OF TRANSPORTATION
Caltrans
DESIGN OVERSIGHT
BEHZAD GOLEMOHAMMADI

LAST REVISION 00-00-00
DATE PLOTTED => 5/22/2008
TIME PLOTTED => 10:38:45 AM

FOR REDUCED PLANS ORIGINAL SCALE IS IN MILLIMETERS 0 20 40 60 80

DGN FILE =>T:\13103\WS\pse\SAS Struc\CCO\SAS CCO44\04-0120f1_01 8R02.dgn
USERNAME =>lorico

CU 04251 EA 0120F1

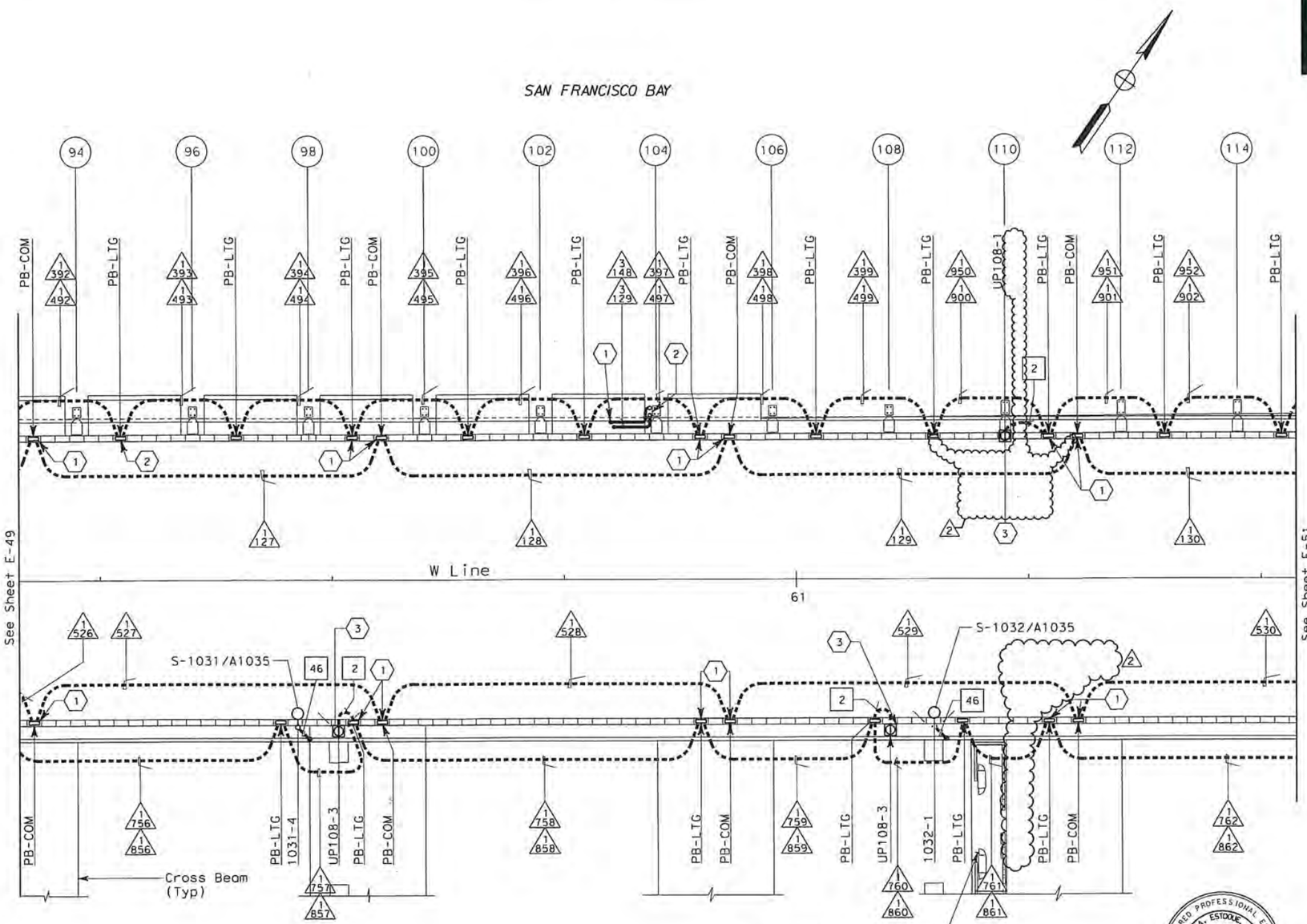

CONDUIT PLAN

DIST	COUNTY	ROUTE	KILOMETER POST TOTAL PROJECT	SHEET No	TOTAL SHEETS
04	SF	80	13.2/13.9	121 R2	1204

12/19/02
REGISTERED ELECTRICAL ENGINEER DATE

12-6-04
PLANS APPROVAL DATE

REGISTERED PROFESSIONAL ENGINEER — JENS ERLINGSSON — No. 8249 — Exp. 9/30/06 ELECTRICAL — STATE OF CALIFORNIA

PB POWER, Inc.
A Parsons Brinckerhoff Company
303 Second St., Suite 700N
San Francisco, CA 94107-1317

The State of California or its officers or agents shall not be responsible for the accuracy or completeness of electronic copies of this plan sheet.

Caltrans now has a web site! To get to the web site, go to http://www.dot.ca.gov

SHEET NOTES:

1. Conduit from barrier pullbox or other equipment down into Girder, See sheet E-100.
2. For conduit to Suspend Lighting, See sheet E-230.
3. Roadway Barrier Receptacle, see Detail 1, sheet E-68.

NOTES:

1. References:
   - For typical details and locations of conduit connections to light poles, barrier outlet boxes, call boxes, overhead sign lighting, CCTV and MVDS, see sheets E-66, E-67 and E-68.
   - TOS equipment is shown for conduit routing only. For typical details of TOS controller and devices, see sheets E-344 through E-357.
   - For types of pullboxes, splice boxes and enclosures, see sheet E-83.
   - For circuit and conduit/cable tray schedules, see sheets starting at E-401.
2. For Roadway Call Boxes refer to sheet E-396.
3. For Roadway Level Lighting Pole Schedules, see sheet E-82.
4. For Roadway Level Call Box Schedule, see sheet E-397.
5. For number of lighting fixtures (main tower lights), see lighting schedule sheets E-271 and E-272.

REGISTERED PROFESSIONAL ENGINEER — S. A. ESTOQUE, JR. — No. E-10151 — Exp. 12/31/2008 ELECTRICAL — STATE OF CALIFORNIA

FOR REVISION ONLY

REQUEST FOR INFORMATION NOT ADDRESSED IN THIS CCO REMAIN IN FORCE					
2	03/04/08	BARRIER MODIFICATIONS	JS BM	RC SE	44
1	02/19/08	ELECTRICAL MODIFICATIONS	MP EL	RR	42
MARK	DATE	DESCRIPTIONS REVISIONS	BY	CH'D	CCO#

CONTRACT CHANGE ORDER NO. 4450
SHEET 8 OF 92

SAS SUPERSTRUCTURE ROADWAY WESTBOUND
LIGHTING AND ELECTRICAL SYSTEMS

SCALE 1:200

E-50

THIS PLAN IS ACCURATE FOR ELECTRICAL WORK ONLY.

CALCULATED/ DESIGNED BY		FK	DATE 8/02	REVISED BY		
CHECKED BY		IAH	8/02	DATE REVISED		

STATE OF CALIFORNIA - DEPARTMENT OF TRANSPORTATION — Caltrans
DESIGN OVERSIGHT — BEHZAD GOLEMOHAMMADI

LAST REVISION 00-00-00 — DATE PLOTTED => 5/22/2008 — TIME PLOTTED => 10:39:14 AM

FOR REDUCED PLANS ORIGINAL SCALE IS IN MILLIMETERS 0 20 40 60 80

DGN FILE =>T:\13103\WS\pse\SAS Struc\CCO\SAS CCO44\04-0120F1_0121R02.dgn
USERNAME =>llorica

CU 04251 | EA 0120F1

UTILITY PANEL UP-105 (CKT #1096)

Location: SAS SUPERSTRUCTURE SERVICE PLATFORM 5

LOAD DESCRIPTION	LTG	REC	OTH.	CB		CB	LTG	REC	OTH.	LOAD DESCRIPTION
Spare				20/1	1 A 2	20/1				Spare (1)
Recept (2) Westbound South Barrier		360		20/1	3 B 4	20/1				Spare
Recept (2) Service Platform #5		360		20/1	5 C 6	20/1				Spare
Recept (2) Girder		360		20/1	7 A 8	20/1	738			Girder Lighting (18)
Recept (4) Crossbeams		720		20/1	9 B 10	20/1	820			Crossbeam Ltg (20)
RTU #10W (PLC Power Supply)			100	20/1	11 C 12	20/1			900	Strong Motion Recorder #2 Box A
RTU #10W (Lighting & Receptacle)	105	180	150	20/1	13 A 14	20/1			300	Strong Motion Recorder #2 Box B
Navigation Relay Cabinet #NAP-5			600	20/1	15 B 16	20/1				Spare
Spare				20/1	17 C 18	20/1				
				20/1	19 A 20	20/1				
				20/1	21 B 22	20/1				
				20/1	23 C 24	20/1				
TOTAL VA	105	1980	850				1558	(1)	1200	TOTAL VA

LOAD SUMMARY (INCLUDES .90 PF) (VA)

Lighting (At 100%): 1663
Gen Use (1st 10 kVA AT 100% Plus 50% of remainder): 4050

(1) TOTAL kVA: 5.693

BALANCE (kVA)

Phase A - 1.833
Phase B - 2.500 (1)
Phase C - 1.360

VOLTAGE: 208Y/120 V
PHASE/WIRES: 3-phase, 4-wire
BUS RATING: 100 A
MAIN: 60 A
MOUNTING: Surface
K.A.I.C.: 10

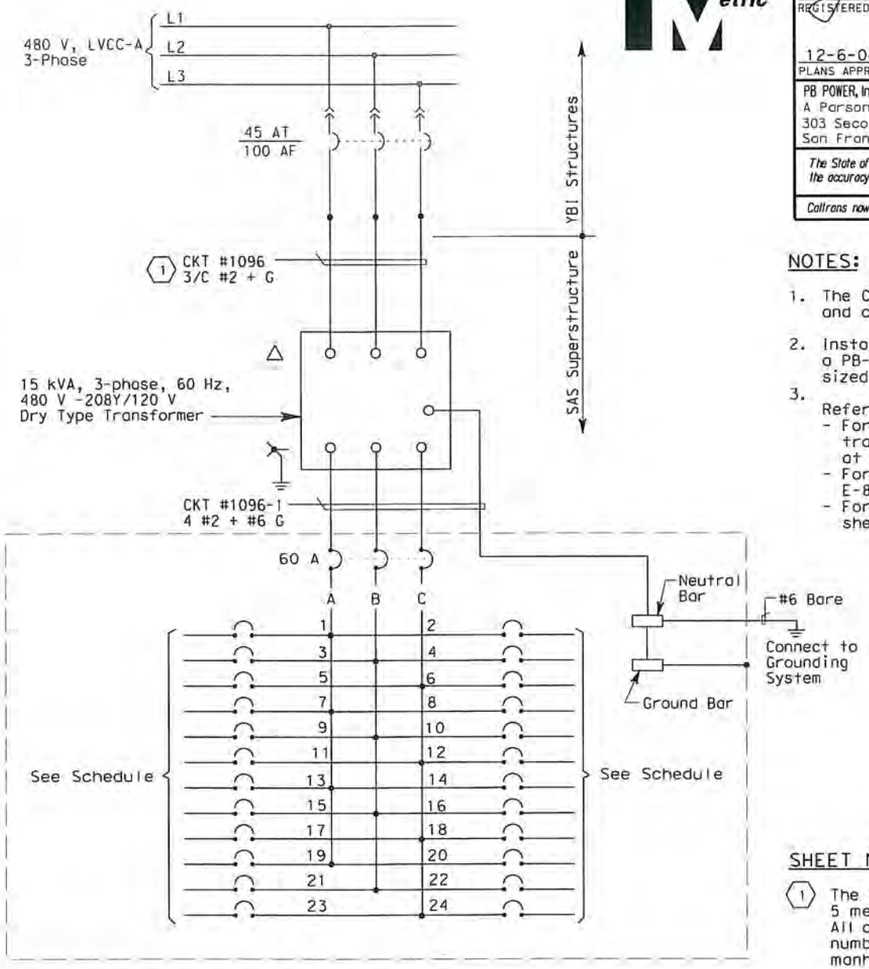

NOTES:

1. The Contractor shall provide nameplates and circuit schedules as shown.
2. Install panelboard inside a PB-8A enclosure (fiberglass) to be sized by the Contractor.
3. References:
   - For circuit and conduit/cable tray schedules, see sheets starting at E-401.
   - For pull box schedule, see sheet E-83.
   - For crossbeam lighting plan, see sheet E-119.

SHEET NOTES:

(1) The Contractor shall extend and coil 5 meters of cable in manhole 25. All cables shall be tagged with circuit numbers as shown. For location of manhole 25, see sheet E-11.

DIST	COUNTY	ROUTE	KILOMETER POST TOTAL PROJECT	SHEET No	TOTAL SHEETS
04	SF	80	13.2/13.9	127 R1	1204

Jens Erlingsson 12/19/02
REGISTERED ELECTRICAL ENGINEER DATE

12-6-04
PLANS APPROVAL DATE

REGISTERED PROFESSIONAL ENGINEER — JENS ERLINGSSON — No. 8249 — Exp. 9/30/06 ELECTRICAL — STATE OF CALIFORNIA

PB POWER, Inc.
A Parsons Brinckerhoff Company
303 Second St., Suite 700N
San Francisco, CA 94107-1317

The State of California or its officers or agents shall not be responsible for the accuracy or completeness of electronic copies of this plan sheet.

Caltrans now has a web site! To get to the web site, go to http://www.dot.ca.gov

DATE	REVISED BY	DATE REVISED
08/01	JP	8/01

CALCULATED/DESIGNED BY: BL
CHECKED BY: BEHZAD GOLEMOHAMMADI
DESIGN OVERSIGHT

STATE OF CALIFORNIA - DEPARTMENT OF TRANSPORTATION
Caltrans

REGISTERED PROFESSIONAL ENGINEER — S. A. ESTOQUE, JR. — No. E-10151 — Exp. 12/31/2008 ELECTRICAL — STATE OF CALIFORNIA

FOR REVISION ONLY

REQUEST FOR INFORMATION NOT ADDRESSED IN THIS CCO REMAIN IN FORCE					
(1)	03/04/08	BARRIER MODIFICATIONS	JS BM	RG SE	44
MARK	DATE	DESCRIPTIONS	BY	CH'D	CCO#
REVISIONS					

CONTRACT CHANGE ORDER NO. 44 SO
SHEET 9 OF 92

THIS PLAN IS ACCURATE FOR ELECTRICAL WORK ONLY.

DETAILS
SAS SUPERSTRUCTURE ROADWAY WESTBOUND
PANEL UP-105 SCHEDULE

E-60

LAST REVISION 00-00-00 — DATE PLOTTED => 5/22/2008 — TIME PLOTTED => 10:39:38 AM

FOR REDUCED PLANS ORIGINAL SCALE IS IN MILLIMETERS 0 20 40 60 80

DGN FILE => T:\13103\MS\pse\SAS Struc\CCO\SAS CC044\04-0120F1_0127R01.dgn
USERNAME => florico

CU 04251

EA 0120F1

UTILITY PANEL UP-108 (CKT #1099)

Location: SAS SUPERSTRUCTURE SERVICE PLATFORM 8

LOAD DESCRIPTION	LTG	REC	OTH.	CB		CB	LTG	REC	OTH.	LOAD DESCRIPTION
Recept (1) Westbound North Barrier		180		20/1	1 A 2	20/1			10	CB-143A
Recept (3) Westbound South Barrier		540		20/1	3 B 4	20/1			10 ⚠1	CB-143B ⚠1
Recept (2) Service Platform #8		360		20/1	5 C 6	20/1				Spare
Recept (3) Girder		540		20/1	7 A 8	20/1	984			Girder Ltg. (24)
Recept (6) Crossbeams		1080		20/1	9 B 10	20/1	738			Crossbeam Ltg (20)
RTU #11W (Lighting & Receptacle)	105	180	150	20/1	11 C 12	20/1	820			Crossbeam Ltg (20)
Recept (1) Crossbeams		180		20/1	13 A 14	20/1				Spare
Spare				20/1	15 B 16	20/1				Spare
RTU #11W (PLC Power Supply)			100	20/1	17 C 18	20/1				
Spare				20/1	19 A 20	20/1				
				20/1	21 B 22	20/1				
↓				20/1	23 C 24	20/1				↓
TOTAL VA	105	3060	250				2542	⚠1	20	TOTAL VA

LOAD SUMMARY (INCLUDES .90 PF) (VA)	BALANCE (kVA)	
Lighting (At 100%): 2647 Gen Use (1st 10 kVA AT 100% Plus 50% of remainder): 3350	Phase A - 1.884 Phase B - 2.358 ⚠1 Phase C - 1.715	VOLTAGE: 208Y/120 V PHASE/WIRES: 3-phase, 4-wire BUS RATING: 100 A MAIN: 60 A MOUNTING: Surface K.A.I.C.: 10

TOTAL kVA: 5.977 ⚠1

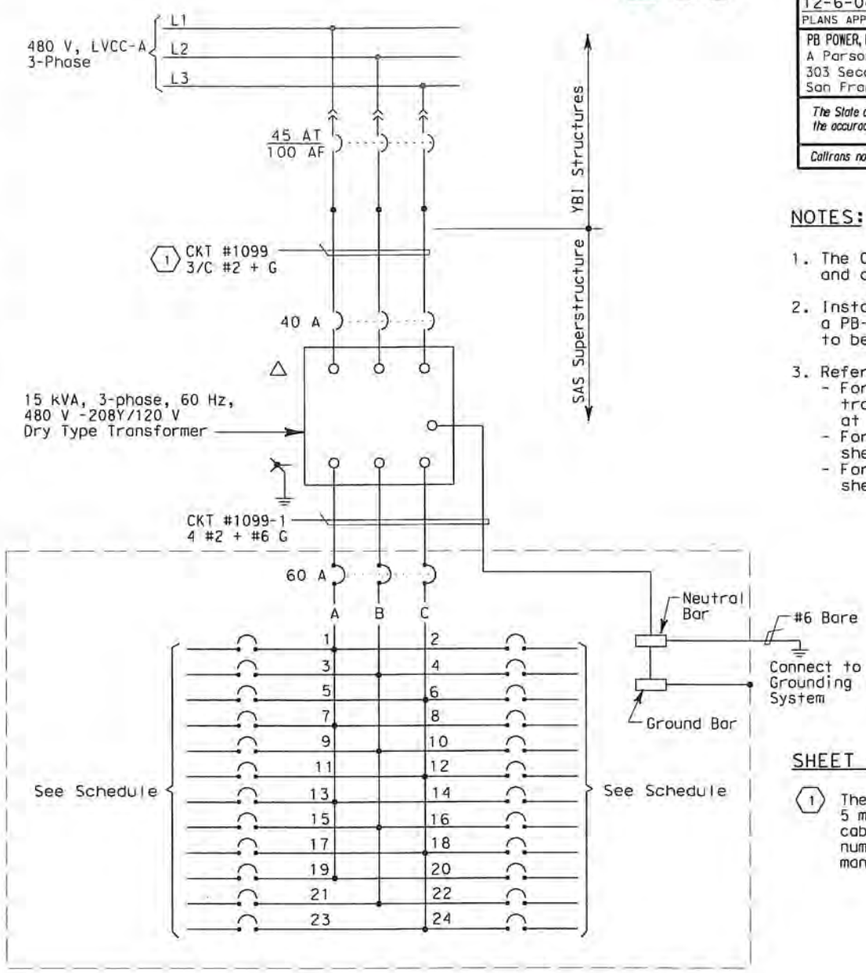

NOTES:

1. The Contractor shall provide nameplates and circuit schedules as shown.
2. Install transformer/panelboard inside a PB-8A enclosure (fiberglass) to be sized by the Contractor.
3. References:
   - For circuit and conduit/cable tray schedules, see sheets starting at E-401.
   - For pull box schedule, see sheet E-83.
   - For crossbeam lighting plan, see sheet E-119.

SHEET NOTES:

(1) The Contractor shall extend and coil 5 meters of cable in manhole 25. All cables shall be tagged with circuit numbers as shown. For location of manhole 25, see sheet E-11.

DIST	COUNTY	ROUTE	KILOMETER POST TOTAL PROJECT	SHEET No	TOTAL SHEETS
04	SF	80	13.2/13.9	130 R1	1204

Jens Erlingsson 12/19/02
REGISTERED ELECTRICAL ENGINEER DATE

REGISTERED PROFESSIONAL ENGINEER JENS ERLINGSSON No. 8249 Exp. 9/30/06 ELECTRICAL STATE OF CALIFORNIA

12-6-04
PLANS APPROVAL DATE

PB POWER, Inc.
A Parsons Brinckerhoff Company
303 Second St., Suite 700N
San Francisco, CA 94107-1317

The State of California or its officers or agents shall not be responsible for the accuracy or completeness of electronic copies of this plan sheet.

Caltrans now has a web site! To get to the web site, go to http://www.dot.ca.gov

REGISTERED PROFESSIONAL ENGINEER S. A. ESTOOLE, JR No. E-10151 Exp. 12/31/2008 ELECTRICAL STATE OF CALIFORNIA

FOR REVISION ONLY

REQUEST FOR INFORMATION NOT ADDRESSED IN THIS CCO REMAIN IN FORCE					
⚠1	03/04/08	BARRIER MODIFICATIONS	JS BM	RG SE	44
MARK	DATE	DESCRIPTIONS	BY	CH'D	CCO#
REVISIONS					

CONTRACT CHANGE ORDER NO. 4450
SHEET 10 OF 92

DETAILS
SAS SUPERSTRUCTURE ROADWAY WESTBOUND
PANEL UP-108 SCHEDULE

NO SCALE

E-63

DESIGN OVERSIGHT	CALCULATED/ DESIGNED BY	DRAWN BY	CHECKED BY	QUANTITIES BY
BEHZAD GOLEMOHAMMADI	EJL	JP	BL	

REVISED BY	DATE REVISED
EJL	2/04
DATE 08/01	11/01

STATE OF CALIFORNIA - DEPARTMENT OF TRANSPORTATION
Caltrans

THIS PLAN IS ACCURATE FOR ELECTRICAL WORK ONLY.

LAST REVISION 00-00-00 | DATE PLOTTED => 5/22/2008 | TIME PLOTTED => 10:40:13 AM

FOR REDUCED PLANS ORIGINAL SCALE IS IN MILLIMETERS 0 20 40 60 80

DGN FILE =>T:\13103\MS\pse\SAS Struc\CCO\SAS CCO44\04-0120f1_0130R01.dgn
USERNAME =>florico

CU 04251 | EA 0120F1

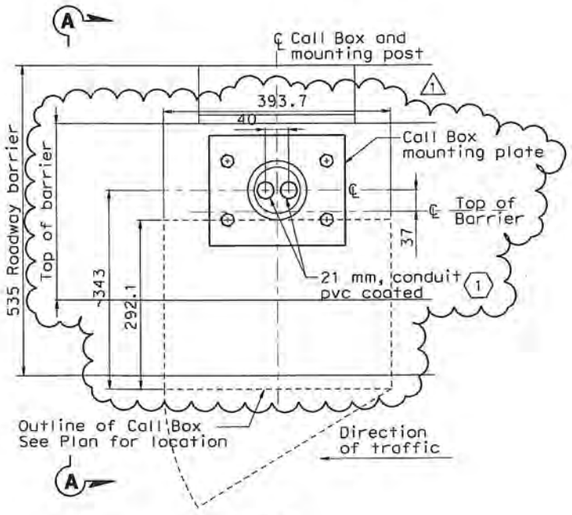

PLAN

CONDUIT STUB AND MOUNTING
OF CALL BOX AT BARRIER
SCALE 1:4

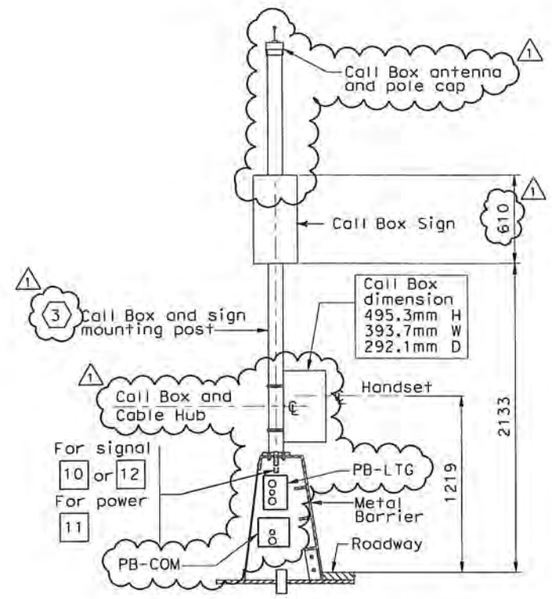

SECTION A-A

1 SCALE 1:20

NOTES:

1. References:
   - For pull box schedule, see Sheet E-83.
   - For light pole schedule, see Sheet E-82.
   - For call box schedule, see Sheet E-307
2. For location of pull boxes inside girder, see Sheet E-96 through E-101.
3. For mounting hole detail of call box on roadway metal barrier, see sheet AS-13.

SHEET NOTES:

1. Bond grounding bushing to pole ground lug with #6 bare copper wire.
2. For conduit location inside lighting pole, see Sheet E-68.
3. For call box mounting detail, see AS Sheets.
4. For typical conduit support locations inside barrier diaphragm, see Details 1, 2, and 3 of Sheet E-66A.
5. Locate Pull Box at approximate center of diaphragm. For typical PB-LTG and conduit support inside barrier diaphragm, see Details 4 and 6 sheet E-66A.
6. Locate Pull Box at approximate center of diaphragm. For typical PB-COM and conduit support inside barrier diaphragm, see Detail 5 sheet E-66A.
7. Provide conduit clamp for each conduit.
8. Strut channel, 41 mm. support for pull box and installed by Contractor.

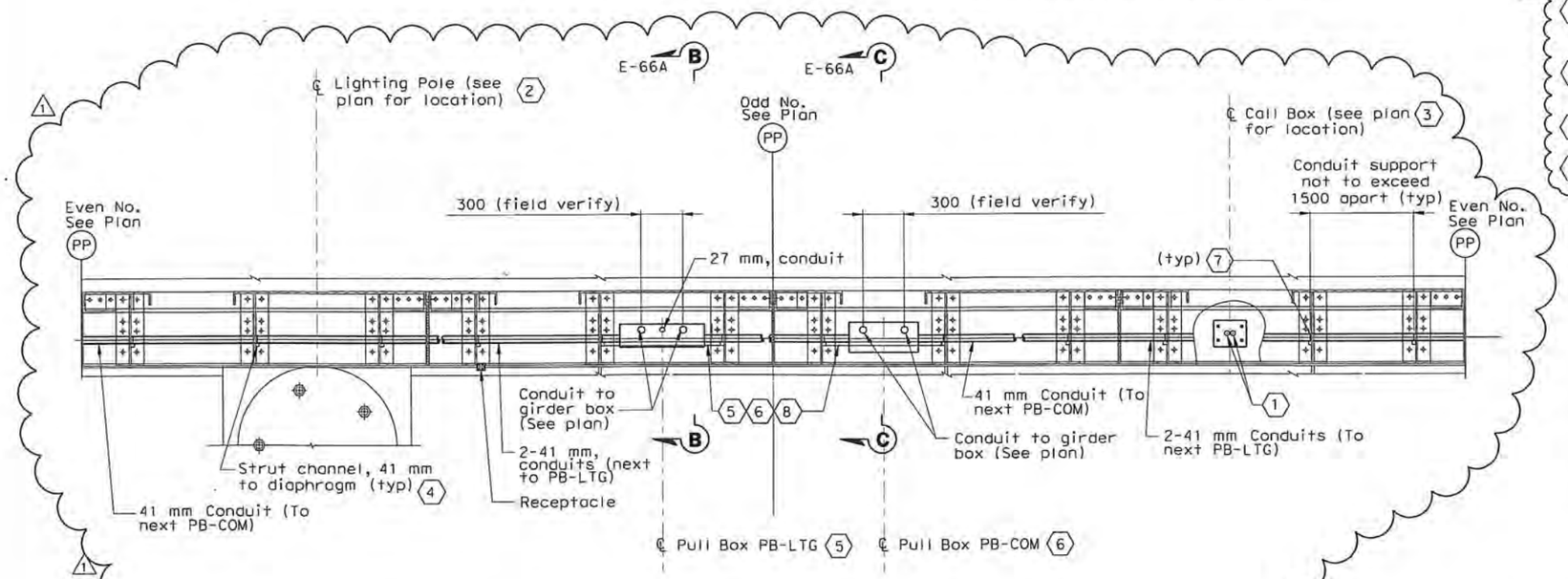

PLAN-TYPICAL PULL BOX AND CONDUIT LOCATIONS

(CONDUITS INSIDE STEEL BARRIER TYPE 732 MODIFIED)
SCALE 1:20

DETAILS
SAS SUPERSTRUCTURE ROADWAY
CONDUIT AND PULL BOX LOCATIONS
SCALE AS NOTED

E-66

DIST	COUNTY	ROUTE	KILOMETER POST TOTAL PROJECT	SHEET No	TOTAL SHEETS
04	SF	80	13.2/13.9	131 R1	1204

12/19/02
REGISTERED ELECTRICAL ENGINEER DATE

12-6-04
PLANS APPROVAL DATE

REGISTERED PROFESSIONAL ENGINEER — JENS ERLINGSSON No. 8249 Exp. 9/30/06 ELECTRICAL — STATE OF CALIFORNIA

PB POWER, Inc.
A Parsons Brinckerhoff Company
303 Second St., Suite 700N
San Francisco, CA 94107-1317

The State of California or its officers or agents shall not be responsible for the accuracy or completeness of electronic copies of this plan sheet.

Caltrans now has a web site! To get to the web site, go to http://www.dot.ca.gov

REGISTERED PROFESSIONAL ENGINEER — S. A. ESTOQUE, JR. No. E-10151 Exp. 12/31/2008 ELECTRICAL — STATE OF CALIFORNIA

FOR REVISION ONLY

REQUEST FOR INFORMATION NOT ADDRESSED IN THIS CCO REMAIN IN FORCE

MARK	DATE	REVISIONS DESCRIPTIONS	BY	CH'D	CCO#
1	03/04/08	BARRIER MODIFICATIONS	JS BM	RG SE	44

CONTRACT CHANGE ORDER NO. 44 SO
SHEET 11 OF 92

DESIGN OVERSIGHT	CALCULATED/ DESIGNED BY	CHECKED BY	DATE	REVISED BY	DATE REVISED
BEHZAD GOLEMOHAMMADI	FK	IAH	11/02		11/02

STATE OF CALIFORNIA - DEPARTMENT OF TRANSPORTATION
Caltrans

THIS PLAN IS ACCURATE FOR ELECTRICAL WORK ONLY. ALL DIMENSIONS ARE IN MILLIMETERS UNLESS OTHERWISE SHOWN.

FOR REDUCED PLANS ORIGINAL SCALE IS IN MILLIMETERS 0 20 40 60 80

DGN FILE =>T:\13103\MS\pse\SAS Struc\CCO\SAS CC044\04-0120F1_0131R01.dgn
USERNAME =>llorico
CU 04251
EA 0120F1

LAST REVISION 00-00-00
DATE PLOTTED => 5/22/2008
TIME PLOTTED => 10:41:30 AM

DIST	COUNTY	ROUTE	KILOMETER POST TOTAL PROJECT	SHEET No	TOTAL SHEETS
04	SF	80	13.2/13.9	131 S1	1204

REGISTERED ELECTRICAL ENGINEER — 9/18/07 DATE

REGISTERED PROFESSIONAL ENGINEER — MARRELL FUMIO TAKATA — No. E 8651 — Exp. 9/30/2008 — ELECTRICAL — STATE OF CALIFORNIA

PLANS APPROVAL DATE

PB AMERICAS, Inc.
A Parsons Brinckerhoff Company
303 Second St., Suite 700N
San Francisco, CA 94107-1317

The State of California or its officers or agents shall not be responsible for the accuracy or completeness of electronic copies of this plan sheet.

Caltrans now has a web site! To get to the web site, go to http://www.dot.ca.gov

Caltrans Metric

MARK	DATE	DESCRIPTIONS	BY	CH'D	CCO#
		REVISIONS			
0	03/04/08	BARRIER MODIFICATIONS	EL	RG SE	44

REQUEST FOR INFORMATION NOT ADDRESSED IN THIS CCO REMAIN IN FORCE

CONTRACT CHANGE ORDER NO. 4450
SHEET 12 OF 92

CALCULATED/ DESIGNED BY	CHECKED BY	DATE	REVISED BY	DATE REVISED
FK	IAH	11/02		

DESIGN OVERSIGHT — BEHZAD GOLEMOHAMMADI

STATE OF CALIFORNIA - DEPARTMENT OF TRANSPORTATION — Caltrans

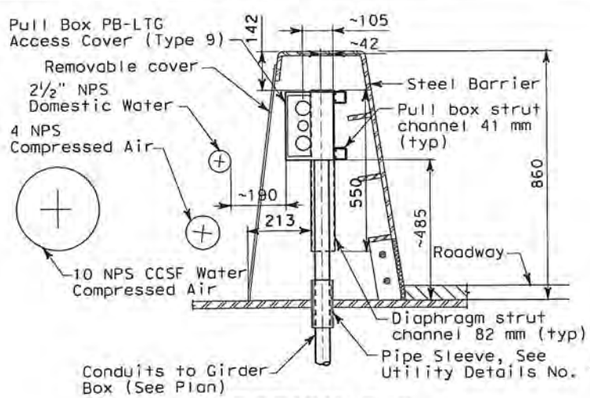

SECTION B-B

TYPICAL PULL BOX PB-LTG AND CONDUIT LOCATION (W5) (W2) (SIMILAR)
SCALE 1:10

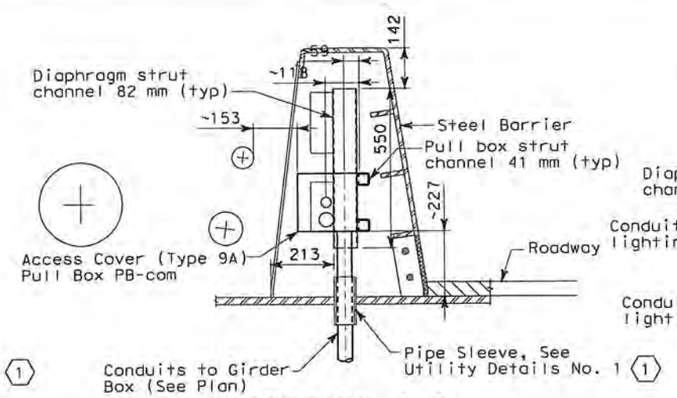

SECTION C-C

TYPICAL PULL BOX PB-COM AND CONDUIT LOCATION (W5) (W2) (SIMILAR)
SCALE 1:10

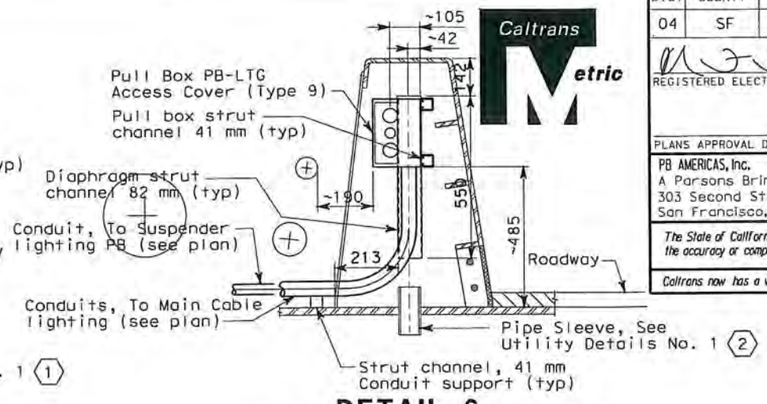

DETAIL 6

TYPICAL CONDUIT LOCATION FROM PULL BOX PB-LTG TO SUSPENDER AND MAIN CABLE LIGHTING
SCALE 1:10
(W5) (W2) (SIMILAR)

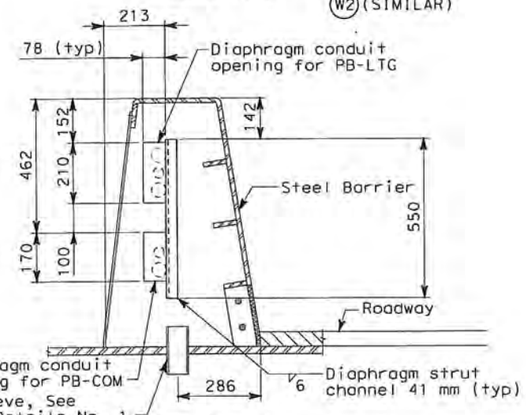

DETAIL 1

TYPICAL CONDUIT SUPPORT THROUGH DIAPHRAGM (W5)
SCALE 1:10

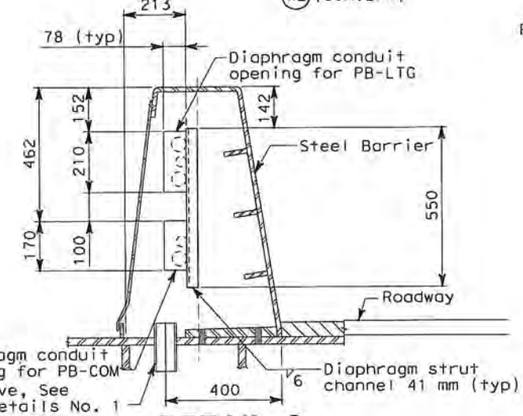

DETAIL 2

TYPICAL CONDUIT SUPPORT THROUGH DIAPHRAGM (W2)
SCALE 1:10

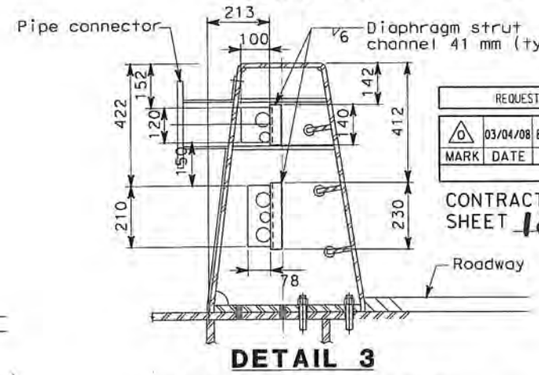

DETAIL 3

AT BARRIER WITH MOUNTED SIGNS
CONDUIT SUPPORT DIAPHRAGM E5 (PP38 + 2.150)
CONDUIT SUPPORT DIAPHRAGM E2 (PP38 + 2.150)
SCALE 1:10

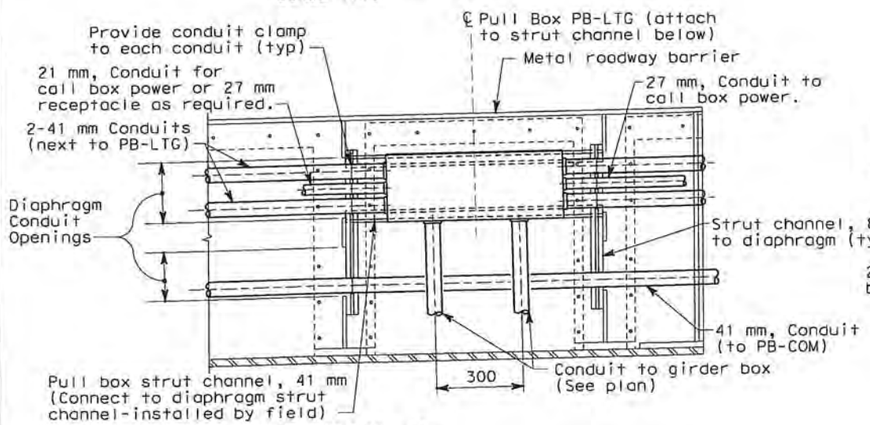

DETAIL 4

TYPICAL CONDUIT SUPPORT PULL BOX PB-LTG MOUNTING
SCALE 1:10

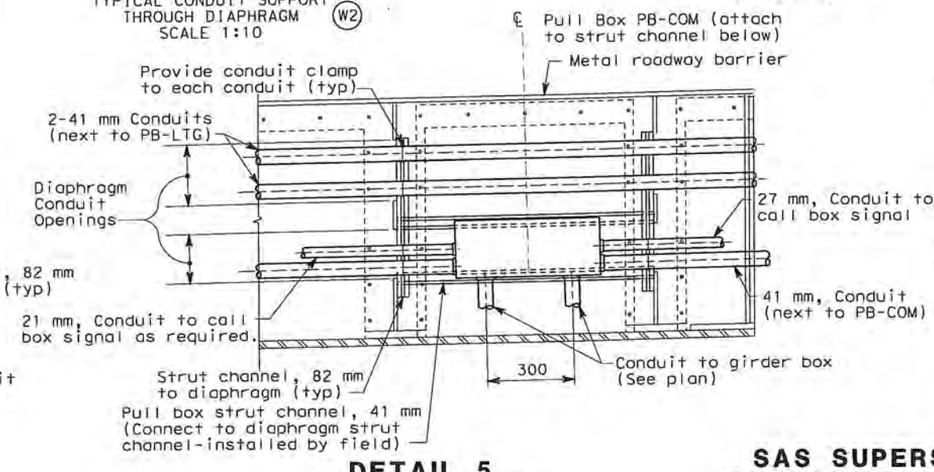

DETAIL 5

TYPICAL CONDUIT SUPPORT PULL BOX PB-COM MOUNTING
SCALE 1:10

NOTES:

1. References:
   - For pull box schedule, see Sheet E-83.
   - For barrier details, see structural drawings.
2. For location of pull boxes inside girder, see Sheet E-96 through E-101.

SHEET NOTES:

(1) To prevent moisture from passing inside the sleeve, the Contractor shall install sealant between the sleeve and conduit.

(2) Spare pipe sleeves shall be capped on both ends.

DETAILS
SAS SUPERSTRUCTURE ROADWAY CONDUIT AND PULL BOX LOCATIONS

SCALE AS NOTED

E-66A

LAST REVISION 00-00-00 — DATE PLOTTED => 5/22/2008 — TIME PLOTTED => 10:42:12 AM

THIS PLAN IS ACCURATE FOR ELECTRICAL WORK ONLY.

ALL DIMENSIONS ARE IN MILLIMETERS UNLESS OTHERWISE SHOWN.

FOR REDUCED PLANS ORIGINAL SCALE IS IN MILLIMETERS — 0 20 40 60 80

DGN FILE =>T:\13103\WS\pse\SAS Struc\CCO\SAS CC044\04-0120F1_0131S01.dgn
USERNAME =>llorica

CU 04251 — EA 0120F1

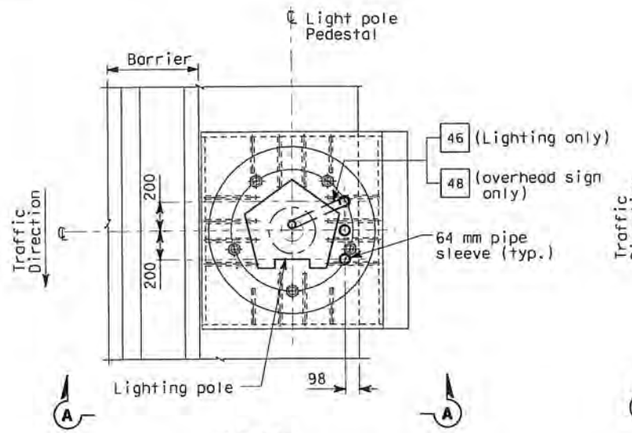

PLAN

CONDUIT STUB-UP PLAN FOR ROADWAY LIGHTING ON A METAL BASE
(SIMILAR FOR OVERHEAD SIGN ON A METAL BASE EXCEPT AS NOTED)
SCALE 1:20

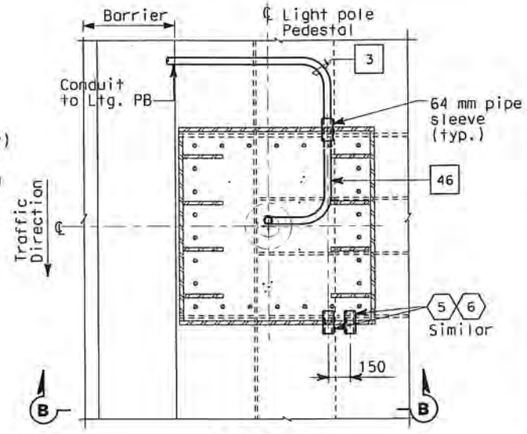

PLAN

CONDUIT STUB-UP PLAN FOR ROADWAY LIGHTING ON A METAL BASE AT PIER E2 ONLY
SCALE 1:20

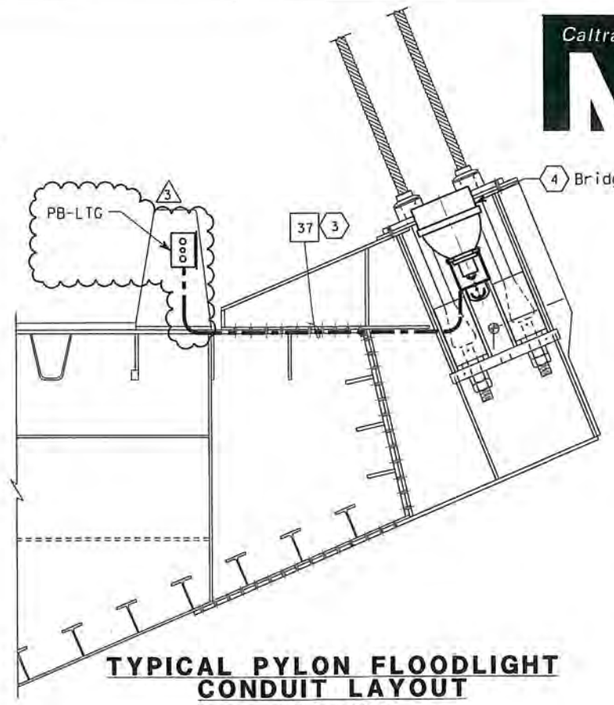

TYPICAL PYLON FLOODLIGHT CONDUIT LAYOUT

SCALE 1:20

Caltrans Metric

DIST	COUNTY	ROUTE	KILOMETER POST TOTAL PROJECT	SHEET No	TOTAL SHEETS
04	SF	80	13.2/13.9	132R3	1204

12/19/02
REGISTERED ELECTRICAL ENGINEER DATE

12-6-04
PLANS APPROVAL DATE

REGISTERED PROFESSIONAL ENGINEER — JENS ERLINGSSON No. 8249 Exp. 9/30/06 ELECTRICAL — STATE OF CALIFORNIA

PB POWER, Inc.
A Parsons Brinckerhoff Company
303 Second St., Suite 700N
San Francisco, CA 94107-1317

The State of California or its officers or agents shall not be responsible for the accuracy or completeness of electronic copies of this plan sheet.

Caltrans now has a web site! To get to the web site, go to http://www.dot.ca.gov

SHEET NOTES:

1. Bond grounding bushing to ground lug of lighting pole with #6 bare copper wire.
2. Conduits for future light pipe shall continue from this pull box.
3. Conduit shall be clear of all piping and pipe sleeves. Route conduit on top of deck plate, outside of girder box.
4. For pylon floodlighting layout, see sheets E-47 & E-48.
5. See Utility Detail No. 1 (Sheet No. 965 of 1204) for conduit penetration through girder plate and lighting pole metal base. The Contractor shall install sealant between the sleeve and conduit to prevent water or moisture from passing inside the sleeve.
6. Cap spare sleeves for future use where noted.
7. Ensure that the maximum of three conduits passing through the 150 mm ø pedestal plate opening are separated as much as possible from each other.

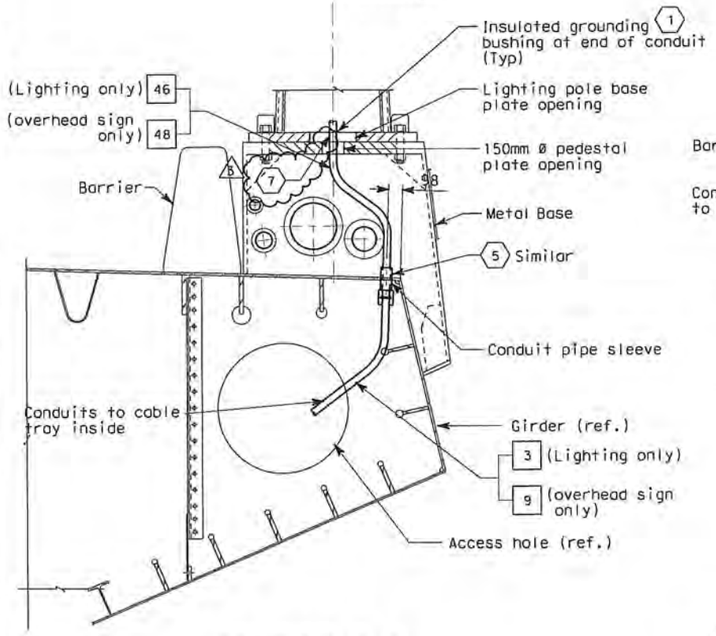

SECTION A-A

LIGHT POLE METAL PEDESTAL
CONDUIT TYPICAL INSTALLATION
SCALE 1:20

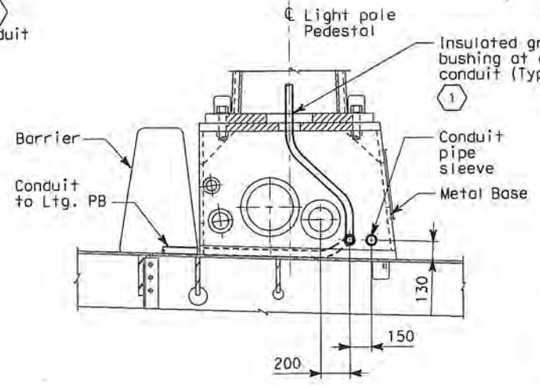

SECTION B-B

SCALE 1:20

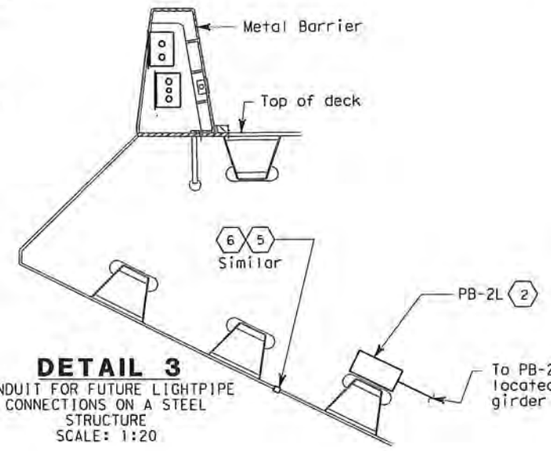

DETAIL 3

CONDUIT FOR FUTURE LIGHTPIPE CONNECTIONS ON A STEEL STRUCTURE
SCALE: 1:20

NOTES:

1. References:
   - For lighting pole schedule, see sheet E-82.
   - For location of pull boxes inside girder, see sheets E-96 thru E-101.
   - For luminaire support details, see structural sheets.
   - For pull box schedule, see sheet E-83.
2. Roadway Barrier Receptacle, see Detail 1, sheet E-68.
3. For conduit and pull box details in steel barrier, see drawings E-66 and E-66A.

REQUEST FOR INFORMATION NOT ADDRESSED IN THIS CCO REMAIN IN FORCE					
3	03/04/08	BARRIER MODIFICATIONS	JS BM	SE RG	44
2	02/19/08	ELECTRICAL MODIFICATIONS	MP EL RG	RR	42
1	10/16/06	REVISED SHEET NOTES	LR	MG	11
MARK	DATE	DESCRIPTIONS	BY	CH'D	CCO#
REVISIONS					

REGISTERED PROFESSIONAL ENGINEER — S. A. ESTOQUE, JR. No. E-10151 Exp. 12/31/2008 ELECTRICAL — STATE OF CALIFORNIA

FOR REVISION ONLY

CONTRACT CHANGE ORDER NO. 44 SO
SHEET 13 OF 92

DETAILS
SAS SUPERSTRUCTURE ROADWAY WESTBOUND CONDUIT LOCATIONS

SCALE AS NOTED

E-67

STATE OF CALIFORNIA - DEPARTMENT OF TRANSPORTATION
Caltrans
DESIGN OVERSIGHT: BEHZAD GOLEMOHAMMADI
CALCULATED/DESIGNED BY: KG
CHECKED BY: AB
DATE REVISED: 10/01 11/01
REVISED BY

THIS PLAN IS ACCURATE FOR ELECTRICAL WORK ONLY.

ALL DIMENSIONS ARE IN MILLIMETERS UNLESS OTHERWISE SHOWN.

FOR REDUCED PLANS ORIGINAL SCALE IS IN MILLIMETERS 0 20 40 60 80

DGN FILE =>T:\13103\MS\pse\SAS Struc\CCO\SAS EC044\04-0120F1_0132R03.dgn
USERNAME =>llorico

DATE PLOTTED => 5/22/2008
TIME PLOTTED => 10:44:30 AM

LAST REVISION 00-00-00

CU 04251

EA 0120F1

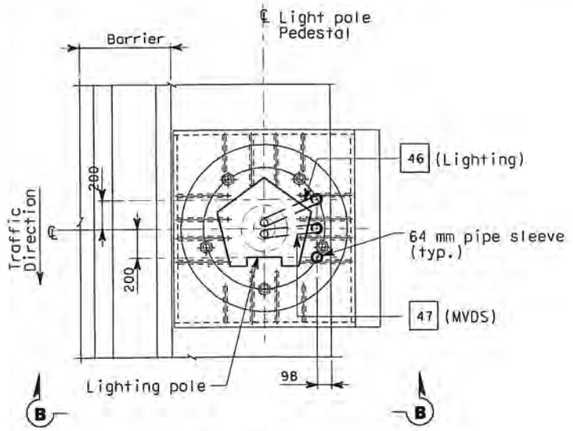

PLAN

CONDUIT STUB-UP PLAN FOR ROADWAY LIGHTING, AND MVDS ON METAL BASE
SCALE 1:20

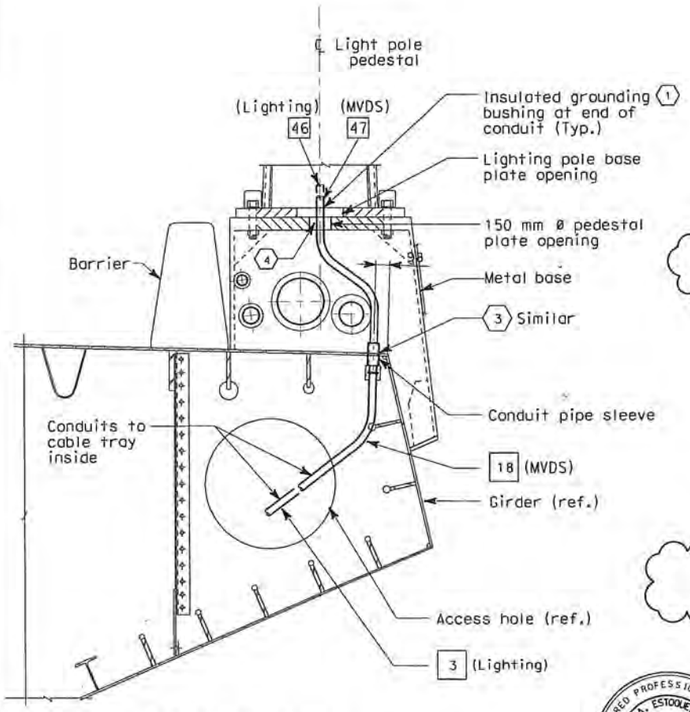

SECTION B-B

SCALE 1:20

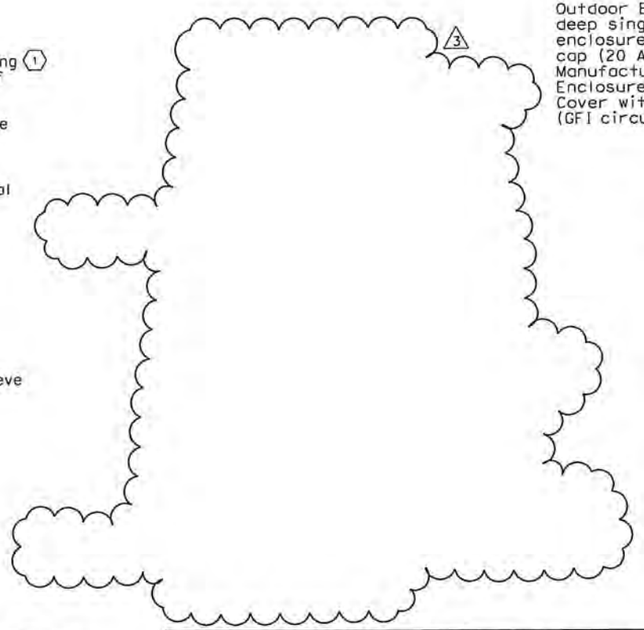

Outdoor Barrier receptacle with deep single gang, corrosion resistant enclosure and weatherproof threaded cap (20 A, 125 V, 3 W, straight blade) Manufacturer Crouse Hinds or equal
Enclosure = FDLA2 (Corro-free)
Cover with receptacle = DS222
(GFI circuit breaker protection)

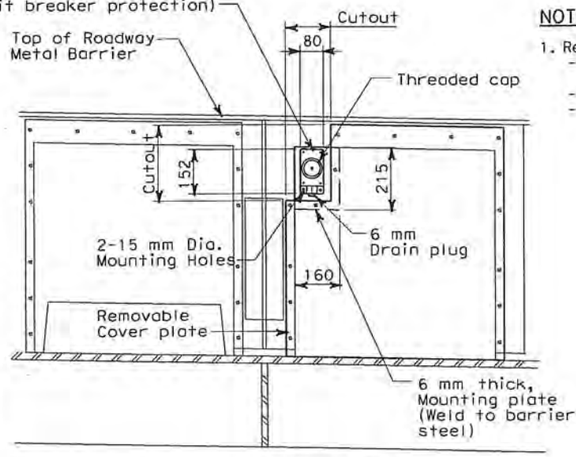

DETAIL 1

(TYPICAL ROADWAY BARRIER RECEPTACLE LOCATION)
SCALE: 1:10

NOTES:

1. References:
   - For installation and typical details of TOS equipment, see sheets E-344 thru E-357.
   - For pull box schedule, see sheet E-83.
   - For TOS field element locations, see sheet E-341.

SHEET NOTES:

1. Bond grounding bushing to ground lug of lighting pole or overhead sign post with #6 bare copper wire.
2. Deleted
3. See Utility Detail No. 1 (Sheet No. 965 of 1204) for conduit penetration through girder plate and lighting pole metal base. The Contractor shall install sealant between the sleeve and conduit to prevent water or moisture from passing inside the sleeve.
4. Ensure that the maximum of three conduits passing through the 150 mm ø pedestal plate opening are separated as much as possible from each other.

DIST	COUNTY	ROUTE	KILOMETER POST TOTAL PROJECT	SHEET No	TOTAL SHEETS
04	SF	80	13.2/13.9	133R3	1204

REGISTERED ELECTRICAL ENGINEER — DATE 12/19/02

12-6-04
PLANS APPROVAL DATE

REGISTERED PROFESSIONAL ENGINEER — JENS ERLINGSSON No. 8249 Exp. 9/30/06 ELECTRICAL — STATE OF CALIFORNIA

PB POWER, Inc.
A Parsons Brinckerhoff Company
303 Second St., Suite 700N
San Francisco, CA 94107-1317

The State of California or its officers or agents shall not be responsible for the accuracy or completeness of electronic copies of this plan sheet.

Caltrans now has a web site! To get to the web site, go to http://www.dot.ca.gov

MARK	DATE	DESCRIPTIONS	BY	CH'D	CCO#
		REVISIONS			
3	03/04/08	BARRIER MODIFICATIONS	JS BM	RG SE	44
2	02/19/08	ELECTRICAL MODIFICATIONS	MP EL RG	RR	42
1	10/16/06	REVISED SHEET NOTES	LR	MG	11

REQUEST FOR INFORMATION NOT ADDRESSED IN THIS CCO REMAIN IN FORCE

REGISTERED PROFESSIONAL ENGINEER — S. A. ESTOQUE, JR. No. E-10151 Exp. 12/31/2008 ELECTRICAL — STATE OF CALIFORNIA

FOR REVISION ONLY

CONTRACT CHANGE ORDER NO. 4450
SHEET 14 OF 92

DETAILS
SAS SUPERSTRUCTURE ROADWAY WESTBOUND CONDUIT LOCATIONS

SCALE AS NOTED

E-68

CALCULATED/ DESIGNED BY	CHECKED BY	DATE	REVISED BY	DATE REVISED
KG	AB	10/01	11/01	

STATE OF CALIFORNIA - DEPARTMENT OF TRANSPORTATION — DESIGN OVERSIGHT — BEHZAD GOLEMOHAMMADI — Caltrans

FOR REDUCED PLANS ORIGINAL SCALE IS IN MILLIMETERS — 0 20 40 60 80

DGN FILE =>T:\13103\WS\pse\SAS Struc\CCO\SAS CC044\04-0120f1_0133R03.dgn
USERNAME =>florico
CU 04251
EA 0120F1

LAST REVISION 00-00-00 — DATE PLOTTED => 5/22/2008 — TIME PLOTTED => 10:44:55 AM

DIST	COUNTY	ROUTE	KILOMETER POST TOTAL PROJECT	SHEET No	TOTAL SHEETS
04	SF	80	13.2/13.9	189 R2	1204

12/19/02
REGISTERED ELECTRICAL ENGINEER DATE

12-6-04
PLANS APPROVAL DATE

REGISTERED PROFESSIONAL ENGINEER — JENS ERLINGSSON No. 8249 Exp. 9/30/06 ELECTRICAL — STATE OF CALIFORNIA

PB POWER, Inc.
A Parsons Brinckerhoff Company
303 Second St., Suite 700N
San Francisco, CA 94107-1317

The State of California or its officers or agents shall not be responsible for the accuracy or completeness of electronic copies of this plan sheet.

Caltrans now has a web site! To get to the web site, go to: http://www.dot.ca.gov

DESIGN OVERSIGHT	CALCULATED/ DESIGNED BY	DATE	REVISED BY
BEHZAD GOLEMOHAMMADI	EDC	08/02	DATE REVISED
	CHECKED BY	CYF	08/02

STATE OF CALIFORNIA - DEPARTMENT OF TRANSPORTATION
Caltrans

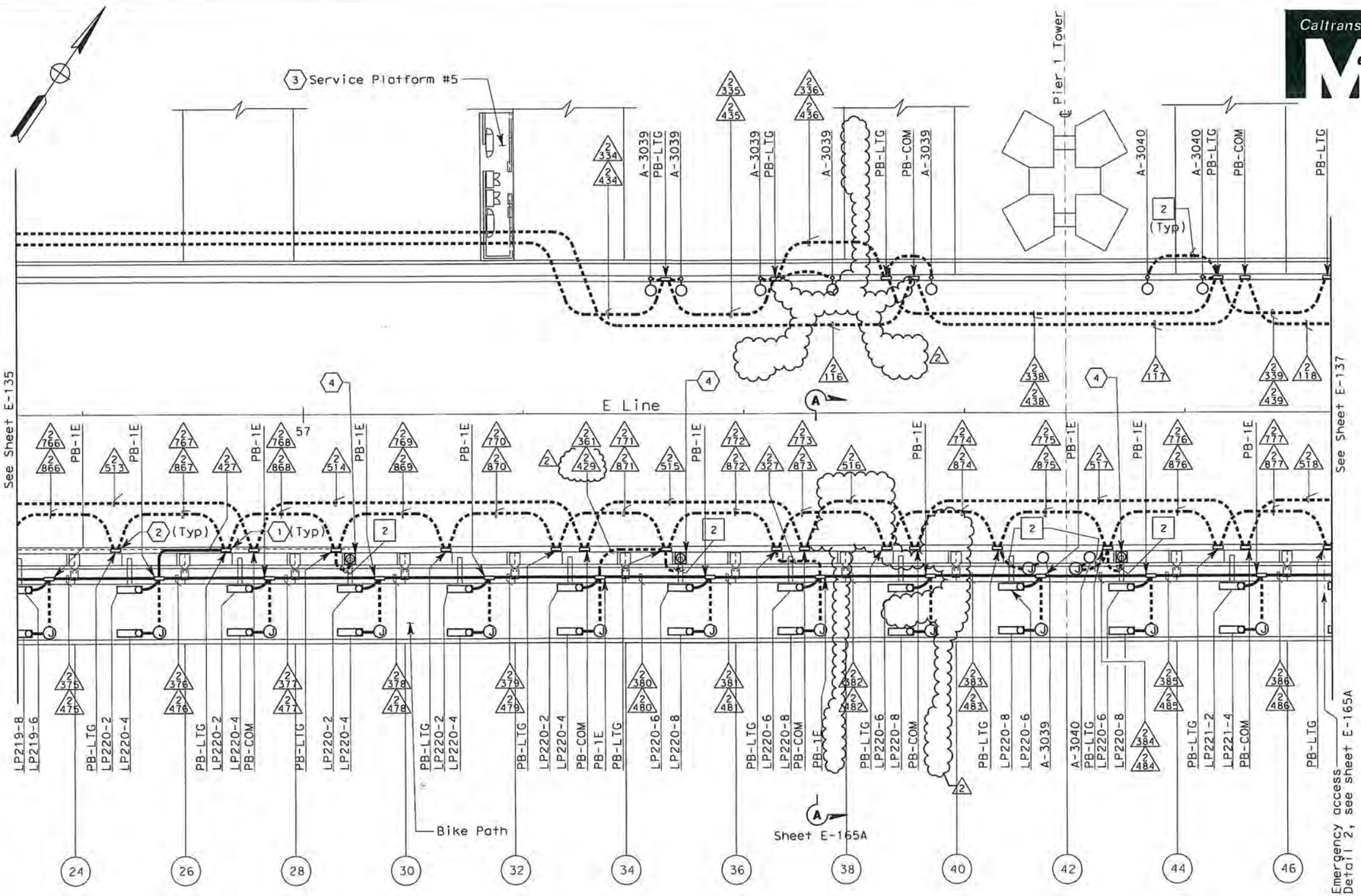

SAS SUPERSTRUCTURE CONDUIT - PLAN

SHEET NOTES:

1. Conduit from barrier pullbox or other equipment down into Girder Box, see sheet E-182.
2. For conduit to tower and suspension cable lighting see sheet E-227.
3. Contractor shall furnish and install UP-205 and LP-220 per sheet E-72. For complete scope of work on platform and other related work not shown on this sheet, see Electrical Special Provisions.
4. Roadway Barrier Receptacle, see Detail 1, sheet E-162.

NOTES:

1. References:
   - For typical details and locations of conduit connections to light poles, barrier outlet boxes, call boxes, overhead sign lighting, CMS, CCTV and MVDS, see sheets E-160 thru E-162 and E-169.
   - TOS equipment is shown for conduit routing only. For typical details of TOS controller and devices, see sheets E-344 through E-357.
   - For types of pull boxes, splice boxes and enclosures, see sheet E-169.
   - For circuit and conduit/cable tray schedules, see sheets starting at E-401.
2. For Roadway Level Call Boxes, refer to sheet E-396.
3. For Roadway level, Bike Path and Belvedere Lighting Fixture Schedules, see sheets E-146, E-147 and E-165.
4. For Roadway level and Bike Path Call Box Schedule, see sheet E-397.
5. For number of lighting fixtures (main tower lights) see lighting schedule sheets E-271 and E-272.
6. All conduits and fittings routed exposed between the Bike Path and the roadway shall be galvanized rigid steel, PVC coated.
7. See sheets E-160 thru E-165 for conduit locations.

REGISTERED PROFESSIONAL ENGINEER — S. A. ESTOQUE, JR. No. E-10151 Exp. 12/31/2008 ELECTRICAL — STATE OF CALIFORNIA

FOR REVISION ONLY

REQUEST FOR INFORMATION NOT ADDRESSED IN THIS CCO REMAIN IN FORCE					
2	03/04/08	BARRIER MODIFICATIONS	JS BM	RG SE	44
1	02/19/08	ELECTRICAL MODIFICATIONS	MP EL	RR	42
MARK	DATE	DESCRIPTIONS REVISIONS	BY	CH'D	CCO#

CONTRACT CHANGE ORDER NO. 4450
SHEET 15 OF 92

THIS PLAN ACCURATE FOR ELECTRICAL WORK ONLY.

SAS SUPERSTRUCTURE ROADWAY EASTBOUND
LIGHTING AND ELECTRICAL SYSTEMS

SCALE 1:200

E-136

LAST REVISION 00-00-00 — DATE PLOTTED => 5/22/2008 — TIME PLOTTED => 10:49:21 AM

FOR REDUCED PLANS ORIGINAL SCALE IS IN MILLIMETERS 0 20 40 60 80

DGN FILE =>T:\13103\MS\pse\SAS Struc\CCO\SAS CC044\04-0120F1_0189R02.dgn
USERNAME =>florico

CU 04251 EA 0120F1

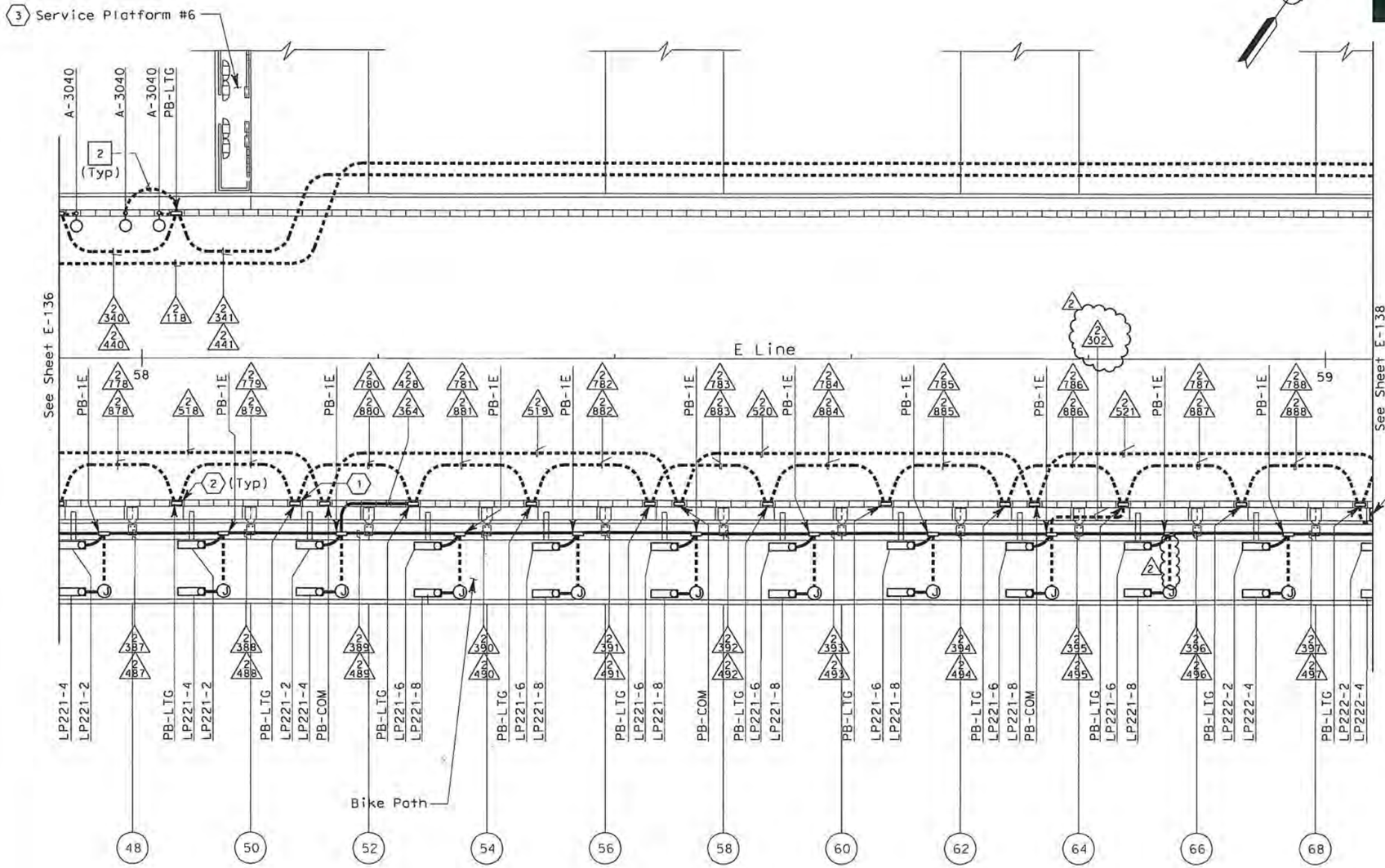

SAS SUPERSTRUCTURE - CONDUIT PLAN

DIST	COUNTY	ROUTE	KILOMETER POST TOTAL PROJECT	SHEET No	TOTAL SHEETS
04	SF	80	13.2/13.9	190R2	1204

Jens Erlingsson 12/19/02
REGISTERED ELECTRICAL ENGINEER DATE

12-6-04
PLANS APPROVAL DATE

REGISTERED PROFESSIONAL ENGINEER — JENS ERLINGSSON — No. 8249 — Exp. 9/30/06 ELECTRICAL — STATE OF CALIFORNIA

PB POWER, Inc.
A Parsons Brinckerhoff Company
303 Second St., Suite 700N
San Francisco, CA 94107-1317

The State of California or its officers or agents shall not be responsible for the accuracy or completeness of electronic copies of this plan sheet.

Caltrans now has a web site! To get to the web site, go to: http://www.dot.ca.gov

SHEET NOTES:

1. Conduit from barrier pullbox or other equipment down into Girder Box, see sheet E-183.
2. For conduit to tower and suspension cable lighting see sheet E-228.
3. Contractor shall furnish and install UP-206 and LP-221 per sheet E-73. For complete scope of work on platform and other related work not shown on this sheet, see Electrical Special Provisions.
4. Roadway Barrier Receptacle, see Detail 1, sheet E-162.

NOTES:

1. References:
   - For typical details and locations of conduit connections to light poles, barrier outlet boxes, call boxes, overhead sign lighting, CMS, CCTV and MVDS, see sheets E-160 thru E-162 and E-169.
   - TOS equipment is shown for conduit routing only. For typical details of TOS controller and devices, see sheets E-344 through E-357.
   - For types of pull boxes, splice boxes and enclosures, see sheet E-169.
   - For circuit and conduit/cable tray schedules, see sheets starting at E-401.
2. For Roadway Level Call Boxes, refer to sheet E-396.
3. For Roadway level, Bike Path and Belvedere Lighting Fixture Schedules, see sheets E-146, E-147 and E-165.
4. For Roadway level and Bike Path Call Box Schedule, see sheet E-397.
5. For number of lighting fixtures (main tower lights) see lighting schedule sheets E-271 and E-272.
6. All conduits and fittings routed exposed between the Bike Path and the roadway shall be galvanized rigid steel, PVC coated.
7. See sheets E-160 thru E-165 for conduit locations.

REGISTERED PROFESSIONAL ENGINEER — FADI WALIEDDINE — No. 11465 — Exp. 12/31/2009 ELECTRICAL — STATE OF CALIFORNIA

FOR REVISION ONLY

REQUEST FOR INFORMATION NOT ADDRESSED IN THIS CCO REMAIN IN FORCE					
2	03/04/08	BARRIER MODIFICATIONS	TW	RG	44
1	02/19/08	ELECTRICAL MODIFICATIONS	MP EL	RR	42
MARK	DATE	DESCRIPTIONS	BY	CH'D	CCO#
REVISIONS					

CONTRACT CHANGE ORDER NO. 4450
SHEET 16 OF 92

THIS PLAN ACCURATE FOR ELECTRICAL WORK ONLY.

SAS SUPERSTRUCTURE ROADWAY EASTBOUND
LIGHTING AND ELECTRICAL SYSTEMS

SCALE 1:200

E-137

ALL DIMENSIONS ARE IN METERS UNLESS OTHERWISE SHOWN

FOR REDUCED PLANS ORIGINAL SCALE IS IN MILLIMETERS 0 20 40 60 80

DGN FILE =>T:\13103\MS\pse\SAS Struc\CCO\SAS CCO44\04-0120F1_0190R02.dgn
USERNAME =>llorico

CU 04251 EA 0120F1

LAST REVISION 00-00-00 DATE PLOTTED => 5/22/2008 TIME PLOTTED => 10:49:59 AM

STATE OF CALIFORNIA - DEPARTMENT OF TRANSPORTATION
Caltrans

DESIGN OVERSIGHT: BEHZAD GOLEMOHAMMADI

CALCULATED/ DESIGNED BY | CHECKED BY | DATE 08/02 | EDC | 08/02 | CYF | REVISED BY | DATE REVISED

DIST	COUNTY	ROUTE	KILOMETER POST TOTAL PROJECT	SHEET No	TOTAL SHEETS
04	SF	80	13.2/13.9	192 R2	1204

Jens Erlingsson 12/19/02
REGISTERED ELECTRICAL ENGINEER DATE

12-6-04
PLANS APPROVAL DATE

REGISTERED PROFESSIONAL ENGINEER — JENS ERLINGSSON No. 8249 Exp. 9/30/06 ELECTRICAL — STATE OF CALIFORNIA

PB POWER, Inc.
A Parsons Brinckerhoff Company
303 Second St., Suite 700N
San Francisco, CA 94107-1317

The State of California or its officers or agents shall not be responsible for the accuracy or completeness of electronic copies of this plan sheet.

Caltrans now has a web site! To get to the web site, go to http://www.dot.ca.gov

Caltrans Metric

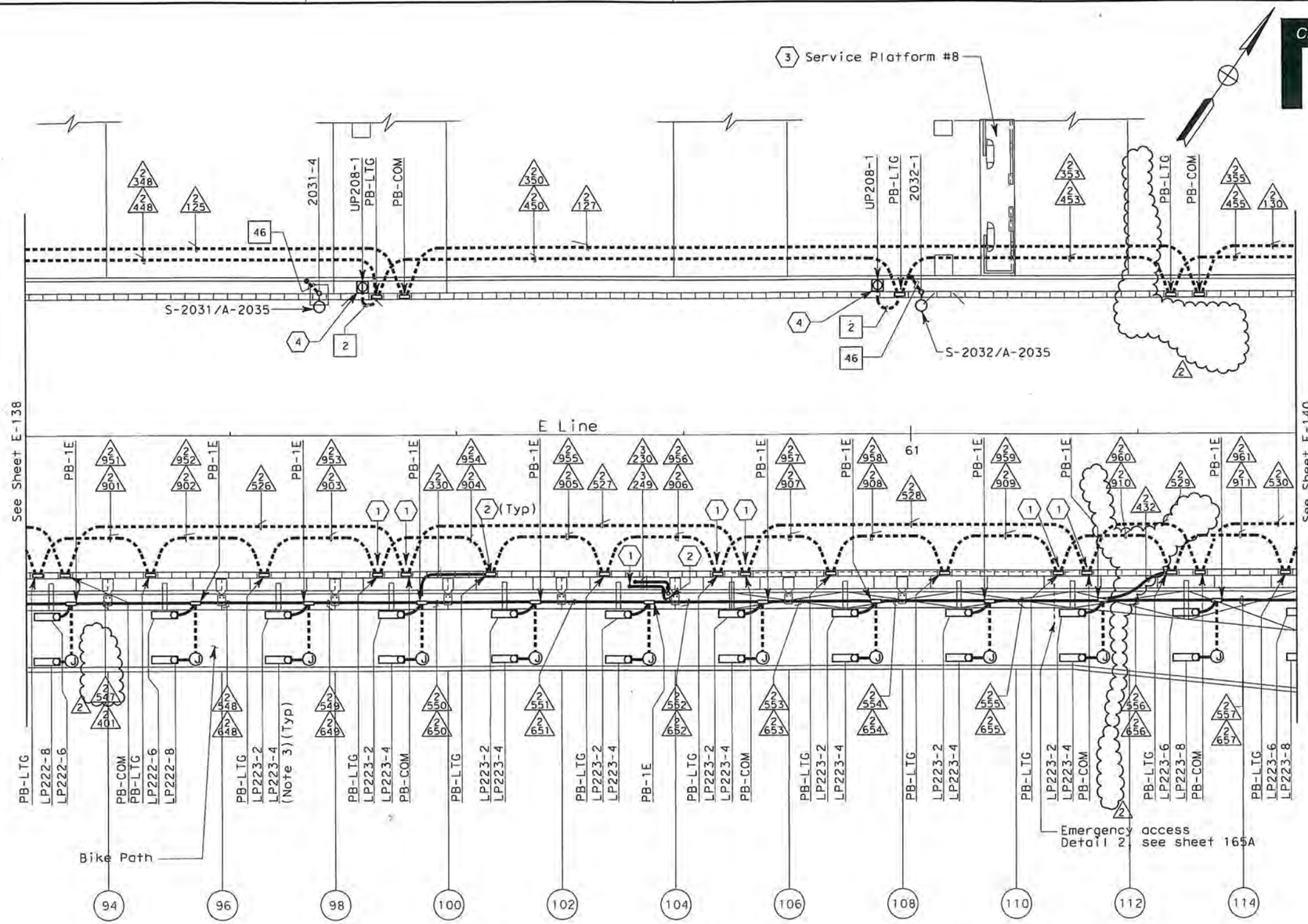

SAS SUPERSTRUCTURE - CONDUIT PLAN

SHEET NOTES:

1. Conduit from barrier pullbox or other equipment down into Girder Box, see sheet E-185.
2. Contractor shall furnish and install UP-208 and LP-223 per sheet E-75. For complete scope of work on platform and other related work not shown on this sheet, see Electrical Special Provisions.
3. For conduit to tower and suspension cable lighting, see sheet E-230.
4. Roadway Barrier Receptacle, see Detail 1, sheet E-162.

NOTES:

1. References:
   - For typical details and locations of conduit connections to light poles, barrier outlet boxes, call boxes, overhead sign lighting, CMS, CCTV and MVDS, see sheets E-160 thru E-162 and E-169.
   - TOS equipment is shown for conduit routing only. For typical details of TOS controller and devices, see sheets E-344 through E-357.
   - For types of pull boxes, splice boxes and enclosures, see sheet E-169.
   - For circuit and conduit/cable tray schedules, see sheets starting at E-401.
2. For Roadway Level Call Boxes, refer to sheet E-396.
3. For Roadway level, Bike Path and Belvedere Lighting Fixture Schedules, see sheets E-146, E-147 and E-165.
4. For Roadway level and Bike Path Call Box Schedule, see sheet E-397.
5. For number of lighting fixtures (main tower lights) see lighting schedule sheets E-271 and E-272.
6. All conduits and fittings routed exposed between the Bike Path and the roadway shall be rigid galvanized steel, PVC coated.
7. See sheets E-160 thru E-165 for conduit locations.

REGISTERED PROFESSIONAL ENGINEER — S. A. ESTOQUE, JR. No. E-10151 Exp. 12/31/2008 ELECTRICAL — STATE OF CALIFORNIA

FOR REVISION ONLY

THIS PLAN ACCURATE FOR ELECTRICAL WORK ONLY.

REQUEST FOR INFORMATION NOT ADDRESSED IN THIS CCO REMAIN IN FORCE					
2	03/04/08	BARRIER MODIFICATIONS	JS BM	RG SE	44
1	02/19/08	ELECTRICAL MODIFICATIONS	MP EL	RR	42
MARK	DATE	DESCRIPTIONS	BY	CH'D	CCO#
REVISIONS					

CONTRACT CHANGE ORDER NO. 4450
SHEET 17 OF 92

SAS SUPERSTRUCTURE ROADWAY EASTBOUND LIGHTING AND ELECTRICAL SYSTEMS

SCALE 1:200

E-139

STATE OF CALIFORNIA - DEPARTMENT OF TRANSPORTATION	DESIGN OVERSIGHT	CALCULATED/ DESIGNED BY	EDC	DATE 08/02	REVISED BY
Caltrans	BEHZAD GOLEMOHAMMADI	CHECKED BY	CYF	08/02	DATE REVISED

LAST REVISION 00-00-00 | DATE PLOTTED => 5/22/2008 | TIME PLOTTED => 10:50:24 AM

FOR REDUCED PLANS ORIGINAL SCALE IS IN MILLIMETERS 0 20 40 60 80

DGN FILE =>T:\13103\WS\pse\SAS Struc\CCO\SAS CC044\04-0120f1_0192R02.dgn
USERNAME =>llorico

CU 04251 | EA 0120F1

DIST	COUNTY	ROUTE	KILOMETER POST TOTAL PROJECT	SHEET No	TOTAL SHEETS
04	SF	80	13.2/13.9	193R2	1204

Caltrans Metric

James Erlingsson 12/19/02
REGISTERED ELECTRICAL ENGINEER DATE

12-6-04
PLANS APPROVAL DATE

REGISTERED PROFESSIONAL ENGINEER — JENS ERLINGSSON — No. 8249 — Exp. 9/30/06 ELECTRICAL — STATE OF CALIFORNIA

PB POWER, Inc.
A Parsons Brinckerhoff Company
303 Second St., Suite 700N
San Francisco, CA 94107-1317

The State of California or its officers or agents shall not be responsible for the accuracy or completeness of electronic copies of this plan sheet.

Caltrans now has a web site! To get to the web site, go to http://www.dot.ca.gov

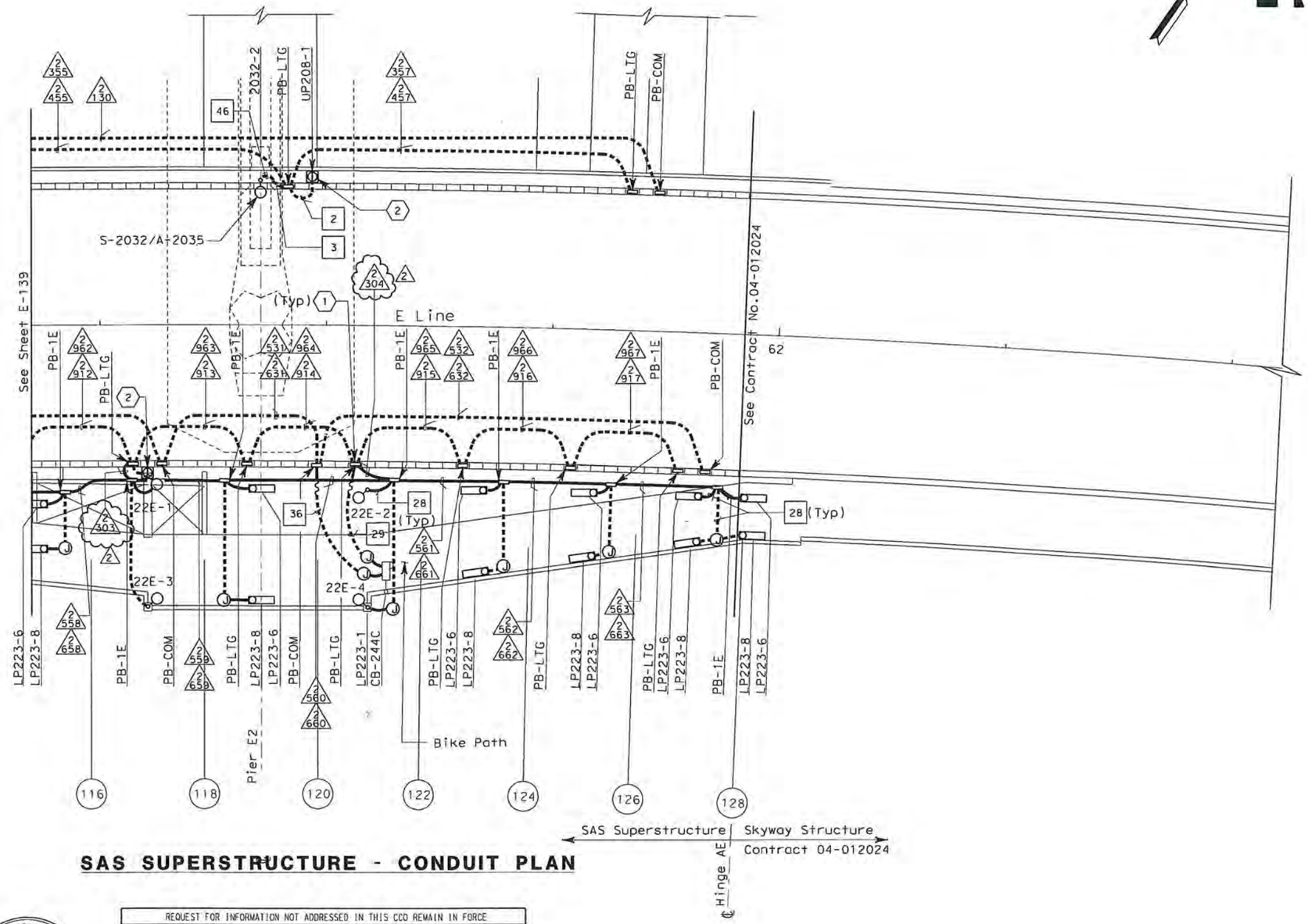

SAS SUPERSTRUCTURE - CONDUIT PLAN

SHEET NOTES:

(1) For conduit to tower and suspension cable lighting, see sheet E-230.

(2) Roadway Barrier Receptacle, see Detail 1, sheet E-162.

NOTES:

1. References:
   - For typical details and locations of conduit connections to light poles, barrier outlet boxes, call boxes, overhead sign lighting, CMS, CCTV and MVDS, see sheets E-160 thru E-162 and E-169.
   - TOS equipment is shown for conduit routing only. For typical details of TOS controller and devices, see sheets E-344 through E-357.
   - For types of pull boxes, splice boxes and enclosures, see sheet E-169.
   - For circuit and conduit/cable tray schedules, see sheets starting at E-401.
2. For Roadway Level Call Boxes, refer to sheet E-396.
3. For Roadway level, Bike Path and Belvedere Lighting Fixture Schedules, see sheets E-146, E-147 and E-165.
4. For Roadway level and Bike Path Call Box Schedule, see sheet E-397.
5. For number of lighting fixtures (main tower lights) see lighting schedule sheets E-271 and E-272.
6. All conduits and fittings routed exposed between the Bike Path and the roadway shall be galvanized rigid steel, PVC coated.
7. See sheets E-160 thru E-165 for conduit locations.
8. For Belvedere lighting fixture installation, see sheet E-173.

REQUEST FOR INFORMATION NOT ADDRESSED IN THIS CCO REMAIN IN FORCE					
2	03/04/08	BARRIER MODIFICATIONS	TW	RG	44
1	02/19/08	ELECTRICAL MODIFICATIONS	MP EL	RR	42
MARK	DATE	DESCRIPTIONS	BY	CH'D	CCO#
REVISIONS					

CONTRACT CHANGE ORDER NO. 4450
SHEET 18 OF 92

REGISTERED PROFESSIONAL ENGINEER — FADI WALIEDDINE — No. 11465 — Exp. 12/31/2009 ELECTRICAL — STATE OF CALIFORNIA

FOR REVISION ONLY
THIS PLAN ACCURATE FOR ELECTRICAL WORK ONLY.

SAS SUPERSTRUCTURE ROADWAY EASTBOUND
LIGHTING AND ELECTRICAL SYSTEMS

SCALE 1:200

E-140

ALL DIMENSIONS ARE IN METERS UNLESS OTHERWISE SHOWN

FOR REDUCED PLANS ORIGINAL SCALE IS IN MILLIMETERS 0 20 40 60 80

DGN FILE =>T:\13103\MS\pse\SAS Struc\CCO\SAS CCO44\04-0120F1_0193R02.dgn
USERNAME =>florico

CU 04251

EA 0120F1

LAST REVISION 00-00-00
DATE PLOTTED => 5/22/2008
TIME PLOTTED => 10:50:46 AM

STATE OF CALIFORNIA - DEPARTMENT OF TRANSPORTATION
Caltrans

DESIGN OVERSIGHT: BEHZAD GOLEMOHAMMADI
CALCULATED/DESIGNED BY: ADI
CHECKED BY:
EDC
CYF

MARK	DATE	REVISED BY	DATE REVISED
2	08/02		08/02

UTILITY PANEL UP-205 (CKT #2096)

Location: SAS SUPERSTRUCTURE SERVICE PLATFORM #5

LOAD DESCRIPTION	LTG	REC	OTH.	CB			CB	LTG	REC	OTH.	LOAD DESCRIPTION
Recept (2) Eastbound North Barrier		360		20/1	1	A 2	20/1				Spare
Spare				20/1	3	B 4	20/1				Spare 2
Recept (2) Service Platform #5		360		20/1	5	C 6	20/1				Spare
Recept (2) Girder		360		20/1	7	A 8	20/1	738			Girder Lighting (18)
RTU #10E (PLC Power Supply)			100	20/1	9	B 10	20/1				Spare
RTU-#10E (Lighting & Receptacle)	105	180	150	20/1	11	C 12	20/1				Spare
TOTAL WATTS	105	1260	250					738		2	TOTAL VA

LOAD SUMMARY (INCLUDES .90 PF) (VA)

Lighting (At 100%): 843
Gen Use (1st 10 kVA at 100% Plus 50% of remainder): 1540

TOTAL kVA: 2.363 2

BALANCE (kVA)

Phase A - 0.720 2
Phase B - 0.100
Phase C - 0.795

VOLTAGE: 208Y/120 V
PHASE/WIRES: 3-phase, 4-wire
BUS RATING: 100 A
MAIN: 60 A
MOUNTING: Surface
K.A.I.C.: 10

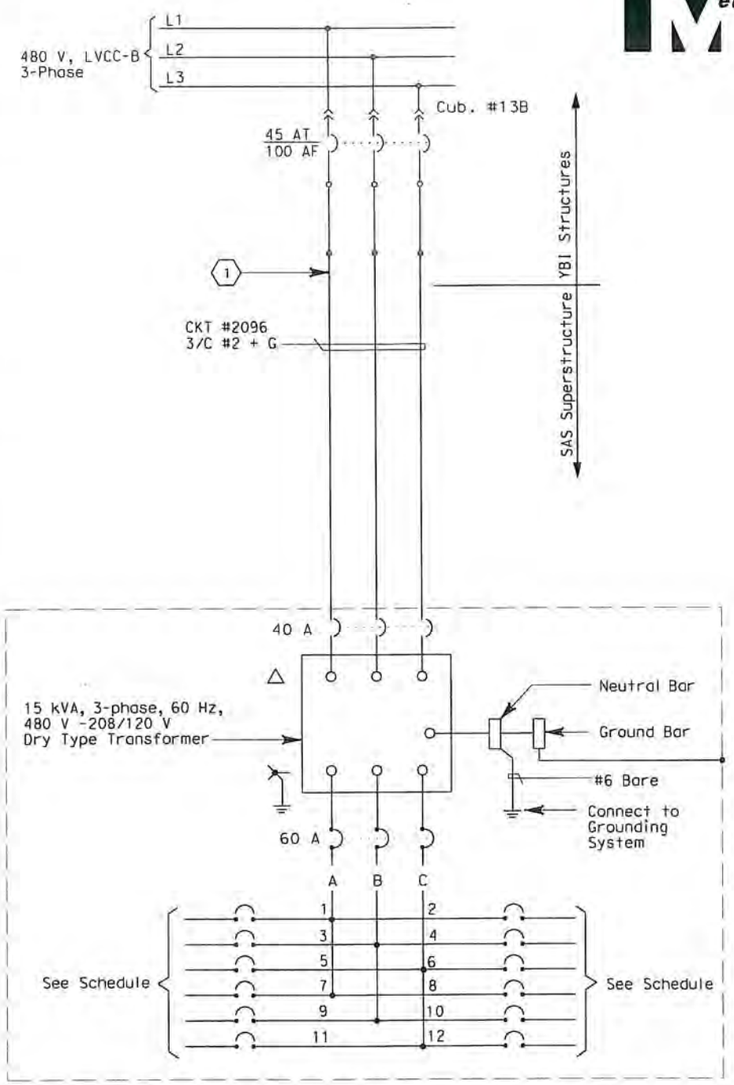

Caltrans Metric

DIST	COUNTY	ROUTE	KILOMETER POST TOTAL PROJECT	SHEET No	TOTAL SHEETS
04	SF	80	13.2/13.9	200 R2	1204

Jens Erlingsson 12/19/02
REGISTERED ELECTRICAL ENGINEER DATE

12-6-04
PLANS APPROVAL DATE

REGISTERED PROFESSIONAL ENGINEER — JENS ERLINGSSON No. 8249 Exp. 9/30/06 ELECTRICAL — STATE OF CALIFORNIA

PB POWER, Inc.
A Parsons Brinckerhoff Company
303 Second St., Suite 700N
San Francisco, CA 94107-1317

The State of California or its officers or agents shall not be responsible for the accuracy or completeness of electronic copies of this plan sheet.

Caltrans now has a web site! To get to the web site, go to http://www.dot.ca.gov

SHEET NOTES:

1. The Contractor shall extend and coil 5.0 meters of cable in manhole #25. All cables shall be tagged with circuit numbers as shown.

NOTES:

1. The Contractor shall provide nameplates and circuit schedules as shown.
2. Install transformer/panelboard inside a PB-8A enclosure (fiberglass) to be sized by the Contractor.
3. References:
   - For LVCC-B single line diagram, see sheets E-32 thru E-34.
   - For circuit and conduit/cable tray schedules, see sheets starting at E-401.
   - For pull box schedule, see sheet E-169.

DATE	REVISED BY	DATE REVISED
7/01	JP	12/01

CALCULATED/DESIGNED BY: BL
CHECKED BY:

DESIGN OVERSIGHT: BEHZAD GOLEMOHAMMADI

STATE OF CALIFORNIA - DEPARTMENT OF TRANSPORTATION
Caltrans

REGISTERED PROFESSIONAL ENGINEER — S. A. ESTOOLE, JR. No. E-10151 Exp. 12/31/2008 ELECTRICAL — STATE OF CALIFORNIA

FOR REVISION ONLY

REQUEST FOR INFORMATION NOT ADDRESSED IN THIS CCO REMAIN IN FORCE					
2	03/04/08	BARRIER MODIFICATIONS	JS BM	RG SE	44
1	02/19/08	ELECTRICAL MODIFICATIONS	MP EL	RR	42
MARK	DATE	DESCRIPTIONS	BY	CH'D	CCO#
REVISIONS					

CONTRACT CHANGE ORDER NO. 4450
SHEET 19 OF 92

THIS PLAN ACCURATE FOR ELECTRICAL WORK ONLY.

DETAILS
SAS SUPERSTRUCTURE ROADWAY EASTBOUND PANEL UP-205 SCHEDULE
NO SCALE

E-151

ASST. REVISION	DATE PLOTTED => 5/22/2008
00-00-00	TIME PLOTTED => 10:51:08 AM

FOR REDUCED PLANS ORIGINAL SCALE IS IN MILLIMETERS 0 20 40 60 80

DGN FILE =>T:\13103\MS\pse\SAS Struc\CCO\SAS CC044\04-0120F1_0200R02.dgn
USERNAME =>llorico
CU 04251
EA 0120F1

UTILITY PANEL UP-208 (CKT #2099)

Location: SAS SUPERSTRUCTURE SERVICE PLATFORM #8

LOAD DESCRIPTION	LTG	REC	OTH.	CB		CB	LTG	REC	OTH.	LOAD DESCRIPTION
Recept (3) Eastbound North Barrier		540		20/1	1 A 2	20/1		(1)	10	CB-243A
Spare				20/1	3 B 4	20/1			10	CB-243B
Recept (2) Service Platform #8		360		20/1	5 C 6	20/1			20	CB-243C,CB-244C
Recept (3) Girder		540		20/1	7 A 8	20/1	984			Girder Lighting (24)
RTU-#11E (PLC Power Supply)			100	20/1	9 B 10	20/1	697			Girder Lighting (17)
RTU-#11E (Lighting & Receptacle)	105	180	150	20/1	11 C 12	20/1				Spare
Spare				20/1	13 A 14	20/1				Spare
Navigation Relay Cabinet # NAP-8			600	20/1	15 B 16	20/1				Spare
Spare				20/1	17 C 18	20/1				
				20/1	19 A 20	20/1				
				20/1	21 B 22	20/1				
				20/1	23 C 24	20/1			(1) 40	
TOTAL VA	105	1620	850				1681			TOTAL VA

LOAD SUMMARY (INCLUDES .90 PF) (VA)

Lighting (At 100%): 1786
Gen Use (1st 10 kVA at 100% Plus 50% of remainder): 2,530

TOTAL kVA: (1) 4.296

BALANCE (kVA)

Phase A - 2.074 (1)
Phase B - 1.407
Phase C - 0.815

VOLTAGE: 208Y/120 V
PHASE/WIRES: 3-phase, 4-wire
BUS RATING: 100 A
MAIN: 60 A
MOUNTING: Surface
K.A.I.C.: 10

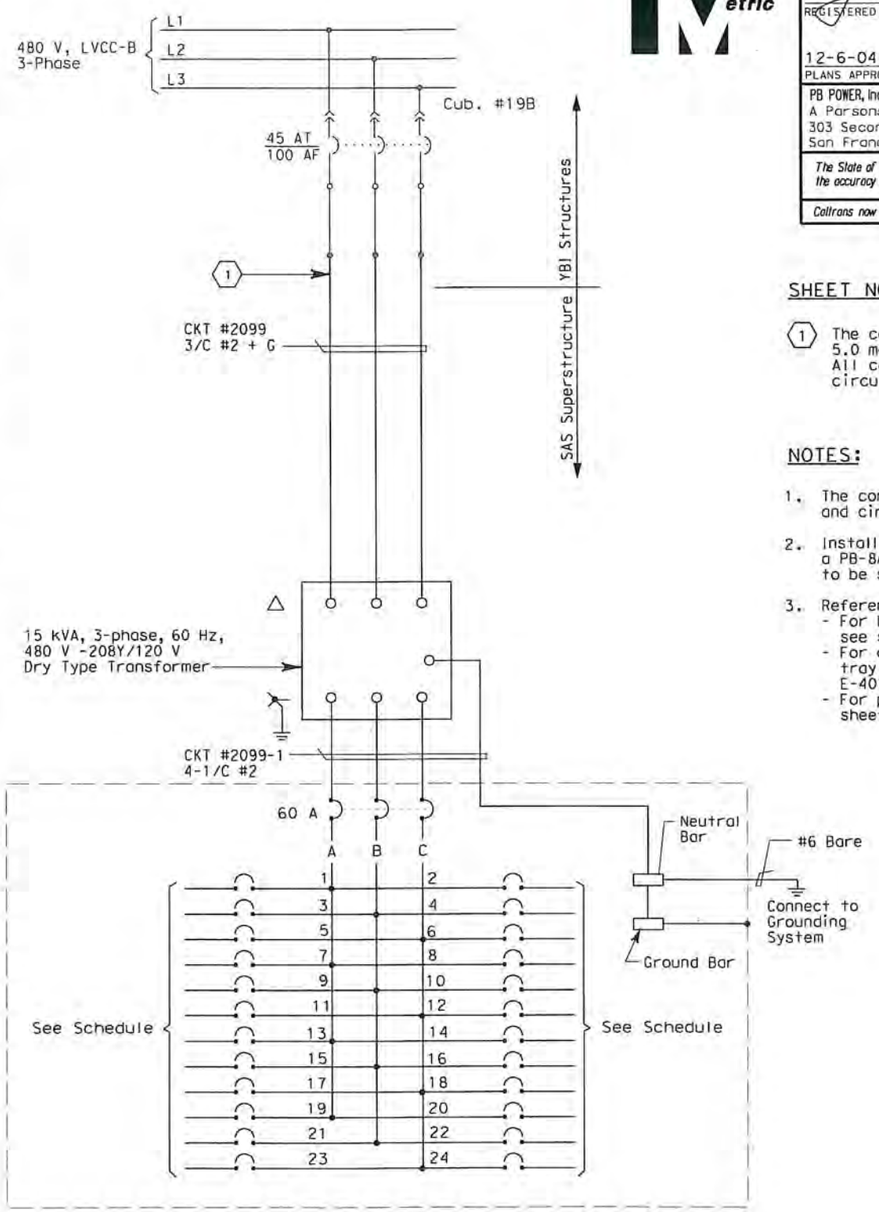

SHEET NOTES:

(1) The contractor shall extend and coil 5.0 meters of cable in manhole 25 All cables shall be tagged with circuit numbers as shown.

NOTES:

1. The contractor shall provide nameplates and circuit schedules as shown.
2. Install transformer/panelboard inside a PB-8A enclosure (fiberglass) to be sized by the contractor.
3. References:
   - For LVCC-B single line diagram, see sheets E-32 thru E-34.
   - For circuit and conduit/cable tray schedules, see sheets starting at E-401.
   - For pull box schedule, see sheet E-169.

DIST	COUNTY	ROUTE	KILOMETER POST TOTAL PROJECT	SHEET No	TOTAL SHEETS
04	SF	80	13.2/13.9	203 R1	1204

Jens Erlingsson 12/19/02
REGISTERED ELECTRICAL ENGINEER DATE

REGISTERED PROFESSIONAL ENGINEER — JENS ERLINGSSON No. 8249 Exp. 9/30/06 ELECTRICAL — STATE OF CALIFORNIA

12-6-04
PLANS APPROVAL DATE

PB POWER, Inc.
A Parsons Brinckerhoff Company
303 Second St., Suite 700N
San Francisco, CA 94107-1317

The State of California or its officers or agents shall not be responsible for the accuracy or completeness of electronic copies of this plan sheet.

Caltrans now has a web site! To get to the web site, go to http://www.dot.ca.gov

REGISTERED PROFESSIONAL ENGINEER — S. A. ESTOOLE, JR. No. E-10151 Exp. 12/31/2008 ELECTRICAL — STATE OF CALIFORNIA

FOR REVISION ONLY

REQUEST FOR INFORMATION NOT ADDRESSED IN THIS CCO REMAIN IN FORCE					
(1)	03/04/08	BARRIER MODIFICATIONS	JS BM	RG SE	44
MARK	DATE	DESCRIPTIONS (REVISIONS)	BY	CH'D	CCO#

CONTRACT CHANGE ORDER NO. 44 SO
SHEET 20 OF 92

THIS PLAN IS ACCURATE FOR ELECTRICAL WORK ONLY.

DETAILS
SAS SUPERSTRUCTURE ROADWAY EASTBOUND PANEL UP-208 SCHEDULE
NO SCALE

E-154

DESIGN OVERSIGHT	CALCULATED/ DESIGNED BY	CHECKED BY	DATE	REVISED BY	DATE REVISED
BEHZAD GOLEMOHAMMADI	JP	BL	8/01	EJL	2/04

STATE OF CALIFORNIA - DEPARTMENT OF TRANSPORTATION — Caltrans

LAST REVISION 00-00-00 — DATE PLOTTED => 5/22/2008 — TIME PLOTTED => 10:51:34 AM

FOR REDUCED PLANS ORIGINAL SCALE IS IN MILLIMETERS 0 20 40 60 80

DGN FILE =>T:\13103\MS\pse\SAS Struc\CCO\SAS CC044\04-0120F1_0203R01.dgn
USERNAME =>florico

CU 04251 | EA 0120F1

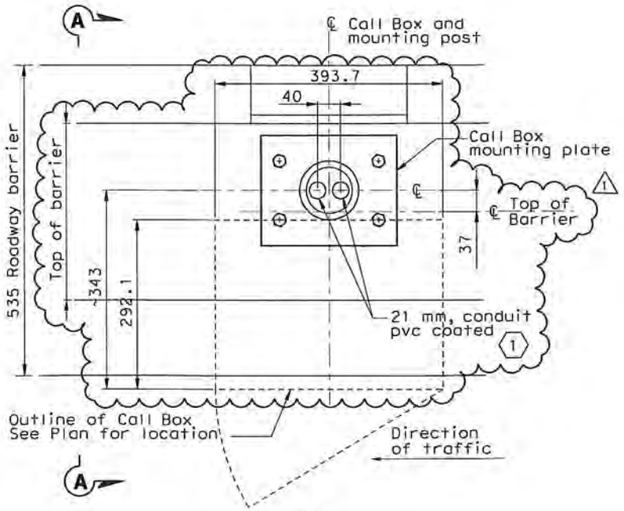

PLAN

CONDUIT STUB AND MOUNTING
OF CALL BOX AT BARRIER
SCALE 1:4

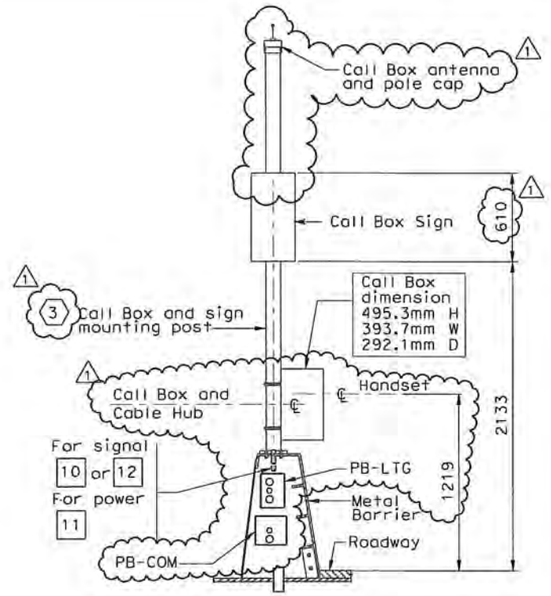

SECTION A-A

SCALE 1:20

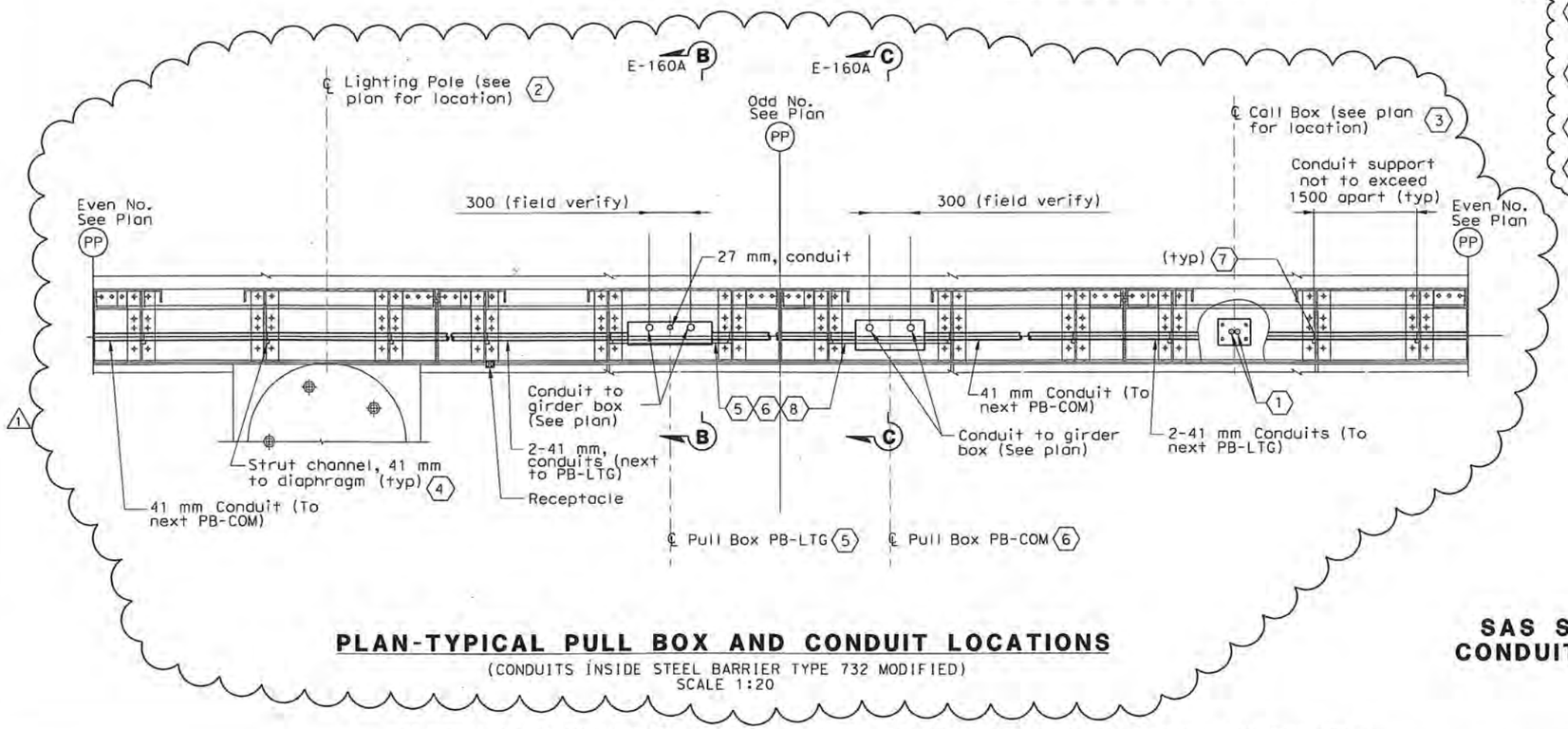

PLAN-TYPICAL PULL BOX AND CONDUIT LOCATIONS

(CONDUITS INSIDE STEEL BARRIER TYPE 732 MODIFIED)
SCALE 1:20

THIS PLAN IS ACCURATE FOR ELECTRICAL WORK ONLY.

ALL DIMENSIONS ARE IN MILLIMETERS UNLESS OTHERWISE SHOWN.

FOR REDUCED PLANS ORIGINAL SCALE IS IN MILLIMETERS 0 20 40 60 80

Caltrans Metric

DIST	COUNTY	ROUTE	KILOMETER POST TOTAL PROJECT	SHEET No	TOTAL SHEETS
04	SF	80	13.2/13.9	207 R1	1204

Jens Erlingsson 12/19/02
REGISTERED ELECTRICAL ENGINEER DATE

REGISTERED PROFESSIONAL ENGINEER — JENS ERLINGSSON No. 8249 Exp. 9/30/06 ELECTRICAL — STATE OF CALIFORNIA

12-6-04
PLANS APPROVAL DATE

PB POWER, Inc.
A Parsons Brinckerhoff Company
303 Second St., Suite 700N
San Francisco, CA 94107-1317

The State of California or its officers or agents shall not be responsible for the accuracy or completeness of electronic copies of this plan sheet.

Caltrans now has a web site! To get to the web site, go to http://www.dot.ca.gov

NOTES:

1. References:
   - For pull box schedule, see Sheet E-169.
   - For light pole schedule, see Sheet E-166.
   - For call box schedule, see Sheet E-397
2. For location of pull boxes inside girder, see Sheet E-35 through E-140.
3. For mounting hole detail for call box on roadway metal barrier, see sheet AS-13.

SHEET NOTES:

1. Bond grounding bushing to pole ground lug with #6 bare copper wire.
2. For conduit location inside lighting pole, see Sheet E-161.
3. For call box mounting detail, see AS Sheets.
4. For typical conduit support locations inside barrier diaphragm, see Details 1, 2, and 3 of Sheet E-160A.
5. Locate Pull Box at approximate center of diaphragm. For typical PB-LTG and conduit support inside barrier diaphragm, see Details 4 and 6 sheet E-160A.
6. Locate Pull Box at approximate center of diaphragm. For typical PB-COM and conduit support inside barrier diaphragm, see Detail 5 sheet E-160A.
7. Provide conduit clamp for each conduit.
8. Strut channel, 41 mm. support for pull box and installed by Contractor.

REGISTERED PROFESSIONAL ENGINEER — S. A. ESTOQUE, JR. No. E-10151 Exp. 12/31/2008 ELECTRICAL — STATE OF CALIFORNIA

FOR REVISION ONLY

REQUEST FOR INFORMATION NOT ADDRESSED IN THIS CCO REMAIN IN FORCE

MARK	DATE	DESCRIPTIONS	BY	CH'D	CCO#
		REVISIONS			
1	03/04/08	BARRIER MODIFICATIONS	JS BM	RG SE	44

CONTRACT CHANGE ORDER NO. 44 SO
SHEET 21 OF 92

DETAILS
SAS SUPERSTRUCTURE ROADWAY CONDUIT AND PULL BOX LOCATIONS

SCALE AS NOTED

E-160

STATE OF CALIFORNIA - DEPARTMENT OF TRANSPORTATION
Caltrans

CALCULATED/ DESIGNED BY	CHECKED BY	FK	IAH	DATE 11/02	11/02
		REVISED BY		DATE REVISED	

DESIGN OVERSIGHT
BEHZAD GOLEMOHAMMADI

LAST REVISION 00-00-00
DATE PLOTTED => 5/22/2008
TIME PLOTTED => 10:52:00 AM

DGN FILE =>T:\13103\MS\pse\SAS Struc\CCO\SAS CC044\04-0120f1_02d7R01.dgn
USERNAME =>llorico
CU 04251
EA 0120F1

DIST	COUNTY	ROUTE	KILOMETER POST TOTAL PROJECT	SHEET No	TOTAL SHEETS
04	SF	80	13.2/13.9	207 S1	1204

REGISTERED ELECTRICAL ENGINEER — 9/18/2007 DATE

PLANS APPROVAL DATE

REGISTERED PROFESSIONAL ENGINEER — MARCELL FUMIO TAKATA — No. E 8651 — Exp. 9/30/2008 ELECTRICAL — STATE OF CALIFORNIA

PB AMERICAS, Inc.
A Parsons Brinckerhoff Company
303 Second St., Suite 700N
San Francisco, CA 94107-1317

The State of California or its officers or agents shall not be responsible for the accuracy or completeness of electronic copies of this plan sheet.

Caltrans now has a web site! To get to the web site, go to http://www.dot.ca.gov

Caltrans Metric

MARK	DATE	REVISIONS	BY	CH'D	CCO#
0	03/04/08	BARRIER MODIFICATIONS	JS BM	RG SE	44

REQUEST FOR INFORMATION NOT ADDRESSED IN THIS CCO REMAIN IN FORCE

CONTRACT CHANGE ORDER NO. 44 SO
SHEET 22 OF 92

CALCULATED/ DESIGNED BY	CHECKED BY	DATE REVISED	REVISED BY	DATE
JS	RG	09/07		09/07

DESIGN OVERSIGHT — BEHZAD GOLEMOHAMMADI

STATE OF CALIFORNIA - DEPARTMENT OF TRANSPORTATION — Caltrans

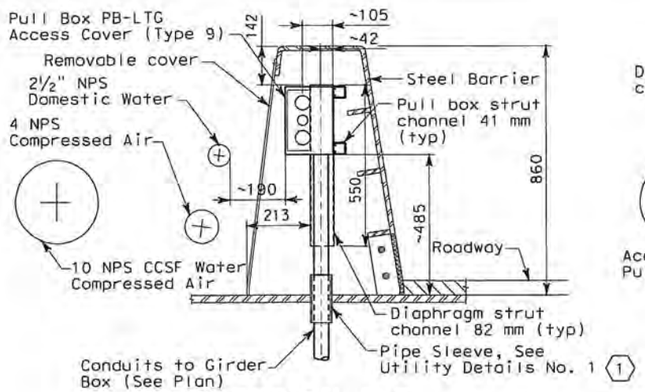

SECTION B-B

TYPICAL PULL BOX PB-LTG AND CONDUIT LOCATION (E5) (E2) (SIMILAR)
SCALE 1:10

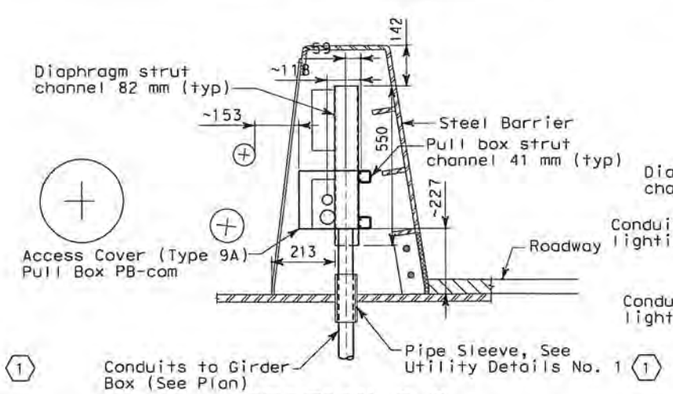

SECTION C-C

TYPICAL PULL BOX PB-COM AND CONDUIT LOCATION (E5) (E2) (SIMILAR)
SCALE 1:10

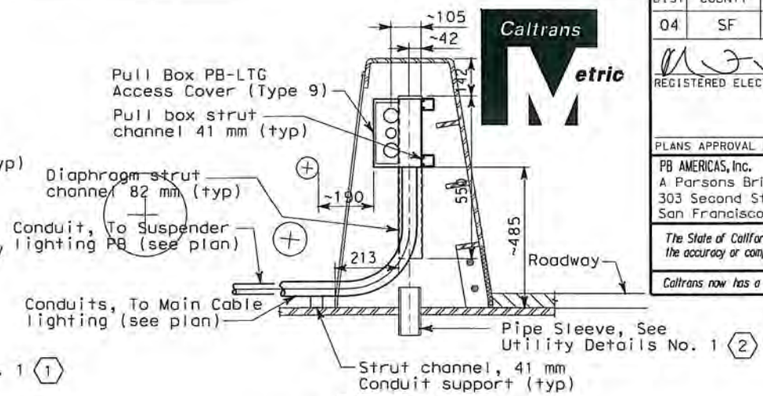

DETAIL 6

TYPICAL CONDUIT LOCATION FROM PULL BOX PB-LTG TO SUSPENDER AND MAIN CABLE LIGHTING (E5) (E2) (SIMILAR)
SCALE 1:10

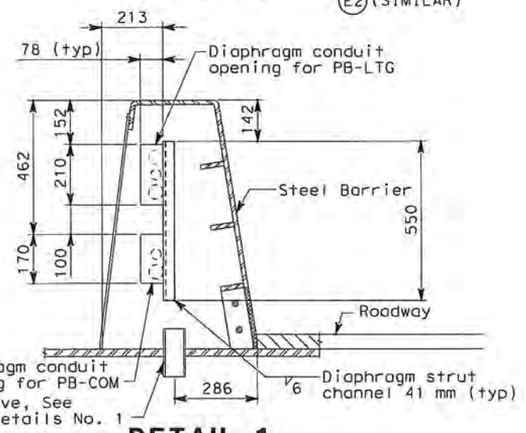

DETAIL 1

TYPICAL CONDUIT SUPPORT THROUGH DIAPHRAGM (E2)
SCALE 1:10

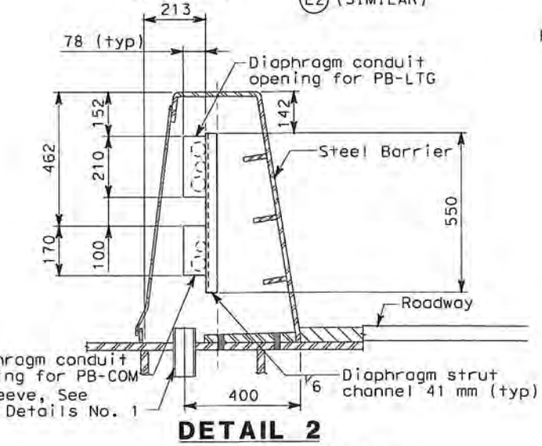

DETAIL 2

TYPICAL CONDUIT SUPPORT THROUGH DIAPHRAGM (E5)
SCALE 1:10

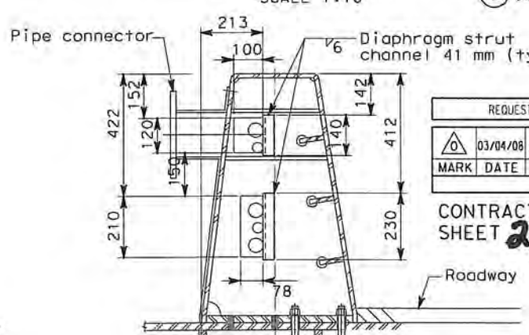

DETAIL 3

AT BARRIER WITH MOUNTED SIGNS
CONDUIT SUPPORT DIAPHRAGM E5 (PP38 + 1.250)
CONDUIT SUPPORT DIAPHRAGM E2 (PP38 + 1.250)
SCALE 1:10

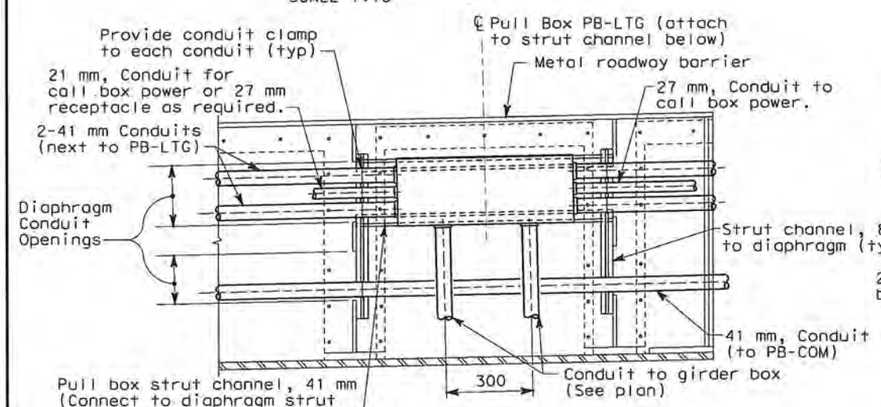

DETAIL 4

TYPICAL CONDUIT SUPPORT PULL BOX PB-LTG MOUNTING
SCALE 1:10

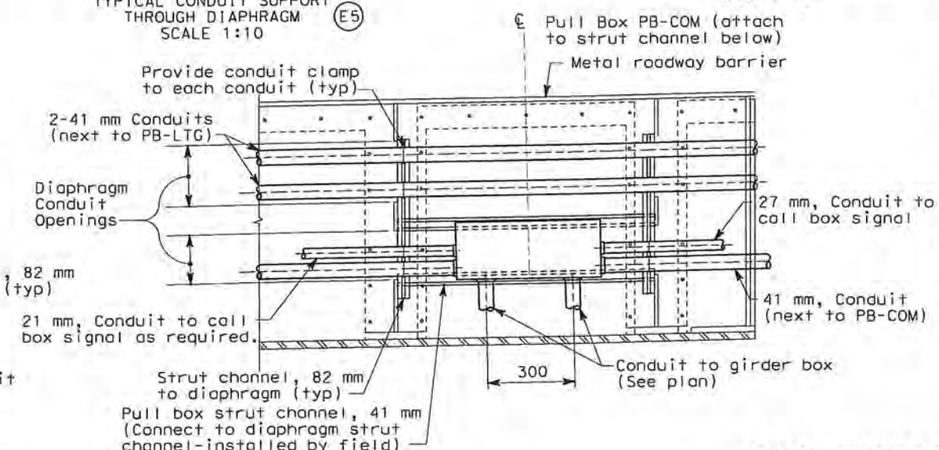

DETAIL 5

TYPICAL CONDUIT SUPPORT PULL BOX PB-COM MOUNTING
SCALE 1:10

NOTES:

1. References:
   - For pull box schedule, see Sheet E-169.
   - For barrier details, see structural drawings.
2. For location of pull boxes inside girder, see Sheet E-135 through E-140.

SHEET NOTES:

(1) To prevent moisture from passing inside the sleeve, the Contractor shall install sealant between the sleeve and conduit.

(2) Spare pipe sleeves shall be capped on both ends.

DETAILS
SAS SUPERSTRUCTURE ROADWAY CONDUIT AND PULL BOX LOCATIONS

SCALE AS NOTED

E-160A

LAST REVISION 00-00-00 — DATE PLOTTED => 5/22/2008 — TIME PLOTTED => 10:53:05 AM

THIS PLAN IS ACCURATE FOR ELECTRICAL WORK ONLY. ALL DIMENSIONS ARE IN MILLIMETERS UNLESS OTHERWISE SHOWN.

FOR REDUCED PLANS ORIGINAL SCALE IS IN MILLIMETERS 0 20 40 60 80

DGN FILE =>T:\13103\MS\pse\SAS Struc\CCO\SAS CC044\04-0120f1_02d7S01.dgn
USERNAME =>llorico

CU 04251 — EA 0120F1

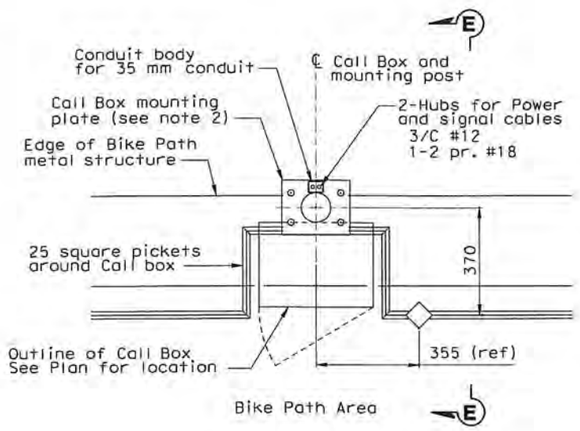

PLAN

CALL BOX MOUNTING AT BIKE PATH
SCALE 1:10

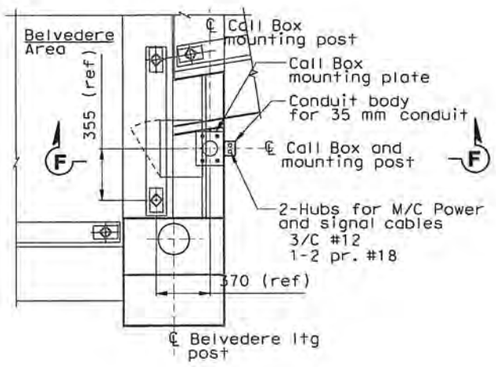

PLAN

CALL BOX MOUNTING AT BELVEDERE
SCALE 1:20

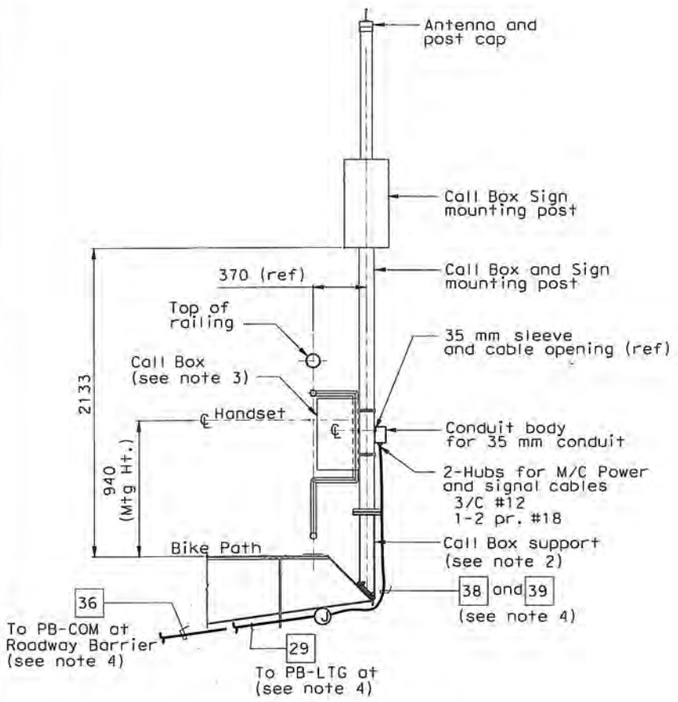

SECTION E-E

SCALE 1:20

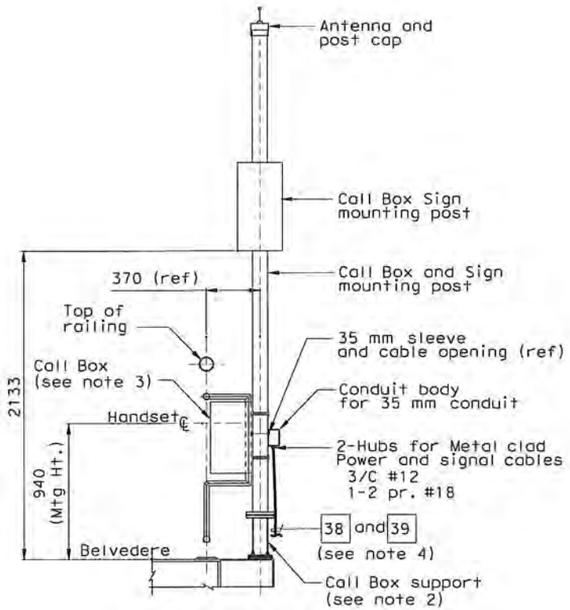

SECTION F-F

SCALE 1:20

NOTES:

1. References:
   - For call box schedule, see Sheet E-397.
2. For call box support, see drawing AS-2.
3. Call box dimensions are 495.8 mm high x 393.7 mm wide x 292.1 mm depth.
4. Field to locate support for metal clad and conduit below Bike Path structure.

DIST	COUNTY	ROUTE	KILOMETER POST TOTAL PROJECT	SHEET No	TOTAL SHEETS
04	SF	80	13.2/13.9	207 S2	1204

REGISTERED ELECTRICAL ENGINEER — 9/18/2007 DATE

REGISTERED PROFESSIONAL ENGINEER — MARWELL FUMIO TAKATA — No. E 8651 — Exp. 9/30/2008 ELECTRICAL — STATE OF CALIFORNIA

PLANS APPROVAL DATE

PB AMERICAS, Inc.
A Parsons Brinckerhoff Company
303 Second St., Suite 700N
San Francisco, CA 94107-1317

The State of California or its officers or agents shall not be responsible for the accuracy or completeness of electronic copies of this plan sheet.

Caltrans now has a web site! To get to the web site, go to http://www.dot.ca.gov

REQUEST FOR INFORMATION NOT ADDRESSED IN THIS CCO REMAIN IN FORCE					
MARK	DATE	REVISIONS DESCRIPTIONS	BY	CH'D	CCO#
0	03/04/08	BARRIER MODIFICATIONS	EL	RG SE	44

CONTRACT CHANGE ORDER NO. 4450
SHEET 23 OF 92

DETAILS
SAS SUPERSTRUCTURE ROADWAY CONDUIT AND PULL BOX LOCATIONS

SCALE AS NOTED

E-160B

DESIGN OVERSIGHT	CALCULATED/ DESIGNED BY	DATE	REVISED BY	DATE REVISED
BEHZAD GOLEMOHAMMADI	CHECKED BY	JS 09/07	RG	09/07

STATE OF CALIFORNIA - DEPARTMENT OF TRANSPORTATION
Caltrans

THIS PLAN IS ACCURATE FOR ELECTRICAL WORK ONLY.

ALL DIMENSIONS ARE IN MILLIMETERS UNLESS OTHERWISE SHOWN.

FOR REDUCED PLANS ORIGINAL SCALE IS IN MILLIMETERS 0 20 40 60 80

DGN FILE =>T:\13103\WS\pse\SAS Struc\CCO\SAS CC044\04-0120f1_02d7S02.dgn
USERNAME =>llorico

CU 04251

EA 0120F1

LAST REVISION 00-00-00 DATE PLOTTED => 5/22/2008 TIME PLOTTED => 10:53:33 AM

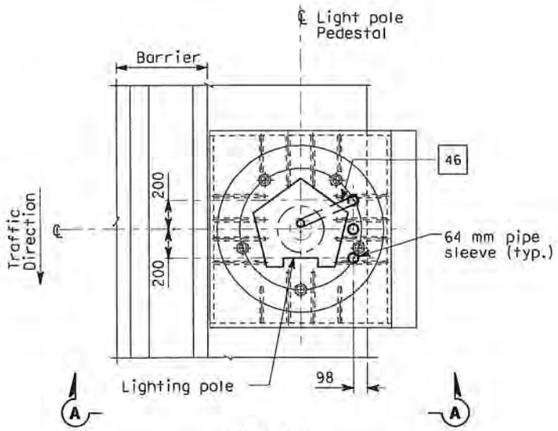

PLAN

CONDUIT STUB-UP PLAN FOR ROADWAY LIGHTING ON A METAL BASE
SCALE 1:20

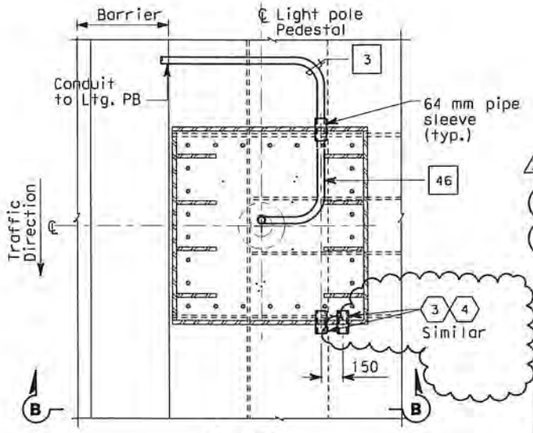

PLAN

CONDUIT STUB-UP PLAN FOR ROADWAY LIGHTING ON A METAL BASE AT PIER E2 ONLY
SCALE 1:20

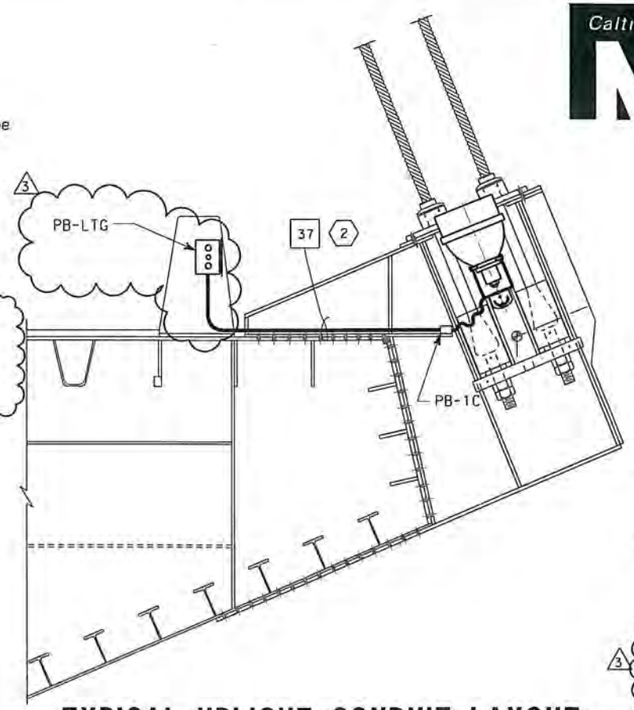

TYPICAL UPLIGHT CONDUIT LAYOUT

SCALE 1:20

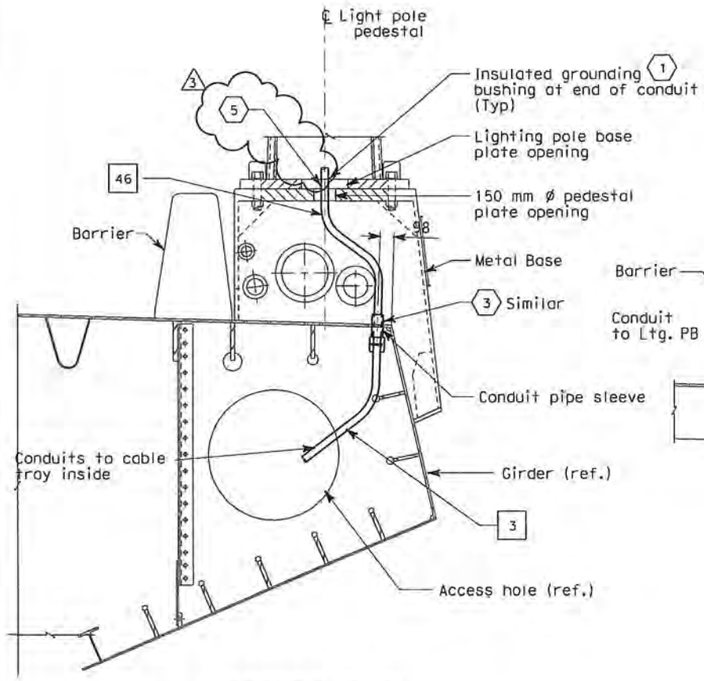

SECTION A-A

LIGHT POLE METAL PEDESTAL
CONDUIT TYPICAL INSTALLATION
SCALE 1:20

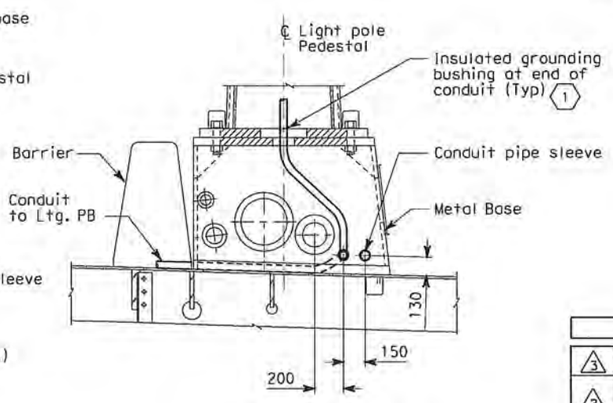

SECTION B-B

SCALE 1:20

SHEET NOTES:

1. Bond grounding bushing to ground lug of lighting pole with #6 bare copper wire.
2. Conduit shall be clear of all piping and pipe sleeve. Route conduit on top of deck plate, outside of girder box.
3. See Utility Detail No. 1 (Sheet No. 965 of 1204) for conduit penetration through girder plate and lighting pole metal base. The Contractor shall install sealant between the sleeve and conduit to prevent water or moisture from passing inside the sleeve.
4. Cap spare sleeves for future use where noted.
5. Ensure that the maximum of three conduits passing through the 150 mm ø pedestal plate opening are separated as much as possible from each other.

NOTES:

1. References:
   - For lighting pole schedule, see sheet E-82.
   - For location of pull boxes inside girder, see sheets E-96 thru E-101.
   - For luminaire support details, see structural sheets.
2. Roadway Barrier Receptacle, see Detail 1, sheet E-68.
3. For conduit and pull box details in steel barrier, see drawings E-160 and E-160A.

FOR REVISION ONLY

REQUEST FOR INFORMATION NOT ADDRESSED IN THIS CCO REMAIN IN FORCE					
3	03/04/08	BARRIER MODIFICATIONS	JS BM	SE RG	44
2	02/19/08	ELECTRICAL MODIFICATIONS	MP EL RG	RR	42
1	10/16/06	REVISED SHEET NOTES	LR	MG	11
MARK	DATE	DESCRIPTIONS	BY	CH'D	CCO#
		REVISIONS			

CONTRACT CHANGE ORDER NO. 44 SO
SHEET 24 OF 92

DIST	COUNTY	ROUTE	KILOMETER POST TOTAL PROJECT	SHEET No	TOTAL SHEETS
04	SF	80	13.2/13.9	208R3	1204

REGISTERED ELECTRICAL ENGINEER — 12/19/02 DATE

12-6-04
PLANS APPROVAL DATE

JENS ERLINGSSON No. 8249 Exp. 9/30/06 ELECTRICAL — REGISTERED PROFESSIONAL ENGINEER — STATE OF CALIFORNIA

PB POWER, Inc.
A Parsons Brinckerhoff Company
303 Second St., Suite 700N
San Francisco, CA 94107-1317

The State of California or its officers or agents shall not be responsible for the accuracy or completeness of electronic copies of this plan sheet.

Caltrans now has a web site! To get to the web site, go to http://www.dot.ca.gov

DATE	REVISED BY	DATE REVISED
10/01	KG	8/01
CALCULATED/ DESIGNED BY		AB
CHECKED BY		

DESIGN OVERSIGHT — BEHZAD GOLEMOHAMMADI

STATE OF CALIFORNIA - DEPARTMENT OF TRANSPORTATION — Caltrans

DETAILS
SAS SUPERSTRUCTURE ROADWAY EASTBOUND CONDUIT LOCATIONS

SCALE AS NOTED

E-161

LAST REVISION 00-00-00 — DATE PLOTTED => 6/9/2008 — TIME PLOTTED => 4:38:36 PM

ALL DIMENSIONS ARE IN MILLIMETERS UNLESS OTHERWISE SHOWN.

FOR REDUCED PLANS ORIGINAL SCALE IS IN MILLIMETERS 0 20 40 60 80

DGN FILE =>T:\13103\MS\pse\SAS Struc\CCO\SAS CCD44\04-0120F1_0208R03.dgn
USERNAME =>garciar

CU 04251 | EA 0120F1

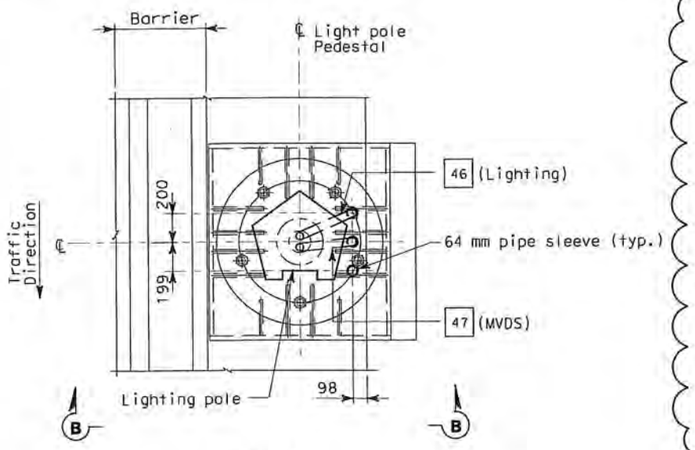

PLAN

CONDUIT STUB-UP PLAN FOR ROADWAY LIGHTING AND MVDS ON METAL BASE
SCALE 1:20

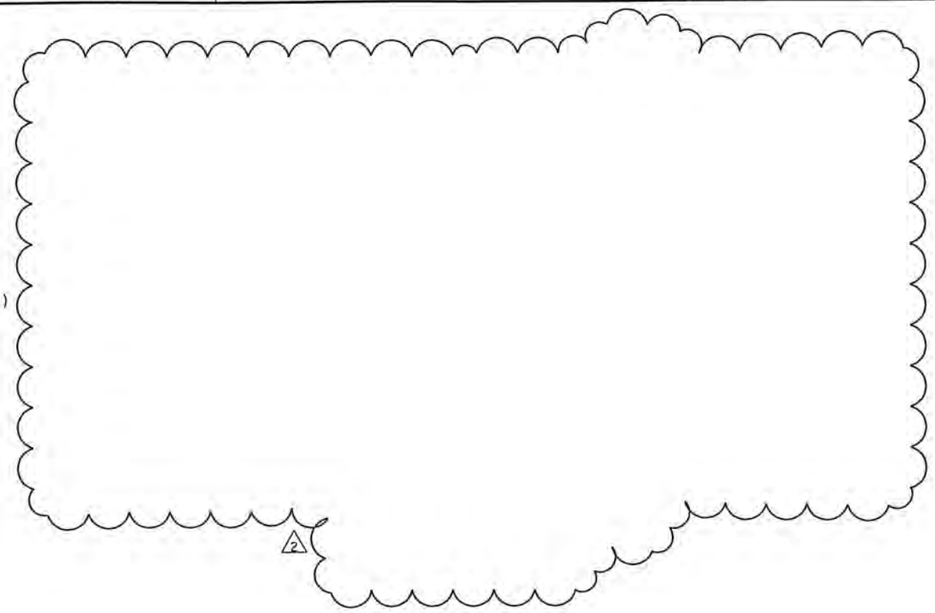

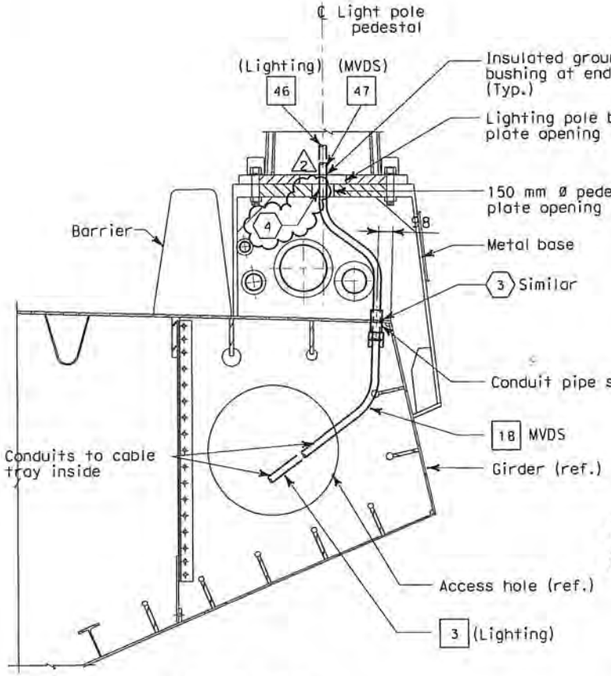

SECTION B-B
SCALE 1:20

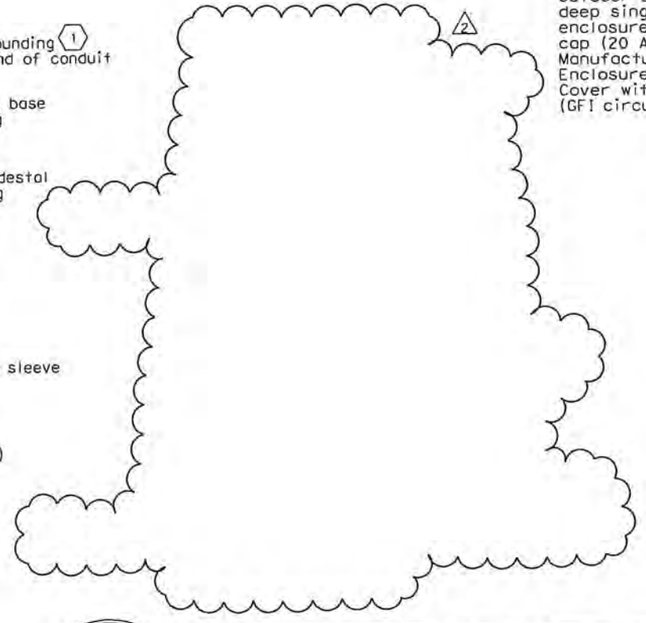

Outdoor Barrier receptacle with deep single gang, corrosion resistant enclosure and weatherproof threaded cap (20 A, 125 V, 3 W, straight blade)
Manufacturer Crouse Hinds or equal
Enclosure = FDLA2 (Corro-free)
Cover with receptacle = DS222
(GFI circuit breaker protection)

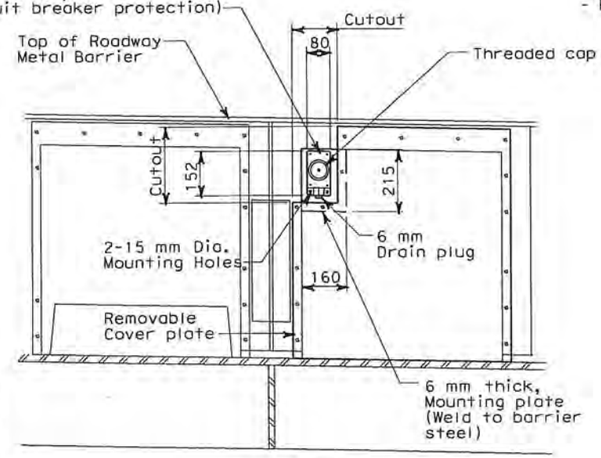

DETAIL 1
(TYPICAL ROADWAY BARRIER RECEPTACLE LOCATION)
SCALE: 1:10

SHEET NOTES:

1. Bond grounding bushing to ground lug of lighting pole with #6 bare copper wire.
2. Deleted
3. See Utility Detail No. 1 (Sheet No. 965 of 1204) for conduit penetration through girder plate and lighting pole metal base. The Contractor shall install sealant between the sleeve and conduit to prevent water or moisture from passing inside the sleeve.
4. Ensure that the maximum of three conduits passing through the 150 mm ø pedestal plate opening are separated as much as possible from each other.

NOTES:

1. References:
   - For installation and typical details of TOS equipment, see sheets E-341 thru E-357.
   - For pull box schedule, see sheet E-169

DIST	COUNTY	ROUTE	KILOMETER POST TOTAL PROJECT	SHEET No	TOTAL SHEETS
04	SF	80	13.2/13.9	209 R2	1204

12/19/02
REGISTERED ELECTRICAL ENGINEER DATE

12-6-04
PLANS APPROVAL DATE

REGISTERED PROFESSIONAL ENGINEER — JENS ERLINGSSON No. 8249 Exp. 9/30/06 ELECTRICAL — STATE OF CALIFORNIA

PB POWER, Inc.
A Parsons Brinckerhoff Company
303 Second St., Suite 700N
San Francisco, CA 94107-1317

The State of California or its officers or agents shall not be responsible for the accuracy or completeness of electronic copies of this plan sheet.

Caltrans now has a web site! To get to the web site, go to http://www.dot.ca.gov

REGISTERED PROFESSIONAL ENGINEER — S. A. ESTOQUE, JR. No. E-10151 Exp. 12/31/2008 ELECTRICAL — STATE OF CALIFORNIA

FOR REVISION ONLY

MARK	DATE	DESCRIPTIONS	BY	CH'D	CCO#
		REVISIONS			
2	03/04/08	BARRIER MODIFICATIONS	JS BM	RG SE	44
1	02/19/08	ELECTRICAL MODIFICATIONS	MP EL RG	RR	42

REQUEST FOR INFORMATION NOT ADDRESSED IN THIS CCO REMAIN IN FORCE

CONTRACT CHANGE ORDER NO. 4450
SHEET 25 OF 92

DETAILS
SAS SUPERSTRUCTURE ROADWAY EASTBOUND CONDUIT LOCATIONS

SCALE AS NOTED

E-162

CALCULATED/ DESIGNED BY	CHECKED BY	DATE	REVISED BY	DATE REVISED
KG	AB	10/01		11/01

STATE OF CALIFORNIA - DEPARTMENT OF TRANSPORTATION — Caltrans
DESIGN OVERSIGHT — BEHZAD GOLEMOHAMMADI

LAST REVISION 00-00-00 — DATE PLOTTED => 5/22/2008 — TIME PLOTTED => 10:54:13 AM

FOR REDUCED PLANS ORIGINAL SCALE IS IN MILLIMETERS 0 20 40 60 80

DGN FILE =>T:\13103\MS\pse\SAS Struc\CCO\SAS CC044\04-0120f1_0209R02.dgn
USERNAME =>llorico

CU 04251 — EA 0120F1

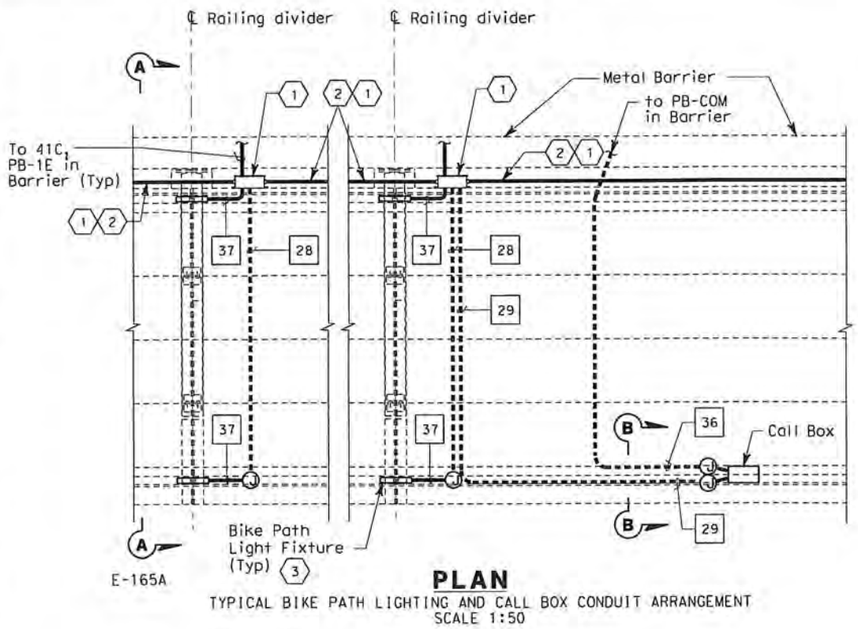

PLAN

TYPICAL BIKE PATH LIGHTING AND CALL BOX CONDUIT ARRANGEMENT
SCALE 1:50

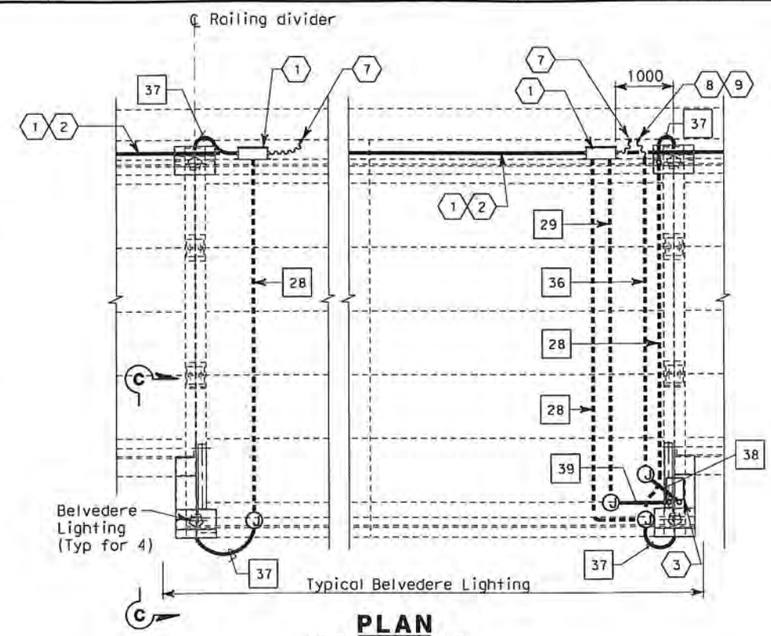

PLAN

CONDUIT ARRANGEMENT
SCALE 1:50

DIST	COUNTY	ROUTE	KILOMETER POST TOTAL PROJECT	SHEET No	TOTAL SHEETS
04	SF	80	13.2/13.9	210 R2	1204

James Ellingsson 12/19/02
REGISTERED ELECTRICAL ENGINEER DATE

12-6-04
PLANS APPROVAL DATE

REGISTERED PROFESSIONAL ENGINEER — JENS ERLINGSSON No. 8249 Exp. 9/30/06 ELECTRICAL — STATE OF CALIFORNIA

PB POWER, Inc.
A Parsons Brinckerhoff Company
303 Second St., Suite 700N
San Francisco, CA 94107-1317

The State of California or its officers or agents shall not be responsible for the accuracy or completeness of electronic copies of this plan sheet.

Caltrans now has a web site! To get to the web site, go to http://www.dot.ca.gov

SHEET NOTES:

1. PB-1E and conduit support, mounting details see sheet E-165A.
2. 41C, continued to the next PB-1E mounted along side at Bike Path deck.
3. For bike path light detail, see sheet E-172.
4. Weld connectors for conduit support under bike path.
5. Field locate support for metal-clad cable.
6. For connection and mounting details of call box on railings, refer to structural railing details.
7. 41C, Liquidtight flexible metal conduit to RGS in roadway concrete barrier (PB-LTG). (2)
8. 41C, Liquidtight flexible metal conduit to RGS in roadway concrete barrier (PB-COM). (2)
9. Provide reducer as required.
10. For connection and mounting details, see sheet E-172. Metal clad cable is supplied and part of Bike Path lighting assembly. Cable is shown solid for detail clarity only.
11. For details of Belvedere, see sheet E-173.
12. Weld connectors for conduit support under Bike Path. Field to locate support for conduit as required.
13. (2) For call box mounting detail and connection, see sheet E-160B.

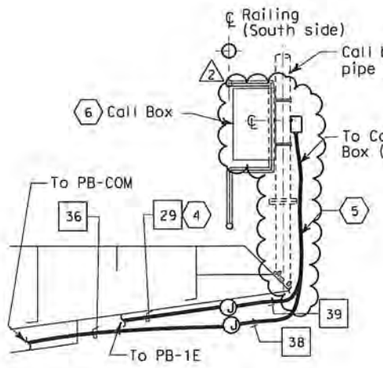

SECTION B-B

CONDUITS TO CALL BOX
SCALE 1:20

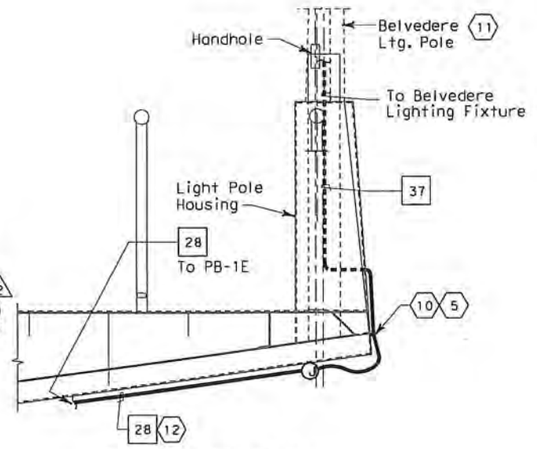

SECTION C-C

CONDUITS TO BELVEDERE LIGHTING
SCALE 1:20

NOTES:

1. All exposed conduits and fittings installed between the roadway and the bike path shall be PVC coated galvanized steel unless noted otherwise. (2)
2. See sheets E-135 through E-140 for SAS Superstructure Roadway Plans.

DETAILS
SAS SUPERSTRUCTURE ROADWAY EASTBOUND
TYPICAL BIKE PATH PLANS AND SECTIONS

SCALE AS NOTED

E-165

REQUEST FOR INFORMATION NOT ADDRESSED IN THIS CCO REMAIN IN FORCE					
2	03/04/08	BARRIER MODIFICATIONS	JS BM	RG SE	44
1	02/19/08	ELECTRICAL MODIFICATIONS	MP EL	RR	42
MARK	DATE	REVISIONS	BY	CH'D	CCO#

S. A. ESTOQUE, JR. REGISTERED PROFESSIONAL ENGINEER — No. E-10151 Exp. 12/31/2008 ELECTRICAL — STATE OF CALIFORNIA

FOR REVISION ONLY

CONTRACT CHANGE ORDER NO. 4450
SHEET 26 OF 92

CALCULATED/ DESIGNED BY	CHECKED BY	DRAWN BY	CHECKED BY	DATE	REVISED BY	DATE REVISED
KG	AB			10/01		11/01

DESIGN OVERSIGHT
BEHZAD GOLEMOHAMMADI

STATE OF CALIFORNIA - DEPARTMENT OF TRANSPORTATION
Caltrans

THIS PLAN IS ACCURATE FOR ELECTRICAL WORK ONLY.

ALL DIMENSIONS ARE IN MILLIMETERS UNLESS OTHERWISE SHOWN.

FOR REDUCED PLANS ORIGINAL SCALE IS IN MILLIMETERS 0 20 40 60 80

DGN FILE =>T:\13103\MS\pse\SAS Struc\CCO\SAS CC044\04-0120f1_02R02.dgn
USERNAME =>llorico

CU 04251

EA 0120F1

LAST REVISION 00-00-00
DATE PLOTTED => 5/22/2008
TIME PLOTTED => 10:54:36 AM

DIST	COUNTY	ROUTE	KILOMETER POST TOTAL PROJECT	SHEET No	TOTAL SHEETS
04	SF	80	13.2/13.9	217 R1	1204

12/19/02
REGISTERED ELECTRICAL ENGINEER DATE

REGISTERED PROFESSIONAL ENGINEER — JENS ERLINGSSON No. 8249 Exp. 9/30/06 ELECTRICAL — STATE OF CALIFORNIA

12-6-04
PLANS APPROVAL DATE

PB POWER, Inc.
A Parsons Brinckerhoff Company
303 Second St., Suite 700N
San Francisco, CA 94107-1317

The State of California or its officers or agents shall not be responsible for the accuracy or completeness of electronic copies of this plan sheet.

Caltrans now has a web site! To get to the web site, go to http://www.dot.ca.gov

Caltrans Metric

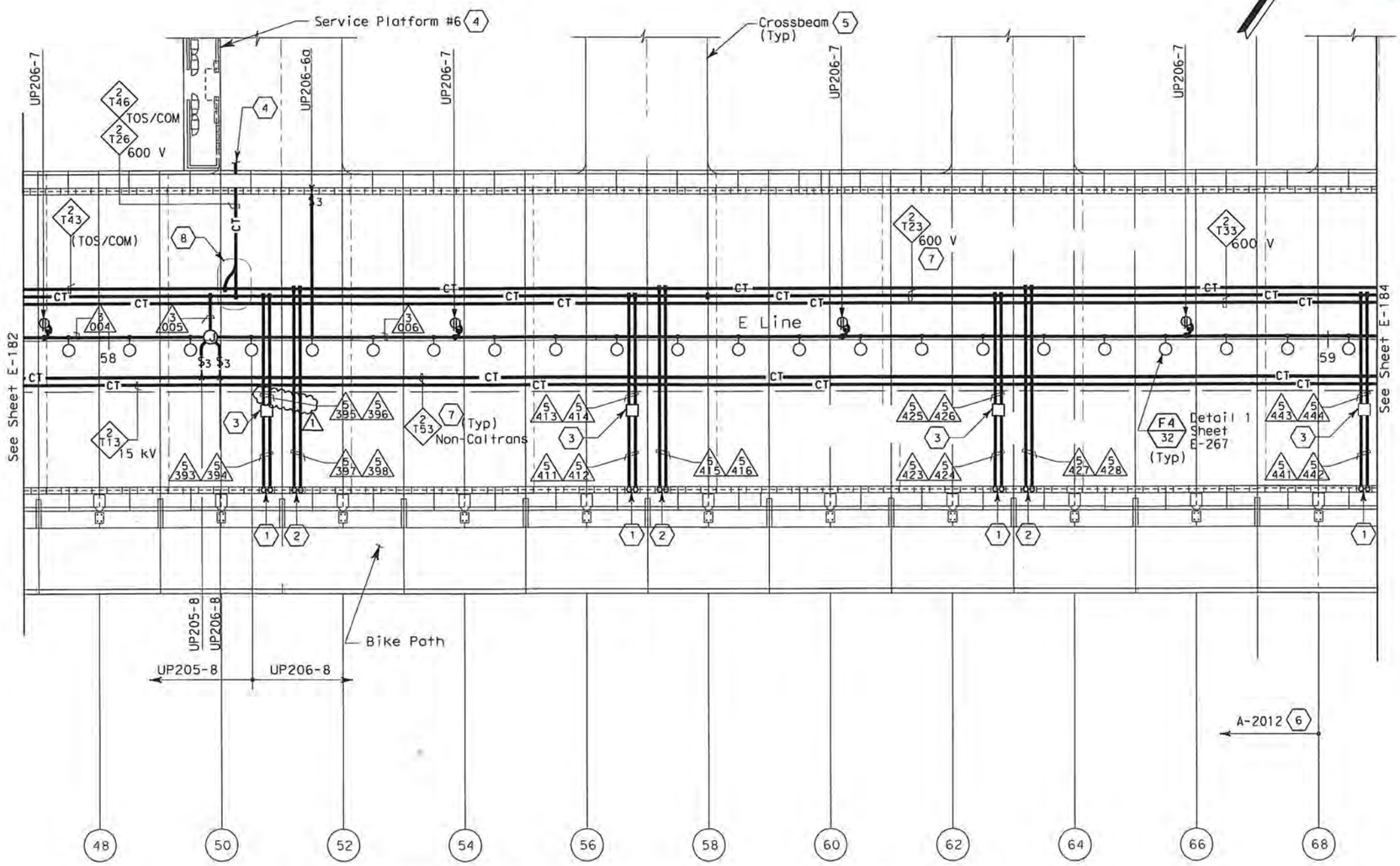

SAS SUPERSTRUCTURE - CONDUIT AND CABLE TRAY PLAN

SHEET NOTES:

1. Conduit up to PB-LTG located in barrier, see sheet E-137.
2. Conduit up to PB-COM located in barrier, see sheet E-137.
3. PB-2A, locate on top of floor.
4. For cable tray run and lighting inside crossbeam, see sheet E-116.
5. For lighting inside crossbeam, see sheet E-119.
6. For future light pipes, see sheets E-202 thru E-204. For light pipe schedule, see sheet E-217.
7. For cable tray & ground bar support, refer to sheet E-208.
8. For fiber splice tray detail. Refer to sheet E-355.

NOTES:

1. References:
   - TOS equipment is shown for conduit routing only. For typical details of TOS controller and devices, see sheets E-344 through E-357.
   - For types of pull boxes, splice boxes and enclosures, see sheet E-169.
   - For bridge grounding plan, see sheet E-196.
   - For circuit and conduit/cable tray schedules, see sheets starting at E-401.
2. For other work related to items not shown on this sheet, see Electrical Special Provisions.
3. The girder lighting fixtures are shown diagrammatically. Contractor shall install fixtures at railing posts with a maximum of 8000 mm between fixtures. For types and typical lighting fixture installation details, see sheet E-206.
4. The cable trays are shown diagrammatically. For typical girder cable tray plans and sections, see sheets E-207 and E-208.

REGISTERED PROFESSIONAL ENGINEER — FADI WALIEDDINE No. 11465 Exp. 12/31/2009 ELECTRICAL — STATE OF CALIFORNIA

FOR REVISION ONLY

REQUEST FOR INFORMATION NOT ADDRESSED IN THIS CCO REMAIN IN FORCE					
MARK	DATE	REVISIONS DESCRIPTIONS	BY	CH'D	CCO#
1	03/04/08	BARRIER MODIFICATIONS	TW	RG	44

CONTRACT CHANGE ORDER NO. 44 SO
SHEET 27 OF 92

SAS SUPERSTRUCTURE GIRDER EASTBOUND
LIGHTING AND ELECTRICAL SYSTEMS

SCALE 1:200

E-183

DESIGN OVERSIGHT	CALCULATED/ DESIGNED BY	EDC	DATE 08/02	REVISED BY
BEHZAD GOLEMOHAMMADI	CHECKED BY	CYF	08/02	DATE REVISED

STATE OF CALIFORNIA - DEPARTMENT OF TRANSPORTATION — Caltrans

THIS PLAN IS ACCURATE FOR ELECTRICAL WORK ONLY.

ALL DIMENSIONS ARE IN METERS UNLESS OTHERWISE SHOWN

FOR REDUCED PLANS ORIGINAL SCALE IS IN MILLIMETERS 0 20 40 60 80

DGN FILE =>T:\13103\MS\pse\SAS Struc\CCO\SAS CCO44\04-0120f1_02 7R01.dgn
USERNAME =>llorico
CU 04251
EA 0120F1

LAST REVISION 00-00-00
DATE PLOTTED => 5/22/2008
TIME PLOTTED => 10:54:57 AM 5/22/2008

DIST	COUNTY	ROUTE	KILOMETER POST TOTAL PROJECT	SHEET No	TOTAL SHEETS
04	SF	80	13.2/13.9	218 R2	1204

Jens Erlingsson 12/19/02
REGISTERED ELECTRICAL ENGINEER DATE

12-6-04
PLANS APPROVAL DATE

REGISTERED PROFESSIONAL ENGINEER — JENS ERLINGSSON No. 8249 Exp. 9/30/06 ELECTRICAL — STATE OF CALIFORNIA

PB POWER, Inc.
A Parsons Brinckerhoff Company
303 Second St., Suite 700N
San Francisco, CA 94107-1317

The State of California or its officers or agents shall not be responsible for the accuracy or completeness of electronic copies of this plan sheet.

Caltrans now has a web site! To get to the web site, go to http://www.dot.ca.gov

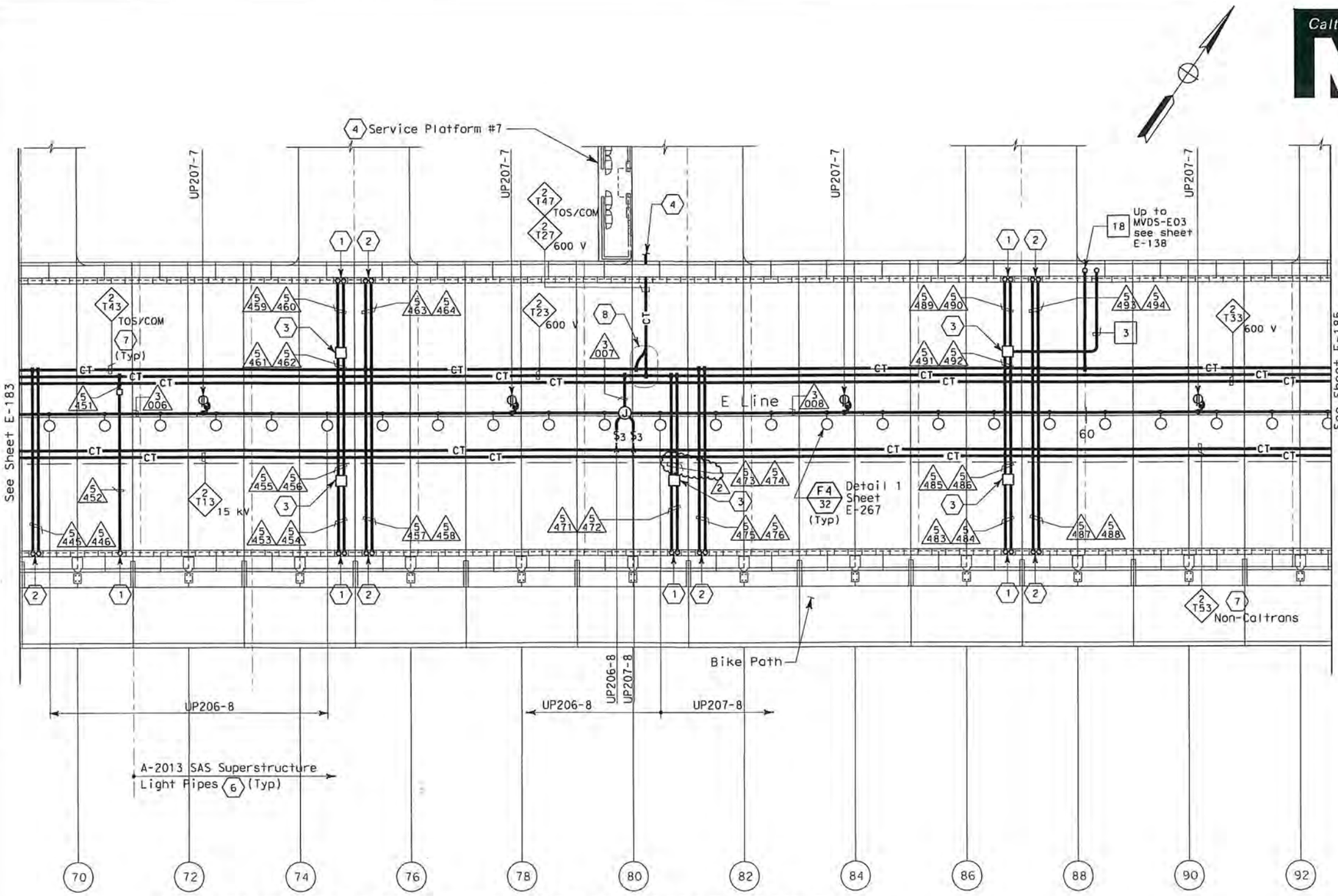

SAS SUPERSTRUCTURE - CONDUIT AND CABLE TRAY PLAN

SHEET NOTES:

1. Conduit up to PB-LTG located in barrier, see sheet E-138.
2. Conduit up to PB-COM located in barrier, see sheet E-138
3. PB-2A, locate on top of floor.
4. For cable tray run and lighting inside crossbeam, see sheet E-117.
5. For lighting inside crossbeam, see sheet E-119.
6. For future light pipes, see sheets E-202 thru E-204. For light pipe schedule, see sheet E-217.
7. For cable tray & ground bar support, refer to sheet E-208.
8. For fiber splice tray detail. Refer to sheet E-355.

NOTES:

1. References:
   - TOS equipment is shown for conduit routing only. For typical details of TOS controller and devices, see sheets E-344 through E-357.
   - For types of pull boxes, splice boxes and enclosures, see sheet E-169.
   - For bridge grounding plan, see sheet E-196.
   - For circuit and conduit/cable tray schedules, see sheets starting at E-401.
2. For other work related to items not shown on this sheet, see Electrical Special Provisions.
3. The girder lighting fixtures are shown diagrammatically. Contractor shall install fixtures at railing posts with a maximum of 8000 mm between fixtures. For types and typical lighting fixture installation details, see sheet E-206.
4. The cable trays are shown diagrammatically. For typical girder cable tray plans and sections, see sheets E-207 and E-208.

REGISTERED PROFESSIONAL ENGINEER — FADI WALIEDDINE No. 11465 Exp. 12/31/2009 ELECTRICAL — STATE OF CALIFORNIA

FOR REVISION ONLY

REQUEST FOR INFORMATION NOT ADDRESSED IN THIS CCO REMAIN IN FORCE					
2	03/04/08	BARRIER MODIFICATIONS	TW	RG	44
1	02/19/08	ELECTRICAL MODIFICATIONS	MP EL	RR	42
MARK	DATE	DESCRIPTIONS	BY	CH'D	CCO#
REVISIONS					

CONTRACT CHANGE ORDER NO. 44 SO
SHEET 28 OF 92

SAS SUPERSTRUCTURE GIRDER EASTBOUND
LIGHTING AND ELECTRICAL SYSTEMS

SCALE 1:200

E-184

DESIGN OVERSIGHT	CALCULATED/ DESIGNED BY	EDC	DATE 08/02	REVISED BY
BEHZAD GOLEMOHAMMADI	CHECKED BY	CYF	08/02	DATE REVISED

STATE OF CALIFORNIA - DEPARTMENT OF TRANSPORTATION
Caltrans

THIS PLAN IS ACCURATE FOR ELECTRICAL WORK ONLY.

ALL DIMENSIONS ARE IN METERS UNLESS OTHERWISE SHOWN.

FOR REDUCED PLANS ORIGINAL SCALE IS IN MILLIMETERS 0 20 40 60 80

DGN FILE =>T:\13103\MS\pse\SAS Struc\CCO\SAS CC044\04-0120F1_02[8R02.dgn
USERNAME =>llorico

CU 04251 EA 0120F1

LAST REVISION 00-00-00
DATE PLOTTED => 5/22/2008
TIME PLOTTED => 10:55:32 AM

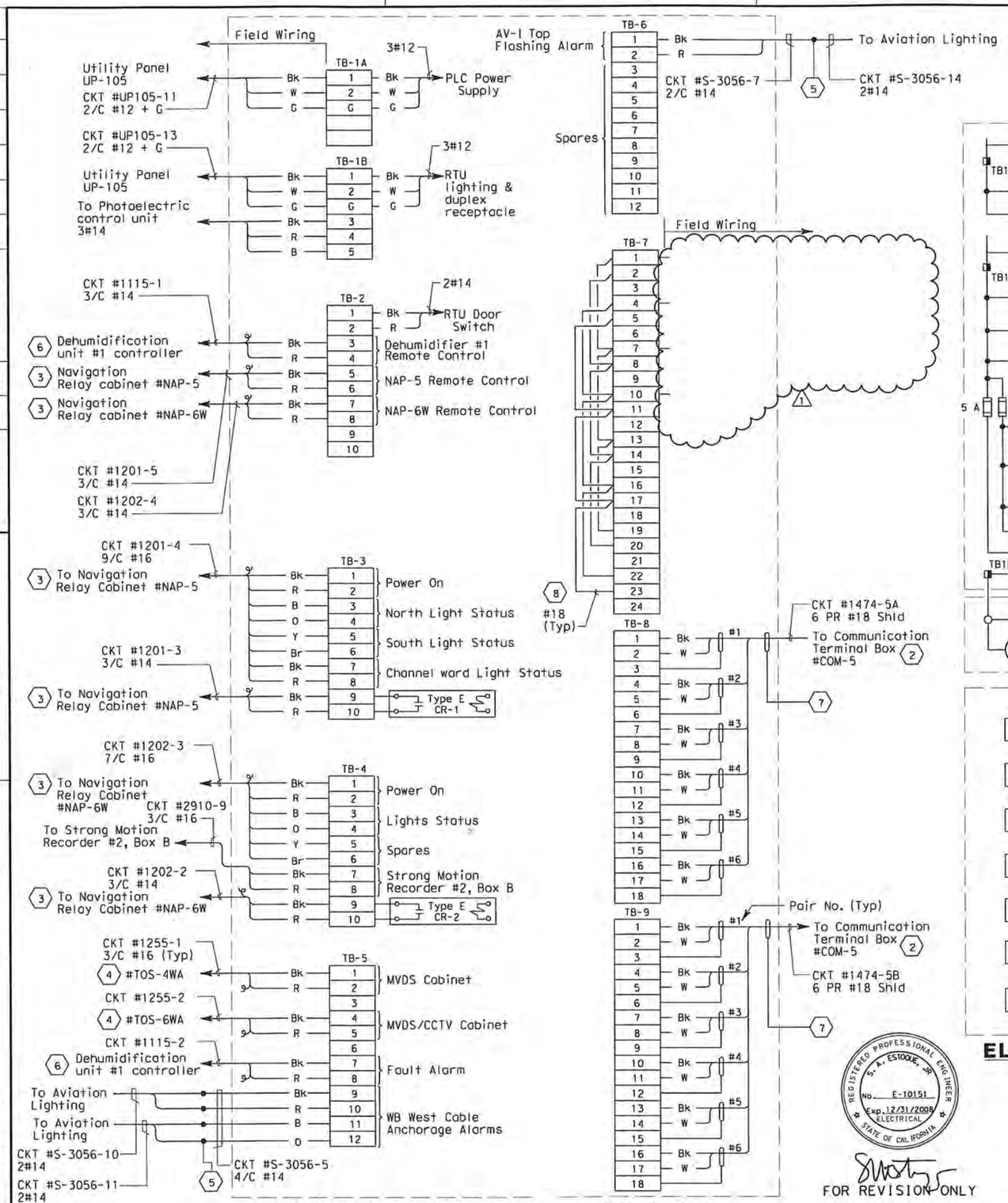

CONNECTION DIAGRAM - RTU #10W

ELEMENTARY DIAGRAM - RTU #10W

(Navigation Lighting System)

FOR REVISION ONLY

DIST	COUNTY	ROUTE	KILOMETER POST TOTAL PROJECT	SHEET No	TOTAL SHEETS
04	SF	80	13.2/13.9	311 R1	1204

Jens Erlingsson 12/19/02
REGISTERED ELECTRICAL ENGINEER DATE

12-6-04
PLANS APPROVAL DATE

REGISTERED PROFESSIONAL ENGINEER JENS ERLINGSSON No. 8249 Exp. 9/30/06 ELECTRICAL STATE OF CALIFORNIA

PB POWER, Inc.
A Parsons Brinckerhoff Company
303 Second St., Suite 700N
San Francisco, CA 94107-1317

The State of California or its officers or agents shall not be responsible for the accuracy or completeness of electronic copies of this plan sheet.

Caltrans now has a web site! To get to the web site, go to http://www.dot.ca.gov

SHEET NOTES:

1. Deleted.
2. For connection diagram to scada system, see sheet E-324.
3. For navigation system connection diagrams, see sheet E-303.
4. Connections to panel door switch. For remote alarm status to RTU.
5. Conductors spliced inside junction box PB-2A located inside the girder.
6. For connection diagram to dehumidification controller, see sheet E-79.
7. Field to tape cable overall shield wire.
8. The Contractor shall install resistors, approximately equal to the impedance (Zo) of the twised pairs, at the extreme ends of the multidrop network.

NOTES:

1. All spare conductors shall be coiled and taped at conductor ends unless terminated.
2. Terminate cable shields to low level ground bus.
3. References:
   - For UP-105 panel schedule, see sheet E-60.
   - For navigation system elementary diagram, see sheet E-298.
   - For RTU #10W panel layout, see sheet E-320.
   - For circuit and conduit/cable tray schedules, see sheets starting at E-401.
   - For strong motion detection system cable block diagrams, see sheet E-383.

REQUEST FOR INFORMATION NOT ADDRESSED IN THIS CCO REMAIN IN FORCE

MARK	DATE	DESCRIPTIONS	BY	CH'D	CCO#
		REVISIONS			
1	03/04/08	BARRIER MODIFICATIONS	JS BM	RG SE	44

CONTRACT CHANGE ORDER NO. 44 SO
SHEET 29 OF 92

DETAILS
SCADA REMOTE TERMINAL UNIT SYSTEM
RTU #10W ELEMENTARY AND CONNECTION DIAGRAM

NO SCALE

E-330

STATE OF CALIFORNIA - DEPARTMENT OF TRANSPORTATION
Caltrans
DESIGN OVERSIGHT
BEHZAD GOLEMOHAMMADI
CALCULATED/DESIGNED BY
CHECKED BY
EDC
JL
DATE REVISED
12/01
10/01
REVISED BY
DATE REVISED

LAST REVISION 00-00-00
DATE PLOTTED => 5/22/2008
TIME PLOTTED => 10:55:51 AM

THIS PLAN IS ACCURATE FOR ELECTRICAL WORK ONLY.

FOR REDUCED PLANS ORIGINAL SCALE IS IN MILLIMETERS 0 20 40 60 80

DGN FILE =>T:\13103\MS\pse\SAS Struc\CCO\SAS CC044\04-0120f1_03\1R01.dgn
USERNAME =>florico

CU 04251

EA 0120F1

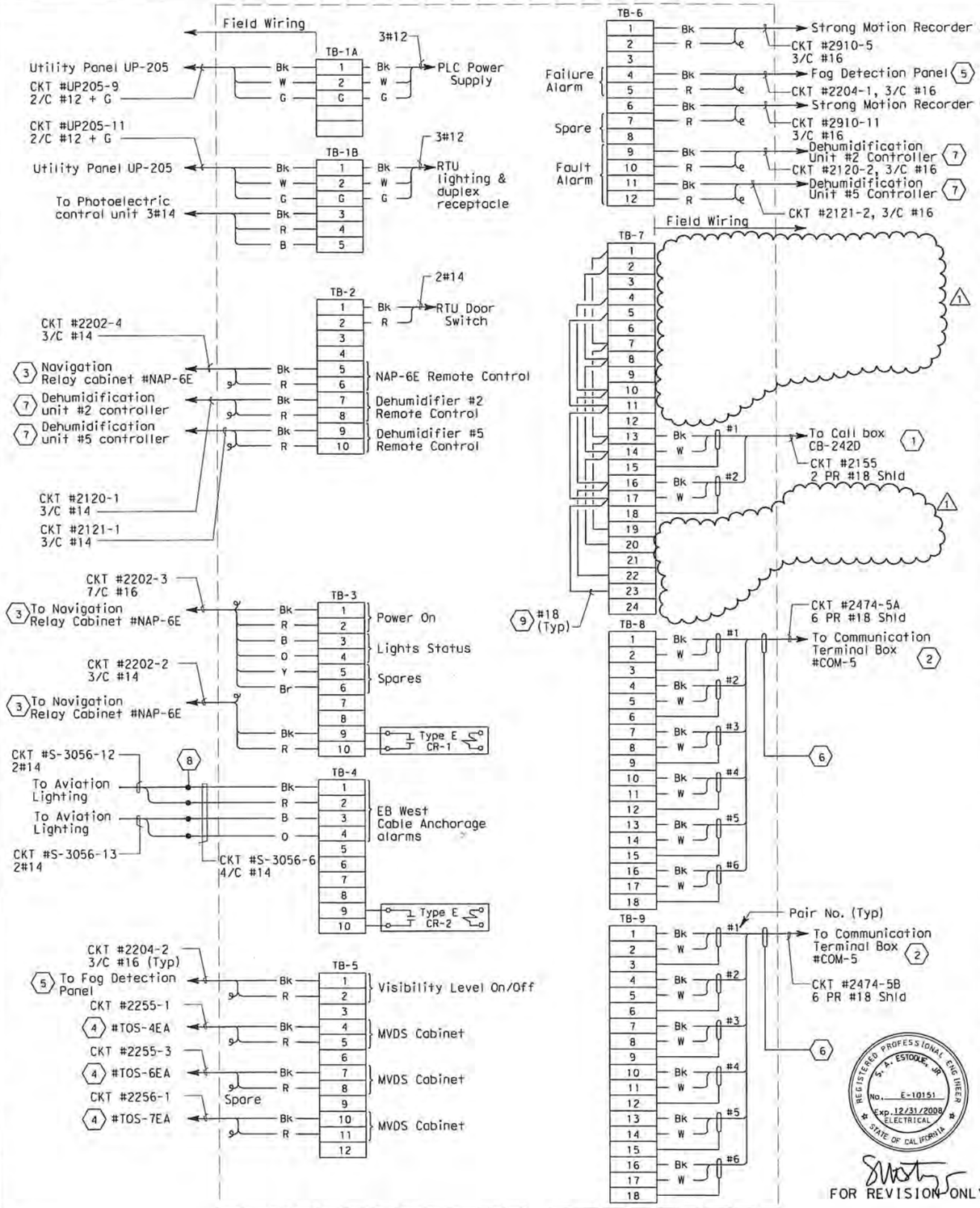

CONNECTION DIAGRAM - RTU #10E

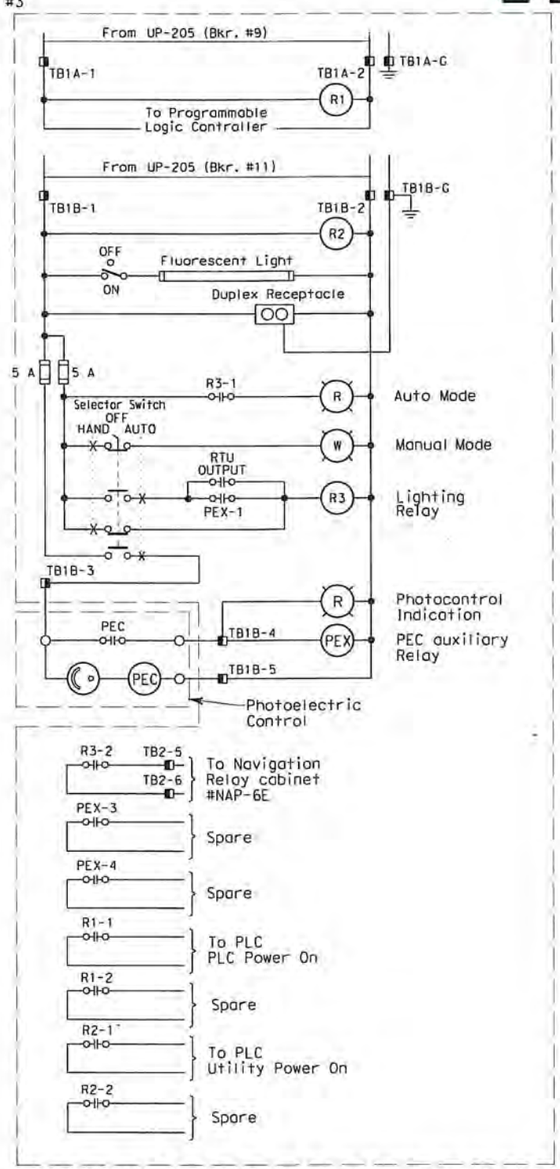

ELEMENTARY DIAGRAM - RTU #10E

(Navigation Lighting System)

DETAILS
SCADA REMOTE TERMINAL UNIT SYSTEM
RTU #10E ELEMENTARY AND CONNECTION DIAGRAM

NO SCALE

E-331

DIST	COUNTY	ROUTE	KILOMETER POST TOTAL PROJECT	SHEET No	TOTAL SHEETS
04	SF	80	13.2/13.9	312 R1	1204

REGISTERED ELECTRICAL ENGINEER — 12/19/02 DATE

12-6-04
PLANS APPROVAL DATE

JENS ERLINGSSON No. 8249 Exp. 9/30/06 ELECTRICAL — REGISTERED PROFESSIONAL ENGINEER — STATE OF CALIFORNIA

PB POWER, Inc.
A Parsons Brinckerhoff Company
303 Second St., Suite 700N
San Francisco, CA 94107-1317

The State of California or its officers or agents shall not be responsible for the accuracy or completeness of electronic copies of this plan sheet.

Caltrans now has a web site! To get to the web site, go to http://www.dot.ca.gov

SHEET NOTES:

(1) For connection diagram to call boxes, see sheet E-399.

(2) For connection diagram to scada system, see sheet E-325.

(3) For connection diagram to navigation system, see sheet E-303.

(4) Connections to panel door switch. For remote alarm status to RTU.

(5) For connection diagram to fog detection panel, see sheet E-300.

(6) Field to tape cable overall shield wire.

(7) For connection diagram to dehumidification controllers, see sheet E-79.

(8) Conductors spliced inside junction box PB-2A located inside the girder.

(9) The Contractor shall install resistors, approximately equal to the impedance (Zo) of the twised pairs, at the extreme ends of the multidrop network.

NOTES:

1. All spare conductors shall be coiled and taped at conductor ends unless terminated.
2. Terminate cable shields to low level ground bus.
3. References:
   - For UP-205 panel schedule, see sheet E-151.
   - For navigation system elementary diagram, see sheet E-299.
   - For RTU #10E panel layout, see sheet E-320.
   - For circuit and conduit/cable tray schedules, see sheets starting at E-401.
   - For strong motion detection system cable block diagrams, see sheets E-383 and E-384.

REQUEST FOR INFORMATION NOT ADDRESSED IN THIS CCO REMAIN IN FORCE

MARK	DATE	DESCRIPTIONS	BY	CH'D	CCO#
		REVISIONS			
1	03/04/08	BARRIER MODIFICATIONS	JS BM	RG SE	44

CONTRACT CHANGE ORDER NO. 4450
SHEET 30 OF 92

DATE	REVISED BY	DATE REVISED
10/01	EDC	12/01

CALCULATED/DESIGNED BY: JL
CHECKED BY:

DESIGN OVERSIGHT: BEHZAD GOLEMOHAMMADI

STATE OF CALIFORNIA - DEPARTMENT OF TRANSPORTATION
Caltrans

LAST REVISION 00-00-00 — DATE PLOTTED => 5/22/2008 — TIME PLOTTED => 10:56:15 AM

THIS PLAN IS ACCURATE FOR ELECTRICAL WORK ONLY.

FOR REDUCED PLANS ORIGINAL SCALE IS IN MILLIMETERS 0 20 40 60 80

DGN FILE => T:\13103\MS\pse\SAS Struc\CCO\SAS CC044\04-0120f1_0312R01.dgn
USERNAME => llorico

CU 04251 | EA 0120F1

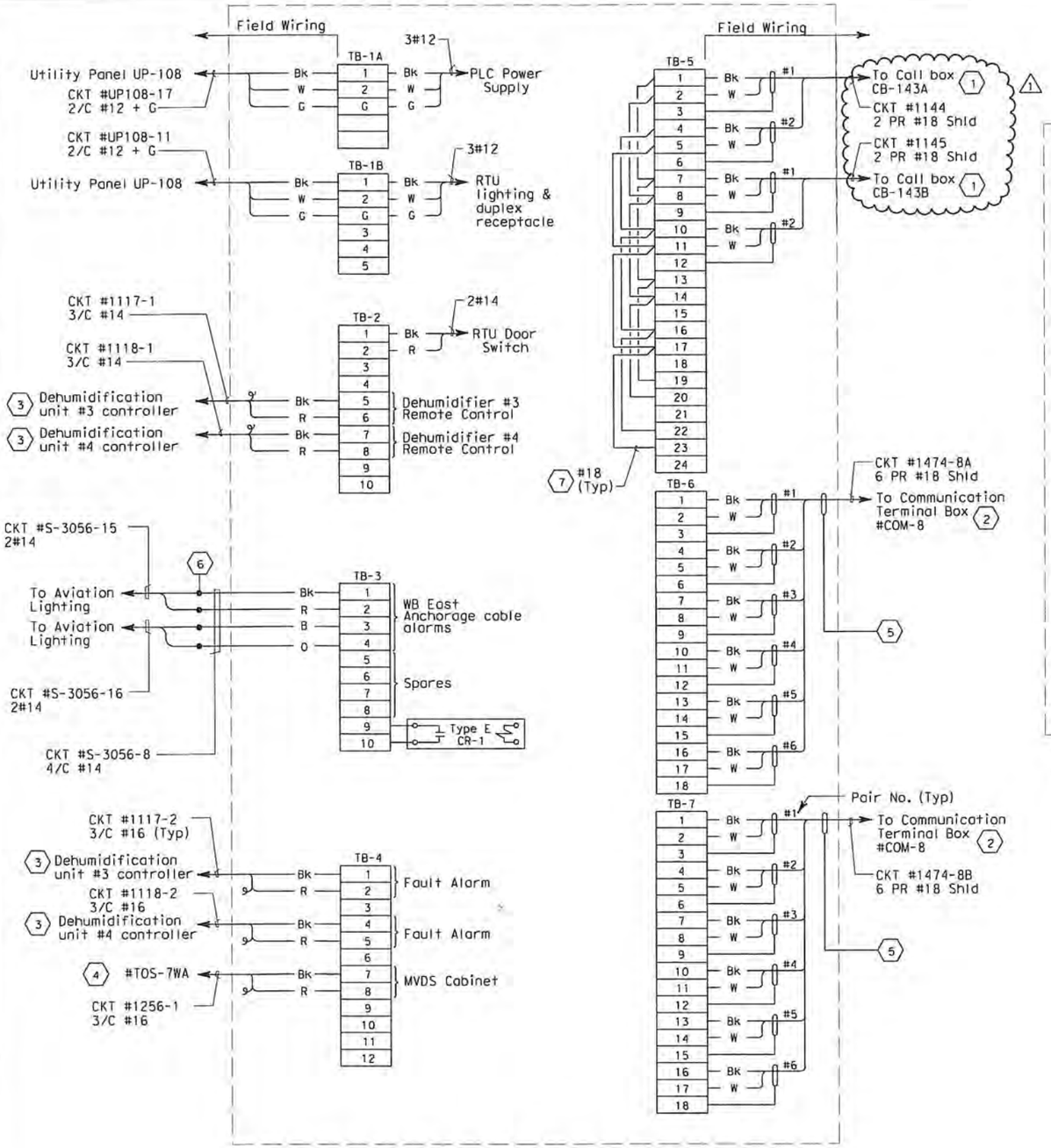

CONNECTION DIAGRAM - RTU #11W

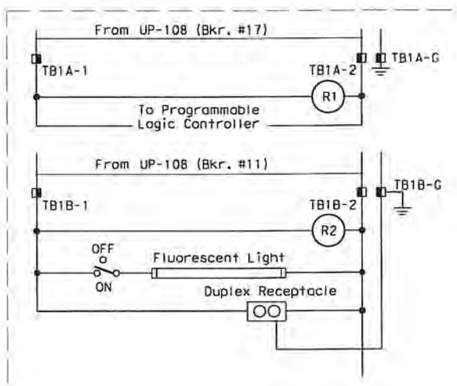

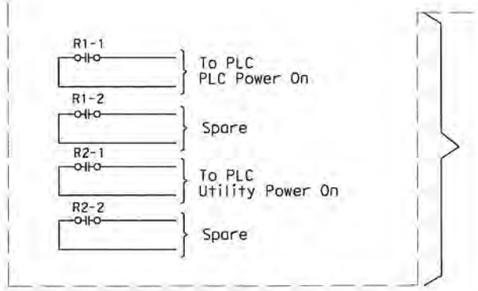

ELEMENTARY DIAGRAM - RTU #11W

SHEET NOTES:

(1) For connection diagram to call boxes, see sheet E-398.

(2) For connection diagram to scada system, see Table A, sheet E-325.

(3) For connection diagram to dehumification controllers, see sheets E-79.

(4) Connections to panel door switch. For remote alarm status to RTU.

(5) Field to tape cable overall shield wire.

(6) Conductors spliced inside junction box PB-2A located inside the girder.

(7) The Contractor shall install resistors, approximately equal to the impedance (Zo) of the twised pairs, at the extreme ends of the multidrop network.

NOTES:

1. All spare conductors shall be coiled and taped at conductor ends unless terminated.
2. Terminate cable shields to low level ground bus.
3. References:
   - For UP-108 panel schedule, see sheet E-63.
   - For RTU #11W panel layout, see sheet E-320.
   - For circuit and conduit/cable tray schedules, see sheets starting at E-401.

DIST	COUNTY	ROUTE	KILOMETER POST TOTAL PROJECT	SHEET No	TOTAL SHEETS
04	SF	80	13.2/13.9	313 R1	1204

Jens Erlingsson 12/19/02
REGISTERED ELECTRICAL ENGINEER DATE

12-6-04
PLANS APPROVAL DATE

REGISTERED PROFESSIONAL ENGINEER — JENS ERLINGSSON No. 8249 Exp. 9/30/06 ELECTRICAL — STATE OF CALIFORNIA

PB POWER, Inc.
A Parsons Brinckerhoff Company
303 Second St., Suite 700N
San Francisco, CA 94107-1317

The State of California or its officers or agents shall not be responsible for the accuracy or completeness of electronic copies of this plan sheet.

Caltrans now has a web site! To get to the web site, go to http://www.dot.ca.gov

REGISTERED PROFESSIONAL ENGINEER — S. A. ESTOQUE, JR. No. E-10151 Exp. 12/31/2008 ELECTRICAL — STATE OF CALIFORNIA

FOR REVISION ONLY

REQUEST FOR INFORMATION NOT ADDRESSED IN THIS CCO REMAIN IN FORCE					
1	03/04/08	BARRIER MODIFICATIONS	JS BM	RG SE	44
MARK	DATE	DESCRIPTIONS	BY	CH'D	CCO#
REVISIONS					

CONTRACT CHANGE ORDER NO. 44 SO
SHEET 31 OF 92

DETAILS
SCADA REMOTE TERMINAL UNIT SYSTEM
RTU #11W ELEMENTARY AND CONNECTION DIAGRAM
NO SCALE

E-332

REVISED BY	DATE REVISED
EDC	10/01
JL	12/01

CALCULATED/DESIGNED BY
CHECKED BY

DESIGN OVERSIGHT
BEHZAD GOLEMOHAMMADI

STATE OF CALIFORNIA - DEPARTMENT OF TRANSPORTATION
Caltrans

LAST REVISION 00-00-00
DATE PLOTTED => 5/22/2008
TIME PLOTTED => 10:56:40 AM

FOR REDUCED PLANS ORIGINAL SCALE IS IN MILLIMETERS 0 20 40 60 80

DGN FILE =>T:\13103\WS\pse\SAS Struc\CCO\SAS CC044\04-0120f1_0313R01.dgn
USERNAME =>florico
CU 04251
EA 0120F1

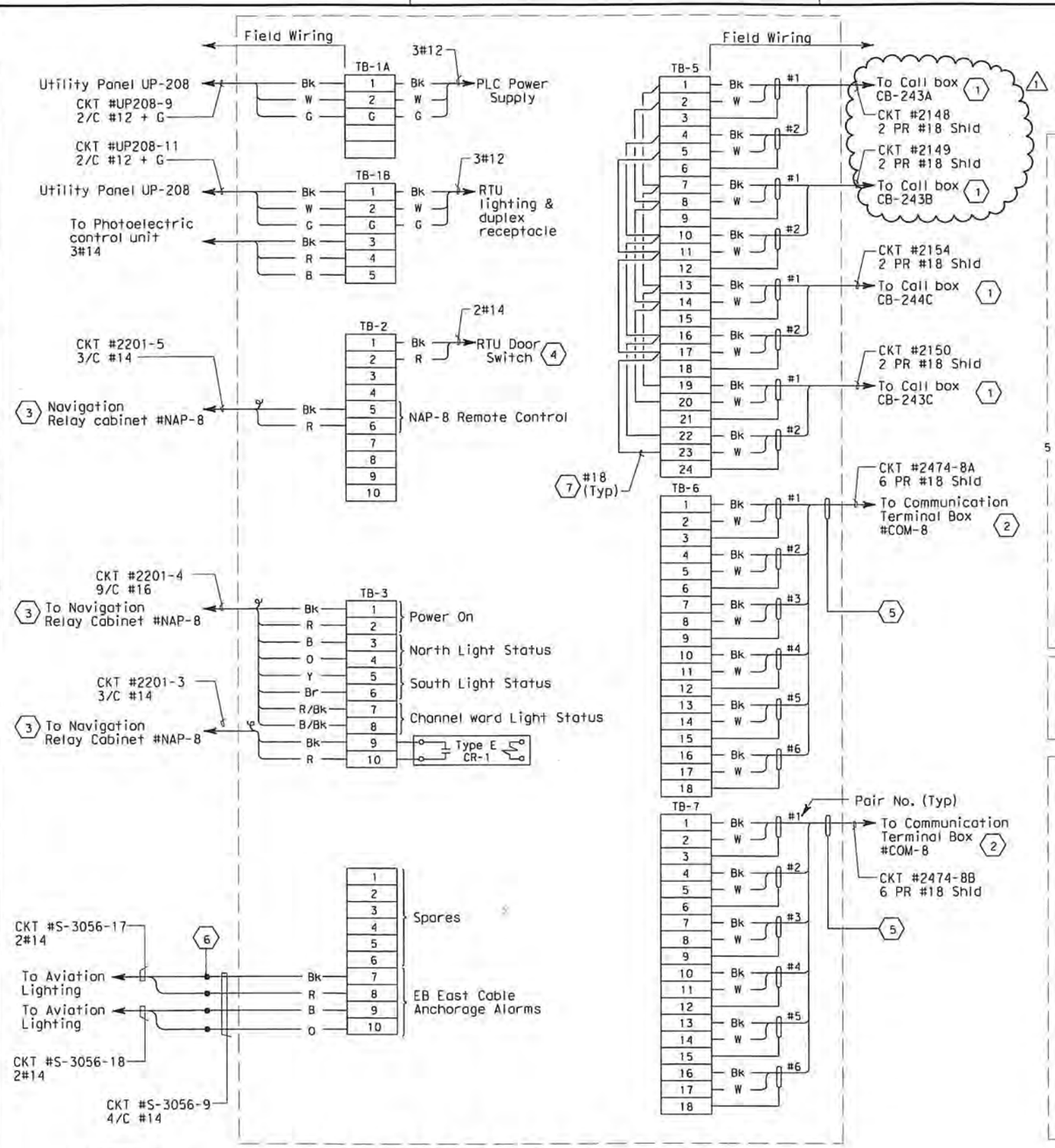

CONNECTION DIAGRAM - RTU #11E

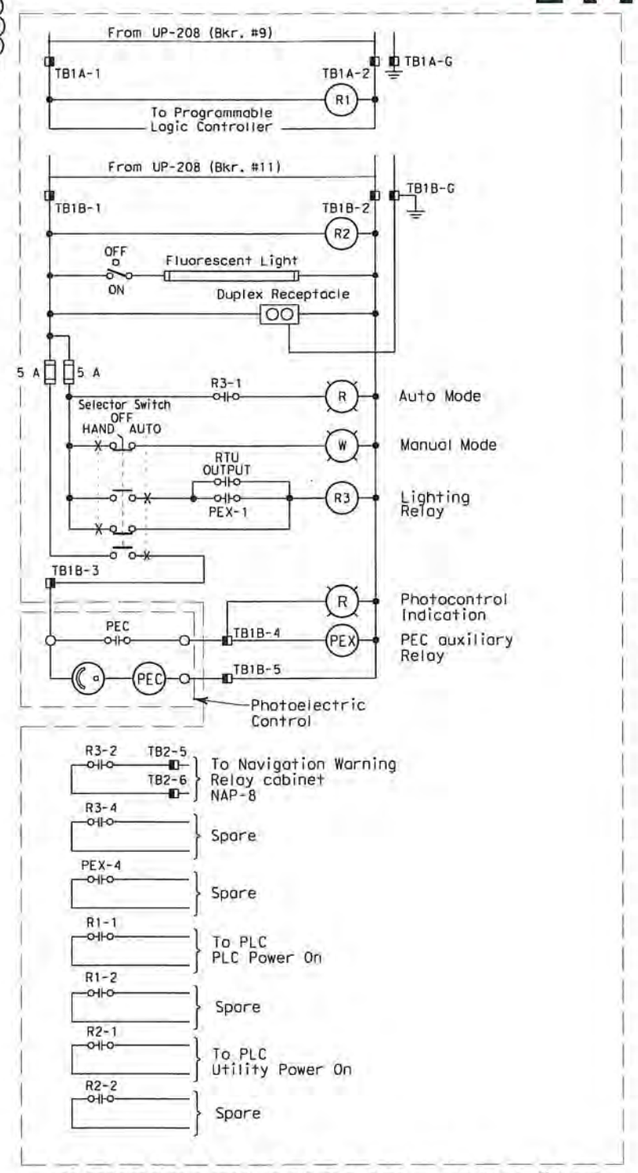

ELEMENTARY DIAGRAM - RTU #11E

(Navigation Lighting System)

SHEET NOTES:

1. For connection diagram to call boxes, see sheet E-400.
2. For connection diagram to scada system, see Table A, sheet E-325.
3. For connection diagram to navigation system, see sheet E-303.
4. Connections to panel door switch. For remote alarm status to RTU.
5. Field to tape cable overall shield wire.
6. Conductors spliced inside junction box PB-2A located inside the girder.
7. The Contractor shall install resistors, approximately equal to the impedance (Zo) of the twised pairs, at the extreme ends of the multidrop network.

NOTES:

1. All spare conductors shall be coiled and taped at conductor ends unless terminated.
2. Terminate cable shields to low level ground bus.
3. References:
   - For Up-208 panel schedule, see sheet E-154.
   - For navigation system elementary diagram, see sheet E-298.
   - For RTU #11E panel layout, see sheet E-320.
   - For circuit and conduit/cable tray schedules, see sheets starting at E-401.

DETAILS
SCADA REMOTE TERMINAL UNIT SYSTEM
RTU #11E ELEMENTARY AND CONNECTION DIAGRAM

NO SCALE

E-333

DIST	COUNTY	ROUTE	KILOMETER POST TOTAL PROJECT	SHEET No	TOTAL SHEETS
04	SF	80	13.2/13.9	314 R1	1204

REGISTERED ELECTRICAL ENGINEER — 12/19/02 DATE

12-6-04
PLANS APPROVAL DATE

REGISTERED PROFESSIONAL ENGINEER — JENS ERLINGSSON No. 8249 Exp. 9/30/06 ELECTRICAL — STATE OF CALIFORNIA

PB POWER, Inc.
A Parsons Brinckerhoff Company
303 Second St., Suite 700N
San Francisco, CA 94107-1317

The State of California or its officers or agents shall not be responsible for the accuracy or completeness of electronic copies of this plan sheet.

Caltrans now has a web site! To get to the web site, go to http://www.dot.ca.gov

DATE	REVISED BY	DATE REVISED
10/01	EDC	11/01

CALCULATED/DESIGNED BY
CHECKED BY
DESIGN OVERSIGHT — BEHZAD GOLEMOHAMMADI
STATE OF CALIFORNIA - DEPARTMENT OF TRANSPORTATION — Caltrans

REGISTERED PROFESSIONAL ENGINEER — S. A. ESTOQUE, JR. No. E-10151 Exp. 12/31/2008 ELECTRICAL — STATE OF CALIFORNIA

FOR REVISION ONLY

REQUEST FOR INFORMATION NOT ADDRESSED IN THIS CCO REMAIN IN FORCE

MARK	DATE	DESCRIPTIONS	BY	CH'D	CCO#
		REVISIONS			
1	03/04/08	BARRIER MODIFICATIONS	JS BM	RG SE	44

CONTRACT CHANGE ORDER NO. 4450
SHEET 32 OF 92

LAST REVISION 00-00-00 — DATE PLOTTED => 5/22/2008 — TIME PLOTTED => 10:56:59 AM

FOR REDUCED PLANS ORIGINAL SCALE IS IN MILLIMETERS 0 20 40 60 80

DGN FILE =>T:\13103\WS\pse\SAS Struc\CCO\SAS CCO44\04-0120f1_03[4R01.dgn
USERNAME =>llorico

CU 04251 — EA 0120F1

DIST	COUNTY	ROUTE	KILOMETER POST TOTAL PROJECT	SHEET No	TOTAL SHEETS
04	SF	80	13.2/13.9	351 R2	1204

REGISTERED ELECTRICAL ENGINEER — 12/19/02 DATE

12-6-04
PLANS APPROVAL DATE

REGISTERED PROFESSIONAL ENGINEER — JENS ERLINGSSON No. 8249 Exp. 9/30/06 ELECTRICAL — STATE OF CALIFORNIA

PB POWER, Inc.
A Parsons Brinckerhoff Company
303 Second St., Suite 700N
San Francisco, CA 94107-1317

The State of California or its officers or agents shall not be responsible for the accuracy or completeness of electronic copies of this plan sheet.

Caltrans now has a web site! To get to the web site, go to http://www.dot.ca.gov

DESIGN OVERSIGHT	CALCULATED/ DESIGNED BY	KG	DATE 11/01	REVISED BY
BEHZAD GOLEMOHAMMADI	CHECKED BY	EDC	11/01	DATE REVISED

STATE OF CALIFORNIA - DEPARTMENT OF TRANSPORTATION
Caltrans

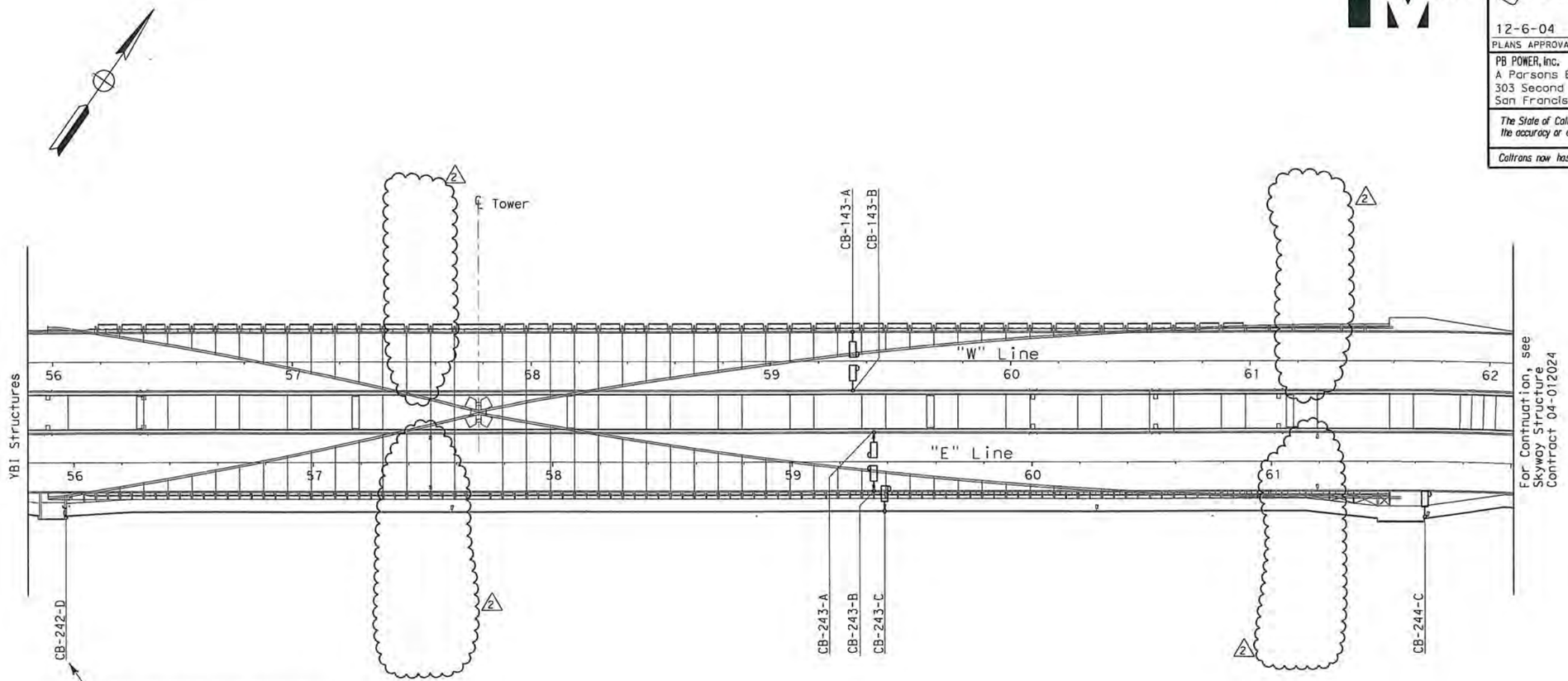

PLAN

NOTES:

1. References:
   - For call box conduit routing see sheets E-46 thru E-51 (WB), and sheets E-135 thru E-140 (EB).
   - For call box schedule, see sheet E-397.
   - For call box wiring diagrams, see sheets E-398 (WB), and sheets E-399 and E-400 (EB).
   - Call box are State-furnished and Contractor installed.

REGISTERED PROFESSIONAL ENGINEER — S. A. ESTOQUE, JR. No. E-10151 Exp. 12/31/2008 ELECTRICAL — STATE OF CALIFORNIA

FOR REVISION ONLY

REQUEST FOR INFORMATION NOT ADDRESSED IN THIS CCO REMAIN IN FORCE					
2	03/04/08	BARRIER MODIFICATIONS	JS BM	RG SE	44
1	02/19/08	ELECTRICAL MODIFICATIONS	MP EL	RR	42
MARK	DATE	DESCRIPTIONS	BY	CH'D	CCO#
		REVISIONS			

CONTRACT CHANGE ORDER NO. 44 SO
SHEET 33 OF 92

CALL BOX SYSTEM
SAS SUPERSTRUCTURE LOCATIONS
SCALE 1:1000

E-396

LAST REVISION 00-00-00 — DATE PLOTTED => 5/22/2008 — TIME PLOTTED => 10:57:17 AM

THIS PLAN ACCURATE FOR ELECTRICAL WORK ONLY.

FOR REDUCED PLANS ORIGINAL SCALE IS IN MILLIMETERS 0 20 40 60 80

DGN FILE =>T:\13103\MS\pse\SAS Struc\CCO\SAS CCO44\04-0120f1_03S1R02.dgn
USERNAME =>florico
CU 04251
EA 0120F1

CALL BOX SCHEDULE - WESTBOUND

Call Box Number	Station Number	Mounting Type	Location: Roadway Location	RTU Connection	Remarks
CB-143A	59 + 33.80	Steel Barrier	Westbound North	RTU #11W	
CB-143B	59 + 33.80	Steel Barrier	Westbound South	RTU #11W	

2

CALL BOX SCHEDULE - EASTBOUND

Call Box Number	Station Number	Mounting Type	Location: Roadway Side	RTU Connection	Remarks
					2
CB-242D	55 + 96	Bike Path Railing	Bike Path	RTU #10E	Installed By Others
CB-243A	59 + 35	Steel Barrier	Eastbound North	RTU #11E	
CB-243B	59 + 35	Steel Barrier	Eastbound South	RTU #11E	
CB-243C	59 + 48	Bike Path Railing	Bike Path	RTU #11E	
					2
CB-244C	61 + 64	Bike Path Railing	Bike Path	RTU #11E	At Pier E2E

Caltrans Metric

DIST	COUNTY	ROUTE	KILOMETER POST TOTAL PROJECT	SHEET No	TOTAL SHEETS
04	SF	80	13.2/13.9	352 R2	1204

James Ellingsson 12/19/02
REGISTERED ELECTRICAL ENGINEER DATE

12-6-04
PLANS APPROVAL DATE

REGISTERED PROFESSIONAL ENGINEER — JENS ERLINGSSON No. 8249 Exp. 9/30/08 ELECTRICAL — STATE OF CALIFORNIA

PB POWER, Inc.
A Parsons Brinckerhoff Company
303 Second St., Suite 700N
San Francisco, CA 94107-1317

The State of California or its officers or agents shall not be responsible for the accuracy or completeness of electronic copies of this plan sheet.

Caltrans now has a web site! To get to the web site, go to http://www.dot.ca.gov

NOTES:

1. Call boxes will be State-furnished.
2. References:
   - For RTU #10W, #11W, #10E #11E panel layout, see sheet E-320.

REGISTERED PROFESSIONAL ENGINEER — S. A. ESTOQUE, JR. No. E-10151 Exp. 12/31/2008 ELECTRICAL — STATE OF CALIFORNIA

FOR REVISION ONLY

REQUEST FOR INFORMATION NOT ADDRESSED IN THIS CCO REMAIN IN FORCE					
2	03/04/08	BARRIER MODIFICATIONS	JS BM	RC SE	44
1	02/19/08	ELECTRICAL MODIFICATIONS	MP EL	RR	42
MARK	DATE	DESCRIPTIONS	BY	CH'D	CCO#
		REVISIONS			

CONTRACT CHANGE ORDER NO. 44 SO
SHEET 34 OF 92

DETAILS
CALL BOX SYSTEM
CALL BOX SCHEDULES
NO SCALE

E-397

CALCULATED/ DESIGNED BY	EJL	DATE 9/01	REVISED BY	DATE REVISED
BY	EDC	11/01		

DESIGN OVERSIGHT
BEHZAD GOLEMOHAMMADI

STATE OF CALIFORNIA - DEPARTMENT OF TRANSPORTATION
Caltrans

THIS PLAN ACCURATE FOR ELECTRICAL WORK ONLY.

FOR REDUCED PLANS ORIGINAL SCALE IS IN MILLIMETERS 0 20 40 60 80

DGN FILE =>T:\13103\WS\pse\SAS Struc\CCO\SAS CCO44\04-0120F1_0352R02.dgn
USERNAME =>llorico

CU 04251

EA 0120F1

LAST REVISION 00-00-00
DATE PLOTTED => 5/22/2008
TIME PLOTTED => 10:57:34 AM

DIST	COUNTY	ROUTE	KILOMETER POST TOTAL PROJECT	SHEET No	TOTAL SHEETS
04	SF	80	13.2/13.9	353 R1	1204

REGISTERED ELECTRICAL ENGINEER — 12/19/02 DATE

12-6-04
PLANS APPROVAL DATE

REGISTERED PROFESSIONAL ENGINEER — JENS ERLINGSSON No. 8249 Exp. 9/30/06 ELECTRICAL — STATE OF CALIFORNIA

PB POWER, Inc.
A Parsons Brinckerhoff Company
303 Second St., Suite 700N
San Francisco, CA 94107-1317

The State of California or its officers or agents shall not be responsible for the accuracy or completeness of electronic copies of this plan sheet.

Caltrans now has a web site! To get to the web site, go to http://www.dot.ca.gov

SHEET NOTES:

1. Conductors spliced inside PB-Ltg.
2. For continuation, see RTU 11W connection diagram sheet E-332. 1
3. Data cable 1-2 pairs #18 shielded with overall shield. Coil and tape end of pair #2 inside Call Box.
4. The Contractor shall install resistors, approximately equal to the impedance (Zo) of the twised pairs, at the extreme ends of the multidrop network.

NOTE:

1. References:
   - For panel schedules, see sheets E-60 and E-63.
   - For circuit and conduit/cable tray schedules, see sheets starting at E-401.
   - For call Boxes schedule, see sheet E-397.

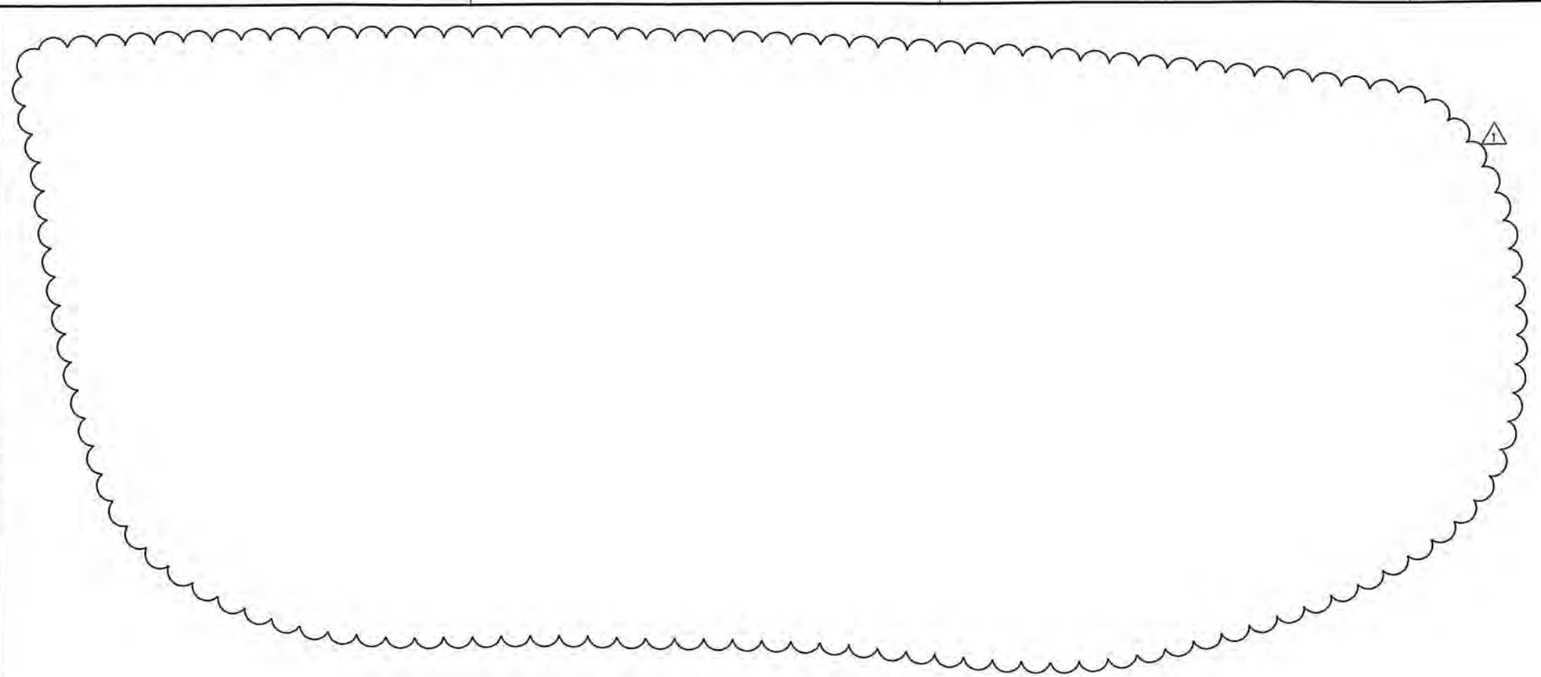

WESTBOUND SAS SUPERSTRUCTURE

REGISTERED PROFESSIONAL ENGINEER — S. A. ESTOCLET, JR. No. E-10151 Exp. 12/31/2008 ELECTRICAL — STATE OF CALIFORNIA

FOR REVISION ONLY

REQUEST FOR INFORMATION NOT ADDRESSED IN THIS CCO REMAIN IN FORCE

MARK	DATE	REVISIONS DESCRIPTIONS	BY	CH'D	CCO#
1	03/04/08	BARRIER MODIFICATIONS	JS BM	RG SE	44

CONTRACT CHANGE ORDER NO. 44 SO
SHEET 35 OF 92

DETAILS
CALL BOX SYSTEM
CALL BOX WIRING DIAGRAM
NO SCALE

E-398

THIS PLAN ACCURATE FOR ELECTRICAL WORK ONLY.

STATE OF CALIFORNIA - DEPARTMENT OF TRANSPORTATION
Caltrans
DESIGN OVERSIGHT
BEHZAD GOLEMOHAMMADI

	CALCULATED/ DESIGNED BY	CHECKED BY	DATE	REVISED BY	DATE REVISED
	E.J.L.	EDC	08/01		11/01

LAST REVISION 00-00-00
DATE PLOTTED => 5/22/2008
TIME PLOTTED => 10:57:57 AM

FOR REDUCED PLANS ORIGINAL SCALE IS IN MILLIMETERS 0 20 40 60 80

DGN FILE =>T:\13103\WS\pse\SAS Struc\CCO\SAS CC044\04-0120f1_0353R01.dgn
USERNAME =>lloriba

CU 04251 EA 0120F1

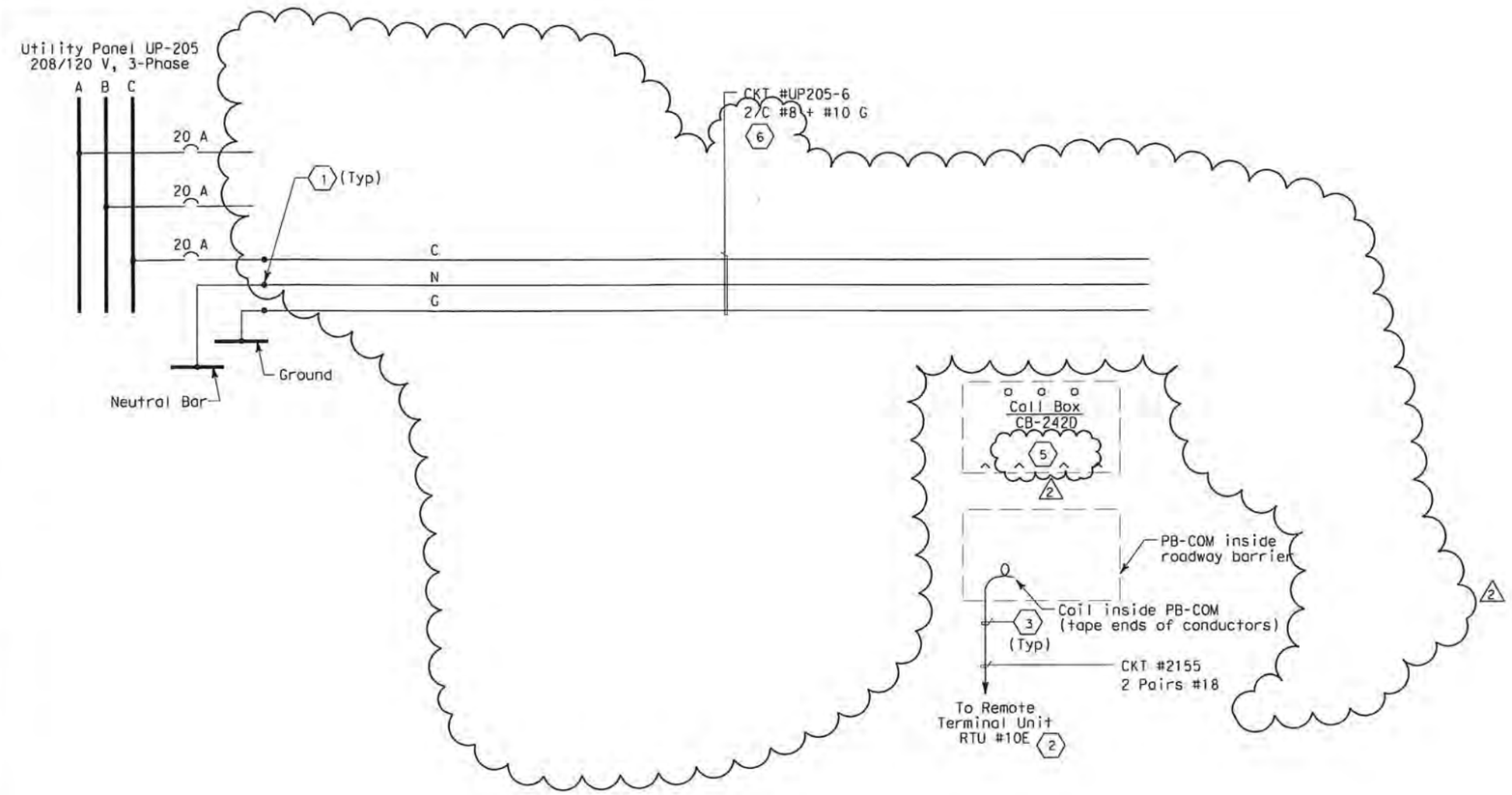

Caltrans Metric

DIST	COUNTY	ROUTE	KILOMETER POST TOTAL PROJECT	SHEET No	TOTAL SHEETS
04	SF	80	13.2/13.9	354 R2	1204

Jens Erlingsson 12/19/02
REGISTERED ELECTRICAL ENGINEER DATE

REGISTERED PROFESSIONAL ENGINEER
JENS ERLINGSSON
No. 8249
Exp. 9/30/06
ELECTRICAL
STATE OF CALIFORNIA

12-6-04
PLANS APPROVAL DATE

PB POWER, Inc.
A Parsons Brinckerhoff Company
303 Second St., Suite 700N
San Francisco, CA 94107-1317

The State of California or its officers or agents shall not be responsible for the accuracy or completeness of electronic copies of this plan sheet.

Caltrans now has a web site! To get to the web site, go to http://www.dot.ca.gov

SHEET NOTES:

(1) Conductors spliced inside PB-Ltg.

(2) For continuation, see RTU #10E connection diagrams sheet E-331.

(3) Data cable 1-2 pairs #18 shielded with overall shield. Coil and tape end of pair #2 inside Call Box.

(2) (4) Deleted.

(5) Not deleted from contract, (2) state furnished and installed by others.

(2) (6) Cable shall be unterminated, coiled and taped at both ends until call box is installed.

NOTE:

1. References:
   - For panel schedules, see sheets E-151.
   - For circuit and conduit/cable tray schedules, see sheets starting at E-401.
   - For call boxes schedule, see sheet E-397.

EASTBOUND SAS SUPERSTRUCTURE

REGISTERED PROFESSIONAL ENGINEER
S. K. ESTOOLE, JR
No. E-10151
Exp. 12/31/2006
ELECTRICAL
STATE OF CALIFORNIA

FOR REVISION ONLY

REQUEST FOR INFORMATION NOT ADDRESSED IN THIS CCO REMAIN IN FORCE					
(2)	03/04/08	BARRIER MODIFICATIONS	JS BM	RG SE	44
(1)	02/19/08	ELECTRICAL MODIFICATIONS	MP EL	RR	42
MARK	DATE	DESCRIPTIONS	BY	CH'D	CCO#
REVISIONS					

CONTRACT CHANGE ORDER NO. 44 SO
SHEET 36 OF 92

DETAILS
CALL BOX SYSTEM
CALL BOX WIRING DIAGRAM
NO SCALE

E-399

STATE OF CALIFORNIA - DEPARTMENT OF TRANSPORTATION	DESIGN OVERSIGHT	REVISED BY	
Caltrans	BEHZAD GOLEMOHAMMADI	DATE 08/01	DATE REVISED
	CALCULATED/DESIGNED BY EJL	EDC 11/01	
	CHECKED BY		

LAST REVISION 00-00-00 DATE PLOTTED => 5/22/2008 TIME PLOTTED => 10:58:20 AM

THIS PLAN ACCURATE FOR ELECTRICAL WORK ONLY.

FOR REDUCED PLANS ORIGINAL SCALE IS IN MILLIMETERS 0 20 40 60 80

DGN FILE =>T:\13103\MS\pse\SAS Struc\CCO\SAS CCO44\04-0120F1_0354R02.dgn
USERNAME =>florico

CU 04251 EA 0120F1

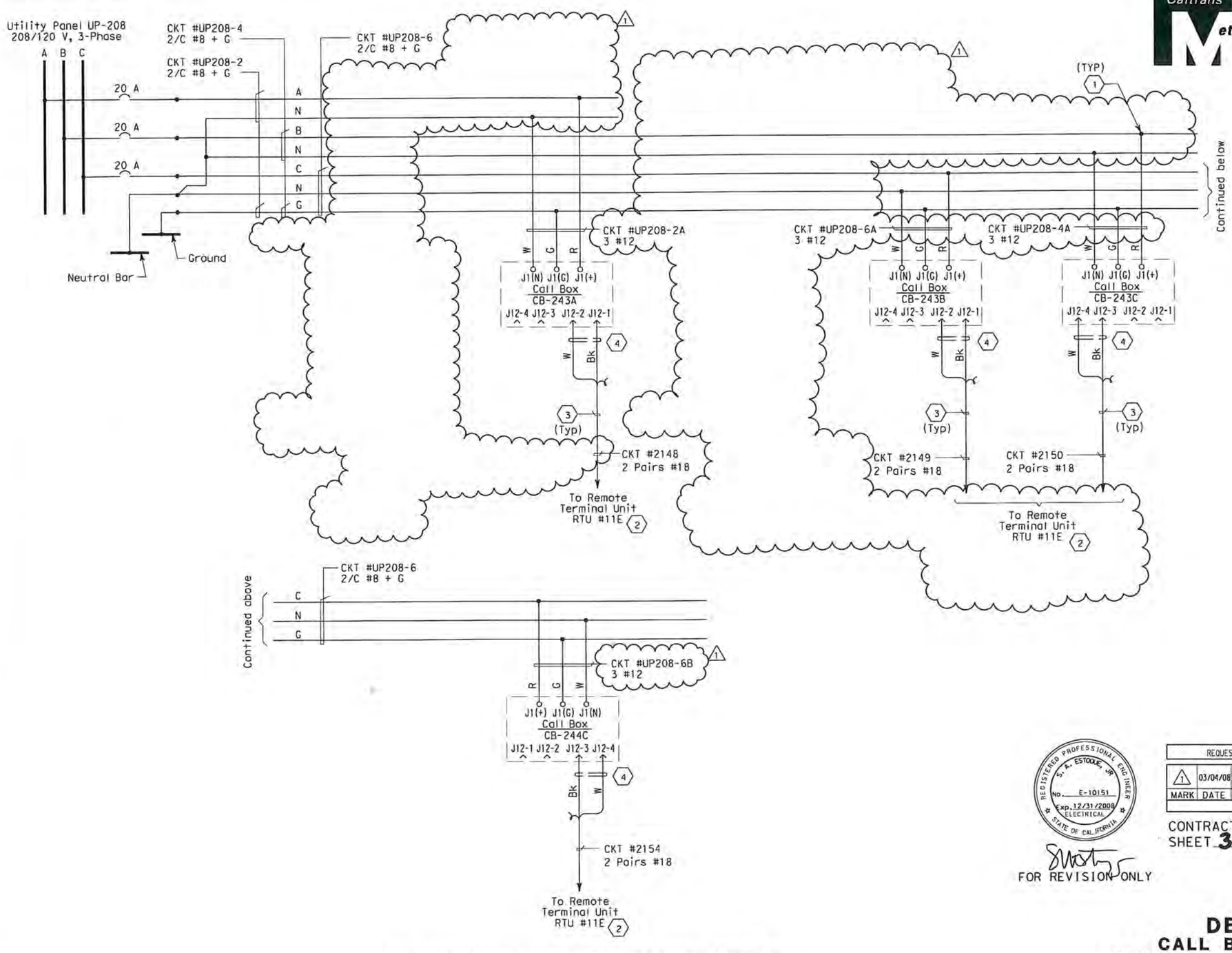

EASTBOUND SAS SUPERSTRUCTURE

DIST	COUNTY	ROUTE	KILOMETER POST TOTAL PROJECT	SHEET No	TOTAL SHEETS
04	SF	80	13.2/13.9	355 R1	1204

Jens Erlingsson 12/19/02
REGISTERED ELECTRICAL ENGINEER DATE

12-6-04
PLANS APPROVAL DATE

REGISTERED PROFESSIONAL ENGINEER — JENS ERLINGSSON No. 8249 Exp. 9/30/06 ELECTRICAL — STATE OF CALIFORNIA

PB POWER, Inc.
A Parsons Brinckerhoff Company
303 Second St., Suite 700N
San Francisco, CA 94107-1317

The State of California or its officers or agents shall not be responsible for the accuracy or completeness of electronic copies of this plan sheet.

Caltrans now has a web site! To get to the web site, go to http://www.dot.ca.gov

SHEET NOTES:

1. Conductors spliced inside PB-Ltg.
2. For continuation, see RTU #11E connection diagrams sheet E-333.
3. Data cable 1-2 pairs #18 shielded with overall shield. Coil and tape end of pair #2 inside Call Box.
4. The Contractor shall install resistors, approximately equal to the impedance (Zo) of the twised pairs, at the extreme ends of the multidrop network.

NOTE:

1. References:
   - For panel schedules, see sheets E-154.
   - For circuit and conduit/cable tray schedules, see sheets starting at E-401.
   - For call boxes schedule, see sheet E-397.

REGISTERED PROFESSIONAL ENGINEER — S. A. ESTOQUE, JR. No. E-10151 Exp. 12/31/2008 ELECTRICAL — STATE OF CALIFORNIA

FOR REVISION ONLY

REQUEST FOR INFORMATION NOT ADDRESSED IN THIS CCO REMAIN IN FORCE					
1	03/04/08	BARRIER MODIFICATIONS	JS BM	RG SE	44
MARK	DATE	DESCRIPTIONS	BY	CH'D	CCO#
		REVISIONS			

CONTRACT CHANGE ORDER NO. 4490
SHEET 37 OF 92

DETAILS
CALL BOX SYSTEM
CALL BOX WIRING DIAGRAM
NO SCALE

E-400

STATE OF CALIFORNIA - DEPARTMENT OF TRANSPORTATION
Caltrans
DESIGN OVERSIGHT
BEHZAD GOLEMOHAMMADI
CALCULATED/DESIGNED BY
CHECKED BY
EJL
EDC
DATE 09/01
11/01
REVISED BY
DATE REVISED

LAST REVISION 00-00-00
DATE PLOTTED => 5/22/2008
TIME PLOTTED => 10:56:38 AM

THIS PLAN ACCURATE FOR ELECTRICAL WORK ONLY.

FOR REDUCED PLANS ORIGINAL SCALE IS IN MILLIMETERS 0 20 40 60 80

DGN FILE =>T:\13103\MS\pse\SAS Struc\CCO\SAS CCO44\04-0120f1_0355R01.dgn
USERNAME =>llorico

CU 04251

EA 0120F1

DIST	COUNTY	ROUTE	KILOMETER POST TOTAL PROJECT	SHEET No	TOTAL SHEETS
04	SF	80	13.2/13.9	358 R1	1204

REGISTERED ELECTRICAL ENGINEER — 12/19/02 DATE

12-6-04
PLANS APPROVAL DATE

REGISTERED PROFESSIONAL ENGINEER — JENS ERLINGSSON No. 8249 Exp. 9/30/06 ELECTRICAL — STATE OF CALIFORNIA

PB POWER, Inc.
A Parsons Brinckerhoff Company
303 Second St., Suite 700N
San Francisco, CA 94107-1317

The State of California or its officers or agents shall not be responsible for the accuracy or completeness of electronic copies of this plan sheet.

Caltrans now has a web site! To get to the web site, go to http://www.dot.ca.gov

REGISTERED PROFESSIONAL ENGINEER — S. A. ESTOQUE, JR. No. E-10151 Exp. 12/31/2008 ELECTRICAL — STATE OF CALIFORNIA

FOR REVISION ONLY

REQUEST FOR INFORMATION NOT ADDRESSED IN THIS CCO REMAIN IN FORCE

MARK	DATE	DESCRIPTIONS	BY	CH'D	CCO#
		REVISIONS			
1	03/04/08	BARRIER MODIFICATIONS	JS BM	RC SE	44

CONTRACT CHANGE ORDER NO. 4450
SHEET 38 OF 92

CONDUIT DATA

Conduit No	Reference	Size	Type	Total Fill (mm²)	Allowable Fill (mm²)	Included Cable No.	Conductor Type
1361	E-47	41	RGS conduit	212.85	534.55	Pull rope	Soft-Fiber Polyester
						A-3002-2	3 + 1 gnd #6,#8, 600 V, RHH/RHW insulation
1362	E-47	41	RGS conduit	212.85	534.55	Pull rope	Soft-Fiber Polyester
						A-3002-2	3 + 1 gnd #6,#8, 600 V, RHH/RHW insulation
1363	E-47	41	RGS conduit	212.85	534.55	Pull rope	Soft-Fiber Polyester
						A-3002-2	3 + 1 gnd #6,#8, 600 V, RHH/RHW insulation
1364	E-47	41	RGS conduit	0.00	534.55	Pull rope	Soft-Fiber Polyester
1365	E-47	41	RGS conduit	212.85	534.55	A-3003-2	3 + 1 gnd #6,#8, 600 V, RHH/RHW insulation
						Pull rope	Soft-Fiber Polyester
1366	E-47	41	RGS conduit	440.31	534.55	A-3003-2	3 + 1 gnd #6,#8, 600 V, RHH/RHW insulation
						UP106-1	1-2/C + gnd #8, 600 V, EPR insulation
						Pull rope	Soft-Fiber Polyester
1367	E-47	41	RGS conduit	440.31	534.55	Pull rope	Soft-Fiber Polyester
						A-3003-2	3 + 1 gnd #6,#8, 600 V, RHH/RHW insulation
						UP106-1	1-2/C + gnd #8, 600 V, EPR insulation
1368	E-47	41	RGS conduit	440.31	534.55	A-3003-2	3 + 1 gnd #6,#8, 600 V, RHH/RHW insulation
						Pull rope	Soft-Fiber Polyester
						UP106-1	1-2/C + gnd #8, 600 V, EPR insulation
1369	E-48	41	RGS conduit	440.31	534.55	A-3003-2	3 + 1 gnd #6,#8, 600 V, RHH/RHW insulation
						UP106-1	1-2/C + gnd #8, 600 V, EPR insulation
						Pull rope	Soft-Fiber Polyester
1370	E-48	41	RGS conduit	227.46	534.55	Pull rope	Soft-Fiber Polyester
						UP106-1	1-2/C + gnd #8, 600 V, EPR insulation
1371	E-48	41	RGS conduit	212.85	534.55	A-3004-2	3 + 1 gnd #6,#8, 600 V, RHH/RHW insulation
						Pull rope	Soft-Fiber Polyester
1372	E-48	41	RGS conduit	212.85	534.55	A-3004-2	3 + 1 gnd #6,#8, 600 V, RHH/RHW insulation
						Pull rope	Soft-Fiber Polyester
1373	E-48	41	RGS conduit	212.85	534.55	Pull rope	Soft-Fiber Polyester
						A-3004-2	3 + 1 gnd #6,#8, 600 V, RHH/RHW insulation
1374	E-48	41	RGS conduit	212.85	534.55	Pull rope	Soft-Fiber Polyester
						A-3004-2	3 + 1 gnd #6,#8, 600 V, RHH/RHW insulation
1375	E-48	41	RGS conduit	212.85	534.55	Pull rope	Soft-Fiber Polyester
						A-3004-2	3 + 1 gnd #6,#8, 600 V, RHH/RHW insulation
1376	E-48	41	RGS conduit	0.00	534.55	Pull rope	Soft-Fiber Polyester
1377	E-48	41	RGS conduit	212.85	534.55	A-3005-2	3 + 1 gnd #6,#8, 600 V, RHH/RHW insulation
						Pull rope	Soft-Fiber Polyester
1378	E-48	41	RGS conduit	212.85	534.55	Pull rope	Soft-Fiber Polyester
						A-3005-2	3 + 1 gnd #6,#8, 600 V, RHH/RHW insulation
1379	E-48	41	RGS conduit	212.85	534.55	Pull rope	Soft-Fiber Polyester
						A-3005-2	3 + 1 gnd #6,#8, 600 V, RHH/RHW insulation
1380	E-49	41	RGS conduit	212.85	534.55	Pull rope	Soft-Fiber Polyester
						A-3005-2	3 + 1 gnd #6,#8, 600 V, RHH/RHW insulation
1381	E-49	41	RGS conduit	212.85	534.55	Pull rope	Soft-Fiber Polyester
						A-3005-2	3 + 1 gnd #6,#8, 600 V, RHH/RHW insulation
1382	E-49	41	RGS conduit	227.46	534.55	Pull rope	Soft-Fiber Polyester
						UP108-2	1-2/C + gnd #8, 600 V, EPR insulation
1383	E-49	41	RGS conduit	212.85	534.55	A-3006-2	3 + 1 gnd #6,#8, 600 V, RHH/RHW insulation
						Pull rope	Soft-Fiber Polyester
1384	E-49	41	RGS conduit	212.85	534.55	A-3006-2	3 + 1 gnd #6,#8, 600 V, RHH/RHW insulation
						Pull rope	Soft-Fiber Polyester
1385	E-49	41	RGS conduit	212.85	534.55	Pull rope	Soft-Fiber Polyester
						A-3006-2	3 + 1 gnd #6,#8, 600 V, RHH/RHW insulation
1386	E-49	41	RGS conduit	212.85	534.55	A-3006-2	3 + 1 gnd #6,#8, 600 V, RHH/RHW insulation
						Pull rope	Soft-Fiber Polyester

CONDUIT DATA

Conduit No	Reference	Size	Type	Total Fill (mm²)	Allowable Fill (mm²)	Included Cable No.	Conductor Type
1387	E-49	41	RGS conduit	212.85	534.55	A-3006-2	3 + 1 gnd #6,#8, 600 V, RHH/RHW insulation
						Pull rope	Soft-Fiber Polyester
1388	E-49	41	RGS conduit	212.85	534.55	A-3006-2	3 + 1 gnd #6,#8, 600 V, RHH/RHW insulation
						Pull rope	Soft-Fiber Polyester
1389	E-49	41	RGS conduit	212.85	534.55	Pull rope	Soft-Fiber Polyester
						A-3006-2	3 + 1 gnd #6,#8, 600 V, RHH/RHW insulation
1390	E-49	41	RGS conduit	212.85	534.55	Pull rope	Soft-Fiber Polyester
						A-3006-2	3 + 1 gnd #6,#8, 600 V, RHH/RHW insulation
1391	E-49	41	RGS conduit	0.00	534.55	Pull rope	Soft-Fiber Polyester
1392	E-50	41	RGS conduit	0.00	534.55	Pull rope	Soft-Fiber Polyester
1393	E-50	41	RGS conduit	0.00	534.55	Pull rope	Soft-Fiber Polyester
1394	E-50	41	RGS conduit	0.00	534.55	Pull rope	Soft-Fiber Polyester
1395	E-50	41	RGS conduit	0.00	534.55	Pull rope	Soft-Fiber Polyester
1396	E-50	41	RGS conduit	0.00	534.55	Pull rope	Soft-Fiber Polyester
1397	E-50	41	RGS conduit	0.00	534.55	Pull rope	Soft-Fiber Polyester
1398	E-50	41	RGS conduit	0.00	534.55	Pull rope	Soft-Fiber Polyester
1399	E-50	41	RGS conduit	0.00	534.55	Pull rope	Soft-Fiber Polyester
1447	E-46	41	RGS conduit	0.00	534.55	Pull rope	Soft-Fiber Polyester
1448	E-46	41	RGS conduit	0.00	534.55	Pull rope	Soft-Fiber Polyester
1449	E-46	41	RGS conduit	0.00	534.55	Pull rope	Soft-Fiber Polyester
1450	E-46	41	RGS conduit	0.00	534.55	Pull rope	Soft-Fiber Polyester
1451	E-46	41	RGS conduit	0.00	534.55	Pull rope	Soft-Fiber Polyester
1452	E-46	41	RGS conduit	0.00	534.55	Pull rope	Soft-Fiber Polyester
1453	E-46	41	RGS conduit	0.00	534.55	Pull rope	Soft-Fiber Polyester
1454	E-46	41	RGS conduit	0.00	534.55	Pull rope	Soft-Fiber Polyester
1455	E-46	41	RGS conduit	0.00	534.55	Pull rope	Soft-Fiber Polyester
1456	E-46	41	RGS conduit	0.00	534.55	Pull rope	Soft-Fiber Polyester

For continuation, see next sheet.

CONDUIT AND TRAY SCHEDULE

E-403

DATE	REVISED BY	DATE REVISED
8/02	PBP	8/02

CALCULATED/DESIGNED BY: AB
CHECKED BY: BEHZAD GOLEMOHAMMADI
DESIGN OVERSIGHT: BEHZAD GOLEMOHAMMADI

STATE OF CALIFORNIA - DEPARTMENT OF TRANSPORTATION
Caltrans

LAST REVISION 00-00-00
DATE PLOTTED => 5/22/2008
TIME PLOTTED => 10:58:57 AM

FOR REDUCED PLANS ORIGINAL SCALE IS IN MILLIMETERS 0 20 40 60 80

DGN FILE =>T:\13103\WS\pse\SAS Struc\CCO\SAS CC044\04-0120f1_0358R01.dgn
USERNAME =>florico

CU 04251 EA 0120F1

CONDUIT DATA

Conduit No	Reference	Size	Type	Total Fill (mm²)	Allowable Fill (mm²)	Included Cable No.	Conductor Type
1735	E-46	41	RGS conduit	0.00	534.55	Pull rope	Soft-Fiber Polyester
1736	E-46	41	RGS conduit	0.00	534.55	Pull rope	Soft-Fiber Polyester
1737	E-47	41	RGS conduit	0.00	534.55	Pull rope	Soft-Fiber Polyester
1738	E-47	41	RGS conduit	126.88	534.55	Pull rope	Soft-Fiber Polyester
						UP105-3	1-2/C + gnd #10, 600 V, EPR insulation
1739	E-47	41	RGS conduit	126.88	534.55	UP105-3	1-2/C + gnd #10, 600 V, EPR insulation
						Pull rope	Soft-Fiber Polyester
1740	E-47	41	RGS conduit	126.88	534.55	UP105-3	1-2/C + gnd #10, 600 V, EPR insulation
						Pull rope	Soft-Fiber Polyester
1741	E-47	41	RGS conduit	126.88	534.55	UP105-3	1-2/C + gnd #10, 600 V, EPR insulation
						Pull rope	Soft-Fiber Polyester
1742	E-47	41	RGS conduit	0.00	534.55	Pull rope	Soft-Fiber Polyester
1743	E-47	41	RGS conduit	0.00	534.55	Pull rope	Soft-Fiber Polyester
1744	E-47	41	RGS conduit	0.00	534.55	Pull rope	Soft-Fiber Polyester
1745	E-47	41	RGS conduit	440.31	534.55	UP106-3	1-2/C + gnd #8, 600 V, EPR insulation
						A-3010-2	3 + 1 gnd #6,#8, 600 V, RHH/RHW insulation
						Pull rope	Soft-Fiber Polyester
1746	E-48	41	RGS conduit	440.31	534.55	Pull rope	Soft-Fiber Polyester
						A-3010-2	3 + 1 gnd #6,#8, 600 V, RHH/RHW insulation
						UP106-3	1-2/C + gnd #8, 600 V, EPR insulation
1747	E-48	41	RGS conduit	0.00	534.55	Pull rope	Soft-Fiber Polyester
1748	E-48	41	RGS conduit	0.00	534.55	Pull rope	Soft-Fiber Polyester
1749	E-48	41	RGS conduit	0.00	534.55	Pull rope	Soft-Fiber Polyester
1750	E-48	41	RGS conduit	0.00	534.55	Pull rope	Soft-Fiber Polyester
1751	E-49	41	RGS conduit	0.00	534.55	Pull rope	Soft-Fiber Polyester
1752	E-49	41	RGS conduit	0.00	534.55	Pull rope	Soft-Fiber Polyester
1753	E-49	41	RGS conduit	0.00	534.55	Pull rope	Soft-Fiber Polyester
1754	E-49	41	RGS conduit	0.00	534.55	Pull rope	Soft-Fiber Polyester
1755	E-49	41	RGS conduit	0.00	534.55	Pull rope	Soft-Fiber Polyester
1756	E-50	41	RGS conduit	0.00	534.55	Pull rope	Soft-Fiber Polyester
1757	E-50	41	RGS conduit	0.00	534.55	Pull rope	Soft-Fiber Polyester
1758	E-50	41	RGS conduit	0.00	534.55	Pull rope	Soft-Fiber Polyester
1759	E-50	41	RGS conduit	0.00	534.55	Pull rope	Soft-Fiber Polyester
1760	E-50	41	RGS conduit	49.21	534.55	Pull rope	Soft-Fiber Polyester
						UP108-3A	2 + 1 gnd #12,#12, 600 V, RHH/RHW insulation
1761	E-50	41	RGS conduit	49.21	534.55	UP108-3A	2 + 1 gnd #12,#12, 600 V, RHH/RHW insulation
						Pull rope	Soft-Fiber Polyester
1762	E-50	41	RGS conduit	373.50	534.55	1106	1-3/C + gnd #6, 600 V, EPR insulation
						UP108-3A	2 + 1 gnd #12,#12, 600 V, RHH/RHW insulation
						Pull rope	Soft-Fiber Polyester
1763	E-51	41	RGS conduit	324.29	534.55	Pull rope	Soft-Fiber Polyester
						1106	1-3/C + gnd #6, 600 V, EPR insulation
1764	E-51	41	RGS conduit	0.00	534.55	Pull rope	Soft-Fiber Polyester
1765	E-51	41	RGS conduit	324.29	534.55	1106	1-3/C + gnd #6, 600 V, EPR insulation
						Pull rope	Soft-Fiber Polyester

DATE	REVISED BY	DATE REVISED
8/02	PBP	AB 8/02

CALCULATED/DESIGNED BY
CHECKED BY

DESIGN OVERSIGHT
BEHZAD GOLEMOHAMMADI

STATE OF CALIFORNIA - DEPARTMENT OF TRANSPORTATION
Caltrans

REQUEST FOR INFORMATION NOT ADDRESSED IN THIS CCO REMAIN IN FORCE					
2	03/04/08	BARRIER MODIFICATIONS	JS BM	RG SE	44
1	02/19/08	ELECTRICAL MODIFICATIONS	MP EL	RR	42
MARK	DATE	DESCRIPTIONS	BY	CH'D	CCO#
REVISIONS					

CONTRACT CHANGE ORDER NO. 4450
SHEET 39 OF 92

Caltrans Metric

S. A. ESTOQUE, JR. — REGISTERED PROFESSIONAL ENGINEER — No. E-10151 — Exp. 12/31/2008 ELECTRICAL — STATE OF CALIFORNIA

FOR REVISION ONLY

DIST	COUNTY	ROUTE	KILOMETER POST TOTAL PROJECT	SHEET No	TOTAL SHEETS
04	SF	80	13.2/13.9	360 R2	1204

Jens Erlingsson 12/19/02
REGISTERED ELECTRICAL ENGINEER DATE

12-6-04
PLANS APPROVAL DATE

REGISTERED PROFESSIONAL ENGINEER — JENS ERLINGSSON — No. 8249 — Exp. 9/30/06 ELECTRICAL — STATE OF CALIFORNIA

PB POWER, Inc.
A Parsons Brinckerhoff Company
303 Second St., Suite 700N
San Francisco, CA 94107-1317

The State of California or its officers or agents shall not be responsible for the accuracy or completeness of electronic copies of this plan sheet.

Caltrans now has a web site! To get to the web site, go to http://www.dot.ca.gov

CONDUIT DATA

Conduit No	Reference	Size	Type	Total Fill (mm²)	Allowable Fill (mm²)	Included Cable No.	Conductor Type
1766	E-79	53	RGS-PVC coated conduit	754.18	879.42	Pull rope	Soft-Fiber Polyester
						1115	1-3/C + gnd #1/0, 600 V, EPR insulation
1767	E-79	53	RGS-PVC coated conduit	147.25	879.42	Pull rope	Soft-Fiber Polyester
						1115-2	1-3/C #16, 600 V, EPR insulation
						1115-1	1-3/C #14, 600 V, EPR insulation
1768	E-120, E-101	78	RGS-PVC coated conduit	882.89	1935.24	Pull rope	Soft-Fiber Polyester
						1117	1-3/C + gnd #2/0, 600 V, EPR insulation
1769	E-120, E-101	27	RGS-PVC coated conduit	147.25	229.03	1117-2	1-3/C #16, 600 V, EPR insulation
						Pull rope	Soft-Fiber Polyester
						1117-1	1-3/C #14, 600 V, EPR insulation
~~1831~~							
1832	E-46	41	RGS conduit	474.91	534.55	A-1035-1	1-3/C + gnd #6, 600V, EPR insulation
						UP104-3A	2 + 1gnd #12,#12, 600 V, RHH/RHW insulation
						Pull rope	Soft-Fiber Polyester
						S-1031-1	1-3/C + gnd #2, 600V, EPR insulation
1833	E-46	41	RGS conduit	474.91	534.55	S-1031-1	1-3/C + gnd #2, 600V, EPR insulation
						A-1035-1	1-3/C + gnd #6, 600V, EPR insulation
						UP104-3A	2 + 1gnd #12,#12, 600 V, RHH/RHW insulation
						Pull rope	Soft-Fiber Polyester
1834	E-46	41	RGS conduit	474.91	534.55	UP104-3A	2 + 1 gnd #12,#12, 600 V, RHH/RHW insulation
						A-1035-1	1-3/C + gnd #6, 600V, EPR insulation
						Pull rope	Soft-Fiber Polyester
						S-1031-1	1-3/C + gnd #2, 600V, EPR insulation
1835	E-46	41	RGS conduit	0.00	534.55	Pull rope	Soft-Fiber Polyester
1836	E-46, E-47	41	RGS conduit	0.00	534.55	Pull rope	Soft-Fiber Polyester
1837	E-47	41	RGS conduit	0.00	534.55	Pull rope	Soft-Fiber Polyester
1838	E-47	41	RGS conduit	212.85	534.55	A-3009-2	3 + 1 gnd #6,#8, 600 V, RHH/RHW insulation
						Pull rope	Soft-Fiber Polyester
1839	E-47	41	RGS conduit	212.85	534.55	Pull rope	Soft-Fiber Polyester
						A-3009-2	3 + 1 gnd #6,#8, 600 V, RHH/RHW insulation
1840	E-47	41	RGS conduit	212.85 (2)	534.55	A-3009-2	3 + 1 gnd #6,#8, 600 V, RHH/RHW insulation
					(2)	Pull rope	Soft-Fiber Polyester
1841	E-47	41	RGS conduit	212.85 (2)	534.55 (2)	Pull rope	Soft-Fiber Polyester
						A-3009-2	3 + 1 gnd #6,#8, 600 V, RHH/RHW insulation
1842	E-47	41	RGS conduit	212.85	534.55	Pull rope	Soft-Fiber Polyester
						A-3009-2	3 + 1 gnd #6,#8, 600 V, RHH/RHW insulation

For continuation, see next sheet.

CONDUIT AND TRAY SCHEDULE

E-405

LAST REVISION 00-00-00
DATE PLOTTED => 5/22/2008
TIME PLOTTED => 10:59:14 AM

FOR REDUCED PLANS ORIGINAL SCALE IS IN MILLIMETERS 0 20 40 60 80

DGN FILE =>T:\13103\MS\pse\SAS Struc\CCO\SAS CC044\04-0120f1_0360R02.dgn
USERNAME =>llorico

CU 04251 EA 0120F1

DIST	COUNTY	ROUTE	KILOMETER POST TOTAL PROJECT	SHEET No	TOTAL SHEETS
04	SF	80	13.2/13.9	361 R2	1204

Jens Erlingsson 12/19/02
REGISTERED ELECTRICAL ENGINEER DATE

12-6-04
PLANS APPROVAL DATE

REGISTERED PROFESSIONAL ENGINEER — JENS ERLINGSSON — No. 8249 — Exp. 9/30/06 ELECTRICAL — STATE OF CALIFORNIA

PB POWER, Inc.
A Parsons Brinckerhoff Company
303 Second St., Suite 700N
San Francisco, CA 94107-1317

The State of California or its officers or agents shall not be responsible for the accuracy or completeness of electronic copies of this plan sheet.

Caltrans now has a web site! To get to the web site, go to http://www.dot.ca.gov

Caltrans Metric

REGISTERED PROFESSIONAL ENGINEER — S. A. ESTOQUE, JR. — No. E-10151 — Exp. 12/31/2008 ELECTRICAL — STATE OF CALIFORNIA

FOR REVISION ONLY

REQUEST FOR INFORMATION NOT ADDRESSED IN THIS CCO REMAIN IN FORCE

MARK	DATE	DESCRIPTIONS	BY	CH'D	CCO#
		REVISIONS			
2	03/04/08	BARRIER MODIFICATIONS	JS BM	RG SE	44
1	02/19/08	ELECTRICAL MODIFICATIONS	MP EL	RR	42

CONTRACT CHANGE ORDER NO. 4430
SHEET 40 OF 92

CONDUIT DATA

Conduit No	Reference	Size	Type	Total Fill (mm²)	Allowable Fill (mm²)	Included Cable No.	Conductor Type
1843	E-47	41	RGS conduit	0.00	534.55	Pull rope	Soft-Fiber Polyester
1844	E-47	41	RGS conduit	0.00	534.55	Pull rope	Soft-Fiber Polyester
1845	E-47	41	RGS conduit	0.00	534.55	Pull rope	Soft-Fiber Polyester
1846	E-48	41	RGS conduit	0.00	534.55	Pull rope	Soft-Fiber Polyester
1847	E-48	41	RGS conduit	0.00	534.55	Pull rope	Soft-Fiber Polyester
1848	E-48	41	RGS conduit	0.00	534.55	Pull rope	Soft-Fiber Polyester
1849	E-48	41	RGS conduit	0.00	534.55	Pull rope	Soft-Fiber Polyester
1850	E-48	41	RGS conduit	0.00	534.55	Pull rope	Soft-Fiber Polyester
1851	E-49	41	RGS conduit	0.00	534.55	Pull rope	Soft-Fiber Polyester
1852	E-49	41	RGS conduit	0.00	534.55	Pull rope	Soft-Fiber Polyester
1853	E-49	41	RGS conduit	0.00	534.55	Pull rope	Soft-Fiber Polyester
1854	E-49	41	RGS conduit	262.06	534.55		
						UP107-3A	2 + 1 gnd #12,#12, 600 V, RHH/RHW insulation
						Pull rope	Soft-Fiber Polyester
1855	E-49	41	RGS conduit	262.06	534.55		
						UP107-3A	2 + 1 gnd #12,#12, 600 V, RHH/RHW insulation
						Pull rope	Soft-Fiber Polyester
1856	E-50	41	RGS conduit	262.06	534.55		
						UP107-3A	2 + 1 gnd #12,#12, 600 V, RHH/RHW insulation
						Pull rope	Soft-Fiber Polyester
1857	E-50	41	RGS conduit	162.40	534.55	UP107-3A	2 + 1 gnd #12,#12, 600 V, RHH/RHW insulation
						Pull rope	Soft-Fiber Polyester
1858	E-50	41	RGS conduit	0.00	534.55		
						Pull rope	Soft-Fiber Polyester
1859	E-50	41	RGS conduit	0.00	534.55	Pull rope	Soft-Fiber Polyester
1860	E-50	41	RGS conduit	0.00	534.55		
						Pull rope	Soft-Fiber Polyester
1861	E-50	41	RGS conduit	265.64	534.55	Pull rope	Soft-Fiber Polyester
						S-1032-2	3 + 1 gnd #6, #8, 600 V, RHH/RHW insulation
1862	E-50, E-51	41	RGS conduit	265.64	534.55	Pull rope	Soft-Fiber Polyester
						S-1032-2	3 + 1 gnd #6, #8, 600 V, RHH/RHW insulation
1863	E-51	41	RGS conduit	265.64	534.55	Pull rope	Soft-Fiber Polyester
						S-1032-5	3 + 1 gnd #6, #8, 600 V, RHH/RHW insulation
1864	E-51	41	RGS conduit	0.00	534.55	Pull rope	Soft-Fiber Polyester
1865	E-51	41	RGS conduit	0.00	534.55	Pull rope	Soft-Fiber Polyester
1900	E-50	41	RGS conduit	0.00	534.55	Pull rope	Soft-Fiber Polyester
1901	E-50	41	RGS conduit	0.00	534.55	Pull rope	Soft-Fiber Polyester
1902	E-50	41	RGS conduit	0.00	534.55	Pull rope	Soft-Fiber Polyester
1903	E-51	41	RGS conduit	0.00	534.55	Pull rope	Soft-Fiber Polyester
1904	E-51	41	RGS conduit	0.00	534.55	Pull rope	Soft-Fiber Polyester
1905	E-51	41	RGS conduit	0.00	534.55	Pull rope	Soft-Fiber Polyester
1906	E-51	41	RGS conduit	0.00	534.55	Pull rope	Soft-Fiber Polyester

CONDUIT DATA

Conduit No	Reference	Size	Type	Total Fill (mm²)	Allowable Fill (mm²)	Included Cable No.	Conductor Type
1907	E-51	41	RGS conduit	0.00	534.55	Pull rope	Soft-Fiber Polyester
1908	E-51	41	RGS conduit	0.00	534.55	Pull rope	Soft-Fiber Polyester
1950	E-50	41	RGS conduit	0.00 (2)	534.55	Pull rope	Soft-Fiber Polyester (2)
1951	E-50	41	RGS conduit	0.00	534.55	Pull rope	Soft-Fiber Polyester
1952	E-50	41	RGS conduit	0.00	534.55	Pull rope	Soft-Fiber Polyester
1953	E-51	41	RGS conduit	0.00	534.55	Pull rope	Soft-Fiber Polyester
1954	E-51	41	RGS conduit	0.00	534.55	Pull rope	Soft-Fiber Polyester
1955	E-51	41	RGS conduit	0.00	534.55	Pull rope	Soft-Fiber Polyester
1956	E-51	41	RGS conduit	0.00	534.55	Pull rope	Soft-Fiber Polyester
1957	E-51	41	RGS conduit	0.00	534.55	Pull rope	Soft-Fiber Polyester
1958	E-51	41	RGS conduit	0.00	534.55	Pull rope	Soft-Fiber Polyester
1T13	E-96, E-101	305	152.4 mm siderail ladder tray	2780.99	19354.80	1391	3-1/C #4/0 + 1/C #1/0 gnd, 15 kV, EPR insulation
						Pull rope	Soft-Fiber Polyester
1T14	E-128, E-19	305	152.4 mm siderail ladder tray	2780.99	8387.08	1391	3-1/C #4/0 + 1/C #1/0 gnd, 15 kV, EPR insulation
						Pull rope	Soft-Fiber Polyester
1T23	E-96, E-101	610	152.4 mm siderail ladder tray	13557.45 (2)	18064.48	(2)	(2)
						A-3010-1	1-3/C + gnd #2, 600 V, EPR insulation
						1115-2	1-3/C #16, 600 V, EPR insulation
						S-1031-1	1-3/C + gnd #2, 600 V, EPR insulation
						1115-1	1-3/C #14, 600 V, EPR insulation
						2201-1	1-2/C + gnd #8, 600 V, EPR insulation
						A-3009-3	1-3/C + gnd #6, 600 V, EPR insulation
						1106	1-3/C + gnd #6, 600 V, EPR insulation
						S-3056-5	1-4/C #14, 600 V, EPR insulation
						S-3056-7	1-2/C #14, 600 V, EPR insulation
						S-3056-8	1-4/C #14, 600 V, EPR insulation
						Pull rope	Soft-Fiber Polyester
						A-3010-3	1-3/C #6 + gnd 600 V, RHH/RHW insulation
						S-3051-1	1-3/C + gnd #4, 600 V, EPR insulation
						UP108-3	1-2/C + gnd #8, 600 V, EPR insulation
						1255-1	1-3/C #16 ,600V, EPR insulation
						A-3001-1	1-3/C + gnd #4, 600 V, EPR insulation
						A-3012-1	1-3/C + gnd #2, 600 V, EPR insulation
						A-3013-1	1-3/C + gnd #2, 600 V, EPR insulation
						S-3022-1	1-3/C + gnd #2, 600 V, EPR insulation
						A-3002-1	1-3/C + gnd #4, 600 V, EPR insulation
						UP107-6	1-2/C + gnd #8, 600 V, EPR insulation

For continuation, see next sheet.

CONDUIT AND TRAY SCHEDULE

E-406

DESIGN OVERSIGHT	CALCULATED/ DESIGNED BY	DATE	REVISED BY
BEHZAD GOLEMOHAMMADI	CHECKED BY	8/02	DATE REVISED
	AB	PBP	

STATE OF CALIFORNIA - DEPARTMENT OF TRANSPORTATION
Caltrans

FOR REDUCED PLANS ORIGINAL SCALE IS IN MILLIMETERS 0 20 40 60 80

DGN FILE =>T:\13103\WS\pse\SAS Struc\CCO\SAS CCO44\04-0120f1_0361R02.dgn
USERNAME =>llorico

CU 04251 | EA 0120F1

LAST REVISION 00-00-00 | DATE PLOTTED => 5/22/2008 | TIME PLOTTED => 10:59:33 AM

DIST	COUNTY	ROUTE	KILOMETER POST TOTAL PROJECT	SHEET No	TOTAL SHEETS
04	SF	80	13.2/13.9	362 R1	1204

REGISTERED ELECTRICAL ENGINEER — 12/19/02 DATE

12-6-04
PLANS APPROVAL DATE

REGISTERED PROFESSIONAL ENGINEER — JENS ERLINGSSON No. 8249 Exp. 9/30/06 ELECTRICAL — STATE OF CALIFORNIA

PB POWER, Inc.
A Parsons Brinckerhoff Company
303 Second St., Suite 700N
San Francisco, CA 94107-1317

The State of California or its officers or agents shall not be responsible for the accuracy or completeness of electronic copies of this plan sheet.

Caltrans now has a web site! To get to the web site, go to http://www.dot.ca.gov

REGISTERED PROFESSIONAL ENGINEER — S. A. ESTOQUE, JR. No. E-10151 Exp. 12/31/2008 ELECTRICAL — STATE OF CALIFORNIA

FOR REVISION ONLY

Caltrans Metric

REQUEST FOR INFORMATION NOT ADDRESSED IN THIS CCO REMAIN IN FORCE

MARK	DATE	DESCRIPTIONS	BY	CH'D	CCO#
		REVISIONS			
1	03/04/08	BARRIER MODIFICATIONS	TW	RG	44

CONTRACT CHANGE ORDER NO. 44 SO
SHEET 41 OF 92

CONDUIT DATA

Conduit No.	Reference	Size	Type	Total Fill (mm²)	Allowable Fill (mm²)	Included Cable No.	Conductor Type
						1117-1	1-3/C #14, 600 V, EPR insulation
						A-3009-1	1-3/C + gnd #2, 600 V, EPR insulation
						1202-4	1-3/C #14, 600 V, EPR insulation
						1117-2	1-3/C #16, 600 V, EPR insulation
						S-3021-1	1-3/C + gnd #4, 600 V, EPR insulation
						S-3023-1	1-3/C + gnd #4, 600 V, EPR insulation
						S-3056-1	1-3/C + gnd #6, 600 V, EPR insulation
						S-1031-3	1-3/C + gnd #4, 600 V, EPR insulation
						S-1032-1	1-3/C + gnd #4, 600 V, EPR insulation
						A-1035-1	1-3/C + gnd #6, 600 V, EPR insulation
						1202-3	1-7/C #16, 600 V, EPR insulation
						1099	1-3/C + gnd #2, 600 V, EPR insulation
						1098	1-3/C + gnd #2, 600 V, EPR insulation
						1097	1-3/C + gnd #2, 600 V, EPR insulation
						1096	1-3/C + gnd #2, 600 V, EPR insulation
						1095	1-3/C + gnd #2, 600 V, EPR insulation
						1117	1-3/C + gnd #2/0, 600 V, EPR insulation
						1256-1	1-3/C #16, 600 V, EPR insulation
						1202-1	1-2/C + gnd #8 ,600 V, EPR insulation
						1255-2	1-3/C #16, 600 V, EPR insulation
						A-3008-1	1-2/C + gnd #8, 600 V, EPR insulation
						1202-2	1-3/C #14, 600 V, EPR insulation
						A-3011-1	1-3/C + gnd #2, 600 V, EPR insulation
1T24	E-114	610	152.4 mm siderail ladder tray	1652.27	18064.48		
						UP104-7	1-2/C + gnd #8, 600 V, EPR insulation
						1095	1-3/C + gnd #2, 600 V, EPR insulation
						Pull rope	Soft-Fiber Polyester
						UP104-9	1-2/C + gnd #10, 600 V, EPR insulation
						UP104-8	1-2/C + gnd #8, 600 V, EPR insulation
						1255-1	1-3/C #16, 600 V, EPR insulation
						UP104-3	1-2/C + gnd #10, 600 V, EPR insulation
						UP204-1	1-2/C + gnd #10, 600 V, EPR insulation
						UP104-6	1-2/C + gnd #8 ,600 V, EPR insulation
1T25	E-115	610	152.4 mm siderail ladder tray	3092.69 (1)	18064.48		
						UP105-10	1-2/C + gnd #8, 600 V, EPR insulation
						1201-1	1-2/C + gnd #8, 600 V, EPR insulation
						1201-2	1-2/C + gnd #8, 600 V, EPR insulation
						1201-6	1-2/C + gnd #8, 600 V, EPR insulation
						1096	1-3/C + gnd #2, 600 V, EPR insulation
						1255-1	1-3/C #16, 600 V, EPR insulation
						1202-4	1-3/C #14, 600 V, EPR insulation
						UP105-8	1-2/C + gnd #8, 600 V, EPR insulation
						UP205-1	1-2/C + gnd #10, 600 V, EPR insulation
						1115-1	1-3/C #14, 600 V, EPR insulation
						1202-3	1-7/C #16, 600 V, EPR insulation
						1202-2	1-3/C #14, 600 V, EPR insulation
						1115-2	1-3/C #16, 600 V, EPR insulation
						1255-2	1-3/C #16, 600 V, EPR insulation
						Pull rope	Soft-Fiber Polyester
						UP105-3	1-2/C + gnd #10, 600 V, EPR insulation
						UP105-9	1-2/C + gnd #8, 600 V, EPR insulation
						UP105-7	1-2/C + gnd #8, 600 V, EPR insulation
							(1)
						S-3056-5	1-4/C #14, 600 V, EPR insulation
						S-3056-7	1-2/C #14, 600 V, EPR insulation
1T26	E-116	610	152.4 mm siderail ladder tray	2773.72	18064.48	UP106-1	1-2/C + gnd #8, 600 V, EPR insulation
						UP106-8	1-2/C + gnd #8, 600 V, EPR insulation
						UP106-3	1-2/C + gnd #8, 600 V, EPR insulation
						1255-2	1-3/C #16, 600 V, EPR insulation
						UP206-1	1-2/C + gnd #10, 600 V, EPR insulation
						Pull rope	Soft-Fiber Polyester
						1202-2	1-3/C #14, 600 V, EPR insulation
						1202-3	1-7/C #16, 600 V, EPR insulation
						UP106-6	1-2/C + gnd #8, 600 V, EPR insulation
						UP106-7	1-2/C + gnd #8, 600 V, EPR insulation
						CCTVE01BA	TVP
						CCTVE01BB	TVCP
						UP106-9	1-2/C + gnd #8, 600 V, EPR insulation
						1097	1-3/C + gnd #2, 600 V, EPR insulation
						1202-4	1-3/C #14, 600 V, EPR insulation
						1202-1	1-2/C + gnd #8, 600 V, EPR insulation
1T27	E-117	610	152.4 mm siderail ladder tray	1726.55	18064.48	UP107-6	1-2/C + gnd #8, 600 V, EPR insulation
						Pull rope	Soft-Fiber Polyester
						UP107-7	1-2/C + gnd #8, 600 V, EPR insulation
						UP107-9	1-2/C + gnd #8, 600 V, EPR insulation
						1256-1	1-3/C #16 ,600V, EPR insulation
						UP107-8	1-2/C + gnd #8, 600 V, EPR insulation

CONDUIT DATA

Conduit No.	Reference	Size	Type	Total Fill (mm²)	Allowable Fill (mm²)	Included Cable No.	Conductor Type
						1098	1-3/C + gnd #2, 600 V, EPR insulation
						UP107-3	1-2/C + gnd #8, 600 V, EPR insulation
1T28	E-118	610	152.4 mm siderail ladder tray	3336.36	18064.48	UP108-8	1-2/C + gnd #8, 600 V, EPR insulation
						UP108-3	1-2/C + gnd #8, 600 V, EPR insulation
						UP108-10	1-2/C + gnd #8, 600 V, EPR insulation
						S-3056-8	1-4/C #14, 600 V, EPR insulation
						UP108-4	1-2/C + gnd #8, 600 V, EPR insulation
						Pull rope	Soft-Fiber Polyester
						UP108-7	1-2/C + gnd #8, 600 V, EPR insulation
						1117-2	1-3/C #16 ,600V, EPR insulation
						2201-5	1-3/C #14, 600 V, EPR insulation
						2201-3	1-3/C #14, 600 V, EPR insulation
						2201-1	1-2/C + gnd #8, 600 V, EPR insulation
						2201-4	1-9/C #16, 600 V, EPR insulation
						1118-2	1-3/C #16, 600 V, EPR insulation
						UP108-9	1-2/C + gnd #8, 600 V, EPR insulation
						UP108-12	1-2/C + gnd #8, 600 V, EPR insulation
						1117-1	1-3/C #14, 600 V, EPR insulation
						1118-1	1-3/C #14, 600 V, EPR insulation
						UP108-2	1-2/C + gnd #8, 600 V, EPR insulation
						1099	1-3/C + gnd #2, 600 V, EPR insulation
						1256-1	1-3/C #16, 600 V, EPR insulation
1T29	E-128, E-19	610	152.4 mm siderail ladder tray	11507.41	18064.48	1106	1-3/C + gnd #6, 600 V, EPR insulation
						S-1032-1	1-3/C + gnd #4, 600 V, EPR insulation
						A-3002-1	1-3/C + gnd #4, 600 V, EPR insulation
						A-3001-1	1-3/C + gnd #4, 600 V, EPR insulation
						A-3013-1	1-3/C + gnd #2, 600 V, EPR insulation
						A-3012-1	1-3/C + gnd #2, 600 V, EPR insulation
						S-3023-1	1-3/C + gnd #4, 600 V, EPR insulation
						1097	1-3/C + gnd #2, 600 V, EPR insulation
						S-3051-1	1-3/C + gnd #4, 600 V, EPR insulation
						A-1035-1	1-3/C + gnd #6, 600 V, EPR insulation
						A-3011-1	1-3/C + gnd #2, 600 V, EPR insulation
						S-3021-1	1-3/C + gnd #4, 600 V, EPR insulation
						S-3022-1	1-3/C + gnd #2, 600 V, EPR insulation
						S-3056-1	1-3/C + gnd #6, 600 V, EPR insulation
						1098	1-3/C + gnd #2, 600 V, EPR insulation
						1096	1-3/C + gnd #2, 600 V, EPR insulation
						1095	1-3/C + gnd #2, 600 V, EPR insulation
						S-1031-1	1-3/C + gnd #2, 600 V, EPR insulation
						Pull rope	Soft-Fiber Polyester
						1099	1-3/C + gnd #2, 600 V, EPR insulation
						A-3008-1	1-2/C + gnd #8, 600 V, EPR insulation
						1117	1-3/C + gnd #2/0, 600 V, EPR insulation
						A-3010-1	1-3/C + gnd #2, 600 V, EPR insulation
						1115	1-3/C + gnd #1/0, 600 V, EPR insulation
						1115-1	1-3/C #14, 600 V, EPR insulation
						1115-2	1-3/C #16, 600 V, EPR insulation
						A-3009-1	1-3/C + gnd #2, 600 V, EPR insulation

For continuation, see next sheet.

CONDUIT AND TRAY SCHEDULE

E-407

DESIGNED BY	CALCULATED/	CHECKED BY	DRAWN BY	CHECKED BY	DATE	REVISED BY
BEHZAD GOLEMOHAMMADI			PBP	AB	8/02	DATE REVISED

DESIGN OVERSIGHT

STATE OF CALIFORNIA - DEPARTMENT OF TRANSPORTATION
Caltrans

LAST REVISION 00-00-00 — DATE PLOTTED => 5/22/2008 — TIME PLOTTED => 10:59:53 AM

FOR REDUCED PLANS ORIGINAL SCALE IS IN MILLIMETERS 0 20 40 60 80

DGN FILE =>T:\13103\MS\pse\SAS Struc\CCO\SAS CCO44\04-0120f1_0362R01.dgn
USERNAME =>florico

CU 04251

EA 0120F1

DIST	COUNTY	ROUTE	KILOMETER POST TOTAL PROJECT	SHEET No	TOTAL SHEETS
04	SF	80	13.2/13.9	363 R1	1204

Jens Erlingsson 12/19/02
REGISTERED ELECTRICAL ENGINEER DATE

12-6-04
PLANS APPROVAL DATE

REGISTERED PROFESSIONAL ENGINEER — JENS ERLINGSSON No. 8249 Exp. 9/30/06 ELECTRICAL — STATE OF CALIFORNIA

PB POWER, Inc.
A Parsons Brinckerhoff Company
303 Second St., Suite 700N
San Francisco, CA 94107-1317

The State of California or its officers or agents shall not be responsible for the accuracy or completeness of electronic copies of this plan sheet.

Caltrans now has a web site! To get to the web site, go to http://www.dot.ca.gov

Caltrans Metric

REGISTERED PROFESSIONAL ENGINEER — S. A. ESTOQUE, JR. No. E-10151 Exp. 12/31/2008 ELECTRICAL — STATE OF CALIFORNIA

FOR REVISION ONLY

MARK	DATE	DESCRIPTIONS	BY	CH'D	CCO#
		REVISIONS			
1	03/04/08	BARRIER MODIFICATIONS	TW	RG	44

REQUEST FOR INFORMATION NOT ADDRESSED IN THIS CCO REMAIN IN FORCE

CONTRACT CHANGE ORDER NO. 4450
SHEET 42 OF 92

CONDUIT DATA

Conduit No	Reference	Size	Type	Total Fill (mm²)	Allowable Fill (mm²)	Included Cable No.	Conductor Type
1T33	E-96, E-101	610	152.4 mm siderail ladder tray	7720.94	18064.48	UP104-8	1-2/C + gnd #8, 600 V, EPR insulation
						UP108-12	1-2/C + gnd #8, 600 V, EPR insulation
						UP108-9	1-2/C + gnd #8, 600 V, EPR insulation
						A-1011-1	1-3/C + gnd #2, 600 V, EPR insulation
						A-1012-1	1-3/C + gnd #2, 600 V, EPR insulation
						UP104-3	1-2/C + gnd #10, 600 V, EPR insulation
						UP107-3	1-2/C + gnd #8, 600 V, EPR insulation
						UP105-9	1-2/C + gnd #8, 600 V, EPR insulation
						UP104-9	1-2/C + gnd #10, 600 V, EPR insulation
						Pull rope	Soft-Fiber Polyester
						UP108-4	1-2/C + gnd #8, 600 V, EPR insulation
						UP108-2	1-2/C + gnd #8, 600 V, EPR insulation
						UP108-7	1-2/C + gnd #8, 600 V, EPR insulation
						UP107-7	1-2/C + gnd #8, 600 V, EPR insulation
						UP106-7	1-2/C + gnd #8, 600 V, EPR insulation
						UP105-7	1-2/C + gnd #8, 600 V, EPR insulation
						A-1013-1	1-3/C + gnd #2, 600 V, EPR insulation
						UP107-9	1-2/C + gnd #8, 600 V, EPR insulation
						A-1014-1	1-3/C + gnd #2, 600 V, EPR insulation
						UP106-3	1-2/C + gnd #8, 600 V, EPR insulation
						UP105-3	1-2/C + gnd #10, 600 V, EPR insulation
						UP106-6	1-2/C + gnd #8, 600 V, EPR insulation
						UP105-10	1-2/C + gnd #8, 600 V, EPR insulation
						UP104-6	1-2/C + gnd #8, 600 V, EPR insulation
						UP107-8	1-2/C + gnd #8, 600 V, EPR insulation
						UP106-8	1-2/C + gnd #8, 600 V, EPR insulation
						UP105-8	1-2/C + gnd #8, 600 V, EPR insulation
						UP104-7	1-2/C + gnd #8, 600 V, EPR insulation
						UP108-8	1-2/C + gnd #8, 600 V, EPR insulation
						UP106-9	1-2/C + gnd #8, 600 V, EPR insulation
						UP108-10	1-2/C + gnd #8, 600 V, EPR insulation
1T39	E-128, E-19	610	152.4 mm siderail ladder tray	1054.36	18064.48	A-1011-1	1-3/C + gnd #2, 600 V, EPR insulation
						A-1014-1	1-3/C + gnd #2, 600 V, EPR insulation
						Pull rope	Soft-Fiber Polyester
1T43	E-96, E-101	610	152.4 mm siderail ladder tray	11370.25 (1)	38709.60	MVDSW04A	MVDS DLC
						1144	1 - 2 pair, shielded #18 with IS/OA , 300 V, PVC jacket
						1475-3C	12 Fiber, single mode fiberoptic cable
						1475-3A	12 Fiber, single mode fiberoptic cable
						1474-4	50 pair #18, shielded pairs, IS/OS shield 600 V, XLPE insul., PVC jacket
						1145	1 - 2 pair, shielded #18 with IS/OA , 300 V, PVC jacket
						1474-5	50 pair #18, shielded pairs, IS/OS shield 600 V, XLPE insul., PVC jacket
						1474-7	50 pair #18, shielded pairs, IS/OS shield 600 V, XLPE insul., PVC jacket
						1477-2	72 Fiber, single mode fiberoptic riser cable
						1475-3	72 Fiber, single mode fiberoptic riser cable
						MVDSW02A	MVDS DLC
						1475-3B	12 Fiber, single mode fiberoptic cable
						2900-472B	4 pair #22, shielded pairs, FEP insulation
						2900-182A	4 pair #22, shielded pairs, FEP insulation
						2900-182B	4 pair #22, shielded pairs, FEP insulation
						2900-202A	4 pair #22, shielded pairs, FEP insulation
						2900-282A	4 pair #22, shielded pairs, FEP insulation
						2900-342A	4 pair #22, shielded pairs, FEP insulation
						2900-392A	4 pair #22, shielded pairs, FEP insulation
						2900-462A	4 pair #22, shielded pairs, FEP insulation
						2900-472A	4 pair #22, shielded pairs, FEP insulation
						Pull rope	Soft-Fiber Polyester
						2900-472C	4 pair #22, shielded pairs, FEP insulation
						1474-8	50 pair #18, shielded pairs, IS/OS shield 600 V, XLPE insul., PVC jacket
						1473-5	50 pair #18, shielded pairs, IS/OS shield 600 V, XLPE insul., PVC jacket
						1473-7	50 pair #18, shielded pairs, IS/OS shield 600 V, XLPE insul., PVC jacket
						1473-10	50 pair #18, shielded pairs, IS/OS shield 600V, XLPE insul., PVC jacket

CONDUIT DATA

Conduit No	Reference	Size	Type	Total Fill (mm²)	Allowable Fill (mm²)	Included Cable No.	Conductor Type
						1474-10	50 pair #18, shielded pairs, IS/OS shield 600 V, XLPE insul., PVC jacket
						2900-4628	4 pair #22, shielded pairs, FEP insulation
1T44	E-114	610	152.4 mm siderail ladder tray	3785.76	38709.60	1473-5	50 pair #18, shielded pairs, IS/OS shield 600 V, XLPE insul., PVC jacket
						1474-5	50 pair #18, shielded pairs, IS/OS shield 600 V, XLPE insul., PVC jacket
						1475-3A	12 Fiber, single mode fiberoptic cable
						MVDSW02A	MVDS DLC
						Pull rope	Soft-Fiber Polyester
						1474-4	50 pair #18, shielded pairs, IS/OS shield 600 V, XLPE insul., PVC jacket
1T45	E-115	610	152.4 mm siderail ladder tray	3563.45 (1)	38709.60	Pull rope	Soft-Fiber Polyester
						2900-182A	4 pair #22, shielded pairs, FEP insulation
						2910-10	4 pair #22, shielded pairs, 300 V, PE insulation
						2910-8	4 pair #22, shielded pairs, 300 V, PE insulation
						1473-5	50 pair #18, shielded pairs, IS/OS shield 600 V, XLPE insul., PVC jacket
						1474-5	50 pair #18, shielded pairs, IS/OS shield 600 V, XLPE insul., PVC jacket
						1474-5B	1 - 6 pair, shielded #18 with overall shield , 300 V, PVC jacket
						1474-5A	1 - 6 pair, shielded #18 with overall shield , 300 V, PVC jacket
						2900-472C	4 pair #22, shielded pairs, FEP insulation
						2900-182B	4 pair #22, shielded pairs, FEP insulation
						2900-472A	4 pair #22, shielded pairs, FEP insulation
						2900-462B	4 pair #22, shielded pairs, FEP insulation
						2900-462A	4 pair #22, shielded pairs, FEP insulation
						2900-392A	4 pair #22, shielded pairs, FEP insulation
						2900-342A	4 pair #22, shielded pairs, FEP insulation
						2900-282A	4 pair #22, shielded pairs, FEP insulation
						2910-7	4 pair #24, overall shielded, 30 V, PE insulation
						2900-472B	4 pair #22, shielded pairs, FEP insulation
						2900-202A	4 pair #22, shielded pairs, FEP insulation
1T46	E-118	610	152.4 mm siderail ladder tray	2757.87	38709.60	CCTVE01BD	TVL
						1474-7	50 pair #18, shielded pairs, IS/OS shield 600 V, XLPE insul., PVC jacket
						MVDSW03A	MVDS DLC
						CCTVE01BC	TVC
						1475-3B	12 Fiber, single mode fiberoptic cable
						Pull rope	Soft-Fiber Polyester
						1473-7	50 pair #18, shielded pairs, IS/OS shield 600 V, XLPE insul., PVC jacket

For continuation, see next sheet.

CONDUIT AND TRAY SCHEDULE

E-408

DESIGNED BY	CALCULATED/	CHECKED BY	DATE	REVISED BY	DATE REVISED
BEHZAD GOLEMOHAMMADI	PBP	AB	8/02		

STATE OF CALIFORNIA - DEPARTMENT OF TRANSPORTATION
DESIGN OVERSIGHT
Caltrans

FOR REDUCED PLANS ORIGINAL SCALE IS IN MILLIMETERS 0 20 40 60 80

DGN FILE =>T:\13103\MS\pse\SAS Struc\CCO\SAS CC044\04-0120f1_0363R01.dgn
USERNAME =>llorico

CU 04251 EA 0120F1

LAST REVISION 00-00-00 DATE PLOTTED => 5/22/2008 TIME PLOTTED => 11:00:18 AM

DIST	COUNTY	ROUTE	KILOMETER POST TOTAL PROJECT	SHEET No	TOTAL SHEETS
04	SF	80	13.2/13.9	364 R1	1204

12/19/02
REGISTERED ELECTRICAL ENGINEER DATE

12-6-04
PLANS APPROVAL DATE

REGISTERED PROFESSIONAL ENGINEER — JENS ERLINGSSON No. 8249 Exp. 9/30/06 ELECTRICAL — STATE OF CALIFORNIA

PB POWER, Inc.
A Parsons Brinckerhoff Company
303 Second St., Suite 700N
San Francisco, CA 94107-1317

The State of California or its officers or agents shall not be responsible for the accuracy or completeness of electronic copies of this plan sheet.

Caltrans now has a web site! To get to the web site, go to http://www.dot.ca.gov

Caltrans Metric

REGISTERED PROFESSIONAL ENGINEER — S. A. ESTOQUE, JR. No. E-10151 Exp. 12/31/2008 ELECTRICAL — STATE OF CALIFORNIA

FOR REVISION ONLY

REQUEST FOR INFORMATION NOT ADDRESSED IN THIS CCO REMAIN IN FORCE

MARK	DATE	DESCRIPTIONS	BY	CH'D	CCO#
		REVISIONS			
1	03/04/08	BARRIER MODIFICATIONS	JS BM	RG SE	44

CONTRACT CHANGE ORDER NO. 4450
SHEET 43 OF 92

CONDUIT DATA

Conduit No	Reference	Size	Type	Total Fill (mm²)	Allowable Fill (mm²)	Included Cable No.	Conductor Type
1T47	E-117	610	152.4 mm siderail ladder tray	3785.76	38709.60	Pull rope	Soft-Fiber Polyester
						MVDSW04A	MVDS DLC
						1474-7	50 pair #18, shielded pairs, IS/OS shield 600 V, XLPE insul., PVC jacket
						1473-7	50 pair #18, shielded pairs, IS/OS shield 600 V, XLPE insul., PVC jacket
						1474-8	50 pair #18, shielded pairs, IS/OS shield 600 V, XLPE insul., PVC jacket
						1475-3C	12 Fiber, single mode fiberoptic cable (1)
1T48	E-118	610	152.4 mm siderail ladder tray	2157.13 (1)	38709.60		
						Pull rope	Soft-Fiber Polyester
						1474-8A	1 - 6 pair, shielded #18 with overall shield , 300 V, PVC jacket
						1474-8B	1 - 6 pair, shielded #18 with overall shield , 300 V, PVC jacket
						1474-10	50 pair #18, shielded pairs, IS/OS shield 600 V, XLPE insul., PVC jacket
						1474-8	50 pair #18, shielded pairs, IS/OS shield 600 V, XLPE insul., PVC jacket
						(1)	
						1473-10	50 pair #18, shielded pairs, IS/OS shield 600 V, XLPE insul., PVC jacket
1T49	E-128, E-19	305	152.4 mm siderail ladder tray	1849.01	19354.80	Pull rope	Soft-Fiber Polyester
						1474-4	50 pair #18, shielded pairs, IS/OS shield 600 V, XLPE insul., PVC jacket
						1475-3	72 Fiber, single mode fiberoptic riser cable
						1477-2	72 Fiber, single mode fiberoptic riser cable
1T53	E-96, E-126	610	152.4 mm siderail ladder tray	0.00	16774.16	Pull rope	Soft-Fiber Polyester
1T54	E-126	610	152.4 mm siderail ladder tray	0.00	16774.16	Pull rope	Soft-Fiber Polyester
2000	E-96	41	RGS conduit	323.69	534.55	UP104-7-1	1-2/C + gnd #8,600 V, EPR insulation
						UP104-8-2	2 + 1 gnd #8,#10, 600 V, RHH/RHW insulation
2001	E-96	53	RGS conduit	809.26	879.42	UP104-9	1-2/C + gnd #10,600 V, EPR insulation
						UP104-8	1-2/C + gnd #8,600 V, EPR insulation
						UP104-6	1-2/C + gnd #8,600 V, EPR insulation
						UP104-7	1-2/C + gnd #8,600 V, EPR insulation
2002	E-96	63	RGS conduit	905.49	1663.73	UP104-8-2	2 + 1 gnd #8,#10, 600 V, RHH/RHW insulation
						UP104-6	1-2/C + gnd #8,600 V, EPR insulation
						UP104-9	1-2/C + gnd #10,600 V, EPR insulation
						UP104-7	1-2/C + gnd #8,600 V, EPR insulation
						UP104-8	1-2/C + gnd #8,600 V, EPR insulation
2003	E-96	41	RGS conduit	192.46	534.55	UP104-9-2	2 + 1 gnd #8,#10, 600 V, RHH/RHW insulation
						UP104-6A	2 + 1 gnd #8,#10, 600 V, RHH/RHW insulation
2004	E-96	53	RGS conduit	811.22	879.42	UP104-7	1-2/C + gnd #8,600 V, EPR insulation
						UP104-8-1	3 + 1 gnd #8,#10, 600 V, RHH/RHW insulation
						UP104-8-2	2 + 1 gnd #8,#10, 600 V, RHH/RHW insulation
						UP104-9	1-2/C + gnd #10,600 V, EPR insulation
						UP104-6	1-2/C + gnd #8,600 V, EPR insulation
2005	E-96	41	RGS conduit	192.46	534.55	UP104-6b	2 + 1 gnd #8,#10, 600 V, RHH/RHW insulation
						UP104-9-1	2 + 1 gnd #8,#10, 600 V, RHH/RHW insulation
2006	E-96	53	RGS conduit	811.22	879.42	UP104-9	1-2/C + gnd #10,600 V, EPR insulation
						UP104-6	1-2/C + gnd #8,600 V, EPR insulation
						UP104-8-2	2 + 1 gnd #8,#10, 600 V, RHH/RHW insulation
						UP104-8-1	3 + 1 gnd #8,#10, 600 V, RHH/RHW insulation
						UP104-7	1-2/C + gnd #8,600 V, EPR insulation
2007	E-97	41	RGS conduit	354.34	534.55	UP104-9	1-2/C + gnd #10,600 V, EPR insulation
						UP104-6	1-2/C + gnd #8,600 V, EPR insulation
2008	E-97	53	RGS conduit	456.88	879.42	UP104-8-2	2 + 1 gnd #8,#10, 600 V, RHH/RHW insulation
						UP104-8-1	3 + 1 gnd #8,#10, 600 V, RHH/RHW insulation
						UP105-7-1	1-2/C + gnd #8,600 V, EPR insulation
2009	E-97	63	RGS conduit	909.84	1663.73	UP105-7	1-2/C + gnd #8,600 V, EPR insulation
						UP105-9	1-2/C + gnd #8,600 V, EPR insulation
						UP105-10	1-2/C + gnd #8,600 V, EPR insulation
						UP105-8	1-2/C + gnd #8,600 V, EPR insulation

CONDUIT DATA

Conduit No	Reference	Size	Type	Total Fill (mm²)	Allowable Fill (mm²)	Included Cable No.	Conductor Type
2010	E-97	63	RGS conduit	1139.26	1663.73	UP104-8-2	2 + 1 gnd #8,#10, 600 V, RHH/RHW insulation
						UP104-8-1	3 + 1 gnd #8,#10, 600 V, RHH/RHW insulation
						UP105-8	1-2/C + gnd #8,600 V, EPR insulation
						UP105-7	1-2/C + gnd #8,600 V, EPR insulation
						UP105-9	1-2/C + gnd #8,600 V, EPR insulation
						UP105-10	1-2/C + gnd #8,600 V, EPR insulation
2011	E-97	41	RGS conduit	192.46	534.55	UP105-10A	2 + 1 gnd #8,#10, 600 V, RHH/RHW insulation
						UP105-9-2	2 + 1 gnd #8,#10, 600 V, RHH/RHW insulation
2012	E-97	63	RGS conduit	911.80	1663.73	UP105-9	1-2/C + gnd #8,600 V, EPR insulation
						UP105-10	1-2/C + gnd #8,600 V, EPR insulation
						UP105-8-1	3 + 1 gnd #8,#10, 600 V, RHH/RHW insulation
						UP105-7	1-2/C + gnd #8,600 V, EPR insulation
						UP105-8-2	2 + 1 gnd #8,#10, 600 V, RHH/RHW insulation
2013	E-97	41	RGS conduit	192.46	534.55	UP105-10b	2 + 1 gnd #8,#10, 600 V, RHH/RHW insulation
						UP105-9-1	2 + 1 gnd #8,#10, 600 V, RHH/RHW insulation
2014	E-97	63	RGS conduit	911.80	1663.73	UP105-10	1-2/C + gnd #8,600 V, EPR insulation
						UP105-8-1	3 + 1 gnd #8,#10, 600 V, RHH/RHW insulation
						UP105-8-2	2 + 1 gnd #8,#10, 600 V, RHH/RHW insulation
						UP105-7	1-2/C + gnd #8,600 V, EPR insulation
						UP105-9	1-2/C + gnd #8,600 V, EPR insulation
2015	E-97	41	RGS conduit	454.92	534.55	UP105-10	1-2/C + gnd #8,600 V, EPR insulation
						UP105-9	1-2/C + gnd #8,600 V, EPR insulation
2016	E-97	63	RGS conduit	229.42	1663.73	UP105-8-1	3 + 1 gnd #8,#10, 600 V, RHH/RHW insulation
						UP105-8-2	2 + 1 gnd #8,#10, 600 V, RHH/RHW insulation
2017	E-98	63	RGS conduit	909.84	1663.73	UP106-6	1-2/C + gnd #8,600 V, EPR insulation
						UP106-8	1-2/C + gnd #8,600 V, EPR insulation
						UP106-7	1-2/C + gnd #8,600 V, EPR insulation
						UP106-9	1-2/C + gnd #8,600 V, EPR insulation
2018	E-98	63	RGS conduit	1139.26	1663.73	UP106-7	1-2/C + gnd #8,600 V, EPR insulation
						UP106-9	1-2/C + gnd #8,600 V, EPR insulation
						UP106-6	1-2/C + gnd #8,600 V, EPR insulation
						UP105-8-1	3 + 1 gnd #8,#10, 600 V, RHH/RHW insulation
						UP105-8-2	2 + 1 gnd #8,#10, 600 V, RHH/RHW insulation
						UP106-8	1-2/C + gnd #8,600 V, EPR insulation
2019	E-98	41	RGS conduit	323.69	534.55	UP106-6A	1-2/C + gnd #8,600 V, EPR insulation
						UP106-9-2	2 + 1 gnd #8,#10, 600 V, RHH/RHW insulation
2020	E-98	63	RGS conduit	911.80	1663.73	UP106-6	1-2/C + gnd #8,600 V, EPR insulation
						UP106-8-1	3 + 1 gnd #8,#10, 600 V, RHH/RHW insulation
						UP106-7	1-2/C + gnd #8,600 V, EPR insulation
						UP106-8-2	2 + 1 gnd #8,#10, 600 V, RHH/RHW insulation
						UP106-9	1-2/C + gnd #8,600 V, EPR insulation

For continuation, see next sheet.

CONDUIT AND TRAY SCHEDULE

E-409

DATE	REVISED BY	DATE REVISED
8/02	PBP	8/02
	CALCULATED/ DESIGNED BY	AB
	CHECKED BY	
	DESIGN OVERSIGHT	BEHZAD GOLEMOHAMMADI

STATE OF CALIFORNIA - DEPARTMENT OF TRANSPORTATION
Caltrans

LAST REVISION 00-00-00
DATE PLOTTED => 5/22/2008
TIME PLOTTED => 11:00:57 AM

FOR REDUCED PLANS ORIGINAL SCALE IS IN MILLIMETERS 0 20 40 60 80

DGN FILE =>T:\13103\MS\pse\SAS Struc\CCO\SAS CC044\04-0120F1_0364R01.dgn
USERNAME =>florico

CU 04251

EA 0120F1

CONDUIT DATA

Conduit No	Reference	Size	Type	Total Fill (mm²)	Allowable Fill (mm²)	Included Cable No.	Conductor Type
2214	E-136	41	RGS conduit	0.00	534.55	Pull rope	Soft-Fiber Polyester
2215	E-136	41	RGS conduit	0.00	534.55	Pull rope	Soft-Fiber Polyester
2216	E-136	41	RGS conduit	0.00	534.55	Pull rope	Soft-Fiber Polyester
2217	E-136	41	RGS conduit	0.00	534.55	Pull rope	Soft-Fiber Polyester
2218	E-136	41	RGS conduit	0.00	534.55	Pull rope	Soft-Fiber Polyester
2219	E-137	41	RGS conduit	0.00	534.55	Pull rope	Soft-Fiber Polyester
2220	E-137	41	RGS conduit	0.00	534.55	Pull rope	Soft-Fiber Polyester
2221	E-137	41	RGS conduit	0.00	534.55	Pull rope	Soft-Fiber Polyester
2222	E-138	41	RGS conduit	0.00	534.55	Pull rope	Soft-Fiber Polyester
2223	E-138	41	RGS conduit	0.00	534.55	Pull rope	Soft-Fiber Polyester
2224	E-138	41	RGS conduit	0.00	534.55	Pull rope	Soft-Fiber Polyester
2225	E-138	41	RGS conduit	0.00	534.55	Pull rope	Soft-Fiber Polyester
2226	E-139	41	RGS conduit	0.00	534.55	Pull rope	Soft-Fiber Polyester
2227	E-139	41	RGS conduit	0.00	534.55	Pull rope	Soft-Fiber Polyester
2228	E-139	41	RGS conduit	0.00	534.55	Pull rope	Soft-Fiber Polyester
2229	E-139	41	RGS conduit	0.00	534.55	Pull rope	Soft-Fiber Polyester
2230	E-139	41	RGS conduit	0.00	534.55	Pull rope	Soft-Fiber Polyester
2231	E-140	41	RGS conduit	0.00	534.55	Pull rope	Soft-Fiber Polyester
2300	E-138	41	RGS conduit	212.85	534.55	A-2013-2	3 + 1 gnd #6,#8, 600 V RHH/RHW insulation
2301	E-138	41	RGS conduit	0.00	534.55	Pull rope	Soft-Fiber Polyester
2302	E-137	41	RGS conduit	0.00	534.55	Pull rope	Soft-Fiber Polyester
2326	E-135	41	RGS conduit	339.73	534.55	Pull rope	Soft-Fiber Polyester
						A-2011-2	3 + 1 gnd #6,#8, 600 V RHH/RHW insulation
						UP204-1	1-2/C + gnd #10, 600 V, EPR insulation
2327	E-135	41	RGS conduit	339.73	534.55	UP204-1	1-2/C + gnd #10, 600 V, EPR insulation
						A-2012-2	3 + 1 gnd #6,#8, 600 V RHH/RHW insulation
						Pull rope	Soft-Fiber Polyester
2328	E-135	41	RGS conduit	339.73	534.55	UP204-1	1-2/C + gnd #10, 600 V, EPR insulation
						Pull rope	Soft-Fiber Polyester
						S-2031-2	3 + 1 gnd #6,#8, 600 V RHH/RHW insulation
2329	E-135	41	RGS conduit	0.00	534.55	Pull rope	Soft-Fiber Polyester
2330	E-135	41	RGS conduit	212.85	534.55	A-2014-2	3 + 1 gnd #6,#8, 600 V RHH/RHW insulation
						Pull rope	Soft-Fiber Polyester
2331	E-135	41	RGS conduit	0.00	534.55	Pull rope	Soft-Fiber Polyester
2332	E-136	41	RGS conduit	0.00	534.55	Pull rope	Soft-Fiber Polyester
2333	E-136	41	RGS conduit	0.00	534.55	Pull rope	Soft-Fiber Polyester
2334	E-135	41	RGS conduit	126.88	534.55	Pull rope	Soft-Fiber Polyester
						UP205-1	1-2/C + gnd #10, 600 V, EPR insulation
2335	E-136	41	RGS conduit	339.73	534.55	A-3039-2	3 + 1 gnd #6,#8, 600 V RHH/RHW insulation
						Pull rope	Soft-Fiber Polyester
						UP205-1	1-2/C + gnd #10, 600 V, EPR insulation
2336	E-136	41	RGS conduit	339.73	534.55	Pull rope	Soft-Fiber Polyester
						UP205-1	1-2/C + gnd #10, 600 V, EPR insulation
						A-3039-2	3 + 1 gnd #6,#8, 600 V RHH/RHW insulation
2338	E-136	41	RGS conduit	0.00	534.55	Pull rope	Soft-Fiber Polyester
2339	E-136	41	RGS conduit	339.73	534.55	A-3040-2	3 + 1 gnd #6,#8, 600 V RHH/RHW insulation
						Pull rope	Soft-Fiber Polyester
						UP206-1	1-2/C + gnd #10, 600 V, EPR insulation

REQUEST FOR INFORMATION NOT ADDRESSED IN THIS CCO REMAIN IN FORCE

MARK	DATE	REVISIONS DESCRIPTIONS	BY	CH'D	CCO#
1	03/04/08	BARRIER MODIFICATIONS	TW	RG	44

CONTRACT CHANGE ORDER NO. 4450
SHEET 44 OF 92

FOR REVISION ONLY

Caltrans Metric

DIST	COUNTY	ROUTE	KILOMETER POST TOTAL PROJECT	SHEET No	TOTAL SHEETS
04	SF	80	13.2/13.9	367 R1	1204

REGISTERED ELECTRICAL ENGINEER — 12/19/02 DATE

12-6-04
PLANS APPROVAL DATE

REGISTERED PROFESSIONAL ENGINEER — JENS ERLINGSSON No. 8249 Exp. 9/30/06 ELECTRICAL — STATE OF CALIFORNIA

REGISTERED PROFESSIONAL ENGINEER — FADI WALIEDDINE No. 11465 Exp. 12/31/2009 ELECTRICAL — STATE OF CALIFORNIA

PB POWER, Inc.
A Parsons Brinckerhoff Company
303 Second St., Suite 700N
San Francisco, CA 94107-1317

The State of California or its officers or agents shall not be responsible for the accuracy or completeness of electronic copies of this plan sheet.

Caltrans now has a web site! To get to the web site, go to http://www.dot.ca.gov

CONDUIT DATA

Conduit No	Reference	Size	Type	Total Fill (mm²)	Allowable Fill (mm²)	Included Cable No.	Conductor Type
2340	E-137	41	RGS conduit	339.73	534.55	Pull rope	Soft-Fiber Polyester
						UP206-1	1-2/C + gnd #10, 600 V, EPR insulation
						A-3040-2	3 + 1 gnd #6,#8, 600 V RHH/RHW insulation
2341	E-137	41	RGS conduit	0.00	534.55	Pull rope	Soft-Fiber Polyester
2346	E-138	41	RGS conduit	0.00	534.55	Pull rope	Soft-Fiber Polyester
2348	E-138, E-139	41	RGS conduit	481.21	534.55	S-2031-4	3+1gnd #4,#8, 600V, RHH/RHW insulation
						Pull rope	Soft-Fiber Polyester
						A-2035-4	3 + 1 gnd #6,#8, 600 V RHH/RHW insulation
2350	E-139	41	RGS conduit	425.70	534.55	Pull rope	Soft-Fiber Polyester
						A-2035-4	3 + 1 gnd #6,#8, 600 V RHH/RHW insulation
						S-2032-2	3 + 1 gnd #6,#8, 600 V RHH/RHW insulation
2353	E-139	41	RGS conduit	425.70	534.55	S-2032-2	3 + 1 gnd #6,#8, 600 V RHH/RHW insulation
						Pull rope	Soft-Fiber Polyester
						A-2035-4	3 + 1 gnd #6,#8, 600 V RHH/RHW insulation
2355	E-140	41	RGS conduit	425.70	534.55	A-2035-4	3 + 1 gnd #6,#8, 600 V RHH/RHW insulation
						Pull rope	Soft-Fiber Polyester
						S-2032-2	3 + 1 gnd #6,#8, 600 V RHH/RHW insulation
2357	E-140	41	RGS conduit	0.00	534.55	Pull rope	Soft-Fiber Polyester
2358	E-139	41	RGS conduit	0.00	534.55	Pull rope	Soft-Fiber Polyester
2359	E-137	41	RGS conduit	126.88	534.55	UP206-1	1-2/C + gnd #10, 600 V, EPR insulation
						Pull rope	Soft-Fiber Polyester
2360	E-138	41	RGS conduit	0.00	534.55	Pull rope	Soft-Fiber Polyester
2361	E-136	41	RGS conduit	0.00	534.55	Pull rope	Soft-Fiber Polyester
2364	E-137	41	RGS conduit	212.85	534.55	LP220-2,4A	3 + 1 gnd #6,#8, 600 V RHH/RHW insulation
2368	E-135	41	RGS conduit	212.85	534.55	LP219-2,4A	3 + 1 gnd #6,#8, 600 V RHH/RHW insulation
2369	E-135	41	RGS conduit	212.85	534.55	LP219-2,4A	3 + 1 gnd #6,#8, 600 V RHH/RHW insulation
2370	E-135	41	RGS conduit	212.85	534.55	LP219-2,4A	3 + 1 gnd #6,#8, 600 V RHH/RHW insulation
2371	E-135	41	RGS conduit	212.85	534.55	LP219-6,8A	3 + 1 gnd #6,#8, 600 V RHH/RHW insulation
2372	E-135	41	RGS conduit	212.85	534.55	LP219-6,8A	3 + 1 gnd #6,#8, 600 V RHH/RHW insulation
2373	E-135	41	RGS conduit	212.85	534.55	LP219-6,8A	3 + 1 gnd #6,#8, 600 V RHH/RHW insulation
2374	E-135	41	RGS conduit	212.85	534.55	LP219-6,8A	3 + 1 gnd #6,#8, 600 V RHH/RHW insulation
2375	E-136	41	RGS conduit	0.00	534.55	Pull rope	Soft-Fiber Polyester
2376	E-136	41	RGS conduit	212.85	534.55	LP220-2,4A	3 + 1 gnd #6,#8, 600 V RHH/RHW insulation

For continuation, see next sheet.

CONDUIT AND TRAY SCHEDULE

E-412

STATE OF CALIFORNIA - DEPARTMENT OF TRANSPORTATION
Caltrans

DESIGN OVERSIGHT
BEHZAD GOLEMOHAMMADI

CALCULATED/DESIGNED BY
CHECKED BY

DATE	REVISED BY	DATE REVISED
8/02	PBP	AB

LAST REVISION 00-00-00
DATE PLOTTED => 5/22/2008
TIME PLOTTED => 11:01:45 AM

FOR REDUCED PLANS ORIGINAL SCALE IS IN MILLIMETERS 0 20 40 60 80

DGN FILE =>T:\13103\WS\pse\SAS Struc\CCO\SAS CC044\04-0120f1_0367R01.dgn
USERNAME =>llorico

CU 04251

EA 0120F1

CONDUIT DATA

Conduit No	Reference	Size	Type	Total Fill (mm²)	Allowable Fill (mm²)	Included Cable No.	Conductor Type
2303	E-140	41	RGS conduit	0.00	534.55	Pull rope	Soft-Fiber Polyester
2304	E-140	41	RGS conduit	0.00	534.55	Pull rope	Soft-Fiber Polyester

REQUEST FOR INFORMATION NOT ADDRESSED IN THIS CCO REMAIN IN FORCE

MARK	DATE	DESCRIPTIONS	BY	CH'D	CCO#
		REVISIONS			
0	03/04/08	BARRIER MODIFICATIONS	TW	RG	44

CONTRACT CHANGE ORDER NO. 44 S0
SHEET 45 OF 92

Caltrans Metric

DIST	COUNTY	ROUTE	KILOMETER POST TOTAL PROJECT	SHEET No	TOTAL SHEETS
04	SF	80	13.2/13.9	367 S1	1204

REGISTERED ELECTRICAL ENGINEER DATE

REGISTERED PROFESSIONAL ENGINEER
FADI WALIEDDINE
No. 11465
Exp. 12/31/2009
ELECTRICAL
STATE OF CALIFORNIA

PLANS APPROVAL DATE

PB AMERICAS, Inc.
A Parsons Brinckerhoff Company
303 Second St., Suite 700N
San Francisco, CA 94107-1317

The State of California or its officers or agents shall not be responsible for the accuracy or completeness of electronic copies of this plan sheet.

Caltrans now has a web site! To get to the web site, go to http://www.dot.ca.gov

CONDUIT DATA

Conduit No	Reference	Size	Type	Total Fill (mm²)	Allowable Fill (mm²)	Included Cable No.	Conductor Type

For continuation, see next sheet.

CONDUIT AND TRAY SCHEDULE

E-412A

DESIGN OVERSIGHT	CALCULATED/ DESIGNED BY	CHECKED BY	DATE	REVISED BY	DATE REVISED
BEHZAD GOLEMOHAMMADI	PBP	AB	8/02		8/02

STATE OF CALIFORNIA - DEPARTMENT OF TRANSPORTATION
Caltrans

FOR REDUCED PLANS ORIGINAL SCALE IS IN MILLIMETERS 0 20 40 60 80

DGN FILE =>T:\13103\WS\pse\SAS Struc\CCO\SAS CCO44\04-0120f1_0367S01.dgn
USERNAME =>llorico

CU 04251

EA 0120F1

LAST REVISION 00-00-00
DATE PLOTTED => 5/22/2008
TIME PLOTTED => 11:09:36 AM

CONDUIT DATA

Conduit No	Reference	Size	Type	Total Fill (mm²)	Allowable Fill (mm²)	Included Cable No.	Conductor Type
2377	E-136	41	RGS conduit	212.85	534.55	LP220-2,4A	3 + 1 gnd #6,#8, 600 V, RHH/RHW insulation
2378	E-136	41	RGS conduit	212.85	534.55	LP220-2,4A	3 + 1 gnd #6,#8, 600 V, RHH/RHW insulation
2379	E-136	41	RGS conduit	212.85	534.55	LP220-2,4A	3 + 1 gnd #6,#8, 600 V, RHH/RHW insulation
2380	E-136	41	RGS conduit	212.85	534.55	LP220-6,8A	3 + 1 gnd #6,#8, 600 V, RHH/RHW insulation
2381	E-136	41	RGS conduit	212.85	534.55	LP220-6,8A	3 + 1 gnd #6,#8, 600 V, RHH/RHW insulation
2382	E-136	41	RGS conduit	212.85	534.55	LP220-6,8A	3 + 1 gnd #6,#8, 600 V, RHH/RHW insulation
2383	E-136	41	RGS conduit	212.85	534.55	LP220-6,8A	3 + 1 gnd #6,#8, 600 V, RHH/RHW insulation
2384	E-136	41	RGS conduit	212.85	534.55	LP220-6,8A	3 + 1 gnd #6,#8, 600 V, RHH/RHW insulation
2385	E-136	41	RGS conduit	0.00	534.55	Pull rope	Soft-Fiber Polyester
2386	E-136	41	RGS conduit	212.85	534.55	LP221-2,4A	3 + 1 gnd #6,#8, 600 V, RHH/RHW insulation
2387	E-137	41	RGS conduit	212.85	534.55	LP221-2,4A	3 + 1 gnd #6,#8, 600 V, RHH/RHW insulation
2388	E-137	41	RGS conduit	212.85	534.55	LP221-2,4A	3 + 1 gnd #6,#8, 600 V, RHH/RHW insulation
2389	E-137	41	RGS conduit	212.85	534.55	LP221-6,8A	3 + 1 gnd #6,#8, 600 V, RHH/RHW insulation
2390	E-137	41	RGS conduit	212.85	534.55	LP221-6,8A	3 + 1 gnd #6,#8, 600 V, RHH/RHW insulation
2391	E-137	41	RGS conduit	212.85	534.55	LP221-6,8A	3 + 1 gnd #6,#8, 600 V, RHH/RHW insulation
2392	E-137	41	RGS conduit	212.85	534.55	LP221-6,8A	3 + 1 gnd #6,#8, 600 V, RHH/RHW insulation
2393	E-137	41	RGS conduit	212.85	534.55	LP221-6,8A	3 + 1 gnd #6,#8, 600 V, RHH/RHW insulation
2394	E-137	41	RGS conduit	212.85	534.55	LP221-6,8A	3 + 1 gnd #6,#8, 600 V, RHH/RHW insulation
2395	E-137	41	RGS conduit	212.85	534.55	LP221-6,8A	3 + 1 gnd #6,#8, 600 V, RHH/RHW insulation
2396	E-137	41	RGS conduit	212.85	534.55	LP222-2,4A	3 + 1 gnd #6,#8, 600 V, RHH/RHW insulation
2397	E-138	41	RGS conduit	212.85	534.55	LP222-2,4A	3 + 1 gnd #6,#8, 600 V, RHH/RHW insulation
2398	E-138	41	RGS conduit	212.85	534.55	LP222-2,4A	3 + 1 gnd #6,#8, 600 V, RHH/RHW insulation
2399	E-138	41	RGS conduit	212.85	534.55	LP222-2,4A	3 + 1 gnd #6,#8, 600 V, RHH/RHW insulation
2401	E-138	41	RGS conduit	212.85	534.55	Pull rope	Soft-Fiber Polyester
						A-2013-2	3 + 1 gnd #6,#8, 600 V, RHH/RHW insulation
2426	E-135	41	RGS conduit	212.85	534.55	LP219-2,4A	3 + 1 gnd #6,#8, 600 V, RHH/RHW insulation
						Pull rope	Soft-Fiber Polyester
2427	E-135	41	RGS conduit	(212.85) 1	534.55	Pull rope	Soft-Fiber Polyester
						LP220-2,4A	3 + 1 gnd #6,#8, 600 V, RHH/RHW insulation
2428	E-135	41	RGS conduit	425.70	534.55	Pull rope	Soft-Fiber Polyester
						A-2035-2	3 + 1 gnd #6,#8, 600 V, RHH/RHW insulation
						LP221-6,8A	3 + 1 gnd #6,#8, 600 V, RHH/RHW insulation
2429	E-136	41	RGS conduit	212.85	534.55	LP219-6,8A	3 + 1 gnd #6,#8, 600 V, RHH/RHW insulation
2430	E-138	41	RGS conduit	425.70	534.55	LP222-2,4A	3 + 1 gnd #6,#8, 600 V, RHH/RHW insulation
						LP222-6,8A	3 + 1 gnd #6,#8, 600 V, RHH/RHW insulation
2432	E-139	41	RGS conduit	425.70	534.55	LP219-2,4A	3 + 1 gnd #6,#8, 600 V, RHH/RHW insulation
						LP219-6,8A	3 + 1 gnd #6,#8, 600 V, RHH/RHW insulation
2434	E-135	41	RGS conduit	0.00	534.55	Pull rope	Soft-Fiber Polyester 1
2435	E-136	41	RGS conduit	0.00	534.55	Pull rope	Soft-Fiber Polyester
2436	E-136	41	RGS conduit	(0.00) 1	534.55	Pull rope	Soft-Fiber Polyester 1
2437	E-136	41	RGS conduit	0.00	534.55	Pull rope	Soft-Fiber Polyester
2438	E-136	41	RGS conduit	0.00	534.55	Pull rope	Soft-Fiber Polyester
2439	E-136	41	RGS conduit	0.00	534.55	Pull rope	Soft-Fiber Polyester
2440	E-136	41	RGS conduit	0.00	534.55	Pull rope	Soft-Fiber Polyester

REQUEST FOR INFORMATION NOT ADDRESSED IN THIS CCO REMAIN IN FORCE

MARK	DATE	REVISIONS DESCRIPTIONS	BY	CH'D	CCO#
1	03/04/08	BARRIER MODIFICATIONS	JS BM	RG SE	44

CONTRACT CHANGE ORDER NO. 4450
SHEET 46 OF 92

FOR REVISION ONLY

Caltrans Metric

DIST	COUNTY	ROUTE	KILOMETER POST TOTAL PROJECT	SHEET No	TOTAL SHEETS
04	SF	80	13.2/13.9	368 R1	1204

Jens Erlingsson 12/19/02
REGISTERED ELECTRICAL ENGINEER DATE

12-6-04
PLANS APPROVAL DATE

REGISTERED PROFESSIONAL ENGINEER — JENS ERLINGSSON No. 8249 Exp. 9/30/06 ELECTRICAL — STATE OF CALIFORNIA

REGISTERED PROFESSIONAL ENGINEER — S. A. ESTOQUE, JR. No. E-10151 Exp. 12/31/2008 ELECTRICAL — STATE OF CALIFORNIA

PB POWER, Inc.
A Parsons Brinckerhoff Company
303 Second St., Suite 700N
San Francisco, CA 94107-1317

The State of California or its officers or agents shall not be responsible for the accuracy or completeness of electronic copies of this plan sheet.

Caltrans now has a web site! To get to the web site, go to: http://www.dot.ca.gov

CONDUIT DATA

Conduit No	Reference	Size	Type	Total Fill (mm²)	Allowable Fill (mm²)	Included Cable No.	Conductor Type
2441	E-137	41	RGS conduit	0.00	534.55	Pull rope	Soft-Fiber Polyester
2442	E-137	41	RGS conduit	0.00	534.55	Pull rope	Soft-Fiber Polyester
2443	E-137	41	RGS conduit	0.00	534.55	Pull rope	Soft-Fiber Polyester
2444	E-137	41	RGS conduit	0.00	534.55	Pull rope	Soft-Fiber Polyester
2446	E-138	41	RGS conduit	0.00	534.55	Pull rope	Soft-Fiber Polyester
2447	E-138	41	RGS conduit	0.00	534.55	Pull rope	Soft-Fiber Polyester
2448	E-138	41	RGS conduit	0.00	534.55	Pull rope	Soft-Fiber Polyester
2449	E-139	41	RGS conduit	0.00	534.55	Pull rope	Soft-Fiber Polyester
2450	E-139	41	RGS conduit	0.00	534.55	Pull rope	Soft-Fiber Polyester
2451	E-139	41	RGS conduit	0.00	534.55	Pull rope	Soft-Fiber Polyester
2452	E-139	41	RGS conduit	0.00	534.55	Pull rope	Soft-Fiber Polyester
2453	E-139	41	RGS conduit	0.00	534.55	Pull rope	Soft-Fiber Polyester
2454	E-139	41	RGS conduit	0.00	534.55	Pull rope	Soft-Fiber Polyester
2455	E-140	41	RGS conduit	0.00	534.55	Pull rope	Soft-Fiber Polyester
2457	E-140	41	RGS conduit	0.00	534.55	Pull rope	Soft-Fiber Polyester
2459	E-139	41	RGS conduit	0.00	534.55	Pull rope	Soft-Fiber Polyester
2460	E-137	41	RGS conduit	0.00	534.55	Pull rope	Soft-Fiber Polyester
2461	E-138	41	RGS conduit	0.00	534.55	Pull rope	Soft-Fiber Polyester
2468	E-135	41	RGS conduit	212.85	534.55	A-2011-2	3 + 1 gnd #6,#8, 600 V, RHH/RHW insulation
2469	E-135	41	RGS conduit	212.85	534.55	A-2011-2	3 + 1 gnd #6,#8, 600 V, RHH/RHW insulation
2470	E-135	41	RGS conduit	212.85	534.55	A-2011-2	3 + 1 gnd #6,#8, 600 V, RHH/RHW insulation
2471	E-135	41	RGS conduit	212.85	534.55	A-2011-2	3 + 1 gnd #6,#8, 600 V, RHH/RHW insulation
2472	E-135	41	RGS conduit	212.85	534.55	A-2011-2	3 + 1 gnd #6,#8, 600 V, RHH/RHW insulation
2473	E-135	41	RGS conduit	212.85	534.55	A-2011-2	3 + 1 gnd #6,#8, 600 V, RHH/RHW insulation
2474	E-135	41	RGS conduit	212.85	534.55	A-2011-2	3 + 1 gnd #6,#8, 600 V, RHH/RHW insulation
2475	E-136	41	RGS conduit	212.85	534.55	A-2011-2	3 + 1 gnd #6,#8, 600 V, RHH/RHW insulation
2476	E-136	41	RGS conduit	212.85	534.55	A-2011-2	3 + 1 gnd #6,#8, 600 V, RHH/RHW insulation
2477	E-136	41	RGS conduit	212.85	534.55	A-2011-2	3 + 1 gnd #6,#8, 600 V, RHH/RHW insulation

For continuation, see next sheet.

CONDUIT AND TRAY SCHEDULE

E-413

STATE OF CALIFORNIA - DEPARTMENT OF TRANSPORTATION
Caltrans

DESIGN OVERSIGHT: BEHZAD GOLEMOHAMMADI

CALCULATED/DESIGNED BY: PBP
CHECKED BY: AB

DATE	REVISED BY	DATE REVISED
8/02		8/02

LAST REVISION: 00-00-00
DATE PLOTTED => 5/22/2008
TIME PLOTTED => 11:10:24 AM

FOR REDUCED PLANS ORIGINAL SCALE IS IN MILLIMETERS 0 20 40 60 80

DGN FILE =>T:\13103\MS\pse\SAS Struc\CCO\SAS CC044\04-0120F1_0368R01.dgn
USERNAME =>florico

CU 04251 | EA 0120F1

DIST	COUNTY	ROUTE	KILOMETER POST TOTAL PROJECT	SHEET No	TOTAL SHEETS
04	SF	80	13.2/13.9	369 R1	1204

REGISTERED ELECTRICAL ENGINEER — Jens Erlingsson — DATE 12/19/02

12-6-04
PLANS APPROVAL DATE

JENS ERLINGSSON No. 8249 Exp. 9/30/06 ELECTRICAL — REGISTERED PROFESSIONAL ENGINEER — STATE OF CALIFORNIA

PB POWER, Inc.
A Parsons Brinckerhoff Company
303 Second St., Suite 700N
San Francisco, CA 94107-1317

The State of California or its officers or agents shall not be responsible for the accuracy or completeness of electronic copies of this plan sheet.

Caltrans now has a web site! To get to the web site, go to: http://www.dot.ca.gov

REQUEST FOR INFORMATION NOT ADDRESSED IN THIS CCO REMAIN IN FORCE

MARK	DATE	DESCRIPTIONS	BY	CH'D	CCO#
		REVISIONS			
1	03/04/08	BARRIER MODIFICATIONS	JS BM	RG SE	44

CONTRACT CHANGE ORDER NO. 4450
SHEET 47 OF 92

FOR REVISION ONLY

REGISTERED PROFESSIONAL ENGINEER — S. A. ESTOQUE, JR. — No. E-10151 — Exp. 12/31/2006 ELECTRICAL — STATE OF CALIFORNIA

Caltrans Metric

CONDUIT DATA

Conduit No	Reference	Size	Type	Total Fill (mm²)	Allowable Fill (mm²)	Included Cable No.	Conductor Type
2478	E-136	41	RGS conduit	212.85	534.55	A-2011-2	3 + 1 gnd #6,#8, 600 V, RHH/RHW insulation
2479	E-136	41	RGS conduit	212.85	534.55	A-2011-2	3 + 1 gnd #6,#8, 600 V, RHH/RHW insulation
2480	E-136	41	RGS conduit	212.85	534.55	A-2011-2	3 + 1 gnd #6,#8, 600 V, RHH/RHW insulation
2481	E-136	41	RGS conduit	274.92	534.55	1256-7	1-3/C #16 ,600 V, EPR insulation
						A-2011-2	3 + 1 gnd #6,#8, 600 V, RHH/RHW insulation
2482	E-136	41	RGS conduit	212.85	534.55	A-2012-2	3 + 1 gnd #6,#8, 600 V, RHH/RHW insulation
2483	E-136	41	RGS conduit	212.85	534.55	A-2012-2	3 + 1 gnd #6,#8, 600 V, RHH/RHW insulation
2484	E-136	41	RGS conduit	212.85	534.55	A-2012-2	3 + 1 gnd #6,#8, 600 V, RHH/RHW insulation
2485	E-136	41	RGS conduit	212.85	534.55	A-2012-2	3 + 1 gnd #6,#8, 600 V, RHH/RHW insulation
2486	E-136	41	RGS conduit	212.85	534.55	A-2012-2	3 + 1 gnd #6,#8, 600 V, RHH/RHW insulation
2487	E-137	41	RGS conduit	212.85	534.55	A-2012-2	3 + 1 gnd #6,#8, 600 V, RHH/RHW insulation
2488	E-137	41	RGS conduit	212.85	534.55	A-2012-2	3 + 1 gnd #6,#8, 600 V, RHH/RHW insulation
2489	E-137	41	RGS conduit	212.85	534.55	A-2012-2	3 + 1 gnd #6,#8, 600 V, RHH/RHW insulation
2490	E-137	41	RGS conduit	212.85	534.55	A-2012-2	3 + 1 gnd #6,#8, 600 V, RHH/RHW insulation
2491	E-137	41	RGS conduit	212.85	534.55	A-2012-2	3 + 1 gnd #6,#8, 600 V, RHH/RHW insulation
2492	E-137	41	RGS conduit	212.85	534.55	A-2012-2	3 + 1 gnd #6,#8, 600 V, RHH/RHW insulation
2493	E-137	41	RGS conduit	212.85	534.55	A-2012-2	3 + 1 gnd #6,#8, 600 V, RHH/RHW insulation
2494	E-137	41	RGS conduit	212.85	534.55	A-2012-2	3 + 1 gnd #6,#8, 600 V, RHH/RHW insulation
2495	E-137	41	RGS conduit	212.85	534.55	A-2012-2	3 + 1 gnd #6,#8, 600 V, RHH/RHW insulation
2496	E-137	41	RGS conduit	212.85	534.55	A-2012-2	3 + 1 gnd #6,#8, 600 V, RHH/RHW insulation
2497	E-138	41	RGS conduit	0.00	534.55	Pull rope	Soft-Fiber Polyester
2498	E-138	41	RGS conduit	212.85	534.55	A-2013-2	3 + 1 gnd #6,#8, 600 V, RHH/RHW insulation
2499	E-138	41	RGS conduit	212.85	534.55	A-2013-2	3 + 1 gnd #6,#8, 600 V, RHH/RHW insulation
2511	E-135	41	RGS conduit	98.10	534.55	2155	1 - 2 pair, shielded #18 with IS/OA, 300 V, PVC jacket
						Pull rope	Soft-Fiber Polyester
2512	E-135	41	RGS conduit	0.00	534.55	Pull rope	Soft-Fiber Polyester
2513	E-136	41	RGS conduit	0.00	534.55	Pull rope	Soft-Fiber Polyester
2514	E-136	41	RGS conduit	0.00	534.55	Pull rope	Soft-Fiber Polyester
2515	E-136	41	RGS conduit	0.00	534.55	Pull rope	Soft-Fiber Polyester
2516	E-136	41	RGS conduit	1 0.00	534.55	Pull rope	Soft-Fiber Polyester 1
2517	E-136	41	RGS conduit	0.00	534.55	Pull rope	Soft-Fiber Polyester
2518	E-136	41	RGS conduit	0.00	534.55	Pull rope	Soft-Fiber Polyester
2519	E-137	41	RGS conduit	0.00	534.55	Pull rope	Soft-Fiber Polyester
2520	E-137	41	RGS conduit	0.00	534.55	Pull rope	Soft-Fiber Polyester
2521	E-137	41	RGS conduit	0.00	534.55	Pull rope	Soft-Fiber Polyester
2522	E-138	41	RGS conduit	0.00	534.55	Pull rope	Soft-Fiber Polyester
2523	E-138	41	RGS conduit	0.00	534.55	Pull rope	Soft-Fiber Polyester
2524	E-138	41	RGS conduit	0.00	534.55	Pull rope	Soft-Fiber Polyester

CONDUIT DATA

Conduit No	Reference	Size	Type	Total Fill (mm²)	Allowable Fill (mm²)	Included Cable No.	Conductor Type
2525	E-138	41	RGS conduit	0.00	534.55	Pull rope	Soft-Fiber Polyester
2526	E-139	41	RGS conduit	0.00	534.55	Pull rope	Soft-Fiber Polyester
2527	E-139	41	RGS conduit	0.00	534.55	Pull rope	Soft-Fiber Polyester
2528	E-139	41	RGS conduit	0.00	534.55	Pull rope	Soft-Fiber Polyester
2529	E-139	41	RGS conduit	0.00	534.55	Pull rope	Soft-Fiber Polyester
2530	E-139	41	RGS conduit	0.00	534.55	Pull rope	Soft-Fiber Polyester
2531	E-140	41	RGS conduit	0.00	534.55	Pull rope	Soft-Fiber Polyester
2532	E-186	41	RGS conduit	227.46	534.55	UP208-6	1-2/C + gnd #8,600 V, EPR insulation
2533	E-186	41	RGS conduit	98.10	534.55	2154	1 - 2 pair, shielded #18 with IS/OA, 300 V, PVC jacket
2535	E-199	78	RGS-PVC coated conduit	882.89	1935.24	1118	1-3/C + gnd #2/0,600 V, EPR insulation
						Pull rope	Soft-Fiber Polyester
2536	E-199	53	RGS-PVC coated conduit	147.25	879.42	1118-2	1-3/C #14,600 V, EPR insulation
						1118-1	1-3/C #16,600 V, EPR insulation
						Pull rope	Soft-Fiber Polyester
2537	E-138	41	RGS conduit	212.85	534.55	LP222-2,4A	3 + 1 gnd #6,#8, 600 V, RHH/RHW insulation 1
2538	E-138	41	RGS conduit	212.85	534.55	LP222-2,4A	3 + 1 gnd #6,#8, 600 V, RHH/RHW insulation
2539	E-138	41	RGS conduit	212.85	534.55	LP222-2,4A	3 + 1 gnd #6,#8, 600 V, RHH/RHW insulation
2540	E-138	41	RGS conduit	212.85	534.55	LP222-2,4A	3 + 1 gnd #6,#8, 600 V, RHH/RHW insulation
2541	E-138	41	RGS conduit	212.85	534.55	LP222-6,8A	3 + 1 gnd #6,#8, 600 V, RHH/RHW insulation
2542	E-138	41	RGS conduit	212.85	534.55	LP222-6,8A	3 + 1 gnd #6,#8, 600 V, RHH/RHW insulation
2543	E-138	41	RGS conduit	212.85	534.55	LP222-6,8A	3 + 1 gnd #6,#8, 600 V, RHH/RHW insulation
2544	E-138	41	RGS conduit	212.85	534.55	LP222-6,8A	3 + 1 gnd #6,#8, 600 V, RHH/RHW insulation
2545	E-138	41	RGS conduit	212.85	534.55	LP222-6,8A	3 + 1 gnd #6,#8, 600 V, RHH/RHW insulation
2546	E-138	41	RGS conduit	212.85	534.55	LP222-6,8A	3 + 1 gnd #6,#8, 600 V, RHH/RHW insulation
2547	E-139	41	RGS conduit	212.85	534.55	LP222-6,8A	3 + 1 gnd #6,#8, 600 V, RHH/RHW insulation
2548	E-139	41	RGS conduit	0.00	534.55	Pull rope	Soft-Fiber Polyester
2549	E-139	41	RGS conduit	212.85	534.55	LP223-2,4A	3 + 1 gnd #6,#8, 600 V, RHH/RHW insulation
2550	E-139	41	RGS conduit	212.85	534.55	LP223-2,4A	3 + 1 gnd #6,#8, 600 V, RHH/RHW insulation

For continuation, see next sheet.

CONDUIT AND TRAY SCHEDULE

E-414

DESIGN OVERSIGHT	CALCULATED/ DESIGNED BY	CHECKED BY	DRAWN BY	CHECKED BY	DATE	REVISED BY	DATE REVISED
BEHZAD GOLEMOHAMMADI	PBP	AB			8/02		8/02

STATE OF CALIFORNIA - DEPARTMENT OF TRANSPORTATION — Caltrans

LAST REVISION 00-00-00 — DATE PLOTTED => 5/22/2008 — TIME PLOTTED => 11:10:49 AM

FOR REDUCED PLANS ORIGINAL SCALE IS IN MILLIMETERS 0 20 40 60 80

DGN FILE =>T:\13103\MS\pse\SAS Struc\CCO\SAS CC044\04-0120F1_0369R01.dgn
USERNAME =>llorico

CU 04251

EA 0120F1

CONDUIT DATA

Conduit No	Reference	Size	Type	Total Fill (mm²)	Allowable Fill (mm²)	Included Cable No.	Conductor Type
2551	E-139	41	RGS conduit	212.85	534.55	LP223-2,4A	3 + 1 gnd #6,#8, 600 V, RHH/RHW insulation
2552	E-139	41	RGS conduit	212.85	534.55	LP223-2,4A	3 + 1 gnd #6,#8, 600 V, RHH/RHW insulation
2553	E-139	41	RGS conduit	212.85	534.55	LP223-2,4A	3 + 1 gnd #6,#8, 600 V, RHH/RHW insulation
2554	E-139	41	RGS conduit	212.85	534.55	LP223-2,4A	3 + 1 gnd #6,#8, 600 V, RHH/RHW insulation
2555	E-139	41	RGS conduit	212.85	534.55	LP223-2,4A	3 + 1 gnd #6,#8, 600 V, RHH/RHW insulation
2556	E-139	41	RGS conduit	212.85	534.55	LP223-6,8A	3 + 1 gnd #6,#8, 600 V, RHH/RHW insulation
2557	E-139	41	RGS conduit	212.85	534.55	LP223-6,8A	3 + 1 gnd #6,#8, 600 V, RHH/RHW insulation
2558	E-140	41	RGS conduit	212.85	534.55	LP223-6,8A	3 + 1 gnd #6,#8, 600 V, RHH/RHW insulation
2559	E-140	41	RGS conduit	212.85	534.55	LP223-6,8A	3 + 1 gnd #6,#8, 600 V, RHH/RHW insulation
2560	E-140	41	RGS conduit	212.85	534.55	LP223-6,8A	3 + 1 gnd #6,#8, 600 V, RHH/RHW insulation
2561	E-140	41	RGS conduit	212.85	534.55	LP223-6,8A	3 + 1 gnd #6,#8, 600 V, RHH/RHW insulation
2562	E-140	41	RGS conduit	212.85	534.55	LP223-6,8A	3 + 1 gnd #6,#8, 600 V, RHH/RHW insulation
2563	E-140	41	RGS conduit	212.85	534.55	LP223-6,8A	3 + 1 gnd #6,#8, 600 V, RHH/RHW insulation
2611	E-135	41	RGS conduit	0.00	534.55	Pull rope	Soft-Fiber Polyester
2612	E-135	41	RGS conduit	0.00	534.55	Pull rope	Soft-Fiber Polyester
2613	E-135	41	RGS conduit	0.00	534.55	Pull rope	Soft-Fiber Polyester
2614	E-136	41	RGS conduit	0.00	534.55	Pull rope	Soft-Fiber Polyester
2615	E-136	41	RGS conduit	0.00	534.55	Pull rope	Soft-Fiber Polyester
2616	E-136	41	RGS conduit	0.00	534.55	Pull rope	Soft-Fiber Polyester
2617	E-136	41	RGS conduit	0.00	534.55	Pull rope	Soft-Fiber Polyester
2618	E-137	41	RGS conduit	0.00	534.55	Pull rope	Soft-Fiber Polyester
2619	E-137	41	RGS conduit	0.00	534.55	Pull rope	Soft-Fiber Polyester
2620	E-137	41	RGS conduit	0.00	534.55	Pull rope	Soft-Fiber Polyester
2621	E-137	41	RGS conduit	0.00	534.55	Pull rope	Soft-Fiber Polyester
2622	E-138	41	RGS conduit	0.00	534.55	Pull rope	Soft-Fiber Polyester
2623	E-138	41	RGS conduit	0.00	534.55	Pull rope	Soft-Fiber Polyester
2624	E-138	41	RGS conduit	0.00	534.55	Pull rope	Soft-Fiber Polyester
2625	E-138	41	RGS conduit	0.00	534.55	Pull rope	Soft-Fiber Polyester
2626	E-139	41	RGS conduit	0.00	534.55	Pull rope	Soft-Fiber Polyester
2627	E-139	41	RGS conduit	0.00	534.55	Pull rope	Soft-Fiber Polyester
2628	E-139	41	RGS conduit	0.00	534.55	Pull rope	Soft-Fiber Polyester
2629	E-139	41	RGS conduit	0.00	534.55	Pull rope	Soft-Fiber Polyester
2630	E-139	41	RGS conduit	0.00	534.55	Pull rope	Soft-Fiber Polyester
2631	E-140	41	RGS conduit	0.00	534.55	Pull rope	Soft-Fiber Polyester
2637	E-138	41	RGS conduit	212.85	534.55	Pull rope	Soft-Fiber Polyester
2638	E-138	41	RGS conduit	212.85	534.55	A-2013-2	3 + 1 gnd #6,#8, 600 V, RHH/RHW insulation
2639	E-138	41	RGS conduit	212.85	534.55	A-2013-2	3 + 1 gnd #6,#8, 600 V, RHH/RHW insulation
2640	E-138	41	RGS conduit	212.85	534.55	A-2013-2	3 + 1 gnd #6,#8, 600 V, RHH/RHW insulation
2641	E-138	41	RGS conduit	212.85	534.55	A-2013-2	3 + 1 gnd #6,#8, 600 V, RHH/RHW insulation
2642	E-138	41	RGS conduit	212.85	534.55	A-2013-2	3 + 1 gnd #6,#8, 600 V, RHH/RHW insulation

REQUEST FOR INFORMATION NOT ADDRESSED IN THIS CCO REMAIN IN FORCE

MARK	DATE	DESCRIPTIONS	BY	CH'D	CCO#
		REVISIONS			
2	03/04/08	BARRIER MODIFICATIONS	JS BM	RG SE	44
1	02/19/08	ELECTRICAL MODIFICATIONS	MP EL	RR	42

CONTRACT CHANGE ORDER NO. 44 SO
SHEET 48 OF 92

FOR REVISION ONLY

Caltrans Metric

DIST	COUNTY	ROUTE	KILOMETER POST TOTAL PROJECT	SHEET No	TOTAL SHEETS
04	SF	80	13.2/13.9	370 R2	1204

12/19/02
REGISTERED ELECTRICAL ENGINEER DATE

12-6-04
PLANS APPROVAL DATE

REGISTERED PROFESSIONAL ENGINEER — JENS ERLINGSSON No. 8249 Exp. 9/30/06 ELECTRICAL — STATE OF CALIFORNIA

PB POWER, Inc.
A Parsons Brinckerhoff Company
303 Second St., Suite 700N
San Francisco, CA 94107-1317

The State of California or its officers or agents shall not be responsible for the accuracy or completeness of electronic copies of this plan sheet.

Caltrans now has a web site! To get to the web site, go to: http://www.dot.ca.gov

REGISTERED PROFESSIONAL ENGINEER — S. A. ESTOQUE, JR. No. E-10151 Exp. 12/31/2008 ELECTRICAL — STATE OF CALIFORNIA

CONDUIT DATA

Conduit No	Reference	Size	Type	Total Fill (mm²)	Allowable Fill (mm²)	Included Cable No.	Conductor Type
2643	E-138	41	RGS conduit	212.85	534.55	A-2013-2	3 + 1 gnd #6,#8, 600 V, RHH/RHW insulation
2644	E-138	41	RGS conduit	212.85	534.55	A-2013-2	3 + 1 gnd #6,#8, 600 V, RHH/RHW insulation
2645	E-138	41	RGS conduit	212.85	534.55	A-2013-2	3 + 1 gnd #6,#8, 600 V, RHH/RHW insulation
2646	E-138	41	RGS conduit	212.85	534.55	A-2013-2	3 + 1 gnd #6,#8, 600 V, RHH/RHW insulation
2647	E-139	41	RGS conduit	212.85	534.55	A-2013-2	3 + 1 gnd #6,#8, 600 V, RHH/RHW insulation
2648	E-139	41	RGS conduit	212.85	534.55	A-2013-2	3 + 1 gnd #6,#8, 600 V, RHH/RHW insulation
2649	E-139	41	RGS conduit	212.85	534.55	A-2013-2	3 + 1 gnd #6,#8, 600 V, RHH/RHW insulation
2650	E-139	41	RGS conduit	212.85	534.55	A-2014-2	3 + 1 gnd #6,#8, 600 V, RHH/RHW insulation
2651	E-139	41	RGS conduit	212.85	534.55	A-2014-2	3 + 1 gnd #6,#8, 600 V, RHH/RHW insulation
2652	E-139	41	RGS conduit	212.85	534.55	A-2014-2	3 + 1 gnd #6,#8, 600 V, RHH/RHW insulation
2653	E-139	41	RGS conduit	212.85	534.55	A-2014-2	3 + 1 gnd #6,#8, 600 V, RHH/RHW insulation
2654	E-139	41	RGS conduit	212.85	534.55	A-2014-2	3 + 1 gnd #6,#8, 600 V, RHH/RHW insulation
2655	E-139	41	RGS conduit	212.85	534.55	A-2014-2	3 + 1 gnd #6,#8, 600 V, RHH/RHW insulation
2656	E-139	41	RGS conduit	212.85	534.55	A-2014-2	3 + 1 gnd #6,#8, 600 V, RHH/RHW insulation
2657	E-139	41	RGS conduit	212.85	534.55	A-2014-2	3 + 1 gnd #6,#8, 600 V, RHH/RHW insulation
2658	E-140	41	RGS conduit	212.85	534.55	A-2014-2	3 + 1 gnd #6,#8, 600 V, RHH/RHW insulation
2659	E-140	41	RGS conduit	212.85	534.55	A-2014-2	3 + 1 gnd #6,#8, 600 V, RHH/RHW insulation
2660	E-140	41	RGS conduit	212.85	534.55	A-2014-2	3 + 1 gnd #6,#8, 600 V, RHH/RHW insulation
2661	E-140	41	RGS conduit	212.85	534.55	A-2014-2	3 + 1 gnd #6,#8, 600 V, RHH/RHW insulation
2662	E-140	41	RGS conduit	212.85	534.55	A-2014-2	3 + 1 gnd #6,#8, 600 V, RHH/RHW insulation
2663	E-140	41	RGS conduit	212.85	534.55	A-2014-2	3 + 1 gnd #6,#8, 600 V, RHH/RHW insulation
2664	E-135	41	RGS conduit	212.85	534.55	LP219-6,8A	3 + 1 gnd #6,#8, 600 V, RHH/RHW insulation
2757	E-135	41	RGS conduit	0.00	534.55	Pull rope	Soft-Fiber Polyester
2758	E-135	41	RGS conduit, PVC Coated	227.46	534.55	Pull rope	Soft-Fiber Polyester
						UP205-6	1-2/C + gnd #8, 600 V, EPR insulation
2759	E-135	41	RGS conduit	440.31	534.55	A-3031-2	3 + 1 gnd #6,#8, 600 V, RHH/RHW insulation
						UP205-6	1-2/C + gnd #8, 600 V, EPR insulation
						Pull rope	Soft-Fiber Polyester

For continuation, see next sheet.

CONDUIT AND TRAY SCHEDULE

E-415

LAST REVISION 00-00-00
DATE PLOTTED => 5/22/2008
TIME PLOTTED => 11:11:39 AM

STATE OF CALIFORNIA - DEPARTMENT OF TRANSPORTATION
Caltrans
DESIGN OVERSIGHT
BEHZAD GOLEMOHAMMADI
CALCULATED/ DESIGNED BY
CHECKED BY
PBP
AB
DATE 8/02
DATE REVISED
REVISED BY

FOR REDUCED PLANS ORIGINAL SCALE IS IN MILLIMETERS
0 20 40 60 80

DGN FILE =>T:\13103\WS\pse\SAS Struc\CCO\SAS CC044\04-0120f1_03T0R02.dgn
USERNAME =>florico

CU 04251
EA 0120F1

CONDUIT DATA

Conduit No	Reference	Size	Type	Total Fill (mm²)	Allowable Fill (mm²)	Included Cable No.	Conductor Type
2760	E-135	41	RGS conduit	440.31	534.55	A-3031-2	3 + 1 gnd #6,#8, 600 V, RHH/RHW insulation
						UP205-6	1-2/C + gnd #8, 600 V, EPR insulation
						Pull rope	Soft-Fiber Polyester
2761	E-135	41	RGS conduit	425.70	534.55	LP219-2,4A	3 + 1 gnd #6,#8, 600 V, RHH/RHW insulation
						Pull rope	Soft-Fiber Polyester
						A-3031-2	3 + 1 gnd #6,#8, 600 V, RHH/RHW insulation
2762	E-135	41	RGS conduit	212.85	534.55	Pull rope	Soft-Fiber Polyester
						A-3031-2	3 + 1 gnd #6,#8, 600 V, RHH/RHW insulation
2763	E-135	41	RGS conduit	212.85	534.55	Pull rope	Soft-Fiber Polyester
						A-3031-2	3 + 1 gnd #6,#8, 600 V, RHH/RHW insulation
2764	E-135	41	RGS conduit	212.85	534.55	Pull rope	Soft-Fiber Polyester
						A-3031-2	3 + 1 gnd #6,#8, 600 V, RHH/RHW insulation
2765	E-135	41	RGS conduit	212.85	534.55	Pull rope	Soft-Fiber Polyester
						A-3031-2	3 + 1 gnd #6,#8, 600 V, RHH/RHW insulation
2766	E-136	41	RGS conduit	212.85	534.55	Pull rope	Soft-Fiber Polyester
						A-3031-2	3 + 1 gnd #6,#8, 600 V, RHH/RHW insulation
2767	E-136	41	RGS conduit	0.00	534.55	Pull rope	Soft-Fiber Polyester
2768	E-136	41	RGS conduit	212.85	534.55	Pull rope	Soft-Fiber Polyester
						A-3032-2	3 + 1 gnd #6,#8, 600 V, RHH/RHW insulation
2769	E-136	41	RGS conduit	212.85	534.55	Pull rope	Soft-Fiber Polyester
						A-3032-2	3 + 1 gnd #6,#8, 600 V, RHH/RHW insulation
2770	E-136	41	RGS conduit	212.85	534.55	Pull rope	Soft-Fiber Polyester
						A-3032-2	3 + 1 gnd #6,#8, 600 V, RHH/RHW insulation
2771	E-136	41	RGS conduit	212.85	534.55	A-3032-2	3 + 1 gnd #6,#8, 600 V, RHH/RHW insulation
						Pull rope	Soft-Fiber Polyester
2772	E-136	41	RGS conduit	212.85	534.55	Pull rope	Soft-Fiber Polyester
						A-3032-2	3 + 1 gnd #6,#8, 600 V, RHH/RHW insulation
2773	E-136	41	RGS conduit	212.85	534.55	Pull rope	Soft-Fiber Polyester
						A-3033-2	3 + 1 gnd #6,#8, 600 V, RHH/RHW insulation
2774	E-136	53	RGS conduit	537.14	681.55	Pull rope	Soft-Fiber Polyester
						A-3040-3	1-3/C + gnd #6, 600 V, EPR insulation
						A-3033-2	3 + 1 gnd #6,#8, 600 V, RHH/RHW insulation
2775	E-136	53	RGS conduit	537.14	681.55	A-3033-2	3 + 1 gnd #6,#8, 600 V, RHH/RHW insulation
						A-3040-3	1-3/C + gnd #6, 600 V, EPR insulation
						Pull rope	Soft-Fiber Polyester
2776	E-136	41	RGS conduit	212.85	534.55	A-3033-2	3 + 1 gnd #6,#8, 600 V, RHH/RHW insulation
						Pull rope	Soft-Fiber Polyester
2777	E-136	41	RGS conduit	212.85	534.55	Pull rope	Soft-Fiber Polyester
						A-3033-2	3 + 1 gnd #6,#8, 600 V, RHH/RHW insulation
2778	E-137	41	RGS conduit	212.85	534.55	Pull rope	Soft-Fiber Polyester
						A-3033-2	3 + 1 gnd #6,#8, 600 V, RHH/RHW insulation
2779	E-137	41	RGS conduit	0.00	534.55	Pull rope	Soft-Fiber Polyester
2780	E-137	41	RGS conduit	425.70	534.55	LP221-2,4A	3 + 1 gnd #6,#8, 600 V, RHH/RHW insulation
						A-3034-2	3 + 1 gnd #6,#8, 600 V, RHH/RHW insulation
						Pull rope	Soft-Fiber Polyester
2781	E-137	41	RGS conduit	212.85	534.55	Pull rope	Soft-Fiber Polyester
						A-3034-2	3 + 1 gnd #6,#8, 600 V, RHH/RHW insulation
2782	E-137	41	RGS conduit	212.85	534.55	Pull rope	Soft-Fiber Polyester
						A-3034-2	3 + 1 gnd #6,#8, 600 V, RHH/RHW insulation
2783	E-137	41	RGS conduit	212.85	534.55	Pull rope	Soft-Fiber Polyester
						A-3034-2	3 + 1 gnd #6,#8, 600 V, RHH/RHW insulation
2784	E-137	41	RGS conduit	212.85	534.55	Pull rope	Soft-Fiber Polyester
						A-3034-2	3 + 1 gnd #6,#8, 600 V, RHH/RHW insulation
2785	E-137	41	RGS conduit	0.00	534.55	Pull rope	Soft-Fiber Polyester

DIST	COUNTY	ROUTE	KILOMETER POST TOTAL PROJECT	SHEET No	TOTAL SHEETS
04	SF	80	13.2/13.9	371 R2	1204

Jens Erlingsson 12/19/02
REGISTERED ELECTRICAL ENGINEER DATE

12-6-04
PLANS APPROVAL DATE

JENS ERLINGSSON No. 8249 Exp. 9/30/06 ELECTRICAL — REGISTERED PROFESSIONAL ENGINEER — STATE OF CALIFORNIA

PB POWER, Inc.
A Parsons Brinckerhoff Company
303 Second St., Suite 700N
San Francisco, CA 94107-1317

The State of California or its officers or agents shall not be responsible for the accuracy or completeness of electronic copies of this plan sheet.

Caltrans now has a web site! To get to the web site, go to: http://www.dot.ca.gov

REQUEST FOR INFORMATION NOT ADDRESSED IN THIS CCO REMAIN IN FORCE

MARK	DATE	DESCRIPTIONS	BY	CH'D	CCO#
		REVISIONS			
2	03/04/08	BARRIER MODIFICATIONS	JS BM	RG SE	44
1	02/19/08	ELECTRICAL MODIFICATIONS	MP EL	RR	42

CONTRACT CHANGE ORDER NO. 4450
SHEET 49 OF 92

REGISTERED PROFESSIONAL ENGINEER — S. A. ESTOQUE, JR. — No. E-10151 — Exp. 12/31/2008 ELECTRICAL — STATE OF CALIFORNIA

FOR REVISION ONLY

CONDUIT DATA

Conduit No	Reference	Size	Type	Total Fill (mm²)	Allowable Fill (mm²)	Included Cable No.	Conductor Type
2786	E-137	41	RGS conduit	212.85	534.55	A-3035-2	3 + 1 gnd #6,#8, 600 V, RHH/RHW insulation
						Pull rope	Soft-Fiber Polyester
2787	E-137	41	RGS conduit	212.85	534.55	Pull rope	Soft-Fiber Polyester
						A-3035-2	3 + 1 gnd #6,#8, 600 V, RHH/RHW insulation
2788	E-137	41	RGS conduit	212.85	534.55	Pull rope	Soft-Fiber Polyester
						A-3035-2	3 + 1 gnd #6,#8, 600 V, RHH/RHW insulation
2789	E-138	41	RGS conduit	212.85	534.55	Pull rope	Soft-Fiber Polyester
						A-3035-2	3 + 1 gnd #6,#8, 600 V, RHH/RHW insulation
2790	E-138	41	RGS conduit	212.85	534.55	Pull rope	Soft-Fiber Polyester
						A-3035-2	3 + 1 gnd #6,#8, 600 V, RHH/RHW insulation
2791	E-138	41	RGS conduit	0.00	534.55	Pull rope	Soft-Fiber Polyester
2792	E-138	41	RGS conduit	212.85	534.55	A-3036-2	3 + 1 gnd #6,#8, 600 V, RHH/RHW insulation
						Pull rope	Soft-Fiber Polyester
2793	E-138	41	RGS conduit	212.85	534.55	A-3036-2	3 + 1 gnd #6,#8, 600 V, RHH/RHW insulation
						Pull rope	Soft-Fiber Polyester
2794	E-138	41	RGS conduit	212.85	534.55	Pull rope	Soft-Fiber Polyester
						A-3036-2	3 + 1 gnd #6,#8, 600 V, RHH/RHW insulation
2795	E-138	41	RGS conduit	425.70	534.55	Pull rope	Soft-Fiber Polyester
						A-3036-2	3 + 1 gnd #6,#8, 600 V, RHH/RHW insulation
						LP222-2,4A	3 + 1 gnd #6,#8, 600 V, RHH/RHW insulation
2796	E-138	41	RGS conduit	212.85	534.55	Pull rope	Soft-Fiber Polyester
						A-3036-2	3 + 1 gnd #6,#8, 600 V, RHH/RHW insulation
2797	E-138	41	RGS conduit	212.85	534.55	Pull rope	Soft-Fiber Polyester
						A-3036-2	3 + 1 gnd #6,#8, 600 V, RHH/RHW insulation
2798	E-138	41	RGS conduit	212.85	534.55	A-3036-2	3 + 1 gnd #6,#8, 600 V, RHH/RHW insulation
						Pull rope	Soft-Fiber Polyester
2799	E-138	41	RGS conduit	212.85	534.55	A-3036-2	3 + 1 gnd #6,#8, 600 V, RHH/RHW insulation
						Pull rope	Soft-Fiber Polyester
2857	E-138	41	RGS conduit	0.00	534.55	Pull rope	Soft-Fiber Polyester
2858	E-135	41	RGS conduit, PVC Coated	0.00	534.55	Pull rope	Soft-Fiber Polyester
2859	E-135	41	RGS conduit	212.85	534.55	Pull rope	Soft-Fiber Polyester
						A-2011-2	3 + 1 gnd #6,#8, 600 V, RHH/RHW insulation
2860	E-135	41	RGS conduit	0.00	534.55	Pull rope	Soft-Fiber Polyester
2861	E-135	41	RGS conduit	212.85	534.55	Pull rope	Soft-Fiber Polyester
						LP219-6,8A	3 + 1 gnd #6,#8, 600 V, RHH/RHW insulation

For continuation, see next sheet.

CONDUIT AND TRAY SCHEDULE

E-416

REVISED BY | DATE REVISED
PBP | 8/02 | AB | 8/02

CALCULATED/DESIGNED BY | CHECKED BY

DESIGN OVERSIGHT
BEHZAD GOLEMOHAMMADI

STATE OF CALIFORNIA - DEPARTMENT OF TRANSPORTATION
Caltrans

LAST REVISION 00-00-00
DATE PLOTTED => 5/22/2008
TIME PLOTTED => 11:12:00 AM

FOR REDUCED PLANS ORIGINAL SCALE IS IN MILLIMETERS 0 20 40 60 80

DGN FILE =>T:\13103\WS\pse\SAS Struc\CCO\SAS CC044\04-0120f1_0371R02.dgn
USERNAME =>florico
CU 04251
EA 0120F1

DIST	COUNTY	ROUTE	KILOMETER POST TOTAL PROJECT	SHEET No	TOTAL SHEETS
04	SF	80	13.2/13.9	373 R1	1204

Jens Erlingsson 12/19/02
REGISTERED ELECTRICAL ENGINEER DATE

12-6-04
PLANS APPROVAL DATE

REGISTERED PROFESSIONAL ENGINEER — JENS ERLINGSSON No. 8249 Exp. 9/30/06 ELECTRICAL — STATE OF CALIFORNIA

PB POWER, Inc.
A Parsons Brinckerhoff Company
303 Second St., Suite 700N
San Francisco, CA 94107-1317

The State of California or its officers or agents shall not be responsible for the accuracy or completeness of electronic copies of this plan sheet.

Caltrans now has a web site! To get to the web site, go to: http://www.dot.ca.gov

Caltrans Metric

REGISTERED PROFESSIONAL ENGINEER — S. A. ESTOQUE, JR. No. E-10151 Exp. 12/31/2008 ELECTRICAL — STATE OF CALIFORNIA

FOR REVISION ONLY

REQUEST FOR INFORMATION NOT ADDRESSED IN THIS CCO REMAIN IN FORCE

MARK	DATE	DESCRIPTIONS	BY	CH'D	CCO#
		REVISIONS			
1	03/04/08	BARRIER MODIFICATIONS	JS BM	RG SE	44

CONTRACT CHANGE ORDER NO. 44 S0
SHEET 50 OF 92

CONDUIT DATA

Conduit No	Reference	Size	Type	Total Fill (mm²)	Allowable Fill (mm²)	Included Cable No.	Conductor Type
2959	E-139	41	RGS conduit	0.00	534.55	Pull rope	Soft-Fiber Polyester
2960	E-139	41	RGS conduit	212.85	534.55	LP223-2,4A	3 + 1 gnd #6,#8, 600 V, RHH/RHW insulation
						Pull rope	Soft-Fiber Polyester
2961	E-139	41	RGS conduit	0.00	534.55	Pull rope	Soft-Fiber Polyester
2962	E-138	41	RGS conduit	0.00	534.55	Pull rope	Soft-Fiber Polyester
2963	E-138	41	RGS conduit	0.00	534.55	Pull rope	Soft-Fiber Polyester
2964	E-138	41	RGS conduit	0.00	534.55	Pull rope	Soft-Fiber Polyester
2965	E-138	41	RGS conduit	0.00	534.55	Pull rope	Soft-Fiber Polyester
2966	E-138	41	RGS conduit	0.00	534.55	Pull rope	Soft-Fiber Polyester
2967	E-138	41	RGS conduit	0.00	534.55	Pull rope	Soft-Fiber Polyester
2T13	E-181 Thru E-186	305	152.4 mm siderail ladder tray	2780.99	8387.08	Pull rope	Soft-Fiber Polyester
						2391	3-1/C #4/0 + 1/C #1/0 gnd, 15kV, EPR insulation
2T14	E-212, E-19	305	152.4 mm siderail ladder tray	2780.99	8387.08	Pull rope	Soft-Fiber Polyester
						2391	3-1/C #4/0 + 1/C #1/0 gnd, 15kV, EPR insulation
2T23	E-181 Thru E-186	760	152.4 mm siderail ladder tray	19079.92	22580.60	2202-2	1-3/C #14,600 V, EPR insulation
						A-3004-1	1-3/C + gnd #2,600 V, EPR insulation
						A-3003-1	1-3/C + gnd #4,600 V, EPR insulation
						A-2013-1	1-3/C + gnd #2,600 V, EPR insulation
						A-2012-1	1-3/C + gnd #2,600 V, EPR insulation
						2123	1-3/C + gnd #2,600 V, EPR insulation
						2202-3	1-7/C #16,600 V, EPR insulation
						2105	1-3/C + gnd #2,600 V, EPR insulation
						2106	1-3/C + gnd #2,600 V, EPR insulation
						2120-1	1-3/C #14,600 V, EPR insulation
						2120-2	1-3/C #14,600 V, EPR insulation
						2202-4	1-3/C #14,600 V, EPR insulation
						2104	1-3/C + gnd #2,600 V, EPR insulation
						2121	1-3/C + gnd #1/0,600 V, EPR insulation
						2204-1	1-3/C #16,600 V, EPR insulation
						UP204-7	1-2/C + gnd #8,600 V, EPR insulation
						2119-A	1-3/C + gnd 250 Kcmil,600 V, EPR insulation
						CCTVE01BA	TVP
						CCTVE01BB	TVCP
						CCTVE01AA	TVP
						2121-2	1-3/C #14,600 V, EPR insulation
						2201-2	1-2/C + gnd #8,600 V, EPR insulation
						2123-2	1-3/C + gnd #2/0,600 V, EPR insulation
						2123-3	1-3/C + gnd #2/0,600 V, EPR insulation
						1118	1-3/C + gnd #2/0,600 V, EPR insulation
						2095	1-3/C + gnd #2,600 V, EPR insulation
						2096	1-3/C + gnd #2,600 V, EPR insulation
						2097	1-3/C + gnd #2,600 V, EPR insulation
						2098	1-3/C + gnd #2,600 V, EPR insulation
						2099	1-3/C + gnd #2,600 V, EPR insulation
						S-3053-1	1-3/C + gnd #2,600 V, EPR insulation
						2107	1-3/C + gnd #2,600 V, EPR insulation
						2120	1-3/C + gnd #1/0,600 V, EPR insulation
						2201-6	1-2/C + gnd #8,600 V, EPR insulation
						1201-1	1-2/C + gnd #8,600 V, EPR insulation
						2202-1	1-2/C + gnd #8,600 V, EPR insulation
						2204-2	1-3/C #16,600 V, EPR insulation
						Pull rope	Soft-Fiber Polyester
						A-3041-1	1-3/C + gnd #2,600 V, EPR insulation
						S-3052-1	1-3/C + gnd #2,600 V, EPR insulation
						2125	1-3/C + gnd 250 Kcmil,600 V, EPR insulation
						2103	1-3/C + gnd #2,600 V, EPR insulation
						S-3056-9	1-4/C #14,600 V, EPR insulation
						CCTVE01AB	TVCP
						2121-1	1-3/C #14,600 V, EPR insulation
						S-3056-6	1-4/C #14,600 V, EPR insulation

CONDUIT DATA

Conduit No	Reference	Size	Type	Total Fill (mm²)	Allowable Fill (mm²)	Included Cable No.	Conductor Type
2T24	E-114, E-182	610	152.4 mm siderail ladder tray	2284.74	18064.48	LP219-2,4	1-3/C + gnd #6,600 V, EPR insulation
						LP219-6,8	1-3/C + gnd #6,600 V, EPR insulation
						Pull rope	Soft-Fiber Polyester
						UP204-7	1-2/C + gnd #8,600 V, EPR insulation
						UP204-1	1-2/C + gnd #10,600 V, EPR insulation
						UP204-8	1-2/C + gnd #8,600 V, EPR insulation
						2103	1-3/C + gnd #2,600 V, EPR insulation
						2095	1-3/C + gnd #2,600 V, EPR insulation
2T25	E-115, E-182	610	152.4 mm siderail ladder tray	3606.85	18064.48	UP205-7	1-2/C + gnd #8,600 V, EPR insulation
						UP205-1	1-2/C + gnd #10,600 V, EPR insulation
						LP220-6,8	1-3/C + gnd #6,600 V, EPR insulation
						LP220-2,4	1-3/C + gnd #6,600 V, EPR insulation
						Pull rope	Soft-Fiber Polyester
						S-3056-6	1-4/C #14,600 V, EPR insulation
						UP205-6	1-2/C + gnd #8,600 V, EPR insulation
						2202-2	1-3/C #14,600 V, EPR insulation
						2120-1	1-3/C #14,600 V, EPR insulation
						2204-2	1-3/C #16,600 V, EPR insulation
						2121-2	1-3/C #14,600 V, EPR insulation
						2096	1-3/C + gnd #2,600 V, EPR insulation
						2204-1	1-3/C #16,600 V, EPR insulation
						2104	1-3/C + gnd #2,600 V, EPR insulation
						UP205-8	1-2/C + gnd #8,600 V, EPR insulation
						2202-4	1-3/C #14,600 V, EPR insulation
						2202-3	1-7/C #16,600 V, EPR insulation
						2120-2	1-3/C #14,600 V, EPR insulation
						2121-1	1-3/C #14,600 V, EPR insulation
2T26	E-117, E-183	610	152.4 mm siderail ladder tray	3296.85	18064.48	2202-1	1-2/C + gnd #8,600 V, EPR insulation
						CCTVE01BA	TVP
						LP221-2,4	1-3/C + gnd #6,600 V, EPR insulation
						Pull rope	Soft-Fiber Polyester
						CCTVE01AB	TVCP
						CCTVE01AA	TVP
						CCTVE01BB	TVCP
						LP221-6,8	1-3/C + gnd #6,600 V, EPR insulation
						UP206-7	1-2/C + gnd #8,600 V, EPR insulation
						UP207-1	1-2/C + gnd #10,600 V, EPR insulation
						UP206-1	1-2/C + gnd #10,600 V, EPR insulation
						2202-2	1-3/C #14,600 V, EPR insulation
						2105	1-3/C + gnd #2,600 V, EPR insulation
						2097	1-3/C + gnd #2,600 V, EPR insulation
						UP206-8	1-2/C + gnd #8,600 V, EPR insulation
						2202-4	1-3/C #14,600 V, EPR insulation
						2202-3	1-7/C #16,600 V, EPR insulation

For continuation, see next sheet.

CONDUIT AND TRAY SCHEDULE

E-418

DESIGN OVERSIGHT	CALCULATED/ DESIGNED BY	DRAWN BY	CHECKED BY	DATE REVISED	REVISED BY
BEHZAD GOLEMOHAMMADI	PBP	AB		8/02	8/02

STATE OF CALIFORNIA - DEPARTMENT OF TRANSPORTATION
Caltrans

LAST REVISION 00-00-00
DATE PLOTTED => 5/22/2008
TIME PLOTTED => 11:12:22 AM

FOR REDUCED PLANS ORIGINAL SCALE IS IN MILLIMETERS 0 20 40 60 80

DGN FILE =>T:\13103\MS\pse\SAS Struc\CCO\SAS CC044\04-0120f1_03R01.dgn
USERNAME =>florico

CU 04251

EA 0120F1

DIST	COUNTY	ROUTE	KILOMETER POST TOTAL PROJECT	SHEET No	TOTAL SHEETS
04	SF	80	13.2/13.9	374 R1	1204

Jens Erlingsson 12/19/02
REGISTERED ELECTRICAL ENGINEER DATE

12-6-04
PLANS APPROVAL DATE

REGISTERED PROFESSIONAL ENGINEER JENS ERLINGSSON No. 8249 Exp. 9/30/06 ELECTRICAL STATE OF CALIFORNIA

PB POWER, Inc.
A Parsons Brinckerhoff Company
303 Second St., Suite 700N
San Francisco, CA 94107-1317

The State of California or its officers or agents shall not be responsible for the accuracy or completeness of electronic copies of this plan sheet.

Caltrans now has a web site! To get to the web site, go to: http://www.dot.ca.gov

Caltrans Metric

REGISTERED PROFESSIONAL ENGINEER S. A. ESTOQUE, JR No. E-10151 Exp. 12/31/2008 ELECTRICAL STATE OF CALIFORNIA

REQUEST FOR INFORMATION NOT ADDRESSED IN THIS CCO REMAIN IN FORCE

MARK	DATE	DESCRIPTIONS	BY	CH'D	CCO#
1	03/04/08	BARRIER MODIFICATIONS	JS BM	RG SE	44

REVISIONS

CONTRACT CHANGE ORDER NO. 44 SO
SHEET 51 OF 92

FOR REVISION ONLY

CONDUIT DATA

Conduit No	Reference	Size	Type	Total Fill (mm²)	Allowable Fill (mm²)	Included Cable No.	Conductor Type
2T27	E-118, E-184	610	152.4 mm siderail ladder tray	2157.86	18064.48	LP222-6,8	1-3/C + gnd #6,600 V, EPR insulation
						2098	1-3/C + gnd #2,600 V, EPR insulation
						2106	1-3/C + gnd #2,600 V, EPR insulation
						UP207-8	1-2/C + gnd #8,600 V, EPR insulation
						UP207-7	1-2/C + gnd #8,600 V, EPR insulation
						Pull rope	Soft-Fiber Polyester
						LP222-2,4	1-3/C + gnd #6,600 V, EPR insulation
2T28	E-119, E-185	610	152.4 mm siderail ladder tray	3847.88	18064.48	UP208-4	1-2/C + gnd #8,600 V, EPR insulation
						UP208-6	1-2/C + gnd #8,600 V, EPR insulation
						Pull rope	Soft-Fiber Polyester
						LP223-2,4	1-3/C + gnd #6,600 V, EPR insulation
						UP208-2	1-2/C + gnd #8,600 V, EPR insulation
						UP208-7	1-2/C + gnd #8,600 V, EPR insulation
						2107	1-3/C + gnd #2,600 V, EPR insulation
						LP223-6,8	1-3/C + gnd #6,600 V, EPR insulation
						2201-5	1-3/C #14,600 V, EPR insulation
						UP208-8	1-2/C + gnd #8,600 V, EPR insulation
						1118-1	1-3/C #14,600 V, EPR insulation
						2201-6	1-2/C + gnd #8,600 V, EPR insulation
						S-3056-9	1-4/C #14,600 V, EPR insulation
						2099	1-3/C + gnd #2,600 V, EPR insulation
						1118-2	1-3/C #16,600 V, EPR insulation
						2201-3	1-3/C #14,600 V, EPR insulation
						2201-2	1-2/C + gnd #8,600 V, EPR insulation
						2201-4	1-9/C #16,600 V, EPR insulation
2T29	E-212, E-21	610	152.4 mm siderail ladder tray	16623.79	18064.48	2123-3	1-3/C + gnd #2/0,600 V, EPR insulation
						Pull rope	Soft-Fiber Polyester
						2119-A	1-3/C + gnd 250 kcmil,600 V, EPR insulation
						2121	1-3/C + gnd #1/0,600 V, EPR insulation
						A-3004-1	1-3/C + gnd #2,600 V, EPR insulation
						A-3003-1	1-3/C + gnd #4,600 V, EPR insulation
						A-2012-1	1-3/C + gnd #2,600 V, EPR insulation
						2123	1-3/C + gnd #2,600 V, EPR insulation
						2105	1-3/C + gnd #2,600 V, EPR insulation
						2104	1-3/C + gnd #2,600 V, EPR insulation
						2125	1-3/C + gnd 250 kcmil,600 V, EPR insulation
						2123-2	1-3/C + gnd #2/0,600 V, EPR insulation
						2106	1-3/C + gnd #2,600 V, EPR insulation
						1118	1-3/C + gnd #2/0,600 V, EPR insulation
						2095	1-3/C + gnd #2,600 V, EPR insulation
						2096	1-3/C + gnd #2,600 V, EPR insulation
						2097	1-3/C + gnd #2,600 V, EPR insulation
						2098	1-3/C + gnd #2,600 V, EPR insulation
						2099	1-3/C + gnd #2,600 V, EPR insulation
						2103	1-3/C + gnd #2,600 V, EPR insulation
						2107	1-3/C + gnd #2,600 V, EPR insulation
						A-3041-1	1-3/C + gnd #2,600 V, EPR insulation
						S-3053-1	1-3/C + gnd #2,600 V, EPR insulation
						S-3052-1	1-3/C + gnd #2,600 V, EPR insulation
						2120	1-3/C + gnd #1/0,600 V, EPR insulation
						A-2013-1	1-3/C + gnd #2,600 V, EPR insulation
2T33	E-181 Thru E-186	760	152.4 mm siderail ladder tray	18689.05 (1)	22580.60	A-2011-1	1-3/C + gnd #2,600 V, EPR insulation (1)
						UP208-4	1-2/C + gnd #8,600 V, EPR insulation (1)
						UP208-6	1-2/C + gnd #8,600 V, EPR insulation
						Pull rope	Soft-Fiber Polyester
						LP219-2,4	1-3/C + gnd #6,600 V, EPR insulation
						LP219-6,8	1-3/C + gnd #6,600 V, EPR insulation
						LP220-2,4	1-3/C + gnd #6,600 V, EPR insulation
						LP220-6,8	1-3/C + gnd #6,600 V, EPR insulation
						LP221-2,4	1-3/C + gnd #6,600 V, EPR insulation
						UP205-6	1-2/C + gnd #8,600 V, EPR insulation
						A-3057-1	1-3/C + gnd #2,600 V, EPR insulation (1)
						A-2014-1	1-3/C + gnd #2,600 V, EPR insulation
						UP204-8	1-2/C + gnd #8,600 V, EPR insulation
						UP205-8	1-2/C + gnd #8,600 V, EPR insulation
						UP207-8	1-2/C + gnd #8,600 V, EPR insulation
						UP205-1	1-2/C + gnd #10,600 V, EPR insulation
						UP207-7	1-2/C + gnd #8,600 V, EPR insulation
						A-3039-3	1-3/C + gnd #6,600 V, EPR insulation
						A-3040-3	1-3/C + gnd #6,600 V, EPR insulation
						A-3005-1	1-3/C + gnd #2,600 V, EPR insulation
						A-3006-1	1-3/C + gnd #4,600 V, EPR insulation
						A-3031-1	1-3/C + gnd #4,600 V, EPR insulation

CONDUIT DATA

Conduit No	Reference	Size	Type	Total Fill (mm²)	Allowable Fill (mm²)	Included Cable No.	Conductor Type
						A-3032-1	1-3/C + gnd #4,600 V, EPR insulation
						A-3039-1	1-3/C + gnd #2,600 V, EPR insulation
						A-3040-1	1-3/C + gnd #2,600 V, EPR insulation
						LP221-6,8	1-3/C + gnd #6,600 V, EPR insulation
						UP204-1	1-2/C + gnd #10,600 V, EPR insulation
						UP206-8	1-2/C + gnd #8,600 V, EPR insulation
						S-2032-1	1-3/C + gnd #4,600 V, EPR insulation
						A-3036-1	1-3/C + gnd #4,600 V, EPR insulation
						A-2035-1	1-3/C + gnd #6,600 V, EPR insulation
						A-2035-3	1-3/C + gnd #6,600 V, EPR insulation
						UP205-7	1-2/C + gnd #8,600 V, EPR insulation
						UP206-7	1-2/C + gnd #8,600 V, EPR insulation
						LP223-2,4	1-3/C + gnd #6,600 V, EPR insulation
						LP222-6,8	1-3/C + gnd #6,600 V, EPR insulation
						A-3035-1	1-3/C + gnd #4,600 V, EPR insulation
						A-3034-1	1-3/C + gnd #2,600 V, EPR insulation
						UP208-2	1-2/C + gnd #8,600 V, EPR insulation
						UP207-1	1-2/C + gnd #10,600 V, EPR insulation
						S-2031-1	1-3/C + gnd #2,600 V, EPR insulation
						UP206-1	1-2/C + gnd #10,600 V, EPR insulation
						1118-1	1-3/C #14,600 V, EPR insulation
						1118-2	1-3/C #16,600 V, EPR insulation
						1201-2	1-2/C + gnd #8,600 V, EPR insulation
						LP223-6,8	1-3/C + gnd #6,600 V, EPR insulation
						UP208-7	1-2/C + gnd #8,600 V, EPR insulation
						LP222-2,4	1-3/C + gnd #6,600 V, EPR insulation
						1201-6	1-2/C + gnd #8,600 V, EPR insulation
						A-3043-1	1-3/C + gnd #2,600 V, EPR insulation
						A-3042-1	1-3/C + gnd #2,600 V, EPR insulation
						2119-B	1-3/C + gnd 250 kcmil,600 V, EPR insulation (1)
						A-3033-1	1-3/C + gnd #2,600 V, EPR insulation
						UP208-8	1-2/C + gnd #8,600 V, EPR insulation
2T39	E-212, E-21	610	152.4 mm siderail ladder tray	9889.17	18064.48	A-3032-1	1-3/C + gnd #4,600 V, EPR insulation
						2119-B	1-3/C + gnd 250 kcmil,600 V, EPR insulation
						A-2035-1	1-3/C + gnd #6,600 V, EPR insulation
						S-2032-1	1-3/C + gnd #4,600 V, EPR insulation
						S-2031-1	1-3/C + gnd #2,600 V, EPR insulation
						A-3036-1	1-3/C + gnd #4,600 V, EPR insulation
						A-3035-1	1-3/C + gnd #4,600 V, EPR insulation
						A-3034-1	1-3/C + gnd #2,600 V, EPR insulation
						A-3033-1	1-3/C + gnd #2,600 V, EPR insulation
						Pull rope	Soft-Fiber Polyester
						A-3039-1	1-3/C + gnd #2,600 V, EPR insulation
						A-3042-1	1-3/C + gnd #2,600 V, EPR insulation
						A-3031-1	1-3/C + gnd #4,600 V, EPR insulation
						A-3006-1	1-3/C + gnd #4,600 V, EPR insulation
						A-3005-1	1-3/C + gnd #2,600 V, EPR insulation
						A-2014-1	1-3/C + gnd #2,600 V, EPR insulation
						A-2011-1	1-3/C + gnd #2,600 V, EPR insulation
						A-3057-1	1-3/C + gnd #2,600 V, EPR insulation
						A-3043-1	1-3/C + gnd #2,600 V, EPR insulation
						A-3040-1	1-3/C + gnd #2,600 V, EPR insulation

For continuation, see next sheet.

CONDUIT AND TRAY SCHEDULE

E-419

STATE OF CALIFORNIA - DEPARTMENT OF TRANSPORTATION
Caltrans

DESIGN OVERSIGHT: BEHZAD GOLEMOHAMMADI
CALCULATED/DESIGNED BY: PBP DATE 8/02
CHECKED BY: AB 8/02
REVISED BY / DATE REVISED

LAST REVISION 00-00-00
DATE PLOTTED => 5/22/2008
TIME PLOTTED => 11:12:53 AM

FOR REDUCED PLANS ORIGINAL SCALE IS IN MILLIMETERS 0 20 40 60 80

DGN FILE =>T:\13103\MS\pse\SAS Struc\CCO\SAS CC044\04-0120f1_0374R01.dgn
USERNAME =>llorico

CU 04251 EA 0120F1

DIST	COUNTY	ROUTE	KILOMETER POST TOTAL PROJECT	SHEET No	TOTAL SHEETS
04	SF	80	13.2/13.9	375 R1	1204

Jens Erlingsson 12/19/02
REGISTERED ELECTRICAL ENGINEER DATE

12-6-04
PLANS APPROVAL DATE

REGISTERED PROFESSIONAL ENGINEER — JENS ERLINGSSON No. 8249 Exp. 9/30/06 ELECTRICAL — STATE OF CALIFORNIA

PB POWER, Inc.
A Parsons Brinckerhoff Company
303 Second St., Suite 700N
San Francisco, CA 94107-1317

The State of California or its officers or agents shall not be responsible for the accuracy or completeness of electronic copies of this plan sheet.

Caltrans now has a web site! To get to the web site, go to: http://www.dot.ca.gov

Caltrans Metric

REGISTERED PROFESSIONAL ENGINEER — S. A. ESTOQUE, JR. No. E-10151 Exp. 12/31/2008 ELECTRICAL — STATE OF CALIFORNIA

FOR REVISION ONLY

REQUEST FOR INFORMATION NOT ADDRESSED IN THIS CCO REMAIN IN FORCE

MARK	DATE	DESCRIPTIONS REVISIONS	BY	CH'D	CCO#
1	03/04/08	BARRIER MODIFICATIONS	JS BM	RG SE	44

CONTRACT CHANGE ORDER NO. 44 SO
SHEET 52 OF 92

CONDUIT DATA

Conduit No	Reference	Size	Type	Total Fill (mm²)	Allowable Fill (mm²)	Included Cable No.	Conductor Type
2T43	E-181 Thru E-186	610	152.4 mm siderail ladder tray	10169.05 1	38709.60	2900-152C	4 pair #22, shielded pairs, FEP insulation
						2900-292A	4 pair #22, shielded pairs, FEP insulation
						2900-272C	4 pair #22, shielded pairs, FEP insulation
						2900-272B	4 pair #22, shielded pairs, FEP insulation
						2900-272A	4 pair #22, shielded pairs, FEP insulation
						2900-192C	4 pair #22, shielded pairs, FEP insulation
						2900-192B	4 pair #22, shielded pairs, FEP insulation
						2900-192A	4 pair #22, shielded pairs, FEP insulation
						2900-172C	4 pair #22, shielded pairs, FEP insulation
						2900-172B	4 pair #22, shielded pairs, FEP insulation
						2900-172A	4 pair #22, shielded pairs, FEP insulation
						1473-6	50 pair #18, shielded pairs, IS/OS shield 600 V, XLPE insul., PVC jacket
						2900-162A	4 pair #22, shielded pairs, FEP insulation
						2900-332C	4 pair #22, shielded pairs, FEP insulation
						2900-152B	4 pair #22, shielded pairs, FEP insulation
						2900-152A	4 pair #22, shielded pairs, FEP insulation
						2900-142A	4 pair #22, shielded pairs, FEP insulation
						2910-8	4 pair #22, shielded pairs, 300 V, PE insulation
						2119-2	4 pair #22, shielded pairs, 300 V, PE insulation
						2475-3C	12 Fiber, single mode fiberoptic cable
						MVDSE03A	MVDS DLC
						MVDSE01A	MVDS DLC
						MVDSE02A	MVDS DLC
						2149	1 - 2 pair, shielded #18 with IS/OA, 300 V, PVC jacket
						2154	1 - 2 pair, shielded #18 with IS/OA, 300 V, PVC jacket
						2900-162B	4 pair #22, shielded pairs, FEP insulation
						2900-442A	4 pair #22, shielded pairs, FEP insulation
						2474-10	50 pair #18, shielded pairs, IS/OS shield 600 V, XLPE insul., PVC jacket
						1474-6	50 pair #18, shielded pairs, IS/OS shield 600 V, XLPE insul., PVC jacket
						1473-4	50 pair #18, shielded pairs, IS/OS shield 600 V, XLPE insul., PVC jacket
						2910-7	4 pair #24, overall shielded, 300V, PE insulation
						2910-3	4 pair #22, shielded pairs, FEP insulation
						2910-2	4 pair #22, shielded pairs, FEP insulation
						2910-12	4 pair #22, shielded pairs, 300 V, PE insulation
						2910-11	1-3/C #16,600 V, EPR insulation
						2900-482A	4 pair #22, shielded pairs, FEP insulation
						2900-452B	4 pair #22, shielded pairs, FEP insulation
						2900-452A	4 pair #22, shielded pairs, FEP insulation
						2900-332A	4 pair #22, shielded pairs, FEP insulation
						2900-442B	4 pair #22, shielded pairs, FEP insulation
						2900-332B	4 pair #22, shielded pairs, FEP insulation
						2900-432A	4 pair #22, shielded pairs, FEP insulation
						2900-422B	4 pair #22, shielded pairs, FEP insulation
						2900-422A	4 pair #22, shielded pairs, FEP insulation
						2900-412C	4 pair #22, shielded pairs, FEP insulation
						2900-412B	4 pair #22, shielded pairs, FEP insulation
						2900-412A	4 pair #22, shielded pairs, FEP insulation
						2900-402A	4 pair #22, shielded pairs, FEP insulation
						2900-382C	4 pair #22, shielded pairs, FEP insulation
						2900-382B	4 pair #22, shielded pairs, FEP insulation
						2900-382A	4 pair #22, shielded pairs, FEP insulation
						2148	1 - 2 pair, shielded #18 with IS/OA, 300 V, PVC jacket
						2900-442C	4 pair #22, shielded pairs, FEP insulation
						CCTVE01AD	TVL
						1473-8	50 pair #18, shielded pairs, IS/OS shield 600 V, XLPE insul., PVC jacket
						Pull rope	Soft-Fiber Polyester
						2475-3A	12 Fiber, single mode fiberoptic cable
						2475-3B	12 Fiber, single mode fiberoptic cable
						2475-3	72 Fiber, single mode fiberoptic riser cable
						CCTVE01BC	TVC
						CCTVE01BD	TVL
						CCTVE01AC	TVC
						2900-432B	4 pair #22, shielded pairs, FEP insulation
						2155	1 - 2 pair, shielded #18 with IS/OA, 300 V, PVC jacket

CONDUIT DATA

Conduit No	Reference	Size	Type	Total Fill (mm²)	Allowable Fill (mm²)	Included Cable No.	Conductor Type
						MVDSW03A 1	MVDS DLC
2T44	E-115, E-182	610	152.4 mm siderail ladder tray	5109.21	38709.60	2119-2	4 pair #22, shielded pairs, 300 V, PE insulation
						1473-4	50 pair #18, shielded pairs, IS/OS shield 600 V, XLPE insul., PVC jacket
						1474-5	50 pair #18, shielded pairs, IS/OS shield 600 V, XLPE insul., PVC jacket
						1474-4	50 pair #18, shielded pairs, IS/OS shield 600 V, XLPE insul., PVC jacket
						Pull rope	Soft-Fiber Polyester
						MVDSE01A	MVDS DLC
						2475-3A	12 Fiber, single mode fiberoptic cable
						1473-5	50 pair #18, shielded pairs, IS/OS shield 600 V, XLPE insul., PVC jacket
2T45	E-115, E-182	610	152.4 mm siderail ladder tray	7529.12 1	38709.60	2900-432B	4 pair #22, shielded pairs, FEP insulation
						2910-12	4 pair #22, shielded pairs, 300 V, PE insulation
						Pull rope	Soft-Fiber Polyester
						2900-412A	4 pair #22, shielded pairs, FEP insulation
						2910-11	1-3/C #16,600 V, EPR insulation
						2910-7	4 pair #24, overall shielded, 30V, PE insulation
						2910-10	4 pair #22, shielded pairs, 300 V, PE insulation
						2910-8	4 pair #22, shielded pairs, 300 V, PE insulation
						2900-422B	4 pair #22, shielded pairs, FEP insulation
						2900-422A	4 pair #22, shielded pairs, FEP insulation
						2900-412C	4 pair #22, shielded pairs, FEP insulation
						2900-412B	4 pair #22, shielded pairs, FEP insulation
						2900-382C	4 pair #22, shielded pairs, FEP insulation
						2900-402A	4 pair #22, shielded pairs, FEP insulation
						2900-272C	4 pair #22, shielded pairs, FEP insulation
						2900-382B	4 pair #22, shielded pairs, FEP insulation
						2900-382A	4 pair #22, shielded pairs, FEP insulation
						2900-332C	4 pair #22, shielded pairs, FEP insulation
						2900-332B	4 pair #22, shielded pairs, FEP insulation
						2900-332A	4 pair #22, shielded pairs, FEP insulation
						2900-292A	4 pair #22, shielded pairs, FEP insulation
						2900-172A	4 pair #22, shielded pairs, FEP insulation
						2900-192B	4 pair #22, shielded pairs, FEP insulation
						2900-142A	4 pair #22, shielded pairs, FEP insulation
						1474-5A	1 - 6 pair, shielded #18 with overall shield, 300 V, PVC jacket
						2910-3	4 pair #22, shielded pairs, FEP insulation
						2910-2	4 pair #22, shielded pairs, FEP insulation
						2900-482A	4 pair #22, shielded pairs, FEP insulation
						2900-452B	4 pair #22, shielded pairs, FEP insulation
						2155	1 - 2 pair, shielded #18 with IS/OA, 300 V, PVC jacket

For continuation, see next sheet.

CONDUIT AND TRAY SCHEDULE

E-420

STATE OF CALIFORNIA - DEPARTMENT OF TRANSPORTATION
Caltrans
DESIGN OVERSIGHT: BEHZAD GOLEMOHAMMADI
CALCULATED/DESIGNED BY: PBP
CHECKED BY: AB
DATE: 8/02
REVISED BY: DATE REVISED

LAST REVISION 00-00-00
DATE PLOTTED => 5/22/2008
TIME PLOTTED => 11:13:19 AM

FOR REDUCED PLANS ORIGINAL SCALE IS IN MILLIMETERS 0 20 40 60 80

DGN FILE =>T:\13103\WS\pse\SAS Struc\CCO\SAS CC044\04-0120F1_035R01.dgn
USERNAME =>llorico

CU 04251 EA 0120F1

DIST	COUNTY	ROUTE	KILOMETER POST TOTAL PROJECT	SHEET No	TOTAL SHEETS
04	SF	80	13.2/13.9	376 R1	1204

Jens Erlingsson 12/19/02
REGISTERED ELECTRICAL ENGINEER DATE

12-6-04
PLANS APPROVAL DATE

REGISTERED PROFESSIONAL ENGINEER — JENS ERLINGSSON — No. 8249 — Exp. 9/30/06 ELECTRICAL — STATE OF CALIFORNIA

PB POWER, Inc.
A Parsons Brinckerhoff Company
303 Second St., Suite 700N
San Francisco, CA 94107-1317

The State of California or its officers or agents shall not be responsible for the accuracy or completeness of electronic copies of this plan sheet.

Caltrans now has a web site! To get to the web site, go to: http://www.dot.ca.gov

Caltrans Metric

REGISTERED PROFESSIONAL ENGINEER — S. A. ESTOCLET, JR. — No. E-10151 — Exp. 12/31/2008 ELECTRICAL — STATE OF CALIFORNIA

FOR REVISION ONLY

REQUEST FOR INFORMATION NOT ADDRESSED IN THIS CCO REMAIN IN FORCE

MARK	DATE	DESCRIPTIONS	BY	CH'D	CCO#
		REVISIONS			
1	03/04/08	BARRIER MODIFICATIONS	JS BM	RG SE	44

CONTRACT CHANGE ORDER NO. 44 SO
SHEET 53 OF 92

CONDUIT DATA

Conduit No	Reference	Size	Type	Total Fill (mm²)	Allowable Fill (mm²)	Included Cable No.	Conductor Type
						2900-452A	4 pair #22, shielded pairs, FEP insulation
						2900-442A	4 pair #22, shielded pairs, FEP insulation
						2900-442C	4 pair #22, shielded pairs, FEP insulation
						2900-442B	4 pair #22, shielded pairs, FEP insulation
						2900-272A	4 pair #22, shielded pairs, FEP insulation
						2900-162A	4 pair #22, shielded pairs, FEP insulation
						2900-192C	4 pair #22, shielded pairs, FEP insulation
						1474-5	50 pair #18, shielded pairs, IS/OS shield 600 V, XLPE insul., PVC jacket
						2900-432A	4 pair #22, shielded pairs, FEP insulation
						2900-192A	4 pair #22, shielded pairs, FEP insulation
						2900-172C	4 pair #22, shielded pairs, FEP insulation
						2900-172B	4 pair #22, shielded pairs, FEP insulation
						2900-162B	4 pair #22, shielded pairs, FEP insulation
						2900-152C	4 pair #22, shielded pairs, FEP insulation
						2900-152B	4 pair #22, shielded pairs, FEP insulation
						2900-152A	4 pair #22, shielded pairs, FEP insulation
						1474-5B	1 - 6 pair, shielded #18 with overall shield, 300 V, PVC jacket
						1474-6	50 pair #18, shielded pairs, IS/OS shield 600 V, XLPE insul., PVC jacket
						1473-5	50 pair #18, shielded pairs, IS/OS shield 600 V, XLPE insul., PVC jacket
						1473-6	50 pair #18, shielded pairs, IS/OS shield 600 V, XLPE insul., PVC jacket
						2900-272B	4 pair #22, shielded pairs, FEP insulation
2T46	E-115, E-183	610	152.4 mm siderail ladder tray	5485.55	38709.60	1474-6	50 pair #18, shielded pairs, IS/OS shield 600 V, XLPE insul., PVC jacket
						Pull rope	Soft-Fiber Polyester
						MVDSE02A	MVDS DLC
						CCTVE01AD	TVL
						CCTVE01AC	TVC
						MVDSW03A	MVDS DLC
						CCTVE01BD	TVL
						CCTVE01BC	TVC
						1473-7	50 pair #18, shielded pairs, IS/OS shield 600 V, XLPE insul., PVC jacket
						1474-7	50 pair #18, shielded pairs, IS/OS shield 600 V, XLPE insul., PVC jacket
						1473-6	50 pair #18, shielded pairs, IS/OS shield 600 V, XLPE insul., PVC jacket
						2475-3B	12 Fiber, single mode fiberoptic cable
2T47	E-117, E-184	610	152.4 mm siderail ladder tray	4987.47	38709.60	1474-7	50 pair #18, shielded pairs, IS/OS shield 600 V, XLPE insul., PVC jacket
						MVDSE03A	MVDS DLC
						2475-3C	12 Fiber, single mode fiberoptic cable
						1473-8	50 pair #18, shielded pairs, IS/OS shield 600 V, XLPE insul., PVC jacket
						1473-7	50 pair #18, shielded pairs, IS/OS shield 600 V, XLPE insul., PVC jacket
						1474-8	50 pair #18, shielded pairs, IS/OS shield 600 V, XLPE insul., PVC jacket
						Pull rope	Soft-Fiber Polyester
2T48	E-118, E-185	610	152.4 mm siderail ladder tray	6718.75 (1)	38709.60	Pull rope	Soft-Fiber Polyester
						1474-10	50 pair #18, shielded pairs, IS/OS shield 600 V, XLPE insul., PVC jacket
						1474-8A	1 - 6 pair, shielded #18 with overall shield, 300 V, PVC jacket
						1474-8B	1 - 6 pair, shielded #18 with overall shield, 300 V, PVC jacket
						1474-8	50 pair #18, shielded pairs, IS/OS shield 600 V, XLPE insul., PVC jacket
						2154	1 - 2 pair, shielded #18 with IS/OA, 300 V, PVC jacket
						2148	1 - 2 pair, shielded #18 with IS/OA, 300 V, PVC jacket (1)
						2149	1 - 2 pair, shielded #18 with IS/OA, 300 V, PVC jacket
						1473-10	50 pair #18, shielded pairs, IS/OS shield 600 V, XLPE insul., PVC jacket
						1473-8	50 pair #18, shielded pairs, IS/OS shield 600 V, XLPE insul., PVC jacket
						2474-10	50 pair #18, shielded pairs, IS/OS shield 600 V, XLPE insul., PVC jacket
						2150	1 - 2 pair, shielded #18 with IS/OA, 300 V, PVC jacket (1)

CONDUIT DATA

Conduit No	Reference	Size	Type	Total Fill (mm²)	Allowable Fill (mm²)	Included Cable No.	Conductor Type
2T49	E-212,E-20	305	152.4 mm siderail ladder tray	1904.72	19354.80	Pull rope	Soft-Fiber Polyester
						2900-152A	4 pair #22, shielded pairs, FEP insulation
						2900-152C	4 pair #22, shielded pairs, FEP insulation
						2900-162A	4 pair #22, shielded pairs, FEP insulation
						2900-162B	4 pair #22, shielded pairs, FEP insulation
						2910-2	4 pair #22, shielded pairs, FEP insulation
						2910-3	4 pair #22, shielded pairs, FEP insulation
						1473-4	50 pair #18, shielded pairs, IS/OS shield 600 V, XLPE insul., PVC jacket
						2475-3	72 Fiber, single mode fiberoptic riser cable
						2900-152B	4 pair #22, shielded pairs, FEP insulation
						2900-142A	4 pair #22, shielded pairs, FEP insulation
2T53	E-181 Thru E-186	610	152.4 mm siderail ladder tray	0.00	38709.60	Pull rope	Soft-Fiber Polyester
2T54	E-212,E-20	610	152.4 mm siderail ladder tray	0.00	16774.16	Pull rope	Soft-Fiber Polyester
3000		41	RGS conduit	323.69	534.55	UP204-8-2	2 + 1gnd #8,#10, 600 V, RHH/RHW insulation
						UP204-7-1	1-2/C + gnd #8,600 V, EPR insulation
3001		41	RGS conduit	454.92	534.55	UP204-7	1-2/C + gnd #8,600 V, EPR insulation
						UP204-8	1-2/C + gnd #8,600 V, EPR insulation
3002		53	RGS conduit	684.34	879.42	UP204-7	1-2/C + gnd #8,600 V, EPR insulation
						UP205-7-1	1-2/C + gnd #8,600 V, EPR insulation
						UP204-8-2	2 + 1gnd #8,#10, 600 V, RHH/RHW insulation
						UP204-8-1	3 + 1gnd #8,#10, 600 V, RHH/RHW insulation
3003		41	RGS conduit	454.92	534.55	UP205-8	1-2/C + gnd #8,600 V, EPR insulation
						UP205-7	1-2/C + gnd #8,600 V, EPR insulation
3004		53	RGS conduit	684.34	879.42	UP205-8-2	2 + 1gnd #8,#10, 600 V, RHH/RHW insulation
						UP205-8-1	3 + 1gnd #8,#10, 600 V, RHH/RHW insulation
						UP206-7-1	1-2/C + gnd #8,600 V, EPR insulation
						UP205-7	1-2/C + gnd #8,600 V, EPR insulation
3005		41	RGS conduit	454.92	534.55	UP206-8	1-2/C + gnd #8,600 V, EPR insulation
						UP206-7	1-2/C + gnd #8,600 V, EPR insulation
3006		53	RGS conduit	684.34	879.42	UP206-7	1-2/C + gnd #8,600 V, EPR insulation
						UP207-7-1	1-2/C + gnd #8,600 V, EPR insulation
						UP206-8-1	3 + 1gnd #8,#10, 600 V, RHH/RHW insulation
						UP206-8-2	2 + 1gnd #8,#10, 600 V, RHH/RHW insulation
3007		41	RGS conduit	454.92	534.55	UP207-8	1-2/C + gnd #8,600 V, EPR insulation
						UP207-7	1-2/C + gnd #8,600 V, EPR insulation
3008		53	RGS conduit	684.34	879.42	UP207-8-2	2 + 1gnd #8,#10, 600 V, RHH/RHW insulation
						UP207-8-1	3 + 1gnd #8,#10, 600 V, RHH/RHW insulation
						UP207-7	1-2/C + gnd #8,600 V, EPR insulation
						UP208-7-1	1-2/C + gnd #8,600 V, EPR insulation
3009		41	RGS conduit	454.92	534.55	UP208-8	1-2/C + gnd #8,600 V, EPR insulation
						UP208-7	1-2/C + gnd #8,600 V, EPR insulation

For continuation, see next sheet.

CONDUIT AND TRAY SCHEDULE

E-421

STATE OF CALIFORNIA - DEPARTMENT OF TRANSPORTATION
Caltrans
DESIGN OVERSIGHT
BEHZAD GOLEMOHAMMADI
CALCULATED/ DESIGNED BY
CHECKED BY
PBP
AB
DATE 8/02
8/02
REVISED BY
DATE REVISED

LAST REVISION 00-00-00
DATE PLOTTED => 5/22/2008
TIME PLOTTED => 11:13:41 AM

FOR REDUCED PLANS ORIGINAL SCALE IS IN MILLIMETERS 0 20 40 60 80

DGN FILE =>T:\13103\MS\pse\SAS Struc\CCO\SAS CC044\04-0120F1_0376R01.dgn
USERNAME =>llorico

CU 04251

EA 0120F1

DIST	COUNTY	ROUTE	KILOMETER POST TOTAL PROJECT	SHEET No	TOTAL SHEETS
04	SF	80	13.2/13.9	386 R1	1204

12/19/02
REGISTERED ELECTRICAL ENGINEER DATE

12-6-04
PLANS APPROVAL DATE

REGISTERED PROFESSIONAL ENGINEER — JENS ERLINGSSON — No. 8249 — Exp. 9/30/06 ELECTRICAL — STATE OF CALIFORNIA

PB POWER, Inc.
A Parsons Brinckerhoff Company
303 Second St., Suite 700N
San Francisco, CA 94107-1317

The State of California or its officers or agents shall not be responsible for the accuracy or completeness of electronic copies of this plan sheet.

Caltrans now has a web site! To get to the web site, go to http://www.dot.ca.gov

REQUEST FOR INFORMATION NOT ADDRESSED IN THIS CCO REMAIN IN FORCE

MARK	DATE	DESCRIPTIONS	BY	CH'D	CCO#
		REVISIONS			
1	03/04/08	BARRIER MODIFICATIONS	JS BM	RG SE	44

CONTRACT CHANGE ORDER NO. 4450
SHEET 54 OF 92

REGISTERED PROFESSIONAL ENGINEER — S. A. ESTOQUE, JR. — No. E-10151 — Exp. 12/31/2008 ELECTRICAL — STATE OF CALIFORNIA

FOR REVISION ONLY

CONDUIT DATA

Conduit No	Reference	Size	Type	Total Fill (mm²)	Allowable Fill (mm²)	Included Cable No.	Conductor Type
3702	E-284, E-275	78	RGS-PVC coated conduit	436.32	1935.24	UP210-1B-1B	2 + 1 gnd #8,#10, 600 V, RHH/RHW insulation
						UP210-1B-2	2 + 1 gnd #12,#12, 600 V, RHH/RHW insulation
						Pull rope	Soft-Fiber Polyester
3703	E-284	53	RGS-PVC coated conduit	725.01	879.42	UP210-1B-3	2 + 1 gnd #8,#10, 600 V, RHH/RHW insulation
						UP210-1B-4	2 + 1 gnd #12,#12, 600 V, RHH/RHW insulation
						Pull rope	Soft-Fiber Polyester
						UP210-1B-3C	2 + 1 gnd #8,#10, 600 V, RHH/RHW insulation
3704	E-284, E-285	53	RGS-PVC coated conduit	436.32	879.42	UP210-1B-4	2 + 1 gnd #12,#12, 600 V, RHH/RHW insulation
						UP210-1B-3C	2 + 1 gnd #8,#10, 600 V, RHH/RHW insulation
						UP210-1B-3A	2 + 1 gnd #8,#10, 600 V, RHH/RHW insulation
						Pull rope	Soft-Fiber Polyester
3705	E-284, E-275	53	RGS-PVC coated conduit	315.59	879.42	UP210-1B-3B	2 + 1 gnd #8,#10, 600 V, RHH/RHW insulation
						UP210-1B-4	2 + 1 gnd #12,#12, 600 V, RHH/RHW insulation
						Pull rope	Soft-Fiber Polyester
						UP210-1B-3C	2 + 1 gnd #8, #10, 600 V, RHH/RHW insulation
3706	E-284, E-275	53	RGS-PVC coated conduit	241.67	879.42	UP210-1B-5	2 + 1 gnd #8, #10, 600 V, RHH/RHW insulation
						UP210-1B-5C	2 + 1 gnd #8, #10, 600 V, RHH/RHW insulation
						UP210-1B-6	2 + 1 gnd #12, #12, 600 V, RHH/RHW insulation
3707	E-284, E-275	53	RGS-PVC coated conduit	241.67	879.42	UP210-1B-6	2 + 1 gnd #12, #12 600 V, RHH/RHW insulation
						UP210-1B-5A	2 + 1 gnd #8, #10, 600 V, RHH/RHW insulation
						UP210-1B-5C	2 + 1 gnd #8, #10, 600 V, RHH/RHW insulation
3708	E-284, E-275	53	RGS-PVC coated conduit	241.67	879.42	UP210-1B-5B	2 + 1 gnd #8, #10, 600 V, RHH/RHW insulation
						UP210-1B-5C	2 + 1 gnd #8, #10, 600 V, RHH/RHW insulation
						UP210-1B-6	2 + 1 gnd #12, #12, 600 V, RHH/RHW insulation
3800	E-284, E-275	53	RGS-PVC coated conduit	387.11	879.42	UP210-1B-8	2 + 1 gnd #12,#12, 600 V, RHH/RHW insulation
						Pull rope	Soft-Fiber Polyester
						UP210-1B-7	2 + 1 gnd #8,#10, 600 V, RHH/RHW insulation
						UP210-1B-7C	2 + 1 gnd #8,#10, 600 V, RHH/RHW insulation
3801	E-284	53	RGS-PVC coated conduit	483.34	879.42	UP210-1B-8	2 + 1 gnd #12,#12, 600 V, RHH/RHW insulation
						Pull rope	Soft-Fiber Polyester
						UP210-1B-7A	2 + 1 gnd #8,#10, 600 V, RHH/RHW insulation
						UP210-1B-7C	2 + 1 gnd #8,#10, 600 V, RHH/RHW insulation
3802	E-284, E-275	78	RGS-PVC coated conduit	436.32	1935.24	Pull rope	Soft-Fiber Polyester
						UP210-1B-8	2 + 1 gnd #12,#12, 600 V, RHH/RHW insulation
						UP210-1B-7C	2 + 1 gnd #8,#10, 600 V, RHH/RHW insulation
						UP210-1B-7B	2 + 1 gnd #8,#10, 600 V, RHH/RHW insulation
3803	E-284, E-275	53	RGS-PVC coated conduit	725.01	879.42	UP210-1B-10	2 + 1 gnd #12,#12, 600 V, RHH/RHW insulation
						Pull rope	Soft-Fiber Polyester
						UP210-1B-9	2 + 1 gnd #8,#10, 600 V, RHH/RHW insulation
						UP210-1B-9C	2 + 1 gnd #8,#10, 600 V, RHH/RHW insulation
3804	E-284, E-285	78	RGS-PVC coated conduit	436.32	1935.24	Pull rope	Soft-Fiber Polyester
						UP210-1B-10	2 + 1 gnd #12,#12, 600 V, RHH/RHW insulation
						UP210-1B-9A	2 + 1 gnd #8,#10, 600 V, RHH/RHW insulation
						UP210-1B-9C	2 + 1 gnd #8,#10, 600 V, RHH/RHW insulation
3805	E-284, E-275	53	RGS-PVC coated conduit	337.90	879.42	UP210-1B-10	2 + 1 gnd #12,#12, 600 V, RHH/RHW insulation
						Pull rope	Soft-Fiber Polyester
						UP210-1B-9B	2 + 1 gnd #8,#10, 600 V, RHH/RHW insulation
						UP210-1B-9C	2 + 1 gnd #8,#10, 600 V, RHH/RHW insulation
3806	E-284, E-275	53	RGS-PVC coated conduit	241.67	879.42	UP210-1B-12	2 + 1 gnd #12, #12, 600 V, RHH/RHW insulation
						UP210-1B-11	2 + 1 gnd #8, #10, 600 V, RHH/RHW insulation
						UP210-1B-11C	2 + 1 gnd #8, #10, 600 V, RHH/RHW insulation
3807	E-284, E-275	53	RGS-PVC coated conduit	241.67	879.42	UP210-1B-11A	2 + 1 gnd #8, #10, 600 V, RHH/RHW insulation
						UP210-1B-11C	2 + 1 gnd #8, #10, 600 V, RHH/RHW insulation
						UP210-1B-12	2 + 1 gnd #12, #12, 600 V, RHH/RHW insulation

CONDUIT DATA

Conduit No	Reference	Size	Type	Total Fill (mm²)	Allowable Fill (mm²)	Included Cable No.	Conductor Type
3808	E-284, E-275	53	RGS-PVC coated conduit	241.67	879.42	UP210-1B-12	2 + 1 gnd #12, #12, 600 V, RHH/RHW insulation
						UP210-1B-11B	2 + 1 gnd #8, #10, 600 V, RHH/RHW insulation
						UP210-1B-11C	2 + 1 gnd #8, #10, 600 V, RHH/RHW insulation
4007	E-114	53	RGS-PVC coated conduit	150.44	879.42	Pull rope	Soft-Fiber Polyester
						MVDSW02A	MVDS DLC
4009	E-71	53	RGS-PVC coated conduit	60.80	879.42	Pull rope	Soft-Fiber Polyester
						UP104-5	2 + 1 gnd #10,#10, 600 V, RHH/RHW insulation
4010	E-71	53	RGS-PVC coated conduit	98.42	879.42	UP104-12	2 + 1 gnd #12,#12, 600 V, RHH/RHW insulation
						Pull rope	Soft-Fiber Polyester
						UP104-10	2 + 1 gnd #12,#12, 600 V, RHH/RHW insulation
4011	E-71	53	RGS-PVC coated conduit	0.00	879.42	Pull rope	Soft-Fiber Polyester
4029	E-72	78	RGS-PVC coated conduit	1217.21	1935.24	1201-5	1-3/C #14,600 V, EPR insulation
						UP105-15	1-2/C + gnd #8,600 V, EPR insulation
						Pull rope	Soft-Fiber Polyester
						1201-4	1-9/C #16,600 V, EPR insulation
						1201-3	1-3/C #14,600 V, EPR insulation
						1201-1	1-2/C + gnd #8,600 V, EPR insulation
						1201-6	1-2/C + gnd #8,600 V, EPR insulation
						1201-2	1-2/C + gnd #8,600 V, EPR insulation
4032	E-115	78	RGS-PVC coated conduit	317.80 (1)	1935.24	Pull rope	Soft-Fiber Polyester
						1474-5B	1 - 6 pair, shielded #18 with overall shield , 300 V, PVC jacket
							(1)
						1474-5A	1 - 6 pair, shielded #18 with overall shield , 300 V, PVC jacket
4033	E-72	53	RGS-PVC coated conduit	481.89	879.42	Pull rope	Soft-Fiber Polyester
						UP105-5	2 + 1 gnd #12,#12, 600 V, RHH/RHW insulation
						UP105-13	1-2/C + gnd #12,600 V, EPR insulation
						UP105-11	1-2/C + gnd #12,600 V, EPR insulation
						UP105-15	1-2/C + gnd #8,600 V, EPR insulation
4034	E-72	53	RGS-PVC coated conduit	0.00 (1)	879.42	Pull rope	Soft-Fiber Polyester
							(1)
4035	E-72	53	RGS-PVC coated conduit	0.00	879.42	Pull rope	Soft-Fiber Polyester
4036	E-73	53	RGS-PVC coated conduit	276.67	879.42	UP106-5	2 + 1 gnd #12,#12, 600 V, RHH/RHW insulation
						UP106-15	1-2/C + gnd #8,600 V, EPR insulation
						Pull rope	Soft-Fiber Polyester

For continuation, see next sheet.

CONDUIT AND TRAY SCHEDULE

E-431

DESIGNED BY	CALCULATED/ CHECKED BY	DATE	REVISED BY	DATE REVISED
BEHZAD COLEMOHAMMADI	PBP AB	8/02		

OVERSIGHT

STATE OF CALIFORNIA - DEPARTMENT OF TRANSPORTATION
Caltrans

LAST REVISION 00-00-00
DATE PLOTTED => 5/22/2008
TIME PLOTTED => 11:14:03 AM

FOR REDUCED PLANS ORIGINAL SCALE IS IN MILLIMETERS 0 20 40 60 80

DGN FILE =>T:\13103\WS\pse\SAS Struc\CCO\SAS CCO44\04-0120f1_0386R01.dgn
USERNAME =>florico

CU 04251 EA 0120F1

DIST	COUNTY	ROUTE	KILOMETER POST TOTAL PROJECT	SHEET No	TOTAL SHEETS
04	SF	80	13.2/13.9	387 R1	1204

Jens Erlingsson 12/19/02
REGISTERED ELECTRICAL ENGINEER DATE

12-6-04
PLANS APPROVAL DATE

REGISTERED PROFESSIONAL ENGINEER JENS ERLINGSSON No. 8249 Exp. 9/30/06 ELECTRICAL STATE OF CALIFORNIA

PB POWER, Inc.
A Parsons Brinckerhoff Company
303 Second St., Suite 700N
San Francisco, CA 94107-1317

The State of California or its officers or agents shall not be responsible for the accuracy or completeness of electronic copies of this plan sheet.

Caltrans now has a web site! To get to the web site, go to http://www.dot.ca.gov

REGISTERED PROFESSIONAL ENGINEER S. A. ESTOQUE, JR. No. E-10151 Exp. 12/31/2008 ELECTRICAL STATE OF CALIFORNIA

FOR REVISION ONLY

REQUEST FOR INFORMATION NOT ADDRESSED IN THIS CCO REMAIN IN FORCE

MARK	DATE	DESCRIPTIONS / REVISIONS	BY	CH'D	CCO#
1	03/04/08	BARRIER MODIFICATIONS	JS BM	RG SE	44

CONTRACT CHANGE ORDER NO. 44 SO
SHEET 55 OF 92

CONDUIT DATA

Conduit No	Reference	Size	Type	Total Fill (mm²)	Allowable Fill (mm²)	Included Cable No.	Conductor Type
4037	E-73	53	RGS-PVC coated conduit	227.46	879.42	Pull rope	Soft-Fiber Polyester
						UP106-10	1-2/c + gnd #8,600 V, EPR insulation
4038	E-73	53	RGS-PVC coated conduit	0.00	879.42	Pull rope	Soft-Fiber Polyester
4039	E-73	53	RGS-PVC coated conduit	0.00	879.42	Pull rope	Soft-Fiber Polyester
4040	E-114	78	RGS-PVC coated conduit	727.89	1935.24	1202-3	1-7/C #16,600 V, EPR insulation
						Pull rope	Soft-Fiber Polyester
						1202-4	1-3/C #14,600 V, EPR insulation
						1202-2	1-3/C #14,600 V, EPR insulation
						UP106-15	1-2/c + gnd #8,600 V, EPR insulation
						1202-1	1-2/c + gnd #8,600 V, EPR insulation
4057	E-116	78	RGS-PVC coated conduit	324.26	1935.24	Pull rope	Soft-Fiber Polyester
						CCTVE01BD	TVL
						MVDSW03A	MVDS DLC
						CCTVE01BC	TVC
4076	E-74	53	RGS-PVC coated conduit	49.21	879.42	UP107-5	2 + 1 gnd #12,#12, 600 V, RHH/RHW insulation
						Pull rope	Soft-Fiber Polyester
4077	E-74	53	RGS-PVC coated conduit	205.22	879.42	UP107-10	1-2/c + gnd #12,600 V, EPR insulation
						UP207-10	1-3/C #12,600 V, EPR insulation
						Pull rope	Soft-Fiber Polyester
4078	E-74	53	RGS-PVC coated conduit	0.00	879.42	Pull rope	Soft-Fiber Polyester
4082	E-117	53	RGS-PVC coated conduit	150.44	879.42	MVDSW04A	MVDS DLC
4101	E-75	53	RGS-PVC coated conduit	254.43	879.42	Pull rope	Soft-Fiber Polyester
						UP108-5	2 + 1 gnd #12,#12, 600 V, RHH/RHW insulation
						UP108-17	1-2/c + gnd #12,600 V, EPR insulation
						UP108-11	1-2/c + gnd #12,600 V, EPR insulation
4102	E-75	53	RGS-PVC coated conduit	0.00	879.42	Pull rope	Soft-Fiber Polyester
4103	E-75	53	RGS-PVC coated conduit	0.00	879.42	Pull rope	Soft-Fiber Polyester
4104	E-75	78	RGS-PVC coated conduit	1217.21	2564.19	2201-4	1-9/C #16,600 V, EPR insulation
						2201-2	1-2/c + gnd #8,600 V, EPR insulation
						2201-3	1-3/C #14,600 V, EPR insulation
						Pull rope	Soft-Fiber Polyester
						UP208-15	1-2/c + gnd #8,600 V, EPR insulation
						2201-1	1-2/c + gnd #8,600 V, EPR insulation
						2201-6	1-2/c + gnd #8,600 V, EPR insulation
						2201-5	1-3/C #14,600 V, EPR insulation
4107	E-118	78	RGS-PVC coated conduit	317.80 (1)	1935.24	1474-8B	1 - 6 pair, shielded #18 with overall shield, 300 V, PVC jacket
						1474-8A	1 - 6 pair, shielded #18 with overall shield, 300 V, PVC jacket
						Pull rope	Soft-Fiber Polyester
4108	E-117	78	RGS-PVC coated conduit	0.00	1935.24	Pull rope	Soft-Fiber Polyester
4128	E-100	53	RGS conduit	0.00	879.42	Pull rope	Soft-Fiber Polyester
4148	E-100	53	RGS conduit	0.00	879.42	Pull rope	Soft-Fiber Polyester
4149	E-96	78	RGS conduit	648.58	1935.24	A-1011-2	1-3/c + gnd #6,600 V, EPR insulation
						A-1011-2	1-3/c + gnd #6,600 V, EPR insulation
4150	E-96	78	RGS conduit	648.58	1935.24	A-1011-2	1-3/c + gnd #6,600 V, EPR insulation
						A-1011-2	1-3/c + gnd #6,600 V, EPR insulation
4151	E-96	78	RGS conduit	648.58	1935.24	A-1011-2	1-3/c + gnd #6,600 V, EPR insulation
						A-1011-2	1-3/c + gnd #6,600 V, EPR insulation
4152	E-96	78	RGS conduit	648.58	1935.24	A-1011-2	1-3/c + gnd #6,600 V, EPR insulation
						A-1011-2	1-3/c + gnd #6,600 V, EPR insulation
4153	E-96	78	RGS conduit	648.58	1935.24	A-1011-2	1-3/c + gnd #6,600 V, EPR insulation
						A-1011-2	1-3/c + gnd #6,600 V, EPR insulation

CONDUIT DATA

Conduit No	Reference	Size	Type	Total Fill (mm²)	Allowable Fill (mm²)	Included Cable No.	Conductor Type
4154	E-96	78	RGS conduit	648.58	1935.24	A-1011-2	1-3/c + gnd #6,600V, EPR insulation
						A-1011-2	1-3/c + gnd #6,600 V, EPR insulation
4155	E-97	78	RGS conduit	648.58	1935.24	A-1011-2	1-3/c + gnd #6,600 V, EPR insulation
						A-1011-2	1-3/c + gnd #6,600 V, EPR insulation
4156	E-97	78	RGS conduit	648.58	1935.24	A-1011-2	1-3/c + gnd #6,600 V, EPR insulation
						A-1011-2	1-3/c + gnd #6,600 V, EPR insulation
4157	E-97	78	RGS conduit	648.58	1935.24	A-1011-2	1-3/c + gnd #6,600 V, EPR insulation
						A-1011-2	1-3/c + gnd #6,600 V, EPR insulation
4158	E-97	78	RGS conduit	648.58	1935.24	A-1011-2	1-3/c + gnd #6,600 V, EPR insulation
						A-1011-2	1-3/c + gnd #6,600 V, EPR insulation
4159	E-97	78	RGS conduit	648.58	1935.24	A-1011-2	1-3/c + gnd #6,600 V, EPR insulation
						A-1011-2	1-3/c + gnd #6,600 V, EPR insulation
4160	E-97	78	RGS conduit	851.47	1935.24	A-1012-1	1-3/c + gnd #2 ,600V, EPR insulation
						A-1012-2	1-3/c + gnd #6,600 V, EPR insulation
4161	E-97	78	RGS conduit	648.58	1935.24	A-1012-2	1-3/c + gnd #6,600 V, EPR insulation
						A-1012-2	1-3/c + gnd #6,600 V, EPR insulation
4162	E-97	78	RGS conduit	648.58	1935.24	A-1012-2	1-3/c + gnd #6,600 V, EPR insulation
						A-1012-2	1-3/c + gnd #6,600 V, EPR insulation
4163	E-98	78	RGS conduit	648.58	1935.24	A-1012-2	1-3/c + gnd #6,600 V, EPR insulation
						A-1012-2	1-3/c + gnd #6,600 V, EPR insulation
4164	E-98	78	RGS conduit	648.58	1935.24	A-1012-2	1-3/c + gnd #6,600 V, EPR insulation
						A-1012-2	1-3/c + gnd #6,600 V, EPR insulation
4165	E-98	78	RGS conduit	648.58	1935.24	A-1012-2	1-3/c + gnd #6,600 V, EPR insulation
						A-1012-2	1-3/c + gnd #6,600 V, EPR insulation
4166	E-98	78	RGS conduit	648.58	1935.24	A-1012-2	1-3/c + gnd #6,600 V, EPR insulation
						A-1012-2	1-3/c + gnd #6,600 V, EPR insulation
4167	E-98	78	RGS conduit	648.58	1935.24	A-1012-2	1-3/c + gnd #6,600 V, EPR insulation
						A-1012-2	1-3/c + gnd #6,600 V, EPR insulation
4168	E-98	78	RGS conduit	648.58	1935.24	A-1012-2	1-3/c + gnd #6,600 V, EPR insulation
						A-1012-2	1-3/c + gnd #6,600 V, EPR insulation
4169	E-98	78	RGS conduit	648.58	1935.24	A-1012-2	1-3/c + gnd #6,600 V, EPR insulation
						A-1012-2	1-3/c + gnd #6,600 V, EPR insulation
4170	E-98	78	RGS conduit	648.58	1935.24	A-1012-2	1-3/c + gnd #6,600 V, EPR insulation
						A-1012-2	1-3/c + gnd #6,600 V, EPR insulation
4171	E-98	78	RGS conduit	648.58	1935.24	A-1012-2	1-3/c + gnd #6,600 V, EPR insulation
						A-1012-2	1-3/c + gnd #6,600 V, EPR insulation

For continuation, see next sheet.

CONDUIT AND TRAY SCHEDULE

E-432

DATE	REVISED BY	DATE	REVISED
8/02	PBP	8/02	AB

CALCULATED/DESIGNED BY
CHECKED BY

DESIGN OVERSIGHT
BEHZAD GOLEMOHAMMADI

STATE OF CALIFORNIA - DEPARTMENT OF TRANSPORTATION
Caltrans

FOR REDUCED PLANS ORIGINAL SCALE IS IN MILLIMETERS 0 20 40 60 80

DGN FILE =>T:\13103\WS\pse\SAS Struc\CCO\SAS CC044\04-0120F1_0387R01.dgn
USERNAME =>llorico

CU 04251

EA 0120F1

LAST REVISION 00-00-00

DATE PLOTTED => 5/22/2008
TIME PLOTTED => 11:14:24 AM

DIST	COUNTY	ROUTE	KILOMETER POST TOTAL PROJECT	SHEET No	TOTAL SHEETS
04	SF	80	13.2/13.9	388 R1	1204

REGISTERED ELECTRICAL ENGINEER — DATE 12/19/02

12-6-04
PLANS APPROVAL DATE

JENS ERLINGSSON No. 8249 Exp. 9/30/06 ELECTRICAL — REGISTERED PROFESSIONAL ENGINEER — STATE OF CALIFORNIA

PB POWER, Inc.
A Parsons Brinckerhoff Company
303 Second St., Suite 700N
San Francisco, CA 94107-1317

The State of California or its officers or agents shall not be responsible for the accuracy or completeness of electronic copies of this plan sheet.

Caltrans now has a web site! To get to the web site, go to http://www.dot.ca.gov

REQUEST FOR INFORMATION NOT ADDRESSED IN THIS CCO REMAIN IN FORCE

MARK	DATE	REVISIONS DESCRIPTIONS	BY	CH'D	CCO#
1	03/04/08	BARRIER MODIFICATIONS	TW	RG	44

CONTRACT CHANGE ORDER NO. 44 SO
SHEET 56 OF 92

FOR REVISION ONLY

REGISTERED PROFESSIONAL ENGINEER — S. A. ESTOOLE, JR. — No. E-10151 — Exp. 12/31/2008 ELECTRICAL — STATE OF CALIFORNIA

Caltrans Metric

CONDUIT DATA

Conduit No	Reference	Size	Type	Total Fill (mm²)	Allowable Fill (mm²)	Included Cable No.	Conductor Type
4172	E-99	78	RGS conduit	851.47	1935.24	A-1013-2	1-3/c + gnd #6,600 V, EPR insulation
						A-1013-1	1-3/c + gnd #2,600V, EPR insulation
4173	E-99	78	RGS conduit	648.58	1935.24	A-1013-2	1-3/c + gnd #6,600 V, EPR insulation
						A-1013-2	1-3/c + gnd #6,600 V, EPR insulation
4174	E-99	78	RGS conduit	648.58	1935.24	A-1013-2	1-3/c + gnd #6,600 V, EPR insulation
						A-1013-2	1-3/c + gnd #6,600 V, EPR insulation
4175	E-99	78	RGS conduit	648.58	1935.24	A-1013-2	1-3/c + gnd #6,600 V, EPR insulation
						A-1013-2	1-3/c + gnd #6,600 V, EPR insulation
4176	E-99	78	RGS conduit	648.58	1935.24	A-1013-2	1-3/c + gnd #6,600 V, EPR insulation
						A-1013-2	1-3/c + gnd #6,600 V, EPR insulation
4177	E-99	78	RGS conduit	648.58	1935.24	A-1013-2	1-3/c + gnd #6,600 V, EPR insulation
						A-1013-2	1-3/c + gnd #6,600 V, EPR insulation
4178	E-99	78	RGS conduit	648.58	1935.24	A-1013-2	1-3/c + gnd #6,600 V, EPR insulation
						A-1013-2	1-3/c + gnd #6,600 V, EPR insulation
4179	E-99	78	RGS conduit	648.58	1935.24	A-1013-2	1-3/c + gnd #6,600 V, EPR insulation
						A-1013-2	1-3/c + gnd #6,600 V, EPR insulation
4180	E-99	78	RGS conduit	648.58	1935.24	A-1013-2	1-3/c + gnd #6,600 V, EPR insulation
						A-1013-2	1-3/c + gnd #6,600 V, EPR insulation
4181	E-99	78	RGS conduit	648.58	1935.24	A-1013-2	1-3/c + gnd #6,600 V, EPR insulation
						A-1013-2	1-3/c + gnd #6,600 V, EPR insulation
4182	E-99	78	RGS conduit	648.58	1935.24	A-1013-2	1-3/c + gnd #6,600 V, EPR insulation
						A-1013-2	1-3/c + gnd #6,600 V, EPR insulation
4183	E-99	78	RGS conduit	648.58	1935.24	A-1013-2	1-3/c + gnd #6,600 V, EPR insulation
						A-1013-2	1-3/c + gnd #6,600 V, EPR insulation
4184	E-100	78	RGS conduit	648.58	1935.24	A-1013-2	1-3/c + gnd #6,600 V, EPR insulation
						A-1013-2	1-3/c + gnd #6,600 V, EPR insulation
4185	E-100	78	RGS conduit	851.47	1935.24	A-1014-2	1-3/c + gnd #6,600 V, EPR insulation
						A-1014-1	1-3/c + gnd #2,600V, EPR insulation
4186	E-100	78	RGS conduit	648.58	1935.24	A-1014-2	1-3/c + gnd #6,600 V, EPR insulation
						A-1014-2	1-3/c + gnd #6,600 V, EPR insulation
4187	E-100	78	RGS conduit	648.58	1935.24	A-1014-2	1-3/c + gnd #6,600 V, EPR insulation
						A-1014-2	1-3/c + gnd #6,600 V, EPR insulation
4188	E-100	78	RGS conduit	648.58	1935.24	A-1014-2	1-3/c + gnd #6,600 V, EPR insulation
						A-1014-2	1-3/c + gnd #6,600 V, EPR insulation
4189	E-100	78	RGS conduit	648.58	1935.24	A-1014-2	1-3/c + gnd #6,600 V, EPR insulation
						A-1014-2	1-3/c + gnd #6,600 V, EPR insulation
4190	E-100	78	RGS conduit	648.58	1935.24	A-1014-2	1-3/c + gnd #6,600 V, EPR insulation
						A-1014-2	1-3/c + gnd #6,600 V, EPR insulation
4191	E-100	78	RGS conduit	648.58	1935.24	A-1014-2	1-3/c + gnd #6,600 V, EPR insulation
						A-1014-2	1-3/c + gnd #6,600 V, EPR insulation
4192	E-96	78	RGS conduit	648.58	1935.24	A-1011-2	1-3/c + gnd #6,600 V, EPR insulation
						A-1011-2	1-3/c + gnd #6,600 V, EPR insulation
4193	E-97	78	RGS conduit	648.58	1935.24	A-1012-2	1-3/c + gnd #6,600 V, EPR insulation
						A-1012-2	1-3/c + gnd #6,600 V, EPR insulation
4194	E-101	78	RGS conduit	648.58	1935.24	A-1014-2	1-3/c + gnd #6,600 V, EPR insulation
						A-1014-2	1-3/c + gnd #6,600 V, EPR insulation
4195	E-101	78	RGS conduit	648.58	1935.24	A-1014-2	1-3/c + gnd #6,600 V, EPR insulation
						A-1014-2	1-3/c + gnd #6,600 V, EPR insulation
4196	E-101	78	RGS conduit	648.58	1935.24	A-1014-2	1-3/c + gnd #6,600 V, EPR insulation
						A-1014-2	1-3/c + gnd #6,600 V, EPR insulation
4197	E-101	78	RGS conduit	648.58	1935.24	A-1014-2	1-3/c + gnd #6,600 V, EPR insulation
						A-1014-2	1-3/c + gnd #6,600 V, EPR insulation

CONDUIT DATA

Conduit No	Reference	Size	Type	Total Fill (mm²)	Allowable Fill (mm²)	Included Cable No.	Conductor Type
4198	E-101	78	RGS conduit	648.58	1935.24	A-1014-2	1-3/c + gnd #6,600 V, EPR insulation
						A-1014-2	1-3/c + gnd #6,600 V, EPR insulation
4199	E-101	78	RGS conduit	324.29	1935.24	A-1014-2	1-3/c + gnd #6,600 V, EPR insulation
4201	E-114	78	RGS-PVC coated conduit	62.07	1935.24	Pull rope	Soft-Fiber Polyester
						1255-1	1-3/C #16,600 V, EPR insulation
4202	E-114	78	RGS-PVC coated conduit	0.00	1935.24	Pull rope	Soft-Fiber Polyester
4203	E-114	78	RGS-PVC coated conduit	1463.32	1935.24	UP104-3	1-2/c + gnd #10,600 V, EPR insulation
						1095	1-3/c + gnd #2,600 V, EPR insulation
						UP104-8	1-2/c + gnd #8,600 V, EPR insulation
						UP104-6	1-2/c + gnd #8,600 V, EPR insulation
						UP104-7	1-2/c + gnd #8,600 V, EPR insulation
						Pull rope	Soft-Fiber Polyester
						UP104-9	1-2/c + gnd #10,600V, EPR insulation
4204	E-114	78	RGS-PVC coated conduit	0.00	1935.24	Pull rope	Soft-Fiber Polyester
4205	E-114	78	RGS-PVC coated conduit	0.00	1935.24	Pull rope	Soft-Fiber Polyester
4206	E-114	78	RGS-PVC coated conduit	150.44	1935.24	Pull rope	Soft-Fiber Polyester
						MVDSW02A	MVDS DLC
4208	E-114	78	RGS-PVC coated conduit	30.19	1935.24	1475-3A	12 Fiber, single mode fiberoptic cable
						Pull rope	Soft-Fiber Polyester
4221	E-115	78	RGS conduit	719.53 (1)	1935.24	Pull rope	Soft-Fiber Polyester (1)
						S-3056-7	1-2/C #14,600 V, EPR insulation
						S-3056-5	1-4/C #14,600 V, EPR insulation
						1255-1	1-3/C #16,600 V, EPR insulation
						(1) 1255-2	1-3/C #16,600 V, EPR insulation
						1115-2	1-3/C #16,600 V, EPR insulation
						1115-1	1-3/C #14,600 V, EPR insulation
						1202-4	1-3/C #14,600 V, EPR insulation
						1202-2	1-3/C #14,600 V, EPR insulation
						1202-3	1-7/C #16,600 V, EPR insulation
4222	E-115	78	RGS conduit	682.38	1935.24	Pull rope	Soft-Fiber Polyester
						1201-6	1-2/c + gnd #8,600 V, EPR insulation
						1201-2	1-2/c + gnd #8,600 V, EPR insulation
						1201-1	1-2/c + gnd #8,600 V, EPR insulation
4223	E-115	78	RGS conduit	1336.44	1935.24	UP105-10	1-2/c + gnd #8,600 V, EPR insulation
						UP105-3	1-2/c + gnd #10,600 V, EPR insulation
						UP105-7	1-2/c + gnd #8,600 V, EPR insulation
						Pull rope	Soft-Fiber Polyester
						1096	1-3/c + gnd #2,600 V, EPR insulation
						UP105-8	1-2/c + gnd #8,600 V, EPR insulation

For continuation, see next sheet.

CONDUIT AND TRAY SCHEDULE

E-433

DESIGN OVERSIGHT	CALCULATED/ DESIGNED BY	CHECKED BY	DRAWN BY	DATE	REVISED BY	DATE REVISED
BEHZAD GOLEMOHAMMADI	PBP	AB	AB	8/02		

STATE OF CALIFORNIA - DEPARTMENT OF TRANSPORTATION
Caltrans

LAST REVISION 00-00-00 DATE PLOTTED => 5/22/2008 TIME PLOTTED => 11:14:43 AM

FOR REDUCED PLANS ORIGINAL SCALE IS IN MILLIMETERS 0 20 40 60 80

DGN FILE =>T:\13103\WS\pse\SAS Struc\CCO\SAS CC044\04-0120F1_038BR01.dgn
USERNAME =>florico

CU 04251

EA 0120F1

STATE OF CALIFORNIA - DEPARTMENT OF TRANSPORTATION

DESIGN OVERSIGHT: BEHZAD GOLEMOHAMMADI

CALCULATED/DESIGNED BY	PBP	DATE 8/02
CHECKED BY	AB	8/02
REVISED BY	DATE REVISED	

DIST	COUNTY	ROUTE	KILOMETER POST TOTAL PROJECT	SHEET No	TOTAL SHEETS
04	SF	80	13.2/13.9	389 R1	1204

Jens Erlingsson 12/19/02
REGISTERED ELECTRICAL ENGINEER DATE

12-6-04
PLANS APPROVAL DATE

REGISTERED PROFESSIONAL ENGINEER JENS ERLINGSSON No. 8249 Exp. 9/30/06 ELECTRICAL STATE OF CALIFORNIA

PB POWER, Inc.
A Parsons Brinckerhoff Company
303 Second St., Suite 700N
San Francisco, CA 94107-1317

The State of California or its officers or agents shall not be responsible for the accuracy or completeness of electronic copies of this plan sheet.

Caltrans now has a web site! To get to the web site, go to http://www.dot.ca.gov

Caltrans Metric

REQUEST FOR INFORMATION NOT ADDRESSED IN THIS CCO REMAIN IN FORCE

MARK	DATE	DESCRIPTIONS	BY	CH'D	CCO#
1	03/04/08	BARRIER MODIFICATIONS	JS BM	RG SE	44

REVISIONS

CONTRACT CHANGE ORDER NO. 44 SO
SHEET 57 OF 92

REGISTERED PROFESSIONAL ENGINEER S. A. ESTOQUE, JR No. E-10151 Exp. 12/31/2008 ELECTRICAL STATE OF CALIFORNIA

FOR REVISION ONLY

CONDUIT DATA

Conduit No	Reference	Size	Type	Total Fill (mm²)	Allowable Fill (mm²)	Included Cable No.	Conductor Type
4224	E-115	78	RGS conduit	227.46	1935.24	Pull rope	Soft-Fiber Polyester
						UP105-9	1-2/c + gnd #8,600 V, EPR insulation
4225	E-115	78	RGS conduit	317.80	1935.24		
						Pull rope	Soft-Fiber Polyester
						1474-5B	1 - 6 pair, shielded #18 with overall shield, 300 V, PVC jacket
						1474-5A	1 - 6 pair, shielded #18 with overall shield, 300 V, PVC jacket
4226	E-115	78	RGS conduit	0.00	1935.24	Pull rope	Soft-Fiber Polyester
4241	E-116	78	RGS conduit	562.50	1935.24	1255-2	1-3/C #16,600 V, EPR insulation
						1202-4	1-3/C #14,600 V, EPR insulation
						1202-3	1-7/C #16,600 V, EPR insulation
						1202-2	1-3/C #14,600 V, EPR insulation
						1202-1	1-2/c + gnd #8,600 V, EPR insulation
						Pull rope	Soft-Fiber Polyester
4242	E-116	78	RGS conduit	192.40	1935.24	CCTVE01BA	TVP
						CCTVE01BB	TVCP
						Pull rope	Soft-Fiber Polyester
4243	E-116	78	RGS conduit	1364.76	1935.24	UP106-8	1-2/c + gnd #8,600 V, EPR insulation
						UP106-6	1-2/c + gnd #8,600 V, EPR insulation
						UP106-3	1-2/c + gnd #8,600 V, EPR insulation
						UP106-7	1-2/c + gnd #8,600 V, EPR insulation
						UP106-1	1-2/c + gnd #8,600 V, EPR insulation
						UP106-9	1-2/c + gnd #8,600 V, EPR insulation
						Pull rope	Soft-Fiber Polyester
4244	E-116	78	RGS conduit	527.18	1935.24	Pull rope	Soft-Fiber Polyester
						1097	1-3/c + gnd #2,600 V, EPR insulation
4245	E-116	78	RGS conduit	0.00	1935.24	Pull rope	Soft-Fiber Polyester
4246	E-116	78	RGS conduit	324.26	1935.24	MVDSW03A	MVDS DLC
						Pull rope	Soft-Fiber Polyester
						CCTVE01BD	TVL
						CCTVE01BC	TVC
4248	E-116	78	RGS-PVC coated conduit	30.19	1935.24	Pull rope	Soft-Fiber Polyester
						1475-3B	12 Fiber, single mode fiberoptic cable
4261	E-117	78	RGS conduit	62.07	1935.24	Pull rope	Soft-Fiber Polyester
						1256-1	1-3/C #16,600 V, EPR insulation
4262	E-117	78	RGS conduit	0.00	1935.24	Pull rope	Soft-Fiber Polyester
4263	E-117	78	RGS conduit	1664.48	1935.24	Pull rope	Soft-Fiber Polyester
						UP107-8	1-2/c + gnd #8,600 V, EPR insulation
						UP107-7	1-2/c + gnd #8,600 V, EPR insulation
						UP107-9	1-2/c + gnd #8,600 V, EPR insulation
						UP107-3	1-2/c + gnd #8,600 V, EPR insulation
						1098	1-3/c + gnd #2,600 V, EPR insulation
						UP107-6	1-2/c + gnd #8,600 V, EPR insulation
4264	E-117	78	RGS conduit	0.00	1935.24	Pull rope	Soft-Fiber Polyester
4265	E-117	78	RGS conduit	150.44	1935.24	Pull rope	Soft-Fiber Polyester
						MVDSW04A	MVDS DLC
4266	E-117	78	RGS conduit	0.00	1935.24	Pull rope	Soft-Fiber Polyester
4268	E-117	78	RGS-PVC coated conduit	30.19	1935.24	Pull rope	Soft-Fiber Polyester
						1475-3C	12 Fiber, single mode fiberoptic cable
4281	E-118	78	RGS conduit	294.50	1935.24	1118-1	1-3/C #14,600 V, EPR insulation
						1117-1	1-3/C #14,600 V, EPR insulation
						1117-2	1-3/C #16,600 V, EPR insulation
						1118-2	1-3/C #16,600 V, EPR insulation
						Pull rope	Soft-Fiber Polyester

CONDUIT DATA

Conduit No	Reference	Size	Type	Total Fill (mm²)	Allowable Fill (mm²)	Included Cable No.	Conductor Type
4282	E-118	78	RGS conduit	1087.85	1935.24	2201-5	1-3/C #14,600 V, EPR insulation
						2201-1	1-2/c + gnd #8,600 V, EPR insulation
						2201-2	1-2/c + gnd #8,600 V, EPR insulation
						2201-6	1-2/c + gnd #8,600 V, EPR insulation
						Pull rope	Soft-Fiber Polyester
						2201-4	1-9/C #16,600 V, EPR insulation
						2201-3	1-3/C #14,600 V, EPR insulation
						S-3056-8	1-4/C #14,600 V, EPR insulation
4283	E-118	78	RGS conduit	1891.94	1935.24	UP108-4	1-2/c + gnd #8,600 V, EPR insulation
						1099	1-3/c + gnd #2,600 V, EPR insulation
						UP108-12	1-2/c + gnd #8,600 V, EPR insulation
						UP108-9	1-2/c + gnd #8,600 V, EPR insulation
						UP108-7	1-2/c + gnd #8,600 V, EPR insulation
						Pull rope	Soft-Fiber Polyester
						UP108-8	1-2/c + gnd #8,600 V, EPR insulation
						UP108-10	1-2/c + gnd #8,600 V, EPR insulation
4284	E-118	78	RGS conduit	454.92	1935.24	Pull rope	Soft-Fiber Polyester
						UP108-3	1-2/c + gnd #8,600 V, EPR insulation
						UP108-2	1-2/c + gnd #8,600 V, EPR insulation
4285	E-118	78	RGS conduit	317.80	1935.24	Pull rope	Soft-Fiber Polyester
						1474-8A	1 - 6 pair, shielded #18 with overall shield, 300 V, PVC jacket
						1474-8B	1 - 6 pair, shielded #18 with overall shield, 300 V, PVC jacket
4286	E-118	78	RGS conduit	0.00	1935.24	Pull rope	Soft-Fiber Polyester
4301	E-96	78	RGS conduit	366.10	1935.24	A-3001-1	1-3/c + gnd #4,600 V, EPR insulation
4303	E-96	41	RGS conduit	0.00	534.55	Pull rope	Soft-Fiber Polyester
4304	E-96	41	RGS conduit	212.85	534.55	Pull rope	Soft-Fiber Polyester
						A-3001-2	3 + 1 gnd #6,#8, 600 V, RHH/RHW insulation
4305	E-96	41	RGS conduit	0.00	534.55	Pull rope	Soft-Fiber Polyester
4306	E-96	41	RGS conduit	0.00	534.55	Pull rope	Soft-Fiber Polyester
4307	E-96	53	RGS conduit	0.00	879.42	Pull rope	Soft-Fiber Polyester
4308	E-96	53	RGS conduit	0.00	879.42	Pull rope	Soft-Fiber Polyester
4309	E-96	41	RGS conduit	0.00	534.55	Pull rope	Soft-Fiber Polyester
4310	E-96	41	RGS conduit	0.00	534.55	Pull rope	Soft-Fiber Polyester

For continuation, see next sheet.

CONDUIT AND TRAY SCHEDULE

E-434

CONDUIT DATA

Conduit No	Reference	Size	Type	Total Fill (mm²)	Allowable Fill (mm²)	Included Cable No.	Conductor Type
4311	E-96	41	RGS conduit	126.88	534.55	UP104-3	1-2/c + gnd #10,600 V, EPR insulation
						Pull rope	Soft-Fiber Polyester
4312	E-96	41	RGS conduit	0.00	534.55	Pull rope	Soft-Fiber Polyester
4313	E-96	78	RGS conduit	1020.16	1935.24	Pull rope	Soft-Fiber Polyester
						S-1031-1	1-3/c + gnd #2,600 V, EPR insulation
						UP104-3	1-2/c + gnd #10,600 V, EPR insulation
						A-1035-3	1-3/c + gnd #6,600 V, EPR insulation
4314	E-96	53	RGS conduit	648.58	879.42	S-1031-3	1-3/c + gnd #6,600 V, EPR insulation
						A-1035-3	1-3/c + gnd #6,600 V, EPR insulation
						Pull rope	Soft-Fiber Polyester
4315	E-96	41	RGS conduit	0.00	534.55	Pull rope	Soft-Fiber Polyester
4316	E-96	41	RGS conduit	0.00	534.55	Pull rope	Soft-Fiber Polyester
4317	E-96	53	RGS conduit	851.47	879.42	A-1011-1	1-3/c + gnd #2,600 V, EPR insulation
						Pull rope	Soft-Fiber Polyester
						A-1011-2	1-3/c + gnd #6,600 V, EPR insulation
4320	E-96	53	RGS conduit	0.00	879.42	Pull rope	Soft-Fiber Polyester
4321	E-96	41	RGS conduit	0.00	534.55	Pull rope	Soft-Fiber Polyester
4322	E-96	41	RGS conduit	0.00	534.55	Pull rope	Soft-Fiber Polyester
4323	E-96	53	RGS conduit	0.00	879.42	Pull rope	Soft-Fiber Polyester
4324	E-96	53	RGS conduit	0.00	879.42	Pull rope	Soft-Fiber Polyester
4325	E-96	41	RGS conduit	0.00	534.55	Pull rope	Soft-Fiber Polyester
4326	E-96	41	RGS conduit	0.00	534.55	Pull rope	Soft-Fiber Polyester
4327	E-96	41	RGS conduit	0.00	534.55	Pull rope	Soft-Fiber Polyester
4328	E-96	41	RGS conduit	0.00	534.55	Pull rope	Soft-Fiber Polyester
4329	E-96	41	RGS conduit	0.00	534.55	Pull rope	Soft-Fiber Polyester
4330	E-96	41	RGS conduit	0.00	534.55	Pull rope	Soft-Fiber Polyester
4331	E-96	41	RGS conduit	0.00	534.55	Pull rope	Soft-Fiber Polyester
4332	E-96	41	RGS conduit	0.00	534.55	Pull rope	Soft-Fiber Polyester
4333	E-97	41	RGS conduit	212.85	534.55	Pull rope	Soft-Fiber Polyester
						A-3002-2	3 + 1 gnd #6,#8, 600 V, RHH/RHW insulation
4334	E-97	41	RGS conduit	0.00	534.55	Pull rope	Soft-Fiber Polyester
4335	E-97	53	RGS conduit	366.10	879.42	Pull rope	Soft-Fiber Polyester
						A-3002-1	1-3/c + gnd #4,600 V, EPR insulation
4336	E-97	53	RGS conduit	0.00	879.42	Pull rope	Soft-Fiber Polyester
4337	E-97	41	RGS conduit	0.00	534.55	Pull rope	Soft-Fiber Polyester
4338	E-97	41	RGS conduit	0.00	534.55	Pull rope	Soft-Fiber Polyester
4339	E-97	41	RGS conduit	0.00	534.55	Pull rope	Soft-Fiber Polyester
4340	E-97	41	RGS conduit	0.00	534.55	Pull rope	Soft-Fiber Polyester
4341	E-97	53	RGS conduit	0.00	879.42	Pull rope	Soft-Fiber Polyester
4342	E-97	53	RGS conduit	0.00	879.42	Pull rope	Soft-Fiber Polyester
4343	E-97	41	RGS conduit	0.00	534.55	Pull rope	Soft-Fiber Polyester
4344	E-97	41	RGS conduit	0.00	534.55	Pull rope	Soft-Fiber Polyester

REVISED BY	DATE REVISED
PBP	8/02
AB	8/02

CALCULATED/DESIGNED BY
CHECKED BY

DESIGN OVERSIGHT
BEHZAD GOLEMOHAMMADI

STATE OF CALIFORNIA - DEPARTMENT OF TRANSPORTATION
Caltrans

REQUEST FOR INFORMATION NOT ADDRESSED IN THIS CCO REMAIN IN FORCE

MARK	DATE	DESCRIPTIONS	BY	CH'D	CCO#
		REVISIONS			
2	03/04/08	BARRIER MODIFICATIONS	JS BM	RG SE	44
1	02/19/08	ELECTRICAL MODIFICATIONS	MP EL	RR	42

CONTRACT CHANGE ORDER NO. 4450
SHEET 58 OF 92

Caltrans Metric

REGISTERED PROFESSIONAL ENGINEER S. A. ESTOQUE, JR. No E-10151 Exp.12/31/2008 ELECTRICAL STATE OF CALIFORNIA

FOR REVISION ONLY

DIST	COUNTY	ROUTE	KILOMETER POST TOTAL PROJECT	SHEET No	TOTAL SHEETS
04	SF	80	13.2/13.9	390 R2	1204

Jens Erlingsson 12/19/02
REGISTERED ELECTRICAL ENGINEER DATE

REGISTERED PROFESSIONAL ENGINEER JENS ERLINGSSON No. 8249 Exp. 9/30/06 ELECTRICAL STATE OF CALIFORNIA

12-6-04
PLANS APPROVAL DATE

PB POWER, Inc.
A Parsons Brinckerhoff Company
303 Second St., Suite 700N
San Francisco, CA 94107-1317

The State of California or its officers or agents shall not be responsible for the accuracy or completeness of electronic copies of this plan sheet.

Caltrans now has a web site! To get to the web site, go to http://www.dot.ca.gov

CONDUIT DATA

Conduit No	Reference	Size	Type	Total Fill (mm²)	Allowable Fill (mm²)	Included Cable No.	Conductor Type
4345	E-119	53	RGS conduit	0.00	879.42	Pull rope	Soft-Fiber Polyester
4351	E-97	41	RGS conduit	0.00 (2)	534.55	Pull rope	Soft-Fiber Polyester (2)
4352	E-97	41	RGS conduit	0.00	534.55	Pull rope	Soft-Fiber Polyester
4353	E-97	53	RGS conduit	0.00 (2)	879.42	Pull rope	Soft-Fiber Polyester (2)
4354	E-97	53	RGS conduit	0.00	879.42	Pull rope	Soft-Fiber Polyester
4355	E-97	41	RGS conduit	0.00	534.55	Pull rope	Soft-Fiber Polyester
4356	E-97	41	RGS conduit	0.00	534.55	Pull rope	Soft-Fiber Polyester
4357	E-97	41	RGS conduit	466.61	534.55	UP205-1	1-2/c + gnd #10,600 V, EPR insulation
						Pull rope	Soft-Fiber Polyester
						UP105-3	1-2/c + gnd #10,600 V, EPR insulation
						A-3009-2	3 + 1 gnd #6,#8, 600 V, RHH/RHW insulation
4358	E-97	41	RGS conduit	0.00	534.55	Pull rope	Soft-Fiber Polyester
4359	E-97	53	RGS conduit	451.17	879.42	A-3009-3	1-3/c + gnd #6,600 V, EPR insulation
						UP205-1	1-2/c + gnd #10,600 V, EPR insulation
						Pull rope	Soft-Fiber Polyester
4360	E-97	53	RGS conduit	527.18	879.42	Pull rope	Soft-Fiber Polyester
						A-3009-1	1-3/c + gnd #2,600 V, EPR insulation
4361	E-97	41	RGS conduit	0.00 (2)	534.55	Pull rope	Soft-Fiber Polyester (2)
4362	E-97	41	RGS conduit	0.00	534.55	Pull rope	Soft-Fiber Polyester
4363	E-97	41	RGS conduit	324.29	534.55	A-3009-3	1-3/c + gnd #6,600 V, EPR insulation
						Pull rope	Soft-Fiber Polyester
4364	E-97	41	RGS conduit	212.85	534.55	A-3003-2	3 + 1 gnd #6,#8, 600 V, RHH/RHW insulation
						Pull rope	Soft-Fiber Polyester
4365	E-97	53	RGS conduit	324.29	879.42	A-3009-3	1-3/c + gnd #6,600 V, EPR insulation
						Pull rope	Soft-Fiber Polyester
4366	E-97	53	RGS conduit	366.10	879.42	A-3003-1	1-3/c + gnd #4,600 V, EPR insulation
						Pull rope	Soft-Fiber Polyester
4367	E-97	41	RGS conduit	0.00 (2)	534.55	Pull rope	Soft-Fiber Polyester (2)
4368	E-97	41	RGS conduit	0.00	534.55	Pull rope	Soft-Fiber Polyester

For continuation, see next sheet.

CONDUIT AND TRAY SCHEDULE

E-435

LAST REVISION 00-00-00
DATE PLOTTED => 5/22/2008
TIME PLOTTED => 11:15:23 AM

FOR REDUCED PLANS ORIGINAL SCALE IS IN MILLIMETERS 0 20 40 60 80

DGN FILE =>T:\13103\MS\pse\SAS Struc\CCO\SAS CC044\04-0120F1_0390R02.dgn
USERNAME =>florico

CU 04251

EA 0120F1

CONDUIT DATA

Conduit No	Reference	Size	Type	Total Fill (mm²)	Allowable Fill (mm²)	Included Cable No.	Conductor Type
4369	E-97	41	RGS conduit	126.88	534.55	UP105-3	1-2/C + gnd #10,600 V, EPR insulation
						Pull rope	Soft-Fiber Polyester
4370	E-97	41	RGS conduit	0.00	534.55	Pull rope	Soft-Fiber Polyester
4371	E-97	53	RGS conduit	0.00	879.42	Pull rope	Soft-Fiber Polyester
4372	E-97	53	RGS conduit	0.00	879.42	Pull rope	Soft-Fiber Polyester
4373	E-97	41	RGS conduit	0.00	534.55	Pull rope	Soft-Fiber Polyester
4374	E-97	41	RGS conduit	0.00	534.55	Pull rope	Soft-Fiber Polyester
4376	E-97	53	RGS conduit	324.29	879.42	A-1011-2	1-3/C + gnd #6,600 V, EPR insulation
						Pull rope	Soft-Fiber Polyester
4377	E-97	53	RGS conduit	648.58	879.42	A-1012-2	1-3/C + gnd #6,600 V, EPR insulation
						A-1012-2	1-3/C + gnd #6,600 V, EPR insulation
						Pull rope	Soft-Fiber Polyester
4378	E-126	103	RGS conduit	2780.99	3324.51	1391	3-1/C #4/0 + 1/C #1/0 gnd, 15 kV, EPR insulation
						Pull rope	Soft-Fiber Polyester
4381	E-97	41	RGS conduit	324.29	534.55	A-3010-3	1-3/C #6 + gnd 600 V, RHH/RHW insulation
						Pull rope	Soft-Fiber Polyester
4382	E-97	41	RGS conduit	0.00	534.55	Pull rope	Soft-Fiber Polyester
4383	E-97	53	RGS conduit	324.29	879.42	A-3010-3	1-3/C #6 + gnd 600 V, RHH/RHW insulation
						Pull rope	Soft-Fiber Polyester
4384	E-97	53	RGS conduit	0.00	879.42	Pull rope	Soft-Fiber Polyester
4385	E-97	41	RGS conduit	0.00	534.55	Pull rope	Soft-Fiber Polyester
4386	E-97	41	RGS conduit	0.00	534.55	Pull rope	Soft-Fiber Polyester
4387	E-97	41	RGS conduit	440.31	534.55	A-3010-2	3 + 1 gnd #6,#8, 600 V, RHH/RHW insulation
						Pull rope	Soft-Fiber Polyester
						UP106-3	1-2/C + gnd #8,600 V, EPR insulation
4388	E-97	41	RGS conduit	0.00	534.55	Pull rope	Soft-Fiber Polyester
4389	E-97	53	RGS conduit	754.64	879.42	Pull rope	Soft-Fiber Polyester
						UP106-3	1-2/C + gnd #8,600 V, EPR insulation
						A-3010-1	1-3/C + gnd #2,600 V, EPR insulation
4390	E-97	53	RGS conduit	324.29	879.42	Pull rope	Soft-Fiber Polyester
						A-3010-3	1-3/C #6 + gnd 600 V, RHH/RHW insulation
4391	E-97	41	RGS conduit	0.00	534.55	Pull rope	Soft-Fiber Polyester
4392	E-97	41	RGS conduit	0.00	534.55	Pull rope	Soft-Fiber Polyester
4393	E-97	41	RGS conduit	212.85	534.55	A-3004-2	3 + 1 gnd #6,#8, 600 V, RHH/RHW insulation
						Pull rope	Soft-Fiber Polyester
4394	E-97	41	RGS conduit	0.00	534.55	Pull rope	Soft-Fiber Polyester
4395	E-97	78	RGS conduit	754.64	1935.24	Pull rope	Soft-Fiber Polyester
						UP106-1	1-2/C + gnd #8,600 V, EPR insulation
						A-3004-1	1-3/C + gnd #2,600 V, EPR insulation
4396	E-97	53	RGS conduit	0.00	879.42	Pull rope	Soft-Fiber Polyester
4397	E-97	41	RGS conduit	0.00	534.55	Pull rope	Soft-Fiber Polyester
4398	E-97	41	RGS conduit	0.00	534.55	Pull rope	Soft-Fiber Polyester
4399	E-97	41	RGS conduit	126.88	534.55	Pull rope	Soft-Fiber Polyester
						UP206-1	1-2/C + gnd #10,600 V, EPR insulation
4400	E-97	41	RGS conduit	0.00	534.55	Pull rope	Soft-Fiber Polyester
4401	E-97	53	RGS conduit	126.88	879.42	Pull rope	Soft-Fiber Polyester
						UP206-1	1-2/C + gnd #10,600 V, EPR insulation

REQUEST FOR INFORMATION NOT ADDRESSED IN THIS CCO REMAIN IN FORCE

MARK	DATE	DESCRIPTIONS	BY	CH'D	CCO#
		REVISIONS			
1	03/04/08	BARRIER MODIFICATIONS	TW	RG	44

CONTRACT CHANGE ORDER NO. 44 SO
SHEET 59 OF 92

FOR REVISION ONLY

REGISTERED PROFESSIONAL ENGINEER S. A. ESTOOLE, JR. No. E-10151 Exp. 12/31/2008 ELECTRICAL STATE OF CALIFORNIA

Caltrans Metric

DIST	COUNTY	ROUTE	KILOMETER POST TOTAL PROJECT	SHEET No	TOTAL SHEETS
04	SF	80	13.2/13.9	391 R1	1204

Jens Erlingsson 12/19/02
REGISTERED ELECTRICAL ENGINEER DATE

12-6-04
PLANS APPROVAL DATE

REGISTERED PROFESSIONAL ENGINEER JENS ERLINGSSON No. 8249 Exp. 9/30/06 ELECTRICAL STATE OF CALIFORNIA

PB POWER, Inc.
A Parsons Brinckerhoff Company
303 Second St., Suite 700N
San Francisco, CA 94107-1317

The State of California or its officers or agents shall not be responsible for the accuracy or completeness of electronic copies of this plan sheet.

Caltrans now has a web site! To get to the web site, go to http://www.dot.ca.gov

CONDUIT DATA

Conduit No	Reference	Size	Type	Total Fill (mm²)	Allowable Fill (mm²)	Included Cable No.	Conductor Type
4402	E-97	53	RGS conduit	0.00	879.42	Pull rope	Soft-Fiber Polyester
4403	E-97	41	RGS conduit	0.00	534.55	Pull rope	Soft-Fiber Polyester
4404	E-97	41	RGS conduit	0.00	534.55	Pull rope	Soft-Fiber Polyester
4411	E-98	41	RGS conduit	0.00	534.55	Pull rope	Soft-Fiber Polyester
4412	E-98	41	RGS conduit	0.00	534.55	Pull rope	Soft-Fiber Polyester
4413	E-98	53	RGS conduit	0.00	879.42	Pull rope	Soft-Fiber Polyester
4414	E-98	53	RGS conduit	0.00	879.42	Pull rope	Soft-Fiber Polyester
4415	E-98	41	RGS conduit	0.00	534.55	Pull rope	Soft-Fiber Polyester
4416	E-98	41	RGS conduit	0.00	534.55	Pull rope	Soft-Fiber Polyester
4417	E-98	41	RGS conduit	0.00	534.55	Pull rope	Soft-Fiber Polyester
4418	E-98	41	RGS conduit	0.00	534.55	Pull rope	Soft-Fiber Polyester
4419	E-98	53	RGS conduit	0.00	879.42	Pull rope	Soft-Fiber Polyester
4420	E-98	53	RGS conduit	0.00	879.42	Pull rope	Soft-Fiber Polyester
4421	E-98	41	RGS conduit	0.00	534.55	Pull rope	Soft-Fiber Polyester
4422	E-98	41	RGS conduit	0.00	534.55	Pull rope	Soft-Fiber Polyester
4423	E-98	41	RGS conduit	212.85	534.55	A-3005-2	3 + 1 gnd #6,#8, 600 V, RHH/RHW insulation
						Pull rope	Soft-Fiber Polyester
4424	E-98	41	RGS conduit	0.00	534.55	Pull rope	Soft-Fiber Polyester
4425	E-98	53	RGS conduit	527.18	879.42	A-3005-1	1-3/C + gnd #2,600 V, EPR insulation
						Pull rope	Soft-Fiber Polyester
4426	E-98	53	RGS conduit	0.00	879.42	Pull rope	Soft-Fiber Polyester
4427	E-98	41	RGS conduit	0.00	534.55	Pull rope	Soft-Fiber Polyester
4428	E-98	41	RGS conduit	0.00	534.55	Pull rope	Soft-Fiber Polyester
4429	E-98	41	RGS conduit	0.00	534.55	Pull rope	Soft-Fiber Polyester
4430	E-98	41	RGS conduit	0.00	534.55	Pull rope	Soft-Fiber Polyester
4431	E-98	53	RGS conduit	0.00	879.42	Pull rope	Soft-Fiber Polyester
4432	E-98	53	RGS conduit	0.00	879.42	Pull rope	Soft-Fiber Polyester

For continuation, see next sheet.

CONDUIT AND TRAY SCHEDULE

E-436

DESIGN OVERSIGHT	CALCULATED/ DESIGNED BY	CHECKED BY	DRAWN BY	DATE	REVISED BY	DATE REVISED
BEHZAD GOLEMOHAMMADI			PBP	8/02	AB	8/02

STATE OF CALIFORNIA - DEPARTMENT OF TRANSPORTATION
Caltrans

FOR REDUCED PLANS ORIGINAL SCALE IS IN MILLIMETERS 0 20 40 60 80

DGN FILE =>T:\13103\MS\pse\SAS Struc\CCO\SAS CC044\04-0120f1_0391R01.dgn
USERNAME =>llorico

CU 04251 EA 0120F1

LAST REVISION 00-00-00 DATE PLOTTED => 5/22/2008 TIME PLOTTED => 11:15:42 AM

CONDUIT DATA

Conduit No	Reference	Size	Type	Total Fill (mm²)	Allowable Fill (mm²)	Included Cable No.	Conductor Type
4433	E-98	41	RGS conduit	0.00	534.55	Pull rope	Soft-Fiber Polyester
4434	E-98	41	RGS conduit	0.00	534.55	Pull rope	Soft-Fiber Polyester
4435	E-119	53	RGS conduit	0.00	879.42	Pull rope	Soft-Fiber Polyester
4436	E-98	53	RGS conduit	324.29	879.42	Pull rope	Soft-Fiber Polyester
						A-1012-2	1-3/C + gnd #6, 600 V, EPR insulation
4441	E-99	41	RGS conduit	0.00	534.55	Pull rope	Soft-Fiber Polyester
4442	E-99	41	RGS conduit	0.00	534.55	Pull rope	Soft-Fiber Polyester
4443	E-99	53	RGS conduit	0.00	879.42	Pull rope	Soft-Fiber Polyester
4444	E-99	53	RGS conduit	0.00	879.42	Pull rope	Soft-Fiber Polyester
4445	E-99	41	RGS conduit	0.00	534.55	Pull rope	Soft-Fiber Polyester
4446	E-99	41	RGS conduit	0.00	534.55	Pull rope	Soft-Fiber Polyester
4447	E-99	41	RGS conduit	0.00	534.55	Pull rope	Soft-Fiber Polyester
4448	E-99	41	RGS conduit	0.00	534.55	Pull rope	Soft-Fiber Polyester
4449	E-98	53	RGS conduit	0.00	879.42	Pull rope	Soft-Fiber Polyester
4450	E-98	53	RGS conduit	0.00	879.42	Pull rope	Soft-Fiber Polyester
4451	E-99	41	RGS conduit	0.00	534.55	Pull rope	Soft-Fiber Polyester
4452	E-99	41	RGS conduit	0.00	534.55	Pull rope	Soft-Fiber Polyester
4453	E-99	41	RGS conduit	440.31	534.55	Pull rope	Soft-Fiber Polyester
						UP108-2 /2	1-2/C + gnd #8, 600 V, EPR insulation
						A-3006-2	3 + 1 gnd #6,#8, 600 V, RHH/RHW insulation
4454	E-99	41	RGS conduit	0.00	534.55	Pull rope	Soft-Fiber Polyester
4455	E-99	53	RGS conduit	593.56	879.42	UP108-2 /2	1-2/C + gnd #8, 600 V, EPR insulation
						A-3006-1	1-3/C + gnd #4, 600 V, EPR insulation
						Pull rope	Soft-Fiber Polyester
4456	E-99	53	RGS conduit	0.00	879.42	Pull rope	Soft-Fiber Polyester
4457	E-99	41	RGS conduit	98.10	534.55	Pull rope	Soft-Fiber Polyester
						1144	1 - 2 pair, shielded #18 with IS/OA , 300 V, PVC jacket
4458	E-99	41	RGS conduit	0.00	534.55	Pull rope	Soft-Fiber Polyester
4459	E-99	41	RGS conduit	227.46	534.55	Pull rope	Soft-Fiber Polyester
						UP108-4 /2	1-2/C + gnd #8, 600 V, EPR insulation
4460	E-99	41	RGS conduit	0.00	534.55	Pull rope	Soft-Fiber Polyester
4461	E-99	53	RGS conduit	227.46	879.42	Pull rope	Soft-Fiber Polyester
						UP108-4 /2	1-2/C + gnd #8, 600 V, EPR insulation
4462	E-99	53	RGS conduit	0.00	879.42	Pull rope	Soft-Fiber Polyester
4463	E-99	41	RGS conduit	98.10	534.55	1145	1 - 2 pair, shielded #18 with IS/OA , 300 V, PVC jacket
						Pull rope	Soft-Fiber Polyester
4464	E-99	41	RGS conduit	0.00	534.55	Pull rope	Soft-Fiber Polyester
4465	E-99	78	RGS conduit	648.58	1935.24	A-1013-2	1-3/C + gnd #6, 600 V, EPR insulation
						A-1013-2	1-3/C + gnd #6, 600 V, EPR insulation
						Pull rope	Soft-Fiber Polyester
4466	E-119	53	RGS conduit	0.00	879.42	Pull rope	Soft-Fiber Polyester
4471	E-99	41	RGS conduit	0.00	534.55	Pull rope	Soft-Fiber Polyester
4472	E-99	41	RGS conduit	0.00	534.55	Pull rope	Soft-Fiber Polyester
4473	E-99	53	RGS conduit	0.00	879.42	Pull rope	Soft-Fiber Polyester
4474	E-99	53	RGS conduit	0.00	879.42	Pull rope	Soft-Fiber Polyester

MARK	DATE	REVISIONS DESCRIPTIONS	BY	CH'D	CCO#
		REQUEST FOR INFORMATION NOT ADDRESSED IN THIS CCO REMAIN IN FORCE			
2	03/04/08	BARRIER MODIFICATIONS	TW	RG	44
1	02/19/08	ELECTRICAL MODIFICATIONS	MP EL	RR	42

CONTRACT CHANGE ORDER NO. 44 SO
SHEET 60 OF 92

FOR REVISION ONLY

REGISTERED PROFESSIONAL ENGINEER — S. A. ESTOQUE, JR. — No. E-10151 — Exp. 12/31/2008 ELECTRICAL — STATE OF CALIFORNIA

Caltrans Metric

DIST	COUNTY	ROUTE	KILOMETER POST TOTAL PROJECT	SHEET No	TOTAL SHEETS
04	SF	80	13.2/13.9	392 R2	1204

REGISTERED ELECTRICAL ENGINEER — 12/19/02 DATE

REGISTERED PROFESSIONAL ENGINEER — JENS ERLINGSSON — No. 8249 — Exp. 9/30/06 ELECTRICAL — STATE OF CALIFORNIA

12-6-04
PLANS APPROVAL DATE

PB POWER, Inc.
A Parsons Brinckerhoff Company
303 Second St., Suite 700N
San Francisco, CA 94107-1317

The State of California or its officers or agents shall not be responsible for the accuracy or completeness of electronic copies of this plan sheet.

Caltrans now has a web site! To get to the web site, go to http://www.dot.ca.gov

CONDUIT DATA

Conduit No	Reference	Size	Type	Total Fill (mm²)	Allowable Fill (mm²)	Included Cable No.	Conductor Type
4475	E-99	41	RGS conduit	0.00	534.55	Pull rope	Soft-Fiber Polyester
4476	E-99	41	RGS conduit	0.00	534.55	Pull rope	Soft-Fiber Polyester
4477	E-99	41	RGS conduit	227.46	534.55	UP107-3	1-2/C + gnd #8, 600 V, EPR insulation
						Pull rope	Soft-Fiber Polyester
4478	E-99	41	RGS conduit	126.88	534.55	Pull rope	Soft-Fiber Polyester
						UP207-1	1-2/C + gnd #10, 600 V, EPR insulation
4479	E-99	53	RGS conduit	0.00	879.42	Pull rope	Soft-Fiber Polyester
4480	E-99	53	RGS conduit	126.88	879.42	UP207-1	1-2/C + gnd #10, 600 V, EPR insulation
						Pull rope	Soft-Fiber Polyester
4481	E-99	41	RGS conduit	0.00	534.55	Pull rope	Soft-Fiber Polyester
4482	E-99	41	RGS conduit	0.00	534.55	Pull rope	Soft-Fiber Polyester
4483	E-99	41	RGS conduit	0.00	534.55	Pull rope	Soft-Fiber Polyester
4484	E-99	41	RGS conduit	0.00	534.55	Pull rope	Soft-Fiber Polyester
4485	E-99	53	RGS conduit	0.00	879.42	Pull rope	Soft-Fiber Polyester
4486	E-99	53	RGS conduit	0.00	879.42	Pull rope	Soft-Fiber Polyester
4487	E-99	41	RGS conduit	0.00	534.55	Pull rope	Soft-Fiber Polyester
4488	E-99	41	RGS conduit	0.00	534.55	Pull rope	Soft-Fiber Polyester
4489	E-99	41	RGS conduit	0.00	534.55	Pull rope	Soft-Fiber Polyester
4490	E-99	41	RGS conduit	0.00	534.55	Pull rope	Soft-Fiber Polyester
4491	E-99	53	RGS conduit	690.39	879.42	S-1031-3	1-3/C + gnd #4, 600 V, EPR insulation
						A-1035-3	1-3/C + gnd #6, 600 V, EPR insulation
						Pull rope	Soft-Fiber Polyester
4492	E-99	53	RGS conduit	481.21	879.42	Pull rope	Soft-Fiber Polyester
						A-1035-4	3 + 1 gnd #6, #8, 600 V, RHH/RHW insulation
						S-1031-4	3 + 1 gnd #4, #8, 600 V, RHH/RHW insulation
4493	E-99	41	RGS conduit	0.00	534.55	Pull rope	Soft-Fiber Polyester
4494	E-99	41	RGS conduit	0.00	534.55	Pull rope	Soft-Fiber Polyester
4501	E-101	53	RGS conduit	0.00	879.42	Pull rope	Soft-Fiber Polyester
4502	E-101	53	RGS conduit	0.00	879.42	Pull rope	Soft-Fiber Polyester
4503	E-101	53	RGS conduit	0.00	879.42	Pull rope	Soft-Fiber Polyester
4504	E-101	53	RGS conduit	0.00	879.42	Pull rope	Soft-Fiber Polyester

For continuation, see next sheet.

CONDUIT AND TRAY SCHEDULE

E-437

DATE	REVISED BY	DATE REVISED
8/02	PBP	8/02 AB

CALCULATED/DESIGNED BY
CHECKED BY

DESIGN OVERSIGHT
BEHZAD GOLEMOHAMMADI

STATE OF CALIFORNIA - DEPARTMENT OF TRANSPORTATION
Caltrans

DATE PLOTTED => 5/22/2008
TIME PLOTTED => 11:16:02 AM
LAST REVISION 00-00-00

FOR REDUCED PLANS ORIGINAL SCALE IS IN MILLIMETERS 0 20 40 60 80

DGN FILE =>T:\13103\MS\pse\SAS Struc\CCO\SAS CC044\04-0120f1_0392R02.dgn
USERNAME =>florico
CU 04251
EA 0120F1

DIST	COUNTY	ROUTE	KILOMETER POST TOTAL PROJECT	SHEET No	TOTAL SHEETS
04	SF	80	13.2/13.9	393 R2	1204

REGISTERED ELECTRICAL ENGINEER — Jens Erlingsson — DATE 12/19/02

PLANS APPROVAL DATE 12-6-04

REGISTERED PROFESSIONAL ENGINEER — JENS ERLINGSSON — No. 8249 — Exp. 9/30/06 ELECTRICAL — STATE OF CALIFORNIA

PB POWER, Inc.
A Parsons Brinckerhoff Company
303 Second St., Suite 700N
San Francisco, CA 94107-1317

The State of California or its officers or agents shall not be responsible for the accuracy or completeness of electronic copies of this plan sheet.

Caltrans now has a web site! To get to the web site, go to http://www.dot.ca.gov

REQUEST FOR INFORMATION NOT ADDRESSED IN THIS CCO REMAIN IN FORCE					
2	03/04/08	BARRIER MODIFICATIONS	JS BM	RG SE	44
1	02/19/08	ELECTRICAL MODIFICATIONS	MP EL	RR	42
MARK	DATE	DESCRIPTIONS	BY	CH'D	CCO#
		REVISIONS			

CONTRACT CHANGE ORDER NO. 44 SO
SHEET 61 OF 92

FOR REVISION ONLY

REGISTERED PROFESSIONAL ENGINEER — S. A. ESTOQUE, JR. — No. E-10151 — Exp. 12/31/2008 ELECTRICAL — STATE OF CALIFORNIA

Caltrans Metric

CONDUIT DATA

Conduit No	Reference	Size	Type	Total Fill (mm²)	Allowable Fill (mm²)	Included Cable No.	Conductor Type
4505	E-100	41	RGS conduit	0.00	534.55	Pull rope	Soft-Fiber Polyester
4506	E-100	41	RGS conduit	0.00	534.55	Pull rope	Soft-Fiber Polyester
4507	E-101	41	RGS conduit	0.00	534.55	Pull rope	Soft-Fiber Polyester
4508	E-99	41	RGS conduit	0.00	534.55	Pull rope	Soft-Fiber Polyester
4509	E-99	53	RGS conduit	0.00	879.42	Pull rope	Soft-Fiber Polyester
4510	E-99	53	RGS conduit	0.00	879.42	Pull rope	Soft-Fiber Polyester
4511	E-100	41	RGS conduit	0.00	534.55	Pull rope	Soft-Fiber Polyester
4512	E-100	41	RGS conduit	0.00	534.55	Pull rope	Soft-Fiber Polyester
4513	E-100	41	RGS conduit	0.00	534.55	Pull rope	Soft-Fiber Polyester
4514	E-100	41	RGS conduit	0.00	534.55	Pull rope	Soft-Fiber Polyester
4515	E-100	53	RGS conduit	0.00	879.42	Pull rope	Soft-Fiber Polyester
4516	E-100	53	RGS conduit	0.00	879.42	Pull rope	Soft-Fiber Polyester
4517	E-100	41	RGS conduit	0.00	534.55	Pull rope	Soft-Fiber Polyester
4518	E-100	41	RGS conduit	0.00	534.55	Pull rope	Soft-Fiber Polyester
4519	E-100	41	RGS conduit	0.00	534.55	Pull rope	Soft-Fiber Polyester
4520	E-100	41	RGS conduit	0.00	534.55	Pull rope	Soft-Fiber Polyester
4521	E-100	53	RGS conduit	481.21	879.42	Pull rope	Soft-Fiber Polyester
						S-1031-4	3 + 1 gnd #4, #8, 600 V, RHH/RHW insulation
						A-1035-4	3 + 1 gnd #6, #8, 600 V, RHH/RHW insulation
4522	E-100	53	RGS conduit	176.28	879.42	Pull rope	Soft-Fiber Polyester
						A-1035-4	3 + 1 gnd #6, #8, 600 V, RHH/RHW insulation
4523	E-100	41	RGS conduit	0.00	534.55	Pull rope	Soft-Fiber Polyester
4524	E-100	41	RGS conduit	0.00	534.55	Pull rope	Soft-Fiber Polyester
4525	E-100	53	RGS conduit	324.29	879.42	A-1013-2	1-3/C + gnd #6, 600 V, EPR insulation
						Pull rope	Soft-Fiber Polyester
4526	E-100	53	RGS conduit	648.58	879.42	A-1014-2	1-3/C + gnd #6, 600 V, EPR insulation
						Pull rope	Soft-Fiber Polyester
						A-1014-2	1-3/C + gnd #6, 600 V, EPR insulation
4527	E-100	41	RGS conduit	0.00	534.55	Pull rope	Soft-Fiber Polyester
4528	E-100	41	RGS conduit	0.00	534.55	Pull rope	Soft-Fiber Polyester
4530	E-100	53	RGS conduit	0.00	879.42	Pull rope	Soft-Fiber Polyester
4531	E-100	41	RGS conduit	0.00	534.55	Pull rope	Soft-Fiber Polyester
4532	E-100	41	RGS conduit	0.00	534.55	Pull rope	Soft-Fiber Polyester
4533	E-100	53	RGS conduit	0.00	879.42	Pull rope	Soft-Fiber Polyester
4534	E-100	53	RGS conduit	0.00	879.42	Pull rope	Soft-Fiber Polyester
4535	E-100	41	RGS conduit	0.00	534.55	Pull rope	Soft-Fiber Polyester
4536	E-100	41	RGS conduit	0.00	534.55	Pull rope	Soft-Fiber Polyester
4537	E-100	41	RGS conduit	0.00	534.55	Pull rope	Soft-Fiber Polyester
4538	E-100	41	RGS conduit	0.00	534.55	Pull rope	Soft-Fiber Polyester
4539	E-100	53	RGS conduit	0.00	879.42	Pull rope	Soft-Fiber Polyester
4540	E-100	53	RGS conduit	0.00	879.42	Pull rope	Soft-Fiber Polyester
4541	E-100	41	RGS conduit	0.00	534.55	Pull rope	Soft-Fiber Polyester
4542	E-100	41	RGS conduit	0.00	534.55	Pull rope	Soft-Fiber Polyester
4543	E-100	41	RGS conduit	227.46	534.55	Pull rope	Soft-Fiber Polyester

CONDUIT DATA

Conduit No	Reference	Size	Type	Total Fill (mm²)	Allowable Fill (mm²)	Included Cable No.	Conductor Type
4544	E-100	41	RGS conduit	0.00	534.55	Pull rope	Soft-Fiber Polyester
4545	E-100	53	RGS conduit	0.00	879.42	Pull rope	Soft-Fiber Polyester
4546	E-100	53	RGS conduit	0.00	879.42	Pull rope	Soft-Fiber Polyester
4547	E-100	41	RGS conduit	0.00	534.55	Pull rope	Soft-Fiber Polyester
4548	E-100	41	RGS conduit	0.00	534.55	Pull rope	Soft-Fiber Polyester
4549	E-100	41	RGS conduit	537.14	534.55	Pull rope	Soft-Fiber Polyester
						1106	1-3/C + gnd #6, 600 V, EPR insulation
						S-1032-2	3 + 1 gnd #6, #8, 600 V, RHH/RHW insulation
4550	E-100	41	RGS conduit	227.46	534.55	UP108-3	1-2/C + gnd #8, 600 V, EPR insulation
						Pull rope	Soft-Fiber Polyester
4551	E-100	53	RGS conduit	690.39	879.42	S-1032-1	1-3/C + gnd #4, 600 V, EPR insulation
						1106	1-3/C + gnd #6, 600 V, EPR insulation
						Pull rope	Soft-Fiber Polyester
4552	E-100	53	RGS conduit	227.46	879.42	UP108-3	1-2/C + gnd #8, 600 V, EPR insulation
						Pull rope	Soft-Fiber Polyester
4553	E-100	41	RGS conduit	0.00	534.55	Pull rope	Soft-Fiber Polyester
4554	E-100	41	RGS conduit	0.00	534.55	Pull rope	Soft-Fiber Polyester
4555	E-100	53	RGS conduit	648.58	879.42	Pull rope	Soft-Fiber Polyester
						A-1014-2	1-3/C + gnd #6, 600 V, EPR insulation
						A-1014-2	1-3/C + gnd #6, 600 V, EPR insulation
4556	E-100	103	RGS conduit	0.00	2576.49	Pull rope	Soft-Fiber Polyester
4557	E-101	53	RGS conduit	0.00	879.42	Pull rope	Soft-Fiber Polyester
4558	E-101	53	RGS conduit	0.00	879.42	Pull rope	Soft-Fiber Polyester
4749	E-99	53	RGS conduit	227.46	879.42	Pull rope	Soft-Fiber Polyester
						UP107-3	1-2/C + gnd #8, 600 V, EPR insulation
5001	E-71	78	RGS-PVC coated conduit	98.42	1935.24	UP205-5	2 + 1 gnd #12,#12, 600 V, RHH/RHW insulation
						UP204-5	2 + 1 gnd #12,#12, 600 V, RHH/RHW insulation
						Pull rope	Soft-Fiber Polyester

For continuation, see next sheet.

CONDUIT AND TRAY SCHEDULE

E-438

DATE	REVISED BY	DATE REVISED
8/02	PBP	8/02 AB

CALCULATED/DESIGNED BY
CHECKED BY

DESIGN OVERSIGHT
BEHZAD GOLEMOHAMMADI

STATE OF CALIFORNIA - DEPARTMENT OF TRANSPORTATION
Caltrans

LAST REVISION 00-00-00
DATE PLOTTED => 5/22/2008
TIME PLOTTED => 11:16:21 AM

FOR REDUCED PLANS ORIGINAL SCALE IS IN MILLIMETERS 0 20 40 60 80

DGN FILE => T:\13103\MS\pse\SAS Struc\CCO\SAS CCO44\04-0120f1_0393R02.dgn
USERNAME => llorico

CU 04251

EA 0120F1

DIST	COUNTY	ROUTE	KILOMETER POST TOTAL PROJECT	SHEET No	TOTAL SHEETS
04	SF	80	13.2/13.9	394 R1	1204

REGISTERED ELECTRICAL ENGINEER — 12/19/02 DATE

12-6-04
PLANS APPROVAL DATE

PB POWER, Inc.
A Parsons Brinckerhoff Company
303 Second St., Suite 700N
San Francisco, CA 94107-1317

REGISTERED PROFESSIONAL ENGINEER — JENS ERLINGSSON — No. 8249 — Exp. 9/30/06 — ELECTRICAL — STATE OF CALIFORNIA

The State of California or its officers or agents shall not be responsible for the accuracy or completeness of electronic copies of this plan sheet.

Caltrans now has a web site! To get to the web site, go to http://www.dot.ca.gov

REQUEST FOR INFORMATION NOT ADDRESSED IN THIS CCO REMAIN IN FORCE

MARK	DATE	DESCRIPTIONS	BY	CH'D	CCO#
1	03/04/08	BARRIER MODIFICATIONS	JS BM	RG SE	44

REVISIONS

CONTRACT CHANGE ORDER NO. 44 SO
SHEET 62 OF 92

FOR REVISION ONLY

REGISTERED PROFESSIONAL ENGINEER — S. A. ESTOQUE, JR. — No. E-10151 — Exp. 12/31/2006 — ELECTRICAL — STATE OF CALIFORNIA

CONDUIT DATA

Conduit No	Reference	Size	Type	Total Fill (mm^2)	Allowable Fill (mm^2)	Included Cable No.	Conductor Type
5002	E-71	78	RGS-PVC coated conduit	0.00	1935.24	Pull rope	Soft-Fiber Polyester
5003	E-71	78	RGS-PVC coated conduit	0.00	1935.24	Pull rope	Soft-Fiber Polyester
5004	E-71	78	RGS-PVC coated conduit	648.58	1935.24	Pull rope	Soft-Fiber Polyester
						LP219-2,4	1-3/C + gnd #6, 600 V, EPR insulation
						LP219-6,8	1-3/C + gnd #6, 600 V, EPR insulation
5005	E-71	78	RGS-PVC coated conduit	0.00	1935.24	Pull rope	Soft-Fiber Polyester
5006	E-71	53	RGS-PVC coated conduit	0.00	879.42	Pull rope	Soft-Fiber Polyester
5007	E-114	78	RGS-PVC coated conduit	150.44	1935.24	MVDSE01A	MVDS DLC
						Pull rope	Soft-Fiber Polyester
5026	E-72	78	RGS-PVC coated conduit	205.22	1935.24	UP205-9	1-2/C + gnd #12, 600 V, EPR insulation
						UP205-11	1-2/C + gnd #12, 600 V, EPR insulation
						Pull rope	Soft-Fiber Polyester
5027	E-72	78	RGS-PVC coated conduit	0.00	1935.24	Pull rope	Soft-Fiber Polyester
5028	E-72	78	RGS-PVC coated conduit	0.00	1935.24	Pull rope	Soft-Fiber Polyester
5029	E-72	78	RGS-PVC coated conduit	648.58	1935.24	LP220-2,4	1-3/C + gnd #6, 600 V, EPR insulation
						Pull rope	Soft-Fiber Polyester
						LP220-6,8	1-3/C + gnd #6, 600 V, EPR insulation
5030	E-72	53	RGS-PVC coated conduit	0.00	879.42	Pull rope	Soft-Fiber Polyester
5031	E-72	53	RGS-PVC coated conduit	0.00	879.42	Pull rope	Soft-Fiber Polyester
5032	E-115	78	RGS-PVC coated conduit	160.17 (1)	1935.24 (1)	2910-11	1-3/C #16, 600 V, EPR insulation
						2155	1-2 pair, shielded #18 with IS/OA, 300V, PVC jacket
						Pull rope	Soft-Fiber Polyester
5035	E-72	53	RGS-PVC coated conduit	0.00	879.42	Pull rope	Soft-Fiber Polyester
5051	E-73	78	RGS-PVC coated conduit	49.21	1935.24	Pull rope	Soft-Fiber Polyester
						UP206-5	2+1gnd #12,#12, 600 V, RHH/RHW insulation
5052	E-73	78	RGS-PVC coated conduit	0.00	1935.24	Pull rope	Soft-Fiber Polyester
5053	E-73	78	RGS-PVC coated conduit	227.46	1935.24	UP206-9	1-2/C + gnd #8, 600 V, EPR insulation
						Pull rope	Soft-Fiber Polyester
5054	E-73	78	RGS-PVC coated conduit	648.58	1935.24	Pull rope	Soft-Fiber Polyester
						LP221-6,8	1-3/C + gnd #6, 600 V, EPR insulation
						LP221-2,4	1-3/C + gnd #6, 600 V, EPR insulation
5055	E-73	78	RGS-PVC coated conduit	0.00	1935.24	Pull rope	Soft-Fiber Polyester
5056	E-73	78	RGS-PVC coated conduit	0.00	1935.24	Pull rope	Soft-Fiber Polyester
5057	E-116	78	RGS-PVC coated conduit	324.26	1935.24	Pull rope	Soft-Fiber Polyester
						CCTVE01AD	TVL
						MVDSE02A	MVDS DLC
						CCTVE01AC	TVC
5058	E-73	78	RGS-PVC coated conduit	0.00	1935.24	Pull rope	Soft-Fiber Polyester
5076	E-74	78	RGS-PVC coated conduit	49.21	1935.24	UP207-5	2 + 1 gnd #12,#12, 600 V, RHH/RHW insulation
						Pull rope	Soft-Fiber Polyester
5077	E-74	78	RGS-PVC coated conduit	0.00	1935.24	Pull rope	Soft-Fiber Polyester
5078	E-74	78	RGS-PVC coated conduit	0.00	1935.24	Pull rope	Soft-Fiber Polyester
5079	E-74	78	RGS-PVC coated conduit	648.58	1935.24	LP222-6,8	1-3/C + gnd #6, 600 V, EPR insulation
						Pull rope	Soft-Fiber Polyester
						LP222-2,4	1-3/C + gnd #6, 600 V, EPR insulation
5080	E-74	78	RGS-PVC coated conduit	0.00	1935.24	Pull rope	Soft-Fiber Polyester
5081	E-74	78	RGS-PVC coated conduit	0.00	1935.24	Pull rope	Soft-Fiber Polyester
5082	E-117	78	RGS-PVC coated conduit	150.44	1935.24	Pull rope	Soft-Fiber Polyester
						MVDSE03A	MVDS DLC

CONDUIT DATA

Conduit No	Reference	Size	Type	Total Fill (mm^2)	Allowable Fill (mm^2)	Included Cable No.	Conductor Type
5101	E-75	78	RGS-PVC coated conduit	481.89	1935.24	UP208-5	2 + 1 gnd #12,#12, 600 V, RHH/RHW insulation
						UP208-11	1-3/C #12, 600 V, EPR insulation
						UP208-15	1-2/C + gnd #8, 600 V, EPR insulation
						UP208-9	1-2/C + gnd #12, 600 V, EPR insulation
						Pull rope	Soft-Fiber Polyester
5102	E-75	78	RGS-PVC coated conduit	0.00	1935.24	Pull rope	Soft-Fiber Polyester
5103	E-75	78	RGS-PVC coated conduit	0.00	1935.24	Pull rope	Soft-Fiber Polyester
5104	E-75	78	RGS-PVC coated conduit	648.58	1935.24	LP223-2,4	1-3/C + gnd #6, 600 V, EPR insulation
						LP223-6,8	1-3/C + gnd #6, 600 V, EPR insulation
						Pull rope	Soft-Fiber Polyester
5105	E-75	78	RGS-PVC coated conduit	0.00	1935.24	Pull rope	Soft-Fiber Polyester
5106	E-75	53	RGS-PVC coated conduit	0.00	879.42	Pull rope	Soft-Fiber Polyester
5107	E-118	78	RGS-PVC coated conduit	212.85 (1)	1935.24	2154	1 - 2 pair, shielded #18 with IS/OA, 300 V, PVC jacket (1)
						Pull rope	Soft-Fiber Polyester (1)
5201	E-114	78	RGS conduit	648.58	1935.24	Pull rope	Soft-Fiber Polyester
						LP219-2,4	1-3/C + gnd #6, 600 V, EPR insulation
						LP219-6,8	1-3/C + gnd #6, 600 V, EPR insulation
5202	E-114	78	RGS conduit	0.00	1935.24	Pull rope	Soft-Fiber Polyester
5203	E-114	78	RGS conduit	1108.98	1935.24	UP204-8	1-2/C + gnd #8, 600 V, EPR insulation
						UP204-7	1-2/C + gnd #8, 600 V, EPR insulation
						UP204-1	1-2/C + gnd #10,600 V, EPR insulation
						2095	1-3/C + gnd #2, 600 V, EPR insulation
						Pull rope	Soft-Fiber Polyester
5204	E-114	78	RGS conduit	0.00	1935.24	Pull rope	Soft-Fiber Polyester
5205	E-114	78	RGS conduit	527.18	1935.24	Pull rope	Soft-Fiber Polyester
						2103	1-3/C + gnd #2, 600 V, EPR insulation
5206	E-114	78	RGS conduit	1201.71	1935.24	1474-4	50 pair #18, shielded pairs, IS/OS shield 600 V, XLPE insul., PVC jacket
						Pull rope	Soft-Fiber Polyester
5207	E-114	78	RGS conduit	1352.15	1935.24	MVDSE01A	MVDS DLC
						1474-5	50 pair #18, shielded pairs, IS/OS shield 600 V, XLPE insul., PVC jacket
						Pull rope	Soft-Fiber Polyester
5208	E-114	78	RGS-PVC coated conduit	30.19	1935.24	2475-3A	12 Fiber, single mode fiberoptic cable
						Pull rope	Soft-Fiber Polyester
5209	E-114	53	RGS-PVC coated conduit	0.00	879.42	Pull rope	Soft-Fiber Polyester

For continuation, see next sheet.

CONDUIT AND TRAY SCHEDULE

E-439

DATE	REVISED BY	DATE REVISED
8/02	PBP	8/02 AB

CALCULATED/DESIGNED BY
CHECKED BY

DESIGN OVERSIGHT
BEHZAD GOLEMOHAMMADI

STATE OF CALIFORNIA - DEPARTMENT OF TRANSPORTATION
Caltrans

LAST REVISION 00-00-00 — DATE PLOTTED => 5/22/2008 — TIME PLOTTED => 11:16:39 AM

FOR REDUCED PLANS ORIGINAL SCALE IS IN MILLIMETERS 0 20 40 60 80

DGN FILE =>T:\13103\WS\pse\SAS Struc\CCO\SAS CC044\04-0120f1_0394R01.dgn
USERNAME =>florico

CU 04251 | EA 0120F1

DIST	COUNTY	ROUTE	KILOMETER POST TOTAL PROJECT	SHEET No	TOTAL SHEETS
04	SF	80	13.2/13.9	395 R1	1204

Jens Erlingsson 12/19/02
REGISTERED ELECTRICAL ENGINEER DATE

12-6-04
PLANS APPROVAL DATE

REGISTERED PROFESSIONAL ENGINEER — JENS ERLINGSSON — No. 8249 — Exp. 9/30/06 ELECTRICAL — STATE OF CALIFORNIA

PB POWER, Inc.
A Parsons Brinckerhoff Company
303 Second St., Suite 700N
San Francisco, CA 94107-1317

The State of California or its officers or agents shall not be responsible for the accuracy or completeness of electronic copies of this plan sheet.

Caltrans now has a web site! To get to the web site, go to http://www.dot.ca.gov

Caltrans Metric

REGISTERED PROFESSIONAL ENGINEER — S. A. ESTOQUE, JR. — No. E-10151 — Exp. 12/31/2008 ELECTRICAL — STATE OF CALIFORNIA

FOR REVISION ONLY

REQUEST FOR INFORMATION NOT ADDRESSED IN THIS CCO REMAIN IN FORCE

MARK	DATE	DESCRIPTIONS	BY	CH'D	CCO#
		REVISIONS			
1	03/04/08	BARRIER MODIFICATIONS	JS BM	RG SE	44

CONTRACT CHANGE ORDER NO. 44 SO
SHEET 63 OF 92

REVISED BY	DATE REVISED
PBP	8/02 AB

CALCULATED/DESIGNED BY
CHECKED BY

DESIGN OVERSIGHT
BEHZAD GOLEMOHAMMADI

STATE OF CALIFORNIA - DEPARTMENT OF TRANSPORTATION
Caltrans

CONDUIT DATA

Conduit No	Reference	Size	Type	Total Fill (mm²)	Allowable Fill (mm²)	Included Cable No.	Conductor Type
5210	E-114	78	RGS-PVC coated conduit	1323.45	1935.24	Pull rope	Soft-Fiber Polyester
						2119-2	4 pair #22, shielded pairs, 300 V, PE insulation
						1473-5	50 pair #18, shielded pairs, IS/OS shield 600 V, XLPE insul., PVC jacket
5211	E-114	78	RGS-PVC coated conduit	0.00	1935.24	Pull rope	Soft-Fiber Polyester
5221	E-115	78	RGS conduit	272.97	1935.24	2202-2	1-3/C #14, 600 V, EPR insulation
						Pull rope	Soft-Fiber Polyester
						2202-3	1-7/C #16, 600 V, EPR insulation
						2202-4	1-3/C #14, 600 V, EPR insulation
5222	E-115	78	RGS conduit	1211.54	1935.24	LP220-2,4	1-3/C + gnd #6, 600 V, EPR insulation
						2121-1	1-3/C #14, 600 V, EPR insulation
						LP220-6,8	1-3/C + gnd #6, 600 V, EPR insulation
						Pull rope	Soft-Fiber Polyester
						S-3056-6	1-4/C #14, 600 V, EPR insulation
						2120-2	1-3/C #14, 600 V, EPR insulation
						2120-1	1-3/C #14, 600 V, EPR insulation
						2204-2	1-3/C #16, 600 V, EPR insulation
						2204-1	1-3/C #16, 600 V, EPR insulation
						2121-4	1-3/C #14, 600 V, EPR insulation
5223	E-115	78	RGS conduit	1235.86	1935.24	UP205-1	1-2/C + gnd #10 ,600 V, EPR insulation
						Pull rope	Soft-Fiber Polyester
						UP206-1	1-2/C + gnd #10 ,600 V, EPR insulation
						UP205-8	1-2/C + gnd #8, 600 V, EPR insulation
						2096	1-3/C + gnd #2, 600 V, EPR insulation
						UP205-7	1-2/C + gnd #8, 600 V, EPR insulation
5224	E-115	78	RGS conduit	227.46 △1	1935.24	Pull rope	Soft-Fiber Polyester
						UP205-6	1-2/C + gnd #8, 600 V, EPR insulation △1
5225	E-115	78	RGS conduit	527.18	1935.24	Pull rope	Soft-Fiber Polyester
						2104	1-3/C + gnd #2, 600 V, EPR insulation △1
5226	E-115	78	RGS conduit	1361.88 △1	1935.24		
						2910-11	1-3/C #16, 600 V, EPR insulation
						1474-5	50 pair #18, shielded pairs, IS/OS shield 600 V, XLPE insul., PVC jacket △1
						2155	1-2 pair, shielded #18 with IS/OA, 300V PVC jacket
						Pull rope	Soft-Fiber Polyester
5227	E-115	78	RGS conduit	1201.71	1935.24	Pull rope	Soft-Fiber Polyester
						1474-6	50 pair #18, shielded pairs, IS/OS shield 600 V, XLPE insul., PVC jacket
5228	E-115	78	RGS-PVC coated conduit	1445.19	1935.24	2910-10	4 pair #22, shielded pairs, 300 V, PE insulation
						Pull rope	Soft-Fiber Polyester
						1473-5	50 pair #18, shielded pairs, IS/OS shield 600 V, XLPE insul., PVC jacket
						2910-12	4 pair #22, shielded pairs, 300 V, PE insulation
5229	E-115	78	RGS-PVC coated conduit	317.80	1935.24	1474-5A	1 - 6 pair, shielded #18 with overall shield, 300 V, PVC jacket
						Pull rope	Soft-Fiber Polyester
						1474-5B	1 - 6 pair, shielded #18 with overall shield, 300 V, PVC jacket
5230	E-114	78	RGS-PVC coated conduit	0.00	1935.24	Pull rope	Soft-Fiber Polyester
5231	E-114	78	RGS-PVC coated conduit	0.00	1935.24	Pull rope	Soft-Fiber Polyester
5232	E-114	78	RGS-PVC coated conduit	1201.71	1935.24	1473-4	50 pair #18, shielded pairs, IS/OS shield 600 V, XLPE insul., PVC jacket
						Pull rope	Soft-Fiber Polyester
5233	E-115	78	RGS-PVC coated conduit	0.00	1935.24	Pull rope	Soft-Fiber Polyester
5234	E-115	78	RGS-PVC coated conduit	0.00	1935.24	Pull rope	Soft-Fiber Polyester
5235	E-115	78	RGS-PVC coated conduit	1201.71	1935.24	Pull rope	Soft-Fiber Polyester
						1473-6	50 pair #18, shielded pairs, IS/OS shield 600 V, XLPE insul., PVC jacket

CONDUIT DATA

Conduit No	Reference	Size	Type	Total Fill (mm²)	Allowable Fill (mm²)	Included Cable No.	Conductor Type
5236	E-116	78	RGS-PVC coated conduit	0.00	1935.24	Pull rope	Soft-Fiber Polyester
5237	E-116	78	RGS-PVC coated conduit	0.00	1935.24	Pull rope	Soft-Fiber Polyester
5238	E-116	78	RGS-PVC coated conduit	1201.71	1935.24	1473-6	50 pair #18, shielded pairs, IS/OS shield 600 V, XLPE insul., PVC jacket
						Pull rope	Soft-Fiber Polyester
5241	E-116	78	RGS conduit	1027.61	1935.24	2202-3	1-7/C #16, 600 V, EPR insulation
						2202-2	1-3/C #14, 600 V, EPR insulation
						2202-4	1-3/C #14, 600 V, EPR insulation
						2105	1-3/C + gnd #2, 600 V, EPR insulation
						2202-1	1-2/C + gnd #8, 600 V, EPR insulation
						Pull rope	Soft-Fiber Polyester
5242	E-116	78	RGS conduit	192.40	1935.24	Pull rope	Soft-Fiber Polyester
						CCTVE01AB	TVCP
						CCTVE01AA	TVP
5243	E-116	78	RGS conduit	982.10	1935.24	Pull rope	Soft-Fiber Polyester
						UP206-7	1-2/C + gnd #8, 600 V, EPR insulation
						UP206-8	1-2/C + gnd #8, 600 V, EPR insulation
						2097	1-3/C + gnd #2, 600 V, EPR insulation
5244	E-116	78	RGS conduit	648.58	1935.24	Pull rope	Soft-Fiber Polyester
						LP221-2,4	1-3/C + gnd #6, 600 V, EPR insulation
						LP221-6,8	1-3/C + gnd #6, 600 V, EPR insulation
5245	E-116	78	RGS-PVC coated conduit	727.89	1935.24	2202-1	1-2/C + gnd #8, 600 V, EPR insulation
						2202-2	1-3/C #14, 600 V, EPR insulation
						UP206-9	1-2/C + gnd #8, 600 V, EPR insulation
						2202-4	1-3/C #14, 600 V, EPR insulation
						2204-3	1-7/C #16, 600 V, EPR insulation
						Pull rope	Soft-Fiber Polyester
5246	E-116	78	RGS conduit	1201.71	1935.24	1474-6	50 pair #18, shielded pairs, IS/OS shield 600 V, XLPE insul., PVC jacket
						Pull rope	Soft-Fiber Polyester
5247	E-116	78	RGS conduit	1525.97	1935.24	Pull rope	Soft-Fiber Polyester
						MVDSE02A	MVDS DLC
						CCTVE01AD	TVL
						CCTVE01AC	TVC
						1474-7	50 pair #18, shielded pairs, IS/OS shield 600 V, XLPE insul., PVC jacket
5249	E-116	78	RGS-PVC coated conduit	30.19	1935.24	2475-3B	12 Fiber, single mode fiberoptic cable
						Pull rope	Soft-Fiber Polyester
5250	E-116	78	RGS-PVC coated conduit	1201.71	1935.24	1473-7	50 pair #18, shielded pairs, IS/OS shield 600 V, XLPE insul., PVC jacket
						Pull rope	Soft-Fiber Polyester

For continuation, see next sheet.

CONDUIT AND TRAY SCHEDULE

E-440

LAST REVISION 00-00-00
DATE PLOTTED => 5/22/2008
TIME PLOTTED => 11:17:00 AM

FOR REDUCED PLANS ORIGINAL SCALE IS IN MILLIMETERS 0 20 40 60 80

DGN FILE =>T:\13103\MS\pse\SAS Struc\CCO\SAS CC044\04-0120f1_0395R01.dgn
USERNAME =>llorico

CU 04251

EA 0120F1

CONDUIT DATA

Conduit No	Reference	Size	Type	Total Fill (mm²)	Allowable Fill (mm²)	Included Cable No.	Conductor Type
5251	E-116	78	RGS-PVC coated conduit	0.00	1935.24	Pull rope	Soft-Fiber Polyester
5261	E-117	78	RGS conduit	648.58	1935.24	LP222-2,4	1-3/C + gnd #6, 600 V, EPR insulation
						Pull rope	Soft-Fiber Polyester
						LP222-6,8	1-3/C + gnd #6, 600 V, EPR insulation
5262	E-117	78	RGS conduit	0.00	1935.24	Pull rope	Soft-Fiber Polyester
5263	E-117	78	RGS conduit	1108.98	1935.24	UP207-7	1-2/C + gnd #8, 600 V, EPR insulation
						2098	1-3/C + gnd #2, 600 V, EPR insulation
						UP207-1	1-2/C + gnd #10, 600 V, EPR insulation
						Pull rope	Soft-Fiber Polyester
						UP207-8	1-2/C + gnd #8, 600 V, EPR insulation
5264	E-117	78	RGS conduit	0.00	1935.24	Pull rope	Soft-Fiber Polyester
5265	E-117	78	RGS conduit	527.18	1935.24	Pull rope	Soft-Fiber Polyester
						2106	1-3/C + gnd #2, 600 V, EPR insulation
5266	E-117	78	RGS conduit	0.00	1935.24	Pull rope	Soft-Fiber Polyester
5267	E-117	78	RGS conduit	1201.71	1935.24	Pull rope	Soft-Fiber Polyester
						1474-8	50 pair #18, shielded pairs, IS/OS shield 600 V, XLPE insul., PVC jacket
5269	E-117	78	RGS-PVC coated conduit	30.19	1935.24	2475-3C	12 Fiber, single mode fiberoptic cable
						Pull rope	Soft-Fiber Polyester
5270	E-117	78	RGS-PVC coated conduit	1201.71	1935.24	Pull rope	Soft-Fiber Polyester
						1473-7	50 pair #18, shielded pairs, IS/OS shield 600 V, XLPE insul., PVC jacket
5271	E-117	78	RGS-PVC coated conduit	1201.71	1935.24	Pull rope	Soft-Fiber Polyester
						1474-7	50 pair #18, shielded pairs, IS/OS shield 600 V, XLPE insul., PVC jacket
5272	E-117	78	RGS-PVC coated conduit	1201.71	1935.24	1473-8	50 pair #18, shielded pairs, IS/OS shield 600 V, XLPE insul., PVC jacket
						Pull rope	Soft-Fiber Polyester
5273	E-117	78	RGS-PVC coated conduit	0.00	1935.24	Pull rope	Soft-Fiber Polyester
5274	E-117	78	RGS-PVC coated conduit	150.44	1935.24	MVDSE03A	MVDS DLC
						Pull rope	Soft-Fiber Polyester
5275	E-118	78	RGS-PVC coated conduit	1201.71	1935.24	2474-10	50 pair #18, shielded pairs, IS/OS shield 600 V, XLPE insul., PVC jacket
						Pull rope	Soft-Fiber Polyester
5276	E-118	78	RGS-PVC coated conduit	0.00	1935.24	Pull rope	Soft-Fiber Polyester
5277	E-118	78	RGS-PVC coated conduit	1201.71	1935.24	1473-8	50 pair #18, shielded pairs, IS/OS shield 600 V, XLPE insul., PVC jacket
5281	E-118	78	RGS conduit	307.37	1935.24	2210-5	1-3/C #14, 600 V, EPR insulation
						Pull rope	Soft-Fiber Polyester
						2201-3	1-3/C #14, 600 V, EPR insulation
						2201-4	1-9/C #16, 600 V, EPR insulation
5282	E-118	78	RGS conduit	98.10	1935.24	S-3056-9	1-4/C #14, 600 V, EPR insulation
						Pull rope	Soft-Fiber Polyester
5283	E-118	78	RGS conduit	1630.68	1935.24	UP208-8	1-2/C + gnd #8, 600 V, EPR insulation
						Pull rope	Soft-Fiber Polyester
						LP223-2,4	1-3/C + gnd #6, 600 V, EPR insulation
						LP223-6,8	1-3/C + gnd #6, 600 V, EPR insulation
						UP208-7	1-2/C + gnd #8, 600 V, EPR insulation
						2099	1-3/C + gnd #2, 600 V, EPR insulation
5284	E-118	78	RGS conduit	682.38	1935.24	UP208-2	1-2/C + gnd #8, 600 V, EPR insulation
						Pull rope	Soft-Fiber Polyester
						UP208-4	1-2/C + gnd #8, 600 V, EPR insulation
						UP208-6	1-2/C + gnd #8, 600 V, EPR insulation
5285	E-118	78	RGS conduit	527.18	1935.24	2107	1-3/C + gnd #2, 600 V, EPR insulation
						Pull rope	Soft-Fiber Polyester

REQUEST FOR INFORMATION NOT ADDRESSED IN THIS CCO REMAIN IN FORCE

MARK	DATE	REVISIONS DESCRIPTIONS	BY	CH'D	CCO#
2	03/04/08	BARRIER MODIFICATIONS	JS BM	RG SE	44
1	02/19/08	ELECTRICAL MODIFICATIONS	MP EL	RR	42

CONTRACT CHANGE ORDER NO. 44 SO
SHEET 64 OF 92

FOR REVISION ONLY

REGISTERED PROFESSIONAL ENGINEER S. A. ESTOQUE, JR. No. E-10151 Exp. 12/31/2008 ELECTRICAL STATE OF CALIFORNIA

Caltrans Metric

DIST	COUNTY	ROUTE	KILOMETER POST TOTAL PROJECT	SHEET No	TOTAL SHEETS
04	SF	80	13.2/13.9	396 R2	1204

Jens Erlingsson 12/19/02
REGISTERED ELECTRICAL ENGINEER DATE

12-6-04
PLANS APPROVAL DATE

REGISTERED PROFESSIONAL ENGINEER JENS ERLINGSSON No. 8249 Exp. 9/30/06 ELECTRICAL STATE OF CALIFORNIA

PB POWER, Inc.
A Parsons Brinckerhoff Company
303 Second St., Suite 700N
San Francisco, CA 94107-1317

The State of California or its officers or agents shall not be responsible for the accuracy or completeness of electronic copies of this plan sheet.

Caltrans now has a web site! To get to the web site, go to http://www.dot.ca.gov

CONDUIT DATA

Conduit No	Reference	Size	Type	Total Fill (mm²)	Allowable Fill (mm²)	Included Cable No.	Conductor Type
5286	E-118	78	RGS conduit	1299.81 2	1935.24	2154	1 - 2 pair, shielded #18 with IS/OA, 300 V, PVC jacket 2
						1474-10	50 pair #18, shielded pairs, IS/OS shield 600 V, XLPE insul., PVC jacket
						Pull rope	Soft-Fiber Polyester
5287	E-118	78	RGS conduit	0.00	1935.24	Pull rope	Soft-Fiber Polyester
5289	E-118	78	RGS-PVC coated conduit	1201.71	1935.24	Pull rope	Soft-Fiber Polyester
						1473-10	50 pair #18, shielded pairs, IS/OS shield 600 V, XLPE insul., PVC jacket
5290	E-118	78	RGS-PVC coated conduit	1519.51	1935.24	1474-8A	1 - 6 pair, shielded #18 with overall shield, 300 V, PVC jacket
						1474-8B	1 - 6 pair, shielded #18 with overall shield, 300 V, PVC jacket
						1474-8	50 pair #18, shielded pairs, IS/OS shield 600 V, XLPE insul., PVC jacket
						Pull rope	Soft-Fiber Polyester
5299	E-182	41	RGS conduit	425.70	534.55	A-3032-2	3 + 1 gnd #6,#8, 600 V, RHH/RHW insulation
						A-3033-2	3 + 1 gnd #6,#8, 600 V, RHH/RHW insulation
5301	E-181	41	RGS conduit	0.00	534.55	Pull rope	Soft-Fiber Polyester
5302	E-181	41	RGS conduit	0.00	534.55	Pull rope	Soft-Fiber Polyester
5303	E-181	53	RGS conduit	648.58	879.42	A-3040-3	1-3/C + gnd #6, 600 V, EPR insulation
						Pull rope	Soft-Fiber Polyester
						A-3039-3	1-3/C + gnd #6, 600 V, EPR insulation
5304	E-181	53	RGS conduit	0.00	879.42	Pull rope	Soft-Fiber Polyester
5305	E-181	41	RGS conduit	212.85	534.55	Pull rope	Soft-Fiber Polyester
						LP219-2,4A	3 + 1 gnd #6,#8, 600 V, RHH/RHW insulation
5306	E-181	41	RGS conduit	440.31	534.55	UP205-6	1-2/C + gnd #8, 600 V, EPR insulation
						Pull rope	Soft-Fiber Polyester
						LP219-6,8A	3 + 1 gnd #6,#8, 600 V, RHH/RHW insulation
5307	E-181	53	RGS conduit	324.29	879.42	LP219-2,4	1-3/C + gnd #6, 600 V, EPR insulation
						Pull rope	Soft-Fiber Polyester
5308	E-181	53	RGS conduit	551.75	879.42	UP205-6	1-2/C + gnd #8, 600 V, EPR insulation
						Pull rope	Soft-Fiber Polyester
						LP219-6,8	1-3/C + gnd #6, 600 V, EPR insulation
5309	E-181	53	RGS conduit	98.10	879.42	Pull rope	Soft-Fiber Polyester
						2155	1 - 2 pair, shielded #18 with IS/OA, 300 V, PVC jacket
5310	E-181	53	RGS conduit	0.00	879.42	Pull rope	Soft-Fiber Polyester
5311	E-181	41	RGS conduit	126.88	534.55	S-2031-2	3 + 1 gnd #6,#8, 600 V, RHH/RHW insulation
						Pull rope	Soft-Fiber Polyester
						UP204-1	1-2/C + gnd #10, 600 V, EPR insulation

For continuation, see next sheet.

CONDUIT AND TRAY SCHEDULE

E-441

DESIGN OVERSIGHT BEHZAD GOLEMOHAMMADI
CALCULATED/DESIGNED BY PBP
CHECKED BY AB
REVISED BY DATE REVISED
8/02 8/02

STATE OF CALIFORNIA - DEPARTMENT OF TRANSPORTATION
Caltrans

LAST REVISION 00-00-00
DATE PLOTTED => 5/22/2008
TIME PLOTTED => 11:17:21 AM

FOR REDUCED PLANS ORIGINAL SCALE IS IN MILLIMETERS 0 20 40 60 80

DGN FILE =>T:\13103\MS\pse\SAS Struc\CCO\SAS CC044\04-0120F1_0396R02.dgn
USERNAME =>llorico
CU 04251
EA 0120F1

DIST	COUNTY	ROUTE	KILOMETER POST TOTAL PROJECT	SHEET No	TOTAL SHEETS
04	SF	80	13.2/13.9	397 R2	1204

REGISTERED ELECTRICAL ENGINEER — 12/19/02 DATE

12-6-04
PLANS APPROVAL DATE

JENS ERLINGSSON No. 8249 Exp. 9/30/06 ELECTRICAL — REGISTERED PROFESSIONAL ENGINEER — STATE OF CALIFORNIA

PB POWER, Inc.
A Parsons Brinckerhoff Company
303 Second St., Suite 700N
San Francisco, CA 94107-1317

The State of California or its officers or agents shall not be responsible for the accuracy or completeness of electronic copies of this plan sheet.

Caltrans now has a web site! To get to the web site, go to http://www.dot.ca.gov

REQUEST FOR INFORMATION NOT ADDRESSED IN THIS CCO REMAIN IN FORCE						
MARK	DATE	DESCRIPTIONS REVISIONS	BY	CH'D	CCO#	
2	03/04/08	BARRIER MODIFICATIONS	JS BM	RG SE	44	
1	02/19/08	ELECTRICAL MODIFICATIONS	MP EL	RR	42	

CONTRACT CHANGE ORDER NO. 4450
SHEET 65 OF 92

FOR REVISION ONLY

REGISTERED PROFESSIONAL ENGINEER — S. A. ESTOQUE, JR. — No. E-10151 — Exp. 12/31/2008 ELECTRICAL — STATE OF CALIFORNIA

CONDUIT DATA

Conduit No	Reference	Size	Type	Total Fill (mm²)	Allowable Fill (mm²)	Included Cable No.	Conductor Type
5312	E-181	41	RGS conduit	0.00	534.55	A-2035-2	3 + 1 gnd #6,#8, 600 V, RHH/RHW insulation
						Pull rope	Soft-Fiber Polyester
5313	E-181	78	RGS conduit	654.06	1935.24	S-2031-3	1-3/C + gnd #4, 600 V, EPR insulation
						UP204-1	1-2/C + gnd #10, 600 V, EPR insulation
						S-2031-1	1-3/C + gnd #2, 600 V, EPR insulation
						Pull rope	Soft-Fiber Polyester
5314	E-181	53	RGS conduit	648.58	879.42	A-2035-1	1-3/C + gnd #6, 600 V, EPR insulation
						A-2035-3	1-3/C + gnd #6, 600 V, EPR insulation
						Pull rope	Soft-Fiber Polyester
5315	E-181	53	RGS conduit	0.00	879.42	Pull rope	Soft-Fiber Polyester
5316	E-181	53	RGS conduit	0.00	879.42	Pull rope	Soft-Fiber Polyester
5317	E-181	78	RGS conduit	527.18	1935.24	A-2011-1	1-3/C + gnd #2, 600 V, EPR insulation
						Pull rope	Soft-Fiber Polyester
5320	E-185	78	RGS conduit	0.00	1935.24	Pull rope	Soft-Fiber Polyester
5321	E-181	41	RGS conduit	0.00	534.55	Pull rope	Soft-Fiber Polyester
5322	E-181	41	RGS conduit	0.00	534.55	Pull rope	Soft-Fiber Polyester
5323	E-181	53	RGS conduit	0.00	879.42	Pull rope	Soft-Fiber Polyester
5324	E-181	53	RGS conduit	0.00	879.42	Pull rope	Soft-Fiber Polyester
5325	E-181	53	RGS conduit	0.00	879.42	Pull rope	Soft-Fiber Polyester
5326	E-181	53	RGS conduit	0.00	879.42	Pull rope	Soft-Fiber Polyester
5333	E-182	41	RGS conduit	212.85	534.55	Pull rope	Soft-Fiber Polyester
						LP220-2,4A	3 + 1 gnd #6,#8, 600 V, RHH/RHW insulation
5334	E-182	41	RGS conduit	0.00	534.55	Pull rope	Soft-Fiber Polyester
5335	E-182	53	RGS conduit	324.29	879.42	Pull rope	Soft-Fiber Polyester
						LP220-2,4	1-3/C + gnd #6, 600 V, EPR insulation
5336	E-182	53	RGS conduit	0.00	879.42	Pull rope	Soft-Fiber Polyester
5337	E-182	53	RGS conduit	0.00	879.42	Pull rope	Soft-Fiber Polyester
5338	E-182	53	RGS conduit	0.00	879.42	Pull rope	Soft-Fiber Polyester
5346	E-185	53	RGS conduit	366.10	879.42	Pull rope	Soft-Fiber Polyester
						A-3031-1	1-3/C + gnd #4, 600 V, EPR insulation
5347	E-185	53	RGS conduit	0.00	879.42	Pull rope	Soft-Fiber Polyester
5348	E-181	41	RGS conduit	212.85	534.55	Pull rope	Soft-Fiber Polyester
						A-3031-2	3 + 1 gnd #6,#8, 600 V, RHH/RHW insulation
5349	E-181	41	RGS conduit	212.85	534.55	Pull rope	Soft-Fiber Polyester
						A-2011-2	3 + 1 gnd #6,#8, 600 V, RHH/RHW insulation
5350	E-185	53	RGS conduit	0.00	879.42	Pull rope	Soft-Fiber Polyester
5351	E-182	41	RGS conduit	0.00	534.55	Pull rope	Soft-Fiber Polyester
5352	E-182	41	RGS conduit	212.85	534.55	Pull rope	Soft-Fiber Polyester
						LP220-6,8A	3 + 1 gnd #6,#8, 600 V, RHH/RHW insulation
5353	E-182	53	RGS conduit	0.00	879.42	Pull rope	Soft-Fiber Polyester
5354	E-182	53	RGS conduit	324.29	879.42	Pull rope	Soft-Fiber Polyester
						LP220-6,8	1-3/C + gnd #6, 600 V, EPR insulation
5355	E-182	53	RGS conduit	0.00	879.42	Pull rope	Soft-Fiber Polyester
5356	E-182	53	RGS conduit	0.00	879.42	Pull rope	Soft-Fiber Polyester
5357	E-182	41	RGS conduit	212.85	534.55	A-3039-2	3 + 1 gnd #6,#8, 600 V, RHH/RHW insulation
						Pull rope	Soft-Fiber Polyester
5358	E-182	41	RGS conduit	0.00	534.55	Pull rope	Soft-Fiber Polyester
5359	E-182	53	RGS conduit	851.47	879.42	A-3039-3	1-3/C + gnd #6, 600 V, EPR insulation
						A-3039-1	1-3/C + gnd #2, 600 V, EPR insulation
						Pull rope	Soft-Fiber Polyester
5360	E-182	53	RGS conduit	648.58	879.42	Pull rope	Soft-Fiber Polyester

CONDUIT DATA

Conduit No	Reference	Size	Type	Total Fill (mm²)	Allowable Fill (mm²)	Included Cable No.	Conductor Type
						A-3039-3	1-3/C + gnd #6, 600 V, EPR insulation
						A-3040-3	1-3/C + gnd #6, 600 V, EPR insulation
5363	E-182	41	RGS conduit	212.85	534.55	A-2012-2	3 + 1 gnd #6, #8, 600 V, RHH/RHW insulation
						Pull rope	Soft-Fiber Polyester
5364	E-182	41	RGS conduit	0.00 (2)	534.55	Pull rope	Soft-Fiber Polyester (2)
5365	E-182	53	RGS conduit	0.00 (2)	879.42	Pull rope	Soft-Fiber Polyester (2)
5366	E-182	53	RGS conduit	527.18	879.42	A-2012-1	1-3/C + gnd #2, 600 V, EPR insulation
						Pull rope	Soft-Fiber Polyester
5367	E-182	53	RGS conduit	0.00 (2)	879.42	Pull rope	Soft-Fiber Polyester (2)
5368	E-182	53	RGS conduit	0.00 (2)	879.42	Pull rope	Soft-Fiber Polyester
5369	E-182	53	RGS conduit	0.00	879.42	Pull rope	Soft-Fiber Polyester (2)
5370	E-182	53	RGS conduit	0.00 (2)	879.42	Pull rope	Soft-Fiber Polyester
5371	E-182	53	RGS conduit	0.00 (2)	879.42	Pull rope	Soft-Fiber Polyester (2)
5372	E-182	53	RGS conduit	0.00	879.42	Pull rope	Soft-Fiber Polyester
5373	E-182	53	RGS conduit	0.00 (2)	879.42	Pull rope	Soft-Fiber Polyester (2)
5374	E-182	53	RGS conduit	0.00	879.42	Pull rope	Soft-Fiber Polyester
5375	E-182	53	RGS conduit	0.00	879.42	Pull rope	Soft-Fiber Polyester
5378	E-185	78	RGS conduit	0.00	1935.24	Pull rope	Soft-Fiber Polyester
5379	E-185	78	RGS conduit	0.00	1935.24	Pull rope	Soft-Fiber Polyester
5380	E-182	53	RGS conduit	0.00	879.42	Pull rope	Soft-Fiber Polyester
5381	E-182	41	RGS conduit	0.00	534.55	Pull rope	Soft-Fiber Polyester
5382	E-182	41	RGS conduit	0.00	534.55	Pull rope	Soft-Fiber Polyester
5383	E-182	78	RGS conduit	0.00	1935.24	Pull rope	Soft-Fiber Polyester
5384	E-182	53	RGS conduit	0.00	879.42	Pull rope	Soft-Fiber Polyester
5385	E-182	53	RGS conduit	0.00	879.42	Pull rope	Soft-Fiber Polyester
5386	E-182	53	RGS conduit	0.00	879.42	Pull rope	Soft-Fiber Polyester
5387	E-182	41	RGS conduit	212.85	534.55	A-3040-2	3 + 1 gnd #6,#8, 600 V, RHH/RHW insulation
						Pull rope	Soft-Fiber Polyester

For continuation, see next sheet.

CONDUIT AND TRAY SCHEDULE

E-442

DESIGNED BY	CALCULATED/ CHECKED BY	DATE	REVISED BY	DATE REVISED
PBP	AB	8/02		8/02

DESIGN OVERSIGHT — BEHZAD GOLEMOHAMMADI

STATE OF CALIFORNIA - DEPARTMENT OF TRANSPORTATION — Caltrans

LAST REVISION 00-00-00 — DATE PLOTTED => 5/22/2008 — TIME PLOTTED => 11:17:42 AM

FOR REDUCED PLANS ORIGINAL SCALE IS IN MILLIMETERS 0 20 40 60 80

DGN FILE =>T:\I3103\MS\pse\SAS Struc\CCO\SAS CC044\04-0120F1_0397R02.dgn
USERNAME =>llorico

CU 04251

EA 0120F1

CONDUIT DATA

Conduit No	Reference	Size	Type	Total Fill (mm²)	Allowable Fill (mm²)	Included Cable No.	Conductor Type
5388	E-182	41	RGS conduit	0.00	534.55	Pull rope	Soft-Fiber Polyester
5389	E-182	53	RGS conduit	851.47	879.42	A-3040-3	1-3/C + gnd #6, 600 V, EPR insulation
						Pull rope	Soft-Fiber Polyester
						A-3040-1	1-3/C + gnd #2, 600 V, EPR insulation
5390	E-182	53	RGS conduit	0.00	879.42	Pull rope	Soft-Fiber Polyester
5391	E-182	53	RGS conduit	0.00	879.42	Pull rope	Soft-Fiber Polyester
5392	E-182	53	RGS conduit	0.00	879.42	Pull rope	Soft-Fiber Polyester
5393	E-183	41	RGS conduit	440.31	534.55	A-3034-2	3 + 1 gnd #6,#8, 600 V, RHH/RHW insulation
						Pull rope	Soft-Fiber Polyester
						UP106-1	1-2/C + gnd #8, 600 V, EPR insulation
5394	E-183	41	RGS conduit	425.70	534.55	Pull rope	Soft-Fiber Polyester
						LP221-2,4A	3 + 1 gnd #6,#8, 600 V, RHH/RHW insulation
						LP221-6,8A	3 + 1 gnd #6,#8, 600 V, RHH/RHW insulation
5395	E-183	78	RGS conduit	527.18	1935.24	Pull rope	Soft-Fiber Polyester
						A-3034-1	1-3/C + gnd #2, 600 V, EPR insulation
5396	E-183	53	RGS conduit	648.58	879.42	Pull rope	Soft-Fiber Polyester
						LP221-2,4	1-3/C + gnd #6 ,600 V, EPR insulation
						LP221-6,8	1-3/C + gnd #6 ,600 V, EPR insulation
5397	E-183	53	RGS conduit	0.00	879.42	Pull rope	Soft-Fiber Polyester
5398	E-183	53	RGS conduit	0.00	879.42	Pull rope	Soft-Fiber Polyester
5399	E-183	41	RGS conduit	0.00	534.55	Pull rope	Soft-Fiber Polyester
5400	E-183	41	RGS conduit	0.00	534.55	Pull rope	Soft-Fiber Polyester
5401	E-183	53	RGS conduit	0.00	879.42	Pull rope	Soft-Fiber Polyester
5402	E-183	53	RGS conduit	0.00	879.42	Pull rope	Soft-Fiber Polyester
5403	E-183	53	RGS conduit	0.00	879.42	Pull rope	Soft-Fiber Polyester
5404	E-183	53	RGS conduit	0.00	879.42	Pull rope	Soft-Fiber Polyester
5405	E-183	53	RGS conduit	0.00	879.42	Pull rope	Soft-Fiber Polyester
5406	E-183	53	RGS conduit	0.00	879.42	Pull rope	Soft-Fiber Polyester
5411	E-183	41	RGS conduit	0.00	534.55	Pull rope	Soft-Fiber Polyester
5412	E-183	41	RGS conduit	0.00	534.55	Pull rope	Soft-Fiber Polyester
5413	E-183	53	RGS conduit	0.00	879.42	Pull rope	Soft-Fiber Polyester
5414	E-183	53	RGS conduit	0.00	879.42	Pull rope	Soft-Fiber Polyester
5415	E-183	53	RGS conduit	0.00	879.42	Pull rope	Soft-Fiber Polyester
5416	E-183	53	RGS conduit	0.00	879.42	Pull rope	Soft-Fiber Polyester
5417	E-183	41	RGS conduit	0.00	534.55	Pull rope	Soft-Fiber Polyester
5418	E-183	41	RGS conduit	0.00	534.55	Pull rope	Soft-Fiber Polyester
5419	E-183	53	RGS conduit	0.00	879.42	Pull rope	Soft-Fiber Polyester
5420	E-183	53	RGS conduit	0.00	879.42	Pull rope	Soft-Fiber Polyester
5421	E-183	53	RGS conduit	0.00	879.42	Pull rope	Soft-Fiber Polyester
5422	E-183	53	RGS conduit	0.00	879.42	Pull rope	Soft-Fiber Polyester
5423	E-183	41	RGS conduit	212.85	534.55	Pull rope	Soft-Fiber Polyester
						A-3035-2	3 + 1 gnd #6,#8, 600 V, RHH/RHW insulation
5424	E-183	41	RGS conduit	0.00	534.55	Pull rope	Soft-Fiber Polyester
5425	E-183	78	RGS conduit	366.10	1935.24	A-3035-1	1-3/C + gnd #4 600 V, EPR insulation
						Pull rope	Soft-Fiber Polyester

REQUEST FOR INFORMATION NOT ADDRESSED IN THIS CCO REMAIN IN FORCE

MARK	DATE	DESCRIPTIONS	BY	CH'D	CCO#
		REVISIONS			
1	03/04/08	BARRIER MODIFICATIONS	TW	RG	44

CONTRACT CHANGE ORDER NO. 4450
SHEET 66 OF 92

FOR REVISION ONLY

REGISTERED PROFESSIONAL ENGINEER S. A. ESTOQUE, JR No. E-10151 Exp. 12/31/2008 ELECTRICAL STATE OF CALIFORNIA

Caltrans Metric

DIST	COUNTY	ROUTE	KILOMETER POST TOTAL PROJECT	SHEET No	TOTAL SHEETS
04	SF	80	13.2/13.9	398 R1	1204

Jens Erlingsson 12/19/02
REGISTERED ELECTRICAL ENGINEER DATE

REGISTERED PROFESSIONAL ENGINEER JENS ERLINGSSON No. 8249 Exp. 9/30/06 ELECTRICAL STATE OF CALIFORNIA

12-6-04
PLANS APPROVAL DATE

PB POWER, Inc.
A Parsons Brinckerhoff Company
303 Second St., Suite 700N
San Francisco, CA 94107-1317

The State of California or its officers or agents shall not be responsible for the accuracy or completeness of electronic copies of this plan sheet.

Caltrans now has a web site! To get to the web site, go to http://www.dot.ca.gov

CONDUIT DATA

Conduit No	Reference	Size	Type	Total Fill (mm²)	Allowable Fill (mm²)	Included Cable No.	Conductor Type
5426	E-183	53	RGS conduit	0.00	879.42	Pull rope	Soft-Fiber Polyester
5427	E-183	53	RGS conduit	0.00	879.42	Pull rope	Soft-Fiber Polyester
5428	E-183	53	RGS conduit	0.00	879.42	Pull rope	Soft-Fiber Polyester
5429	E-183	41	RGS conduit	0.00	534.55	Pull rope	Soft-Fiber Polyester
5430	E-183	41	RGS conduit	0.00	534.55	Pull rope	Soft-Fiber Polyester
5431	E-183	53	RGS conduit	0.00	879.42	Pull rope	Soft-Fiber Polyester
5432	E-183	53	RGS conduit	0.00	879.42	Pull rope	Soft-Fiber Polyester
5433	E-183	53	RGS conduit	0.00	879.42	Pull rope	Soft-Fiber Polyester
5434	E-183	53	RGS conduit	0.00	879.42	Pull rope	Soft-Fiber Polyester
5436	E-183	53	RGS conduit	0.00	879.42	Pull rope	Soft-Fiber Polyester
5437	E-185	53	RGS conduit	0.00	879.42	Pull rope	Soft-Fiber Polyester
5441	E-183	41	RGS conduit	0.00	534.55	Pull rope	Soft-Fiber Polyester
5442	E-183	41	RGS conduit	0.00	534.55	Pull rope	Soft-Fiber Polyester
5443	E-183	53	RGS conduit	0.00	879.42	Pull rope	Soft-Fiber Polyester
5444	E-183	53	RGS conduit	0.00	879.42	Pull rope	Soft-Fiber Polyester
5445	E-184	53	RGS conduit	0.00	879.42	Pull rope	Soft-Fiber Polyester
5446	E-184	53	RGS conduit	0.00	879.42	Pull rope	Soft-Fiber Polyester
5447	E-183	41	RGS conduit	0.00	534.55	Pull rope	Soft-Fiber Polyester
5448	E-183	41	RGS conduit	0.00	534.55	Pull rope	Soft-Fiber Polyester
5449	E-183	53	RGS conduit	0.00	879.42	Pull rope	Soft-Fiber Polyester
5450	E-183	53	RGS conduit	0.00	879.42	Pull rope	Soft-Fiber Polyester
5451	E-184	53	RGS conduit	527.18	879.42	A-2013-1	1-3/C + gnd #2, 600 V, EPR insulation
						Pull rope	Soft-Fiber Polyester
5452	E-184	53	RGS conduit	212.85	879.42	Pull rope	Soft-Fiber Polyester
						A-2013-2	3 + 1 gnd #6,#8, 600 V, RHH/RHW insulation
5453	E-184	53	RGS conduit	454.92 (1)	879.42	Pull rope	Soft-Fiber Polyester
						UP208-4	1-2/C + gnd #8, 600 V, EPR insulation
				(1)		UP208-6	1-2/C + gnd #8, 600 V, EPR insulation (1)
5454	E-184	53	RGS conduit	212.85	879.42	A-3036-2	3 + 1 gnd #6,#8, 600 V, RHH/RHW insulation
						Pull rope	Soft-Fiber Polyester
5455	E-184	53	RGS conduit	454.92 (1)	879.42 (1)	UP208-4	1-2/C + gnd #8, 600 V, EPR insulation
						Pull rope	Soft-Fiber Polyester
				(1)		UP208-6	1-2/C + gnd #8, 600 V, EPR insulation (1)

For continuation, see next sheet.

CONDUIT AND TRAY SCHEDULE

E-443

DESIGN OVERSIGHT	CALCULATED/ DESIGNED BY	CHECKED BY	DATE	BY	DATE REVISED	REVISED BY
BEHZAD GOLEMOHAMMADI	FBP	AB	8/02			

STATE OF CALIFORNIA - DEPARTMENT OF TRANSPORTATION
Caltrans

FOR REDUCED PLANS ORIGINAL SCALE IS IN MILLIMETERS 0 20 40 60 80

DGN FILE =>T:\13103\MS\pse\SAS Struc\CCO\SAS CCO44\04-0120f1_0398R01.dgn
USERNAME =>florico

CU 04251

EA 0120F1

LAST REVISION 00-00-00
DATE PLOTTED => 5/22/2008
TIME PLOTTED => 11:18:02 AM

CONDUIT DATA

Conduit No	Reference	Size	Type	Total Fill (mm²)	Allowable Fill (mm²)	Included Cable No.	Conductor Type
5456	E-184	53	RGS conduit	366.10	879.42	A-3036-1	1-3/C + gnd #4 , 600 V, EPR insulation
						Pull rope	Soft-Fiber Polyester
5457	E-184	53	RGS conduit	196.2 (2)	879.42	2149	1 - 2 pair, shielded #18 with IS/OA, 300 V, PVC jacket
						Pull rope	Soft-Fiber Polyester
					(2)	2150	1 - 2 pair, shielded #18 with IS/OA, 300 V, PVC jacket
5458	E-184	53	RGS conduit	0.00	879.42	Pull rope	Soft-Fiber Polyester
5459	E-184	41	RGS conduit	0.00	534.55	Pull rope	Soft-Fiber Polyester
5460	E-184	41	RGS conduit	227.46	534.55	Pull rope	Soft-Fiber Polyester
						UP208-2 (2)	1-2/C + gnd #8, 600 V, EPR insulation
5461	E-184	53	RGS conduit	0.00	879.42	Pull rope	Soft-Fiber Polyester
5462	E-184	53	RGS conduit	227.46	879.42	Pull rope	Soft-Fiber Polyester
						UP208-2 (2)	1-2/C + gnd #8, 600 V, EPR insulation
5463	E-184	53	RGS conduit	98.10	879.42	2148	1 - 2 pair, shielded #18 with IS/OA, 300 V, PVC jacket
						Pull rope	Soft-Fiber Polyester
5464	E-184	53	RGS conduit	0.00	879.42	Pull rope	Soft-Fiber Polyester
5465	E-184	53	RGS conduit	0.00	879.42	Pull rope	Soft-Fiber Polyester
5466	E-184	53	RGS conduit	0.00	879.42	Pull rope	Soft-Fiber Polyester
5471	E-184	41	RGS conduit	212.85	534.55	Pull rope	Soft-Fiber Polyester
						LP222-2,4A	3 + 1 gnd #6, #8, 600 V, RHH/RHW insulation
5472	E-184	41	RGS conduit	212.85	534.55	Pull rope	Soft-Fiber Polyester
						LP222-6,8A	3 + 1 gnd #6, #8, 600 V, RHH/RHW insulation
5473	E-184	53	RGS conduit	324.29	879.42	Pull rope	Soft-Fiber Polyester
						LP222-2,4	1-3/C + gnd #6, 600 V, EPR insulation
5474	E-184	53	RGS conduit	324.29	879.42	Pull rope	Soft-Fiber Polyester
						LP222-6,8	1-3/C + gnd #6, 600 V, EPR insulation
5475	E-184	53	RGS conduit	0.00	879.42	Pull rope	Soft-Fiber Polyester
5476	E-184	53	RGS conduit	0.00	879.42	Pull rope	Soft-Fiber Polyester
5477	E-184	41	RGS conduit	0.00	534.55	Pull rope	Soft-Fiber Polyester
5478	E-184	41	RGS conduit	0.00	534.55	Pull rope	Soft-Fiber Polyester
5479	E-184	53	RGS conduit	0.00	879.42	Pull rope	Soft-Fiber Polyester
5480	E-184	53	RGS conduit	0.00	879.42	Pull rope	Soft-Fiber Polyester
5481	E-184	53	RGS conduit	0.00	879.42	Pull rope	Soft-Fiber Polyester
5482	E-184	53	RGS conduit	0.00	879.42	Pull rope	Soft-Fiber Polyester
5483	E-184	41	RGS conduit	0.00	534.55	Pull rope	Soft-Fiber Polyester
5484	E-184	41	RGS conduit	0.00	534.55	Pull rope	Soft-Fiber Polyester
5485	E-184	53	RGS conduit	0.00	879.42	Pull rope	Soft-Fiber Polyester
5486	E-184	53	RGS conduit	0.00	879.42	Pull rope	Soft-Fiber Polyester
5487	E-184	53	RGS conduit	0.00	879.42	Pull rope	Soft-Fiber Polyester
5488	E-184	53	RGS conduit	0.00	879.42	Pull rope	Soft-Fiber Polyester
5489	E-184	41	RGS conduit	268.36	534.55	S-2031-4	3 + 1 gnd #4,#8, 600 V, RHH/RHW insulation
						Pull rope	Soft-Fiber Polyester
5490	E-184	41	RGS conduit	212.85	534.55	Pull rope	Soft-Fiber Polyester
						A-2035-4	3 + 1 gnd #6,#8, 600 V, RHH/RHW insulation
5491	E-184	53	RGS conduit	0.00	879.42	S-2031-3	1-3/C + gnd #4, 600 V, EPR insulation
						Pull rope	Soft-Fiber Polyester
5492	E-184	53	RGS conduit	0.00	879.42	A-2035-3	1-3/C + gnd #6, 600 V, EPR insulation
						Pull rope	Soft-Fiber Polyester

REVISED BY | DATE REVISED
PBP | 8/02
CALCULATED/ DESIGNED BY | CHECKED BY
DESIGN OVERSIGHT
BEHZAD GOLEMOHAMMADI

STATE OF CALIFORNIA - DEPARTMENT OF TRANSPORTATION
Caltrans

REQUEST FOR INFORMATION NOT ADDRESSED IN THIS CCO REMAIN IN FORCE

MARK	DATE	REVISIONS	BY	CH'D	CCO#
2	03/04/08	BARRIER MODIFICATIONS	JS BM	RG SE	44
1	02/19/08	ELECTRICAL MODIFICATIONS	MP EL	RR	42

CONTRACT CHANGE ORDER NO. 4450
SHEET 67 OF 92

FOR REVISION ONLY

Caltrans Metric

REGISTERED PROFESSIONAL ENGINEER S. A. ESTOQUE, JR. No. E-10151 Exp. 12/31/2008 ELECTRICAL STATE OF CALIFORNIA

DIST	COUNTY	ROUTE	KILOMETER POST TOTAL PROJECT	SHEET No	TOTAL SHEETS
04	SF	80	13.2/13.9	399 R2	1204

Jens Erlingsson 12/19/02
REGISTERED ELECTRICAL ENGINEER DATE

12-6-04
PLANS APPROVAL DATE

REGISTERED PROFESSIONAL ENGINEER JENS ERLINGSSON No. 8249 Exp. 9/30/06 ELECTRICAL STATE OF CALIFORNIA

PB POWER, Inc.
A Parsons Brinckerhoff Company
303 Second St., Suite 700N
San Francisco, CA 94107-1317

The State of California or its officers or agents shall not be responsible for the accuracy or completeness of electronic copies of this plan sheet.

Caltrans now has a web site! To get to the web site, go to http://www.dot.ca.gov

CONDUIT DATA

Conduit No	Reference	Size	Type	Total Fill (mm²)	Allowable Fill (mm²)	Included Cable No.	Conductor Type
5493	E-184	53	RGS conduit	0.00	879.42	Pull rope	Soft-Fiber Polyester
5494	E-184	53	RGS conduit	0.00	879.42	Pull rope	Soft-Fiber Polyester
5495	E-184	41	RGS conduit	0.00	534.55	Pull rope	Soft-Fiber Polyester
5497	E-184	53	RGS conduit	0.00	879.42	Pull rope	Soft-Fiber Polyester
5498	E-183	53	RGS conduit	0.00	879.42	Pull rope	Soft-Fiber Polyester
5501	E-185	41	RGS conduit	0.00	534.55	Pull rope	Soft-Fiber Polyester
5502	E-185	41	RGS conduit	0.00	534.55	Pull rope	Soft-Fiber Polyester
5503	E-185	53	RGS conduit	0.00	879.42	Pull rope	Soft-Fiber Polyester
5504	E-185	53	RGS conduit	0.00	879.42	Pull rope	Soft-Fiber Polyester
5505	E-185	53	RGS conduit	0.00	879.42	Pull rope	Soft-Fiber Polyester
5506	E-185	53	RGS conduit	0.00	879.42	Pull rope	Soft-Fiber Polyester
5512	E-185	41	RGS conduit	212.85	534.55	Pull rope	Soft-Fiber Polyester
						A-2014-2	3 + 1 gnd #6,#8, 600 V, RHH/RHW insulation
5513	E-185	53	RGS conduit	0.00	879.42	Pull rope	Soft-Fiber Polyester
5514	E-185	53	RGS conduit	0.00	879.42	Pull rope	Soft-Fiber Polyester
5515	E-185	53	RGS conduit	0.00	879.42	Pull rope	Soft-Fiber Polyester
5516	E-185	53	RGS conduit	0.00	879.42	Pull rope	Soft-Fiber Polyester
5517	E-185	53	RGS conduit	0.00	879.42	Pull rope	Soft-Fiber Polyester
5518	E-185	53	RGS conduit	0.00	879.42	Pull rope	Soft-Fiber Polyester
5519	E-185	41	RGS conduit	212.85	534.55	S-2032-2	3 + 1 gnd #6,#8, 600 V, RHH/RHW insulation
						Pull rope	Soft-Fiber Polyester
5520	E-185	41	RGS conduit	0.00	534.55	Pull rope	Soft-Fiber Polyester
5521	E-185	53	RGS conduit	366.10	879.42	Pull rope	Soft-Fiber Polyester
						S-2032-1	1-3/C + gnd #4, 600 V, EPR insulation
5522	E-185	53	RGS conduit	0.00	879.42	Pull rope	Soft-Fiber Polyester
5523	E-185	53	RGS conduit	0.00	879.42	Pull rope	Soft-Fiber Polyester
5524	E-185	53	RGS conduit	0.00	879.42	Pull rope	Soft-Fiber Polyester
5528	E-185	41	RGS conduit	0.00	534.55	Pull rope	Soft-Fiber Polyester

For continuation, see next sheet.

CONDUIT AND TRAY SCHEDULE

E-444

LAST REVISION 00-00-00 | DATE PLOTTED => 5/22/2008 TIME PLOTTED => 11:18:21 AM

FOR REDUCED PLANS ORIGINAL SCALE IS IN MILLIMETERS 0 20 40 60 80

DGN FILE =>T:\13103\WS\pse\SAS Struc\CCO\SAS CCO44\04-0120f1_0399R02.dgn
USERNAME =>llorico

CU 04251 | EA 0120F1

CONDUIT DATA

Conduit No	Reference	Size	Type	Total Fill (mm²)	Allowable Fill (mm²)	Included Cable No.	Conductor Type
5529	E-185	53	RGS conduit	0.00	879.42	Pull rope	Soft-Fiber Polyester
5530	E-185	41	RGS conduit	0.00	534.55	Pull rope	Soft-Fiber Polyester
5531	E-185	41	RGS conduit	0.00	534.55	Pull rope	Soft-Fiber Polyester
5532	E-185	41	RGS conduit	0.00	534.55	Pull rope	Soft-Fiber Polyester
5533	E-185	53	RGS conduit	0.00	879.42	Pull rope	Soft-Fiber Polyester
5534	E-185	53	RGS conduit	0.00	879.42	Pull rope	Soft-Fiber Polyester
5535	E-185	53	RGS conduit	0.00	879.42	Pull rope	Soft-Fiber Polyester
5536	E-185	53	RGS conduit	0.00	879.42	Pull rope	Soft-Fiber Polyester
5537	E-185	53	RGS conduit	0.00	879.42	Pull rope	Soft-Fiber Polyester
5543	E-185	41	RGS conduit	212.85	534.55	Pull rope	Soft-Fiber Polyester
						LP223-2,4A	3 + 1 gnd #6, #8, 600 V, RHH/RHW insulation
5544	E-185	41	RGS conduit	212.85	534.55	Pull rope	Soft-Fiber Polyester
						LP223-6,8A	3 + 1 gnd #6, #8, 600 V, RHH/RHW insulation
5545	E-185	53	RGS conduit	324.29	879.42	Pull rope	Soft-Fiber Polyester
						UP208-4A	1-2/C+gnd #8 ,600V, EPR insulation
						LP223-2,4	1-3/C +gnd #6, 600 V, EPR insulation
5546	E-212	103	RGS conduit	2780.99	3324.51	2391	3-1/C #4/0 + 1/C #1/0 gnd, 15 kV, EPR insulation
						Pull rope	Soft-Fiber Polyester
5547	E-185	53	RGS conduit	0.00	879.42		
						Pull rope	Soft-Fiber Polyester
5548	E-185	53	RGS conduit	0.00	879.42	Pull rope	Soft-Fiber Polyester
5549	E-185	41	RGS conduit	0.00	534.55	Pull rope	Soft-Fiber Polyester
5550	E-185	41	RGS conduit	0.00	534.55		
						Pull rope	Soft-Fiber Polyester
5551	E-185	53	RGS conduit	0.00	879.42	Pull rope	Soft-Fiber Polyester
5552	E-185	53	RGS conduit	0.00	879.42		
						UP208-2A	1-2/C + gnd #8, 600 V, EPR insulation
						Pull rope	Soft-Fiber Polyester
5553	E-185	53	RGS conduit	98.10	879.42	Pull rope	Soft-Fiber Polyester
						2148	1 - 2 pair, shielded #18 with IS/OA, 300 V, PVC jacket
5554	E-185	53	RGS conduit	0.00	879.42	Pull rope	Soft-Fiber Polyester
5555	E-185	41	RGS conduit	527.18	534.55	A-2014-1	1-3/C + gnd #2, 600 V, EPR insulation
						Pull rope	Soft-Fiber Polyester
5556	E-185	53	RGS conduit	324.29	879.42	LP223-6,8	1-3/C + gnd #6, 600 V, EPR insulation
						Pull rope	Soft-Fiber Polyester
5557	E-186	53	RGS conduit	0.00	879.42	Pull rope	Soft-Fiber Polyester
5558	E-186	53	RGS conduit	0.00	879.42	Pull rope	Soft-Fiber Polyester
5597	E-185	53	RGS conduit	0.00	879.42	Pull rope	Soft-Fiber Polyester
7403	E-139	41	RGS conduit	0.00	534.55	Pull rope	Soft-Fiber Polyester
8001	E-293	41	RGS-PVC coated conduit	227.46	534.55	Pull rope	Soft-Fiber Polyester
						1201-6	1-2/C + gnd #8, 600 V, EPR insulation
8002	E-293	41	RGS-PVC coated conduit	454.92	534.55	1201-6	1-2/C +gnd #8, 600 V, EPR insulation
						1201-2	1-2/C + gnd #8, 600 V, EPR insulation
						Pull rope	Soft-Fiber Polyester

REQUEST FOR INFORMATION NOT ADDRESSED IN THIS CCO REMAIN IN FORCE

MARK	DATE	DESCRIPTIONS	BY	CH'D	CCO#
1	03/04/08	BARRIER MODIFICATIONS	JS BM	RG SE	44

REVISIONS

CONTRACT CHANGE ORDER NO. 4450
SHEET 68 OF 92

FOR REVISION ONLY

DIST	COUNTY	ROUTE	KILOMETER POST TOTAL PROJECT	SHEET No	TOTAL SHEETS
04	SF	80	13.2/13.9	400 R1	1204

Jens Erlingsson 12/19/02
REGISTERED ELECTRICAL ENGINEER DATE

12-6-04
PLANS APPROVAL DATE

REGISTERED PROFESSIONAL ENGINEER — JENS ERLINGSSON — No. 8249 — Exp. 9/30/06 ELECTRICAL — STATE OF CALIFORNIA

PB POWER, Inc.
A Parsons Brinckerhoff Company
303 Second St., Suite 700N
San Francisco, CA 94107-1317

The State of California or its officers or agents shall not be responsible for the accuracy or completeness of electronic copies of this plan sheet.

Caltrans now has a web site! To get to the web site, go to http://www.dot.ca.gov

CONDUIT DATA

Conduit No	Reference	Size	Type	Total Fill (mm²)	Allowable Fill (mm²)	Included Cable No.	Conductor Type
8003	E-293	21	RGS-PVC coated conduit	126.88	187.69	Pull rope	Soft-Fiber Polyester
						2204-3	1-2/C + gnd #10, 600 V, EPR insulation
8004	E-293	41	RGS-PVC coated conduit	227.46	534.55	1201-1	1-2/C + gnd #8, 600 V, EPR insulation
						Pull rope	Soft-Fiber Polyester
8005	E-293	41	RGS-PVC coated conduit	151.82	534.55	2204-5	1-3/C #12, 600 V, EPR insulation
						Pull rope	Soft-Fiber Polyester
						UP210-3	2 + 1 gnd #12, #12, 600 V, RHH/RHW insulation
8006	E-293	53	RGS-PVC coated conduit	506.16	879.42	UP210-3	2 + 1 gnd #12, #12, 600 V, RHH/RHW insulation
						2204-3	1-2/C + gnd #10, 600 V, EPR insulation
						1201-1	1-2/C + gnd #8, 600n V, EPR insulation
						2204-5	1-3/C #12, 600 V, EPR insulation
						Pull rope	Soft-Fiber Polyester
8007	E-293	53	RGS-PVC coated conduit	506.16	879.42	UP210-3	2 + 1 gnd #12, #12, 600 V, RHH/RHW insulation
						Pull rope	Soft-Fiber Polyester
						1201-1	1-2/C + gnd #8, 600 V, EPR insulation
						2204-3	1-2/C + gnd #10, 600 V, EPR insulation
						2204-5	1-3/C #12, 600 V, EPR insulation
8008	E-293	53	RGS-PVC coated conduit	449.86	879.42	2204-3	1-2/C + gnd #10, 600 V, EPR insulation
						2204-2	1-3/C #16, 600 V, EPR insulation
						2204-1	1-3/C #16, 600 V, EPR insulation
						UP210-1	2 + 1 gnd #8, #10, 600 V RHH/RHW insulation
						Pull rope	Soft-Fiber Polyester
						2204-5	1-3/C #12, 600V , EPR insulation
8009	E-293	41	RGS-PVC coated conduit	454.92	534.55	1201-2	1-2/C + gnd #8, 600 V, EPR insulation
						Pull rope	Soft-Fiber Polyester
						1201-6	1-2/C + gnd #8, 600 V, EPR insulation
8010	E-293	41	RGS-PVC coated conduit	227.46	534.55	Pull rope	Soft-Fiber Polyester
						1201-2	1-2/C + gnd #8, 600 V, EPR insulation
8011	E-264A, E-293	41	RGS-PVC coated conduit	344.86	534.55	1201-1	1-2/C + gnd #8, 600 V, EPR insulation
						2204-1	1-3/C #16, 600 V, EPR insulation
						2204-2	1-3/C #16, 600 V, EPR insulation
8012	E-293	41	RGS-PVC coated conduit	145.44	534.55	Pull rope	Soft-Fiber Polyester
						UP210-3	2 + 1 gnd #12, #12, 600 V, RHH/RHW insulation
						UP210-1	2 + 1 gnd #8, #10, 600 V, RHH/RHW insulation
8013	E-294	21	RGS-PVC coated conduit	227.46	187.69	2201-6	1-2/C + gnd #8, 600 V, EPR insulation
						Pull rope	Soft-Fiber Polyester
8014	E-264A, E-293	41	RGS-PVC coated conduit	441.44	534.55	1201-6	1-2/C + gnd #8, 600 V, EPR insulation
						1201-2	1-2/C + gnd #8, 600 V, EPR insulation
8100	E-294	41	RGS-PVC coated conduit	227.46	534.55	Pull rope	Soft-Fiber Polyester
						2201-1	1-2/C + gnd #8, 600 V, EPR insulation

For continuation, see next sheet.

CONDUIT AND TRAY SCHEDULE

E-445

DESIGN OVERSIGHT — BEHZAD GOLEMOHAMMADI

STATE OF CALIFORNIA - DEPARTMENT OF TRANSPORTATION — Caltrans

DATE	REVISED BY	DATE REVISED
8/02	PBP	8/02

CALCULATED/DESIGNED BY — CHECKED BY — AB

LAST REVISION 00-00-00 — DATE PLOTTED => 5/22/2008 — TIME PLOTTED => 11:18:48 AM

FOR REDUCED PLANS ORIGINAL SCALE IS IN MILLIMETERS 0 20 40 60 80

DGN FILE =>T:\13103\WS\pse\SAS Struc\CCO\SAS CC044\04-0120f1_0400R01.dgn
USERNAME =>llorico

CU 04251 — EA 0120F1

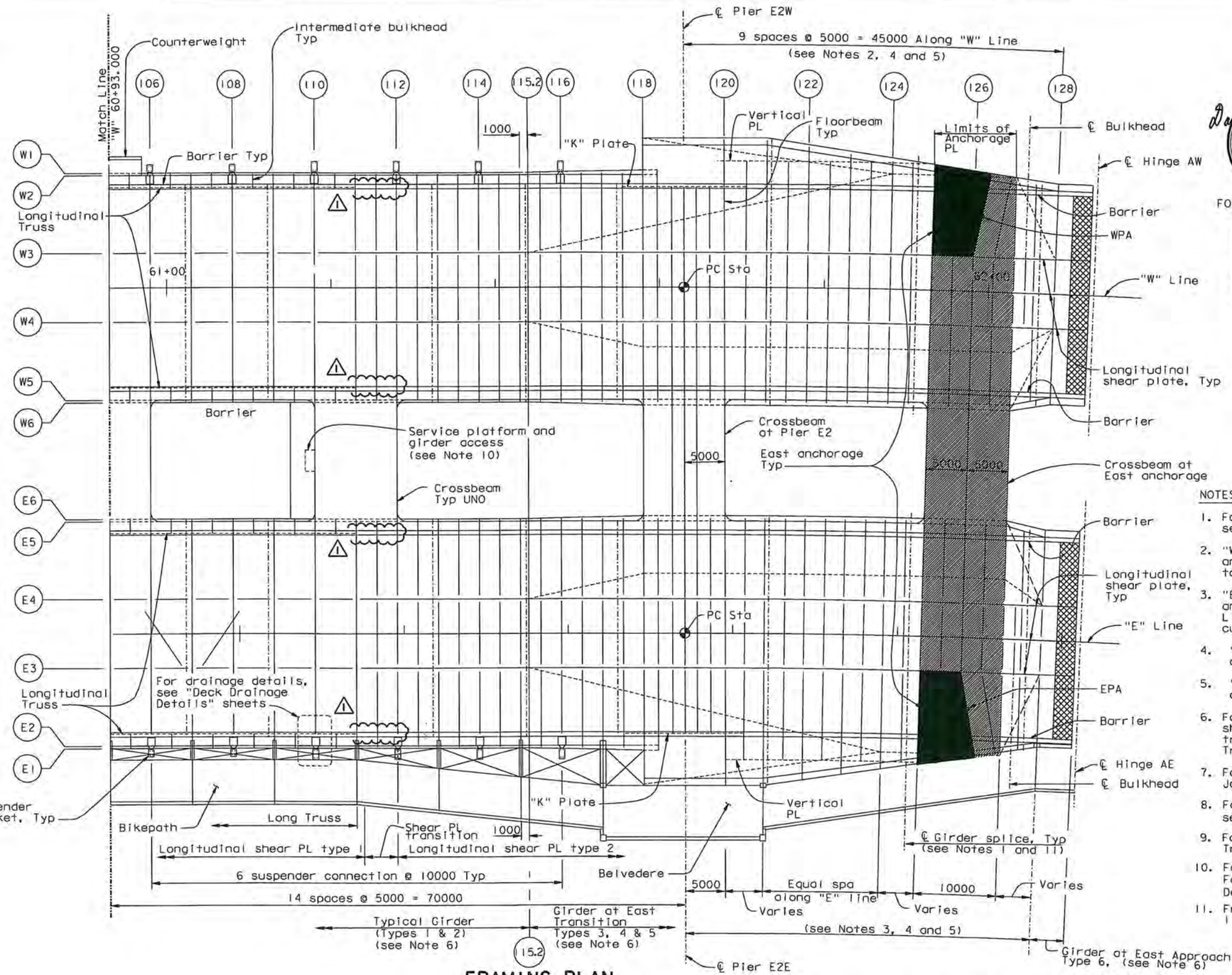

FRAMING PLAN

1:250

ALL DIMENSIONS ARE IN MILLIMETERS UNLESS OTHERWISE SHOWN

LEGEND:

- East anchorage
- Top anchorage plate
- Blockout for modular joint (see Note 7)

NOTES:

1. For girder splice details, see "Typical Girder Details" sheets.
2. "W" Line floorbeams from PP120.5 through PP124.5, and PP126, PP127.5 and PP128 are radial with respect to "W" Line curve.
3. "E" Line floorbeams from PP120.5 through PP124.5, and PP126, PP127.5 and 128 are aligned with "W" Line floorbeams and radial with respect to "E" Line curve.
4. "W" and "E" Line floorbeams from PP118 through PP120 are parallel.
5. "W" and "E" Line floorbeams from PP125 through PP127 are parallel.
6. For typical girder details, see "Typical Girder Details" sheets. For girder details and transition at East transition PP118 through PP128, see "Girder at East Transition" and "Girder At Pier E2" sheets.
7. For modular joint details, see "Hinge A Expansion Joint Details" sheets.
8. For Hinge A bulkheads, floorbeams, and joint blockout, see "Hinge A Details" sheets.
9. For "K" and vertical plates, see "Girder at East Transition Details" sheets.
10. For service platform details, see "Road Plans". For girder access details, see "Girder Access Details" sheets.
11. From PP115 through PP128, the distance between center line of girder splice and adjacent floorbeam is 800.

DIST.	COUNTY	ROUTE	KILOMETER POST TOTAL PROJECT	SHEET NO.	TOTAL SHEETS
04	SF	80	13.2/13.9	622RI	1204

George Baker
REGISTERED ENGINEER - CIVIL
12-6-04
PLANS APPROVAL DATE

George S. Baker, No. C57112, Exp. 12/31/05, CIVIL

The State of California or its officers or agents shall not be responsible for the accuracy or completeness of electronic copies of this plan sheet.

Daniel J. Turner, No. C 65033, Exp. 06/30/09, CIVIL

FOR REVISIONS ONLY

T.Y. LIN / MOFFATT & NICHOL
825 BATTERY STREET
SAN FRANCISCO, CA 94111

Caltrans now has a web site! To get to the web site, go to: http://www.dot.ca.gov

MARK	DATE	REVISIONS DESCRIPTIONS	BY	CH'D	CCO#
1	08/24/07	BARRIER MODIFICATIONS	GB	DT	44

CONTRACT CHANGE ORDER NO. 4450
SHEET 69 OF 92

100 % PS&E
DATE PLOTTED => 27 AUG 2008 TIME PLOTTED => 14:03:37
USERNAME => dwinrow

DESIGN	BY G. Baker	CHECKED T. McMeans	PREPARED FOR THE STATE OF CALIFORNIA DEPARTMENT OF TRANSPORTATION
DETAILS	BY M. Gulyas	CHECKED T. McMeans	
QUANTITIES	BY G. Baker	CHECKED M. Roberts	

R. Valizadeh/V. Toan/Y.L./W.L./F.C.
DESIGN OVERSIGHT
SIGN OFF DATE 08/24/07

R. Manzanarez
PROJECT ENGINEER

BRIDGE NO. 34-0006L/R
KILOMETER POST 13.2/13.9

CU 04
EA 0120F1

SAN FRANCISCO OAKLAND BAY BRIDGE
EAST SPAN SEISMIC SAFETY PROJECT
SELF-ANCHORED SUSPENSION BRIDGE
(SUPERSTRUCTURE & TOWER)

GIRDER FRAMING PLAN NO. 4

SHEET 205RI

Rev. Date: 5-18-98

ORIGINAL SCALE IN MILLIMETERS FOR REDUCED PLANS 0 10 20 30 40 50 60 70 80 90 100

DISREGARD PRINTS BEARING EARLIER REVISION DATES

REVISION DATES (PRELIMINARY STAGE ONLY): 01/25/99 05/25/99 09/20/99 03/24/00 09/08/00 01/24/02 12/19/02

FILE => I:\bb\04-0120F1\sas\contract plans and cco\cco#44\revised 8-25-08\dgn\aggir04.dgn

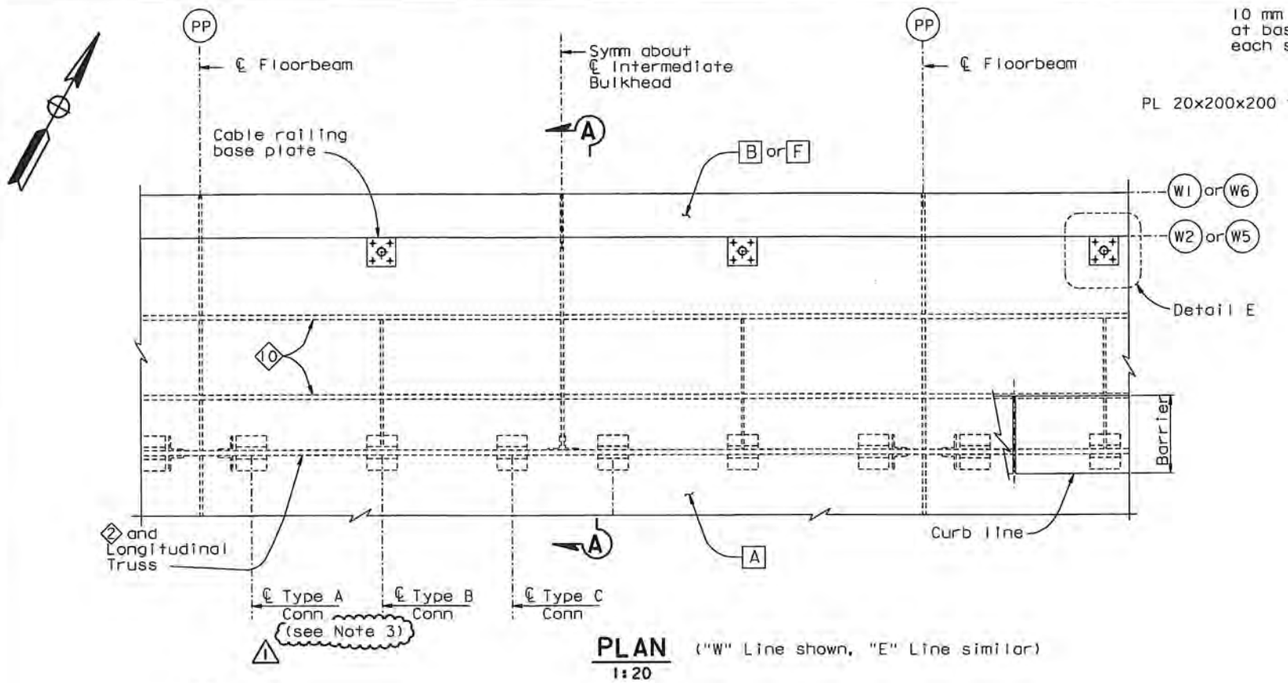

PLAN ("W" Line shown, "E" Line similar)
1:20

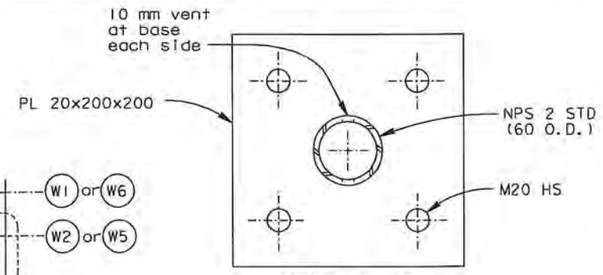

DETAIL E
1:2.5

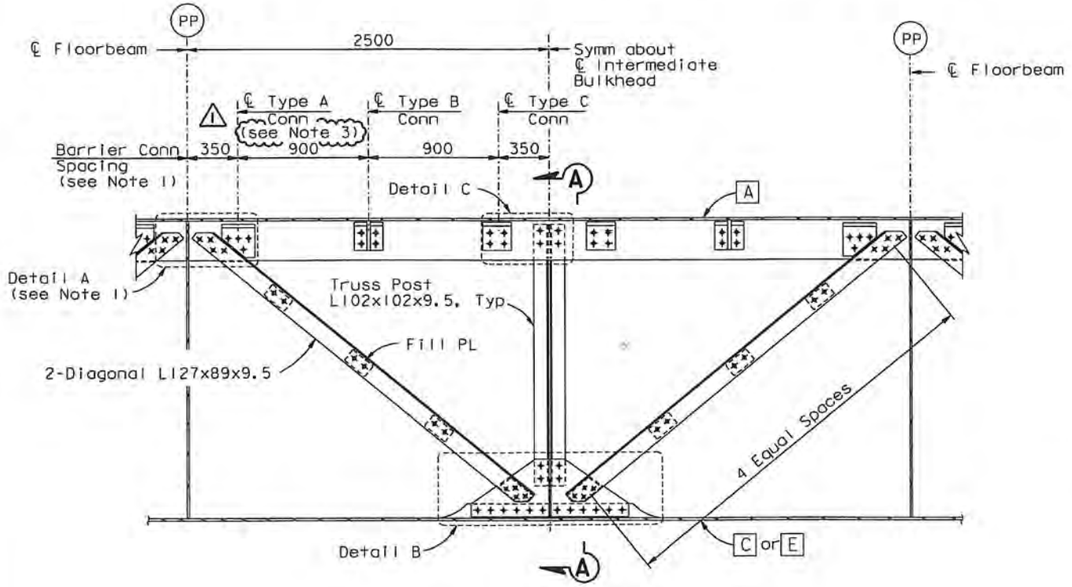

ELEVATION
LONGITUDINAL TRUSS ("W" Line Shown, "E" Line Similar)
1:20

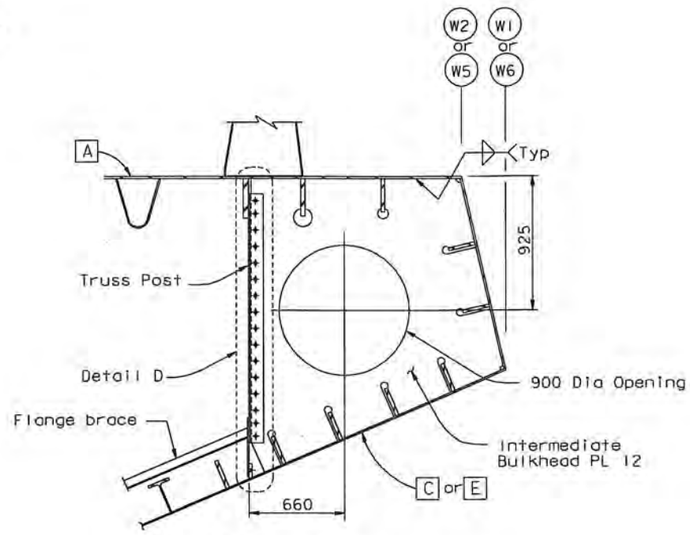

SECTION A-A
1:20

NOTES:

1. For barrier connection details, see "Typical Girder Details No. 14" sheet.
2. For Details A, B, C and D, see "Typical Girder Details No. 13" sheet.
3. For locations without a longitudinal truss, barrier connection type C shall be used in lieu of connection type A.

DIST.	COUNTY	ROUTE	KILOMETER POST TOTAL PROJECT	SHEET NO.	TOTAL SHEETS
04	SF	80	13.2/13.9	636R1	1204

George Baker
REGISTERED ENGINEER - CIVIL
12-6-04
PLANS APPROVAL DATE

REGISTERED PROFESSIONAL ENGINEER — George S. Baker — No. C57112 — Exp. 12/31/05 — CIVIL — STATE OF CALIFORNIA

The State of California or its officers or agents shall not be responsible for the accuracy or completeness of electronic copies of this plan sheet.

Daniel J. Turner
REGISTERED PROFESSIONAL ENGINEER — Daniel J. Turner — No. C 65033 — Exp. 06/30/09 — CIVIL — STATE OF CALIFORNIA
FOR REVISIONS ONLY

T.Y. LIN / MOFFATT & NICHOL
825 BATTERY STREET
SAN FRANCISCO, CA 94111

Caltrans now has a web site! To get to the web site, go to: http://www.dot.ca.gov

MARK	DATE	DESCRIPTIONS	BY	CH'D	CCO#
1	08/24/07	BARRIER MODIFICATIONS	GB	DT	44
		REVISIONS			

CONTRACT CHANGE ORDER NO. 4450
SHEET 70 OF 92

ALL DIMENSIONS ARE IN MILLIMETERS UNLESS OTHERWISE SHOWN

SAN FRANCISCO OAKLAND BAY BRIDGE
EAST SPAN SEISMIC SAFETY PROJECT
SELF-ANCHORED SUSPENSION BRIDGE
(SUPERSTRUCTURE & TOWER)

TYPICAL GIRDER DETAILS NO. 12

R. Vallizadeh/V. Toan/Y.L./W.L./F.C.
DESIGN OVERSIGHT
Ron Vallizadeh / Vong Toan / Y. Liu
SIGN OFF DATE 08/24/07

	BY	CHECKED
DESIGN	G. Baker	P. Ritchie
DETAILS	C. Mauch	T. McMeans
QUANTITIES	G. Baker	M. Roberts

PREPARED FOR THE STATE OF CALIFORNIA
DEPARTMENT OF TRANSPORTATION

R. Manzanarez
PROJECT ENGINEER

BRIDGE NO. 34-0006L/R
KILOMETER POST 13.2/13.9

CU 04
EA 0120F1

DISREGARD PRINTS BEARING EARLIER REVISION DATES →
REVISION DATES (PRELIMINARY STAGE ONLY): 05/19/99 | 08/27/99 | 05/31/01 | 04/08/02 | 07/01/02 | 12/19/02

SHEET 219R1 OF

Rev. Date: 5-18-98

ORIGINAL SCALE IN MILLIMETERS FOR REDUCED PLANS 0 10 20 30 40 50 60 70 80 90 100

FILE => I:\bb\04-0120I\sas\contract plans and cco\cco\in progress\cco#44\revised 8-25-08\dgn\agdkd06c.dgn

100% PS&E
USERNAME => dwinrow DATE PLOTTED => 27 AUG 2008 TIME PLOTTED => 14:01:18

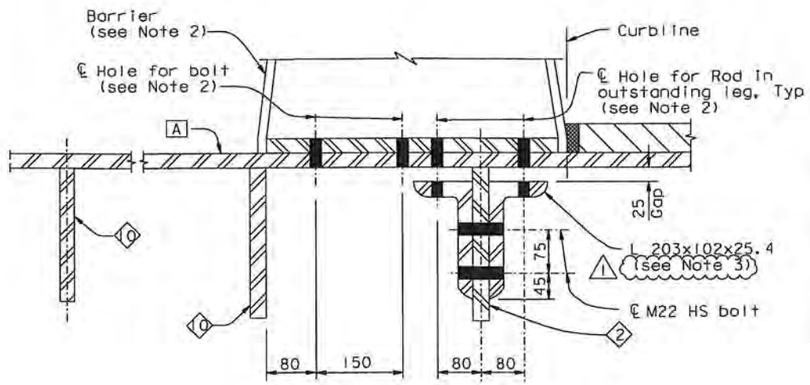

SECTION A-A
1:5

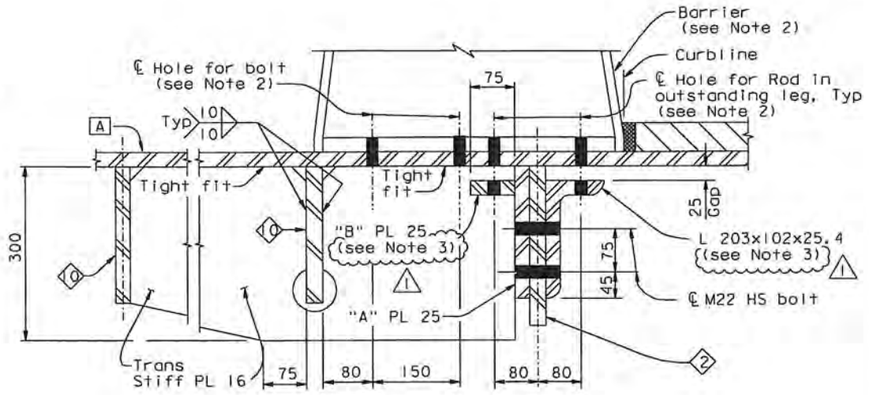

SECTION B-B
1:5

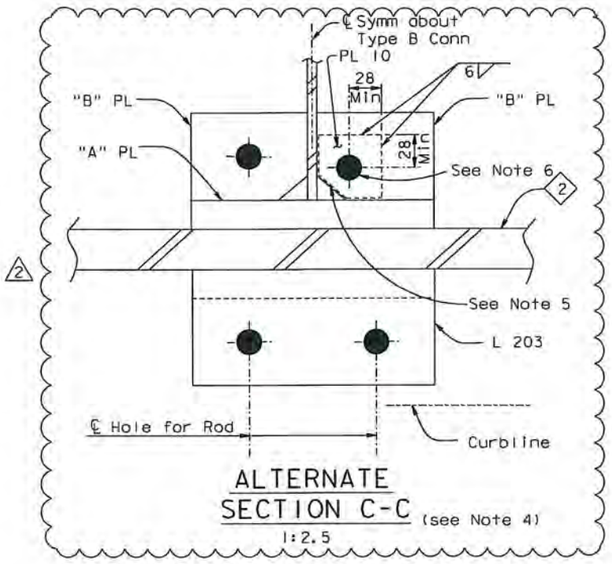

ALTERNATE
SECTION C-C (see Note 4)
1:2.5

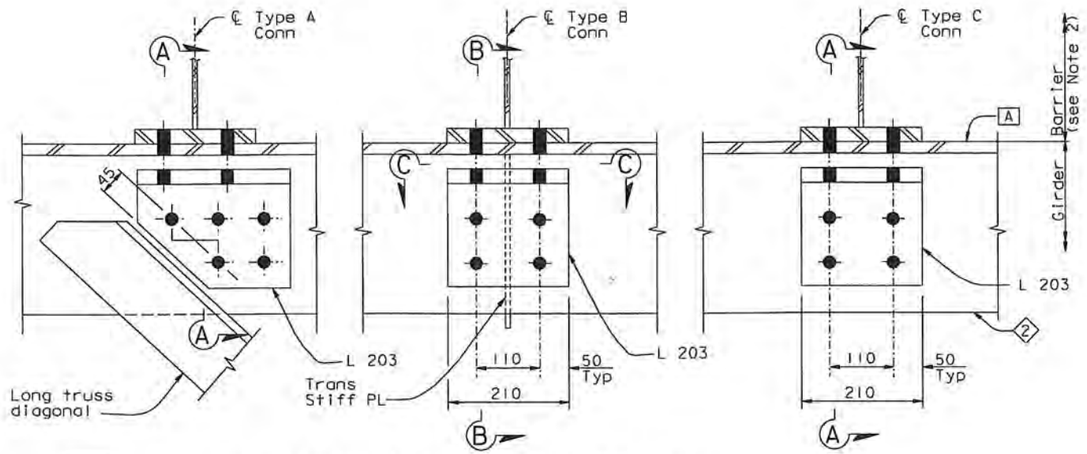

BARRIER CONNECTION DETAILS (see Note 1)
1:5

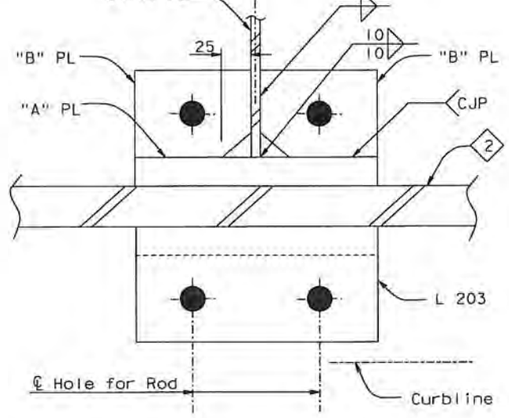

SECTION C-C
1:2.5

NOTES:

1. For location of typical barrier connection types A,B and C, see "Typical Girder Details No.12" sheet.
2. For typical barrier details, see "Barrier Details" sheets.
1. For bolt hole deviation due to fit-up tolerance, the minimum acceptable edge distance shall be 28 mm for angles and 32 mm for fabricated plate or cut edges.
2. As a result of mis-drilled holes during fabication, Alternate Section C-C may be used on a Fit-for-purpose basis where edge distance is less than 22 mm. For details not shown, see Section C-C.
5. Snipe PL 10 to clear weld. Grind weld to 10 mm fillet if necessary.
6. Match drill PL 10 bolt hole from deck.

DIST.	COUNTY	ROUTE	KILOMETER POST TOTAL PROJECT	SHEET NO.	TOTAL SHEETS
04	SF	80	13.2/13.9	638R2	1204

George Baker
REGISTERED ENGINEER - CIVIL
12-6-04
PLANS APPROVAL DATE

REGISTERED PROFESSIONAL ENGINEER
George S. Baker
No. C 57112
Exp. 12/31/05
CIVIL
STATE OF CALIFORNIA

The State of California or its officers or agents shall not be responsible for the accuracy or completeness of electronic copies of this plan sheet.

T.Y. LIN / MOFFATT & NICHOL
825 BATTERY STREET
SAN FRANCISCO, CA 94111

Caltrans now has a web site! To get to the web site, go to: http://www.dot.ca.gov

REGISTERED PROFESSIONAL ENGINEER
Marwan N. Nader
No. C 054426
Exp. 12/31/11
CIVIL
STATE OF CALIFORNIA

FOR REVISIONS ONLY

CONTRACT CHANGE ORDER NO. 4450
SHEET 71 OF 92

REQUESTS FOR INFORMATION NOT ADDRESSED IN THIS CCO REMAIN IN FORCE

ALL DIMENSIONS ARE IN MILLIMETERS UNLESS OTHERWISE SHOWN

MARK	DATE	DESCRIPTIONS	BY	CH'D	CCO#
2	09/14/10	BARRIER MODIFICATIONS	GB	MN	44
1	04/05/10	BARRIER MODIFICATIONS	GB	MN	44

REVISIONS

	BY	CHECKED
DESIGN	G. Baker	P. Ritchie
DETAILS	C. Mauch	T. McMeans
QUANTITIES	G. Baker	M. Roberts

PREPARED FOR THE
STATE OF CALIFORNIA
DEPARTMENT OF TRANSPORTATION

R. Manzanarez
PROJECT ENGINEER

BRIDGE NO. 34-0006L/R
KILOMETER POST 13.2/13.9

SAN FRANCISCO OAKLAND BAY BRIDGE
EAST SPAN SEISMIC SAFETY PROJECT
SELF-ANCHORED SUSPENSION BRIDGE
(SUPERSTRUCTURE & TOWER)

TYPICAL GIRDER DETAILS NO. 14

R. Vallzadeh/V. Toan/Y. L./W. L./F. C.
DESIGN OVERSIGHT
Roya Vallzadeh / Vong Toan / Y. Liu
SIGN OFF DATE 09/14/10

Rev. Date: 5-18-98

ORIGINAL SCALE IN MILLIMETERS
FOR REDUCED PLANS 0 10 20 30 40 50 60 70 80 90 100

CU 04
EA 0120F1

DISREGARD PRINTS BEARING EARLIER REVISION DATES

REVISION DATES (PRELIMINARY STAGE ONLY)
05/17/01 01/30/02 07/01/02 12/15/02

SHEET 221R2 OF

FILE => I:\bb\04-0120I\sos\contract plans and cco\cco\cco#44\19-revision 09-14-10\dgn\agdkd09.dgn

100 % PS&E
DATE PLOTTED => 14 SEP 2010
TIME PLOTTED => 13:36:35
USERNAME => orivera

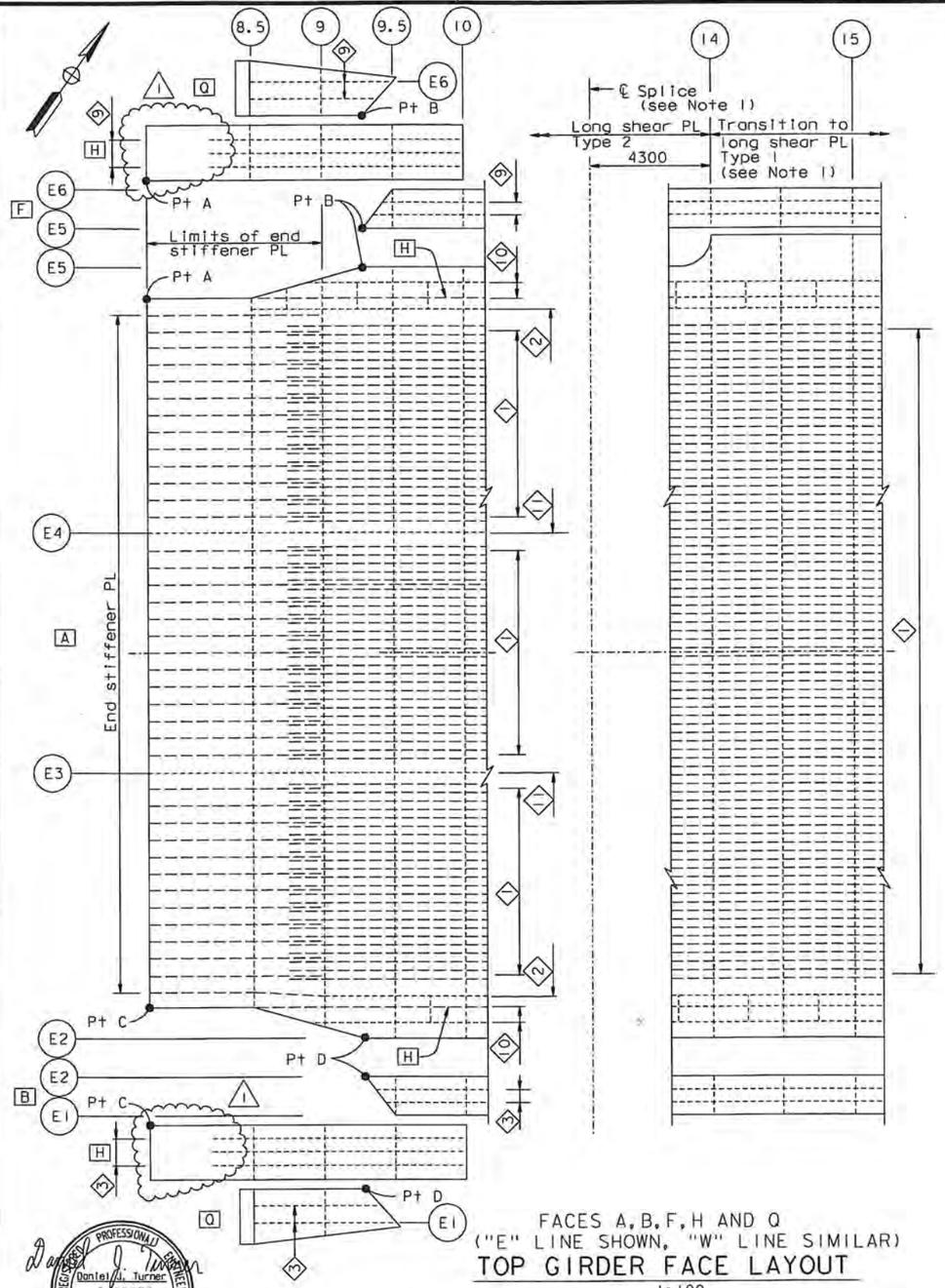

FACES A, B, F, H AND Q
("E" LINE SHOWN, "W" LINE SIMILAR)

TOP GIRDER FACE LAYOUT

1:100

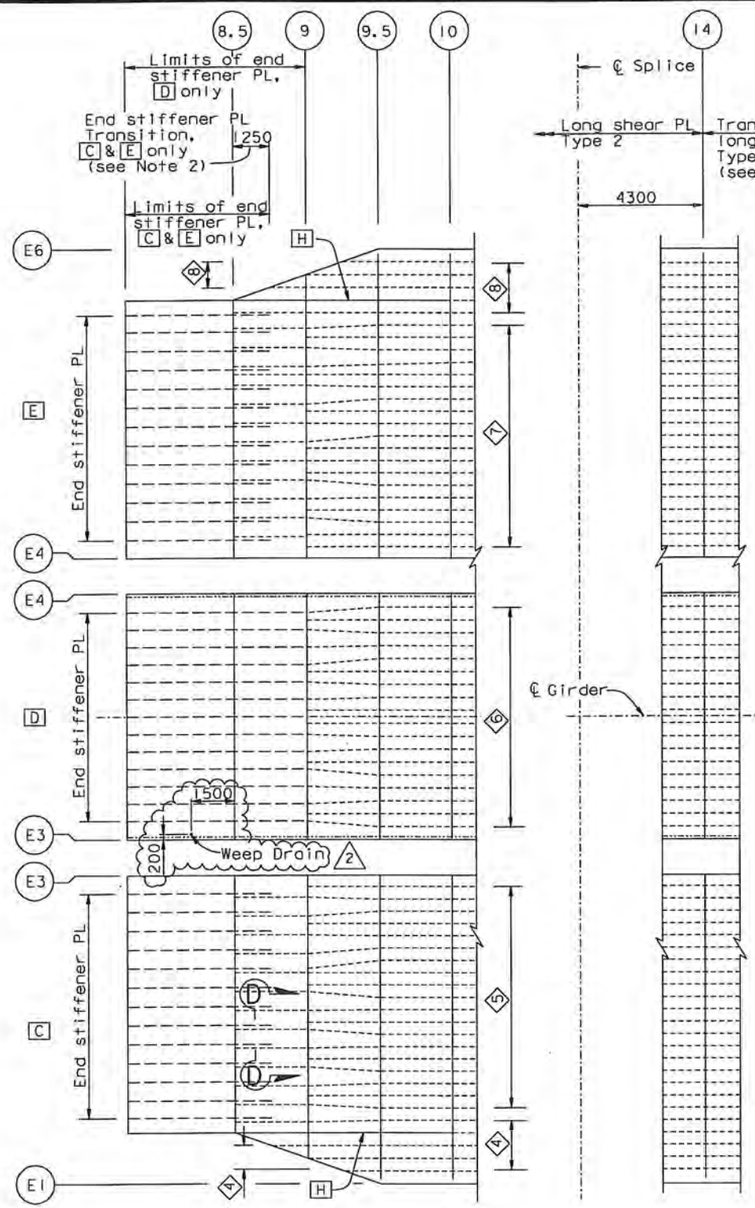

FACES C, D AND E
("E" LINE SHOWN, "W" LINE SIMILAR)

BOTTOM GIRDER FACE LAYOUT

1:100

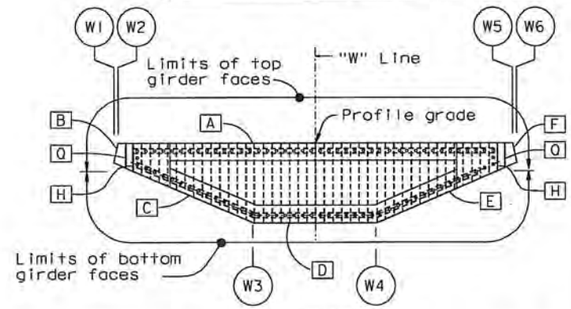

"W" LINE

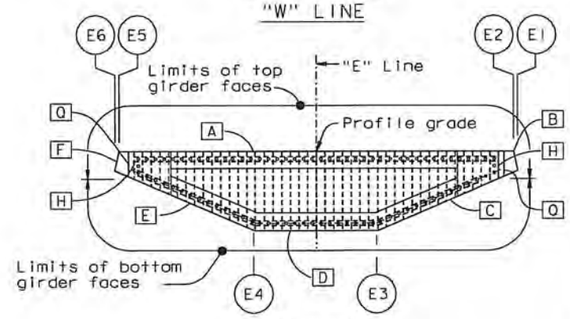

"E" LINE

KEY CROSS SECTIONS

1:200

LEGEND:

- D — Girder face designation D
- ------- Stiffener type 4, 5, 6, 7 or 8
- – – – Longitudinal stiffener Type 1 leg or End stiffener PL
- ..... Longitudinal stiffener Type 1 or 2
- ◇4 Stiffener Type 4 designation

NOTES:

1. For longitudinal shear plate transition details, see "Typical Girder Details No. 7" sheet.
2. For Section D-D end stiffener plate transition details for C and E, see "Girder At Pier W2 No. 6" sheet.

ALL DIMENSIONS ARE IN MILLIMETERS UNLESS OTHERWISE SHOWN

DIST.	COUNTY	ROUTE	KILOMETER POST TOTAL PROJECT	SHEET NO.	TOTAL SHEETS
04	SF	80	13.2/13.9	669R2	1204

George Baker
REGISTERED ENGINEER - CIVIL
12-6-04
PLANS APPROVAL DATE

The State of California or its officers or agents shall not be responsible for the accuracy or completeness of electronic copies of this plan sheet.

REGISTERED PROFESSIONAL ENGINEER — George S. Baker — No. C57112 — Exp. 12/31/05 — CIVIL — STATE OF CALIFORNIA

T.Y. LIN / MOFFATT & NICHOL
825 BATTERY STREET
SAN FRANCISCO, CA 94111

Caltrans now has a web site! To get to the web site, go to: http://www.dot.ca.gov

Daniel J. Turner — REGISTERED PROFESSIONAL ENGINEER — No. C 65033 — Exp. 06/30/011 — CIVIL — STATE OF CALIFORNIA

FOR REVISIONS ONLY

CONTRACT CHANGE ORDER NO. 4450
SHEET 72 OF 92

REQUESTS FOR INFORMATION NOT ADDRESSED IN THIS CCO REMAIN IN FORCE

MARK	DATE	DESCRIPTIONS	BY	CH'D	CCO#
2	06/11/10	BARRIER MODIFICATIONS	DT	GB	44
1	02/16/07	BULKHEAD AT GIRDER PIER W2	AS	DT	27
		REVISIONS			

R. Vollzadeh/V. Toan/Y.L./W.L./F.C.
DESIGN OVERSIGHT
SIGN OFF DATE 06/11/10

Rev. Date: 5-18-98

DESIGN BY G. Baker — CHECKED P. Ritchie
DETAILS BY M. Gulyas — CHECKED T. McMeans
QUANTITIES BY C. Mauch — CHECKED M. Roberts

PREPARED FOR THE STATE OF CALIFORNIA
DEPARTMENT OF TRANSPORTATION

R. Manzanarez
PROJECT ENGINEER

CU 04
EA 0120F1

BRIDGE NO. 34-0006L/R
KILOMETER POST 13.2/13.9

SAN FRANCISCO OAKLAND BAY BRIDGE
EAST SPAN SEISMIC SAFETY PROJECT
SELF-ANCHORED SUSPENSION BRIDGE
(SUPERSTRUCTURE & TOWER)

GIRDER AT PIER W2 NO. 5

ORIGINAL SCALE IN MILLIMETERS FOR REDUCED PLANS 0 10 20 30 40 50 60 70 80 90 100

DISREGARD PRINTS BEARING EARLIER REVISION DATES →

REVISION DATES (PRELIMINARY STAGE ONLY): 01/15/99 | 05/15/99 | 08/02/99 | 05/31/01 | 01/09/02 | 01/31/02 | 12/19/02

SHEET 252R2 OF

FILE => I:\bb\04-0120F1\sas\contract plans and cco\cco\cco#44\18-revision 06-11-10\dgn\aggdd05.dgn

100% PS&E

TIME PLOTTED => 13:44:03
DATE PLOTTED => 11 JUN 2010
USERNAME => dwinrow

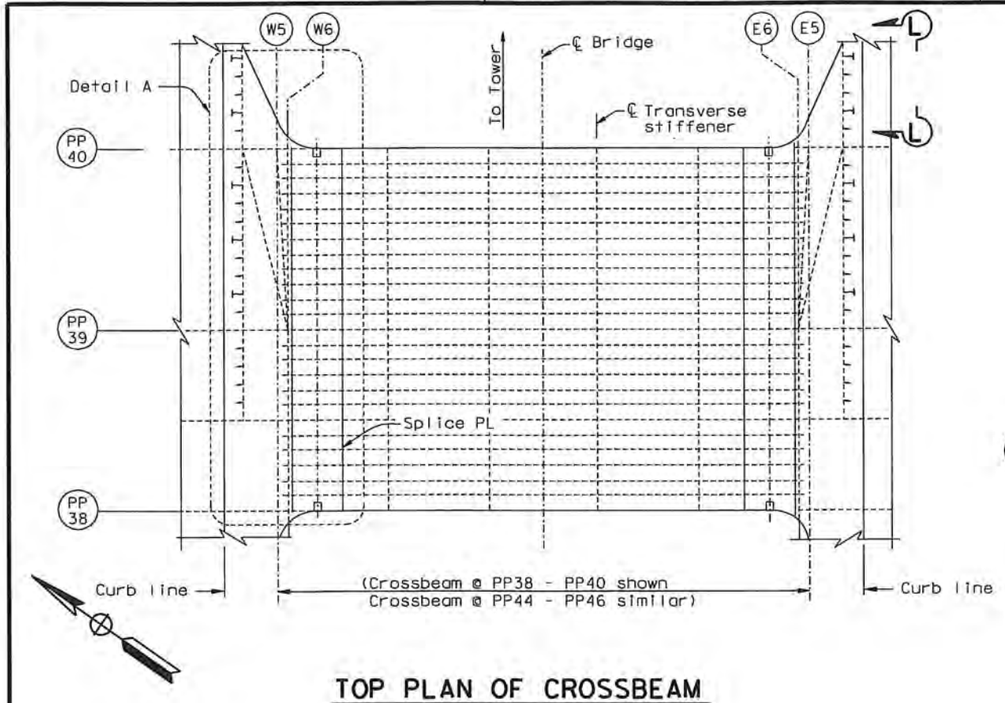

TOP PLAN OF CROSSBEAM

1:80

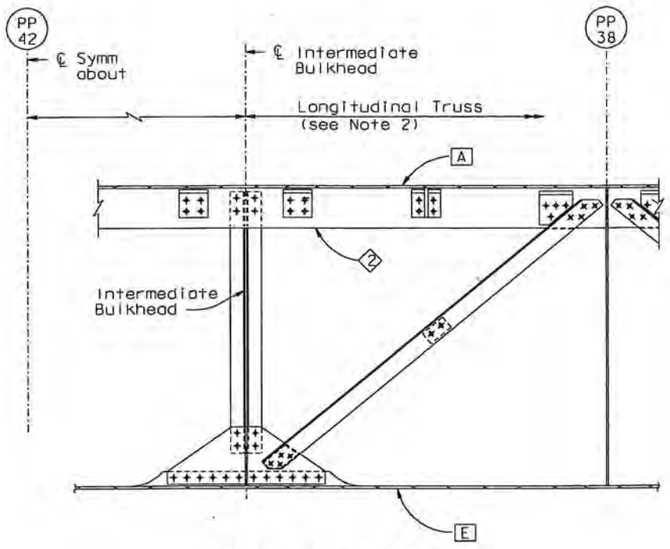

LONGITUDINAL TRUSS

SECTION A-A

1:20

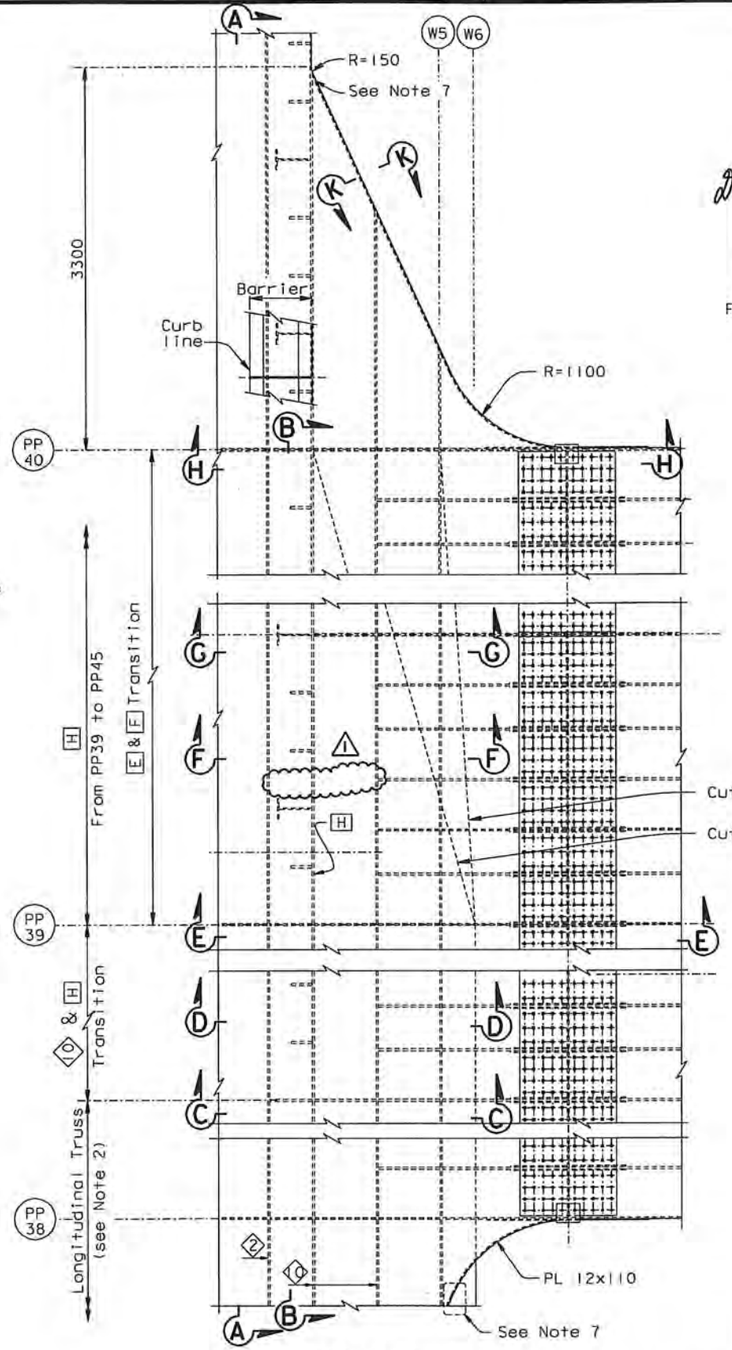

DETAIL A

1:25

ALL DIMENSIONS ARE IN MILLIMETERS UNLESS OTHERWISE SHOWN

NOTES:

1. For crossbeam details not shown, see "Typical Crossbeam Details" sheets.
2. For longitudinal truss details not shown, see "Typical Girder Details No.13" sheet.
3. For Sections C-C, D-D, E-E, F-F, G-G and H-H, see "Girder Transition Near Tower No.3" sheet.
4. See legend on "Girder Transition Near Tower No.2" sheet.
5. For "Girder Transition Near Tower" sheets. All bolts shall be detailed according to the bolt dimension table, see "Typical Girder Details No.1" sheet. All bolts are HS unless noted otherwise.
6. For "Girder Transition Near Tower" sheets unless noted otherwise all fillet welds shall be 6 mm for plate sizes not greater that 20 mm. For plates greater than 20 mm fillet welds shall be 8 mm unless noted otherwise.
7. For stiffener termination, see "Typical Girder Details No.16" sheet.
8. For Sections B-B, K-K and L-L, see "Girder Transition Near Tower No.2" sheet.

Caltrans Metric

DIST.	COUNTY	ROUTE	KILOMETER POST TOTAL PROJECT	SHEET NO.	TOTAL SHEETS
04	SF	80	13.2/13.9	671RI	1204

George Baker
REGISTERED ENGINEER - CIVIL
12-6-04
PLANS APPROVAL DATE

REGISTERED PROFESSIONAL ENGINEER George S. Baker No. C57112 Exp. 12/31/05 CIVIL STATE OF CALIFORNIA

The State of California or its officers or agents shall not be responsible for the accuracy or completeness of electronic copies of this plan sheet.

T.Y. LIN / MOFFATT & NICHOL
825 BATTERY STREET
SAN FRANCISCO, CA 94111

Caltrans now has a web site! To get to the web site, go to: http://www.dot.ca.gov

REGISTERED PROFESSIONAL ENGINEER Daniel J. Turner No. C 65033 Exp. 06/30/09 CIVIL STATE OF CALIFORNIA

FOR REVISIONS ONLY

MARK	DATE	REVISIONS	BY	CH'D	CCO#
1	08/24/07	BARRIER MODIFICATIONS	GB	DT	44

CONTRACT CHANGE ORDER NO. 44 SO
SHEET 73 OF 92

100 % PS&E

DATE PLOTTED => 27 AUG 2008 TIME PLOTTED => 13:49:40
USERNAME => dwinrow

R. Vallzadeh/V. Toan/Y.L./W.L./F.C.
DESIGN OVERSIGHT
Ryan Vallzadeh / Vong P. Toan / Y. Liu
SIGN OFF DATE 08/24/07

	BY	CHECKED
DESIGN	G. Baker	P. Ritchie
DETAILS	D. Veytsman	T. McMeans
QUANTITIES	G. Baker	M. Roberts

PREPARED FOR THE STATE OF CALIFORNIA DEPARTMENT OF TRANSPORTATION

R. Manzanarez
PROJECT ENGINEER

CU 04
EA 0120F1

BRIDGE NO. 34-0006L/R
KILOMETER POST 13.2/13.9

SAN FRANCISCO OAKLAND BAY BRIDGE
EAST SPAN SEISMIC SAFETY PROJECT
SELF-ANCHORED SUSPENSION BRIDGE (SUPERSTRUCTURE & TOWER)
GIRDER TRANSITION NEAR TOWER NO. 1

DISREGARD PRINTS BEARING EARLIER REVISION DATES

REVISION DATES (PRELIMINARY STAGE ONLY)										SHEET	OF
05/07/99	08/07/99	05/07/01	04/08/02	07/09/02	12/13/02					254RI	

Rev. Date: 5-18-98

ORIGINAL SCALE IN MILLIMETERS FOR REDUCED PLANS 0 10 20 30 40 50 60 70 80 90 100

FILE => I:\bb\04-01200I\sas\contract plans and cco\cco\in progress\cco#44\revised 8-25-08\dgn\agcrs10a.dgn

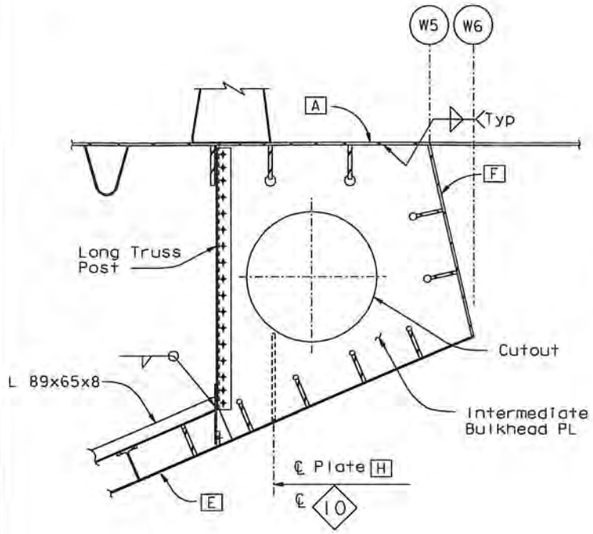

SECTION C-C
1:20

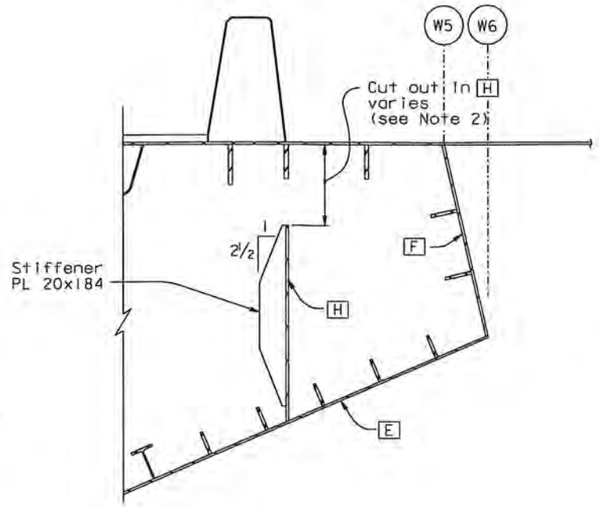

SECTION D-D
1:20

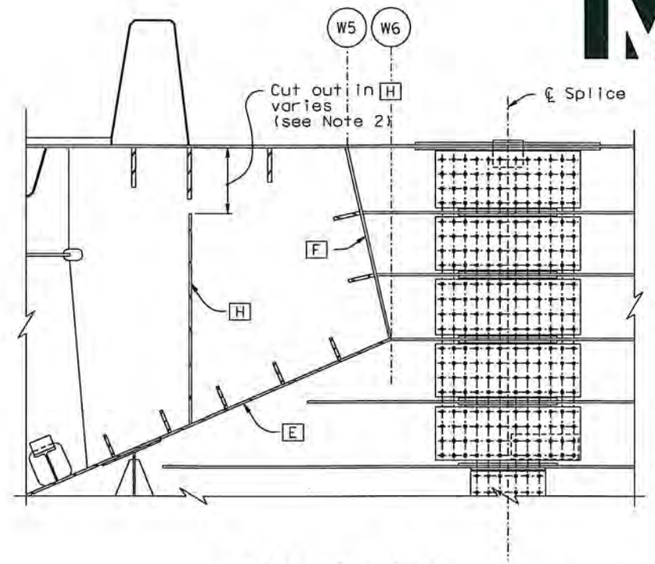

SECTION E-E
1:20

DIST.	COUNTY	ROUTE	KILOMETER POST TOTAL PROJECT	SHEET NO.	TOTAL SHEETS
04	SF	80	13.2/13.9	673R1	1204

George Baker
REGISTERED ENGINEER - CIVIL

12-6-04
PLANS APPROVAL DATE

The State of California or its officers or agents shall not be responsible for the accuracy or completeness of electronic copies of this plan sheet.

PROFESSIONAL ENGINEER — George S. Baker — No. C57112 — Exp. 12/31/05 — CIVIL — STATE OF CALIFORNIA

T.Y. LIN / MOFFATT & NICHOL
825 BATTERY STREET
SAN FRANCISCO, CA 94111

Caltrans now has a web site! To get to the web site, go to: http://www.dot.ca.gov

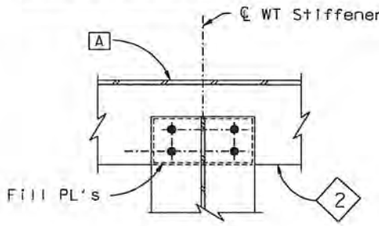

WT CONNECTION
SECTION J-J
1:10

MARK	DATE	DESCRIPTIONS	BY	CH'D	CCO#
1	08/24/07	BARRIER MODIFICATIONS	GB	DT	44

REVISIONS

CONTRACT CHANGE ORDER NO. 4450
SHEET 74 OF 92

FOR REVISIONS ONLY

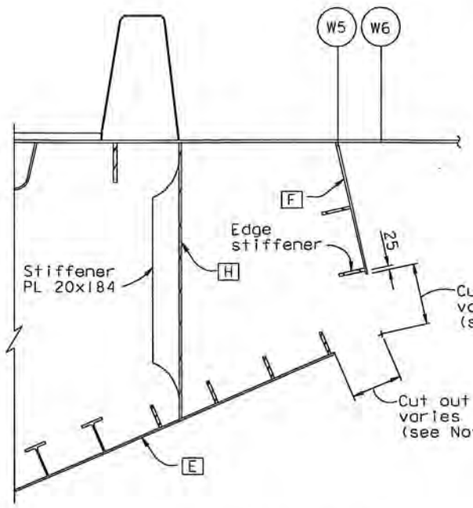

SECTION F-F
1:20

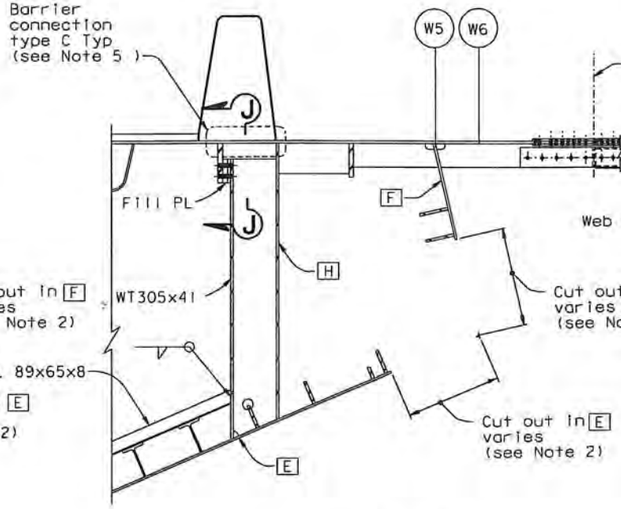

SECTION G-G
1:20

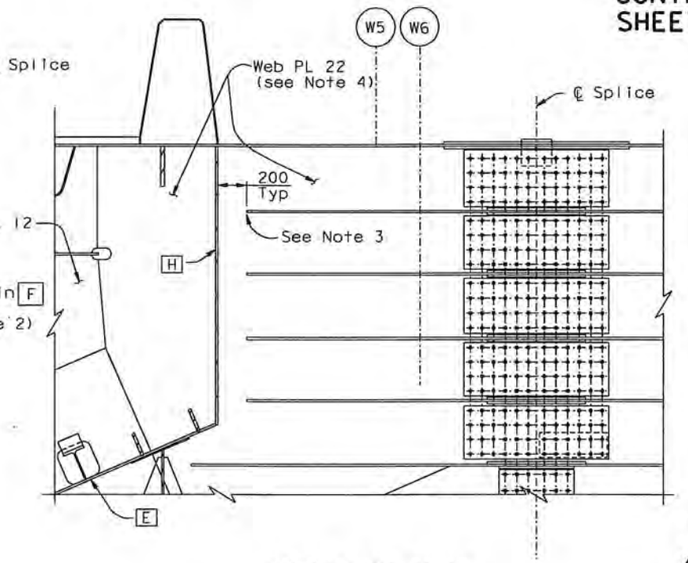

SECTION H-H
1:20

NOTES:

1. For Details not shown, see "Typical Crossbeam Details" and "Typical Girder Details" sheets.
2. For cut out in plates E F and H, see "Girder Transition Near Tower No. 2" sheet.
3. For stiffener terminations, see "Typical Girder Details No. 16" sheet.
4. For limits of floorbeam web PLs at crossbeam, see "Typical Floorbeam Details No. 2" sheet.
5. Barrier connections from PP38.5-PP45.5 shall use connection Type C. See "Typical Girder Details No. 14" sheet.

1

ALL DIMENSIONS ARE IN MILLIMETERS UNLESS OTHERWISE SHOWN

SAN FRANCISCO OAKLAND BAY BRIDGE
EAST SPAN SEISMIC SAFETY PROJECT
SELF-ANCHORED SUSPENSION BRIDGE
(SUPERSTRUCTURE & TOWER)

GIRDER TRANSITION NEAR TOWER NO. 3

R. Vallzadeh/V. Togn/Y.L./W.L./F.C.
DESIGN OVERSIGHT
Roya Vallzadeh / Vong Toan / Y. Lin
SIGN OFF DATE 08/24/07

	BY	CHECKED
DESIGN	G. Baker	P. Ritchie
DETAILS	S. Como	T. McMeans
QUANTITIES	G. Baker	M. Roberts

PREPARED FOR THE STATE OF CALIFORNIA
DEPARTMENT OF TRANSPORTATION

R. Manzanarez
PROJECT ENGINEER

BRIDGE NO. 34-0006L/R
KILOMETER POST 13.2/13.9

CU 04
EA 0120F1

DISREGARD PRINTS BEARING EARLIER REVISION DATES

REVISION DATES (PRELIMINARY STAGE ONLY): 05/15/98 | 08/07/98 | 05/14/01 | 01/08/02 | 01/09/02 | 12/19/02

SHEET 256R1 OF

Rev. Date: 5-18-98

ORIGINAL SCALE IN MILLIMETERS FOR REDUCED PLANS 0 10 20 30 40 50 60 70 80 90 100

FILE => I:\bb\04-0120F1\sas\contract plans and cco\cco\In progress\cco#44\revised 8-25-08\dgn\dgcrs09b.dgn

DATE PLOTTED => 27 AUG 2008 TIME PLOTTED => 13:46:32
100 % PS&E
USERNAME => dwinrow

DIST.	COUNTY	ROUTE	KILOMETER POST TOTAL PROJECT	SHEET NO.	TOTAL SHEETS
04	SF	80	13.2/13.9	742R2	1204

REGISTERED ENGINEER - CIVIL
12-6-04
PLANS APPROVAL DATE
Marwan N. Nader No. C 054426 Exp. 12/31/09 CIVIL STATE OF CALIFORNIA
The State of California or its officers or agents shall not be responsible for the accuracy or completeness of electronic copies of this plan sheet.

T.Y. LIN / MOFFATT & NICHOL
825 BATTERY STREET
SAN FRANCISCO, CA 94111

Caltrans now has a web site! To get to the web site, go to: http://www.dot.ca.gov

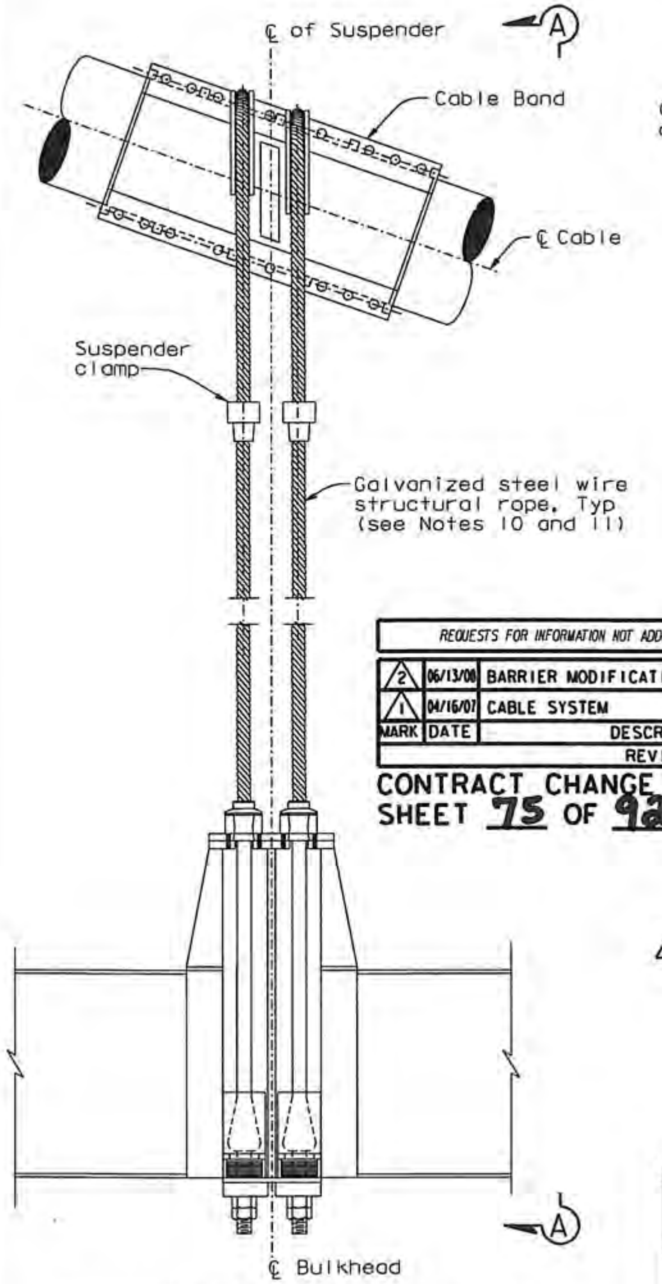

SUSPENDER TYPES 1 & 2
NTS

MARK	DATE	DESCRIPTIONS	BY	CH'D	CCO#
2	06/13/08	BARRIER MODIFICATIONS	AS	MN	44
1	04/16/07	CABLE SYSTEM	GB	MN	37

REQUESTS FOR INFORMATION NOT ADDRESSED IN THIS CCO REMAIN IN FORCE
REVISIONS

CONTRACT CHANGE ORDER NO. 44 50
SHEET 75 OF 92

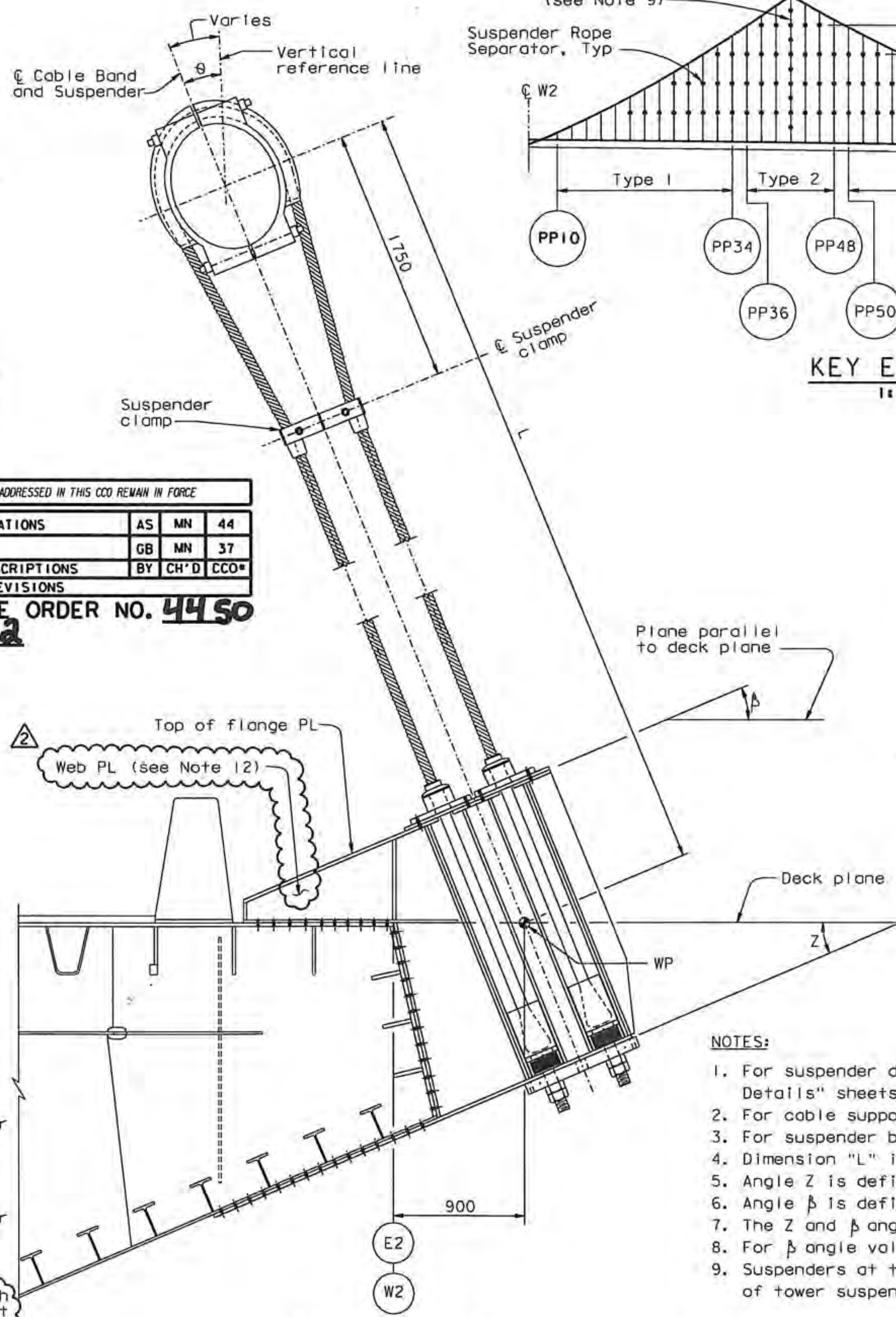

SECTION A-A (TYPICAL)
NTS

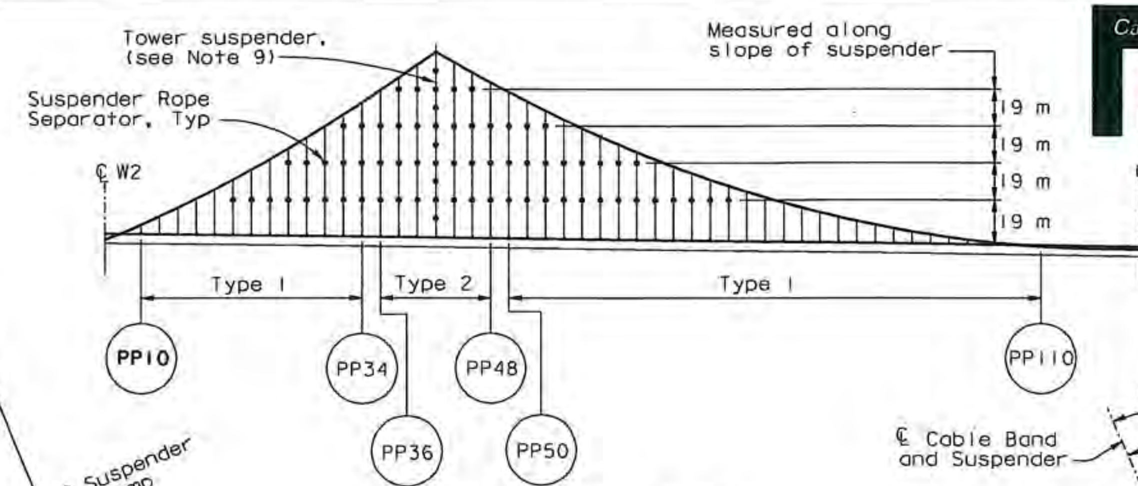

KEY ELEVATION
1:2000

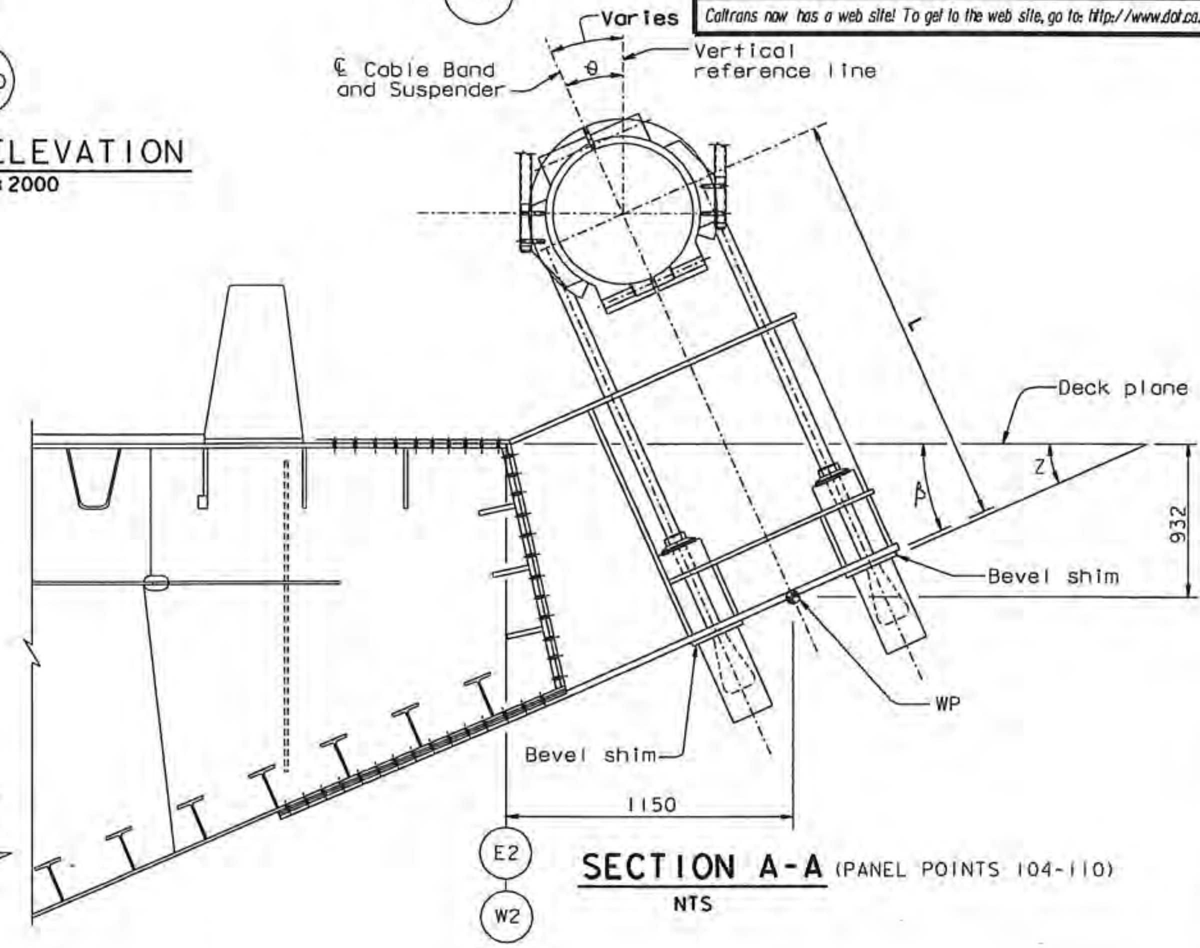

SECTION A-A (PANEL POINTS 104-110)
NTS

10. Type 1 Suspender ropes shall have a metallic area of at least 2742 mm² and a nominal diameter no greater than 78 mm. The vertical component of dead load on the four rope parts of one suspender shall be limited to 3200 kN.
11. Type 2 Suspender ropes shall have a metallic area of at least 4460 mm² and a nominal diameter no greater than 102 mm. The vertical component of dead load on the four rope parts of one suspender shall be limited to 4800 kN.
12. At locations where cable railing interferes with web PL, drilling a 10 mm Dia hole in the bracket web PL is acceptable, subject to review and approval of the Engineer. (2)

NOTES:

1. For suspender details, see "Suspender Assembly Details" sheets. For cable band details, see "Cable Band Details" sheets.
2. For cable support at PP 112, 114 & 116, see "Cable Bracket Details" sheets.
3. For suspender bracket details, see "Suspender Bracket Details" sheets.
4. Dimension "L" is defined as the distance between the ℄ of the cable and the WP of the suspender bracket.
5. Angle Z is defined as the angle between the deck plane and the top flange of the suspender bracket.
6. Angle β is defined as the angle between the deck plane and the top of the bevel shim.
7. The Z and β angles shall be taken as equal.
8. For β angle values, see "Suspender Bracket Details No. 3" sheet.
9. Suspenders at the tower are architectural and are substantially different from all others. For details of tower suspenders, see "Suspenders At Tower Details" sheets.

ALL DIMENSIONS ARE IN MILLIMETERS UNLESS OTHERWISE SHOWN

R. Valizadeh/V. Toan/Y.L./W.L./F.C.
DESIGN OVERSIGHT
SIGN OFF DATE 06/13/08
Rev. Date: 5-18-98

DESIGN BY M. Nader — CHECKED S. Rodriguez
DETAILS BY C. Mibelli — CHECKED S. Rodriguez
QUANTITIES BY C. Mibelli — CHECKED G. Baker

PREPARED FOR THE STATE OF CALIFORNIA
DEPARTMENT OF TRANSPORTATION

R. Manzanarez
PROJECT ENGINEER

BRIDGE NO. 34-0006L/R
KILOMETER POST 13.2/13.9

SAN FRANCISCO OAKLAND BAY BRIDGE
EAST SPAN SEISMIC SAFETY PROJECT
SELF-ANCHORED SUSPENSION BRIDGE
(SUPERSTRUCTURE & TOWER)

SUSPENDER LAYOUT NO. 1

ORIGINAL SCALE IN MILLIMETERS FOR REDUCED PLANS 0 10 20 30 40 50 60 70 80 90 100
CU 04
EA 0120F1
DISREGARD PRINTS BEARING EARLIER REVISION DATES
REVISION DATES (PRELIMINARY STAGE ONLY)
SHEET 325R2
FILE => I:\bb\04-0120F1\sas\contract plans and cco\cco\in progress\cco#44\revised 8-25-08\dgn\agsus02.dgn
USERNAME => dwinrow DATE PLOTTED => 27 AUG 2008 TIME PLOTTED => 14:06:35
100 % PS&E

DIST.	COUNTY	ROUTE	KILOMETER POST TOTAL PROJECT	SHEET NO.	TOTAL SHEETS
04	SF	80	13.2/13.9	876R2	1204

George Baker
REGISTERED ENGINEER - CIVIL
12-6-04
PLANS APPROVAL DATE

REGISTERED PROFESSIONAL ENGINEER — George S. Baker — No. C57112 — Exp. 12/31/05 — CIVIL — STATE OF CALIFORNIA

The State of California or its officers or agents shall not be responsible for the accuracy or completeness of electronic copies of this plan sheet.

T.Y. LIN / MOFFATT & NICHOL
825 BATTERY STREET
SAN FRANCISCO, CA 94111

Caltrans now has a web site! To get to the web site, go to: http://www.dot.ca.gov

REGISTERED PROFESSIONAL ENGINEER — Daniel J. Turner — No. C 65033 — Exp. 06/30/09 — CIVIL — STATE OF CALIFORNIA

FOR REVISIONS ONLY

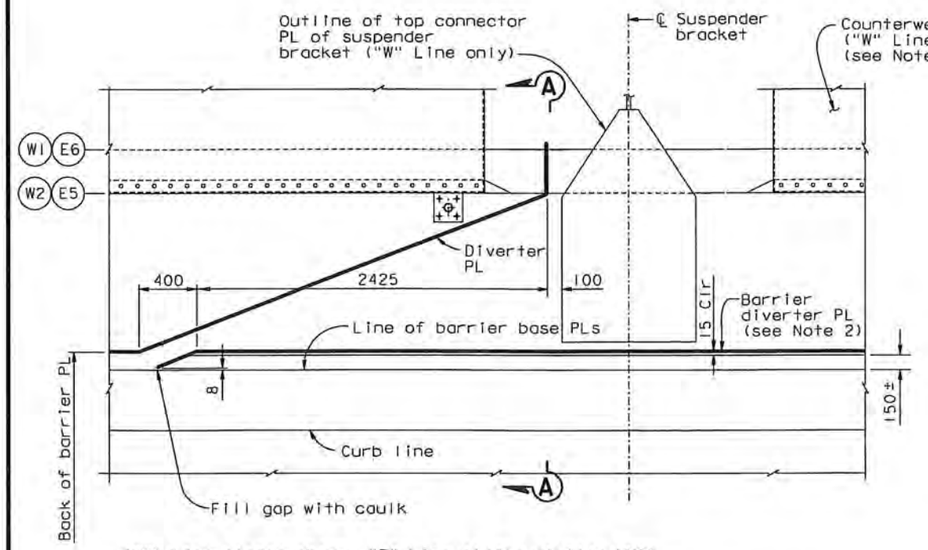

("W" Line girder shown. "E" Line girder similar UNO)

TYPICAL DRAINAGE PLAN TYPE 1 (See Notes 3 & 5)

1:20

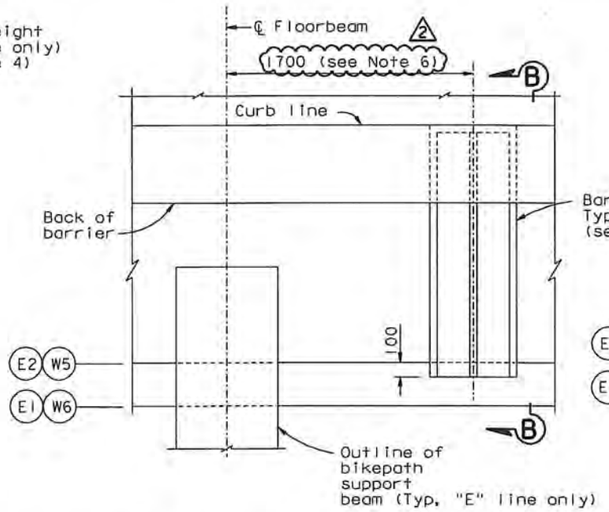

("E" Line girder shown. "W" Line girder similar UNO)

TYPICAL DRAINAGE PLAN TYPE 2

1:20 (See Note 3)

NOTES:

1. For sections A-A, A'-A', B-B, C-C, see "Deck Drainage Details No. 2" sheet.
2. Barrier diverter plate shall be continuous along barriers near working lines W2 and E5, unless otherwise shown.
3. For barrier flume details and locations of drainage types 1, 2 and 3, see "Deck Drainage Details No. 3" sheet.
4. For Counterweight details, see "Typical Girder Details" sheets.
5. Diverter plates may be shifted subject to review and approval by the Engineer.
6. Barrier flumes may be shifted to avoid interferences with deck level utilities and fixtures, subject to review and approval of the Engineer.

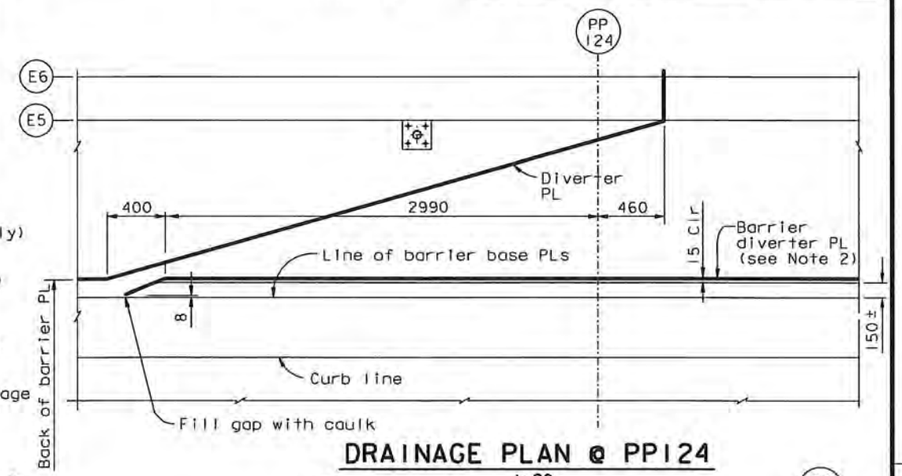

DRAINAGE PLAN @ PP124

1:20

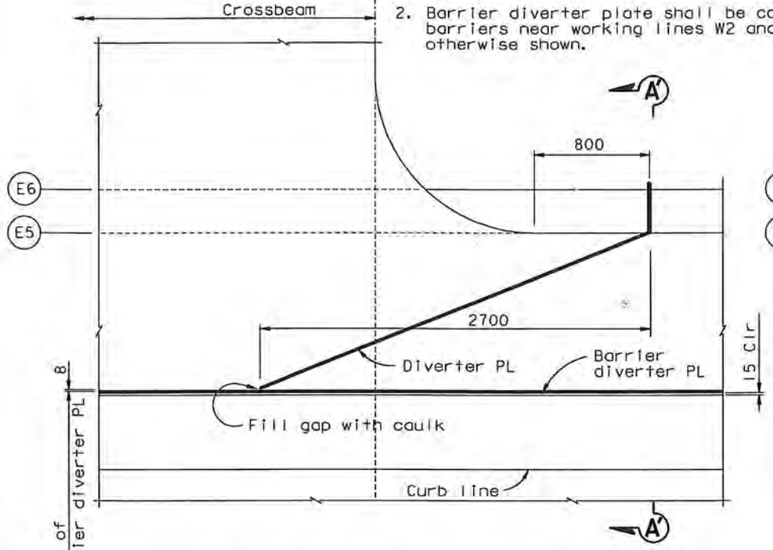

TYPICAL DRAINAGE PLAN TYPE 3 (See Notes 3 & 5)

1:20

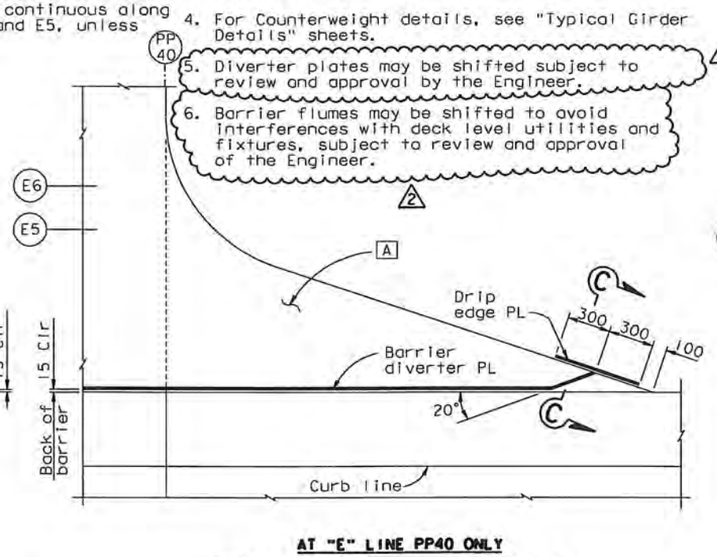

AT "E" LINE PP40 ONLY

DRAINAGE PLAN TYPE 4

1:20

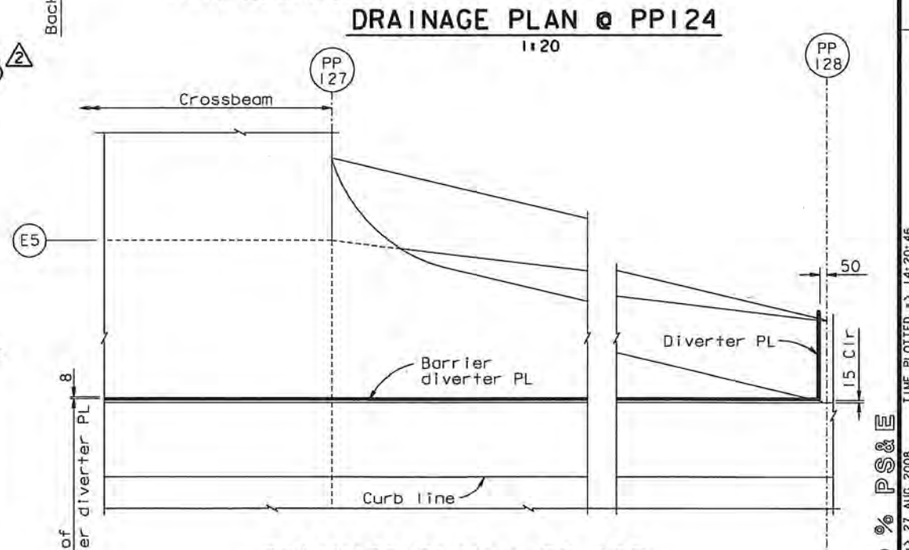

DRAINAGE PLAN @ PP 127

1:20

100 % PS&E

USERNAME => gwinrow DATE PLOTTED => 27 AUG 2008 TIME PLOTTED => 14:20:46

REQUESTS FOR INFORMATION NOT ADDRESSED IN THIS CCO REMAIN IN FORCE					
2	04/18/08	BARRIER MODIFICATIONS	AS	DT	44
1	08/24/07	BARRIER MODIFICATIONS	GB	DT	44
MARK	DATE	DESCRIPTIONS	BY	CH'D	CCO#
REVISIONS					

CONTRACT CHANGE ORDER NO. 4480
SHEET 76 OF 92

	BY	CHECKED
DESIGN	G. Baker	T. Ho
DETAILS	D. Turner	T. Ho
QUANTITIES	G. Baker	D. Harrison

ORIGINAL SCALE IN MILLIMETERS FOR REDUCED PLANS 0 10 20 30 40 50 60 70 80 90 100

R. Vallzadeh/V. Toan/Y.L./W.L./F.C.
DESIGN OVERSIGHT
Reza Vallzadeh / Vonp Toan / Y. Liu
SIGN OFF DATE 04/18/08

Rev. Date: 5-18-98

PREPARED FOR THE STATE OF CALIFORNIA DEPARTMENT OF TRANSPORTATION

ALL DIMENSIONS ARE IN MILLIMETERS UNLESS OTHERWISE SHOWN

R. Manzanarez
PROJECT ENGINEER

CU 04
EA 0120F1

FILE => I:\bb\04-01200I\sas\contract plans and cca\cco\in progress\cco#44\revised 8-25-08\dgn\akdkd01.dgn

SAN FRANCISCO OAKLAND BAY BRIDGE
EAST SPAN SEISMIC SAFETY PROJECT
SELF-ANCHORED SUSPENSION BRIDGE
(SUPERSTRUCTURE & TOWER)

DECK DRAINAGE DETAILS NO. 1

BRIDGE NO.	KILOMETER POST
34-0006L/R	13.2/13.9

DISREGARD PRINTS BEARING EARLIER REVISION DATES →

REVISION DATES (PRELIMINARY STAGE ONLY): 05/07/08 | 08/24/07 | 05/24/01 | 01/20/02 | 12/19/02

SHEET 459R2 OF

DIST.	COUNTY	ROUTE	KILOMETER POST TOTAL PROJECT	SHEET NO.	TOTAL SHEETS
04	SF	80	13.2/13.9	877R1	1204

George Baker
REGISTERED ENGINEER - CIVIL
12-6-04
PLANS APPROVAL DATE

PROFESSIONAL ENGINEER George S. Baker No. C57112 Exp. 12/31/05 CIVIL STATE OF CALIFORNIA

PROFESSIONAL ENGINEER Daniel J. Turner No. C 65033 Exp. 06/30/09 CIVIL STATE OF CALIFORNIA

FOR REVISIONS ONLY

The State of California or its officers or agents shall not be responsible for the accuracy or completeness of electronic copies of this plan sheet.

T.Y. LIN / MOFFATT & NICHOL
825 BATTERY STREET
SAN FRANCISCO, CA 94111

Caltrans now has a web site! To get to the web site, go to: http://www.dot.ca.gov

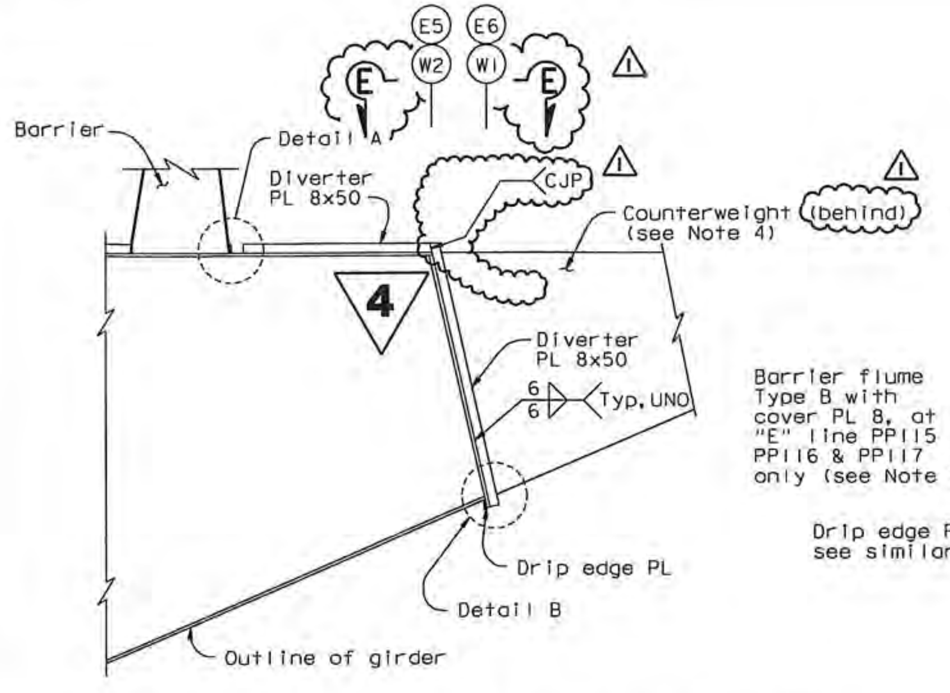

SECTION A-A (SECTION A'-A' SIMILAR) (see Note 6)
1:20

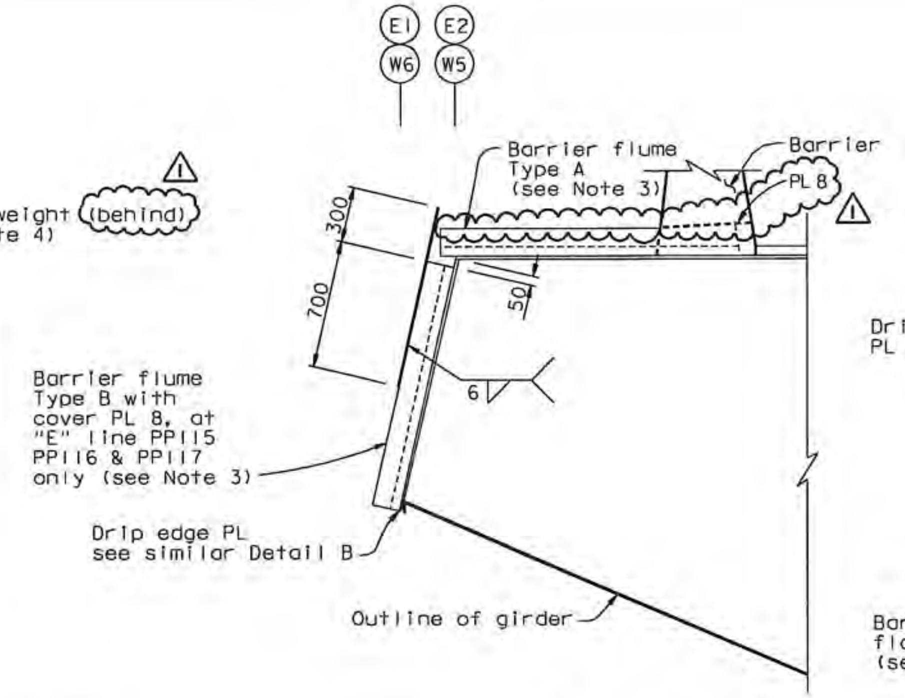

SECTION B-B
1:20

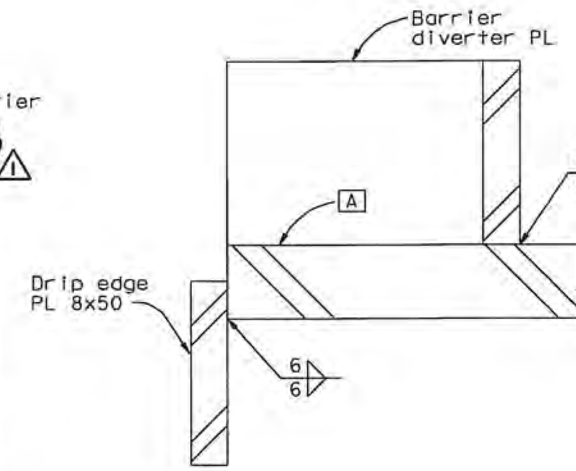

SECTION C-C
1:1

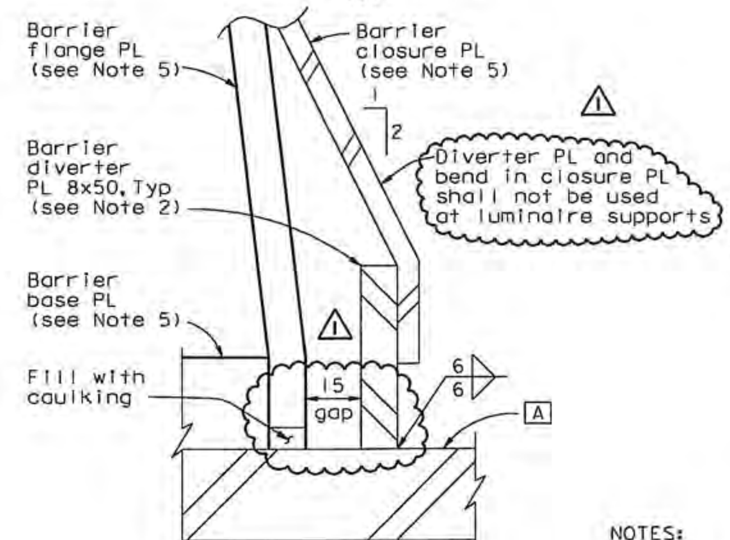

DETAIL A
1:1

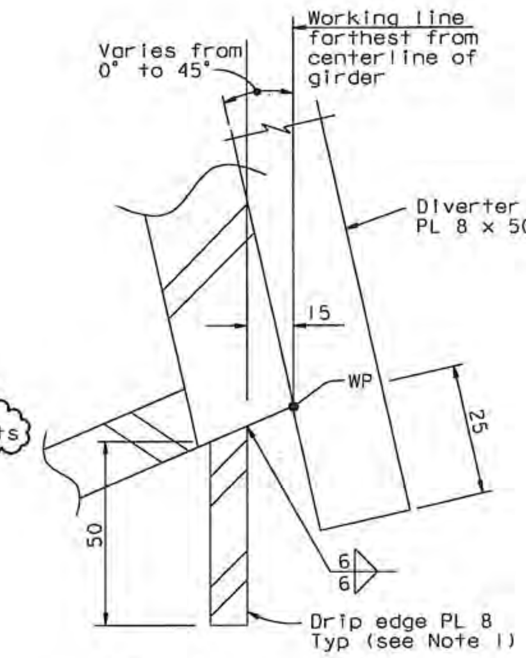

DETAIL B
1:1

1	08/24/07	BARRIER MODIFICATIONS	GB	DT	44
MARK	DATE	DESCRIPTIONS	BY	CH'D	CCO#
		REVISIONS			

CONTRACT CHANGE ORDER NO. 44 S0
SHEET 77 OF 92

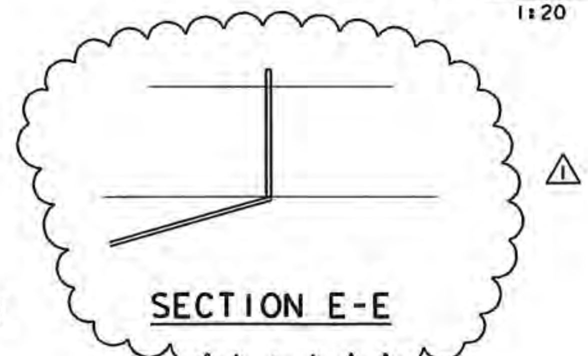

SECTION E-E

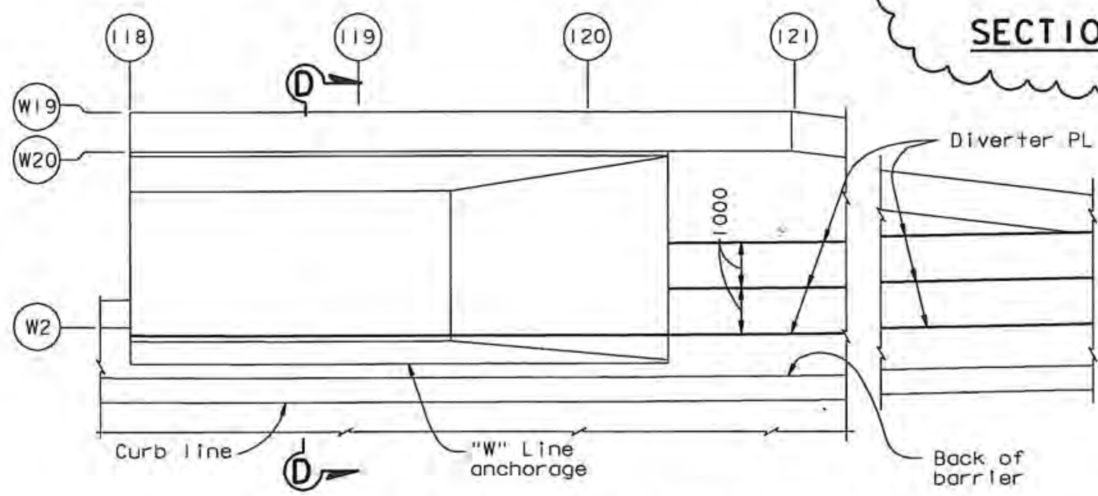

DRAINAGE PLAN AT "W" LINE ANCHORAGE
1:100

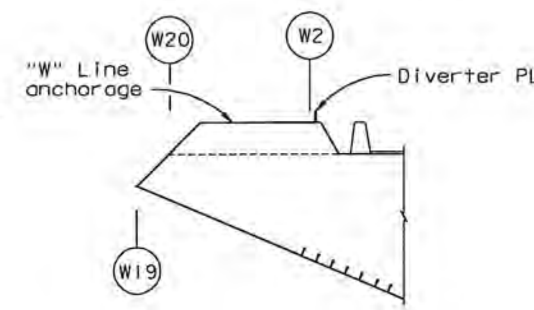

SECTION D-D
1:100

NOTES:

1. Drip edge plate shall be continuous along length of typical girder at working lines W1, W6, E1 and E6. For girder transitions at pier W2, tower and east approach, drip edge plate shall be continuous along bottom corner of working line farthest from the center line of girder.
2. Barrier diverter plate shall be continuous along barriers near working lines W2 and E5, unless otherwise shown.
3. For barrier flume details, see "Deck Drainage Details No.3" sheet.
4. For counterweight details, see "Typical Girder Details" sheets.
5. For barrier details, see "Barrier Details" sheets.
6. Use similar detail where diverter PLs meet edge of girder top face at "W" line anchorage and line E5 at PP 8.5.
7. At all drip edge and diverter plate terminations, the end 40 mm of weld shall be CJP.

4 REVISED PER ADDENDUM NO. 4 DATED DECEMBER 9, 2005

ALL DIMENSIONS ARE IN MILLIMETERS UNLESS OTHERWISE SHOWN

R. Valizadeh/V. Toan/Y.L./W.L./F.C.
DESIGN OVERSIGHT
SIGN OFF DATE 08/24/07

DESIGN	BY G. Baker	CHECKED T. Ho
DETAILS	BY D. Turner	CHECKED T. Ho
QUANTITIES	BY G. Baker	CHECKED D. Harrison

PREPARED FOR THE STATE OF CALIFORNIA DEPARTMENT OF TRANSPORTATION

R. Manzanarez
PROJECT ENGINEER

BRIDGE NO. 34-0006L/R
KILOMETER POST 13.2/13.9

SAN FRANCISCO OAKLAND BAY BRIDGE
EAST SPAN SEISMIC SAFETY PROJECT
SELF-ANCHORED SUSPENSION BRIDGE (SUPERSTRUCTURE & TOWER)

DECK DRAINAGE DETAILS NO. 2

Rev. Date: 5-18-98
ORIGINAL SCALE IN MILLIMETERS FOR REDUCED PLANS 0 10 20 30 40 50 60 70 80 90 100
CU 04
EA 0120F1
DISREGARD PRINTS BEARING EARLIER REVISION DATES
SHEET 460R1

FILE => I:\bb\04-01200I\sas\contract plans and cco\cco\in progress\cco#44\revised 8-25-08\dgn\okdkd02.dgn

USERNAME => dwinrow DATE PLOTTED => 27 AUG 2008 TIME PLOTTED => 14:23:16
100 % PS&E

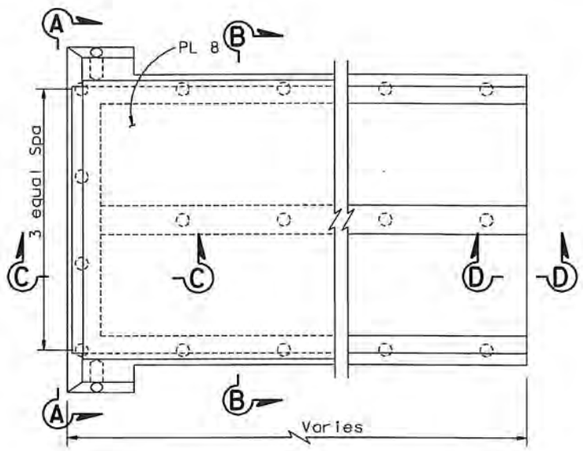

TYPE A

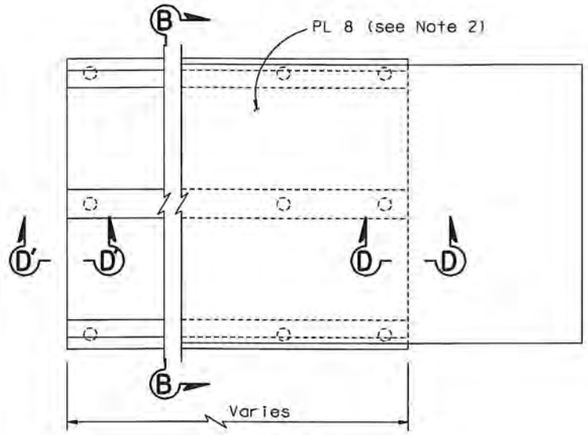

TYPE B

PLAN

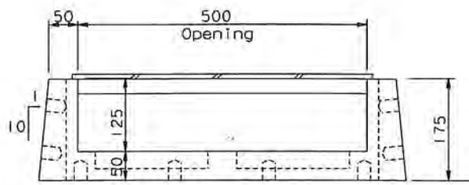

END VIEW A-A

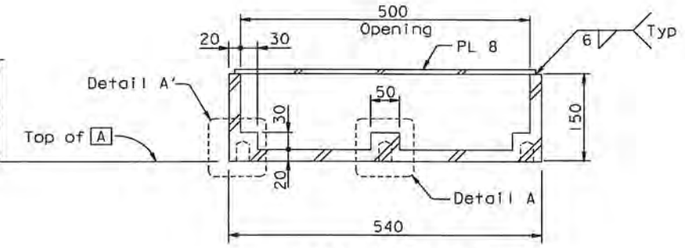

SECTION B-B

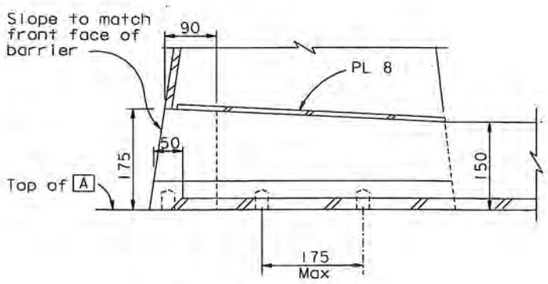

SECTION C-C

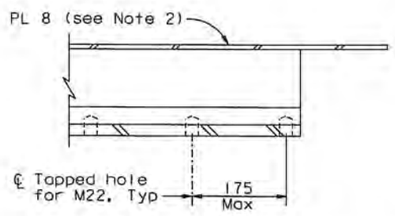

SECTION D-D (Section D'-D' similar)

BARRIER FLUME DETAILS (Drainage Type 2 only)

1:5

DRAINAGE TYPE LOCATION TABLE

See Note 1

PANEL POINT					
TYPE 1			TYPE 2		TYPE 3
(W2)		(E5)	(W5)	(E2)	(E5)
10	66	19	9	West of 11	16
12	68	25	12	19	22
14	70	31	18	25	28
16	72	37	23	29	34
18	74	49	25	35	46
20	76	55	30 (2)	39	52
22	78	61	35 (2)	45	58
24	80	67	37	49	64
26	82	73	46	55	70
28	84	79	48	59	76
30	86	85	53	65	82
32	88	91	55	69	88
34	90	97	61	75	94
36	92	103	66	79	100
38	94	108 (2)	71	85	106
40	96	115	73	89	112
42	98	117	78	95	120
44	100	124	84	99	127
46	102		89	105	
48	104		91	111	
50	106		96	115	
52	110		101	116	
54	112		103	117	
56	114		107 (2)	123	
58	116		113	125	
60	118		116	127	
62			117	128	
64			120.5		
			121		
			122		
			123		
			123.5		
			124		
			127		
			127.5		
			128		

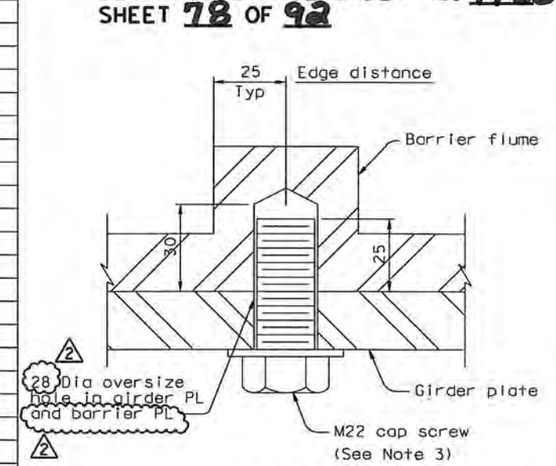

DETAIL A (A' Similar)

1:1

NOTES:

1. Drainage types 1, 2 and 3 are located to the nearest working line indicated. Types 2 and 3 are located east of the panel point unless noted otherwise. Type 1 is located west of panel point.
2. For the extent of PL 8 at Type B Flume, see Section B-B, "Deck Drainage Details No.2" sheet.
3. (2) Cap screws shall be galvanized A307 bolts and shall be used with a thread locking system.

Caltrans Metric

DIST.	COUNTY	ROUTE	KILOMETER POST TOTAL PROJECT	SHEET NO.	TOTAL SHEETS
04	SF	80	13.2/13.9	878R2	1204

George Baker
REGISTERED ENGINEER - CIVIL
12-6-04
PLANS APPROVAL DATE

REGISTERED PROFESSIONAL ENGINEER George S. Baker No. C57112 Exp. 12/31/05 CIVIL STATE OF CALIFORNIA

The State of California or its officers or agents shall not be responsible for the accuracy or completeness of electronic copies of this plan sheet.

T.Y. LIN / MOFFATT & NICHOL
825 BATTERY STREET
SAN FRANCISCO, CA 94111

Caltrans now has a web site! To get to the web site, go to: http://www.dot.ca.gov

REGISTERED PROFESSIONAL ENGINEER Daniel J. Turner No. C 65033 Exp. 06/30/09 CIVIL STATE OF CALIFORNIA

FOR REVISIONS ONLY

REQUESTS FOR INFORMATION NOT ADDRESSED IN THIS CCO REMAIN IN FORCE

MARK	DATE	DESCRIPTIONS	BY	CH'D	CCO#
		REVISIONS			
2	06/13/08	BARRIER MODIFICATIONS	GB	DT	44
1	08/24/07	BARRIER MODIFICATIONS	GB	DT	44

CONTRACT CHANGE ORDER NO. 4450
SHEET 78 OF 92

ALL DIMENSIONS ARE IN MILLIMETERS UNLESS OTHERWISE SHOWN

R. Valizadeh/V. Toan/Y.L./W.L./F.C.
DESIGN OVERSIGHT
SIGN OFF DATE 06/13/08

	BY	CHECKED
DESIGN	G. Baker	T. Ho
DETAILS	D. Turner	T. Ho
QUANTITIES	G. Baker	D. Harrison

PREPARED FOR THE STATE OF CALIFORNIA DEPARTMENT OF TRANSPORTATION

R. Manzanarez
PROJECT ENGINEER

BRIDGE NO. 34-0006L/R
KILOMETER POST 13.2/13.9

CU 04
EA 0120F1

DISREGARD PRINTS BEARING EARLIER REVISION DATES → 05/14/99 | 08/08/99 | 05/31/01 | 04/08/02 | 07/01/02 | 12/19/02

SAN FRANCISCO OAKLAND BAY BRIDGE
EAST SPAN SEISMIC SAFETY PROJECT
SELF-ANCHORED SUSPENSION BRIDGE
(SUPERSTRUCTURE & TOWER)

DECK DRAINAGE DETAIL NO. 3

SHEET 46 R2 OF

Rev. Date: 5-18-98

ORIGINAL SCALE IN MILLIMETERS FOR REDUCED PLANS 0 10 20 30 40 50 60 70 80 90 100

FILE => I:\bb\04-0120F1\sas\contract plans and cco\cco\In progress\cco#44\revised 8-25-08\dgn\akdkd03.dgn

USERNAME => dwinrow DATE PLOTTED => 27 AUG 2008 TIME PLOTTED => 14:25:10

100 % PS&E

REGISTERED ENGINEER - CIVIL

12-6-04

PLANS APPROVAL DATE

Tien Hung Ho No. C 43990 Exp. 6/30/11 CIVIL STATE OF CALIFORNIA

The State of California or its officers or agents shall not be responsible for the accuracy or completeness of electronic copies of this plan sheet.

T.Y. LIN / MOFFATT & NICHOL
825 BATTERY STREET
SAN FRANCISCO, CA 94111

Caltrans now has a web site! To get to the web site, go to: http://www.dot.ca.gov

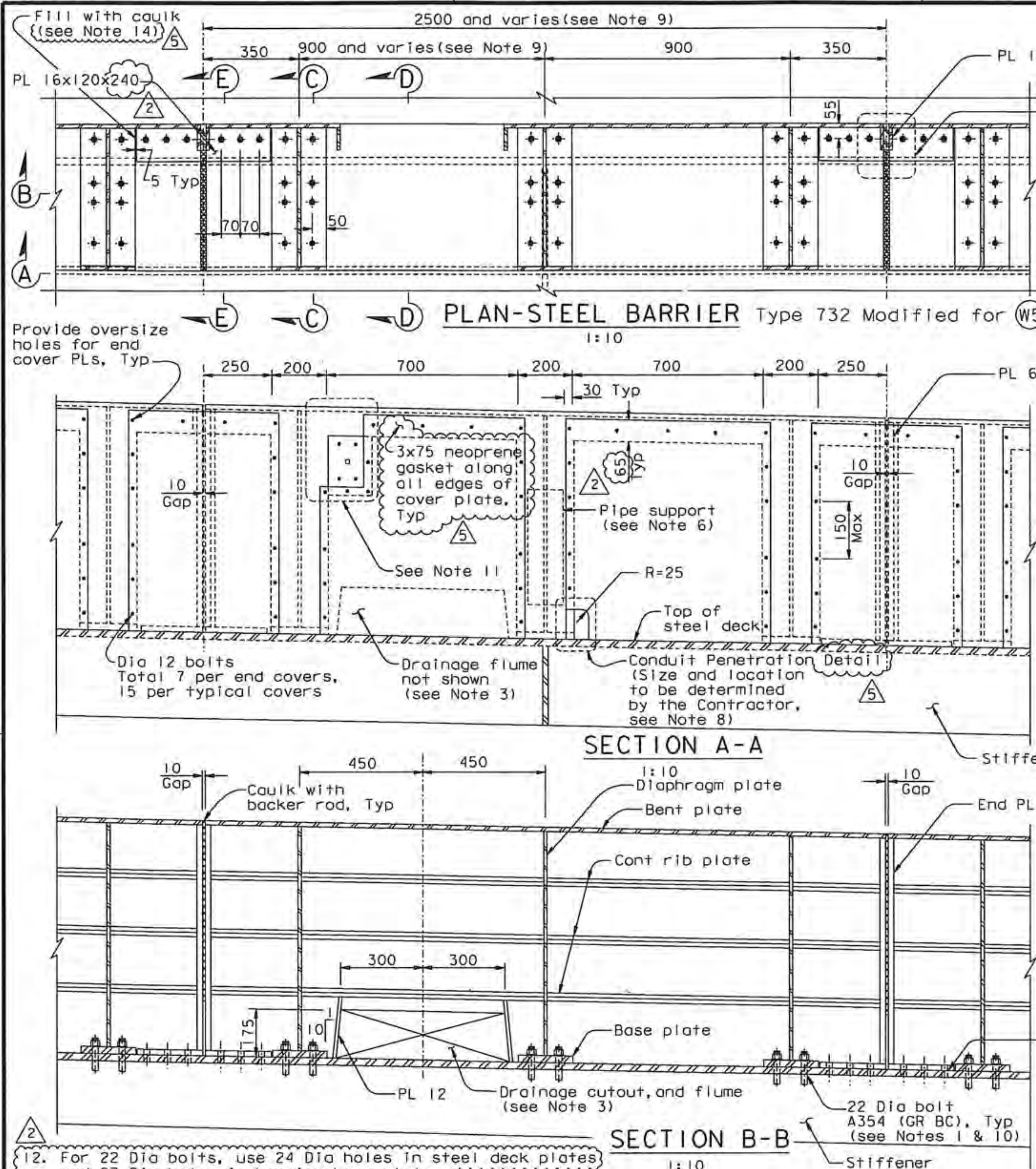

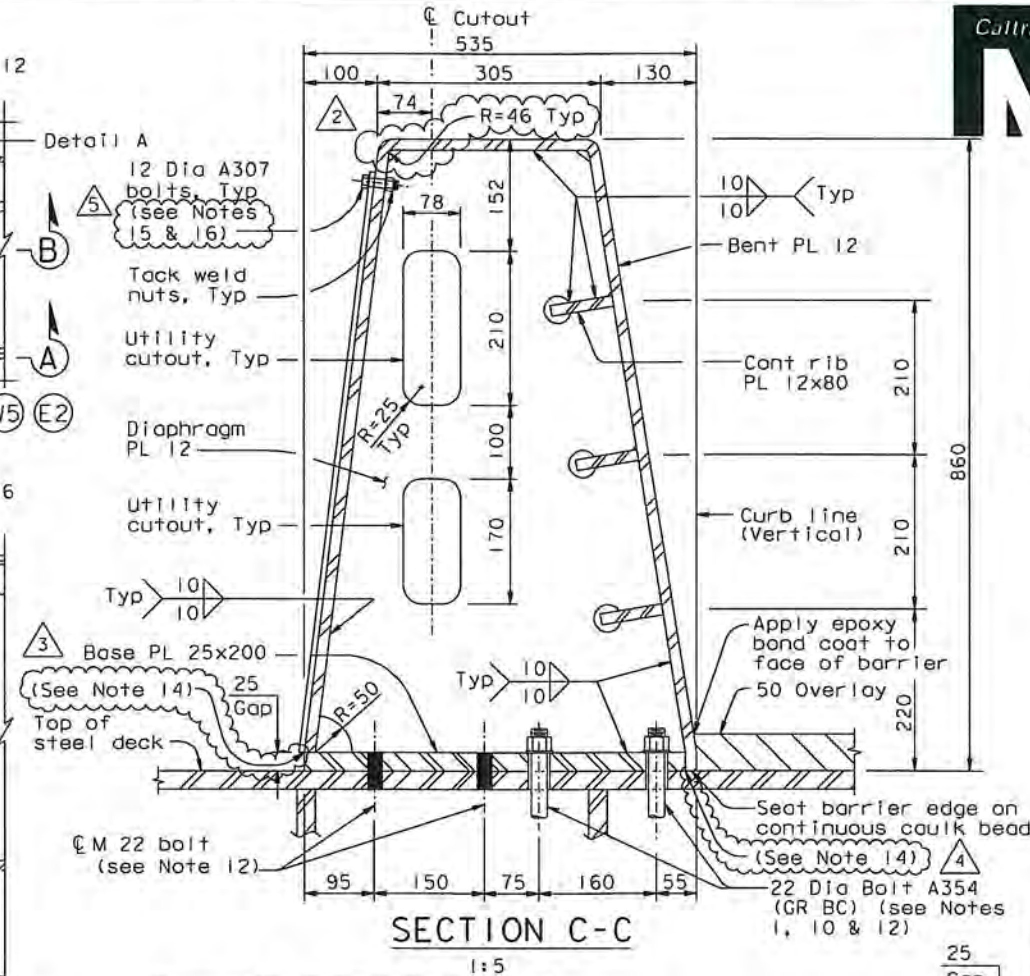

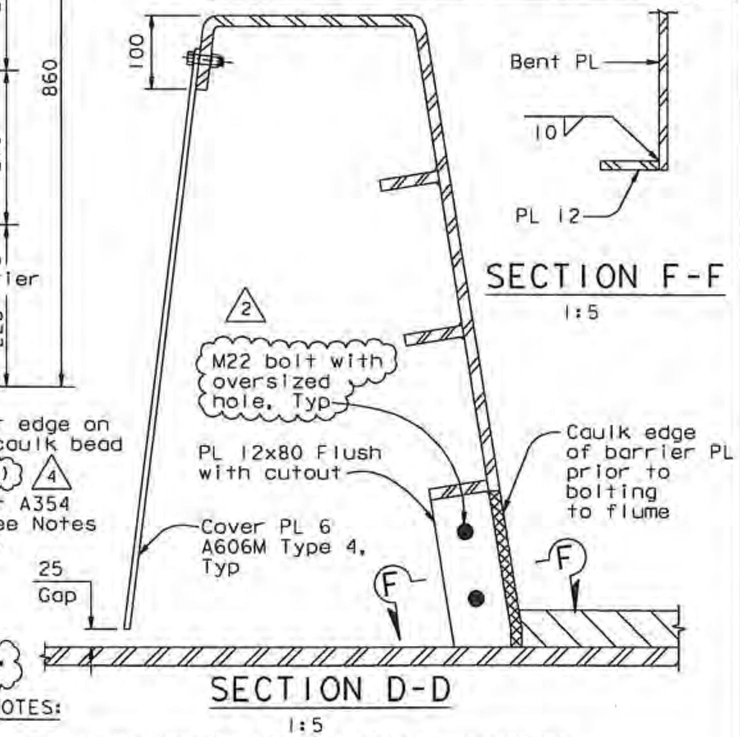

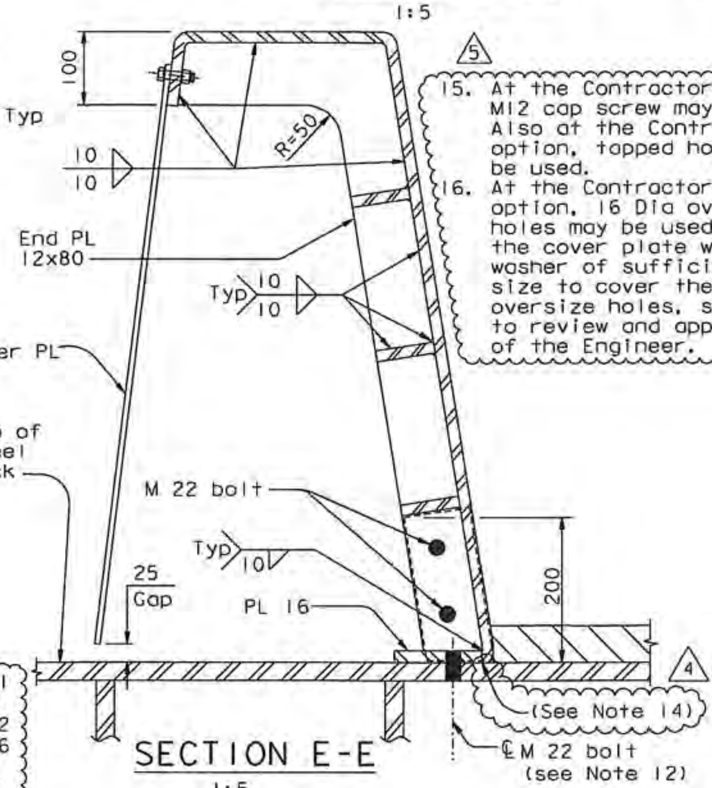

15. At the Contractor's option, M12 cap screw may be used. Also at the Contractor's option, tapped hole may be used.
16. At the Contractor's option, 16 Dia oversize holes may be used in the cover plate with washer of sufficient size to cover the oversize holes, subject to review and approval of the Engineer.

NOTES:

1. For steel barrier to box girder connection details, see "Typical Girder Details" sheets.
2. Inlets and flume plates exist on south barrier of each deck only.
3. For locations and details of drainage features, see "Deck Drainage Details" sheets.
4. For Detail A, see "Barrier Details No. 2" sheet.
5. For conduit penetration thru deck and beveled plate detail, see "Utility Details" sheets.
6. For utilities inside barrier, pipe supports and other attachments to barrier, see "Road Plans".
7. For "Barrier Details" sheets, the Contractor shall verify all controlling field dimensions before ordering or fabricating any material.
8. The Contractor shall provide cutouts for conduit penetrations as required. Conduit penetrations shall be arranged so as to allow removal of cover plate. For conduit penetration details, see "Barrier Details No. 1A" sheet.
9. Barrier length and diaphragm spacing varies west of PP 9 and from PP 118 to Hinge A. See Detail D on "Girder at Pier W2 No. 3" sheet and "Girder Framing Plan No. 4" sheet.
10. Following installation of all HS Bolts all A354 (GR BC) bolts for barrier segment shall be installed snug tight. They shall then be tightened by an additional one-half turn of the nut.
11. For recepticle mounting see "Utility Details No. 2". For locations see "Road Plans".
12. For 22 Dia bolts, use 24 Dia holes in steel deck plates and 27 Dia holes in barrier base plate.
13. For conduit and box support details, see "Road Plans".
14. At the Contractor's option, a seal weld may be used in lieu of caulk seal between: - Base PL 25 & PL 12 - Base PL 25 & PL 16 - PL 16 & PL 12, subject to review and approval of the Engineer.

CONTRACT CHANGE ORDER NO. 44 S0
SHEET 79 OF 92

REQUESTS FOR INFORMATION NOT ADDRESSED IN THIS CCO REMAIN IN FORCE.

ALL DIMENSIONS ARE IN MILLIMETERS UNLESS OTHERWISE SHOWN

MARK	DATE	DESCRIPTIONS	BY	CH'D	CCO#
5	01/21/11	BARRIER MODIFICATIONS	GB	TH	44
4	10/22/10	BARRIER MODIFICATIONS	GB	TH	44
3	09/14/10	BARRIER MODIFICATIONS	GB	TH	44
2	04/18/08	BARRIER MODIFICATIONS	GB	TH	44
1	08/24/07	BARRIER MODIFICATIONS	GB	TH	44
		REVISIONS			

R. Valizadeh/V. Toan/Y.L./W.L./F.C.
DESIGN OVERSIGHT
SIGN OFF DATE 01/21/11

	BY	CHECKED
DESIGN	T. Ho	M. Nader
DETAILS	G. Baker	M. Nader
QUANTITIES	C. Shi	K. Cormier

PREPARED FOR THE STATE OF CALIFORNIA DEPARTMENT OF TRANSPORTATION

R. Manzanarez
PROJECT ENGINEER

BRIDGE NO. 34-0006L/R
KILOMETER POST 13.2/13.9

SAN FRANCISCO OAKLAND BAY BRIDGE
EAST SPAN SEISMIC SAFETY PROJECT
SELF-ANCHORED SUSPENSION BRIDGE (SUPERSTRUCTURE & TOWER)

BARRIER DETAILS NO. 1

Rev. Date: 5-18-98

ORIGINAL SCALE IN MILLIMETERS FOR REDUCED PLANS 0 10 20 30 40 50 60 70 80 90 100

CU 04
EA 0120F1

DISREGARD PRINTS BEARING EARLIER REVISION DATES

REVISION DATES (PRELIMINARY STAGE ONLY) 01/15/99 05/17/99 08/02/99 04/30/02 07/31/02 12/19/02

SHEET 472R5

FILE => i:\bb\04-012001\sas\contract plans and cco\cco\cco#44\21-revision 01-21-11\dgn\okbar01.dgn

USERNAME => DWinrow DATE PLOTTED => 21 JAN 2011 TIME PLOTTED => 14:50:00

100 % PS&E

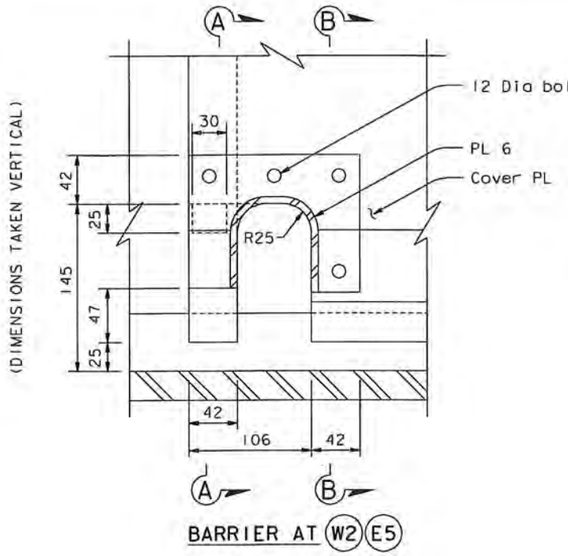

BARRIER AT (W2)(E5)

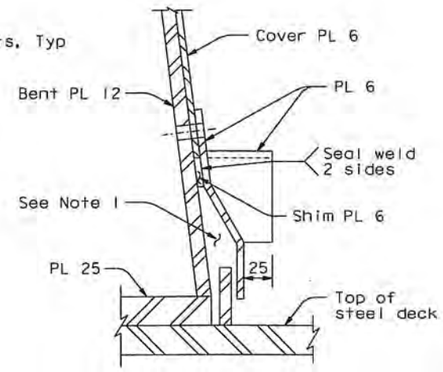

SECTION A-A

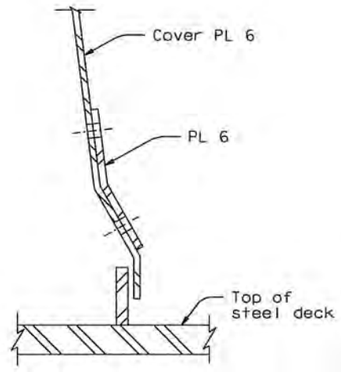

SECTION B-B

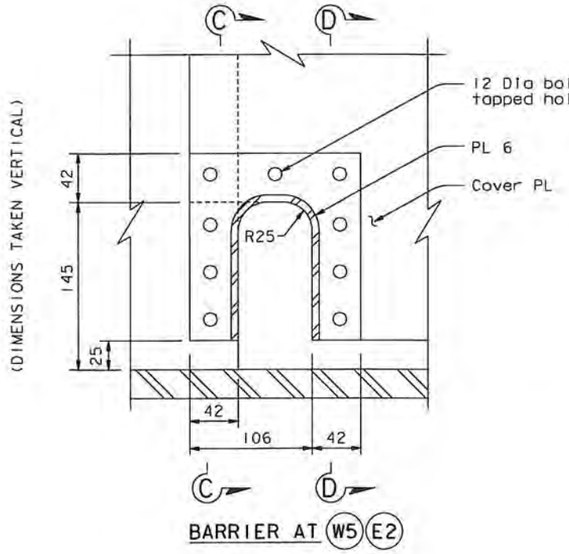

BARRIER AT (W5)(E2)

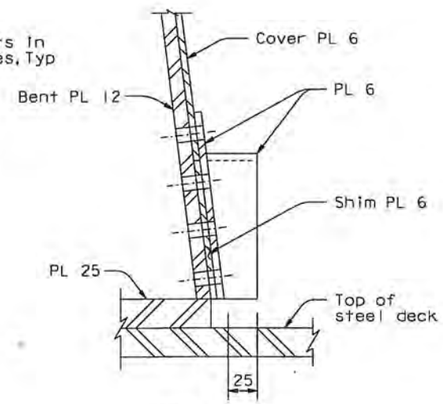

SECTION C-C

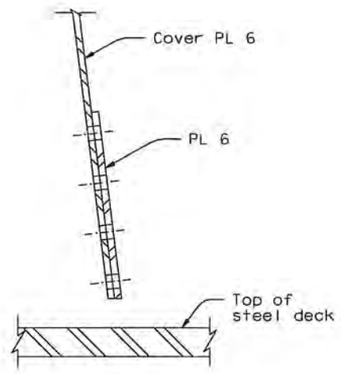

SECTION D-D

CONDUIT PENETRATION DETAILS

1:2.5

NOTES:

1. For caulking details, see "Barrier Details No. 2" sheet.

CONTRACT CHANGE ORDER NO. 4450
SHEET 80 OF 92

REQUESTS FOR INFORMATION NOT ADDRESSED IN THIS CCO REMAIN IN FORCE

DIST.	COUNTY	ROUTE	KILOMETER POST TOTAL PROJECT	SHEET NO.	TOTAL SHEETS
04	SF	80	13.2/13.9	88951	1204

REGISTERED ENGINEER - CIVIL

Tien Hung Ha
No. C 43990
Exp. 06/30/11
CIVIL

01-21-11
PLANS APPROVAL DATE

The State of California or its officers or agents shall not be responsible for the accuracy or completeness of electronic copies of this plan sheet.

REGISTERED PROFESSIONAL ENGINEER * STATE OF CALIFORNIA *

T.Y. LIN / MOFFATT & NICHOL
825 BATTERY STREET
SAN FRANCISCO, CA 94111

Caltrans now has a web site! To get to the web site, go to: http://www.dot.ca.gov

100% PS&E

USERNAME => DWinrow DATE PLOTTED => 21 JAN 2011 TIME PLOTTED => 14:52:01

MARK	DATE	REVISIONS	BY	CH'D	CCO#
6	01/21/11	BARRIER MODIFICATIONS	GB	TH	44

	BY	CHECKED
DESIGN	G. Baker	T. Ho
DETAILS	G. Baker	T. Ho
QUANTITIES	G. Baker	T. Ho

PREPARED FOR THE
STATE OF CALIFORNIA
DEPARTMENT OF TRANSPORTATION

ALL DIMENSIONS ARE IN MILLIMETERS UNLESS OTHERWISE SHOWN

R. Manzanarez
PROJECT ENGINEER

BRIDGE NO. 34-0006L/R
KILOMETER POST 13.2/13.9

SAN FRANCISCO OAKLAND BAY BRIDGE
EAST SPAN SEISMIC SAFETY PROJECT
SELF-ANCHORED SUSPENSION BRIDGE
(SUPERSTRUCTURE & TOWER)

BARRIER DETAILS NO. 1A

R. Vaziadeh/V. Toan/Y. L. /W. L. /F. C.
DESIGN OVERSIGHT
Reza Vaziadeh / Vang P. Toan / Y. Liu
SIGN OFF DATE 01/21/11

Rev. Date: 5-18-98

ORIGINAL SCALE IN MILLIMETERS FOR REDUCED PLANS 0 10 20 30 40 50 60 70 80 90 100

CU 04
EA 0120F1

DISREGARD PRINTS BEARING EARLIER REVISION DATES

REVISION DATES (PRELIMINARY STAGE ONLY): 01/21/11

SHEET 472S1 OF

FILE => I:\bb\04-012001\sas\contract plans and cco\cco\cco#44\21-revision 01-21-11\dgn\akbar01a.dgn

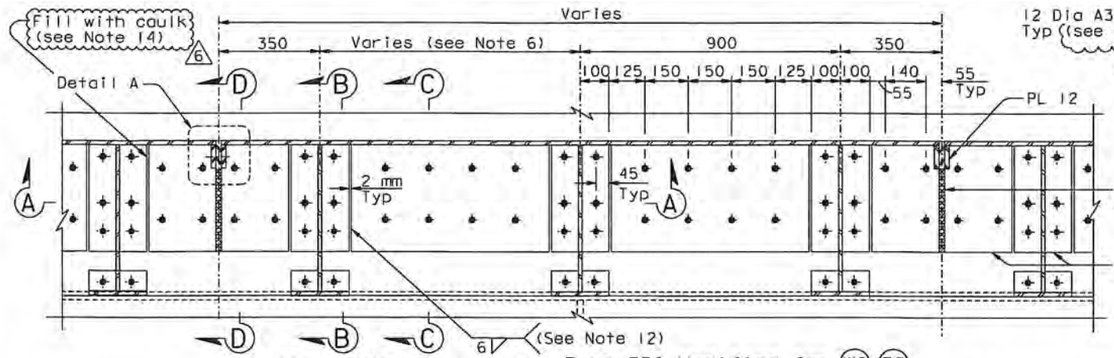

PLAN-STEEL BARRIER Type 732 Modified for (W2) (E5)

1:10

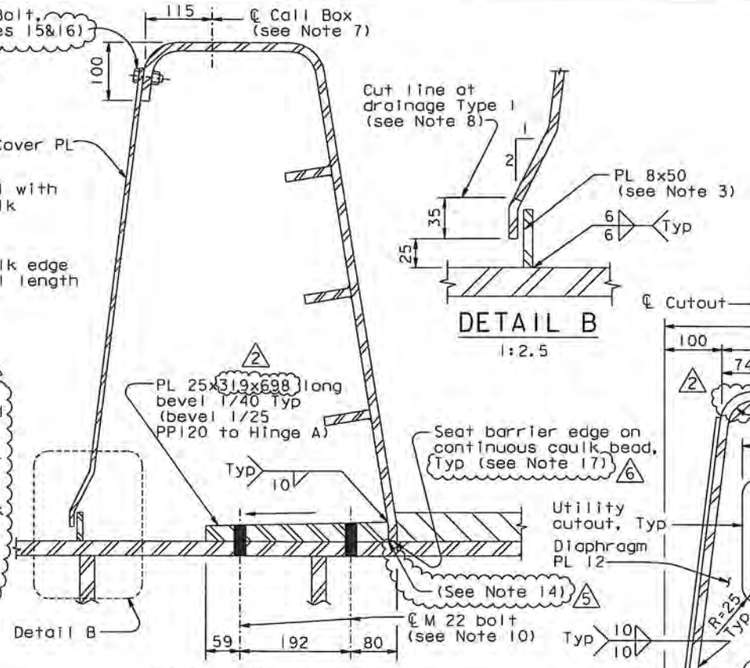

SECTION C-C

1:5

DETAIL B

1:2.5

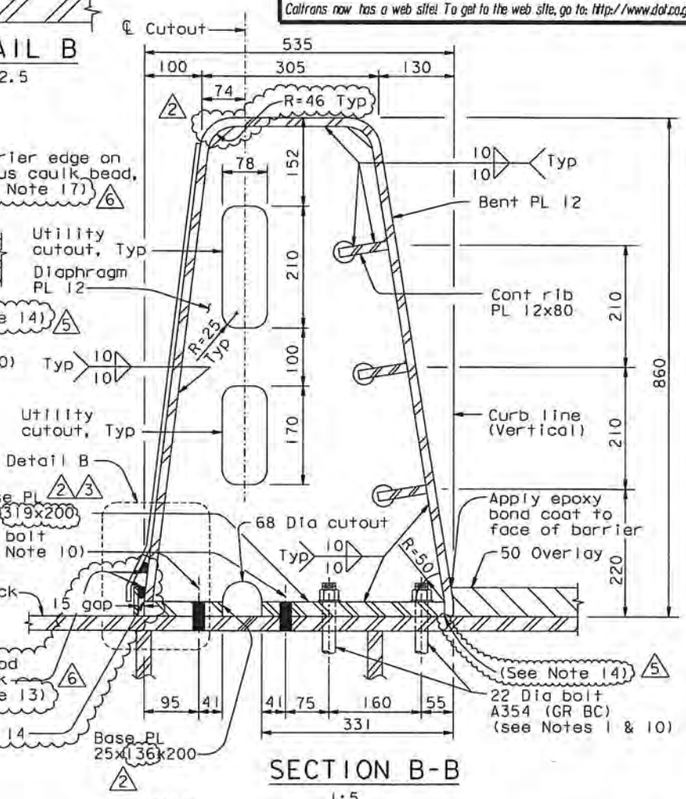

SECTION B-B

1:5

SECTION E-E

1:2.5

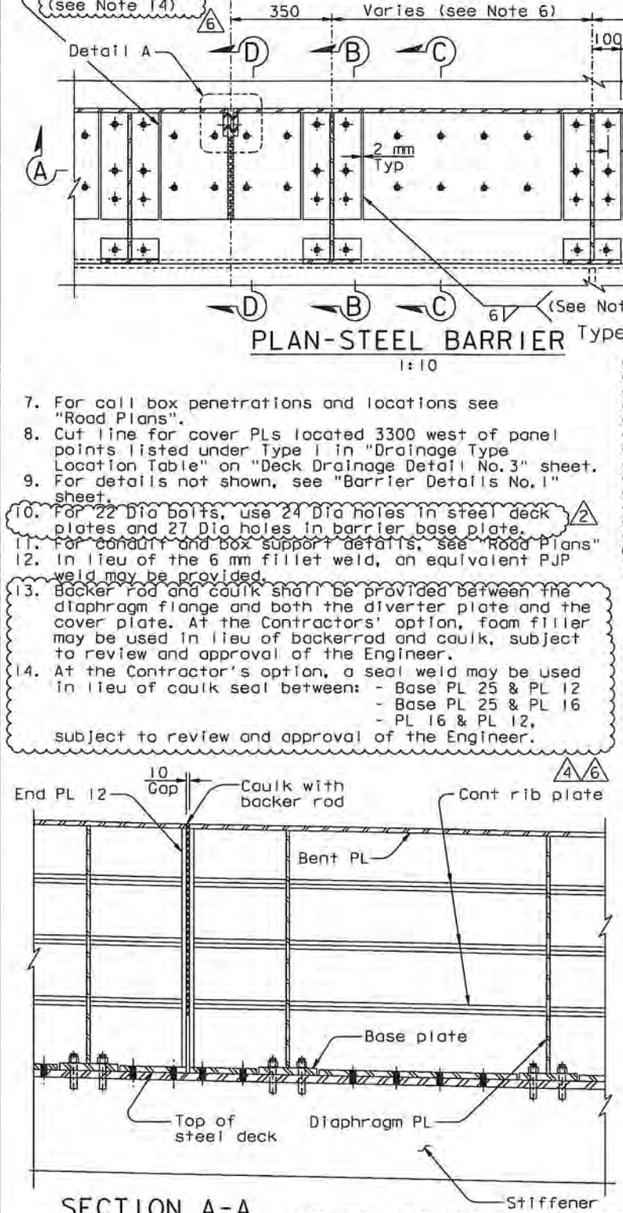

SECTION A-A

1:10

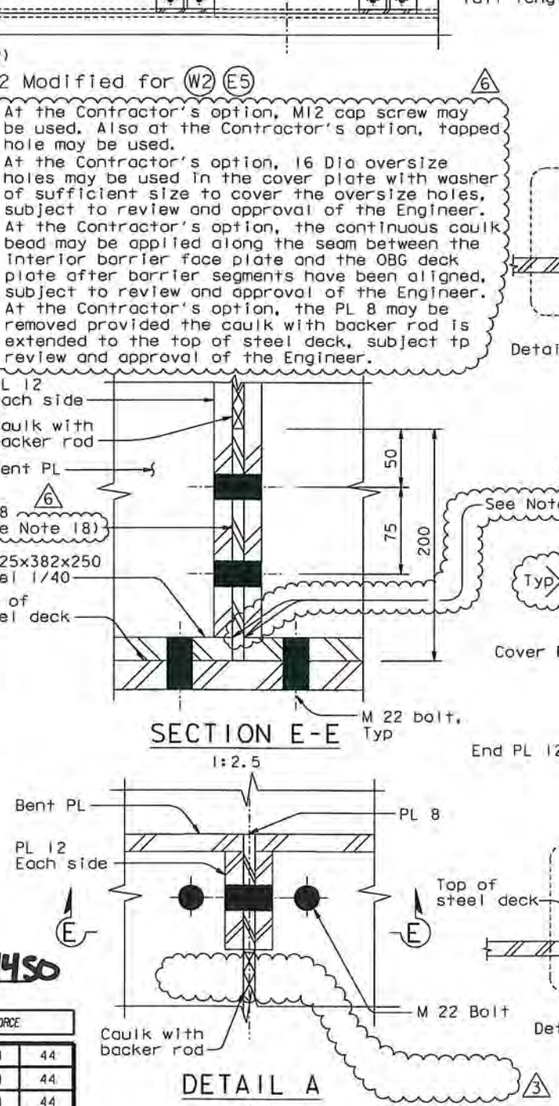

DETAIL A

1:2.5

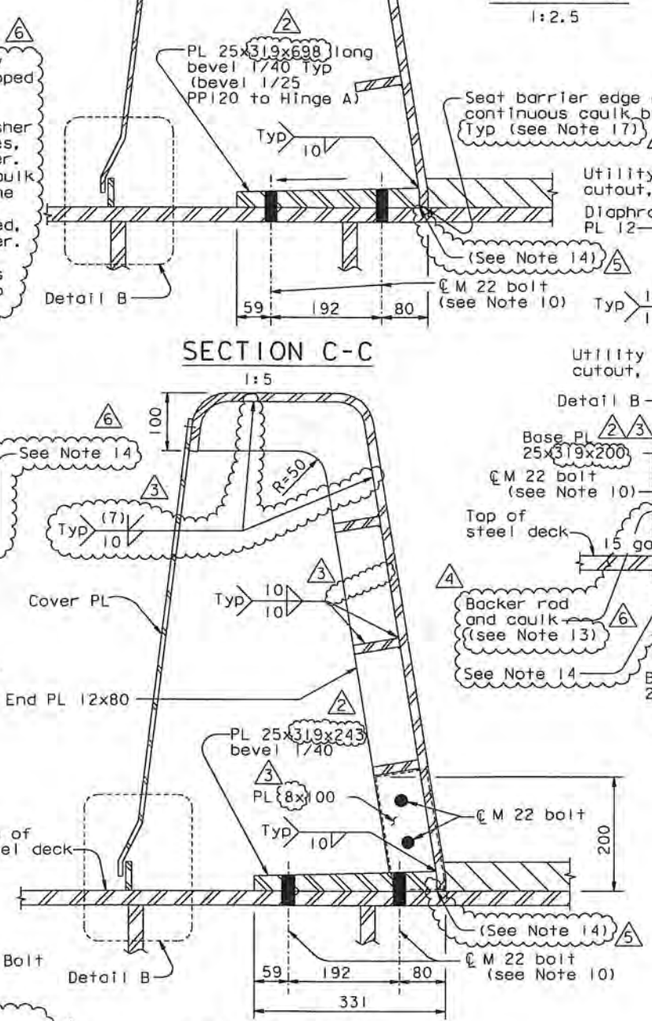

SECTION D-D

1:5

CONTRACT CHANGE ORDER NO. 4450
SHEET 81 OF 92

REQUESTS FOR INFORMATION NOT ADDRESSED IN THIS CCO REMAIN IN FORCE

MARK	DATE	DESCRIPTIONS	BY	CH'D	CCO#
6	01/21/11	BARRIER MODIFICATIONS	DT	TH	44
5	10/22/10	BARRIER MODIFICATIONS	DT	TH	44
4	09/14/10	BARRIER MODIFICATIONS	DT	TH	44
3	04/05/10	BARRIER MODIFICATIONS	GB	TH	44
2	06/13/08	BARRIER MODIFICATIONS	GB	TH	44
1	08/24/07	BARRIER MODIFICATIONS	GB	TH	44

REVISIONS

7. For call box penetrations and locations see "Road Plans".
8. Cut line for cover PLs located 3300 west of panel points listed under Type 1 in "Drainage Type Location Table" on "Deck Drainage Detail No. 3" sheet.
9. For details not shown, see "Barrier Details No. 1" sheet.
10. For 22 Dia bolts, use 24 Dia holes in steel deck plates and 27 Dia holes in barrier base plate.
11. For conduit and box support details, see "Road Plans"
12. In lieu of the 6 mm fillet weld, an equivalent PJP weld may be provided.
13. Backer rod and caulk shall be provided between the diaphragm flange and both the diverter plate and the cover plate. At the Contractors' option, foam filler may be used in lieu of backerrod and caulk, subject to review and approval of the Engineer.
14. At the Contractor's option, a seal weld may be used in lieu of caulk seal between:
    - Base PL 25 & PL 12
    - Base PL 25 & PL 16
    - PL 16 & PL 12,

    subject to review and approval of the Engineer.
15. At the Contractor's option, M12 cap screw may be used. Also at the Contractor's option, tapped hole may be used.
16. At the Contractor's option, 16 Dia oversize holes may be used in the cover plate with washer of sufficient size to cover the oversize holes, subject to review and approval of the Engineer.
17. At the Contractor's option, the continuous caulk bead may be applied along the seam between the interior barrier face plate and the OBG deck plate after barrier segments have been aligned, subject to review and approval of the Engineer.
18. At the Contractor's option, the PL 8 may be removed provided the caulk with backer rod is extended to the top of steel deck, subject tp review and approval of the Engineer.

NOTES:

1. For steel barrier to box girder connection details, see "Typical Girder Details" and "Barrier Details No. 1" sheets.
2. Inlets and flume plates exist on south barrier of each deck only.
3. For locations of drainage features, see "Deck Drainage Details No. 2" sheet. Slot cover over Diverter plate where shown on "Deck Drainage Details No. 1" sheet.
4. For conduit penetration thru deck and beveled plate detail, see "Utility Detail" sheets.
5. For utilities inside barrier, see "Road Plans".
6. Barrier length and diaphragm spacing varies west of PP 9 and from PP 118 to Hinge A. See Detail D on "Girder At Pier W2 No. 3" sheet, and "Girder Framing Plan No. 4" sheet.

ALL DIMENSIONS ARE IN MILLIMETERS UNLESS OTHERWISE SHOWN

DIST.	COUNTY	ROUTE	KILOMETER POST TOTAL PROJECT	SHEET NO.	TOTAL SHEETS
04	SF	80	13.2/13.9	890R6	1204

REGISTERED ENGINEER - CIVIL
Tien Hung Ho, No. C 43990, Exp. 6/30/11, CIVIL, REGISTERED PROFESSIONAL ENGINEER, STATE OF CALIFORNIA
12-6-04
PLANS APPROVAL DATE

The State of California or its officers or agents shall not be responsible for the accuracy or completeness of electronic copies of this plan sheet.

T.Y. LIN / MOFFATT & NICHOL
825 BATTERY STREET
SAN FRANCISCO, CA 94111

Caltrans now has a web site! To get to the web site, go to: http://www.dot.ca.gov

SAN FRANCISCO OAKLAND BAY BRIDGE
EAST SPAN SEISMIC SAFETY PROJECT
SELF-ANCHORED SUSPENSION BRIDGE
(SUPERSTRUCTURE & TOWER)

BARRIER DETAILS NO. 2

DESIGN	BY	T. Ho	CHECKED	M. Nader
DETAILS	BY	G. Baker	CHECKED	M. Nader
QUANTITIES	BY	C. Shi	CHECKED	K. Cormier

PREPARED FOR THE STATE OF CALIFORNIA DEPARTMENT OF TRANSPORTATION

R. Manzanarez
PROJECT ENGINEER

BRIDGE NO. 34-0006L/R
KILOMETER POST 13.2/13.9

R. Vallzadeh/V. Toan/Y.L./W.L./F.C.
DESIGN OVERSIGHT
SIGN OFF DATE 01/21/11

Rev. Date: 5-18-98

ORIGINAL SCALE IN MILLIMETERS FOR REDUCED PLANS 0 10 20 30 40 50 60 70 80 90 100

CU 04
EA 0120F1

DISREGARD PRINTS BEARING EARLIER REVISION DATES

REVISION DATES (PRELIMINARY STAGE ONLY)

SHEET 473R6 OF

FILE => I:\bb\04-012001\sas\contract plans and cco\cco\cco#44\21-revision 01-21-11\dgn\akbar03.dgn

100% PS&E

DATE PLOTTED => 21 JAN 2011 TIME PLOTTED => 14:54:49

USERNAME => DWinrow

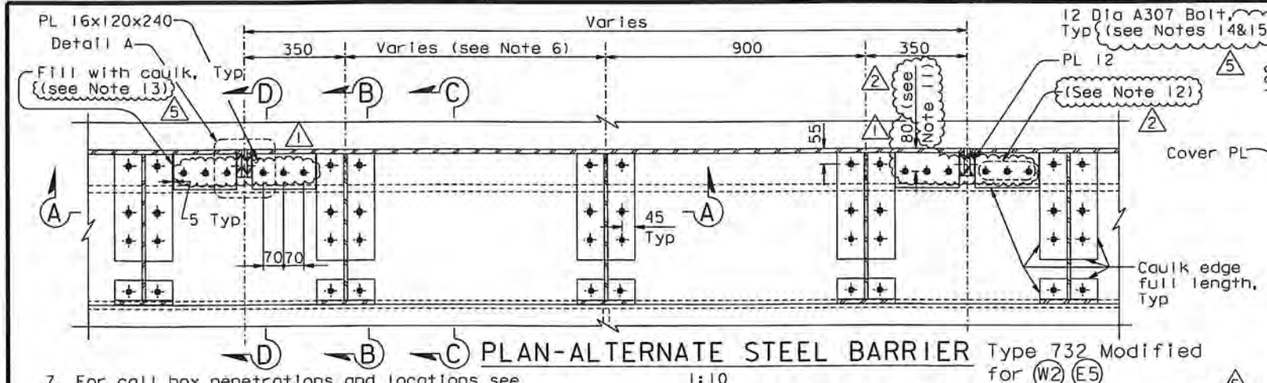

PLAN-ALTERNATE STEEL BARRIER Type 732 Modified for (W2) (E5)

1:10

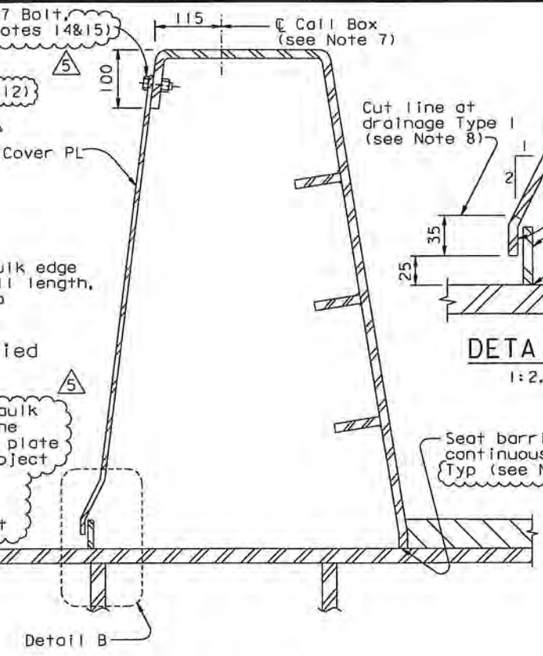

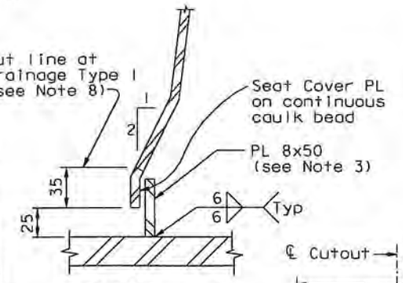

DETAIL B

1:2.5

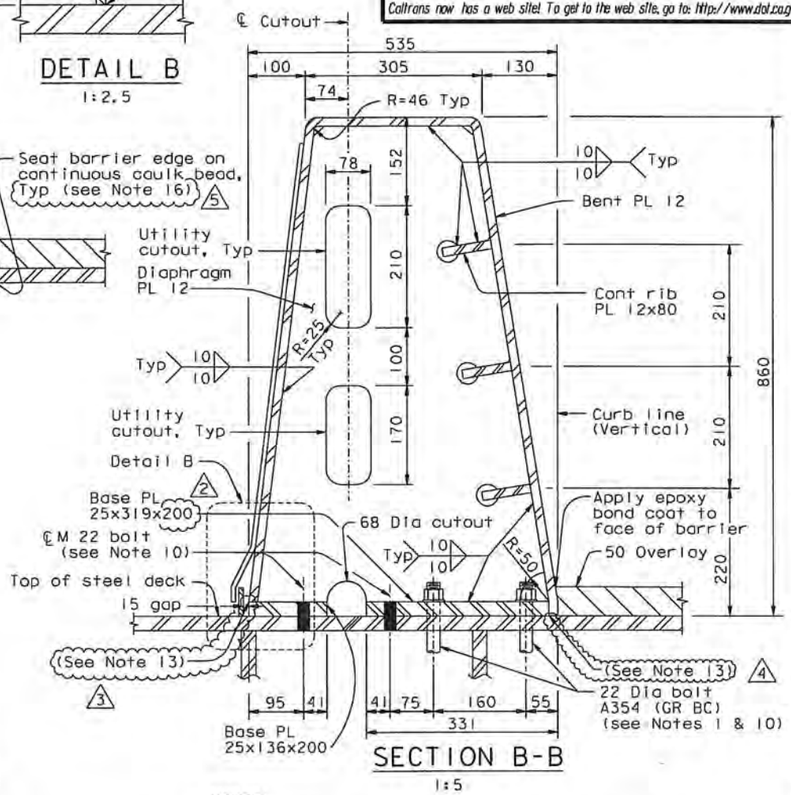

SECTION B-B

1:5

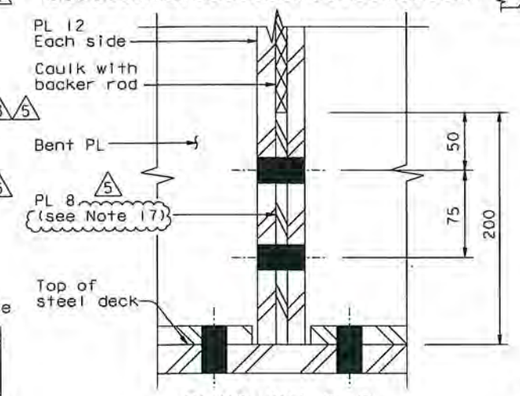

SECTION E-E

1:2.5

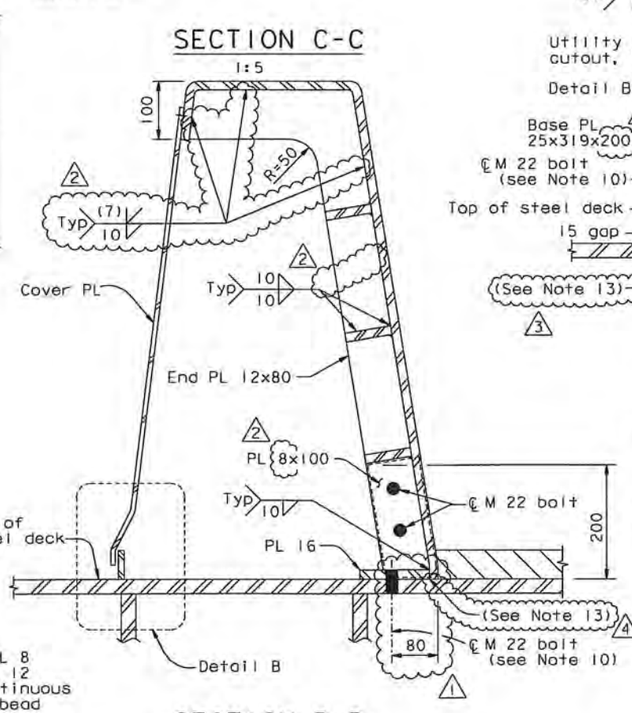

SECTION D-D

1:5

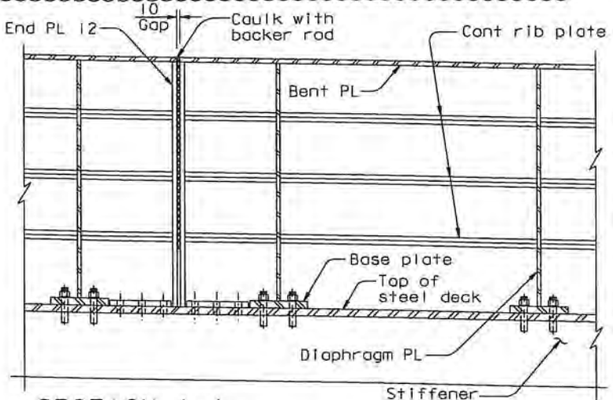

SECTION A-A

1:10

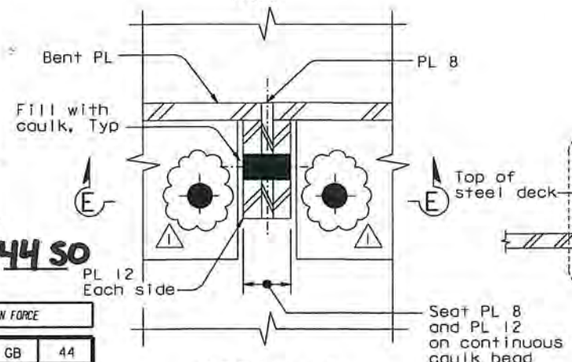

DETAIL A

1:2.5

NOTES:

1. For steel barrier to box girder connection details, see "Typical Girder Details" and "Barrier Details No.1" sheets.
2. Inlets and flume plates exist on south barrier of each deck only.
3. For locations of drainage features, see "Deck Drainage Details No. 2" sheet. Slot cover over Diverter plate where shown on "Deck Drainage Details No.1" sheet.
4. For conduit penetration thru deck and beveled plate detail, see "Utility Detail" sheets.
5. For utilities inside barrier support details, conduit and box, see "Road Plans".
6. Barrier length and diaphragm spacing varies west PP 9 and from PP 118 to Hinge A. See Detail D on "Girder At Pier W2 No. 3" sheet and "Girder Framing Plan No. 4" sheet.

7. For call box penetrations and locations see "Road Plans".
8. Cut line for cover PLs located 3300 west of panel points listed under Type 1 in "Drainage Type Location Table" on "Deck Drainage Detail No.3" sheet.
9. For details not shown, see "Barrier Details No.1" sheet.
10. For 22 Dia bolts, use 24 Dia holes in steel deck plates and 27 Dia holes in barrier base plate.
11. A spacing of 55 mm shall be used between PP 47 and Hinge A.
12. At the Contractor's option, the 3-M22 bolt pattern at each barrier end may be replaced with 4-M22 bolts using 25x319x243 plates between PP 8 and PP 47. For details of PL 25x319x243 not shown, see "Barrier Details No.2" sheet.
13. At the Contractor's option, a seal weld may be used in lieu of caulk seal between:
    - Base PL 25 & PL 12
    - Base PL 25 & PL 16
    - PL 16 & PL 12,

    subject to review and approval of the Engineer.
14. At the Contractor's option, M12 cap screw may be used. Also at the Contractor's option, tapped hole may be used.
15. At the Contractor's option, 16 Dia oversize holes may be used in the cover plate with washer of sufficient size to cover the oversize holes, subject to review and approval of the Engineer.
16. At the Contractor's option, the continuous caulk bead may be applied along the seam between the interior barrier face plate and the OBG deck plate after barrier segments have been aligned, subject to review and approval of the Engineer.
17. At the Contractor's option, the PL 8 may be removed provided the caulk with backer rod is extended to the top of steel deck, subject to review and approval of the Engineer.

CONTRACT CHANGE ORDER NO. 44 SO
SHEET 82 OF 92

REQUESTS FOR INFORMATION NOT ADDRESSED IN THIS CCO REMAIN IN FORCE

MARK	DATE	REVISIONS	BY	CH'D	CCO#
5	01/21/11	BARRIER MODIFICATIONS	TH	GB	44
4	10/22/10	BARRIER MODIFICATIONS	TH	GB	44
3	09/14/10	BARRIER MODIFICATIONS	TH	GB	44
2	04/05/10	BARRIER MODIFICATIONS	TH	GB	44
1	01/29/10	BARRIER MODIFICATIONS	TH	GB	44
0	01/20/10	BARRIER MODIFICATIONS	TH	GB	44

DIST.	COUNTY	ROUTE	KILOMETER POST TOTAL PROJECT	SHEET NO.	TOTAL SHEETS
04	SF	80	13.2/13.9	890SIR5	1204

REGISTERED ENGINEER - CIVIL
Tien Hung Ho
No. C 43990
Exp. 06/30/11
CIVIL
STATE OF CALIFORNIA
01-20-10
PLANS APPROVAL DATE

The State of California or its officers or agents shall not be responsible for the accuracy or completeness of electronic copies of this plan sheet.

T.Y. LIN / MOFFATT & NICHOL
825 BATTERY STREET
SAN FRANCISCO, CA 94111

Caltrans now has a web site! To get to the web site, go to: http://www.dot.ca.gov

ALL DIMENSIONS ARE IN MILLIMETERS UNLESS OTHERWISE SHOWN

	BY		CHECKED
DESIGN	T. Ho		G. Baker
DETAILS	T. Ho		G. Baker
QUANTITIES	T. Ho		G. Baker

PREPARED FOR THE STATE OF CALIFORNIA
DEPARTMENT OF TRANSPORTATION

R. Manzanarez
PROJECT ENGINEER

BRIDGE NO. 34-0006L/R
KILOMETER POST 13.2/13.9

SAN FRANCISCO OAKLAND BAY BRIDGE
EAST SPAN SEISMIC SAFETY PROJECT
SELF-ANCHORED SUSPENSION BRIDGE
(SUPERSTRUCTURE & TOWER)

BARRIER DETAILS NO. 2A

R. Valizadeh/V. Toan/Y.L./W.L./F.C.
DESIGN OVERSIGHT
SIGN OFF DATE 01/21/11

Rev. Date: 5-18-98

ORIGINAL SCALE IN MILLIMETERS FOR REDUCED PLANS 0 10 20 30 40 50 60 70 80 90 100

CU 04
EA 0120F1

DISREGARD PRINTS BEARING EARLIER REVISION DATES →

REVISION DATES (PRELIMINARY STAGE ONLY) 01/20/10

SHEET 473SIR5 OF

FILE => I:\bb\04-012001\sas\contract plans and cco\cco\cco#44\21-revision 01-21-11\dgn\akbar03a.dgn

USERNAME => DWinrow DATE PLOTTED => 21 JAN 2011 TIME PLOTTED => 14:56:04

100 % PS&E

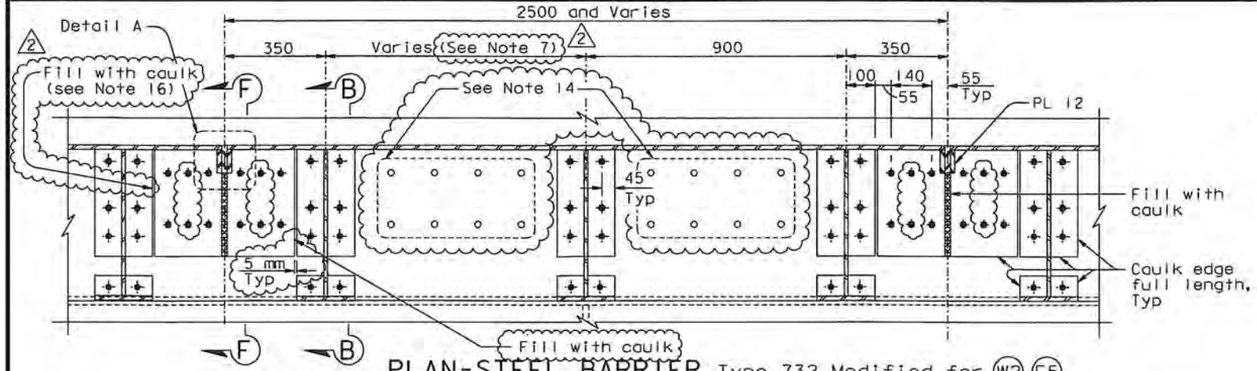

PLAN-STEEL BARRIER Type 732 Modified for (W2) (E5)

1:10

FOR LIFTS 1 THROUGH 6: DECK DRILLED FOR DRAINAGE PLATES (See Note 13)

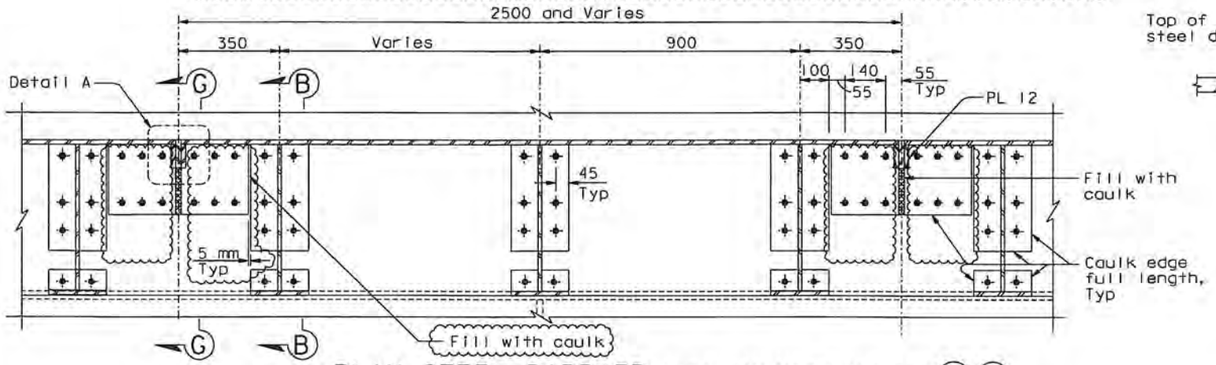

PLAN-STEEL BARRIER Type 732 Modified for (W2) (E5)

1:10

FOR LIFTS 7 THROUGH 14: DECK NOT DRILLED FOR DRAINAGE PLATES (See Note 13)

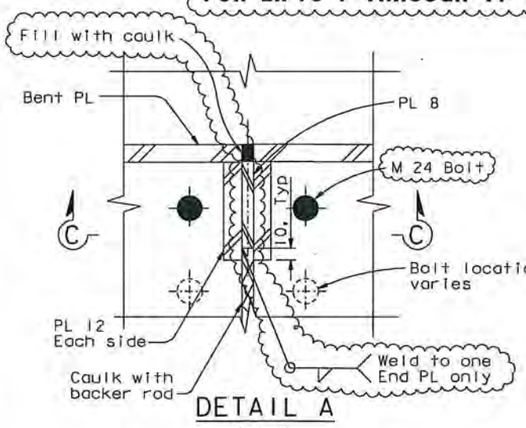

DETAIL A

1:2.5

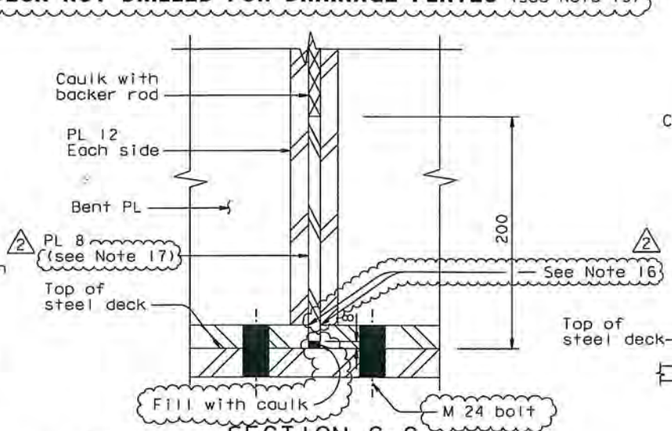

SECTION C-C

1:2.5

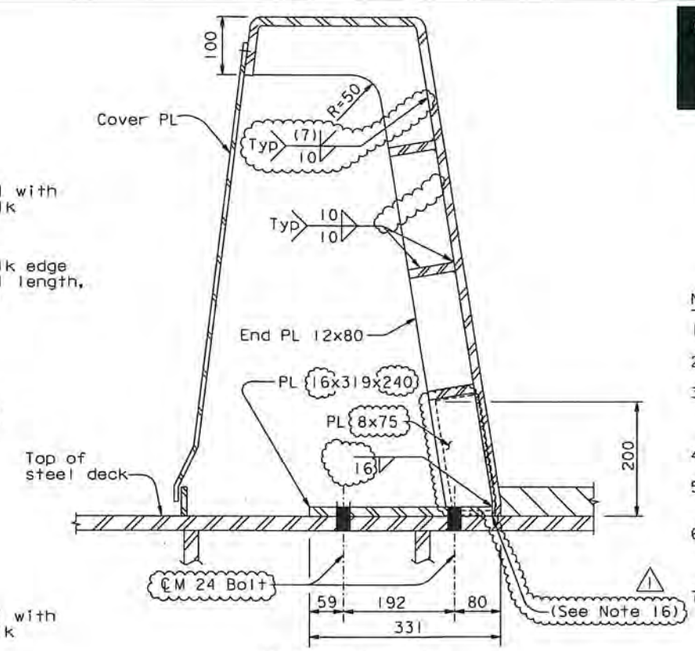

SECTION F-F

1:5

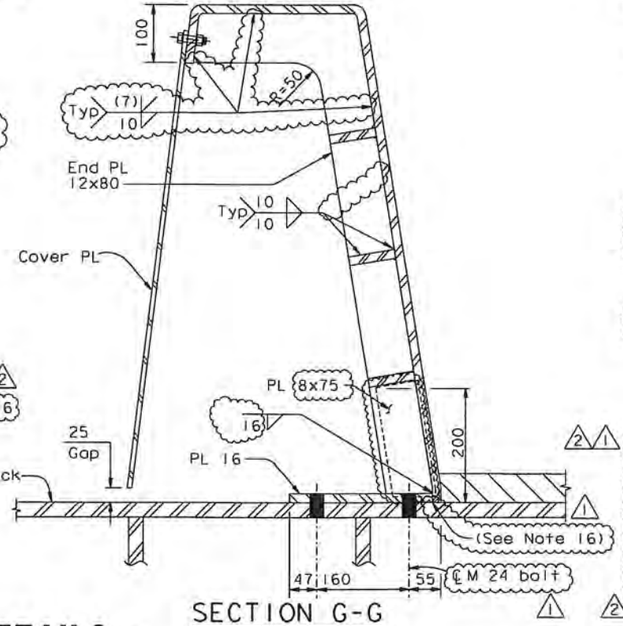

SECTION G-G

1:5

NOTES:

1. For steel barrier to box girder connection details, see "Typical Girder Details" sheets.
2. Inlets and flume plates exist on south barrier of each deck only.
3. For locations and details of drainage features, see "Deck Drainage Details" sheets. Slot cover over Diverter plate where shown on "Deck Drainage Details No. 1" sheet.
4. For conduit penetration thru deck and beveled plate detail, see "Utility Details" sheets.
5. For utilities inside barrier, pipe supports and other attachments to barrier, see "Road Plans".
6. The contractor shall provide cutouts for conduit penetrations as required. Conduit penetrations shall be arranged so as to allow removal of cover plate.
7. Barrier length and diaphragm spacing vary west of PP 9 and from PP 118 to Hinge A. See Detail D on "Girder at Pier W2 No. 3" sheet and "Girder Framing Plan No. 4" sheet. Bolt spacings may be varied within the requirements of "Bolt Dimension Table" on "Typical Girder Details No. 1" sheet.
8. For receptacle mounting see "Utility Details No. 2". For locations see "Road Plans".
9. For conduit and box support details, and for call box penetrations and locations, see "Road Plans".
10. Between PP 120+350 and PP 120+1250, the Contractor shall provide shim plates under the barrier base plates and under the barrier connections as required to fill the gap caused by the OBG kink. The 68 Dia drainage cut-out in the barrier diaphragm shall not be blocked, and the caulk shall be thickened under the barrier along the curb lines between these panel points.
11. Bolt holes shall be standard size in the deck PL and oversize in the barrier.
12. All bolts between the barrier and the deck shall be tensioned prior to load transfer.
13. For Section B-B and Details not shown for Lines W2/E5, see "Barrier Details No. 2".
14. Drainage PL 25x319x698 not required. Fill all drilled holes with M22 HS bolts.
15. Following installation of all HS bolts all anchor rods for barrier segment shall be installed snug tight. They shall then be tightened by an additional one-half turn of the nut.
16. At the Contractor's option, a seal weld may be used in lieu of caulk seal between:
    - Base PL 25 & PL 12
    - Base PL 25 & PL 16
    - PL 16 & PL 12, subject to review and approval of the Engineer.
17. At the Contractor's option, the PL 8 may be removed provided the caulk with backer rod is extended to the top of steel deck, subject to review and approval of the Engineer.

Caltrans Metric

DIST.	COUNTY	ROUTE	KILOMETER POST TOTAL PROJECT	SHEET NO.	TOTAL SHEETS
04	SF	80	13.2/13.9	890S2R2	1204

REGISTERED ENGINEER - CIVIL

04-05-10

PLANS APPROVAL DATE

REGISTERED PROFESSIONAL ENGINEER — Marwan N. Nader, No. C 054426, Exp. 12/31/11, CIVIL, STATE OF CALIFORNIA

The State of California or its officers or agents shall not be responsible for the accuracy or completeness of electronic copies of this plan sheet.

T.Y. LIN / MOFFATT & NICHOL
825 BATTERY STREET
SAN FRANCISCO, CA 94111

Caltrans now has a web site! To get to the web site, go to: http://www.dot.ca.gov

CONTRACT CHANGE ORDER NO. 4450
SHEET 83 OF 92

REQUESTS FOR INFORMATION NOT ADDRESSED IN THIS CCO REMAIN IN FORCE

MARK	DATE	DESCRIPTIONS	BY	CH'D	CCO#
2	01/21/11	BARRIER MODIFICATIONS	GB	MN	44
1	10/22/10	BARRIER MODIFICATIONS	GB	MN	44
0	04/05/10	BARRIER MODIFICATIONS	GB	MN	44

REVISIONS

ALTERNATE BARRIER DETAILS - CONNECTION BEFORE LOAD TRANSFER

ALL DIMENSIONS ARE IN MILLIMETERS UNLESS OTHERWISE SHOWN

DESIGN	BY M. Noder	CHECKED G. Baker	
DETAILS	BY D. Turner	CHECKED J. Duxbury	
QUANTITIES	BY J. Duxbury	CHECKED D. Turner	

PREPARED FOR THE STATE OF CALIFORNIA DEPARTMENT OF TRANSPORTATION

R. Manzanarez
PROJECT ENGINEER

BRIDGE NO. 34-0006L/R
KILOMETER POST 13.2/13.9

SAN FRANCISCO OAKLAND BAY BRIDGE
EAST SPAN SEISMIC SAFETY PROJECT
SELF-ANCHORED SUSPENSION BRIDGE (SUPERSTRUCTURE & TOWER)

BARRIER DETAILS NO. 2B

R. Valizadeh/V. Toan/Y.L./W.L./F.C.
DESIGN OVERSIGHT
SIGN OFF DATE 01/21/11

Rev. Date: 5-18-98

ORIGINAL SCALE IN MILLIMETERS FOR REDUCED PLANS 0 10 20 30 40 50 60 70 80 90 100

CU 04
EA 0120F1

DISREGARD PRINTS BEARING EARLIER REVISION DATES

REVISION DATES (PRELIMINARY STAGE ONLY): 04/05/10

SHEET 473S2R2 OF

FILE => I:\bb\04-012001\sas\contract plans and cco\cco\cco#44\21-revision 01-21-11\dgn\akbar03b.dgn

USERNAME => DWinrow DATE PLOTTED => 21 JAN 2011 TIME PLOTTED => 14:57:50

100 % PS&E

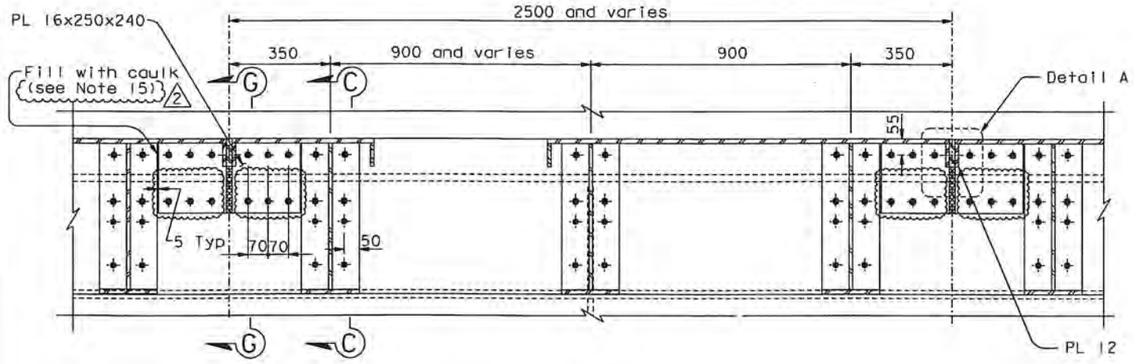

PLAN-STEEL BARRIER Type 732 Modified for (W5) (E2)
1:10 (See Note 13)

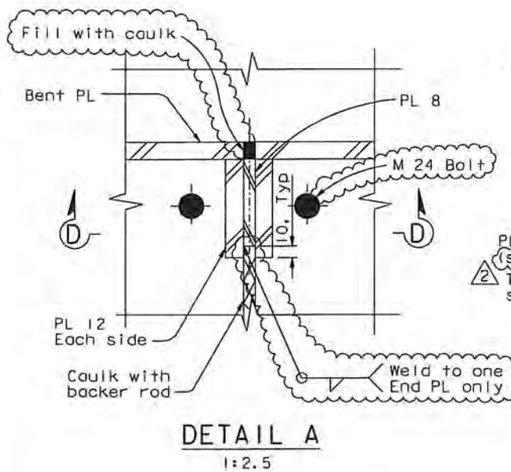

DETAIL A
1:2.5

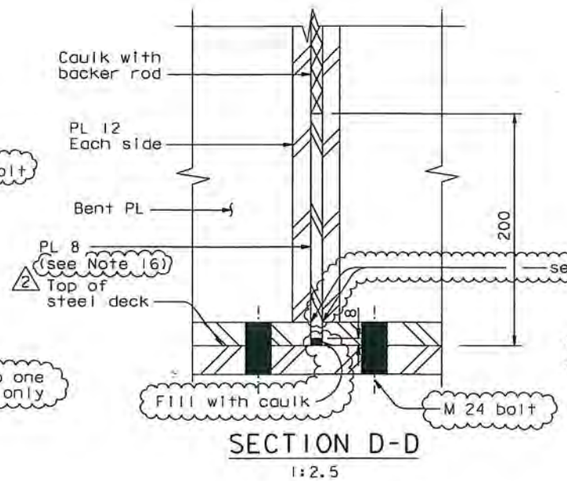

SECTION D-D
1:2.5

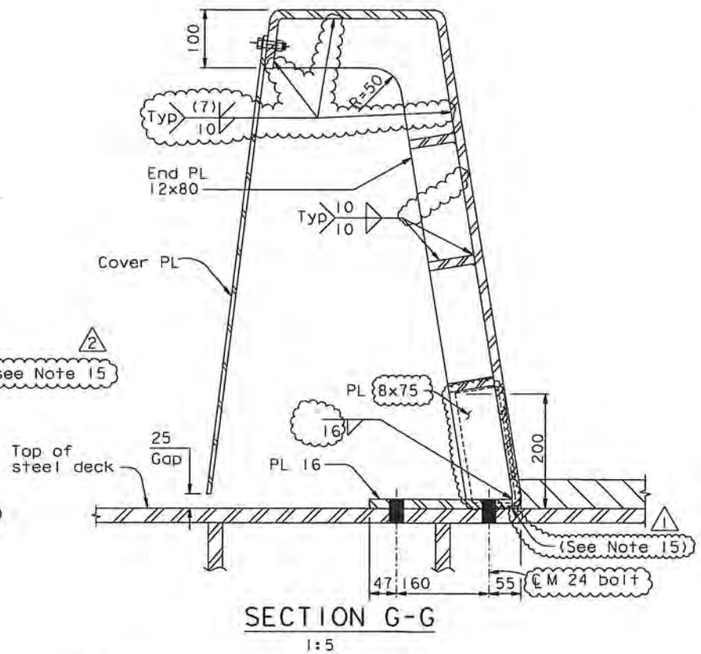

SECTION G-G
1:5

2 16. At the Contractor's option, the PL 8 may be removed provided the caulk with backer rod is extended to the top of steel deck, subject to review and approval of the Engineer.

CONTRACT CHANGE ORDER NO. 4450
SHEET 84 OF 92

REQUESTS FOR INFORMATION NOT ADDRESSED IN THIS CCO REMAIN IN FORCE

MARK	DATE	DESCRIPTIONS	BY	CH'D	CCO#
2	01/21/11	BARRIER MODIFICATIONS	GB	MN	44
1	10/22/10	BARRIER MODIFICATIONS	GB	MN	44
0	04/05/10	BARRIER MODIFICATIONS	GB	MN	44

REVISIONS

ALTERNATE BARRIER DETAILS - CONNECTION BEFORE LOAD TRANSFER

ALL DIMENSIONS ARE IN MILLIMETERS UNLESS OTHERWISE SHOWN

	BY	CHECKED
DESIGN	M. Nader	G. Baker
DETAILS	D. Turner	J. Duxbury
QUANTITIES	J. Duxbury	D. Turner

PREPARED FOR THE STATE OF CALIFORNIA DEPARTMENT OF TRANSPORTATION

R. Manzanarez
PROJECT ENGINEER

BRIDGE NO. 34-0006L/R
KILOMETER POST 13.2/13.9

SAN FRANCISCO OAKLAND BAY BRIDGE
EAST SPAN SEISMIC SAFETY PROJECT
SELF-ANCHORED SUSPENSION BRIDGE
(SUPERSTRUCTURE & TOWER)

BARRIER DETAILS NO. 2C

R. Vaziadeh/V. Toan/Y.L./W.L./F.C.
DESIGN OVERSIGHT
SIGN OFF DATE 01/21/11

Rev. Date: 5-18-98

ORIGINAL SCALE IN MILLIMETERS FOR REDUCED PLANS 0 10 20 30 40 50 60 70 80 90 100

CU 04
EA 0120F1

DISREGARD PRINTS BEARING EARLIER REVISION DATES →

REVISION DATES (PRELIMINARY STAGE ONLY): 04/05/10

SHEET 47353R2 OF

FILE => I:\bb\04-0120F1\sos\contract plans and cco\cco\cco#44\21-revision 01-21-11\dgn\akbar03c.dgn

Caltrans Metric

DIST.	COUNTY	ROUTE	KILOMETER POST TOTAL PROJECT	SHEET NO.	TOTAL SHEETS
04	SF	80	13.2/13.9	890S3R2	1204

REGISTERED ENGINEER - CIVIL

04-05-10
PLANS APPROVAL DATE

REGISTERED PROFESSIONAL ENGINEER Marwan N. Nader No. C 054426 Exp. 12/31/11 CIVIL STATE OF CALIFORNIA

The State of California or its officers or agents shall not be responsible for the accuracy or completeness of electronic copies of this plan sheet.

T.Y. LIN / MOFFATT & NICHOL
825 BATTERY STREET
SAN FRANCISCO, CA 94111

Caltrans now has a web site! To get to the web site, go to: http://www.dot.ca.gov

NOTES:

1. For steel barrier to box girder connection details, see "Typical Girder Details" sheets.
2. Inlets and flume plates exist on south barrier of each deck only.
3. For locations and details of drainage features, see "Deck Drainage Details" sheets. Slot cover over Diverter plate where shown on "Deck Drainage Details No. 1" sheet.
4. For conduit penetration thru deck and beveled plate detail, see "Utility Details" sheets.
5. For utilities inside barrier, pipe supports and other attachments to barrier, see "Road Plans".
6. The contractor shall provide cutouts for conduit penetrations as required. Conduit penetrations shall be arranged so as to allow removal of cover plate.
7. Barrier length and diaphragm spacing vary west of PP 9 and from PP 118 to Hinge A. See Detail D on "Girder at Pier W2 No. 3" sheet and "Girder Framing Plan No. 4" sheet. Bolt spacings may be varied within the requirements of "Bolt Dimension Table" on "Typical Girder Details No. 1" sheet.
8. For receptacle mounting see "Utility Details No. 2". For locations see "Road Plans".
9. For conduit and box support details, and for call box penetrations and locations, see "Road Plans".
10. Between PP 120+350 and PP 120+1250, the Contractor shall provide shim plates under the barrier base plates and under the barrier connections as required to fill the gap caused by the OBG kink. The 68 Dia drainage cut-out in the barrier diaphragm shall not be blocked, and the caulk shall be thickened under the barrier along the curb lines between these panel points.
11. Bolt holes shall be standard size in the deck PL and oversize in the barrier.
12. All bolts between the barrier and the deck shall be tensioned prior to load transfer.
13. For Section C-C and Details not shown for Lines W5/E2, see "Barrier Details No. 1".
14. Following installation of all HS bolts all anchor rods for barrier segment shall be installed snug tight. They shall then be tightened by an additional one-half turn of the nut.

2 1 15. At the Contractor's option, a seal weld may be used in lieu of caulk seal between:
- Base PL 25 & PL 12
- Base PL 25 & PL 16
- PL 16 & PL 12,
subject to review and approval of the Engineer.

100 % PS&E

USERNAME => DWinrow DATE PLOTTED => 21 JAN 2011 TIME PLOTTED => 14:59:30

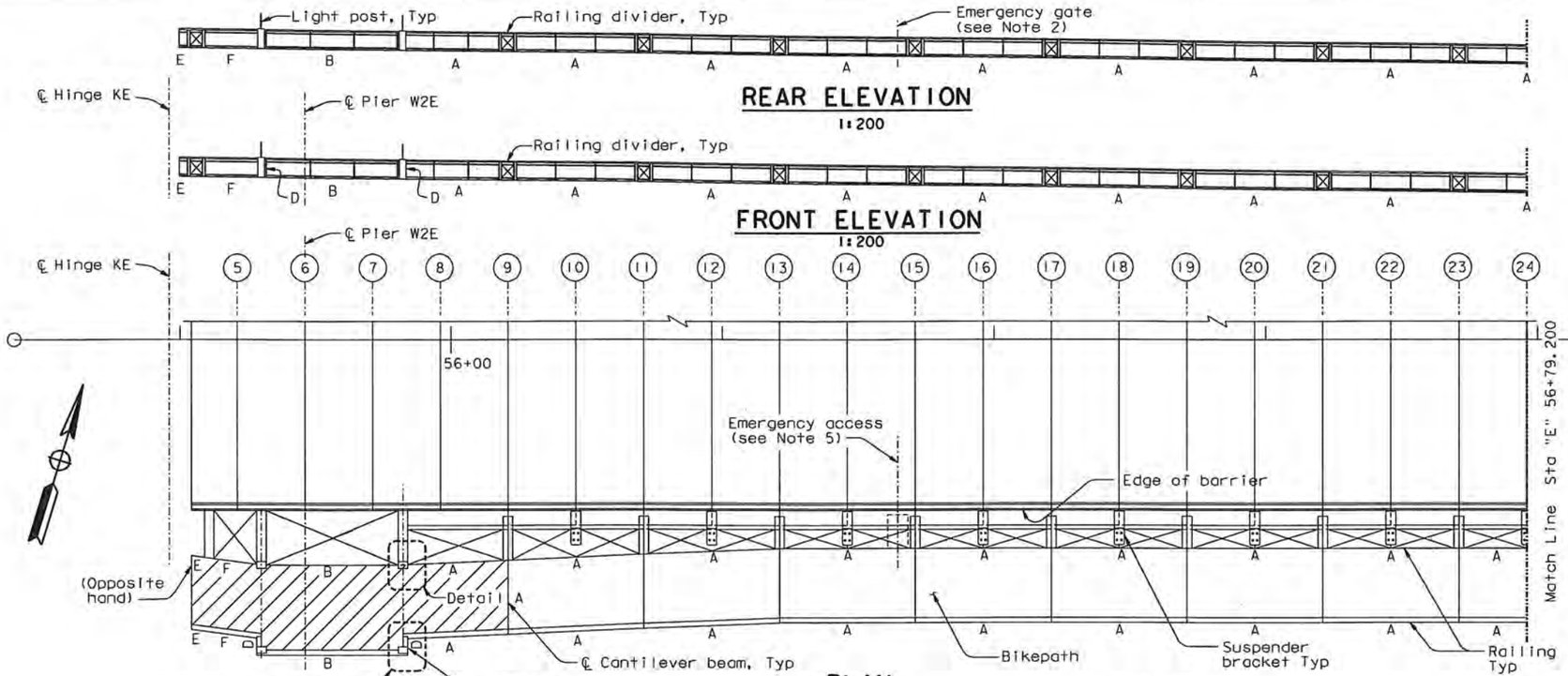

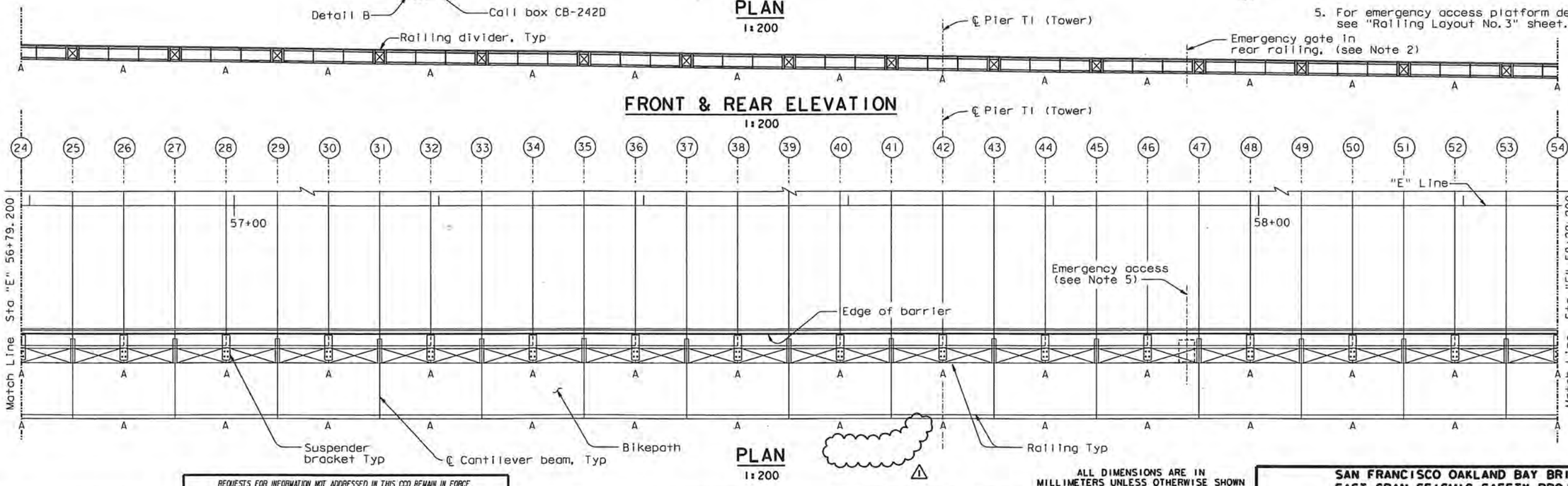

DIST.	COUNTY	ROUTE	KILOMETER POST TOTAL PROJECT	SHEET NO.	TOTAL SHEETS
04	SF	80	13.2/13.9	895R1	1204

REGISTERED ENGINEER - CIVIL

12-6-04
PLANS APPROVAL DATE

REGISTERED PROFESSIONAL ENGINEER — Tien Hung Ho — No. C 43990 — Exp. 6/30/09 — CIVIL — STATE OF CALIFORNIA

The State of California or its officers or agents shall not be responsible for the accuracy or completeness of electronic copies of this plan sheet.

T.Y. LIN / MOFFATT & NICHOL
825 BATTERY STREET
SAN FRANCISCO, CA 94111

Caltrans now has a web site! To get to the web site, go to: http://www.dot.ca.gov

"E" Line

LEGEND:

A Indicates Railing Panel Type Number

(51) Indicates Panel Point

Indicates area of bikepath (including railing) to be installed by others after demolishing of existing structure

NOTES:

1. For railing panel Type A through Type F, see "Railing Details No.1" sheet.
2. For emergency gate details, see "Railing Details No.5" sheet.
3. For "Detail A" and "Detail B", see "Railing Details No.4" sheet.
4. For call box location and details, see "Road Plans".
5. For emergency access platform details, see "Railing Layout No.3" sheet.

REQUESTS FOR INFORMATION NOT ADDRESSED IN THIS CCO REMAIN IN FORCE.

MARK	DATE	DESCRIPTIONS	BY	CH'D	CCO#
1	07/16/08	BARRIER MODIFICATIONS	TH	JD	44

REVISIONS

CONTRACT CHANGE ORDER NO. 4450
SHEET 85 OF 92

R. Vallzadeh/V. Toan/Y.L./W.L./F.C.
DESIGN OVERSIGHT
SIGN OFF DATE 07/16/08

Rev. Date: 5-18-98

DESIGN	BY T. Ho	CHECKED	C. Redfield
DETAILS	BY R. Xu	CHECKED	C. Redfield
QUANTITIES	BY C. Baker	CHECKED	K. Carmier

ORIGINAL SCALE IN MILLIMETERS FOR REDUCED PLANS 0 10 20 30 40 50 60 70 80 90 100

PREPARED FOR THE STATE OF CALIFORNIA DEPARTMENT OF TRANSPORTATION

ALL DIMENSIONS ARE IN MILLIMETERS UNLESS OTHERWISE SHOWN

R. Manzanarez
PROJECT ENGINEER

CU 04
EA 0120F1

BRIDGE NO.	34-0006L/R
KILOMETER POST	13.2/13.9

DISREGARD PRINTS BEARING EARLIER REVISION DATES →

REVISION DATES (PRELIMINARY STAGE ONLY): 05/23/96 05/27/99 05/27/01 05/28/02 07/20/02 12/15/02

SAN FRANCISCO OAKLAND BAY BRIDGE
EAST SPAN SEISMIC SAFETY PROJECT
SELF-ANCHORED SUSPENSION BRIDGE
(SUPERSTRUCTURE & TOWER)

RAILING LAYOUT NO. 1

SHEET 478R1 OF

FILE => I:\bb\04-0120f1\sas\contract plans and cco\cco\in progress\cco#44\revised 8-25-08\dgn\akrlg01.dgn

USERNAME => dwinrow DATE PLOTTED => 27 AUG 2008 TIME PLOTTED => 14:33:30

100 % PS&E

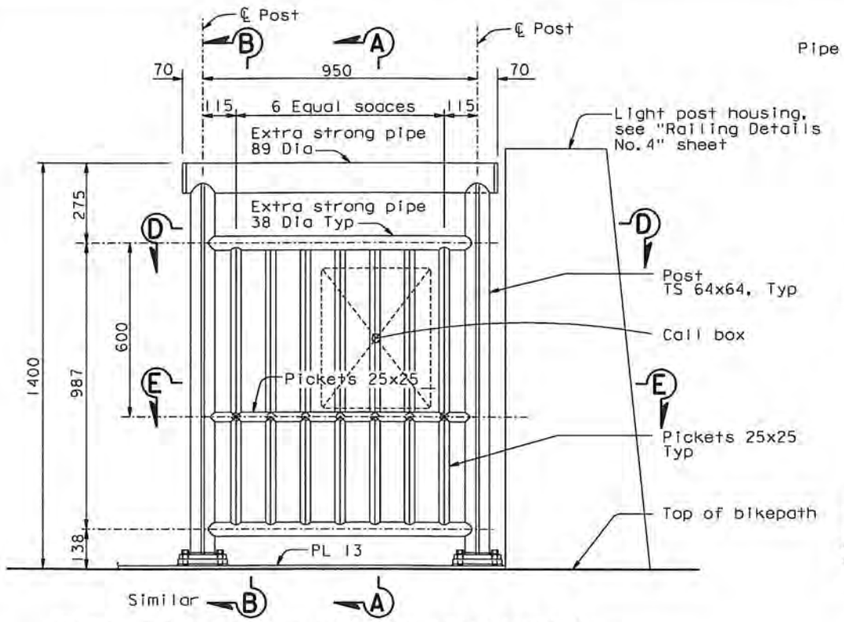

CALL BOX AT BELVEDERE ELEVATION

1:10
(Type D modified)

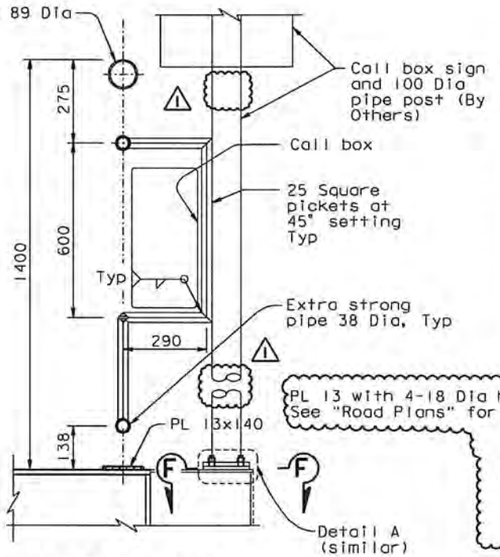

SECTION A-A

1:10

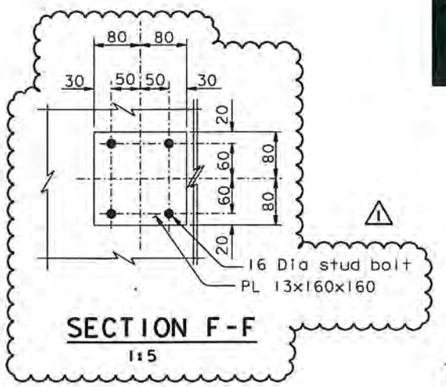

SECTION F-F

1:5

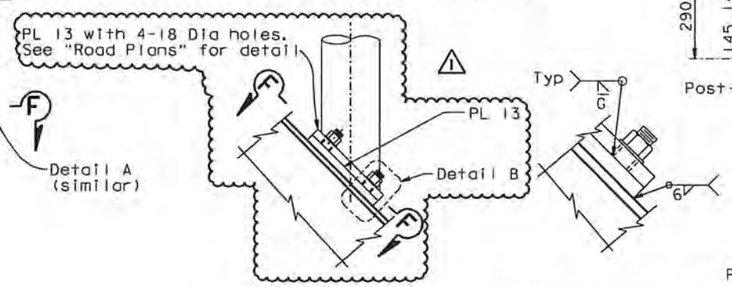

DETAIL A

1:5

DETAIL B

1:2.5

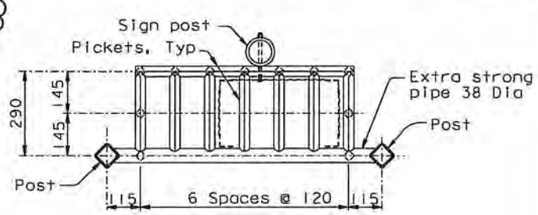

SECTION D-D

1:10

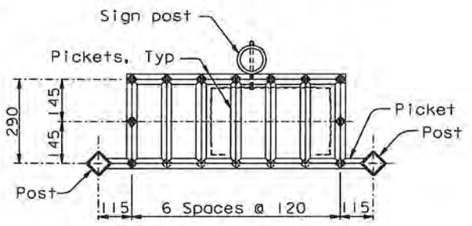

SECTION E-E

1:10

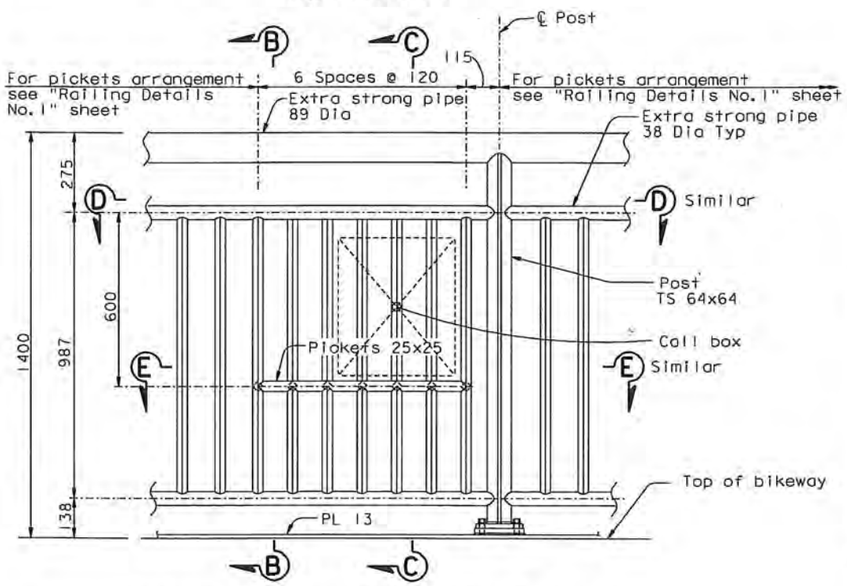

TYPICAL CALL BOX ELEVATION

1:10
(Type A modified)

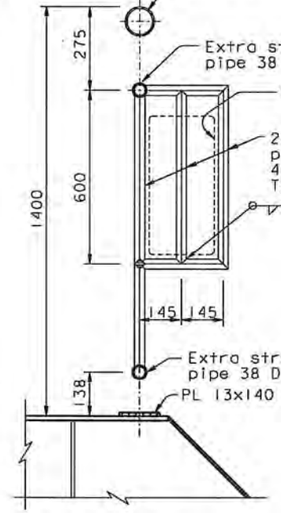

SECTION B-B

1:10

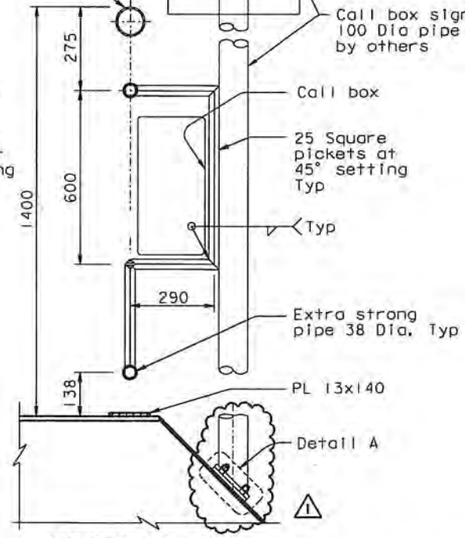

SECTION C-C

1:10

ALL DIMENSIONS ARE IN MILLIMETERS UNLESS OTHERWISE SHOWN

DIST.	COUNTY	ROUTE	KILOMETER POST TOTAL PROJECT	SHEET NO.	TOTAL SHEETS
04	SF	80	13.2/13.9	903RI	1204

REGISTERED ENGINEER - CIVIL
Tien Hung Ho
No. C 43990
Exp. 06/30/09
CIVIL
STATE OF CALIFORNIA

12-6-04
PLANS APPROVAL DATE

The State of California or its officers or agents shall not be responsible for the accuracy or completeness of electronic copies of this plan sheet.

T.Y. LIN / MOFFATT & NICHOL
825 BATTERY STREET
SAN FRANCISCO, CA 94111

To get to the web site, go to: http://www.dot.ca.gov

REQUESTS FOR INFORMATION NOT ADDRESSED IN THIS CCO REMAIN IN FORCE

MARK	DATE	REVISIONS DESCRIPTIONS	BY	CH'D	CCO#
1	03/21/08	BARRIER MODIFICATIONS	TH	AS	44

CONTRACT CHANGE ORDER NO. 4450
SHEET 86 OF 92

NOTES:

1. For layout, see "Railing Layout" sheets.
2. For details not shown, see "Railing Details" sheets.

100 % PS&E

USERNAME => dwinrow DATE PLOTTED => 27 AUG 2008 TIME PLOTTED => 14:35:08

R. Vallzadeh/V. Toan/Y.L./W.L./F.C.
DESIGN OVERSIGHT
SIGN OFF DATE 03/21/08

	BY	CHECKED
DESIGN	T. Ho	C. Redfield
DETAILS	R. Xu	C. Redfield
QUANTITIES	G. Baker	K. Cormier

PREPARED FOR THE STATE OF CALIFORNIA
DEPARTMENT OF TRANSPORTATION

R. Manzanarez
PROJECT ENGINEER

BRIDGE NO. 34-0006L/R
KILOMETER POST 13.2/13.9

CU 04
EA 0120F1

DISREGARD PRINTS BEARING EARLIER REVISION DATES

REVISION DATES (PRELIMINARY STAGE ONLY): 04/08/02 07/31/02 12/19/02

SHEET 486RI OF

SAN FRANCISCO OAKLAND BAY BRIDGE
EAST SPAN SEISMIC SAFETY PROJECT
SELF-ANCHORED SUSPENSION BRIDGE
(SUPERSTRUCTURE & TOWER)

RAILING DETAILS NO. 6

Rev. Date: 5-18-98

ORIGINAL SCALE IN MILLIMETERS FOR REDUCED PLANS 0 10 20 30 40 50 60 70 80 90 100

FILE => I:\bb\04-01200I\sas\contract plans and cco\cco\In progress\cco#44\revised 8-25-08\dgn\akrig09.dgn

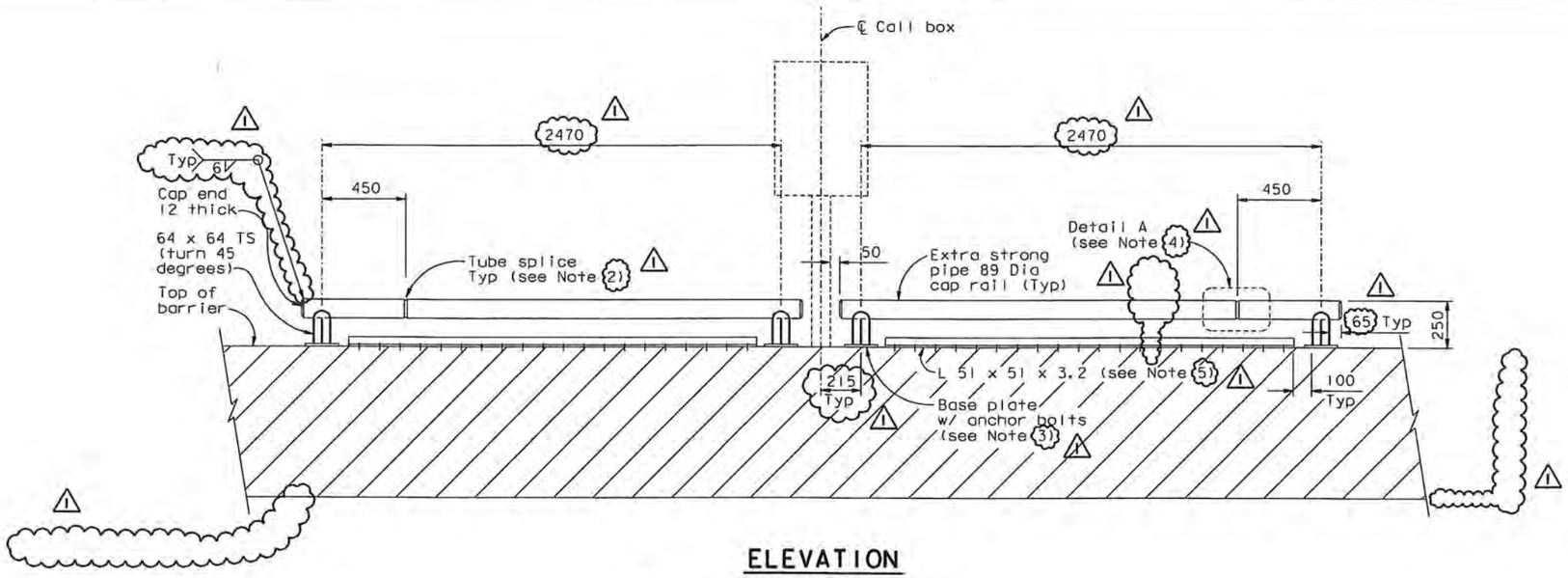

ELEVATION
1:15

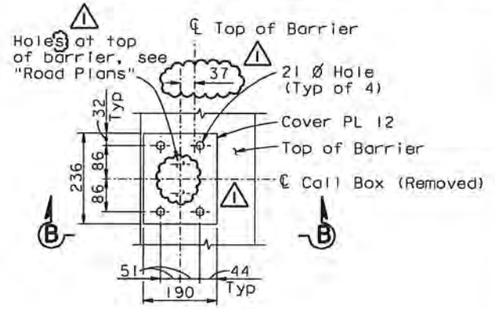

PLAN

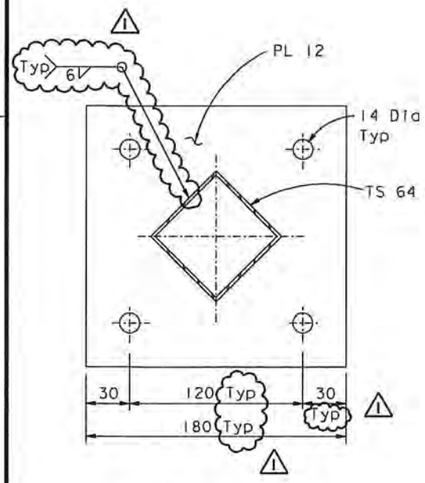

SECTION A-A
1:2

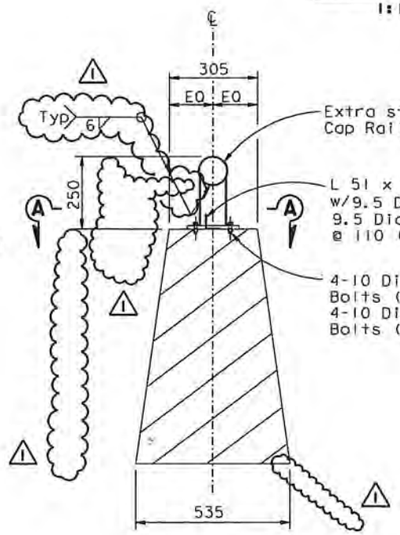

ELEVATION VIEW
1:10

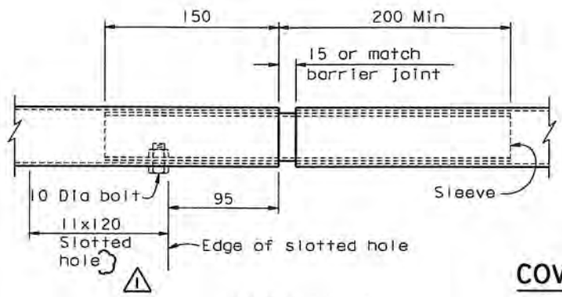

DETAIL A
1:2.5

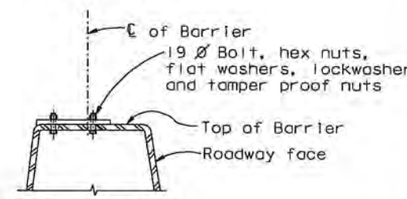

SECTION B-B

COVER PLATE AT REMOVED CALL BOX (STEEL BARRIER)
1:7.5

RAILING AT CALL BOX

NOTES:

1. The details in this sheet are intended for both SAS and Skyway structures. Use applicable details as required.
2. Tube splice may be located 450 mm away from either end of rail support.
3. A grout pad to level rail base plates shall be used for concrete barrier.
4. Tube splice required at steel barriers only.
5. Cut angle and provide a 15 mm gap at steel barrier joint.
6. For call box locations, see "Road Plans".
7. Adjust bolt spacing to miss the barrier diaphragm.

REQUESTS FOR INFORMATION NOT ADDRESSED IN THIS CCO REMAIN IN FORCE					
1	06/13/08	BARRIER MODIFICATIONS	TH	AS	44
0	10/31/07	BARRIER MODIFICATIONS	TH	AS	44
MARK	DATE	DESCRIPTIONS REVISIONS	BY	CH'D	CCO#

CONTRACT CHANGE ORDER NO. 4450
SHEET 87 OF 92

ALL DIMENSIONS ARE IN MILLIMETERS UNLESS OTHERWISE SHOWN

DIST.	COUNTY	ROUTE	KILOMETER POST TOTAL PROJECT	SHEET NO.	TOTAL SHEETS
04	SF	80	13.2/13.9	9035IRI	1204

Caltrans Metric

REGISTERED ENGINEER - CIVIL
Tien Hung Ho No. C 43990 Exp. 6/30/09 CIVIL
10-31-07
PLANS APPROVAL DATE
The State of California or its officers or agents shall not be responsible for the accuracy or completeness of electronic copies of this plan sheet.

T.Y. LIN / MOFFATT & NICHOL
825 BATTERY STREET
SAN FRANCISCO, CA 94111

Caltrans now has a web site! To get to the web site, go to: http://www.dot.ca.gov

R. Valizadeh/V. Toan/Y.L./W.L./F.C.
DESIGN OVERSIGHT
Sign Off Date 06/13/08

	BY	CHECKED
DESIGN	T. Ho	A. Sanjines
DETAILS	T. Ho	A. Sanjines
QUANTITIES	T. Ho	A. Sanjines

PREPARED FOR THE STATE OF CALIFORNIA DEPARTMENT OF TRANSPORTATION

R. Manzanarez
PROJECT ENGINEER

BRIDGE NO. 34-0006L/R
KILOMETER POST 13.2/13.9

CU 04
EA 0120F1

DISREGARD PRINTS BEARING EARLIER REVISION DATES →
REVISION DATES (PRELIMINARY STAGE ONLY) 10/31/07
SHEET 486SIRI OF

SAN FRANCISCO OAKLAND BAY BRIDGE
EAST SPAN SEISMIC SAFETY PROJECT
SELF-ANCHORED SUSPENSION BRIDGE (SUPERSTRUCTURE & TOWER)

RAILING DETAILS NO. 6A

Rev. Date: 5-18-98

ORIGINAL SCALE IN MILLIMETERS FOR REDUCED PLANS 0 10 20 30 40 50 60 70 80 90 100

FILE => I:\bb\04-012001\sas\contract plans and cco\cco\in progress\cco#44\revised 8-25-08\dgn\akrlg10.dgn

USERNAME => dwinrow DATE PLOTTED => 27 AUG 2008 TIME PLOTTED => 14:39:06

100 % PS&E

DIST.	COUNTY	ROUTE	KILOMETER POST TOTAL PROJECT	SHEET NO.	TOTAL SHEETS
04	SF	80	13.2/13.9	904R3	1204

Tien Hung Ho
REGISTERED ENGINEER - CIVIL

12-6-04
PLANS APPROVAL DATE

REGISTERED PROFESSIONAL ENGINEER — Tien Hung Ho — No. C 43990 — Exp. 06/30/09 — CIVIL — STATE OF CALIFORNIA

The State of California or its officers or agents shall not be responsible for the accuracy or completeness of electronic copies of this plan sheet.

T.Y. LIN / MOFFATT & NICHOL
825 BATTERY STREET
SAN FRANCISCO, CA 94111

Caltrans now has a web site! To get to the web site, go to: http://www.dot.ca.gov

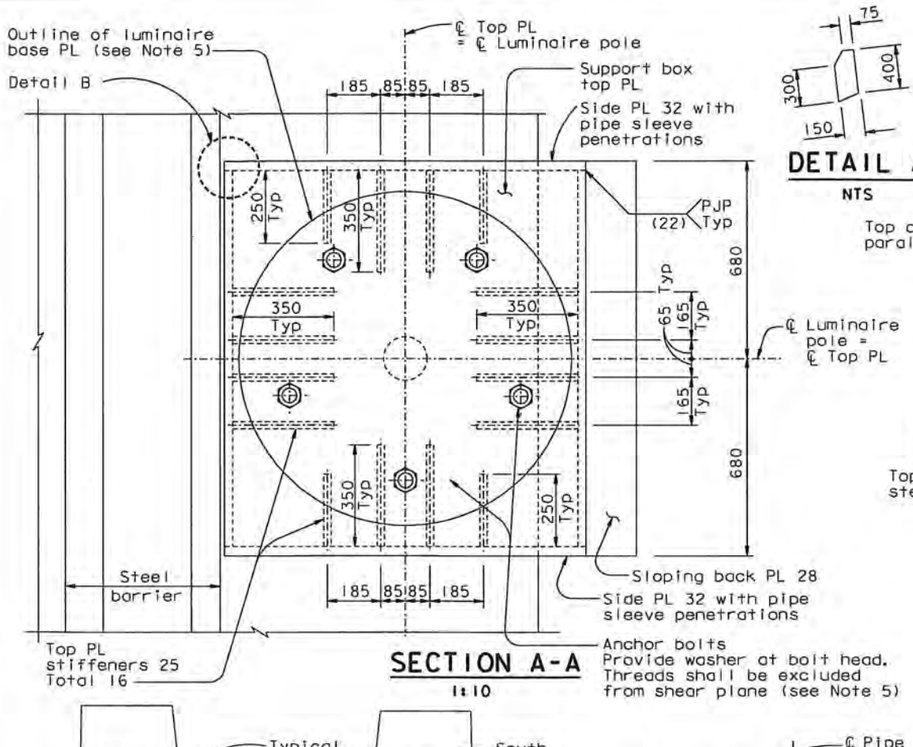

SECTION A-A
1:10

DETAIL A
NTS

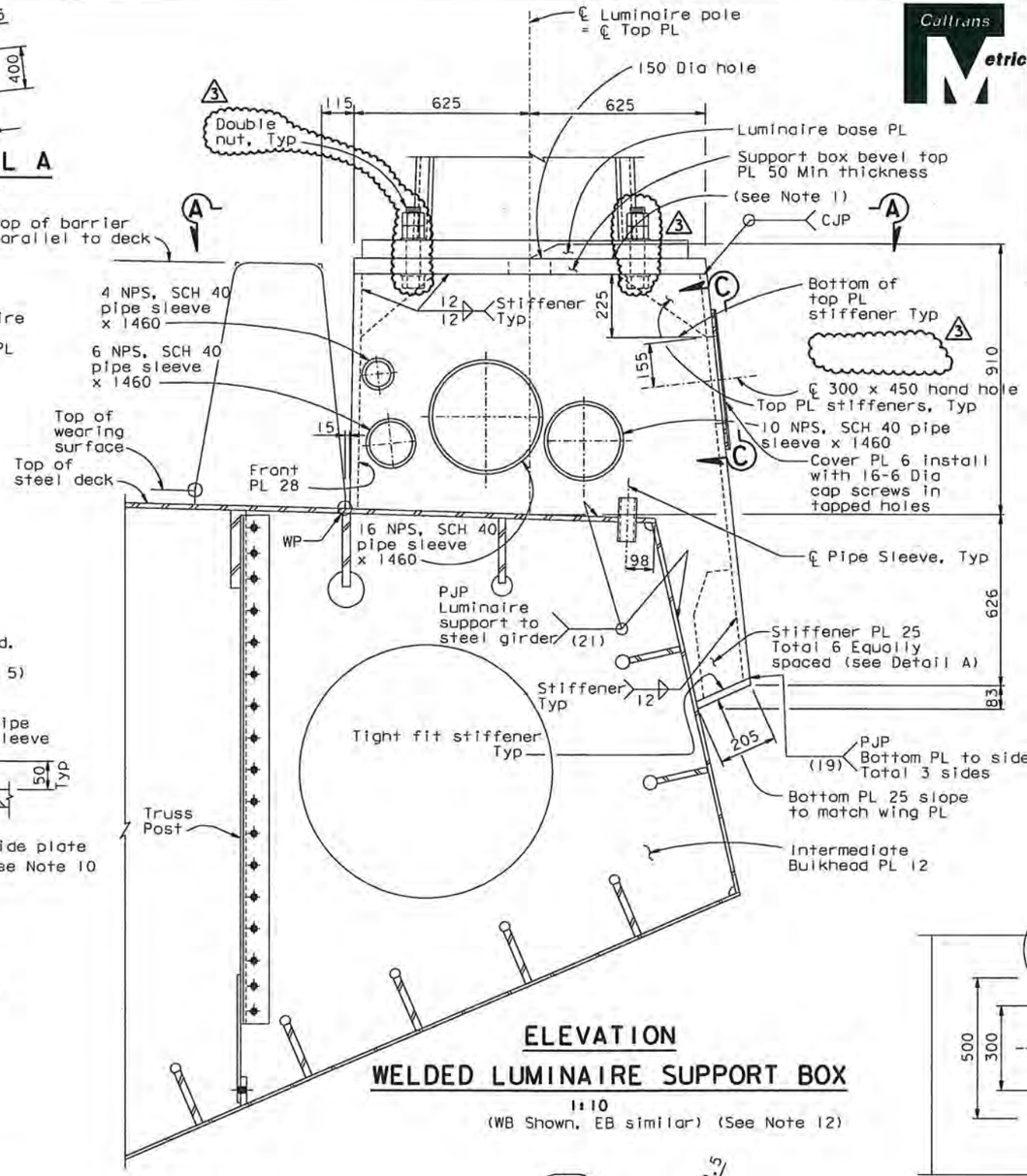

ELEVATION
WELDED LUMINAIRE SUPPORT BOX
1:10
(WB Shown, EB similar) (See Note 12)

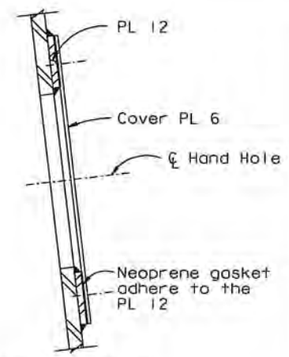

SECTION D-D
1:5

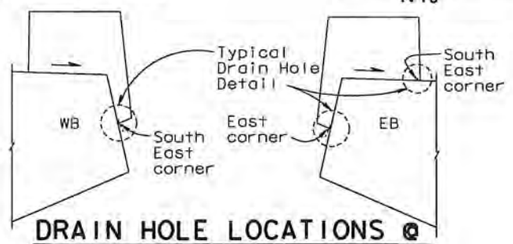

DRAIN HOLE LOCATIONS @ TYPICAL LUMINAIRE AND SIGN SUPPORT BOX
NTS

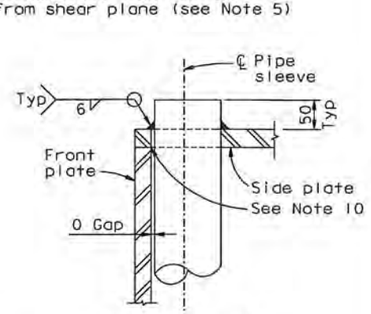

DETAIL B
1:5

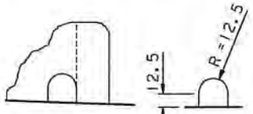

TYPICAL DRAIN HOLE DETAIL
1:2.5

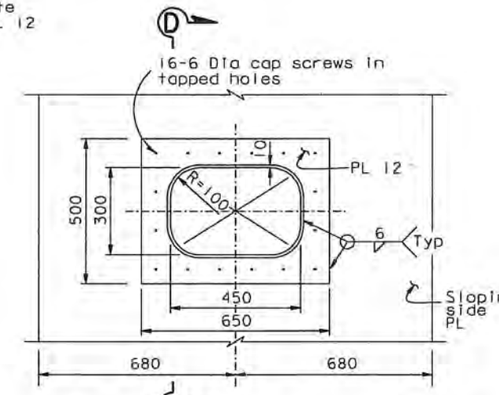

6 x 500 x 650 cover PL not shown for clarity

VIEW C-C
1:10

NOTES:

1. Surfaces of plates shall be milled level to ensure bearing.
2. For location of pipe sleeves, see "Road Plans".
3. The Contractor shall submit for approval by the Engineer details of conduit penetration through deck plate. Conduit penetration details shall be completely sealed to ensure no water leakage into support box.
4. For Geometry of luminaire base plate, conduit openings and locations of bolts, see "Road Plans".
5. For details of utilities opening through luminaire support box, see "Road Plans".
6. Pipe sleeves shall be completely sealed at support box side plates to ensure no water leakage into support box.
7. For location of luminaire, see "Road Plans" sheets.
8. Pipe sleeves shall typically be concentric with the carried utility line. For utility locations, see the "Road Plans". For 4 NPS pipe sleeve, place the sleeve with 0 gap at the face of support box front plate, and aligned vertically on the utility line.
9. The side plates are normal to the deck.
10. Grind weld flush at pipe sleeve.
11. Pipe sleeve locations for pedestals @ PP 119 and sign post, see "Road Plans".
12. At locations where cable railing interferes with luminaire support box, terminate railing at eye bolts, each side of support box, subject to review and approval of the Engineer.

REQUESTS FOR INFORMATION NOT ADDRESSED IN THIS CCO REMAIN IN FORCE

MARK	DATE	DESCRIPTIONS	BY	CH'D	CCO#
3	10/31/08	BARRIER MODIFICATIONS	GB	TH	44
2	06/13/08	BARRIER MODIFICATIONS	GB	TH	44
1	06/24/07	BARRIER MODIFICATIONS	GB	TH	44

REVISIONS

CONTRACT CHANGE ORDER NO. 4450
SHEET 88 OF 92

ALL DIMENSIONS ARE IN MILLIMETERS UNLESS OTHERWISE SHOWN

	BY	CHECKED
DESIGN	T. Ho	C. Redfield
DETAILS	R. Xu	C. Redfield
QUANTITIES	C. Mauch	K. Cormier

PREPARED FOR THE STATE OF CALIFORNIA
DEPARTMENT OF TRANSPORTATION

R. Manzanarez
PROJECT ENGINEER

BRIDGE NO. 34-0006L/R
KILOMETER POST 13.2/13.9

CU 04
EA 0120F1
FILE => $REQUEST

DISREGARD PRINTS BEARING EARLIER REVISION DATES

REVISION DATES (PRELIMINARY STAGE ONLY): 05/27/01 | 04/30/02 | 07/30/02 | 12/19/02 | 11/13/05

SHEET 487R3 OF

SAN FRANCISCO OAKLAND BAY BRIDGE
EAST SPAN SEISMIC SAFETY PROJECT
SELF-ANCHORED SUSPENSION BRIDGE
(SUPERSTRUCTURE & TOWER)

LUMINAIRE SUPPORT DETAILS NO. 1

R. Valizadeh/V. Toan/Y.L./W.L./F.C.
DESIGN OVERSIGHT
SIGN OFF DATE 10/31/08

Rev. Date: 5-18-98

ORIGINAL SCALE IN MILLIMETERS FOR REDUCED PLANS 0 10 20 30 40 50 60 70 80 90 100

100 % PS&E
USERNAME => $USER DATE PLOTTED => $DATE TIME PLOTTED => $TIME

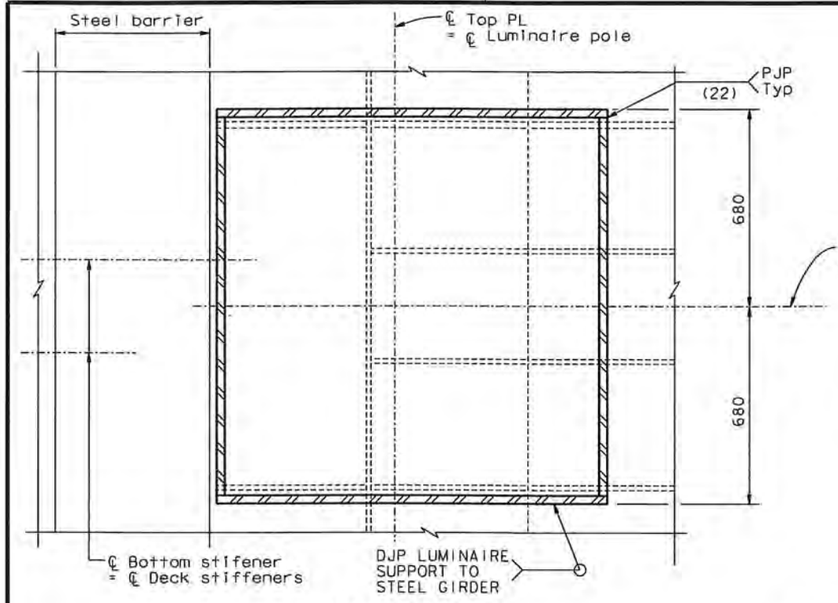

SECTION B-B

1:10

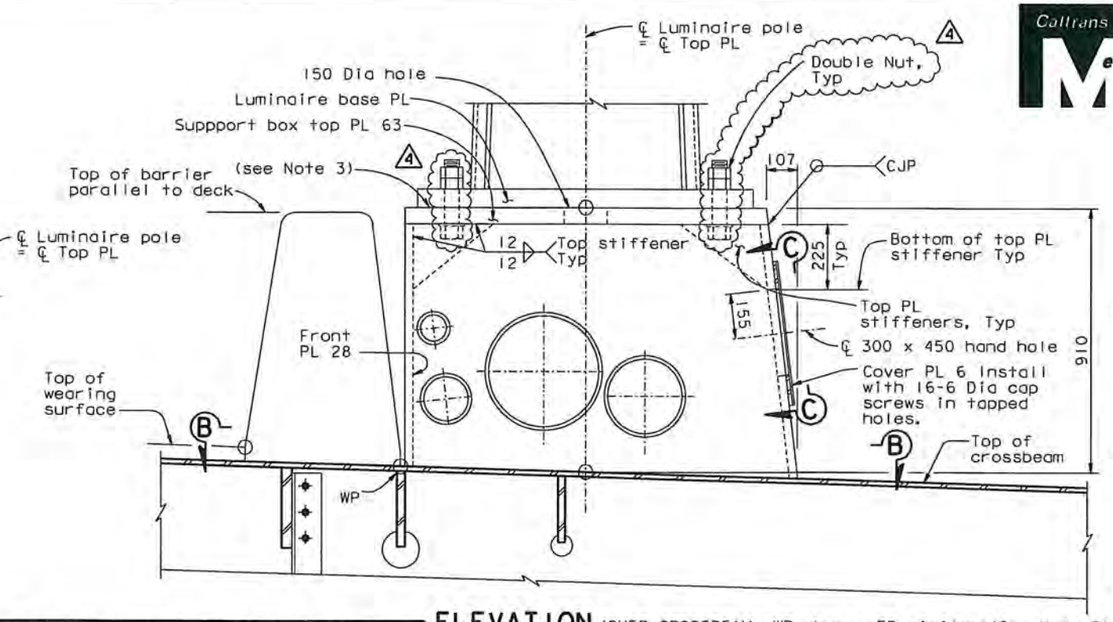

ELEVATION (OVER CROSSBEAM, WB shown, EB similar)(See Note 9)

DIST.	COUNTY	ROUTE	KILOMETER POST TOTAL PROJECT	SHEET NO.	TOTAL SHEETS
04	SF	80	13.2/13.9	905R4	1204

Tien Hung Ho
REGISTERED ENGINEER - CIVIL

12-6-04
PLANS APPROVAL DATE

REGISTERED PROFESSIONAL ENGINEER — Tien Hung Ho — No. C 43990 — Exp. 06/30/09 — CIVIL — STATE OF CALIFORNIA

The State of California or its officers or agents shall not be responsible for the accuracy or completeness of electronic copies of this plan sheet.

T.Y. LIN / MOFFATT & NICHOL
825 BATTERY STREET
SAN FRANCISCO, CA 94111

Caltrans now has a web site! To get to the web site, go to: http://www.dot.ca.gov

NOTES:

1. For dimensions and details not shown, see "Luminaire Support Details No.1" sheet.
2. Anchor rods at the base PL connection shall be tensioned to 0.5Fy.
3. Surfaces of plates shall be milled level to ensure bearing.
4. For View C-C and Typical Drain Hole Detail, see "Luminaire Support Details No.1" sheet.
5. The Contractor shall submit for approval by the Engineer details of conduit penetration through deck plate. Conduit penetration details shall be completely sealed to ensure no water leakage into support box.
6. For location of luminaire, see "Road Plans" sheets.
7. For geometry of luminaire base plate, conduit openings and location of bolts, see "Road Plans".
8. All reinforcement in concrete luminaire support shall be epoxy coated.
9. At locations where cable railing interferes with luminaire support box, terminate railing at eye bolts, each side of support box, subject to review and approval of the Engineer.

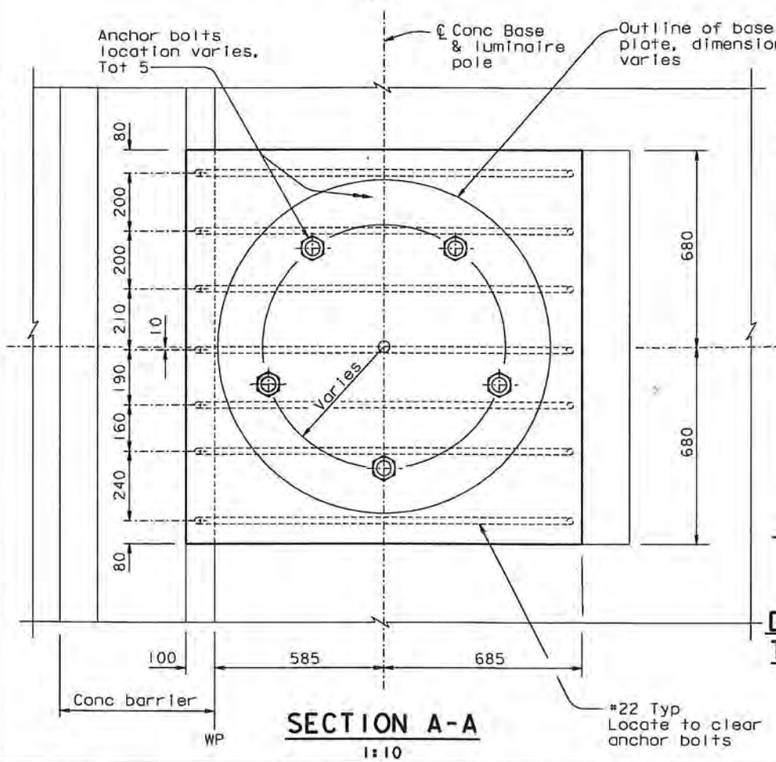

SECTION A-A

1:10

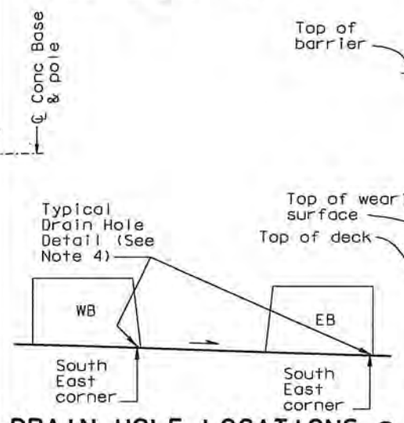

DRAIN HOLE LOCATIONS @ TYPICAL LUMINAIRE AND SIGN SUPPORT BOX

NTS

WELDED LUMINAIRE SUPPORT BOX

1:10

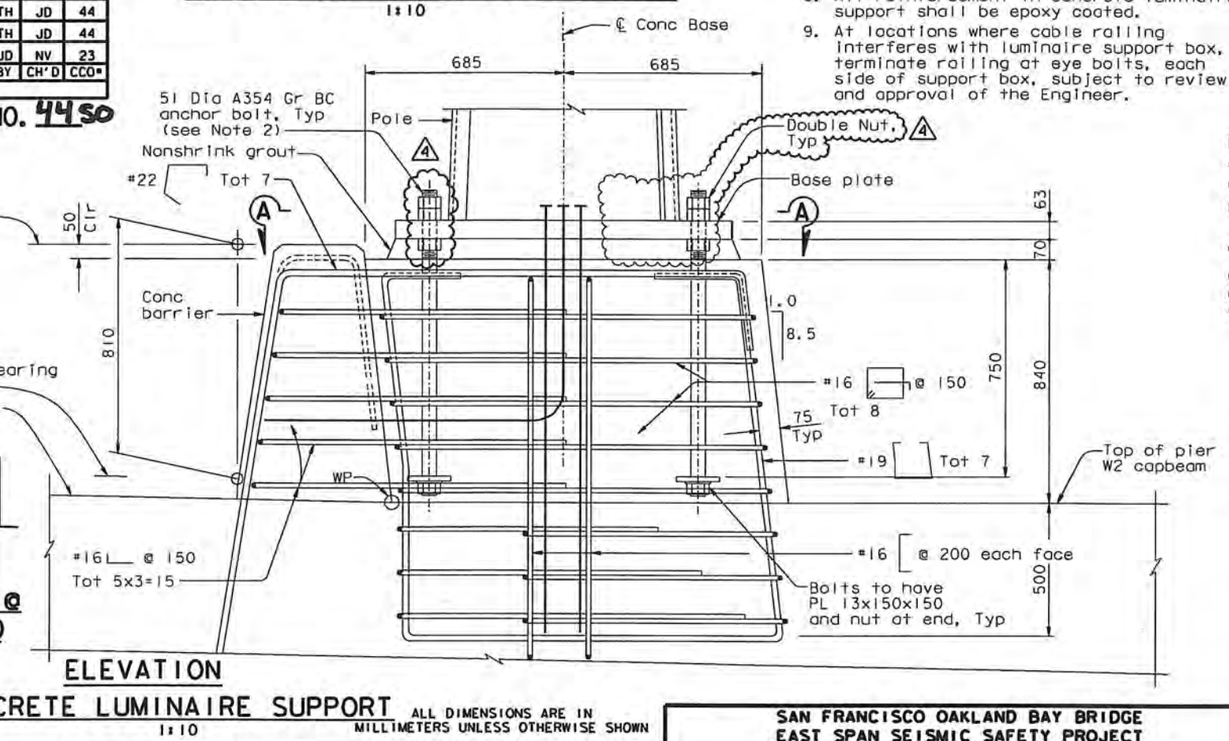

ELEVATION

CONCRETE LUMINAIRE SUPPORT

ALL DIMENSIONS ARE IN MILLIMETERS UNLESS OTHERWISE SHOWN

1:10

MARK	DATE	REVISIONS DESCRIPTIONS	BY	CH'D	CCO#
4	10/31/08	BARRIER MODIFICATIONS	TH	JD	44
3	06/13/08	BARRIER MODIFICATIONS	TH	JD	44
2	08/24/07	BARRIER MODIFICATIONS	TH	JD	44
1	07/21/06	W2 CAP BEAM ISD	JD	NV	23

REQUESTS FOR INFORMATION NOT ADDRESSED IN THIS CCO REMAIN IN FORCE

CONTRACT CHANGE ORDER NO. 44SO
SHEET 89 OF 92

100 % PS&E

DATE PLOTTED => 31 OCT 2008 TIME PLOTTED => 13:14:50
USERNAME => dwinrow

R. Vallzadeh/V. Toon/Y.L./W.L./F.C.
DESIGN OVERSIGHT
SIGN OFF DATE 10/31/08

	BY	CHECKED
DESIGN	T. Ho	C. Redfield
DETAILS	R. Xu	C. Redfield
QUANTITIES	C. Mauch	K. Cormier

PREPARED FOR THE STATE OF CALIFORNIA
DEPARTMENT OF TRANSPORTATION

R. Manzanarez
PROJECT ENGINEER

BRIDGE NO. 34-0006L/R
KILOMETER POST 13.2/13.9

CU 04
EA 0120F1

SAN FRANCISCO OAKLAND BAY BRIDGE
EAST SPAN SEISMIC SAFETY PROJECT
SELF-ANCHORED SUSPENSION BRIDGE
(SUPERSTRUCTURE & TOWER)

LUMINAIRE SUPPORT DETAILS NO. 2

DISREGARD PRINTS BEARING EARLIER REVISION DATES

REVISION DATES (PRELIMINARY STAGE ONLY): 05/29/02 09/26/02 01/29/03 12/19/03 11/13/05

SHEET 488R4 OF

Rev. Date: 5-18-98

ORIGINAL SCALE IN MILLIMETERS FOR REDUCED PLANS 0 10 20 30 40 50 60 70 80 90 100

FILE => I:\bb\04-012001\sas\contract plans and cco\cco\in progress\cco#44\update 10-31-08\dgn\aklht08a.dgn

REQUESTS FOR INFORMATION NOT ADDRESSED IN THIS CCO REMAIN IN FORCE

MARK	DATE	REVISIONS: DESCRIPTIONS	BY	CH'D	CCO#
1	10/31/08	BARRIER MODIFICATIONS	AS	TH	44

CONTRACT CHANGE ORDER NO. 4450
SHEET 90 OF 92

Caltrans Metric

DIST.	COUNTY	ROUTE	KILOMETER POST TOTAL PROJECT	SHEET NO.	TOTAL SHEETS
04	SF	80	13.2/13.9	908RI	1204

REGISTERED ENGINEER - CIVIL
Tien Hung Ho
No. C 43990
Exp. 06/30/09
CIVIL
12-6-04
PLANS APPROVAL DATE
The State of California or its officers or agents shall not be responsible for the accuracy or completeness of electronic copies of this plan sheet.

REGISTERED PROFESSIONAL ENGINEER * STATE OF CALIFORNIA *

T.Y. LIN / MOFFATT & NICHOL
825 BATTERY STREET
SAN FRANCISCO, CA 94111

Caltrans now has a web site! To get to the web site, go to: http://www.dot.ca.gov

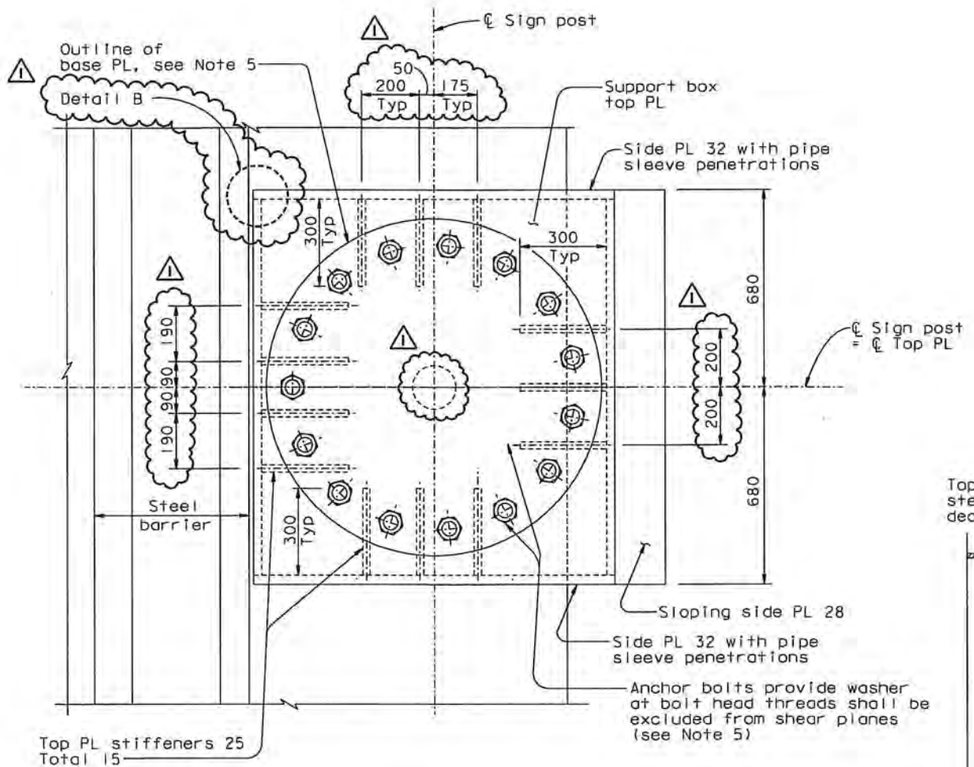

SECTION A-A
1:10

NOTES:

1. Surfaces of plates shall be milled level to ensure bearing.
2. For location of pipe sleeves, see "Road Plans".
3. The Contractor shall submit for approval by the Engineer details of conduit penetration through deck plate. Conduit penetration details shall be completely sealed to ensure no water leakage into support box.
4. For details of utilities opening thru sign support box, see "Road Plans".
5. For geometry of base plate, conduit opening and locations of bolts, see "Road Plans".
6. Pipe sleeves shall be completely sealed at support box side plates to ensure no water leakage into support box.
7. For Detail B, View C-C and drain hole locations, see "Luminaire Support Details No.1" sheet.

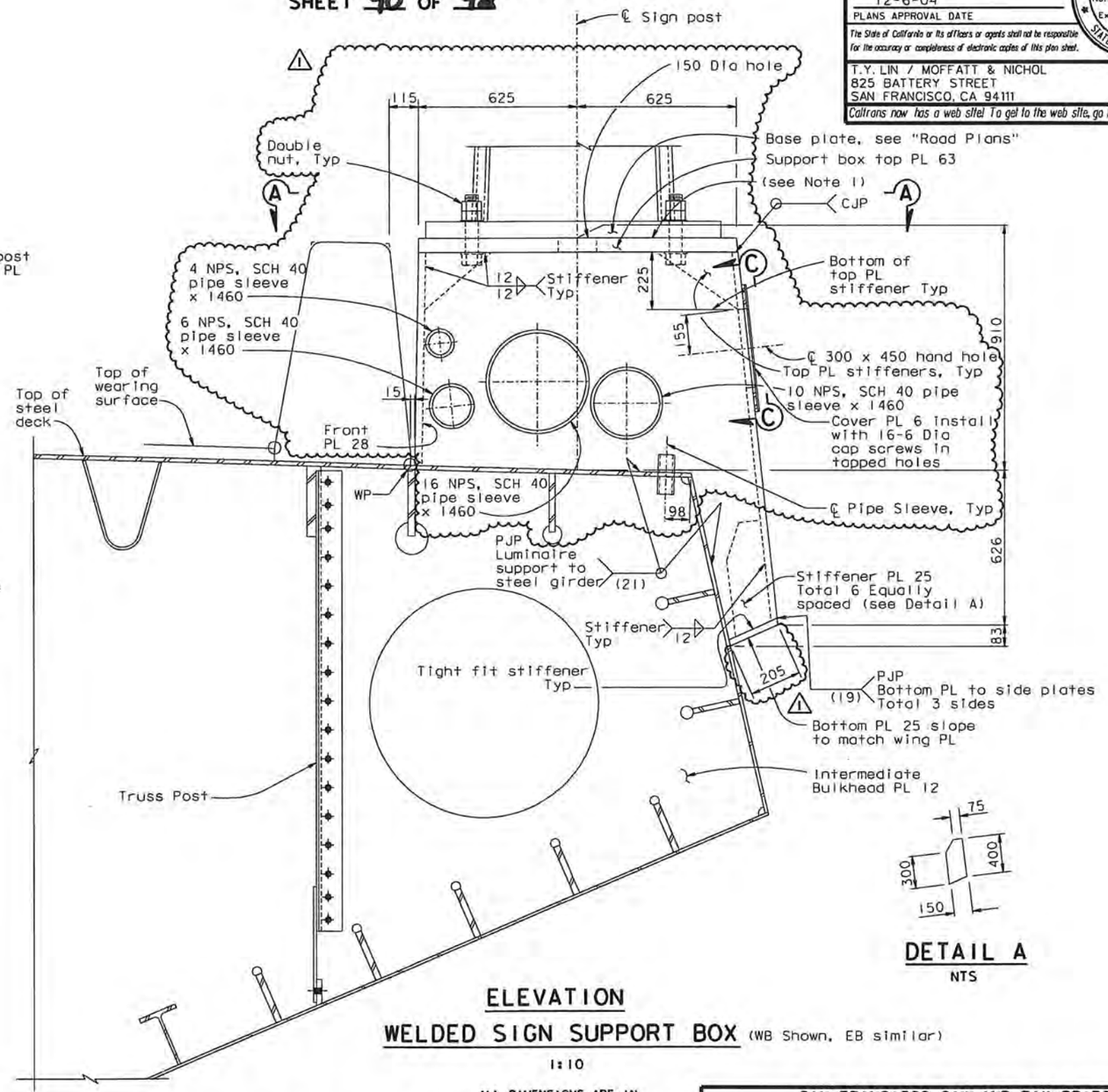

ELEVATION
WELDED SIGN SUPPORT BOX (WB Shown, EB similar)
1:10

DETAIL A
NTS

ALL DIMENSIONS ARE IN MILLIMETERS UNLESS OTHERWISE SHOWN

100 % PS&E

USERNAME => dwinrow DATE PLOTTED => 31 OCT 2008 TIME PLOTTED => 13:13:49

R. Vallzadeh/V. Toan/Y.L./W.L./F.C.
DESIGN OVERSIGHT
Roya Vallazadeh / Vinh Toan / Y. Liu
SIGN OFF DATE 10/31/08

	BY	CHECKED	
DESIGN	T. Ho	C. Redfield	
DETAILS	R. Xu	C. Redfield	
QUANTITIES	C. Mauch	K. Cormier	

PREPARED FOR THE STATE OF CALIFORNIA DEPARTMENT OF TRANSPORTATION

R. Manzanarez
PROJECT ENGINEER

BRIDGE NO. 34-0006L/R
KILOMETER POST 13.2/13.9

CU 04
EA 0120F1

DISREGARD PRINTS BEARING EARLIER REVISION DATES

SAN FRANCISCO OAKLAND BAY BRIDGE
EAST SPAN SEISMIC SAFETY PROJECT
SELF-ANCHORED SUSPENSION BRIDGE
(SUPERSTRUCTURE & TOWER)

SIGN SUPPORT DETAILS

REVISION DATES (PRELIMINARY STAGE ONLY): 04/08/02 07/07/02 12/19/02

SHEET 491RI OF

Rev. Date: 5-18-98

ORIGINAL SCALE IN MILLIMETERS FOR REDUCED PLANS 0 10 20 30 40 50 60 70 80 90 100

FILE => I:\bb\04-0120F1\sas\contract plans and cco\cco\in progress\cco#44\update 10-31-08\dgn\akssd01.dgn

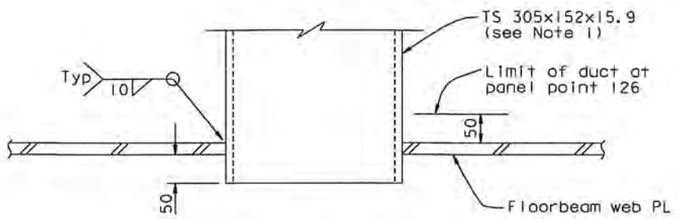

TYPICAL UTILITY DUCT DETAIL AT PIER E2 AND PANEL POINT 126

1:5

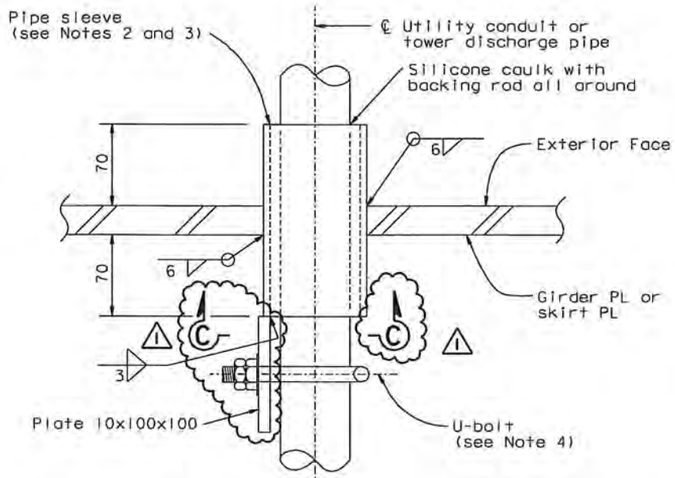

TYPICAL UTILITY CONDUIT AND TOWER DISCHARGE PIPE PENETRATION DETAIL

1:2.5

PIPE SLEEVE TABLE

Conduit Nominal size	Pipe sleeve Nominal size	Minimum Spacing (See Note 8)
27	51	150
41	64	200
53	76	250
63	89	300
78	102	500
91	127	1000
103	127	1000

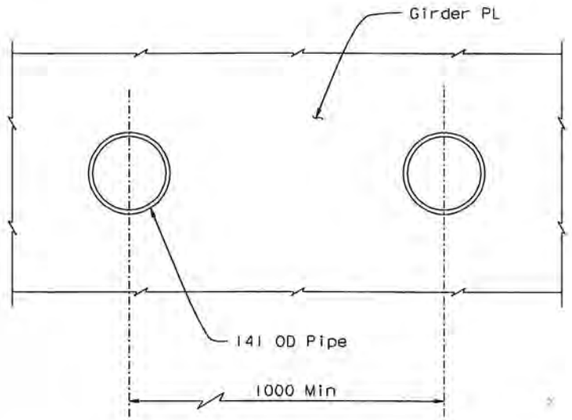

TYPICAL UTILITY CABLE PENETRATION DETAIL

1:5

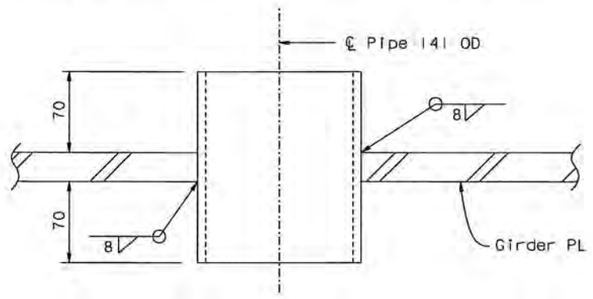

SECTION B-B (see Note 5)

1:2.5

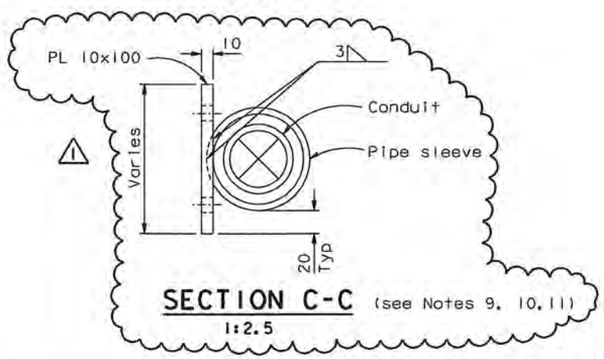

SECTION C-C (see Notes 9, 10, 11)

1:2.5

NOTES:

1. TS 305x152 at Pier E2 shall extend through all three webs of floorbeam E2.
2. All pipe sleeves shall be A53 GR B or an equivalent steel grade as approved by the Engineer and shall be detailed to accommodate actual utility conduit and pipe sizes. For utility conduit, pipe and cable sizes, see "Road Plans". For tower discharge pipe, see "Tower Drainage Details No. 1" sheet.
3. For pipe sleeves sizes, see "Pipe Sleeve Table". Contractor shall be responsible for fit-up, support and sealing of pipes and conduits in the pipe sleeves. Contractor may select alternative pipe sleeve sizes to suit the actual conduits and pipes installed.
4. For conduit mounting details, see "Road Plans".
5. For mounting and sealing cables in pipe sleeves, see "Road Plans".
6. For conduit penetrations at panel point 41, see "Girder Transition Near Tower" sheets.
7. For conduit penetrations at utility platforms, see Typical Crossbeams Details" sheets.
8. Unless otherwise noted or approved by the Enginner pipe sleeves may not be located in the unreinfoced girder skin plates at less than the minimum spacing.
9. 10 mm plate welded to pipe sleeve to vary in width depending on O.D. of pipe.
10. Dimension and size of holes in plate depend on U-bolt size.
11. Edge of plate to align with inside edge of pipe sleeve.

DIST.	COUNTY	ROUTE	KILOMETER POST TOTAL PROJECT	SHEET NO.	TOTAL SHEETS
04	SF	80	13.2/13.9	965R1	1204

Caltrans Metric

George Baker
REGISTERED ENGINEER - CIVIL

1-27-03
PLANS APPROVAL DATE

George S. Baker No. C57112 Exp. 12/31/05 CIVIL — REGISTERED PROFESSIONAL ENGINEER — STATE OF CALIFORNIA

The State of California or its officers or agents shall not be responsible for the accuracy or completeness of electronic copies of this plan sheet.

T.Y. LIN / MOFFATT & NICHOL
825 BATTERY STREET
SAN FRANCISCO, CA 94111

To get to the web site, go to: http://www.dot.ca.gov

REQUESTS FOR INFORMATION NOT ADDRESSED IN THIS CCO REMAIN IN FORCE					
MARK	DATE	DESCRIPTIONS REVISIONS	BY	CH'D	CCO#
1	05/06/08	BARRIER MODIFICATIONS	DT	AS	44

CONTRACT CHANGE ORDER NO. 4450
SHEET 91 OF 92

Daniel J. Turner — REGISTERED PROFESSIONAL ENGINEER — Daniel J. Turner No. C 65033 Exp. 06/30/09 CIVIL — STATE OF CALIFORNIA

FOR REVISIONS ONLY

ALL DIMENSIONS ARE IN MILLIMETERS UNLESS OTHERWISE SHOWN

DESIGN	BY G. Baker	CHECKED T. Ho	
DETAILS	BY S. Cano	CHECKED T. Ho	
QUANTITIES	BY C. Mauch	CHECKED D. Harrison	

PREPARED FOR THE STATE OF CALIFORNIA DEPARTMENT OF TRANSPORTATION

R. Manzanarez
PROJECT ENGINEER

BRIDGE NO. 34-0006L/R
KILOMETER POST 13.2/13.9

CU 04
EA 0120F1

R. Vallzadeh/V. Toan/Y.L./W.L./F.C.
DESIGN OVERSIGHT
SIGN OFF DATE 05/06/08

Rev. Date: 5-18-98

ORIGINAL SCALE IN MILLIMETERS FOR REDUCED PLANS 0 10 20 30 40 50 60 70 80 90 100

DISREGARD PRINTS BEARING EARLIER REVISION DATES

REVISION DATES (PRELIMINARY STAGE ONLY): 05/07/99 | 05/23/01 | 05/08/02 | 05/31/02 | 12/19/02

SHEET 548R1 OF

SAN FRANCISCO OAKLAND BAY BRIDGE
EAST SPAN SEISMIC SAFETY PROJECT
SELF-ANCHORED SUSPENSION BRIDGE
(SUPERSTRUCTURE & TOWER)

UTILITY DETAILS NO. 1

FILE => I:\bb\04-012001\sas\contract plans and cco\cco\in progress\cco#44\revised 8-25-08\dgn\akmsc13.dgn

USERNAME => dwinrow DATE PLOTTED => 27 AUG 2008 TIME PLOTTED => 14:29:23

100 % PS&E

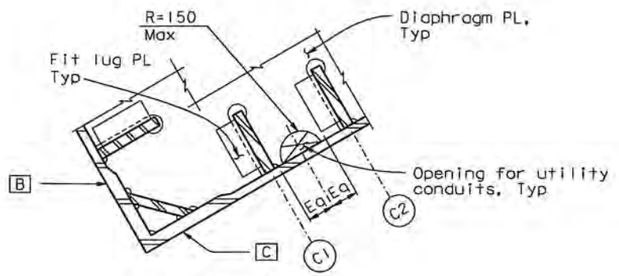

TYPICAL
1:20

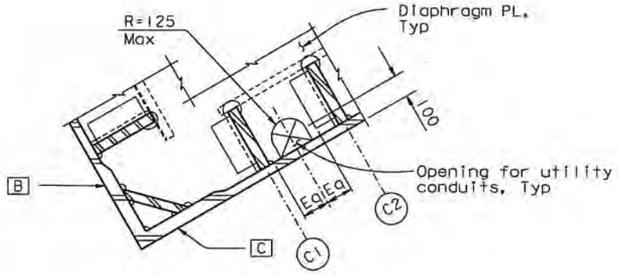

AT DIAPHRAGM TYPE 2C ONLY
1:20

DIAPHRAGM COPE DETAIL FOR UTILITY CONDUITS

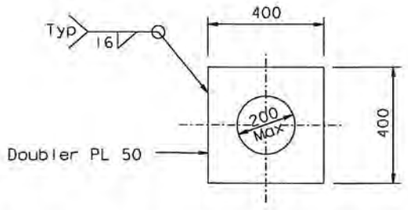

FOR DEHUMIDIFICATION CONDUITS (see Note 3)
1:10

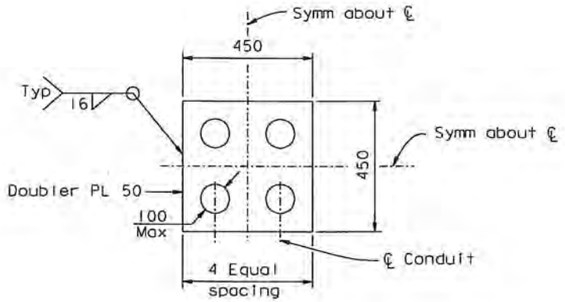

FOR ELECTRIC CONDUITS (see Note 1)
1:10

HOLE STIFFENING DETAIL FOR UTILITY CONDUITS

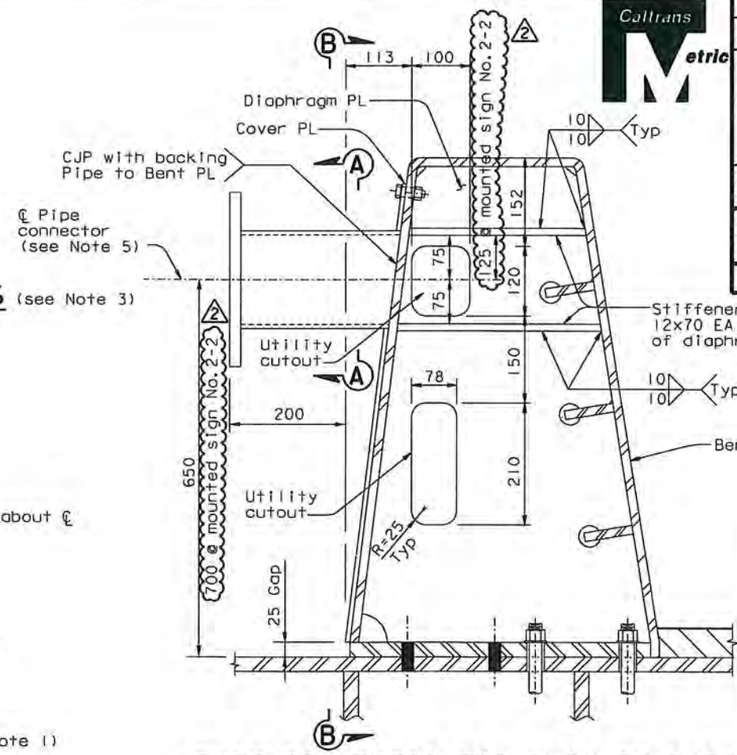

PIPE CONNECTOR FOR SIGN ON BARRIER
1:5

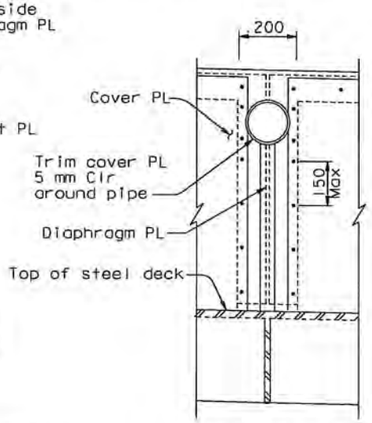

SECTION B-B
1:10

LEGEND:

(C1) Tower longitudinal stiffener designation (see Note 4)

NOTES:

1. Drill holes (100 Dia Max) as required up to 4 maximum. Seal around conduits with silicone caulk with backing rods.
2. For utility layout and details, see "Road Plans".
3. Drill hole and seal to conduits as required for dehumidification conduits. For other duct penetrations, see similar "Duct Opening Detail" on "Dehumidification Support Details No. 5" sheet.
4. For tower longitudinal stiffener locations, see "Tower Shaft Details" sheets.
5. Pipe connector must line up with barrier diaphragm. Sign location shall be moved to the nearest diaphragm. See "Barrier Details" sheets for barrier details. See Road Plans for sign details.
6. For mounting screw and openings in mounting PL see "Road Plans."
7. For conduit and box support details, see "Road Plans".

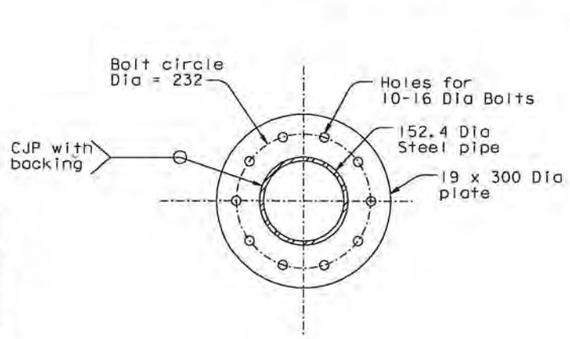

SECTION A-A
1:5

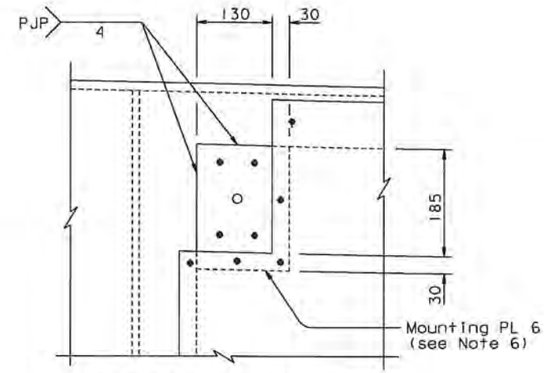

RECEPTACLE MOUNTING
1:5

REQUESTS FOR INFORMATION NOT ADDRESSED IN THIS CCO REMAIN IN FORCE					
2	04/18/08	BARRIER MODIFICATIONS	AS	MN	44
1	08/24/07	BARRIER MODIFICATIONS	GB	MN	44
MARK	DATE	DESCRIPTIONS	BY	CH'D	CCO#
REVISIONS					

CONTRACT CHANGE ORDER NO. 44 SO
SHEET 92 OF 92

DIST.	COUNTY	ROUTE	KILOMETER POST TOTAL PROJECT	SHEET NO.	TOTAL SHEETS
04	SF	80	13.2/13.9	966R2	1204

REGISTERED ENGINEER - CIVIL
1-27-03
PLANS APPROVAL DATE
REGISTERED PROFESSIONAL ENGINEER Marwan N. Nader No. C 054426 Exp. 12/31/09 CIVIL STATE OF CALIFORNIA
The State of California or its officers or agents shall not be responsible for the accuracy or completeness of electronic copies of this plan sheet.

T.Y. LIN / MOFFATT & NICHOL
825 BATTERY STREET
SAN FRANCISCO, CA 94111

To get to the web site, go to: http://www.dot.ca.gov

ALL DIMENSIONS ARE IN MILLIMETERS UNLESS OTHERWISE SHOWN

SAN FRANCISCO OAKLAND BAY BRIDGE
EAST SPAN SEISMIC SAFETY PROJECT
SELF-ANCHORED SUSPENSION BRIDGE
(SUPERSTRUCTURE & TOWER)

UTILITY DETAILS NO. 2

DESIGN	BY M. Nader	CHECKED T. Ho	PREPARED FOR THE STATE OF CALIFORNIA DEPARTMENT OF TRANSPORTATION
DETAILS	BY L. Rus	CHECKED T. Ho	
QUANTITIES	BY L. Rus	CHECKED D. Harrison	

R. Vaziadeh/V. Toan/Y.L./W.L./F.C.
DESIGN OVERSIGHT
SIGN OFF DATE 04/18/08

R. Manzanarez
PROJECT ENGINEER

BRIDGE NO. 34-0006L/R
KILOMETER POST 13.2/13.9

CU 04
EA 0120F1

DISREGARD PRINTS BEARING EARLIER REVISION DATES

REVISION DATES (PRELIMINARY STAGE ONLY): 04/08/08 | 03/07/08 | 12/07/07 | 11/13/06

SHEET 549R2

Rev. Date: 5-18-98

ORIGINAL SCALE IN MILLIMETERS FOR REDUCED PLANS 0 10 20 30 40 50 60 70 80 90 100

FILE => I:\bb\04-0120F1\sas\contract plans and cco\cco\in progress\cco*44\revised 8-25-08\dgn\akmsc14.dgn

100 % PS&E
27 AUG 2008
TIME4PBGT06D =>
DATE PLOTTED =>
USERNAME => dwinrow

STATE OF CALIFORNIA - DEPARTMENT OF TRANSPORTATION

CONTRACT CHANGE ORDER

Change Requested by: Engineer

CCO: 44 **Suppl. No. 1** **Contract No. 04 – 0120F4** **Road** SF-80-13.2/13.9 **FED. AID LOC.:**

To: **AMERICAN BRIDGE/FLUOR ENTERPRISES INC A JOINT VENTURE**

You are directed to make the following changes from the plans and specifications or do the following described work not included in the plans and specifications for this contract. ***NOTE: This change order is not effective until approved by the Engineer.***

Description of work to be done, estimate of quantities and prices to be paid. (Segregate between additional work at contract price, agreed price and force account.) Unless otherwise stated, rates for rental of equipment cover only such time as equipment is actually used and no allowance will be made for idle time. This last percentage shown is the net accumulated increase or decrease from the original quantity in the Engineer's Estimate.

Adjustment of Compensation at Lump Sum:

Modify the West End barrier including, but not limited to, the following:

- Extend and stub out conduits and install pull boxes in the concrete barrier to the contract limits at Hinge K.
- Change the RGS conduit with PVC coated rigid conduit at the transition of the metal barrier to the concrete barrier.
- Add a new call box mounting attachment on the barrier at Station 58+70 Eastbound South for an equipment mounting pole.

The following revised plan sheets detail the changes addressed in this change order: 83R4, 117R2, 131S1R1, 131S2, 149R3, 188R3, 207S3, 352R3, 357R2, 358R2, 359R2, 360R3, 366R1, 367R2, 368R2, 369R2, 370R3, 371R3, 377R2, and 407S16 (of 1204) as shown on sheets 2 through 21 of this change order.

For this work, the Contractor will receive a lump sum price of $24,202.00. This sum constitutes full and complete compensation for furnishing all labor, material, tools and incidentals including all markups by reason of this change.

Adjustment of Compensation at Lump Sum.....$24,202.00

Estimated Cost: Increase ☒ **Decrease** ☐ **$24,202.00**

By reason of this order the time of completion will be adjusted as follows: **0 Days**

Submitted by

Signature **Resident Engineer** Kannu Balan, Senior T.E. **Date** 12-6-11

Approval Recommended by

Signature **Program Manager** Jon Tapping for Tony Anziano, Program Manager **Date** 12-6-11

Engineer Approval by

Signature **Program Manager** Tony Anziano, Program Manager **Date** 1/5/12

We the undersigned contractor, have given careful consideration to the change proposed and agree, if this proposal is approved, that we will provide all equipment, furnish the materials, except as otherwise be noted above, and perform all services necessary for the work above specified, and will accept as full payment therefor the prices shown above.

NOTE: If you, the contractor, do not sign acceptance of this order, your attention is directed to the requirements of the specifications as to proceeding with the ordered work and filing a written protest within the time therein specified.

Contractor Acceptance by

Signature (Print name and title) BRIAN A. PETERSEN - PROJECT DIRECTOR **Date** 03JAN12

STATE OF CALIFORNIA - DEPARTMENT OF TRANSPORTATION

CONTRACT CHANGE ORDER MEMORANDUM

DATE: 12/2/2011 Page 1 of 1

TO: Tony Anziano, Program Manager /	FILE: **E.A.** 04 - 0120F4
FROM: Kannu Balan, Senior TE	**CO-RTE-PM** SF-80-13.2/13.9
	FED. NO.
CCO#: **44** SUPPLEMENT#: **1** Category Code: **CKSA**	CONTINGENCY BALANCE (incl. this change) **$145,010,079.58**
COST: **$24,202.00** INCREASE ☑ DECREASE ☐	HEADQUARTERS APPROVAL REQUIRED? ☑ YES ☐ NO
SUPPLEMENTAL FUNDS PROVIDED: **$0.00**	IS THIS REQUEST IN ACCORDANCE WITH ENVIRONMENTAL DOCUMENTS? ☑ YES ☐ NO
CCO DESCRIPTION: West End Barrier Conduit	**PROJECT DESCRIPTION:** CONSTRUCT SELF-ANCHORED SUSPENSION BRIDGE

Original Contract Time:	Time Adj. This Change:	Previously Approved CCO Time Adjustments:	Percentage Time Adjusted: (including this change)	Total # of Unreconciled Deferred Time CCO(s): (including this change)
2490 Day(s)	**0** Day(s)	**501** Day(s)	**20** %	**3**

THIS CHANGE ORDER PROVIDES FOR:

Modifying the West End barrier by extending and stubbing out conduits and installing pull boxes in the concrete barrier to the contract limits at Hinge K, changing the RGS conduit with PVC coated rigid conduit at the transition of the metal barrier to the concrete barrier, and adding a new call box mounting attachment on the barrier at Station Number 58+70 Eastbound South for an equipment mounting pole.

These changes will facilitate future extension and use of power and communication circuitry between Yerba Buena Island and the new Bay Bridge. Changing to PVC coated conduit will extend the life of the conduit and protect it from possible moisture and water intrusion at the transition area.

The total cost of this change order is $24,202.00, which can be financed from the contingency fund. A detailed cost analysis is on file. The cumulative total of CCO 44S0 and 44S1 is $1,413,028.00.

No time adjustment is warranted, as this change order does not affect the controlling operation.

This change order has concurrence from Peter Siegenthaler (Principal TE), Ken Terpstra (Project Manager), Rich Foley (HQ Oversight), Wenyi Long (Bridge Design), Lina Ellis (Maintenance), and Jing Chen (District Design).

Toll Bridge Program Oversight Committee (TBPOC) approved CCOs 44 S0 and S1 on December 1, 2011, for a value of $1,413,028.

CONCURRED BY:			
Construction Engineer:	PCE, Pete Siegenthaler, Prin TE	Date	9/29/10
Bridge Engineer:	CT Oversight, Wenyi Long, P.E.	Date	10/7/10
Project Engineer:	District Design, Jing Chen	Date	4/6/11
Project Manager:	Proj Manager, Ken Terpstra	Date	9/10/11
FHWA Rep.:		Date	
Environmental:		Date	
Other (specify):	Struct. Maint, Lina Ellis	Date	8/25/11
Other (specify):	HQ, Rich Foley	Date	8/23/11
District Prior Approval By:		Date	
HQ (Issue Approve) By:		Date	
Resident Engineer's Signature:		Date	12-6-11

ESTIMATE OF COST		
	THIS REQUEST	TOTAL TO DATE
ITEMS	$0.00	$0.00
FORCE ACCOUNT	$0.00	$0.00
AGREED PRICE	$0.00	$0.00
ADJUSTMENT	$24,202.00	$1,413,028.00
TOTAL	$24,202.00	$1,413,028.00

FEDERAL PARTICIPATION

☐ PARTICIPATING ☐ PARTICIPATING IN PART ☑ NONE
☐ NON-PARTICIPATING (MAINTENANCE) ☐ NON-PARTICIPATING

FEDERAL SEGREGATION (if more than one Funding Source or P.I.P. type)
☐ CCO FUNDED PER CONTRACT ☐ CCO FUNDED AS FOLLOWS

FEDERAL FUNDING SOURCE	PERCENT

ADA Notice: For individuals with sensory disabilities, this document is available in alternate formats. For information call: (916) 654-6410 or TDD (916) 654-3880 or write Records and Forms Management, 1120 N Street, MS-89, Sacramento, CA 95814.

NOTES:

1. The contractor shall verify all controlling field dimensions before ordering or fabricating any material.
2. For structural notes, see sheet AS-1.
3. For electrical panel support locations, see electrical plans.
4. For callbox locations, see electrical sheets, sheet E-397.
5. Unless otherwise noted, all framing elements are L76x76x6.4.
6. For electrical enclosure support, use Unistrut P2000 or approved equal. Attach to frame per manufacturer's recommendations. Locate to suit.

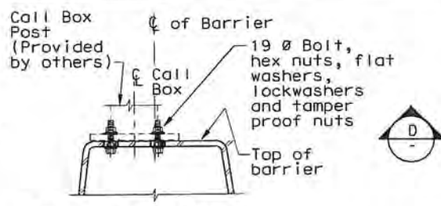

D — SECTION
NO SCALE

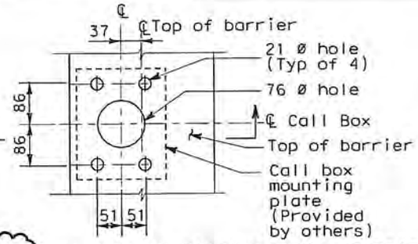

MOUNTING DETAIL FOR CALL BOX ON ROADWAY METAL BARRIER
See note 4 for call box locations
4

AS-2 DETAIL
NO SCALE

REQUEST FOR INFORMATION NOT ADDRESSED IN THIS CCO REMAIN IN FORCE					
4	05/10/10	WEST END BARRIER CONDUIT	NK	MSO	44S1
3	08/03/09	ELECTRICAL WARNING SYSTEMS	GB	MSO	61
2	03/30/09	SERVICE PLATFORM ELECTRICAL CHANGES	NK	MSO	55
1	03/04/08	BARRIER MODIFICATIONS.	EL	MI	44
MARK	DATE	DESCRIPTIONS	BY	CH'D	CCO#
		REVISIONS			

CONTRACT CHANGE ORDER NO. 44 S1
SHEET 2 OF 21

DIST	COUNTY	ROUTE	KILOMETER POST TOTAL PROJECT	SHEET No	TOTAL SHEETS
04	SF	80	13.2/13.9	83R4	1204

REGISTERED CIVIL ENGINEER 4/02/04

12-6-04
PLANS APPROVAL DATE

REGISTERED PROFESSIONAL ENGINEER — Mee Shing Owyang — No. 24960 — Exp. 12/31/05 — CIVIL — STATE OF CALIFORNIA

The State of California or its officers or agents shall not be responsible for the accuracy or completeness of electronic copies of this plan sheet.

Parsons Brinckerhoff Quade & Douglas, Inc.
303 Second Street, Suite 700N
San Francisco, CA 94107

Caltrans now has a web site! To get to the web site, go to: http://www.dot.ca.gov

PP 14 — PP 32 — PP 50 — PP 80 — PP 110

L76x76x6.4 connected to crossbeam at center and at each end of rack

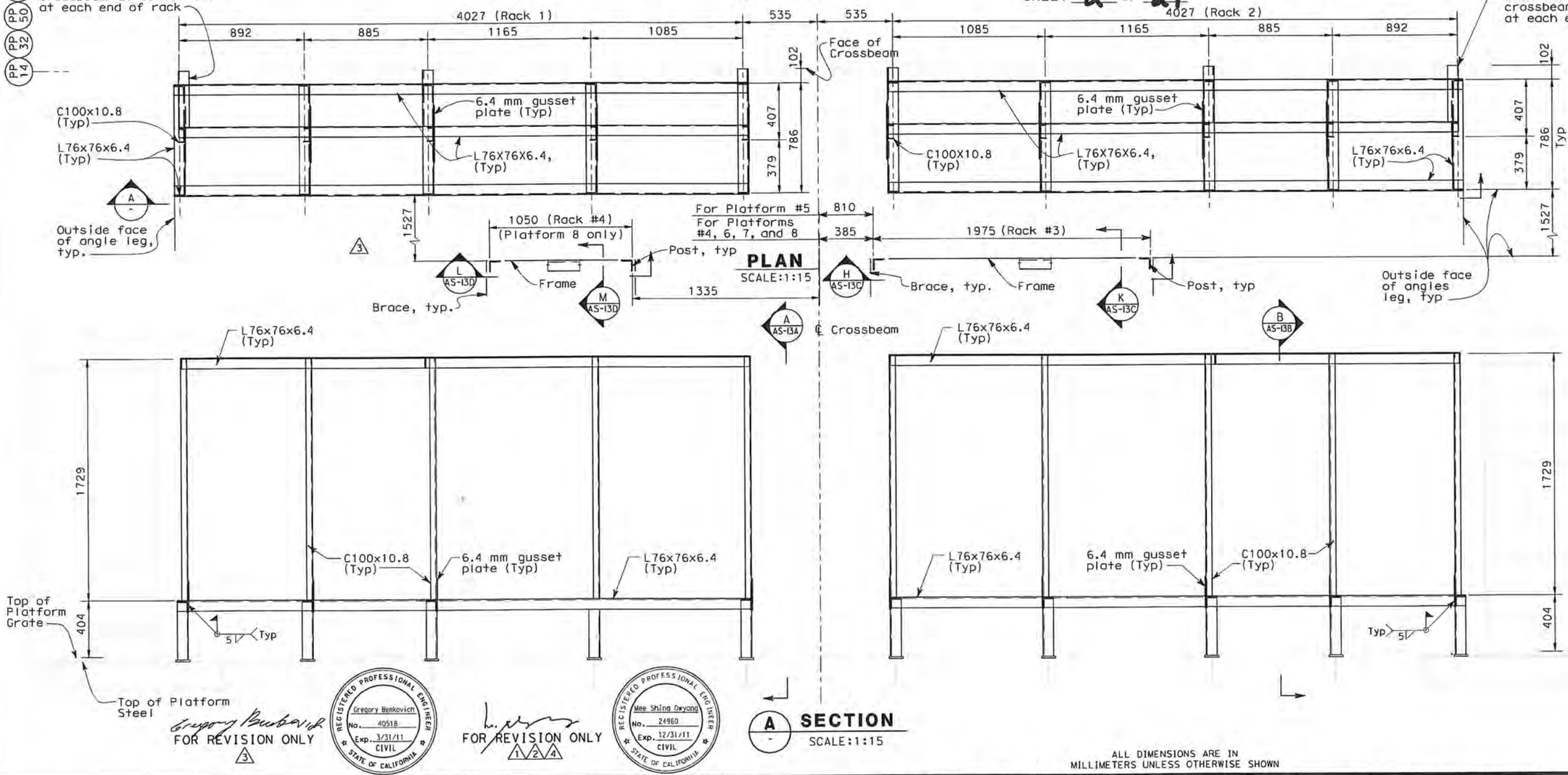

Gregory Benkovich — FOR REVISION ONLY 3

REGISTERED PROFESSIONAL ENGINEER — Gregory Benkovich — No. 40518 — Exp. 3/31/11 — CIVIL — STATE OF CALIFORNIA

Mee Shing Owyang — FOR REVISION ONLY 1 2 4

REGISTERED PROFESSIONAL ENGINEER — Mee Shing Owyang — No. 24960 — Exp. 12/31/11 — CIVIL — STATE OF CALIFORNIA

A SECTION
SCALE:1:15

ALL DIMENSIONS ARE IN MILLIMETERS UNLESS OTHERWISE SHOWN

BoB Zandipour — DESIGN OVERSIGHT		DESIGN	BY N. King	CHECKED M. S. Owyang	PREPARED FOR THE STATE OF CALIFORNIA DEPARTMENT OF TRANSPORTATION
SIGN OFF DATE		DETAILS	BY L. Reyes	CHECKED M. S. Owyang	
DESIGN DETAIL SHEET (METRIC) (REV. 3/1/98)		QUANTITIES	BY	CHECKED	

PROJECT ENGINEER

BRIDGE NO. 34-0006
KILOMETER POST 13.2/13.9

SAS SUPERSTRUCTURE
ELECTRICAL PANEL SUPPORT SECTIONS — AS-13

SHEET OF

ORIGINAL SCALE IN MILLIMETERS FOR REDUCED PLANS 0 10 20 30 40 50 60 70 80 90 100

CU 04251
EA 0120F1

DISREGARD PRINTS BEARING EARLIER REVISION DATES

REVISION DATES (PRELIMINARY STAGE ONLY)

FILE => T:\13103\MS\pse\SAS Struc\CCO\SAS CCO44S1\2010-03-18 Addendum\04-0120f1_0083R04.dgn

USERNAME => tlorico DATE PLOTTED => 5/10/2010 TIME PLOTTED => 3:01:12 PM

$REQUEST

DIST	COUNTY	ROUTE	KILOMETER POST TOTAL PROJECT	SHEET No	TOTAL SHEETS
04	SF	80	13.2/13.9	117 R2	1204

12/19/02
REGISTERED ELECTRICAL ENGINEER DATE

12-6-04
PLANS APPROVAL DATE

REGISTERED PROFESSIONAL ENGINEER — JENS ERLINGSSON No. 8249 Exp. 9/30/06 ELECTRICAL — STATE OF CALIFORNIA

PB POWER, Inc.
A Parsons Brinckerhoff Company
303 Second St., Suite 700N
San Francisco, CA 94107-1317

The State of California or its officers or agents shall not be responsible for the accuracy or completeness of electronic copies of this plan sheet.

Caltrans now has a web site! To get to the web site, go to http://www.dot.ca.gov

Caltrans Metric

SAN FRANCISCO BAY

Hinge KW

Bent W2W

6 8 10 12 14 16 18 20 22 24

YBI Transition Structure

SAS Superstructure

Contract 04-012H4

For detail of this area, see E-66B

See YBI Structures Contract

W Line

56

See Sheet E-47

PB-LTG PB-LTG PB-LTG PB-COM PB-LTG PB-LTG PB-LTG PB-COM PB-LTG PB-LTG

1/350 1/450 1/351 1/451 1/352 1/452 1/353 1/453 1/354 1/454 1/355 1/455 1/356 1/456 1/357 1/457

1/113 1/114 1/115

1/513 1/514 1/515

S-1031/A-1035

46 2 47

1/732 1/832 1/733 1/833 1/734 1/834 MVDS-W02 1031-2 UP104-3 PB-LTG PB-COM 1/735 1/835 PB-LTG PB-COM 1/736 1/836

W2 Cap Beam (Typ)

Service Platform 4 see sheet E-71

SHEET NOTES:

(1) Conduit from barrier pullbox or other equipment down into Girder, see sheet E-96.

(2) Deleted. △2

(3) Roadway Barrier Receptacle, see Detail 1, sheet E-68.

(4) See drawing E-66B for continuation of conduits. △2

NOTES:

1. References:
   - For typical details and locations of conduit connections to light poles, barrier outlet boxes, call boxes, overhead sign lighting, CCTV and MVDS, see sheets E-66, E-67 and E-68.
   - TOS equipment is shown for conduit routing only. For typical details of TOS controller and devices, see sheets E-344 through E-357.
   - For types of pullboxes, splice boxes and enclosures, see sheet E-83.
   - For circuit and conduit/cable tray schedules, see sheets starting at E-401.
2. For Roadway Level Lighting Pole Schedules, see sheet E-82.

REGISTERED PROFESSIONAL ENGINEER — FADI WALIEDDINE No. 11465 Exp. 12/31/2009 ELECTRICAL — STATE OF CALIFORNIA

FOR REVISION ONLY △2

REGISTERED PROFESSIONAL ENGINEER — MARRELL FUMIO TAKATA No. E 8651 Exp. 9/30/2008 ELECTRICAL — STATE OF CALIFORNIA

FOR REVISION ONLY △1

REQUEST FOR INFORMATION NOT ADDRESSED IN THIS CCO REMAIN IN FORCE					
△2	06/25/09	WEST END BARRIER CONDUIT	RG	FW	44S1
△1	02/19/08	ELECTRICAL MODIFICATIONS	MP EL	RR	42
MARK	DATE	DESCRIPTIONS	BY	CH'D	CCO#
REVISIONS					

CONTRACT CHANGE ORDER NO. 44 S1
SHEET 3 OF 21

CONDUIT PLAN

SAS SUPERSTRUCTURE ROADWAY WESTBOUND
LIGHTING AND ELECTRICAL SYSTEMS

SCALE 1:200

E-46

CALCULATED/ DESIGNED BY	FK	DATE 8/02	REVISED BY
CHECKED BY	IAH	8/02	DATE REVISED

DESIGN OVERSIGHT — BEHZAD GOLEMOHAMMADI

STATE OF CALIFORNIA - DEPARTMENT OF TRANSPORTATION — Caltrans

THIS PLAN IS ACCURATE FOR ELECTRICAL WORK ONLY.

LAST REVISION 00-00-00 — DATE PLOTTED => 7/15/2009 — TIME PLOTTED => 4:37:26 PM

FOR REDUCED PLANS ORIGINAL SCALE IS IN MILLIMETERS 0 20 40 60 80

DGN FILE =>t:\13103\MS\pse\SAS Struc\CCO\SAS CCO44S1\2009-07-17 Issued for Submittal (Draft 2)\04-0120f1_0117R02.dgn
USERNAME =>Graja

CU 04251 EA 0120F1

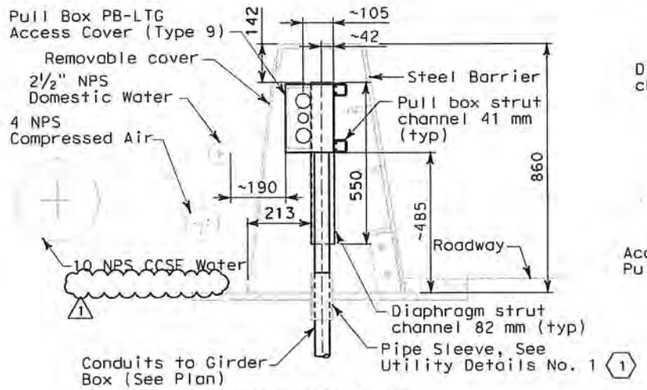

SECTION B-B

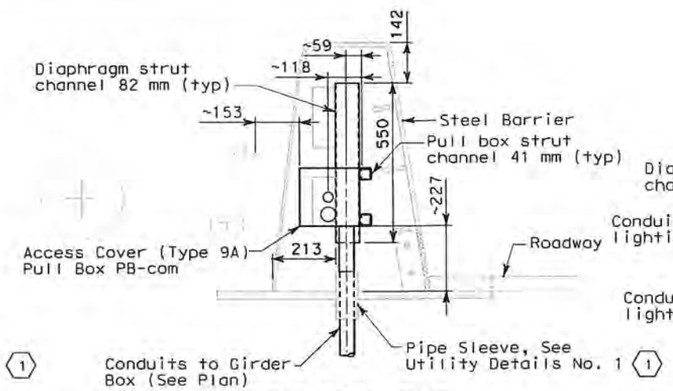

SECTION C-C

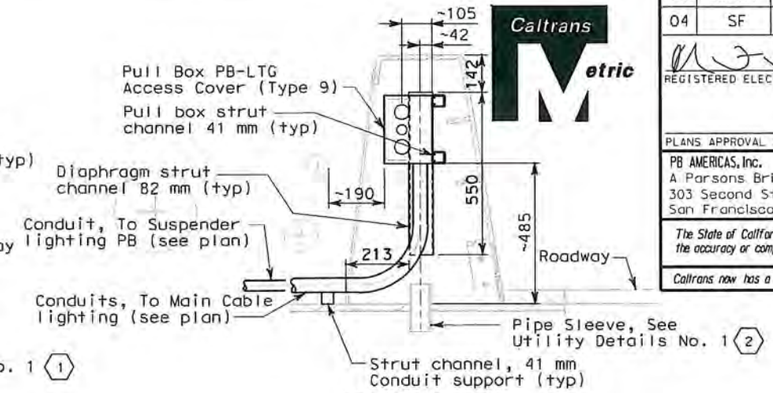

DETAIL 6

TYPICAL CONDUIT LOCATION FROM PULL BOX PB-LTG TO SUSPENDER AND MAIN CABLE LIGHTING (W5) (W2) (SIMILAR)
SCALE 1:10

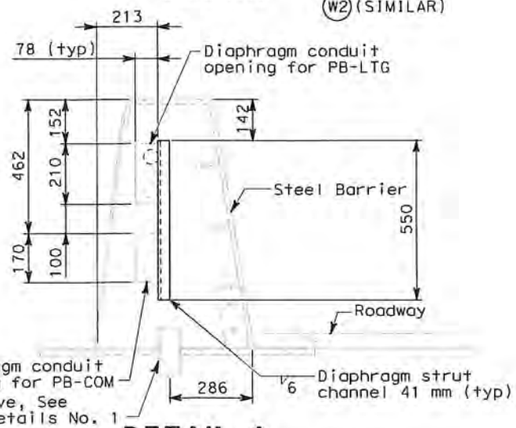

DETAIL 1

TYPICAL PULL BOX PB-LTG AND CONDUIT LOCATION (W5) (W2) (SIMILAR)
SCALE 1:10

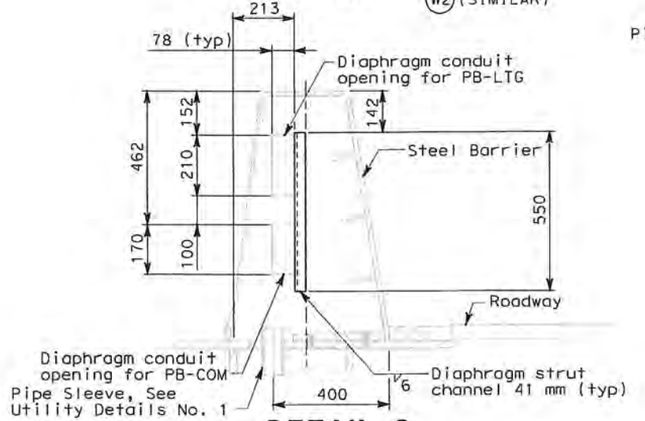

DETAIL 2

TYPICAL PULL BOX PB-COM AND CONDUIT LOCATION (W5) (W2) (SIMILAR)
SCALE 1:10

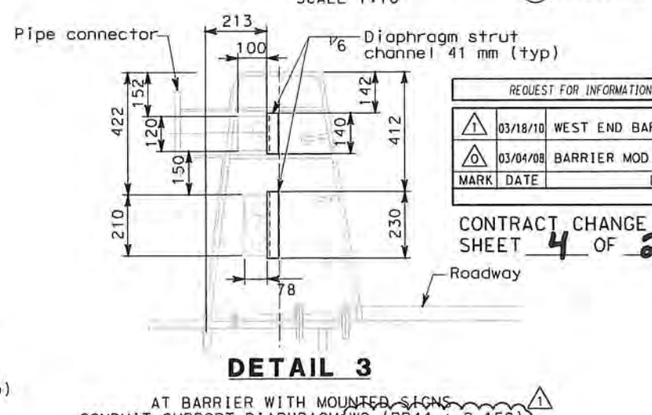

DETAIL 3

AT BARRIER WITH MOUNTED SIGNS (1)
CONDUIT SUPPORT DIAPHRAGM (W2) (PP44 + 2.150)
CONDUIT SUPPORT DIAPHRAGM (W5) (PP44 + 2.150)
SCALE 1:10

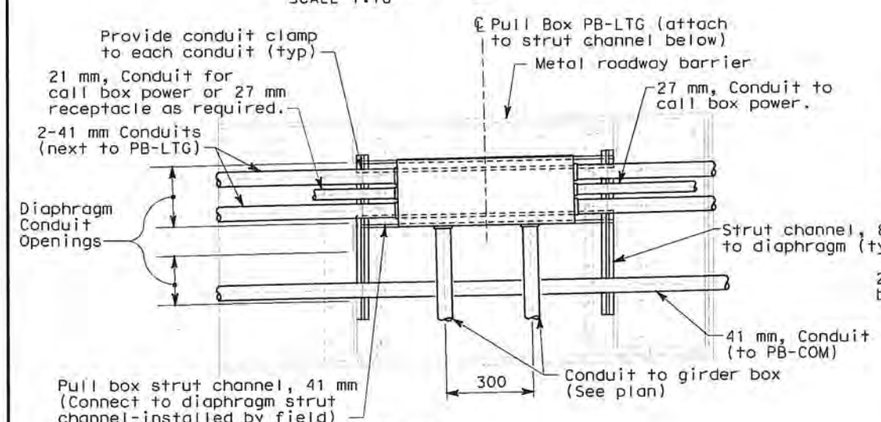

DETAIL 4

TYPICAL CONDUIT SUPPORT PULL BOX PB-LTG MOUNTING (W5)
SCALE 1:10

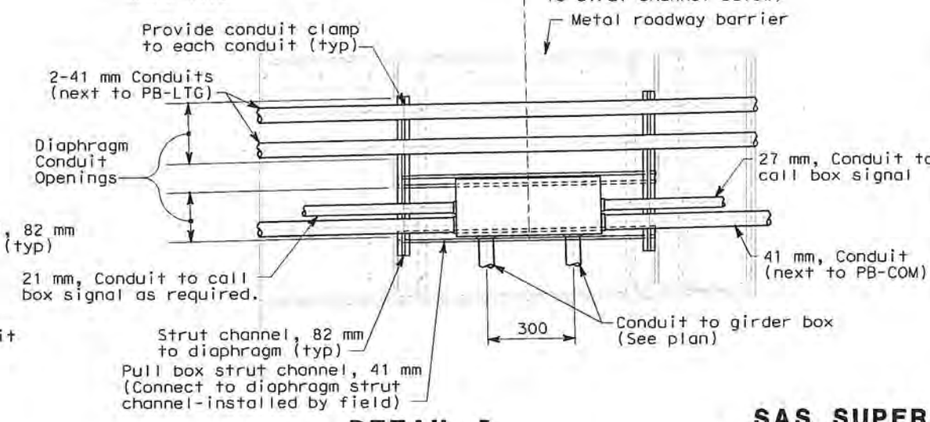

DETAIL 5

TYPICAL CONDUIT SUPPORT PULL BOX PB-COM MOUNTING (W2)
SCALE 1:10

NOTES:

1. References:
   - For pull box schedule, see Sheet E-83.
   - For barrier details, see structural drawings.
2. For location of pull boxes inside girder, see Sheet E-96 through E-101.

SHEET NOTES:

(1) To prevent moisture from passing inside the sleeve, the Contractor shall install sealant between the sleeve and conduit.

(2) Spare pipe sleeves shall be capped on both ends.

DETAILS
SAS SUPERSTRUCTURE ROADWAY CONDUIT AND PULL BOX LOCATIONS

SCALE AS NOTED

DIST	COUNTY	ROUTE	KILOMETER POST TOTAL PROJECT	SHEET No	TOTAL SHEETS
04	SF	80	13.2/13.9	131 S1R1	1204

REGISTERED ELECTRICAL ENGINEER — 9/18/07 DATE

REGISTERED PROFESSIONAL ENGINEER — MARCELL FUMIO TAKATA — No. E 8651 — Exp. 9/30/2008 ELECTRICAL — STATE OF CALIFORNIA

PLANS APPROVAL DATE

PB AMERICAS, Inc.
A Parsons Brinckerhoff Company
303 Second St., Suite 700N
San Francisco, CA 94107-1317

The State of California or its officers or agents shall not be responsible for the accuracy or completeness of electronic copies of this plan sheet.

Caltrans now has a web site! To get to the web site, go to http://www.dot.ca.gov

1 — REGISTERED PROFESSIONAL ENGINEER — DAVID H. OTO — No. 10699 — Exp. 06/30/2011 ELECTRICAL — STATE OF CALIFORNIA

FOR REVISION ONLY

REQUEST FOR INFORMATION NOT ADDRESSED IN THIS CCO REMAIN IN FORCE

MARK	DATE	DESCRIPTIONS REVISIONS	BY	CH'D	CCO#
1	03/18/10	WEST END BARRIER CONDUIT	TW	RG DO	44S1
0	03/04/08	BARRIER MODIFICATIONS	EL	RG SE	44

CONTRACT CHANGE ORDER NO. 44 S1
SHEET 4 OF 21

CALCULATED/ DESIGNED BY	CHECKED BY	DATE	REVISED BY	DATE REVISED
FK	IAH	11/02		

DESIGN OVERSIGHT — BEHZAD GOLEMOHAMMADI

STATE OF CALIFORNIA - DEPARTMENT OF TRANSPORTATION — Caltrans

THIS PLAN IS ACCURATE FOR ELECTRICAL WORK ONLY.

ALL DIMENSIONS ARE IN MILLIMETERS UNLESS OTHERWISE SHOWN.

FOR REDUCED PLANS ORIGINAL SCALE IS IN MILLIMETERS — 0 20 40 60 80

DGN FILE =>T:\13103\MS\pse\SAS Struc\CCO\SAS CCO44S1\2010-03-18 Addendum\04-0120F1_013IS01R01.dgn
USERNAME =>llorico

CU 04251 | EA 0120F1

LAST REVISION 00-00-00 — DATE PLOTTED => 3/17/2010 TIME PLOTTED => 3:38:03 PM

E-66A

DIST	COUNTY	ROUTE	KILOMETER POST TOTAL PROJECT	SHEET NO	TOTAL SHEETS
04	SF	80	13.2/13.9	131 S2	1204

REGISTERED ELECTRICAL ENGINEER — 06/25/09 DATE

PLANS APPROVAL DATE

FADI WALIEDDINE No. 11465 Exp. 12/31/2009 ELECTRICAL — REGISTERED PROFESSIONAL ENGINEER — STATE OF CALIFORNIA

PB AMERICAS, Inc.
A Parsons Brinckerhoff Company
303 Second St., Suite 700N
San Francisco, CA 94107-1317

The State of California or its officers or agents shall not be responsible for the accuracy or completeness of electronic copies of this plan sheet.

Caltrans now has a web site! To get to the web site, go to http://www.dot.ca.gov

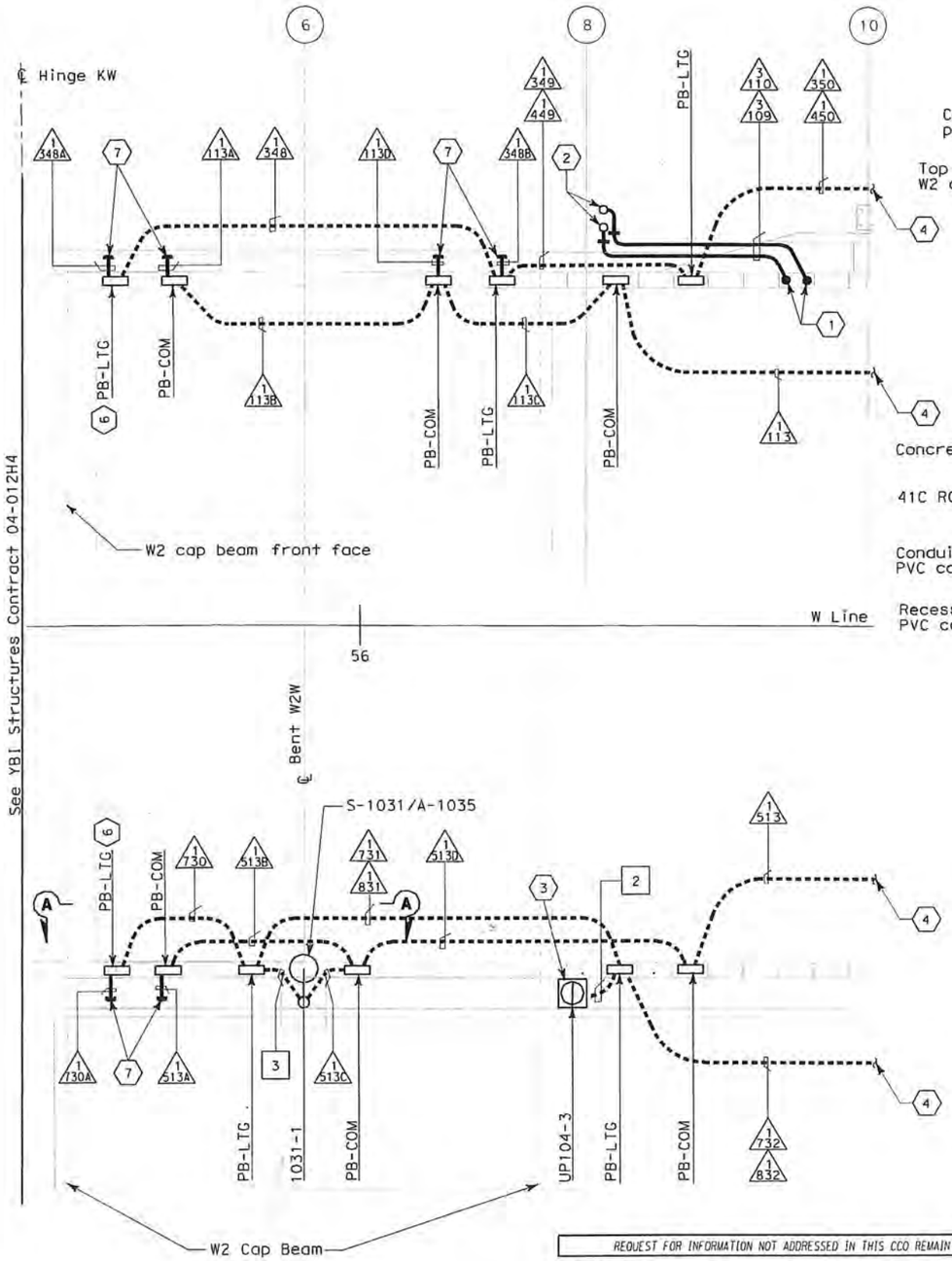

CONDUIT PLAN
SCALE: 1:100

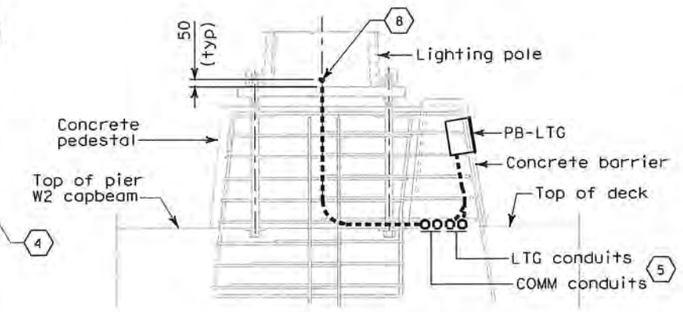

SECTION D-D
NO SCALE

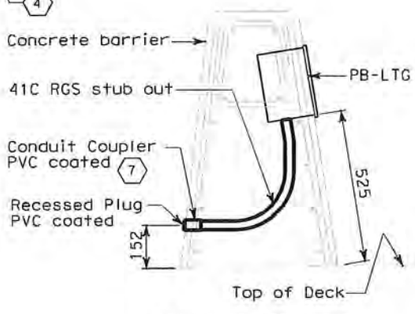

SECTION B-B
NO SCALE
Typical for PB-LTG in concrete barrier.

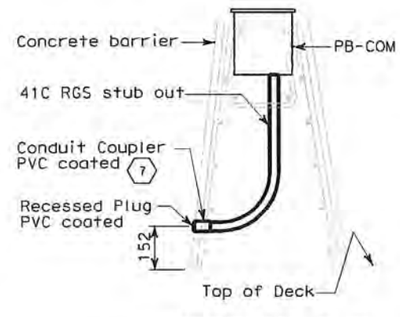

SECTION C-C
NO SCALE
Typical for PB-COM in concrete barrier.

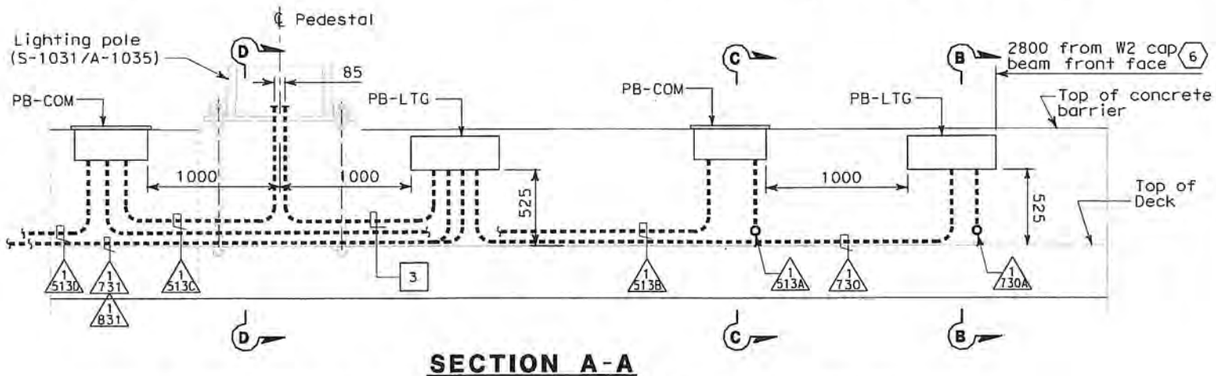

SECTION A-A
NO SCALE
Similar for installation of PB-LTG and PB-COM on north side concrete barrier.
Conduit routing varies, see conduit plan.

SHEET NOTES:

1. Conduit from barrier pullbox or other equipment down into Girder, see sheet E-96.
2. For conduit to Suspend Lighting, see sheet E-226. Typ for all PB-LTG located on the north side of the roadway.
3. Roadway Barrier Receptacle, see Detail 1, sheet E-68.
4. See drawing E-46 for continuation of conduits.
5. Conduit arrangement may be adjusted to suit field condition.
6. Contractor shall verify dimension and locate PB-LTG with sufficient distance to accommodate required clearance for the expansion joint.
7. Stub-out conduits are furnished and installed by Contractor. Conduit shall stub-out at the non-roadway side of the barrier with the coupler flushed to the barrier face wall and provided with plug.
8. Capped end of conduit stub-ups.

NOTES:

1. For general notes, see E-46.

REQUEST FOR INFORMATION NOT ADDRESSED IN THIS CCO REMAIN IN FORCE					
0	06/25/09	WEST END BARRIER CONDUIT	RG	FW	4451
MARK	DATE	DESCRIPTIONS	BY	CH'D	CCO#
REVISIONS					

CONTRACT CHANGE ORDER NO. 44 S1
SHEET 5 OF 21

DETAILS
SAS SUPERSTRUCTURE ROADWAY WESTBOUND CONDUIT AND PULL BOX LOCATIONS
SCALE AS NOTED

E-66B

CALCULATED/ DESIGNED BY	RG	DATE 6-09	REVISED BY
CHECKED BY	FW	6-09	DATE REVISED

STATE OF CALIFORNIA - DEPARTMENT OF TRANSPORTATION — Caltrans
DESIGN OVERSIGHT — BEHZAD GOLEMOHAMMADI

LAST REVISION 00-00-00
DATE PLOTTED => 7/15/2009
TIME PLOTTED => 4:41:35 PM

FOR REDUCED PLANS ORIGINAL SCALE IS IN MILLIMETERS 0 20 40 60 80

DGN FILE =>t:\13103\MS\pse\SAS Struc\CCO\SAS CCO4451\2009-07-17
USERNAME =>Grajo

Issued for Submittal (Draft 2)\04-0120F1_0131S02.dgn

CU 04251 | EA 0120F1

DIST	COUNTY	ROUTE	KILOMETER POST TOTAL PROJECT	SHEET No	TOTAL SHEETS
04	SF	80	13.2/13.9	149 R3	1204

REGISTERED ELECTRICAL ENGINEER — 12/19/02 DATE

REGISTERED PROFESSIONAL ENGINEER — JENS ERLINGSSON No. 8249 Exp. 9/30/06 ELECTRICAL — STATE OF CALIFORNIA

12-6-04
PLANS APPROVAL DATE

PB POWER, Inc.
A Parsons Brinckerhoff Company
303 Second St., Suite 700N
San Francisco, CA 94107-1317

The State of California or its officers or agents shall not be responsible for the accuracy or completeness of electronic copies of this plan sheet.

Caltrans now has a web site! To get to the web site, go to http://www.dot.ca.gov

Caltrans Metric

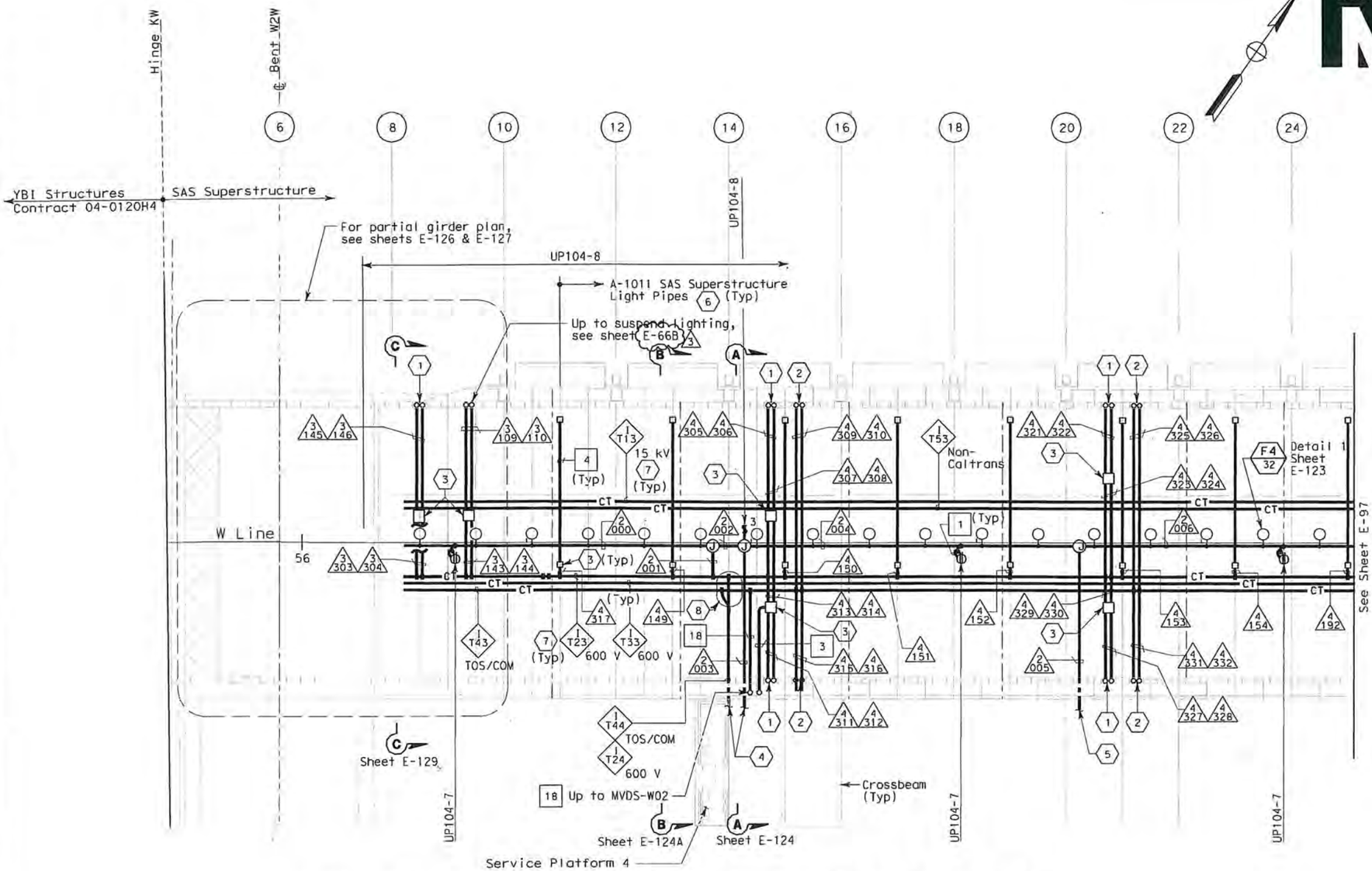

SHEET NOTES:

1. Conduit up to PB-LTG located in barrier, see sheet E-46.
2. Conduit up to PB-COM located in barrier, see sheet E-46.
3. PB-2A locate on top of floor.
4. For cable tray run and lighting inside crossbeam, see sheet E-114.
5. For lighting inside crossbeam, see sheet E-119.
6. PB-2L with circuit for future light pipes. See sheet E-121 for installation details and E-130 for lighting schedule.
7. For cable tray & ground bar support, refer to sheet E-125.
8. For fiber splice tray detail, refer to sheet E-356.

NOTES:

1. References:
   - TOS equipment is shown for conduit routing only. For typical details of TOS controller and devices, see sheets E-344 through E-357.
   - For types of pull boxes, splice boxes and enclosures, see sheet E-83.
   - For bridge grounding plan, see sheet E-111.
   - For circuit and conduit/cable tray schedules, see sheets starting at E-401.
2. For other work related to Hinge KW and items not shown on this sheet, see Electrical Special Provisions.
3. The girder lighting fixtures are shown diagrammatically. Contractor shall install fixtures at railing posts with a maximum of 8000 mm between fixtures. For types and typical lighting fixture installation details, see sheet E-123.
4. The cable trays are shown diagrammatically. For typical girder cable tray plans and sections, see sheets E-124 and E-125.

SAS SUPERSTRUCTURE - CONDUIT AND CABLE TRAY PLAN

REGISTERED PROFESSIONAL ENGINEER — FADI WALIEDDINE No. 11465 Exp. 12/31/2009 ELECTRICAL — STATE OF CALIFORNIA

FOR REVISION ONLY (2) (3)

REGISTERED PROFESSIONAL ENGINEER — MARWELL FUMIO TAKAKI No. E 8651 Exp. 9/30/2010 ELECTRICAL — STATE OF CALIFORNIA

FOR REVISION ONLY (1)

REQUEST FOR INFORMATION NOT ADDRESSED IN THIS CCO REMAIN IN FORCE					
(3)	06/25/09	WEST END BARRIER CONDUIT	RG	FW	4451
(2)	02/25/08	CABLE TRAY CHANGES	RG	FW	4251
(1)	02/19/08	ELECTRICAL MODIFICATIONS	MP EL	RR	42
MARK	DATE	REVISIONS DESCRIPTIONS	BY	CH'D	CCO#

CONTRACT CHANGE ORDER NO. 44 51
SHEET 6 OF 21

THIS PLAN IS ACCURATE FOR ELECTRICAL WORK ONLY.

ALL DIMENSIONS ARE IN MILLIMETERS UNLESS OTHERWISE SHOWN.

SAS SUPERSTRUCTURE GIRDER WESTBOUND
LIGHTING AND ELECTRICAL SYSTEMS

SCALE 1:200

E-96

STATE OF CALIFORNIA - DEPARTMENT OF TRANSPORTATION
Caltrans
DESIGN OVERSIGHT: BEHZAD GOLEMOHAMMADI
CALCULATED/DESIGNED BY
CHECKED BY
FK
DATE 8/02
REVISED BY
IAH
8/02
DATE REVISED

LAST REVISION 00-00-00
DATE PLOTTED => 7/15/2009
TIME PLOTTED => 4:42:52 PM

FOR REDUCED PLANS ORIGINAL SCALE IS IN MILLIMETERS 0 20 40 60 80

DGN FILE =>t:\13103\MS\pse\SAS Struc\CCO\SAS CCO44S1\2009-07-17 Issued for Submittal (Draft 2)\04-0120F1_0149R03.dgn
USERNAME =>Grajo

CU 04251 | EA 0120F1

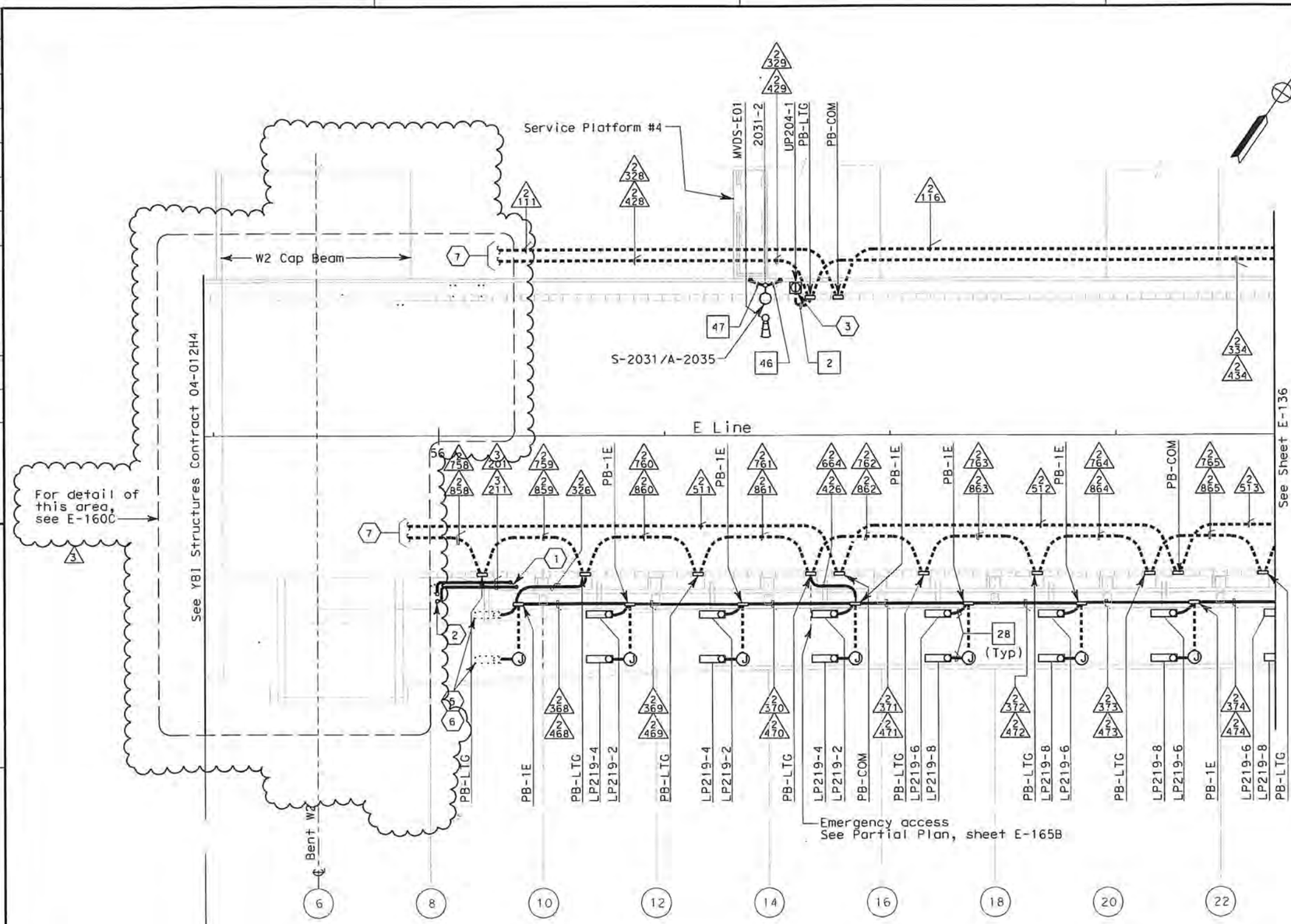

SAS SUPERSTRUCTURE - CONDUIT PLAN

YBI Structures — SAS Superstructure

REQUEST FOR INFORMATION NOT ADDRESSED IN THIS CCO REMAIN IN FORCE					
MARK	DATE	DESCRIPTIONS REVISIONS	BY	CH'D	CCO#
3	06/25/09	WEST END BARRIER CONDUIT	RG	FW	4451
2	12/15/08	BIKE PATH DETAILS	TW	RG FW	99
1	02/19/08	ELECTRICAL MODIFICATIONS	MP EL	RR	42

CONTRACT CHANGE ORDER NO. 4451
SHEET 7 OF 21

REGISTERED PROFESSIONAL ENGINEER — MARRELL FUMIO TAKATA — No. E 8651 — Exp. 9/30/2008 ELECTRICAL — STATE OF CALIFORNIA
FOR REVISION ONLY 1

REGISTERED PROFESSIONAL ENGINEER — FADI WALIEDDINE — No. 11465 — Exp. 12/31/2009 ELECTRICAL — STATE OF CALIFORNIA
FOR REVISION ONLY 2 3

THIS PLAN ACCURATE FOR ELECTRICAL WORK ONLY.

SHEET NOTES:

1. Conduit from barrier pull box or other equipment down into Girder Box, see sheet E-181.
2. For conduit to suspension cable lighting, see sheet E-226.
3. Roadway Barrier Receptacle, see Detail 1, sheet E-162.
4. Deleted.
5. Railing lights are contractor furnished and installed by others.
6. Bike path electrical components west of PP-9 are furnished by contractor and installed by others.
7. See drawing E-160C for continuation of conduits.

NOTES:

1. References:
   - For typical details and locations of conduit connections to light poles, barrier outlet boxes, call boxes, overhead sign lighting, CMS, CCTV and MVDS, see sheets E-160 thru E-162 and E-169.
   - TOS equipment is shown for conduit routing only. For typical details of TOS controller and devices, see sheets E-344 through E-357.
   - For types of pull boxes, splice boxes and enclosures, see sheet E-169.
   - For circuit and conduit/cable tray schedules, see sheets starting at E-401.
2. For Roadway level, Bike Path and Belvedere Lighting Fixture Schedules and wiring diagrams see sheets E-146, E-147 and E-165.
3. For Roadway level and Bike Path Call Box Schedule, see sheet E-397.
4. For number of lighting fixtures (main tower lights) see lighting schedule sheets E-271 and E-272.
5. All conduits and fittings routed exposed between the Bike Path and the roadway shall be galvanized rigid steel, PVC coated.
6. See sheets E-160 thru E-165 for conduit locations.
7. For Belvedere Lighting Fixture installation, see sheet E-173.

SAS SUPERSTRUCTURE ROADWAY EASTBOUND LIGHTING AND ELECTRICAL SYSTEMS

SCALE 1:200

E-135

ALL DIMENSIONS ARE IN METERS UNLESS OTHERWISE SHOWN.

FOR REDUCED PLANS ORIGINAL SCALE IS IN MILLIMETERS 0 20 40 60 80

DIST	COUNTY	ROUTE	KILOMETER POST TOTAL PROJECT	SHEET No	TOTAL SHEETS
04	SF	80	13.2/13.9	188 R3	1204

REGISTERED ELECTRICAL ENGINEER — 12/19/02 DATE

12-6-04
PLANS APPROVAL DATE

REGISTERED PROFESSIONAL ENGINEER — JENS ERLINGSSON — No. 8249 — Exp. 9/30/06 ELECTRICAL — STATE OF CALIFORNIA

PB POWER, Inc.
A Parsons Brinckerhoff Company
303 Second St., Suite 700N
San Francisco, CA 94107-1317

The State of California or its officers or agents shall not be responsible for the accuracy or completeness of electronic copies of this plan sheet.

Caltrans now has a web site! To get to the web site, go to: http://www.dot.ca.gov

DATE	REVISED BY	DATE REVISED
08/02	EDC	08/02
	CALCULATED/ DESIGNED BY	CHECKED BY
	CYF	

DESIGN OVERSIGHT — BEHZAD GOLEMOHAMMADI

STATE OF CALIFORNIA - DEPARTMENT OF TRANSPORTATION — Caltrans

LAST REVISION 00-00-00 — DATE PLOTTED => 7/15/2009 TIME PLOTTED => 4:45:46 PM

DGN FILE =>t:\13103\MS\pse\SAS Struc\CCO\SAS CCO4451\2009-07-17	Issued for Submittal (Draft 2)	04-0120F1_0188R03.dgn
USERNAME =>Graja	CU 04251	EA 0120F1

DIST	COUNTY	ROUTE	KILOMETER POST TOTAL PROJECT	SHEET No	TOTAL SHEETS
04	SF	80	13.2/13.9	207 S3	1204

REGISTERED ELECTRICAL ENGINEER — DATE 02/11/10

REGISTERED PROFESSIONAL ENGINEER — DAVID H. OTO — No. 10699 — Exp. 06/30/2011 ELECTRICAL — STATE OF CALIFORNIA

PLANS APPROVAL DATE

PB AMERICAS, Inc.
A Parsons Brinckerhoff Company
303 Second St., Suite 700N
San Francisco, CA 94107-1317

The State of California or its officers or agents shall not be responsible for the accuracy or completeness of electronic copies of this plan sheet.

Caltrans now has a web site! To get to the web site, go to http://www.dot.ca.gov

Caltrans Metric

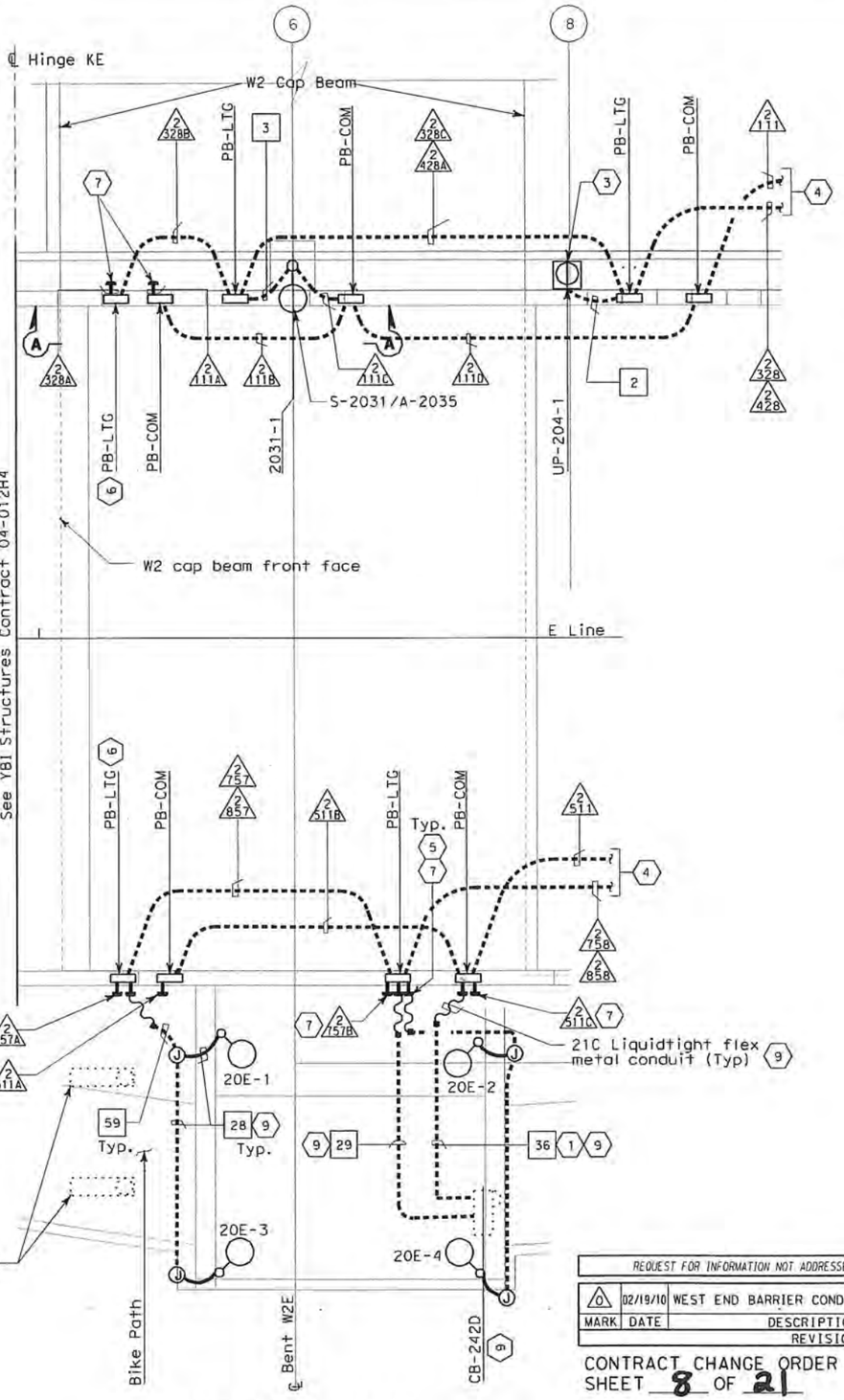

CONDUIT PLAN
SCALE: 1:100

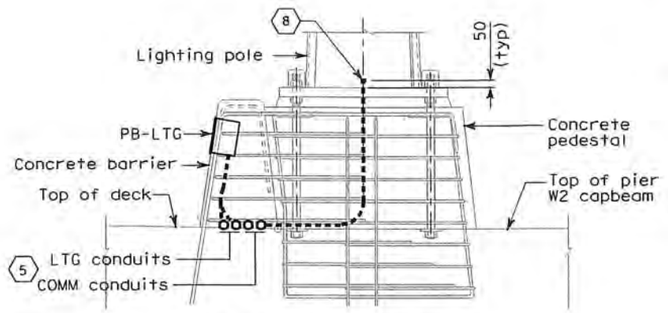

SECTION D-D
NO SCALE

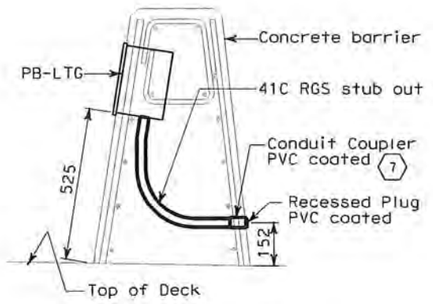

SECTION B-B
NO SCALE
Typical for PB-LTG in concrete barrier.

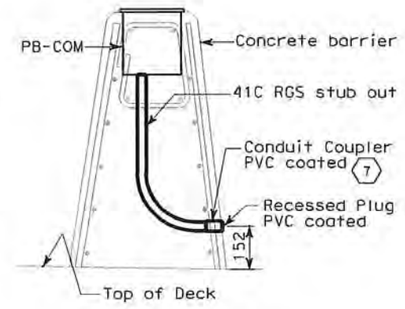

SECTION C-C
NO SCALE
Typical for PB-COM in concrete barrier.

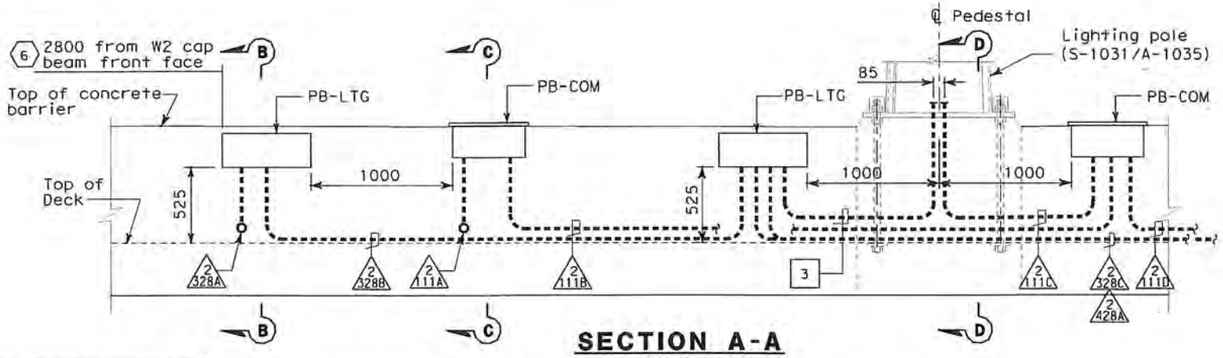

SECTION A-A
NO SCALE
Similar for installation of PB-LTG and PB-COM on south side concrete barrier.
Conduit routing varies, see conduit plan.

SHEET NOTES:

1. Contractor shall coil 70 meters inside cable tray at PP15 for feed into PB-COM by others.
2. Railing lights are conrtractor furnished and installed by others.
3. Roadway Barrier Receptacle, see Detail 1, sheet E-68.
4. See drawing E-135 for continuation of conduits.
5. Conduit arrangement may be adjusted to suit field condition.
6. Contractor shall verify dimension and locate PB-LTG with sufficient distance to accommodate required clearance for the expansion joint.
7. Stub-out conduits are furnished and installed by Contractor. Conduit shall stub-out at the non-roadway side of the barrier with the coupler flushed to the barrier face wall and provided with plug.
8. Capped end of conduit stub-ups.
9. Bike path electrical components west of PP-9 are furnished by Contractor and installed by others.

NOTES:

1. For additional general notes, see E135.

MARK	DATE	DESCRIPTIONS	BY	CH'D	CCO#
		REVISIONS			
0	02/19/10	WEST END BARRIER CONDUIT	TW	RG DO	4451

REQUEST FOR INFORMATION NOT ADDRESSED IN THIS CCO REMAIN IN FORCE

CONTRACT CHANGE ORDER NO. 4451
SHEET 8 OF 21

DETAILS
SAS SUPERSTRUCTURE ROADWAY EASTBOUND CONDUIT AND PULL BOX LOCATIONS
SCALE AS NOTED

E-160C

THIS PLAN ACCURATE FOR ELECTRICAL WORK ONLY.

FOR REDUCED PLANS ORIGINAL SCALE IS IN MILLIMETERS 0 20 40 60 80

DGN FILE =>T:\13103\WS\pse\SAS Struc\CCO\SAS CCO4451\2010-02-11
USERNAME =>llorico

Issued for Submittal (Draft 3)\04-0120F1_0207S03.dgn
CU 04251 | EA 0120F1

LAST REVISION 00-00-00
DATE PLOTTED => 2/19/2010
TIME PLOTTED => 10:24:34 AM

STATE OF CALIFORNIA - DEPARTMENT OF TRANSPORTATION
Caltrans

DESIGN OVERSIGHT
BEHZAD GOLEMOHAMMADI

CALCULATED/ DESIGNED BY	RG	DATE 6-09	REVISED BY
CHECKED BY	FW	6-09	DATE REVISED

DIST	COUNTY	ROUTE	KILOMETER POST TOTAL PROJECT	SHEET No	TOTAL SHEETS
04	SF	80	13.2/13.9	352 R3	1204

12/19/02
REGISTERED ELECTRICAL ENGINEER DATE

12-6-04
PLANS APPROVAL DATE

REGISTERED PROFESSIONAL ENGINEER — JENS ERLINGSSON No. 8249 Exp. 9/30/08 ELECTRICAL — STATE OF CALIFORNIA

PB POWER, Inc.
A Parsons Brinckerhoff Company
303 Second St., Suite 700N
San Francisco, CA 94107-1317

The State of California or its officers or agents shall not be responsible for the accuracy or completeness of electronic copies of this plan sheet.

Caltrans now has a web site! To get to the web site, go to http://www.dot.ca.gov

CALL BOX SCHEDULE - WESTBOUND

Call Box Number	Station Number	Mounting Type	Location: Roadway Location	RTU Connection	Remarks
CB-143A	59 + 33.80	Steel Barrier	Westbound North	RTU #11W	
CB-143B	59 + 33.80	Steel Barrier	Westbound South	RTU #11W	

CALL BOX SCHEDULE - EASTBOUND

Call Box Number	Station Number	Mounting Type	Location: Roadway Side	RTU Connection	Remarks
CB-242D	55 + 96	Bike Path Railing	Bike Path	RTU #10E	Installed By Others
3 See Note 3	57 + 80	Steel Barrier	Eastbound South	See Note 3	Near T1
CB-243A	59 + 35	Steel Barrier	Eastbound North	RTU #11E	
CB-243B	59 + 35	Steel Barrier	Eastbound South	RTU #11E	
CB-243C	59 + 39	Bike Path Railing	Bike Path	RTU #11E	
CB-244C	61 + 64	Bike Path Railing	Bike Path	RTU #11E	At Pier E2E

NOTES:

1. Call boxes will be State-furnished.
2. References:
   - For RTU #10W, #11W, #10E #11E panel layout, see sheet E-320.
3. Call box mount at 57 + 80 is for future use.
4. For mounting detail of call box on bike path, see sheet AS-2.
5. For mounting detail of call box on steel barrier see sheet AS-13.

SYN YEE CHIN No. 18186 Exp. 09/30/2011 ELECTRICAL — REGISTERED PROFESSIONAL ENGINEER — STATE OF CALIFORNIA
FOR REVISION ONLY 3

S. A. ESTOQUE, JR. No. E-10151 Exp. 12/31/2008 ELECTRICAL — REGISTERED PROFESSIONAL ENGINEER — STATE OF CALIFORNIA
FOR REVISION ONLY 2

MARIELL FUNTO TAGAT No. E 8651 Exp. 9/30/2008 ELECTRICAL — REGISTERED PROFESSIONAL ENGINEER — STATE OF CALIFORNIA
FOR REVISION ONLY 1

REQUEST FOR INFORMATION NOT ADDRESSED IN THIS CCO REMAIN IN FORCE

MARK	DATE	DESCRIPTIONS	BY	CH'D	CCO#
		REVISIONS			
3	05/10/10	WEST END BARRIER CONDUIT	NK	RG SYC	44S1
2	03/04/08	BARRIER MODIFICATIONS	JS BM	RG SE	44
1	02/19/08	ELECTRICAL MODIFICATIONS	MP EL	RR	42

CONTRACT CHANGE ORDER NO. 44 S1
SHEET 9 OF 21

DETAILS
CALL BOX SYSTEM
CALL BOX SCHEDULES
NO SCALE

E-397

CALCULATED/ DESIGNED BY	DATE	REVISED BY	DATE REVISED
BY	E.J.L. 9/01	EDC 11/01	

DESIGN OVERSIGHT — BEHZAD GOLEMOHAMMADI

STATE OF CALIFORNIA - DEPARTMENT OF TRANSPORTATION — Caltrans

THIS PLAN ACCURATE FOR ELECTRICAL WORK ONLY.

FOR REDUCED PLANS ORIGINAL SCALE IS IN MILLIMETERS 0 20 40 60 80

DGN FILE =>T:\13103\MS\pse\SAS Struc\CCO\SAS CC044S1\2010-03-18 | Addendum\04-0120f1_0352R03.dgn
USERNAME =>florico | CU 04251 | EA 0120F1

LAST REVISION 00-00-00 | DATE PLOTTED => 5/10/2010 | TIME PLOTTED => 2:44:44 PM

DIST	COUNTY	ROUTE	KILOMETER POST TOTAL PROJECT	SHEET No	TOTAL SHEETS
04	SF	80	13.2/13.9	357 R2	1204

Jens Erlingsson 12/19/02
REGISTERED ELECTRICAL ENGINEER DATE

12-6-04
PLANS APPROVAL DATE

REGISTERED PROFESSIONAL ENGINEER — JENS ERLINGSSON No. 8249 Exp. 9/30/06 ELECTRICAL — STATE OF CALIFORNIA

PB POWER, Inc.
A Parsons Brinckerhoff Company
303 Second St., Suite 700N
San Francisco, CA 94107-1317

The State of California or its officers or agents shall not be responsible for the accuracy or completeness of electronic copies of this plan sheet.

Caltrans now has a web site! To get to the web site, go to http://www.dot.ca.gov

REQUEST FOR INFORMATION NOT ADDRESSED IN THIS CCO REMAIN IN FORCE

MARK	DATE	DESCRIPTIONS	BY	CH'D	CCO#
		REVISIONS			
2	02/11/10	WEST END BARRIER CONDUIT	TW	RG DO	44S1
1	02/19/08	ELECTRICAL MODIFICATIONS	MP EL	RR	42

CONTRACT CHANGE ORDER NO. 44 S1
SHEET 10 OF 21

1 REGISTERED PROFESSIONAL ENGINEER — MARCELL FUMIO TAKATA No. E 8651 Exp. 9/30/2008 ELECTRICAL — STATE OF CALIFORNIA
FOR REVISION ONLY

2 REGISTERED PROFESSIONAL ENGINEER — DAVID M. OTO No. 10699 Exp. 06/30/2011 ELECTRICAL — STATE OF CALIFORNIA
FOR REVISION ONLY

CONDUIT DATA

Conduit No	Reference	Size	Type	Total Fill (mm²)	Allowable Fill (mm²)	Included Cable No.	Conductor Type
0583	E-11, E-21	103	RGS conduit	3077.66	3324.51	Pull rope	Soft-Fiber Polyester
						2121	1-3/C + gnd #1/0, 600 V, EPR insulation
						2120	1-3/C + gnd #1/0, 600 V, EPR insulation
						2125	1-3/C + gnd 250 kcmil, 600 V, EPR insulation
0584	E-11, E-21	103	RGS conduit	2518.76	3324.51	A-3043-1	1-3/C + gnd #2, 600 V, EPR insulation
						S-3051-1	1-3/C + gnd #4, 600 V, EPR insulation
						A-3006-1	1-3/C + gnd #4, 600 V, EPR insulation
						S-3022-1	1-3/C + gnd #2, 600 V, EPR insulation
						S-3023-1	1-3/C + gnd #4, 600 V, EPR insulation
						S-3021-1	1-3/C + gnd #4, 600 V, EPR insulation
						Pull rope	Soft-Fiber Polyester
0585	E-11, E-20	103	RGS conduit	647.30	3324.51	Pull rope	Soft-Fiber Polyester
						1477-2	72 Fiber, single mode fiberoptic riser cable
						1475-3	72 Fiber, single mode fiberoptic riser cable
0586	E-11, E-21	103	RGS conduit	1296.55	3324.51	2910-2	4 pair #22, shielded pairs, FEP insulation
						Pull rope	Soft-Fiber Polyester
						2910-3	4 pair #22, shielded pairs, FEP insulation
						1473-4	50 pair #18, shielded pairs, IS/OS shield 600 V, XLPE insul., PVC jacket
0587	E-11, E-21	103	RGS conduit	2780.99	3324.51	2391	3-1/C #4/0 + 1/C#1/0 gnd, 15 kV, EPR insulation
						Pull rope	Soft-Fiber Polyester
0588	E-11, E-21	103	RGS conduit	0.00	3324.51	Pull rope	Soft-Fiber Polyester
0590	E-11, E-20	103	RGS conduit	0.00	3324.51	Pull rope	Soft-Fiber Polyester
0591	E-11, E-21	103	RGS conduit	0.00	3324.51	Pull rope	Soft-Fiber Polyester
0600	E-11, E-20	103	RGS conduit	0.00	3324.51	Pull rope	Soft-Fiber Polyester
0601	E-11, E-20	103	RGS conduit	0.00	3324.51	Pull rope	Soft-Fiber Polyester
0602	E-11, E-20	103	RGS conduit	1201.71	3324.51	1474-4	50 pair #18, shielded pairs, IS/OS shield 600V, XLPE insul., PVC jacket
						Pull rope	Soft-Fiber Polyester
0603	E-11, E-20	103	RGS conduit	0.00	3324.51	Pull rope	Soft-Fiber Polyester
0610	E-11, E-21	103	RGS conduit	0.00	3324.51	Pull rope	Soft-Fiber Polyester
0611	E-11, E-21	103	RGS conduit	0.00	3324.51	Pull rope	Soft-Fiber Polyester
0612	E-11, E-21	103	RGS conduit	0.00	3324.51	Pull rope	Soft-Fiber Polyester
0613	E-11, E-21	103	RGS conduit	0.00	3324.51	Pull rope	Soft-Fiber Polyester
~~1112~~							
1113	E-46, E-66B (2)	41	RGS conduit	0.00	534.55	Pull rope	Soft-Fiber Polyester
1114	E-46	41	RGS conduit	0.00	534.55	Pull rope	Soft-Fiber Polyester
1115	E-46	41	RGS conduit	0.00	534.55	Pull rope	Soft-Fiber Polyester
1116	E-47	41	RGS conduit	0.00	534.55	Pull rope	Soft-Fiber Polyester
1117	E-47	41	RGS conduit	0.00	534.55	Pull rope	Soft-Fiber Polyester
1118	E-47	41	RGS conduit	0.00	534.55	Pull rope	Soft-Fiber Polyester
1119	E-47, E-48	41	RGS conduit	0.00	534.55	Pull rope	Soft-Fiber Polyester
1120	E-48	41	RGS conduit	0.00	534.55	Pull rope	Soft-Fiber Polyester
1121	E-48	41	RGS conduit	0.00	534.55	Pull rope	Soft-Fiber Polyester
1122	E-48	41	RGS conduit	0.00	534.55	Pull rope	Soft-Fiber Polyester
1123	E-49	41	RGS conduit	0.00	534.55	Pull rope	Soft-Fiber Polyester
1124	E-49	41	RGS conduit	0.00	534.55	Pull rope	Soft-Fiber Polyester

CONDUIT DATA

Conduit No	Reference	Size	Type	Total Fill (mm²)	Allowable Fill (mm²)	Included Cable No.	Conductor Type
1125	E-49	41	RGS conduit	0.00	534.55	Pull rope	Soft-Fiber Polyester
1126	E-49	41	RGS conduit	0.00	534.55	Pull rope	Soft-Fiber Polyester
1127	E-50	41	RGS conduit	0.00	534.55	Pull rope	Soft-Fiber Polyester
1128	E-50	41	RGS conduit	0.00	534.55	Pull rope	Soft-Fiber Polyester
1129	E-50	41	RGS conduit	0.00	534.55	Pull rope	Soft-Fiber Polyester
1130	E-50, E-51	41	RGS conduit	0.00	534.55	Pull rope	Soft-Fiber Polyester
1131	E-50, E-51	41	RGS conduit	0.00	534.55	Pull rope	Soft-Fiber Polyester
1347	E-46	41	RGS conduit	0.00	534.55	Pull rope	Soft-Fiber Polyester
1348	E-46	41	RGS conduit	0.00	534.55	Pull rope	Soft-Fiber Polyester
1349	E-66B (2)	41	RGS (2) PVC coated conduit	0.00	534.55	Pull rope	Soft-Fiber Polyester
1350	E-46, E-66B	41	RGS conduit	212.85	534.55	A-3001-2	3 + 1 gnd #6,#8, 600 V, RHH/RHW insulation
						Pull rope	Soft-Fiber Polyester
1351	E-46	41	RGS conduit	212.85	534.55	Pull rope	Soft-Fiber Polyester
						A-3001-2	3 + 1 gnd #6,#8, 600 V, RHH/RHW insulation
1352	E-46	41	RGS conduit	212.85	534.55	A-3001-2	3 + 1 gnd #6,#8, 600 V, RHH/RHW insulation
						Pull rope	Soft-Fiber Polyester
1353	E-46	41	RGS conduit	212.85	534.55	A-3001-2	3 + 1 gnd #6,#8, 600 V, RHH/RHW insulation
						Pull rope	Soft-Fiber Polyester
1354	E-46	41	RGS conduit	212.85	534.55	Pull rope	Soft-Fiber Polyester
						A-3001-2	3 + 1 gnd #6,#8, 600 V, RHH/RHW insulation
1355	E-46	41	RGS conduit	212.85	534.55	Pull rope	Soft-Fiber Polyester
						A-3001-2	3 + 1 gnd #6,#8, 600 V, RHH/RHW insulation
1356	E-46	41	RGS conduit	212.85	534.55	Pull rope	Soft-Fiber Polyester
						A-3001-2	3 + 1 gnd #6,#8, 600 V, RHH/RHW insulation
1357	E-46	41	RGS conduit	212.85	534.55	A-3001-2	3 + 1 gnd #6,#8, 600 V, RHH/RHW insulation
						Pull rope	Soft-Fiber Polyester
1358	E-47	41	RGS conduit	212.85	534.55	Pull rope	Soft-Fiber Polyester
						A-3001-2	3 + 1 gnd #6,#8, 600 V, RHH/RHW insulation
1359	E-47	41	RGS conduit	212.85	534.55	Pull rope	Soft-Fiber Polyester
						A-3002-2	3 + 1 gnd #6,#8, 600 V, RHH/RHW insulation
1360	E-47	41	RGS conduit	212.85	534.55	Pull rope	Soft-Fiber Polyester
						A-3002-2	3 + 1 gnd #6,#8, 600 V, RHH/RHW insulation

For continuation, see next sheet.

CONDUIT AND TRAY SCHEDULE

E-402

DESIGNED BY	CALCULATED/	CHECKED BY	DRAWN BY	REVISED BY	DATE REVISED
BEHZAD GOLEMOHAMMADI		AB	PBP		8/02

DESIGN OVERSIGHT

STATE OF CALIFORNIA - DEPARTMENT OF TRANSPORTATION
Caltrans

FOR REDUCED PLANS ORIGINAL SCALE IS IN MILLIMETERS 0 20 40 60 80

DGN FILE =>T:\13103\MS\pse\SAS Struc\CCO\SAS CCO44S1\2010-02-11
USERNAME =>llarico

Issued for Submittal (Draft 3) | CU 04251 | EA 0120F1

\04-0120f1_0357R02.dgn

LAST REVISION 00-00-00
DATE PLOTTED => 2/11/2010
TIME PLOTTED => 4:24:18 PM

DIST	COUNTY	ROUTE	KILOMETER POST TOTAL PROJECT	SHEET No	TOTAL SHEETS
04	SF	80	13.2/13.9	358 R2	1204

REGISTERED ELECTRICAL ENGINEER — 12/19/02 DATE

12-6-04
PLANS APPROVAL DATE

REGISTERED PROFESSIONAL ENGINEER — JENS ERLINGSSON No. 8249 Exp. 9/30/06 ELECTRICAL — STATE OF CALIFORNIA

PB POWER, Inc.
A Parsons Brinckerhoff Company
303 Second St., Suite 700N
San Francisco, CA 94107-1317

The State of California or its officers or agents shall not be responsible for the accuracy or completeness of electronic copies of this plan sheet.

Caltrans now has a web site! To get to the web site, go to http://www.dot.ca.gov

REQUEST FOR INFORMATION NOT ADDRESSED IN THIS CCO REMAIN IN FORCE					
2	02/11/10	WEST END BARRIER CONDUIT	TW	FW DO	44S1
1	03/04/08	BARRIER MODIFICATIONS	JS BM	RG SE	44
MARK	DATE	DESCRIPTIONS	BY	CH'D	CCO#
		REVISIONS			

CONTRACT CHANGE ORDER NO. 44 S1
SHEET 11 OF 21

REGISTERED PROFESSIONAL ENGINEER — S. A. ESTOOLE, JR. No. E-10151 Exp. 12/31/2008 ELECTRICAL — STATE OF CALIFORNIA — 1

FOR REVISION ONLY

REGISTERED PROFESSIONAL ENGINEER — DAVID H. OTO No. 10699 Exp. 06/30/2011 ELECTRICAL — STATE OF CALIFORNIA — 2

FOR REVISION ONLY

CONDUIT DATA

Conduit No	Reference	Size	Type	Total Fill (mm^2)	Allowable Fill (mm^2)	Included Cable No.	Conductor Type
1361	E-47	41	RGS conduit	212.85	534.55	Pull rope	Soft-Fiber Polyester
						A-3002-2	3 + 1 gnd #6,#8, 600 V, RHH/RHW insulation
1362	E-47	41	RGS conduit	212.85	534.55		
						Pull rope	Soft-Fiber Polyester
						A-3002-2	3 + 1 gnd #6,#8, 600 V, RHH/RHW insulation
1363	E-47	41	RGS conduit	212.85	534.55	Pull rope	Soft-Fiber Polyester
						A-3002-2	3 + 1 gnd #6,#8, 600 V, RHH/RHW insulation
1364	E-47	41	RGS conduit	0.00	534.55	Pull rope	Soft-Fiber Polyester
1365	E-47	41	RGS conduit	212.85	534.55	A-3003-2	3 + 1 gnd #6,#8, 600 V, RHH/RHW insulation
						Pull rope	Soft-Fiber Polyester
1366	E-47	41	RGS conduit	440.31	534.55	A-3003-2	3 + 1 gnd #6,#8, 600 V, RHH/RHW insulation
						UP106-1	1-2/C + gnd #8, 600 V, EPR insulation
						Pull rope	Soft-Fiber Polyester
1367	E-47	41	RGS conduit	440.31	534.55	Pull rope	Soft-Fiber Polyester
						A-3003-2	3 + 1 gnd #6,#8, 600 V, RHH/RHW insulation
						UP106-1	1-2/C + gnd #8, 600 V, EPR insulation
1368	E-47	41	RGS conduit	440.31	534.55	A-3003-2	3 + 1 gnd #6,#8, 600 V, RHH/RHW insulation
						Pull rope	Soft-Fiber Polyester
						UP106-1	1-2/C + gnd #8, 600 V, EPR insulation
1369	E-48	41	RGS conduit	440.31	534.55	A-3003-2	3 + 1 gnd #6,#8, 600 V, RHH/RHW insulation
						UP106-1	1-2/C + gnd #8, 600 V, EPR insulation
						Pull rope	Soft-Fiber Polyester
1370	E-48	41	RGS conduit	227.46	534.55	Pull rope	Soft-Fiber Polyester
						UP106-1	1-2/C + gnd #8, 600 V, EPR insulation
1371	E-48	41	RGS conduit	212.85	534.55	A-3004-2	3 + 1 gnd #6,#8, 600 V, RHH/RHW insulation
						Pull rope	Soft-Fiber Polyester
1372	E-48	41	RGS conduit	212.85	534.55	A-3004-2	3 + 1 gnd #6,#8, 600 V, RHH/RHW insulation
						Pull rope	Soft-Fiber Polyester
1373	E-48	41	RGS conduit	212.85	534.55	Pull rope	Soft-Fiber Polyester
						A-3004-2	3 + 1 gnd #6,#8, 600 V, RHH/RHW insulation
1374	E-48	41	RGS conduit	212.85	534.55	Pull rope	Soft-Fiber Polyester
						A-3004-2	3 + 1 gnd #6,#8, 600 V, RHH/RHW insulation
1375	E-48	41	RGS conduit	212.85	534.55	Pull rope	Soft-Fiber Polyester
						A-3004-2	3 + 1 gnd #6,#8, 600 V, RHH/RHW insulation
1376	E-48	41	RGS conduit	0.00	534.55	Pull rope	Soft-Fiber Polyester
1377	E-48	41	RGS conduit	212.85	534.55	A-3005-2	3 + 1 gnd #6,#8, 600 V, RHH/RHW insulation
						Pull rope	Soft-Fiber Polyester
1378	E-48	41	RGS conduit	212.85	534.55	Pull rope	Soft-Fiber Polyester
						A-3005-2	3 + 1 gnd #6,#8, 600 V, RHH/RHW insulation
1379	E-48	41	RGS conduit	212.85	534.55	Pull rope	Soft-Fiber Polyester
						A-3005-2	3 + 1 gnd #6,#8, 600 V, RHH/RHW insulation
1380	E-49	41	RGS conduit	212.85	534.55	Pull rope	Soft-Fiber Polyester
						A-3005-2	3 + 1 gnd #6,#8, 600 V, RHH/RHW insulation
1381	E-49	41	RGS conduit	212.85	534.55	Pull rope	Soft-Fiber Polyester
						A-3005-2	3 + 1 gnd #6,#8, 600 V, RHH/RHW insulation
1382	E-49	41	RGS conduit	227.46	534.55	Pull rope	Soft-Fiber Polyester
						UP108-2	1-2/C + gnd #8, 600 V, EPR insulation
1383	E-49	41	RGS conduit	212.85	534.55	A-3006-2	3 + 1 gnd #6,#8, 600 V, RHH/RHW insulation
						Pull rope	Soft-Fiber Polyester
1384	E-49	41	RGS conduit	212.85	534.55	A-3006-2	3 + 1 gnd #6,#8, 600 V, RHH/RHW insulation
						Pull rope	Soft-Fiber Polyester
1385	E-49	41	RGS conduit	212.85	534.55	Pull rope	Soft-Fiber Polyester
						A-3006-2	3 + 1 gnd #6,#8, 600 V, RHH/RHW insulation
1386	E-49	41	RGS conduit	212.85	534.55	A-3006-2	3 + 1 gnd #6,#8, 600 V, RHH/RHW insulation
						Pull rope	Soft-Fiber Polyester

CONDUIT DATA

Conduit No	Reference	Size	Type	Total Fill (mm^2)	Allowable Fill (mm^2)	Included Cable No.	Conductor Type
1387	E-49	41	RGS conduit	212.85	534.55	A-3006-2	3 + 1 gnd #6,#8, 600 V, RHH/RHW insulation
						Pull rope	Soft-Fiber Polyester
1388	E-49	41	RGS conduit	212.85	534.55	A-3006-2	3 + 1 gnd #6,#8, 600 V, RHH/RHW insulation
						Pull rope	Soft-Fiber Polyester
1389	E-49	41	RGS conduit	212.85	534.55	Pull rope	Soft-Fiber Polyester
						A-3006-2	3 + 1 gnd #6,#8, 600 V, RHH/RHW insulation
1390	E-49	41	RGS conduit	212.85	534.55	Pull rope	Soft-Fiber Polyester
						A-3006-2	3 + 1 gnd #6,#8, 600 V, RHH/RHW insulation
1391	E-49	41	RGS conduit	0.00	534.55	Pull rope	Soft-Fiber Polyester
1392	E-50	41	RGS conduit	0.00	534.55	Pull rope	Soft-Fiber Polyester
1393	E-50	41	RGS conduit	0.00	534.55	Pull rope	Soft-Fiber Polyester
1394	E-50	41	RGS conduit	0.00	534.55	Pull rope	Soft-Fiber Polyester
1395	E-50	41	RGS conduit	0.00	534.55	Pull rope	Soft-Fiber Polyester
1396	E-50	41	RGS conduit	0.00	534.55	Pull rope	Soft-Fiber Polyester
1397	E-50	41	RGS conduit	0.00	534.55	Pull rope	Soft-Fiber Polyester
1398	E-50	41	RGS conduit	0.00	534.55	Pull rope	Soft-Fiber Polyester
1399	E-50	41	RGS conduit	0.00	534.55	Pull rope	Soft-Fiber Polyester
1447	E-46	41	RGS conduit	0.00	534.55	Pull rope	Soft-Fiber Polyester
1448	E-46	41	RGS conduit	0.00	534.55	Pull rope	Soft-Fiber Polyester
1449	E-66B	41	RGS (PVC coated) conduit	0.00	534.55	Pull rope	Soft-Fiber Polyester
1450	E-46, E-66B	41	RGS conduit	0.00	534.55	Pull rope	Soft-Fiber Polyester
1451	E-46	41	RGS conduit	0.00	534.55	Pull rope	Soft-Fiber Polyester
1452	E-46	41	RGS conduit	0.00	534.55	Pull rope	Soft-Fiber Polyester
1453	E-46	41	RGS conduit	0.00	534.55	Pull rope	Soft-Fiber Polyester
1454	E-46	41	RGS conduit	0.00	534.55	Pull rope	Soft-Fiber Polyester
1455	E-46	41	RGS conduit	0.00	534.55	Pull rope	Soft-Fiber Polyester
1456	E-46	41	RGS conduit	0.00	534.55	Pull rope	Soft-Fiber Polyester

For continuation, see next sheet.

CONDUIT AND TRAY SCHEDULE

E-403

DESIGN OVERSIGHT	CALCULATED/ DESIGNED BY	CHECKED BY	DATE	REVISED BY	DATE REVISED
BEHZAD GOLEMOHAMMADI	PBP	AB	8/02		8/02

STATE OF CALIFORNIA - DEPARTMENT OF TRANSPORTATION
Caltrans

FOR REDUCED PLANS ORIGINAL SCALE IS IN MILLIMETERS 0 20 40 60 80

DGN FILE =>T:\13103\WS\pse\SAS Struc\CCO\SAS CC044S1\2010-02-11 USERNAME =>florico

Issued for Submittal (Draft 3)\04-0120F1_035BR02.dgn

CU 04251 EA 0120F1

LAST REVISION 00-00-00 DATE PLOTTED => 2/11/2010 TIME PLOTTED => 4:25:09 PM

REVISED BY	DATE REVISED
DATE 8/02	8/02
PBP	AB
CALCULATED/ DESIGNED BY	CHECKED BY

DESIGN OVERSIGHT
BEHZAD GOLEMOHAMMADI

STATE OF CALIFORNIA - DEPARTMENT OF TRANSPORTATION
Caltrans

CONDUIT DATA

Conduit No	Reference	Size	Type	Total Fill (mm²)	Allowable Fill (mm²)	Included Cable No.	Conductor Type
1457	E-46	41	RGS conduit	0.00	534.55	Pull rope	Soft-Fiber Polyester
1458	E-47	41	RGS conduit	0.00	534.55	Pull rope	Soft-Fiber Polyester
1459	E-47	41	RGS conduit	0.00	534.55	Pull rope	Soft-Fiber Polyester
1460	E-47	41	RGS conduit	0.00	534.55	Pull rope	Soft-Fiber Polyester
1461	E-47	41	RGS conduit	0.00	534.55	Pull rope	Soft-Fiber Polyester
1462	E-47	41	RGS conduit	0.00	534.55	Pull rope	Soft-Fiber Polyester
1463	E-47	41	RGS conduit	0.00	534.55	Pull rope	Soft-Fiber Polyester
1464	E-47	41	RGS conduit	0.00	534.55	Pull rope	Soft-Fiber Polyester
1465	E-47	41	RGS conduit	324.29	534.55	A-3009-3	1-3/C + gnd #6, 600 V, EPR insulation
						Pull rope	Soft-Fiber Polyester
1466	E-47	41	RGS conduit	0.00	534.55	Pull rope	Soft-Fiber Polyester
1467	E-47	41	RGS conduit	324.29	534.55	A-3010-3	1-3/C #6 + gnd 600 V, RHH/RHW insulation
						Pull rope	Soft-Fiber Polyester
1468	E-47	41	RGS conduit	0.00	534.55	Pull rope	Soft-Fiber Polyester
1469	E-48	41	RGS conduit	0.00	534.55	Pull rope	Soft-Fiber Polyester
1470	E-48	41	RGS conduit	0.00	534.55	Pull rope	Soft-Fiber Polyester
1471	E-48	41	RGS conduit	0.00	534.55	Pull rope	Soft-Fiber Polyester
1472	E-48	41	RGS conduit	0.00	534.55	Pull rope	Soft-Fiber Polyester
1473	E-48	41	RGS conduit	0.00	534.55	Pull rope	Soft-Fiber Polyester
1474	E-48	41	RGS conduit	0.00	534.55	Pull rope	Soft-Fiber Polyester
1475	E-48	41	RGS conduit	0.00	534.55	Pull rope	Soft-Fiber Polyester
1476	E-48	41	RGS conduit	0.00	534.55	Pull rope	Soft-Fiber Polyester
1477	E-48	41	RGS conduit	0.00	534.55	Pull rope	Soft-Fiber Polyester
1478	E-48	41	RGS conduit	0.00	534.55	Pull rope	Soft-Fiber Polyester
1479	E-48	41	RGS conduit	0.00	534.55	Pull rope	Soft-Fiber Polyester
1481	E-49	41	RGS conduit	0.00	534.55	Pull rope	Soft-Fiber Polyester
1482	E-49	41	RGS conduit	0.00	534.55	Pull rope	Soft-Fiber Polyester
1483	E-49	41	RGS conduit	0.00	534.55	Pull rope	Soft-Fiber Polyester
1484	E-49	41	RGS conduit	0.00	534.55	Pull rope	Soft-Fiber Polyester
1485	E-49	41	RGS conduit	0.00	534.55	Pull rope	Soft-Fiber Polyester
1486	E-49	41	RGS conduit	0.00	534.55	Pull rope	Soft-Fiber Polyester
1487	E-49	41	RGS conduit	0.00	534.55	Pull rope	Soft-Fiber Polyester
1488	E-49	41	RGS conduit	0.00	534.55	Pull rope	Soft-Fiber Polyester
1489	E-49	41	RGS conduit	0.00	534.55	Pull rope	Soft-Fiber Polyester
1490	E-49	41	RGS conduit	0.00	534.55	Pull rope	Soft-Fiber Polyester
1491	E-49	41	RGS conduit	0.00	534.55	Pull rope	Soft-Fiber Polyester
1492	E-50	41	RGS conduit	0.00	534.55	Pull rope	Soft-Fiber Polyester
1493	E-50	41	RGS conduit	0.00	534.55	Pull rope	Soft-Fiber Polyester
1494	E-50	41	RGS conduit	0.00	534.55	Pull rope	Soft-Fiber Polyester
1495	E-50	41	RGS conduit	0.00	534.55	Pull rope	Soft-Fiber Polyester

REQUEST FOR INFORMATION NOT ADDRESSED IN THIS CCO REMAIN IN FORCE					
2	07/17/09	WEST END BARRIER CONDUIT	RG	FW	4451
1	02/19/08	ELECTRICAL MODIFICATIONS	MP EL	RR	42
MARK	DATE	DESCRIPTIONS	BY	CH'D	CCO#
		REVISIONS			

CONTRACT CHANGE ORDER NO. 4451
SHEET 12 OF 21

1 REGISTERED PROFESSIONAL ENGINEER — MARRELL FUMIO TAKATA — No. E 8651 — Exp. 9/30/2008 ELECTRICAL — STATE OF CALIFORNIA
FOR REVISION ONLY

2 REGISTERED PROFESSIONAL ENGINEER — FADI WALIEDDINE — No. 11465 — Exp. 12/31/2009 ELECTRICAL — STATE OF CALIFORNIA
FOR REVISION ONLY

Caltrans Metric

DIST	COUNTY	ROUTE	KILOMETER POST TOTAL PROJECT	SHEET No	TOTAL SHEETS
04	SF	80	13.2/13.9	359 R2	1204

REGISTERED ELECTRICAL ENGINEER — 12/19/02 DATE

12-6-04
PLANS APPROVAL DATE

REGISTERED PROFESSIONAL ENGINEER — JENS ERLINGSSON — No. 8249 — Exp. 9/30/06 ELECTRICAL — STATE OF CALIFORNIA

PB POWER, Inc.
A Parsons Brinckerhoff Company
303 Second St., Suite 700N
San Francisco, CA 94107-1317

The State of California or its officers or agents shall not be responsible for the accuracy or completeness of electronic copies of this plan sheet.

Caltrans now has a web site! To get to the web site, go to http://www.dot.ca.gov

CONDUIT DATA

Conduit No	Reference	Size	Type	Total Fill (mm²)	Allowable Fill (mm²)	Included Cable No.	Conductor Type
1496	E-50	41	RGS conduit	0.00	534.55	Pull rope	Soft-Fiber Polyester
1497	E-50	41	RGS conduit	0.00	534.55	Pull rope	Soft-Fiber Polyester
1498	E-50	41	RGS conduit	0.00	534.55	Pull rope	Soft-Fiber Polyester
1499	E-50	41	RGS conduit	0.00	534.55	Pull rope	Soft-Fiber Polyester
1513	E-46, E-66B (2)	41	RGS conduit	0.00	534.55	Pull rope	Soft-Fiber Polyester
1514	E-46	41	RGS conduit	0.00	534.55	Pull rope	Soft-Fiber Polyester
1515	E-46, E-47	41	RGS conduit	0.00	534.55	Pull rope	Soft-Fiber Polyester
1516	E-47	41	RGS conduit	0.00	534.55	Pull rope	Soft-Fiber Polyester
1517	E-47	41	RGS conduit	0.00	534.55	Pull rope	Soft-Fiber Polyester
1518	E-47	41	RGS conduit	0.00	534.55	Pull rope	Soft-Fiber Polyester
1519	E-47, E-48	41	RGS conduit	0.00	534.55	Pull rope	Soft-Fiber Polyester
1520	E-48	41	RGS conduit	0.00	534.55	Pull rope	Soft-Fiber Polyester
1521	E-48	41	RGS conduit	0.00	534.55	Pull rope	Soft-Fiber Polyester
1522	E-48	41	RGS conduit	0.00	534.55	Pull rope	Soft-Fiber Polyester
1523	E-49	41	RGS conduit	0.00	534.55	Pull rope	Soft-Fiber Polyester
1524	E-49	41	RGS conduit	0.00	534.55	Pull rope	Soft-Fiber Polyester
1525	E-49	41	RGS conduit	0.00	534.55	Pull rope	Soft-Fiber Polyester
1526	E-49	41	RGS conduit	0.00	534.55	Pull rope	Soft-Fiber Polyester
1527	E-50	41	RGS conduit	0.00	534.55	Pull rope	Soft-Fiber Polyester
1528	E-50	41	RGS conduit	0.00	534.55	Pull rope	Soft-Fiber Polyester
1529	E-50	41	RGS conduit	0.00	534.55	Pull rope	Soft-Fiber Polyester
1530	E-50	41	RGS conduit	0.00	534.55	Pull rope	Soft-Fiber Polyester
1531	E-51	41	RGS conduit	0.00	534.55	Pull rope	Soft-Fiber Polyester
~~1731~~							
1732	E-46, E-66B (2)	41	RGS conduit	0.00	534.55	Pull rope	Soft-Fiber Polyester
1733	E-46	41	RGS conduit	0.00	534.55	Pull rope	Soft-Fiber Polyester
1734	E-46	41	RGS conduit	0.00	534.55	Pull rope	Soft-Fiber Polyester

For continuation, see next sheet.

CONDUIT AND TRAY SCHEDULE

E-404

LAST REVISION 00-00-00
DATE PLOTTED => 7/15/2009
TIME PLOTTED => 4:49:08 PM

FOR REDUCED PLANS ORIGINAL SCALE IS IN MILLIMETERS 0 20 40 60 80

DGN FILE =>f:\13103\MS\pse\SAS Struc\CCO\SAS CCO4451\2009-07-17 Issued for Submittal (Draft 2)\04-0120f1_0359R02.dgn
USERNAME =>Grajo
CU 04251
EA 0120F1

CONDUIT DATA

Conduit No	Reference	Size	Type	Total Fill (mm²)	Allowable Fill (mm²)	Included Cable No.	Conductor Type
1735	E-46	41	RGS conduit	0.00	534.55	Pull rope	Soft-Fiber Polyester
1736	E-46	41	RGS conduit	0.00	534.55	Pull rope	Soft-Fiber Polyester
1737	E-47	41	RGS conduit	0.00	534.55	Pull rope	Soft-Fiber Polyester
1738	E-47	41	RGS conduit	126.88	534.55	Pull rope	Soft-Fiber Polyester
						UP105-3	1-2/C + gnd #10, 600 V, EPR insulation
1739	E-47	41	RGS conduit	126.88	534.55	UP105-3	1-2/C + gnd #10, 600 V, EPR insulation
						Pull rope	Soft-Fiber Polyester
1740	E-47	41	RGS conduit	126.88	534.55	UP105-3	1-2/C + gnd #10, 600 V, EPR insulation
						Pull rope	Soft-Fiber Polyester
1741	E-47	41	RGS conduit	126.88	534.55	UP105-3	1-2/C + gnd #10, 600 V, EPR insulation
						Pull rope	Soft-Fiber Polyester
1742	E-47	41	RGS conduit	0.00	534.55	Pull rope	Soft-Fiber Polyester
1743	E-47	41	RGS conduit	0.00	534.55	Pull rope	Soft-Fiber Polyester
1744	E-47	41	RGS conduit	0.00	534.55	Pull rope	Soft-Fiber Polyester
1745	E-47	41	RGS conduit	440.31	534.55	UP106-3	1-2/C + gnd #8, 600 V, EPR insulation
						A-3010-2	3 + 1 gnd #6,#8, 600 V, RHH/RHW insulation
						Pull rope	Soft-Fiber Polyester
1746	E-48	41	RGS conduit	440.31	534.55	Pull rope	Soft-Fiber Polyester
						A-3010-2	3 + 1 gnd #6,#8, 600 V, RHH/RHW insulation
						UP106-3	1-2/C + gnd #8, 600 V, EPR insulation
1747	E-48	41	RGS conduit	0.00	534.55	Pull rope	Soft-Fiber Polyester
1748	E-48	41	RGS conduit	0.00	534.55	Pull rope	Soft-Fiber Polyester
1749	E-48	41	RGS conduit	0.00	534.55	Pull rope	Soft-Fiber Polyester
1750	E-48	41	RGS conduit	0.00	534.55	Pull rope	Soft-Fiber Polyester
1751	E-49	41	RGS conduit	0.00	534.55	Pull rope	Soft-Fiber Polyester
1752	E-49	41	RGS conduit	0.00	534.55	Pull rope	Soft-Fiber Polyester
1753	E-49	41	RGS conduit	0.00	534.55	Pull rope	Soft-Fiber Polyester
1754	E-49	41	RGS conduit	0.00	534.55	Pull rope	Soft-Fiber Polyester
1755	E-49	41	RGS conduit	0.00	534.55	Pull rope	Soft-Fiber Polyester
1756	E-50	41	RGS conduit	0.00	534.55	Pull rope	Soft-Fiber Polyester
1757	E-50	41	RGS conduit	0.00	534.55	Pull rope	Soft-Fiber Polyester
1758	E-50	41	RGS conduit	0.00	534.55	Pull rope	Soft-Fiber Polyester
1759	E-50	41	RGS conduit	0.00	534.55	Pull rope	Soft-Fiber Polyester
1760	E-50	41	RGS conduit	49.21	534.55	Pull rope	Soft-Fiber Polyester
						UP108-3A	2 + 1 gnd #12,#12, 600 V, RHH/RHW insulation
1761	E-50	41	RGS conduit	49.21	534.55	UP108-3A	2 + 1 gnd #12,#12, 600 V, RHH/RHW insulation
						Pull rope	Soft-Fiber Polyester
1762	E-50	41	RGS conduit	373.50	534.55	1106	1-3/C + gnd #6, 600 V, EPR insulation
						UP108-3A	2 + 1 gnd #12,#12, 600 V, RHH/RHW insulation
						Pull rope	Soft-Fiber Polyester
1763	E-51	41	RGS conduit	324.29	534.55	Pull rope	Soft-Fiber Polyester
						1106	1-3/C + gnd #6, 600 V, EPR insulation
1764	E-51	41	RGS conduit	0.00	534.55	Pull rope	Soft-Fiber Polyester
1765	E-51	41	RGS conduit	324.29	534.55	1106	1-3/C + gnd #6, 600 V, EPR insulation
						Pull rope	Soft-Fiber Polyester

DATE	REVISED BY	DATE REVISED
8/02	PBP	AB 8/02

CALCULATED/DESIGNED BY
CHECKED BY

DESIGN OVERSIGHT
BEHZAD GOLEMOHAMMADI

STATE OF CALIFORNIA - DEPARTMENT OF TRANSPORTATION
Caltrans

REQUEST FOR INFORMATION NOT ADDRESSED IN THIS CCO REMAIN IN FORCE

MARK	DATE	DESCRIPTIONS	BY	CH'D	CCO#
		REVISIONS			
3	07/17/09	WEST END BARRIER CONDUIT	RG	FW	44S1
2	03/04/08	BARRIER MODIFICATIONS	JS BM	RG	44
1	02/19/08	ELECTRICAL MODIFICATIONS	MP EL	RR	42

CONTRACT CHANGE ORDER NO. 44 S1
SHEET 13 OF 21

1 — REGISTERED PROFESSIONAL ENGINEER — MARRELL FUMIO TAKATA — No. E 8651 — Exp. 9/30/2008 ELECTRICAL — STATE OF CALIFORNIA
FOR REVISION ONLY

2 — REGISTERED PROFESSIONAL ENGINEER — S. A. ESTCOURT, JR. — No. E-10151 — Exp. 12/31/2008 ELECTRICAL — STATE OF CALIFORNIA
FOR REVISION ONLY

3 — REGISTERED PROFESSIONAL ENGINEER — FADI WALIEDDINE — No. 11465 — Exp. 12/31/2009 ELECTRICAL — STATE OF CALIFORNIA
FOR REVISION ONLY

Caltrans Metric

DIST	COUNTY	ROUTE	KILOMETER POST TOTAL PROJECT	SHEET NO	TOTAL SHEETS
04	SF	80	13.2/13.9	360 R3	1204

REGISTERED ELECTRICAL ENGINEER — 12/19/02 DATE

12-6-04
PLANS APPROVAL DATE

JENS ERLINGSSON — No. 8249 — Exp. 9/30/06 ELECTRICAL — REGISTERED PROFESSIONAL ENGINEER — STATE OF CALIFORNIA

PB POWER, Inc.
A Parsons Brinckerhoff Company
303 Second St., Suite 700N
San Francisco, CA 94107-1317

The State of California or its officers or agents shall not be responsible for the accuracy or completeness of electronic copies of this plan sheet.

Caltrans now has a web site! To get to the web site, go to http://www.dot.ca.gov

CONDUIT DATA

Conduit No	Reference	Size	Type	Total Fill (mm²)	Allowable Fill (mm²)	Included Cable No.	Conductor Type
1766	E-79	53	RGS-PVC coated conduit	754.18	879.42	Pull rope	Soft-Fiber Polyester
						1115	1-3/C + gnd #1/0, 600 V, EPR insulation
1767	E-79	53	RGS-PVC coated conduit	147.25	879.42	Pull rope	Soft-Fiber Polyester
						1115-2	1-3/C #16, 600 V, EPR insulation
						1115-1	1-3/C #14, 600 V, EPR insulation
1768	E-120, E-101	78	RGS-PVC coated conduit	882.89	1935.24	Pull rope	Soft-Fiber Polyester
						1117	1-3/C + gnd #2/0, 600 V, EPR insulation
1769	E-120, E-101	27	RGS-PVC coated conduit	147.25	229.03	1117-2	1-3/C #16, 600 V, EPR insulation
						Pull rope	Soft-Fiber Polyester
						1117-1	1-3/C #14, 600 V, EPR insulation
1832	E-46 (E-66B) 4	41	RGS conduit	474.91	534.55	A-1035-1	1-3/C + gnd #6, 600V, EPR insulation
						UP104-3A	2 + 1gnd #12,#12, 600 V, RHH/RHW insulation
						Pull rope	Soft-Fiber Polyester
						S-1031-1	1-3/C + gnd #2, 600V, EPR insulation
1833	E-46	41	RGS conduit	474.91	534.55	S-1031-1	1-3/C + gnd #2, 600V, EPR insulation
						A-1035-1	1-3/C + gnd #6, 600V, EPR insulation
						UP104-3A	2 + 1gnd #12,#12, 600 V, RHH/RHW insulation
						Pull rope	Soft-Fiber Polyester
1834	E-46	41	RGS conduit	474.91	534.55	UP104-3A	2 + 1 gnd #12,#12, 600 V, RHH/RHW insulation
						A-1035-1	1-3/C + gnd #6, 600V, EPR insulation
						Pull rope	Soft-Fiber Polyester
						S-1031-1	1-3/C + gnd #2, 600V, EPR insulation
1835	E-46	41	RGS conduit	0.00	534.55	Pull rope	Soft-Fiber Polyester
1836	E-46, E-47	41	RGS conduit	0.00	534.55	Pull rope	Soft-Fiber Polyester
1837	E-47	41	RGS conduit	0.00	534.55	Pull rope	Soft-Fiber Polyester
1838	E-47	41	RGS conduit	212.85	534.55	A-3009-2	3 + 1 gnd #6,#8, 600 V, RHH/RHW insulation
						Pull rope	Soft-Fiber Polyester
1839	E-47	41	RGS conduit	212.85	534.55	Pull rope	Soft-Fiber Polyester
						A-3009-2	3 + 1 gnd #6,#8, 600 V, RHH/RHW insulation
1840	E-47	41	RGS conduit	212.85	534.55	A-3009-2	3 + 1 gnd #6,#8, 600 V, RHH/RHW insulation
						Pull rope	Soft-Fiber Polyester
1841	E-47	41	RGS conduit	212.85	534.55		
						Pull rope	Soft-Fiber Polyester
						A-3009-2	3 + 1 gnd #6,#8, 600 V, RHH/RHW insulation
1842	E-47	41	RGS conduit	212.85	534.55	Pull rope	Soft-Fiber Polyester
						A-3009-2	3 + 1 gnd #6,#8, 600 V, RHH/RHW insulation

For continuation, see next sheet.

CONDUIT AND TRAY SCHEDULE

E-405

LAST REVISION 00-00-00
DATE PLOTTED => 7/15/2009
TIME PLOTTED => 5:13:42 PM

FOR REDUCED PLANS ORIGINAL SCALE IS IN MILLIMETERS 0 20 40 60 80

DGN FILE =>T:\13103\MS\pse\SAS Struc\CCO\SAS CCO44S1\2009-07-17 [Issued for Submittal (Draft 2)\04-0120F1_0360R03.dgn
USERNAME =>florica
CU 04251
EA 0120F1

CONDUIT DATA

Conduit No	Reference	Size	Type	Total Fill (mm²)	Allowable Fill (mm²)	Included Cable No.	Conductor Type
2052	E-114	41	RGS conduit	325.65	534.55	UP104-6a-3	2 + 1 gnd #8,#10, 600 V, RHH/RHW insulation
						UP104-6a-2	3 + 1 gnd #8,#10, 600 V, RHH/RHW insulation
						UP104-9-2	2 + 1 gnd #8,#10, 600 V, RHH/RHW insulation
2053	E-119	41	RGS conduit	325.65	534.55	UP104-6b-2	2 + 1 gnd #8,#10, 600 V, RHH/RHW insulation
						UP104-9-1	2 + 1 gnd #8,#10, 600 V, RHH/RHW insulation
						UP104-6b-1	3 + 1 gnd #8,#10, 600 V, RHH/RHW insulation
2054	E-119	41	RGS conduit	356.30	534.55	UP104-9	1-2/C + gnd #10, 600 V, EPR insulation
						UP104-6-1	3 + 1 gnd #8,#10, 600 V, RHH/RHW insulation
						UP104-6-2	2 + 1 gnd #8,#10, 600 V, RHH/RHW insulation
2055	E-115	41	RGS conduit	325.65	534.55	UP105-10a-1	3 + 1 gnd #8,#10, 600 V, RHH/RHW insulation
						UP105-10a-3	2 + 1 gnd #8,#10, 600 V, RHH/RHW insulation
						UP105-9-2	2 + 1 gnd #8,#10, 600 V, RHH/RHW insulation
2056	E-115	41	RGS conduit	266.38	534.55	UP105-10a-1	3 + 1 gnd #8,#10, 600 V, RHH/RHW insulation
						UP105-10a-2	3 + 1 gnd #8,#10, 600 V, RHH/RHW insulation
2057	E-115	41	RGS conduit	325.65	534.55	UP105-10a-2	3 + 1 gnd #8,#10, 600 V, RHH/RHW insulation
						UP105-10a-3	2 + 1 gnd #8,#10, 600 V, RHH/RHW insulation
						UP105-9-2	2 + 1 gnd #8,#10, 600 V, RHH/RHW insulation
2058	E-119	41	RGS conduit	325.65	534.55	UP105-10b-1	3 + 1 gnd #8,#10, 600 V, RHH/RHW insulation
						UP105-10b-2	2 + 1 gnd #8,#10, 600 V, RHH/RHW insulation
						UP105-9-1	2 + 1 gnd #8,#10, 600 V, RHH/RHW insulation
2059	E-119	41	RGS conduit	456.88	534.55	UP105-10-1	3 + 1 gnd #8,#10, 600 V, RHH/RHW insulation
						UP105-10-2	2 + 1 gnd #8,#10, 600 V, RHH/RHW insulation
						UP105-9	1-2/C + gnd #8, 600 V, EPR insulation
2060	E-116	41	RGS conduit	325.65	534.55	UP106-9-2	2 + 1 gnd #8,#10, 600 V, RHH/RHW insulation
						UP106-6a-1	3 + 1 gnd #8,#10, 600 V, RHH/RHW insulation
						UP106-6a-3	2 + 1 gnd #8,#10, 600 V, RHH/RHW insulation
2061	E-116	41	RGS conduit	266.38	534.55	UP106-6a-1	3 + 1 gnd #8,#10, 600 V, RHH/RHW insulation
						UP106-6a-2	3 + 1 gnd #8,#10, 600 V, RHH/RHW insulation
2062	E-116	41	RGS conduit	325.65	534.55	UP106-6a-3	2 + 1 gnd #8,#10, 600 V, RHH/RHW insulation
						UP106-6a-2	3 + 1 gnd #8,#10, 600 V, RHH/RHW insulation
						UP106-9-2	2 + 1 gnd #8,#10, 600 V, RHH/RHW insulation
2063	E-119	41	RGS conduit	325.65	534.55	UP106-6b-2	2 + 1 gnd #8,#10, 600 V, RHH/RHW insulation
						UP106-6b-1	3 + 1 gnd #8,#10, 600 V, RHH/RHW insulation
						UP106-9-1	2 + 1 gnd #8,#10, 600 V, RHH/RHW insulation
2064	E-119	41	RGS conduit	456.88	534.55	UP106-9	1-2/C + gnd #8, 600 V, EPR insulation
						UP106-6-2	2 + 1 gnd #8,#10, 600 V, RHH/RHW insulation
						UP106-6-1	3 + 1 gnd #8,#10, 600 V, RHH/RHW insulation
2065	E-119	41	RGS conduit	456.88	534.55	UP107-6-2	2 + 1 gnd #8,#10, 600 V, RHH/RHW insulation
						UP107-6-1	3 + 1 gnd #8,#10, 600 V, RHH/RHW insulation
						UP107-9	1-2/C + gnd #8, 600 V, EPR insulation
2066	E-119	41	RGS conduit	325.65	534.55	UP107-6b-2	2 + 1 gnd #8,#10, 600 V, RHH/RHW insulation
						UP107-6b-1	3 + 1 gnd #8,#10, 600 V, RHH/RHW insulation
						UP107-9-1	2 + 1 gnd #8,#10, 600 V, RHH/RHW insulation
2067	E-117	41	RGS conduit	325.65	534.55	UP107-9-2	2 + 1 gnd #8,#10, 600 V, RHH/RHW insulation
						UP107-6a-3	2 + 1 gnd #8,#10, 600 V, RHH/RHW insulation
						UP107-6a-1	3 + 1 gnd #8,#10, 600 V, RHH/RHW insulation
2068	E-117	41	RGS conduit	266.38	534.55	UP107-6a-2	3 + 1 gnd #8,#10, 600 V, RHH/RHW insulation
						UP107-6a-1	3 + 1 gnd #8,#10, 600 V, RHH/RHW insulation
2069	E-117	41	RGS conduit	325.65	534.55	UP107-6a-3	2 + 1 gnd #8,#10, 600 V, RHH/RHW insulation
						UP107-6a-2	3 + 1 gnd #8,#10, 600 V, RHH/RHW insulation
						UP107-9-2	2 + 1 gnd #8,#10, 600 V, RHH/RHW insulation
2070	E-119	41	RGS conduit	325.65	534.55	UP107-6c-2	2 + 1 gnd #8,#10, 600 V, RHH/RHW insulation
						UP107-6c-1	3 + 1 gnd #8,#10, 600 V, RHH/RHW insulation
						UP107-9-3	2 + 1 gnd #8,#10, 600 V, RHH/RHW insulation
2071	E-119	41	RGS conduit	325.65	534.55	UP108-10a-2	2 + 1 gnd #8,#10, 600 V, RHH/RHW insulation
						UP108-10a-1	3 + 1 gnd #8,#10, 600 V, RHH/RHW insulation
						UP108-9-5	2 + 1 gnd #8,#10, 600 V, RHH/RHW insulation
2072	E-119	41	RGS conduit	325.65	534.55	UP108-9-4	2 + 1 gnd #8,#10, 600 V, RHH/RHW insulation
						UP108-10b-2	2 + 1 gnd #8,#10, 600 V, RHH/RHW insulation
						UP108-10b-1	3 + 1 gnd #8,#10, 600 V, RHH/RHW insulation

REQUEST FOR INFORMATION NOT ADDRESSED IN THIS CCO REMAIN IN FORCE

MARK	DATE	REVISIONS DESCRIPTIONS	BY	CH'D	CCO#
1	03/18/10	WEST END BARRIER CONDUIT	RG	DO	4451

CONTRACT CHANGE ORDER NO. 4451
SHEET 14 OF 21

REGISTERED PROFESSIONAL ENGINEER — DAVID H. OTO — No. 10699 — Exp. 06/30/2011 ELECTRICAL — STATE OF CALIFORNIA

FOR REVISION ONLY

Caltrans Metric

DIST	COUNTY	ROUTE	KILOMETER POST TOTAL PROJECT	SHEET No	TOTAL SHEETS
04	SF	80	13.2/13.9	366 R1	1204

Jens Erlingsson 12/19/02
REGISTERED ELECTRICAL ENGINEER DATE

12-6-04
PLANS APPROVAL DATE

REGISTERED PROFESSIONAL ENGINEER — JENS ERLINGSSON — No. 8249 — Exp. 9/30/06 ELECTRICAL — STATE OF CALIFORNIA

PB POWER, Inc.
A Parsons Brinckerhoff Company
303 Second St., Suite 700N
San Francisco, CA 94107-1317

The State of California or its officers or agents shall not be responsible for the accuracy or completeness of electronic copies of this plan sheet.

Caltrans now has a web site! To get to the web site, go to http://www.dot.ca.gov

CONDUIT DATA

Conduit No	Reference	Size	Type	Total Fill (mm²)	Allowable Fill (mm²)	Included Cable No.	Conductor Type
2073	E-119	41	RGS conduit	325.65	534.55	UP108-9-3	2 + 1 gnd #8,#10, 600 V, RHH/RHW insulation
						UP108-10-2	2 + 1 gnd #8,#10, 600 V, RHH/RHW insulation
						UP108-10-1	3 + 1 gnd #8,#10, 600 V, RHH/RHW insulation
2074	E-118	41	RGS conduit	325.65	534.55	UP108-12a-3	2 + 1 gnd #8,#10, 600 V, RHH/RHW insulation
						UP108-12a-1	3 + 1 gnd #8,#10, 600 V, RHH/RHW insulation
						UP108-9-2	2 + 1 gnd #8,#10, 600 V, RHH/RHW insulation
2075	E-118	41	RGS conduit	266.38	534.55	UP108-12a-2	3 + 1 gnd #8,#10, 600 V, RHH/RHW insulation
						UP108-12a-1	3 + 1 gnd #8,#10, 600 V, RHH/RHW insulation
				325.65	534.55	UP108-9-2	2 + 1 gnd #8,#10, 600 V, RHH/RHW insulation
						UP108-12a-2	3 + 1 gnd #8,#10, 600 V, RHH/RHW insulation
2076	E-118	41	RGS conduit			UP108-12a-3	2 + 1 gnd #8,#10, 600 V, RHH/RHW insulation
				325.65	534.55	UP108-12b-2	2 + 1 gnd #8,#10, 600 V, RHH/RHW insulation
						UP108-12b-1	3 + 1 gnd #8,#10, 600 V, RHH/RHW insulation
2077	E-119	41	RGS conduit			UP108-9-1	2 + 1 gnd #8,#10, 600 V, RHH/RHW insulation
				456.88	534.55	UP108-12-2	2 + 1 gnd #8,#10, 600 V, RHH/RHW insulation
						UP108-12-1	3 + 1 gnd #8,#10, 600 V, RHH/RHW insulation
2078	E-119	41	RGS conduit			UP108-9	1-2/C + gnd #8, 600 V, EPR insulation
				0.00	534.55	Pull rope	Soft-Fiber Polyester
2111	E-135, (E-160C)	41	RGS conduit	0.00	534.55	Pull rope	Soft-Fiber Polyester
2112	E-135	41	RGS conduit	0.00	534.55	Pull rope	Soft-Fiber Polyester
2113	E-135	41	RGS conduit	0.00	534.55	Pull rope	Soft-Fiber Polyester
2114	E-136	41	RGS conduit	0.00	534.55	Pull rope	Soft-Fiber Polyester
2115	E-136	41	RGS conduit	0.00	534.55	Pull rope	Soft-Fiber Polyester
2116	E-136, E-137	41	RGS conduit	0.00	534.55	Pull rope	Soft-Fiber Polyester
2117	E-136	41	RGS conduit	0.00	534.55	Pull rope	Soft-Fiber Polyester
2118	E-137, E-138	41	RGS conduit	0.00	534.55	Pull rope	Soft-Fiber Polyester
2123	E-138	41	RGS conduit	0.00	534.55	Pull rope	Soft-Fiber Polyester
2125	E-138	41	RGS conduit	0.00	534.55	Pull rope	Soft-Fiber Polyester
2127	E-139	41	RGS conduit	0.00	534.55	Pull rope	Soft-Fiber Polyester
2130	E-140	41	RGS conduit	0.00	534.55	Pull rope	Soft-Fiber Polyester
2211	E-135	41	RGS conduit	0.00	534.55	Pull rope	Soft-Fiber Polyester
2212	E-135	41	RGS conduit	0.00	534.55	Pull rope	Soft-Fiber Polyester
2213	E-135	41	RGS conduit				

For continuation, see next sheet.

CONDUIT AND TRAY SCHEDULE

E-411

MARK	DATE	REVISED BY	DATE REVISED
	8/02	PBP	AB

CALCULATED/DESIGNED BY
CHECKED BY

DESIGN OVERSIGHT
BEHZAD GOLEMOHAMMADI

STATE OF CALIFORNIA - DEPARTMENT OF TRANSPORTATION
Caltrans

LAST REVISION 00-00-00
DATE PLOTTED => 3/17/2010
TIME PLOTTED => 3:38:59 PM

FOR REDUCED PLANS ORIGINAL SCALE IS IN MILLIMETERS 0 20 40 60 80

DGN FILE =>T:\13103\MS\pse\SAS Struc\CCO\SAS CCO4451\2010-03-18 Addendum\04-0120f1_0366R01.dgn
USERNAME =>florico
CU 04251
EA 0120F1

CONDUIT DATA

Conduit No	Reference	Size	Type	Total Fill (mm²)	Allowable Fill (mm²)	Included Cable No.	Conductor Type
2214	E-136	41	RGS conduit	0.00	534.55	Pull rope	Soft-Fiber Polyester
2215	E-136	41	RGS conduit	0.00	534.55	Pull rope	Soft-Fiber Polyester
2216	E-136	41	RGS conduit	0.00	534.55	Pull rope	Soft-Fiber Polyester
2217	E-136	41	RGS conduit	0.00	534.55	Pull rope	Soft-Fiber Polyester
2218	E-136	41	RGS conduit	0.00	534.55	Pull rope	Soft-Fiber Polyester
2219	E-137	41	RGS conduit	0.00	534.55	Pull rope	Soft-Fiber Polyester
2220	E-137	41	RGS conduit	0.00	534.55	Pull rope	Soft-Fiber Polyester
2221	E-137	41	RGS conduit	0.00	534.55	Pull rope	Soft-Fiber Polyester
2222	E-138	41	RGS conduit	0.00	534.55	Pull rope	Soft-Fiber Polyester
2223	E-138	41	RGS conduit	0.00	534.55	Pull rope	Soft-Fiber Polyester
2224	E-138	41	RGS conduit	0.00	534.55	Pull rope	Soft-Fiber Polyester
2225	E-138	41	RGS conduit	0.00	534.55	Pull rope	Soft-Fiber Polyester
2226	E-139	41	RGS conduit	0.00	534.55	Pull rope	Soft-Fiber Polyester
2227	E-139	41	RGS conduit	0.00	534.55	Pull rope	Soft-Fiber Polyester
2228	E-139	41	RGS conduit	0.00	534.55	Pull rope	Soft-Fiber Polyester
2229	E-139	41	RGS conduit	0.00	534.55	Pull rope	Soft-Fiber Polyester
2230	E-139	41	RGS conduit	0.00	534.55	Pull rope	Soft-Fiber Polyester
2231	E-140	41	RGS conduit	0.00	534.55	Pull rope	Soft-Fiber Polyester
2300	E-138	41	RGS conduit	212.85	534.55	A-2013-2	3 + 1 gnd #6,#8, 600 V RHH/RHW insulation
2301	E-138	41	RGS conduit	0.00	534.55	Pull rope	Soft-Fiber Polyester
2302	E-137	41	RGS conduit	0.00	534.55	Pull rope	Soft-Fiber Polyester
2326	E-135	41	RGS conduit	339.73	534.55	Pull rope	Soft-Fiber Polyester
						A-2011-2	3 + 1 gnd #6,#8, 600 V RHH/RHW insulation
						UP204-1	1-2/C + gnd #10, 600 V, EPR insulation
2327	E-135	41	RGS conduit	339.73	534.55	UP204-1	1-2/C + gnd #10, 600 V, EPR insulation
						A-2012-2	3 + 1 gnd #6,#8, 600 V RHH/RHW insulation
						Pull rope	Soft-Fiber Polyester
2328	E-135, (E-160C) 2	41	RGS conduit	339.73	534.55	UP204-1	1-2/C + gnd #10, 600 V, EPR insulation
						Pull rope	Soft-Fiber Polyester
						S-2031-2	3 + 1 gnd #6,#8, 600 V RHH/RHW insulation
2329	E-135	41	RGS conduit	0.00	534.55	Pull rope	Soft-Fiber Polyester
2330	E-135	41	RGS conduit	212.85	534.55	A-2014-2	3 + 1 gnd #6,#8, 600 V RHH/RHW insulation
						Pull rope	Soft-Fiber Polyester
2331	E-135	41	RGS conduit	0.00	534.55	Pull rope	Soft-Fiber Polyester
2332	E-136	41	RGS conduit	0.00	534.55	Pull rope	Soft-Fiber Polyester
2333	E-136	41	RGS conduit	0.00	534.55	Pull rope	Soft-Fiber Polyester
2334	E-135	41	RGS conduit	126.88	534.55	Pull rope	Soft-Fiber Polyester
						UP205-1	1-2/C + gnd #10, 600 V, EPR insulation
2335	E-136	41	RGS conduit	339.73	534.55	A-3039-2	3 + 1 gnd #6,#8, 600 V RHH/RHW insulation
						Pull rope	Soft-Fiber Polyester
						UP205-1	1-2/C + gnd #10, 600 V, EPR insulation
2336	E-136	41	RGS conduit	339.73	534.55	Pull rope	Soft-Fiber Polyester
						UP205-1	1-2/C + gnd #10, 600 V, EPR insulation
						A-3039-2	3 + 1 gnd #6,#8, 600 V RHH/RHW insulation
2338	E-136	41	RGS conduit	0.00	534.55	Pull rope	Soft-Fiber Polyester
2339	E-136	41	RGS conduit	339.73	534.55	A-3040-2	3 + 1 gnd #6,#8, 600 V RHH/RHW insulation
						Pull rope	Soft-Fiber Polyester
						UP206-1	1-2/C + gnd #10, 600 V, EPR insulation

REQUEST FOR INFORMATION NOT ADDRESSED IN THIS CCO REMAIN IN FORCE

MARK	DATE	DESCRIPTIONS	BY	CH'D	CCO#
REVISIONS					
2	07/17/09	WEST END BARRIER CONDUIT	RG	FW	4451
1	03/04/08	BARRIER MODIFICATIONS	TW	RG	44

CONTRACT CHANGE ORDER NO. 4451
SHEET 15 OF 21

Caltrans Metric

REGISTERED PROFESSIONAL ENGINEER — FADI WALIEDDINE — No. 11465 — Exp. 12/31/2009 ELECTRICAL — STATE OF CALIFORNIA

1/2

FOR REVISION ONLY

DIST	COUNTY	ROUTE	KILOMETER POST TOTAL PROJECT	SHEET NO	TOTAL SHEETS
04	SF	80	13.2/13.9	367 R2	1204

12/19/02
REGISTERED ELECTRICAL ENGINEER DATE

REGISTERED PROFESSIONAL ENGINEER — JENS ERLINGSSON — No. 8249 — Exp. 9/30/06 ELECTRICAL — STATE OF CALIFORNIA

12-6-04
PLANS APPROVAL DATE

PB POWER, Inc.
A Parsons Brinckerhoff Company
303 Second St., Suite 700N
San Francisco, CA 94107-1317

The State of California or its officers or agents shall not be responsible for the accuracy or completeness of electronic copies of this plan sheet.

Caltrans now has a web site! To get to the web site, go to http://www.dot.ca.gov

CONDUIT DATA

Conduit No	Reference	Size	Type	Total Fill (mm²)	Allowable Fill (mm²)	Included Cable No.	Conductor Type
2340	E-137	41	RGS conduit	339.73	534.55	Pull rope	Soft-Fiber Polyester
						UP206-1	1-2/C + gnd #10, 600 V, EPR insulation
						A-3040-2	3 + 1 gnd #6,#8, 600 V RHH/RHW insulation
2341	E-137	41	RGS conduit	0.00	534.55	Pull rope	Soft-Fiber Polyester
2346	E-138	41	RGS conduit	0.00	534.55	Pull rope	Soft-Fiber Polyester
2348	E-138, E-139	41	RGS conduit	481.21	534.55	S-2031-4	3+1gnd #4,#8, 600V, RHH/RHW insulation
						Pull rope	Soft-Fiber Polyester
						A-2035-4	3 + 1 gnd #6,#8, 600 V RHH/RHW insulation
2350	E-139	41	RGS conduit	425.70	534.55	Pull rope	Soft-Fiber Polyester
						A-2035-4	3 + 1 gnd #6,#8, 600 V RHH/RHW insulation
						S-2032-2	3 + 1 gnd #6,#8, 600 V RHH/RHW insulation
2353	E-139	41	RGS conduit	425.70	534.55	S-2032-2	3 + 1 gnd #6,#8, 600 V RHH/RHW insulation
						Pull rope	Soft-Fiber Polyester
						A-2035-4	3 + 1 gnd #6,#8, 600 V RHH/RHW insulation
2355	E-140	41	RGS conduit	425.70	534.55	A-2035-4	3 + 1 gnd #6,#8, 600 V RHH/RHW insulation
						Pull rope	Soft-Fiber Polyester
						S-2032-2	3 + 1 gnd #6,#8, 600 V RHH/RHW insulation
2357	E-140	41	RGS conduit	0.00	534.55	Pull rope	Soft-Fiber Polyester
2358	E-139	41	RGS conduit	0.00	534.55	Pull rope	Soft-Fiber Polyester
2359	E-137	41	RGS conduit	126.88	534.55	UP206-1	1-2/C + gnd #10, 600 V, EPR insulation
						Pull rope	Soft-Fiber Polyester
2360	E-138	41	RGS conduit	0.00	534.55	Pull rope	Soft-Fiber Polyester
2361	E-136	41	RGS conduit	0.00	534.55	Pull rope	Soft-Fiber Polyester
2364	E-137	41	RGS conduit	212.85	534.55	LP220-2,4A	3 + 1 gnd #6,#8, 600 V RHH/RHW insulation
2368	E-135	41	RGS conduit	212.85	534.55	LP219-2,4A	3 + 1 gnd #6,#8, 600 V RHH/RHW insulation
2369	E-135	41	RGS conduit	212.85	534.55	LP219-2,4A	3 + 1 gnd #6,#8, 600 V RHH/RHW insulation
2370	E-135	41	RGS conduit	212.85	534.55	LP219-2,4A	3 + 1 gnd #6,#8, 600 V RHH/RHW insulation
2371	E-135	41	RGS conduit	212.85	534.55	LP219-6,8A	3 + 1 gnd #6,#8, 600 V RHH/RHW insulation
2372	E-135	41	RGS conduit	212.85	534.55	LP219-6,8A	3 + 1 gnd #6,#8, 600 V RHH/RHW insulation
2373	E-135	41	RGS conduit	212.85	534.55	LP219-6,8A	3 + 1 gnd #6,#8, 600 V RHH/RHW insulation
2374	E-135	41	RGS conduit	212.85	534.55	LP219-6,8A	3 + 1 gnd #6,#8, 600 V RHH/RHW insulation
2375	E-136	41	RGS conduit	0.00	534.55	Pull rope	Soft-Fiber Polyester
2376	E-136	41	RGS conduit	212.85	534.55	LP220-2,4A	3 + 1 gnd #6,#8, 600 V RHH/RHW insulation

For continuation, see next sheet.

CONDUIT AND TRAY SCHEDULE

E-412

DESIGN OVERSIGHT — BEHZAD GOLEMOHAMMADI

CALCULATED/DESIGNED BY — PBP
CHECKED BY — AB

DATE	REVISED BY	DATE REVISED
8/02		8/02

STATE OF CALIFORNIA - DEPARTMENT OF TRANSPORTATION — Caltrans

LAST REVISION 00-00-00 — DATE PLOTTED => 7/15/2009 TIME PLOTTED => 4:50:40 PM

FOR REDUCED PLANS ORIGINAL SCALE IS IN MILLIMETERS 0 20 40 60 80

DGN FILE =>f:\13103\MS\pse\SAS Struc\CCO\SAS CC0445I\2009-07-17
USERNAME =>Grajo

Issued for Submittal (Draft 2)\04-0120F1_0367R02.dgn

CU 04251 | EA 0120F1

CONDUIT DATA

Conduit No	Reference	Size	Type	Total Fill (mm²)	Allowable Fill (mm²)	Included Cable No.	Conductor Type
2377	E-136	41	RGS conduit	212.85	534.55	LP220-2,4A	3 + 1 gnd #6,#8, 600 V, RHH/RHW insulation
2378	E-136	41	RGS conduit	212.85	534.55	LP220-2,4A	3 + 1 gnd #6,#8, 600 V, RHH/RHW insulation
2379	E-136	41	RGS conduit	212.85	534.55	LP220-2,4A	3 + 1 gnd #6,#8, 600 V, RHH/RHW insulation
2380	E-136	41	RGS conduit	212.85	534.55	LP220-6,8A	3 + 1 gnd #6,#8, 600 V, RHH/RHW insulation
2381	E-136	41	RGS conduit	212.85	534.55	LP220-6,8A	3 + 1 gnd #6,#8, 600 V, RHH/RHW insulation
2382	E-136	41	RGS conduit	212.85	534.55	LP220-6,8A	3 + 1 gnd #6,#8, 600 V, RHH/RHW insulation
2383	E-136	41	RGS conduit	212.85	534.55	LP220-6,8A	3 + 1 gnd #6,#8, 600 V, RHH/RHW insulation
2384	E-136	41	RGS conduit	212.85	534.55	LP220-6,8A	3 + 1 gnd #6,#8, 600 V, RHH/RHW insulation
2385	E-136	41	RGS conduit	0.00	534.55	Pull rope	Soft-Fiber Polyester
2386	E-136	41	RGS conduit	212.85	534.55	LP221-2,4A	3 + 1 gnd #6,#8, 600 V, RHH/RHW insulation
2387	E-137	41	RGS conduit	212.85	534.55	LP221-2,4A	3 + 1 gnd #6,#8, 600 V, RHH/RHW insulation
2388	E-137	41	RGS conduit	212.85	534.55	LP221-2,4A	3 + 1 gnd #6,#8, 600 V, RHH/RHW insulation
2389	E-137	41	RGS conduit	212.85	534.55	LP221-6,8A	3 + 1 gnd #6,#8, 600 V, RHH/RHW insulation
2390	E-137	41	RGS conduit	212.85	534.55	LP221-6,8A	3 + 1 gnd #6,#8, 600 V, RHH/RHW insulation
2391	E-137	41	RGS conduit	212.85	534.55	LP221-6,8A	3 + 1 gnd #6,#8, 600 V, RHH/RHW insulation
2392	E-137	41	RGS conduit	212.85	534.55	LP221-6,8A	3 + 1 gnd #6,#8, 600 V, RHH/RHW insulation
2393	E-137	41	RGS conduit	212.85	534.55	LP221-6,8A	3 + 1 gnd #6,#8, 600 V, RHH/RHW insulation
2394	E-137	41	RGS conduit	212.85	534.55	LP221-6,8A	3 + 1 gnd #6,#8, 600 V, RHH/RHW insulation
2395	E-137	41	RGS conduit	212.85	534.55	LP221-6,8A	3 + 1 gnd #6,#8, 600 V, RHH/RHW insulation
2396	E-137	41	RGS conduit	212.85	534.55	LP222-2,4A	3 + 1 gnd #6,#8, 600 V, RHH/RHW insulation
2397	E-138	41	RGS conduit	212.85	534.55	LP222-2,4A	3 + 1 gnd #6,#8, 600 V, RHH/RHW insulation
2398	E-138	41	RGS conduit	212.85	534.55	LP222-2,4A	3 + 1 gnd #6,#8, 600 V, RHH/RHW insulation
2399	E-138	41	RGS conduit	212.85	534.55	LP222-2,4A	3 + 1 gnd #6,#8, 600 V, RHH/RHW insulation
2401	E-138	41	RGS conduit	212.85	534.55	Pull rope	Soft-Fiber Polyester
						A-2013-2	3 + 1 gnd #6,#8, 600 V, RHH/RHW insulation
2426	E-135	41	RGS conduit	212.85	534.55	LP219-2,4A	3 + 1 gnd #6,#8, 600 V, RHH/RHW insulation
						Pull rope	Soft-Fiber Polyester
2427	E-135	41	RGS conduit	212.85	534.55	Pull rope	Soft-Fiber Polyester
						LP220-2,4A	3 + 1 gnd #6,#8, 600 V, RHH/RHW insulation
2428	E-135, (E-160C) 2	41	RGS conduit	425.70	534.55	Pull rope	Soft-Fiber Polyester
						A-2035-2	3 + 1 gnd #6,#8, 600 V, RHH/RHW insulation
						LP221-6,8A	3 + 1 gnd #6,#8, 600 V, RHH/RHW insulation
2429	E-136	41	RGS conduit	212.85	534.55	LP219-6,8A	3 + 1 gnd #6,#8, 600 V, RHH/RHW insulation
2430	E-138	41	RGS conduit	425.70	534.55	LP222-2,4A	3 + 1 gnd #6,#8, 600 V, RHH/RHW insulation
						LP222-6,8A	3 + 1 gnd #6,#8, 600 V, RHH/RHW insulation
2432	E-139	41	RGS conduit	425.70	534.55	LP219-2,4A	3 + 1 gnd #6,#8, 600 V, RHH/RHW insulation
						LP219-6,8A	3 + 1 gnd #6,#8, 600 V, RHH/RHW insulation
2434	E-135	41	RGS conduit	0.00	534.55	Pull rope	Soft-Fiber Polyester
2435	E-136	41	RGS conduit	0.00	534.55	Pull rope	Soft-Fiber Polyester
2436	E-136	41	RGS conduit	0.00	534.55	Pull rope	Soft-Fiber Polyester
2437	E-136	41	RGS conduit	0.00	534.55	Pull rope	Soft-Fiber Polyester
2438	E-136	41	RGS conduit	0.00	534.55	Pull rope	Soft-Fiber Polyester
2439	E-136	41	RGS conduit	0.00	534.55	Pull rope	Soft-Fiber Polyester
2440	E-136	41	RGS conduit	0.00	534.55	Pull rope	Soft-Fiber Polyester

REQUEST FOR INFORMATION NOT ADDRESSED IN THIS CCO REMAIN IN FORCE

MARK	DATE	DESCRIPTIONS REVISIONS	BY	CH'D	CCO#
2	07/17/09	WEST END BARRIER CONDUIT	RG	FW	44S1
1	03/04/08	BARRIER MODIFICATIONS	JS BM	RG SE	44

CONTRACT CHANGE ORDER NO. 44 S1
SHEET 16 OF 21

FOR REVISION ONLY — FADI WALIEDDINE, No. 11465, Exp. 12/31/2009 ELECTRICAL, REGISTERED PROFESSIONAL ENGINEER, STATE OF CALIFORNIA (2)

FOR REVISION ONLY — S. A. ESTOQUE, JR, No. E-10151, Exp. 12/31/2008 ELECTRICAL, REGISTERED PROFESSIONAL ENGINEER, STATE OF CALIFORNIA (1)

Caltrans Metric

DIST	COUNTY	ROUTE	KILOMETER POST TOTAL PROJECT	SHEET No	TOTAL SHEETS
04	SF	80	13.2/13.9	368 R2	1204

Jens Erlingsson 12/19/02
REGISTERED ELECTRICAL ENGINEER DATE

12-6-04
PLANS APPROVAL DATE

JENS ERLINGSSON, No. 8249, Exp. 9/30/06 ELECTRICAL, REGISTERED PROFESSIONAL ENGINEER, STATE OF CALIFORNIA

PB POWER, Inc.
A Parsons Brinckerhoff Company
303 Second St., Suite 700N
San Francisco, CA 94107-1317

The State of California or its officers or agents shall not be responsible for the accuracy or completeness of electronic copies of this plan sheet.

Caltrans now has a web site! To get to the web site, go to: http://www.dot.ca.gov

CONDUIT DATA

Conduit No	Reference	Size	Type	Total Fill (mm²)	Allowable Fill (mm²)	Included Cable No.	Conductor Type
2441	E-137	41	RGS conduit	0.00	534.55	Pull rope	Soft-Fiber Polyester
2442	E-137	41	RGS conduit	0.00	534.55	Pull rope	Soft-Fiber Polyester
2443	E-137	41	RGS conduit	0.00	534.55	Pull rope	Soft-Fiber Polyester
2444	E-137	41	RGS conduit	0.00	534.55	Pull rope	Soft-Fiber Polyester
2446	E-138	41	RGS conduit	0.00	534.55	Pull rope	Soft-Fiber Polyester
2447	E-138	41	RGS conduit	0.00	534.55	Pull rope	Soft-Fiber Polyester
2448	E-138	41	RGS conduit	0.00	534.55	Pull rope	Soft-Fiber Polyester
2449	E-139	41	RGS conduit	0.00	534.55	Pull rope	Soft-Fiber Polyester
2450	E-139	41	RGS conduit	0.00	534.55	Pull rope	Soft-Fiber Polyester
2451	E-139	41	RGS conduit	0.00	534.55	Pull rope	Soft-Fiber Polyester
2452	E-139	41	RGS conduit	0.00	534.55	Pull rope	Soft-Fiber Polyester
2453	E-139	41	RGS conduit	0.00	534.55	Pull rope	Soft-Fiber Polyester
2454	E-139	41	RGS conduit	0.00	534.55	Pull rope	Soft-Fiber Polyester
2455	E-140	41	RGS conduit	0.00	534.55	Pull rope	Soft-Fiber Polyester
2457	E-140	41	RGS conduit	0.00	534.55	Pull rope	Soft-Fiber Polyester
2459	E-139	41	RGS conduit	0.00	534.55	Pull rope	Soft-Fiber Polyester
2460	E-137	41	RGS conduit	0.00	534.55	Pull rope	Soft-Fiber Polyester
2461	E-138	41	RGS conduit	0.00	534.55	Pull rope	Soft-Fiber Polyester
2468	E-135	41	RGS conduit	212.85	534.55	A-2011-2	3 + 1 gnd #6,#8, 600 V, RHH/RHW insulation
2469	E-135	41	RGS conduit	212.85	534.55	A-2011-2	3 + 1 gnd #6,#8, 600 V, RHH/RHW insulation
2470	E-135	41	RGS conduit	212.85	534.55	A-2011-2	3 + 1 gnd #6,#8, 600 V, RHH/RHW insulation
2471	E-135	41	RGS conduit	212.85	534.55	A-2011-2	3 + 1 gnd #6,#8, 600 V, RHH/RHW insulation
2472	E-135	41	RGS conduit	212.85	534.55	A-2011-2	3 + 1 gnd #6,#8, 600 V, RHH/RHW insulation
2473	E-135	41	RGS conduit	212.85	534.55	A-2011-2	3 + 1 gnd #6,#8, 600 V, RHH/RHW insulation
2474	E-135	41	RGS conduit	212.85	534.55	A-2011-2	3 + 1 gnd #6,#8, 600 V, RHH/RHW insulation
2475	E-136	41	RGS conduit	212.85	534.55	A-2011-2	3 + 1 gnd #6,#8, 600 V, RHH/RHW insulation
2476	E-136	41	RGS conduit	212.85	534.55	A-2011-2	3 + 1 gnd #6,#8, 600 V, RHH/RHW insulation
2477	E-136	41	RGS conduit	212.85	534.55	A-2011-2	3 + 1 gnd #6,#8, 600 V, RHH/RHW insulation

For continuation, see next sheet.

CONDUIT AND TRAY SCHEDULE

E-413

DATE	REVISED BY	DATE REVISED
8/02	PBP	8/02 AB

CALCULATED/DESIGNED BY
CHECKED BY

DESIGN OVERSIGHT
BEHZAD GOLEMOHAMMADI

STATE OF CALIFORNIA - DEPARTMENT OF TRANSPORTATION
Caltrans

LAST REVISION 00-00-00
DATE PLOTTED => 7/15/2009
TIME PLOTTED => 4:51:07 PM

FOR REDUCED PLANS ORIGINAL SCALE IS IN MILLIMETERS 0 20 40 60 80

DGN FILE =>I:\13103\MS\pse\SAS Struc\CCO\SAS CCO44S1\2009-07-17 [Issued for Submittal (Draft 2)\04-0120F1_0368R02.dgn
USERNAME =>Grajo
CU 04251
EA 0120F1

CONDUIT DATA

Conduit No	Reference	Size	Type	Total Fill (mm²)	Allowable Fill (mm²)	Included Cable No.	Conductor Type
2478	E-136	41	RGS conduit	212.85	534.55	A-2011-2	3 + 1 gnd #6,#8, 600 V, RHH/RHW insulation
2479	E-136	41	RGS conduit	212.85	534.55	A-2011-2	3 + 1 gnd #6,#8, 600 V, RHH/RHW insulation
2480	E-136	41	RGS conduit	212.85	534.55	A-2011-2	3 + 1 gnd #6,#8, 600 V, RHH/RHW insulation
2481	E-136	41	RGS conduit	274.92	534.55	1256-7	1-3/C #16 ,600 V, EPR insulation
						A-2011-2	3 + 1 gnd #6,#8, 600 V, RHH/RHW insulation
2482	E-136	41	RGS conduit	212.85	534.55	A-2012-2	3 + 1 gnd #6,#8, 600 V, RHH/RHW insulation
2483	E-136	41	RGS conduit	212.85	534.55	A-2012-2	3 + 1 gnd #6,#8, 600 V, RHH/RHW insulation
2484	E-136	41	RGS conduit	212.85	534.55	A-2012-2	3 + 1 gnd #6,#8, 600 V, RHH/RHW insulation
2485	E-136	41	RGS conduit	212.85	534.55	A-2012-2	3 + 1 gnd #6,#8, 600 V, RHH/RHW insulation
2486	E-136	41	RGS conduit	212.85	534.55	A-2012-2	3 + 1 gnd #6,#8, 600 V, RHH/RHW insulation
2487	E-137	41	RGS conduit	212.85	534.55	A-2012-2	3 + 1 gnd #6,#8, 600 V, RHH/RHW insulation
2488	E-137	41	RGS conduit	212.85	534.55	A-2012-2	3 + 1 gnd #6,#8, 600 V, RHH/RHW insulation
2489	E-137	41	RGS conduit	212.85	534.55	A-2012-2	3 + 1 gnd #6,#8, 600 V, RHH/RHW insulation
2490	E-137	41	RGS conduit	212.85	534.55	A-2012-2	3 + 1 gnd #6,#8, 600 V, RHH/RHW insulation
2491	E-137	41	RGS conduit	212.85	534.55	A-2012-2	3 + 1 gnd #6,#8, 600 V, RHH/RHW insulation
2492	E-137	41	RGS conduit	212.85	534.55	A-2012-2	3 + 1 gnd #6,#8, 600 V, RHH/RHW insulation
2493	E-137	41	RGS conduit	212.85	534.55	A-2012-2	3 + 1 gnd #6,#8, 600 V, RHH/RHW insulation
2494	E-137	41	RGS conduit	212.85	534.55	A-2012-2	3 + 1 gnd #6,#8, 600 V, RHH/RHW insulation
2495	E-137	41	RGS conduit	212.85	534.55	A-2012-2	3 + 1 gnd #6,#8, 600 V, RHH/RHW insulation
2496	E-137	41	RGS conduit	212.85	534.55	A-2012-2	3 + 1 gnd #6,#8, 600 V, RHH/RHW insulation
2497	E-138	41	RGS conduit	0.00	534.55	Pull rope	Soft-Fiber Polyester
2498	E-138	41	RGS conduit	212.85	534.55	A-2013-2	3 + 1 gnd #6,#8, 600 V, RHH/RHW insulation
2499	E-138	41	RGS conduit	212.85	534.55	A-2013-2	3 + 1 gnd #6,#8, 600 V, RHH/RHW insulation
2511	E-135, E-160C (2)	41	RGS PVC coated (2) conduit	98.10	534.55	2155	1 - 2 pair, shielded #18 with IS/OA, 300 V, PVC jacket
						Pull rope	Soft-Fiber Polyester
2512	E-135	41	RGS conduit	0.00	534.55	Pull rope	Soft-Fiber Polyester
2513	E-136	41	RGS conduit	0.00	534.55	Pull rope	Soft-Fiber Polyester
2514	E-136	41	RGS conduit	0.00	534.55	Pull rope	Soft-Fiber Polyester
2515	E-136	41	RGS conduit	0.00	534.55	Pull rope	Soft-Fiber Polyester
2516	E-136	41	RGS conduit	0.00	534.55	Pull rope	Soft-Fiber Polyester
2517	E-136	41	RGS conduit	0.00	534.55	Pull rope	Soft-Fiber Polyester
2518	E-136	41	RGS conduit	0.00	534.55	Pull rope	Soft-Fiber Polyester
2519	E-137	41	RGS conduit	0.00	534.55	Pull rope	Soft-Fiber Polyester
2520	E-137	41	RGS conduit	0.00	534.55	Pull rope	Soft-Fiber Polyester
2521	E-137	41	RGS conduit	0.00	534.55	Pull rope	Soft-Fiber Polyester
2522	E-138	41	RGS conduit	0.00	534.55	Pull rope	Soft-Fiber Polyester
2523	E-138	41	RGS conduit	0.00	534.55	Pull rope	Soft-Fiber Polyester
2524	E-138	41	RGS conduit	0.00	534.55	Pull rope	Soft-Fiber Polyester

REQUEST FOR INFORMATION NOT ADDRESSED IN THIS CCO REMAIN IN FORCE

MARK	DATE	DESCRIPTIONS REVISIONS	BY	CH'D	CCO#
2	02/11/10	WEST END BARRIER CONDUIT	TW	RG DO	44S1
1	03/04/08	BARRIER MODIFICATIONS	JS BM	RG SE	44

CONTRACT CHANGE ORDER NO. 44 S1
SHEET 17 OF 21

FOR REVISION ONLY — DAVID H. OTO, No. 10699, Exp. 06/30/2011 ELECTRICAL, REGISTERED PROFESSIONAL ENGINEER, STATE OF CALIFORNIA (2)

FOR REVISION ONLY — S. A. ESTOCLE, JR., No. E-10151, Exp. 12/31/2008 ELECTRICAL, REGISTERED PROFESSIONAL ENGINEER, STATE OF CALIFORNIA (1)

Caltrans Metric

DIST	COUNTY	ROUTE	KILOMETER POST TOTAL PROJECT	SHEET No	TOTAL SHEETS
04	SF	80	13.2/13.9	369 R2	1204

Jens Erlingsson 12/19/02
REGISTERED ELECTRICAL ENGINEER DATE

12-6-04
PLANS APPROVAL DATE

JENS ERLINGSSON, No. 8249, Exp. 9/30/06 ELECTRICAL, REGISTERED PROFESSIONAL ENGINEER, STATE OF CALIFORNIA

PB POWER, Inc.
A Parsons Brinckerhoff Company
303 Second St., Suite 700N
San Francisco, CA 94107-1317

The State of California or its officers or agents shall not be responsible for the accuracy or completeness of electronic copies of this plan sheet.

Caltrans now has a web site! To get to the web site, go to: http://www.dot.ca.gov

CONDUIT DATA

Conduit No	Reference	Size	Type	Total Fill (mm²)	Allowable Fill (mm²)	Included Cable No.	Conductor Type
2525	E-138	41	RGS conduit	0.00	534.55	Pull rope	Soft-Fiber Polyester
2526	E-139	41	RGS conduit	0.00	534.55	Pull rope	Soft-Fiber Polyester
2527	E-139	41	RGS conduit	0.00	534.55	Pull rope	Soft-Fiber Polyester
2528	E-139	41	RGS conduit	0.00	534.55	Pull rope	Soft-Fiber Polyester
2529	E-139	41	RGS conduit	0.00	534.55	Pull rope	Soft-Fiber Polyester
2530	E-139	41	RGS conduit	0.00	534.55	Pull rope	Soft-Fiber Polyester
2531	E-140	41	RGS conduit	0.00	534.55	Pull rope	Soft-Fiber Polyester
2532	E-186	41	RGS conduit	227.46	534.55	UP208-6	1-2/C + gnd #8,600 V, EPR insulation
2533	E-186	41	RGS conduit	98.10	534.55	2154	1 - 2 pair, shielded #18 with IS/OA, 300 V, PVC jacket
2535	E-199	78	RGS-PVC coated conduit	882.89	1935.24	1118	1-3/C + gnd #2/0,600 V, EPR insulation
						Pull rope	Soft-Fiber Polyester
2536	E-199	53	RGS-PVC coated conduit	147.25	879.42	1118-2	1-3/C #14,600 V, EPR insulation
						1118-1	1-3/C #16,600 V, EPR insulation
						Pull rope	Soft-Fiber Polyester
2537	E-138	41	RGS conduit	212.85	534.55	LP222-2,4A	3 + 1 gnd #6,#8, 600 V, RHH/RHW insulation
2538	E-138	41	RGS conduit	212.85	534.55	LP222-2,4A	3 + 1 gnd #6,#8, 600 V, RHH/RHW insulation
2539	E-138	41	RGS conduit	212.85	534.55	LP222-2,4A	3 + 1 gnd #6,#8, 600 V, RHH/RHW insulation
2540	E-138	41	RGS conduit	212.85	534.55	LP222-2,4A	3 + 1 gnd #6,#8, 600 V, RHH/RHW insulation
2541	E-138	41	RGS conduit	212.85	534.55	LP222-6,8A	3 + 1 gnd #6,#8, 600 V, RHH/RHW insulation
2542	E-138	41	RGS conduit	212.85	534.55	LP222-6,8A	3 + 1 gnd #6,#8, 600 V, RHH/RHW insulation
2543	E-138	41	RGS conduit	212.85	534.55	LP222-6,8A	3 + 1 gnd #6,#8, 600 V, RHH/RHW insulation
2544	E-138	41	RGS conduit	212.85	534.55	LP222-6,8A	3 + 1 gnd #6,#8, 600 V, RHH/RHW insulation
2545	E-138	41	RGS conduit	212.85	534.55	LP222-6,8A	3 + 1 gnd #6,#8, 600 V, RHH/RHW insulation
2546	E-138	41	RGS conduit	212.85	534.55	LP222-6,8A	3 + 1 gnd #6,#8, 600 V, RHH/RHW insulation
2547	E-139	41	RGS conduit	212.85	534.55	LP222-6,8A	3 + 1 gnd #6,#8, 600 V, RHH/RHW insulation
2548	E-139	41	RGS conduit	0.00	534.55	Pull rope	Soft-Fiber Polyester
2549	E-139	41	RGS conduit	212.85	534.55	LP223-2,4A	3 + 1 gnd #6,#8, 600 V, RHH/RHW insulation
2550	E-139	41	RGS conduit	212.85	534.55	LP223-2,4A	3 + 1 gnd #6,#8, 600 V, RHH/RHW insulation

For continuation, see next sheet.

CONDUIT AND TRAY SCHEDULE

E-414

CALCULATED/ DESIGNED BY			
CHECKED BY			
DATE	8/02	PBP	AB
REVISED BY	DATE REVISED		

DESIGN OVERSIGHT — BEHZAD GOLEMOHAMMADI

STATE OF CALIFORNIA - DEPARTMENT OF TRANSPORTATION — Caltrans

LAST REVISION 00-00-00 — DATE PLOTTED => 2/11/2010 TIME PLOTTED => 4:25:57 PM

FOR REDUCED PLANS ORIGINAL SCALE IS IN MILLIMETERS 0 20 40 60 80

DGN FILE =>T:\13103\MS\pse\SAS Struc\CCO\SAS CCO44S1\2010-02-11
USERNAME =>florico
Issued for Submittal (Draft 3)\04-0120f1_0369R02.dgn

CU 04251 | EA 0120F1

CONDUIT DATA

Conduit No	Reference	Size	Type	Total Fill (mm²)	Allowable Fill (mm²)	Included Cable No.	Conductor Type
2551	E-139	41	RGS conduit	212.85	534.55	LP223-2,4A	3 + 1 gnd #6,#8, 600 V, RHH/RHW insulation
2552	E-139	41	RGS conduit	212.85	534.55	LP223-2,4A	3 + 1 gnd #6,#8, 600 V, RHH/RHW insulation
2553	E-139	41	RGS conduit	212.85	534.55	LP223-2,4A	3 + 1 gnd #6,#8, 600 V, RHH/RHW insulation
2554	E-139	41	RGS conduit	212.85	534.55	LP223-2,4A	3 + 1 gnd #6,#8, 600 V, RHH/RHW insulation
2555	E-139	41	RGS conduit	212.85	534.55	LP223-2,4A	3 + 1 gnd #6,#8, 600 V, RHH/RHW insulation
2556	E-139	41	RGS conduit	212.85	534.55	LP223-6,8A	3 + 1 gnd #6,#8, 600 V, RHH/RHW insulation
2557	E-139	41	RGS conduit	212.85	534.55	LP223-6,8A	3 + 1 gnd #6,#8, 600 V, RHH/RHW insulation
2558	E-140	41	RGS conduit	212.85	534.55	LP223-6,8A	3 + 1 gnd #6,#8, 600 V, RHH/RHW insulation
2559	E-140	41	RGS conduit	212.85	534.55	LP223-6,8A	3 + 1 gnd #6,#8, 600 V, RHH/RHW insulation
2560	E-140	41	RGS conduit	212.85	534.55	LP223-6,8A	3 + 1 gnd #6,#8, 600 V, RHH/RHW insulation
2561	E-140	41	RGS conduit	212.85	534.55	LP223-6,8A	3 + 1 gnd #6,#8, 600 V, RHH/RHW insulation
2562	E-140	41	RGS conduit	212.85	534.55	LP223-6,8A	3 + 1 gnd #6,#8, 600 V, RHH/RHW insulation
2563	E-140	41	RGS conduit	212.85	534.55	LP223-6,8A	3 + 1 gnd #6,#8, 600 V, RHH/RHW insulation
2611	E-135	41	RGS conduit	0.00	534.55	Pull rope	Soft-Fiber Polyester
2612	E-135	41	RGS conduit	0.00	534.55	Pull rope	Soft-Fiber Polyester
2613	E-135	41	RGS conduit	0.00	534.55	Pull rope	Soft-Fiber Polyester
2614	E-136	41	RGS conduit	0.00	534.55	Pull rope	Soft-Fiber Polyester
2615	E-136	41	RGS conduit	0.00	534.55	Pull rope	Soft-Fiber Polyester
2616	E-136	41	RGS conduit	0.00	534.55	Pull rope	Soft-Fiber Polyester
2617	E-136	41	RGS conduit	0.00	534.55	Pull rope	Soft-Fiber Polyester
2618	E-137	41	RGS conduit	0.00	534.55	Pull rope	Soft-Fiber Polyester
2619	E-137	41	RGS conduit	0.00	534.55	Pull rope	Soft-Fiber Polyester
2620	E-137	41	RGS conduit	0.00	534.55	Pull rope	Soft-Fiber Polyester
2621	E-137	41	RGS conduit	0.00	534.55	Pull rope	Soft-Fiber Polyester
2622	E-138	41	RGS conduit	0.00	534.55	Pull rope	Soft-Fiber Polyester
2623	E-138	41	RGS conduit	0.00	534.55	Pull rope	Soft-Fiber Polyester
2624	E-138	41	RGS conduit	0.00	534.55	Pull rope	Soft-Fiber Polyester
2625	E-138	41	RGS conduit	0.00	534.55	Pull rope	Soft-Fiber Polyester
2626	E-139	41	RGS conduit	0.00	534.55	Pull rope	Soft-Fiber Polyester
2627	E-139	41	RGS conduit	0.00	534.55	Pull rope	Soft-Fiber Polyester
2628	E-139	41	RGS conduit	0.00	534.55	Pull rope	Soft-Fiber Polyester
2629	E-139	41	RGS conduit	0.00	534.55	Pull rope	Soft-Fiber Polyester
2630	E-139	41	RGS conduit	0.00	534.55	Pull rope	Soft-Fiber Polyester
2631	E-140	41	RGS conduit	0.00	534.55	Pull rope	Soft-Fiber Polyester
2637	E-138	41	RGS conduit	212.85	534.55	Pull rope	Soft-Fiber Polyester
2638	E-138	41	RGS conduit	212.85	534.55	A-2013-2	3 + 1 gnd #6,#8, 600 V, RHH/RHW insulation
2639	E-138	41	RGS conduit	212.85	534.55	A-2013-2	3 + 1 gnd #6,#8, 600 V, RHH/RHW insulation
2640	E-138	41	RGS conduit	212.85	534.55	A-2013-2	3 + 1 gnd #6,#8, 600 V, RHH/RHW insulation
2641	E-138	41	RGS conduit	212.85	534.55	A-2013-2	3 + 1 gnd #6,#8, 600 V, RHH/RHW insulation
2642	E-138	41	RGS conduit	212.85	534.55	A-2013-2	3 + 1 gnd #6,#8, 600 V, RHH/RHW insulation

REQUEST FOR INFORMATION NOT ADDRESSED IN THIS CCO REMAIN IN FORCE

MARK	DATE	REVISIONS DESCRIPTIONS	BY	CH'D	CCO#
3	07/17/09	WEST END BARRIER CONDUIT	RG	FW	44S1
2	03/04/08	BARRIER MODIFICATIONS	JS BM	RG	44
1	02/19/08	ELECTRICAL MODIFICATIONS	MP EL	RR	42

CONTRACT CHANGE ORDER NO. 44S1
SHEET 18 OF 21

1 — REGISTERED PROFESSIONAL ENGINEER — HARRELL FUMIO TAKATA — No. E 8651 — Exp. 9/30/2008 ELECTRICAL — STATE OF CALIFORNIA
FOR REVISION ONLY

2 — REGISTERED PROFESSIONAL ENGINEER — S. A. ESTOQUE, JR. — No. E-10151 — Exp. 12/31/2008 ELECTRICAL — STATE OF CALIFORNIA
FOR REVISION ONLY

3 — REGISTERED PROFESSIONAL ENGINEER — FADI WALIEDDINE — No. 11465 — Exp. 12/31/2009 ELECTRICAL — STATE OF CALIFORNIA
FOR REVISION ONLY

Caltrans Metric

DIST	COUNTY	ROUTE	KILOMETER POST TOTAL PROJECT	SHEET No	TOTAL SHEETS
04	SF	80	13.2/13.9	370 R3	1204

James Erlingsson 12/19/02
REGISTERED ELECTRICAL ENGINEER DATE

12-6-04
PLANS APPROVAL DATE

REGISTERED PROFESSIONAL ENGINEER — JENS ERLINGSSON — No. 8249 — Exp. 9/30/06 ELECTRICAL — STATE OF CALIFORNIA

PB POWER, Inc.
A Parsons Brinckerhoff Company
303 Second St., Suite 700N
San Francisco, CA 94107-1317

The State of California or its officers or agents shall not be responsible for the accuracy or completeness of electronic copies of this plan sheet.

Caltrans now has a web site! To get to the web site, go to: http://www.dot.ca.gov

CONDUIT DATA

Conduit No	Reference	Size	Type	Total Fill (mm²)	Allowable Fill (mm²)	Included Cable No.	Conductor Type
2643	E-138	41	RGS conduit	212.85	534.55	A-2013-2	3 + 1 gnd #6,#8, 600 V, RHH/RHW insulation
2644	E-138	41	RGS conduit	212.85	534.55	A-2013-2	3 + 1 gnd #6,#8, 600 V, RHH/RHW insulation
2645	E-138	41	RGS conduit	212.85	534.55	A-2013-2	3 + 1 gnd #6,#8, 600 V, RHH/RHW insulation
2646	E-138	41	RGS conduit	212.85	534.55	A-2013-2	3 + 1 gnd #6,#8, 600 V, RHH/RHW insulation
2647	E-139	41	RGS conduit	212.85	534.55	A-2013-2	3 + 1 gnd #6,#8, 600 V, RHH/RHW insulation
2648	E-139	41	RGS conduit	212.85	534.55	A-2013-2	3 + 1 gnd #6,#8, 600 V, RHH/RHW insulation
2649	E-139	41	RGS conduit	212.85	534.55	A-2013-2	3 + 1 gnd #6,#8, 600 V, RHH/RHW insulation
2650	E-139	41	RGS conduit	212.85	534.55	A-2014-2	3 + 1 gnd #6,#8, 600 V, RHH/RHW insulation
2651	E-139	41	RGS conduit	212.85	534.55	A-2014-2	3 + 1 gnd #6,#8, 600 V, RHH/RHW insulation
2652	E-139	41	RGS conduit	212.85	534.55	A-2014-2	3 + 1 gnd #6,#8, 600 V, RHH/RHW insulation
2653	E-139	41	RGS conduit	212.85	534.55	A-2014-2	3 + 1 gnd #6,#8, 600 V, RHH/RHW insulation
2654	E-139	41	RGS conduit	212.85	534.55	A-2014-2	3 + 1 gnd #6,#8, 600 V, RHH/RHW insulation
2655	E-139	41	RGS conduit	212.85	534.55	A-2014-2	3 + 1 gnd #6,#8, 600 V, RHH/RHW insulation
2656	E-139	41	RGS conduit	212.85	534.55	A-2014-2	3 + 1 gnd #6,#8, 600 V, RHH/RHW insulation
2657	E-139	41	RGS conduit	212.85	534.55	A-2014-2	3 + 1 gnd #6,#8, 600 V, RHH/RHW insulation
2658	E-140	41	RGS conduit	212.85	534.55	A-2014-2	3 + 1 gnd #6,#8, 600 V, RHH/RHW insulation
2659	E-140	41	RGS conduit	212.85	534.55	A-2014-2	3 + 1 gnd #6,#8, 600 V, RHH/RHW insulation
2660	E-140	41	RGS conduit	212.85	534.55	A-2014-2	3 + 1 gnd #6,#8, 600 V, RHH/RHW insulation
2661	E-140	41	RGS conduit	212.85	534.55	A-2014-2	3 + 1 gnd #6,#8, 600 V, RHH/RHW insulation
2662	E-140	41	RGS conduit	212.85	534.55	A-2014-2	3 + 1 gnd #6,#8, 600 V, RHH/RHW insulation
2663	E-140	41	RGS conduit	212.85	534.55	A-2014-2	3 + 1 gnd #6,#8, 600 V, RHH/RHW insulation
2664	E-135	41	RGS conduit	212.85	534.55	LP219-6,8A	3 + 1 gnd #6,#8, 600 V, RHH/RHW insulation
2757	E-160C (5)	41	RGS conduit	0.00	534.55	Pull rope	Soft-Fiber Polyester
2758	E-135, E-160C	41	RGS conduit, PVC Coated	227.46	534.55	Pull rope	Soft-Fiber Polyester
						UP205-6	1-2/C + gnd #8, 600 V, EPR insulation
2759	E-135	41	RGS conduit	440.31	534.55	A-3031-2	3 + 1 gnd #6,#8, 600 V, RHH/RHW insulation
						UP205-6	1-2/C + gnd #8, 600 V, EPR insulation
						Pull rope	Soft-Fiber Polyester

For continuation, see next sheet.

CONDUIT AND TRAY SCHEDULE

E-415

DESIGN OVERSIGHT — BEHZAD GOLEMOHAMMADI
CALCULATED/DESIGNED BY — PBP
CHECKED BY — AB
DRAWN BY — DATE REVISED
DATE 8/02 — 8/02
REVISED BY

STATE OF CALIFORNIA - DEPARTMENT OF TRANSPORTATION
Caltrans

LAST REVISION 00-00-00 — DATE PLOTTED => 7/15/2009 — TIME PLOTTED => 4:52:46 PM

FOR REDUCED PLANS ORIGINAL SCALE IS IN MILLIMETERS 0 20 40 60 80

DGN FILE =>t:\13103\MS\pse\SAS Struc\CCO\SAS CCO44S1\2009-07-17 [Issued for Submittal (Draft 2)\04-0120F1_0370R03.dgn
USERNAME =>Grajo
CU 04251 EA 0120F1

CONDUIT DATA

Conduit No	Reference	Size	Type	Total Fill (mm^2)	Allowable Fill (mm^2)	Included Cable No.	Conductor Type
2760	E-135	41	RGS conduit	440.31	534.55	A-3031-2	3 + 1 gnd #6,#8, 600 V, RHH/RHW insulation
						UP205-6	1-2/C + gnd #8, 600 V, EPR insulation
						Pull rope	Soft-Fiber Polyester
2761	E-135	41	RGS conduit	425.70	534.55	LP219-2,4A	3 + 1 gnd #6,#8, 600 V, RHH/RHW insulation
						Pull rope	Soft-Fiber Polyester
						A-3031-2	3 + 1 gnd #6,#8, 600 V, RHH/RHW insulation
2762	E-135	41	RGS conduit	212.85	534.55	Pull rope	Soft-Fiber Polyester
						A-3031-2	3 + 1 gnd #6,#8, 600 V, RHH/RHW insulation
2763	E-135	41	RGS conduit	212.85	534.55	Pull rope	Soft-Fiber Polyester
						A-3031-2	3 + 1 gnd #6,#8, 600 V, RHH/RHW insulation
2764	E-135	41	RGS conduit	212.85	534.55	Pull rope	Soft-Fiber Polyester
						A-3031-2	3 + 1 gnd #6,#8, 600 V, RHH/RHW insulation
2765	E-135	41	RGS conduit	212.85	534.55	Pull rope	Soft-Fiber Polyester
						A-3031-2	3 + 1 gnd #6,#8, 600 V, RHH/RHW insulation
2766	E-136	41	RGS conduit	212.85	534.55	Pull rope	Soft-Fiber Polyester
						A-3031-2	3 + 1 gnd #6,#8, 600 V, RHH/RHW insulation
2767	E-136	41	RGS conduit	0.00	534.55	Pull rope	Soft-Fiber Polyester
2768	E-136	41	RGS conduit	212.85	534.55	Pull rope	Soft-Fiber Polyester
						A-3032-2	3 + 1 gnd #6,#8, 600 V, RHH/RHW insulation
2769	E-136	41	RGS conduit	212.85	534.55	Pull rope	Soft-Fiber Polyester
						A-3032-2	3 + 1 gnd #6,#8, 600 V, RHH/RHW insulation
2770	E-136	41	RGS conduit	212.85	534.55	Pull rope	Soft-Fiber Polyester
						A-3032-2	3 + 1 gnd #6,#8, 600 V, RHH/RHW insulation
2771	E-136	41	RGS conduit	212.85	534.55	A-3032-2	3 + 1 gnd #6,#8, 600 V, RHH/RHW insulation
						Pull rope	Soft-Fiber Polyester
2772	E-136	41	RGS conduit	212.85	534.55	Pull rope	Soft-Fiber Polyester
						A-3032-2	3 + 1 gnd #6,#8, 600 V, RHH/RHW insulation
2773	E-136	41	RGS conduit	212.85	534.55	Pull rope	Soft-Fiber Polyester
						A-3033-2	3 + 1 gnd #6,#8, 600 V, RHH/RHW insulation
2774	E-136	53	RGS conduit	537.14	681.55	Pull rope	Soft-Fiber Polyester
						A-3040-3	1-3/C + gnd #6, 600 V, EPR insulation
						A-3033-2	3 + 1 gnd #6,#8, 600 V, RHH/RHW insulation
2775	E-136	53	RGS conduit	537.14	681.55	A-3033-2	3 + 1 gnd #6,#8, 600 V, RHH/RHW insulation
						A-3040-3	1-3/C + gnd #6, 600 V, EPR insulation
						Pull rope	Soft-Fiber Polyester
2776	E-136	41	RGS conduit	212.85	534.55	A-3033-2	3 + 1 gnd #6,#8, 600 V, RHH/RHW insulation
						Pull rope	Soft-Fiber Polyester
2777	E-136	41	RGS conduit	212.85	534.55	Pull rope	Soft-Fiber Polyester
						A-3033-2	3 + 1 gnd #6,#8, 600 V, RHH/RHW insulation
2778	E-137	41	RGS conduit	212.85	534.55	Pull rope	Soft-Fiber Polyester
						A-3033-2	3 + 1 gnd #6,#8, 600 V, RHH/RHW insulation
2779	E-137	41	RGS conduit	0.00	534.55	Pull rope	Soft-Fiber Polyester
2780	E-137	41	RGS conduit	425.70	534.55	LP221-2,4A	3 + 1 gnd #6,#8, 600 V, RHH/RHW insulation
						A-3034-2	3 + 1 gnd #6,#8, 600 V, RHH/RHW insulation
						Pull rope	Soft-Fiber Polyester
2781	E-137	41	RGS conduit	212.85	534.55	Pull rope	Soft-Fiber Polyester
						A-3034-2	3 + 1 gnd #6,#8, 600 V, RHH/RHW insulation
2782	E-137	41	RGS conduit	212.85	534.55	Pull rope	Soft-Fiber Polyester
						A-3034-2	3 + 1 gnd #6,#8, 600 V, RHH/RHW insulation
2783	E-137	41	RGS conduit	212.85	534.55	Pull rope	Soft-Fiber Polyester
						A-3034-2	3 + 1 gnd #6,#8, 600 V, RHH/RHW insulation
2784	E-137	41	RGS conduit	212.85	534.55	Pull rope	Soft-Fiber Polyester
						A-3034-2	3 + 1 gnd #6,#8, 600 V, RHH/RHW insulation
2785	E-137	41	RGS conduit	0.00	534.55	Pull rope	Soft-Fiber Polyester

REQUEST FOR INFORMATION NOT ADDRESSED IN THIS CCO REMAIN IN FORCE

MARK	DATE	REVISIONS DESCRIPTIONS	BY	CH'D	CCO#
3	07/17/09	WEST END BARRIER CONDUIT	RG	FW	4451
2	03/04/08	BARRIER MODIFICATIONS	JS BM	RG	44
1	02/19/08	ELECTRICAL MODIFICATIONS	MP EL	RR	42

CONTRACT CHANGE ORDER NO. 4451
SHEET 19 OF 21

REGISTERED PROFESSIONAL ENGINEER — MARRELL FUMIO TAKATA — No. E 8651 — Exp. 9/30/2008 ELECTRICAL — STATE OF CALIFORNIA (1)

FOR REVISION ONLY

REGISTERED PROFESSIONAL ENGINEER — S. A. ESTOQUE, JR. — No. E-10151 — Exp. 12/31/2008 ELECTRICAL — STATE OF CALIFORNIA (2)

REGISTERED PROFESSIONAL ENGINEER — FADI WALIEDDINE — No. 11465 — Exp. 12/31/2009 ELECTRICAL — STATE OF CALIFORNIA (3)

FOR REVISION ONLY FOR REVISION ONLY

Caltrans Metric

DIST	COUNTY	ROUTE	KILOMETER POST TOTAL PROJECT	SHEET No	TOTAL SHEETS
04	SF	80	13.2/13.9	371 R3	1204

REGISTERED ELECTRICAL ENGINEER — 12/19/02 DATE

PLANS APPROVAL DATE — 12-6-04

REGISTERED PROFESSIONAL ENGINEER — JENS ERLINGSSON — No. 8249 — Exp. 9/30/06 ELECTRICAL — STATE OF CALIFORNIA

PB POWER, Inc.
A Parsons Brinckerhoff Company
303 Second St., Suite 700N
San Francisco, CA 94107-1317

The State of California or its officers or agents shall not be responsible for the accuracy or completeness of electronic copies of this plan sheet.

Caltrans now has a web site! To get to the web site, go to: http://www.dot.ca.gov

CONDUIT DATA

Conduit No	Reference	Size	Type	Total Fill (mm^2)	Allowable Fill (mm^2)	Included Cable No.	Conductor Type
2786	E-137	41	RGS conduit	212.85	534.55	A-3035-2	3 + 1 gnd #6,#8, 600 V, RHH/RHW insulation
						Pull rope	Soft-Fiber Polyester
2787	E-137	41	RGS conduit	212.85	534.55	Pull rope	Soft-Fiber Polyester
						A-3035-2	3 + 1 gnd #6,#8, 600 V, RHH/RHW insulation
2788	E-137	41	RGS conduit	212.85	534.55	Pull rope	Soft-Fiber Polyester
						A-3035-2	3 + 1 gnd #6,#8, 600 V, RHH/RHW insulation
2789	E-138	41	RGS conduit	212.85	534.55	Pull rope	Soft-Fiber Polyester
						A-3035-2	3 + 1 gnd #6,#8, 600 V, RHH/RHW insulation
2790	E-138	41	RGS conduit	212.85	534.55	Pull rope	Soft-Fiber Polyester
						A-3035-2	3 + 1 gnd #6,#8, 600 V, RHH/RHW insulation
2791	E-138	41	RGS conduit	0.00	534.55	Pull rope	Soft-Fiber Polyester
2792	E-138	41	RGS conduit	212.85	534.55	A-3036-2	3 + 1 gnd #6,#8, 600 V, RHH/RHW insulation
						Pull rope	Soft-Fiber Polyester
2793	E-138	41	RGS conduit	212.85	534.55	A-3036-2	3 + 1 gnd #6,#8, 600 V, RHH/RHW insulation
						Pull rope	Soft-Fiber Polyester
2794	E-138	41	RGS conduit	212.85	534.55	Pull rope	Soft-Fiber Polyester
						A-3036-2	3 + 1 gnd #6,#8, 600 V, RHH/RHW insulation
2795	E-138	41	RGS conduit	425.70	534.55	Pull rope	Soft-Fiber Polyester
						A-3036-2	3 + 1 gnd #6,#8, 600 V, RHH/RHW insulation
						LP222-2,4A	3 + 1 gnd #6,#8, 600 V, RHH/RHW insulation
2796	E-138	41	RGS conduit	212.85	534.55	Pull rope	Soft-Fiber Polyester
						A-3036-2	3 + 1 gnd #6,#8, 600 V, RHH/RHW insulation
2797	E-138	41	RGS conduit	212.85	534.55	Pull rope	Soft-Fiber Polyester
						A-3036-2	3 + 1 gnd #6,#8, 600 V, RHH/RHW insulation
2798	E-138	41	RGS conduit	212.85	534.55	A-3036-2	3 + 1 gnd #6,#8, 600 V, RHH/RHW insulation
						Pull rope	Soft-Fiber Polyester
2799	E-138	41	RGS conduit	212.85	534.55	A-3036-2	3 + 1 gnd #6,#8, 600 V, RHH/RHW insulation
						Pull rope	Soft-Fiber Polyester
2857	E-160C (3)	41	RGS conduit	0.00	534.55	Pull rope	Soft-Fiber Polyester
2858	E-135, E-160C	41	RGS conduit, PVC Coated	0.00	534.55	Pull rope	Soft-Fiber Polyester
2859	E-135	41	RGS conduit	212.85	534.55	Pull rope	Soft-Fiber Polyester
						A-2011-2	3 + 1 gnd #6,#8, 600 V, RHH/RHW insulation
2860	E-135	41	RGS conduit	0.00	534.55	Pull rope	Soft-Fiber Polyester
2861	E-135	41	RGS conduit	212.85	534.55	Pull rope	Soft-Fiber Polyester
						LP219-6,8A	3 + 1 gnd #6,#8, 600 V, RHH/RHW insulation

For continuation, see next sheet.

CONDUIT AND TRAY SCHEDULE

E-416

DESIGN OVERSIGHT — BEHZAD GOLEMOHAMMADI

STATE OF CALIFORNIA - DEPARTMENT OF TRANSPORTATION — Caltrans

DATE	REVISED BY	DATE REVISED
8/02	AB	8/02

CALCULATED/DESIGNED BY — PBP
CHECKED BY

LAST REVISION 00-00-00

DATE PLOTTED => 7/15/2009
TIME PLOTTED => 4:53:42 PM

FOR REDUCED PLANS ORIGINAL SCALE IS IN MILLIMETERS 0 20 40 60 80

DGN FILE =>t:\13103\MS\pse\SAS Struc\CCO\SAS CCO4451\2009-07-17 USERNAME =>Graja

Issued for Submittal (Draft 2)\04-0120F1_0371R03.dgn

CU 04251 | EA 0120F1

REVISED BY	DATE REVISED
PBP	8/02
AB	8/02

CALCULATED/DESIGNED BY
CHECKED BY

DESIGN OVERSIGHT
BEHZAD GOLEMOHAMMADI

STATE OF CALIFORNIA - DEPARTMENT OF TRANSPORTATION
Caltrans

CONDUIT DATA

Conduit No	Reference	Size	Type	Total Fill (mm²)	Allowable Fill (mm²)	Included Cable No.	Conductor Type
3010	E-185, E-186	53	RGS conduit	456.88	879.42	UP208-8-1	3 + 1 gnd #8,#10, 600 V, RHH/RHW insulation
						UP208-7	1-2/C + gnd #8,600 V, EPR insulation
						UP208-8-2	2 + 1 gnd #8,#10, 600 V, RHH/RHW insulation
3101	E-226	41	Liquidtight flexible metal conduit	503.37	511.11	S-3021-2	3 + 1 gnd #6,#8, 600 V, RHH/RHW insulation
						S-3056-10	1-2/C #14, 600 V, EPR insulation
						S-3056-11	1-2/C #14, 600 V, EPR insulation
						S-3056-14	1-2/C #14, 600 V, EPR insulation
						Pull rope	Soft-Fiber Polyester
						S-3056-2	3 + 1 gnd #6,#8, 600 V, RHH/RHW insulation
3102	E-226	41	Liquidtight flexible metal conduit	503.37	511.11	S-3021-2	3 + 1 gnd #6,#8, 600 V, RHH/RHW insulation
						S-3056-14	1-2/C #14, 600 V, EPR insulation
						S-3056-10	1-2/C #14, 600 V, EPR insulation
						Pull rope	Soft-Fiber Polyester
						S-3056-2	3 + 1 gnd #6,#8, 600 V, RHH/RHW insulation
						S-3056-11	1-2/C #14, 600 V, EPR insulation
3103	E-226	41	Liquidtight flexible metal conduit	503.37	511.11	S-3056-11	1-2/C #14, 600 V, EPR insulation
						S-3056-2	3 + 1 gnd #6,#8, 600 V, RHH/RHW insulation
						S-3021-2	3 + 1 gnd #6,#8, 600 V, RHH/RHW insulation
						S-3056-10	1-2/C #14, 600 V, EPR insulation
						Pull rope	Soft-Fiber Polyester
						S-3056-14	1-2/C #14, 600 V, EPR insulation
3104	E-226, E-227	41	Liquidtight flexible metal conduit	477.48	511.11	S-3056-2	3 + 1 gnd #6,#8, 600 V, RHH/RHW insulation
						S-3056-11	1-2/C #14, 600 V, EPR insulation
						S-3056-14	1-2/C #14, 600 V, EPR insulation
						Pull rope	Soft-Fiber Polyester
						S-3021-2	3 + 1 gnd #6,#8, 600 V, RHH/RHW insulation
3105	E-227	41	Liquidtight flexible metal conduit	477.48	511.11	Pull rope	Soft-Fiber Polyester
						S-3021-2	3 + 1 gnd #6,#8, 600 V, RHH/RHW insulation
						S-3056-2	3 + 1 gnd #6,#8, 600 V, RHH/RHW insulation
						S-3056-14	1-2/C #14, 600 V, EPR insulation
						S-3056-11	1-2/C #14, 600 V, EPR insulation
3106	E-227	41	Liquidtight flexible metal conduit	451.59	511.11	Pull rope	Soft-Fiber Polyester
						S-3056-14	1-2/C #14, 600 V, EPR insulation
						S-3021-2	3 + 1 gnd #6,#8, 600 V, RHH/RHW insulation
						S-3056-2	3 + 1 gnd #6,#8, 600 V, RHH/RHW insulation
3107	E-100	78	RGS-PVC coated conduit	991.38	2564.19	S-3056-8	1-4/C #14,600 V, EPR insulation
						Pull rope	Soft-Fiber Polyester
						S-3023-1	1-3/C + gnd #4,600 V, EPR insulation
						S-3022-1	1-3/C + gnd #2,600 V, EPR insulation
3108	E-100	41	RGS-PVC coated conduit	527.18	534.55	Pull rope	Soft-Fiber Polyester
						A-3012-1	1-3/C + gnd #2,600 V, EPR insulation
3109	E-96, E-66B (2)	41	RGS-PVC coated conduit	503.37	534.55	S-3056-14	1-2/C #14, 600 V, EPR insulation
						Pull rope	Soft-Fiber Polyester
						S-3056-2	3 + 1 gnd #6,#8, 600 V, RHH/RHW insulation
						S-3021-2	3 + 1 gnd #6,#8, 600 V, RHH/RHW insulation
						S-3056-10	1-2/C #14, 600 V, EPR insulation
						S-3056-11	1-2/C #14, 600 V, EPR insulation
3110	E-96, E-66B (2)	41	RGS-PVC coated conduit	309.08	534.55	A-3011-2	3 + 1 gnd #6,#8, 600 V, RHH/RHW insulation
						Pull rope	Soft-Fiber Polyester
						A-3008-2	2 + 1 gnd #8,#10, 600 V, RHH/RHW insulation
3111	E-226	41	Liquidtight flexible metal conduit	309.08	511.11	A-3011-2	3 + 1 gnd #6,#8, 600 V, RHH/RHW insulation
						Pull rope	Soft-Fiber Polyester
						A-3008-2	2 + 1 gnd #8,#10, 600 V, RHH/RHW insulation
3112	E-226	41	Liquidtight flexible metal conduit	309.08	511.11	A-3008-2	2 + 1 gnd #8,#10, 600 V, RHH/RHW insulation
						Pull rope	Soft-Fiber Polyester
						A-3011-2	3 + 1 gnd #6,#8, 600 V, RHH/RHW insulation
3113	E-226	41	Liquidtight flexible metal conduit	309.08	511.11	A-3008-2	2 + 1 gnd #8,#10, 600 V, RHH/RHW insulation
						A-3011-2	3 + 1 gnd #6,#8, 600 V, RHH/RHW insulation
						Pull rope	Soft-Fiber Polyester
3114	E-226	41	Liquidtight flexible metal conduit	309.08	511.11	Pull rope	Soft-Fiber Polyester
						A-3011-2	3 + 1 gnd #6,#8, 600 V, RHH/RHW insulation
						A-3008-2	2 + 1 gnd #8,#10, 600 V, RHH/RHW insulation

REQUEST FOR INFORMATION NOT ADDRESSED IN THIS CCO REMAIN IN FORCE

MARK	DATE	DESCRIPTIONS REVISIONS	BY	CH'D	CCO#
2	07/17/09	WEST END BARRIER CONDUIT	RG	FW	44S1
1	09/24/08	CABLE ELECTRICAL	RR AG	RG SE	72

CONTRACT CHANGE ORDER NO. 44 S1
SHEET 20 OF 21

FOR REVISION ONLY

1 REGISTERED PROFESSIONAL ENGINEER S. A. ESTOOKE, JR No. E-10151 Exp. 12/31/2008 ELECTRICAL STATE OF CALIFORNIA

FOR REVISION ONLY

2 REGISTERED PROFESSIONAL ENGINEER FADI WALIEDDINE No. 11465 Exp. 12/31/2009 ELECTRICAL STATE OF CALIFORNIA

Caltrans Metric

DIST	COUNTY	ROUTE	KILOMETER POST TOTAL PROJECT	SHEET No	TOTAL SHEETS
04	SF	80	13.2/13.9	377 R2	1204

REGISTERED ELECTRICAL ENGINEER — 12/19/02 DATE

12-6-04
PLANS APPROVAL DATE

REGISTERED PROFESSIONAL ENGINEER JENS ERLINGSSON No. 8249 Exp. 9/30/06 ELECTRICAL STATE OF CALIFORNIA

PB POWER, Inc.
A Parsons Brinckerhoff Company
303 Second St., Suite 700N
San Francisco, CA 94107-1317

The State of California or its officers or agents shall not be responsible for the accuracy or completeness of electronic copies of this plan sheet.

Caltrans now has a web site! To get to the web site, go to: http://www.dot.ca.gov

CONDUIT DATA

Conduit No	Reference	Size	Type	Total Fill (mm²)	Allowable Fill (mm²)	Included Cable No.	Conductor Type
3115	E-226	41	Liquidtight flexible metal conduit	309.08	511.11	A-3008-2	2 + 1 gnd #8,#10, 600 V, RHH/RHW insulation
						A-3011-2	3 + 1 gnd #6,#8, 600 V, RHH/RHW insulation
						Pull rope	Soft-Fiber Polyester
3116	E-226	41	Liquidtight flex metal conduit	212.85	511.11	Pull rope	Soft-Fiber Polyester
						A-3011-2	3 + 1 gnd #6,#8, 600 V, RHH/RHW insulation
3117	E-226	41	Liquidtight flex metal conduit	309.08	511.11	Pull rope	Soft-Fiber Polyester
						A-3008-2	2 + 1 gnd #8,#10, 600 V, RHH/RHW insulation
						A-3011-2	3 + 1 gnd #6,#8, 600 V, RHH/RHW insulation
3118	E-226, E-227	41	Liquidtight flexible metal conduit	309.08	511.11	A-3008-2	2 + 1 gnd #8,#10, 600 V, RHH/RHW insulation
						A-3011-2	3 + 1 gnd #6,#8, 600 V, RHH/RHW insulation
						Pull rope	Soft-Fiber Polyester
3119	E-227	41	Liquidtight flexible metal conduit	309.08	511.11	A-3008-2	2 + 1 gnd #8,#10, 600 V, RHH/RHW insulation
						A-3011-2	3 + 1 gnd #6,#8, 600 V, RHH/RHW insulation
						Pull rope	Soft-Fiber Polyester
3120	E-227	41	Liquidtight flexible metal conduit	309.08	511.11	A-3008-2	2 + 1 gnd #8,#10, 600 V, RHH/RHW insulation
						A-3011-2	3 + 1 gnd #6,#8, 600 V, RHH/RHW insulation
						Pull rope	Soft-Fiber Polyester
3121	E-227	41	Liquidtight flexible metal conduit	309.08	511.11	A-3008-2	2 + 1 gnd #8,#10, 600 V, RHH/RHW insulation
						A-3011-2	3 + 1 gnd #6,#8, 600 V, RHH/RHW insulation
						Pull rope	Soft-Fiber Polyester
3122	E-227	41	Liquidtight flexible metal conduit	309.08	511.11	A-3008-2	2 + 1 gnd #8,#10, 600 V, RHH/RHW insulation
						A-3011-2	3 + 1 gnd #6,#8, 600 V, RHH/RHW insulation
						Pull rope	Soft-Fiber Polyester
3123	E-227	41	Liquidtight flexible metal conduit	309.08	511.11	Pull rope	Soft-Fiber Polyester
						A-3008-2	2 + 1 gnd #8,#10, 600 V, RHH/RHW insulation
						A-3011-2	3 + 1 gnd #6,#8, 600 V, RHH/RHW insulation
3124	E-227	41	Liquidtight flexible metal conduit	309.08	511.11	A-3011-2	3 + 1 gnd #6,#8, 600 V, RHH/RHW insulation
						Pull rope	Soft-Fiber Polyester
						A-3008-2	2 + 1 gnd #8,#10, 600 V, RHH/RHW insulation
3125	E-227	41	Liquidtight flexible metal conduit	309.08	511.11	A-3011-2	3 + 1 gnd #6,#8, 600 V, RHH/RHW insulation
						A-3008-2	2 + 1 gnd #8,#10, 600 V, RHH/RHW insulation
						Pull rope	Soft-Fiber Polyester
3126	E-227	41	Liquidtight flexible metal conduit	309.08	511.11	A-3008-2	2 + 1 gnd #8,#10,.600 V, RHH/RHW insulation
						A-3011-2	3 + 1 gnd #6,#8, 600 V, RHH/RHW insulation
						Pull rope	Soft-Fiber Polyester
3127	E-227	41	Liquidtight flexible metal conduit	96.23	511.11	A-3008-2	2 + 1 gnd #8,#10, 600 V, RHH/RHW insulation
						Pull rope	Soft-Fiber Polyester
3129	E-50, E-100	41	RGS-PVC coated conduit	477.48	534.55	S-3022-2	3 + 1 gnd #6,#8, 600 V, RHH/RHW insulation
						S-3023-2	3 + 1 gnd #6,#8, 600 V, RHH/RHW insulation
						S-3056-15	1-2/C #14, 600 V, EPR insulation
						S-3056-16	1-2/C #14, 600 V, EPR insulation
						Pull rope	Soft-Fiber Polyester

For continuation, see next sheet.

CONDUIT AND TRAY SCHEDULE

E-422

LAST REVISION 00-00-00
DATE PLOTTED => 7/15/2009
TIME PLOTTED => 4:54:12 PM

FOR REDUCED PLANS ORIGINAL SCALE IS IN MILLIMETERS 0 20 40 60 80

DGN FILE =>t:\13103\WS\pse\SAS Struc\CCO\SAS CCO44S1\2009-07-17
USERNAME =>Graja

Issued for Submittal (Draft 2)\04-0120f1_0377R02.dgn

CU 04251 | EA 0120F1

CONDUIT DATA

Conduit No	Reference	Size	Type	Total Fill (mm²)	Allowable Fill (mm²)	Included Cable No.	Conductor Type
1113A	E-66B	41	RGS Conduit		534.55	Pull rope	Soft-fiber Polyester
1113B	E-66B	41	RGS Conduit		534.55	Pull rope	Soft-fiber Polyester
1113C	E-66B	41	RGS PVC Coated Conduit		534.55	Pull rope	Soft-fiber Polyester
1113D	E-66B	41	RGS Conduit		534.55	Pull rope	Soft-fiber Polyester
1348	E-66B	41	RGS Conduit		534.55	Pull rope	Soft-fiber Polyester
1348A	E-66B	41	RGS Conduit		534.55	Pull rope	Soft-fiber Polyester
1348B	E-66B	41	RGS Conduit		534.55	Pull rope	Soft-fiber Polyester
1513A	E-66B	41	RGS Conduit		534.55	Pull rope	Soft-fiber Polyester
1513B	E-66B	41	RGS Conduit		534.55	Pull rope	Soft-fiber Polyester
1513C	E-66B	41	RGS Conduit		534.55	Pull rope	Soft-fiber Polyester
1513D	E-66B	41	RGS PVC Coated Conduit		534.55	Pull rope	Soft-fiber Polyester
1730	E-66B	41	RGS Conduit		534.55	Pull rope	Soft-fiber Polyester
1730A	E-66B	41	RGS Conduit		534.55	Pull rope	Soft-fiber Polyester
1731	E-66B	41	RGS PVC Coated Conduit		534.55	Pull rope	Soft-fiber Polyester
1831	E-66B	41	RGS PVC Coated Conduit	474.91	534.55	Pull rope	Soft-fiber Polyester
						S-1031-1	1-3/C + gnd #2, 600V, EPR insulation
						A-1035-1	1-3/C + gnd #6, 600V, EPR insulation
						UP104-3A	2 + 1gnd #12,#12, 600 V, RHH/RHW insulation
2111A	E-160C	41	RGS Conduit		534.55	Pull rope	Soft-fiber Polyester
2111B	E-160C	41	RGS Conduit		534.55	Pull rope	Soft-fiber Polyester

REQUEST FOR INFORMATION NOT ADDRESSED IN THIS CCO REMAIN IN FORCE

MARK	DATE	REVISIONS DESCRIPTIONS	BY	CH'D	CCO#
0	02/11/10	WEST END BARRIER CONDUIT	TW	RG DO	4451

CONTRACT CHANGE ORDER NO. 4451
SHEET 21 OF 21

Caltrans Metric

DIST	COUNTY	ROUTE	KILOMETER POST TOTAL PROJECT	SHEET No	TOTAL SHEETS
04	SF	80	13.2/13.9	407 S16	1204

REGISTERED ELECTRICAL ENGINEER — 02/11/10 DATE

PLANS APPROVAL DATE

REGISTERED PROFESSIONAL ENGINEER — DAVID H. OTO No. 10699 Exp. 06/30/2011 ELECTRICAL — STATE OF CALIFORNIA

PB AMERICAS, Inc.
A Parsons Brinckerhoff Company
303 Second St., Suite 700N
San Francisco, CA 94107-1317

The State of California or its officers or agents shall not be responsible for the accuracy or completeness of electronic copies of this plan sheet.

Caltrans now has a web site! To get to the web site, go to http://www.dot.ca.gov

CONDUIT DATA

Conduit No	Reference	Size	Type	Total Fill (mm)	Allowable Fill (mm)	Included Cable No.	Conductor Type
2111C	E-160C	41	RGS Conduit		534.55	Pull rope	Soft-fiber Polyester
2111D	E-160C	41	RGS PVC Coated Conduit		534.55	Pull rope	Soft-fiber Polyester
2328A	E-160C	41	RGS Conduit		534.55	Pull rope	Soft-fiber Polyester
2328B	E-160C	41	RGS Conduit		534.55	Pull rope	Soft-fiber Polyester
2328C	E-160C	41	RGS PVC Coated Conduit		534.55	Pull rope	Soft-fiber Polyester
2428A	E-160C	41	RGS PVC Coated Conduit		534.55	Pull rope	Soft-fiber Polyester
2511A	E-160C	41	RGS Conduit		534.55	Pull rope	Soft-fiber Polyester
2511B	E-160C	41	RGS Conduit		534.55	Pull rope	Soft-fiber Polyester
2511C	E-160C	41	RGS Conduit		534.55	Pull rope	Soft-fiber Polyester
2757A	E-160C	41	RGS Conduit		534.55	Pull rope	Soft-fiber Polyester
2757B	E-160C	41	RGS Conduit		534.55	Pull rope	Soft-fiber Polyester

CONDUIT AND TRAY SCHEDULE

E-449DM

DESIGN OVERSIGHT	CALCULATED/ DESIGNED BY	CHECKED BY	DATE	REVISED BY	DATE REVISED
BEHZAD GOLEMOHAMMADI	XXX	XXX	XXX	XXX	XXX

STATE OF CALIFORNIA - DEPARTMENT OF TRANSPORTATION — Caltrans

LAST REVISION 00-00-00 — DATE PLOTTED => 2/12/2010 — TIME PLOTTED => 10:37:00 AM

FOR REDUCED PLANS ORIGINAL SCALE IS IN MILLIMETERS 0 20 40 60 80

DGN FILE =>t:\13103\MS\pse\SAS Struc\CCO\SAS CCO4451\2010-02-11 Issued for Submittal (Draft 3)\04-0120F1_0407S16.dgn
USERNAME =>cantiller

CU 04251 | EA 0120F1

CONTRACT CHANGE ORDER

Change Requested by: Engineer

CCO 45	Suppl. No. 0	Contract No. 04 - 0120F4	Road SF-80-13.2/13.9	FED. AID LOC.:

To: **AMERICAN BRIDGE/FLUOR ENTERPRISES INC A JOINT VENT**

You are directed to make the following changes from the plans and specifications or do the following described work not included in the plans and specifications for this contract. ***NOTE: This change order is not effective until approved by the Engineer.***

Description of work to be done, estimate of quantities and prices to be paid. (Segregate between additional work at contract price, agreed price and force account.) Unless otherwise stated, rates for rental of equipment cover only such time as equipment is actually used and no allowance will be made for idle time. This last percentage shown is the net accumulated increase or decrease from the original quantity in the Engineer's Estimate.

Extra Work at Force Account:

Reimburse the Contractor for added work to load and transport the pipe material from the painter's facility to Pier 7, including the additional cost to off-load the pipe at Pier 7.

Labor, equipment and material authorized by the Engineer, as necessary, will be paid in accordance with the provisions of Section 4-1.03D, "Extra Work" of the Standard Specifications and Section 5-1.24, "Force Account Payment" of the Special Provisions.

Estimated Cost of Extra Work at Force Account $20,000.00

Adjustment of Compensation at Lump Sum:

The fifth paragraph under subsection, "MATERIALS, Pipe and Fittings for Line 4 NPS or Greater", in Section 10-4.03, "CCSF Water Mains and Sewage Force Main", of the Special Provisions is replaced as follows:

From: "Ductile iron pipe and fittings shall have cement mortar lining and seal coating conforming to ANSI/AWWA C104/A21.4. Pipe shall have a bituminous outside coating conforming to ANSI/AWWA C151/A21.51, and fittings shall have a bituminous outside coating conforming to ANSI/AWWA C110/A21.10."

To: "Ductile iron pipe and fittings shall have cement mortar lining and seal coating conforming to ANSI/AWWA C104/A21.4. Pipe and fittings shall have a moisture-cured urethane primer outside coating conforming to ANCI/NSF Standard 61 and have finish paint in accordance with Section 10-1.69, "Clean and Paint Structural Steel" of the Special Provisions."

The specified bituminous coating will be eliminated and, in lieu of, a moisture-cured urethane (MCU) universal primer and finish paint shall be shop applied. This change will apply to the following bid items and associated fittings:

Item 121 - CCSF Reclaim Water (6 NPS)
Item 122 - CCSF Sewer Forced Main (10 NPS)
Item 123 - CCSF Water Main (12 NPS)

The fifth paragraph under Section 5-1.25, "PAYMENTS" of the Special Provisions shall include the following material used on the ductile iron pipe for inclusion in the payment of materials furnished but not incorporated in the work:

"P. CCSF Reclaimed Water (6 NPS) and fittings
Q. CCSF Sewer Forced Main (10 NPS) and fittings
R. CCSF Water Main (12 NPS) and fittings"

CONTRACT CHANGE ORDER

Change Requested by: Engineer

CCO 45	Suppl. No. 0	Contract No. 04 - 0120F4	Road SF-80-13.2/13.9	FED. AID LOC.:

For this work, the Contractor agrees to accept a lump sum payment of $258,930.00. This sum constitutes full and complete compensation, including all markups for furnishing the CCSF pipe.

Adjustment of Compensation at Lump Sum $258,930.00

Determination of cost due to a change in character of the pipe installation due to the addition of the finish paint is deferred.

Total Estimated Cost of this Change Order $278,930.00

Estimated Cost: Increase ☑ Decrease ☐ **$278,930.00**

By reason of this order the time of completion will be adjusted as follows: 0 days

Submitted by

Signature	Resident Engineer William Shedd for Gary Pursell, P.E., Sup.T.E.	Date 8-25-08

Approval Recommended by

Signature	Supervising Transportation Engineer Gary Pursell, P.E., Sup. TE	Date 8/25/08

Engineer Approval by

Signature	Supervising Transportation Engineer Gary Pursell, P.E., Sup. TE	Date 8/29/08

We the undersigned contractor, have given careful consideration to the change proposed and agree, if this proposal is approved, that we will provide all equipment, furnish the materials, except as may otherwise be noted above, and perform all services necessary for the work above specified, and will accept as full payment therefor the prices shown above.

NOTE: If you, the contractor, do not sign acceptance of this order, your attention is directed to the requirements of the specifications as to proceeding with the ordered work and filing a written protest within the time therein specified.

Contractor Acceptance by

Signature	(Print name and title) Michael D. Flowers Project Director	Date 8-28-08

STATE OF CALIFORNIA - DEPARTMENT OF TRANSPORTATION

CONTRACT CHANGE ORDER MEMORANDUM

TO: Mike Forner, Prin. TE / Gary Pursell, P.E., Sup T.E.	FILE: E.A. 04 - 0120F4
FROM: Gary Pursell, P.E., Sup.T.E.	CO-RTE-PM SF-80-13.2/13.9
	FED. NO.
CCO#: 45 SUPPLEMENT#: 0 Category Code: CHSA	CONTINGENCY BALANCE (incl. this change) $138,968,056.40
COST: $278,930.00 INCREASE ☑ DECREASE ☐	HEADQUARTERS APPROVAL REQUIRED? ☑ YES ☐ NO
SUPPLEMENTAL FUNDS PROVIDED: $0.00	IS THIS REQUEST IN ACCORDANCE WITH ENVIRONMENTAL DOCUMENTS? ☑ YES ☐ NO
CCO DESCRIPTION: Paint Primer on Ductile Iron Pipe	**PROJECT DESCRIPTION:** CONSTRUCT SELF-ANCHORED SUSPENSION BRIDGE

Original Contract Time:	Time Adj. This Change:	Previously Approved CCO Time Adjustments:	Percentage Time Adjusted: (including this change)	Total # of Unreconciled Deferred Time CCO(s): (including this change)
2490 Day(s)	0 Day(s)	30 Day(s)	1 %	0

THIS CHANGE ORDER PROVIDES FOR:

Modifying the fifth paragraph under Section 10-4.03, "CCSF Water Mains and Sewage Force Main", subsection, "MATERIALS, Pipe and Fittings for Line 4 NPS or Greater", of the Special Provisions as follows:

From; "Ductile iron pipe and fittings shall have cement mortar lining and seal coating conforming to ANSI/AWWA C104/A21.4. Pipe shall have a bituminous outside coating conforming to ANSI/AWWA C151/A21.51, and fittings shall have a bituminous outside coating conforming to ANSI/AWWA C110/A21.10."

To; "Ductile iron pipe and fittings shall have cement mortar lining and seal coating conforming to ANSI/AWWA C104/A21.4. Pipe and fittings shall have a moisture-cured urethane primer outside coating conforming to ANCI/NSF Standard 61 and have finish paint in accordance with Section 10-1.69, "Clean and Paint Structural Steel" of the Special Provisions."

The bituminous coating will be replaced with a urethane primer and a shop applied finish paint. This change will apply to contract item numbers 121 "CCSF Reclaim Water (6 NPS)", 122 "CCSF Sewer Forced Main (10 NPS)", and 123 "CCSF Water Main (12 NPS)". All associated hardware and fittings shall also have moisture-cured urethane primer and finish paint coating applied.

Finish painting the pipes and fittings to match the bridge structure is not addressed in the contract documentation. These pipes and fittings are visible to the public and are also exposed to the elements. The architectural requirements, for elements visible to the public, cannot be met by the factory applied bituminous pipe coating. Finish painting over the bituminous pipe coating is not recommended due to the incompatibility of the coatings which will result in higher maintenance cost. Therefore this CCO addresses deleting the factory applied bituminous pipe coating and applying a moisture-cured urethane primer coating along with a finish paint coating to pipes and associated fittings.

For cleaning, priming and painting the pipes, the Contractor will receive a lump sum payment of $258,930.00. A detailed cost analysis is on file.

Additional cost to transport pipes from painting facility, in lieu of directly to the jobsite, and additional handling costs will be paid for as Extra Work at Force Account for an estimated amount of $20,000.00, which can be financed from the contingency fund.

This material will be paid for as Material On Hand until incorporated in the work to protect the Department from future price escalations.

The total estimated cost of this Contract Change Order is $278,930.00.

There is no time adjustment due to this change, as it does not affect the controlling operation.

Costs associated with the change in character to install the pipe will be addressed in a supplement change order.

ADA Notice: For individuals with sensory disabilities, this document is available in alternate formats. For information call: (916) 654-6410 or TDD (916) 654-3880 or write Records and Forms Management, 1120 N Street, MS-89, Sacramento, CA 95814.

This change order received concurrence from the Design of Record (Marwan Nader), HQ Department Oversight (Andy Rogerson and Reza Valizadeh), Maintenance (Bill Zanetich), HQ Support (Rob Kobal), Project Manager (Ken Terpstra) and Toll Bridge Construction Principal (Pete Siegenthaler).

This change order has received an Issue and Approve from the Division of Construction on 5/19/2008..

CONCURRED BY:			
Construction Engineer:	Res. Eng., Gary Pursell, Sup. TE	Date	7/13/07
Bridge Engineer:	Struct Maint, Bill Zanetich, P.E.	Date	7/16/07
Project Engineer:	CT Oversight, Reza Valizadeh, P.E	Date	1/18/07
Project Manager:	Proj Manager, Ken Terpstra	Date	8/28/07
FHWA Rep.:	Struct Maint, Bill Zanetich, P.E.	Date	2/27/07
Environmental:	Design of Record, Marwan Nader,	Date	1/18/07
Other (specify):	HQ, Rob Kobal	Date	7/16/07
Other (specify):	PCE, Pete Siegenthaler, Prin TE	Date	7/17/07
District Prior Approval By:	HQ, Ken Darby	Date	2/26/07
HQ (Issue Approve) By:	HQ, Ken Darby	Date	5/22/08
Resident Engineer's Signature:	Gary Pursell	Date	8/29/08

ESTIMATE OF COST

	THIS REQUEST	TOTAL TO DATE
ITEMS	$0.00	$0.00
FORCE ACCOUNT	$20,000.00	$20,000.00
AGREED PRICE	$0.00	$0.00
ADJUSTMENT	$258,930.00	$258,930.00
TOTAL	$278,930.00	$278,930.00

FEDERAL PARTICIPATION

☐ PARTICIPATING ☐ PARTICIPATING IN PART ☑ NONE
☐ NON-PARTICIPATING (MAINTENANCE) ☐ NON-PARTICIPATING

FEDERAL SEGREGATION (if more than one Funding Source or P.I.P. type)
☑ CCO FUNDED PER CONTRACT ☐ CCO FUNDED AS FOLLOWS

FEDERAL FUNDING SOURCE	PERCENT

ADA Notice: For individuals with sensory disabilities, this document is available in alternate formats. For information call: (916) 654-6410 or TDD (916) 654-3880 or write Records and Forms Management, 1120 N Street, MS-89, Sacramento, CA 95814.

CONTRACT CHANGE ORDER

Change Requested by: Engineer

CCO: 45 **Suppl. No. 1** **Contract No. 04 – 0120F4** **Road** SF-80-13.2/13.9 **FED. AID LOC.:**

To: **AMERICAN BRIDGE/FLUOR ENTERPRISES INC A JOINT VENTURE**

You are directed to make the following changes from the plans and specifications or do the following described work not included in the plans and specifications for this contract. ***NOTE: This change order is not effective until approved by the Engineer.***

Description of work to be done, estimate of quantities and prices to be paid. (Segregate between additional work at contract price, agreed price and force account.) Unless otherwise stated, rates for rental of equipment cover only such time as equipment is actually used and no allowance will be made for idle time. This last percentage shown is the net accumulated increase or decrease from the original quantity in the Engineer's Estimate.

Extra Work at Force Account:

Provide additional funds for Ductile Iron Pipe handling and other related maintenance expenses as directed by the Engineer.

Labor, equipment and material authorized by the Engineer, as necessary, will be paid in accordance with the provisions of Section 4-1.03D, "Extra Work" of the Standard Specifications and Section 5-1.24, "Force Account Payment" of the Special Provisions.

Estimated Cost of Extra Work at Force Account.....$50,000.00

Estimated Cost: **Increase** ☒ **Decrease** ☐ **$50,000.00**

By reason of this order the time of completion will be adjusted as follows: **0**

Submitted by

Signature W. L. **Resident Engineer** William Shedd for Gary Pursell, Sup.T.E. **Date** 10-8-09

Approval Recommended by

Signature Gary Pursell **Supervising Bridge Engineer** Gary Pursell for Richard Morrow, Sup.T.E. **Date** 10/8/09

Engineer Approval by

Signature Gary Pursell **Supervising Transportation Engineer** Peter Siegenthaler, Prin.T.E. **Date** 10/14/09

We the undersigned contractor, have given careful consideration to the change proposed and agree, if this proposal is approved, that we will provide all equipment, furnish the materials, except as otherwise be noted above, and perform all services necessary for the work above specified, and will accept as full payment therefor the prices shown above.

NOTE: If you, the contractor, do not sign acceptance of this order, your attention is directed to the requirements of the specifications as to proceeding with the ordered work and filing a written protest within the time therein specified.

Contractor Acceptance by

Signature (NOT REQUIRED) (Print name and title) **Date**

STATE OF CALIFORNIA - DEPARTMENT OF TRANSPORTATION

CONTRACT CHANGE ORDER MEMORANDUM

DC-CEM-4903 (OLD HC-39 REV. 6/93) CT# 7541-3544-0

DATE: 10/14/2009 Page 1 of 1

TO Pete Siegenthaler, Principal TE	FILE 04-0120F4 04-SF-80-13.2/13.9
FROM Gary Pursell, STE / Richard Morrow, SBE	
CCO NO. **45** / SUPPLEMENT NO. **1** / CATEGORY CODE **CHSA**	CONTINGENCY BALANCE (including this change) **$67,005,863.40**
$50,000.00 INCREASE ☒ DECREASE ☐	HEADQUARTERS APPROVAL REQUIRED? YES ☒ NO ☐
SUPPLEMENTAL FUNDS PROVIDED $	IS THIS REQUEST IN ACCORDANCE WITH ENVIRONMENTAL DOCUMENTS? YES ☒ NO ☐
CCO DESCRIPTION: Provide Additional Funds	**PROJECT DESCRIPTION** CONSTRUCT SELF-ANCHORED SUSPENSION BRIDGE

Original Contract Time	Time Adj.: This Change	Previously Approved CCO Time Adjustments	Percentage Time Adjusted: (including this change)	Total # of Unreconciled Deferred Time CCO(s): (including this change)
2490 Day(s)	**0** Day(s)	**150** Day(s)	**6** %	**6**

THIS CHANGE ORDER PROVIDES FOR:

Providing additional funds for Ductile Iron Pipe handling and other related maintenance expenses as directed by the Engineer.

During the storage of the pipe as directed by the Engineer, it was observed that additional maintenance expenses would be incurred to protect and maintain the pipe not anticipated in the original estimate. The pipe was purchased under the original change order due to a change in the pipe material specified by the Engineer and to protect the Department from future price escalations.

Payment for this supplemental change will be at Extra Work at Force Account for an estimated amount of $50,000.00, which can be financed from the contingency fund. This will result in a cumulative amount of $328,930.00 for this change order. A detailed cost analysis is in the project records.

No adjustment of contract time is warranted, as this change order does not affect the controlling operation.

This change order has concurrence from Gary Pursell (Resident Engineer), Rick Morrow (Sup. Structure Rep), Rich Foley (HQ Const), Ken Terpstra (Project Manager) and Pete Siegenthaler (Principal TE). Design and Maintenance concurrences are not required for this change.

The Resident Engineer received an Issue and Approve from the Division of Construction for this Change on October 14, 2009.

CONCURRED BY:	
CONSTRUCTION ENGINEER Res. Eng. Gary Pursell, Sup. TE	DATE 10/1/09
SR. BRIDGE ENGINEER Struct. Rep. Rick Morrow, Sup. TE	DATE 10/1/09
FHWA REPRESENTATIVE	DATE
PROJECT MANAGER Proj. Manager, Ken Terpstra	DATE 10/1/09
OTHER (SPECIFIY) HQ Liaison, Rich Foley	DATE 10/5/09
Prin. TE, Pete Siegenthaler	DATE 10/7/09
DISTRICT PRIOR APPROVAL BY	DATE
HQ (ISSUE & APPROVE) (TO PROCEED) BY Bob Molera	DATE 10/14/09
RESIDENT ENGINEER SIGNATURE Gary Pursell	DATE 10/14/09

ESTIMATE OF COST	THIS REQUEST	TOTAL TO DATE
ITEMS	$0.00	$0.00
FORCE ACCOUNT	$50,000.00	$70,000.00
AGREED PRICE	$0.00	$0.00
ADJUSTMENT	$0.00	$258,930.00
TOTAL	$50,000.00	$328,930.00

FEDERAL PARTICIPATION

☐ PARTICIPATING ☐ PARTICIPATING IN PART ☒ NONE
☐ NON-PARTICIPATING (MAINTENANCE) ☐ NON-PARTICIPATING

FEDERAL SEGREGATION (IF MORE THAN ONE FUNDING SOURCE OR P.I.P. TYPE)

☒ CCO FUNDED PER CONTRACT ☐ CCO FUNDED AS FOLLOWS

FEDERAL FUNDING SOURCE	PERCENT

HC-39 Word(Rev. 9/96)

CONTRACT CHANGE ORDER

Change Requested by: Engineer

CCO: 45 **Suppl. No. 1** **Contract No. 04 – 0120F4** **Road** SF-80-13.2/13.9 **FED. AID LOC.:**

To: **AMERICAN BRIDGE/FLUOR ENTERPRISES INC A JOINT VENTURE**

You are directed to make the following changes from the plans and specifications or do the following described work not included in the plans and specifications for this contract. ***NOTE: This change order is not effective until approved by the Engineer.***

Description of work to be done, estimate of quantities and prices to be paid. (Segregate between additional work at contract price, agreed price and force account.) Unless otherwise stated, rates for rental of equipment cover only such time as equipment is actually used and no allowance will be made for idle time. This last percentage shown is the net accumulated increase or decrease from the original quantity in the Engineer's Estimate.

Extra Work at Force Account:

Provide additional funds for Ductile Iron Pipe handling and other related maintenance expenses as directed by the Engineer.

Labor, equipment and material authorized by the Engineer, as necessary, will be paid in accordance with the provisions of Section 4-1.03D, "Extra Work" of the Standard Specifications and Section 5-1.24, "Force Account Payment" of the Special Provisions.

Estimated Cost of Extra Work at Force Account.....$50,000.00

Estimated Cost: **Increase** ☒ **Decrease** ☐ **$50,000.00**

By reason of this order the time of completion will be adjusted as follows: 0

Submitted by

Signature W. L **Resident Engineer** William Shedd for Gary Pursell, Sup.T.E. **Date** 10-8-09

Approval Recommended by

Signature Gary Pursell **Supervising Bridge Engineer** Gary Pursell for Richard Morrow, Sup.T.E. **Date** 10/8/09

Engineer Approval by

Signature Gary Pursell **Supervising Transportation Engineer** Peter Siegenthaler, Prin.T.E. **Date** 10/14/09

We the undersigned contractor, have given careful consideration to the change proposed and agree, if this proposal is approved, that we will provide all equipment, furnish the materials, except as otherwise be noted above, and perform all services necessary for the work above specified, and will accept as full payment therefor the prices shown above.

NOTE: If you, the contractor, do not sign acceptance of this order, your attention is directed to the requirements of the specifications as to proceeding with the ordered work and filing a written protest within the time therein specified.

Contractor Acceptance by

Signature (NOT REQUIRED) (Print name and title) **Date**

STATE OF CALIFORNIA - DEPARTMENT OF TRANSPORTATION

CONTRACT CHANGE ORDER

Change Requested by: Engineer

CCO: 45 **Suppl. No. 2** **Contract No. 04 – 0120F4** **Road** SF-80-13.2/13.9 **FED. AID LOC.:**

To: **AMERICAN BRIDGE/FLUOR ENTERPRISES INC A JOINT VENTURE**

You are directed to make the following changes from the plans and specifications or do the following described work not included in the plans and specifications for this contract. ***NOTE: This change order is not effective until approved by the Engineer.***

Description of work to be done, estimate of quantities and prices to be paid. (Segregate between additional work at contract price, agreed price and force account.) Unless otherwise stated, rates for rental of equipment cover only such time as equipment is actually used and no allowance will be made for idle time. This last percentage shown is the net accumulated increase or decrease from the original quantity in the Engineer's Estimate.

Extra Work at Lump Sum:

ITEM 1.

Perform additional handling measures to protect the painted ductile iron pipe and fittings during transport from Pier 7 to the job site and during installation.

For this work, the Contractor will receive a lump sum price of $123,008.00. This sum constitutes full and complete compensation for furnishing all labor, material, tools and incidentals including all markups by reason of this change.

Extra Work at Lump Sum..... $123,008.00

Extra Work at Force Account:

ITEM 2.

As directed by the Engineer, perform touch up painting on the ductile iron pipe after installation.

Labor, equipment and material authorized by the Engineer, as necessary, will be paid in accordance with the provisions of Section 4-1.03D, "Extra Work" of the Standard Specifications and Section 5-1.24, "Force Account Payment" of the Special Provisions.

Estimated Cost of Extra Work at Force Account..... $50,000.00

CHANGE ORDER COST AND TIME SUMMARY

(ITEM 1) Extra Work at Lump Sum	$123,008.00
(ITEM 2) Extra Work at Force Account	$50,000.00
Total net pay for this change order	$173,008.00

Estimated Cost: Increase ☒ Decrease ☐ $173,008.00

By reason of this order the time of completion will be adjusted as follows: 0 days

Submitted by

Signature Kannu Balan **Resident Engineer** Kannu Balan, Senior T.E. **Date** 6-28-11

Approval Recommended by

Signature Peter Siegenthaler **Principal Transportation Engineer** Peter Siegenthaler, Prin. T.E. **Date** 6-30-11

Engineer Approval by

Signature FOR SIEGENTHALER **Principal Transportation Engineer** Peter Siegenthaler, Prin. T.E. **Date** 20 JULY 2011

We the undersigned contractor, have given careful consideration to the change proposed and agree, if this proposal is approved, that we will provide all equipment, furnish the materials, except as otherwise be noted above, and perform all services necessary for the work above specified, and will accept as full payment therefor the prices shown above.

NOTE: If you, the contractor, do not sign acceptance of this order, your attention is directed to the requirements of the specifications as to proceeding with the ordered work and filing a written protest within the time therein specified.

Contractor Acceptance by

Signature (Print name and title) BRIAN A. PETERSEN - PROJECT DIRECTOR **Date** 19 JULY 11

STATE OF CALIFORNIA - DEPARTMENT OF TRANSPORTATION

CONTRACT CHANGE ORDER MEMORANDUM

DATE: 6/29/2011 Page 1 of 1

TO: Pete Siegenthaler, Prin TE /	FILE: **E.A.** 04 - 0120F4
FROM: Kannu Balan, Senior TE	**CO-RTE-PM** SF-80-13.2/13.9
	FED. NO.
CCO#: **45** SUPPLEMENT#: **2** Category Code: **CHSA**	CONTINGENCY BALANCE (incl. this change) **$167,603,231.11**
COST: **$173,008.00** INCREASE ☑ DECREASE ☐	HEADQUARTERS APPROVAL REQUIRED? ☑ YES ☐ NO
SUPPLEMENTAL FUNDS PROVIDED: **$0.00**	IS THIS REQUEST IN ACCORDANCE WITH ENVIRONMENTAL DOCUMENTS? ☑ YES ☐ NO
CCO DESCRIPTION: Handling for Painted Ductile Iron Pipe	**PROJECT DESCRIPTION:** CONSTRUCT SELF-ANCHORED SUSPENSION BRIDGE

Original Contract Time:	Time Adj. This Change:	Previously Approved CCO Time Adjustments:	Percentage Time Adjusted: (including this change)	Total # of Unreconciled Deferred Time CCO(s): (including this change)
2490 Day(s)	**0** Day(s)	**501** Day(s)	**20** %	**1**

THIS CHANGE ORDER PROVIDES FOR:

Performing additional handling measures to protect the painted ductile iron pipe and fittings during transport from Pier 7 to the job site and during installation. As directed by the Engineer, performing touch up painting on the ductile iron pipe after installation.

CCO 45S0 added paint to the ductile iron pipe and fittings for the 6" City and County of San Francisco (CCSF) reclaimed water, 10" CCSF sewer force main, and 12" CCSF water lines. In order to install these lines as directed by the Engineer, the plumbing subcontractor will have to take additional measures during handling and installation to protect the already painted surfaces. Additional time will be spent safely rigging the pipes with protective material, using nylon slings, and slowing movement to avoid contact. An extra work at force account portion of this supplement will pay for the painting contractor to touch up scratches to the paint that may occur during installation.

The cost of this supplemental change is $173,008.00, which can be financed from the contingency fund. This will result in a cumulative amount of $501,938.00 for CCO 45S0, 45S1, and 45S2. A detailed cost estimate is on file.

No time adjustment is warranted as this change order does not affect the controlling operation.

This change order has concurrence from Peter Siegenthaler (Principal TE), Ken Terpstra (Proj. Manager), and Rich Foley (HQ Oversight). Design and Maintenance concurrence are not required for this change.

The Resident Engineer requests Headquarters CCO Desk "Issue and Approve".

CONCURRED BY:		
Construction Engineer:	PCE, Pete Siegenthaler, Prin TE	Date 12/13/10
Bridge Engineer:		Date
Project Engineer:		Date
Project Manager:	Proj Manager, Ken Terpstra	Date 12/15/10
FHWA Rep.:		Date
Environmental:		Date
Other (specify):	HQ, Rich Foley	Date 12/14/10
Other (specify):		Date
District Prior Approval By:	HQ, Larry Salhaney	Date 12/21/10
HQ (Issue Approve) By:		Date
Resident Engineer's Signature:		Date 6-28-11

ESTIMATE OF COST

	THIS REQUEST	TOTAL TO DATE
ITEMS	$0.00	$0.00
FORCE ACCOUNT	$50,000.00	$120,000.00
AGREED PRICE	$123,008.00	$123,008.00
ADJUSTMENT	$0.00	$258,930.00
TOTAL	$173,008.00	$501,938.00

FEDERAL PARTICIPATION

☐ PARTICIPATING ☐ PARTICIPATING IN PART ☑ NONE
☐ NON-PARTICIPATING (MAINTENANCE) ☐ NON-PARTICIPATING

FEDERAL SEGREGATION (if more than one Funding Source or P.I.P. type)
☐ CCO FUNDED PER CONTRACT ☐ CCO FUNDED AS FOLLOWS

FEDERAL FUNDING SOURCE PERCENT

ADA Notice: For individuals with sensory disabilities, this document is available in alternate formats. For information call: (916) 654-6410 or TDD (916) 654-3880 or write Records and Forms Management, 1120 N Street, MS-89, Sacramento, CA 95814.

STATE OF CALIFORNIA - DEPARTMENT OF TRANSPORTATION

CONTRACT CHANGE ORDER

Change Requested by: Engineer

CCO: 45 **Suppl. No. 3** **Contract No. 04 – 0120F4** **Road** SF-80-13.2/13.9 **FED. AID LOC.:**

To: **AMERICAN BRIDGE/FLUOR ENTERPRISES INC A JOINT VENTURE**

You are directed to make the following changes from the plans and specifications or do the following described work not included in the plans and specifications for this contract. ***NOTE: This change order is not effective until approved by the Engineer.***

Description of work to be done, estimate of quantities and prices to be paid. (Segregate between additional work at contract price, agreed price and force account.) Unless otherwise stated, rates for rental of equipment cover only such time as equipment is actually used and no allowance will be made for idle time. This last percentage shown is the net accumulated increase or decrease from the original quantity in the Engineer's Estimate.

Extra Work at Lump Sum:

After all repairs are made to the uninstalled ductile iron pipe that was stored at Pier 7 as of November 16, 2011, apply two coats of 3 to 5 mil Carboline Carboxane 2000 at ABC's paint shop as per State Letter 05.03.01-010208.

For this work, the Contractor will receive a lump sum price of $20,996.00. This sum constitutes full and complete compensation for furnishing all labor, material, tools and incidentals including all markups by reason of this change.

Extra Work at Lump Sum..... $20,996.00

Estimated Cost: Increase ☒ **Decrease** ☐ **$20,996.00**

By reason of this order the time of completion will be adjusted as follows: 0 Days

Submitted by

Signature **Resident Engineer** Darryl Schram, Senior T.E. **Date** 5/14/12

Approval Recommended by

Signature **Supervising Transportation Engineer** William Casey, Supervising T.E. **Date** 5-21-12

Engineer Approval by

Signature **Supervising Transportation Engineer** William Casey, Supervising T.E. **Date** 5-29-12

We the undersigned contractor, have given careful consideration to the change proposed and agree, if this proposal is approved, that we will provide all equipment, furnish the materials, except as otherwise be noted above, and perform all services necessary for the work above specified, and will accept as full payment therefor the prices shown above.

NOTE: If you, the contractor, do not sign acceptance of this order, your attention is directed to the requirements of the specifications as to proceeding with the ordered work and filing a written protest within the time therein specified.

Contractor Acceptance by

Signature (Print name and title) BRIAN A. PETERSEN - PROJECT DIRECTOR **Date** 22MAY12

STATE OF CALIFORNIA - DEPARTMENT OF TRANSPORTATION

CONTRACT CHANGE ORDER MEMORANDUM

DATE: 5/7/2012 Page 1 of 1

TO: Tony Anziano, Program Manager /	FILE: **E.A.** 04 - 0120F4
	CO-RTE-PM SF-80-13.2/13.9
FROM: Darryl Schram, Senior TE	**FED. NO.**
CCO#: **45** SUPPLEMENT#: **3** Category Code: **CHSA**	CONTINGENCY BALANCE (incl. this change) **$113,829,492.58**
COST: **$20,996.00** INCREASE ☑ DECREASE ☐	HEADQUARTERS APPROVAL REQUIRED? ☑ YES ☐ NO
SUPPLEMENTAL FUNDS PROVIDED: **$0.00**	IS THIS REQUEST IN ACCORDANCE WITH ENVIRONMENTAL DOCUMENTS? ☑ YES ☐ NO
CCO DESCRIPTION: Add. Paint on Ductile Iron Pipe (Shop)	**PROJECT DESCRIPTION:** CONSTRUCT SELF-ANCHORED SUSPENSION BRIDGE

Original Contract Time:	Time Adj. This Change:	Previously Approved CCO Time Adjustments:	Percentage Time Adjusted: (including this change)	Total # of Unreconciled Deferred Time CCO(s): (including this change)
2490 Day(s)	**0** Day(s)	**501** Day(s)	**20** %	**3**

THIS CHANGE ORDER PROVIDES FOR:

Applying two coats of 3 to 5 mil polysiloxane paint on the Ductile Iron Pipe (DIP) at ABC's paint shop.

The DIP and fittings for the 6" City and County of San Francisco (CCSF) Reclaimed Water, 10" CCSF Sewer Force Main, and 12" CCSF Water lines were painted per CCO 45S0. Approximately 70% of this DIP has been transported to the bridge and incorporated into the work. Caltrans' Material Engineering and Testing Services Branch (METS) inspected installed DIP and determined that the dry film thickness of the primer and paint, that was specified and applied, was insufficient to prevent corrosion. METS recommended that two additional coats of 3 to 5 mil polysiloxane paint be applied. This change order will provide for applying additional paint coat to the 30% of DIP that has not yet been incorporated into the work. The remaining 70% of DIP will be painted in a subsequent change order.

The cost of this supplemental change is $20,996.00, which can be financed from the contingency fund. This will result in a cumulative amount of $522,934.00 for CCO 45S0, 45S1, 45S2, and 45S3. A detailed cost estimate is on file.

No time adjustment is warranted as this change order does not affect the controlling operation.

This change order has concurrence from William Casey (Supervising TE), Rich Foley (HQ Oversight), Wenyi Long (Bridge Design), Lina Ellis (Maintenance), and Jing Chen (District Design).

CONCURRED BY:			
Construction Engineer:	William Casey, Sup TE	Date	4/6/12
Bridge Engineer:	CT Oversight, Wenyi Long, P.E.	Date	4/6/12
Project Engineer:	District Design, Jing Chen	Date	4/6/12
Project Manager:		Date	
FHWA Rep.:		Date	
Environmental:		Date	
Other (specify):	HQ, Rich Foley	Date	4/9/12
Other (specify):	Struct. Maint, Lina Ellis	Date	4/9/12
District Prior Approval By:		Date	
HQ (Issue-Approve) By:		Date	
Resident Engineer's Signature:	D. Schram for B. Casey 5/7/12	Date	

ESTIMATE OF COST

	THIS REQUEST	TOTAL TO DATE
ITEMS	$0.00	$0.00
FORCE ACCOUNT	$0.00	$120,000.00
AGREED PRICE	$20,996.00	$144,004.00
ADJUSTMENT	$0.00	$258,930.00
TOTAL	$20,996.00	$522,934.00

FEDERAL PARTICIPATION

☐ PARTICIPATING ☐ PARTICIPATING IN PART ☑ NONE
☐ NON-PARTICIPATING (MAINTENANCE) ☐ NON-PARTICIPATING

FEDERAL SEGREGATION (if more than one Funding Source or P.I.P. type)
☐ CCO FUNDED PER CONTRACT ☐ CCO FUNDED AS FOLLOWS

FEDERAL FUNDING SOURCE	PERCENT

ADA Notice: For individuals with sensory disabilities, this document is available in alternate formats. For information call: (916) 654-6410 or TDD (916) 654-3880 or write Records and Forms Management, 1120 N Street, MS-89, Sacramento, CA 95814.

STATE OF CALIFORNIA - DEPARTMENT OF TRANSPORTATION

CONTRACT CHANGE ORDER

Change Requested by: Engineer

CCO: 45 **Suppl. No. 4** **Contract No. 04 – 0120F4** **Road** SF-80-13.2/13.9 **FED. AID LOC.:**

To: **AMERICAN BRIDGE/FLUOR ENTERPRISES INC A JOINT VENTURE**

You are directed to make the following changes from the plans and specifications or do the following described work not included in the plans and specifications for this contract. ***NOTE: This change order is not effective until approved by the Engineer.***

Description of work to be done, estimate of quantities and prices to be paid. (Segregate between additional work at contract price, agreed price and force account.) Unless otherwise stated, rates for rental of equipment cover only such time as equipment is actually used and no allowance will be made for idle time. This last percentage shown is the net accumulated increase or decrease from the original quantity in the Engineer's Estimate.

Extra Work at Lump Sum:

Repair areas with subsurface imperfections per National Association of Pipe Fabricators Specification NAPF-500-03-03. The repair areas are to be prepared in accordance with the Society of Protective Coatings specifications SSPC-SP2 or SSPC-SP3, then shall be painted with two (2) coats of Wasser MC-Ferroclad Ductile Iron Primer, or other approved product, to a dry film thickness of 6 to 10 mils. The primer shall be feathered into the existing paint system to expose a minimum of 13 mm of each coat. During the re-application of the paint, care must be used to ensure that each coat of paint is only applied within the following areas. The undercoat shall only be applied to the surface of the bare metal and the existing undercoat, which has been exposed by feathering. The finish coat shall not extend beyond the areas which have been feathered or lightly sanded. All repairs shall be made in a manner to blend the patched area with the adjacent coating. The finished surface of the patched area shall have a smooth even profile with the adjacent surface. The first repair area shall be used as a test section and no more repairs made until the methods are approved by the Engineer, and an approved addendum to a Paint Quality Work Plan (PQWP). A finish coat of 3 to 5 mils of Carboline Carboxane 2000 or an approved alternative shall be applied over the repaired and primed areas.

After repairing and recoating of the subsurface imperfections, the entire surface of the installed DIP shall be prepared in accordance with Society of Protective Coatings specifications SSPC-SP2 or SSPC-SP3, then two (2) finish coats of 5 to 7 mils of Carboline Carboxane 2000 or an approved alternative shall be applied in accordance with an approved addendum to a PQWP. DIP on the Pier W2 cap and column shall have two finish coats of grey Federal Standard 595B #26492 applied, in lieu of the white paint.

For this work, the Contractor shall receive a lump sum price of $182,495.00. This sum constitutes full and complete compensation for furnishing all labor, material, tools and incidentals including all markups by reason of this change.

Extra Work at Lump Sum..... $182,495.00

Estimated Cost: Increase ☒ Decrease ☐ $182,495.00

By reason of this order the time of completion will be adjusted as follows: 0 Days

Submitted by

Signature **Resident Engineer** William Shedd, Senior T.E. **Date** 6-25-12

Approval Recommended by

Signature **Supervising Transportation Engineer** William Casey, Supervising T.E. **Date** 6-25-12

Engineer Approval by

Signature **Supervising Transportation Engineer** William Casey, Supervising T.E. **Date** 7-2-12

We the undersigned contractor, have given careful consideration to the change proposed and agree, if this proposal is approved, that we will provide all equipment, furnish the materials, except as otherwise be noted above, and perform all services necessary for the work above specified, and will accept as full payment therefor the prices shown above.

NOTE: If you, the contractor, do not sign acceptance of this order, your attention is directed to the requirements of the specifications as to proceeding with the ordered work and filing a written protest within the time therein specified.

Contractor Acceptance by

Signature (Print name and title) BRIAN A. PETERSEN - PROJECT DIRECTOR **Date** 28 JUN 12

STATE OF CALIFORNIA - DEPARTMENT OF TRANSPORTATION

CONTRACT CHANGE ORDER MEMORANDUM

TO: Tony Anziano, Program Manager /	FILE: **E.A.** 04 - 0120F4
FROM: Darryl Schram, Senior TE	**CO-RTE-PM** SF-80-13.2/13.9
	FED. NO.
CCO#: **45** SUPPLEMENT#: **4** Category Code: **CHSA**	CONTINGENCY BALANCE (incl. this change) **$106,950,047.58**
COST: **$182,495.00** INCREASE ☑ DECREASE ☐	HEADQUARTERS APPROVAL REQUIRED? ☑ YES ☐ NO
SUPPLEMENTAL FUNDS PROVIDED: **$0.00**	IS THIS REQUEST IN ACCORDANCE WITH ENVIRONMENTAL DOCUMENTS? ☑ YES ☐ NO
CCO DESCRIPTION: Add. Paint on Ductile Iron Pipe (Field)	**PROJECT DESCRIPTION:** CONSTRUCT SELF-ANCHORED SUSPENSION BRIDGE

Original Contract Time:	Time Adj. This Change:	Previously Approved CCO Time Adjustments:	Percentage Time Adjusted: (including this change)	Total # of Unreconciled Deferred Time CCO(s): (including this change)
2490 Day(s)	**0** Day(s)	**501** Day(s)	**20** %	**3**

THIS CHANGE ORDER PROVIDES FOR:

Repairing and repainting areas with surface imperfections on the Ductile Iron Pipe (DIP) which has been transported to the bridge and incorporated in the work. After paint repair has been completed, preparing the DIP in accordance with Society of Protective Coatings specifications and applying two finish coats of 5 to7 mils of Carboline Carboxane 2000. DIP on the Pier W2 cap and column shall have two finish coats of grey Federal Standard 595B #26492 applied, in lieu of white paint.

The DIP and fittings for the 6" City and County of San Francisco (CCSF) Reclaimed Water, 10" CCSF Sewer Force Main, and 12" CCSF Water lines were painted per CCO 45S0. Approximately 70% of this DIP has been transported to the bridge and incorporated into the work. Caltrans' Material Engineering and Testing Services Branch (METS) inspected installed DIP and determined that the dry film thickness of the primer and paint, that was specified and applied, was insufficient to prevent corrosion. METS recommended that two additional coats of 5 to 7 mil polysiloxane paint be applied. This change order will provide for applying additional paint coat to the 70% of DIP that has been incorporated into the work. The remaining 30% of DIP was painted in CCO 45S3. The paint color at Pier W2 is changed to grey to match the cap and column.

The cost of this supplemental change is $182,495.00, which can be financed from the contingency fund. This will result in a cumulative amount of $705,429.00 for CCO 45S0, S1, S2, S3, and S4. A detailed cost estimate is on file.

No time adjustment is warranted as this change order does not affect the controlling operation.

This change order has concurrence from William Casey (Supervising TE), Ken Terpstra (Proj. Manager), Rich Foley (HQ Oversight), Wenyi Long (Bridge Design), Lina Ellis (Maintenance), and Jing Chen (District Design).

CONCURRED BY:			
Construction Engineer:	William Casey, Sup TE	Date	5/7/12
Bridge Engineer:	CT Oversight, Wenyi Long, P.E.	Date	5/29/12
Project Engineer:	District Design, Jing Chen	Date	5/3/12
Project Manager:	Proj Manager, Ken Terpstra	Date	5/9/12
FHWA Rep.:		Date	
Environmental:		Date	
Other (specify):	HQ, Rich Foley	Date	5/10/12
Other (specify):	Struct. Maint, Lina Ellis	Date	5/3/12
District Prior Approval By:		Date	
HQ (Issue Approve) By:		Date	
Resident Engineer's Signature:		Date	6-25-12

ESTIMATE OF COST

	THIS REQUEST	TOTAL TO DATE
ITEMS	$0.00	$0.00
FORCE ACCOUNT	$0.00	$120,000.00
AGREED PRICE	$182,495.00	$326,499.00
ADJUSTMENT	$0.00	$258,930.00
TOTAL	$182,495.00	$705,429.00

FEDERAL PARTICIPATION

☐ PARTICIPATING ☐ PARTICIPATING IN PART ☑ NONE
☐ NON-PARTICIPATING (MAINTENANCE) ☐ NON-PARTICIPATING

FEDERAL SEGREGATION (if more than one Funding Source or P.I.P. type)
☐ CCO FUNDED PER CONTRACT ☐ CCO FUNDED AS FOLLOWS

FEDERAL FUNDING SOURCE	PERCENT

ADA Notice: For individuals with sensory disabilities, this document is available in alternate formats. For information call: (916) 654-6410 or TDD (916) 654-3880 or write Records and Forms Management, 1120 N Street, MS-89, Sacramento, CA 95814.

STATE OF CALIFORNIA - DEPARTMENT OF TRANSPORTATION

CONTRACT CHANGE ORDER

Change Requested by: Engineer

CCO: 46	Suppl. No. 0	Contract No. 04 - 0120F4	Road SF-80-13.2/13.9	FED. AID LOC.:

To: **AMERICAN BRIDGE/FLUOR ENTERPRISES INC A JOINT VENT**

You are directed to make the following changes from the plans and specifications or do the following described work not included in the plans and specifications for this contract. ***NOTE: This change order is not effective until approved by the Engineer.***

Description of work to be done, estimate of quantities and prices to be paid. (Segregate between additional work at contract price, agreed price and force account.) Unless otherwise stated, rates for rental of equipment cover only such time as equipment is actually used and no allowance will be made for idle time. This last percentage shown is the net accumulated increase or decrease from the original quantity in the Engineer's Estimate.

Extra Work at Force Account:

Provide additional materials, equipment, labor and services for Item 36, High Strength Prestressing Rod (75MM), which are not otherwise provided for in the plans and Special Provisions, as directed by the Engineer. Additional materials, equipment, labor, and services will include, but will not be limited to:

1. An additional 26-each High Strength Prestressing Rod assemblies, including Denso tape coating and transportation to the job site.
2. 304-each Aluminum Anchor Caps.
3. Support labor and equipment, not otherwise provided by the manufacturer, required to complete the work of stressing High Strength Prestressing Rods. Support labor and equipment shall be agreed upon by the Engineer in advance of stressing operations.
4. Required insurance policies, such as California Workmen's Compensation Insurance, not otherwise provided by the High Strength Prestressing Rod vendor.
5. Securing the availability of stressing jack(s) in advance of field operations as directed by the Engineer.

Additional materials, equipment, labor, and services to be paid through CCO 46 will not include:

1. Manufacturer's technical representative or stressing services requested by the Contractor.
2. Transportation and accommodations for Manufacturer's representatives.
3. Jacks and support equipment provided by the manufacturer.
4. Shipping for jacks and support equipment provided by the manufacturer.
5. Variances in the GBP/USD exchange rate, except the actual exchange rate will be applied to payments made for additional materials, equipment, labor, and services ordered pursuant to CCO 46.

Payments authorized by the Engineer, as necessary, will be paid in accordance with the provisions of Section 4-1.03D, "Extra Work" of the Standard Specifications and Section 5-1.24, "Force Account Payment" of the Special Provisions.

Estimated cost of Extra Work at Force Account $150,000.00

Estimated Cost: **Increase** ☑ **Decrease** ☐ **$150,000.00**

By reason of this order the time of completion will be adjusted as follows: 0 days

Submitted by

Signature	Resident Engineer	Date
Gary Pursell	Gary Pursell, P.E., Sup.T.E.	11/5/07

Approval Recommended by

Signature	Supervising Bridge Engineer	Date
for RT Morrow	Richard Morrow, P.E., Sup. BE	11/8/07

Engineer Approval by

Signature	Supervising Transportation Engineer	Date
Gary Pursell	Gary Pursell, P.E., Sup. TE	11/7/07

We the undersigned contractor, have given careful consideration to the change proposed and agree, if this proposal is approved, that we will provide all equipment, furnish the materials, except as may otherwise be noted above, and perform all services necessary for the work above specified, and will accept as full payment therefor the prices shown above.

NOTE: If you, the contractor, do not sign acceptance of this order, your attention is directed to the requirements of the specifications as to proceeding with the ordered work and filing a written protest within the time therein specified.

Contractor Acceptance by

Signature	(Print name and title)	Date
Michael D. Flowers	Michael D. Flowers, Project Director	11.5.07

STATE OF CALIFORNIA - DEPARTMENT OF TRANSPORTATION

CONTRACT CHANGE ORDER MEMORANDUM

TO: Pete Siegenthaler, Prin. TE / Gary Pursell, P.E., Sup T.E.

FROM: Gary Pursell, P.E., Sup.T.E.

FILE: **E.A.** 04 - 0120F4
CO-RTE-PM SF-80-13.2/13.9
FED. NO.

CCO#:	SUPPLEMENT#:	Category Code:
46	**0**	**CHSA**

CONTINGENCY BALANCE (incl. this change) **$140,534,525.58**

COST: **$150,000.00** INCREASE ☑ DECREASE ☐

HEADQUARTERS APPROVAL REQUIRED? ☑ YES ☐ NO

SUPPLEMENTAL FUNDS PROVIDED: **$0.00**

IS THIS REQUEST IN ACCORDANCE WITH ENVIRONMENTAL DOCUMENTS? ☑ YES ☐ NO

CCO DESCRIPTION:
Additional Macalloy Bars

PROJECT DESCRIPTION:
CONSTRUCT SELF-ANCHORED SUSPENSION BRIDGE

Original Contract Time:	Time Adj. This Change:	Previously Approved CCO Time Adjustments:	Percentage Time Adjusted: (including this change)	Total # of Unreconciled Deferred Time CCO(s): (including this change)
2490 Day(s)	**0** Day(s)	**30** Day(s)	**1** %	**0**

THIS CHANGE ORDER PROVIDES FOR:

New and unforeseen materials, equipment, labor and services related to Contract Item 36, High Strength Prestressing Rod (75MM), which were not otherwise provided for in the contract Special Provisions. The plans and specifications required the installation of 304-each high strength prestressing rods, which were to be manufactured and supplied by Macalloy Limited, of the UK, the only known source that could meet the requirements for the contract. The Department entered into a sole source agreement with Macalloy prior to bid opening. This CCO provides for rectifying several inconsistencies between the sole source agreement and the contract special provisions, and provides for payment for extra high strength bars ordered by the Engineer. Specific changes include the following:

1) The contractor was directed by the Engineer, to provide an additional 28-each High Strength Prestressing Rod assemblies, including Denso tape coating and transportation to the job site. These rods were ordered to reduce the risk of project schedule delays.

   During initial tensile testing of the planned rods, one lot of rods failed the required minimum test criteria resulting in 54-each rod assemblies being rejected. The supplier then proceeded with re-fabrication of additional lots of bars to replace the 54 rejected bars. Failure of any of the replacement lots would have resulted in a delay of several months to the schedule since the testing facility, an educational institution in Germany, was scheduled to be shut down for the summer.

   The Resident Engineer ordered the additional bars as extra for backup to avoid schedule delays in the event of further failures, or if the planned bars become lost or damaged prior to installation for any reason whatsoever. Toll Bridge Program management has advocated such schedule risk reduction measures.

   Two of the 28 additional bars ordered were utilized for destructive tensile testing. The two destroyed bars are considered included in the price of the remaining 26 bars to be purchased and shipped.

2) A total of 304 anchor caps are required to protect the stressing nuts and ends of the High Strength Prestressing Rods. However, the contract Special Provisions did not indicate the caps were required, and the caps were not included in the price quoted from Macalloy to Caltrans for rod assemblies. Since the specifications did not include any material properties for the caps nor reference the caps, the Contractor is entitled for payment of these caps and will be compensated as extra work at force account.

3) The Special Provisions indicate a price of $700/day as the manufacturer's charge for stressing the prestressing rods, including all necessary labor and equipment. However, in the agreement between Caltrans and Macalloy, the $700/day only included the technician and the jack, and not necessary support equipment such as furnishing compressed air, lifting equipment, and support labor. Therefore, the Contractor is entitled for payment of the additional support equipment and labor, as agreed upon by the Engineer, and will be paid as extra work at force account.

ADA Notice: For individuals with sensory disabilities, this document is available in alternate formats. For information call: (916) 654-6410 or TDD (916) 654-3880 or write Records and Forms Management, 1120 N Street, MS-89, Sacramento, CA 95814.

4) The sole source agreement between Macalloy and Caltrans specifically excluded required local insurance policies, such as California Workmen's Compensation Insurance. However, the Special Provisions did not indicate such insurance for manufacturer's representative was excluded from the prices quoted by Macalloy. Therefore, the Contractor is entitled for reimbursement of such insurance and will be paid for as extra work at force account.

5) As part of the agreement with Macalloy, jacks are to be provided to tension the high strength prestressing rods. Because the jacks are designed to fit the unique threads of the Macalloy rods and fit into the confined space, jacks are not readily available from any other suppliers. The rods are scheduled to be installed late in 2007; however, the rods are not scheduled to be stressed with the jacks until 2010, during installation of the Hinge K pipe beam. To assure the availability of jacks when needed in 2010, and avoid potential project schedule delays, the Engineer may order the delivering of the jacks sometime in advance of the need in 2010. If ordered to do so, the Contractor is entitled for reimbursement of the jacks that are to be rented, leased, or purchased with a buyback provisions as agreed upon with Macalloy, and the cost of securing the jacks early will be paid for at force account.

Payment for this work will be at Extra Work at Force Account for an estimated cost of $150,000.00, which can be financed from the contingency fund. A detail of the costs will be placed in the project files.

No adjustment of contract time is warranted, as this change does not affect the controlling operation.

Maintenance concurrence is not required for this change order.

This change order received an Issue and Approve from Division of Construction on Oct. 26, 2007.

CONCURRED BY:			
Construction Engineer:	Res. Eng., Gary Pursell, Sup. TE	Date	10/1/07
Bridge Engineer:	Struct Rep, Rick Morrow, Sup TE	Date	10/1/07
Project Engineer:	CT Oversight, Wenyi Long, P.E.	Date	10/30/07
Project Manager:	Proj Manager, Ken Terpstra	Date	10/5/07
FHWA Rep.:		Date	
Environmental:		Date	
Other (specify):	PCE, Mike Forner, Prin TE	Date	10/2/07
Other (specify):	HQ, Patrick Treacy	Date	10/2/07
District Prior Approval By:		Date	
HQ (Issue Approve) By:	HQ, Ken Darby	Date	10/26/07
Resident Engineer's Signature:	Gary Pursell	Date	11/7/07

ESTIMATE OF COST

	THIS REQUEST	TOTAL TO DATE
ITEMS	$0.00	$0.00
FORCE ACCOUNT	$150,000.00	$150,000.00
AGREED PRICE	$0.00	$0.00
ADJUSTMENT	$0.00	$0.00
TOTAL	$150,000.00	$150,000.00

FEDERAL PARTICIPATION

☐ PARTICIPATING ☐ PARTICIPATING IN PART ☑ NONE
☐ NON-PARTICIPATING (MAINTENANCE) ☐ NON-PARTICIPATING

FEDERAL SEGREGATION (if more than one Funding Source or P.I.P. type)
☑ CCO FUNDED PER CONTRACT ☐ CCO FUNDED AS FOLLOWS

FEDERAL FUNDING SOURCE	PERCENT

ADA Notice: For individuals with sensory disabilities, this document is available in alternate formats. For information call: (916) 654-6410 or TDD (916) 654-3880 or write Records and Forms Management, 1120 N Street, MS-89, Sacramento, CA 95814.

TELECOPY

California Department of Transportation

CONSTRUCTION DIVISION

TO: District 4 CCO Desk

Date: 10/26/2007

Contract No.: 4 - 0120F4

Road: SF-80-13.2/13.9

FED. No.: NONE

To: SARTIPI - 04

Attention: 04 - SARWARY

HQ Direction: TO ISSUE AND APPROVE

CCO No. 046 **Sup. No.** 0 **Rev. No.** 0

Per Your Submittal Dated: 10/26/2007 **CCO Category Code:** C - H - S - A

PROVIDES FOR RESOLVING DIFFERENCES BETWEEN THE CONTRACT SPECIAL PROVISION REQUIREMENTS AND THE SOLE SOURCE AGREEMENT CONCERNING THE HIGH STRENGTH PRESTRESSING RODS (75 MM) SUPPLIED BY MACALLOY LIMITED. ALSO PROVIDES FOR RISK MITIGATION IN THE FORM OF SUPPLY OF 28 ADDITIONAL ASSEMBLIES TO MINIMIZE POTENTIAL PROJECT SCHEDULE DELAYS. IN ADDITION, REQUIRES ANCHOR CAPS TO PROTECT THE RODS AND PROVIDES FOR ADDITIONAL JACKING COSTS.

ISSUE AND APPROVE IS CONDITIONAL ON THE FOLLOWING:

1. OBTAINING THE PROJECT ENGINEER'S SIGNATURE ON THE SPECIFICATION CHANGE AND SO NOTING ON THE CCO MEMO.

2. RESOLVING THE DIFFERENCE BETWEEN THE NUMBER OF ADDITIONAL RODS LISTED IN THE CCO (26) AND MEMO (28).

THE TOTAL COST FOR THIS CHANGE IS SHOWN AS $150,000.00 WITH NO TIME ADJUSTMENT.

Items:	$0.00
Force Account:	$150,000.00
Agreed Price:	$0.00
Adj. of Comp.	$0.00
Total:	**$150,000.00**
Time:	**(NONE)**

ELIZABETH DOOHER,
Acting Assistant Division Chief, by:

Ken Darby

Ken Darby

Division of Construction
1120 "N" Street, MS-44, Sacramento, CA 95814
Fax Number: (916) 654-5735
To Confirm Transmission, Call (916) 654-5259

4) The sole source agreement between Macalloy and Caltrans specifically excluded required local insurance policies, such as California Workmen's Compensation Insurance. However, the Special Provisions did not indicate such insurance for manufacturer's representative was excluded from the prices quoted by Macalloy. Therefore, the cost of such insurance is considered extra work and will be compensated for accordingly.

5) As part of the agreement with Macalloy, jacks are to be provided to tension the high strength prestressing rods. Because the jacks are designed to fit the unique threads of the Macalloy rods and fit into the confined space, jacks are not readily available from any other suppliers. The rods are scheduled to be installed late in 2007; however, the rods are not scheduled to be stressed with the jacks until 2010, during installation of the Hinge K pipe beam. To assure the availability of jacks when needed in 2010, and avoid potential project schedule delays, the Engineer may order the delivering of the jacks sometime in advance of the need in 2010. If so, the jacks will be rented, leased, or purchased with a buyback provisions as agreed upon with Macalloy, and the cost of securing the jacks early will be paid for at force account.

Payment for this work will be at Extra Work at Force Account for an estimated cost of $150,000.00, which can be financed from the contingency fund. A detailed cost analysis is on file.

No adjustment of contract time is warranted, as this change does not affect the controlling operation.

Design and Maintenance concurrences are not required for this change order.

CONCURRED BY:			
Construction Engineer:	Res. Eng., Gary Pursell, Sup. TE	Date	10/1/07
Bridge Engineer:	Struct Rep, Rick Morrow, Sup TE	Date	10/1/07
Project Engineer:		Date	
Project Manager:	Proj Manager, Ken Terpstra	Date	10/5/07
FHWA Rep.:		Date	
Environmental:		Date	
Other (specify):	PCE, Mike Forner, Prin TE	Date	10/2/07
Other (specify):	HQ, Patrick Treacy	Date	10/2/07
District Prior Approval By:		Date	
HQ (Issue Approve) By:		Date	
Resident Engineer's Signature:	Gary Pursell	Date	10/16/07

ESTIMATE OF COST

	THIS REQUEST	TOTAL TO DATE
ITEMS	$0.00	$0.00
FORCE ACCOUNT	$150,000.00	$150,000.00
AGREED PRICE	$0.00	$0.00
ADJUSTMENT	$0.00	$0.00
TOTAL	$150,000.00	$150,000.00

FEDERAL PARTICIPATION

☐ PARTICIPATING ☐ PARTICIPATING IN PART ☑ NONE
☐ NON-PARTICIPATING (MAINTENANCE) ☐ NON-PARTICIPATING

FEDERAL SEGREGATION (if more than one Funding Source or P.I.P. type)
☑ CCO FUNDED PER CONTRACT ☐ CCO FUNDED AS FOLLOWS

FEDERAL FUNDING SOURCE	PERCENT

ADA Notice: For individuals with sensory disabilities, this document is available in alternate formats. For information call: (916) 654-6410 or TDD (916) 654-3880 or write Records and Forms Management, 1120 N Street, MS-89, Sacramento, CA 95814.

STATE OF CALIFORNIA - DEPARTMENT OF TRANSPORTATION

CONTRACT CHANGE ORDER

Change Requested by: Engineer

CCO: 46	Suppl. No. 0	Contract No. 04 - 0120F4	Road SF-80-13.2/13.9	FED. AID LOC.:

To: **AMERICAN BRIDGE/FLUOR ENTERPRISES INC A JOINT VENT**

You are directed to make the following changes from the plans and specifications or do the following described work not included in the plans and specifications for this contract. ***NOTE: This change order is not effective until approved by the Engineer.***

Description of work to be done, estimate of quantities and prices to be paid. (Segregate between additional work at contract price, agreed price and force account.) Unless otherwise stated, rates for rental of equipment cover only such time as equipment is actually used and no allowance will be made for idle time. This last percentage shown is the net accumulated increase or decrease from the original quantity in the Engineer's Estimate.

Extra Work at Force Account:

Provide additional materials, equipment, labor and services for Item 36, High Strength Prestressing Rod (75MM), which are not otherwise provided for in the plans and Special Provisions, as directed by the Engineer. Additional materials, equipment, labor, and services will include, but will not be limited to:

1. An additional 26-each High Strength Prestressing Rod assemblies, including Denso tape coating and transportation to the job site.
2. 304-each Aluminum Anchor Caps.
3. Support labor and equipment, not otherwise provided by the manufacturer, required to complete the work of stressing High Strength Prestressing Rods. Support labor and equipment shall be agreed upon by the Engineer in advance of stressing operations.
4. Required insurance policies, such as California Workmen's Compensation Insurance, not otherwise provided by the High Strength Prestressing Rod vendor.
5. Securing the availability of stressing jack(s) in advance of field operations as directed by the Engineer.

Additional materials, equipment, labor, and services to be paid through CCO 46 will not include:

1. Manufacturer's technical representative or stressing services requested by the Contractor.
2. Transportation and accommodations for Manufacturer's representatives.
3. Jacks and support equipment provided by the manufacturer.
4. Shipping for jacks and support equipment provided by the manufacturer.
5. Variances in the GBP/USD exchange rate, except the actual exchange rate will be applied to payments made for additional materials, equipment, labor, and services ordered pursuant to CCO 46.

Payments authorized by the Engineer, as necessary, will be paid in accordance with the provisions of Section 4-1.03D, "Extra Work" of the Standard Specifications and Section 5-1.24, "Force Account Payment" of the Special Provisions.

Estimated cost of Extra Work at Force Account $150,000.00

Estimated Cost: **Increase** ☑ **Decrease** ☐ **$150,000.00**

By reason of this order the time of completion will be adjusted as follows: 0 days

Submitted by

Signature	Resident Engineer	Date
Gary Pursell	Gary Pursell, P.E., Sup.T.E.	10/4/07

Approval Recommended by

Signature	Supervising Bridge Engineer	Date
R Morrow	Richard Morrow, P.E., Sup. BE	10/4/07

Engineer Approval by

Signature	Supervising Transportation Engineer	Date
Gary Pursell	Gary Pursell, P.E., Sup. TE	10/16/07

We the undersigned contractor, have given careful consideration to the change proposed and agree, if this proposal is approved, that we will provide all equipment, furnish the materials, except as may otherwise be noted above, and perform all services necessary for the work above specified, and will accept as full payment therefor the prices shown above.

NOTE: If you, the contractor, do not sign acceptance of this order, your attention is directed to the requirements of the specifications as to proceeding with the ordered work and filing a written protest within the time therein specified.

Contractor Acceptance by

Signature	(Print name and title)	Date
Michael K. Flowers	Michael O. Flowers Project Director	10.8.07

STATE OF CALIFORNIA - DEPARTMENT OF TRANSPORTATION

CONTRACT CHANGE ORDER

Change Requested by: Engineer

CCO: 46 **Suppl. No. 1** **Contract No. 04 – 0120F4** **Road** SF-80-13.2/13.9 **FED. AID LOC.:**

To: **AMERICAN BRIDGE/FLUOR ENTERPRISES INC A JOINT VENTURE**

You are directed to make the following changes from the plans and specifications or do the following described work not included in the plans and specifications for this contract. ***NOTE: This change order is not effective until approved by the Engineer.***

Description of work to be done, estimate of quantities and prices to be paid. (Segregate between additional work at contract price, agreed price and force account.) Unless otherwise stated, rates for rental of equipment cover only such time as equipment is actually used and no allowance will be made for idle time. This last percentage shown is the net accumulated increase or decrease from the original quantity in the Engineer's Estimate.

Extra Work at Force Account:

Provide additional funds.

Labor, equipment and material authorized by the Engineer, as necessary, will be paid in accordance with the provisions of Section 4-1.03D, "Extra Work" of the Standard Specifications and Section 5-1.24, "Force Account Payment" of the Special Provisions.

Estimated Cost of Extra Work at Force Account.....$45,000.00

Estimated Cost: Increase ☒ Decrease ☐ $45,000.00

By reason of this order the time of completion will be adjusted as follows: 0 Days

Submitted by

Signature Kannu Balan **Resident Engineer** Kannu Balan, Senior T.E. **Date** 8/15/11

Approval Recommended by

Signature Brian Boal **Supervising Bridge Engineer** Brian Boal, Actg. Sup. B.E. **Date** 15 AUG 2011

Engineer Approval by

Signature Brian Boal FOR SIEGENTHALER **Principal Transportation Engineer** Peter Siegenthaler, Prin. T.E. **Date** 19 AUG 2011

We the undersigned contractor, have given careful consideration to the change proposed and agree, if this proposal is approved, that we will provide all equipment, furnish the materials, except as otherwise be noted above, and perform all services necessary for the work above specified, and will accept as full payment therefor the prices shown above.

NOTE: If you, the contractor, do not sign acceptance of this order, your attention is directed to the requirements of the specifications as to proceeding with the ordered work and filing a written protest within the time therein specified.

Contractor Acceptance by

Signature (Print name and title) BRIAN A. PETERSEN - PROJECT DIRECTOR **Date** 16AUG11

STATE OF CALIFORNIA - DEPARTMENT OF TRANSPORTATION

CONTRACT CHANGE ORDER MEMORANDUM

DATE: 8/11/2011 Page 1 of 1

TO: Pete Siegenthaler, Prin TE /	FILE: **E.A.** 04 - 0120F4
FROM: Kannu Balan, Senior TE	**CO-RTE-PM** SF-80-13.2/13.9
	FED. NO.
CCO#: **46** SUPPLEMENT#: **1** Category Code: **CHSA**	CONTINGENCY BALANCE (incl. this change) **$166,545,773.11**
COST: **$45,000.00** INCREASE ☑ DECREASE ☐	HEADQUARTERS APPROVAL REQUIRED? ☐ YES ☑ NO
SUPPLEMENTAL FUNDS PROVIDED: **$0.00**	IS THIS REQUEST IN ACCORDANCE WITH ENVIRONMENTAL DOCUMENTS? ☑ YES ☐ NO
CCO DESCRIPTION: Additional Funds Macalloy Bars	**PROJECT DESCRIPTION:** CONSTRUCT SELF-ANCHORED SUSPENSION BRIDGE

Original Contract Time:	Time Adj. This Change:	Previously Approved CCO Time Adjustments:	Percentage Time Adjusted: (including this change)	Total # of Unreconciled Deferred Time CCO(s): (including this change)
2490 Day(s)	**0** Day(s)	**501** Day(s)	**20** %	**3**

THIS CHANGE ORDER PROVIDES FOR:

Providing additional funds for material, equipment, labor and services for Item 36, High Strength Prestressing Rod (75 mm) as specified in CCO 46 Supplement 0.

Additional force account will be issued to cover the remainder of the expected cost for the high strength prestressing rods.

This work will be paid as extra work at force account and the Department estimates it to total $45,000.00, which can be financed from the contingency fund. A detailed cost analysis is on file. The cumulative total of CCO 46S0 and CCO 46S1 is $195,000.00, which can be financed from the contingency fund.

No time adjustment is warranted as this change order does not affect the controlling operation.

This change order has concurrence from Brian Boal (Supervising BE) and Wenyi Long (Design Oversight).

CONCURRED BY:		
Construction Engineer:		Date
Bridge Engineer:	Brian Boal, Sup BE	Date 10/1/07
Project Engineer:	CT Oversight, Wenyi Long, P.E.	Date 10/30/07
Project Manager:		Date
FHWA Rep.:		Date
Environmental:		Date
Other (specify):		Date
Other (specify):		Date
District Prior Approval By:		Date
HQ (Issue Approve) By:		Date
Resident Engineer's Signature:		Date 8-15-11

ESTIMATE OF COST

	THIS REQUEST	TOTAL TO DATE
ITEMS	$0.00	$0.00
FORCE ACCOUNT	$45,000.00	$195,000.00
AGREED PRICE	$0.00	$0.00
ADJUSTMENT	$0.00	$0.00
TOTAL	$45,000.00	$195,000.00

FEDERAL PARTICIPATION

☐ PARTICIPATING ☐ PARTICIPATING IN PART ☑ NONE
☐ NON-PARTICIPATING (MAINTENANCE) ☐ NON-PARTICIPATING

FEDERAL SEGREGATION (if more than one Funding Source or P.I.P. type)
☐ CCO FUNDED PER CONTRACT ☐ CCO FUNDED AS FOLLOWS

FEDERAL FUNDING SOURCE PERCENT

ADA Notice: For individuals with sensory disabilities, this document is available in alternate formats. For information call: (916) 654-6410 or TDD (916) 654-3880 or write Records and Forms Management, 1120 N Street, MS-89, Sacramento, CA 95814.

STATE OF CALIFORNIA - DEPARTMENT OF TRANSPORTATION

CONTRACT CHANGE ORDER

Change Requested by: Contractor

CCO: 47	Suppl. No. 1	Contract No. 04 - 0120F4	Road SF-80-13.2/13.9	FED. AID LOC.:

To: **AMERICAN BRIDGE/FLUOR ENTERPRISES INC A JOINT VENT**

You are directed to make the following changes from the plans and specifications or do the following described work not included in the plans and specifications for this contract. ***NOTE: This change order is not effective until approved by the Engineer.***

Description of work to be done, estimate of quantities and prices to be paid. (Segregate between additional work at contract price, agreed price and force account.) Unless otherwise stated, rates for rental of equipment cover only such time as equipment is actually used and no allowance will be made for idle time. This last percentage shown is the net accumulated increase or decrease from the original quantity in the Engineer's Estimate.

Adjustment of Compensation at Lump Sum:

Eliminate Demonstration Pour for the Pier E2 cross beam required under Section 10-1.45, "CONCRETE STRUCTURES," subsection "MASS CONCRETE," subsection "Demonstration Pours" of the contract Special Provisions.

For this change, the Department shall receive a credit of $200,000.00. This sum constitutes full compensation, including all markups, for this change.

Adjustment of Compensation at Lump Sum .....($200,000.00)

Estimated Cost: Increase ☐ Decrease ☑ **($200,000.00)**

By reason of this order the time of completion will be adjusted as follows: 0 days

Submitted by

Signature	Resident Engineer	Date
for Gil Klebanov	Gil Klebanov for Gary Pursell, R.E.	21 Aug 2008

Approval Recommended by

Signature	Supervising Bridge Engineer	Date
	Richard Morrow, P.E., Sup. BE	8/21/08

Engineer Approval by

Signature	Supervising Transportation Engineer	Date
	Gary Pursell, P.E., Sup. TE	12/3/08

We the undersigned contractor, have given careful consideration to the change proposed and agree, if this proposal is approved, that we will provide all equipment, furnish the materials, except as may otherwise be noted above, and perform all services necessary for the work above specified, and will accept as full payment therefor the prices shown above.

NOTE: If you, the contractor, do not sign acceptance of this order, your attention is directed to the requirements of the specifications as to proceeding with the ordered work and filing a written protest within the time therein specified.

Contractor Acceptance by

Signature	(Print name and title)	Date
	Michael D. Flowers	12.2.08

CONTRACT CHANGE ORDER

Change Requested by: Engineer

CCO: 48 Suppl. No. 0 Contract No. 04 – 0120F4 Road SF-80-13.2/13.9 **FED. AID LOC.:**

To: **AMERICAN BRIDGE/FLUOR ENTERPRISES INC A JOINT VENTURE**

You are directed to make the following changes from the plans and specifications or do the following described work not included in the plans and specifications for this contract. ***NOTE: This change order is not effective until approved by the Engineer.***

Description of work to be done, estimate of quantities and prices to be paid. (Segregate between additional work at contract price, agreed price and force account.) Unless otherwise stated, rates for rental of equipment cover only such time as equipment is actually used and no allowance will be made for idle time. This last percentage shown is the net accumulated increase or decrease from the original quantity in the Engineer's Estimate.

Modify the Tower Steel Structure as follows:

The following revised plan sheet details the changes addressed in this change order: 575R1 (of 1204) as shown on sheet 3 of this change order.

This change order resolves the costs associated with Contractor Request For Information (RFI) numbers 761, 935R0, 935R1, 935R2, 935R3, 935R4, 1186, 1614, and 2169 with respect to changes listed below.

Adjustment of Compensation at Lump Sum:

ITEM 1.

Provide polytetrafluoro-ethylene (PTFE) film at the interface between the seal angles and the top and bottom Tower façade plates. Bolts at the PTFE connections are to be snug-tight.

Adjustment of Compensation at Lump Sum.....$531,137.00

ITEM 2.

In Special Provisions Section 10-1.59 "STEEL STRUCTURES," subsection "FABRICATION," subsection "Bolted Connections," add bullet "Q" as follows:

"Q. At the option of the Contractor, "Extra Thick" style washers may be used in lieu of standard thickness "Circular" style washers. "Extra Thick" style washers shall conform to all the requirements of ASTM F 436M, except the thickness shall be accordance with ASTM F 436."

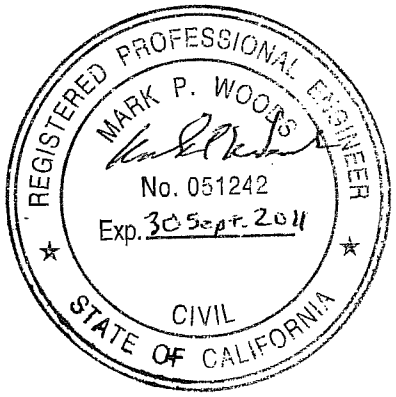

Adjustment of Compensation at Lump Sum.....$0.00

CONTRACT CHANGE ORDER

Change Requested by: Engineer

CCO: 48	Suppl. No. 0	Contract No. 04 – 0120F4	Road SF-80-13.2/13.9	FED. AID LOC.:

CHANGE ORDER COST SUMMARY

ITEM 1. Adjustment of Compensation at Lump Sum.....$531,137.00
ITEM 2. Adjustment of Compensation at Lump Sum..... $0.00

Total net pay for this change order.....$531,137.00

This sum constitutes full and complete compensation for furnishing all labor, material, tools and incidentals including all markups by reason of this change.

Estimated Cost: Increase ☒ Decrease ☐ **$531,137.00**

By reason of this order the time of completion will be adjusted as follows: 0 Days

Submitted by

Signature	Resident Engineer	Date
	Mark Woods, Senior B.E.	10 Aug 2010

Approval Recommended by

Signature	Supervising Bridge Engineer	Date
for	Rick Morrow, Sup. B.E.	8/10/10

Engineer Approval by

Signature	Supervising Transportation Engineer	Date
	Gary Pursell, Sup. T.E.	8/13/10

We the undersigned contractor, have given careful consideration to the change proposed and agree, if this proposal is approved, that we will provide all equipment, furnish the materials, except as otherwise be noted above, and perform all services necessary for the work above specified, and will accept as full payment therefor the prices shown above.

NOTE: If you, the contractor, do not sign acceptance of this order, your attention is directed to the requirements of the specifications as to proceeding with the ordered work and filing a written protest within the time therein specified.

Contractor Acceptance by

Signature	(Print name and title)	Date
	Michael D. Flowers Project Director	8-12-10

STATE OF CALIFORNIA - DEPARTMENT OF TRANSPORTATION

CONTRACT CHANGE ORDER MEMORANDUM

TO: Pete Siegenthaler, Prin TE /	FILE: **E.A.** 04 - 0120F4
FROM: Gary Pursell, Sup. TE	**CO-RTE-PM** SF-80-13.2/13.9
	FED. NO.
CCO#: **48** SUPPLEMENT#: **0** Category Code: **CHSA**	CONTINGENCY BALANCE (incl. this change) **$48,100,323.40**
COST: **$531,137.00** INCREASE ☑ DECREASE ☐	HEADQUARTERS APPROVAL REQUIRED? ☑ YES ☐ NO
SUPPLEMENTAL FUNDS PROVIDED: **$0.00**	IS THIS REQUEST IN ACCORDANCE WITH ENVIRONMENTAL DOCUMENTS? ☑ YES ☐ NO
CCO DESCRIPTION: Tower Strut Façade	**PROJECT DESCRIPTION:** CONSTRUCT SELF-ANCHORED SUSPENSION BRIDGE

Original Contract Time:	Time Adj. This Change:	Previously Approved CCO Time Adjustments:	Percentage Time Adjusted: (including this change)	Total # of Unreconciled Deferred Time CCO(s): (including this change)
2490 Day(s)	**0** Day(s)	**227** Day(s)	**9** %	**6**

THIS CHANGE ORDER PROVIDES FOR:

Providing polytetrafluoro-ethylene (PTFE) film at the interface between the seal angles and the top and bottom Tower façade plates. Installing bolts at the PTFE connections that are snug-tight.

In Special Provisions Section 10-1.59 "STEEL STRUCTURES," subsection "FABRICATION," subsection "Bolted Connections," add bullet "Q" as follows:

"Q. At the option of the Contractor, Extra Thick style washers may be used in lieu of standard thickness Circular style washers. Extra Thick style washers shall conform to all the requirements of ASTM F 436M, except the thickness shall be accordance with ASTM F 436."

The Designer's original intent was to have PTFE at the Tower façade plates, but it was not reflected in the Contract documents. Since the F436M specifications do not provide a metric dimension for "double thick"washers, Special Provisions is revised to address this issue.

This change order resolves the costs associated with Contractor Request For Information (RFI) numbers 761, 935R0, 935R1, 935R2, 935R3, 935R4, 1186, 1614, and 2169 with respect to changes listed above.

The total cost of this change order is $531,137.00, which can be financed from the contingency fund. A detailed cost analysis is on file.

No time adjustment is warranted as this change order does not affect the controlling operation.

This change order has concurrence from Gary Pursell (Resident Engineer), Rick Morrow (Supervising Bridge Engineer), Peter siegenthaler (Principal TE), Ken Terpstra (Project Manager), Wenyi Long (Design Oversight), Bill Zanetich (Structure Maintenance) and Rich Foley (HQ Oversight).

ADA Notice: For individuals with sensory disabilities, this document is available in alternate formats. For information call: (916) 654-6410 or TDD (916) 654-3880 or write Records and Forms Management, 1120 N Street, MS-89, Sacramento, CA 95814.

CONCURRED BY:			
Construction Engineer:	Res. Eng., Gary Pursell, Sup. TE	Date	8/17/07
Bridge Engineer:	Struct Rep, Rick Morrow, Sup TE	Date	8/16/07
Project Engineer:	CT Oversight, Wenyi Long, P.E.	Date	8/24/07
Project Manager:	Proj Manager, Ken Terpstra	Date	8/25/07
FHWA Rep.:	HQ, Rich Foley	Date	8/10/10
Environmental:		Date	
Other (specify):	PCE, Pete Siegenthaler, Prin TE	Date	8/20/07
Other (specify):	Struct Maint, Bill Zanetich, P.E.	Date	8/29/07
District Prior Approval By:		Date	
HQ (Issue Approve) By:		Date	
Resident Engineer's Signature:		Date	8/10/10

ESTIMATE OF COST

	THIS REQUEST	TOTAL TO DATE
ITEMS	$0.00	$0.00
FORCE ACCOUNT	$0.00	$0.00
AGREED PRICE	$0.00	$0.00
ADJUSTMENT	$531,137.00	$531,137.00
TOTAL	$531,137.00	$531,137.00

FEDERAL PARTICIPATION

☐ PARTICIPATING ☐ PARTICIPATING IN PART ☐ NONE
☐ NON-PARTICIPATING (MAINTENANCE) ☐ NON-PARTICIPATING

FEDERAL SEGREGATION (if more than one Funding Source or P.I.P. type)
☐ CCO FUNDED PER CONTRACT ☐ CCO FUNDED AS FOLLOWS

FEDERAL FUNDING SOURCE	PERCENT

ADA Notice: For individuals with sensory disabilities, this document is available in alternate formats. For information call: (916) 654-6410 or TDD (916) 654-3880 or write Records and Forms Management, 1120 N Street, MS-89, Sacramento, CA 95814.

STATE OF CALIFORNIA - DEPARTMENT OF TRANSPORTATION

CONTRACT CHANGE ORDER

Change Requested by: Engineer

CCO: 48 **Suppl. No. 1** **Contract No. 04 – 0120F4** **Road** SF-80-13.2/13.9 **FED. AID LOC.:**

To: **AMERICAN BRIDGE/FLUOR ENTERPRISES INC A JOINT VENTURE**

You are directed to make the following changes from the plans and specifications or do the following described work not included in the plans and specifications for this contract. ***NOTE: This change order is not effective until approved by the Engineer.***

Description of work to be done, estimate of quantities and prices to be paid. (Segregate between additional work at contract price, agreed price and force account.) Unless otherwise stated, rates for rental of equipment cover only such time as equipment is actually used and no allowance will be made for idle time. This last percentage shown is the net accumulated increase or decrease from the original quantity in the Engineer's Estimate.

Adjustment of Compensation at Lump Sum:

Trim the polytetrafluoro-ethylene (PTFE) film on the Tower Façades where it extends beyond the angles and tabs. Cut back PTFE flush with the edge of the tab or angle and remove necessary adhesive so that the caulk and paint can adhere to a clean surface.

Cleaning of the surfaces where the PTFE is removed shall be performed in accordance with Special Provisions Section 10-1.69 "Clean and Paint Structural Steel."

For this work, the Contractor will receive a lump sum price of $40,680.00. This sum constitutes full and complete compensation for furnishing all labor, material, tools and incidentals including all markups by reason of this change.

Adjustment of Compensation at Lump Sum.....$40,680.00

Estimated Cost: Increase ☒ Decrease ☐ $40,680.00

By reason of this order the time of completion will be adjusted as follows: 0 days

Submitted by

Signature Kannu Bala **Resident Engineer** Kannu Balan, Senior T.E. **Date** 7-28-11

Approval Recommended by

Signature [signature] **Supervising Bridge Engineer** Richard Morrow, Sup. B.E. **Date** 7/28/11

Engineer Approval by

Signature Pete Siegenthaler **Principal Transportation Engineer** Peter Siegenthaler, Prin. T.E. **Date** 8/2/2011

We the undersigned contractor, have given careful consideration to the change proposed and agree, if this proposal is approved, that we will provide all equipment, furnish the materials, except as otherwise be noted above, and perform all services necessary for the work above specified, and will accept as full payment therefor the prices shown above.

NOTE: If you, the contractor, do not sign acceptance of this order, your attention is directed to the requirements of the specifications as to proceeding with the ordered work and filing a written protest within the time therein specified.

Contractor Acceptance by

Signature [signature] (Print name and title) BRIAN A. PETERSEN - PROJECT DIRECTOR **Date** 01 AUG 11

STATE OF CALIFORNIA - DEPARTMENT OF TRANSPORTATION

CONTRACT CHANGE ORDER MEMORANDUM

TO: Pete Siegenthaler, Prin TE /	FILE: **E.A.** 04 - 0120F4
FROM: Gary Pursell, Sup. TE	**CO-RTE-PM** SF-80-13.2/13.9
	FED. NO.
CCO#: **48** SUPPLEMENT#: **0** Category Code: **CHSA**	CONTINGENCY BALANCE (incl. this change) **$48,100,323.40**
COST: **$531,137.00** INCREASE ☑ DECREASE ☐	HEADQUARTERS APPROVAL REQUIRED? ☑ YES ☐ NO
SUPPLEMENTAL FUNDS PROVIDED: **$0.00**	IS THIS REQUEST IN ACCORDANCE WITH ENVIRONMENTAL DOCUMENTS? ☑ YES ☐ NO
CCO DESCRIPTION: Tower Strut Façade	**PROJECT DESCRIPTION:** CONSTRUCT SELF-ANCHORED SUSPENSION BRIDGE

Original Contract Time:	Time Adj. This Change:	Previously Approved CCO Time Adjustments:	Percentage Time Adjusted: (including this change)	Total # of Unreconciled Deferred Time CCO(s): (including this change)
2490 Day(s)	**0** Day(s)	**227** Day(s)	**9** %	**6**

THIS CHANGE ORDER PROVIDES FOR:

Providing polytetrafluoro-ethylene (PTFE) film at the interface between the seal angles and the top and bottom Tower façade plates. Installing bolts at the PTFE connections that are snug-tight.

In Special Provisions Section 10-1.59 "STEEL STRUCTURES," subsection "FABRICATION," subsection "Bolted Connections," add bullet "Q" as follows:

"Q. At the option of the Contractor, Extra Thick style washers may be used in lieu of standard thickness Circular style washers. Extra Thick style washers shall conform to all the requirements of ASTM F 436M, except the thickness shall be accordance with ASTM F 436."

The Designer's original intent was to have PTFE at the Tower façade plates, but it was not reflected in the Contract documents. Since the F436M specifications do not provide a metric dimension for "double thick"washers, Special Provisions is revised to address this issue.

This change order resolves the costs associated with Contractor Request For Information (RFI) numbers 761, 935R0, 935R1, 935R2, 935R3, 935R4, 1186, 1614, and 2169 with respect to changes listed above.

The total cost of this change order is $531,137.00, which can be financed from the contingency fund. A detailed cost analysis is on file.

No time adjustment is warranted as this change order does not affect the controlling operation.

This change order has concurrence from Gary Pursell (Resident Engineer), Rick Morrow (Supervising Bridge Engineer), Peter siegenthaler (Principal TE), Ken Terpstra (Project Manager), Wenyi Long (Design Oversight), Bill Zanetich (Structure Maintenance) and Rich Foley (HQ Oversight).

ADA Notice: For individuals with sensory disabilities, this document is available in alternate formats. For information call: (916) 654-6410 or TDD (916) 654-3880 or write Records and Forms Management, 1120 N Street, MS-89, Sacramento, CA 95814.

CONCURRED BY:			
Construction Engineer:	Res. Eng., Gary Pursell, Sup. TE	Date	8/17/07
Bridge Engineer:	Struct Rep, Rick Morrow, Sup TE	Date	8/16/07
Project Engineer:	CT Oversight, Wenyi Long, P.E.	Date	8/24/07
Project Manager:	Proj Manager, Ken Terpstra	Date	8/25/07
FHWA Rep.:	HQ, Rich Foley	Date	8/10/10
Environmental:		Date	
Other (specify):	PCE, Pete Siegenthaler, Prin TE	Date	8/20/07
Other (specify):	Struct Maint, Bill Zanetich, P.E.	Date	8/29/07
District Prior Approval By:		Date	
HQ (Issue Approve) By:		Date	
Resident Engineer's Signature:		Date	8/10/10

ESTIMATE OF COST

	THIS REQUEST	TOTAL TO DATE
ITEMS	$0.00	$0.00
FORCE ACCOUNT	$0.00	$0.00
AGREED PRICE	$0.00	$0.00
ADJUSTMENT	$531,137.00	$531,137.00
TOTAL	$531,137.00	$531,137.00

FEDERAL PARTICIPATION

☐ PARTICIPATING ☐ PARTICIPATING IN PART ☐ NONE
☐ NON-PARTICIPATING (MAINTENANCE) ☐ NON-PARTICIPATING

FEDERAL SEGREGATION (if more than one Funding Source or P.I.P. type)
☐ CCO FUNDED PER CONTRACT ☐ CCO FUNDED AS FOLLOWS

FEDERAL FUNDING SOURCE	PERCENT

ADA Notice: For individuals with sensory disabilities, this document is available in alternate formats. For information call: (916) 654-6410 or TDD (916) 654-3880 or write Records and Forms Management, 1120 N Street, MS-89, Sacramento, CA 95814.

STATE OF CALIFORNIA - DEPARTMENT OF TRANSPORTATION

CONTRACT CHANGE ORDER

Change Requested by: Engineer

CCO 49	Suppl. No. 0	Contract No. 04 - 0120F4	Road SF-80-13.2/13.9	FED. AID LOC.:

To: **AMERICAN BRIDGE/FLUOR ENTERPRISES INC A JOINT VENT**

You are directed to make the following changes from the plans and specifications or do the following described work not included in the plans and specifications for this contract. ***NOTE: This change order is not effective until approved by the Engineer.***

Description of work to be done, estimate of quantities and prices to be paid. (Segregate between additional work at contract price, agreed price and force account.) Unless otherwise stated, rates for rental of equipment cover only such time as equipment is actually used and no allowance will be made for idle time. This last percentage shown is the net accumulated increase or decrease from the original quantity in the Engineer's Estimate.

Extra Work at Force Account:

Provide transportation and transportation related expenses for the Engineer in the vicinity of Shanghai, China, and at fabrication facilities as directed by the Engineer. Transportation shall include, but not be limited to, the following:

1. Shuttle and other transportation services to/from the Engineer's assembly point and the port facility or fabrication facilities located in and around Shanghai, China.
2. Transportation services and expenses at fabricator's facilities.
3. Supplemental accommodations required due to the lack of available transportation, until such time transportation becomes available as deemed necessary by the Engineer.
4. Applicable insurance and incidentals related to transportation services ordered by this change order.

Transportation and transportation expenses shall be provided for official use only by the State of California and its officials and agents in connection with execution of Contract 04-0120F4.

Labor, equipment and material authorized by the Engineer, as necessary, will be paid in accordance with the provisions of Section 4-1.03D, "Extra Work" of the Standard Specifications and Section 5-1.24, "Force Account Payment" of the Special Provisions.

Estimated cost of Extra Work at Force Account $200,000.00

Estimated Cost: Increase ☑ Decrease ☐ **$200,000.00**

By reason of this order the time of completion will be adjusted as follows: 0 days

Submitted by

Signature	Resident Engineer	Date
Gary Pursell	Gary Pursell, P.E., Sup.T.E.	8/2/07

Approval Recommended by

Signature	Supervising Bridge Engineer	Date
	Richard Morrow, P.E., Sup. BE	9/10/07

Engineer Approval by

Signature	Supervising Transportation Engineer	Date
Gary Pursell	Gary Pursell, P.E., Sup. TE	9/10/07

We the undersigned contractor, have given careful consideration to the change proposed and agree, if this proposal is approved, that we will provide all equipment, furnish the materials, except as may otherwise be noted above, and perform all services necessary for the work above specified, and will accept as full payment therefor the prices shown above.

NOTE: If you, the contractor, do not sign acceptance of this order, your attention is directed to the requirements of the specifications as to proceeding with the ordered work and filing a written protest within the time therein specified.

Contractor Acceptance by

Signature	(Print name and title)	Date
Michael D. Flowers	Michael D. Flowers Project Director	9-5-07

STATE OF CALIFORNIA - DEPARTMENT OF TRANSPORTATION

CONTRACT CHANGE ORDER MEMORANDUM

TO: Pete Siegenthaler, Prin. TE / Gary Pursell, P.E., Sup T.E.	FILE: **E.A.** 04 - 0120F4
	CO-RTE-PM SF-80-13.2/13.9
FROM: Gary Pursell, P.E., Sup.T.E.	**FED. NO.**
CCO#: **49** SUPPLEMENT#: **0** Category Code: **CXXX**	CONTINGENCY BALANCE (incl. this change) **$141,119,525.58**
COST: **$200,000.00** INCREASE ☑ DECREASE ☐	HEADQUARTERS APPROVAL REQUIRED? ☐ YES ☑ NO
SUPPLEMENTAL FUNDS PROVIDED: **$200,000.00**	IS THIS REQUEST IN ACCORDANCE WITH ENVIRONMENTAL DOCUMENTS? ☑ YES ☐ NO
CCO DESCRIPTION: Transportation for Engineer in China	**PROJECT DESCRIPTION:** CONSTRUCT SELF-ANCHORED SUSPENSION BRIDGE

Original Contract Time:	Time Adj. This Change:	Previously Approved CCO Time Adjustments:	Percentage Time Adjusted: (including this change)	Total # of Unreconciled Deferred Time CCO(s): (including this change)
2490 Day(s)	**0** Day(s)	**30** Day(s)	**1** %	**0**

THIS CHANGE ORDER PROVIDES FOR:

Providing transportation and other transportation related expenses for the Engineer in the vicinity of Shanghai, China, and at fabricator facilities as directed by the Engineer.

The contract provides for transportation for the Engineer at the project site, but not at overseas fabrication facilities where a major portion of the work is being performed. The Engineer requires transportation to/from assembly points near accommodations and within the fabrication facilities to inspect the material to be used on this project. Direct public transportation is not available to fabrication facilities and Department staff are not permitted to drive themselves while working in China. The most effective and efficient method to transport the Engineer's staff is by hired shuttle bus, with arrangements and schedules to be agreed upon in advance. It is anticipated this transportation will be required for the next three years during fabrication processes.

This work is not covered by any contract items. Therefore, payment for this work will be at Extra Work at Force Account for an estimated cost of $200,000.00. Supplemental funds in the amount of $215,200.00 have been allotted for "Additional Transportation for the Engineer".

No time adjustment is warranted, as this change order does not affect the controlling operation.

Design and Maintenance concurrence is not needed for this change order since this change is addressed in the supplemental funds.

The change order was approved by the Resident Engineer on 9/10/2007.

CONCURRED BY:			
Construction Engineer:	Res. Eng., Gary Pursell, Sup. TE	Date	8/2/07
Bridge Engineer:	Struct Rep, Rick Morrow, Sup TE	Date	8/2/07
Project Engineer:		Date	
Project Manager:	Proj Manager, Ken Terpstra	Date	8/15/07
FHWA Rep.:		Date	
Environmental:		Date	
Other (specify):		Date	
Other (specify):		Date	
District Prior Approval By:		Date	
HQ (Issue Approve) By:		Date	
Resident Engineer's Signature:	Gary Pursell	Date	9/10/07

ESTIMATE OF COST

	THIS REQUEST	TOTAL TO DATE
ITEMS	$0.00	$0.00
FORCE ACCOUNT	$200,000.00	$200,000.00
AGREED PRICE	$0.00	$0.00
ADJUSTMENT	$0.00	$0.00
TOTAL	$200,000.00	$200,000.00

FEDERAL PARTICIPATION

☐ PARTICIPATING ☐ PARTICIPATING IN PART ☐ NONE
☐ NON-PARTICIPATING (MAINTENANCE) ☐ NON-PARTICIPATING

FEDERAL SEGREGATION (if more than one Funding Source or P.I.P. type)
☑ CCO FUNDED PER CONTRACT ☐ CCO FUNDED AS FOLLOWS

FEDERAL FUNDING SOURCE	PERCENT

ADA Notice: For individuals with sensory disabilities, this document is available in alternate formats. For information call: (916) 654-6410 or TDD (916) 654-3880 or write Records and Forms Management, 1120 N Street, MS-89, Sacramento, CA 95814.

CONTRACT CHANGE ORDER

Change Requested by: Engineer

CCO 49	Suppl. No. 1	Contract No. 04 - 0120F4	Road SF-80-13.2/13.9	FED. AID LOC.:

To: **AMERICAN BRIDGE/FLUOR ENTERPRISES INC A JOINT VENT**

You are directed to make the following changes from the plans and specifications or do the following described work not included in the plans and specifications for this contract. ***NOTE: This change order is not effective until approved by the Engineer.***

Description of work to be done, estimate of quantities and prices to be paid. (Segregate between additional work at contract price, agreed price and force account.) Unless otherwise stated, rates for rental of equipment cover only such time as equipment is actually used and no allowance will be made for idle time. This last percentage shown is the net accumulated increase or decrease from the original quantity in the Engineer's Estimate.

Extra Work at Force Account:

Provide additional funds for transportation and other related facility support for the Engineer at fabrication facilities. This change also provides funds to furnish boat, boat operator and crew for after hours and other transportation related expenses as directed by the Engineer.

Labor, equipment and material authorized by the Engineer, as necessary, will be paid in accordance with the provisions of Section 4-1.03D, "Extra Work" of the Standard Specifications and Section 5-1.24, "Force Account Payment" of the Special Provisions.

Estimated cost of Extra Work at Force Account $500,000.00

Estimated Cost: Increase ☑ Decrease ☐ **$500,000.00**

By reason of this order the time of completion will be adjusted as follows: 0 days

Submitted by

Signature	Resident Engineer	Date
Gary Pursell	Gary Pursell, P.E., Sup.T.E.	10/29/08

Approval Recommended by

Signature	Supervising Bridge Engineer	Date
RC Morrow	Richard Morrow, Sup. BE	10/29/08

Engineer Approval by

Signature	Supervising Transportation Engineer	Date
P Siegenthal	Peter Siegenthaler, Prin. BE	12/2/08

We the undersigned contractor, have given careful consideration to the change proposed and agree, if this proposal is approved, that we will provide all equipment, furnish the materials, except as may otherwise be noted above, and perform all services necessary for the work above specified, and will accept as full payment therefor the prices shown above.

NOTE: If you, the contractor, do not sign acceptance of this order, your attention is directed to the requirements of the specifications as to proceeding with the ordered work and filing a written protest within the time therein specified.

Contractor Acceptance by

Signature	(Print name and title)	Date
Michael D. Flowers	Michael D. Flowers Project Director	11.24.08

STATE OF CALIFORNIA - DEPARTMENT OF TRANSPORTATION

CONTRACT CHANGE ORDER MEMORANDUM

TO: Mike Forner, Prin. TE / Gary Pursell, P.E., Sup T.E.	FILE: E.A. 04 - 0120F4
FROM: Gary Pursell, P.E., Sup.T.E.	CO-RTE-PM SF-80-13.2/13.9
	FED. NO.
CCO#: 49 SUPPLEMENT#: 1 Category Code: CXXX	CONTINGENCY BALANCE (incl. this change) $124,150,513.40
COST: $500,000.00 INCREASE ☑ DECREASE ☐	HEADQUARTERS APPROVAL REQUIRED? ☑ YES ☐ NO
SUPPLEMENTAL FUNDS PROVIDED: $15,200.00	IS THIS REQUEST IN ACCORDANCE WITH ENVIRONMENTAL DOCUMENTS? ☑ YES ☐ NO
CCO DESCRIPTION: Provide Additional Funds	**PROJECT DESCRIPTION:** CONSTRUCT SELF-ANCHORED SUSPENSION BRIDGE

Original Contract Time:	Time Adj. This Change:	Previously Approved CCO Time Adjustments:	Percentage Time Adjusted: (including this change)	Total # of Unreconciled Deferred Time CCO(s): (including this change)
2490 Day(s)	0 Day(s)	30 Day(s)	1 %	2

THIS CHANGE ORDER PROVIDES FOR:

Providing additional funds for transportation and other related facility support for the Engineer at fabrication facilities. This change also provides funds to furnish boat, boat operator and crew for after hours and other transportation related expenses as directed by the Engineer.

The contract does not provide for transportation and other related field office support for Department personnel at overseas fabrication facilities. The Department's staff requires transportation to/from assembly points near accommodations and within the fabrication facilities to inspect the material to be used on this project. This is required as public transportation is not available to the fabrication facility and the Department's staff is not permitted to drive themselves while working in China. The most effective and efficient method to transport the Engineer's staff is by dedicated shuttle bus, which will be paid at Extra Work at Force Account. Remote fabrication facilities provide facility support in order for Department personnel to perform there required duties. No other resources are available at these remote locations to provide this required facility support. Additional after hours Pier 7 boat service is also included in this change order to furnish boat, boat operator and crew as required under Special Provisions section 10-1.12, Transportation for the Engineer.

This work is not covered by any contract items. Therefore, payment for this work will be at Extra Work at Force Account for an estimated cost of $500,000.00 (Cumulative total of CCO 49 and this supplement is $700,000.00). A total of $215,200.00 is available from the supplemental funds for this work, the remaining balance of $484,800.00 will be financed from the contingency fund.

This cost increase is due to the unanticipated use of an additional shuttle bus for the Engineers in Shanghai, higher bus rates than initially estimated and additional insurance. Copies of the estimate are in the project files.

No time adjustment is warranted, as this change order does not affect the controlling operation.

This change order received concurrence from Gary Pursell (R.E.), Richard Morrow (Struct. Rep.), Peter Siegenthaler (Principal T.E.), Ken Terpstra (Project Manager), Patrick Treacy (HQ Rep), and Tony Anziano (TB Manager). Design and Maintenance concurrence is not needed for this change order.

The Resident Engineer requests approval of this Change Order.

ADA Notice: For individuals with sensory disabilities, this document is available in alternate formats. For information call: (916) 654-6410 or TDD (916) 654-3880 or write Records and Forms Management, 1120 N Street, MS-89, Sacramento, CA 95814.

CONTRACT CHANGE ORDER MEMORANDUM

CONCURRED BY:		
Construction Engineer:	Res. Eng., Gary Pursell, Sup. TE	Date 10/23/08
Bridge Engineer:	Struct Rep, Rick Morrow, Sup TE	Date 10/23/08
Project Engineer:		Date
Project Manager:	Proj Manager, Ken Terpstra	Date 10/28/08
FHWA Rep.:		Date
Environmental:		Date
Other (specify):	PCE, Pete Siegenthaler, Prin TE	Date 10/28/08
Other (specify):	HQ, Patrick Treacy	Date 10/28/08
District Prior Approval By:		Date
HQ (Issue Approve) By:		Date
Resident Engineer's Signature:		Date 10/31/08

ESTIMATE OF COST

	THIS REQUEST	TOTAL TO DATE
ITEMS	$0.00	$0.00
FORCE ACCOUNT	$500,000.00	$700,000.00
AGREED PRICE	$0.00	$0.00
ADJUSTMENT	$0.00	$0.00
TOTAL	$500,000.00	$700,000.00

FEDERAL PARTICIPATION

☐ PARTICIPATING ☐ PARTICIPATING IN PART ☑ NONE
☐ NON-PARTICIPATING (MAINTENANCE) ☐ NON-PARTICIPATING

FEDERAL SEGREGATION (if more than one Funding Source or P.I.P. type)
☐ CCO FUNDED PER CONTRACT ☐ CCO FUNDED AS FOLLOWS

FEDERAL FUNDING SOURCE	PERCENT

ADA Notice: For individuals with sensory disabilities, this document is available in alternate formats. For information call: (916) 654-6410 or TDD (916) 654-3880 or write Records and Forms Management, 1120 N Street, MS-89, Sacramento, CA 95814.

STATE OF CALIFORNIA - DEPARTMENT OF TRANSPORTATION

CONTRACT CHANGE ORDER

Change Requested by: Engineer

CCO: 49 **Suppl. No. 2** **Contract No. 04 – 0120F4** **Road** SF-80-13.2/13.9 **FED. AID LOC.:**

To: **AMERICAN BRIDGE/FLUOR ENTERPRISES INC A JOINT VENTURE**

You are directed to make the following changes from the plans and specifications or do the following described work not included in the plans and specifications for this contract. ***NOTE: This change order is not effective until approved by the Engineer.***

Description of work to be done, estimate of quantities and prices to be paid. (Segregate between additional work at contract price, agreed price and force account.) Unless otherwise stated, rates for rental of equipment cover only such time as equipment is actually used and no allowance will be made for idle time. This last percentage shown is the net accumulated increase or decrease from the original quantity in the Engineer's Estimate.

Extra Work at Force Account:

Provide additional funds.

Estimated Cost of Extra Work at Force Account.....$500,000.00

Estimated Cost: **Increase** ☒ **Decrease** ☐ **$500,000.00**

By reason of this order the time of completion will be adjusted as follows: 0

Submitted by

Signature [signature] **Resident Engineer** Darryl Schram for Gary Pursell, Sup.T.E. **Date** 12/1/09

Approval Recommended by

Signature [signature] **Supervising Bridge Engineer** Gary Pursell for Richard Morrow, Sup.B.E. **Date** 12/1/09

Engineer Approval by

Signature [signature] **Principal Transportation Engineer** Peter Siegenthaler, Prin.T.E. **Date** 12/1/09

We the undersigned contractor, have given careful consideration to the change proposed and agree, if this proposal is approved, that we will provide all equipment, furnish the materials, except as otherwise be noted above, and perform all services necessary for the work above specified, and will accept as full payment therefor the prices shown above.

NOTE: If you, the contractor, do not sign acceptance of this order, your attention is directed to the requirements of the specifications as to proceeding with the ordered work and filing a written protest within the time therein specified.

Contractor Acceptance by

Signature NOT REQUIRED (Print name and title) **Date**

STATE OF CALIFORNIA - DEPARTMENT OF TRANSPORTATION

CONTRACT CHANGE ORDER MEMORANDUM

DC-CEM-4903 (OLD HC-39 REV. 6/93) CT# 7541-3544-0

DATE: 12/01/2009 Page 1

TO
Pete Siegenthaler, Principal TE

FROM
Gary Pursell, STE / Richard Morrow, SBE

FILE
04-0120F4
04-SF-80-13.2/13.9

CCO NO.	SUPPLEMENT NO.	CATEGORY CODE
49	2	CXXX

CONTINGENCY BALANCE (including this change)
$53,971,776.00

$500,000.00 INCREASE ☒ DECREASE ☐

HEADQUARTERS APPROVAL REQUIRED? YES ☒ NO ☐

SUPPLEMENTAL FUNDS PROVIDED
$ 215,200.00

IS THIS REQUEST IN ACCORDANCE WITH ENVIRONMENTAL DOCUMENTS? YES ☒ NO ☐

CCO DESCRIPTION:
Additional Funds

PROJECT DESCRIPTION
CONSTRUCT SELF-ANCHORED SUSPENSION BRIDGE

Original Contract Time	Time Adj.: This Change	Previously Approved CCO Time Adjustments	Percentage Time Adjusted: (including this change)	Total # of Unreconciled Deferred Time CCO(s): (including this change)
2490 Day(s)	**0**	**150** Day(s)	**6** %	**6**

THIS CHANGE ORDER PROVIDES FOR:

Supplementing CCO 49 with additional funds. This change order provides transportation and other related field office support for Department personnel at overseas fabrication facilities. After hours Pier 7 boat service is also provided by this change order to furnish boats, boat operators, and crews as required under Special Provisions section 10-1.12, Transportation for the Engineer.

Additional funds are needed for transportation and related field office support at oversees fabrication facilities due to the extended duration of fabrication. Recent events at the project site, which include supporting the SFOBB Labor-Day shutdown and emergency repair work, have also impacted the change order funds beyond the amount originally estimated. This supplement will provide additional funds to support extended overseas fabrication and replenish funds utilized to support additional unanticipated work at the project site.

This work is not covered by any contract items, therefore, payment for this work will be at Extra Work at Force Account for an estimated cost of $500,000.00 (Cumulative total of CCO 49 and this supplement is $1,200,000.00). A total of $215,200.00 is available from the supplemental funds for this work, with the remaining balance of $984,200.00 to be financed from the contingency fund. A detailed cost analysis is on file.

No time adjustment is warranted, as this change order does not affect the controlling operation.

This change order received concurrence from Gary Pursell (R.E.), Richard Morrow (Struct. Rep.), Peter Siegenthaler (Principal T.E.), Ken Terpstra (Project Manager), Rich Foley (HQ Rep), and Tony Anziano (TB Manager). Design and Maintenance concurrence is not needed for this change order.

This change order received Headquarter I&A on November 3, 2009, in the amount of $800,000.00 (Cumulative I&A total of CCO 49 is $1,300,000.00). . This change order does not require TBPOC approval since the cumulative amount is less than $1 Million in excess of the $215,200.00 allotted in supplemental funds.

CONCURRED BY:

	DATE
CONSTRUCTION ENGINEER Res. Eng. Gary Pursell, Sup. TE	11/2/09
SR. BRIDGE ENGINEER Rick Morrow, Struct. Rep.	11/2/09
FHWA REPRESENTATIVE	
PROJECT MANAGER Proj. Manager, Ken Terpstra	11/2/09
OTHER (SPECIFY) Toll Bridge Manager, Tony Anziano	11/2/09
HQ-Liaison, Rich Foley	11/2/09
PCE, Peter Siegenthaler, Prin TE	11/2/09
DISTRICT PRIOR APPROVAL BY	
HQ (ISSUE & APPROVE) (TO PROCEED) BY Bob Molera	11/3/09
RESIDENT ENGINEER SIGNATURE Gary Pursell	12/1/09

ESTIMATE OF COST

	THIS REQUEST	TOTAL TO DATE
ITEMS	$0.00	$0.00
FORCE ACCOUNT	$500,000.00	$1,200,000.00
AGREED PRICE	$0.00	$0.00
ADJUSTMENT	$0.00	$0.00
TOTAL	$500,000.00	$1,200,000.00

FEDERAL PARTICIPATION

☐ PARTICIPATING ☐ PARTICIPATING IN PART ☒ NONE
☐ NON-PARTICIPATING (MAINTENANCE) ☐ NON-PARTICIPATING

FEDERAL SEGREGATION (IF MORE THAN ONE FUNDING SOURCE OR P.I.P. TYPE)
☐ CCO FUNDED PER CONTRACT ☐ CCO FUNDED AS FOLLOWS

FEDERAL FUNDING SOURCE	PERCENT

CONTRACT CHANGE ORDER

Change Requested by: Engineer

CCO: 50 Suppl. No. 0 Contract No. 04 – 0120F4 Road SF-80-13.2/13.9 FED. AID LOC.:

To: AMERICAN BRIDGE/FLUOR ENTERPRISES INC A JOINT VENTURE

You are directed to make the following changes from the plans and specifications or do the following described work not included in the plans and specifications for this contract. ***NOTE: This change order is not effective until approved by the Engineer.***

Description of work to be done, estimate of quantities and prices to be paid. (Segregate between additional work at contract price, agreed price and force account.) Unless otherwise stated, rates for rental of equipment cover only such time as equipment is actually used and no allowance will be made for idle time. This last percentage shown is the net accumulated increase or decrease from the original quantity in the Engineer's Estimate.

Provide additional reinforcement to the shear plates at Hinge A as shown on sheets three (3) through six (6) of this change order.

The following revised sheets detail all changes:

Revised Contract Plan Sheet Nos. 631R1, 633R1, 675R1 and 697R1 (of 1204).

Estimate of Increase in Contract Items at Contract Unit Price:

Item #55 (F), FURNISH STRUCTURAL STEEL (BRIDGE) (BOX GIRDER)

6,081 kg (+ 0.02 %) @ $9.00 /kg = +$54,729.00 (+ 0.65 %)

Item #56 (F), ERECT STRUCTURAL STEEL (BRIDGE) (BOX GIRDER)

6,081 kg (+ 0.02 %) @ $1.00 /kg = +$6,081.00 (+ 0.65 %)

The quantity increase shown herein for Item #55, FURNISH STRUCTURAL STEEL (BRIDGE) (BOX GIRDER), when combined with the quantity shown in the Engineer's Estimate, and as modified by any previous change orders or revisions to dimensions made by the Engineer, shall be the final quantity for which payment will be made.

The quantity increase shown herein for Item #56, ERECT STRUCTURAL STEEL (BRIDGE) (BOX GIRDER), when combined with the quantity shown in the Engineer's Estimate, and as modified by any previous change orders or revisions to dimensions made by the Engineer, shall be the final quantity for which payment will be made.

Estimated total cost of Increase in Contract Item..... $60,810.00

Adjustment of Compensation at Agreed Lump Sum:

Perform additional detailing, painting and Engineering work required for this change.

For this work, the Contractor will receive a sum of $15,356.00. This sum constitutes full and complete compensation for furnishing all labor, material, tools, Chinese Value Added Taxes (VAT) and incidentals including all markups by reason of this change.

Estimated cost of Adjustment of Compensation at Lump Sum $15,356.00

CCO: 50 Suppl. No. 0 Contract No. 04 – 0120F4 Road SF-80-13.2/13.9 FED. AID LOC.:

Consideration of a time adjustment will be deferred until completion of the work specified herein. Determination of a commensurate time adjustment will be made in accordance with Section 10-1.13, "PROGRESS SCHEDULE (CRITICAL PATH METHOD)" and Section 10-1.14, "TIME-RELATED OVERHEAD" of the Special Provisions, as well as Section 8-1.07, "LIQUIDATED DAMAGES", of the Standard Specifications.

Estimated Total Cost of this Change Order..... $76,166.00

Estimated Cost: Increase ☒ Decrease ☐ **$76,166.00**

By reason of this order the time of completion will be adjusted as follows: Deferred

Submitted by

Signature Brian Boal **Resident Engineer** Brian Boal for Gary Pursell, Sup. TE **Date** 5/14/2009

Approval Recommended by

Signature Mark P. Woods **Supervising Bridge Engineer** Mark P. Woods for Richard Morrow, Sup. TE **Date** 14 May 2009

Engineer Approval by

Signature Gary Pursell **Supervising Transportation Engineer** Gary Pursell, Sup. TE **Date** 6/9/09

We the undersigned contractor, have given careful consideration to the change proposed and agree, if this proposal is approved, that we will provide all equipment, furnish the materials, except as otherwise be noted above, and perform all services necessary for the work above specified, and will accept as full payment therefor the prices shown above.

NOTE: If you, the contractor, do not sign acceptance of this order, your attention is directed to the requirements of the specifications as to proceeding with the ordered work and filing a written protest within the time therein specified.

Contractor Acceptance by

Signature Michael D. Fish (Print name and title) Michael D. Howard Project Director **Date** 6.5.09

OPENING LOCATION TABLE		
SHEAR PLATE TYPE	WORKING LINE	PANEL POINT (see Note 5)
2	E3, W3	8.5 (East), 9.5, 10.5, 11.5, 12.5, 13.5, 112.5, 113.5, 114.5
2	E4, W4	8.5 (East), 9.5, 10.5, 11.5, 12.5, 13.5, 112.5, 113.5, 114.5

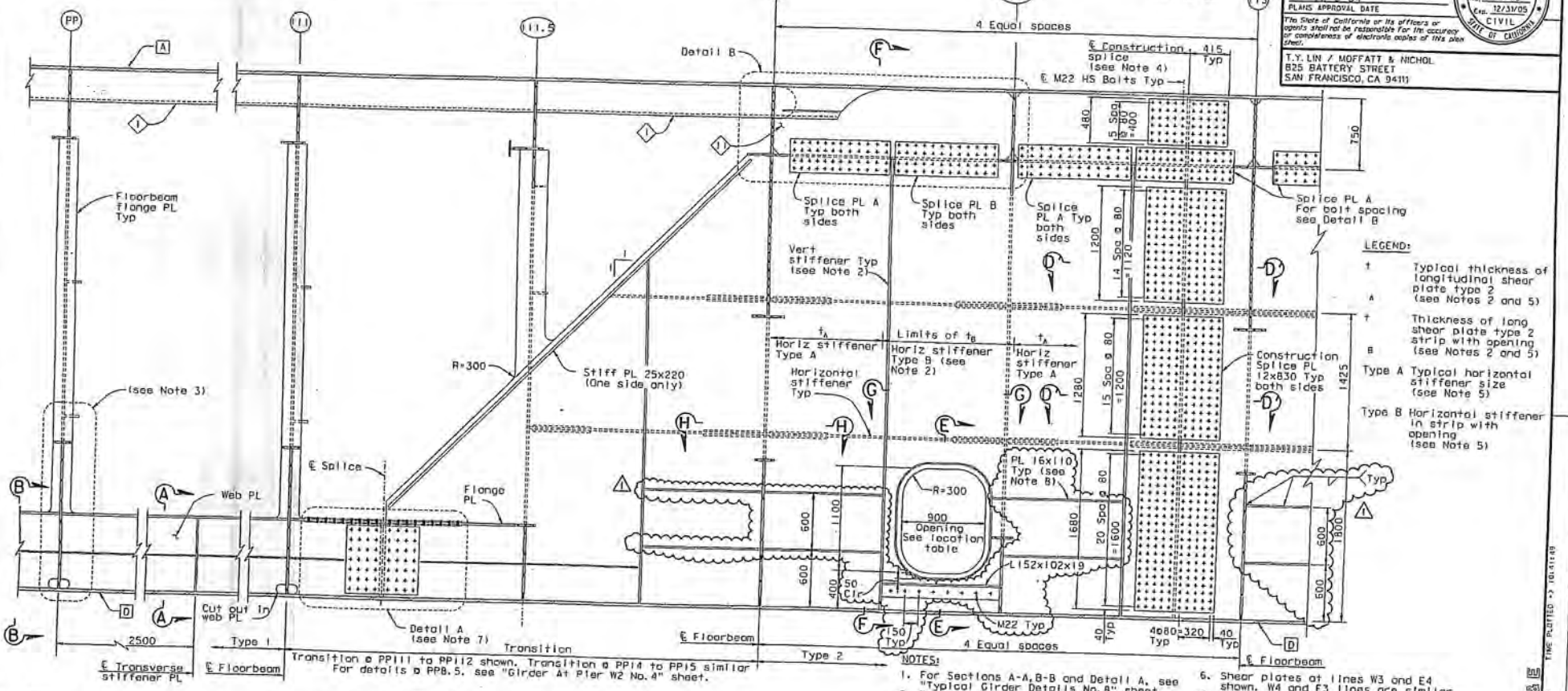

Transition @ PP11 to PP12 shown. Transition @ PP14 to PP15 similar For details @ PP8.5, see "Girder At Pier W2 No. 4" sheet.

NOTES:
1. For Sections A-A, B-B and Detail A, see "Typical Girder Details No. 8" sheet.
2. For Sections E-E, F-F, G-G, H-H, Detail B and details not shown, see "Typical Girder Details No. 9" sheet.
3. For floorbeam details, see "Typical Floorbeam Details" sheets.
4. For location of girder splice, see "Girder Framing Plan" sheets.
5. For plate sizes and openings in east transition, see "Girder at East Transition No. 9" sheet.
6. Shear plates at lines W3 and E4 shown. W4 and E3 lines are similar.
7. Detail A shall be used to splice the longitudinal shear plate Type 1 at box girder splice locations.
8. Lower panel stiffeners shall be placed as shown in Longitudinal shear plate along E3, E4, W3 and W4 lines from PP111.75 to the E2 floorbeam, and from the E2 floorbeam to PP120. Stiffeners shall also be placed along E4' and W4' lines from PP120 to 127. For details at the E2 floorbeam, see "Girder at Pier E2 No. 2" sheet.

ALL DIMENSIONS ARE IN MILLIMETERS UNLESS OTHERWISE SHOWN

LONGITUDINAL SHEAR PLATE ELEVATION
1:20

MARK	DATE	DESCRIPTIONS	BY	CH'D	CCO#
1	01/31/07	HINGE A REACTION-SHEAR PLATES	DT	GB	50
		REVISIONS			

CONTRACT CHANGE ORDER NO. 50
SHEET 3 OF 6

FOR REVISIONS ONLY

DIST.	COUNTY	ROUTE	KILOMETER POST TOTAL PROJECT	SHEET NO.	TOTAL SHEETS
04	SF	80	13.2/13.9	631R1	1204

George Baker
REGISTERED ENGINEER - CIVIL
12-6-04
PLANS APPROVAL DATE
The State of California or its officers or agents shall not be responsible for the accuracy or completeness of electronic copies of this plan sheet.

George S. Baker No. C57112 Exp. 12/31/05 CIVIL STATE OF CALIFORNIA

T.Y. LIN / MOFFATT & NICHOL
825 BATTERY STREET
SAN FRANCISCO, CA 94111

Caltrans now has a web site! To get to the web site go to: http://www.dot.ca.gov

R. Valizadeh/V. Toan/Y.L./N.L./F.C.
DESIGN OVERSIGHT
Sign Off Date 07/31/07

	BY	CHECKED
DESIGN	G. Baker	P. Ritchie
DETAILS	S. Cano	T. McMeans
QUANTITIES	G. Baker	M. Roberts

PREPARED FOR THE STATE OF CALIFORNIA
DEPARTMENT OF TRANSPORTATION

R. Manzanarez
PROJECT ENGINEER

BRIDGE NO. 34-0006L/R
KILOMETER POST 13.2/13.9
CU 04
EA 0120F1

DISREGARD PRINTS BEARING EARLIER REVISION DATES

SAN FRANCISCO OAKLAND BAY BRIDGE
EAST SPAN SEISMIC SAFETY PROJECT
SELF-ANCHORED SUSPENSION BRIDGE
(SUPERSTRUCTURE & TOWER)

TYPICAL GIRDER DETAILS NO. 7

REVISION DATES (PRELIMINARY STAGES ONLY)									SHEET	OF
00/00/00	00/00/00	00/00/00	00/00/00	00/00/00	00/00/00	00/00/00			214R1	

100 % PS&E

FILE => I:\sb\04-0120F1\ses\contract plans and cco\cco\in progress\cco50\dgn\sgak004.dgn
TIME PLOTTED => 10:41:49
DATE PLOTTED => 31 JUL 2007
USERNAME => \\pindata\SSE

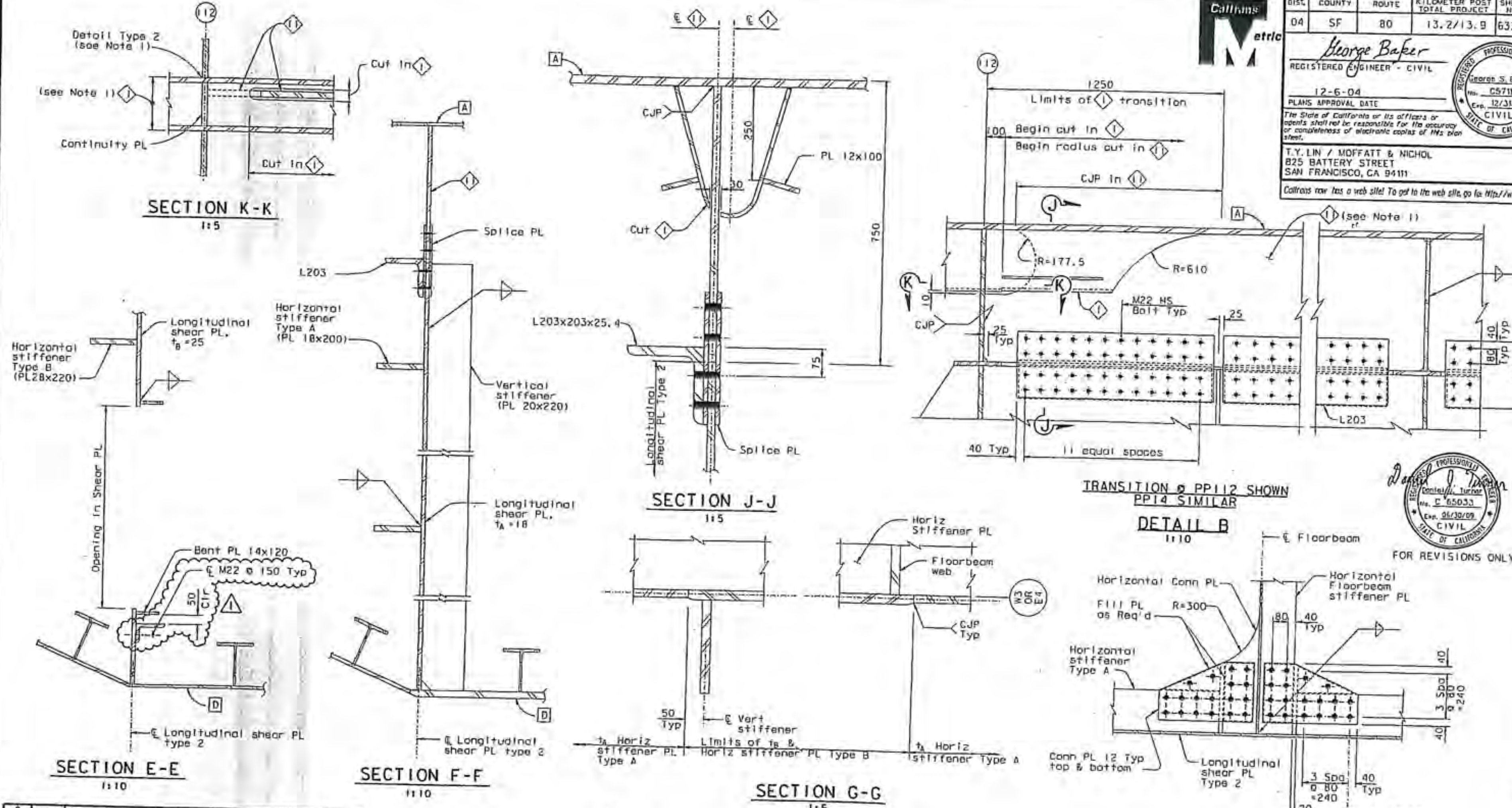

NOTES:

1. For details of ⟨1⟩ and ⟨1⟩, see "Typical Girder Details No. 3" and "Typical Girder Details No. 4" sheets.

MARK	DATE	DESCRIPTIONS	BY	CH'D	CCO#
1	01/31/07	HINGE A REACTION-SHEAR PLATES	DT	GB	50

REVISIONS

CONTRACT CHANGE ORDER NO. 50
SHEET 4 OF 6

DIST.	COUNTY	ROUTE	KILOMETER POST TOTAL PROJECT	SHEET NO.	TOTAL SHEETS
04	SF	80	13.2/13.9	633R1	1204

George Baker
REGISTERED ENGINEER - CIVIL
12-6-04
PLANS APPROVAL DATE

The State of California or its officers or agents shall not be responsible for the accuracy or completeness of electronic copies of this plan sheet.

T.Y. LIN / MOFFATT & NICHOL
825 BATTERY STREET
SAN FRANCISCO, CA 94111

Caltrans now has a web site! To get to the web site, go to: http://www.dot.ca.gov

ALL DIMENSIONS ARE IN MILLIMETERS UNLESS OTHERWISE SHOWN

R. Valizadeh/V. Toan/Y.L./R.L./F.C.
DESIGN OVERSIGHT

DESIGN: G. Baker | CHECKED: P. Ritchie
DETAILS: S. Cano | CHECKED: T. McMeans
QUANTITIES: G. Baker | CHECKED: M. Roberts

PREPARED FOR THE STATE OF CALIFORNIA DEPARTMENT OF TRANSPORTATION

R. Manzanarez
PROJECT ENGINEER

BRIDGE NO. 34-0006L/R
KILOMETER POST 13.2/13.9

CU 04
EA 0120F1

SAN FRANCISCO OAKLAND BAY BRIDGE
EAST SPAN SEISMIC SAFETY PROJECT
SELF-ANCHORED SUSPENSION BRIDGE
(SUPERSTRUCTURE & TOWER)

TYPICAL GIRDER DETAILS NO. 9

SHEET 216R1

100 % PS&E

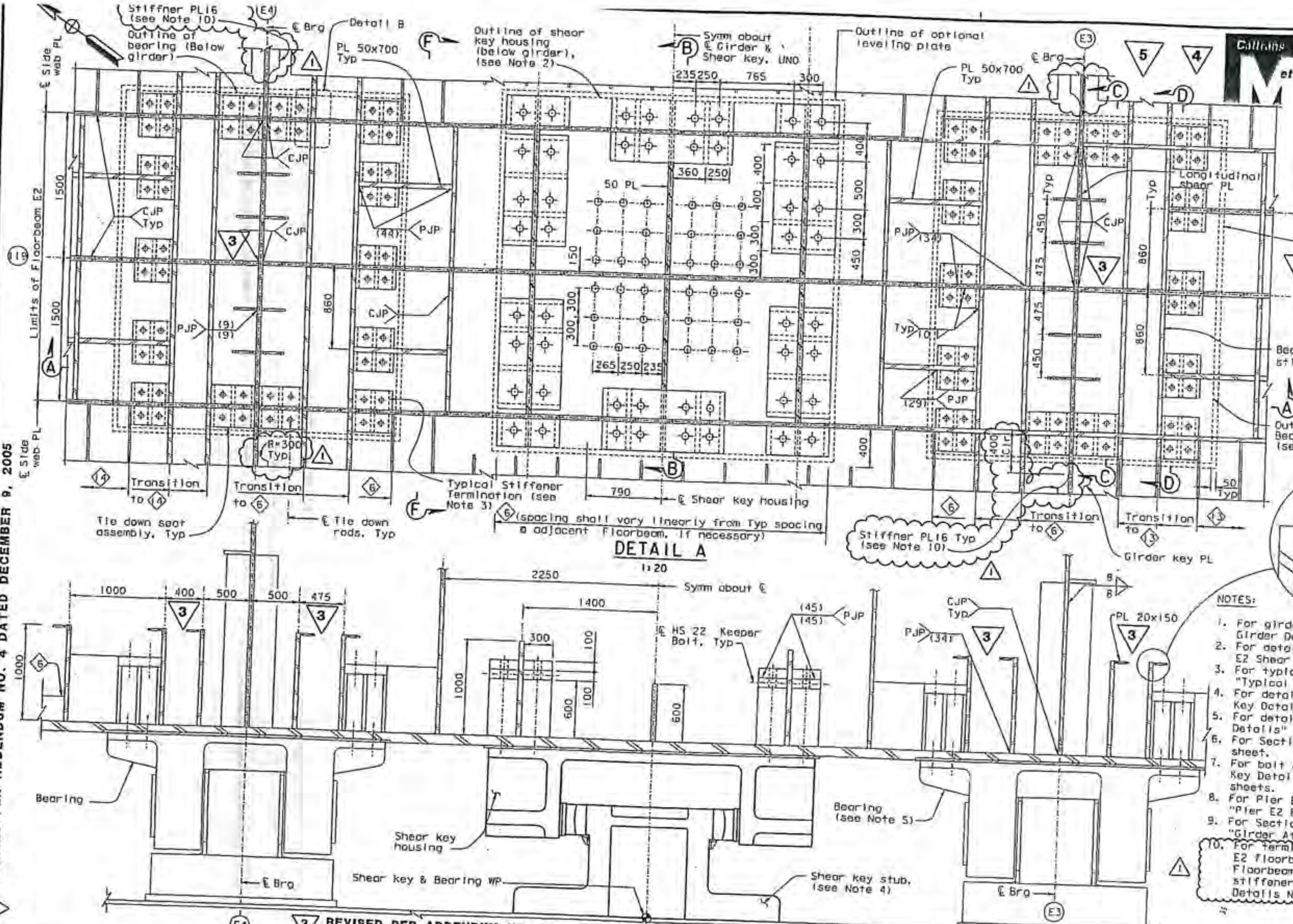

LEGEND

- 75 Dia anchor bolt (A354 Gr. BD)
- 64 Dia anchor bolt (A354 Gr. BD)
- 29 Dia anchor bolt (A354 Gr. BD)
- 50 Dia anchor bolt (A354 Gr. BD)
- t - thickness of terminating plate in T-joint

FOR REVISIONS ONLY

NOTES:

1. For girder plate thickness, see "Typical Girder Details No.1" sheet.
2. For details of shear key housing, see "Pier E2 Shear Key" sheets.
3. For typical girder stiffener termination, see "Typical Girder Details No.16" sheet.
4. For details of shear key, see "Pier E2 Shear Key Details" sheets.
5. For details of bearing, see "Pier E2 Bearing Details" sheets.
6. For Section F-F, see "Girder At Pier E2 No.6" sheet.
7. For bolt and rod locations, see "Pier E2 Shear Key Details" and "Pier E2 Bearing Details" sheets.
8. For Pier E2 bearing and shear key location, see "Pier E2 Bearing And Shear Key Layout" sheet.
9. For Section B-B, C-C, D-D and detail B, see "Girder At Pier E2 No.3" sheet.
10. For termination of stiffener plate 16 of E2 floorbeam, see Detail G on "Typical Floorbeam Details No.4" sheet. For other stiffener details see "Typical Girder Details No.7" sheet.

REVISED PER ADDENDUM NO. 4 DATED DECEMBER 9, 2005

REVISED PER ADDENDUM NO. 3 DATED NOVEMBER 7, 2005

REVISED PER ADDENDUM NO. 5 DATED DECEMBER 21, 2005

ALL DIMENSIONS ARE IN MILLIMETERS UNLESS OTHERWISE SHOWN

DIST.	COUNTY	ROUTE	KILOMETER POST TOTAL PROJECT	SHEET NO.	TOTAL SHEETS
04	SF	80	13.2/13.9	675R1	1204

George Baker
REGISTERED ENGINEER - CIVIL
12-6-04
PLANS APPROVAL DATE
The State of California or its officers or agents shall not be responsible for the accuracy or completeness of electronic copies of this plan sheet.
T.Y. LIN / MOFFATT & NICHOL
825 BATTERY STREET
SAN FRANCISCO, CA 94111
Caltrans now has a web site! To get to the web site, go to: http://www.dot.ca.gov

MARK	DATE	DESCRIPTIONS	BY	CH'D	CCO#
1	01/31/07	HINGE A REACTION-SHEAR PLATES	DT	GB	50

REVISIONS

CONTRACT CHANGE ORDER NO. 50
SHEET 5 OF 6

DESIGN: G. Baker — CHECKED: P. Ritchie
DETAILS: C. Mouch — CHECKED: T. McMeans
QUANTITIES: B. Turner — CHECKED: M. Roberts

PREPARED FOR THE STATE OF CALIFORNIA DEPARTMENT OF TRANSPORTATION

R. Manzanarez, PROJECT ENGINEER

BRIDGE NO. 34-0006L/R
KILOMETER POST 13.2/13.9

CU 04
EA 0120F1

SAN FRANCISCO OAKLAND BAY BRIDGE
EAST SPAN SEISMIC SAFETY PROJECT
SELF-ANCHORED SUSPENSION BRIDGE
(SUPPERSTRUCTURE & TOWER)

GIRDER AT PIER E2 NO. 2

SHEET 258R1

FILE => I:\bb\04-0120F1\sas\contract plans and cco\cco\in progress\cco-50\dgn\agqdd07.dgn

100 % PS&E

REVISED PER ADDENDUM NO. 4 DATED DECEMBER 9, 2005

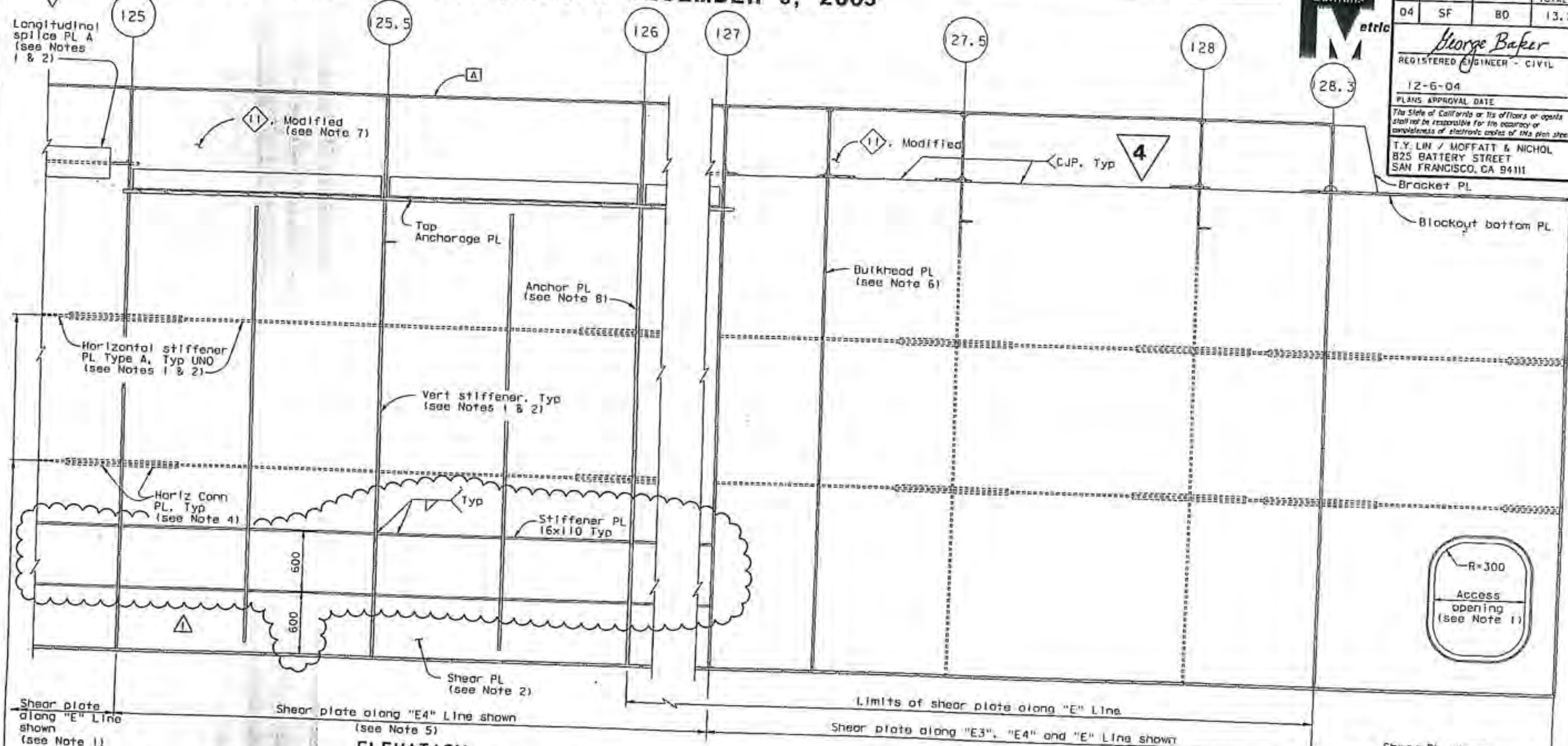

ELEVATION

LONGITUDINAL SHEAR PLATE TYPE 2

SECTION B-B

1:20

("E" Line girder shown, "W" Line girder similar)

NOTES:

1. Longitudinal shear plate type 2 from PP115 to PP125 is similar to longitudinal shear plate type 2 in typical girder section type 2. For details not shown, see "Typical Girder Details No.7" sheet.
2. For longitudinal shear plate dimension table and access opening locations from PP115 to hinge A, see "Girder At East Transition No.9" sheet.
3. For floorbeam details not shown, see "Floorbeam At East Transition" sheets.
4. For horizontal connection plate detail, see "Typical Girder Details No.9" sheet.
5. For detail of longitudinal shear plate type 2 along "E3" Line from PP125 to PP127, see "Girder At East Transition No.6" sheet.
6. For details of bulkhead plate, see "Floorbeam At Transition No.8" sheet.
7. For details of 11, Modified not shown see 12 on "Girder At East Transition No.17" sheet.
8. For details of anchor PL, see "East Cable Anchorage "E" Line Layout" and "East Cable Anchorage "W" Line Layout" sheets.
9. For details of end girder PL, see "Floorbeam At East Transition No.10" sheet.

MARK	DATE	DESCRIPTIONS	BY	CH'D	CCO*
A	01/31/07	HINGE A REACTION-SHEAR PLATES	DT	GB	50

REVISIONS

CONTRACT CHANGE ORDER NO. 50
SHEET 6 OF 6

FOR REVISIONS ONLY

DIST.	COUNTY	ROUTE	KILOMETER POST TOTAL PROJECT	SHEET NO.	TOTAL SHEETS
04	SF	80	13.2/13.9	697R1	1204

George Baker
REGISTERED ENGINEER - CIVIL
12-6-04
PLANS APPROVAL DATE

The State of California or its officers or agents shall not be responsible for the accuracy or completeness of electronic copies of this plan sheet.

T.Y. LIN / MOFFATT & NICHOL
825 BATTERY STREET
SAN FRANCISCO, CA 94111

REGISTERED PROFESSIONAL ENGINEER George S. Baker No. C 57112 Exp. 12/31/05 CIVIL STATE OF CALIFORNIA

REGISTERED PROFESSIONAL ENGINEER Daniel J. Turner No. C 65033 Exp. 06/30/09 CIVIL STATE OF CALIFORNIA

Caltrans now has a web site! To get to the web site, go to: http://www.dot.ca.gov

R. Valizadeh/V. Toan/Y.L./M.L./F.C.
DESIGN OVERSIGHT
SIGN OFF DATE 07/31/07

DESIGN	BY G. Baker	CHECKED P. Ritchie
DETAILS	BY M. Gulyas	CHECKED T. McMoons
QUANTITIES	BY G. Baker	CHECKED M. Roberts

PREPARED FOR THE STATE OF CALIFORNIA DEPARTMENT OF TRANSPORTATION

R. Manzanarez
PROJECT ENGINEER

ALL DIMENSIONS ARE IN MILLIMETERS UNLESS OTHERWISE SHOWN

BRIDGE NO. 34-0006L/R
KILOMETER POST 13.2/13.9

CU 04
EA 0120F1

SAN FRANCISCO OAKLAND BAY BRIDGE
EAST SPAN SEISMIC SAFETY PROJECT
SELF-ANCHORED SUSPENSION BRIDGE
(SUPERSTRUCTURE & TOWER)

GIRDER AT EAST TRANSITION NO. 15

SHEET 280R1

FILE => I:\bb\04-0120F1\sas\contract plans and cco\cco\in progress\cco-50\dgn\agend17.dgn

USERNAME => vtoan DATE PLOTTED => 31 JUL 2007 TIME PLOTTED => 10:41:11

100 % PS&E

STATE OF CALIFORNIA - DEPARTMENT OF TRANSPORTATION

CONTRACT CHANGE ORDER MEMORANDUM

DATE: 6/8/2009

TO: Pete Siegenthaler, Prin. TE / Gary Pursell, P.E., Sup T.E.	FILE: E.A. 04 - 0120F4
FROM: Gary Pursell, Sup.TE	CO-RTE-PM SF-80-13.2/13.9
	FED. NO.
CCO#: 50 SUPPLEMENT#: 0 Category Code: CHPT	CONTINGENCY BALANCE (incl. this change) $67,005,863.40
COST: $76,166.00 INCREASE ☑ DECREASE ☐	HEADQUARTERS APPROVAL REQUIRED? ☐ YES ☑ NO
SUPPLEMENTAL FUNDS PROVIDED: $15,356.00	IS THIS REQUEST IN ACCORDANCE WITH ENVIRONMENTAL DOCUMENTS? ☑ YES ☐ NO

CCO DESCRIPTION:
Hinge A Reaction - Shear Plates

PROJECT DESCRIPTION:
CONSTRUCT SELF-ANCHORED SUSPENSION BRIDGE

Original Contract Time	Time Adj. This Change:	Previously Approved CCO Time Adjustments	Percentage Time Adjusted: (including this change)	Total # of Unreconciled Deferred Time CCO(s): (including this change)
2490 Day(s)	DEF Day(s)	30 Day(s)	1 %	7

THIS CHANGE ORDER PROVIDES FOR:

Installing additional reinforcement to the shear plates at Hinge A.

The Skyway Hinge A reaction force transfer to the SAS was determined to be higher than the force shown in the contract plans. The Department's Design Oversight and Designer of Record agree that it is prudent risk management to provide additional reinforcement to the shear plates at Hinge A.

The increase of contract items at contract unit prices results in a net increase of $60,810.00.

For the changes in character of work related to additional detailing, engineering and painting the structural steel beyond contract item work, the Contractor will receive a lump sum payment of $15,356.00.

The total cost of this change order is $76,166.00, which can be financed from the contingency funds. A total of $2,152,000.00 for Geometry Control (Hinge A and K Reactions) of Supplemental Funds is allotted for this work. Although Cadb does not allow the use of Supplemental Funds to finance increases in contract item work the needed funds will be transferred manually for this work. A cost analysis is in the project files.

Adjustment of contract time is deferred pending completion of the work specified in this change as it may affect the controlling operation.

This change order has concurrence from Gary Pursell (Resident Engineer), Rick Morrow (Sup. Structure Rep), Ken Terpstra (Project Manager), Pete Siegenthaler (Principal TE), Marwan Nader (Design of Record), Reza Valizadeh (Ct Oversight), Bill Zanetich (CT Struct. Maintenance) and Rob Kobal (HQ).

CONCURRED BY:			
Construction Engineer:	Res. Eng., Gary Pursell, Sup. TE	Date	8/17/07
Bridge Engineer:	Struct Rep, Rick Morrow, Sup TE	Date	8/17/07
Project Engineer:	CT Oversight, Reza Valizadeh, P.E	Date	8/21/07
Project Manager:	Proj Manager, Ken Terpstra	Date	8/21/07
FHWA Rep.:	Struct Maint, Bill Zanetich, P.E.	Date	8/27/07
Environmental:		Date	
Other (specify):	PCE, Pete Siegenthaler, Prin TE	Date	8/21/07
Other (specify):	Design of Record, Marwan Nader,	Date	7/31/07
District Prior Approval By:		Date	
HQ (Issue Approve) By:	HQ, Rob Kobal	Date	8/21/07
Resident Engineer's Signature:	Gary Pursell 6/9/09	Date	

ESTIMATE OF COST		
	THIS REQUEST	TOTAL TO DATE
ITEMS	$60,810.00	$60,810.00
FORCE ACCOUNT	$0.00	$0.00
AGREED PRICE	$0.00	$0.00
ADJUSTMENT	$15,356.00	$15,356.00
TOTAL	$76,166.00	$76,166.00

FEDERAL PARTICIPATION

☐ PARTICIPATING ☐ PARTICIPATING IN PART ☑ NONE
☐ NON-PARTICIPATING (MAINTENANCE) ☐ NON-PARTICIPATING

FEDERAL SEGREGATION (if more than one Funding Source or P.I.P. type)
☐ CCO FUNDED PER CONTRACT ☐ CCO FUNDED AS FOLLOWS

FEDERAL FUNDING SOURCE	PERCENT

ADA Notice: For individuals with sensory disabilities, this document is available in alternate formats. For information call: (916) 654-6410 or TDD (916) 654-3880 or write Records and Forms Management, 1120 N Street, MS-89, Sacramento, CA 95814.

STATE OF CALIFORNIA - DEPARTMENT OF TRANSPORTATION

CONTRACT CHANGE ORDER

Change Requested by: Engineer

CCO: 51	Suppl. No. 0	Contract No. 04 - 0120F4	Road SF-80-13.2/13.9	FED. AID LOC.:

To: **AMERICAN BRIDGE/FLUOR ENTERPRISES INC A JOINT VENT**

You are directed to make the following changes from the plans and specifications or do the following described work not included in the plans and specifications for this contract. ***NOTE: This change order is not effective until approved by the Engineer.***

Description of work to be done, estimate of quantities and prices to be paid. (Segregate between additional work at contract price, agreed price and force account.) Unless otherwise stated, rates for rental of equipment cover only such time as equipment is actually used and no allowance will be made for idle time. This last percentage shown is the net accumulated increase or decrease from the original quantity in the Engineer's Estimate.

Extra Work at Force Account:

Provide payment for Department travel expenses in Shanghai, China, as directed by the Engineer.

Payments authorized by the Engineer, as necessary, will be paid in accordance with the provisions of Section 4-1.03D, "Extra Work" of the Standard Specifications and Section 5-1.24, "Force Account Payment" of the Special Provisions.

Estimated cost of Extra Work at Force Account $50,000.00

Estimated Cost: **Increase** ☑ **Decrease** ☐ **$50,000.00**

By reason of this order the time of completion will be adjusted as follows: 0 days

Submitted by

Signature	Resident Engineer	Date
Gary Pursell	Gary Pursell, P.E., Sup.T.E.	8/9/07

Approval Recommended by

Signature	Supervising Bridge Engineer	Date
R Morrow	Richard Morrow, P.E., Sup. BE	8/10/07

Engineer Approval by

Signature	Supervising Transportation Engineer	Date
Gary Pursell	Gary Pursell, P.E., Sup. TE	8/13/07

We the undersigned contractor, have given careful consideration to the change proposed and agree, if this proposal is approved, that we will provide all equipment, furnish the materials, except as may otherwise be noted above, and perform all services necessary for the work above specified, and will accept as full payment therefor the prices shown above.

NOTE: If you, the contractor, do not sign acceptance of this order, your attention is directed to the requirements of the specifications as to proceeding with the ordered work and filing a written protest within the time therein specified.

Contractor Acceptance by

Signature	(Print name and title)	Date
Michael D. Flowers	Michael D. Flowers Project Director	8-13-07

STATE OF CALIFORNIA - DEPARTMENT OF TRANSPORTATION

CONTRACT CHANGE ORDER MEMORANDUM

DATE: 8/13/2007 Page 1 of 1

TO: Pete Siegenthaler, Prin. TE / Gary Pursell, P.E., Sup T.E.	FILE: **E.A.** 04 - 0120F4
FROM: Gary Pursell, P.E., Sup.T.E.	**CO-RTE-PM** SF-80-13.2/13.9
	FED. NO.
CCO#: **51** SUPPLEMENT#: **0** Category Code: **CXXX**	CONTINGENCY BALANCE (incl. this change) **$142,321,714.29**
COST: **$50,000.00** INCREASE ☑ DECREASE ☐	HEADQUARTERS APPROVAL REQUIRED? ☐ YES ☑ NO
SUPPLEMENTAL FUNDS PROVIDED: **$0.00**	IS THIS REQUEST IN ACCORDANCE WITH ENVIRONMENTAL DOCUMENTS? ☑ YES ☐ NO
CCO DESCRIPTION: Travel in China	**PROJECT DESCRIPTION:** CONSTRUCT SELF-ANCHORED SUSPENSION BRIDGE

Original Contract Time:	Time Adj. This Change:	Previously Approved CCO Time Adjustments:	Percentage Time Adjusted: (including this change)	Total # of Unreconciled Deferred Time CCO(s): (including this change)
2490 Day(s)	**0** Day(s)	**30** Day(s)	**1** %	**0**

THIS CHANGE ORDER PROVIDES FOR:

Payment of travel expenses in Shanghai, China, as directed by the Engineer.

Department project staff have been assigned to Shanghai, China, to oversee structural steel fabrication efforts for the tower, box girders and cable. The Department has entered into a lease agreement with the Marriott Hotel in Shanghai to provide office facilities and accommodations for said staff.

Due to the lack of an approved State budget, the Departmental is unable to make lease payments directly and, as a result, the Marriott has indicated they will attach employee's personal credit cards, or could evict the employees from the accommodations, resulting in the employees returning stateside.

Steel fabrication has been identified as the highest risk to the project budget and schedule. It is crucial that key oversight staff remain at the fabrication shops to facilitate timely resolution of issues, thus avoiding unnecessary project delays and costs.

This change order will provide for payment of travel expenses, through the Contractor, until such time the State budget is passed. Payments made by the Contractor, at the direction of the Engineer, will be reimbursed as Extra Work at Force Account. The estimated cost is $50,000.00, which can be financed from the contingency fund. The approved project construction allocation includes $5,380,000 for Out of State Travel Expenses.

No time adjustment is warranted, as this change order does not affect the controlling operation.

This CCO was requested by Toll Bridge Program management. Design and Maintenance concurrence is not required for this change order since this change is addressed in the supplemental funds.

CONCURRED BY:			
Construction Engineer:	Res. Eng., Gary Pursell, Sup. TE	Date	8/9/07
Bridge Engineer:	Struct Rep, Rick Morrow, Sup TE	Date	8/10/07
Project Engineer:		Date	
Project Manager:		Date	
FHWA Rep.:		Date	
Environmental:		Date	
Other (specify):	Proj Manager, Ken Terpstra	Date	8/13/07
Other (specify):		Date	
District Prior Approval By:		Date	
HQ (Issue Approve) By:		Date	
Resident Engineer's Signature:	Gary Pursell	Date	8/13/07

ESTIMATE OF COST

	THIS REQUEST	TOTAL TO DATE
ITEMS	$0.00	$0.00
FORCE ACCOUNT	$50,000.00	$50,000.00
AGREED PRICE	$0.00	$0.00
ADJUSTMENT	$0.00	$0.00
TOTAL	$50,000.00	$50,000.00

FEDERAL PARTICIPATION

☐ PARTICIPATING ☐ PARTICIPATING IN PART ☑ NONE
☐ NON-PARTICIPATING (MAINTENANCE) ☐ NON-PARTICIPATING

FEDERAL SEGREGATION (if more than one Funding Source or P.I.P. type)
☑ CCO FUNDED PER CONTRACT ☐ CCO FUNDED AS FOLLOWS

FEDERAL FUNDING SOURCE	PERCENT

ADA Notice: For individuals with sensory disabilities, this document is available in alternate formats. For information call: (916) 654-6410 or TDD (916) 654-3880 or write Records and Forms Management, 1120 N Street, MS-89, Sacramento, CA 95814.

STATE OF CALIFORNIA • DEPARTMENT OF TRANSPORTATION

CONTRACT CHANGE ORDER INPUT

CEM-4901 REV 5/1993 CT# 7541-3516-2

ADA Notice

For individuals with sensory disabilities, this document is available in alternate formats. For information call (916) 263-2041 or TDD (916) 263-2044 or write Records and Forms Managment, 1120 N Street, MS-89, Sacramento, CA 95814.

CASOAC

CONTRACT NO. 04 0120F4 (1–8) CCO NO. 052 (9) SUPPL. 00 (13) | CONSTRUCTION DEPT. USE ONLY ☐ FUNCTION (14) ☐ OVERRIDE (15)

CARD TYPE 1 (16)

C. C. O. DESCRIPTION: REMOVE CONCRETE PIER W2 TOP SLAB (17–56)

NET $ CHANGE THIS CCO: + 500000.00 (57–66) | APPROVAL DATE: 01-16-08 (67) | TIME EXTENSION DAYS: - 00 (74) | CATEGORY: CHGA (77)

CARD TYPE 2 (16)

PAYMENT METHOD / $ AMOUNT

EW ☒ (17)	AC ☐ (18)	FA ☒ (19)	LS ☐ (20)	UP ☐	+ 500000.00 (23–31)
EW ☐	AC ☐	FA ☐	LS ☐	UP ☐	+
EW ☐	AC ☐	FA ☐	LS ☐	UP ☐	+

CARD TYPE 4 (16)

NET $ AMOUNT BRIDGE WORK THIS CCO: + 500000.00 (18–28)

CARD TYPE 3 (16)

ITEM NUMBER (17–19)	+/-	QUANTITY (21–32)	ITEM NUMBER (17–19)	+/-	QUANTITY (21–32)

CARD TYPE 5 (16)

FEDERAL PARTICIPATION: N (17)

P = PARTICIPATING

M = NON-PARTICIPATING (MAINTENANCE)

N = NON-PARTICIPATING (OTHER THAN MAINTENANCE)

R = NON-PARTICIPATING (REIMBURSEMENT BY OTHERS)

S = PARTICIPATING IN PART

IF PARTICIPATING IN PART (S), BREAKDOWN COST AS FOLLOWS: (INPUT TYPE AS P,M,N,R)

TYPE (18)	COST (19–27)

FEDERAL SEGREGATION (IF MORE THAN ONE FUNDING SOURCE)

☒ (29) E = CCO to be funded as per contract ☐ F = CCO to be funded as follows:

FEDERAL FUNDING SOURCE (30–44)	PERCENT (45)

IN CASE OF QUESTIONS CONTACT: *NAME*

GEORGE BOU-GHOSN | GEORGE_BOUGHOSN@DOT.CA.GOV | BUSINESS PHONE (510) 622-5196 | VERIFY

STATE OF CALIFORNIA - DEPARTMENT OF TRANSPORTATION

CONTRACT CHANGE ORDER MEMORANDUM

TO: Pete Siegenthaler, Prin. TE / Gary Pursell, P.E., Sup T.E.

FROM: Gary Pursell, P.E., Sup.T.E.

FILE: E.A. 04 - 0120F4
CO-RTE-PM SF-80-13.2/13.9
FED. NO.

CCO#: **52** SUPPLEMENT#: **0** Category Code: **CHGA**

CONTINGENCY BALANCE (incl. this change) **$140,246,782.24**

COST: **$50,000.00** INCREASE ☑ DECREASE ☐

HEADQUARTERS APPROVAL REQUIRED? ☐ YES ☑ NO

SUPPLEMENTAL FUNDS PROVIDED: **$0.00**

IS THIS REQUEST IN ACCORDANCE WITH ENVIRONMENTAL DOCUMENTS? ☑ YES ☐ NO

CCO DESCRIPTION:
Remove Concrete Pier W2 Top Slab

PROJECT DESCRIPTION:
CONSTRUCT SELF-ANCHORED SUSPENSION BRIDGE

Original Contract Time:	Time Adj. This Change:	Previously Approved CCO Time Adjustments:	Percentage Time Adjusted: (including this change)	Total # of Unreconciled Deferred Time CCO(s): (including this change)
2490 Day(s)	**0** Day(s)	**30** Day(s)	**1** %	**0**

THIS CHANGE ORDER PROVIDES FOR:

Removing existing concrete along the top slab of Pier W2 as directed by the Engineer.

Field observations have shown that the concrete at the top of the W2W and W2E columns was poured higher than what is shown in the contract plans. The excess concrete shall be removed to a grade that will allow the form work for the cap beam to be set at the correct elevation.

Payment for this work will be at Extra Work at Force Account for an estimated cost of $50,000.00, which can be financed from the contingency fund. A detailed cost analysis is on file.

No time adjustment is warranted, as this change order does not affect the controlling operation.

This change order received concurrences from the Project Manager and Construction Management. Maintenance and Design concurrences are not required for this change.

The Resident Engineer, a Supervisory T.E., gave the Contractor an Authority to Proceed to perform this work on November 9, 2007. A copy of this letter is in the project files.

CONCURRED BY:

Construction Engineer:	Res. Eng., Gary Pursell, Sup. TE	Date 12/19/07
Bridge Engineer:	Struct Rep, Rick Morrow, Sup TE	Date 12/19/07
Project Engineer:		Date
Project Manager:	Proj Manager, Ken Terpstra	Date 1/10/08
FHWA Rep.:		Date
Environmental:		Date
Other (specify):	PCE, Mike Forner, Prin TE	Date 12/19/07
Other (specify):		Date
District Prior Approval By:	Res. Eng., Gary Pursell, Sup. TE	Date 11/9/07
HQ (Issue Approve) By:		Date
Resident Engineer's Signature:		Date

Gary Pursell 01/16/08

ESTIMATE OF COST

	THIS REQUEST	TOTAL TO DATE
ITEMS	$0.00	$0.00
FORCE ACCOUNT	$50,000.00	$50,000.00
AGREED PRICE	$0.00	$0.00
ADJUSTMENT	$0.00	$0.00
TOTAL	$50,000.00	$50,000.00

FEDERAL PARTICIPATION

☐ PARTICIPATING ☐ PARTICIPATING IN PART ☑ NONE
☐ NON-PARTICIPATING (MAINTENANCE) ☐ NON-PARTICIPATING

FEDERAL SEGREGATION (if more than one Funding Source or P.I.P. type)
☑ CCO FUNDED PER CONTRACT ☐ CCO FUNDED AS FOLLOWS

FEDERAL FUNDING SOURCE	PERCENT

ADA Notice: For individuals with sensory disabilities, this document is available in alternate formats. For information call: (916) 654-6410 or TDD (916) 654-3880 or write Records and Forms Management, 1120 N Street, MS-89, Sacramento, CA 95814.

CONTRACT CHANGE ORDER

Change Requested by: Engineer

CCO: 52	Suppl. No. 0	Contract No. 04 - 0120F4	Road SF-80-13.2/13.9	FED. AID LOC.:

To: **AMERICAN BRIDGE/FLUOR ENTERPRISES INC A JOINT VENT**

You are directed to make the following changes from the plans and specifications or do the following described work not included in the plans and specifications for this contract. ***NOTE: This change order is not effective until approved by the Engineer.***

Description of work to be done, estimate of quantities and prices to be paid. (Segregate between additional work at contract price, agreed price and force account.) Unless otherwise stated, rates for rental of equipment cover only such time as equipment is actually used and no allowance will be made for idle time. This last percentage shown is the net accumulated increase or decrease from the original quantity in the Engineer's Estimate.

Extra Work at Force Account:

Remove existing concrete along the top slab of Pier W2 as directed by the Engineer.

Labor, equipment and material authorized by the Engineer, as necessary, will be paid in accordance with the provisions of Section 4-1.03D, "Extra Work" of the Standard Specifications and Section 5-1.24, "Force Account Payment" of the Special Provisions.

Estimated cost of Extra Work at Force Account $50,000.00

Estimated Cost: Increase ☑ Decrease ☐ **$50,000.00**

By reason of this order the time of completion will be adjusted as follows: 0 days

Submitted by

Signature	Resident Engineer	Date
Gil Klebanov	Gil Klebanov for Gary Pursell, P.E., Sup.T.E.	12/20/07

Approval Recommended by

Signature	Supervising Bridge Engineer	Date
R Morrow	Richard Morrow, P.E., Sup. BE	12/20/07

Engineer Approval by

Signature	Supervising Transportation Engineer	Date
Gary Pursell	Gary Pursell, P.E., Sup. TE	01/16/08

We the undersigned contractor, have given careful consideration to the change proposed and agree, if this proposal is approved, that we will provide all equipment, furnish the materials, except as may otherwise be noted above, and perform all services necessary for the work above specified, and will accept as full payment therefor the prices shown above.

NOTE: If you, the contractor, do not sign acceptance of this order, your attention is directed to the requirements of the specifications as to proceeding with the ordered work and filing a written protest within the time therein specified.

Contractor Acceptance by

Signature	(Print name and title)	Date
Michael D. Flowers	Michael D. Flowers Project Director	1-9-08

STATE OF CALIFORNIA - DEPARTMENT OF TRANSPORTATION

CONTRACT CHANGE ORDER MEMORANDUM

TO: Pete Siegenthaler, Prin. TE / Gary Pursell, P.E., Sup T.E.

FROM: Gary Pursell, P.E., Sup.T.E.

FILE: E.A. 04 - 0120F4
CO-RTE-PM SF-80-13.2/13.9
FED. NO.

CCO#: **52** SUPPLEMENT#: **0** Category Code: **CHGA**

CONTINGENCY BALANCE (incl. this change) **$140,246,782.24**

COST: **$50,000.00** INCREASE ☑ DECREASE ☐

HEADQUARTERS APPROVAL REQUIRED? ☐ YES ☑ NO

SUPPLEMENTAL FUNDS PROVIDED: **$0.00**

IS THIS REQUEST IN ACCORDANCE WITH ENVIRONMENTAL DOCUMENTS? ☑ YES ☐ NO

CCO DESCRIPTION:
Remove Concrete Pier W2 Top Slab

PROJECT DESCRIPTION:
CONSTRUCT SELF-ANCHORED SUSPENSION BRIDGE

Original Contract Time:	Time Adj. This Change:	Previously Approved CCO Time Adjustments:	Percentage Time Adjusted: (including this change)	Total # of Unreconciled Deferred Time CCO(s): (including this change)
2490 Day(s)	**0** Day(s)	**30** Day(s)	**1** %	**0**

THIS CHANGE ORDER PROVIDES FOR:

Removing existing concrete along the top slab of Pier W2 as directed by the Engineer.

Field observations have shown that the concrete at the top of the W2W and W2E columns was poured higher than what is shown in the contract plans. The excess concrete shall be removed to a grade that will allow the form work for the cap beam to be set at the correct elevation.

Payment for this work will be at Extra Work at Force Account for an estimated cost of $50,000.00, which can be financed from the contingency fund. A detailed cost analysis is on file.

No time adjustment is warranted, as this change order does not affect the controlling operation.

This change order received concurrences from the Project Manager and Construction Management. Maintenance and Design concurrences are not required for this change.

The Resident Engineer, a Supervisory T.E., gave the Contractor an Authority to Proceed to perform this work on November 9, 2007. A copy of this letter is in the project files.

CONCURRED BY:

Construction Engineer:	Res. Eng., Gary Pursell, Sup. TE	Date 12/19/07
Bridge Engineer:	Struct Rep, Rick Morrow, Sup TE	Date 12/19/07
Project Engineer:		Date
Project Manager:	Proj Manager, Ken Terpstra	Date 1/10/08
FHWA Rep.:		Date
Environmental:		Date
Other (specify):	PCE, Mike Forner, Prin TE	Date 12/19/07
Other (specify):		Date
District Prior Approval By:	Res. Eng., Gary Pursell, Sup. TE	Date 11/9/07
HQ (Issue Approve) By:		Date
Resident Engineer's Signature:		Date

Gary Pursell 01/16/08

ESTIMATE OF COST

	THIS REQUEST	TOTAL TO DATE
ITEMS	$0.00	$0.00
FORCE ACCOUNT	$50,000.00	$50,000.00
AGREED PRICE	$0.00	$0.00
ADJUSTMENT	$0.00	$0.00
TOTAL	$50,000.00	$50,000.00

FEDERAL PARTICIPATION

☐ PARTICIPATING ☐ PARTICIPATING IN PART ☑ NONE
☐ NON-PARTICIPATING (MAINTENANCE) ☐ NON-PARTICIPATING

FEDERAL SEGREGATION (if more than one Funding Source or P.I.P. type)
☑ CCO FUNDED PER CONTRACT ☐ CCO FUNDED AS FOLLOWS

FEDERAL FUNDING SOURCE	PERCENT

ADA Notice: For individuals with sensory disabilities, this document is available in alternate formats. For information call: (916) 654-6410 or TDD (916) 654-3880 or write Records and Forms Management, 1120 N Street, MS-89, Sacramento, CA 95814.

STATE OF CALIFORNIA - DEPARTMENT OF TRANSPORTATION

CONTRACT CHANGE ORDER

Change Requested by: Engineer

CCO: 53 **Suppl. No. 0** **Contract No. 04 – 0120F4** **Road** SF-80-13.2/13.9 **FED. AID LOC.:**

To: **AMERICAN BRIDGE/FLUOR ENTERPRISES INC A JOINT VENTURE**

You are directed to make the following changes from the plans and specifications or do the following described work not included in the plans and specifications for this contract. ***NOTE: This change order is not effective until approved by the Engineer.***

Description of work to be done, estimate of quantities and prices to be paid. (Segregate between additional work at contract price, agreed price and force account.) Unless otherwise stated, rates for rental of equipment cover only such time as equipment is actually used and no allowance will be made for idle time. This last percentage shown is the net accumulated increase or decrease from the original quantity in the Engineer's Estimate.

Adjustment of Compensation at Lump Sum Price:

Revise Special Provisions, Section 10-1.59, "STEEL STRUCTURES," subsection "FIELD WELDING," Item "E" as follows:

From: E. The final external weld surface shall be ground smooth and flush. The direction of final grinding marks shall be parallel to the axis of the tower or bridge.

To: E. The final external weld surface shall be ground smooth and flush. The direction of final grinding marks, where surface roughness exceeds 3μm (microns), shall be parallel to the axis of the tower or transverse to the bridge deck.

For this work, the contractor will be paid the sum of $0.00. This lump sum price constitutes full compensation, including markups, for this change.

Extra Work at Agreed Lump Sum Price:

Perform additional grinding pursuant to the Engineer's direction up through September 24, 2008.

For this work, the contractor will be paid the sum of $7,860.00. This lump sum price constitutes full compensation, including markups, for this change.

Cost of Extra Work at Lump Sum Price.....$7,860.00

This change order resolves Contractor Request for Information (RFI) Nos. 153, 153R1, 199, 199R1, 1481 and Contractor Request for Change Order (RFCO) No. 30 with respect to the changes relative to this change order.

Estimated Cost: **Increase** ☒ **Decrease** ☐ **$7,860.00**

By reason of this order the time of completion will be adjusted as follows: **0 days**

Submitted by

Signature B Boal **Resident Engineer** Brian Boal for, Gary Pursell, Sup.T.E. **Date** 4 MARCH 2010

Approval Recommended by

Signature RC Morrow **Supervising Bridge Engineer** Richard Morrow, Sup.T.E. **Date** 3/4/10

Engineer Approval by

Signature Gary Pursell **Supervising Transportation Engineer** Gary Pursell, Sup.T.E. **Date** 4/21/10

We the undersigned contractor, have given careful consideration to the change proposed and agree, if this proposal is approved, that we will provide all equipment, furnish the materials, except as otherwise be noted above, and perform all services necessary for the work above specified, and will accept as full payment therefor the prices shown above.

NOTE: If you, the contractor, do not sign acceptance of this order, your attention is directed to the requirements of the specifications as to proceeding with the ordered work and filing a written protest within the time therein specified.

Contractor Acceptance by

Signature Michael D. Flowers (Print name and title) Michael D. Flowers **Date** 4-7-10

Project Director

STATE OF CALIFORNIA - DEPARTMENT OF TRANSPORTATION

CONTRACT CHANGE ORDER MEMORANDUM

DC-CEM-4903 (OLD HC-39 REV. 6/93) CT# 7541-3544-0

DATE: 03/04/2010 Page 1 of 1

TO Pete Siegenthaler, Principal TE	FILE 04-0120F4 04-SF-80-13.2/13.9
FROM Gary Pursell, STE / Richard Morrow, SBE	
CCO NO. **53** / SUPPLEMENT NO. **0** / CATEGORY CODE **CHSA**	CONTINGENCY BALANCE (including this change) **$8,014,909.40**
$7,860.00 INCREASE ☒ DECREASE ☐	HEADQUARTERS APPROVAL REQUIRED? YES ☒ NO ☐
SUPPLEMENTAL FUNDS PROVIDED $	IS THIS REQUEST IN ACCORDANCE WITH ENVIRONMENTAL DOCUMENTS? YES ☒ NO ☐
CCO DESCRIPTION: Grind OBG Deck Plates	**PROJECT DESCRIPTION** CONSTRUCT SELF-ANCHORED SUSPENSION BRIDGE

Original Contract Time	Time Adj.: This Change	Previously Approved CCO Time Adjustments	Percentage Time Adjusted: (including this change)	Total # of Unreconciled Deferred Time CCO(s): (including this change)
2490 Day(s)	**0** Day(s)	**227** Day(s)	**9** %	**6**

THIS CHANGE ORDER PROVIDES FOR:

Performing additional grinding on the OBG deck plate welds pursuant to the Engineer's direction up through September 24, 2008 and Revising Special Provisions, Section 10-1.59, "STEEL STRUCTURES," subsection "FIELD WELDING," Item "E."

Additional grinding on the OBG deck plate welds was performed, on a trial basis, to determine grinding requirements needed for adequate fatigue performance over the 150-year design life of the bridge. It was determined by the Engineer of Record that Special Provisions be revised and also to clarify the direction of allowable bridge deck grinding marks. It was also determined by the Engineer of Record that the previously large amount of extra grinding work, that received an ATP, is no longer required. Therefore, the original scope of extra work was significantly reduced by performing the trial grinding only.

This change order resolves Contractor Request for Information (RFI) Nos. 153, 153R1, 199, 199R1, 1481 and Contractor Request for Change Order (RFCO) No. 30 with respect to the changes relative to this change order.

This work is not covered by any contract items. Therefore, payment for the Extra Work will be a Lump Sum of $7,860.00, which can be financed from the contingency fund. A detailed cost analysis is on file.
No adjustment of contract time is warranted, as this change does not affect the controlling operation.

This change order received concurrences from Gary Pursell (Resident Engineer), Rick Morrow (Structure Rep.), Pete Siegenthaler (Principal Engineer), Brian Maroney (Project Engineer), Marwan Nader (Designer of Record), Rich Foley (HQ Liaison) and Ken Terpstra (Project Manager).

This Change Order received an Authority To Proceed (ATP) from Headquarter Construction on 8/4/2008. The Resident Engineer requests an Issue and Approve (I&A) from Headquarter Construction for this change.

CONCURRED BY:	
CONSTRUCTION ENGINEER Res. Eng. Gary Pursell, Sup. TE	DATE 1/5/10
SR. BRIDGE ENGINEER Rick Morrow, Struct. Rep.	DATE 1/5/10
FHWA REPRESENTATIVE	DATE
PROJECT MANAGER Proj. Manager, Ken Terpstra	DATE 1/7/10
OTHER (SPECIFY) HQ Liaison, Rich Foley	DATE 1/6/10
Project Engineer, Brian Marone	1/4/10
PCE, Peter Siegenthaler, Prin TE	DATE 1/7/10
DISTRICT PRIOR APPROVAL BY	DATE
HQ (ISSUE & APPROVE) (TO PROCEED) BY HQ Const, Bob Molera (TO PROCEED)	DATE 8/4/08
RESIDENT ENGINEER SIGNATURE Gary Pursell	DATE 3/5/10

ESTIMATE OF COST	THIS REQUEST	TOTAL TO DATE
ITEMS	$0.00	$0.00
FORCE ACCOUNT	$0.00	$0.00
AGREED PRICE	$7,860.00	$7,860.00
ADJUSTMENT	$0.00	$0.00
TOTAL	$7,860.00	$7,860.00

FEDERAL PARTICIPATION

☐ PARTICIPATING ☐ PARTICIPATING IN PART ☒ NONE
☐ NON-PARTICIPATING (MAINTENANCE) ☐ NON-PARTICIPATING

FEDERAL SEGREGATION (IF MORE THAN ONE FUNDING SOURCE OR P.I.P. TYPE)
☐ CCO FUNDED PER CONTRACT ☐ CCO FUNDED AS FOLLOWS

FEDERAL FUNDING SOURCE	PERCENT

HC-39 Word(Rev.9/96)

DIST.	COUNTY	ROUTE	KILOMETER POST TOTAL PROJECT	SHEET NO.	TOTAL SHEETS
04	SF	80	13.2/13.9	646R4	1204

George Baker
REGISTERED ENGINEER - CIVIL

12-6-04
PLANS APPROVAL DATE

REGISTERED PROFESSIONAL ENGINEER — George S. Baker — No. C57112 — Exp. 12/31/05 — CIVIL — STATE OF CALIFORNIA

The State of California or its officers or agents shall not be responsible for the accuracy or completeness of electronic copies of this plan sheet.

T.Y. LIN / MOFFATT & NICHOL
825 BATTERY STREET
SAN FRANCISCO, CA 94111

Caltrans now has a web site! To get to the web site, go to: http://www.dot.ca.gov

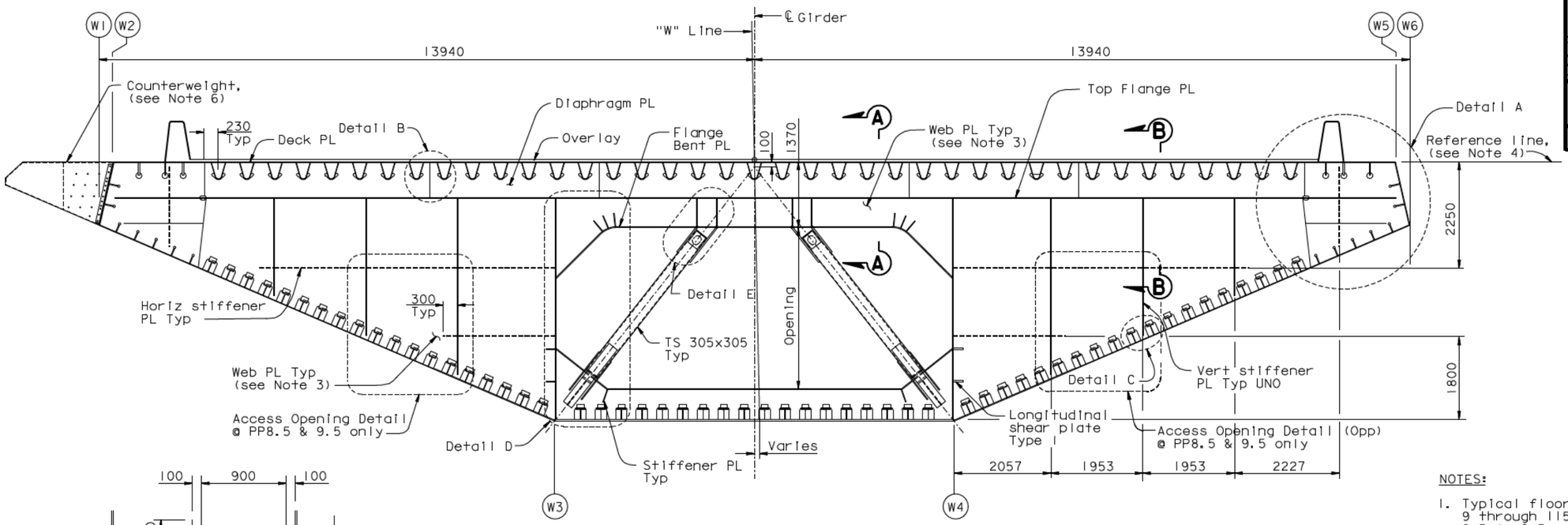

"W" LINE

TYPICAL FLOORBEAM SECTION (See Note 1)

1:50

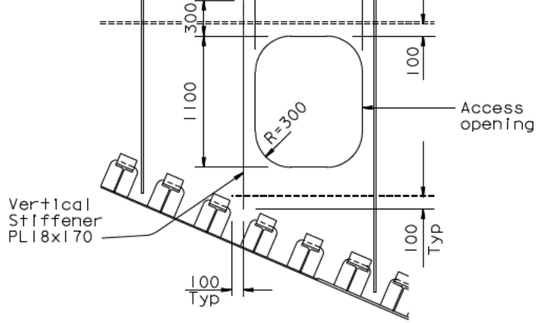

ACCESS OPENING DETAIL

(PP9.5 shown, PP8.5 similar)

NOTES:

1. Typical floorbeam is located at Panel Points 9 through 115 and intermediate Panel Points 8.5 to 9.5.
2. For floorbeam at intermediate Panel Points 10.5, 11.5, 12.5, 13.5, 111.5, 112.5, 113.5, 114.5, 115.2 and 115.5, see "Typical Floorbeam Details No.8" sheet.
3. For extents and thickness of floorbeam web, see "Typical Floorbeam Details No.2" sheet.
4. All dimensions are taken with respect to a reference line tangent to top deck plate.
5. For Sections A-A and B-B and Details B and C, see "Typical Floorbeam Details No.4" sheet.
6. For counterweight details, see "Typical Girder Details No.17" sheet.
7. For "Typical Floorbeam Details" sheets all bolts shall be detailed according to the bolt dimension table. See "Typical Girder Details No.1" sheet. All bolts are HS, unless noted otherwise.
8. For "Typical Floorbeam Details" sheets unless noted otherwise all fillet welds shall be 6 mm for plate sizes not greater than 20 mm. For plates greater than 20 mm fillet welds shall be 8 mm unless noted otherwise.
9. For Detail A, see "Typical Floorbeam Details No.3" sheet.
10. For Details D and E, see "Typical Floorbeam Details No.5" sheet.

Daniel J. Turner — REGISTERED PROFESSIONAL ENGINEER — No. C 65033 — Exp. 06/30/09 — CIVIL — STATE OF CALIFORNIA

FOR REVISIONS ONLY

4 REVISION 4 RESCINDS REVISION 2 & 3

CONTRACT CHANGE ORDER NO. ____
SHEET ___ OF ___

REQUESTS FOR INFORMATION NOT ADDRESSED IN THIS CCO REMAIN IN FORCE

MARK	DATE	DESCRIPTIONS	BY	CH'D	CCO#
4	04/08/09	GRINDING OBG DECK PLATES	AS	DT	53
3	04/30/08	GRINDING OBG DECK PLATES	AS	DT	53
2	01/22/08	GRINDING OBG DECK PLATES	AS	DT	53
1	02/16/07	BULKHEAD AT GIRDER PIER W2	AS	DT	27

REVISIONS

ALL DIMENSIONS ARE IN MILLIMETERS UNLESS OTHERWISE SHOWN

R. Valizadeh/V. Toan/Y.L./W.L./F.C.
DESIGN OVERSIGHT
SIGN OFF DATE 04/08/09

	BY	CHECKED
DESIGN	G. Baker	P. Ritchie
DETAILS	S. Camo	T. McMeans
QUANTITIES	C. Mauch	M. Roberts

PREPARED FOR THE STATE OF CALIFORNIA
DEPARTMENT OF TRANSPORTATION

R. Manzanarez
PROJECT ENGINEER

BRIDGE NO. 34-0006L/R
KILOMETER POST 13.2/13.9

SAN FRANCISCO OAKLAND BAY BRIDGE
EAST SPAN SEISMIC SAFETY PROJECT
SELF-ANCHORED SUSPENSION BRIDGE
(SUPERSTRUCTURE & TOWER)

TYPICAL FLOORBEAM DETAILS NO. 1

Rev. Date: 5-18-98

ORIGINAL SCALE IN MILLIMETERS FOR REDUCED PLANS 0 10 20 30 40 50 60 70 80 90 100

CU 04
EA 0120F1

DISREGARD PRINTS BEARING EARLIER REVISION DATES

REVISION DATES (PRELIMINARY STAGE ONLY)								SHEET	OF
01/15/99	05/15/99	08/30/99	05/31/01	04/26/02	07/29/02	12/19/02		229R4	

FILE -> L:\BB\04-012001\SAS\Contract Plans and CCO\CCO\CCO#53\Revision 04-08-09\DGN\agftb01.dgn

USERNAME => dwinrow DATE PLOTTED => 08 APR 2009 TIME PLOTTED => 10:48:07
100% PS&E

DIST.	COUNTY	ROUTE	KILOMETER POST TOTAL PROJECT	SHEET NO.	TOTAL SHEETS
04	SF	80	13.2/13.9	649R2	1204

George Baker
REGISTERED ENGINEER - CIVIL

12-6-04
PLANS APPROVAL DATE

REGISTERED PROFESSIONAL ENGINEER — George S. Baker — No. C57112 — Exp. 12/31/05 — CIVIL — STATE OF CALIFORNIA

The State of California or its officers or agents shall not be responsible for the accuracy or completeness of electronic copies of this plan sheet.

T.Y. LIN / MOFFATT & NICHOL
825 BATTERY STREET
SAN FRANCISCO, CA 94111

Caltrans now has a web site! To get to the web site, go to: http://www.dot.ca.gov

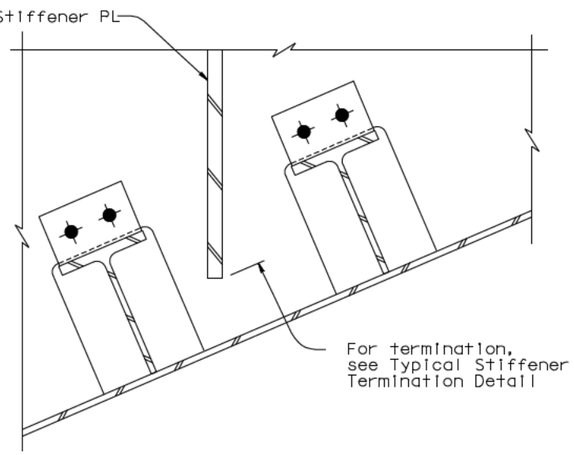

DETAIL C
1:5

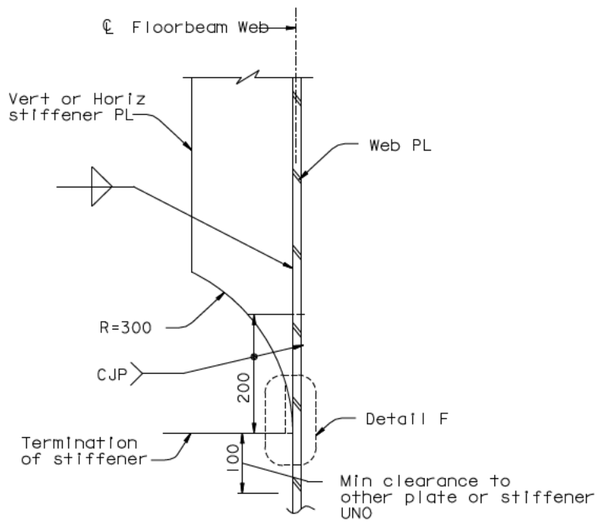

TYPICAL STIFFENER TERMINATION DETAIL
1:5
FOR SPCM PLATES

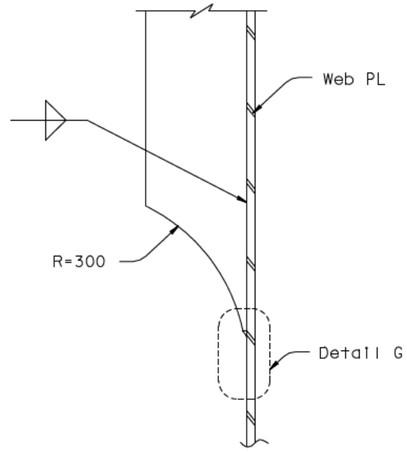

TYPICAL STIFFENER TRANSITION DETAIL
1:5
FOR NON-SPCM PLATES

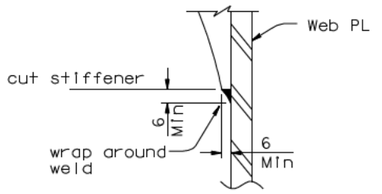

DETAIL G
1:2

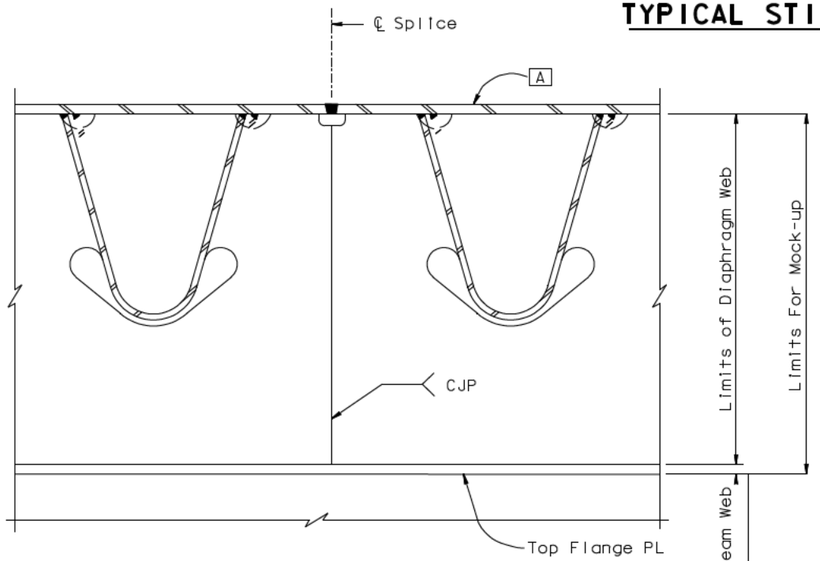

TYPICAL DIAPHRAGM SPLICE DETAIL B
1:5

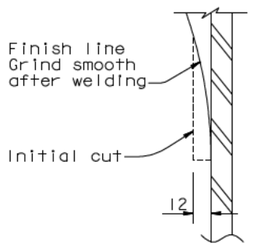

DETAIL F
1:2

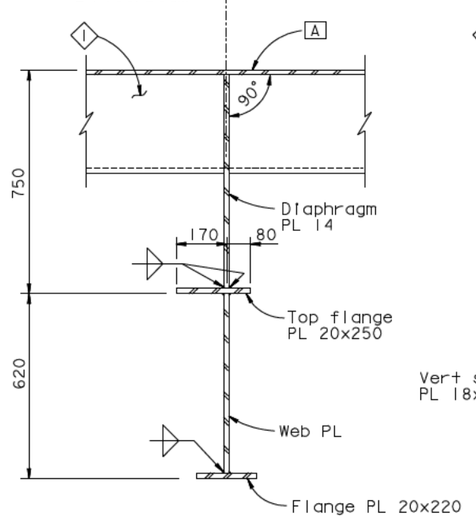

SECTION A-A
1:10

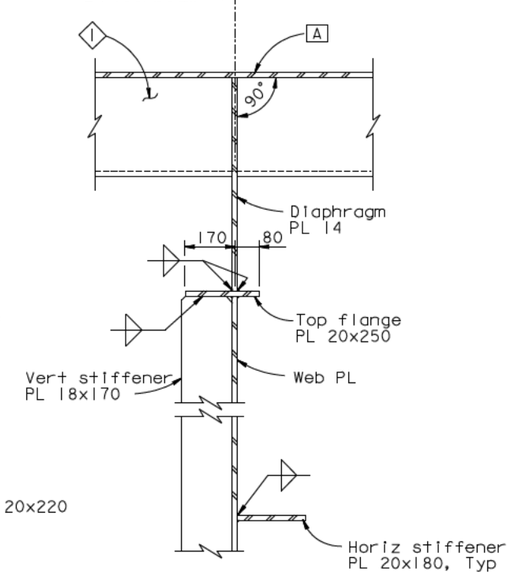

SECTION B-B
1:10

Daniel J. Turner — Daniel J. Turner — No. C 65033 — Exp. 06/30/09 — CIVIL — STATE OF CALIFORNIA

FOR REVISIONS ONLY

2 REVISION 2 RESCINDS REVISION 1

CONTRACT CHANGE ORDER NO. ____
SHEET ___ OF ___

REQUESTS FOR INFORMATION NOT ADDRESSED IN THIS CCO REMAIN IN FORCE

ALL DIMENSIONS ARE IN MILLIMETERS UNLESS OTHERWISE SHOWN

MARK	DATE	DESCRIPTIONS	BY	CH'D	CCO#
2	04/08/09	GRINDING OBG DECK PLATES	AS	DT	53
1	01/22/09	GRINDING OBG DECK PLATES	AS	DT	53

REVISIONS

R. Valizadeh/V. Toan/Y.L./W.L./F.C.
DESIGN OVERSIGHT
Ryan Valizadeh / Vong Toan / Y. Liu
SIGN OFF DATE 04/08/09

DESIGN — BY G. Baker — CHECKED P. Ritchie
DETAILS — BY S. Camo — CHECKED T. McMeans
QUANTITIES — BY C. Mauch — CHECKED M. Roberts

PREPARED FOR THE STATE OF CALIFORNIA DEPARTMENT OF TRANSPORTATION

R. Manzanarez
PROJECT ENGINEER

BRIDGE NO. 34-0006L/R
KILOMETER POST 13.2/13.9

SAN FRANCISCO OAKLAND BAY BRIDGE EAST SPAN SEISMIC SAFETY PROJECT
SELF-ANCHORED SUSPENSION BRIDGE (SUPERSTRUCTURE & TOWER)
TYPICAL FLOORBEAM DETAILS NO. 4

Rev. Date: 5-18-98

ORIGINAL SCALE IN MILLIMETERS FOR REDUCED PLANS 0 10 20 30 40 50 60 70 80 90 100

CU 04
EA 0120F1

DISREGARD PRINTS BEARING EARLIER REVISION DATES

REVISION DATES (PRELIMINARY STAGE ONLY): 08/28/98 08/28/98 | 05/31/01 | 04/08/02 | 07/01/02 | 12/19/02 | 11/13/05

SHEET 232R2 OF

FILE -> I:\bb\04-0120F1\sas\contract plans and cco\cco\cco#53\revision 04-08-09\dgn\agftb06.dgn

100 % PS&E
DATE PLOTTED => 08 APR 2009 TIME PLOTTED => 10:51:07
USERNAME => dwinrow

STATE OF CALIFORNIA - DEPARTMENT OF TRANSPORTATION

CONTRACT CHANGE ORDER

Change Requested by: Engineer

CCO: 54	Suppl. No. 0	Contract No. 04 - 0120F4	Road SF-80-13.2/13.9	FED. AID LOC.:

To: **AMERICAN BRIDGE/FLUOR ENTERPRISES INC A JOINT VENT**

You are directed to make the following changes from the plans and specifications or do the following described work not included in the plans and specifications for this contract. ***NOTE: This change order is not effective until approved by the Engineer.***

Description of work to be done, estimate of quantities and prices to be paid. (Segregate between additional work at contract price, agreed price and force account.) Unless otherwise stated, rates for rental of equipment cover only such time as equipment is actually used and no allowance will be made for idle time. This last percentage shown is the net accumulated increase or decrease from the original quantity in the Engineer's Estimate.

Extra Work at Force Account:

Remove and dispose of additional buried man-made objects as directed by the Engineer. All work shall be performed in accordance with the contract documentation.

Payments for Extra Work at Force Account authorized by the Engineer, as necessary, will be paid in accordance with the provisions of Section 4-1.03D, "Extra Work" of the Standard Specifications and Section 5-1.24, "Force Account Payment" of the Special Provisions.

Consideration of a time adjustment regarding Extra Work at Force Account will be deferred until completion of the work specified herein. Determination of a commensurate time adjustment will be made in accordance with Section 10-1.13, "PROGRESS SCHEDULE (CRITICAL PATH METHOD)" and Section 10-1.14, "TIME-RELATED OVERHEAD" of the Special Provisions, as well as Section 8-1.07, "LIQUIDATED DAMAGES", of the Standard Specifications.

Estimated cost of Extra Work at Force Account $100,000.00

Extra Work at Lump Sum:

Remove and dispose of buried concrete object, referenced in ABF-CAL-LTR-000316, located on Yerba Buena Island at Pier W2. This work shall be in accordance with Section 19-1.04, "Removal and Disposal of Buried Man-Made Objects," of the Standard Specifications.

For this work, the contractor will be paid the sum of $26,024.00. This sum constitutes full compensation, including markups, for this change.

It has been determined in accordance with Section 10-1.13, "PROGRESS SCHEDULE (CRITICAL PATH METHOD)," of the Special Provisions that no adjustment of time is warranted for this work.

Estimated cost of Extra Work at Lump Sum $26,024.00

Estimated Cost: **Increase** ☑ **Decrease** ☐ **$126,024.00**

By reason of this order the time of completion will be adjusted as follows: Deferred

Submitted by		
Signature	**Resident Engineer** Darryl Schram, STE, for Gary Pursell, RE	**Date** 12/4/07
Approval Recommended by		
Signature	**Supervising Bridge Engineer** Richard Morrow, P.E., Sup. BE	**Date** 12/5/07
Engineer Approval by		
Signature Gary Pursell	**Supervising Transportation Engineer** Gary Pursell, P.E., Sup. TE	**Date** 01/02/08

We the undersigned contractor, have given careful consideration to the change proposed and agree, if this proposal is approved, that we will provide all equipment, furnish the materials, except as may otherwise be noted above, and perform all services necessary for the work above specified, and will accept as full payment therefor the prices shown above.

NOTE: If you, the contractor, do not sign acceptance of this order, your attention is directed to the requirements of the specifications as to proceeding with the ordered work and filing a written protest within the time therein specified.

Contractor Acceptance by		
Signature	**(Print name and title)** Michael D. Flowers, Project Director	**Date** 12-12-07

STATE OF CALIFORNIA - DEPARTMENT OF TRANSPORTATION

CONTRACT CHANGE ORDER MEMORANDUM

DATE: 1/3/2008 Page 1 of 1

TO: Pete Siegenthaler, Prin. TE / Gary Pursell, P.E., Sup T.E.	FILE: E.A. 04 - 0120F4
FROM: Gary Pursell, P.E., Sup.T.E.	CO-RTE-PM SF-80-13.2/13.9
	FED. NO.
CCO#: 54 SUPPLEMENT#: 0 Category Code: CDSB	CONTINGENCY BALANCE (incl. this change) $140,246,782.24
COST: $126,024.00 INCREASE ☑ DECREASE ☐	HEADQUARTERS APPROVAL REQUIRED? ☐ YES ☑ NO
SUPPLEMENTAL FUNDS PROVIDED: $0.00	IS THIS REQUEST IN ACCORDANCE WITH ENVIRONMENTAL DOCUMENTS? ☑ YES ☐ NO
CCO DESCRIPTION: Buried Man-Made Objects	**PROJECT DESCRIPTION:** CONSTRUCT SELF-ANCHORED SUSPENSION BRIDGE

Original Contract Time:	Time Adj. This Change:	Previously Approved CCO Time Adjustments:	Percentage Time Adjusted: (including this change)	Total # of Unreconciled Deferred Time CCO(s): (including this change)
2490 Day(s)	DEF Day(s)	30 Day(s)	1 %	0

THIS CHANGE ORDER PROVIDES FOR:

Removing and disposing of buried man-made objects not shown in the contract documentation in accordance with Section 19-1.04, "Removal and Disposal of Buried Man-Made Objects," of the Standard Specifications and as directed by the Engineer.

This change order shall reimburse the Contractor for unanticipated removal and disposal of buried man-made objects in conflict with construction activities around Yerba Buena Island (YBI) and the San Francisco Bay. All work associated with this change shall be done in accordance with project permits and documents.

Payment for removing and disposal of a buried man-made object along W2 will be paid for as Extra Work at Lump Sum Price for a cost of $26,024.00 which can be financed from the contingency fund.

To remove and dispose of additional work outside of the W2 area, the Contractor will be paid for at Extra Work at Force Account at an estimated amount of $100,000.00, which can be financed from the contingency fund.

A detailed account of the costs shall be placed in the project files.

Adjustment of contract time is deferred pending completion of the work specified in this change as it may affect the controlling operation.

Design and Maintenance concurrence is not required for this change.

CONCURRED BY:		
Construction Engineer:	Res. Eng., Gary Pursell, Sup. TE	Date 10/25/07
Bridge Engineer:	Struct Rep, Rick Morrow, Sup TE	Date 10/26/07
Project Engineer:		Date
Project Manager:	Proj Manager, Ken Terpstra	Date 12/21/07
FHWA Rep.:		Date
Environmental:		Date
Other (specify):	PCE, Mike Forner, Prin TE	Date 10/26/07
Other (specify):		Date
District Prior Approval By:		Date
HQ (Issue Approve) By:		Date
Resident Engineer's Signature:	Gary Pursell	Date 1/3/08

ESTIMATE OF COST	THIS REQUEST	TOTAL TO DATE
ITEMS	$0.00	$0.00
FORCE ACCOUNT	$100,000.00	$100,000.00
AGREED PRICE	$26,024.00	$26,024.00
ADJUSTMENT	$0.00	$0.00
TOTAL	$126,024.00	$126,024.00

FEDERAL PARTICIPATION

☐ PARTICIPATING ☐ PARTICIPATING IN PART ☑ NONE
☐ NON-PARTICIPATING (MAINTENANCE) ☐ NON-PARTICIPATING

FEDERAL SEGREGATION (if more than one Funding Source or P.I.P. type)
☑ CCO FUNDED PER CONTRACT ☐ CCO FUNDED AS FOLLOWS

FEDERAL FUNDING SOURCE	PERCENT

ADA Notice: For individuals with sensory disabilities, this document is available in alternate formats. For information call: (916) 654-6410 or TDD (916) 654-3880 or write Records and Forms Management, 1120 N Street, MS-89, Sacramento, CA 95814.

STATE OF CALIFORNIA - DEPARTMENT OF TRANSPORTATION

CONTRACT CHANGE ORDER

Change Requested by: Engineer

CCO: 54 **Suppl. No. 1** **Contract No. 04 – 0120F4** **Road** SF-80-13.2/13.9 **FED. AID LOC.:**

To: **AMERICAN BRIDGE/FLUOR ENTERPRISES INC A JOINT VENTURE**

You are directed to make the following changes from the plans and specifications or do the following described work not included in the plans and specifications for this contract. ***NOTE: This change order is not effective until approved by the Engineer.***

Description of work to be done, estimate of quantities and prices to be paid. (Segregate between additional work at contract price, agreed price and force account.) Unless otherwise stated, rates for rental of equipment cover only such time as equipment is actually used and no allowance will be made for idle time. This last percentage shown is the net accumulated increase or decrease from the original quantity in the Engineer's Estimate.

Extra Work at Force Account:

Provide additional funds to remove and dispose of additional buried man-made objects as directed by the Engineer. All work shall be performed in accordance with the contract documentation.

Payments for Extra Work at Force Account authorized by the Engineer, as necessary, will be paid in accordance with the provisions of Section 4-1.03D, "Extra Work" of the Standard Specifications and Section 5-1.24, "Force Account Payment" of the Special Provisions.

Consideration of a time adjustment will be deferred until completion of the work specified herein. Determination of a commensurate time adjustment will be made in accordance with Section 10-1.13, "PROGRESS SCHEDULE (CRITICAL PATH METHOD)" and Section 10-1.14, "TIME-RELATED OVERHEAD" of the Special Provisions, as well as Section 8-1.07, "LIQUIDATED DAMAGES", of the Standard Specifications.

Estimated cost of Extra Work at Force Account $400,000.00

Estimated Cost: **Increase** ☒ **Decrease** ☐ **$400,000.00**

By reason of this order the time of completion will be adjusted as follows: **Deferred**

Submitted by

Signature N. L **Resident Engineer** William Shedd for Gary Pursell, SupTE **Date** 10-8-09

Approval Recommended by

Signature Gary Pursell **Supervising Bridge Engineer** Gary Pursell for Richard Morrow, SupTE **Date** 10/8/09

Engineer Approval by

Signature Gary Pursell **Supervising Transportation Engineer** Peter Siegenthaler, PrinTE **Date** 10/14/09

We the undersigned contractor, have given careful consideration to the change proposed and agree, if this proposal is approved, that we will provide all equipment, furnish the materials, except as otherwise be noted above, and perform all services necessary for the work above specified, and will accept as full payment therefor the prices shown above.

NOTE: If you, the contractor, do not sign acceptance of this order, your attention is directed to the requirements of the specifications as to proceeding with the ordered work and filing a written protest within the time therein specified.

Contractor Acceptance by

Signature (NOT REQUIRED) (Print name and title) **Date**

CONTRACT CHANGE ORDER

Change Requested by: Engineer

CCO: 55 **Suppl. No. 0** **Contract No. 04 – 0120F4** **Road** SF-80-13.2/13.9 **FED. AID LOC.:**

To: **AMERICAN BRIDGE/FLUOR ENTERPRISES INC A JOINT VENTURE**

You are directed to make the following changes from the plans and specifications or do the following described work not included in the plans and specifications for this contract. ***NOTE: This change order is not effective until approved by the Engineer.***

Description of work to be done, estimate of quantities and prices to be paid. (Segregate between additional work at contract price, agreed price and force account.) Unless otherwise stated, rates for rental of equipment cover only such time as equipment is actually used and no allowance will be made for idle time. This last percentage shown is the net accumulated increase or decrease from the original quantity in the Engineer's Estimate.

Adjustment of Compensation at Lump Sum:

ITEM 1.

- Modify service platforms including, but not limited to, electrical components, conduit routing and types, wireways, pipe sleeves, bolting connections, grating, handrail post base plates, electrical panel supports, and guardrails and pull box supports.
- Waive the galvanizing requirement for service platform framing members below the walkway grating.
- New steel and welds on electrical panel and cable tray supports inside the crossbeams at the service platforms shall be cleaned, primed, and finish painted in accordance with Special Provisions Section 10-1.69 "CLEAN AND PAINT STRUCTURAL STEEL."

Revise Special Provisions Section 10-3.17 "ELECTRICAL EQUIPMENT," as shown on sheets 3 through 6 of this change order.

Adjustment of Compensation at Lump Sum.....$832,437.00

Estimate of Increase in Contract Item at Contract Price:

ITEM 2.

- At utility platform locations, increase the size of thickened crossbeam plates for pipe sleeve penetrations

Item No. 55: FURNISH STRUCTURAL STEEL (BRIDGE) (BOX GIRDER)
2,393 KG (+0.01%) @ $9.00 /KG =+$ 21,537.00 (+0.01%)

Item No. 56: ERECT STRUCTURAL STEEL (BRIDGE) (BOX GIRDER)
2,393 KG (+0.01%) @ $1.00 /KG =+$ 2,393.00 (+0.01%)

The quantity increases shown herein for Items #55 and 56, when combined with the quantity shown in the Engineer's Estimate, and as modified by any previous change orders or revisions to dimensions made by the Engineer, shall be the final quantity for which payment will be made.

Total Cost for Increase in Contract Item..... $23,930.00

The following revised plan sheets detail the changes addressed in this change order: 72R7, 73R1, 75R4, 75S1, 82R3, 82S1R2, 83R2, 83S1R2, 83S2R2, 83S3R2, 111R1, 113R1, 114R1, 126R1, 127R2, 128R1, 129R1, 130R2, 134R1, 134S1R1, 135R1, 135S1R1, 136R1, 136S1R1, 137R1, 137S1R1, 138R1, 138S1, 139R1, 139S1, 139S2, 139S3, 139S4, 139S5, 142R3, 166R2, 166S1, 166S2, 167R2, 168R2, 169R2, 170R2, 176S1R1, 176S2R1, 199R1, 200R3, 201R1, 202R1, 203R2, 204R1, 205R1, 206R1, 212R3, 232S1R1, 232S2R1, 271S5, 308R1, 361R4, 362R3, 363R3, 373R3, 374R3, 375R3, 386R2, 387R2, 388R2, 389R2, 393R3, 394R2, 395R2, 396R3, 403R2, 407S5, 407S6, 407S7, 407S8, 407S9, 407S10, 407S11, 407S12, 407S13, 407S14, 407S15, and 660R2 (of 1204) as shown on sheets 7 through 90 of this change order.

This change order resolves the costs associated with Contractor Request for Information (RFI) numbers 317R0, 317R1, 317R2, 317R3, 451R0, 451R1, 583, 729, 834R0, 834R1, 1136, 1225, 1554, 1670, 1901R0, 1901R1, and 2036 with respect to changes listed above.

CONTRACT CHANGE ORDER

Change Requested by: Engineer

CCO: 55 **Suppl. No.** 0 **Contract No.** 04 – 0120F4 **Road** SF-80-13.2/13.9 **FED. AID LOC.:**

CHANGE ORDER COST AND TIME SUMMARY

(ITEM 1) Adjustment of Compensation at Lump Sum	$832,437.00
(ITEM 2) Increase in Contract Items at Contract Prices	$23,930.00
Total net pay for this change order	$856,367.00

This sum constitutes full and complete compensation for furnishing all labor, material, tools and incidentals including all markups by reason of this change.

Estimated Cost: **Increase** ☒ **Decrease** ☐ **$856,367.00**

By reason of this order the time of completion will be adjusted as follows: **0 Days**

Submitted by

Signature **Resident Engineer** Kannu Balan, Senior T.E. **Date** 10-7-11

Approval Recommended by

Signature **Supervising Transportation Engineer** William Casey, Sup. T.E. **Date** 10/7/11

Engineer Approval by

Signature **Supervising Transportation Engineer** William Casey, Sup. T.E. **Date** 10-12-11

We the undersigned contractor, have given careful consideration to the change proposed and agree, if this proposal is approved, that we will provide all equipment, furnish the materials, except as otherwise be noted above, and perform all services necessary for the work above specified, and will accept as full payment therefore the prices shown above.

NOTE: If you, the contractor, do not sign acceptance of this order, your attention is directed to the requirements of the specifications as to proceeding with the ordered work and filing a written protest within the time therein specified.

Contractor Acceptance by

Signature (Print name and title) BRIAN A. PETERSON - PROJECT DIRECTOR **Date** 11 OCT 11

STATE OF CALIFORNIA - DEPARTMENT OF TRANSPORTATION

CONTRACT CHANGE ORDER MEMORANDUM

TO: Tony Anziano, Program Manager /	FILE: **E.A.** 04 - 0120F4
FROM: Kannu Balan, Senior TE	**CO-RTE-PM** SF-80-13.2/13.9
	FED. NO.
CCO#: **55** SUPPLEMENT#: **0** Category Code: **CBSA**	CONTINGENCY BALANCE (incl. this change) **$146,455,582.11**
COST: **$856,367.00** INCREASE ☑ DECREASE ☐	HEADQUARTERS APPROVAL REQUIRED? ☑ YES ☐ NO
SUPPLEMENTAL FUNDS PROVIDED: **$0.00**	IS THIS REQUEST IN ACCORDANCE WITH ENVIRONMENTAL DOCUMENTS? ☑ YES ☐ NO
CCO DESCRIPTION: Service Platforms Electrical Changes	**PROJECT DESCRIPTION:** CONSTRUCT SELF-ANCHORED SUSPENSION BRIDGE

Original Contract Time:	Time Adj. This Change:	Previously Approved CCO Time Adjustments:	Percentage Time Adjusted: (including this change)	Total # of Unreconciled Deferred Time CCO(s): (including this change)
2490 Day(s)	**0** Day(s)	**501** Day(s)	**20** %	**3**

THIS CHANGE ORDER PROVIDES FOR:

Modifying service platforms including electrical components, conduit routing and types, wireways, pipe sleeves, bolting connections, grating, galvanizing and painting, handrail post base plates, electrical panel supports, and guardrails and pull box supports.

Revising Special Provisions Section 10-3.17 "ELECTRICAL EQUIPMENT."

The conduit routing from inside the crossbeam to the service platforms is not constructible due to horizontal offsets and vertical clearances. There are conflicts between the platform framing and the conduit routing from the cable trays to pipe sleeves. Service platform electrical items are modified to accommodate redesigned conduit routing. Panel racks are revised to avoid interference with the stairway from the top of crossbeam to the platform. The crossbeam slope at PP 14 is not 2% as per plan sheet standard detail therefore the support detail needs to be modified to account for a different slope. Additional pipe sleeves are needed for the lighting circuit inside the crossbeam and the ground cable. The handrailing posts are moved to eliminate conflicts with the gusset plates on the service platforms. By allowing bolted connections instead of field welding, the platforms and racks can be partially or completely assembled in the shop in order to avoid field welding access challenges. The Contractor has been unable to find the grating designated in the plan sheets, therefore the Department has approved an equivalent grating.

This change order resolves the costs associated with Contractor Request for Information (RFI) numbers 317R0, 317R1, 317R2, 317R3, 451R0, 451R1, 583, 729, 834R0, 834R1, 1136, 1225, 1554, 1670, 1901R0, 1901R1, and 2036 with respect to changes listed above.

The total cost of this change order is $832,437.00 lump sum and $23,930.00 increase in contract items for a total of $856,367.00 for this change, which can be financed from the contingency fund. A detailed cost analysis is on file.

No time adjustment is warranted, as this change order does not affect the controlling operation.

This change order has concurrence from Michael Forner (Principal TE), Ken Terpstra (Project Manager), Rick Morrow (Sup. BE), Robert Kobal (HQ Oversight), Wenyi Long (Bridge Design), Lina Ellis (Maintenance), and Jing Chen (District Design) March 9, 2009.

ADA Notice: For individuals with sensory disabilities, this document is available in alternate formats. For information call: (916) 654-6410 or TDD (916) 654-3880 or write Records and Forms Management, 1120 N Street, MS-89, Sacramento, CA 95814.

CONCURRED BY:			
Construction Engineer:	PCE, Mike Forner, Prin TE	Date	1/7/08
Bridge Engineer:	Rick Morrow, Sup BE	Date	1/4/08
Project Engineer:	CT Oversight, Wenyi Long, P.E.	Date	3/9/09
Project Manager:	Proj Manager, Ken Terpstra	Date	1/15/09
FHWA Rep.:		Date	
Environmental:		Date	
Other (specify):	Struct. Maint, Lina Ellis	Date	4/8/09
Other (specify):	HQ, Rob Kobal	Date	1/8/08
District Prior Approval By:	HQ Bob Molera	Date	4/16/09
HQ (Issue Approve) By:		Date	
Resident Engineer's Signature:		Date	10-7-11

ESTIMATE OF COST

	THIS REQUEST	TOTAL TO DATE
ITEMS	$23,930.00	$23,930.00
FORCE ACCOUNT	$0.00	$0.00
AGREED PRICE	$0.00	$0.00
ADJUSTMENT	$832,437.00	$832,437.00
TOTAL	$856,367.00	$856,367.00

FEDERAL PARTICIPATION

☐ PARTICIPATING ☐ PARTICIPATING IN PART ☑ NONE
☐ NON-PARTICIPATING (MAINTENANCE) ☐ NON-PARTICIPATING

FEDERAL SEGREGATION (if more than one Funding Source or P.I.P. type)
☐ CCO FUNDED PER CONTRACT ☐ CCO FUNDED AS FOLLOWS

FEDERAL FUNDING SOURCE	PERCENT

ADA Notice: For individuals with sensory disabilities, this document is available in alternate formats. For information call: (916) 654-6410 or TDD (916) 654-3880 or write Records and Forms Management, 1120 N Street, MS-89, Sacramento, CA 95814.

DIST	COUNTY	ROUTE	KILOMETER POST TOTAL PROJECT	SHEET No	TOTAL SHEETS
04	SF	80	13.2/13.9	72R7	1204

REGISTERED STRUCTURAL ENGINEER — DATE 12/19/02

12-6-04
PLANS APPROVAL DATE

Mee Shing Owyang, No. 24960, Exp. 12/31/07, CIVIL, STATE OF CALIFORNIA

PARSONS BRINCKERHOFF QUADE & DOUGLAS, INC.
303 SECOND STREET, SUITE 700 N
SAN FRANCISCO, CA 94107

The State of California or its officers or agents shall not be responsible for the accuracy or completeness of electronic copies of this plan sheet.

Caltrans now has a web site! To get to the web site, go to http://www.dot.ca.gov

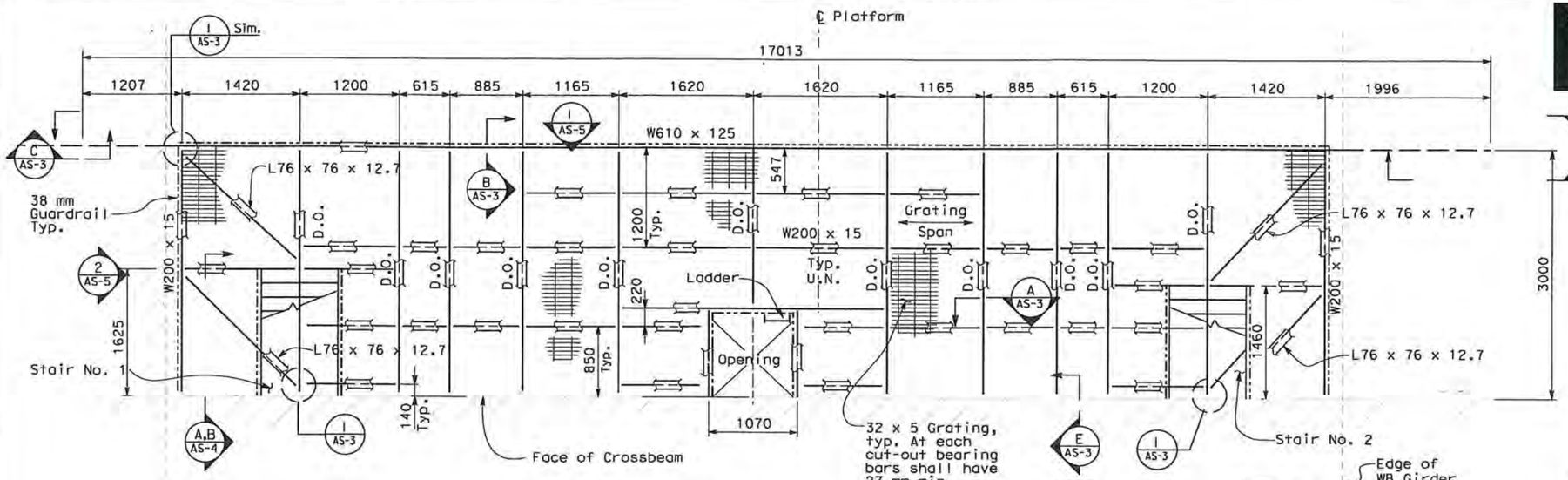

FRAMING PLAN
SCALE: 1:30

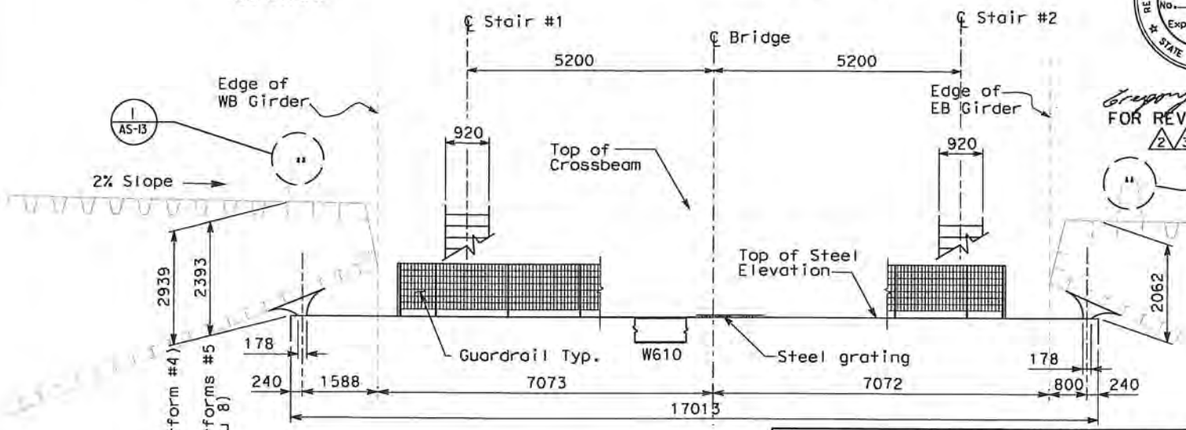

SECTION A
SCALE: 1:60

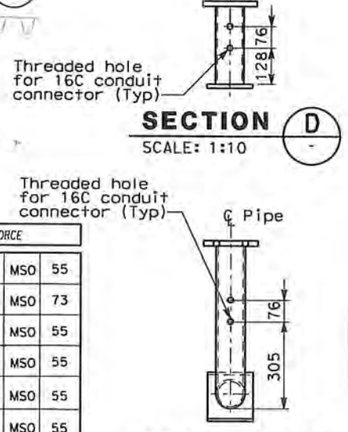

SECTION D
SCALE: 1:10

SECTION E
SCALE: 1:10

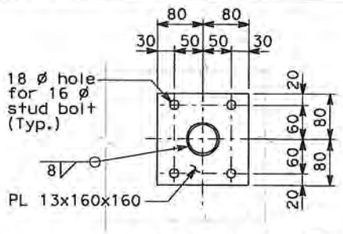

SECTION C
SCALE: 1:5

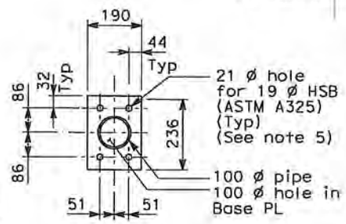

SECTION B
SCALE: 1:10

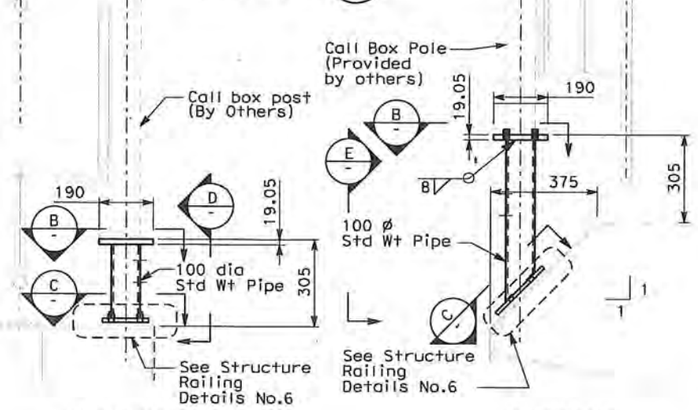

AT BELVEDERE

DETAIL 2
SCALE: 1:10
NOTE 5

AT BIKE PATH

DETAIL 1
SCALE: 1:10
NOTE 5

NOTES:

1. Total weight of platform 5987 kg
2. The Contractor shall verify all controlling field dimensions before ordering or fabricating any materials.
3. For platform locations, see electrical plans.
4. For anchor bolt locations, spacing and other requirements, see electrical plan.
5. For Call Box locations, see electrical plan sheet E-397. Bolt hole size and spacings shown are for information only contractor to verify the actual bolt hole size and spacings.
7. 6. Galvanization requirements for service platform framing members may be waived at the discretion of the Engineer.

REQUEST FOR INFORMATION NOT ADDRESSED IN THIS CCO REMAIN IN FORCE

MARK	DATE	DESCRIPTIONS	BY	CH'D	CCO#
		REVISIONS			
7	11/19/10	SERVICE PLATFORM ELECTRICAL CHANGES	NK	MSO	55
6	06/11/10	BIKE PATH CONDUIT	GB	MSO	73
5	07/17/09	SERVICE PLATFORM ELECTRICAL CHANGES	GB	MSO	55
4	03/30/09	SERVICE PLATFORM ELECTRICAL CHANGES	GB	MSO	55
3	01/07/09	SERVICE PLATFORM ELECTRICAL CHANGES	GB	MSO	55
2	06/12/08	SERVICE PLATFORM ELECTRICAL CHANGES	GB	MSO	55
1	03/04/08	BARRIER MODIFICATIONS.	EL	MI	44

CONTRACT CHANGE ORDER NO. 55
SHEET 7 OF 90

Gregory Benkovich, No. 40518, Exp. 3/31/11, CIVIL, STATE OF CALIFORNIA
FOR REVISION ONLY 2 3 4 5 6

Mee Shing Owyang, No. 24960, Exp. 12/31/09, CIVIL, STATE OF CALIFORNIA
FOR REVISION ONLY 1 7

ALL DIMENSIONS ARE IN MILLIMETERS UNLESS OTHERWISE SHOWN

Bob Zandipour
DESIGN OVERSIGHT
4-4-04
SIGN OFF DATE

	BY	CHECKED
DESIGN	A. Van Felten	M. S. Owyang
DETAILS	A. Van Felten	M. S. Owyang
QUANTITIES	M.S. Owyang	R. Parrino

PREPARED FOR THE STATE OF CALIFORNIA
DEPARTMENT OF TRANSPORTATION

Gene Lusherovich
PROJECT ENGINEER

CU 04251
EA 0120F1

BRIDGE NO. 34-0006
KILOMETER POST 13.2/13.9

SAS SUPERSTRUCTURE
SERVICE PLATFORM FRAMING PLAN
AS-2

DESIGN DETAIL SHEET (METRIC) REV. 3/1/98)

ORIGINAL SCALE IN MILLIMETERS FOR REDUCED PLANS 0 10 20 30 40 50 60 70 80 90 100

DISREGARD PRINTS BEARING EARLIER REVISION DATES

REVISION DATES (PRELIMINARY STAGE ONLY) — SHEET — OF

FILE => T:\13103\MS\pse\SAS Struc\CCO\SAS CC055\Issued to NKing\2010-11-18 for NKing\04-0120F1_0072R07.dgn

USERNAME => lfiorico DATE PLOTTED => 11/18/2010 TIME PLOTTED => 13:37:30 PM

$FREQUEST

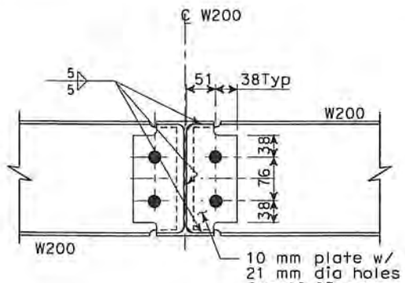

SECTION A (A, AS-2) SCALE: 1:5

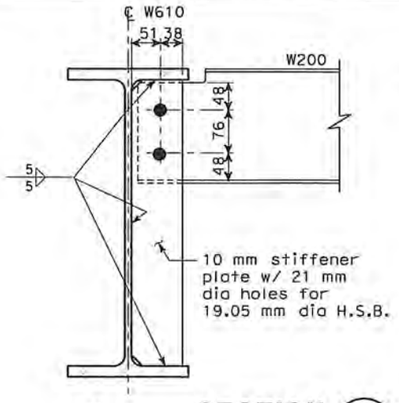

SECTION B (B, AS-2) SCALE: 1:5

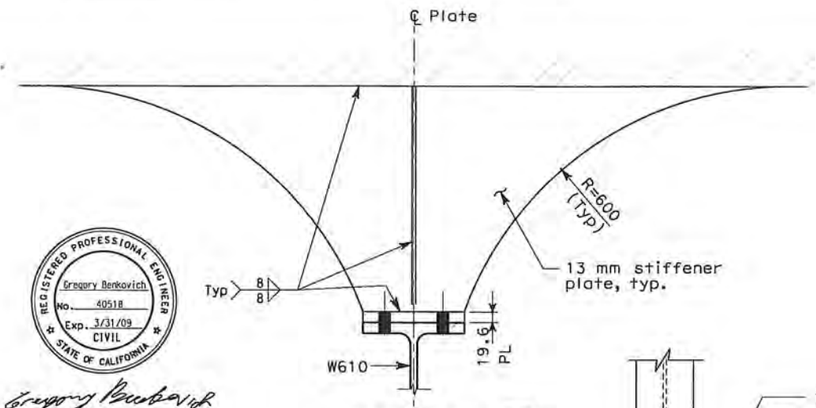

SECTION G (G) SCALE: 1:5

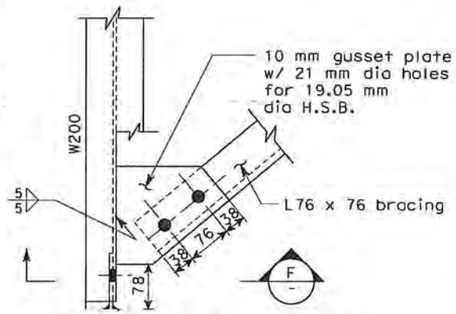

DETAIL I (I, AS-2) SCALE: 1:5

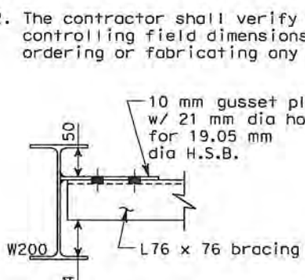

SECTION F (F) SCALE: 1:5

Gregory Benkovich
FOR REVISION ONLY

DIST	COUNTY	ROUTE	KILOMETER POST TOTAL PROJECT	SHEET No	TOTAL SHEETS
04	SF	80	13.2/13.9	73R1	1204

12/19/02
REGISTERED CIVIL ENGINEER

12-6-04
PLANS APPROVAL DATE

REGISTERED PROFESSIONAL ENGINEER — Mee Shing Owyang — No. 24960 — Exp. 12/31/05 — CIVIL — STATE OF CALIFORNIA

The State of California or its officers or agents shall not be responsible for the accuracy or completeness of electronic copies of this plan sheet.

Parsons Brinckerhoff Quade & Douglas, Inc.
303 Second Street, Suite 700N
San Francisco, CA 94107

Caltrans now has a web site! To get to the web site, go to: http://www.dot.ca.gov

REGISTERED PROFESSIONAL ENGINEER — Gregory Benkovich — No. 40518 — Exp. 3/31/09 — CIVIL — STATE OF CALIFORNIA

NOTES:

1. For structural notes, see sheet AS-1.
2. The contractor shall verify all controlling field dimensions before ordering or fabricating any materials.

REQUEST FOR INFORMATION NOT ADDRESSED IN THIS CCO REMAIN IN FORCE					
MARK	DATE	REVISIONS DESCRIPTIONS	BY	CH'D	CCO#
1	03/30/09	SERVICE PLATFORM ELECTRICAL CHANGES	GB	MSO	55

CONTRACT CHANGE ORDER NO. 55
SHEET 8 OF 90

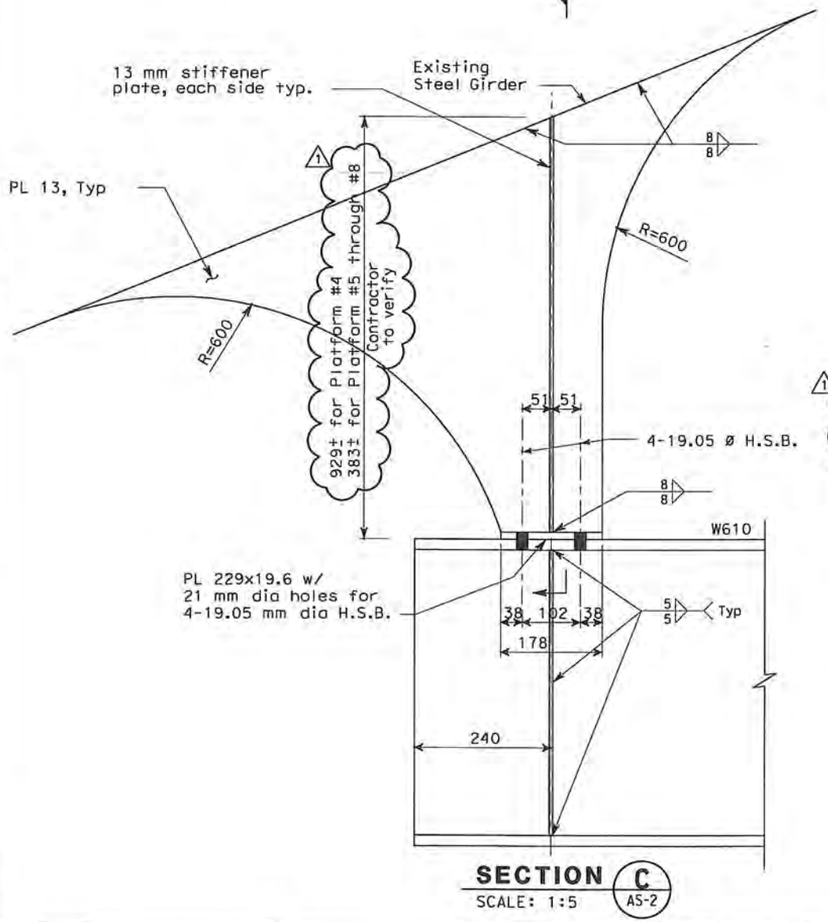

SECTION C (C, AS-2) SCALE: 1:5

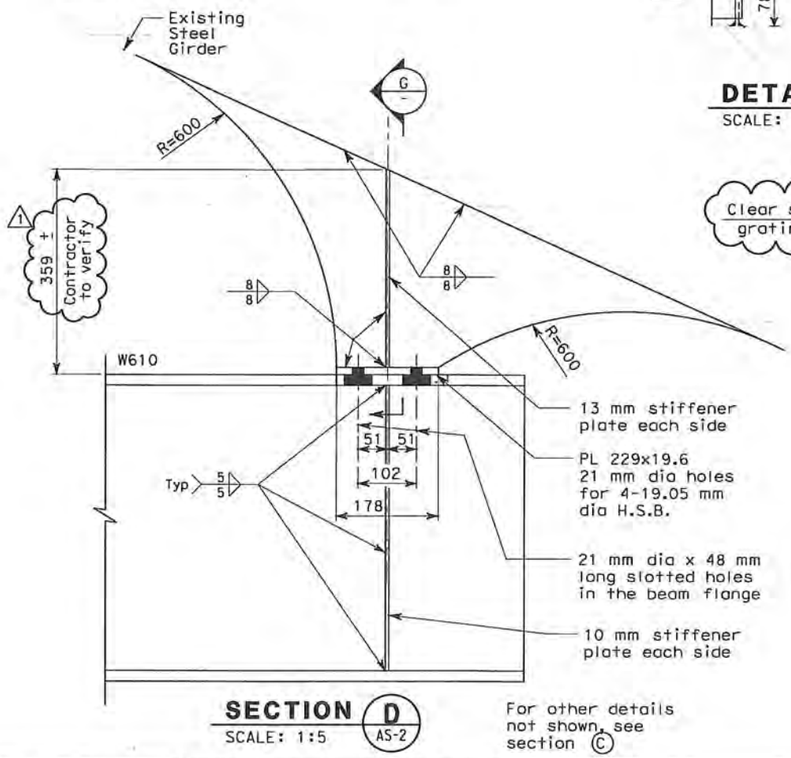

SECTION D (D, AS-2) SCALE: 1:5

For other details not shown, see section (C)

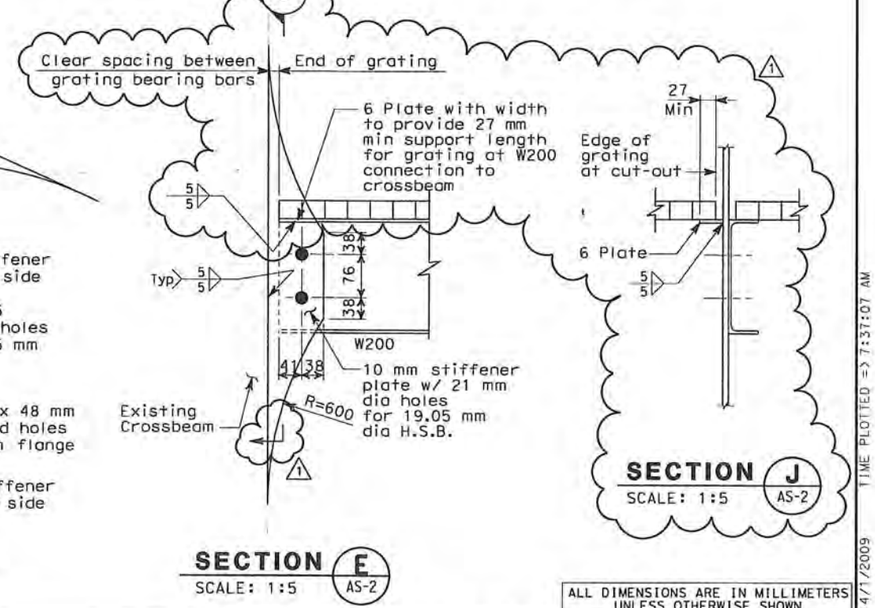

SECTION E (E, AS-2) SCALE: 1:5

SECTION J (J, AS-2) SCALE: 1:5

ALL DIMENSIONS ARE IN MILLIMETERS UNLESS OTHERWISE SHOWN

DESIGN	A. Van Felten	M.S. Owyang	PREPARED FOR THE STATE OF CALIFORNIA DEPARTMENT OF TRANSPORTATION	BRIDGE NO. 34-0006	SAS SUPERSTRUCTURE
LAYOUT	A. Van Felten	M.S. Owyang		KILOMETER POST 13.2/13.9	SERVICE PLATFORM FRAMING DETAILS — AS-3
QUANTITIES	M.S. Owyang	R. Parrino			

BoB Zandpour — DESIGN OVERSIGHT
SIGN OFF DATE
Brady Nadell — PROJECT ENGINEER

DESIGN DETAIL SHEET (METRIC) (REV. 3/1/98)

ORIGINAL SCALE IN MILLIMETERS FOR REDUCED PLANS 0 10 20 30 40 50 60 70 80 90 100

CU 04251
EA 0120F1

DISREGARD PRINTS BEARING EARLIER REVISION DATES →

REVISION DATES (PRELIMINARY STAGE ONLY) — SHEET — OF

DGN FILE => T:\13103\MS\pse\SAS Struc\CCO\SAS CCO55\04-0120f1_0073R01.dgn
USERNAME => garciar

DATE PLOTTED => 4/1/2009 TIME PLOTTED => 7:37:07 AM

$FREQUEST

DIST	COUNTY	ROUTE	KILOMETER POST TOTAL PROJECT	SHEET No	TOTAL SHEETS
04	SF	80	13.2/13.9	75R4	1204

REGISTERED CIVIL ENGINEER 12/19/02

12-6-04
PLANS APPROVAL DATE

REGISTERED PROFESSIONAL ENGINEER — Moo Shing Owyang, No. 24960, Exp. 12/31/08, CIVIL, STATE OF CALIFORNIA

The State of California or its officers or agents shall not be responsible for the accuracy or completeness of electronic copies of this plan sheet.

Parsons Brinckerhoff Quade & Douglas, Inc.
303 Second Street, Suite 700N
San Francisco, CA 94107

Caltrans now has a web site! To get to the web site, go to: http://www.dot.ca.gov

NOTES:

1. The contractor shall verify all controlling field dimensions before ordering or fabricating any material.
2. For structural notes, see sheet AS-1.
3. For alternative bolted handrail connections, see AS-5A. (4)

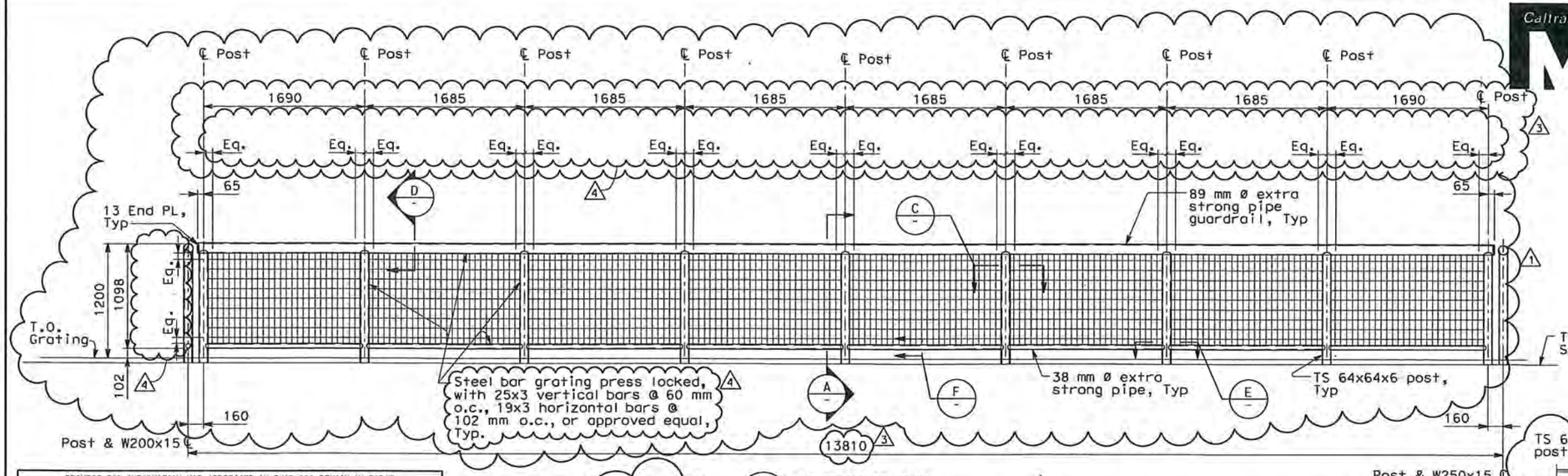

1 **ELEVATION** AS-2 SCALE: 1:25

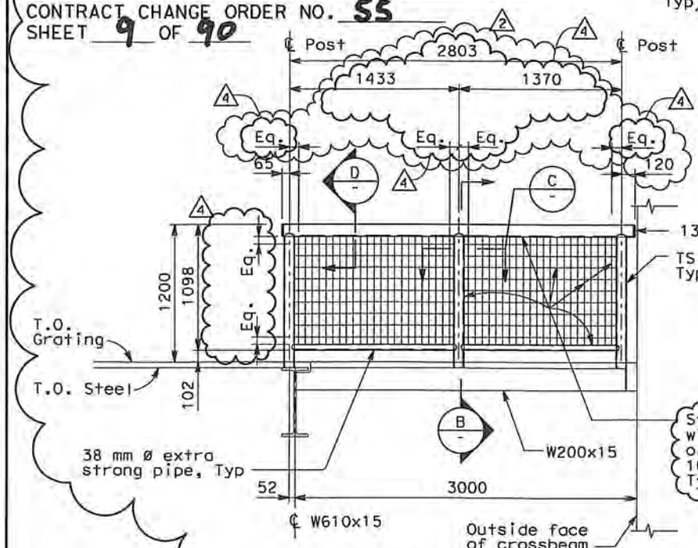

2 **ELEVATION** SCALE: 1:25

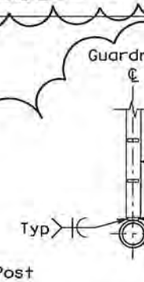

F **SECTION** SCALE: 1:5

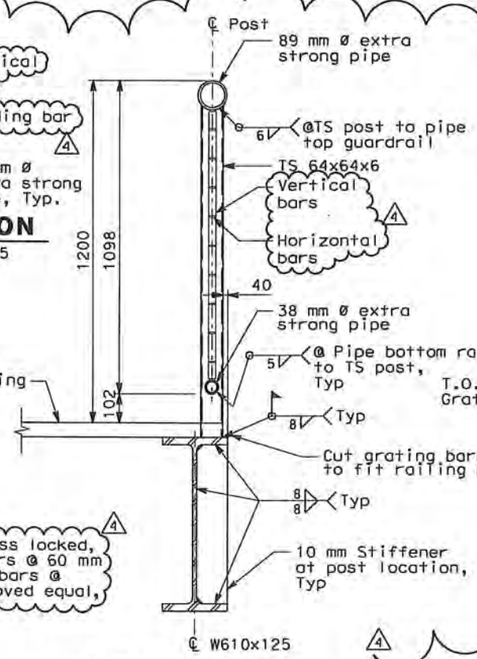

A **SECTION** SCALE: 1:10 SEE NOTE 3

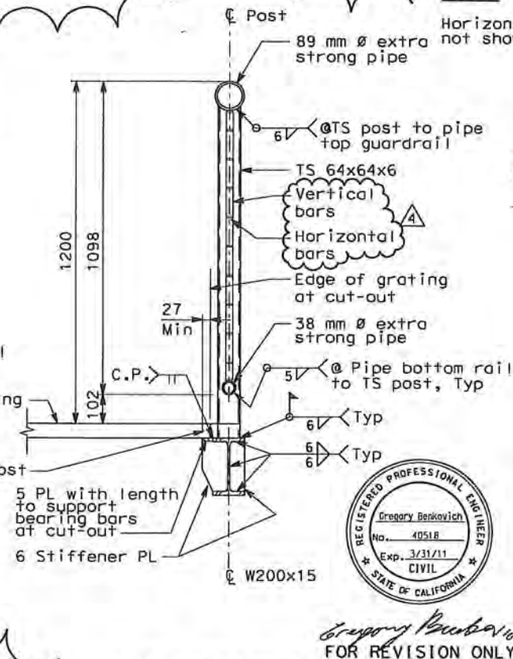

B **SECTION** SCALE: 1:10 SEE NOTE 3

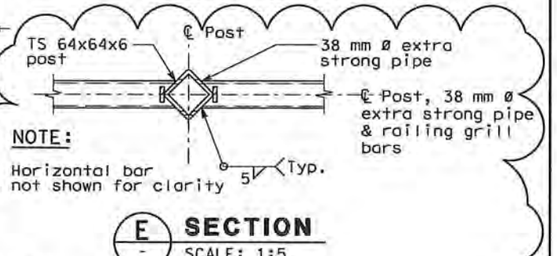

NOTE: Horizontal bar not shown for clarity

E **SECTION** SCALE: 1:5

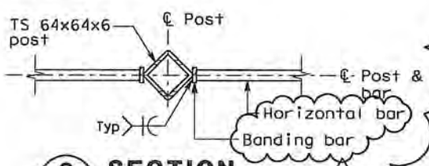

C **SECTION** SCALE: 1:5

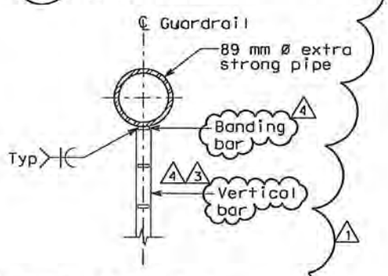

D **SECTION** SCALE: 1:5

REGISTERED PROFESSIONAL ENGINEER — Gregory Benkovich, No. 40518, Exp. 3/31/11, CIVIL, STATE OF CALIFORNIA

Gregory Benkovich FOR REVISION ONLY 1 2 3 4

REQUEST FOR INFORMATION NOT ADDRESSED IN THIS CCO REMAIN IN FORCE					
4	10/15/10	SERVICE PLATFORM ELECTRICAL CHANGES	NK	MSO	55
3	07/20/09	SERVICE PLATFORM ELECTRICAL CHANGES	GB	MSO	55
2	03/30/09	SERVICE PLATFORM ELECTRICAL CHANGES	GB	MSO	55
1	06/12/08	SERVICE PLATFORM ELECTRICAL CHANGES	GB	MSO	55
MARK	DATE	DESCRIPTIONS	BY	CH'D	CCO#
		REVISIONS			

CONTRACT CHANGE ORDER NO. 55
SHEET 9 OF 90

ALL DIMENSIONS ARE IN MILLIMETERS UNLESS OTHERWISE SHOWN

Bob Zandipour
DESIGN OVERSIGHT
4-4-04
SIGN OFF DATE

	BY	CHECKED
DESIGN	A. Van Felten	M.S. Owyang
LAYOUT	A. Van Felten	M.S. Owyang
QUANTITIES	M.S. Owyang	R. Parrino

PREPARED FOR THE STATE OF CALIFORNIA DEPARTMENT OF TRANSPORTATION

Brady Nadell
PROJECT ENGINEER

CU 04251
EA 0120F1

BRIDGE NO. 34-0006
KILOMETER POST 13.2/13.9

SAS SUPERSTRUCTURE
SERVICE PLATFORM DETAILS
AS-5

DISREGARD PRINTS BEARING EARLIER REVISION DATES →
REVISION DATES (PRELIMINARY STAGE ONLY) | SHEET | OF

ORIGINAL SCALE IN MILLIMETERS FOR REDUCED PLANS 0 10 20 30 40 50 60 70 80 90 100

DESIGN DETAIL SHEET (METRIC) REV. 3/1/98

DGN FILE => T:\13103\MS\pse\SAS Struc\CCO\SAS CCO55\2010-10-15_Issued for Submittal (Draft 7)\04-0120f1_0075R04
USERNAME => llorico

DATE PLOTTED => 10/13/2010 TIME PLOTTED => 3:52:52 PM

$FREQUEST

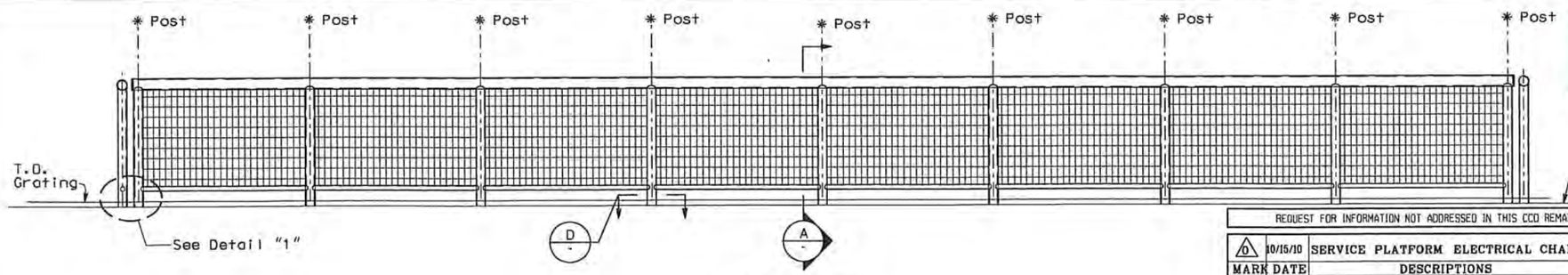

1 ELEVATION
AS-2 SCALE: 1:25

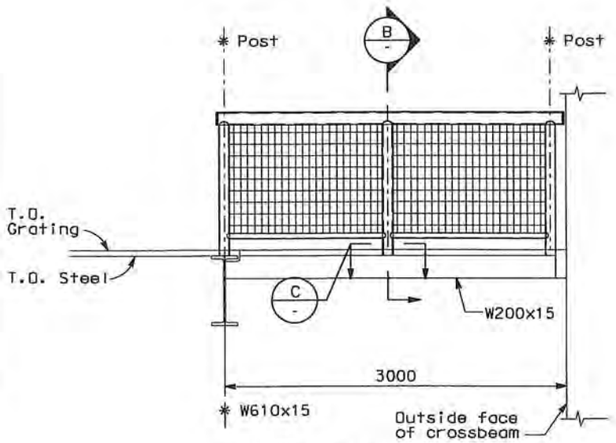

2 ELEVATION
SCALE: 1:25

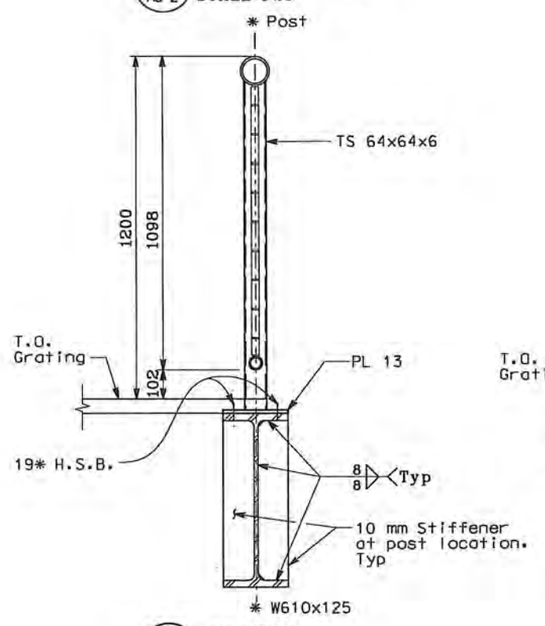

A SECTION
SCALE: 1:10

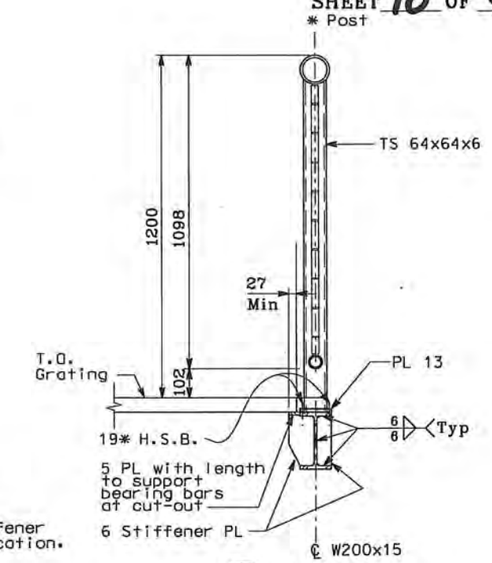

B SECTION
SCALE: 1:10

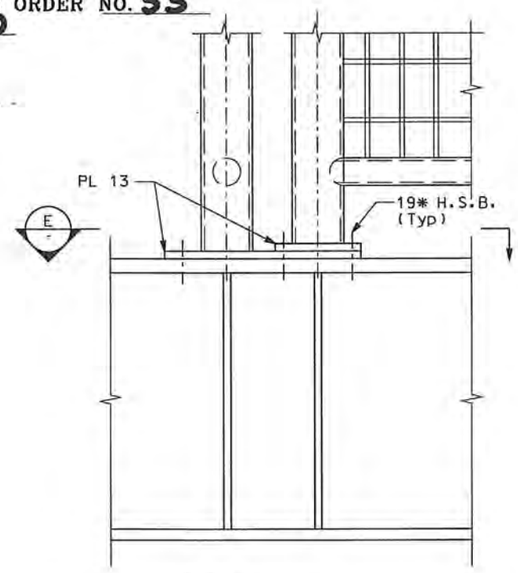

1 DETAIL
NOT TO SCALE

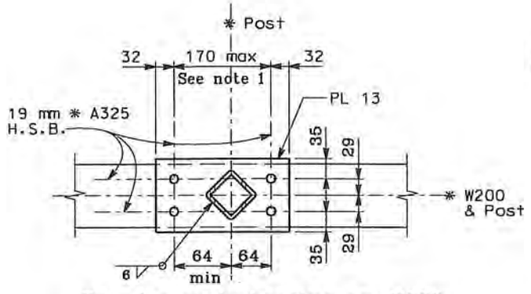

Typ for posts bearing on W200

C SECTION
SCALE: 1:5

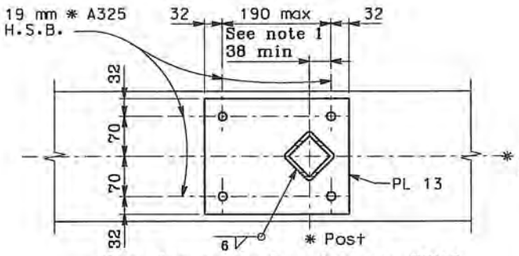

Typ for posts bearing on W610

D SECTION
SCALE: 1:5

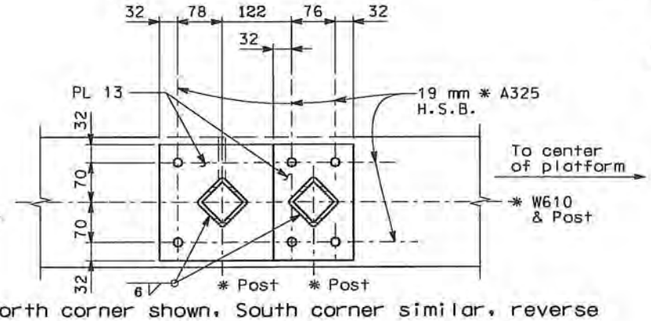

North corner shown, South corner similar, reverse

E SECTION
SCALE: 1:5

NOTES:

1. Locate bolts to maintain AISC assembly clearances from framing members.

ALL DIMENSIONS ARE IN MILLIMETERS UNLESS OTHERWISE SHOWN

DIST	COUNTY	ROUTE	KILOMETER POST TOTAL PROJECT	SHEET No	TOTAL SHEETS
04	SF	80	13.2/13.9	75S1	1204

Caltrans Metric

Gregory Benkerich 09/10/10
REGISTERED CIVIL ENGINEER

PLANS APPROVAL DATE

REGISTERED PROFESSIONAL ENGINEER — Gregory Benkerich — No. 40516 — Exp. 3/31/11 — CIVIL — STATE OF CALIFORNIA

The State of California or its officers or agents shall not be responsible for the accuracy or completeness of electronic copies of this plan sheet.

Parsons Brinckerhoff Quade & Douglas, Inc.
303 Second Street, Suite 700N
San Francisco, CA 94107

Caltrans now has a web site! To get to the web site, go to: http://www.dot.ca.gov

REQUEST FOR INFORMATION NOT ADDRESSED IN THIS CCO REMAIN IN FORCE

MARK	DATE	DESCRIPTIONS	BY	CH'D	CCO#
0	10/15/10	SERVICE PLATFORM ELECTRICAL CHANGES	NK	MSO	55

REVISIONS

CONTRACT CHANGE ORDER NO. 55
SHEET 10 OF 90

Bob Zandipour, DESIGN OVERSIGHT	DESIGN BY N. King	CHECKED M.S. Owyang	PREPARED FOR THE STATE OF CALIFORNIA DEPARTMENT OF TRANSPORTATION
4-4-04, SIGN OFF DATE	LAYOUT BY E. Llorico	CHECKED M.S. Owyang	Brady Nadell, PROJECT ENGINEER
DESIGN DETAIL SHEET (METRIC) (REV. 3/1/98)	QUANTITIES BY M.S. Owyang	CHECKED R. Parrino	CU 04251, EA 0120F1

BRIDGE NO. 34-0008
KILOMETER POST 13.2/13.9

SAS SUPERSTRUCTURE
SERVICE PLATFORM DETAILS
AS-5A

DISREGARD PRINTS BEARING EARLIER REVISION DATES →
REVISION DATES (PRELIMINARY STAGE ONLY) | SHEET | OF

ORIGINAL SCALE IN MILLIMETERS FOR REDUCED PLANS 0 10 20 30 40 50 60 70 80 90 100

DGN FILE *)04-0120f1_0075S01.dgn
USERNAME *)KoonC

DATE PLOTTED *10/3/2011 TIME PLOTTED *10:21:49 AM

$FREQUEST

REQUEST FOR INFORMATION NOT ADDRESSED IN THIS CCO REMAIN IN FORCE					
3	10/15/10	SERVICE PLATFORM ELECTRICAL CHANGES	NK	MSO	55
2	04/09/09	SERVICE PLATFORM ELECTRICAL CHANGES	GB	MSO	55
1	06/12/08	SERVICE PLATFORM ELECTRICAL CHANGES	GB	MSO	55
MARK	DATE	DESCRIPTIONS	BY	CH'D	CCO#
		REVISIONS			

CONTRACT CHANGE ORDER NO. 55
SHEET 11 OF 90

DIST	COUNTY	ROUTE	KILOMETER POST TOTAL PROJECT	SHEET No	TOTAL SHEETS
04	SF	80	13.2/13.9	82R3	1204

REGISTERED STRUCTURAL ENGINEER — 4/02/04 DATE

Mee Shing Owyang, No. 24960, Exp. 12/31/05, CIVIL, REGISTERED PROFESSIONAL ENGINEER, STATE OF CALIFORNIA

12-6-04
PLANS APPROVAL DATE

PARSONS BRINCKERHOFF QUADE & DOUGLAS, INC.
303 SECOND STREET, SUITE 700 N
SAN FRANCISCO, CA 94107

The State of California or its officers or agents shall not be responsible for the accuracy or completeness of electronic copies of this plan sheet.

Caltrans now has a web site! To get to the web site, go to http://www.dot.ca.gov

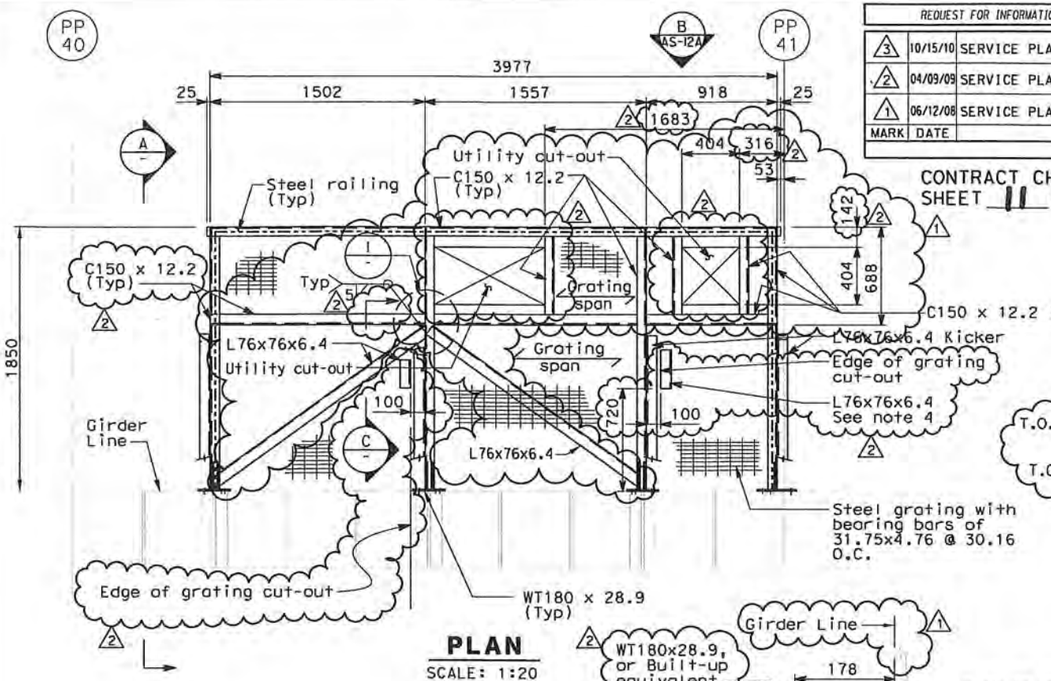

PLAN
SCALE: 1:20

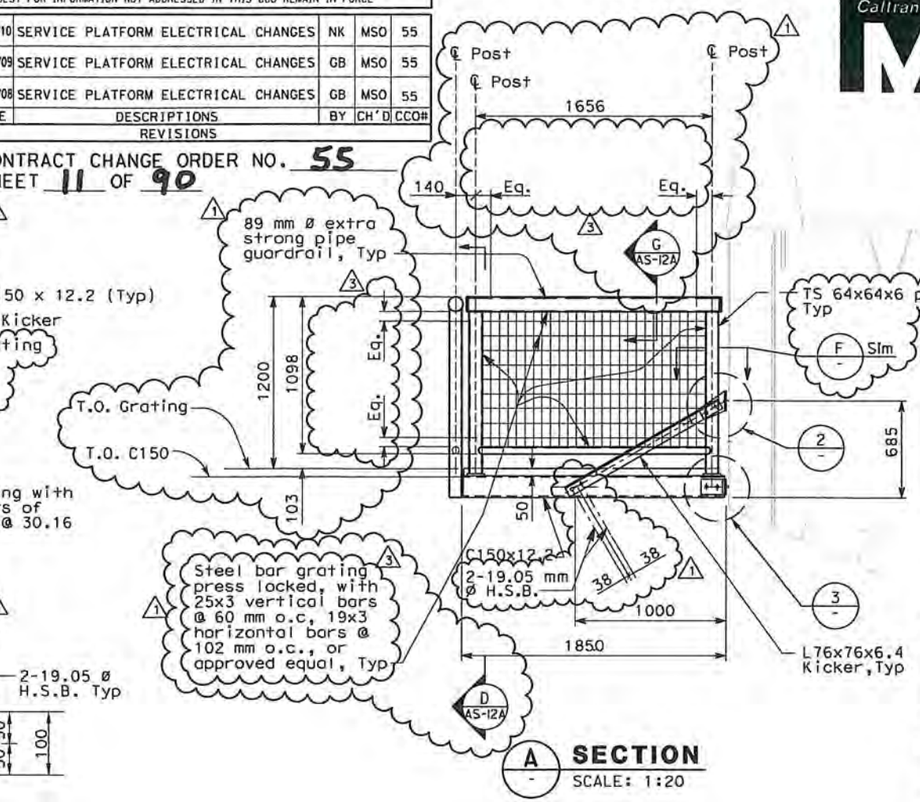

A SECTION
SCALE: 1:20

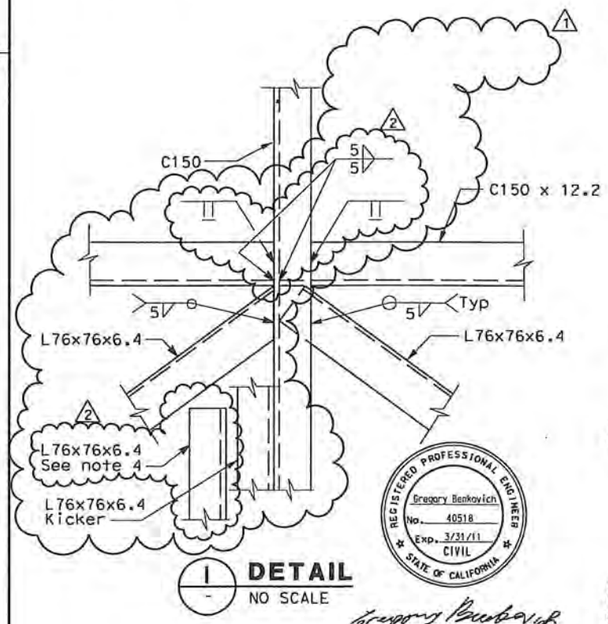

I DETAIL
NO SCALE

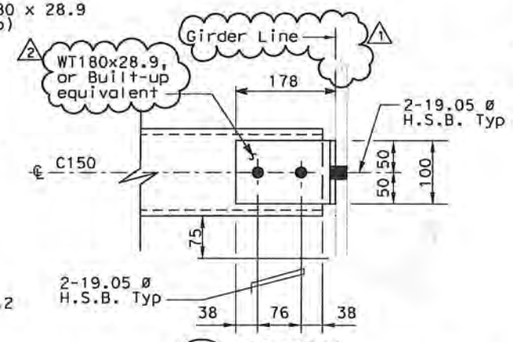

3 DETAIL
NO SCALE

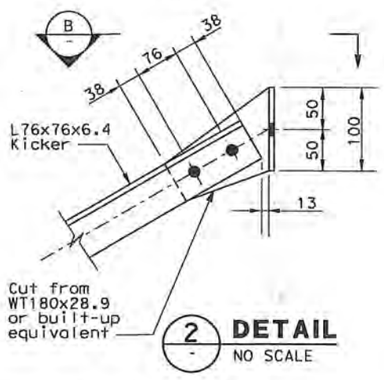

2 DETAIL
NO SCALE

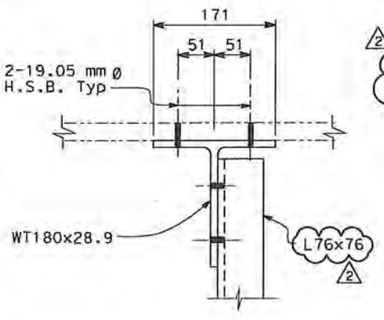

WT180x28.9 OPTION

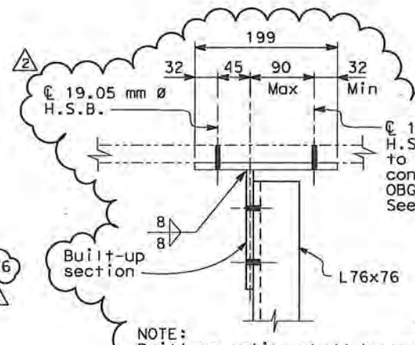

NOTE:
Built-up option shall be used only when when 19 mm Ø H.S.B. interfere with OBG stiffeners.

BUILT-UP OPTION

B SECTION
NO SCALE

NOTES:

1. The contractor shall verify all controlling field dimensions before ordering or fabricating any material.
2. For structural notes, see sheet AS-1.
3. For pull box support locations, see electrical plans.
4. Weld L76x76x6.4 to each cut bearing bar at cut-out. Extend L76x76x6.4 beyond cut-out and weld it to at least three bearing bars on each side of cut-out supported by platform framing.

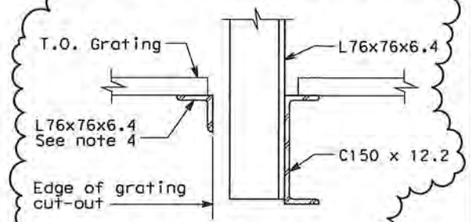

D SECTION
NO SCALE

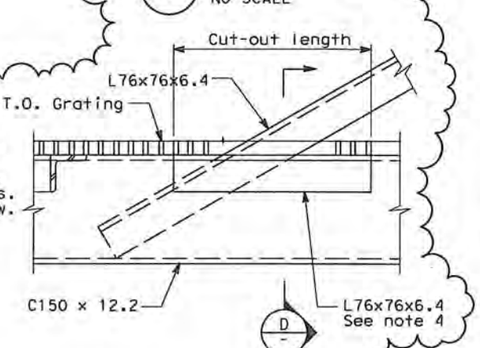

C SECTION
NO SCALE

ALL DIMENSIONS ARE IN MILLIMETERS UNLESS OTHERWISE SHOWN

Gregory Benkovich
FOR REVISION ONLY
1 2 3

Bob Zandipour
DESIGN OVERSIGHT
4-14-04
SIGN OFF DATE

	BY	CHECKED
DESIGN	E. Lucas	M. S. Owyang
LAYOUT	L. Reyes	M. S. Owyang
QUANTITIES	I. Horton	P. McNamee

PREPARED FOR THE STATE OF CALIFORNIA
DEPARTMENT OF TRANSPORTATION

Brady Nadell
PROJECT ENGINEER

CU 04251
EA 0120F1

BRIDGE NO. 34-0006
KILOMETER POST 13.2/13.9

SAS SUPERSTRUCTURE
PULL BOX SUPPORT PLAN, SECTIONS AND DETAILS

AS-12

DISREGARD PRINTS BEARING EARLIER REVISION DATES →
REVISION DATES (PRELIMINARY STAGE ONLY) | SHEET | OF

ORIGINAL SCALE IN MILLIMETERS FOR REDUCED PLANS 0 10 20 30 40 50 60 70 80 90 100

DGN FILE => T:\13103\MS\pse\SAS Struc\CCO\SAS CC055\2010-10-15_Issued for Submittal (Draft 7)\04-0120f1_0082R03
USERNAME => florico

DATE PLOTTED => 10/13/2010 TIME PLOTTED => 3:56:25 PM

DIST	COUNTY	ROUTE	KILOMETER POST TOTAL PROJECT	SHEET No	TOTAL SHEETS
04	SF	80	13.2/13.9	82 S1R2	1204

Gregory Benkovich 6/12/08
REGISTERED STRUCTURAL ENGINEER DATE

PLANS APPROVAL DATE

PARSONS BRINCKERHOFF QUADE & DOUGLAS, INC.
303 SECOND STREET, SUITE 700 N
SAN FRANCISCO, CA 94107

REGISTERED PROFESSIONAL ENGINEER — Gregory Benkovich — No. C40518 — Exp. 3/31/09 — CIVIL — STATE OF CALIFORNIA

The State of California or its officers or agents shall not be responsible for the accuracy or completeness of electronic copies of this plan sheet.

Caltrans now has a web site! To get to the web site, go to http://www.dot.ca.gov

REQUEST FOR INFORMATION NOT ADDRESSED IN THIS CCO REMAIN IN FORCE					
2	10/15/10	SERVICE PLATFORM ELECTRICAL CHANGES	NK	MSO	55
1	07/01/09	SERVICE PLATFORM ELECTRICAL CHANGES	GB	MSO	55
0	06/12/08	SERVICE PLATFORM ELECTRICAL CHANGES	GB	MSO	55
MARK	DATE	DESCRIPTIONS	BY	CH'D	CCO#
		REVISIONS			

CONTRACT CHANGE ORDER NO. 55
SHEET 12 OF 90

Caltrans Metric

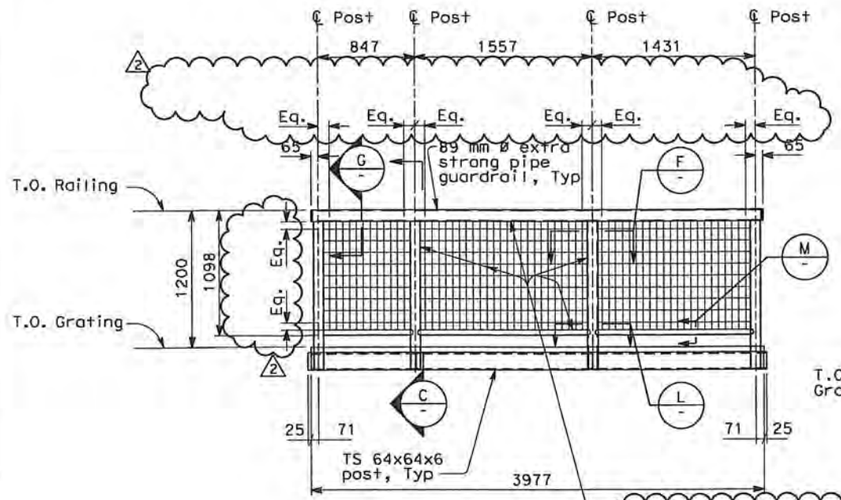

B AS-12 **ELEVATION** SCALE: 1:25

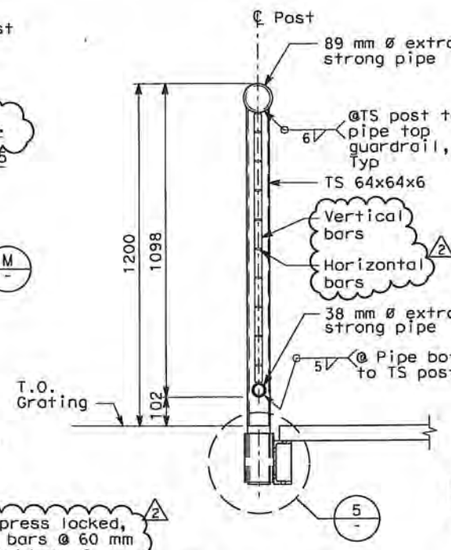

C AS-12 **SECTION** SCALE: 1:10

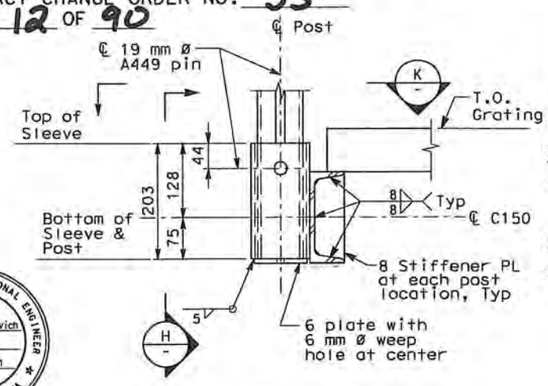

5 **DETAIL** SCALE: 1:5

NOTES:

1. The contractor shall verify all controlling field dimensions before ordering or fabricating any material.
2. For structural notes, see sheet AS-1.
3. For framing member sizes see sheet No. AS-12.

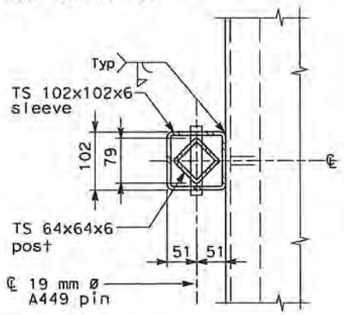

K - **SECTION** SCALE: 1:5

Gregory Benkovich FOR REVISION ONLY
2

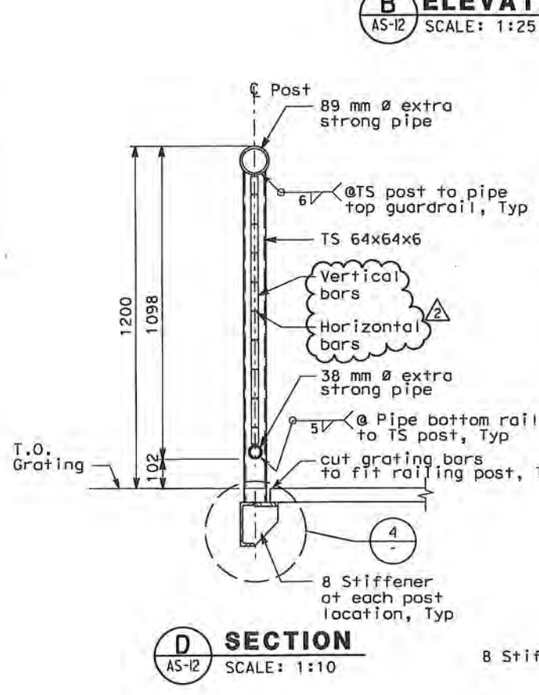

D AS-12 **SECTION** SCALE: 1:10

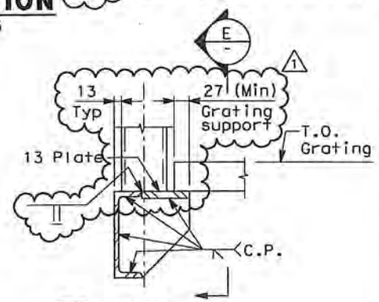

4 - **DETAIL** SCALE: 1:5

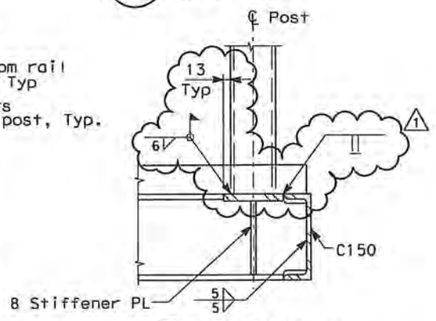

E - **SECTION** SCALE: 1:5

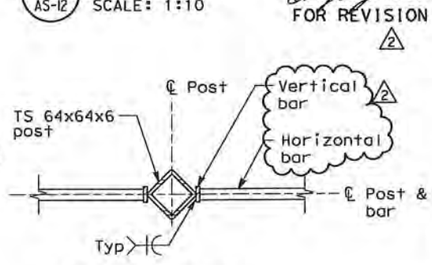

F AS-12 **SECTION** SCALE: 1:5

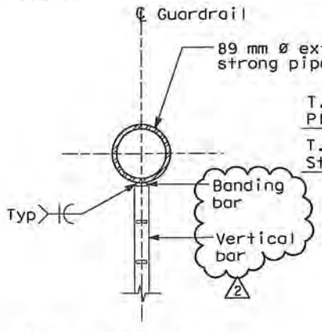

G AS-12 **SECTION** SCALE: 1:5

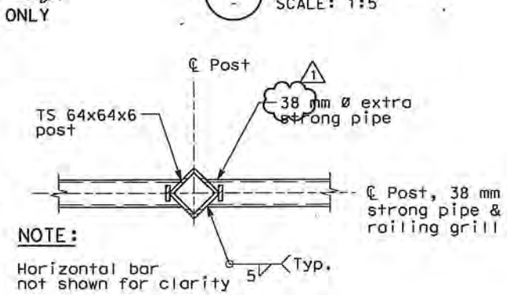

L - **SECTION** SCALE: 1:5

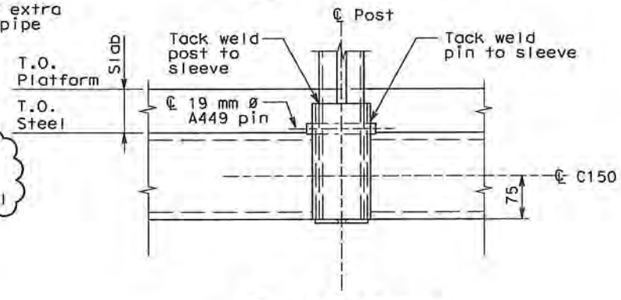

H - **SECTION** SCALE: 1:5

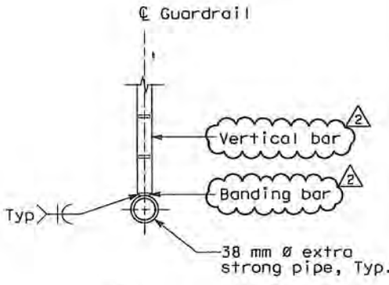

M - **SECTION** SCALE: 1:5

ALL DIMENSIONS ARE IN MILLIMETERS UNLESS OTHERWISE SHOWN

Bob Zandipour		DESIGN	E. Lucas	M. S. Owyang	PREPARED FOR THE STATE OF CALIFORNIA DEPARTMENT OF TRANSPORTATION	Brady Nadell	BRIDGE NO. 34-0006
DESIGN OVERSIGHT 4-14-04		LAYOUT	L. Reyes	M. S. Owyang		PROJECT ENGINEER	KILOMETER POST 13.2/13.9
SIGN OFF DATE		QUANTITIES	I. Horton	P. McNamee			

SAS SUPERSTRUCTURE
PULL BOX SUPPORT PLAN, SECTIONS AND DETAILS — AS-12A

ORIGINAL SCALE IN MILLIMETERS FOR REDUCED PLANS 0 10 20 30 40 50 60 70 80 90 100

CU 04251
EA 0120F1

DISREGARD PRINTS BEARING EARLIER REVISION DATES →

REVISION DATES (PRELIMINARY STAGE ONLY) — SHEET — OF

DGN FILE => T:\13103\MS\pse\SAS Struc\CCO\SAS CCO55\2010-10-15_Issued for Submittal (Draft 7)\04-0120f1_0082S01
USERNAME => florico

DATE PLOTTED => 10/13/2010 TIME PLOTTED => 3:54:16 PM

NOTES:

1. The contractor shall verify all controlling field dimensions before ordering or fabricating any material.
2. For structural notes, see sheet AS-1.
3. For electrical panel support locations, see electrical plans.
4. For callbox locations, see electrical sheets, sheet E-397.
5. Unless otherwise noted, all framing elements are L76x76x6.4.
6. For electrical enclosure support, use Unistrut P2000 or approved equal. Attach to frame per manufacturer's recommendations. Locate to suit.

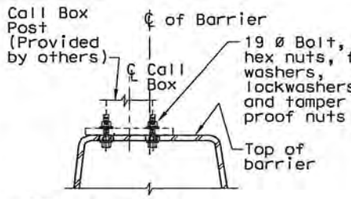

D — SECTION
NO SCALE

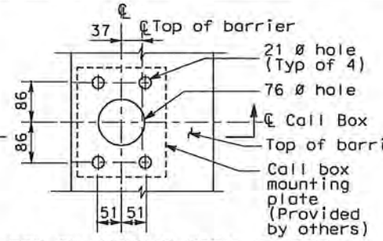

CALL BOX ON ROADWAY METAL BARRIER

1 / AS-2 — DETAIL
NO SCALE

REQUEST FOR INFORMATION NOT ADDRESSED IN THIS CCO REMAIN IN FORCE					
2	03/30/09	SERVICE PLATFORM ELECTRICAL CHANGES	NK	MSO	55
1	03/04/08	BARRIER MODIFICATIONS.	EL	MI	44
MARK	DATE	DESCRIPTIONS REVISIONS	BY	CH'D	CCO#

CONTRACT CHANGE ORDER NO. 55
SHEET 13 OF 90

DIST	COUNTY	ROUTE	KILOMETER POST TOTAL PROJECT	SHEET NO	TOTAL SHEETS
04	SF	80	13.2/13.9	83R2	1204

Caltrans Metric

REGISTERED CIVIL ENGINEER 4/02/04

12-6-04
PLANS APPROVAL DATE

Mee Shing Owyang No. 24960 Exp. 12/31/05 CIVIL — REGISTERED PROFESSIONAL ENGINEER — STATE OF CALIFORNIA

The State of California or its officers or agents shall not be responsible for the accuracy or completeness of electronic copies of this plan sheet.

Parsons Brinckerhoff Quade & Douglas, Inc.
303 Second Street, Suite 700N
San Francisco, CA 94107

Caltrans now has a web site! To get to the web site, go to: http://www.dot.ca.gov

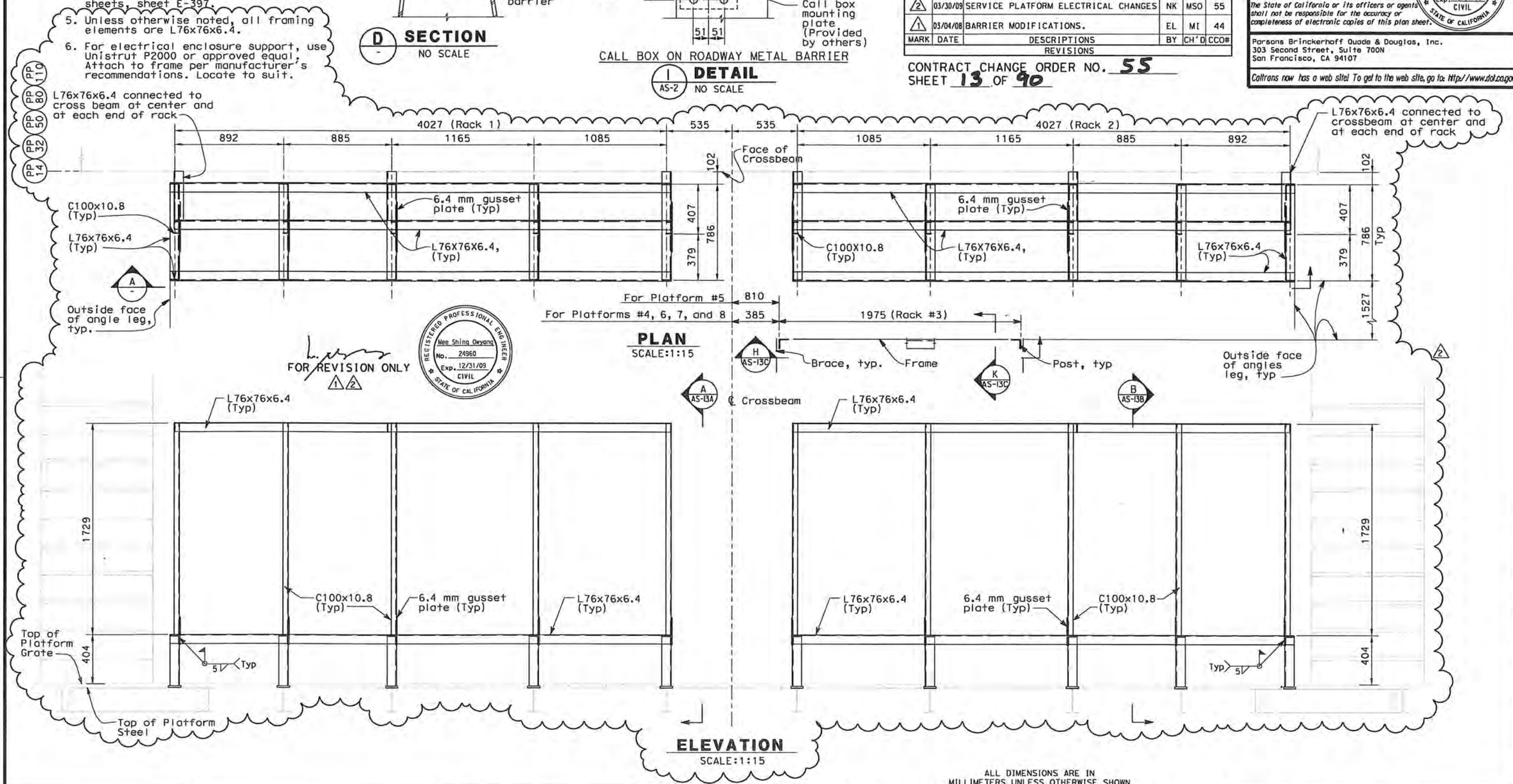

REGISTERED PROFESSIONAL ENGINEER — Mee Shing Owyang No. 24960 Exp. 12/31/09 CIVIL — STATE OF CALIFORNIA

ALL DIMENSIONS ARE IN MILLIMETERS UNLESS OTHERWISE SHOWN

BoB Zandpour — DESIGN OVERSIGHT		DESIGN	BY N. King	CHECKED M. S. Owyang	PREPARED FOR THE STATE OF CALIFORNIA DEPARTMENT OF TRANSPORTATION	PROJECT ENGINEER	BRIDGE NO. 34-0006
SIGN OFF DATE		DETAILS	BY L. Reyes	CHECKED M. S. Owyang			KILOMETER POST 13.2/13.9
		QUANTITIES	BY	CHECKED			

SAS SUPERSTRUCTURE
ELECTRICAL PANEL SUPPORT SECTIONS — AS-13

DESIGN DETAIL SHEET (METRIC) (REV. 3/1/98)

ORIGINAL SCALE IN MILLIMETERS FOR REDUCED PLANS 0 10 20 30 40 50 60 70 80 90 100

CU 04251
EA 0120F1

DISREGARD PRINTS BEARING EARLIER REVISION DATES →

REVISION DATES (PRELIMINARY STAGE ONLY)

SHEET OF

FILE => T:\13103\MS\pse\SAS Struc\CCO\SAS CC055\2009-04-09_Issued for Submittal\04-0120F1_0083R02.dgn

USERNAME => tlorico DATE PLOTTED => 4/9/2009 TIME PLOTTED => 4:47:30 PM

$FREQUEST

REQUEST FOR INFORMATION NOT ADDRESSED IN THIS CCO REMAIN IN FORCE					
2	09/10/10	SERVICE PLATFORM ELECTRICAL CHANGES	NK	MSO	55
1	07/01/09	SERVICE PLATFORM ELECTRICAL CHANGES	NK	MSO	55
0	03/30/09	SERVICE PLATFORM ELECTRICAL CHANGES	NK	MSO	55
MARK	DATE	DESCRIPTIONS	BY	CH'D	CCO#
REVISIONS					

CONTRACT CHANGE ORDER NO. 55
SHEET 14 OF 90

DIST	COUNTY	ROUTE	KILOMETER POST TOTAL PROJECT	SHEET No	TOTAL SHEETS
04	SF	80	13.2/13.9	83S1 R2	1204

REGISTERED CIVIL ENGINEER 3/30/09

PLANS APPROVAL DATE

The State of California or its officers or agents shall not be responsible for the accuracy or completeness of electronic copies of this plan sheet.

REGISTERED PROFESSIONAL ENGINEER — Mee Shing Owyang — No. 24960 — Exp. 12/31/09 — CIVIL — STATE OF CALIFORNIA

PB AMERICAS, Inc.
303 Second Street, Suite 700N
San Francisco, CA 94107

Caltrans now has a web site! To get to the web site, go to: http://www.dot.ca.gov

Caltrans Metric

PP 14 PP 32 PP 50 PP 80 PP 110

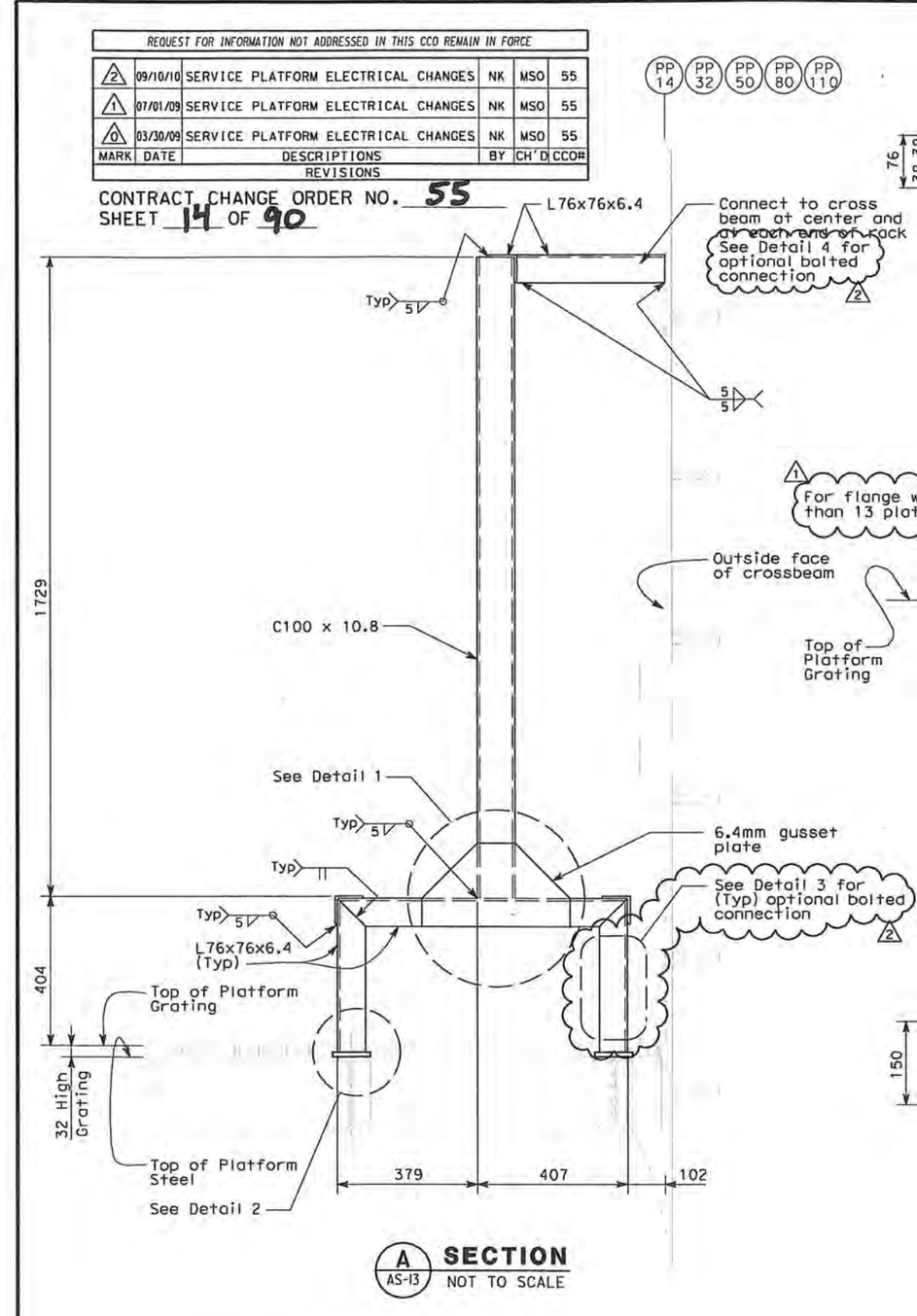

A / AS-13 SECTION
NOT TO SCALE

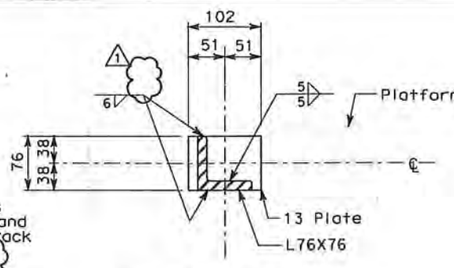

B / - SECTION
NOT TO SCALE

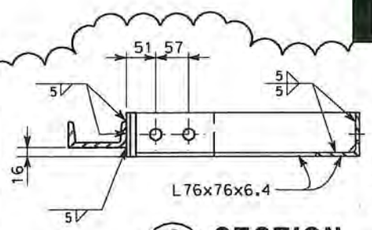

C / - SECTION
NOT TO SCALE

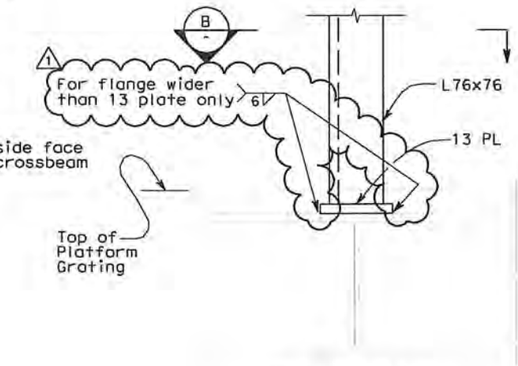

2 / - DETAIL
NOT TO SCALE

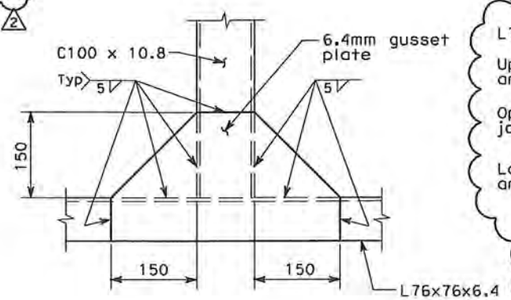

1 / - DETAIL
NOT TO SCALE

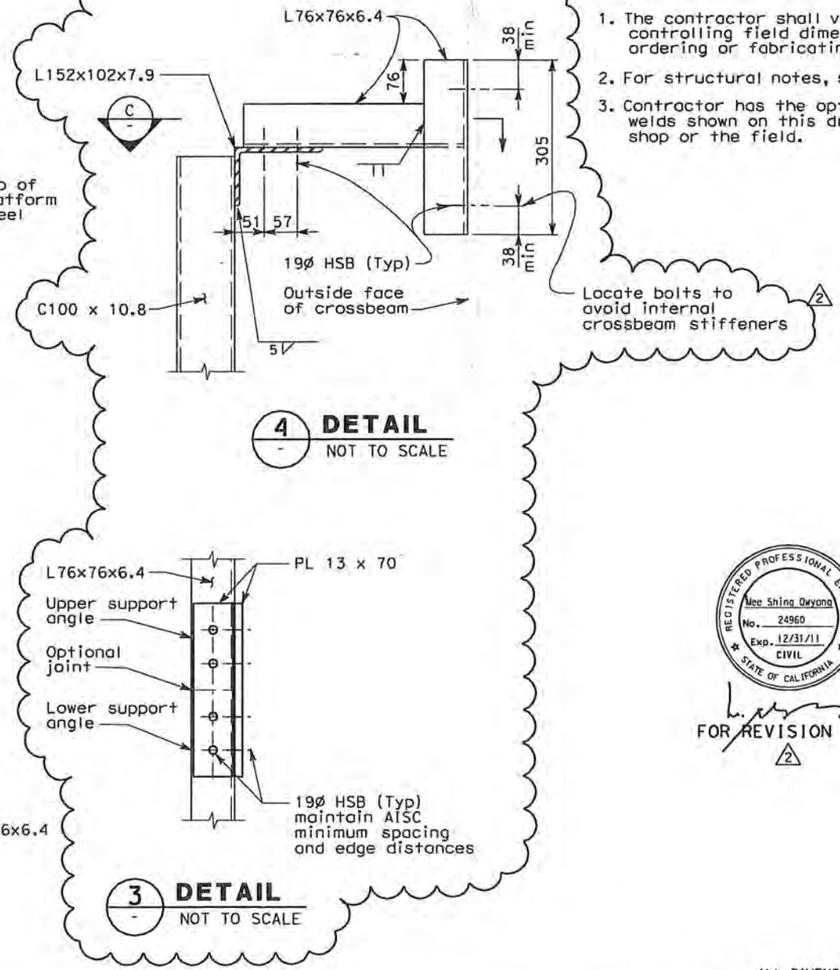

4 / - DETAIL
NOT TO SCALE

3 / - DETAIL
NOT TO SCALE

NOTES:

1. The contractor shall verify all controlling field dimensions before ordering or fabricating any material.
2. For structural notes, see sheet AS-1.
3. Contractor has the option to perform welds shown on this drawing in the shop or the field.

REGISTERED PROFESSIONAL ENGINEER — Mee Shing Owyang — No. 24960 — Exp. 12/31/11 — CIVIL — STATE OF CALIFORNIA

FOR REVISION ONLY
2

ALL DIMENSIONS ARE IN MILLIMETERS UNLESS OTHERWISE SHOWN

Bob Zandipour, DESIGN OVERSIGHT		DESIGN	BY N. King	CHECKED M. S. Owyang	PREPARED FOR THE STATE OF CALIFORNIA DEPARTMENT OF TRANSPORTATION	BRIDGE NO. 34-0006	SAS SUPERSTRUCTURE
SIGN OFF DATE		DETAILS	BY L. Reyes	CHECKED M. S. Owyang	PROJECT ENGINEER	KILOMETER POST 13.2/13.9	ELECTRICAL PANEL SUPPORT SECTIONS SHEET 1 — AS-13A
DESIGN DETAIL SHEET (METRIC) (REV. 3/1/98)		QUANTITIES	BY	CHECKED	CU 04251 EA 0120F1	DISREGARD PRINTS BEARING EARLIER REVISION DATES →	REVISION DATES (PRELIMINARY STAGE ONLY) — SHEET — OF

ORIGINAL SCALE IN MILLIMETERS FOR REDUCED PLANS 0 10 20 30 40 50 60 70 80 90 100

FILE => T:\13103\MS\pse\SAS Struc\CCO\SAS CCO55\2010-09-10_Issued for Submittal\04-0120f1_0083S01R02.dgn

USERNAME => liarico DATE PLOTTED => 9/13/2010 TIME PLOTTED => 8:43:44 AM

SFREQUEST

REQUEST FOR INFORMATION NOT ADDRESSED IN THIS CCO REMAIN IN FORCE					
2	09/10/10	SERVICE PLATFORM ELECTRICAL CHANGES	NK	MSO	55
1	07/01/09	SERVICE PLATFORM ELECTRICAL CHANGES	NK	MSO	55
0	03/30/09	SERVICE PLATFORM ELECTRICAL CHANGES	NK	MSO	55
MARK	DATE	DESCRIPTIONS	BY	CH'D	CCO#
		REVISIONS			

CONTRACT CHANGE ORDER NO. 55
SHEET 15 OF 90

Caltrans Metric

DIST	COUNTY	ROUTE	KILOMETER POST TOTAL PROJECT	SHEET No	TOTAL SHEETS
04	SF	80	13.2/13.9	83S2 R2	1204

REGISTERED CIVIL ENGINEER 3/30/09

PLANS APPROVAL DATE

REGISTERED PROFESSIONAL ENGINEER — Mee Shing Owyang — No. 24960 — Exp. 12/31/09 — CIVIL — STATE OF CALIFORNIA

The State of California or its officers or agents shall not be responsible for the accuracy or completeness of electronic copies of this plan sheet.

PB AMERICAS, Inc.
303 Second Street, Suite 700N
San Francisco, CA 94107

Caltrans now has a web site! To get to the web site, go to: http://www.dot.ca.gov

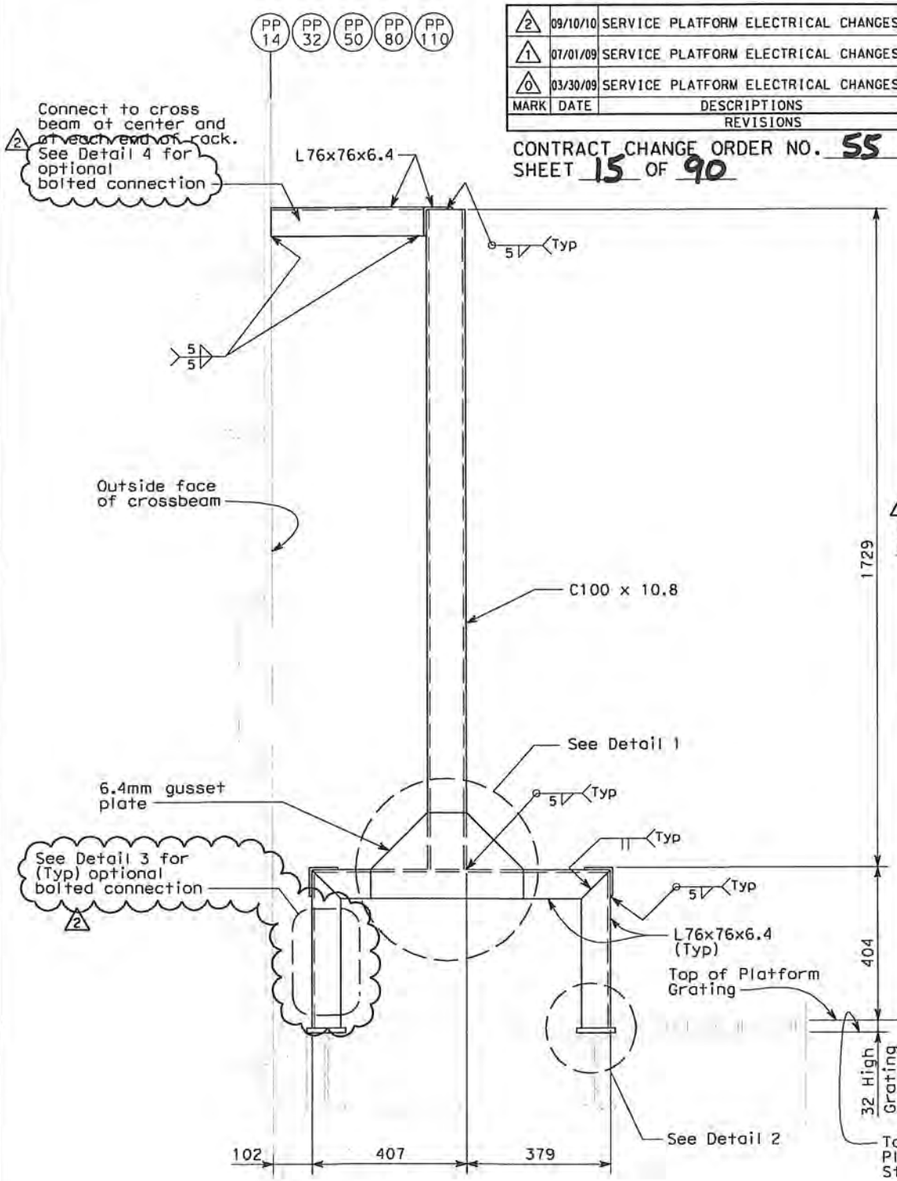

B SECTION
AS-13 NOT TO SCALE

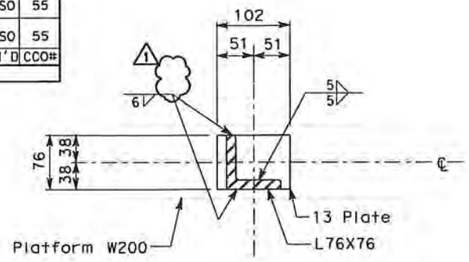

B SECTION
NOT TO SCALE

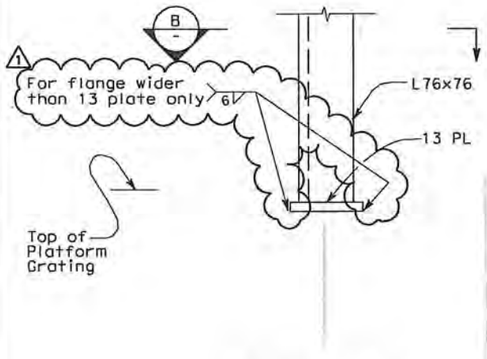

2 DETAIL
NOT TO SCALE

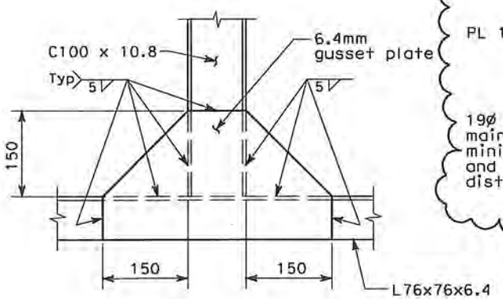

1 DETAIL
NOT TO SCALE

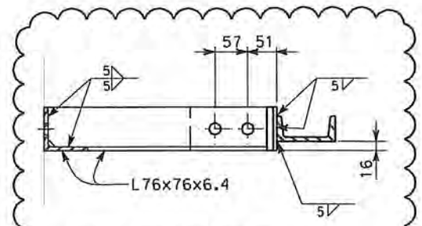

C SECTION
NOT TO SCALE

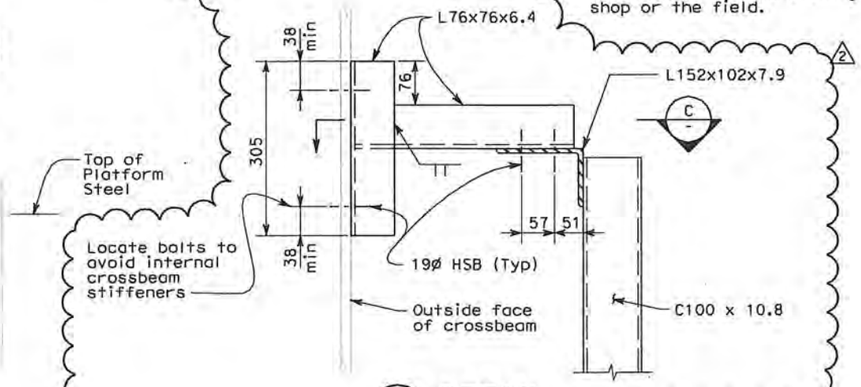

4 DETAIL
NOT TO SCALE

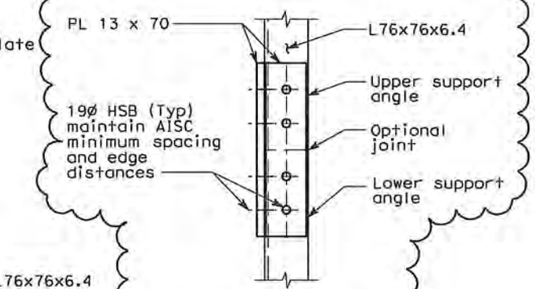

3 DETAIL
NOT TO SCALE

NOTES:

1. The contractor shall verify all controlling field dimensions before ordering or fabricating any material.
2. For structural notes, see sheet AS-1.
3. Contractor has the option to perform welds shown on this drawing in the shop or the field.

REGISTERED PROFESSIONAL ENGINEER — Mee Shing Owyang — No. 24960 — Exp. 12/31/11 — CIVIL — STATE OF CALIFORNIA

FOR REVISION ONLY
2

ALL DIMENSIONS ARE IN MILLIMETERS UNLESS OTHERWISE SHOWN

Bob Zandipour, DESIGN OVERSIGHT		DESIGN	BY N. King	CHECKED M. S. Owyang	PREPARED FOR THE STATE OF CALIFORNIA DEPARTMENT OF TRANSPORTATION	BRIDGE NO. 34-0006	SAS SUPERSTRUCTURE
SIGN OFF DATE		DETAILS	BY L. Reyes	CHECKED M. S. Owyang	PROJECT ENGINEER	KILOMETER POST 13.2/13.9	ELECTRICAL PANEL SUPPORT SECTIONS SHEET 2 — AS-13B
DESIGN DETAIL SHEET (METRIC) (REV. 3/1/98)		QUANTITIES	BY	CHECKED	CU 04251 EA 0120F1	DISREGARD PRINTS BEARING EARLIER REVISION DATES →	REVISION DATES (PRELIMINARY STAGE ONLY) — SHEET — OF

ORIGINAL SCALE IN MILLIMETERS FOR REDUCED PLANS 0 10 20 30 40 50 60 70 80 90 100

FILE => T:\13103\MS\pse\SAS Struc\CCO\SAS CC055\2010-09-10_Issued for Submittal\04-0120F1_00B3S02R02.dgn

USERNAME => florico DATE PLOTTED => 9/13/2010 TIME PLOTTED => 8:46:29 AM

$REQUEST

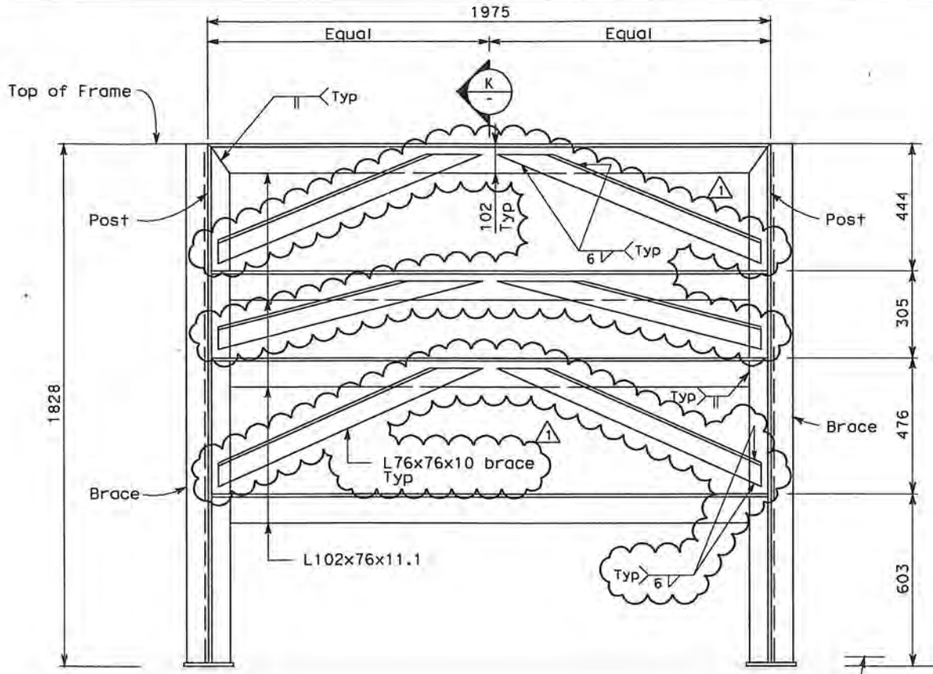

RACK #3 (TRANSFORMER & CIRCUIT BREAKER)

H / AS-13 **SECTION**
NOT TO SCALE

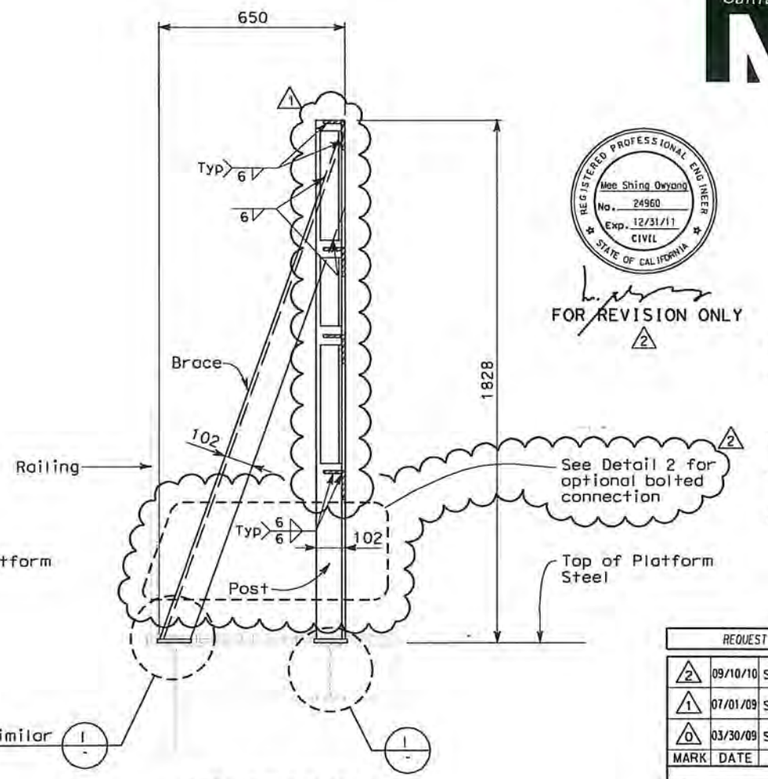

K / AS-13 **SECTION**
NOT TO SCALE

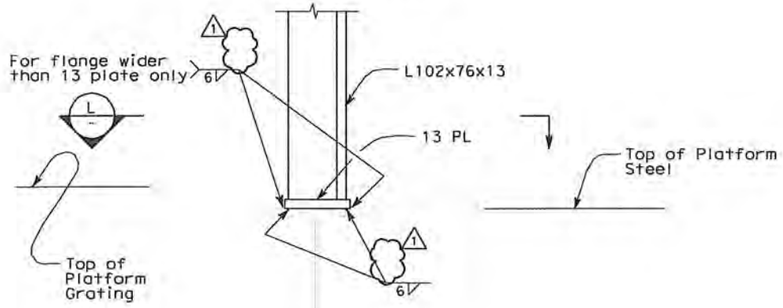

I / - **DETAIL**
NOT TO SCALE

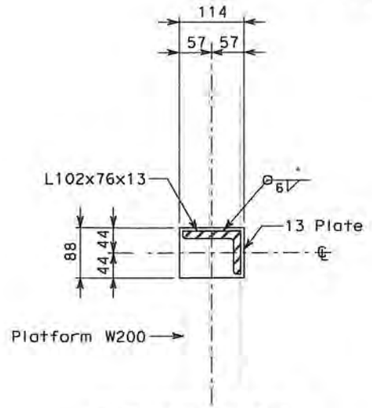

L / - **SECTION**
NOT TO SCALE

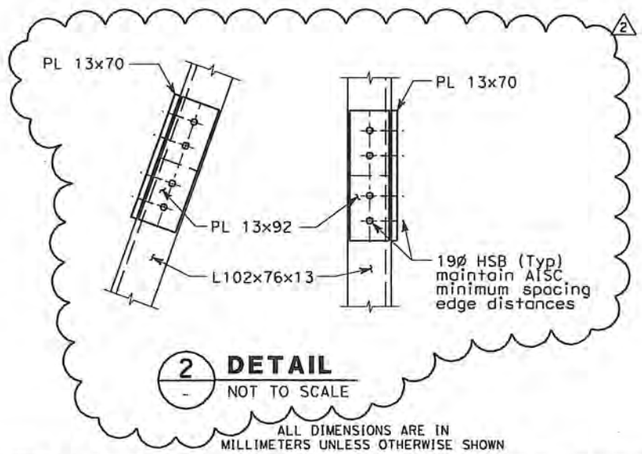

2 / - **DETAIL**
NOT TO SCALE

ALL DIMENSIONS ARE IN
MILLIMETERS UNLESS OTHERWISE SHOWN

Caltrans Metric

DIST	COUNTY	ROUTE	KILOMETER POST TOTAL PROJECT	SHEET No	TOTAL SHEETS
04	SF	80	13.2/13.9	83S3 R2	1204

Gregory Benkovich
REGISTERED CIVIL ENGINEER

PLANS APPROVAL DATE

REGISTERED PROFESSIONAL ENGINEER
Gregory Benkovich
No. 40518
Exp. 3/31/11
CIVIL
STATE OF CALIFORNIA

The State of California or its officers or agents shall not be responsible for the accuracy or completeness of electronic copies of this plan sheet.

PB AMERICAS, Inc.
303 Second Street, Suite 700N
San Francisco, CA 94107

Caltrans now has a web site! To get to the web site, go to: http://www.dot.ca.gov

REGISTERED PROFESSIONAL ENGINEER
Mee Shing Owyang
No. 24960
Exp. 12/31/11
CIVIL
STATE OF CALIFORNIA

FOR REVISION ONLY
2

NOTES:

1. The contractor shall verify all controlling field dimensions before ordering or fabricating any material.
2. For structural notes, see sheet AS-1.
3. Unless otherwise noted, all framing elements are L102x76x13.
4. Contractor has the option to perform welds shown on this drawing in the shop or in the field.

REQUEST FOR INFORMATION NOT ADDRESSED IN THIS CCO REMAIN IN FORCE

MARK	DATE	DESCRIPTIONS	BY	CH'D	CCO#
		REVISIONS			
2	09/10/10	SERVICE PLATFORM ELECTRICAL CHANGES	NK	MSO	55
1	07/01/09	SERVICE PLATFORM ELECTRICAL CHANGES	GB	MSO	55
0	03/30/09	SERVICE PLATFORM ELECTRICAL CHANGES	GB	MSO	55

CONTRACT CHANGE ORDER NO. 55
SHEET 16 OF 90

Bob Zandipour
DESIGN OVERSIGHT
SIGN OFF DATE

	BY	CHECKED
DESIGN	G. Benkovich	M. S. Owyang
DETAILS	L. Reyes	M. S. Owyang
QUANTITIES		

PREPARED FOR THE
STATE OF CALIFORNIA
DEPARTMENT OF TRANSPORTATION

PROJECT ENGINEER

BRIDGE NO.	SAS SUPERSTRUCTURE
34-0006	ELECTRICAL PANEL SUPPORT SECTIONS SHEET 3
KILOMETER POST 13.2/13.9	AS-13C

DESIGN DETAIL SHEET (METRIC) (REV. 3/1/98)

ORIGINAL SCALE IN MILLIMETERS FOR REDUCED PLANS 0 10 20 30 40 50 60 70 80 90 100

CU 04251
EA 0120F1

DISREGARD PRINTS BEARING EARLIER REVISION DATES →

REVISION DATES (PRELIMINARY STAGE ONLY) | SHEET | OF

FILE => T:\13103\MS\pse\SAS Struc\CCO\SAS CC055\04-0120F1_0083S03R02.dgn

USERNAME => llorica DATE PLOTTED => 9/11/2010 TIME PLOTTED => 3:21:43 PM

*REQUEST

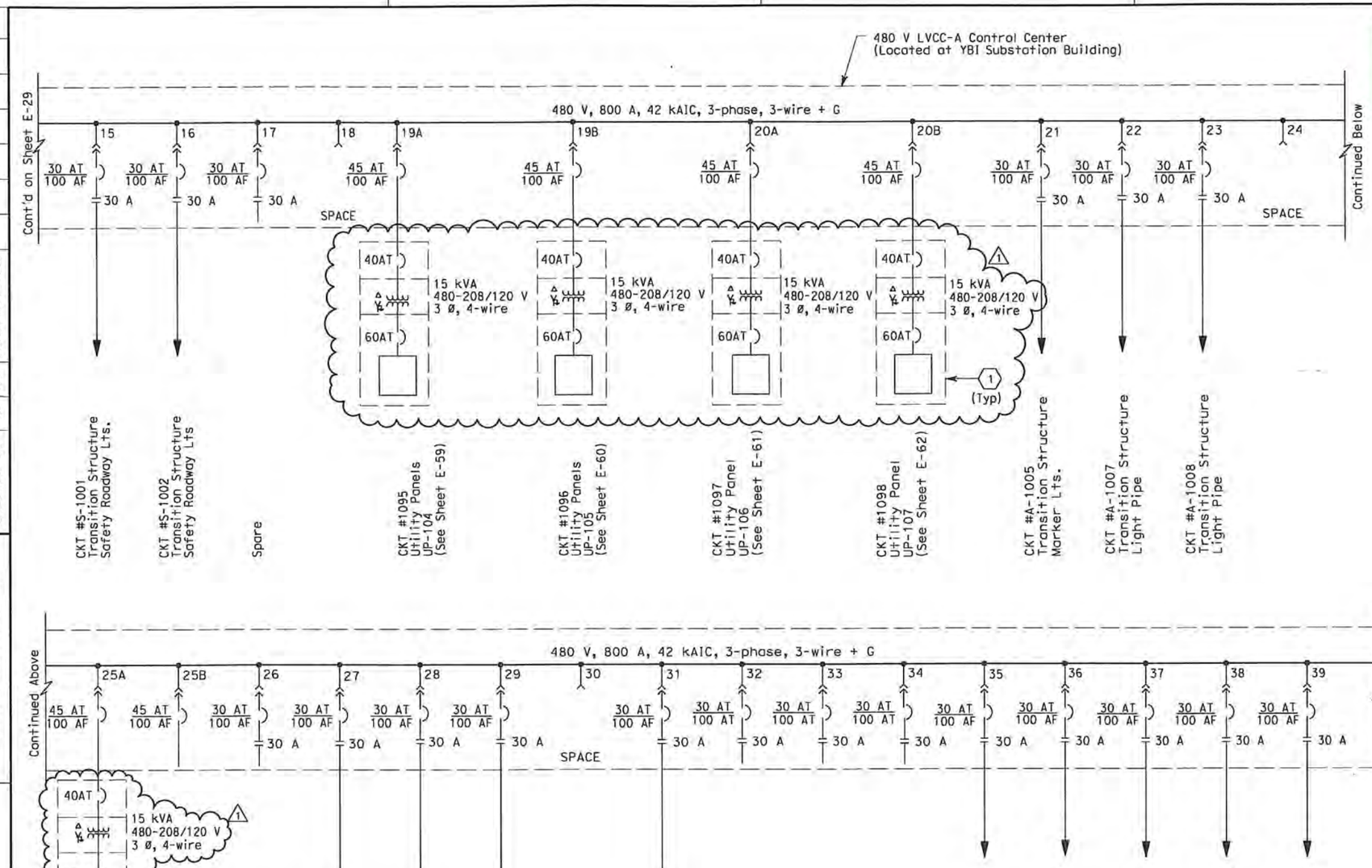

Caltrans Metric

DIST	COUNTY	ROUTE	KILOMETER POST TOTAL PROJECT	SHEET No	TOTAL SHEETS
04	SF	80	13.2/13.9	111 R1	1204

12/19/02
REGISTERED ELECTRICAL ENGINEER DATE

12-6-04
PLANS APPROVAL DATE

REGISTERED PROFESSIONAL ENGINEER — JENS ERLINGSSON No. 8249 Exp. 9/30/06 ELECTRICAL — STATE OF CALIFORNIA

PB POWER, Inc.
A Parsons Brinckerhoff Company
303 Second St., Suite 700N
San Francisco, CA 94107-1317

The State of California or its officers or agents shall not be responsible for the accuracy or completeness of electronic copies of this plan sheet.

Caltrans now has a web site! To get to the web site, go to http://www.dot.ca.gov

SHEET NOTE:

(1) Enclosed in a Nema 4X enclosure located on the service platform.

NOTE:

1. Single line diagram as shown does not represent physical separation of different contracts. Refer to other drawings for physical separation of different contracts.

REGISTERED PROFESSIONAL ENGINEER — FADI WALIEDDINE No. 11465 Exp. 12/31/2009 ELECTRICAL — STATE OF CALIFORNIA

FOR REVISION ONLY
(1)

REQUEST FOR INFORMATION NOT ADDRESSED IN THIS CCO REMAIN IN FORCE

MARK	DATE	DESCRIPTIONS	BY	CH'D	CCO#
		REVISIONS			
(1)	03/30/09	SERVICE PLATFORM ELECTRICAL CHANGES	JD MP	RG FW	55

CONTRACT CHANGE ORDER NO. 55
SHEET 17 OF 90

DETAILS
YBI SUBSTATION
480 V LVCC-A SINGLE LINE DIAGRAM
NO SCALE

E-30

CALCULATED/ DESIGNED BY	CHECKED BY	DATE	REVISED BY	DATE REVISED
EJL	JE	9/01		
		12/01		

STATE OF CALIFORNIA - DEPARTMENT OF TRANSPORTATION
Caltrans
DESIGN OVERSIGHT
BEHZAD GOLEMOHAMMADI

THIS PLAN ACCURATE FOR ELECTRICAL WORK ONLY.

FOR REDUCED PLANS ORIGINAL SCALE IS IN MILLIMETERS 0 20 40 60 80

DGN FILE =>T:\13103\MS\pse\SAS Struc\CCO\SAS CC055\04-0120F1_01 1R01.dgn
USERNAME =>garciar
CU 04251
EA 0120F1

LAST REVISION 00-00-00
DATE PLOTTED => 3/31/2009
TIME PLOTTED => 3:09:38 PM

DIST	COUNTY	ROUTE	KILOMETER POST TOTAL PROJECT	SHEET No	TOTAL SHEETS
04	SF	80	13.2/13.9	113 R1	1204

12/19/02
REGISTERED ELECTRICAL ENGINEER DATE

JENS ERLINGSSON No. 8249 Exp. 9/30/06 ELECTRICAL — REGISTERED PROFESSIONAL ENGINEER — STATE OF CALIFORNIA

12-6-04
PLANS APPROVAL DATE

PB POWER, Inc.
A Parsons Brinckerhoff Company
303 Second St., Suite 700N
San Francisco, CA 94107-1317

The State of California or its officers or agents shall not be responsible for the accuracy or completeness of electronic copies of this plan sheet.

Caltrans now has a web site! To get to the web site, go to http://www.dot.ca.gov

Caltrans Metric

CKTs #2131A and #2131B
From 480 V Swgr, Cub #52S-4
(Continued on Sheet E-28)

480 V LVCC-B Control Center
(Located at YBI Substation Building)

480 V, 800 A, 42 kAIC, 3-phase, 3-wire + G

1	2A	2B	3A	3B	4A	4B	5	6	7A	7B	8A
	100AT 100AF	45AT 100AF	125AT 150AF	125AT 150AF	20AT 100AF	20AT 100AF	MCP		35AT 100AF (1)	40AT 100AF	35AT 100AF (1)

SPACE

Continued Below

100 A (2)
Aux Pnl
2-15 kW
CKT #2119A & B
Pier 1 Tower
Elevator
(See Sheet E-265)

15 kVA
480-208/120 V
3 Ø, 4-wire
CKT #2123
Utility Panel
UP-210
(See Sheet E-278)

25 kVA
480-208/120 V
3 Ø, 4-wire
CKT #2123-2
Utility Panel
UP-210-1A
(See Sheet E-279)

25 kVA
480-208/120 V
3 Ø, 4-wire
CKT #2123-3
Utility Panel
UP-210-1B
(See Sheet E-280)

3 kW (2) (Typ.)
CKT #2124
YBI Battery Room
Unit Heater EH-1

Spare

Spare

15 kVA
480-208/120 V
3 Ø, 4-wire (1) (Typ.)
CKT #2091
Utility Panel
UP-201

30 A Fused Disc. (1)
2-7.46 kW
CKT #2125
Booster Pump P1
(See Sheet E-264)

15 kVA
480-208/120 V
3 Ø, 4-wire
CKT #2092
Utility Panel
UP-202

SHEET NOTES:

1. (1) Enclosed in a Nema 4X (1) enclosure located on the service platform.
2. (2) Safety disconnect switch shall be horsepower rated.
3. (3) Enclosed in a fiberglass enclosure located on Pier 1 (Tower).
4. (1) (4) Electrical Panel with Main Lugs Only.

NOTES:

1. Single line diagram as shown does not represent physical separation of different contracts. Refer to other drawings for physical separation of different contracts.
2. The combination starter unit and thermal magnetic circuit breakers shall be suitable for and coordinated for 42,000 RMS system fault current.

Continued Above

480 V, 800 A, 42 kAIC, 3-phase, 3-wire + G

8B	9A	9B	10A	10B	11A	11B	12	13A	13B	14A
45AT 100AF	45AT 100AF	30AT 100AF	125AT 150AF		50AT 100AF	30AT 100AF	Space	45AT 100AF	45AT 100AF	45AT 100AF

SPACE

Cont'd on Sheet E-33

Spare

15 kVA
480-208/120 V
3 Ø, 4-wire
CKT #2093
Utility Panel
UP-203

Spare

25 kVA
480-120/240 V
1 Ø, 3-wire
CKT #2094
Utility Panel
UP-209

14 kW Reactivation Heaters
0.75 kW Reactivation Blower
1.50 kW Process Blower
CKT #2120
Dehumidification
Unit #2 (Tower Base)
(See Sheet E-265)

480-120/240 V
3 kW
0.37 kW
0.37 kW
CKT #2121
Dehumidification
unit #5 (Tower Head)
(See Sheet E-287)

40AT 60AT (4) 15 kVA 480-208/120 V 3 Ø, 4-wire
CKT #2095
Utility Panel
UP-204
(See Sheet E-150)

40AT 60AT (4) 15 kVA 480-208/120 V 3 Ø, 4-wire
CKT #2096
Utility Panel
UP-205
(See Sheet E-151)

40AT 60AT (4) 15 kVA 480-208/120 V 3 Ø, 4-wire (1)
CKT #2097
Utility Panel
UP-206
(See Sheet E-152)

REGISTERED PROFESSIONAL ENGINEER — FADI WALIEDDINE No. 11465 Exp. 12/31/2009 ELECTRICAL — STATE OF CALIFORNIA

FOR REVISION ONLY (1)

REQUEST FOR INFORMATION NOT ADDRESSED IN THIS CCO REMAIN IN FORCE

MARK	DATE	DESCRIPTIONS	REVISIONS BY	CH'D	CCO#
1	03/30/09	SERVICE PLATFORM ELECTRICAL CHANGES	RR MP / RG FW		55

CONTRACT CHANGE ORDER NO. 55
SHEET 18 OF 90

DETAILS
YBI SUBSTATION
480 V LVCC-B SINGLE LINE DIAGRAM
NO SCALE

E-32

DESIGN OVERSIGHT	CALCULATED/ DESIGNED BY	DATE	REVISED BY
BEHZAD GOLEMOHAMMADI	EJL	9-01	DATE REVISED
STATE OF CALIFORNIA - DEPARTMENT OF TRANSPORTATION	CHECKED BY	JE	12/01
Caltrans			

THIS PLAN ACCURATE FOR ELECTRICAL WORK ONLY.

ASS. REVISION 00-00-00
DATE PLOTTED => 3/31/2009
TIME PLOTTED => 3:09:08 PM

FOR REDUCED PLANS ORIGINAL SCALE IS IN MILLIMETERS 0 20 40 60 80

DGN FILE =>T:\13103\MS\pse\SAS Struc\CCO\SAS CCO55\04-0120F1_01 3R01.dgn
USERNAME =>gorciar
CU 04251
EA 0120F1

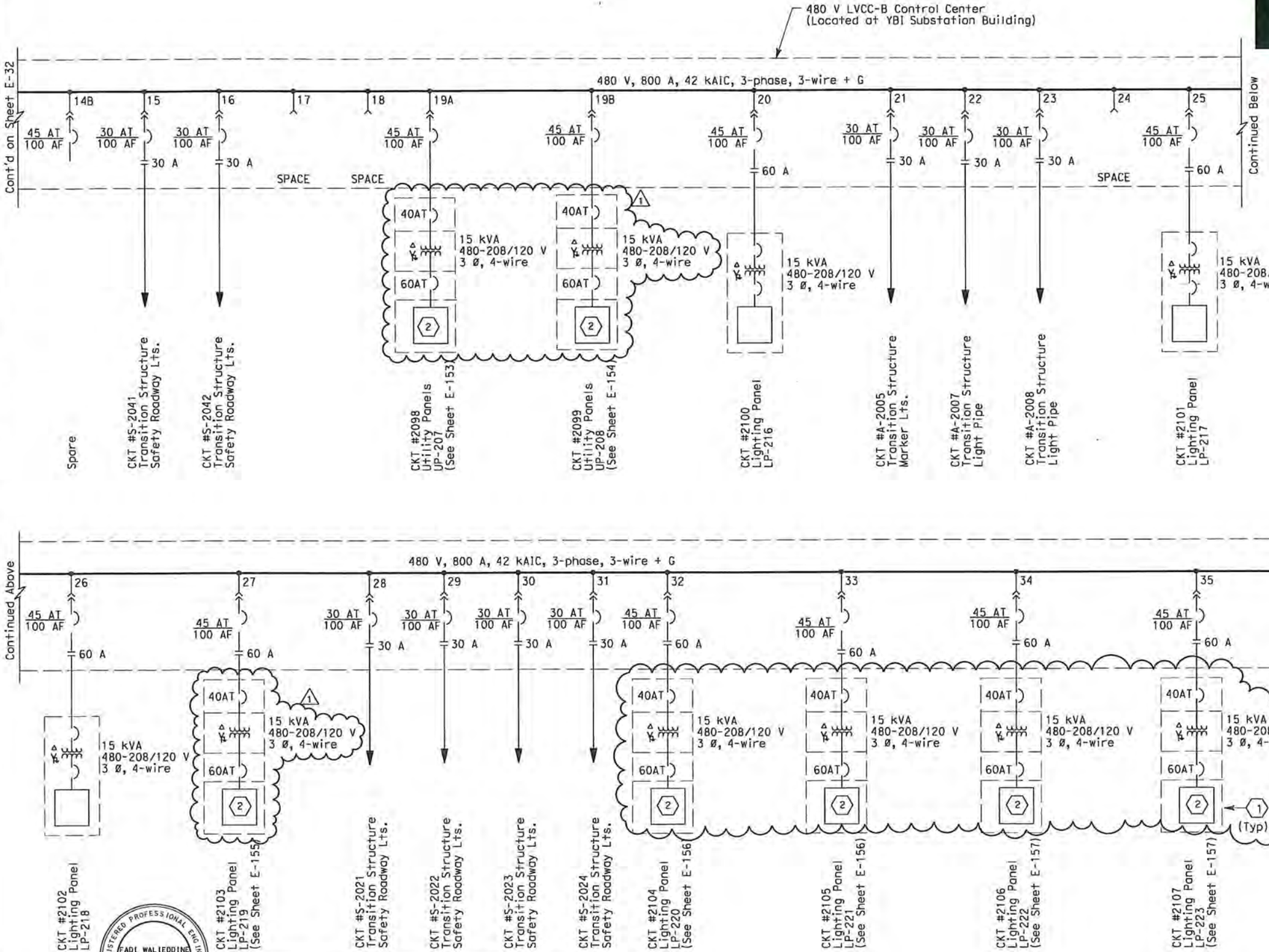

Caltrans Metric

DIST	COUNTY	ROUTE	KILOMETER POST TOTAL PROJECT	SHEET No	TOTAL SHEETS
04	SF	80	13.2/13.9	114 R1	1204

Jens Erlingsson 12/19/02
REGISTERED ELECTRICAL ENGINEER DATE

12-6-04
PLANS APPROVAL DATE

REGISTERED PROFESSIONAL ENGINEER — JENS ERLINGSSON No. 8249 Exp. 9/30/06 ELECTRICAL — STATE OF CALIFORNIA

PB POWER, Inc.
A Parsons Brinckerhoff Company
303 Second St., Suite 700N
San Francisco, CA 94107-1317

The State of California or its officers or agents shall not be responsible for the accuracy or completeness of electronic copies of this plan sheet.

Caltrans now has a web site! To get to the web site, go to http://www.dot.ca.gov

SHEET NOTE:

(1) Enclosed in a Nema 4X enclosure located on the service platform.

(2) Electrical Panel with Main Lugs Only.

NOTE:

1. Single line diagram as shown does not represent physical separation of different contracts. Refer to other drawings for physical separation of different contracts.

DESIGN OVERSIGHT	CALCULATED/ DESIGNED BY	DATE	REVISED BY
BEHZAD GOLEMOHAMMADI	CHECKED BY	JE	12/01 DATE REVISED

STATE OF CALIFORNIA - DEPARTMENT OF TRANSPORTATION

Caltrans

REGISTERED PROFESSIONAL ENGINEER — FADI WALIEDDINE No. 11465 Exp. 12/31/2009 ELECTRICAL — STATE OF CALIFORNIA

FOR REVISION ONLY
1

REQUEST FOR INFORMATION NOT ADDRESSED IN THIS CCO REMAIN IN FORCE

MARK	DATE	DESCRIPTIONS	BY	CH'D	CCO#
		REVISIONS			
1	03/30/09	SERVICE PLATFORM ELECTRICAL CHANGES	RR MP	RG FW	55

CONTRACT CHANGE ORDER NO. 55
SHEET 19 OF 90

DETAILS
YBI SUBSTATION
480 V LVCC-B SINGLE LINE DIAGRAM
NO SCALE

E-33

LAST REVISION 00-00-00
DATE PLOTTED => 3/31/2009
TIME PLOTTED => 3:07:36 PM

FOR REDUCED PLANS ORIGINAL SCALE IS IN MILLIMETERS 0 20 40 60 80

DGN FILE =>T:\13103\MS\pse\SAS Struc\CCO\SAS CCO55\04-0120f1_0114R01.dgn
USERNAME =>gorcior

CU 04251

EA 0120F1

DIST	COUNTY	ROUTE	KILOMETER POST TOTAL PROJECT	SHEET No	TOTAL SHEETS
04	SF	80	13.2/13.9	126 R1	1204

Jens Erlingsson 12/19/02
REGISTERED ELECTRICAL ENGINEER DATE

12-6-04
PLANS APPROVAL DATE

REGISTERED PROFESSIONAL ENGINEER — JENS ERLINGSSON No. 6249 Exp. 9/30/06 ELECTRICAL — STATE OF CALIFORNIA

PB POWER, Inc.
A Parsons Brinckerhoff Company
303 Second St., Suite 700N
San Francisco, CA 94107-1317

The State of California or its officers or agents shall not be responsible for the accuracy or completeness of electronic copies of this plan sheet.

Caltrans now has a web site! To get to the web site, go to http://www.dot.ca.gov

Caltrans Metric

UTILITY PANEL UP-104 (CKT #1095)

Location: SAS SUPERSTRUCTURE SERVICE PLATFORM 4

LOAD DESCRIPTION	LTG	REC	OTH.	CB		CB	LTG	REC	OTH.	LOAD DESCRIPTION
Spare				20/1	1 A 2	20/1				Spare
Recept (2) Westbound South Barrier		360		20/1	3 B 4	20/1				Spare
Recept (2) Service Platform #4		360		20/1	5 C 6	20/1	820			Crossbeam Ltg (20)
Recept (2) Girder		360		20/1	7 A 8	20/1	984			Girder Lighting (24)
Recept (4) Crossbeam		720		20/1	9 B 10 (1)	30/1			2000	Controller Cabinet #TOS-4WA
Spare				20/1	11 C 12 (1)	30/1			2000	Controller Cabinet #TOS-4WB
TOTAL VA		1800					1804		4000	TOTAL VA

LOAD SUMMARY (INCLUDES .90 PF) (VA)

Lighting (At 100%): 1804
Gen Use (1st 10 kVA at 100% plus 50% of remainder): 5800

TOTAL kVA: 7.604

BALANCE (kVA)

Phase A - 1.344
Phase B - 3.080
Phase C - 3.180

VOLTAGE: 208/120 V
PHASE/WIRES: 3-phase, 4-wire
BUS RATING: 100 A
MAIN: 60 A
MOUNTING: Surface
K.A.I.C.: 10

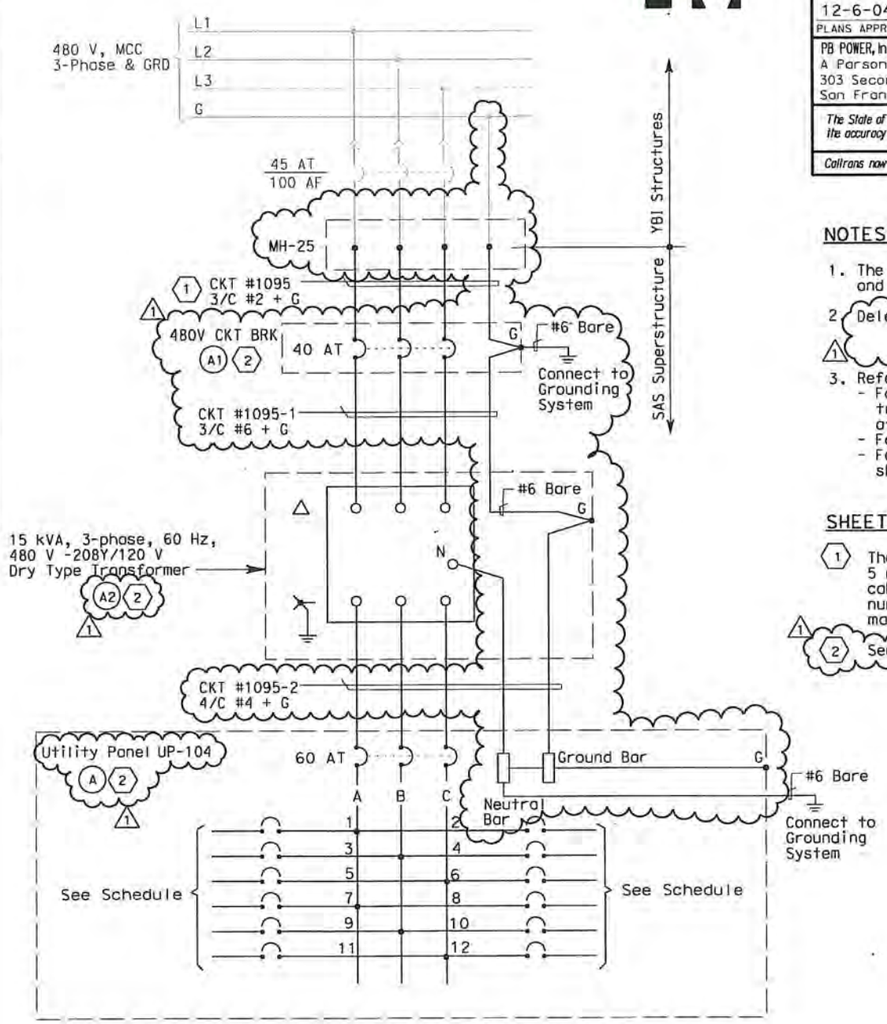

NOTES:

1. The Contractor shall provide nameplates and circuit schedules as shown.
2. Deleted. (1)
3. References:
   - For circuit and conduit/cable tray schedules, see sheets starting at E-401.
   - For pull box schedule, see sheet E-83.
   - For crossbeam lighting plan, see sheet E-119.

SHEET NOTES:

(1) The Contractor shall extend and coil 5 meters of cable in manhole 25. All cables shall be tagged with circuit numbers as shown. For location of manhole 25, see sheet E-11.

(1) (2) See sheet E-71 for Equipment Schedule.

DESIGNED BY	CALCULATED/	CHECKED BY
BEHZAD GOLEMOHAMMADI	JP	BL

DESIGN OVERSIGHT

STATE OF CALIFORNIA - DEPARTMENT OF TRANSPORTATION
Caltrans

DATE	REVISED BY	DATE REVISED
8/01		12/01

REGISTERED PROFESSIONAL ENGINEER — FADI WALIEDDINE No. 11465 Exp. 12/31/2009 ELECTRICAL — STATE OF CALIFORNIA

FOR REVISION ONLY (1)

REQUEST FOR INFORMATION NOT ADDRESSED IN THIS CCO REMAIN IN FORCE

MARK	DATE	DESCRIPTIONS	BY	CH'D	CCO#
		REVISIONS			
(1)	03/30/09	SERVICE PLATFORM ELECTRICAL CHANGES	RR MP	RG FW	55

CONTRACT CHANGE ORDER NO. 55
SHEET 20 OF 90

DETAILS
SAS SUPERSTRUCTURE ROADWAY WESTBOUND
PANEL UP-104 SCHEDULE

E-59

LAST REVISION 00-00-00
DATE PLOTTED => 3/31/2009
TIME PLOTTED => 3:08:34 PM

FOR REDUCED PLANS ORIGINAL SCALE IS IN MILLIMETERS 0 20 40 60 80

DGN FILE =>T:\13103\MS\pse\SAS Struc\CCO\SAS CC055\04-0120F1_0126R01.dgn
USERNAME =>garciar

CU 04251

EA 0120F1

UTILITY PANEL UP-105 (CKT #1096)

Location: SAS SUPERSTRUCTURE SERVICE PLATFORM 5

LOAD DESCRIPTION	LTG	REC	OTH.	CB		CB	LTG	REC	OTH.	LOAD DESCRIPTION
Spare				20/1	1 A 2	20/1				Spare
Recept (2) Westbound South Barrier		360		20/1	3 B 4	20/1				Spare
Recept (2) Service Platform #5		360		20/1	5 C 6	20/1				Spare
Recept (2) Girder		360		20/1	7 A 8	20/1	738			Girder Lighting (18)
Recept (4) Crossbeams		720		20/1	9 B 10	20/1	820			Crossbeam Ltg (20)
RTU #10W (PLC Power Supply)			100	20/1	11 C 12	20/1			900	Strong Motion Recorder #2 Box A
RTU #10W (Lighting & Receptacle)	105	180	150	20/1	13 A 14	20/1			300	Strong Motion Recorder #2 Box B
Navigation Relay Cabinet #NAP-5			600	20/1	15 B 16	20/1				Spare
Spare				20/1	17 C 18	20/1				
				20/1	19 A 20	20/1				
				20/1	21 B 22	20/1				
				20/1	23 C 24	20/1				
TOTAL VA	105	1980	850				1558		1200	TOTAL VA

LOAD SUMMARY (INCLUDES .90 PF) (VA)

Lighting (At 100%): 1663
Gen Use (1st 10 kVA AT 100% Plus 50% of remainder): 4050

BALANCE (kVA)

Phase A - 1.833
Phase B - 2.500
Phase C - 1.360

VOLTAGE: 208Y/120 V
PHASE/WIRES: 3-phase, 4-wire
BUS RATING: 100 A
MAIN: 60 A
MOUNTING: Surface
K.A.I.C.: 10

TOTAL kVA: 5.693

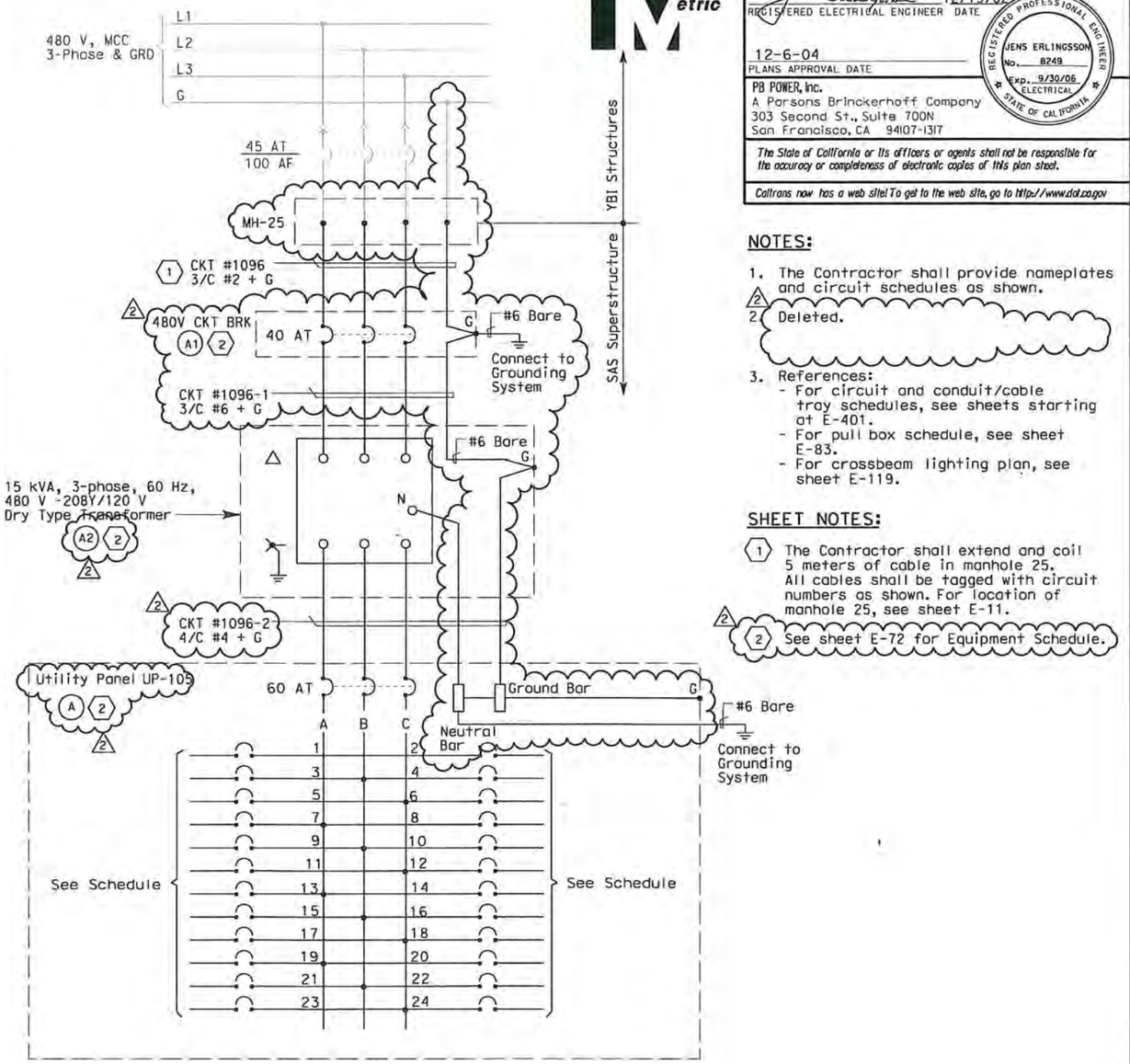

DIST	COUNTY	ROUTE	KILOMETER POST TOTAL PROJECT	SHEET No	TOTAL SHEETS
04	SF	80	13.2/13.9	127 R2	1204

James Erlingsson 12/19/02
REGISTERED ELECTRICAL ENGINEER DATE

REGISTERED PROFESSIONAL ENGINEER JENS ERLINGSSON No. 8249 Exp. 9/30/06 ELECTRICAL STATE OF CALIFORNIA

12-6-04
PLANS APPROVAL DATE

PB POWER, Inc.
A Parsons Brinckerhoff Company
303 Second St., Suite 700N
San Francisco, CA 94107-1317

The State of California or its officers or agents shall not be responsible for the accuracy or completeness of electronic copies of this plan sheet.

Caltrans now has a web site! To get to the web site, go to http://www.dot.ca.gov

NOTES:

1. The Contractor shall provide nameplates and circuit schedules as shown.
2. (2) Deleted.
3. References:
   - For circuit and conduit/cable tray schedules, see sheets starting at E-401.
   - For pull box schedule, see sheet E-83.
   - For crossbeam lighting plan, see sheet E-119.

SHEET NOTES:

(1) The Contractor shall extend and coil 5 meters of cable in manhole 25. All cables shall be tagged with circuit numbers as shown. For location of manhole 25, see sheet E-11.

(2) See sheet E-72 for Equipment Schedule.

REGISTERED PROFESSIONAL ENGINEER S.A. ESTOQUE, JR No. E-10151 Exp. 12/31/2006 ELECTRICAL STATE OF CALIFORNIA

FOR REVISION ONLY (1)

REGISTERED PROFESSIONAL ENGINEER FADI WALIEDDINE No. 11465 Exp. 12/31/2009 ELECTRICAL STATE OF CALIFORNIA

FOR REVISION ONLY (2)

REQUEST FOR INFORMATION NOT ADDRESSED IN THIS CCO REMAIN IN FORCE

MARK	DATE	REVISIONS DESCRIPTIONS	BY	CH'D	CCO#
2	03/30/09	SERVICE PLATFORM ELECTRICAL CHANGES	RR MP	RG FW	55
1	03/04/08	BARRIER MODIFICATIONS	JS BM	RG SE	44

CONTRACT CHANGE ORDER NO. 55
SHEET 21 OF 90

DETAILS
SAS SUPERSTRUCTURE ROADWAY WESTBOUND
PANEL UP-105 SCHEDULE

E-60

DESIGN OVERSIGHT BEHZAD GOLEMOHAMMADI | CALCULATED/DESIGNED BY JP | CHECKED BY BL | DATE 08/01 | REVISED BY II/01 | DATE REVISED

STATE OF CALIFORNIA - DEPARTMENT OF TRANSPORTATION Caltrans

THIS PLAN IS ACCURATE FOR ELECTRICAL WORK ONLY.

LAST REVISION 00-00-00 | DATE PLOTTED => 3/31/2009 TIME PLOTTED => 3:05:50 PM

FOR REDUCED PLANS ORIGINAL SCALE IS IN MILLIMETERS 0 20 40 60 80

DGN FILE =>T:\13103\MS\pse\SAS Struc\CCO\SAS CCO55\04-0120F1_0127R02.dgn
USERNAME =>garciar

CU 04251 | EA 0120F1

UTILITY PANEL UP-106 (CKT #1097)

Location: SAS SUPERSTRUCTURE SERVICE PLATFORM #6

LOAD DESCRIPTION	LTG	REC	OTH.	CB		CB	LTG	REC	OTH.	LOAD DESCRIPTION
Recept (1) Westbound North Barrier		180		20/1	1 A 2	20/1				Spare
Recept (2) Westbound South Barrier		360		20/1	3 B 4	20/1				Spare
Recept (2) Service Platform #6		360		20/1	5 C 6	20/1	820			Crossbeam Ltg (20)
Recept (2) Girder		360		20/1	7 A 8	20/1	1230			Girder Lighting (30)
Recept (5) Crossbeams		720		20/1	9 B 10	30/1 (1)			2000	Controller Cabinet #TOS-6WA
Spare				20/1	11 C 12	20/1				
Spare				20/1	13 A 14	20/1				Spare
Navigation Relay Cabinet #NAP-6W			600	20/1	15 B 16	20/1				Spare
Spare				20/1	17 C 18	20/1				
				20/1	19 A 20	20/1				
Spare				20/1	21 B 22	20/1				Spare
				20/1	23 C 24	20/1				
TOTAL VA		1980	600				2050		2000	TOTAL VA

LOAD SUMMARY (INCLUDES .90 PF) (VA)

Lighting (At 100%): 2050
Gen Use (1st 10 kVA At 100% Plus 50% OF Remainder): 4580

TOTAL kVA: 6.630

BALANCE (kVA)

Phase A - ~~1.770~~
Phase B - 3.680 (1)
Phase C - ~~1.180~~

VOLTAGE: 208/120 V
PHASE/WIRES: 3-phase, 4-wire
BUS RATING: 100 A
MAIN: 60 A
MOUNTING: Surface
K.A.I.C.: 10

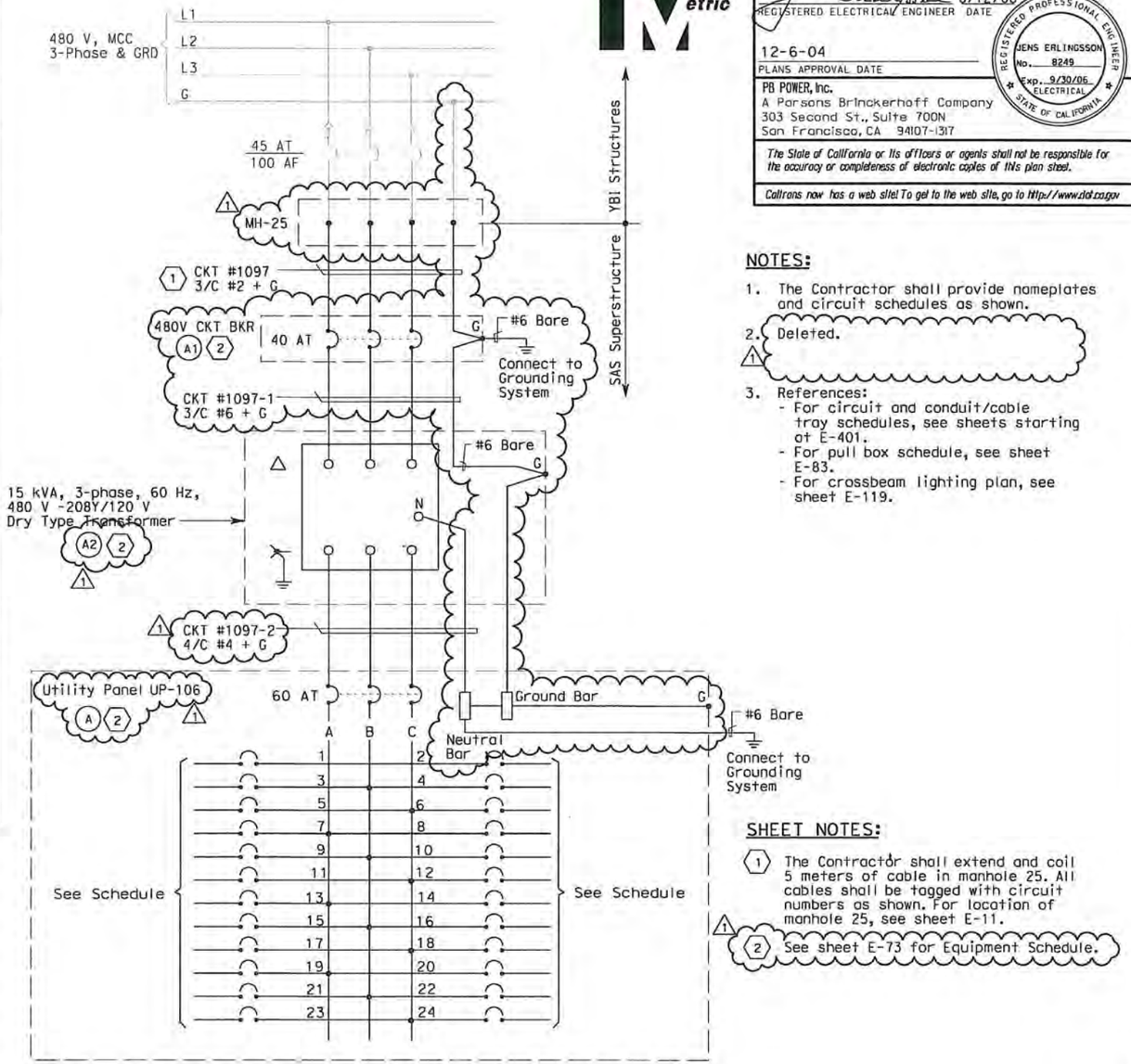

Caltrans Metric

DIST	COUNTY	ROUTE	KILOMETER POST TOTAL PROJECT	SHEET No.	TOTAL SHEETS
04	SF	80	13.2/13.9	128 R1	1204

6/12/08
REGISTERED ELECTRICAL ENGINEER DATE

JENS ERLINGSSON No. 8249 Exp. 9/30/06 ELECTRICAL — REGISTERED PROFESSIONAL ENGINEER — STATE OF CALIFORNIA

12-6-04
PLANS APPROVAL DATE

PB POWER, Inc.
A Parsons Brinckerhoff Company
303 Second St., Suite 700N
San Francisco, CA 94107-1317

The State of California or its officers or agents shall not be responsible for the accuracy or completeness of electronic copies of this plan sheet.

Caltrans now has a web site! To get to the web site, go to http://www.dot.ca.gov

NOTES:

1. The Contractor shall provide nameplates and circuit schedules as shown.
2. (1) Deleted.
3. References:
   - For circuit and conduit/cable tray schedules, see sheets starting at E-401.
   - For pull box schedule, see sheet E-83.
   - For crossbeam lighting plan, see sheet E-119.

SHEET NOTES:

(1) The Contractor shall extend and coil 5 meters of cable in manhole 25. All cables shall be tagged with circuit numbers as shown. For location of manhole 25, see sheet E-11.

(1) (2) See sheet E-73 for Equipment Schedule.

REGISTERED PROFESSIONAL ENGINEER — FADI WALIEDDINE No. 11465 Exp. 12/31/2009 ELECTRICAL — STATE OF CALIFORNIA

FOR REVISION ONLY (1)

REQUEST FOR INFORMATION NOT ADDRESSED IN THIS CCO REMAIN IN FORCE

MARK	DATE	DESCRIPTIONS	BY	CH'D	CCO#
		REVISIONS			
(1)	03/30/09	SERVICE PLATFORM ELECTRICAL CHANGES	RR MP	RG FW	55

CONTRACT CHANGE ORDER NO. 55
SHEET 22 OF 90

DETAILS
SAS SUPERSTRUCTURE ROADWAY WESTBOUND
PANEL UP-106 SCHEDULE

E-61

DATE	REVISED BY	DATE REVISED
08/01	JP	12/01
	BL	

CALCULATED/DESIGNED BY
CHECKED BY

DESIGN OVERSIGHT
BEHZAD GOLEMOHAMMADI

STATE OF CALIFORNIA - DEPARTMENT OF TRANSPORTATION
Caltrans

FOR REDUCED PLANS ORIGINAL SCALE IS IN MILLIMETERS 0 20 40 60 80

DGN FILE =>T:\13103\MS\pse\SAS Struc\CCO\SAS CC055\04-0120f1_0128R01.dgn
USERNAME =>garciar

CU 04251 EA 0120F1

LAST REVISION 00-00-00
DATE PLOTTED => 3/31/2009
TIME PLOTTED => 3:06:50 PM

UTILITY PANEL UP-107 (CKT #1098)

Location: SAS SUPERSTRUCTURE SERVICE PLATFORM 7

LOAD DESCRIPTION	LTG	REC	OTH.	CB		CB	LTG	REC	OTH.	LOAD DESCRIPTION
Spare				20/1	1 A 2	20/1				Spare
Recept (2) Westbound South Barrier		360		20/1	3 B 4	20/1				Spare
Recept (2) Service Platform #7		360		20/1	5 C 6	20/1	820			Crossbeam Ltg (20)
Recept (2) Girder		360		20/1	7 A 8	20/1	1230			Girder Lighting (30)
Recept (4) Crossbeams		720		20/1	9 B 10	30/1 (1)			2000	Controller Cabinet #TOS-7WA
Spare				20/1	11 C 12	20/1				Spare
TOTAL VA		1800					2050		2000	TOTAL VA

LOAD SUMMARY (INCLUDES .90 PF) (VA)

Lighting (At 100%): 1558
Gen Use (1st 10 kVA at 100% Plus 50% of Remainder): 3800

TOTAL kVA: 5.850

BALANCE (kVA)

Phase A - 1.590
Phase B - 3.080
Phase C - 1.180

VOLTAGE: 208/120 V
PHASE/WIRES: 3-phase, 4-wire
BUS RATING: 100 A
MAIN: 60 A
MOUNTING: Surface
K.A.I.C.: 10

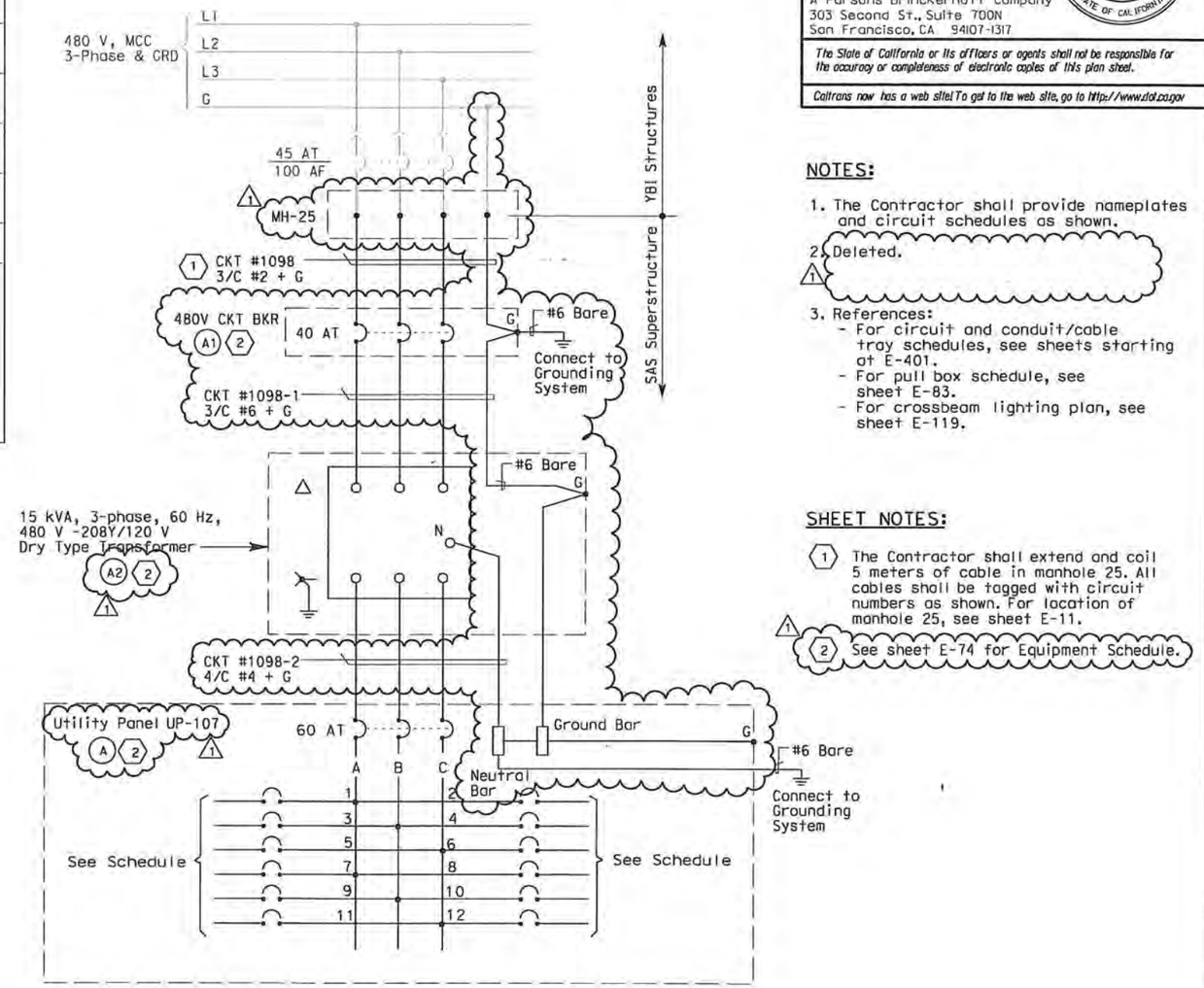

NOTES:

1. The Contractor shall provide nameplates and circuit schedules as shown.
2. (1) Deleted.
3. References:
   - For circuit and conduit/cable tray schedules, see sheets starting at E-401.
   - For pull box schedule, see sheet E-83.
   - For crossbeam lighting plan, see sheet E-119.

SHEET NOTES:

(1) The Contractor shall extend and coil 5 meters of cable in manhole 25. All cables shall be tagged with circuit numbers as shown. For location of manhole 25, see sheet E-11.

(1) (2) See sheet E-74 for Equipment Schedule.

DIST	COUNTY	ROUTE	KILOMETER POST TOTAL PROJECT	SHEET No	TOTAL SHEETS
04	SF	80	13.2/13.9	129 R1	1204

REGISTERED ELECTRICAL ENGINEER — 6/12/08 DATE

12-6-04
PLANS APPROVAL DATE

REGISTERED PROFESSIONAL ENGINEER — JENS ERLINGSSON No. 8249 Exp. 9/30/06 ELECTRICAL — STATE OF CALIFORNIA

PB POWER, Inc.
A Parsons Brinckerhoff Company
303 Second St., Suite 700N
San Francisco, CA 94107-1317

The State of California or its officers or agents shall not be responsible for the accuracy or completeness of electronic copies of this plan sheet.

Caltrans now has a web site! To get to the web site, go to http://www.dot.ca.gov

REGISTERED PROFESSIONAL ENGINEER — FADI WALIEDDINE No. 11465 Exp. 12/31/2009 ELECTRICAL — STATE OF CALIFORNIA

FOR REVISION ONLY (1)

REQUEST FOR INFORMATION NOT ADDRESSED IN THIS CCO REMAIN IN FORCE					
(1)	03/30/09	SERVICE PLATFORM ELECTRICAL CHANGES	RR MP	RG FW	55
MARK	DATE	DESCRIPTIONS	BY	CH'D	CCO#
REVISIONS					

CONTRACT CHANGE ORDER NO. 55
SHEET 23 OF 90

DETAILS
SAS SUPERSTRUCTURE ROADWAY WESTBOUND
PANEL UP-107 SCHEDULE
NO SCALE

E-62

DESIGN OVERSIGHT	CALCULATED/ DESIGNED BY	CHECKED BY	DRAWN BY	DATE	REVISED BY	DATE REVISED
BEHZAD GOLEMOHAMMADI	JP	BL	MM	08/01	II/01	

STATE OF CALIFORNIA - DEPARTMENT OF TRANSPORTATION — Caltrans

FOR REDUCED PLANS ORIGINAL SCALE IS IN MILLIMETERS 0 20 40 60 80

DGN FILE =>I:\13103\MS\pse\SAS Struc\CCO\SAS CCO55\04-0120F1_0129R01.dgn
USERNAME =>garciar

CU 04251 | EA 0120F1

LAST REVISION 00-00-00 | DATE PLOTTED => 3/31/2009 TIME PLOTTED => 3:05:12 PM

UTILITY PANEL UP-108 (CKT #1099)

Location: SAS SUPERSTRUCTURE SERVICE PLATFORM 8

LOAD DESCRIPTION	LTG	REC	OTH.	CB		CB	LTG	REC	OTH.	LOAD DESCRIPTION
Recept (1) Westbound North Barrier		180		20/1	1 A 2	20/1			10	CB-143A
Recept (3) Westbound South Barrier		540		20/1	3 B 4	20/1			10	CB-143B
Recept (2) Service Platform #8		360		20/1	5 C 6	20/1				Spare
Recept (3) Girder		540		20/1	7 A 8	20/1	984			Girder Ltg. (24)
Recept (6) Crossbeams		1080		20/1	9 B 10	20/1	738			Crossbeam Ltg (20)
RTU #11W (Lighting & Receptacle)	105	180	150	20/1	11 C 12	20/1	820			Crossbeam Ltg (20)
Recept (1) Crossbeams		180		20/1	13 A 14	20/1				Spare
Spare				20/1	15 B 16	20/1				Spare
RTU #11W (PLC Power Supply)			100	20/1	17 C 18	20/1				
Spare				20/1	19 A 20	20/1				
				20/1	21 B 22	20/1				
				20/1	23 C 24	20/1				
TOTAL VA	105	3060	250				2542		20	TOTAL VA

LOAD SUMMARY (INCLUDES .90 PF) (VA)

Lighting (At 100%): 2647
Gen Use (1st 10 kVA AT 100% Plus 50% of remainder): 3330

TOTAL kVA: 5.977

BALANCE (kVA)

Phase A - 1.894
Phase B - 2.368 (2)
Phase C - 1.715

VOLTAGE: 208Y/120 V
PHASE/WIRES: 3-phase, 4-wire
BUS RATING: 100 A
MAIN: 60 A
MOUNTING: Surface
K.A.I.C.: 10

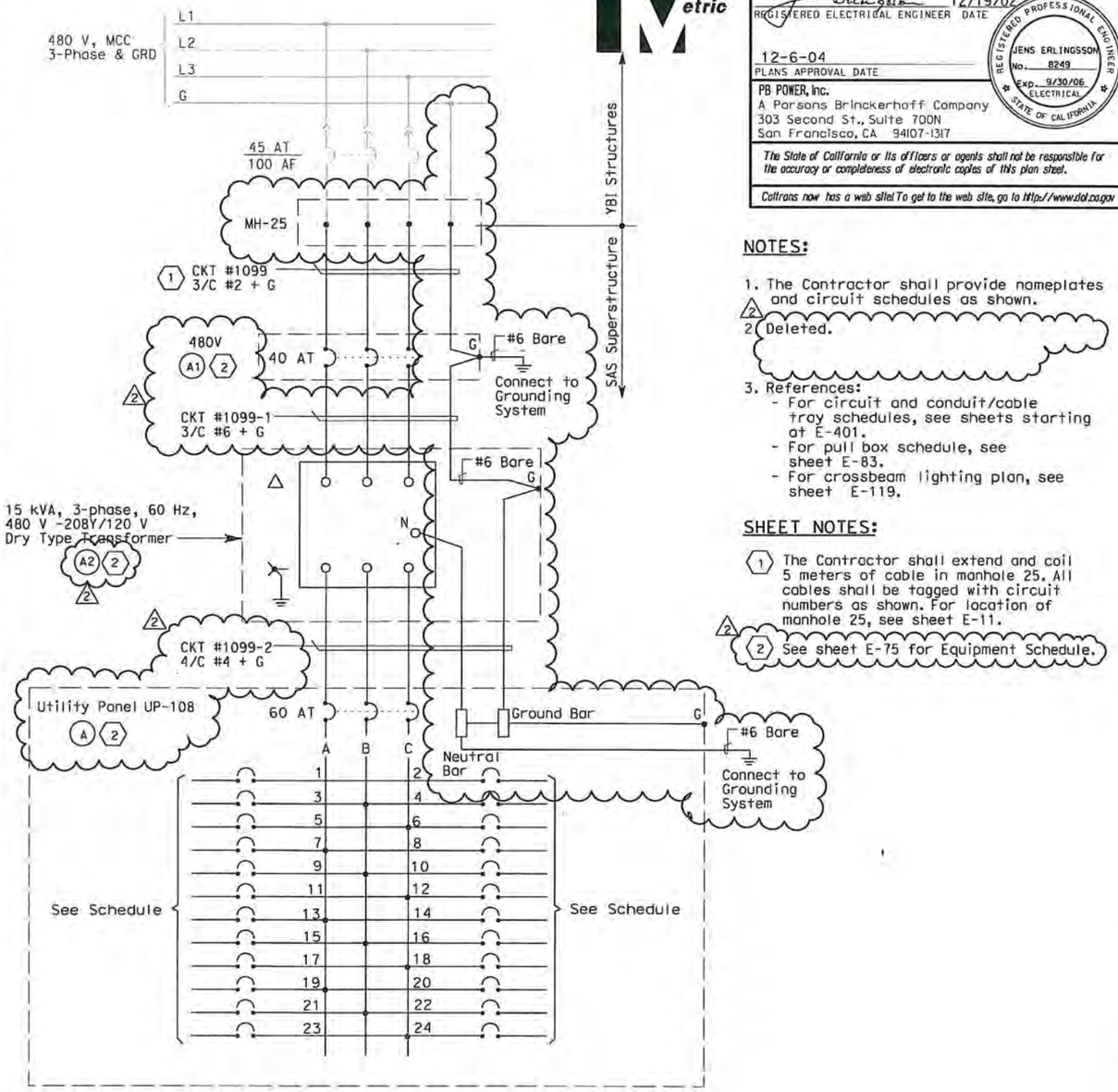

DIST	COUNTY	ROUTE	KILOMETER POST TOTAL PROJECT	SHEET No	TOTAL SHEETS
04	SF	80	13.2/13.9	130 R2	1204

REGISTERED ELECTRICAL ENGINEER — DATE 12/19/02

12-6-04
PLANS APPROVAL DATE

REGISTERED PROFESSIONAL ENGINEER — JENS ERLINGSSON No. 8249 Exp. 9/30/06 ELECTRICAL — STATE OF CALIFORNIA

PB POWER, Inc.
A Parsons Brinckerhoff Company
303 Second St., Suite 700N
San Francisco, CA 94107-1317

The State of California or its officers or agents shall not be responsible for the accuracy or completeness of electronic copies of this plan sheet.

Caltrans now has a web site! To get to the web site, go to http://www.dot.ca.gov

NOTES:

1. The Contractor shall provide nameplates and circuit schedules as shown.
2. (2) Deleted.
3. References:
   - For circuit and conduit/cable tray schedules, see sheets starting at E-401.
   - For pull box schedule, see sheet E-83.
   - For crossbeam lighting plan, see sheet E-119.

SHEET NOTES:

(1) The Contractor shall extend and coil 5 meters of cable in manhole 25. All cables shall be tagged with circuit numbers as shown. For location of manhole 25, see sheet E-11.

(2) See sheet E-75 for Equipment Schedule.

REGISTERED PROFESSIONAL ENGINEER — S. A. ESTOQUE, JR. No. E-10151 Exp. 12/31/2008 ELECTRICAL — STATE OF CALIFORNIA

FOR REVISION ONLY (1)

REGISTERED PROFESSIONAL ENGINEER — FADI WALIEDDINE No. 11465 Exp. 12/31/2009 ELECTRICAL — STATE OF CALIFORNIA

FOR REVISION ONLY (2)

THIS PLAN IS ACCURATE FOR ELECTRICAL WORK ONLY.

REQUEST FOR INFORMATION NOT ADDRESSED IN THIS CCO REMAIN IN FORCE					
MARK	DATE	DESCRIPTIONS	BY	CH'D	CCO#
REVISIONS					
2	03/30/09	SERVICE PLATFORM ELECTRICAL CHANGES	RR MP	RG FW	55
1	03/04/08	BARRIER MODIFICATIONS	JS BM	RG SE	44

CONTRACT CHANGE ORDER NO. 55
SHEET 24 OF 90

DETAILS
SAS SUPERSTRUCTURE ROADWAY WESTBOUND
PANEL UP-108 SCHEDULE
NO SCALE

E-63

CALCULATED/ DESIGNED BY	JP	DATE 08/01	REVISED BY EJL
CHECKED BY	BL	11/01	DATE REVISED 2/04

STATE OF CALIFORNIA - DEPARTMENT OF TRANSPORTATION
Caltrans
DESIGN OVERSIGHT
BEHZAD GOLEMOHAMMADI

LAST REVISION 00-00-00
DATE PLOTTED => 3/31/2009
TIME PLOTTED => 3:04:35 PM

FOR REDUCED PLANS ORIGINAL SCALE IS IN MILLIMETERS 0 20 40 60 80

DGN FILE =>T:\13103\WS\pse\SAS Struc\CCO\SAS CCO55\04-0120f1_0130R02.dgn
USERNAME =>garcior
CU 04251
EA 0120F1

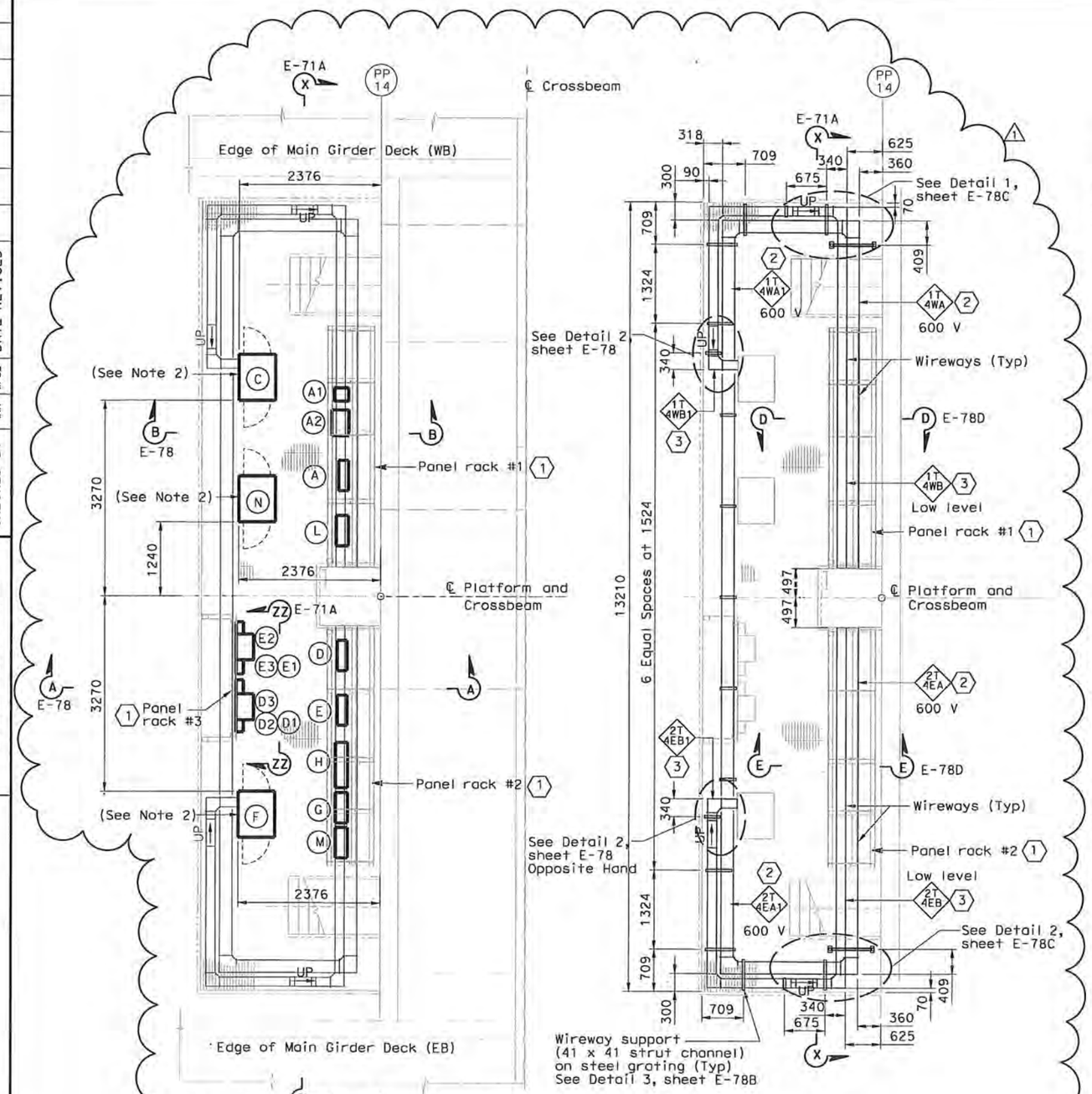

EQUIPMENT ARRANGEMENT PLAN
SCALE 1:40

WIREWAY PLAN
SCALE 1:40

EQUIPMENT SCHEDULE:

Equipment for Westbound

(A) Utility Panel, UP-104, 100A 208/120 V, 3-phase, 4-wire
- (A1) 480 V Breaker for (A2) (Nema 4X) Size: 495 H X 232 W X 124 D
- (A2) 15 kVA Transformer, 3 phase, 60 hertz 480 V-208/120 V, 3 phase (Nema 4X) Size: 375 H X 485 W X 311 D

(C) Controller Cabinet #TOS-4WA Size: 1625 H X 615 W X 768 D

(L) TOS/COM-4WA Pull Box (PB-2B)

(N) Controller Cabinet #TOS-4WB (Temporary) Size: 1625 H X 615 W X 768 D

Equipment for Eastbound

(D) Utility Panel, UP-204, 100A MLO 208/120 V, 3-phase, 4-wire
- (D1) 480 V Breaker for (D2) (Nema 4X) Size: 495 H X 232 W X 124 D
- (D2) 15 kVA Transformer, 3 phase, 60 hertz 480 V-208/120 V, 3 phase (Nema 4X) Size: 375 H X 485 W X 311 D
- (D3) Enclosed circuit breaker 10 kAIC 240 V 3 phase in NEMA 4X enclosure.

(E) Lighting Panel LP-219, 100A MLO 208/120 V, 3-phase, 4-wire
- (E1) 480 V Breaker for (E2) (Nema 4X) Size: 495 H X 232 W X 124 D
- (E2) 15 kVA Transformer, 3 phase, 60 hertz 480 V-208/120 V, 3 phase (Nema 4X) Size: 375 H X 485 W X 311 D
- (E3) Enclosed circuit breaker 10 kAIC 240 V 3 phase in NEMA 4X enclosure.

(F) Controller Cabinet #TOS-4EA Size: 1625 H X 615 W X 768 D

(M) TOS/COM-4EA Pull Box (PB-2B)

Equipment Common for Westbound/Eastbound

(G) Telephone Terminal Box #TEL-4 (PB-7C)

(H) Communication Terminal Box #COM-4 (PB-7B)

SHEET NOTES:

1. For electrical panel support details, see AS-sheets.
2. 600 V Stainless steel wireway, Nema 4X with cover.
3. Low level Stainless steel wireway, Nema 4X with cover.

NOTES:

1. The contractor shall verify the sizes and mounting dimensions of all rack mounted equipment prior to the fabrication of service platform racks. The contractor shall also verify the wireway mounting dimensions and support locations and make adjustment as needed to suit field condition.
2. Contractor to provide cover plate and sealant to all cabinets with open bottom. Cover plate shall be of the same material. See Sheet E-78B for details.
3. References:
   - For platform 4 conduit, lighting and grounding plan, see sheet E-114.
   - For location of platform 4, see sheet E-46.
   - TOS are shown for conduit routing only. For typical details of TOS controller and devices, see sheets E-344 through E-361.
   - For schedule of utility panel UP-104, see sheet E-59.
   - For schedule of utility panel UP-204, see sheet E-150.
   - For schedule of lighting panel LP-219, see sheet E-155.
   - For typical panel arrangement details of SCADA communications terminal box, see sheet E-321.
   - For pull box schedule, see sheet E-83.
   - For circuit and conduit/cable tray schedules, see sheets starting at E-401.
   - For platform elevations, see sheet E-71A.

DIST	COUNTY	ROUTE	KILOMETER POST TOTAL PROJECT	SHEET No	TOTAL SHEETS
04	SF	80	13.2/13.9	134 R1	1204

Jens Erlingsson 12/19/02
REGISTERED ELECTRICAL ENGINEER DATE

12-6-04
PLANS APPROVAL DATE

REGISTERED PROFESSIONAL ENGINEER — JENS ERLINGSSON No. 8249 Exp. 9/30/06 ELECTRICAL — STATE OF CALIFORNIA

PB POWER, Inc.
A Parsons Brinckerhoff Company
303 Second St., Suite 700N
San Francisco, CA 94107-1317

The State of California or its officers or agents shall not be responsible for the accuracy or completeness of electronic copies of this plan sheet.

Caltrans now has a web site! To get to the web site, go to http://www.dot.ca.gov

REGISTERED PROFESSIONAL ENGINEER — FADI WALIEDDINE No. 11465 Exp. 12/31/2009 ELECTRICAL — STATE OF CALIFORNIA

REQUEST FOR INFORMATION NOT ADDRESSED IN THIS CCO REMAIN IN FORCE					
MARK	DATE	REVISIONS DESCRIPTIONS	BY	CH'D	CCO#
1	03/30/09	SERVICE PLATFORM ELECTRICAL CHANGES	RR MP	RG FW	55

FOR REVISION ONLY
1

CONTRACT CHANGE ORDER NO. 55
SHEET 25 OF 90

DETAILS
SAS SUPERSTRUCTURE ROADWAY WESTBOUND PLATFORM 4 ARRANGEMENT
SCALE AS NOTED

E-71

DESIGNED BY	CALCULATED/ CHECKED BY	DATE	REVISED BY	DATE REVISED
BEHZAD GOLEMOHAMMADI	FK IAH	11/02 11/02		

STATE OF CALIFORNIA - DEPARTMENT OF TRANSPORTATION
DESIGN OVERSIGHT
Caltrans

THIS PLAN IS ACCURATE FOR ELECTRICAL WORK ONLY.

ALL DIMENSIONS ARE IN MILLIMETERS UNLESS OTHERWISE SHOWN.

FOR REDUCED PLANS ORIGINAL SCALE IS IN MILLIMETERS 0 20 40 60 80

DGN FILE =>T:\13103\MS\pse\SAS Struc\CCO\SAS CCO55\04-0120F1_0134R01.dgn
USERNAME =>garciar

CU 04251 EA 0120F1

LAST REVISION 00-00-00
DATE PLOTTED => 3/31/2009
TIME PLOTTED => 3:03:48 PM

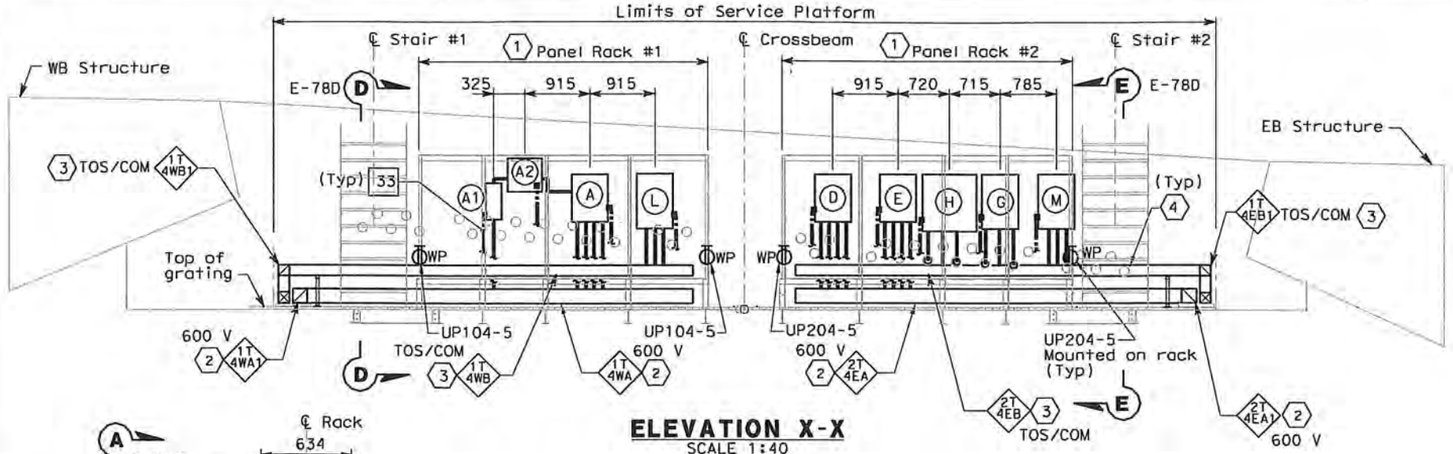

ELEVATION X-X
SCALE 1:40

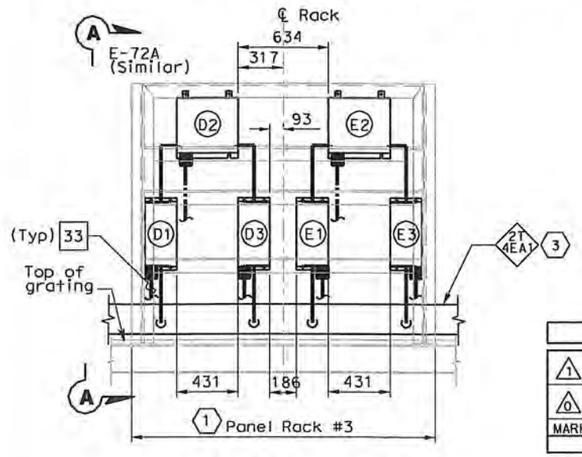

ELEVATION Z-Z
SCALE 1:20

REQUEST FOR INFORMATION NOT ADDRESSED IN THIS CCO REMAIN IN FORCE					
1	07/01/09	SERVICE PLATFORM ELECTRICAL CHANGES	RR RY	RG FW	55
0	03/30/09	SERVICE PLATFORM ELECTRICAL CHANGES	RR MP	RG FW	55
MARK	DATE	DESCRIPTIONS REVISIONS	BY	CH'D	CCO#

CONTRACT CHANGE ORDER NO. 55
SHEET 26 OF 90

SHEET NOTES:

1. For electrical panel support details, see AS-sheets, AS-13, AS-13A and AS-13B.
2. 600 V Stainless steel wireway, Nema 4X with cover.
3. Low level Stainless steel wireway, Nema 4X with cover.
4. Empty conduits shall be capped for future use.

NOTES:

1. Equipment dimensions mounted at panel racks shall be verified by Contractor prior to purchase and installation. Dimensions for equipment location are approximate and may be adjusted to suit field condition.
2. (SP) Denotes spare pipe sleeve for 78 mm conduit. Contractor to provide plug at each ends

WESTBOUND	CONDUIT NUMBERS
A Utility Panel, UP-104	4 203D, 4 204A, 4 009, 4 010
A1 Main Breaker for A2	4 203A, 4 203B
A2 15 kVA Transformer	4 203B, 4 203C
L TOS/COM-4WA Pull Box	4 205A, 4 206A, 4 007A

EASTBOUND	CONDUIT NUMBERS
D Utility Panel, UP-204	5 203D, 5 204A, 5 001, 5 002
D1 Main Breaker for D2	5 203A, 5 203B
D2 15 kVA Transformer	5 203B, 5 203C
D3 Feeder Breaker for D	5 203C, 5 203E
E Lighting Panel LP-219	5 205D, 5 004, 5 005, 5 006
E1 Main Breaker for E2	5 205A, 5 205B
E2 15 kVA Transformer	5 205B, 5 205C
E3 Feeder Breaker for E	5 205C, 5 205E
G Telephone Terminal Box #TEL-4	5 210, 5 210A, 5 232, 1
H Communication Terminal Box #COM-4	5 206, 5 206A, 5 207
M TOS/COM-4EA Pull Box	5 207A, 5 230A, 5 231A

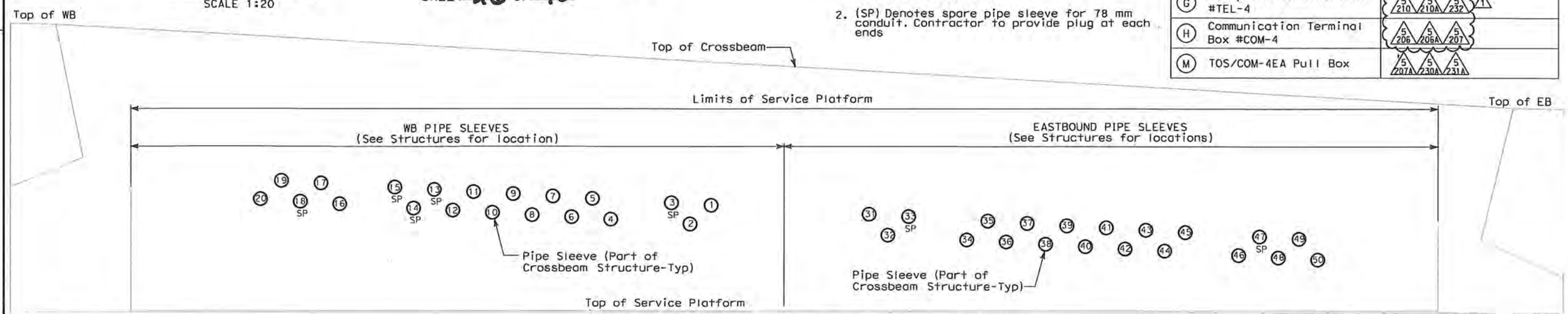

PIPE SLEEVE ELEVATION Y-Y (SEE SHEET E-114)
SCALE 1:20

DETAILS
SAS SUPERSTRUCTURE ROADWAY WESTBOUND PLATFORM 4 ARRANGEMENT
SCALE AS NOTED

E-71A

DIST	COUNTY	ROUTE	KILOMETER POST TOTAL PROJECT	SHEET No	TOTAL SHEETS
04	SF	80	13.2/13.9	134 SIR1	1204

REGISTERED ELECTRICAL ENGINEER — 6/12/08 DATE

REGISTERED PROFESSIONAL ENGINEER — FADI WALIEDDINE No. 11465 Exp. 12/31/2009 ELECTRICAL — STATE OF CALIFORNIA

PLANS APPROVAL DATE

PB AMERICAS, Inc.
A Parsons Brinckerhoff Company
303 Second St., Suite 700N
San Francisco, CA 94107-1317

The State of California or its officers or agents shall not be responsible for the accuracy or completeness of electronic copies of this plan sheet.

Caltrans now has a web site! To get to the web site, go to http://www.dot.ca.gov

DESIGN OVERSIGHT — BEHZAD GOLEMOHAMMADI
CALCULATED/DESIGNED BY — CHECKED BY
DATE — REVISED BY — DATE REVISED
STATE OF CALIFORNIA - DEPARTMENT OF TRANSPORTATION — Caltrans

THIS PLAN IS ACCURATE FOR ELECTRICAL WORK ONLY.

ALL DIMENSIONS ARE IN MILLIMETERS UNLESS OTHERWISE SHOWN.

FOR REDUCED PLANS ORIGINAL SCALE IS IN MILLIMETERS 0 20 40 60 80

DGN FILE =>T:\13103\MS\pse\SAS Struc\CCO\SAS CC055\2009-07-01_Issued for Submittal\04-0120F1_0134S01R01.dgn
USERNAME =>ricafrente

CU 04251 | EA 0120F1

LAST REVISION 00-00-00 — DATE PLOTTED => 7/2/2009 TIME PLOTTED => 1:12:34 PM

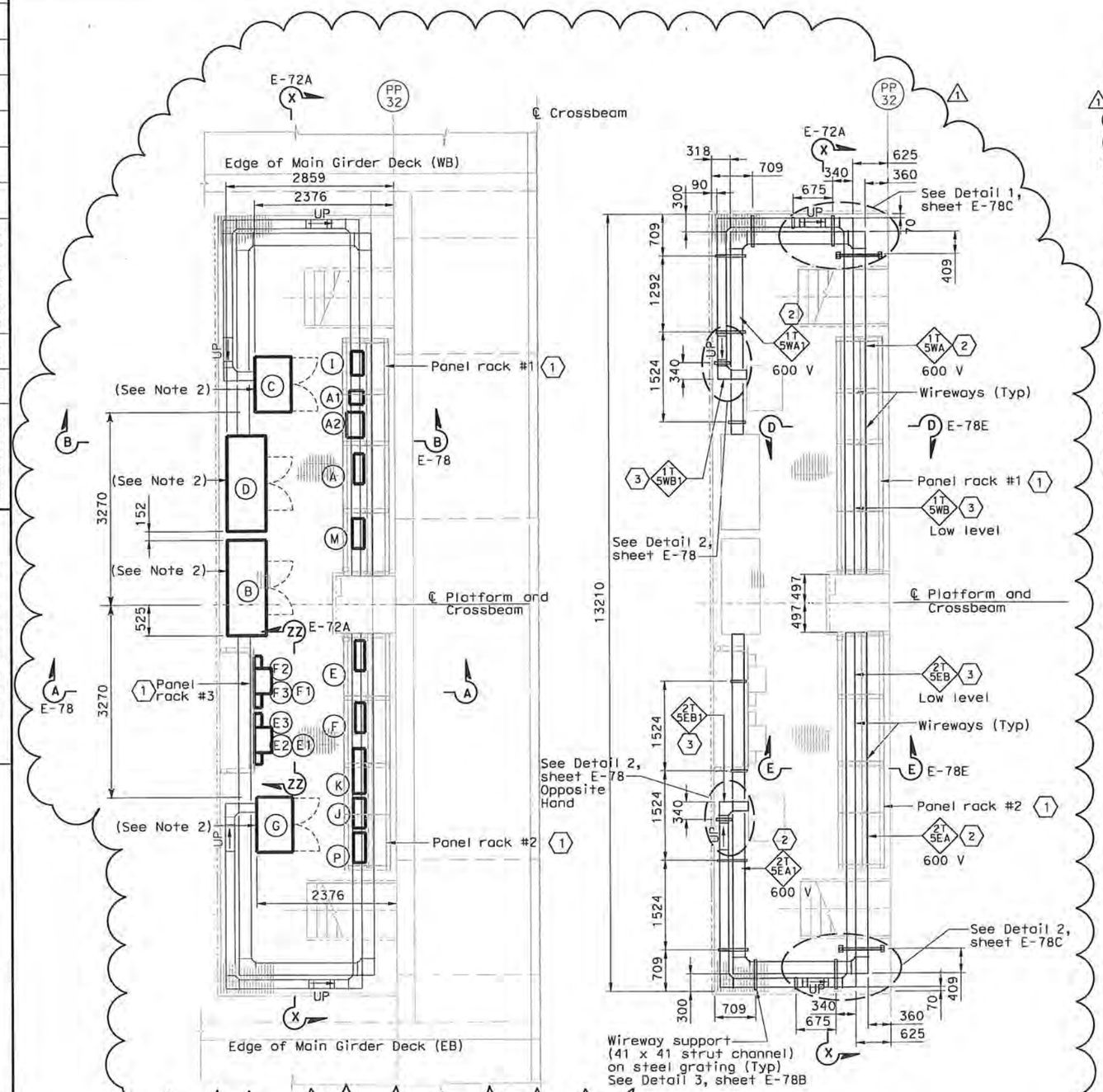

EQUIPMENT ARRANGEMENT PLAN
SCALE 1:40

WIREWAY PLAN
SCALE 1:40

EQUIPMENT SCHEDULE:

Equipment for Westbound

- (A) Utility Panel, UP-105, 100A 208/120 V, 3-phase, 4-wire
  - (A1) 480 V Breaker for (A2) (Nema 4X) Size: 495 H X 232 W X 124 D
  - (A2) 15 kVA Transformer, 3 phase, 60 hertz 480 V-208/120 V, 3 phase (Nema 4X) Size: 375 H X 485 W X 311 D
- (B) Strong Motion Recorder #2 (Box A) Size: 1900 H X 1620 W X 660 D
- (C) Remote Terminal Unit RTU #10W Size: 1830 H X 940 W X 610 D
- (D) Strong Motion Recorder #2 (Box B) Size: 1900 H X 1620 W X 660 D
- (M) TOS/COM-5WA Pull Box (PB-2B)

Equipment for Eastbound

- (E) Utility Panel, UP-205, 100A MLO 208/120 V, 3-phase, 4-wire
  - (E1) 480 V Breaker for (E2) (Nema 4X) Size: 495 H X 232 W X 124 D
  - (E2) 15 kVA Transformer, 3 phase, 60 hertz 480 V-208/120 V, 3 phase (Nema 4X) Size: 375 H X 485 W X 311 D
  - (E3) Enclosed circuit breaker 10 kAIC 240 V 3 phase in NEMA 4X enclosure.
- (F) Lighting Panel LP-220, 100A MLO 208/120 V, 3-phase, 4-wire
  - (F1) 480 V Breaker for (F2) (Nema 4X) Size: 495 H X 232 W X 124 D
  - (F2) 15 kVA Transformer, 3 phase, 60 hertz 480 V-208/120 V, 3 phase (Nema 4X) Size: 375 H X 485 W X 311 D
  - (F3) Enclosed circuit breaker 10 kAIC 240 V 3 phase in NEMA 4X enclosure.
- (G) Remote Terminal Unit RTU #10E Size: 1830 H X 940 W X 610 D
- (P) TOS/COM-5EA Pull Box (PB-2B)

Equipment Common for Westbound/Eastbound

- (I) Navigation Relay Cabinet NAP-5 (PB-6C)
- (J) Telephone Terminal Box #TEL-5 (PB-7C)
- (K) Communication Terminal Box COM-5 (PB-7B)

SHEET NOTES:

1. For electrical panel support details, see AS-sheets.
2. 600 V Stainless steel wireway, Nema 4X with cover.
3. Low level Stainless steel wireway, Nema 4X with cover.

NOTES:

1. The contractor shall verify the sizes and mounting dimensions of all rack mounted equipment prior to the fabrication of service platform racks. The contractor shall also verify the wireway mounting dimensions and support locations and make adjustment as needed to suit field condition.
2. Contractor to provide cover plate and sealant to all cabinets with open bottom. Cover plate shall be of the same material. See Sheet E-78B for details.
3. References:
   - For platform 5 conduit, lighting and grounding plan, see sheet E-115.
   - For location of platform 5, see sheet E-47.
   - TOS are shown for conduit routing only. For typical details of TOS controller and devices, see sheets E-344 through E-361.
   - For schedule of utility panel UP-105, see sheet E-60.
   - For schedule of utility panel UP-205, see sheet E-151.
   - For schedule of lighting panel LP-220, see sheet E-156.
   - For typical panel arrangement details of SCADA communications terminal box, see sheet E-321.
   - For pull box schedule, see sheet E-83.
   - For circuit and conduit/cable tray schedules, see sheets starting at E-401.
   - For platform elevations, see sheet E-72A.

DIST	COUNTY	ROUTE	KILOMETER POST TOTAL PROJECT	SHEET No	TOTAL SHEETS
04	SF	80	13.2/13.9	135 R1	1204

Jens Erlingsson 6/12/08
REGISTERED ELECTRICAL ENGINEER DATE

12-6-04
PLANS APPROVAL DATE

REGISTERED PROFESSIONAL ENGINEER — JENS ERLINGSSON No. 8249 Exp. 9/30/06 ELECTRICAL — STATE OF CALIFORNIA

PB POWER, Inc.
A Parsons Brinckerhoff Company
303 Second St., Suite 700N
San Francisco, CA 94107-1317

The State of California or its officers or agents shall not be responsible for the accuracy or completeness of electronic copies of this plan sheet.

Caltrans now has a web site! To get to the web site, go to http://www.dot.ca.gov

FADI WALIEDDINE No. 11465 Exp. 12/31/2009 ELECTRICAL — REGISTERED PROFESSIONAL ENGINEER — STATE OF CALIFORNIA

FOR REVISION ONLY

REQUEST FOR INFORMATION NOT ADDRESSED IN THIS CCO REMAIN IN FORCE

MARK	DATE	REVISIONS DESCRIPTIONS	BY	CH'D	CCO#
1	03/30/09	SERVICE PLATFORM ELECTRICAL CHANGES	RR MP	RG FW	55

CONTRACT CHANGE ORDER NO. 55
SHEET 27 OF 90

DETAILS
SAS SUPERSTRUCTURE ROADWAY WESTBOUND
PLATFORM 5 ARRANGEMENT
SCALE AS NOTED

E-72

STATE OF CALIFORNIA - DEPARTMENT OF TRANSPORTATION — Caltrans
DESIGN OVERSIGHT — BEHZAD GOLEMOHAMMADI
CALCULATED/DESIGNED BY — CHECKED BY
DATE REVISED — BY — DATE REVISED
FK — IAH — II/02 — II/02

LAST REVISION 00-00-00
DATE PLOTTED => 3/31/2009
TIME PLOTTED => 3:02:27 PM

THIS PLAN IS ACCURATE FOR ELECTRICAL WORK ONLY.

ALL DIMENSIONS ARE IN MILLIMETERS UNLESS OTHERWISE SHOWN.

FOR REDUCED PLANS ORIGINAL SCALE IS IN MILLIMETERS 0 20 40 60 80

DGN FILE =>T:\13103\WS\pse\SAS Struc\CCO\SAS CCO55\04-0120f1_0135R01.dgn
USERNAME =>garciar

CU 04251

EA 0120F1

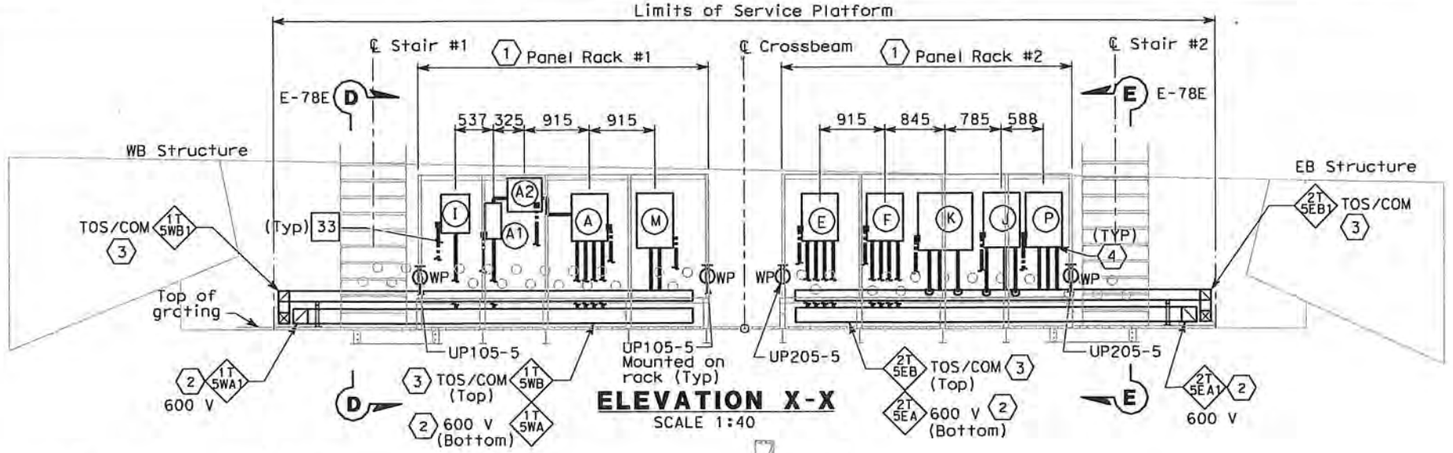

ELEVATION X-X
SCALE 1:40

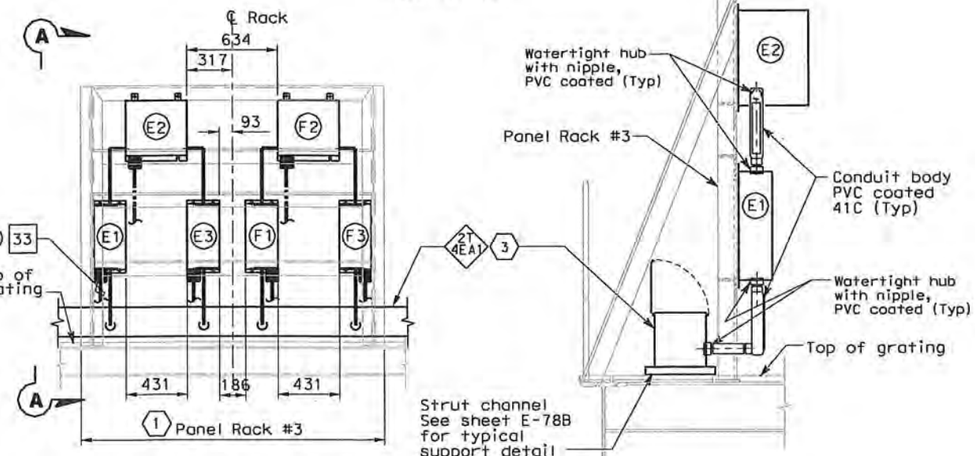

ELEVATION Z-Z
SCALE 1:20

SECTION A-A
NO SCALE
PLATFORM NO. 5 AS SHOWN
(TYPICAL FOR PLATFORMS NOs. 4, 6, 7 AND 8)

SHEET NOTES:

(1) For electrical panel support details, see AS-sheets, AS-13, AS-13A and AS-13B.

(2) 600 V Stainless Steel Wireway, Nema 4X with cover.

(3) Low level Stainless Steel Wireway, Nema 4X with cover.

(4) Empty conduits shall be capped for future use.

NOTES:

1. Equipment dimensions mounted at panel racks shall be verified by Contractor prior to purchase and installation. Dimensions for equipment location are approximate and may be adjusted to suit field condition.
2. (SP) Denotes spare pipe sleeve for 78 mm conduit. Contractor to provide plug at each ends

WESTBOUND	CONDUIT NUMBERS
(A) Utility Panel, UP-105	4/2230 4/224A 4/033 4/034
(A1) Main Breaker for (A2)	4/223A 4/223B
(A2) 15 kVA Transformer	4/223B 4/223C
(M) TOS/COM-5WA Pull Box	4/225A 4/226A
(I) Navigation Relay Cabinet NAP-5	4/029

EASTBOUND	CONDUIT NUMBERS
(E) Utility Panel, UP-205	5/2230 5/224A 5/026 5/027
(E1) Main Breaker for (E2)	5/223A 5/223B
(E2) 15 kVA Transformer	5/223B 5/223C
(E3) Feeder Circuit Breaker for (E)	5/223C 5/223E
(F) Lighting Panel LP-220	5/225D 5/029 5/030 5/031
(F1) Main Breaker for (F2)	5/225A 5/225B
(F2) 15 kVA Transformer	5/225B 5/225C
(F3) Feeder Circuit Breaker for (F)	5/225C 5/225E
(J) Telephone Terminal Box #TEL-5	(1) 5/228 5/235A 5/235 (1)
(K) Communication Terminal Box #COM-5	5/226 5/234A 5/227
(P) TOS/COM-5EA Pull Box	5/226A 5/227A 5/233A

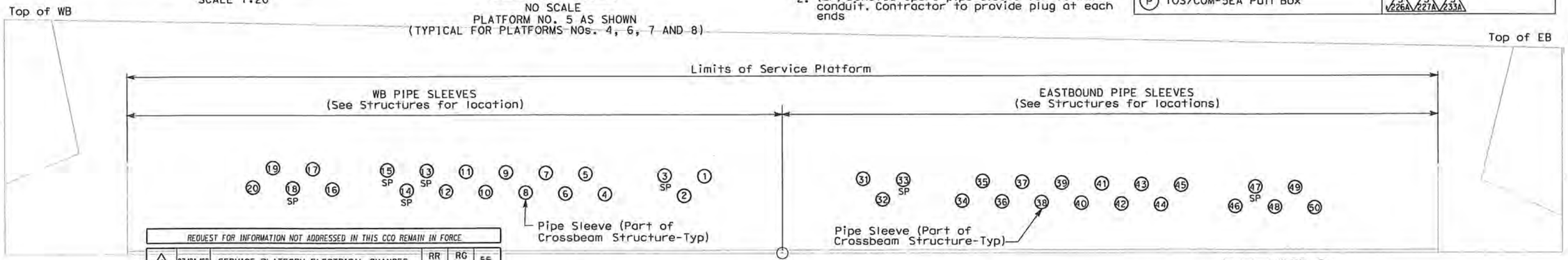

PIPE SLEEVE ELEVATION Y-Y (SEE SHEET E-115)
SCALE 1:20

REQUEST FOR INFORMATION NOT ADDRESSED IN THIS CCO REMAIN IN FORCE					
1	07/01/09	SERVICE PLATFORM ELECTRICAL CHANGES	RR RY	RG FW	55
0	03/30/09	SERVICE PLATFORM ELECTRICAL CHANGES	RR MP	RG FW	55
MARK	DATE	DESCRIPTIONS	BY	CH'D	CCO#
REVISIONS					

CONTRACT CHANGE ORDER NO. 55
SHEET 28 OF 90

THIS PLAN IS ACCURATE FOR ELECTRICAL WORK ONLY.

DETAILS
SAS SUPERSTRUCTURE ROADWAY WESTBOUND PLATFORM 5 ARRANGEMENT
SCALE AS NOTED

ALL DIMENSIONS ARE IN MILLIMETERS UNLESS OTHERWISE SHOWN.

FOR REDUCED PLANS ORIGINAL SCALE IS IN MILLIMETERS 0 20 40 60 80

DGN FILE =>T:\13103\MS\pse\SAS Struc\CCO\SAS CC055\2009-07-01_Issued for Submittal\04-0120f1_0135S01R01.dgn
USERNAME =>ricofrente

CU 04251 | EA 0120F1

E-72A

DIST	COUNTY	ROUTE	KILOMETER POST TOTAL PROJECT	SHEET No	TOTAL SHEETS
04	SF	80	13.2/13.9	135 SIR1	1204

REGISTERED ELECTRICAL ENGINEER — 6/12/08 DATE

REGISTERED PROFESSIONAL ENGINEER — FADI WALEDDINE No. 11465 Exp. 12/31/2009 ELECTRICAL — STATE OF CALIFORNIA

PLANS APPROVAL DATE

PB AMERICAS, Inc.
A Parsons Brinckerhoff Company
303 Second St., Suite 700N
San Francisco, CA 94107-1317

The State of California or its officers or agents shall not be responsible for the accuracy or completeness of electronic copies of this plan sheet.

Caltrans now has a web site! To get to the web site, go to http://www.dot.ca.gov

STATE OF CALIFORNIA - DEPARTMENT OF TRANSPORTATION — Caltrans

DESIGN OVERSIGHT — BEHZAD GOLEMOHAMMADI

CALCULATED/ DESIGNED BY | CHECKED BY

DATE | REVISED BY | DATE REVISED

LAST REVISION 00-00-00

DATE PLOTTED => 7/2/2009
TIME PLOTTED => 1:13:22 PM

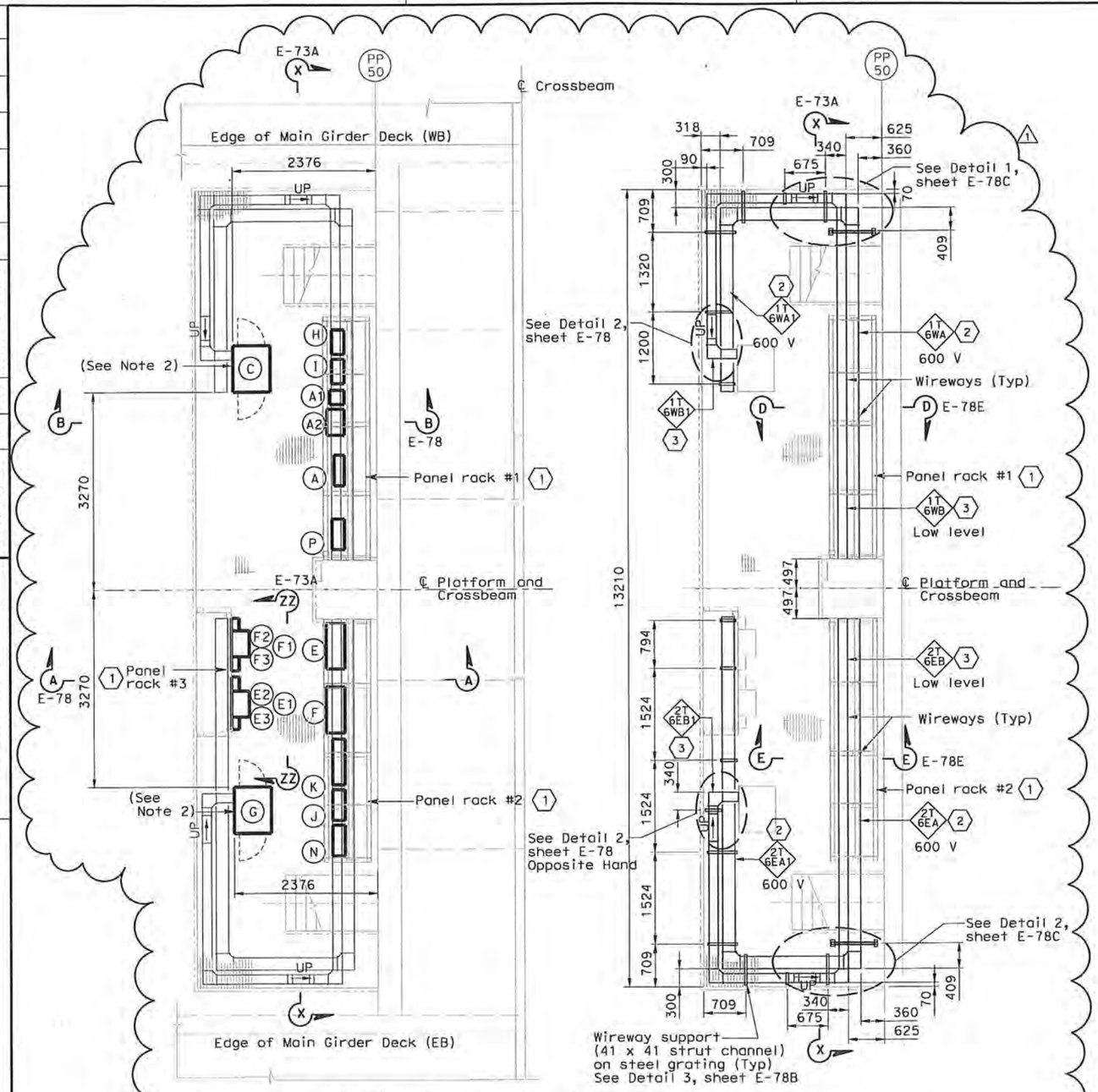

EQUIPMENT ARRANGEMENT PLAN
SCALE 1:40

WIREWAY PLAN
SCALE 1:40

EQUIPMENT SCHEDULE:

Equipment for Westbound

- (A) Utility Panel, UP-106, 100A 208/120 V, 3-phase, 4-wire
- (A1) 480 V Breaker for (A2) (Nema 4X) Size: 495 H X 232 W X 124 D
- (A2) 15 kVA Transformer, 3 phase, 60 hertz 480 V-208/120 V, 3 phase (Nema 4X) Size: 375 H X 485 W X 311 D
- (C) Controller Cabinet TOS-6WA Size: 1625 H X 615 W X 768 D
- (I) Navigation Relay Cabinet NAP-6W (PB-6C)
- (P) TOS/COM-6WA Pull Box (PB-2B)

Equipment for Eastbound

- (E) Utility Panel, UP-206, 100A MLO 208/120 V, 3-phase, 4-wire
- (E1) 480 V Breaker for (E2) (Nema 4X) Size: 495 H X 232 W X 124 D
- (E2) 15 kVA Transformer, 3 phase, 60 hertz 480 V-208/120 V, 3 phase (Nema 4X) Size: 375 H X 485 W X 311 D.
- (E3) Enclosed circuit breaker 10 kAIC 240 V 3 phase in NEMA 4X enclosure.
- (F) Lighting Panel LP-221, 100A MLO 208/120 V, 3-phase, 4-wire
- (F1) 480 V Breaker for LP-221 (Nema 4X) Size: 495 H X 232 W X 124 D
- (F2) 15 kVA Transformer, 3 phase, 60 hertz 480 V-208/120 V, 3 phase (Nema 4X) Size: 375 H X 485 W X 311 D
- (F3) Enclosed circuit breaker 10 kAIC 240 V 3 phase in NEMA 4X enclosure.
- (G) Controller Cabinet TOS-6EA Size: 1625 H X 615 W X 768 D
- (H) Navigation Relay Cabinet NAP-6E (PB-6C)
- (N) TOS/COM-6EA Pull Box (PB-2B)

Equipment Common for Westbound/Eastbound

- (J) Telephone Terminal Box #TEL-6 (PB-7C)
- (K) Communication Terminal Box COM-6 (PB-7B)

SHEET NOTES:

1. For electrical panel support details, see AS-sheets.
2. 600 V Stainless steel wireway, Nema 4X with cover.
3. Low level Stainless steel wireway, Nema 4X with cover.

NOTES:

1. The contractor shall verify the sizes and mounting dimensions of all rack mounted equipment prior to the fabrication of service platform racks. The contractor shall also verify the wireway mounting dimensions and support locations and make adjustment as needed to suit field condition.
2. Contractor to provide cover plate and sealant to all cabinets with open bottom. Cover plate shall be of the same material. See Sheet E-78B for details.
3. References:
   - For platform 6 conduit, lighting and grounding plan, see sheet E-116.
   - For location of platform 6, see sheet E-48.
   - TOS are shown for conduit routing only. For typical details of TOS controller and devices, see sheets E-344 through E-361.
   - For schedule of utility panel UP-106, see sheet E-61.
   - For schedule of utility panel UP-206, see sheet E-152.
   - For schedule of lighting panel LP-221, see sheet E-156.
   - For typical panel arrangement details of SCADA communications terminal box, see sheet E-321.
   - For pull box schedule, see sheet E-83.
   - For circuit and conduit/cable tray schedules, see sheets starting at E-401.
   - For platform elevations, see sheet E-73A.

DIST	COUNTY	ROUTE	KILOMETER POST TOTAL PROJECT	SHEET NO	TOTAL SHEETS
04	SF	80	13.2/13.9	136 R1	1204

REGISTERED ELECTRICAL ENGINEER — DATE 12/19/02
12-6-04
PLANS APPROVAL DATE

REGISTERED PROFESSIONAL ENGINEER — JENS ERLINGSSON No. 8249 Exp. 9/30/06 ELECTRICAL — STATE OF CALIFORNIA

PB POWER, Inc.
A Parsons Brinckerhoff Company
303 Second St., Suite 700N
San Francisco, CA 94107-1317

The State of California or its officers or agents shall not be responsible for the accuracy or completeness of electronic copies of this plan sheet.

Caltrans now has a web site! To get to the web site, go to http://www.dot.ca.gov

REGISTERED PROFESSIONAL ENGINEER — FADI WALIEDDINE No. 11465 Exp. 12/31/2009 ELECTRICAL — STATE OF CALIFORNIA

FOR REVISION ONLY (1)

REQUEST FOR INFORMATION NOT ADDRESSED IN THIS CCO REMAIN IN FORCE					
MARK	DATE	REVISIONS DESCRIPTIONS	BY	CH'D	CCO#
1	03/30/09	SERVICE PLATFORM ELECTRICAL CHANGES	RR MP	RG FW	55

CONTRACT CHANGE ORDER NO. 55
SHEET 29 OF 90

DETAILS
SAS SUPERSTRUCTURE ROADWAY WESTBOUND PLATFORM 6 ARRANGEMENT
SCALE AS NOTED

E-73

DATE	REVISED BY	DATE REVISED
11/02	FK	11/02
11/02	IAH	11/02

CALCULATED/DESIGNED BY
CHECKED BY

STATE OF CALIFORNIA - DEPARTMENT OF TRANSPORTATION
Caltrans
DESIGN OVERSIGHT
BEHZAD GOLEMOHAMMADI

LAST REVISION 00-00-00
DATE PLOTTED => 3/31/2009
TIME PLOTTED => 2:59:20 PM

THIS PLAN IS ACCURATE FOR ELECTRICAL WORK ONLY.

ALL DIMENSIONS ARE IN MILLIMETERS UNLESS OTHERWISE SHOWN.

FOR REDUCED PLANS ORIGINAL SCALE IS IN MILLIMETERS 0 20 40 60 80

DGN FILE =>T:\13103\MS\pse\SAS Struc\CCO\SAS CCO55\04-0120F1_013ER01.dgn
USERNAME =>garcior

CU 04251 | EA 0120F1

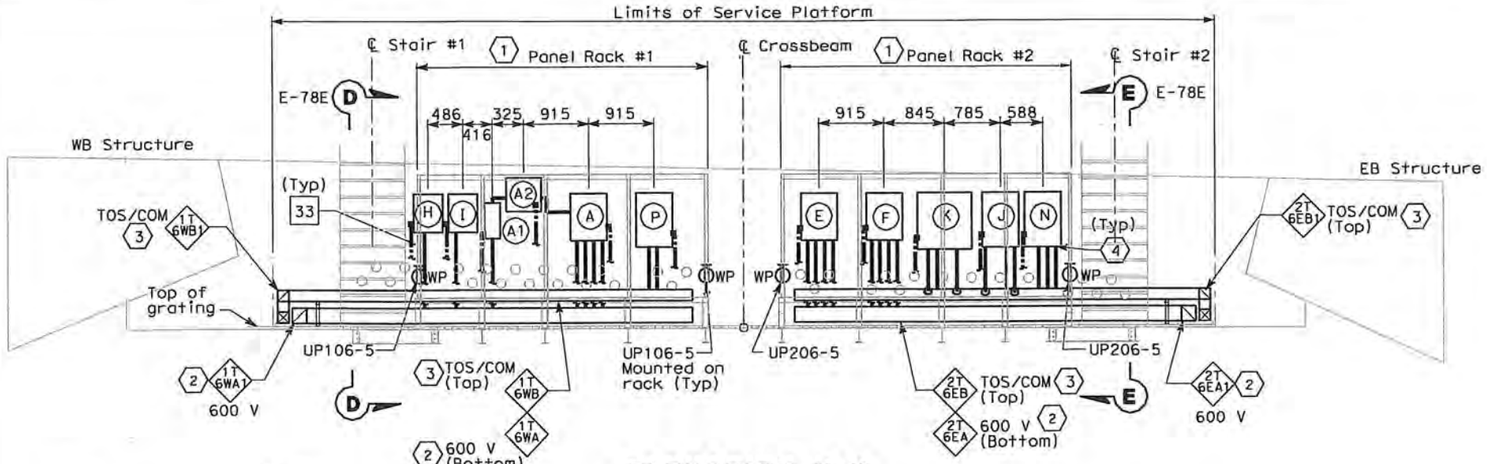

ELEVATION X-X
SCALE 1:40

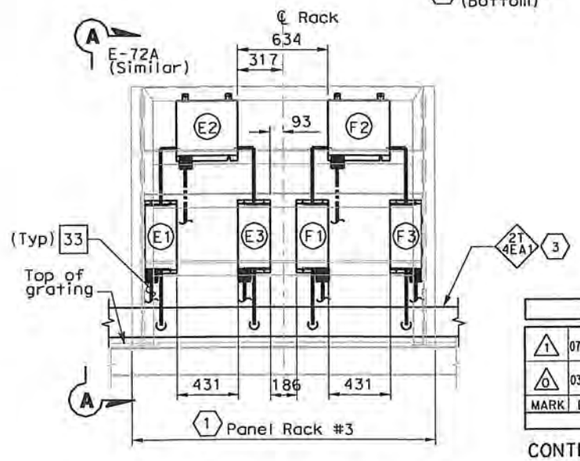

ELEVATION Z-Z
SCALE 1:20

SHEET NOTES:

1. For electrical panel support details, see AS-sheets, AS-13, AS-13A and AS-13B.
2. 600 V Stainless Steel Wireway, Nema 4X with cover.
3. Low level Stainless Steel Wireway, Nema 4X with cover.
4. Empty conduits shall be capped for future use.

REQUEST FOR INFORMATION NOT ADDRESSED IN THIS CCO REMAIN IN FORCE					
1	07/01/09	SERVICE PLATFORM ELECTRICAL CHANGES	RR RY	RG FW	55
0	03/30/09	SERVICE PLATFORM ELECTRICAL CHANGES	RR MP	RG FW	55
MARK	DATE	DESCRIPTIONS REVISIONS	BY	CH'D	CCO#

CONTRACT CHANGE ORDER NO. 55
SHEET 30 OF 90

NOTES:

1. Equipment dimensions mounted at panel racks shall be verified by Contractor prior to purchase and installation. Dimensions for equipment location are approximate and may be adjusted to suit field condition.
2. (SP) Denotes spare pipe sleeve for 78 mm conduit. Contractor to provide plug at each ends

DIST	COUNTY	ROUTE	KILOMETER POST TOTAL PROJECT	SHEET No	TOTAL SHEETS
04	SF	80	13.2/13.9	136 S1R1	1204

REGISTERED ELECTRICAL ENGINEER — 6/12/08 DATE

REGISTERED PROFESSIONAL ENGINEER — FADI WALIEDDINE No. 11465 Exp. 12/31/2009 ELECTRICAL — STATE OF CALIFORNIA

PLANS APPROVAL DATE

PB AMERICAS, Inc.
A Parsons Brinckerhoff Company
303 Second St., Suite 700N
San Francisco, CA 94107-1317

The State of California or its officers or agents shall not be responsible for the accuracy or completeness of electronic copies of this plan sheet.

Caltrans now has a web site! To get to the web site, go to http://www.dot.ca.gov

WESTBOUND	CONDUIT NUMBERS
(A) Utility Panel, UP-106	4 2430, 4 244A, 4 036, 4 037
(A1) Main Breaker for (A2)	4 243A, 4 243B
(A2) 15 kVA Transformer	4 243B, 4 243C
(P) TOS/COM-6WA Pull Box	4 245A, 4 246A
(I) Navigation Relay Cabinet NAP-6W	4 040

EASTBOUND	CONDUIT NUMBERS
(E) Utility Panel, UP-206	5 2430, 5 244A, 5 051, 5 053
(E1) Main Breaker for (E2)	5 243A, 5 243B
(E2) 15 kVA Transformer	5 243B, 5 243C
(E3) Feeder Breaker for (E)	5 243C, 5 243E
(F) Lighting Panel LP-221	5 241D, 5 054, 5 055, 5 056
(F1) Main Breaker for (F2)	5 241A, 5 241B
(F2) 15 kVA Transformer	5 241B, 5 241C
(F3) Feeder Breaker for (F)	5 241C, 5 241E
(J) Telephone Terminal Box #TEL-6	5 250, 5 246A, 5 238 (1)
(K) Communication Terminal Box #COM-6	5 246, 5 238A, 5 247
(N) TOS/COM-6EA Pull Box	5 247A, 5 236A, 5 237A
(H) Navigation Relay Cabinet NAP-6E	5 245A

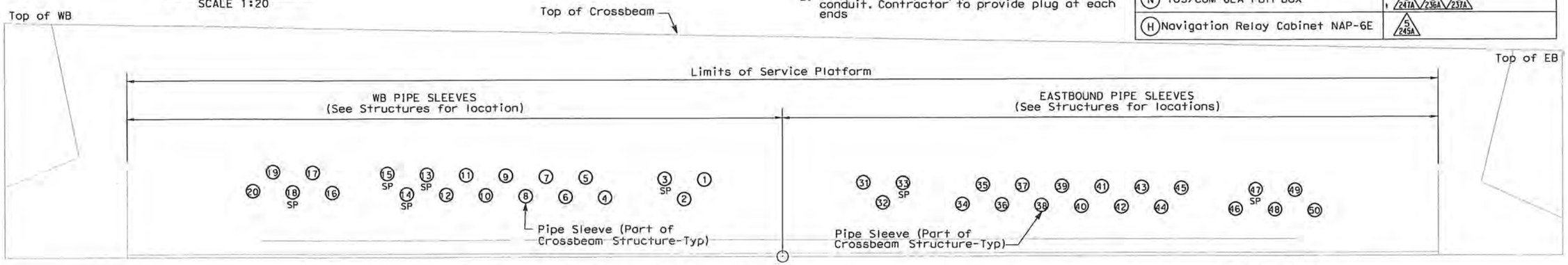

PIPE SLEEVE ELEVATION Y-Y (SEE SHEET E-116)
SCALE 1:20

DETAILS
SAS SUPERSTRUCTURE ROADWAY WESTBOUND PLATFORM 6 ARRANGEMENT
SCALE AS NOTED

E-73A

DESIGN OVERSIGHT — BEHZAD GOLEMOHAMMADI
STATE OF CALIFORNIA - DEPARTMENT OF TRANSPORTATION — Caltrans

DATE	REVISED BY	DATE REVISED
	CALCULATED/ DESIGNED BY	CHECKED BY

THIS PLAN IS ACCURATE FOR ELECTRICAL WORK ONLY.

ALL DIMENSIONS ARE IN MILLIMETERS UNLESS OTHERWISE SHOWN.

FOR REDUCED PLANS ORIGINAL SCALE IS IN MILLIMETERS 0 20 40 60 80

DGN FILE =>T:\13103\MS\pse\SAS Struc\CCO\SAS CC055\2009-07-01_Issued for Submittal\04-0120F1_0136S01R01.dgn
USERNAME =>ricafrente

CU 04251 EA 0120F1

LAST REVISION 00-00-00
DATE PLOTTED => 7/2/2009
TIME PLOTTED => 1:13:47 PM

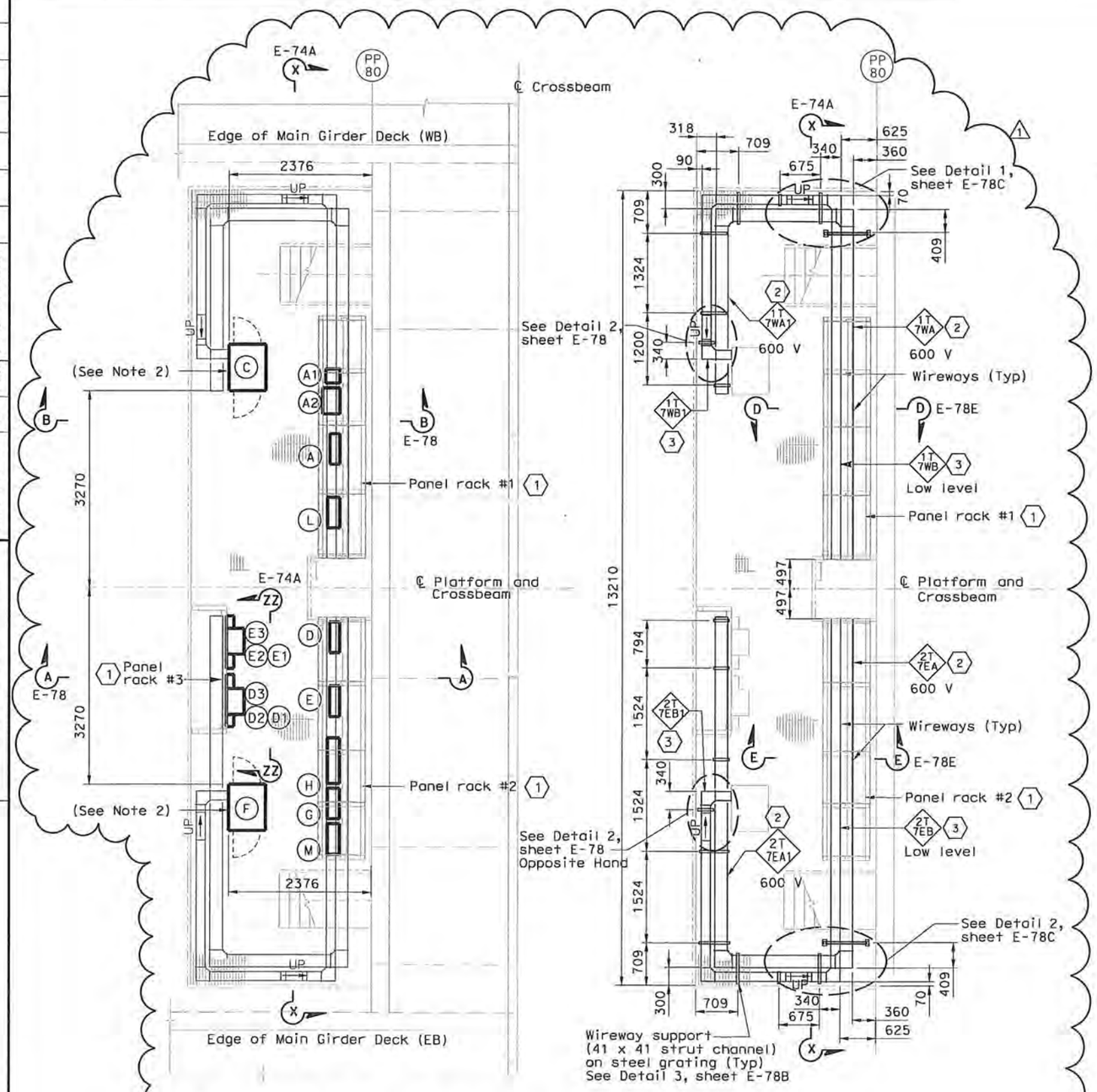

EQUIPMENT ARRANGEMENT PLAN
SCALE 1:40

WIREWAY PLAN
SCALE 1:40

EQUIPMENT SCHEDULE:

Equipment for Westbound

- (A) Utility Panel, UP-107, 100A 208/120 V, 3-phase, 4-wire
- (A1) Main Breaker for UP-107 (Nema 4X) Size: 495 H X 232 W X 124 D
- (A2) 15 kVA Transformer, 3 phase, 60 hertz 480 V-208/120 V, 3 phase (Nema 4x) Size: 375 H X 485 W X 311 D
- (C) Controller Cabinet #TOS-7WA Size: 1625 H X 615 W X 768 D
- (L) TOS/COM-7WA Pull Box (PB-2B)

Equipment for Eastbound

- (D) Utility Panel, UP-207, 100A, MLO 208/120 V, 3-phase, 4-wire
- (D1) Main Breaker for (D2) (Nema 4X) Size: 495 H X 232 W X 124 D
- (D2) 15 kVA Transformer, 3 phase, 60 hertz 480 V-208/120 V, 3 phase (Nema 4X) Size: 375 H X 485 W X 311 D
- (D3) Enclosed circuit breaker 10 kAIC 240 V 3 phase in NEMA 4X enclosure.
- (E) Lighting Panel LP-222, 100A MLO 208/120 V, 3-phase, 4-wire
- (E1) Main Breaker for (E2) (Nema 4X) Size: 495 H X 232 W X 124 D
- (E2) 15 kVA Transformer, 3 phase, 60 hertz 480 V-208/120 V, 3 phase (Nema 4X) Size: 375 H X 485 W X 311 D
- (E3) Enclosed circuit breaker 10 kAIC 240 V 3 phase in NEMA 4X enclosure.
- (F) Controller Cabinet #TOS-7EA, Size: 1625 H X 615 W X 768 D
- (M) TOS/COM-7EA Pull Box (PB-2B)

Equipment Common for Westbound/Eastbound

- (G) Telephone Terminal Box #TEL-7 (PB-7C)
- (H) Communication Terminal Box #COM-7 (PB-7B)

SHEET NOTES:

(1) For electrical panel support details, see AS-sheets.

(2) 600 V Stainless steel wireway, Nema 4X with cover.

(3) Low level Stainless steel wireway, Nema 4X with cover.

NOTES:

1. The contractor shall verify the sizes and mounting dimensions of all rack mounted equipment prior to the fabrication of service platform racks. The contractor shall also verify the wireway mounting dimensions and support locations and make adjustment as needed to suit field condition.
2. Contractor to provide cover plate and sealant to all cabinets with open bottom. Cover plate shall be of the same material. See Sheet E-78B for details.
3. References:
   - For platform 7 conduit, lighting and grounding plan, see sheet E-117.
   - For location of platform 7, see sheet E-49.
   - TOS are shown for conduit routing only. For typical details of TOS controller and devices, see sheets E-344 through E-361.
   - For schedule of utility panel UP-107, see sheet E-62.
   - For schedule of utility panel UP-207, see sheet E-153.
   - For schedule of lighting panel LP-222, see sheet E-157.
   - For typical panel arrangement details of SCADA communications terminal box, see sheet E-321.
   - For pull box schedule, see sheet E-83.
   - For circuit and conduit/cable tray schedules, see sheets starting at E-401.
   - For platform elevations, see sheet E-74A.

DIST	COUNTY	ROUTE	KILOMETER POST TOTAL PROJECT	SHEET No	TOTAL SHEETS
04	SF	80	13.2/13.9	137 R1	1204

12/19/02
REGISTERED ELECTRICAL ENGINEER DATE

12-6-04
PLANS APPROVAL DATE

REGISTERED PROFESSIONAL ENGINEER — JENS ERLINGSSON No. 8249 Exp. 9/30/06 ELECTRICAL — STATE OF CALIFORNIA

PB POWER, inc.
A Parsons Brinckerhoff Company
303 Second St., Suite 700N
San Francisco, CA 94107-1317

The State of California or its officers or agents shall not be responsible for the accuracy or completeness of electronic copies of this plan sheet.

Caltrans now has a web site! To get to the web site, go to http://www.dot.ca.gov

REGISTERED PROFESSIONAL ENGINEER — FADI WALIEDDINE No. 11465 Exp. 12/31/2009 ELECTRICAL — STATE OF CALIFORNIA

FOR REVISION ONLY (1)

CONTRACT CHANGE ORDER NO. 55
SHEET 31 OF 90

REQUEST FOR INFORMATION NOT ADDRESSED IN THIS CCO REMAIN IN FORCE					
MARK	DATE	REVISIONS DESCRIPTIONS	BY	CH'D	CCO#
1	03/30/09	SERVICE PLATFORM ELECTRICAL CHANGES	RR MP	RG FW	55

DETAILS
SAS SUPERSTRUCTURE ROADWAY WESTBOUND PLATFORM 7 ARRANGEMENT
SCALE AS NOTED

E-74

DESIGN OVERSIGHT	CALCULATED/ DESIGNED BY	CHECKED BY	DATE	REVISED BY	DATE REVISED
BEHZAD GOLEMOHAMMADI	FK	IAH	11/02	11/02	

STATE OF CALIFORNIA - DEPARTMENT OF TRANSPORTATION
Caltrans

THIS PLAN IS ACCURATE FOR ELECTRICAL WORK ONLY.

ALL DIMENSIONS ARE IN MILLIMETERS UNLESS OTHERWISE SHOWN.

FOR REDUCED PLANS ORIGINAL SCALE IS IN MILLIMETERS 0 20 40 60 80

DGN FILE =>T:\13103\WS\pse\SAS Struc\CCO\SAS CCO55\04-0120F1_0137R01.dgn
USERNAME =>garcior

CU 04251 | EA 0120F1

LAST REVISION 00-00-00 | DATE PLOTTED => 3/31/2009 | TIME PLOTTED => 2:58:18 PM

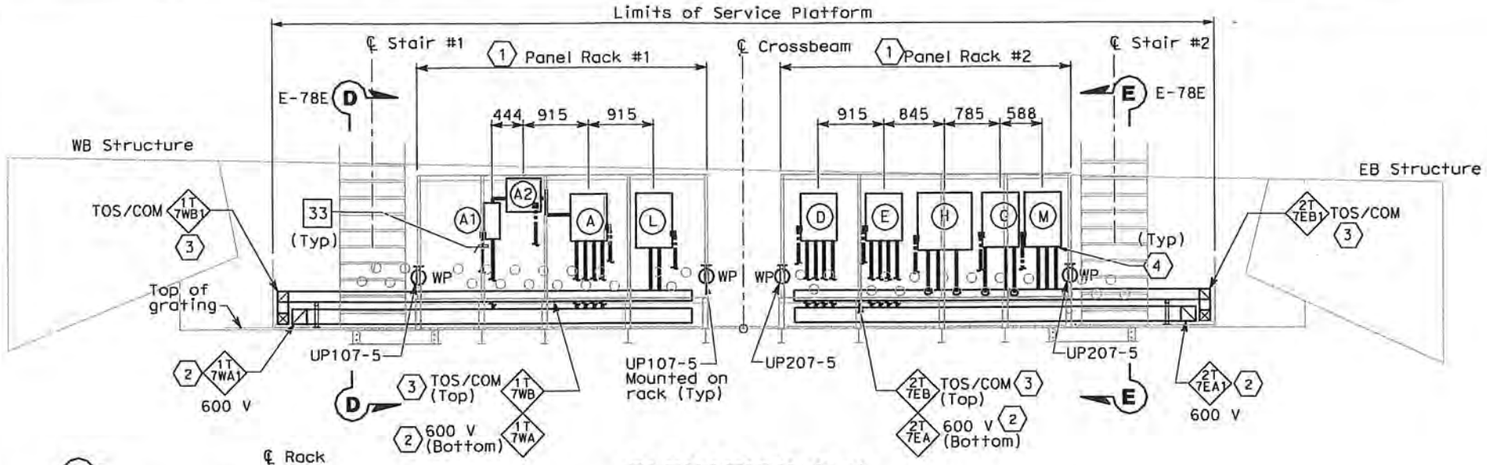

ELEVATION X-X
SCALE 1:40

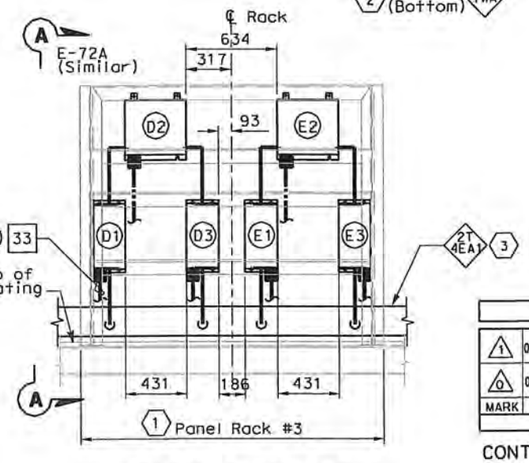

ELEVATION Z-Z
SCALE 1:20

REQUEST FOR INFORMATION NOT ADDRESSED IN THIS CCO REMAIN IN FORCE

MARK	DATE	DESCRIPTIONS	BY	CH'D	CCO#
		REVISIONS			
1	07/01/09	SERVICE PLATFORM ELECTRICAL CHANGES	RR RY	RG FW	55
0	03/30/09	SERVICE PLATFORM ELECTRICAL CHANGES	RR MP	RG FW	55

CONTRACT CHANGE ORDER NO. 55
SHEET 32 OF 90

SHEET NOTES:

1. For electrical panel support details, see AS-sheets, AS-13, AS-13A and AS-13B.
2. 600 V Stainless Steel Wireway, Nema 4X with cover.
3. Low level Stainless Steel Wireway, Nema 4X with cover.
4. Empty conduits shall be capped for future use.

NOTES:

1. Equipment dimensions mounted at panel racks shall be verified by Contractor prior to purchase and installation. Dimensions for equipment location are approximate and may be adjusted to suit field condition.
2. (SP) Denotes spare pipe sleeve for 78 mm conduit. Contractor to provide plug at each ends

WESTBOUND	CONDUIT NUMBERS
(A) Utility Panel, UP-107	4 2630, 4 2640A, 4 076, 4 077
(A1) Main Breaker for (A2)	4 263A, 4 263B
(A2) 15 kVA Transformer	4 263B, 4 263C
(L) TOS/COM-7WA Pull Box	4 265A, 4 266A

EASTBOUND	CONDUIT NUMBERS
(D) Utility Panel, UP-207	5 2630, 5 2640A, 5 076, 5 077
(D1) Main Breaker for (D2)	5 263A, 5 263B
(D2) 15 kVA Transformer	5 263B, 5 263C
(D3) Feeder Breaker for (D)	5 263C, 5 263E
(E) Lighting Panel LP-222	5 2650, 5 079, 5 080, 5 081
(E1) Main Breaker for (E2)	5 265A, 5 265B
(E2) 15 kVA Transformer	5 265B, 5 265C
(E3) Feeder Breaker for (E)	5 265C, 5 265E
(G) Telephone Terminal Box #TEL-7	5 270, 5 271A, 5 272 (1)
(H) Communication Terminal Box #COM-7	5 267, 5 270A, 5 271
(M) TOS/COM-7EA Pull Box	5 272A, 5 266A, 5 273A

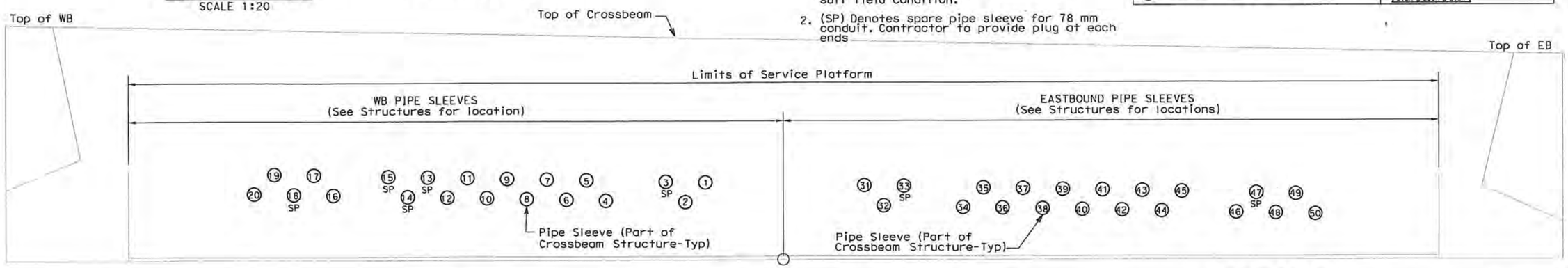

PIPE SLEEVE ELEVATION Y-Y (SEE SHEET E-117)
SCALE 1:20

DETAILS
SAS SUPERSTRUCTURE ROADWAY WESTBOUND PLATFORM 7 ARRANGEMENT
SCALE AS NOTED

E-74A

DIST	COUNTY	ROUTE	KILOMETER POST TOTAL PROJECT	SHEET No	TOTAL SHEETS
04	SF	80	13.2/13.9	137 S1R1	1204

REGISTERED ELECTRICAL ENGINEER — 6/12/08 DATE

REGISTERED PROFESSIONAL ENGINEER — FADI WALIEDDINE No. 11465 Exp. 12/31/2009 ELECTRICAL — STATE OF CALIFORNIA

PLANS APPROVAL DATE

PB AMERICAS, Inc.
A Parsons Brinckerhoff Company
303 Second St., Suite 700N
San Francisco, CA 94107-1317

The State of California or its officers or agents shall not be responsible for the accuracy or completeness of electronic copies of this plan sheet.

Caltrans now has a web site! To get to the web site, go to http://www.dot.ca.gov

DESIGN OVERSIGHT — BEHZAD GOLEMOHAMMADI
CALCULATED/DESIGNED BY
CHECKED BY
DATE REVISED BY
DATE REVISED

STATE OF CALIFORNIA - DEPARTMENT OF TRANSPORTATION
Caltrans

THIS PLAN IS ACCURATE FOR ELECTRICAL WORK ONLY.

ALL DIMENSIONS ARE IN MILLIMETERS UNLESS OTHERWISE SHOWN.

FOR REDUCED PLANS ORIGINAL SCALE IS IN MILLIMETERS 0 20 40 60 80

DGN FILE =>T:\13103\MS\pse\SAS Struc\CCO\SAS CCO55\2009-07-01_Issued for Submittal\04-0120F1_0137S01R01.dgn
USERNAME =>ricafrente
CU 04251 | EA 0120F1

LAST REVISION 00-00-00
DATE PLOTTED => 7/2/2009
TIME PLOTTED => 1:15:22 PM

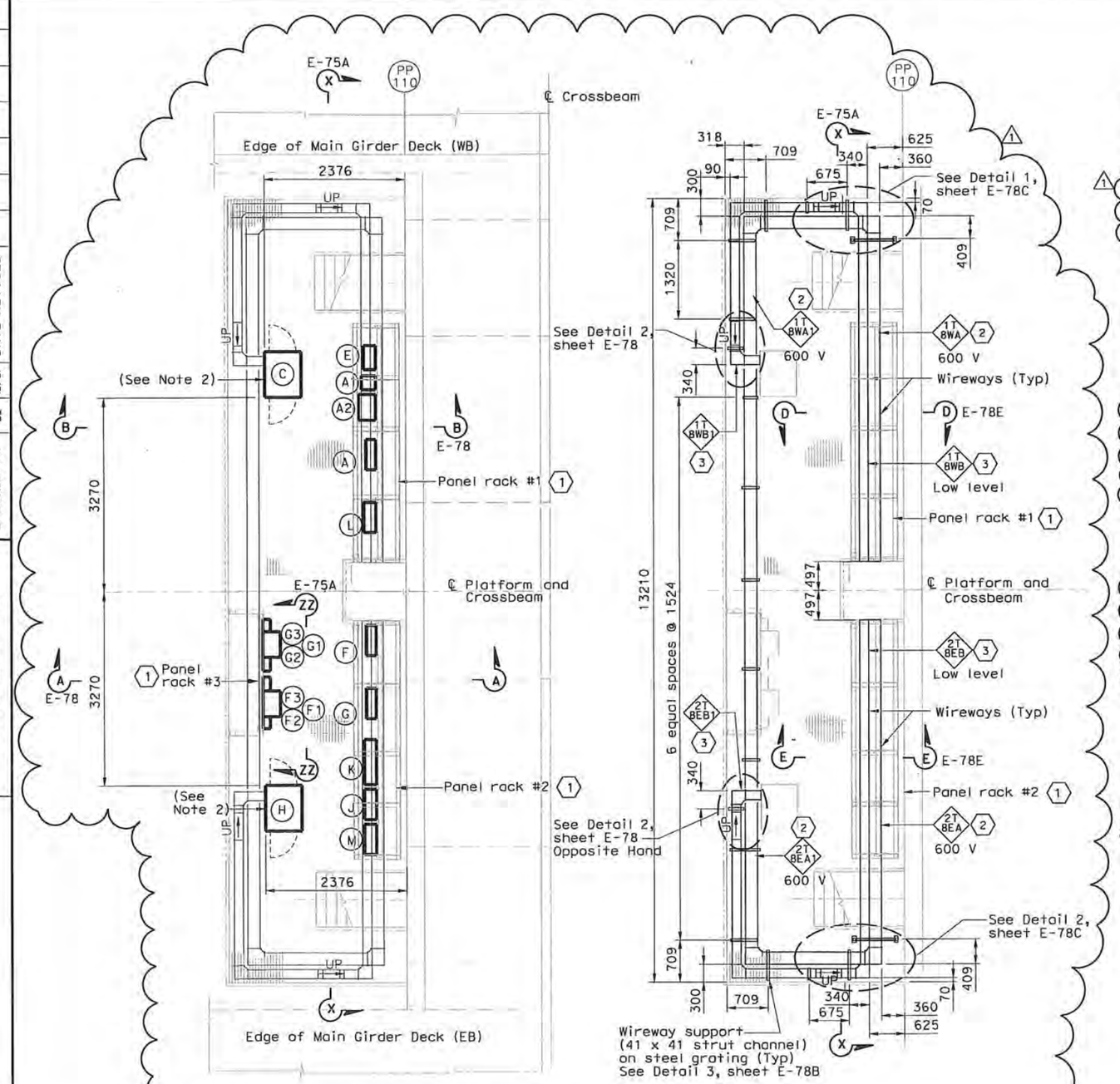

EQUIPMENT ARRANGEMENT PLAN
SCALE 1:40

WIREWAY PLAN
SCALE 1:40

EQUIPMENT SCHEDULE:

Equipment for Westbound

- (A) Utility Panel, UP-108, 100A 208/120 V, 3-phase, 4-wire
  - (A1) 480 V Breaker for (A2) (Nema 4X) Size: 495 H X 232 W X 124 D
  - (A2) 15 kVA Transformer, 3 phase, 60 hertz 480 V-208/120 V, 3 phase (Nema 4X) Size: 375 H X 485 W X 311 D
- (C) Remote Terminal Unit RTU #11W Size: 1830 H X 940 W X 610 D
- (L) TOS/COM-8WA Pull Box (PB-2B)

Equipment for Eastbound

- (F) Utility Panel, UP-208, 100 A, MLO 208/120 V, 3-phase, 4-wire
  - (F1) 480 V Breaker for (F2) (Nema 4X) Size: 495 H X 232 W X 124 D
  - (F2) 15 kVA Transformer, 3 phase, 60 hertz 480 V-208/120 V, 3 phase (Nema 4X) Size: 375 H X 485 W X 311 D
  - (F3) Enclosed circuit breaker 10 kAIC 240 V 3 phase in NEMA 4X enclosure.
- (G) Lighting Panel LP-223, 100 A, MLO 208/120 V, 3-phase, 4-wire
  - (G1) 480 V Breaker for (G2) (Nema 4X) Size: 495 H X 232 W X 124 D
  - (G2) 15 kVA Transformer, 3 phase, 60 hertz 480 V-208/120 V, 3 phase (Nema 4X) Size: 375 H X 485 W X 311 D
  - (G3) Enclosed circuit breaker 10 kAIC 240 V 3 phase in NEMA 4X enclosure.
- (H) Remote Terminal Unit RTU #11E Size: 1830 H X 940 W X 610 D
- (M) TOS/COM-8EA Pull Box (PB-2B)

Equipment Common for Westbound/Eastbound

- (E) Navigation Relay Cabinet NAP-8 (PB-6C)
- (J) Telephone Terminal Box #TEL-8 (PB-7C)
- (K) Communication Terminal Box COM-8 (PB-7B)

SHEET NOTES:

1. For electrical panel support details, see AS-sheets.
2. 600 V Stainless steel wireway, Nema 4X with cover.
3. Low level Stainless steel wireway, Nema 4X with cover.

NOTES:

1. The contractor shall verify the sizes and mounting dimensions of all rack mounted equipment prior to the fabrication of service platform racks. The contractor shall also verify the wireway mounting dimensions and support locations and make adjustment as needed to suit field condition.
2. Contractor to provide cover plate and sealant to all cabinets with open bottom. Cover plate shall be of the same material. See Sheet E-78B for details.
3. References:
   - For platform 5 conduit, lighting and grounding plan, see sheet E-118.
   - For location of platform 8, see sheet E-50.
   - TOS are shown for conduit routing only. For typical details of TOS controller and devices, see sheets E-344 through E-361.
   - For schedule of utility panel UP-108, see sheet E-63.
   - For schedule of utility panel UP-208, see sheet E-154.
   - For schedule of lighting panel LP-223, see sheet E-157.
   - For typical panel arrangement details of SCADA communications terminal box, see sheet E-321.
   - For pull box schedule, see sheet E-83.
   - For circuit and conduit/cable tray schedules, see sheets starting at E-401.
   - For platform elevations, see sheet E-75A.

FOR REVISION ONLY

REQUEST FOR INFORMATION NOT ADDRESSED IN THIS CCO REMAIN IN FORCE					
1	03/30/09	SERVICE PLATFORM ELECTRICAL CHANGES	RR MP	RG FW	55
MARK	DATE	DESCRIPTIONS	BY	CH'D	CCO#
REVISIONS					

CONTRACT CHANGE ORDER NO. 55
SHEET 33 OF 90

DETAILS
SAS SUPERSTRUCTURE ROADWAY WESTBOUND
PLATFORM 8 ARRANGEMENT
SCALE AS NOTED

E-75

DIST	COUNTY	ROUTE	KILOMETER POST TOTAL PROJECT	SHEET No	TOTAL SHEETS
04	SF	80	13.2/13.9	138 R1	1204

Jens Erlingsson 12/19/02
REGISTERED ELECTRICAL ENGINEER DATE

12-6-04
PLANS APPROVAL DATE

REGISTERED PROFESSIONAL ENGINEER — JENS ERLINGSSON No. 8249 Exp. 9/30/06 ELECTRICAL — STATE OF CALIFORNIA

PB POWER, Inc.
A Parsons Brinckerhoff Company
303 Second St., Suite 700N
San Francisco, CA 94107-1317

The State of California or its officers or agents shall not be responsible for the accuracy or completeness of electronic copies of this plan sheet.

Caltrans now has a web site! To get to the web site, go to http://www.dot.ca.gov

REGISTERED PROFESSIONAL ENGINEER — FADI WALIEDDINE No. 11465 Exp. 12/31/2009 ELECTRICAL — STATE OF CALIFORNIA

CALCULATED/ DESIGNED BY	DATE	REVISED BY	DATE REVISED
CHECKED BY			
JP	7/01	BL	12/01

DESIGN OVERSIGHT — BEHZAD GOLEHAMMADI

STATE OF CALIFORNIA - DEPARTMENT OF TRANSPORTATION — Caltrans

THIS PLAN IS ACCURATE FOR ELECTRICAL WORK ONLY.

ALL DIMENSIONS ARE IN MILLIMETERS UNLESS OTHERWISE SHOWN.

FOR REDUCED PLANS ORIGINAL SCALE IS IN MILLIMETERS 0 20 40 60 80

DGN FILE =>T:\13103\MS\pse\SAS Struc\CCO\SAS CCO55\04-0120f1_0138R01.dgn
USERNAME =>garciar

CU 04251 | EA 0120F1

LAST REVISION 00-00-00 — DATE PLOTTED => 4/2/2009 TIME PLOTTED => 3:37:15 PM

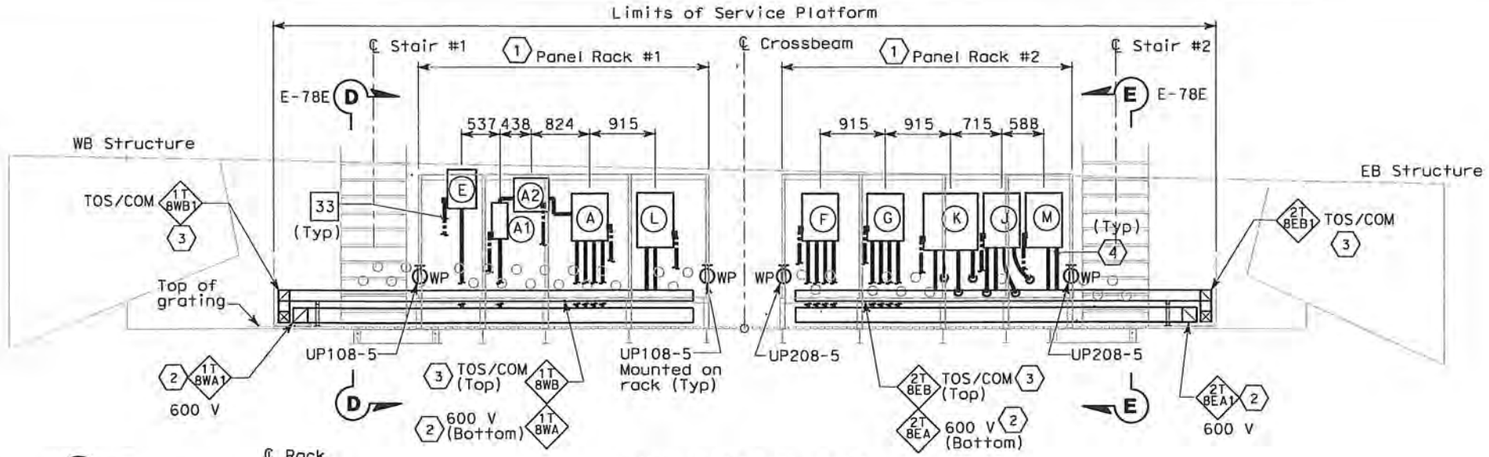

ELEVATION X-X
SCALE 1:40

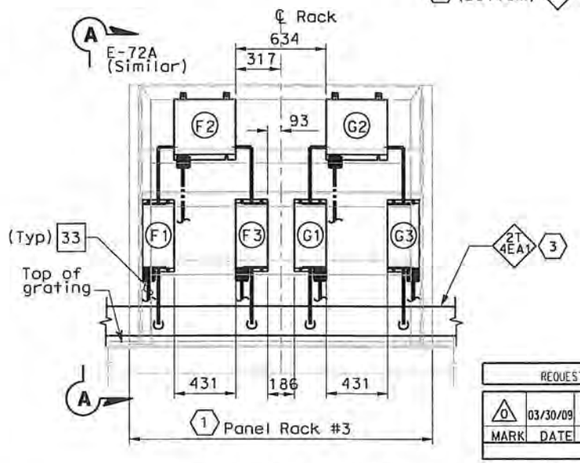

ELEVATION Z-Z
SCALE 1:20

SHEET NOTES:

1. For electrical panel support details, see AS-sheets, AS-13, AS-13A and AS-13B.
2. 600 V Stainless Steel Wireway, Nema 4X with cover.
3. Low level Stainless Steel Wireway, Nema 4X with cover.
4. Empty conduits shall be capped for future use.

NOTES:

1. Equipment dimensions mounted at panel racks shall be verified by Contractor prior to purchase and installation. Dimensions for equipment location are approximate and may be adjusted to suit field condition.
2. (SP) Denotes spare pipe sleeve for 78 mm conduit. Contractor to provide plug at each ends

WESTBOUND	CONDUIT NUMBERS
(A) Utility Panel, UP-108	4 283D, 4 284A, 4 101, 4 102
(A1) Main Breaker for (A2)	4 283A, 4 283B
(A2) 15 kVA Transformer	4 283B, 4 283C
(L) TOS/COM-8WA Pull Box	4 285A, 4 286A
(E) Navigation Relay Cab. NAP-8	4 104

EASTBOUND	CONDUIT NUMBERS
(F) Utility Panel, UP-208	5 283D, 5 284A, 5 101, 5 102
(F1) Main Breaker for (F2)	5 283A, 5 283B
(F2) 15 kVA Transformer	5 283B, 5 283C
(F3) Feeder Breaker for (F)	5 283C, 5 283E
(G) Lighting Panel LP-223	5 285D, 5 104, 5 105, 5 106
(G1) Main Breaker for (G2)	5 285A, 5 285B
(G2) 15 kVA Transformer	5 285B, 5 285C
(G3) Feeder Breaker for (G)	5 285C, 5 285E
(J) Telephone Terminal Box #TEL-8	5 289, 5 289A, 5 277, 5 276
(K) Communication Terminal Box #COM-8	5 290A, 5 286, 5 275, 5 290
(M) TOS/COM-8EA Pull Box	5 286A, 5 200A, 5 200B

MARK	DATE	REVISIONS DESCRIPTIONS	BY	CH'D	CCO#
0	03/30/09	SERVICE PLATFORM ELECTRICAL CHANGES	RR MP	RG FW	55

REQUEST FOR INFORMATION NOT ADDRESSED IN THIS CCO REMAIN IN FORCE

CONTRACT CHANGE ORDER NO. 55
SHEET 34 OF 90

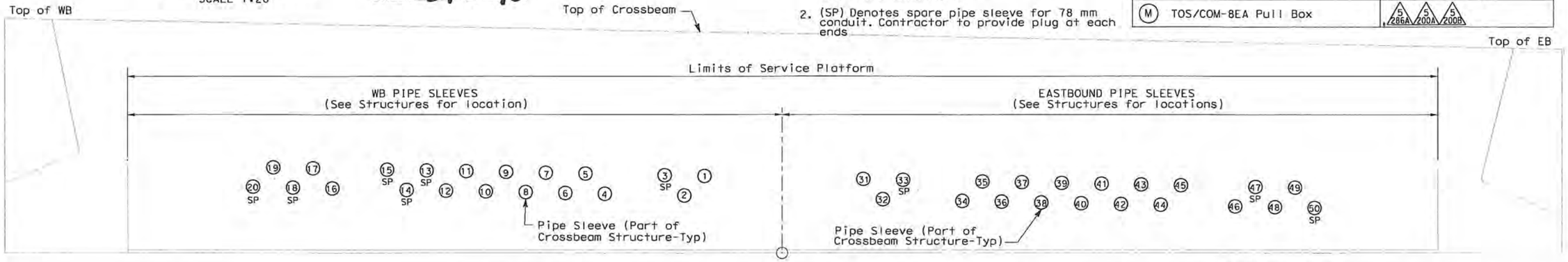

PIPE SLEEVE ELEVATION Y-Y (SEE SHEET E-118)
SCALE 1:20

DETAILS
SAS SUPERSTRUCTURE ROADWAY WESTBOUND PLATFORM 8 ARRANGEMENT
SCALE AS NOTED

E-75A

DIST	COUNTY	ROUTE	KILOMETER POST TOTAL PROJECT	SHEET No	TOTAL SHEETS
04	SF	80	13.2/13.9	138 ST	1204

REGISTERED ELECTRICAL ENGINEER — DATE 6/12/08

REGISTERED PROFESSIONAL ENGINEER — FADI WALIEDDINE No. 11465 Exp. 12/31/2009 ELECTRICAL — STATE OF CALIFORNIA

PLANS APPROVAL DATE

PB AMERICAS, Inc.
A Parsons Brinckerhoff Company
303 Second St., Suite 700N
San Francisco, CA 94107-1317

The State of California or its officers or agents shall not be responsible for the accuracy or completeness of electronic copies of this plan sheet.

Caltrans now has a web site! To get to the web site, go to http://www.dot.ca.gov

DESIGN OVERSIGHT	CALCULATED/ DESIGNED BY	DATE	REVISED BY
BEHZAD GOLEMOHAMMADI	JP	7/01	DATE REVISED
	BL	12/01	
	CHECKED BY		

STATE OF CALIFORNIA - DEPARTMENT OF TRANSPORTATION
Caltrans

THIS PLAN IS ACCURATE FOR ELECTRICAL WORK ONLY.

ALL DIMENSIONS ARE IN MILLIMETERS UNLESS OTHERWISE SHOWN.

FOR REDUCED PLANS ORIGINAL SCALE IS IN MILLIMETERS 0 20 40 60 80

DGN FILE =>T:\13103\MS\pse\SAS Struc\CCO\SAS CC055\04-0120f1_0138S01.dgn
USERNAME =>garcior

CU 04251 | EA 0120F1

LAST REVISION 00-00-00 | DATE PLOTTED => 3/31/2009 | TIME PLOTTED => 2:56:31 PM

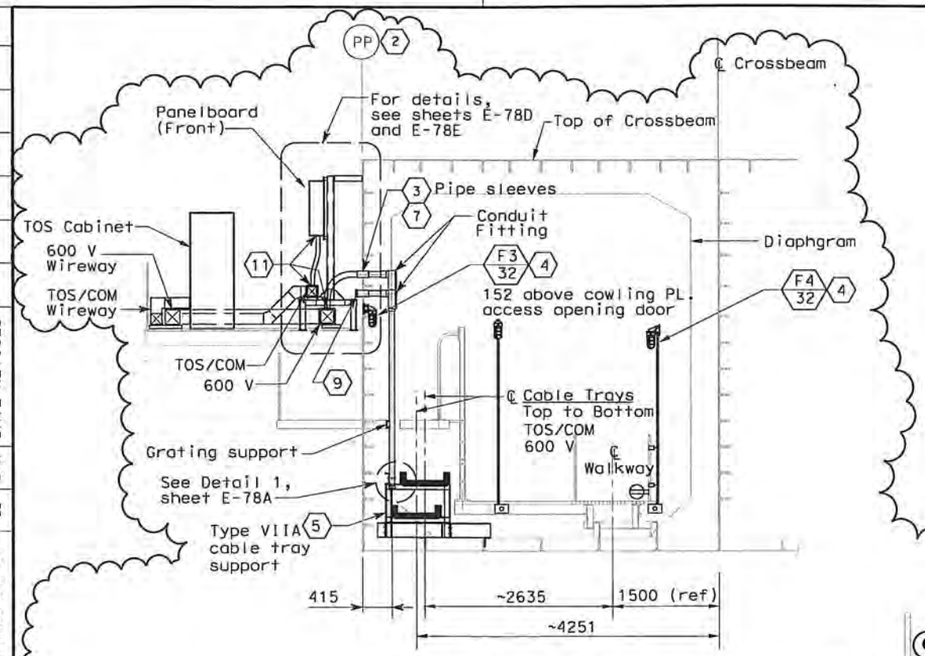

SECTION B-B (10)
SCALE 1:25

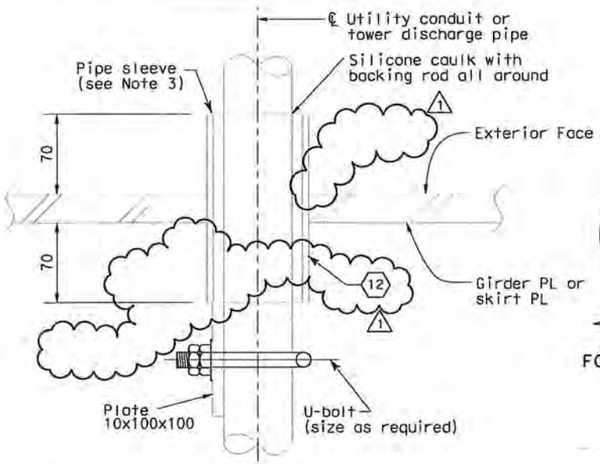

DETAIL 1
TYPICAL UTILITY CONDUIT PENETRATION DETAIL
SCALE 1:10

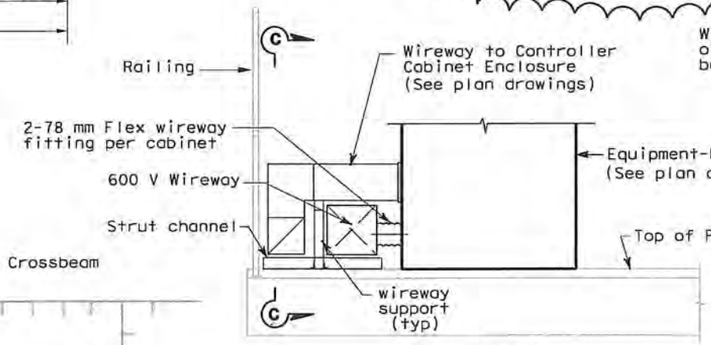

DETAIL 2
SHOWN FOR TOS CONTROLLER CABINET
(SIMILAR TO RTU AND STRONG MOTION RECORDER CABINETS)
NO SCALE

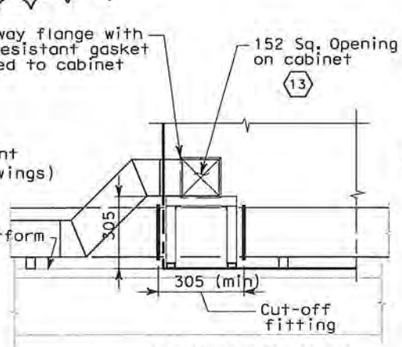

SECTION C-C
NO SCALE

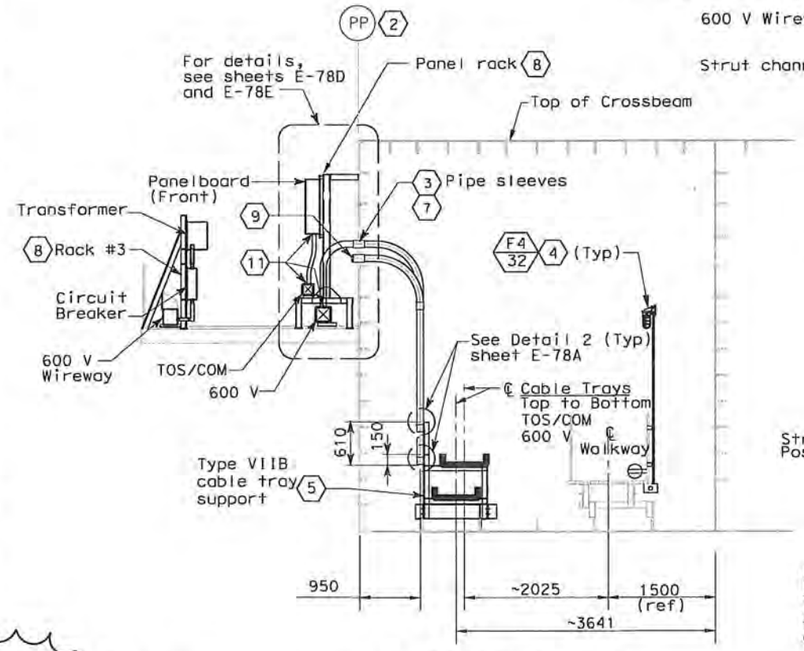

SECTION A-A (10)
SCALE 1:25

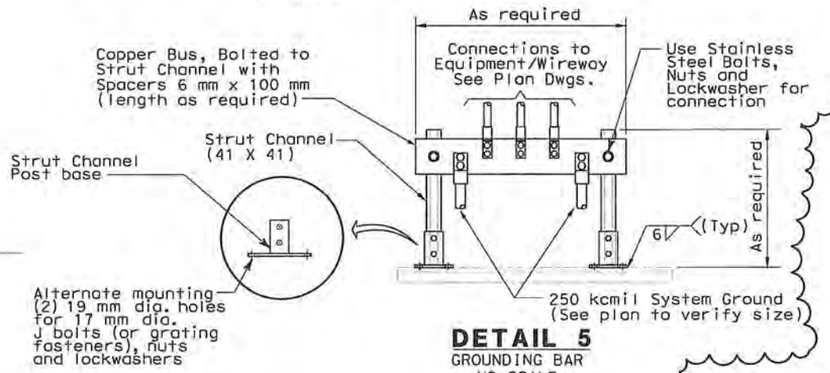

DETAIL 5
GROUNDING BAR
NO SCALE

Caltrans Metric

DIST	COUNTY	ROUTE	KILOMETER POST TOTAL PROJECT	SHEET No	TOTAL SHEETS
04	SF	80	13.2/13.9	139 R1	1204

12/19/02
REGISTERED ELECTRICAL ENGINEER DATE

12-6-04
PLANS APPROVAL DATE

REGISTERED PROFESSIONAL ENGINEER — JENS ERLINGSSON — No. 8249 — Exp. 9/30/06 ELECTRICAL — STATE OF CALIFORNIA

PB POWER, Inc.
A Parsons Brinckerhoff Company
303 Second St., Suite 700N
San Francisco, CA 94107-1317

The State of California or its officers or agents shall not be responsible for the accuracy or completeness of electronic copies of this plan sheet.

Caltrans now has a web site! To get to the web site, go to http://www.dot.ca.gov

REGISTERED PROFESSIONAL ENGINEER — FADI WALIEDDINE — No. 11465 — Exp. 12/31/2009 ELECTRICAL — STATE OF CALIFORNIA

FOR REVISION ONLY
1

SHEET NOTES:

1. Deleted.
2. Panel Points 14, 32, 50, 80 and 110. For platform arrangement drawings, see sheets E-71 thru E-75.
3. For location of pipe sleeves, see Typical Crossbeam Details. For conduit number through pipe sleeves, see sheets:
   - -Service platform #4 - E-71A, E-114
   - -Service platform #5 - E-72A, E-115
   - -Service platform #6 - E-73A, E-116
   - -Service platform #7 - E-74A, E-117
   - -Service platform #8 - E-75A, E-118
   - -Crossbeam - E-114A
4. For typical lighting installation, see sheet E-123.
5. For location and type of cable tray support, see drawings AS-16K, AS-16L, AS-16M, AS-16N and AS-16P.
6. Deleted.
7. See Detail 1. (Typ)
8. For panel rack supports, see sheets AS-13, AS-13A and AS-13B
9. Empty sleeves shall be capped for future use.
10. Section A-A and B-B see sheets E-71 thru E-75 and E-114 thru E-118.
11. Provide insulated ground bushing at end of conduit.
12. See Utility Detail No. 1 (Sheet No. 965 of 1204) for conduit penetration through girder plate.
13. Location of opening shall be verified that there is no interference with components inside panel. Adjust location of opening as required.

REQUEST FOR INFORMATION NOT ADDRESSED IN THIS CCO REMAIN IN FORCE

MARK	DATE	DESCRIPTIONS REVISIONS	BY	CH'D	CCO#
1	03/30/09	SERVICE PLATFORM ELECTRICAL CHANGES	RR MP	RG FW	55

CONTRACT CHANGE ORDER NO. 55
SHEET 35 OF 90

DETAILS
SAS SUPERSTRUCTURE ROADWAY WESTBOUND PLATFORM SECTIONS
SCALE AS NOTED

E-78

DESIGN OVERSIGHT	CALCULATED/ DESIGNED BY	CHECKED BY	DATE REVISED	REVISED BY
BEHZAD GOLEMOHAMMADI	JP	BL	12/01	DATE 7/01

STATE OF CALIFORNIA - DEPARTMENT OF TRANSPORTATION
Caltrans

THIS PLAN IS ACCURATE FOR ELECTRICAL WORK ONLY.

ALL DIMENSIONS ARE IN MILLIMETERS UNLESS OTHERWISE SHOWN.

FOR REDUCED PLANS ORIGINAL SCALE IS IN MILLIMETERS 0 20 40 60 80

DGN FILE =>T:\13103\WS\pse\SAS Struc\CCO\SAS CCO55\04-0120F1_0139R01.dgn
USERNAME =>gorcior

CU 04251 | EA 0120F1

LAST REVISION 00-00-00 | DATE PLOTTED => 3/31/2009 TIME PLOTTED => 2:55:35 PM

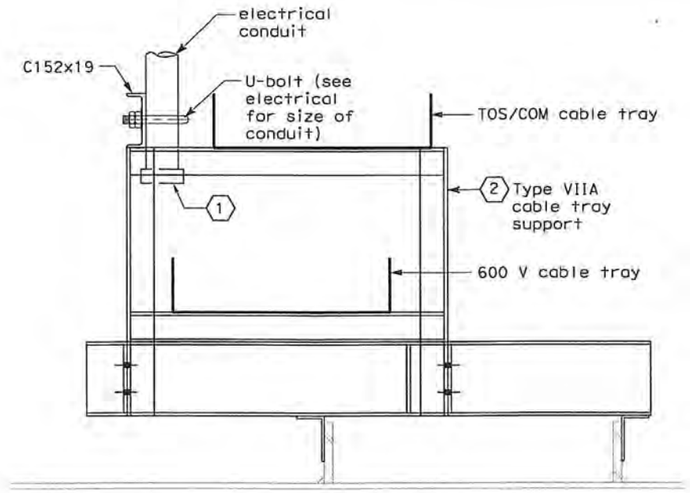

DETAIL 1 (3)
NO SCALE

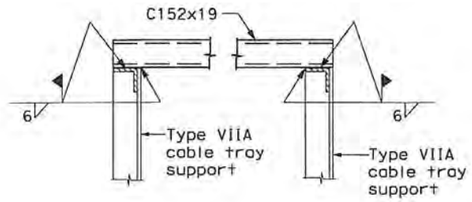

SECTION A-A
NO SCALE

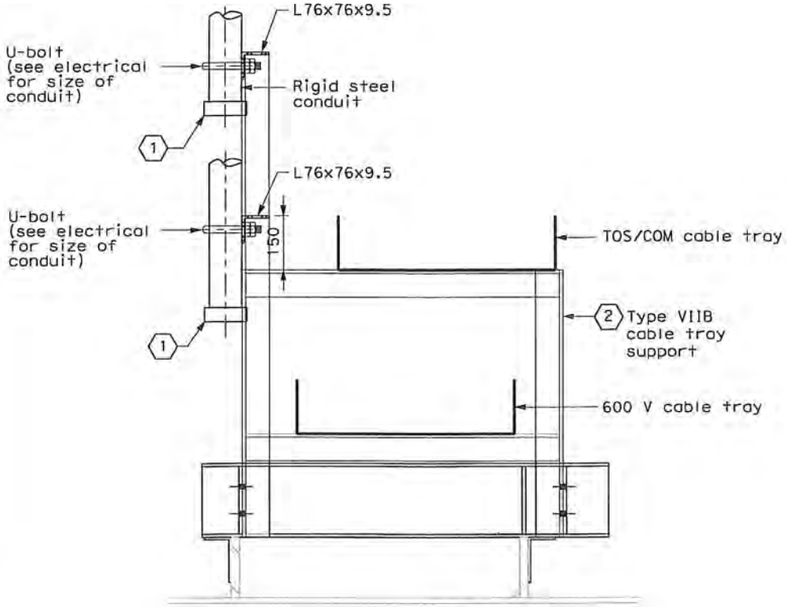

DETAIL 2 (3)
NO SCALE

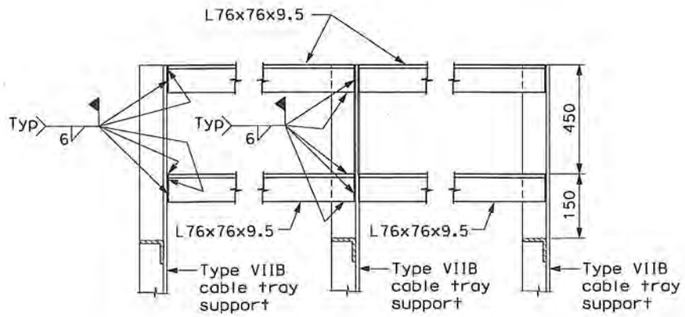

SECTION B-B
NO SCALE

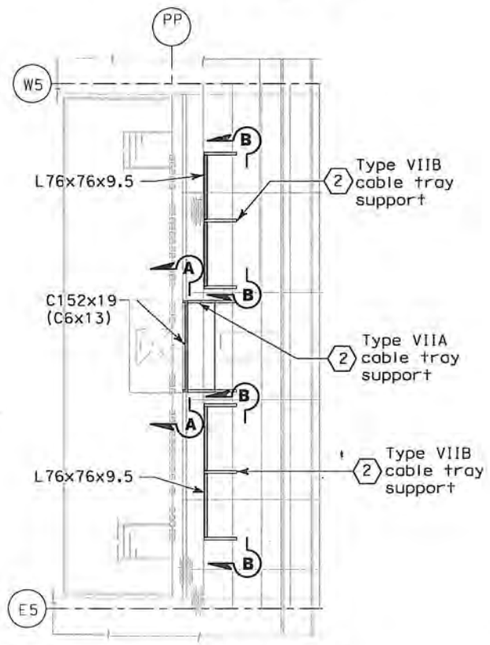

CABLE TRAY SUPPORT INSIDE CROSSBEAM
SCALE 1:80

REQUEST FOR INFORMATION NOT ADDRESSED IN THIS CCO REMAIN IN FORCE					
0	03/30/09	SERVICE PLATFORM ELECTRICAL CHANGES	RR	RG SE	55
MARK	DATE	DESCRIPTIONS	BY	CH'D	CCO#
REVISIONS					

CONTRACT CHANGE ORDER NO. 55
SHEET 36 OF 90

DETAILS
SAS SUPERSTRUCTURE ROADWAY WESTBOUND PLATFORM SECTIONS
SCALE AS NOTED

SHEET NOTES:

1. Provide insulated ground bushing at end of conduit.
2. For location and type of cable tray support, see drawings AS-16K, AS-16L, AS-16M, AS-16N and AS-16P.
3. For location of Detail 1 and Detail 2 see drawing E-78.

DIST	COUNTY	ROUTE	KILOMETER POST TOTAL PROJECT	SHEET No	TOTAL SHEETS
04	SF	80	13.2/13.9	139 S1	1204

Caltrans Metric

REGISTERED ELECTRICAL ENGINEER — DATE 6/12/08

REGISTERED PROFESSIONAL ENGINEER — FADI WALIEDDINE No. 11465 Exp. 12/31/2009 ELECTRICAL — STATE OF CALIFORNIA

PLANS APPROVAL DATE

PB POWER, Inc.
A Parsons Brinckerhoff Company
303 Second St., Suite 700N
San Francisco, CA 94107-1317

The State of California or its officers or agents shall not be responsible for the accuracy or completeness of electronic copies of this plan sheet.

Caltrans now has a web site! To get to the web site, go to http://www.dot.ca.gov

CALCULATED/ DESIGNED BY	CHECKED BY	DATE	REVISED BY	DATE REVISED
JP	BL	7/01	12/01	

STATE OF CALIFORNIA - DEPARTMENT OF TRANSPORTATION
Caltrans
DESIGN OVERSIGHT
BEHZAD GOLEMOHAMMADI

ALL DIMENSIONS ARE IN MILLIMETERS UNLESS OTHERWISE SHOWN.

FOR REDUCED PLANS ORIGINAL SCALE IS IN MILLIMETERS 0 20 40 60 80

DGN FILE =>T:\13103\MS\pse\SAS Struc\CCO\SAS CC055\04-0120f1_0139S01.dgn
USERNAME =>garciar

CU 04251

EA 0120F1

LAST REVISION 00-00-00
DATE PLOTTED => 3/31/2009
TIME PLOTTED => 2:54:36 PM

E-78A

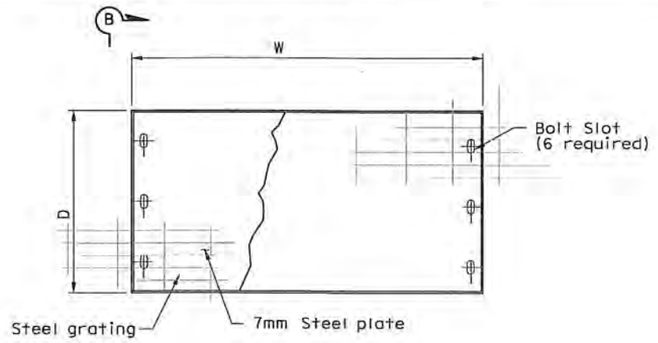

PLAN
NTS

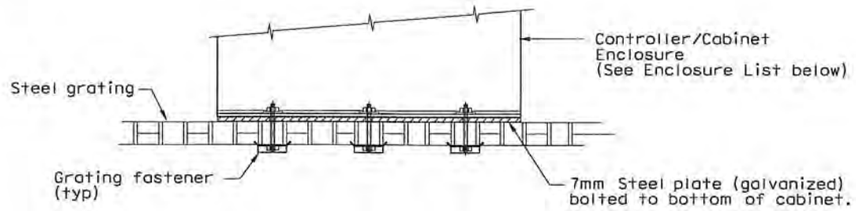

SECTION B-B
NTS

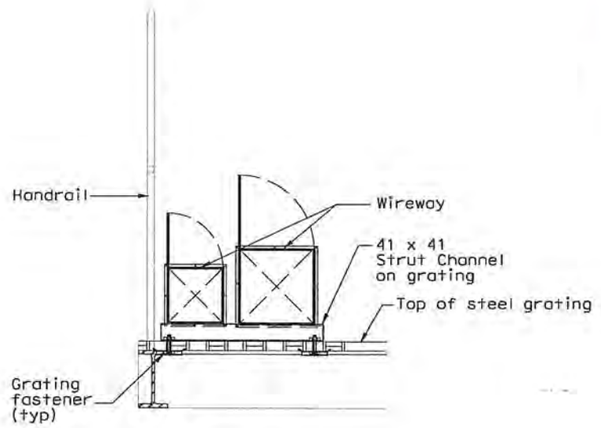

DETAIL 3
WIREWAY SUPPORT ON STEEL GRATING
(See sheets E-71, E-72, E-73, E-74 and E-75)

CONTROLLER CABINET ENCLOSURES

Location	Nameplate	No.	Cabinet/Terminal Box Size
Service Platform #4	Controller Cabinet	TOS-4WA	1625 H x 615 W x 768 D
Service Platform #4	Controller Cabinet	TOS-4WB	1625 H x 615 W x 768 D
Service Platform #4	Controller Cabinet	TOS-4EA	1625 H x 615 W x 768 D
Service Platform #5	Remote Terminal Unit	RTU #10W	1830 H x 940 W x 610 D
Service Platform #5	Strong Motion Recorder #2	Box A	1900 H x 1620 W x 660 D
Service Platform #5	Strong Motion Recorder #2	Box B	1900 H x 1620 W x 660 D
Service Platform #5	Remote Terminal Unit	RTU #10E	1830 H x 940 W x 610 D
Service Platform #6	Controller Cabinet	TOS-6WA	1625 H x 615 W x 768 D
Service Platform #6	Controller Cabinet	TOS-6EA	1625 H x 615 W x 768 D
Service Platform #7	Controller Cabinet	TOS-7WA	1625 H x 615 W x 768 D
Service Platform #7	Controller Cabinet	TOS-7EA	1625 H x 615 W x 768 D
Service Platform #8	Remote Terminal Unit	RTU #11W	1830 H x 940 W x 610 D
Service Platform #8	Remote Terminal Unit	RTU #11E	1830 H x 940 W x 610 D

DIST	COUNTY	ROUTE	KILOMETER POST TOTAL PROJECT	SHEET No	TOTAL SHEETS
04	SF	80	13.2/13.9	139 S2	1204

REGISTERED ELECTRICAL ENGINEER — 6/12/08 DATE

REGISTERED PROFESSIONAL ENGINEER — FADI WALIEDDINE No. 11465 Exp. 12/31/2009 ELECTRICAL — STATE OF CALIFORNIA

PLANS APPROVAL DATE

PB AMERICAS, Inc.
A Parsons Brinckerhoff Company
303 Second St., Suite 700N
San Francisco, CA 94107-1317

The State of California or its officers or agents shall not be responsible for the accuracy or completeness of electronic copies of this plan sheet.

Caltrans now has a web site! To get to the web site, go to http://www.dot.ca.gov

DATE	REVISED BY	DATE REVISED
CALCULATED/ DESIGNED BY	CHECKED BY	

DESIGN OVERSIGHT — BEHZAD GOLEMOHAMMADI

STATE OF CALIFORNIA - DEPARTMENT OF TRANSPORTATION — Caltrans

MARK	DATE	DESCRIPTIONS	BY	CH'D	CCO#
		REVISIONS			
0	03/30/09	SERVICE PLATFORM ELECTRICAL CHANGES	RR MP	RG SE	55

REQUEST FOR INFORMATION NOT ADDRESSED IN THIS CCO REMAIN IN FORCE

CONTRACT CHANGE ORDER NO. 55
SHEET 37 OF 90

DETAILS
SAS SUPERSTRUCTURE ROADWAY WESTBOUND CONTROLLER CABINETS ENCLOSURE

SCALE AS NOTED

E-78B

LAST REVISION 00-00-00 — DATE PLOTTED => 3/31/2009 TIME PLOTTED => 2:54:06 PM

THIS PLAN IS ACCURATE FOR ELECTRICAL WORK ONLY.

ALL DIMENSIONS ARE IN MILLIMETERS UNLESS OTHERWISE SHOWN.

FOR REDUCED PLANS ORIGINAL SCALE IS IN MILLIMETERS 0 20 40 60 80

DGN FILE =>T:\13103\MS\pse\SAS Struc\CCO\SAS CCO55\04-0120F1_0139S02.dgn
USERNAME =>garciar

CU 04251 | EA 0120F1

DIST	COUNTY	ROUTE	KILOMETER POST TOTAL PROJECT	SHEET No	TOTAL SHEETS
04	SF	80	13.2/13.9	139 S3	1204

REGISTERED ELECTRICAL ENGINEER — DATE 3/30/09

REGISTERED PROFESSIONAL ENGINEER — FADI WALIEDDINE No. 11465 Exp. 12/31/2009 ELECTRICAL — STATE OF CALIFORNIA

PLANS APPROVAL DATE

PB AMERICAS, Inc.
A Parsons Brinckerhoff Company
303 Second St., Suite 700N
San Francisco, CA 94107-1317

The State of California or its officers or agents shall not be responsible for the accuracy or completeness of electronic copies of this plan sheet.

Caltrans now has a web site! To get to the web site, go to http://www.dot.ca.gov

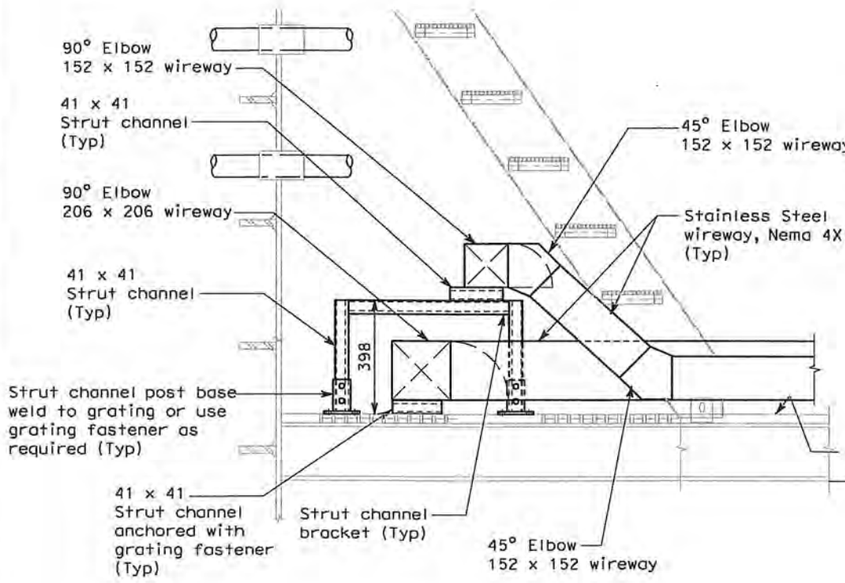

DETAIL 1
SCALE: 1:10
(See sheets E-71, E-72, E-73, E-74 and E-75)

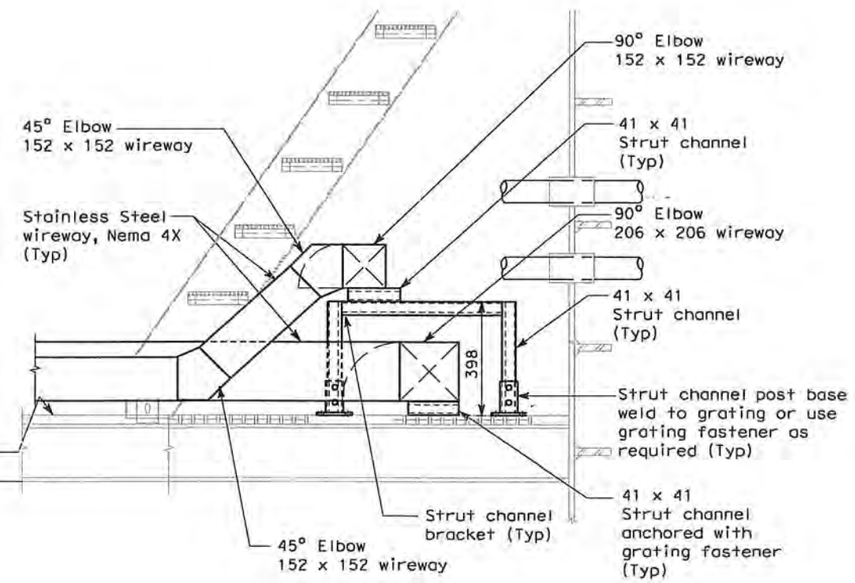

DETAIL 2
SCALE: 1:10
(See sheets E-71, E-72, E-73, E-74 and E-75)

REQUEST FOR INFORMATION NOT ADDRESSED IN THIS CCO REMAIN IN FORCE					
0	03/30/09	SERVICE PLATFORM ELECTRICAL CHANGES	RR MP	RG SE	55
MARK	DATE	DESCRIPTIONS	BY	CH'D	CCO#
		REVISIONS			

CONTRACT CHANGE ORDER NO. 55
SHEET 38 OF 90

DETAILS
SAS SUPERSTRUCTURE ROADWAY WESTBOUND PLATFORM SECTIONS
SCALE AS NOTED

E-78C

ALL DIMENSIONS ARE IN MILLIMETERS UNLESS OTHERWISE SHOWN

FOR REDUCED PLANS ORIGINAL SCALE IS IN MILLIMETERS 0 20 40 60 80

DGN FILE =>T:\13103\MS\pse\SAS Struc\CCO\SAS CCO55\2009-03-30_Issued for Submittal\04-0120F1_0139S03.dgn
USERNAME =>florico

CU 04251 | EA 0120F1

LAST REVISION 00-00-00 | DATE PLOTTED => 4/1/2009 TIME PLOTTED => 8:57:40 AM

STATE OF CALIFORNIA - DEPARTMENT OF TRANSPORTATION — Caltrans

DESIGN OVERSIGHT — BEHZAD GOLEMOHAMMADI

CALCULATED/ DESIGNED BY | CHECKED BY

DATE | REVISED BY | DATE REVISED

DIST	COUNTY	ROUTE	KILOMETER POST TOTAL PROJECT	SHEET No	TOTAL SHEETS
04	SF	80	13.2/13.9	139 S4	1204

REGISTERED ELECTRICAL ENGINEER DATE

REGISTERED PROFESSIONAL ENGINEER — FADI WALIEDDINE No. 11465 Exp. 12/31/2009 ELECTRICAL — STATE OF CALIFORNIA

PLANS APPROVAL DATE

PB AMERICAS, Inc.
A Parsons Brinckerhoff Company
303 Second St., Suite 700N
San Francisco, CA 94107-1317

The State of California or its officers or agents shall not be responsible for the accuracy or completeness of electronic copies of this plan sheet.

Caltrans now has a web site! To get to the web site, go to http://www.dot.ca.gov

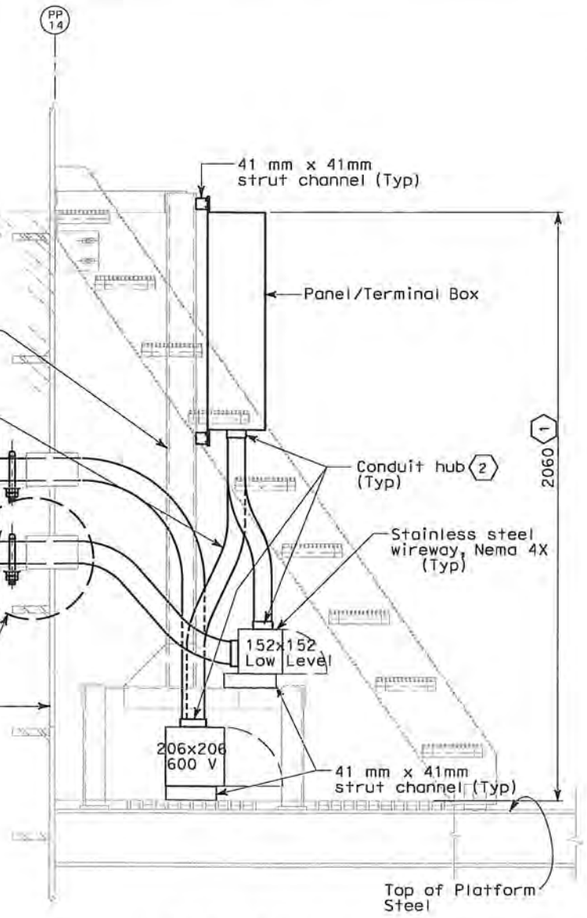

SECTION D-D
SCALE: 1:10

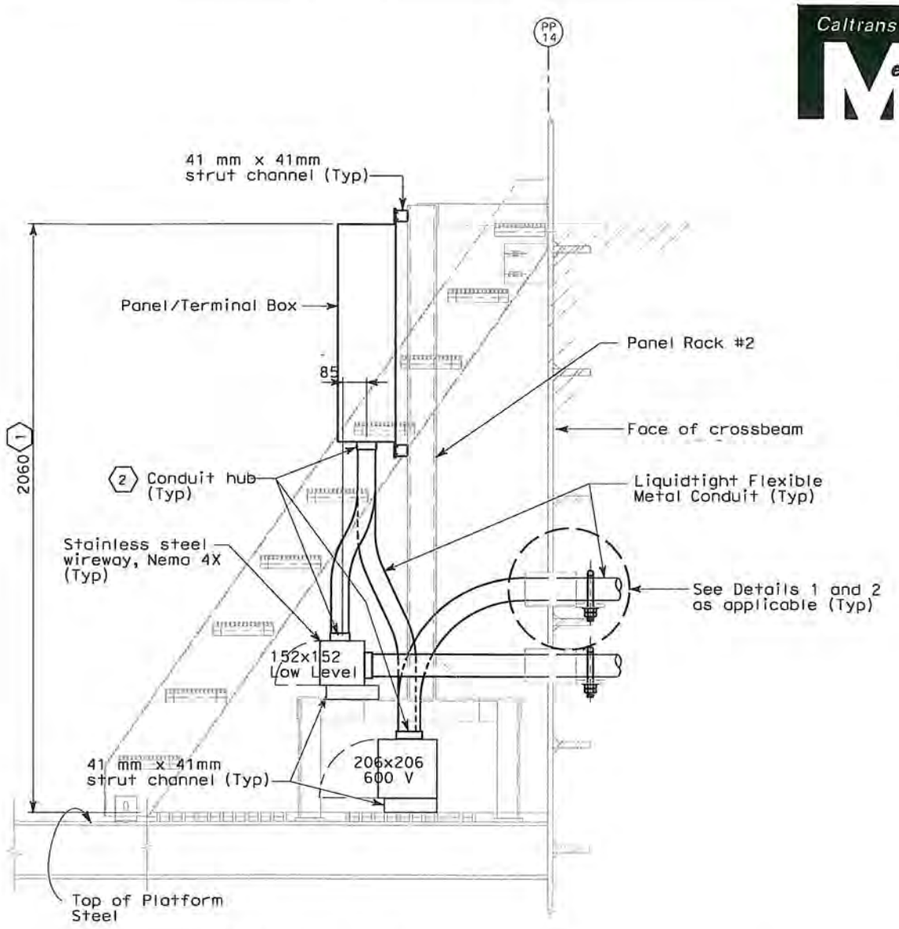

SECTION E-E
SCALE: 1:10

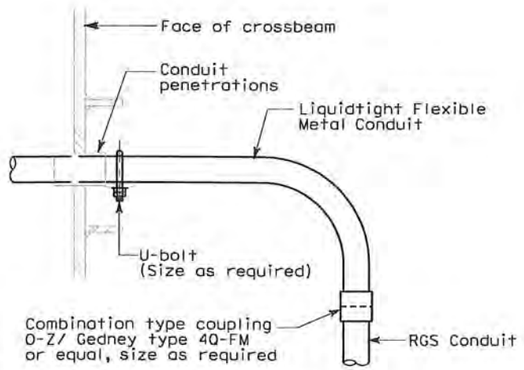

DETAIL 1
NOT TO SCALE
See Section A-A, sheet E-78

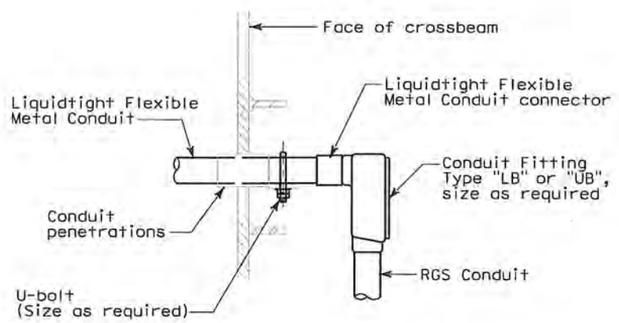

DETAIL 2
NOT TO SCALE
See Section B-B, sheet E-78

SHEET NOTES:

1. Specified dimension is approximate and may be adjusted to suit field condition.
2. All conduit hubs and fittings shall be watertight and PVC coated when installed outdoor. Conduit hubs shall be provided with insulated ground bushing.

REQUEST FOR INFORMATION NOT ADDRESSED IN THIS CCO REMAIN IN FORCE					
MARK	DATE	REVISIONS DESCRIPTIONS	BY	CH'D	CCO#
0	03/30/09	SERVICE PLATFORM ELECTRICAL CHANGES	RR MP	RG SE	55

CONTRACT CHANGE ORDER NO. 55
SHEET 39 OF 90

DETAILS
SAS SUPERSTRUCTURE ROADWAY WESTBOUND PLATFORM #4 SECTIONS
SCALE AS NOTED

E-78D

ALL DIMENSIONS ARE IN MILLIMETERS UNLESS OTHERWISE SHOWN

FOR REDUCED PLANS ORIGINAL SCALE IS IN MILLIMETERS 0 20 40 60 80

DGN FILE =>T:\13103\MS\pse\SAS Struc\CCO\SAS CCO55\04-0120F1_0139504.dgn
USERNAME =>garcior

CU 04251 EA 0120F1

LAST REVISION 00-00-00 DATE PLOTTED => 4/3/2009 TIME PLOTTED => 8:03:10 AM

DESIGN OVERSIGHT BEHZAD GOLEMOHAMMADI
CALCULATED/ DESIGNED BY
CHECKED BY
DATE REVISED BY
DATE REVISED

STATE OF CALIFORNIA - DEPARTMENT OF TRANSPORTATION
Caltrans

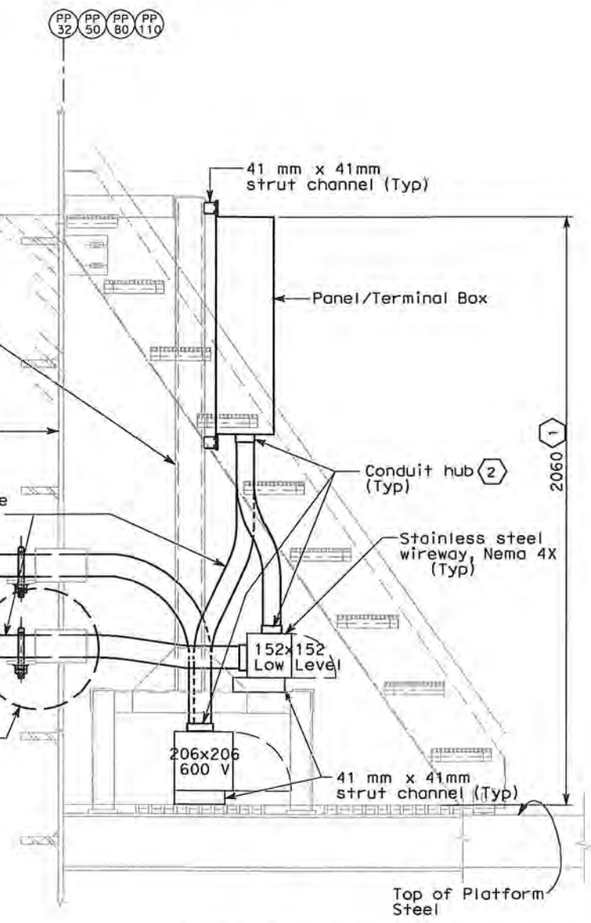

SECTION D-D
SCALE: 1:10

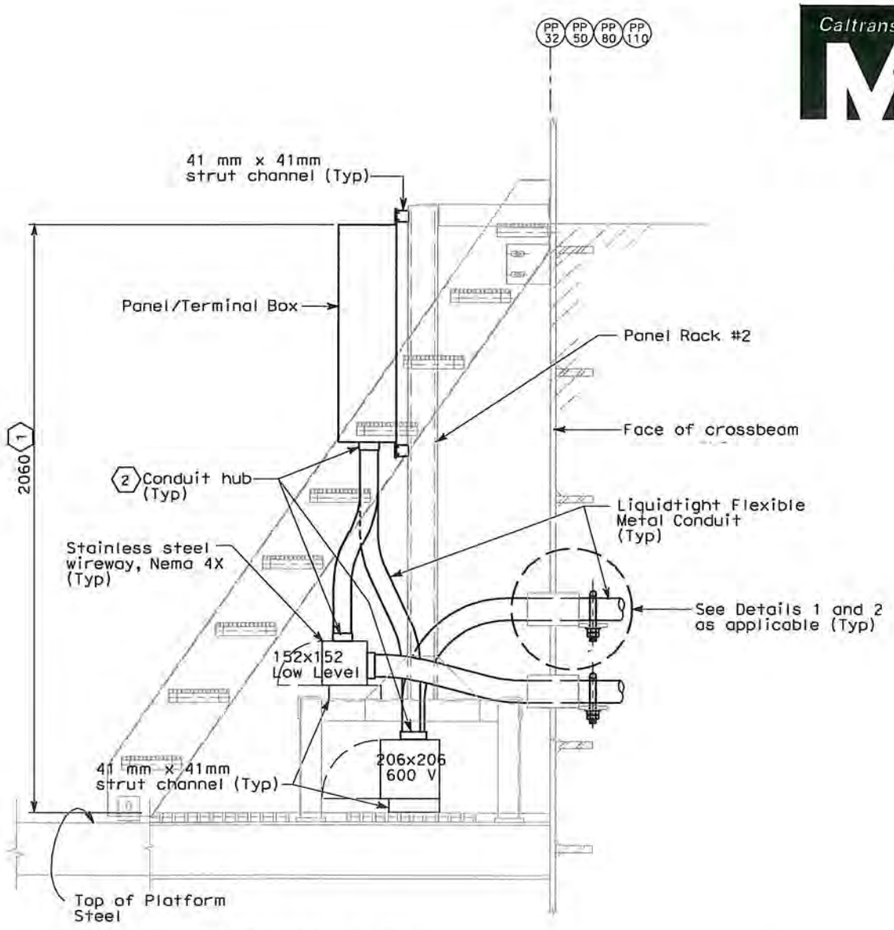

SECTION E-E
SCALE: 1:10

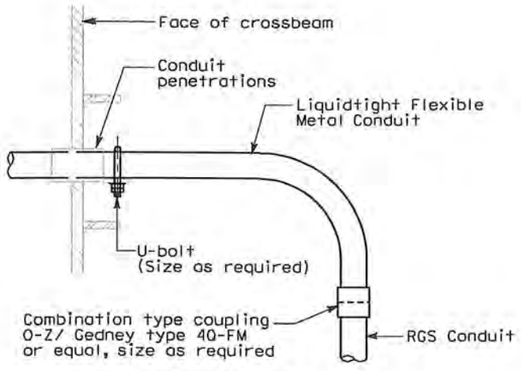

DETAIL 1
NOT TO SCALE
See Section A-A, sheet E-78

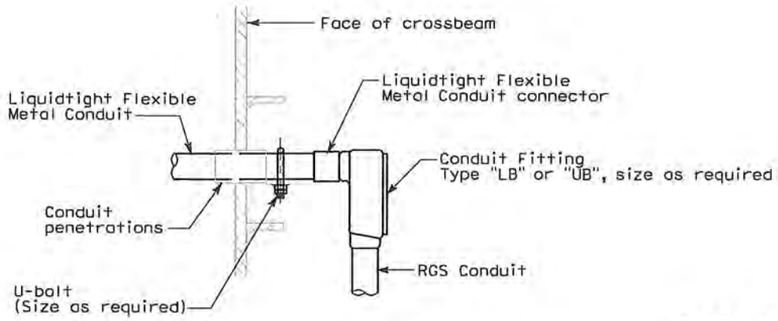

DETAIL 2
NOT TO SCALE
See Section B-B, sheet E-78

DIST	COUNTY	ROUTE	KILOMETER POST TOTAL PROJECT	SHEET No	TOTAL SHEETS
04	SF	80	13.2/13.9	139 S5	1204

REGISTERED ELECTRICAL ENGINEER — 3/30/09 DATE

REGISTERED PROFESSIONAL ENGINEER — FADI WALIEDDINE No. 11465 EXP. 12/31/2009 ELECTRICAL — STATE OF CALIFORNIA

PLANS APPROVAL DATE

PB AMERICAS, Inc.
A Parsons Brinckerhoff Company
303 Second St., Suite 700N
San Francisco, CA 94107-1317

The State of California or its officers or agents shall not be responsible for the accuracy or completeness of electronic copies of this plan sheet.

Caltrans now has a web site! To get to the web site, go to http://www.dot.ca.gov

SHEET NOTES:

(1) Specified dimension is approximate and may be adjusted to suit field condition.

(2) All conduit hubs and fittings shall be watertight and PVC coated when installed outdoor. Conduit hubs shall be provided with insulated ground bushing.

REQUEST FOR INFORMATION NOT ADDRESSED IN THIS CCO REMAIN IN FORCE					
MARK	DATE	REVISIONS DESCRIPTIONS	BY	CH'D	CCO#
0	03/30/09	SERVICE PLATFORM ELECTRICAL CHANGES	RR MP	RG SE	55

CONTRACT CHANGE ORDER NO. 55
SHEET 40 OF 90

DETAILS
SAS SUPERSTRUCTURE ROADWAY WESTBOUND PLATFORMS #5, 6, 7 & 8 SECTIONS
SCALE AS NOTED

E-78E

ALL DIMENSIONS ARE IN MILLIMETERS UNLESS OTHERWISE SHOWN

FOR REDUCED PLANS ORIGINAL SCALE IS IN MILLIMETERS 0 20 40 60 80

DGN FILE =>T:\13103\MS\pse\SAS Struc\CCO\SAS CC055\2009-03-30_Issued for Submittal\04-0120f1_0139S05.dgn
USERNAME =>llorico

CU 04251 EA 0120F1

DATE PLOTTED => 4/1/2009
TIME PLOTTED => 8:56:56 AM

LAST REVISION 00-00-00

DESIGN OVERSIGHT — BEHZAD GOLEMOHAMMADI

CALCULATED/ DESIGNED BY — CHECKED BY

DATE REVISED BY — DATE REVISED

STATE OF CALIFORNIA - DEPARTMENT OF TRANSPORTATION — Caltrans

DIST	COUNTY	ROUTE	KILOMETER POST TOTAL PROJECT	SHEET No	TOTAL SHEETS
04	SF	80	13.2/13.9	142 R3	1204

REGISTERED ELECTRICAL ENGINEER — 12/19/02 DATE

12-6-04
PLANS APPROVAL DATE

REGISTERED PROFESSIONAL ENGINEER — JENS ERLINGSSON No. 8249 Exp. 9/30/06 ELECTRICAL — STATE OF CALIFORNIA

PB POWER, Inc.
A Parsons Brinckerhoff Company
303 Second St., Suite 700N
San Francisco, CA 94107-1317

The State of California or its officers or agents shall not be responsible for the accuracy or completeness of electronic copies of this plan sheet.

Caltrans now has a web site! To get to the web site, go to http://www.dot.ca.gov

PULL BOXES

Location	Type	Pull Box Size	Enclosure Type	Nameplate Pull Box Cover	Remarks
Roadway Barrier	PB-Com			Low Voltage - Call Box	Caltrans standard ES-9C (PB-9A)
3 Roadway Barrier	PB-Ltg			600 V - Electrical	Caltrans standard ES-9C (PB-9)
Roadway and miscellaneous	PB-1B	304 L x 254 W x 127 D	NEMA 4X	600 V - Electrical	Located at main suspender cable
Roadway and miscellaneous	PB-1C	152 L x 152 W x 102 D	NEMA 4X	600 V - Electrical	Located at suspender brackets
Roadway	PB-1F	304 L x 304 W x 152 D	NEMA 4X	600 V - Electrical	Located at main suspender cable
Inside Girder Box	PB-2A	406 L x 254 W x 152 D	NEMA 12	600 V - Electrical	
Service Platform	PB-2B	762 L x 508 W x 203 D	NEMA 4X	600 V - Electrical	
Inside Girder Box	PB-2C	915 L x 610 W x 610 D	NEMA 12	600 V - Electrical	Electrical vault-embedded in conc. deck
Inside Girder Box	PB-2P	1067 L x 915 W x 305 D	NEMA 12	600 V - Electrical	Electrical vault-surface/pendant mounted
Inside Girder Box	PB-2L	152 L x 152 W x 102 D	NEMA 12	600 V - Electrical	For future light pipe

PULL BOXES

Location	Type	Pull Box Size	Enclosure Type	Nameplate Pull Box Cover	Remarks
"E" Line Girder access Platform	PB-2D	457 L x 457 W x 203 D	NEMA 4X	600 V - Electrical	For Base Tower power and lighting
Inside Dehumidification #2 Area	PB-2E	203 L x 203 W x 102 D	NEMA 12	600 V - Electrical	For Base Tower Dehumidification #2 power
Tower Base-Elevator Enclosure	PB-2F	203 L x 203 W x 102 D	NEMA 12	600 V - Electrical	For Elevator pit motor power
Tower Walkway Platform, EL. 93.35 m	PB-2G	457 L x 457 W x 203 D	NEMA 4X	600 V - Electrical	For Power and Lighting
Tower Walkway Platform, EL. 93.35 m	PB-2H	457 L x 457 W x 203 D	NEMA 4X	600 V - Electrical	For Power and Lighting
Elevator Enclosure-EL. 93.35 m	PB-2J	203 L x 203 W x 102 D	NEMA 4X	600 V - Electrical	For Power and Lighting
"E" Line Girder access Platform	PB-2K	305 L x 305 W x 152 D	NEMA 4X	600 V - Electrical	For Base Tower power and lighting
Tower Walkway Platform, EL. 53.0 m	PB-2R	203 L x 203 W x 102 D	NEMA 4X	600 V - Electrical	For Power - Booster Pump P1
Tower Vertical Runs	PB-4D	915 L x 610 W x 610 D	NEMA 12	600 V - Electrical	

SPLICE BOXES

Location	Type	Splice Box Size	Enclosure Type	Nameplate Splice Box Cover	Remarks
Inside Girder Box and Tower EL 63.0	PB-3A	1830 L x 915 W x 305 D	NEMA 12	Danger - High Voltage - Keep Out	
Inside Girder Box	PB-3B	813 L x 203 diameter	Cylindrical Housing	Fiber Optic	72 fibers to 12 fibers
Inside Girder Box	PB-3C	813 L x 203 diameter	Cylindrical Housing	Fiber Optic	72 fibers to 72 fibers

PANEL ENCLOSURES (1)

Location	Type	Cabinet/Terminal Box Size	Enclosure Type	Nameplate Cabinet/Terminal Cover	Remarks
Service Platform	PB-6C	See Panel Layout	NEMA 4X	See Panel Layout on E-305	For Navigation Relay Cabinet
3 Service Platform	PB-7B	See Panel Layout	NEMA 4X	See Panel Layout on E-321	For Scada Communication Terminal Box
Service Platform	PB-7C	762 H x 508 W x 203 D	NEMA 4X	Caltrans Telephone	Enclosure only - For Telephone Terminal Box
Inside Girder Box	PB-7D	508 H x 406 W x 203 D	NEMA 4X	Caltrans Telephone	Enclosure only - For Telephone Terminal Box
DELETED					

SAS SUPERSTRUCTURE WB

Location	Type	Pull Box Size	Enclosure Type	Nameplate Pull Box Cover	Remarks
Inside Light Pole	PB-2N	152 L x 152 W x 102 D	NEMA 12	TOS-MVDS	Cable Termination
Tower Platform	PB-2M	305 L x 305 W x 152 D	NEMA 12	TOS-MVDS	Cable Termination
Inside Dehumidification #1 Area	PB-TOS	203 L x 203 W x 102 D	NEMA 4X	TOS-COM	Dehumidification Unit #1

SHEET NOTE:

(1) Panel enclosures shall be provided with padlock provisions.

REQUEST FOR INFORMATION NOT ADDRESSED IN THIS CCO REMAIN IN FORCE					
3	03/30/09	SERVICE PLATFORM ELECTRICAL CHANGES	RR	RG FW	55
2	09/24/08	CABLE ELECTRICAL	RY AG	RG FW	72
1	02/19/08	ELECTRICAL MODIFICATIONS	MP EL	RR	42
MARK	DATE	DESCRIPTIONS REVISIONS	BY	CH'D	CCO#

CONTRACT CHANGE ORDER NO. 55
SHEET 41 OF 90

REGISTERED PROFESSIONAL ENGINEER — HASWELL FLMIO TARANT No. E 8651 Exp. 9/30/2008 ELECTRICAL — STATE OF CALIFORNIA

FOR REVISION ONLY (1)

REGISTERED PROFESSIONAL ENGINEER — FADI WALIEDDINE No. 11465 Exp. 12/31/2009 ELECTRICAL — STATE OF CALIFORNIA

FOR REVISION ONLY (2)(3)

DETAILS
SAS SUPERSTRUCTURE ROADWAY WESTBOUND PULLBOX SCHEDULES

E-83

DESIGN OVERSIGHT: BEHZAD GOLEMOHAMMADI
CALCULATED/DESIGNED BY: FK
CHECKED BY: BL
DATE REVISED: 10/01 11/01
REVISED BY:

STATE OF CALIFORNIA - DEPARTMENT OF TRANSPORTATION — Caltrans

FOR REDUCED PLANS ORIGINAL SCALE IS IN MILLIMETERS 0 20 40 60 80

DGN FILE =>T:\13103\MS\pse\SAS Struc\CCO\SAS CC055\04-0120F1_0142R03.dgn
USERNAME =>garciar

CU 04251 EA 0120F1

LAST REVISION 00-00-00 DATE PLOTTED => 3/31/2009 TIME PLOTTED => 2:51:14 PM

DIST	COUNTY	ROUTE	KILOMETER POST TOTAL PROJECT	SHEET No	TOTAL SHEETS
04	SF	80	13.2/13.9	166 R2	1204

REGISTERED ELECTRICAL ENGINEER — 12/19/02

12-6-04
PLANS APPROVAL DATE

JENS ERLINGSSON No. 8249 Exp. 9/30/06 ELECTRICAL — REGISTERED PROFESSIONAL ENGINEER — STATE OF CALIFORNIA

PB POWER, Inc.
A Parsons Brinckerhoff Company
303 Second St., Suite 700N
San Francisco, CA 94107-1317

The State of California or its officers or agents shall not be responsible for the accuracy or completeness of electronic copies of this plan sheet.

Caltrans now has a web site! To get to the web site, go to http://www.dot.ca.gov

DESIGN OVERSIGHT	CALCULATED/ DESIGNED	DATE	REVISED	BY
BEHZAD GOLEMOHAMMADI	CHECKED BY	IAH 11/02	DATE REVISED	FK

STATE OF CALIFORNIA - DEPARTMENT OF TRANSPORTATION — Caltrans

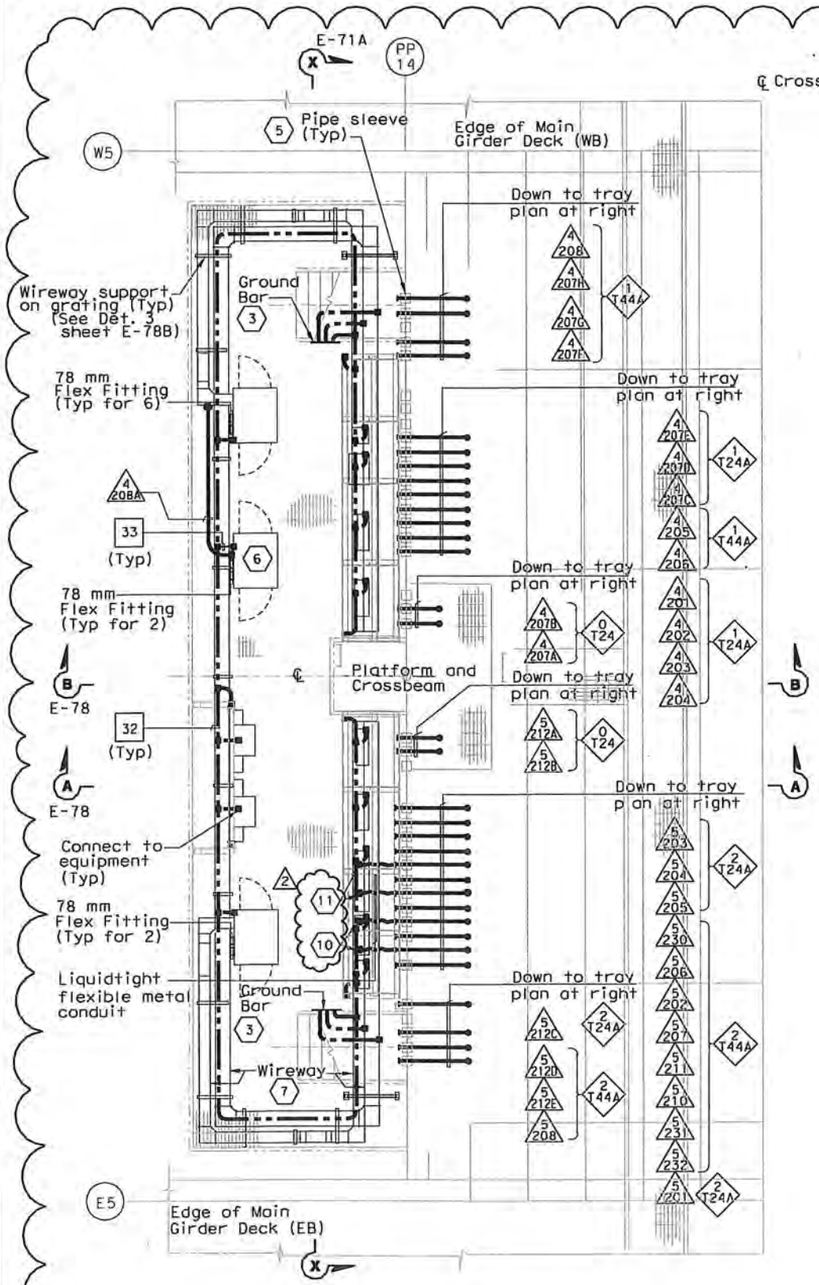

WIREWAY AND CONDUIT PLAN AT SERVICE PLATFORM

SCALE 1:40

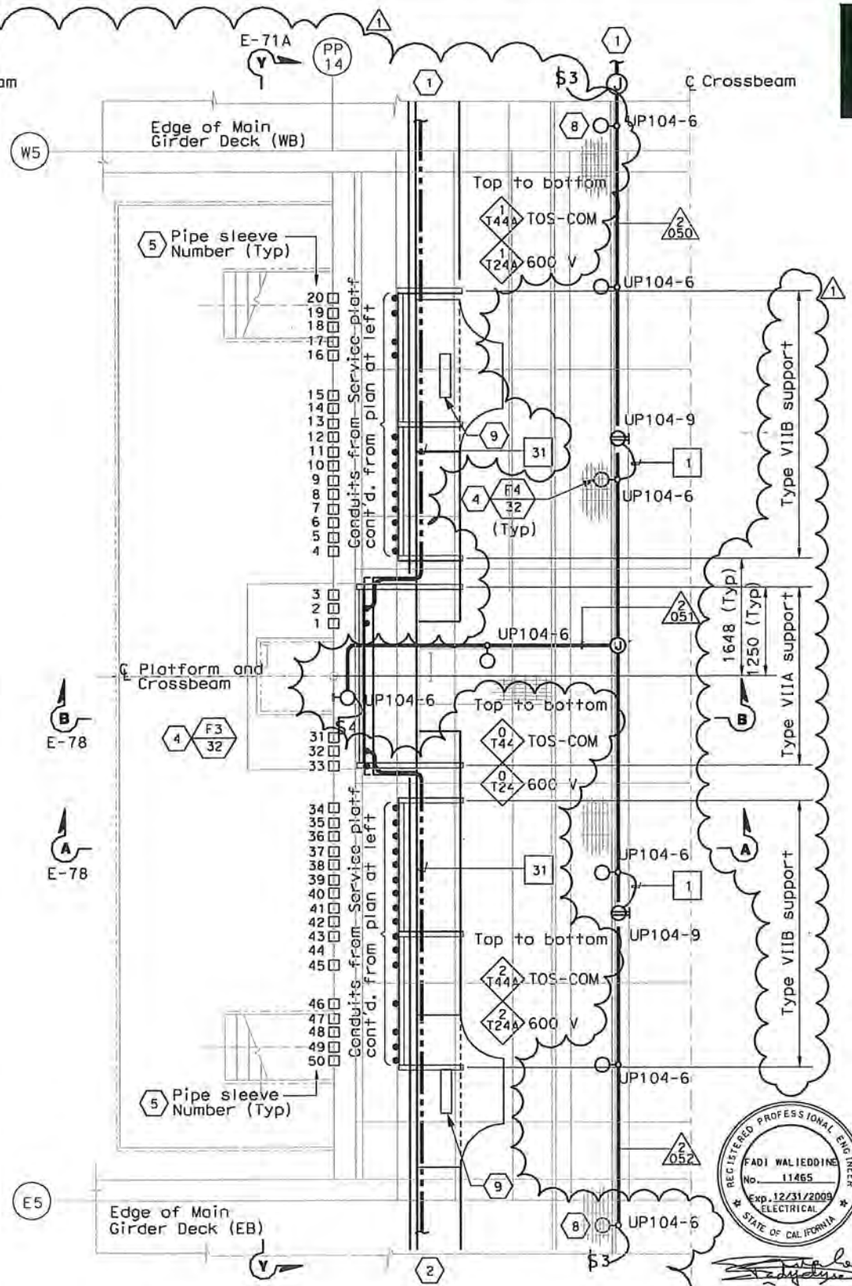

CABLE TRAY AND CONDUIT PLAN INSIDE CROSSBEAM

SCALE 1:40

SHEET NOTES:

1. For continuation inside WB girder, see sheets E-96 and E-114A. 1
2. For continuation inside EB girder, see sheet E-184 and E-114A.
3. For typical ground bar installation, see Detail 5 sheet E-78.
4. For typical lighting fixture installation see Details 2 and 3, sheet E-123.
5. Pipe sleeve without conduit going through is spare. Contractor to provide plug or cap at both ends. For location see Section Y-Y on sheet E-71A.
6. TOS-4WB for the temporary mobile CMS. Control cabinet shall remain for future use. U.O.N.
7. For wireway numbers, see sheet E-71.
8. Locate light fixture approximate half way between girder wall and girder walkway.
9. Fiber splice tray, see sheet E-355.
10. Terminate conduits at Terminal Box #TEL-4.
11. Terminate conduits at Terminal Box #COM-4.

NOTES:

1. Reference:
   - For circuit, conduit/cable tray schedules, see sheets starting at E-401.
2. For wireway support details, see AS sheets. 2
3. For location of pipe sleeves at the utility platform crossbeams, see Typical Crossbeam Details sheets. 1
4. For platform elevations, see sheet E-71A.

REGISTERED PROFESSIONAL ENGINEER — FADI WALIEDDINE No. 11465 Exp. 12/31/2009 ELECTRICAL — STATE OF CALIFORNIA

FOR REVISION ONLY 1 2

REQUEST FOR INFORMATION NOT ADDRESSED IN THIS CCO REMAIN IN FORCE

MARK	DATE	REVISIONS / DESCRIPTIONS	BY	CH'D	CCO#
2	06/25/09	SERVICE PLATFORM ELECTRICAL CHANGES	RR RY	RG FW	55
1	03/30/09	SERVICE PLATFORM ELECTRICAL CHANGES	RR MP	RG FW	55

CONTRACT CHANGE ORDER NO. 55
SHEET 42 OF 90

DETAILS
SAS SUPERSTRUCTURE GIRDER WESTBOUND PLATFORM 4 CONDUIT, LIGHTING AND GROUNDING PLAN

SCALE AS NOTED

E-114

THIS PLAN IS ACCURATE FOR ELECTRICAL WORK ONLY.

ALL DIMENSIONS ARE IN MILLIMETERS UNLESS OTHERWISE SHOWN.

FOR REDUCED PLANS ORIGINAL SCALE IS IN MILLIMETERS 0 20 40 60 80

DGN FILE = X:\13103\MS\pse\SAS Struc\CCO\SAS CCO55\2009-05-25_Issued for Submittal\04-0120F1_0166R02.dgn
USERNAME = klorico

CU 04251 | EA 0120F1

LAST REVISION DATE PLOTTED = 06/25/2009
00-00-00 TIME PLOTTED = 13:21:36 PM

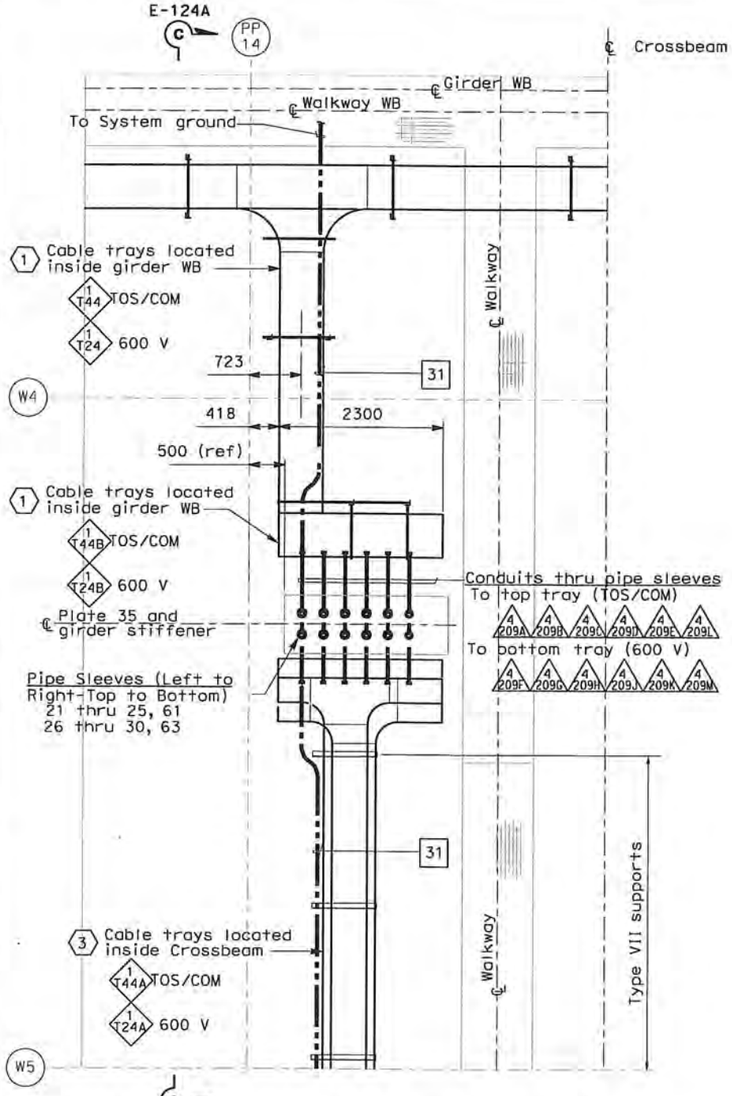

CABLE TRAY PLAN - DETAIL 4

SCALE 1:40

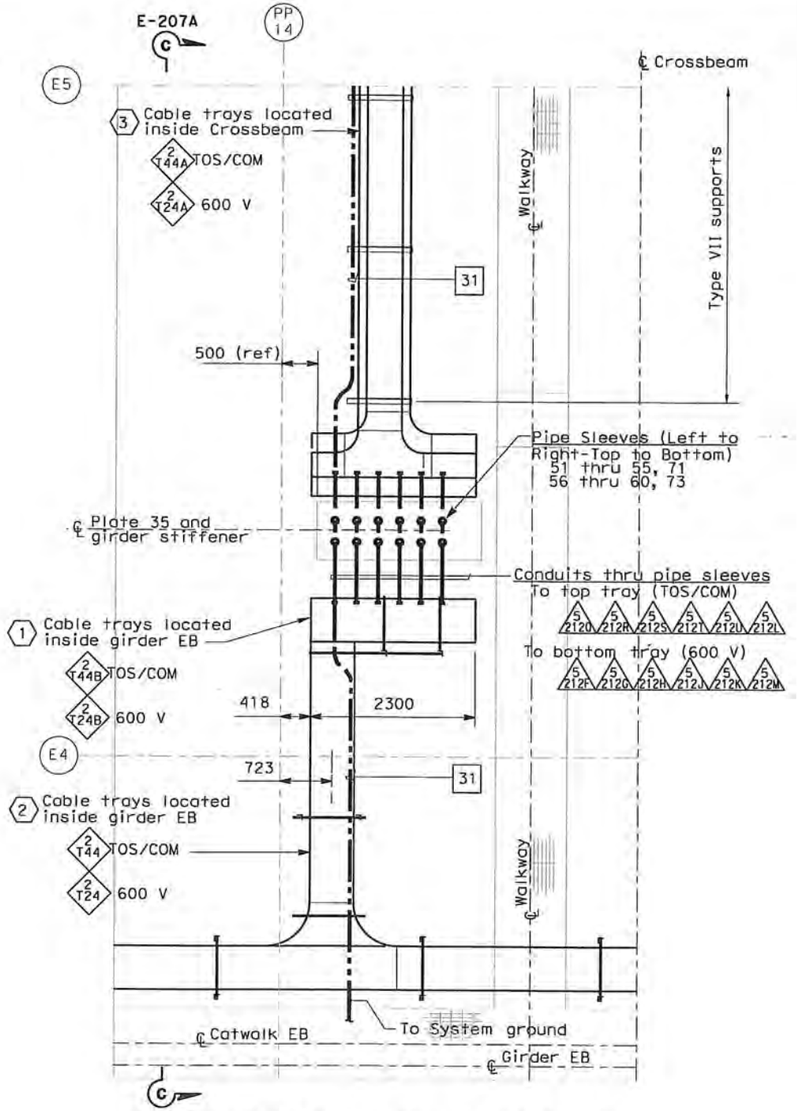

CABLE TRAY PLAN - DETAIL 5

SCALE 1:40

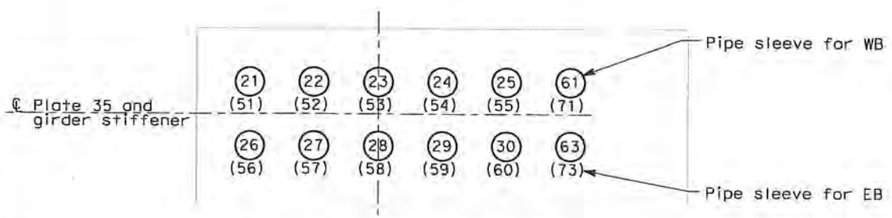

PIPE SLEEVE LOCATION

NO SCALE

THIS PLAN IS ACCURATE FOR ELECTRICAL WORK ONLY.

ALL DIMENSIONS ARE IN MILLIMETERS UNLESS OTHERWISE SHOWN

FOR REDUCED PLANS ORIGINAL SCALE IS IN MILLIMETERS 0 20 40 60 80

DGN FILE =>I:\13103\MS\pse\SAS Struc\CCO\SAS CCO55\04-0120f1_0166501.dgn
USERNAME =>garciar

CU 04251 | EA 0120F1

DIST	COUNTY	ROUTE	KILOMETER POST TOTAL PROJECT	SHEET NO	TOTAL SHEETS
04	SF	80	13.2/13.9	166 S1	1204

REGISTERED ELECTRICAL ENGINEER — 6/12/08 DATE

REGISTERED PROFESSIONAL ENGINEER — FADI WALIEDDINE No. 11465 Exp. 12/31/2009 ELECTRICAL — STATE OF CALIFORNIA

PLANS APPROVAL DATE

PB AMERICAS, Inc.
A Parsons Brinckerhoff Company
303 Second St., Suite 700N
San Francisco, CA 94107-1317

The State of California or its officers or agents shall not be responsible for the accuracy or completeness of electronic copies of this plan sheet.

Caltrans now has a web site! To get to the web site, go to http://www.dot.ca.gov

NOTES:

1. Reference:
   - For circuit, conduit/cable tray schedules, see sheets starting at E-401.
2. For location of pipe sleeves at the Crossbeam/Service platform, see Typical crossbeam details sheets.
3. For cable tray support details, see AS sheets.
4. (SP) Denotes spare pipe sleeve for 103 mm. Contractor to provide plug at each ends.

SHEET NOTES:

1. For continuation inside WB girder, -at Crossbeam #4, see sheet E-96.
2. For continuation inside EB girder, -at Crossbeam #4, see sheet E-181.
3. For continuation inside Crossbeam,

REQUEST FOR INFORMATION NOT ADDRESSED IN THIS CCO REMAIN IN FORCE

MARK	DATE	REVISIONS DESCRIPTIONS	BY	CH'D	CCO#
0	03/30/09	SERVICE PLATFORM ELECTRICAL CHANGES	RR MP	RG FW	55

CONTRACT CHANGE ORDER NO. 55
SHEET 43 OF 90

DETAILS
SAS SUPERSTRUCTURE GIRDER WESTBOUND CONDUIT, GROUNDING AND CABLE TRAY PLAN

SCALE AS NOTED

E-114A

REVISED BY	DATE REVISED
JP	7/01
BL	12/01

CALCULATED/DESIGNED BY
CHECKED BY

DESIGN OVERSIGHT — BEHZAD GOLEMOHAMMADI

STATE OF CALIFORNIA - DEPARTMENT OF TRANSPORTATION — Caltrans

LAST REVISION 00-00-00 — DATE PLOTTED => 3/31/2009 TIME PLOTTED => 3:13:05 PM

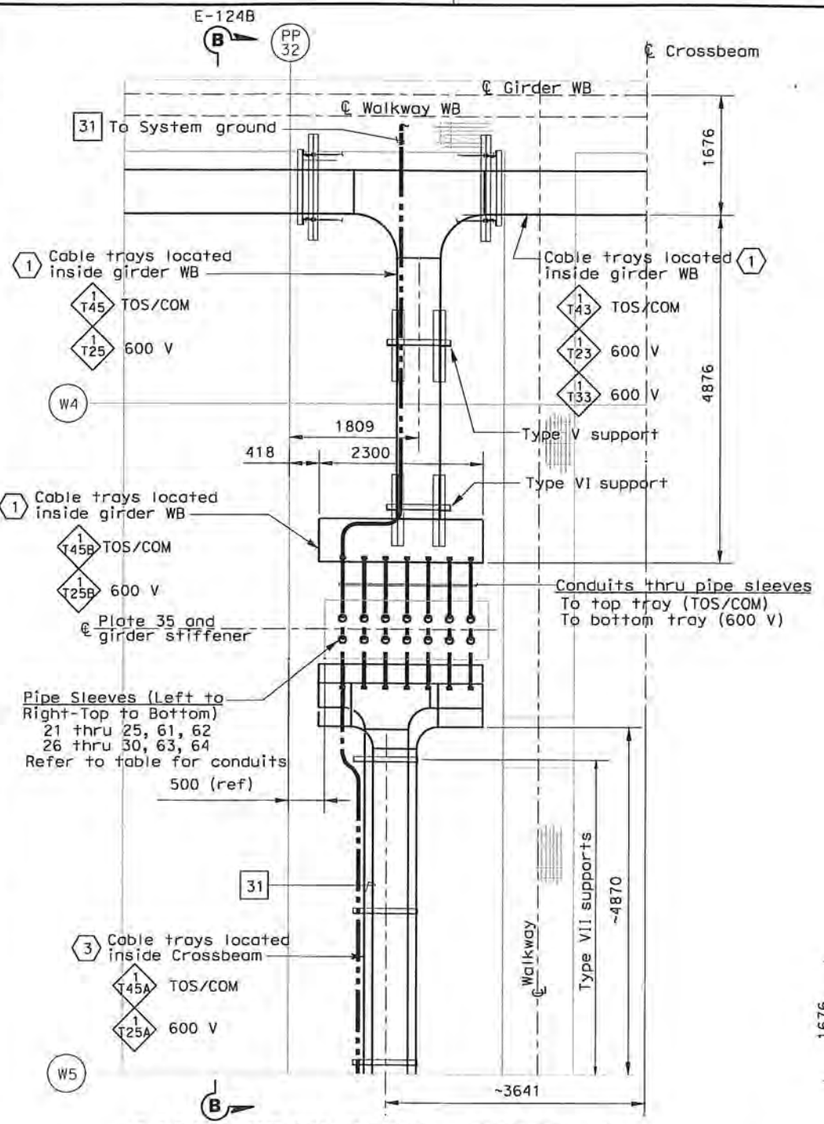

CABLE TRAY PLAN - DETAIL 4

(TYPICAL FOR PP 32, PP 50, PP 80 AND PP 110)
SCALE 1:40

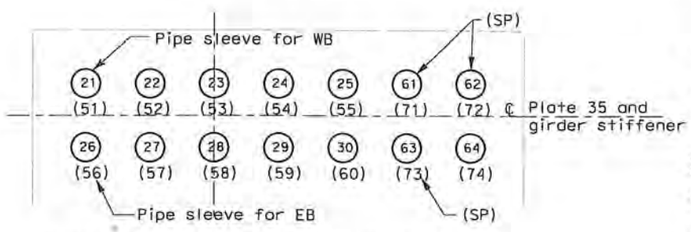

PIPE SLEEVE LOCATION

NO SCALE

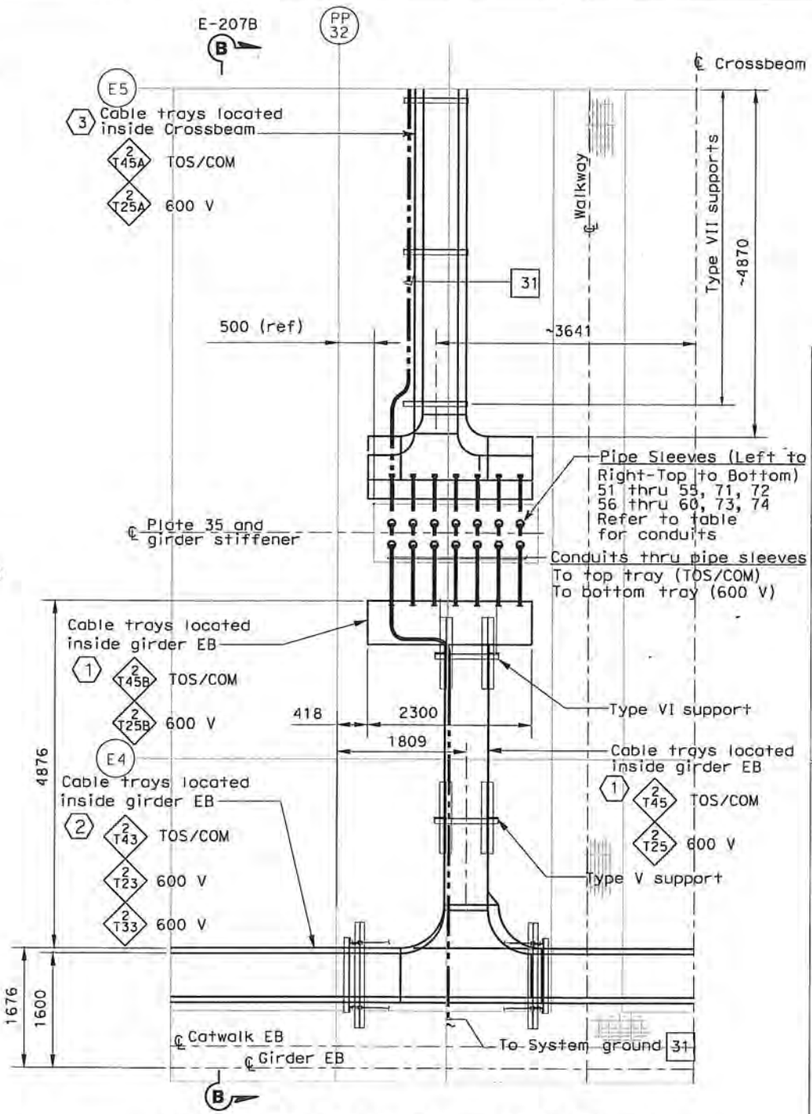

CABLE TRAY PLAN - DETAIL 5

(TYPICAL FOR PP 32, PP 50, PP 80 AND PP 110)
SCALE 1:40

NOTES:

1. Reference:
   - For circuit, conduit/cable tray schedules, see sheets starting at E-401.
2. For location of pipe sleeves at the Crossbeam/Service platform, see Typical crossbeam details sheets.
3. For cable tray support details, see AS sheets.
4. (SP) Denotes spare pipe sleeve with conduit. Contractor to provide plug at each ends.

SHEET NOTES:

1. For continuation inside WB girder, -at Crossbeam #4, see sheet E-96.
2. For continuation inside EB girder, -at Crossbeam #4, see sheet E-181.
3. For continuation inside Crossbeam,

			CONDUIT NUMBER/PIPE SLEEVE	TRAY NO. FROM	TRAY NO. TO
WESTBOUND	CROSSBEAM AT PP-32	TOP	4 211A 21, 4 211B 22, 4 211C 23, 4 211D 24, 4 211E 25, 4 211L 61, 4 211M 62	1 T45A	1 T45B
		BOTTOM	4 211F 26, 4 211G 27, 4 211H 28, 4 211J 29, 4 211K 30, 4 211M 63, 4 211P 64	1 T25A	1 T25B
	CROSSBEAM AT PP-50	TOP	4 213A 21, 4 213B 22, 4 213C 23, 4 213D 24, 4 213E 26, 4 213L 61, 4 213M 62	1 T46A	1 T46B
		BOTTOM	4 213F 26, 4 213G 27, 4 213H 28, 4 213J 29, 4 213K 30, 4 213M 63, 4 213P 64	1 T26A	1 T26B
	CROSSBEAM AT PP-80	TOP	4 215A 21, 4 215B 22, 4 215C 23, 4 215D 24, 4 215E 27, 4 215L 61, 4 215M 62	1 T47A	1 T47B
		BOTTOM	4 215F 27, 4 215G 27, 4 215H 28, 4 215J 29, 4 215K 30, 4 215M 63, 4 215P 64	1 T27A	1 T27B
	CROSSBEAM AT PP-110	TOP	4 217A 21, 4 217B 22, 4 217C 23, 4 217D 24, 4 217E 28, 4 217L 61, 4 217M 62	1 T48A	1 T48B
		BOTTOM	4 217F 28, 4 217G 28, 4 217H 28, 4 217J 29, 4 217K 30, 4 217M 63, 4 217P 64	1 T28A	1 T28B
EASTBOUND	CROSSBEAM AT PP-32	TOP	5 215A 51, 5 215B 52, 5 215C 53, 5 215D 54, 5 215E 55, 5 215L 71, 5 215M 72	2 T45A	2 T45B
		BOTTOM	5 215F 56, 5 215G 57, 5 215H 58, 5 215J 59, 5 215K 60, 5 215M 73, 5 215P 74	2 T25A	2 T25B
	CROSSBEAM AT PP-50	TOP	5 217A 51, 5 217B 52, 5 217C 53, 5 217D 54, 5 217E 55, 5 217L 71, 5 217M 72	2 T46A	2 T46B
		BOTTOM	5 217F 56, 5 217G 57, 5 217H 58, 5 217J 59, 5 217K 60, 5 217M 73, 5 217P 74	2 T26A	2 T26B
	CROSSBEAM AT PP-80	TOP	5 219A 51, 5 219B 52, 5 219C 53, 5 219D 54, 5 219E 55, 5 219L 71, 5 219M 72	2 T47A	2 T47B
		BOTTOM	5 219F 56, 5 219G 57, 5 219H 58, 5 219J 59, 5 219K 60, 5 219M 73, 5 219P 74	2 T27A	2 T27B
	CROSSBEAM AT PP-110	TOP	5 300A 51, 5 300B 52, 5 300C 53, 5 300D 54, 5 300E 55, 5 300L 71, 5 300M 72	2 T48A	2 T48B
		BOTTOM	5 300F 56, 5 300G 57, 5 300H 58, 5 300J 59, 5 300K 60, 5 300M 73, 5 300P 74	2 T28A	2 T28B

REQUEST FOR INFORMATION NOT ADDRESSED IN THIS CCO REMAIN IN FORCE						
MARK	DATE	DESCRIPTIONS	BY	CH'D	CCO#	
REVISIONS						
0	03/30/09	SERVICE PLATFORM ELECTRICAL CHANGES	RR MP	RG FW	55	

CONTRACT CHANGE ORDER NO. 55
SHEET 44 OF 90

DETAILS
SAS SUPERSTRUCTURE GIRDER WESTBOUND CONDUIT, GROUNDING AND CABLE TRAY PLAN

SCALE AS NOTED

E-114B

DIST	COUNTY	ROUTE	KILOMETER POST TOTAL PROJECT	SHEET No	TOTAL SHEETS
04	SF	80	13.2/13.9	166 S2	1204

REGISTERED ELECTRICAL ENGINEER — 6/12/08 DATE

REGISTERED PROFESSIONAL ENGINEER — FADI WALIEDDINE No. 11465 Exp. 12/31/2009 ELECTRICAL — STATE OF CALIFORNIA

PLANS APPROVAL DATE

PB AMERICAS, Inc.
A Parsons Brinckerhoff Company
303 Second St., Suite 700N
San Francisco, CA 94107-1317

The State of California or its officers or agents shall not be responsible for the accuracy or completeness of electronic copies of this plan sheet.

Caltrans now has a web site! To get to the web site, go to http://www.dot.ca.gov

DESIGN OVERSIGHT — BEHZAD GOLEMOHAMMADI
CALCULATED/DESIGNED BY
CHECKED BY
DATE REVISED BY
DATE

STATE OF CALIFORNIA - DEPARTMENT OF TRANSPORTATION — Caltrans

THIS PLAN IS ACCURATE FOR ELECTRICAL WORK ONLY.

ALL DIMENSIONS ARE IN MILLIMETERS UNLESS OTHERWISE SHOWN.

FOR REDUCED PLANS ORIGINAL SCALE IS IN MILLIMETERS 0 20 40 60 80

DGN FILE =>T:\13103\MS\pse\SAS Struc\CCO\SAS CCO55\04-0120F1_0166S02.dgn
USERNAME =>garcior

CU 04251 | EA 0120F1

LAST REVISION 00-00-00 — DATE PLOTTED => 3/31/2009 TIME PLOTTED => 3:13:41 PM

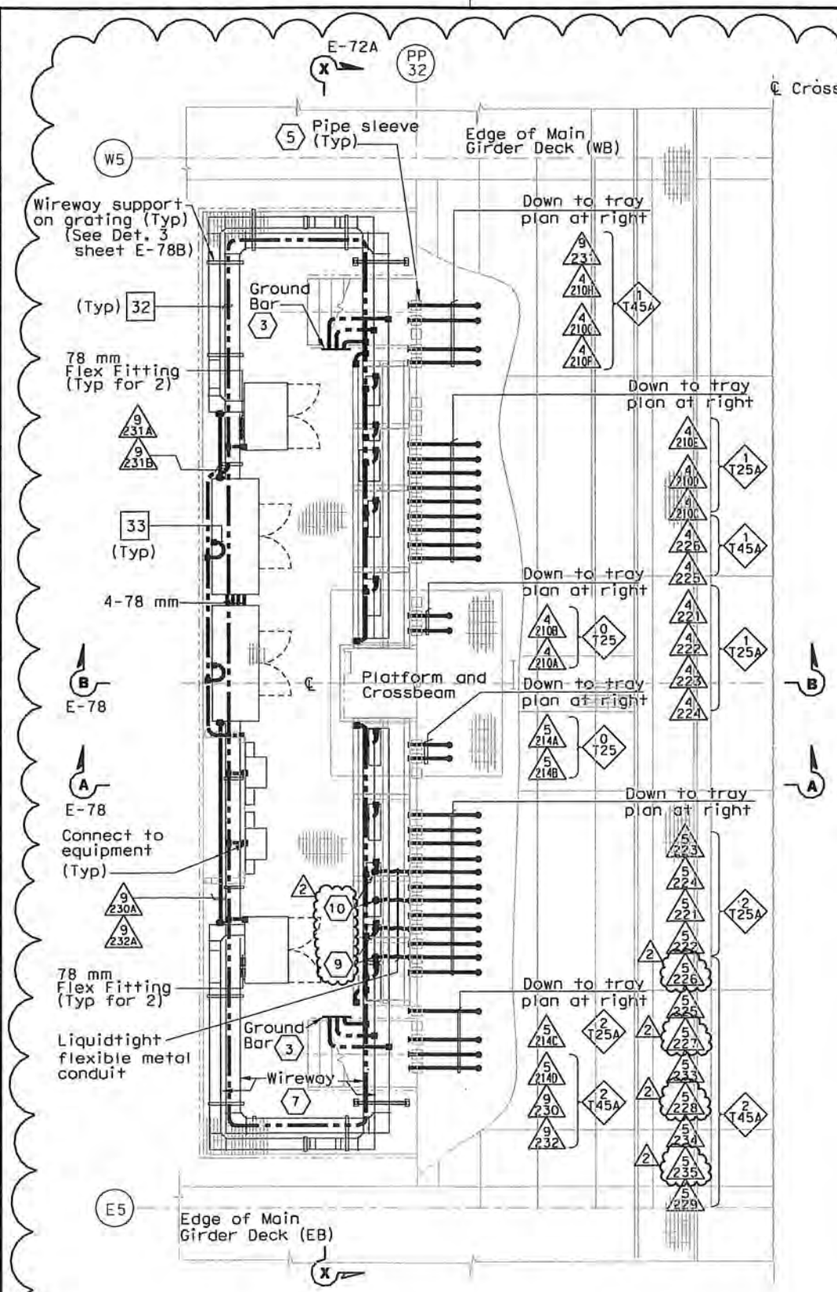

WIREWAY AND CONDUIT PLAN AT SERVICE PLATFORM

SCALE 1:40

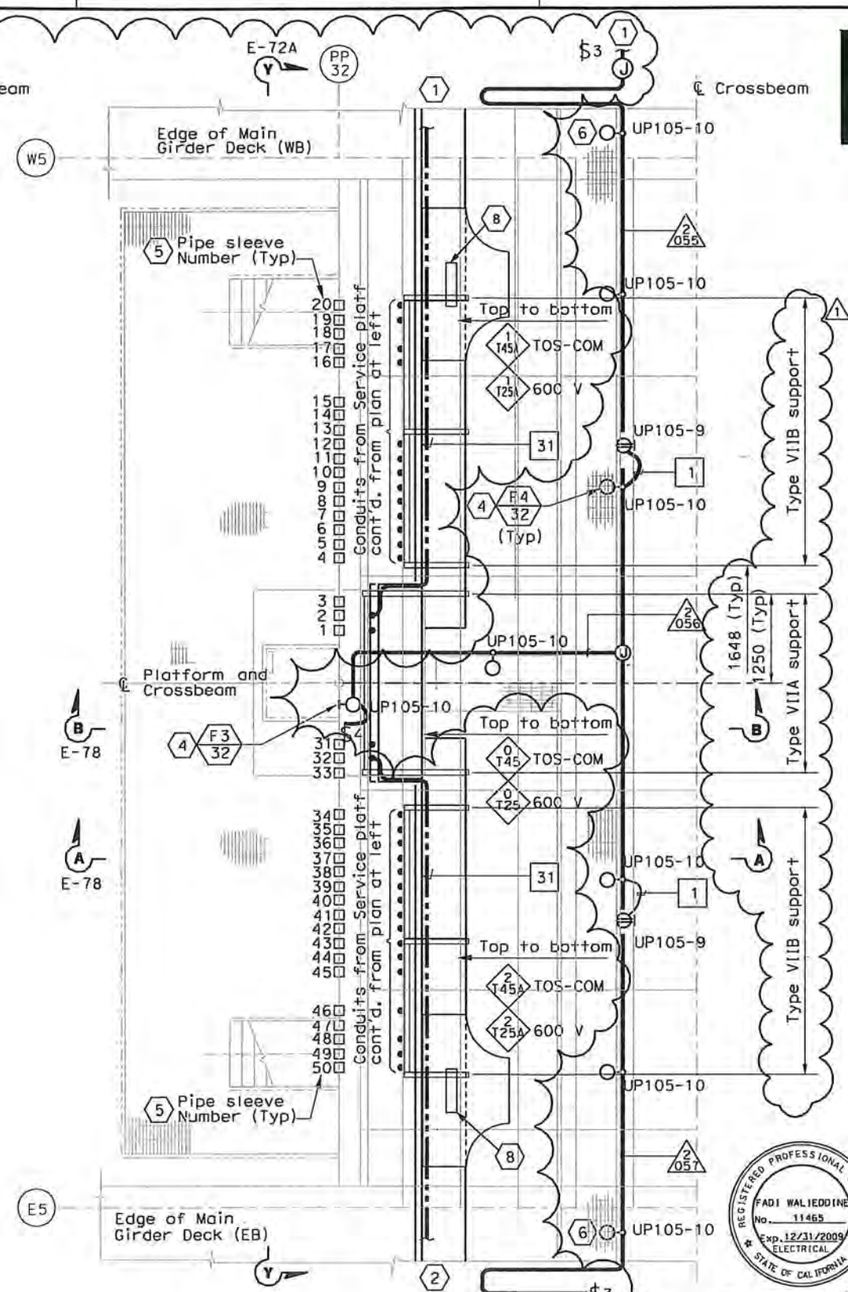

CABLE TRAY AND CONDUIT PLAN INSIDE CROSSBEAM

SCALE 1:40

DIST	COUNTY	ROUTE	KILOMETER POST TOTAL PROJECT	SHEET No	TOTAL SHEETS
04	SF	80	13.2/13.9	167 R2	1204

Jens Erlingsson 12/19/02
REGISTERED ELECTRICAL ENGINEER DATE

12-6-04
PLANS APPROVAL DATE

REGISTERED PROFESSIONAL ENGINEER — JENS ERLINGSSON No. 8249 Exp. 9/30/06 ELECTRICAL — STATE OF CALIFORNIA

PB POWER, Inc.
A Parsons Brinckerhoff Company
303 Second St., Suite 700N
San Francisco, CA 94107-1317

The State of California or its officers or agents shall not be responsible for the accuracy or completeness of electronic copies of this plan sheet.

Caltrans now has a web site! To get to the web site, go to http://www.dot.ca.gov

SHEET NOTES:

1. For continuation inside WB girder, see sheets E-97 and E-114B.
2. For continuation inside EB girder, see sheet E-182 and E-114B.
3. For typical ground bar installation, see Detail 5 sheet E-78.
4. For typical lighting fixture installation see Details 2 and 3, sheet E-123.
5. Pipe sleeve without conduit going through is spare. Contractor to provide plug or cap at both ends. For location see Section Y-Y on sheet E-72A.
6. Locate light fixture approximate half way between girder wall and girder walkway.
7. For wireway numbers, see sheet E-72.
8. Fiber Optic splice closure, see Typical Fiber Optic Tray Detail Sheet E-355.
9. Terminate conduits at Terminal Box #TEL-5.
10. Terminate conduits at Terminal Box #COM-5.

NOTES:

1. Reference:
   - For circuit, conduit/cable tray schedules, see sheets starting at E-401.
2. For wireway support details, see AS sheets.
3. For location of pipe sleeves at the utility platform crossbeams, see Typical Crossbeam Details sheets.
4. For platform elevations, see sheet E-72A.

REGISTERED PROFESSIONAL ENGINEER — FADI WALIEDDINE No. 11465 Exp. 12/31/2009 ELECTRICAL — STATE OF CALIFORNIA

FOR REVISION ONLY

REQUEST FOR INFORMATION NOT ADDRESSED IN THIS CCO REMAIN IN FORCE					
2	06/25/09	SERVICE PLATFORM ELECTRICAL CHANGES	RR RY	RG FW	55
1	03/30/09	SERVICE PLATFORM ELECTRICAL CHANGES	RR MP	RG FW	55
MARK	DATE	DESCRIPTIONS REVISIONS	BY	CH'D	CCO#

CONTRACT CHANGE ORDER NO. 55
SHEET 45 OF 90

DETAILS

SAS SUPERSTRUCTURE GIRDER WESTBOUND PLATFORM 5 CONDUIT, LIGHTING, AND GROUNDING PLAN

SCALE AS NOTED

E-115

DESIGNED BY	CALCULATED/ CHECKED BY	DRAWN BY	CHECKED BY	DATE	REVISED BY	DATE REVISED
JP	BL	JP	BL	1/01	12/01	

STATE OF CALIFORNIA - DEPARTMENT OF TRANSPORTATION
Caltrans
DESIGN OVERSIGHT
BENZAD GOLEMOHAMMADI

THIS PLAN IS ACCURATE FOR ELECTRICAL WORK ONLY.

ALL DIMENSIONS ARE IN MILLIMETERS UNLESS OTHERWISE SHOWN.

FOR REDUCED PLANS ORIGINAL SCALE IS IN MILLIMETERS 0 20 40 60 80

DGN FILE =>T:\13103\WS\pse\SAS Struc\CCO\SAS CCO55\2009-05-25_Issued for Submittal\04-0120F1_0167R02.dgn
USERNAME =>florico

CU 04251 EA 0120F1

LAST REVISION 00-00-00
DATE PLOTTED => 6/25/2009
TIME PLOTTED => 3:21:23 PM

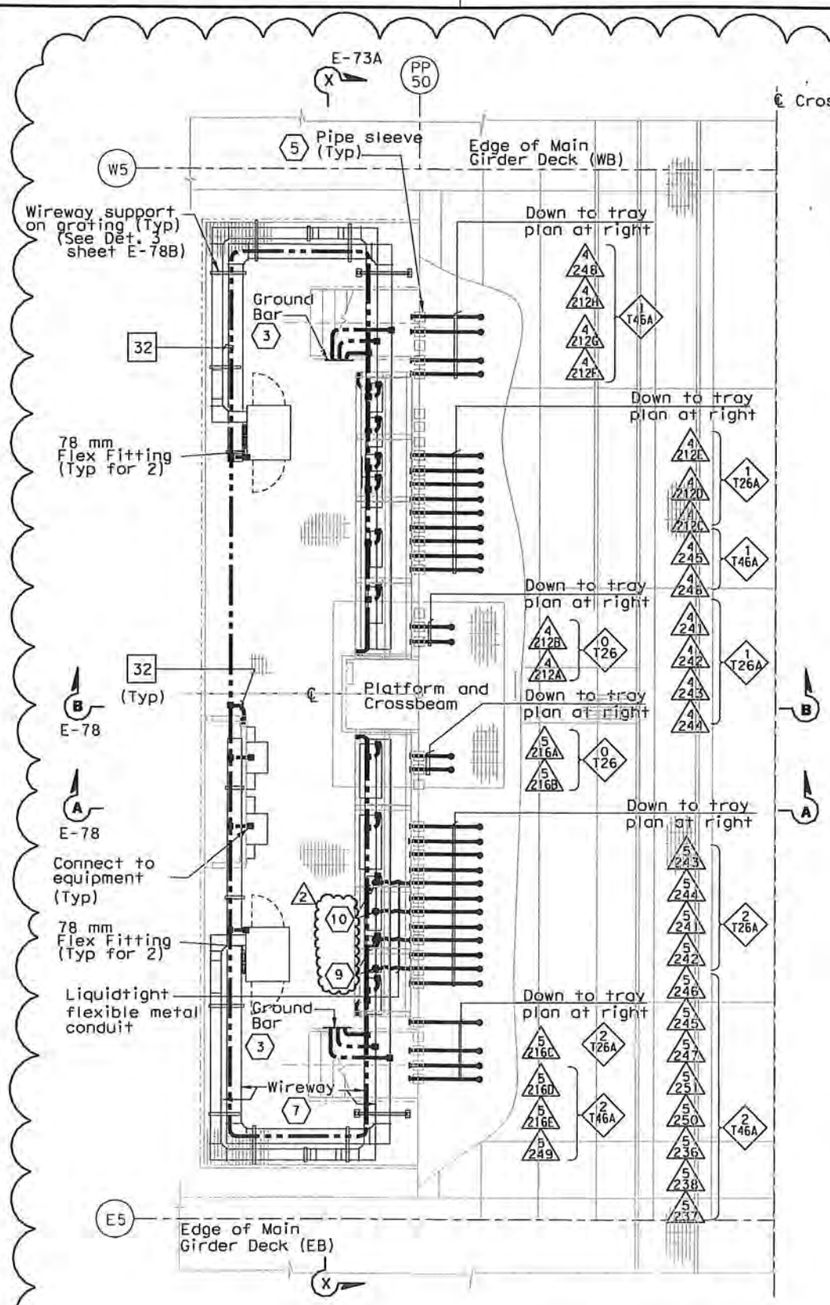

WIREWAY AND CONDUIT PLAN AT SERVICE PLATFORM

SCALE 1:40

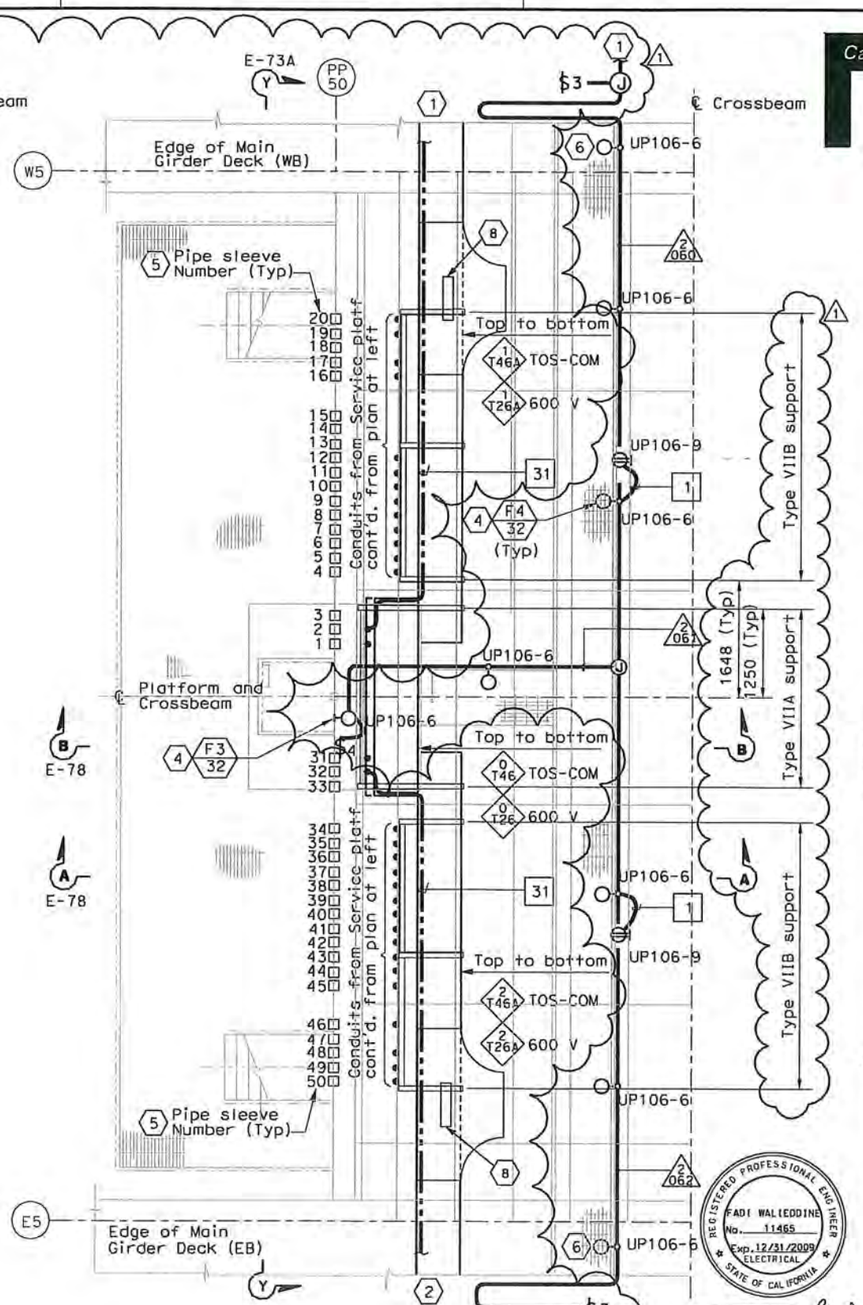

CABLE TRAY AND CONDUIT PLAN INSIDE CROSSBEAM

SCALE 1:40

Caltrans Metric

DIST	COUNTY	ROUTE	KILOMETER POST TOTAL PROJECT	SHEET No	TOTAL SHEETS
04	SF	80	13.2/13.9	168 R2	1204

Jens Erlingsson 12/19/02
REGISTERED ELECTRICAL ENGINEER DATE

12-6-04
PLANS APPROVAL DATE

REGISTERED PROFESSIONAL ENGINEER — JENS ERLINGSSON No. 8249 Exp. 9/10/06 ELECTRICAL — STATE OF CALIFORNIA

PB POWER, Inc.
A Parsons Brinckerhoff Company
303 Second St., Suite 700N
San Francisco, CA 94107-1317

The State of California or its officers or agents shall not be responsible for the accuracy or completeness of electronic copies of this plan sheet.

Caltrans now has a web site! To get to the web site, go to http://www.dot.ca.gov

SHEET NOTES:

1. For continuation inside WB girder, see sheets E-98 and E-114B.
2. For continuation inside EB girder, see sheet E-183 and E-114B.
3. For typical ground bar installation, see Detail 5 sheet E-78.
4. For typical lighting fixture installation see Details 2 and 3, sheet E-123.
5. Pipe sleeve without conduit going through is spare. Contractor to provide plug or cap at both ends. For location see Section Y-Y on sheet E-73A.
6. Locate light fixture approximate half way between girder wall and girder walkway.
7. For wireway numbers, see sheet E-73.
8. Fiber Optic splice closure, see Typical Fiber Optic Tray Detail Sheet E-355.
9. Terminate conduits at Terminal Box #TEL-6.
10. Terminate conduits at Terminal Box #COM-6.

NOTES:

1. Reference:
   - For circuit, conduit/cable tray schedules, see sheets starting at E-401.
2. For wireway support details, see AS sheets.
3. For location of pipe sleeves at the utility platform crossbeams, see Typical Crossbeam Details sheets.
4. For platform elevations, see sheet E-73A.

REGISTERED PROFESSIONAL ENGINEER — FADI WALIEDDINE No. 11465 Exp. 12/31/2009 ELECTRICAL — STATE OF CALIFORNIA

FOR REVISION ONLY 1 2

REQUEST FOR INFORMATION NOT ADDRESSED IN THIS CCO REMAIN IN FORCE

MARK	DATE	DESCRIPTIONS	BY	CH'D	CCO#
		REVISIONS			
2	06/25/09	SERVICE PLATFORM ELECTRICAL CHANGES	RR RY	RG FW	55
1	03/30/09	SERVICE PLATFORM ELECTRICAL CHANGES	RR MP	RG FW	55

CONTRACT CHANGE ORDER NO. 55
SHEET 46 OF 90

DETAILS
SAS SUPERSTRUCTURE GIRDER WESTBOUND PLATFORM 6 CONDUIT, LIGHTING, AND GROUNDING PLAN

SCALE AS NOTED

E-116

CALCULATED/ DESIGNED BY	JP	DATE 08/01	REVISED BY	DATE REVISED
CHECKED BY	BL	11/01		

STATE OF CALIFORNIA - DEPARTMENT OF TRANSPORTATION
Caltrans
DESIGN OVERSIGHT
BEHZAD GOLEMOHAMMADI

THIS PLAN IS ACCURATE FOR ELECTRICAL WORK ONLY.

ALL DIMENSIONS ARE IN MILLIMETERS UNLESS OTHERWISE SHOWN.

FOR REDUCED PLANS ORIGINAL SCALE IS IN MILLIMETERS 0 20 40 60 80

DGN FILE =>T:\13103\MS\pse\SAS Struc\CCO\SAS CCO55\2009-05-25_Issued for Submittal\04-0120F1_D168R02.dgn
USERNAME =>llorico

CU 04251 | EA 0120F1

LAST REVISION 00-00-00
DATE PLOTTED => 6/25/2009
TIME PLOTTED => 3:21:12 PM

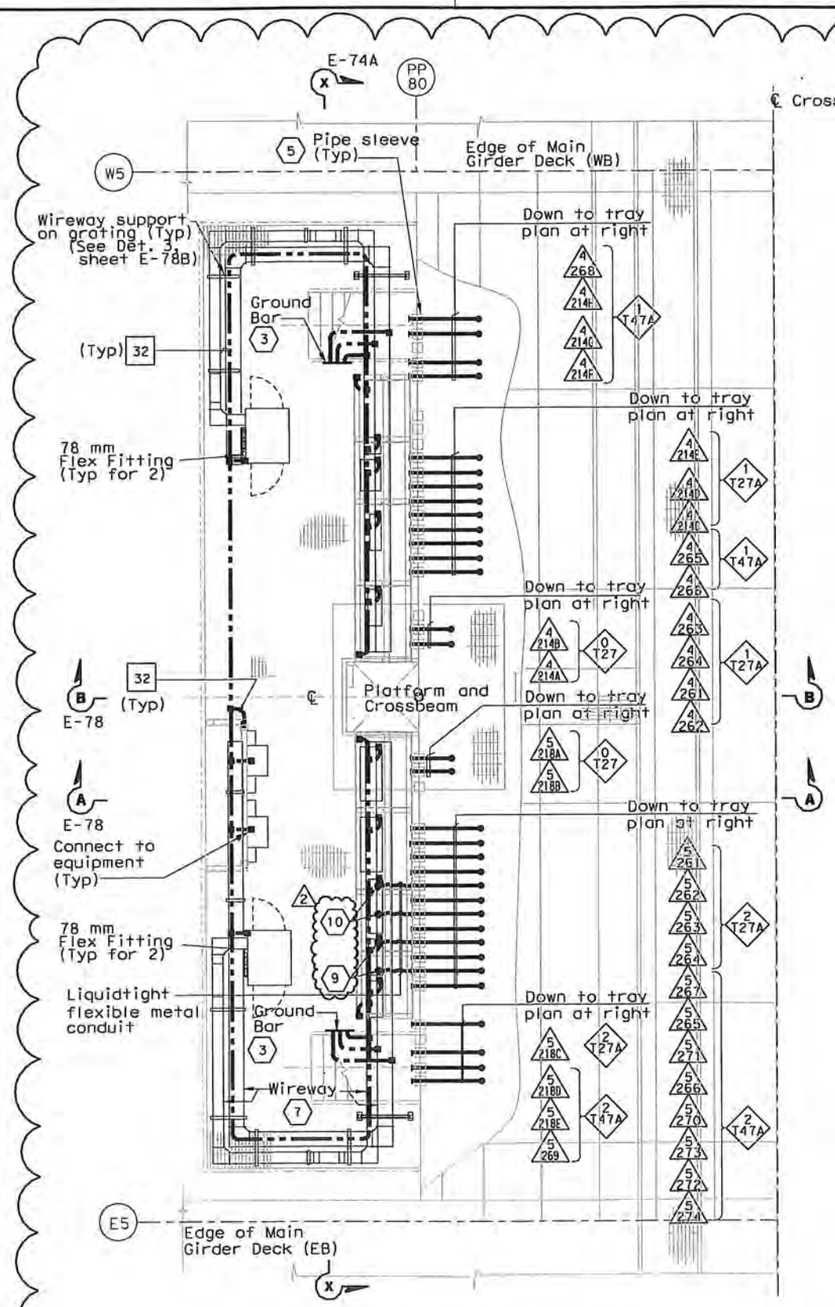

WIREWAY AND CONDUIT PLAN AT SERVICE PLATFORM

SCALE 1:40

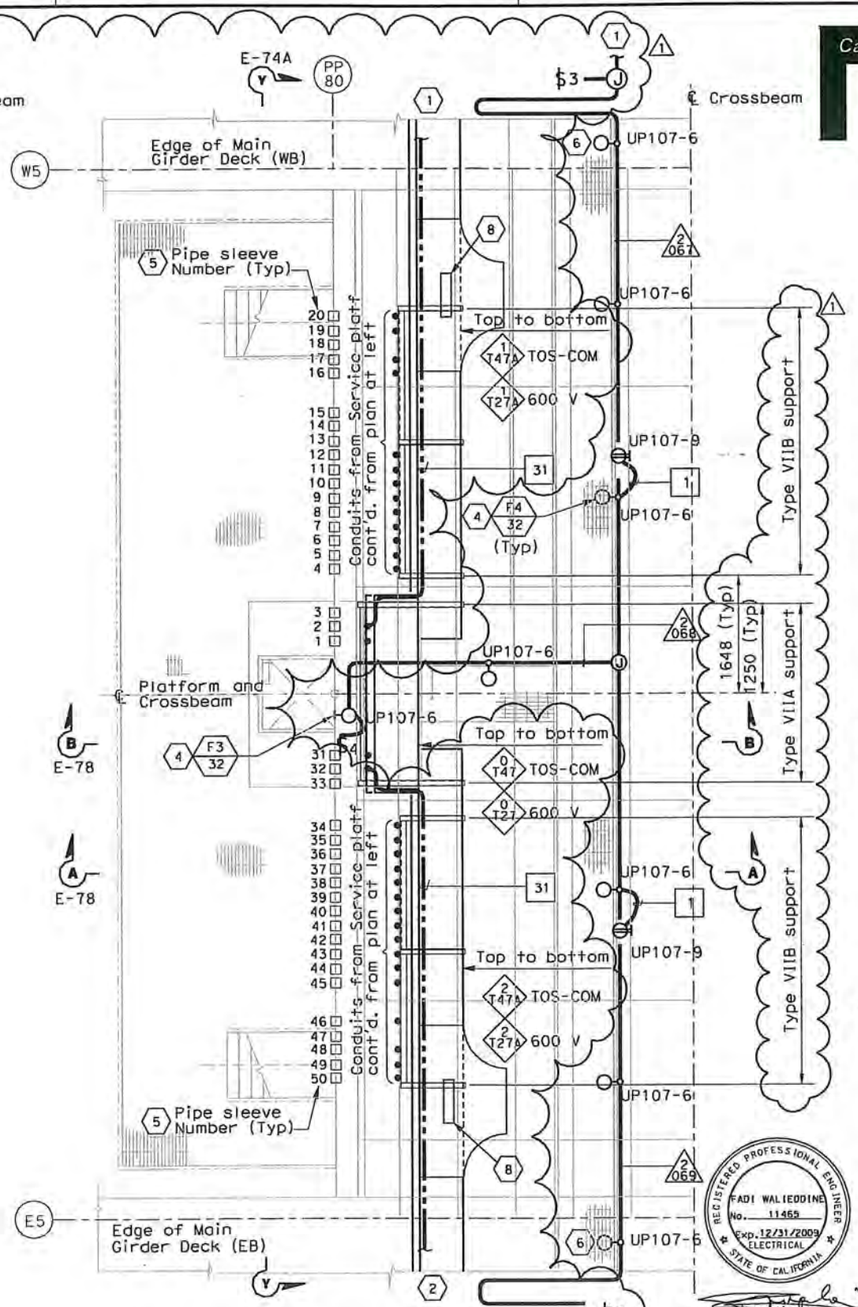

CABLE TRAY AND CONDUIT PLAN INSIDE CROSSBEAM

SCALE 1:40

Caltrans Metric

DIST	COUNTY	ROUTE	KILOMETER POST TOTAL PROJECT	SHEET No	TOTAL SHEETS
04	SF	80	13.2/13.9	169 R2	1204

Jens Erlingsson 12/19/02
REGISTERED ELECTRICAL ENGINEER DATE

12-6-04
PLANS APPROVAL DATE

REGISTERED PROFESSIONAL ENGINEER — JENS ERLINGSSON No. 8249 Exp. 9/30/06 ELECTRICAL — STATE OF CALIFORNIA

PB POWER, Inc.
A Parsons Brinckerhoff Company
303 Second St., Suite 700N
San Francisco, CA 94107-1317

The State of California or its officers or agents shall not be responsible for the accuracy or completeness of electronic copies of this plan sheet.

Caltrans now has a web site! To get to the web site, go to http://www.dot.ca.gov

SHEET NOTES:

1. For continuation inside WB girder, see sheets E-99 and E-114B.
2. For continuation inside EB girder, see sheet E-184 and E-114B.
3. For typical ground bar installation, see Detail 5 sheet E-78.
4. For typical lighting fixture installation see Details 2 and 3, sheet E-123.
5. Pipe sleeve without conduit going through is spare. Contractor to provide plug or cap at both ends. For location see Section Y-Y on sheet E-74A.
6. Locate light fixture approximate half way between girder wall and girder walkway.
7. For wireway numbers, see sheet E-74.
8. Fiber Optic splice closure, see Typical Fiber Optic Tray Detail Sheet E-355.
9. Terminate conduits at Terminal Box #TEL-7.
10. Terminate conduits at Terminal Box #COM-7.

NOTES:

1. Reference:
   - For circuit, conduit/cable tray schedules, see sheets starting at E-401.
2. For wireway support details, see AS sheets.
3. For location of pipe sleeves at the utility platform crossbeams, see Typical Crossbeam Details sheets.
4. For platform elevations, see sheet E-74A.

REGISTERED PROFESSIONAL ENGINEER — FADI WALIEDDINE No. 11465 Exp. 12/31/2009 ELECTRICAL — STATE OF CALIFORNIA

FOR REVISION ONLY 1 2

REQUEST FOR INFORMATION NOT ADDRESSED IN THIS CCO REMAIN IN FORCE

MARK	DATE	DESCRIPTIONS	BY	CH'D	CCO#
		REVISIONS			
2	06/25/09	SERVICE PLATFORM ELECTRICAL CHANGES	RR RY	RG FW	55
1	03/30/09	SERVICE PLATFORM ELECTRICAL CHANGES	RR MP	RG FW	55

CONTRACT CHANGE ORDER NO. 55
SHEET 47 OF 90

DETAILS
SAS SUPERSTRUCTURE GIRDER WESTBOUND PLATFORM 7 CONDUIT, LIGHTING, AND GROUNDING PLAN

SCALE AS NOTED

E-117

STATE OF CALIFORNIA - DEPARTMENT OF TRANSPORTATION
DESIGN OVERSIGHT: BEHZAD GOLEMOHAMMADI
CALCULATED/DESIGNED BY
CHECKED BY
REVISED
Caltrans

LAST REVISION 00-00-00
DATE PLOTTED => 6/25/2009
TIME PLOTTED => 3:20:45 PM

THIS PLAN IS ACCURATE FOR ELECTRICAL WORK ONLY.

ALL DIMENSIONS ARE IN MILLIMETERS UNLESS OTHERWISE SHOWN.

FOR REDUCED PLANS ORIGINAL SCALE IS IN MILLIMETERS 0 20 40 60 80

DGN FILE =>T:\13103\MS\pse\SAS Struc\CCO\SAS CC055\2009-05-25_Issued for Submittal\04-0120F1_0169R02.dgn
USERNAME =>jlarico
CU 04251
EA 0120F1

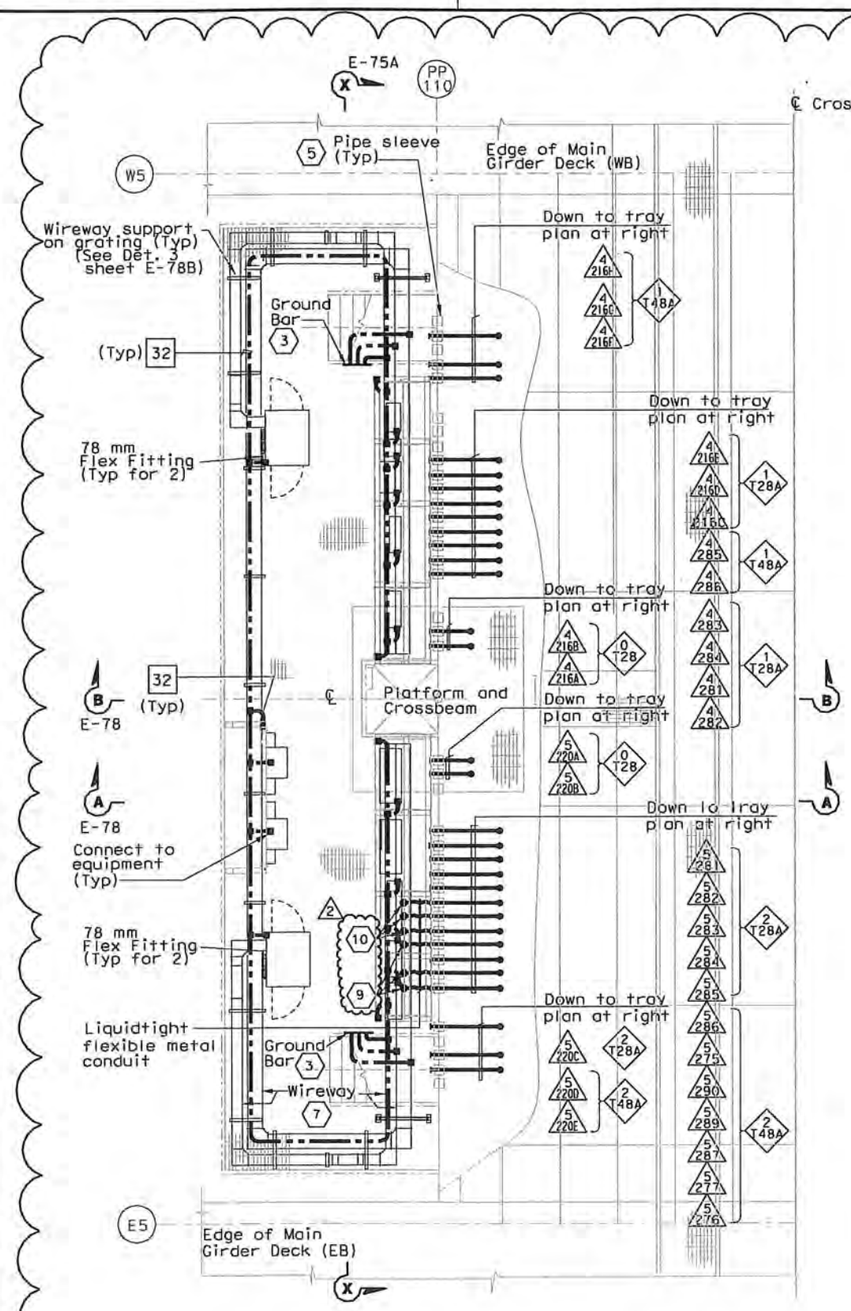

WIREWAY AND CONDUIT PLAN AT SERVICE PLATFORM

SCALE 1:40

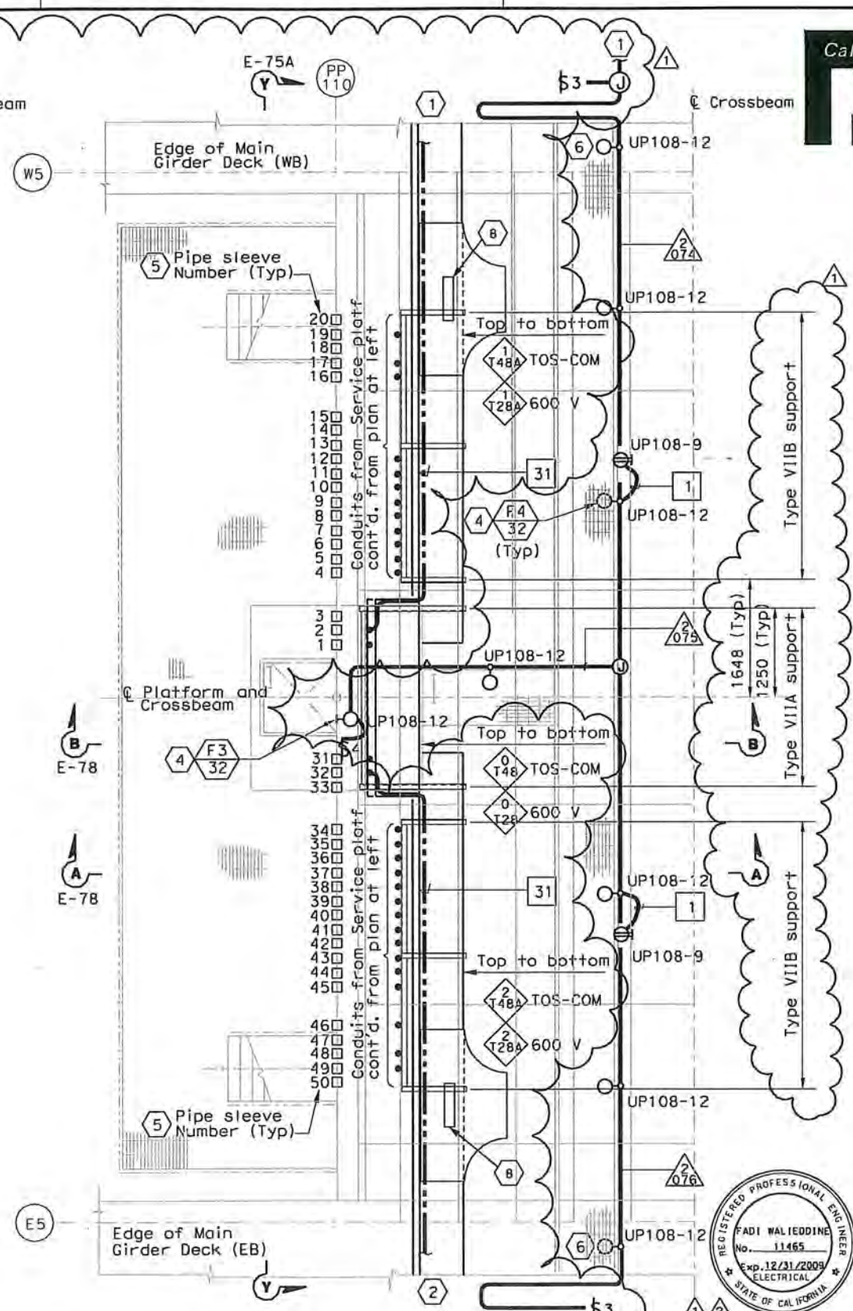

CABLE TRAY AND CONDUIT PLAN INSIDE CROSSBEAM

SCALE 1:40

DIST	COUNTY	ROUTE	KILOMETER POST TOTAL PROJECT	SHEET No.	TOTAL SHEETS
04	SF	80	13.2/13.9	170 R2	1204

Jens Erlingsson 12/19/02
REGISTERED ELECTRICAL ENGINEER DATE

12-6-04
PLANS APPROVAL DATE

REGISTERED PROFESSIONAL ENGINEER — JENS ERLINGSSON No. 8249 Exp. 9/30/06 ELECTRICAL — STATE OF CALIFORNIA

PB POWER, Inc.
A Parsons Brinckerhoff Company
303 Second St., Suite 700N
San Francisco, CA 94107-1317

The State of California or its officers or agents shall not be responsible for the accuracy or completeness of electronic copies of this plan sheet.

Caltrans now has a web site! To get to the web site, go to http://www.dot.ca.gov

SHEET NOTES:

1. For continuation inside WB girder, see sheets E-100 and E-114B.
2. For continuation inside EB girder, see sheet E-185 and E-114B.
3. For typical ground bar installation, see Detail 5 sheet E-78.
4. For typical lighting fixture installation see Details 2 and 3, sheet E-123.
5. Pipe sleeve without conduit going through is spare. Contractor to provide plug or cap at both ends. For location see Section Y-Y on sheet E-75A.
6. Locate light fixture approximate half way between girder wall and girder walkway.
7. For wireway numbers, see sheet E-75.
8. Fiber Optic splice closure, see Typical Fiber Optic Tray Detail Sheet E-355.
9. Terminate conduits at Terminal Box #TEL-8.
10. Terminate conduits at Terminal Box #COM-8.

NOTES:

1. Reference:
   - For circuit, conduit/cable tray schedules, see sheets starting at E-401.
2. For wireway support details, see AS sheets.
3. For location of pipe sleeves at the utility platform crossbeams, see Typical Crossbeam Details sheets.

REGISTERED PROFESSIONAL ENGINEER — FADI WALIEDDINE No. 11465 Exp. 12/31/2009 ELECTRICAL — STATE OF CALIFORNIA

MARK	DATE	REVISIONS DESCRIPTIONS	BY	CH'D	CCO#
		REQUEST FOR INFORMATION NOT ADDRESSED IN THIS CCO REMAIN IN FORCE			
2	06/25/09	SERVICE PLATFORM ELECTRICAL CHANGES	RR RY	RG FW	55
1	03/30/09	SERVICE PLATFORM ELECTRICAL CHANGES	RR MP	RG FW	55

1 2

CONTRACT CHANGE ORDER NO. 55
SHEET 48 OF 90
FOR REVISION ONLY

DETAILS
SAS SUPERSTRUCTURE GIRDER WESTBOUND PLATFORM 8 CONDUIT, LIGHTING, AND GROUNDING PLAN

SCALE AS NOTED

E-118

DATE	REVISED BY
7/01	JP
12/01	BL

CALCULATED/DESIGNED BY
CHECKED BY

DESIGN OVERSIGHT
BEHZAD GOLEMOHAMMADI

STATE OF CALIFORNIA - DEPARTMENT OF TRANSPORTATION
Caltrans

THIS PLAN IS ACCURATE FOR ELECTRICAL WORK ONLY.

ALL DIMENSIONS ARE IN MILLIMETERS UNLESS OTHERWISE SHOWN.

FOR REDUCED PLANS ORIGINAL SCALE IS IN MILLIMETERS 0 20 40 60 80

DGN FILE =>T:\13103\MS\pse\SAS Struc\CCO\SAS CCO55\2009-05-25_Issued for Submittal\04-0120F1_0170R02.dgn
USERNAME =>florico

CU 04251 | EA 0120F1

LAST REVISION 00-00-00
DATE PLOTTED => 6/25/2009
TIME PLOTTED => 3:20:13 PM

DIST	COUNTY	ROUTE	KILOMETER POST TOTAL PROJECT	SHEET No.	TOTAL SHEETS
04	SF	80	13.2/13.9	176 S1R1	1204

REGISTERED ELECTRICAL ENGINEER — 2/22/08 DATE

REGISTERED PROFESSIONAL ENGINEER — S. A. ESTOQUE, JR. — No. E-10151 — Exp. 12/31/2008 — STATE OF CALIFORNIA

PLANS APPROVAL DATE

PB AMERICAS, Inc.
A Parsons Brinckerhoff Company
303 Second St., Suite 700N
San Francisco, CA 94107-1317

The State of California or its officers or agents shall not be responsible for the accuracy or completeness of electronic copies of this plan sheet.

Caltrans now has a web site! To get to the web site, go to http://www.dot.ca.gov

Caltrans Metric

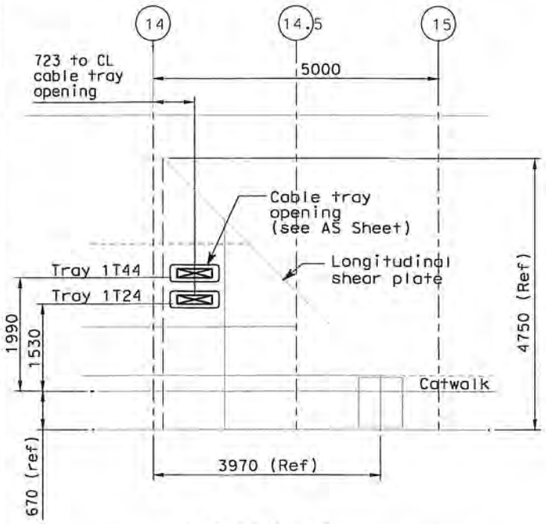

DETAIL 1
Cable penetration thru longitudinal shear plate
Scale 1:50

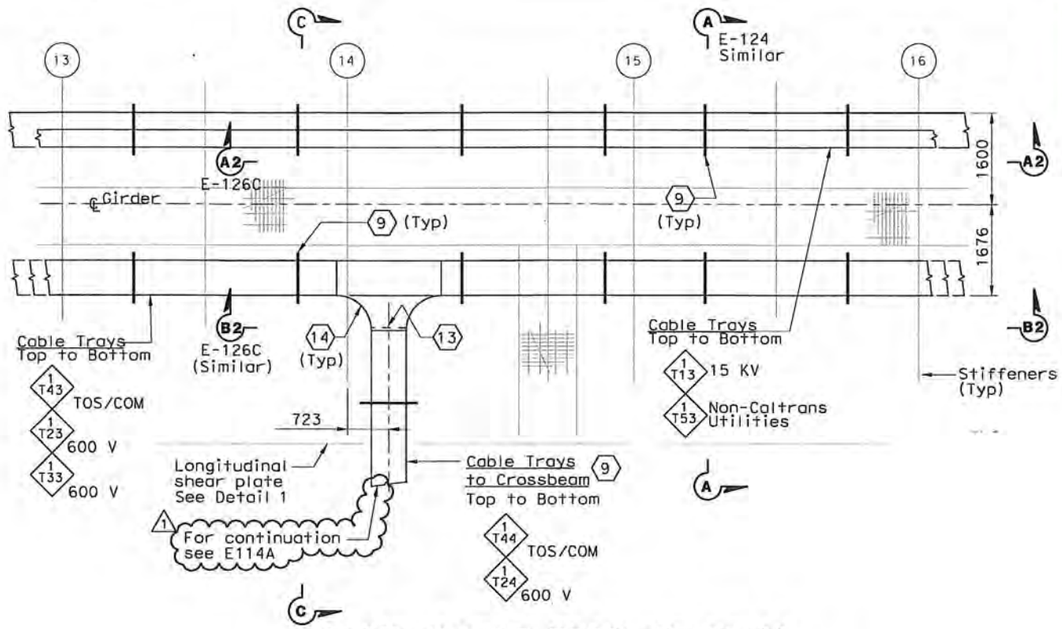

PLAN- CABLE TRAY AT PP-14
Scale 1:50

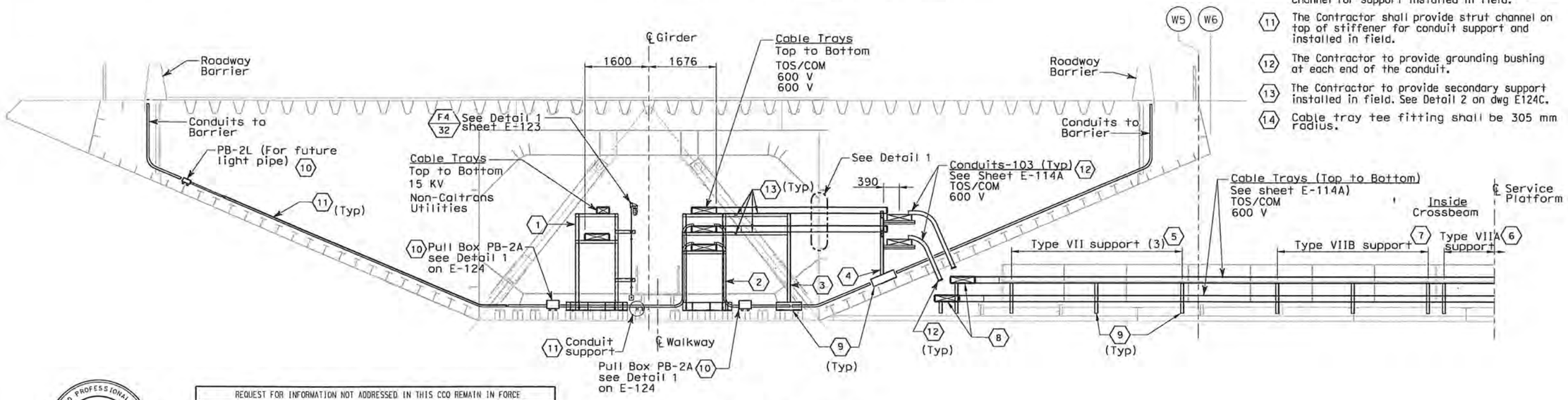

SECTION C - C
(Cable Troy and Support to Crossbeam Panel Point PP-14)
Scale 1:50

SHEET NOTES:

1. Type I, for cable tray supports details, see AS sheets.
2. Type II, for cable tray supports details, see AS sheets.
3. Type V, for cable tray supports details, see AS sheets.
4. Type VI, for cable tray supports details, see AS sheets.
5. Type VII, for cable tray supports details, see AS sheets.
6. Type VIIA, for cable tray supports details, see AS sheets.
7. Type VIIB, for cable tray supports details, see AS sheets.
8. The Contractor to provide cable tray support at each ends of cable tray fitting as required.
9. For cable tray support see AS-Sheets.
10. Pull Box PB-2A and PB-2L shall be located on top of stiffener. The Contractor shall provide strut channel for support installed in field.
11. The Contractor shall provide strut channel on top of stiffener for conduit support and installed in field.
12. The Contractor to provide grounding bushing at each end of the conduit.
13. The Contractor to provide secondary support installed in field. See Detail 2 on dwg E124C.
14. Cable tray tee fitting shall be 305 mm radius.

REQUEST FOR INFORMATION NOT ADDRESSED IN THIS CCO REMAIN IN FORCE					
1	03/30/09	SERVICE PLATFORM ELECTRICAL CHANGES	RG	FW	55
0	02/25/08	CABLE TRAY CHANGES	TW	RG SE	42S1
MARK	DATE	DESCRIPTIONS REVISIONS	BY	CH'D	CCO#

REGISTERED PROFESSIONAL ENGINEER — FADI WALIEDDINE — No. 11465 — Exp. 12/31/2009 ELECTRICAL — STATE OF CALIFORNIA

FOR REVISION ONLY 1

CONTRACT CHANGE ORDER NO. 55
SHEET 49 OF 90

DETAILS
SAS SUPERSTRUCTURE GIRDER WESTBOUND
TYPICAL TRAY AND CONDUIT INSTALLATION
SCALE AS NOTED

E-124A

DESIGN OVERSIGHT — BEHZAD GOLEMOHAMMADI
CALCULATED/DESIGNED BY
CHECKED BY
DATE REVISED BY
DATE REVISED

STATE OF CALIFORNIA - DEPARTMENT OF TRANSPORTATION — Caltrans

THIS PLAN IS ACCURATE FOR ELECTRICAL WORK ONLY.

ALL DIMENSIONS ARE IN MILLIMETERS UNLESS OTHERWISE SHOWN

FOR REDUCED PLANS ORIGINAL SCALE IS IN MILLIMETERS 0 20 40 60 80

DGN FILE =>T:\13103\MS\pse\SAS Struc\CCO\SAS CC055\04-0120f1_0176S01R01.dgn
USERNAME =>garciar

CU 04251 | EA 0120F1

LAST REVISION 00-00-00
DATE PLOTTED => 3/31/2009
TIME PLOTTED => 2:47:57 PM

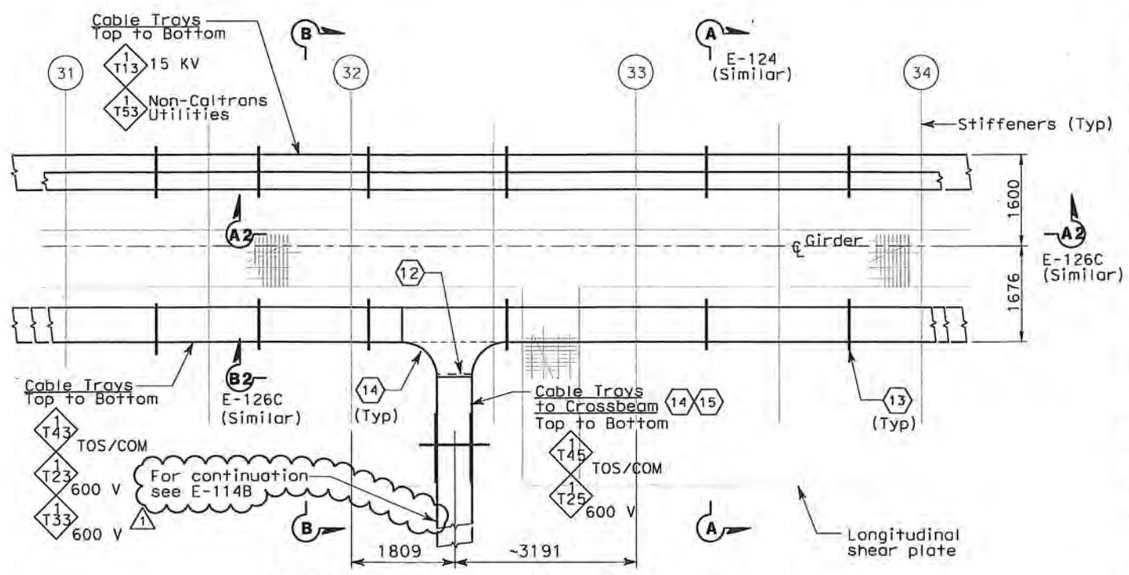

PLAN- CABLE TRAY AT PP 32

(SIMILAR FOR LOCATION AT PP 50, PP80 and PP-110)
SCALE 1:50

SHEET NOTES:

1. Type I, for cable tray supports details, see AS sheets.
2. Type II, for cable tray supports details, see AS sheets.
3. Type V, for cable tray supports details, see AS sheets.
4. Type VI, for cable tray supports details, see AS sheets.
5. Type VII, for cable tray supports details, see AS sheets.
6. Type VIIA, for cable tray supports details, see AS sheets.
7. Type VIIB, for cable tray supports details, see AS sheets.
8. The Contractor to provide cable tray support at each ends of cable tray fitting as required.
9. Pull Box PB-2A and PB-2L shall be located on top of stiffener. The Contractor shall provide strut channel for support installed in field.
10. The Contractor shall provide strut channel on top of stiffener for conduit support and installed in field.
11. The Contractor to provide grounding bushing at each end of the conduit.
12. The Contractor to provide suitable secondary tray support installed in field. See Detail 3 on drawing E-124C.
13. For cable tray support see AS-Sheets.
14. Cable tray tee fitting shall have 305mm radius.
15. For tray numbers to PP 50, PP-80 and PP-110, see sheet E-114B.

Caltrans Metric

DIST	COUNTY	ROUTE	KILOMETER POST TOTAL PROJECT	SHEET No	TOTAL SHEETS
04	SF	80	13.2/13.9	176 S2R1	1204

REGISTERED ELECTRICAL ENGINEER — 2/22/08 DATE

REGISTERED PROFESSIONAL ENGINEER — S. A. ESTOQUE, JR. — No. E-10151 — Exp. 12/31/2008 ELECTRICAL — STATE OF CALIFORNIA

PLANS APPROVAL DATE

PB AMERICAS, Inc.
A Parsons Brinckerhoff Company
303 Second St., Suite 700N
San Francisco, CA 94107-1317

The State of California or its officers or agents shall not be responsible for the accuracy or completeness of electronic copies of this plan sheet.

Caltrans now has a web site! To get to the web site, go to http://www.dot.ca.gov

REGISTERED PROFESSIONAL ENGINEER — FADI WALIEDDINE — No. 11465 — Exp. 12/31/2009 ELECTRICAL — STATE OF CALIFORNIA

FOR REVISION ONLY

1

REQUEST FOR INFORMATION NOT ADDRESSED IN THIS CCO REMAIN IN FORCE

MARK	DATE	DESCRIPTIONS	BY	CH'D	CCO#
		REVISIONS			
1	03/30/09	SERVICE PLATFORM ELECTRICAL CHANGES	RG	FW	55
0	02/25/08	CABLE TRAY CHANGES	TW	RG SE	42S1

CONTRACT CHANGE ORDER NO. 55
SHEET 50 OF 90

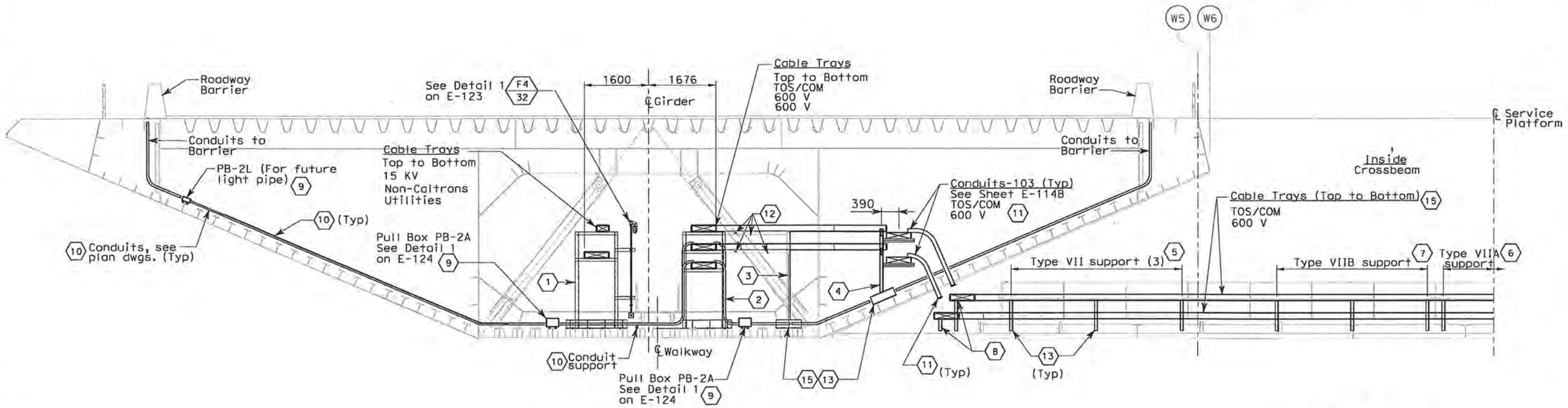

SECTION B-B

(TYPICAL CABLE TRAY AND SUPPORT TO CROSSBEAM
PP-32, PP-50, PP-80 AND PP-110)
SCALE 1:50

DETAILS
SAS SUPERSTRUCTURE GIRDER WESTBOUND
TYPICAL TRAY AND CONDUIT INSTALLATION

SCALE AS NOTED

E-124B

STATE OF CALIFORNIA - DEPARTMENT OF TRANSPORTATION — Caltrans
DESIGN OVERSIGHT — BEHZAD GOLEMOHAMMADI

DATE	REVISED BY	DATE REVISED
08/02	IAH	3/04
08/02	IAH	08/02

CALCULATED/DESIGNED BY — FK
CHECKED BY — IAH

LAST REVISION 00-00-00 — DATE PLOTTED => 3/31/2009 — TIME PLOTTED => 2:47:06 PM

THIS PLAN IS ACCURATE FOR ELECTRICAL WORK ONLY.

ALL DIMENSIONS ARE IN MILLIMETERS UNLESS OTHERWISE SHOWN

FOR REDUCED PLANS ORIGINAL SCALE IS IN MILLIMETERS 0 20 40 60 80

DGN FILE =>T:\13103\WS\pse\SAS Struc\CCO\SAS CCO55\04-0120f1_0176S02R01.dgn
USERNAME =>garcior

CU 04251

EA 0120F1

UTILITY PANEL UP-204 (CKT #2095)

Location: SAS SUPERSTRUCTURE SERVICE PLATFORM #4

LOAD DESCRIPTION	LTG	REC	OTH.	CB		CB	LTG	REC	OTH.	LOAD DESCRIPTION
Recept (2) Eastbound North Barrier		360		20/1	1 A 2	20/1				Spare
Spare				20/1	3 B 4	20/1				Spare
Recept (2) Service Platform #4		360		20/1	5 C 6	20/1				Spare
Recept (2) Girder		360		20/1	7 A 8	20/1	574			Girder Lighting (14)
Spare				20/1	9 B 10	30/1 (1)			2000	Controller Cabinet #TOS-4EA
Spare				20/1	11 C 12	20/1				Spare
TOTAL VA		1080					574		2000	TOTAL VA

LOAD SUMMARY (INCLUDES .90 PF) (VA)

Lighting (At 100%): 574
Gen Use (1st 10 kVA at 100% Plus 50% of remainder): 3080

TOTAL kVA: 3.654

BALANCE (kVA)

Phase A - 1.294
Phase B - 2.000
Phase C - 0.360

VOLTAGE: 208/120 V
PHASE/WIRES: 3-phase, 4-wire
BUS ~~RATING: 100 A~~
MAIN: MAIN LUGS ONLY (1)
MOUNTING: ~~Surface~~
K.A.I.C.: 10

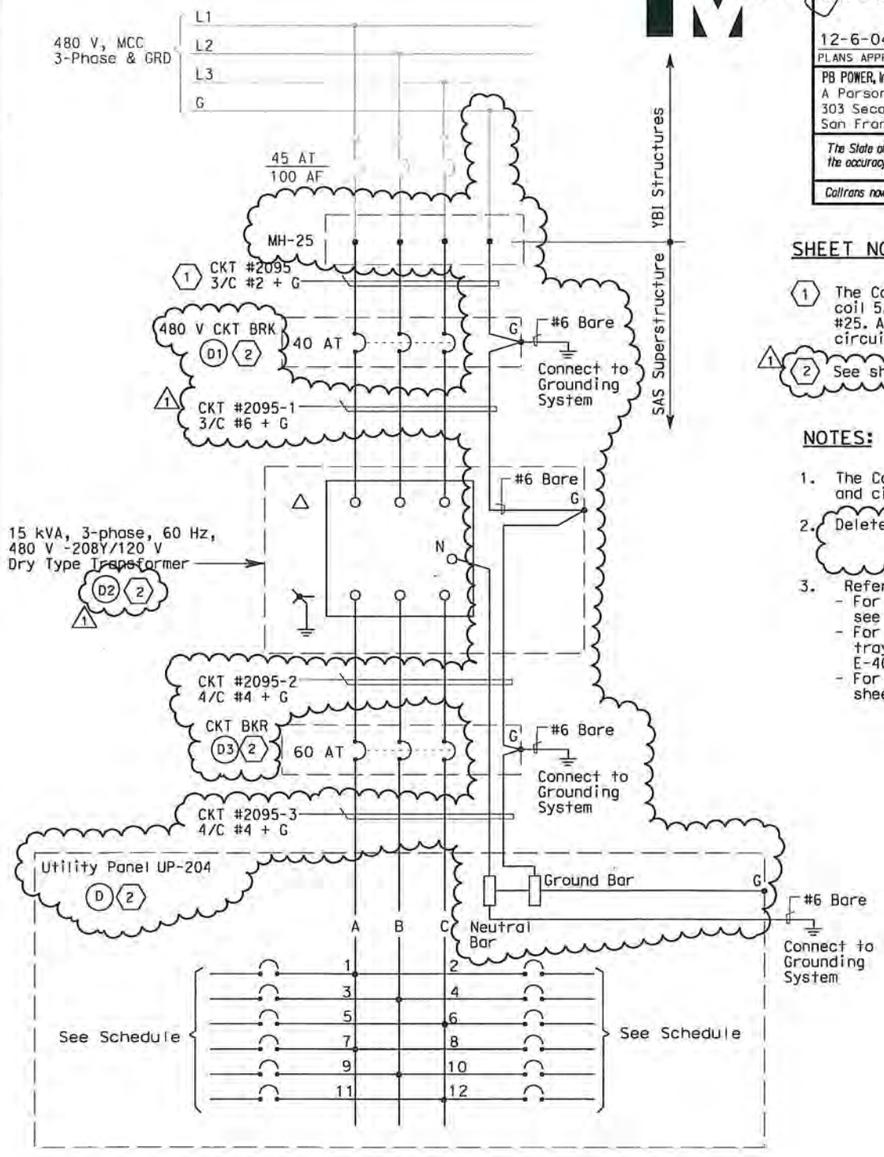

Caltrans Metric

DIST	COUNTY	ROUTE	KILOMETER POST TOTAL PROJECT	SHEET No	TOTAL SHEETS
04	SF	80	13.2/13.9	199 R1	1204

Jens Erlingsson 12/19/02
REGISTERED ELECTRICAL ENGINEER DATE

12-6-04
PLANS APPROVAL DATE

REGISTERED PROFESSIONAL ENGINEER JENS ERLINGSSON No. 8249 Exp. 9/30/06 ELECTRICAL STATE OF CALIFORNIA

PB POWER, Inc.
A Parsons Brinckerhoff Company
303 Second St., Suite 700N
San Francisco, CA 94107-1317

The State of California or its officers or agents shall not be responsible for the accuracy or completeness of electronic copies of this plan sheet.

Caltrans now has a web site! To get to the web site, go to http://www.dot.ca.gov

SHEET NOTES:

(1) The Contractor shall extend and coil 5.0 meters of cable in manhole #25. All cables shall be tagged with circuit numbers as shown.

(1) (2) See sheet E-71 for Equipment Schedule.

NOTES:

1. The Contractor shall provide nameplates and circuit schedules as shown. (1)
2. Deleted.
3. References:
   - For LVCC-B single line diagram, see sheets E-32 thru E-34.
   - For circuit and conduit/cable tray schedules, see sheets starting at E-401.
   - For pull box schedule, see sheet E-169.

REGISTERED PROFESSIONAL ENGINEER FADI WALIEDDINE No. 11465 Exp. 12/31/2009 ELECTRICAL STATE OF CALIFORNIA

FOR REVISION ONLY (1)

REQUEST FOR INFORMATION NOT ADDRESSED IN THIS CCO REMAIN IN FORCE

MARK	DATE	DESCRIPTIONS	BY	CH'D	CCO#
		REVISIONS			
1	03/30/09	SERVICE PLATFORM ELECTRICAL CHANGES	RR MP	RG FW	55

CONTRACT CHANGE ORDER NO. 55
SHEET 51 OF 90

DETAILS
SAS SUPERSTRUCTURE ROADWAY EASTBOUND
PANEL UP-204 SCHEDULE
NO SCALE

E-150

DESIGN OVERSIGHT	CALCULATED/ DESIGNED BY	CHECKED BY	DATE	REVISED BY	DATE REVISED
BEHZAD GOLEMOHAMMADI	JP	BL	09/01		11/01

STATE OF CALIFORNIA - DEPARTMENT OF TRANSPORTATION
Caltrans

FOR REDUCED PLANS ORIGINAL SCALE IS IN MILLIMETERS 0 20 40 60 80

DGN FILE =>T:\13103\MS\pse\SAS Struc\CCO\SAS CCO55\04-0120f1_0199R01.dgn
USERNAME =>garciar

CU 04251 EA 0120F1

LAST REVISION 00-00-00 DATE PLOTTED => 3/31/2009 TIME PLOTTED => 2:46:24 PM

UTILITY PANEL UP-205 (CKT #2096)

Location: SAS SUPERSTRUCTURE SERVICE PLATFORM #5

LOAD DESCRIPTION	LTG	REC	OTH.	CB			CB	LTG	REC	OTH.	LOAD DESCRIPTION
Recept (2) Eastbound North Barrier		360		20/1	1	A 2	20/1				Spare
Spare				20/1	3	B 4	20/1				Spare
Recept (2) Service Platform #5		360		20/1	5	C 6	20/1				Spare
Recept (2) Girder		360		20/1	7	A 8	20/1	738			Girder Lighting (18)
RTU #10E (PLC Power Supply)			100	20/1	9	B 10	20/1				Spare
RTU-#10E (Lighting & Receptacle)	105	180	150	20/1	11	C 12	20/1				Spare
TOTAL WATTS	105	1260	250					738			TOTAL VA

LOAD SUMMARY (INCLUDES .90 PF) (VA)

Lighting (At 100%): 843
Gen Use (1st 10 kVA at 100% Plus 50% of remainder): 1540

BALANCE (kVA)

Phase A - 1.458 (3)
Phase B - 0.100
Phase C - 0.795

VOLTAGE: 208Y/120 V
PHASE/WIRES: 3-phase, 4-wire
BUS ~~RATING: 100 A~~
MAIN: MAIN LUGS ONLY (3)
MOUNTING: ~~Surface~~
K.A.I.C.: 10

TOTAL kVA: 2.353 (3)

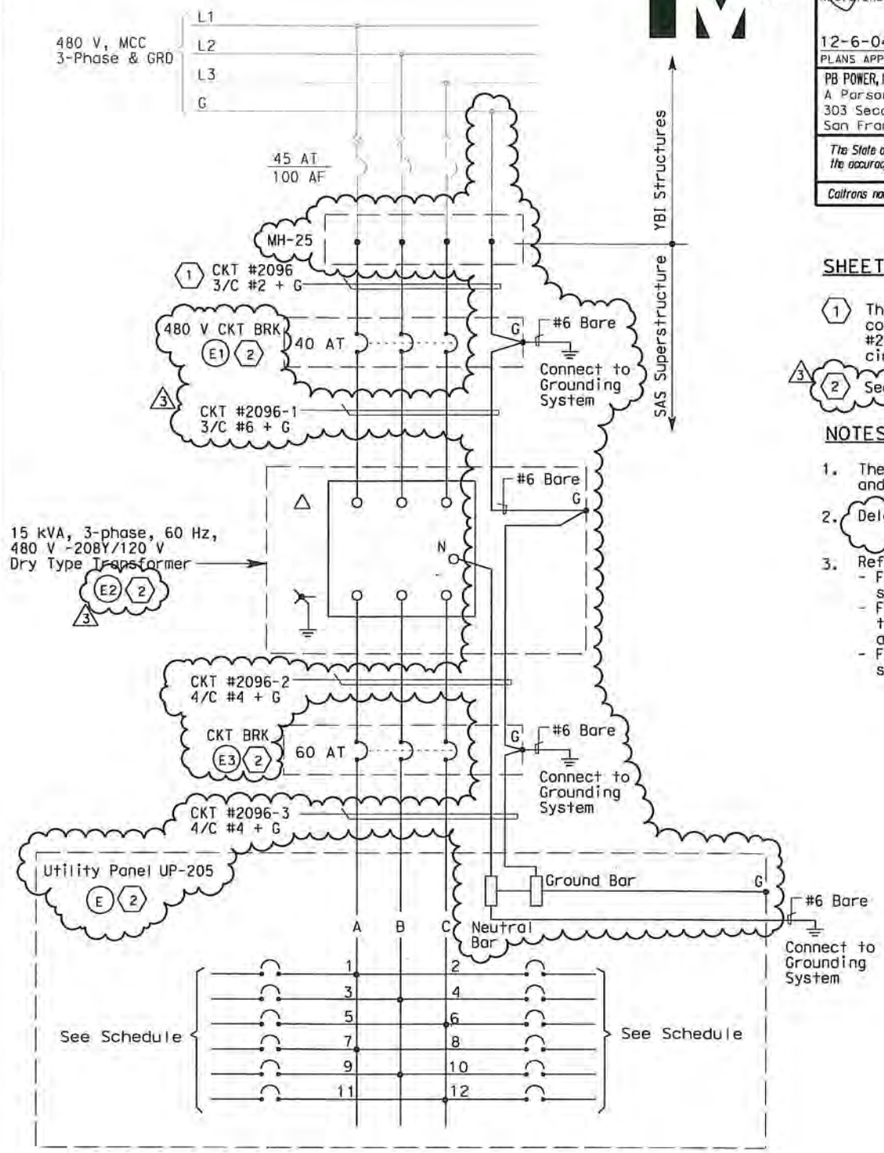

Caltrans Metric

DIST	COUNTY	ROUTE	KILOMETER POST TOTAL PROJECT	SHEET No	TOTAL SHEETS
04	SF	80	13.2/13.9	200 R3	1204

12/19/02
REGISTERED ELECTRICAL ENGINEER DATE

REGISTERED PROFESSIONAL ENGINEER — JENS ERLINGSSON — No. 8249 — Exp. 9/30/06 ELECTRICAL — STATE OF CALIFORNIA

12-6-04
PLANS APPROVAL DATE

PB POWER, Inc.
A Parsons Brinckerhoff Company
303 Second St., Suite 700N
San Francisco, CA 94107-1317

The State of California or its officers or agents shall not be responsible for the accuracy or completeness of electronic copies of this plan sheet.

Caltrans now has a web site! To get to the web site, go to http://www.dot.ca.gov

SHEET NOTES:

(1) The Contractor shall extend and coil 5.0 meters of cable in manhole #25. All cables shall be tagged with circuit numbers as shown.

(3) (2) See sheet E-72 for Equipment Schedule.

NOTES:

1. The Contractor shall provide nameplates and circuit schedules as shown.
2. Deleted (3)
3. References:
   - For LVCC-B single line diagram, see sheets E-32 thru E-34.
   - For circuit and conduit/cable tray schedules, see sheets starting at E-401.
   - For pull box schedule, see sheet E-169.

REGISTERED PROFESSIONAL ENGINEER — MARWELL FUMIO TAKATA — No. E 8651 — Exp. 9/30/2008 ELECTRICAL — STATE OF CALIFORNIA
FOR REVISION ONLY (1)

REGISTERED PROFESSIONAL ENGINEER — S. A. ESTOQUE, JR. — No. E-10151 — Exp. 12/31/2008 ELECTRICAL — STATE OF CALIFORNIA
FOR REVISION ONLY (2)

REGISTERED PROFESSIONAL ENGINEER — FADI WALIEDDINE — No. 11465 — Exp. 12/31/2009 ELECTRICAL — STATE OF CALIFORNIA
FOR REVISION ONLY (3)

MARK	DATE	DESCRIPTIONS	BY	CH'D	CCO#
		REQUEST FOR INFORMATION NOT ADDRESSED IN THIS CCO REMAIN IN FORCE			
3	03/30/09	SERVICE PLATFORM ELECTRICAL CHANGES	RR MP	RG FW	55
2	03/04/08	BARRIER MODIFICATIONS	JS BM	RG SE	44
1	02/19/08	ELECTRICAL MODIFICATIONS	MP EL	RR	42

REVISIONS

CONTRACT CHANGE ORDER NO. 55
SHEET 52 OF 90

DETAILS
SAS SUPERSTRUCTURE ROADWAY EASTBOUND
PANEL UP-205 SCHEDULE
NO SCALE

E-151

DESIGN OVERSIGHT	CALCULATED/ DESIGNED BY	CHECKED BY	DATE 7/01	REVISED BY	DATE REVISED
BEHZAD GOLEMOHAMMADI	JP	BL	12/01		

STATE OF CALIFORNIA - DEPARTMENT OF TRANSPORTATION
Caltrans

THIS PLAN ACCURATE FOR ELECTRICAL WORK ONLY.

LAST REVISION 00-00-00 — DATE PLOTTED => 3/31/2009 — TIME PLOTTED => 2:45:57 PM

FOR REDUCED PLANS ORIGINAL SCALE IS IN MILLIMETERS 0 20 40 60 80

DGN FILE =>T:\13103\MS\pse\SAS Struc\CCO\SAS CC055\04-0120F1_0200R03.dgn
USERNAME =>garciar

CU 04251

EA 0120F1

UTILITY PANEL UP-206 (CKT #2097)

Location: SAS SUPERSTRUCTURE SERVICE PLATFORM, #6

LOAD DESCRIPTION	LTG	REC	OTH.	CB			CB	LTG	REC	OTH.	LOAD DESCRIPTION
Recept (2) Eastbound North Barrier		360		20/1	1	A 2	20/1				Spare
Spare				20/1	3	B 4	20/1				Spare
Recept (2) Service Platform #6		360		20/1	5	C 6	20/1	738			Girder Lighting (18)
Recept (2) Girder		360		20/1	7	A 8	20/1	738			Girder Lighting (18)
Navigation Relay Cabinet #NAP-6E			600	20/1	9	B 10	30/1 (1)			2000	Controller Cabinet #TOS-6EA
Spare				20/1	11	C 12	20/1				Spare
TOTAL VA		1080	600					1476		2000	TOTAL VA

LOAD SUMMARY (INCLUDES .90 PF) (VA)

Lighting (At 100%): 1476
Gen Use (1st 10 kVA at 100% Plus 50% of remainder): 3680

TOTAL kVA: 5.156

BALANCE (kVA)

Phase A - 1.458
Phase B - 2.600
Phase C - 1.098

VOLTAGE: 208/120 V
PHASE/WIRES: 3-phase, 4-Wire
BUS ~~RATING: 100 A~~
MAIN MAIN LUGS ONLY (1)
MOUNTING: ~~Surface~~
K.A.I.C.: 10

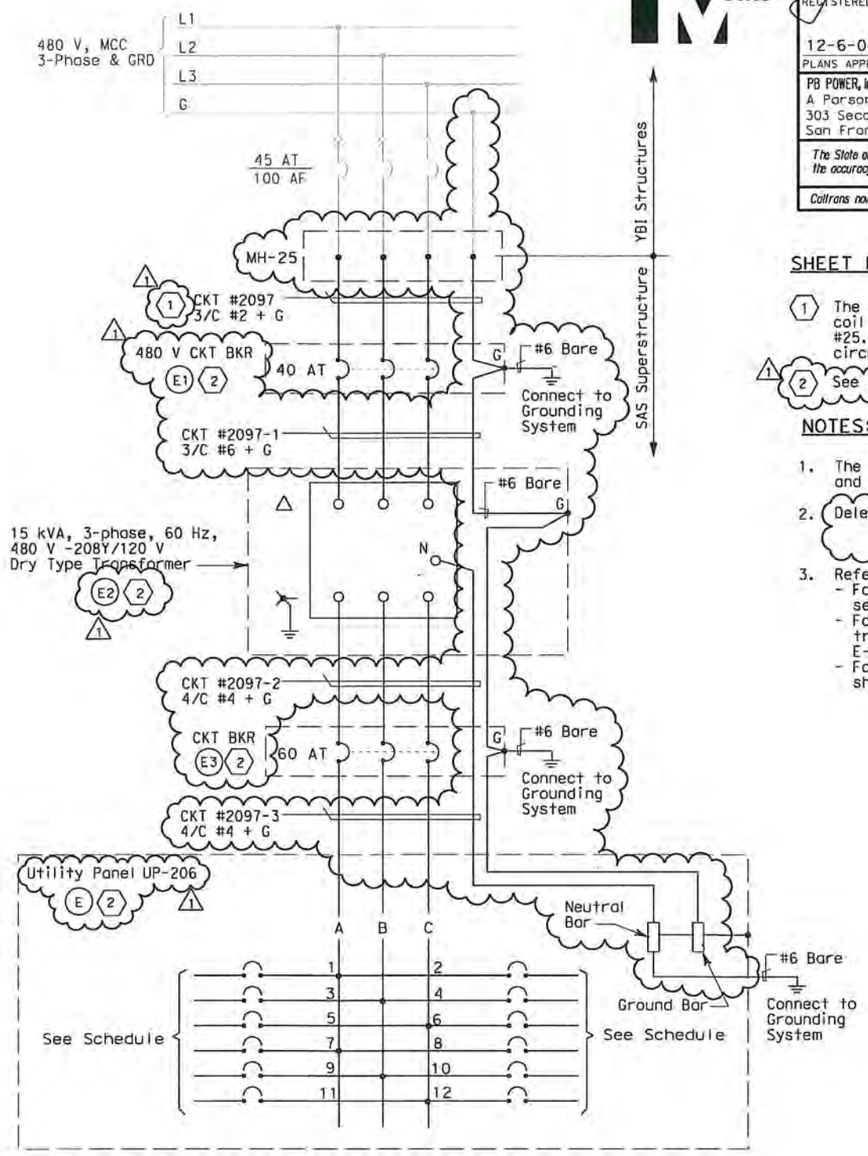

DIST	COUNTY	ROUTE	KILOMETER POST TOTAL PROJECT	SHEET No	TOTAL SHEETS
04	SF	80	13.2/13.9	201 R1	1204

Jens Erlingsson 12/19/02
REGISTERED ELECTRICAL ENGINEER DATE

12-6-04
PLANS APPROVAL DATE

REGISTERED PROFESSIONAL ENGINEER — JENS ERLINGSSON No. 8249 Exp. 9/30/06 ELECTRICAL — STATE OF CALIFORNIA

PB POWER, Inc.
A Parsons Brinckerhoff Company
303 Second St., Suite 700N
San Francisco, CA 94107-1317

The State of California or its officers or agents shall not be responsible for the accuracy or completeness of electronic copies of this plan sheet.

Caltrans now has a web site! To get to the web site, go to http://www.dot.ca.gov

SHEET NOTES:

(1) The Contractor shall extend and coil 5.0 meters of cable in manhole #25. All cables shall be tagged with circuit numbers as shown.

(1) (2) See sheet E-73 for Equipment Schedule.

NOTES:

1. The Contractor shall provide nameplates and circuit schedules as shown. (1)
2. Deleted.
3. References:
   - For LVCC-B single line diagram, see sheets E-32 thru E-34.
   - For circuit and conduit/cable tray schedules, see sheets starting at E-401.
   - For pull box schedule, see sheet E-169.

DATE	REVISED BY	DATE REVISED
09/01	JP	11/01

CALCULATED/DESIGNED BY: BL
CHECKED BY: BEHZAD GOLEMOHAMMADI
DESIGN OVERSIGHT

STATE OF CALIFORNIA - DEPARTMENT OF TRANSPORTATION
Caltrans

REGISTERED PROFESSIONAL ENGINEER — FADI WALIEDDINE No. 11465 Exp. 12/31/2009 ELECTRICAL — STATE OF CALIFORNIA

FOR REVISION ONLY (1)

REQUEST FOR INFORMATION NOT ADDRESSED IN THIS CCO REMAIN IN FORCE					
(1)	03/30/09	SERVICE PLATFORM ELECTRICAL CHANGES	RR MP	RG FW	55
MARK	DATE	DESCRIPTIONS	BY	CH'D	CCO#
REVISIONS					

CONTRACT CHANGE ORDER NO. 55
SHEET 53 OF 90

DETAILS
SAS SUPERSTRUCTURE ROADWAY EASTBOUND
PANEL UP-206 SCHEDULE
NO SCALE

E-152

LAST REVISION 00-00-00
DATE PLOTTED => 3/31/2009
TIME PLOTTED => 2:45:04 PM

FOR REDUCED PLANS ORIGINAL SCALE IS IN MILLIMETERS 0 20 40 60 80

DGN FILE =>T:\13103\MS\pse\SAS Struc\CCO\SAS CCO55\04-0120f1_0201R01.dgn
USERNAME =>garcior

CU 04251

EA 0120F1

UTILITY PANEL UP-207 (CKT #2098)

Location: SAS SUPERSTRUCTURE SERVICE PLATFORM #7

LOAD DESCRIPTION	LTG	REC	OTH.	CB		CB	LTG	REC	OTH.	LOAD DESCRIPTION
Recept (1) Eastbound North Barrier		180		20/1	1 A 2	20/1				Spare
Spare				20/1	3 B 4	20/1				Spare
Recept (2) Service Platform #7		360		20/1	5 C 6	20/1				Spare
Recept (2) Girder		360		20/1	7 A 8	20/1	738			Girder Lighting (18)
Spare				20/1	9 B 10	30/1 (1)			2000	Controller Cabinet #TOS-7EA
↓				20/1	11 C 12	20/1				Spare
TOTAL WATTS		900					738		2000	TOTAL VA

LOAD SUMMARY (INCLUDES .90 PF) (VA)

Lighting (At 100%): 738
Gen Use (1st 10 kVA at 100% Plus 50% of remainder): 2900

TOTAL kVA: 3.638

BALANCE (kVA)

Phase A - 1.278
Phase B - 2.000
Phase C - 0.360

VOLTAGE: 208/120 V
PHASE/WIRES: 3-phase, 4-wire
BUS ~~RATING: 100 A~~
MAIN: MAIN LUGS ONLY (1)
MOUNTING: Surface
K.A.I.C.: 10

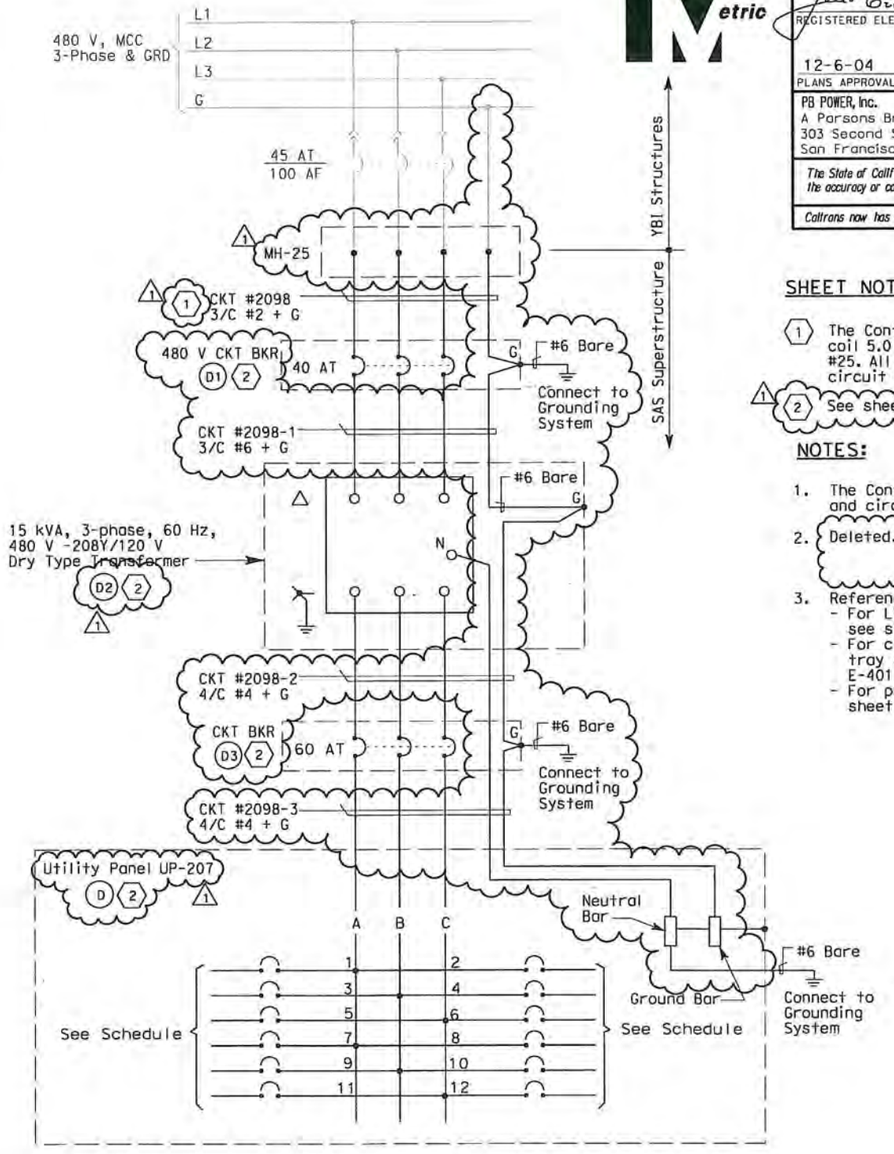

SHEET NOTES:

(1) The Contractor shall extend and coil 5.0 meters of cable in manhole #25. All cables shall be tagged with circuit numbers as shown.

(1) (2) See sheet E-74 for Equipment Schedule.

NOTES:

1. The Contractor shall provide nameplates and circuit schedules as shown.
2. Deleted. (1)
3. References:
   - For LVCC-8 single line diagram, see sheets E-32 thru E-34.
   - For circuit and conduit/cable tray schedules, see sheets starting at E-401.
   - For pull box schedule, see sheet E-169.

DIST	COUNTY	ROUTE	KILOMETER POST TOTAL PROJECT	SHEET No.	TOTAL SHEETS
04	SF	80	13.2/13.9	202 R1	1204

12/19/02
REGISTERED ELECTRICAL ENGINEER DATE

12-6-04
PLANS APPROVAL DATE

REGISTERED PROFESSIONAL ENGINEER — JENS ERLINGSSON No. 8249 Exp. 9/30/06 ELECTRICAL — STATE OF CALIFORNIA

PB POWER, Inc.
A Parsons Brinckerhoff Company
303 Second St., Suite 700N
San Francisco, CA 94107-1317

The State of California or its officers or agents shall not be responsible for the accuracy or completeness of electronic copies of this plan sheet.

Caltrans now has a web site! To get to the web site, go to http://www.dot.ca.gov

DATE	REVISED BY	DATE REVISED
7/01	JP	12/01 BL

CALCULATED/DESIGNED BY
CHECKED BY

STATE OF CALIFORNIA - DEPARTMENT OF TRANSPORTATION
Caltrans

DESIGN OVERSIGHT
BEHZAD GOLEMOHAMMADI

REGISTERED PROFESSIONAL ENGINEER — FADI WALIEDDINE No. 11465 Exp. 12/31/2009 ELECTRICAL — STATE OF CALIFORNIA

FOR REVISION ONLY (1)

REQUEST FOR INFORMATION NOT ADDRESSED IN THIS CCO REMAIN IN FORCE					
MARK	DATE	REVISIONS	BY	CH'D	CCO#
(1)	03/30/09	SERVICE PLATFORM ELECTRICAL CHANGES	RR MP	RG FW	55

CONTRACT CHANGE ORDER NO. 55
SHEET 54 OF 90

DETAILS
SAS SUPERSTRUCTURE ROADWAY EASTBOUND
PANEL UP-207 SCHEDULE
NO SCALE

E-153

LAST REVISION 00-00-00
DATE PLOTTED => 4/3/2009
TIME PLOTTED => 9:09:23 AM

FOR REDUCED PLANS ORIGINAL SCALE IS IN MILLIMETERS 0 20 40 60 80

DGN FILE =>T:\13103\MS\pse\SAS Struc\CCO\SAS CCO55\2009-03-30_Issued for Submittal\04-0120F1_0202R01.dgn
USERNAME =>garciar

CU 04251 EA 0120F1

UTILITY PANEL UP-208 (CKT #2099)

Location: SAS SUPERSTRUCTURE SERVICE PLATFORM #8

LOAD DESCRIPTION	LTG	REC	OTH.	CB		CB	LTG	REC	OTH.	LOAD DESCRIPTION
Recept (3) Eastbound North Barrier		540		20/1	1 A 2	20/1			10	CB-243A
Spare				20/1	3 B 4	20/1			10	CB-243B
Recept (2) Service Platform #8		360		20/1	5 C 6	20/1			20	CB-243C,CB-244C
Recept (3) Girder		540		20/1	7 A 8	20/1	984			Girder Lighting (24)
RTU-#11E (PLC Power Supply)			100	20/1	9 B 10	20/1	697			Girder Lighting (17)
RTU-#11E (Lighting & Receptacle)	105	180	150	20/1	11 C 12	20/1				Spare
Spare				20/1	13 A 14	20/1				Spare
Navigation Relay Cabinet # NAP-8			600	20/1	15 B 16	20/1				Spare
Spare				20/1	17 C 18	20/1				
				20/1	19 A 20	20/1				
				20/1	21 B 22	20/1				
				20/1	23 C 24	20/1				
TOTAL VA	105	1620	850				1681		40	TOTAL VA

LOAD SUMMARY (INCLUDES .90 PF) (VA)	BALANCE (kVA)	
Lighting (At 100%): 1786	Phase A - 2.074	VOLTAGE: 208Y/120 V
Gen Use (1st 10 kVA at 100% Plus 50% of remainder): 2,530	Phase B - 1.407	PHASE/WIRES: 3-phase, 4-wire
	Phase C - 0.815	BUS RATING: 100 A
TOTAL kVA: 4.296		MAIN: MAIN LUGS ONLY (2)
		MOUNTING: Surface
		K.A.I.C.: 10

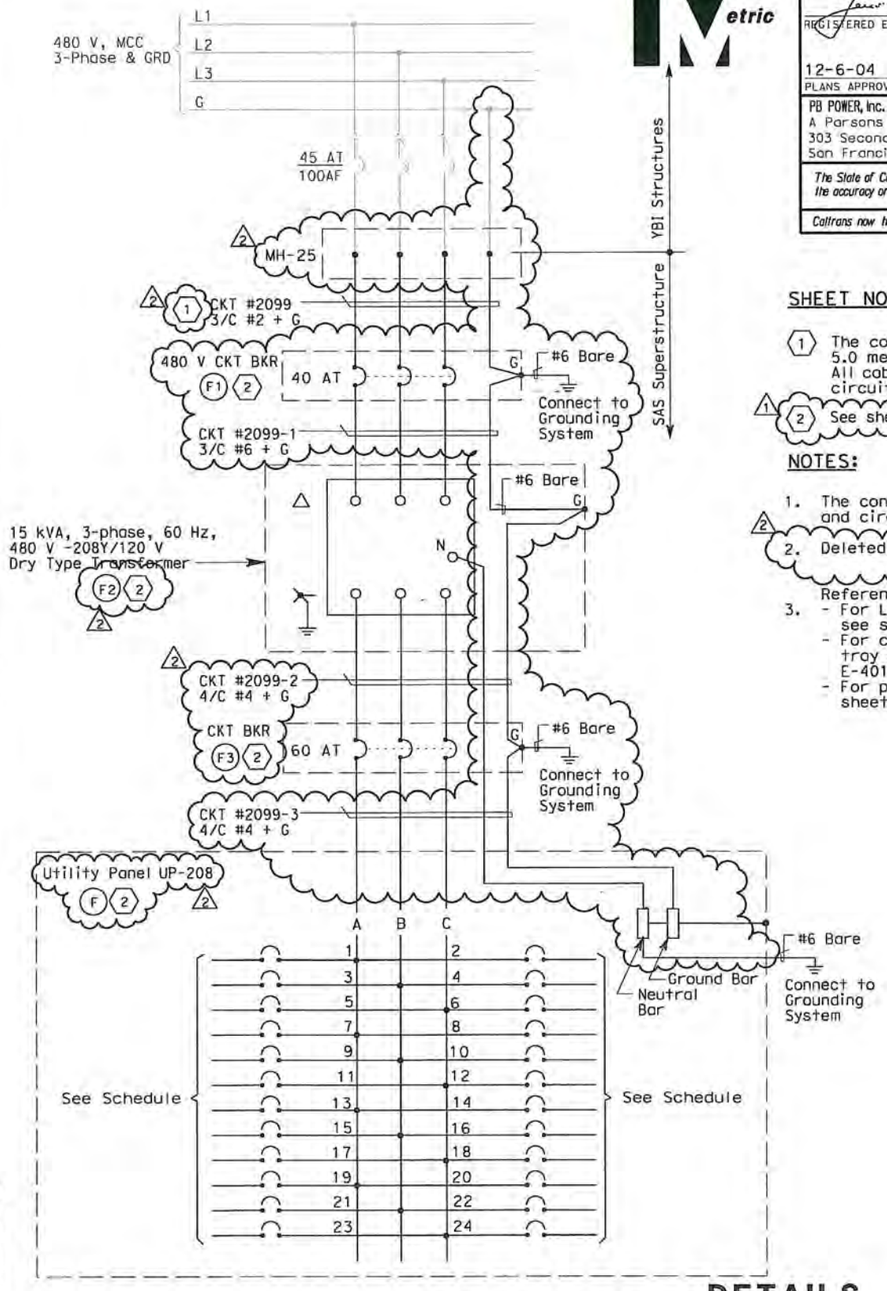

Caltrans Metric

DIST	COUNTY	ROUTE	KILOMETER POST TOTAL PROJECT	SHEET No.	TOTAL SHEETS
04	SF	80	13.2/13.9	203 R2	1204

12/19/02
REGISTERED ELECTRICAL ENGINEER DATE

JENS ERLINGSSON No. 8249 EXP. 9/30/06 ELECTRICAL — REGISTERED PROFESSIONAL ENGINEER — STATE OF CALIFORNIA

12-6-04
PLANS APPROVAL DATE

PB POWER, Inc.
A Parsons Brinckerhoff Company
303 Second St., Suite 700N
San Francisco, CA 94107-1317

The State of California or its officers or agents shall not be responsible for the accuracy or completeness of electronic copies of this plan sheet.

Caltrans now has a web site! To get to the web site, go to http://www.dot.ca.gov

SHEET NOTES:

(1) The contractor shall extend and coil 5.0 meters of cable in manhole 25 All cables shall be tagged with circuit numbers as shown.

(1)(2) See sheet E-75 for Equipment Schedule.

NOTES:

1. The contractor shall provide nameplates and circuit schedules as shown.

(2) 2. Deleted.

References:

3. - For LVCC-B single line diagram, see sheets E-32 thru E-34.
   - For circuit and conduit/cable tray schedules, see sheets starting at E-401.
   - For pull box schedule, see sheet E-169.

S. A. ESTOQUE, JR. REGISTERED PROFESSIONAL ENGINEER No. E-10151 Exp. 12/31/2008 ELECTRICAL STATE OF CALIFORNIA

FOR REVISION ONLY (1)

FADI WALIEDDINE REGISTERED PROFESSIONAL ENGINEER No. 11465 Exp. 12/31/2009 ELECTRICAL STATE OF CALIFORNIA

FOR REVISION ONLY (2)

REQUEST FOR INFORMATION NOT ADDRESSED IN THIS CCO REMAIN IN FORCE					
(2)	03/30/09	SERVICE PLATFORM ELECTRICAL CHANGES	RR MP	RG FW	55
(1)	03/04/08	BARRIER MODIFICATIONS	JS BM	RG SE	44
MARK	DATE	DESCRIPTIONS	BY	CH'D	CCO#
REVISIONS					

CONTRACT CHANGE ORDER NO. 55
SHEET 55 OF 90

DETAILS
SAS SUPERSTRUCTURE ROADWAY EASTBOUND
PANEL UP-208 SCHEDULE

NO SCALE

E-154

THIS PLAN IS ACCURATE FOR ELECTRICAL WORK ONLY.

STATE OF CALIFORNIA - DEPARTMENT OF TRANSPORTATION — Caltrans

DESIGN OVERSIGHT — BEHZAD GOLEMOHAMMADI

CALCULATED/DESIGNED BY — CHECKED BY

DATE	BY	DATE REVISED	REVISED BY
8/01	JP	12/01	BL
		2/04	EJL

FOR REDUCED PLANS ORIGINAL SCALE IS IN MILLIMETERS 0 20 40 60 80

DGN FILE =>T:\13103\MS\pse\SAS Struc\CCO\SAS CC055\2009-03-30_Issued for Submittal\04-0120F1_0203R02.dgn
USERNAME =>garciar

CU 04251 | EA 0120F1

LAST REVISION 00-00-00

DATE PLOTTED => 4/3/2009
TIME PLOTTED => 9:05:21 AM

LIGHTING PANEL LP-219 (CKT #2103)

LOCATION: SAS SUPERSTRUCTURE SERVICE PLATFORM #4

LOAD DESCRIPTION	LTG	CB		CB	LTG	LOAD DESCRIPTION
Spare		20/1	1 A 2	20/1	298	Bike Path LTG (4) Belvedere (2)
		20/1	3 B 4	20/1	298	Bike Path LTG (4) Belvedere (2)
		20/1	5 C 6	20/1	216	Bike Path LTG (4)
		20/1	7 A 8	20/1	216	Bike Path LTG (4)
		20/1	9 B 10	20/1		Spare
		20/1	11 C 12	20/1		
TOTAL VA					1,028	TOTAL VA

LOAD SUMMARY (INCLUDES .90 PF) (VA)
LIGHTING (AT 100%): 1,028

BALANCE (kVA)
Phase A 0.514
Phase B 0.298
Phase C 0.216 (1)

VOLTAGE: 208/120 V
PHASE/WIRES: 3-phase, 4-wire
BUS ~~RATING: 100 A~~
MAIN: MAIN LUGS ONLY (1)
MOUNTING: ~~Surface~~
K.A.I.C.: 10

TOTAL kVA: 1.028

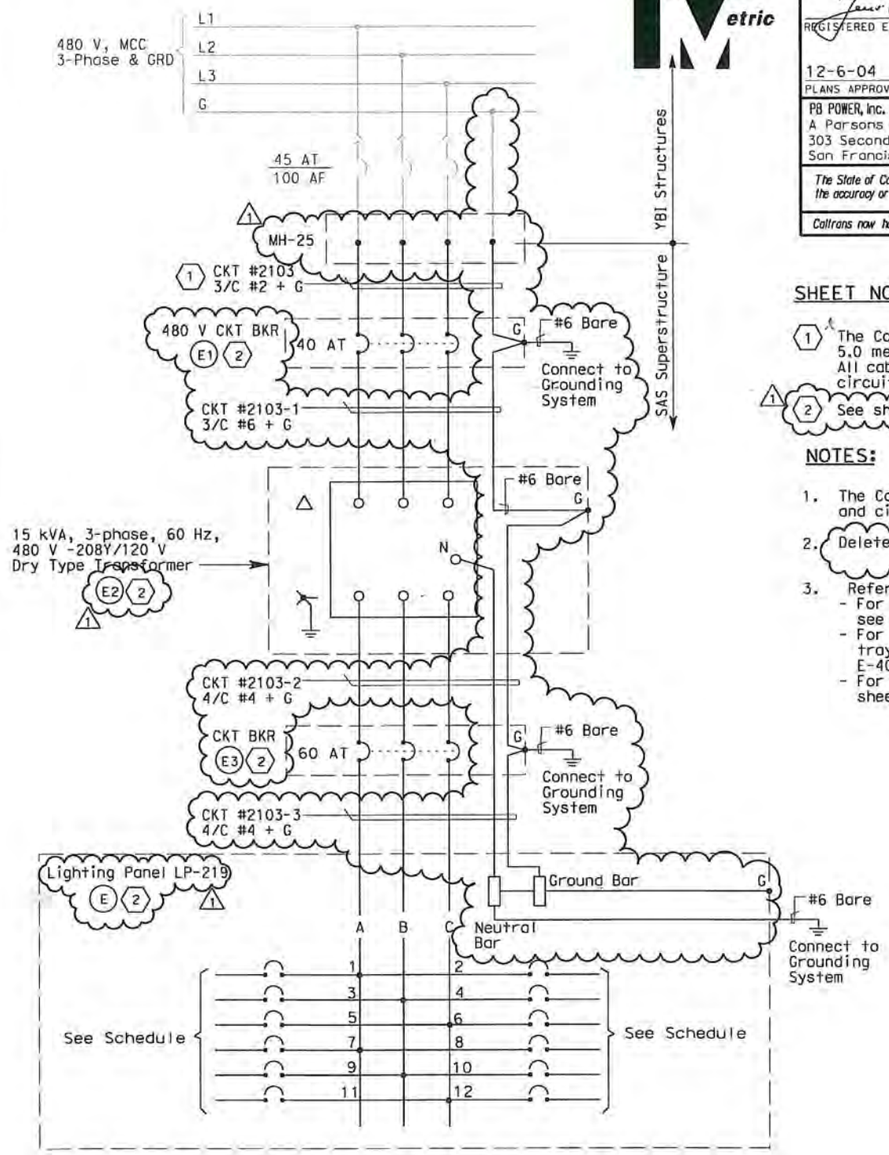

Caltrans Metric

DIST	COUNTY	ROUTE	KILOMETER POST TOTAL PROJECT	SHEET No	TOTAL SHEETS
04	SF	80	13.2/13.9	204 R1	1204

James Erlingsson 12/19/02
REGISTERED ELECTRICAL ENGINEER DATE

JENS ERLINGSSON No. 8249 Exp. 9/30/06 ELECTRICAL — REGISTERED PROFESSIONAL ENGINEER — STATE OF CALIFORNIA

12-6-04
PLANS APPROVAL DATE

PB POWER, Inc.
A Parsons Brinckerhoff Company
303 Second St., Suite 700N
San Francisco, CA 94107-1317

The State of California or its officers or agents shall not be responsible for the accuracy or completeness of electronic copies of this plan sheet.

Caltrans now has a web site! To get to the web site, go to http://www.dot.ca.gov

SHEET NOTES:

(1) The Contractor shall extend and coil 5.0 meters of cable in M.H.#25 All cables shall be tagged with circuit numbers as shown.

(1) (2) See sheet E-71 for Equipment Schedule.

NOTES:

1. The Contractor shall provide nameplates and circuit schedules as shown.
2. Deleted (1)
3. References:
   - For LVCC-A single line diagram, see sheets E-29 thru E-31.
   - For circuit and conduit/cable tray schedules, see sheets starting at E-401.
   - For pull box schedule, see sheet E-169.

STATE OF CALIFORNIA - DEPARTMENT OF TRANSPORTATION
Caltrans

DESIGN OVERSIGHT
BEHZAD GOLEMOHAMMADI

CALCULATED/DESIGNED BY JP
CHECKED BY BL

MARK	DATE	REVISED BY	DATE REVISED
1	03/30/09	SERVICE PLATFORM ELECTRICAL CHANGES	11/01

FADI WALIEDDINE No. 11465 Exp. 12/31/2009 ELECTRICAL — REGISTERED PROFESSIONAL ENGINEER — STATE OF CALIFORNIA

FOR REVISION ONLY (1)

REQUEST FOR INFORMATION NOT ADDRESSED IN THIS CCO REMAIN IN FORCE

MARK	DATE	REVISIONS	BY	CH'D	CCO#
1	03/30/09	SERVICE PLATFORM ELECTRICAL CHANGES	RR MP	RG FW	55

CONTRACT CHANGE ORDER NO. 55
SHEET 56 OF 90

DETAILS
SAS SUPERSTRUCTURE ROADWAY EASTBOUND
PANEL LP-219 SCHEDULE
NO SCALE

E-155

LAST REVISION 00-00-00
DATE PLOTTED => 3/31/2009
TIME PLOTTED => 2:43:10 PM

FOR REDUCED PLANS ORIGINAL SCALE IS IN MILLIMETERS 0 20 40 60 80

DGN FILE =>T:\13103\MS\pse\SAS Struc\CCO\SAS CCO55\04-0120f1_0204R01.dgn
USERNAME =>garciar

CU 04251

EA 0120F1

LIGHTING PANEL LP-220 (CKT #2104)

LOCATION: SAS SUPERSTRUCTURE SERVICE PLATFORM #5

LOAD DESCRIPTION	LTG	CB		CB	LTG	LOAD DESCRIPTION
Spare		20/1	1 A 2	20/1	270	Bike Path LTG (5)
		20/1	3 B 4	20/1	270	Bike Path LTG (5)
		20/1	5 C 6	20/1	270	Bike Path LTG (5)
		20/1	7 A 8	20/1	270	Bike Path LTG (5)
		20/1	9 B 10	20/1		Spare
		20/1	11 C 12	20/1		
TOTAL VA					1,080	TOTAL VA

LOAD SUMMARY (INCLUDES .90 PF) (VA)
LIGHTING (AT 100%): 1,080

BALANCE (kVA)
Phase A - 0.540
Phase B - 0.270
Phase C - 0.270

VOLTAGE: 208/120 V
PHASE/WIRES: 3-phase, 4-wire
BUS ~~RATING: 100 A~~
MAIN: MAIN LUGS ONLY (1)
MOUNTING: ~~Surface~~
K.A.I.C.: 10

TOTAL kVA: 1.080

LIGHTING PANEL LP-221 (CKT #2105)

LOCATION: SAS SUPERSTRUCTURE SERVICE PLATFORM #6

LOAD DESCRIPTION	LTG	CB		CB	LTG	LOAD DESCRIPTION
Spare		20/1	1 A 2	20/1	216	Bike Path LTG (4)
		20/1	3 B 4	20/1	216	Bike Path LTG (4)
		20/1	5 C 6	20/1	378	Bike Path LTG (7)
		20/1	7 A 8	20/1	378	Bike Path LTG (7)
		20/1	9 B 10	20/1		Spare
		20/1	11 C 12	20/1		
TOTAL VA					1188	TOTAL VA

LOAD SUMMARY (INCLUDES .90 PF) (VA)
LIGHTING (AT 100%): 1188

BALANCE (kVA)
Phase A - 0.594
Phase B - 0.216
Phase C - 0.378

VOLTAGE: 208/120 V
PHASE/WIRES: 3-phase, 4-wire
BUS ~~RATING: 100 A~~
MAIN: Main Lugs Only (1)
MOUNTING: ~~Surface~~
K.A.I.C.: 10

TOTAL kVA: 1.188

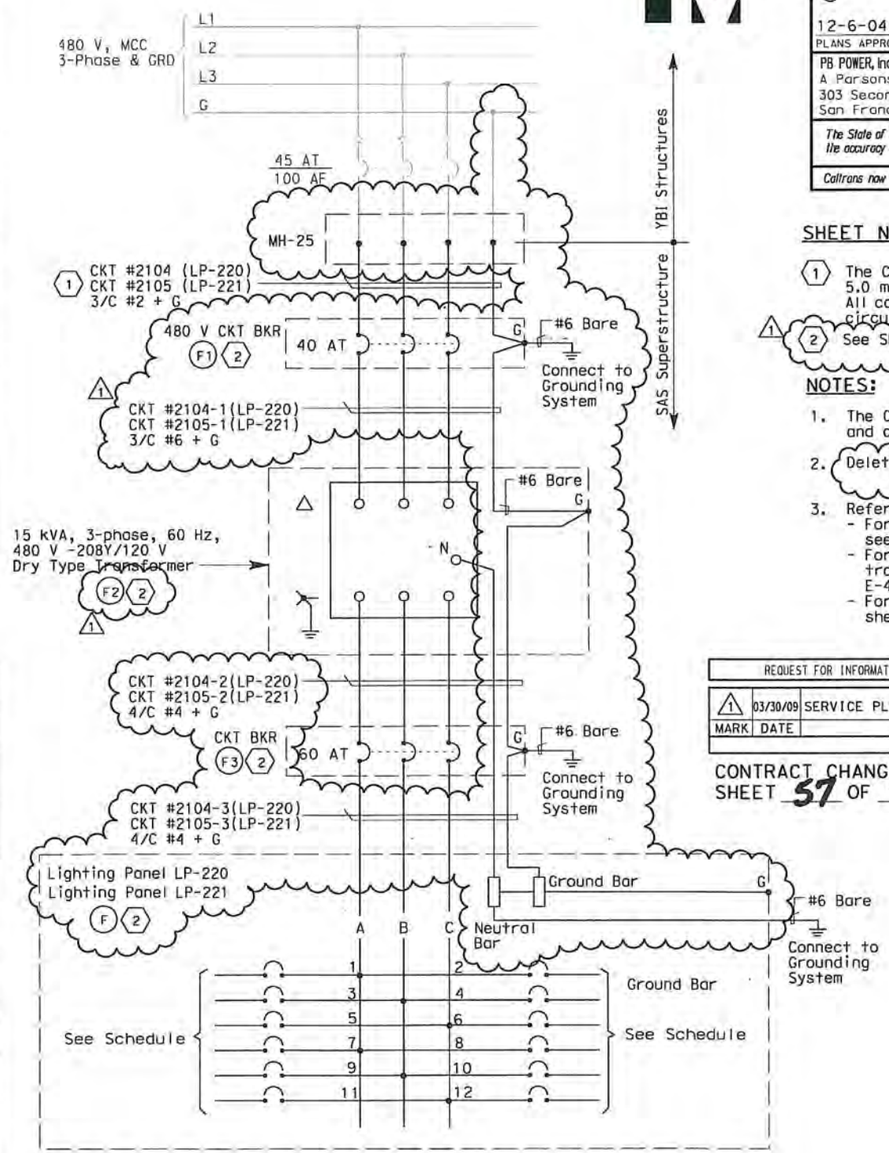

Caltrans Metric

DIST	COUNTY	ROUTE	KILOMETER POST TOTAL PROJECT	SHEET No	TOTAL SHEETS
04	SF	80	13.2/13.9	205 R1	1204

REGISTERED ELECTRICAL ENGINEER — 12/19/02 DATE

12-6-04
PLANS APPROVAL DATE

REGISTERED PROFESSIONAL ENGINEER — JENS ERLINGSSON No. 8249 Exp. 9/30/06 ELECTRICAL — STATE OF CALIFORNIA

PB POWER, Inc.
A Parsons Brinckerhoff Company
303 Second St., Suite 700N
San Francisco, CA 94107-1317

The State of California or its officers or agents shall not be responsible for the accuracy or completeness of electronic copies of this plan sheet.

Caltrans now has a web site! To get to the web site, go to http://www.dot.ca.gov

SHEET NOTES:

1 (1) The Contractor shall extend and coil 5.0 meters of cable in M.H.#25 All cables shall be tagged with circuit numbers as shown.

1 (2) See Sheets E-72 for Equipment Schedule.

NOTES:

1. The Contractor shall provide nameplates and circuit schedules as shown.
2. Deleted 1
3. References:
   - For LVCC-B single line diagram, see sheets E-32 thru E-34.
   - For circuit and conduit/cable tray schedules, see sheets starting at E-401.
   - For pull box schedule, see sheet E-169.

REQUEST FOR INFORMATION NOT ADDRESSED IN THIS CCO REMAIN IN FORCE

MARK	DATE	REVISIONS	BY	CH'D	CCO#
1	03/30/09	SERVICE PLATFORM ELECTRICAL CHANGES	RR	RG FW	55

CONTRACT CHANGE ORDER NO. 55
SHEET 57 OF 90

REGISTERED PROFESSIONAL ENGINEER — FADI WALIEDDINE No. 11465 Exp. 12/31/2009 ELECTRICAL — STATE OF CALIFORNIA

FOR REVISION ONLY 1

DETAILS
SAS SUPERSTRUCTURE ROADWAY EASTBOUND
PANEL LP-220 AND LP-221 SCHEDULES
NO SCALE

E-156

REVISED BY	DATE REVISED
JP	11/01

CALCULATED/DESIGNED BY: BL
CHECKED BY: BEHZAD GOLEMOHAMMADI
DESIGN OVERSIGHT: BEHZAD GOLEMOHAMMADI

STATE OF CALIFORNIA - DEPARTMENT OF TRANSPORTATION
Caltrans

FOR REDUCED PLANS ORIGINAL SCALE IS IN MILLIMETERS 0 20 40 60 80

DGN FILE =>T:\13103\WS\pse\SAS Struc\CCO\SAS CCO55\04-0120F1_0205R01.dgn
USERNAME =>garciar

CU 04251 | EA 0120F1

LAST REVISION 00-00-00
DATE PLOTTED => 3/31/2009
TIME PLOTTED => 2:42:39 PM

LIGHTING PANEL LP-222 (CKT #2106)

LOCATION: SAS SUPERSTRUCTURE SERVICE PLATFORM #7

LOAD DESCRIPTION	LTG	CB		CB	LTG	LOAD DESCRIPTION
Spare		20/1	1 A 2	20/1	432	Bike Path LTG (8)
		20/1	3 B 4	20/1	432	Bike Path LTG (8)
		20/1	5 C 6	20/1	378	Bike Path LTG (7)
		20/1	7 A 8	20/1	378	Bike Path LTG (7)
		20/1	9 B 10	20/1		Spare
		20/1	11 C 12	20/1		
TOTAL VA					1620	TOTAL VA

LOAD SUMMARY (INCLUDES .90 PF) (VA)
LIGHTING (AT 100%): 1620

BALANCE (kVA)
Phase A - 0.810
Phase B - 0.432
Phase C - 0.378

VOLTAGE: 208/120 V
PHASE/WIRES: 3-phase, 4-wire
BUS ~~RATING: 100 A~~
MAIN(MAIN LUGS ONLY) 1
MOUNTING: ~~Sur-face~~
K.A.I.C.: 10

TOTAL kVA: 1.620

LIGHTING PANEL LP-223 (CKT #2107)

LOCATION: SAS SUPERSTRUCTURE SERVICE PLATFORM #8

LOAD DESCRIPTION	LTG	CB		CB	LTG	LOAD DESCRIPTION
Spare		20/1	1 A 2	20/1	432	Bike Path LTG (8)
		20/1	3 B 4	20/1	432	Bike Path LTG (8)
		20/1	5 C 6	20/1	460	Bike Path LTG (7) Belvedere (2)
		20/1	7 A 8	20/1	460	Bike Path LTG (7) Belvedere (2)
		20/1	9 B 10	20/1		Spare
		20/1	11 C 12	20/1		
TOTAL VA					1,784	TOTAL VA

LOAD SUMMARY (INCLUDES .90 PF) (VA)
LIGHTING (AT 100%): 1,784

BALANCE (kVA)
Phase A - 0.892
Phase B - 0.432
Phase C - 0.460

VOLTAGE: 208/120 V
PHASE/WIRES: 3-phase, 4-wire
BUS RATING: 100 A
MAIN(Main Lugs Only) 1
MOUNTING: ~~Sur-face~~
K.A.I.C.: 10

TOTAL kVA: 1.784

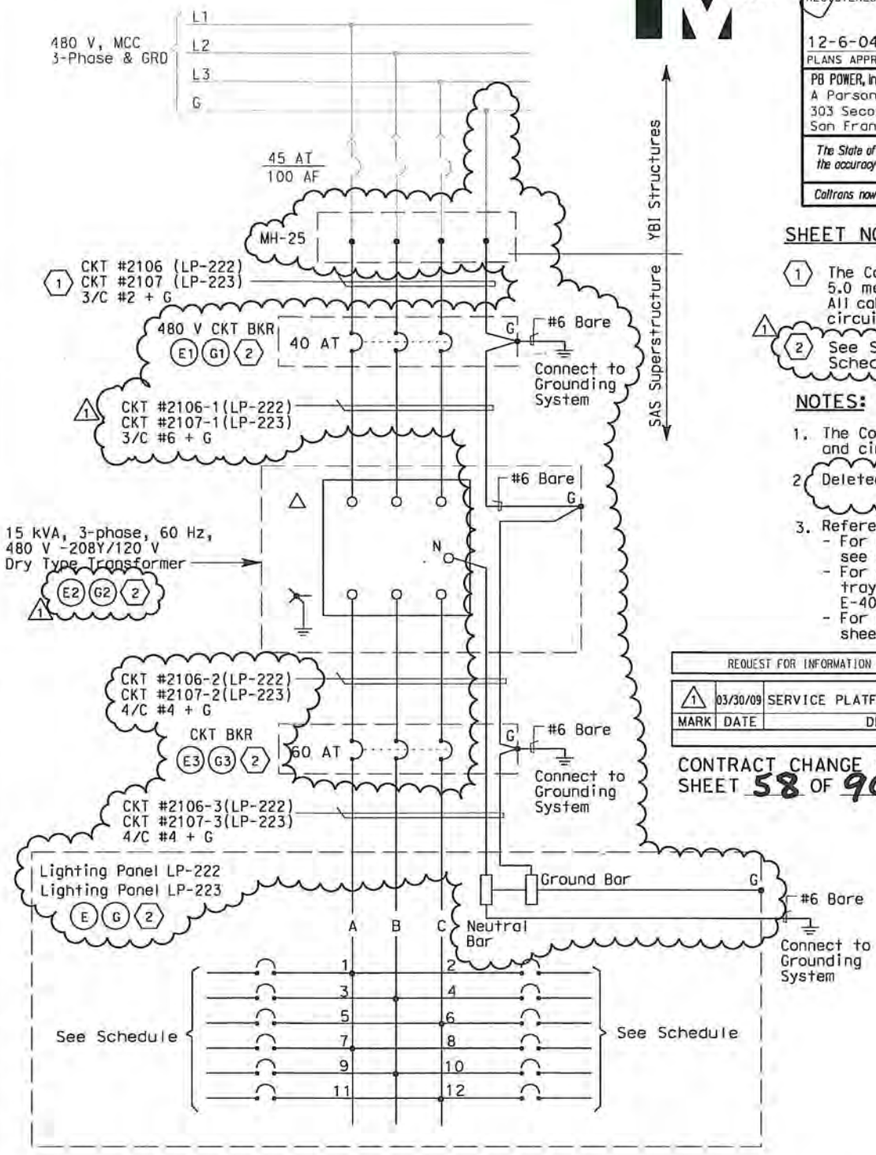

Caltrans Metric

DIST	COUNTY	ROUTE	KILOMETER POST TOTAL PROJECT	SHEET No.	TOTAL SHEETS
04	SF	80	13.2/13.9	206 R1	1204

Jens Erlingsson 12/19/02
REGISTERED ELECTRICAL ENGINEER DATE

REGISTERED PROFESSIONAL ENGINEER
JENS ERLINGSSON
No. 8249
Exp. 9/30/06
ELECTRICAL
STATE OF CALIFORNIA

12-6-04
PLANS APPROVAL DATE

PB POWER, inc.
A Parsons Brinckerhoff Company
303 Second St., Suite 700N
San Francisco, CA 94107-1317

The State of California or its officers or agents shall not be responsible for the accuracy or completeness of electronic copies of this plan sheet.

Caltrans now has a web site! To get to the web site, go to http://www.dot.ca.gov

SHEET NOTES:

1. The Contractor shall extend and coil 5.0 meters of cable in manhole 25 All cables shall be tagged with circuit numbers as shown.
2. See Sheets E-74 & E-75 for Equipment Schedule.

NOTES:

1. The Contractor shall provide nameplates and circuit schedules as shown.
2. Deleted 1
3. References:
   - For LVCC-B single line diagram, see sheets E-32 thru E-34.
   - For circuit and conduit/cable tray schedules, see sheets starting at E-401.
   - For pull box schedule, see sheet E-169.

REQUEST FOR INFORMATION NOT ADDRESSED IN THIS CCO REMAIN IN FORCE

MARK	DATE	DESCRIPTIONS	BY	CH'D	CCO#
		REVISIONS			
1	03/30/09	SERVICE PLATFORM ELECTRICAL CHANGES	RR	RG FW	55

CONTRACT CHANGE ORDER NO. 55
SHEET 58 OF 90

REGISTERED PROFESSIONAL ENGINEER
FADI WALIEDDINE
No. 11465
Exp. 12/31/2009
ELECTRICAL
STATE OF CALIFORNIA

FOR REVISION ONLY 1

DETAILS
SAS SUPERSTRUCTURE ROADWAY EASTBOUND PANEL LP-222 AND LP-223 SCHEDULES
NO SCALE

E-157

REVISED BY	DATE REVISED
JP	BL
CALCULATED/DESIGNED BY	CHECKED BY

DESIGN OVERSIGHT
BEHZAD GOLEMOHAMMADI

STATE OF CALIFORNIA - DEPARTMENT OF TRANSPORTATION
Caltrans

LAST REVISION 00-00-00
DATE PLOTTED => 4/3/2009
TIME PLOTTED => 7:35:02 AM

FOR REDUCED PLANS ORIGINAL SCALE IS IN MILLIMETERS 0 20 40 60 80

DGN FILE =>T:\13103\MS\pse\SAS Struc\CCO\SAS CCO55\04-0120F1_0206R01.dgn
USERNAME =>garciar

CU 04251

EA 0120F1

PULL BOXES

Location	Type	Pull Box Size	Enclosure Type	Nameplate Pull Box Cover	Remarks
Roadway Barrier	PB-Com			Low Voltage - Call Box	Caltrans standard ES-9C (PB-9A)
Roadway Barrier	PB-Ltg			600 V - Electrical	Caltrans standard ES-9C (PB-9)
Roadway and miscellaneous	PB-1B	304 L x 254 W x 127 D	NEMA 4X	600 V - Electrical	Located at main suspender cable
Roadway and miscellaneous	PB-1C	152 L x 152 W x 102 D	NEMA 4X	600 V - Electrical	Located at suspender brackets
Bike Path	PB-1D	152 L x 203 W x 102 D	NEMA 4X	600 V - Electrical	
Bike Path	PB-1E	305 L x 254 W x 152 D	NEMA 4X	600 V - Electrical	
Roadway	PB-1F	304 L x 304 W x 152 D	NEMA 4X	600 V - Electrical	
Inside Girder Box	PB-2A	406 L x 254 W x 152 D	NEMA 12	600 V - Electrical	
Service Platform	PB-2B	762 L x 508 W x 203 D	NEMA 4X	600 V - Electrical	
Inside Girder Box	PB-2C	915 L x 610 W x 610 D	NEMA 12	600 V - Electrical	Electrical vault-embedded in conc. deck
Inside Girder Box	PB-2P	1067 L x 915 W x 305 D	NEMA 12	600 V - Electrical	Electrical vault-surface/pendant mounted
Inside Girder Box	PB-2L	152 L x 152 W x 102 D	NEMA 12	600 V - Electrical	For future light pipe

SPLICE BOXES

Location	Type	Splice Box Size	Enclosure Type	Nameplate Splice Box Cover	Remarks
Inside Girder Box	PB-3A	1830 L x 915 W x 305 D	NEMA 12	Danger - High Voltage - Keep Out	
Inside Girder Box	PB-3B	813 L x 203 diameter	Cylindrical Housing	Fiber Optic	72 fibers to 12 fibers
Inside Girder Box	PB-3C	813 L x 203 diameter	Cylindrical Housing	Fiber Optic	72 fibers to 72 fibers

PANEL ENCLOSURES (1)

Location	Type	Cabinet/Terminal Box Size	Enclosure Type	Nameplate Cabinet/Terminal Cover	Remarks
Service Platform	PB-6C	See Panel Layout	NEMA 4X	See Panel Layout on E-305	For Navigation Relay Cabinet
Service Platform	PB-7B	See Panel Layout	NEMA 4X	See Panel Layout on E-321	For Scada Communication Terminal Box
Service Platform	PB-7C	762 H x 508 W x 203 D	NEMA 4X	Caltrans Telephone	Enclosure only - For Telephone Terminal Box
Inside Girder Box	PB-7D		NEMA 12	Caltrans Telephone	Enclosure only - For Telephone Terminal Box
		DELETED			DELETED

SAS SUPERSTRUCTURE EB

Location	Type	Pull Box Size	Enclosure Type	Nameplate Pull Box Cover	Remarks
Inside Light Pole	PB-2N	152 L x 152 W x 102 D	NEMA 12	TOS-MVDS	Cable Termination
Tower Platform	PB-2M	305 L x 305 W x 152 D	NEMA 12	TOS-MVDS	Cable Termination

Caltrans Metric

DIST	COUNTY	ROUTE	KILOMETER POST TOTAL PROJECT	SHEET No	TOTAL SHEETS
04	SF	80	13.2/13.9	212 R3	1204

12/19/02
REGISTERED ELECTRICAL ENGINEER DATE

12-6-04
PLANS APPROVAL DATE

REGISTERED PROFESSIONAL ENGINEER — JENS ERLINGSSON No. 8249 Exp. 9/30/06 ELECTRICAL — STATE OF CALIFORNIA

PB POWER, Inc.
A Parsons Brinckerhoff Company
303 Second St., Suite 700N
San Francisco, CA 94107-1317

The State of California or its officers or agents shall not be responsible for the accuracy or completeness of electronic copies of this plan sheet.

Caltrans now has a web site! To get to the web site, go to http://www.dot.ca.gov

SHEET NOTE:

(1) Panel enclosures shall be provided with padlock provisions.

REGISTERED PROFESSIONAL ENGINEER — MAXWELL FUMIO TAKATA No. E 8651 Exp. 9/30/2009 ELECTRICAL — STATE OF CALIFORNIA

FOR REVISION ONLY (1)

REGISTERED PROFESSIONAL ENGINEER — FADI WALIEDDINE No. 11465 Exp. 12/31/2009 ELECTRICAL — STATE OF CALIFORNIA

FOR REVISION ONLY (2) (3)

REQUEST FOR INFORMATION NOT ADDRESSED IN THIS CCO REMAIN IN FORCE

MARK	DATE	REVISIONS DESCRIPTIONS	BY	CH'D	CCO#
(3)	03/30/09	SERVICE PLATFORM ELECTRICAL CHANGES	RR	RG FW	55
(2)	09/24/08	CABLE ELECTRICAL	RY AG	RG FW	72
(1)	02/19/08	ELECTRICAL MODIFICATIONS	MP EL	RR	42

CONTRACT CHANGE ORDER NO. 55
SHEET 59 OF 90

DETAILS
SAS SUPERSTRUCTURE ROADWAY EASTBOUND
PULLBOX SCHEDULES
NO SCALE

E-169

REVISED BY | DATE REVISED
DATE 9/01 | 11/01
JP | BL
CALCULATED/DESIGNED BY | CHECKED BY

DESIGN OVERSIGHT
BEHZAD GOLEMOHAMMADI

STATE OF CALIFORNIA - DEPARTMENT OF TRANSPORTATION
Caltrans

LAST REVISION 00-00-00
DATE PLOTTED => 3/31/2009
TIME PLOTTED => 2:41:02 PM

FOR REDUCED PLANS ORIGINAL SCALE IS IN MILLIMETERS 0 20 40 60 80

DGN FILE =>T:\13103\MS\pse\SAS Struc\CCO\SAS CC055\04-0120f1_02R03.dgn
USERNAME =>garciar

CU 04251 | EA 0120F1

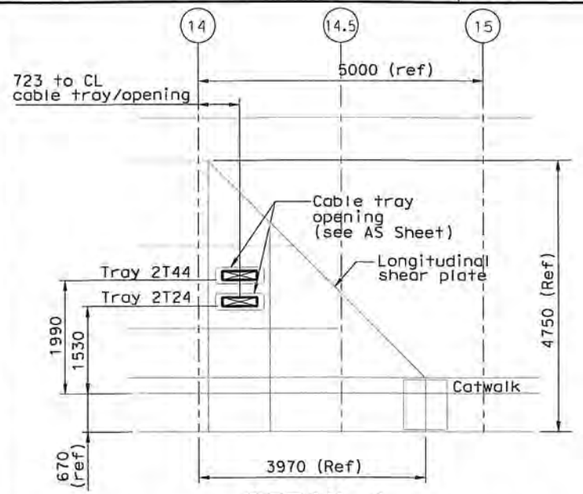

DETAIL 1
Cable pentration thru longitudinal shear plate
Scale 1:50

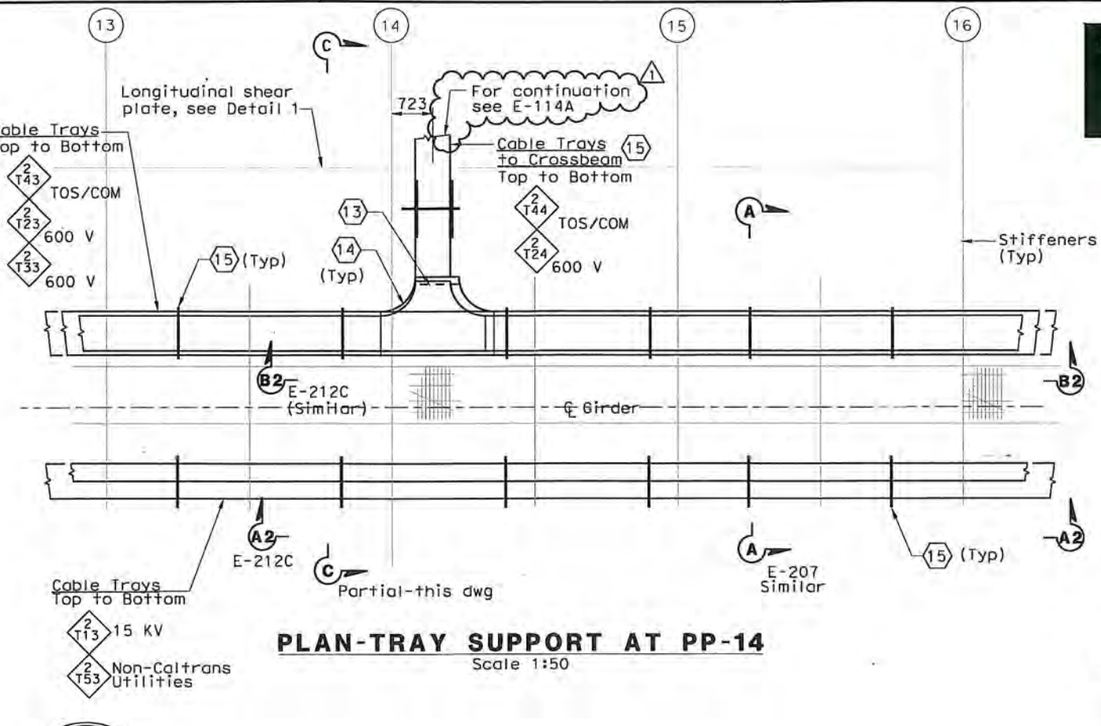

PLAN-TRAY SUPPORT AT PP-14
Scale 1:50

REQUEST FOR INFORMATION NOT ADDRESSED IN THIS CCO REMAIN IN FORCE					
1	03/30/09	SERVICE PLATFORM ELECTRICAL CHANGES	RG	FW	55
0	02/25/08	CABLE TRAY CHANGES	TW	RG SE	42S1
MARK	DATE	DESCRIPTIONS	BY	CH'D	CCO#
REVISIONS					

CONTRACT CHANGE ORDER NO. 55
SHEET 60 OF 90

FADI WALIEDDINE
No. 11465
Exp. 12/31/2009
ELECTRICAL
REGISTERED PROFESSIONAL ENGINEER
STATE OF CALIFORNIA

FOR REVISION ONLY
1

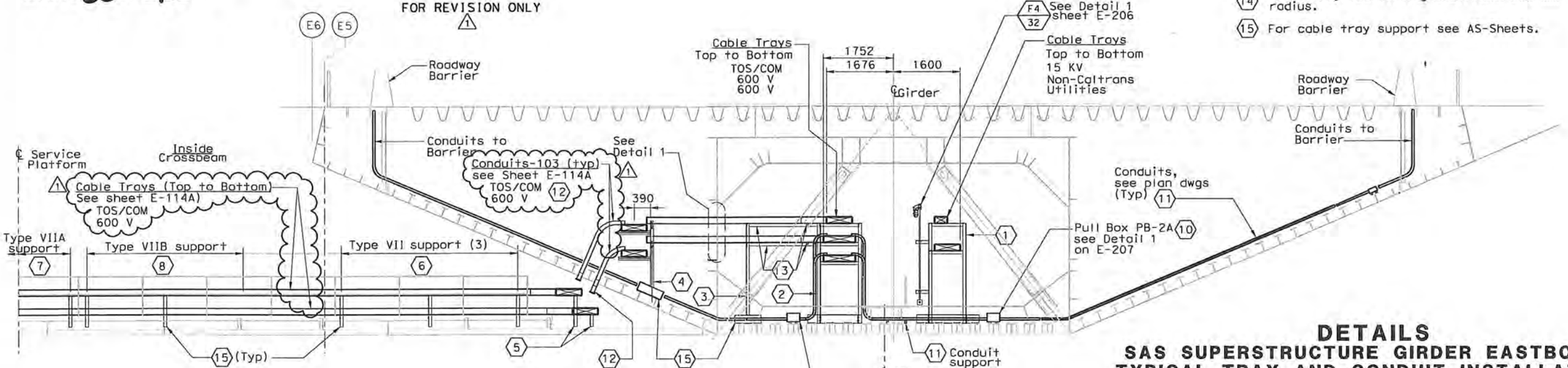

SECTION C-C
Cable Tray Support and Crossbeam
PANEL POINT PP 14
Scale 1:50

DETAILS
SAS SUPERSTRUCTURE GIRDER EASTBOUND
TYPICAL TRAY AND CONDUIT INSTALLATION
SCALE AS NOTED

E-207A

Caltrans Metric

DIST	COUNTY	ROUTE	KILOMETER POST TOTAL PROJECT	SHEET No	TOTAL SHEETS
04	SF	80	13.2/13.9	232 S1R1	1204

REGISTERED ELECTRICAL ENGINEER — DATE 2/22/08
S. A. ESTOQUE, JR. — No. E-10151 — Exp. 12/31/2009 ELECTRICAL — REGISTERED PROFESSIONAL ENGINEER — STATE OF CALIFORNIA
PLANS APPROVAL DATE

PB AMERICAS, Inc.
A Parsons Brinckerhoff Company
303 Second St., Suite 700N
San Francisco, CA 94107-1317

The State of California or its officers or agents shall not be responsible for the accuracy or completeness of electronic copies of this plan sheet.

Caltrans now has a web site! To get to the web site, go to http://www.dot.ca.gov

SHEET NOTES:

1. Type I, for cable tray supports details, see AS sheets.
2. Type II, for cable tray supports details, see AS sheets.
3. Type V, for cable tray supports details, see AS sheets.
4. Type VI, for cable tray supports details, see AS sheets.
5. The Contractor to provide cable tray support at each ends of cable tray fitting as required.
6. Type VII, for cable tray supports details, see AS sheets.
7. Type VIIA, for cable tray supports details, see AS sheets.
8. Type VIIB, for cable tray supports details, see AS sheets.
1 9. Deleted.
10. Pull Box PB-2A shall be located on top of stiffener. The Contractor shall provide strut channel for support installed in field.
11. The Contractor shall provide strut channel on top of stiffener for conduit support and installed in field.
12. The Contractor to provide insulated grounding bushing at each end of the conduit.
13. The Contractor to provide secondary support installed in field, see detail 2 on dwg E-207D.
14. Cable tray tee fitting shall have 305 mm radius.
15. For cable tray support see AS-Sheets.

DESIGN OVERSIGHT — BEHZAD GOLEMOHAMMADI
CALCULATED/DESIGNED BY — FADI WALIEDDINE
CHECKED BY — RAMON GARCIA
DATE REVISED — 00-00-00
REVISED BY — GARCIA
DATE — 03/31/09
STATE OF CALIFORNIA - DEPARTMENT OF TRANSPORTATION — Caltrans

DATE PLOTTED => 3/31/2009
TIME PLOTTED => 2:40:27 PM
LAST REVISION

THIS PLAN ACCURATE FOR ELECTRICAL WORK ONLY.

ALL DIMENSIONS ARE IN MILLIMETERS UNLESS OTHERWISE SHOWN.

FOR REDUCED PLANS ORIGINAL SCALE IS IN MILLIMETERS 0 20 40 60 80

DGN FILE =>T:\13103\MS\pse\SAS Struc\CCO\SAS CCO55\04-0120f1_023201R01.dgn
USERNAME =>garciar

CU 04251

EA 0120F1

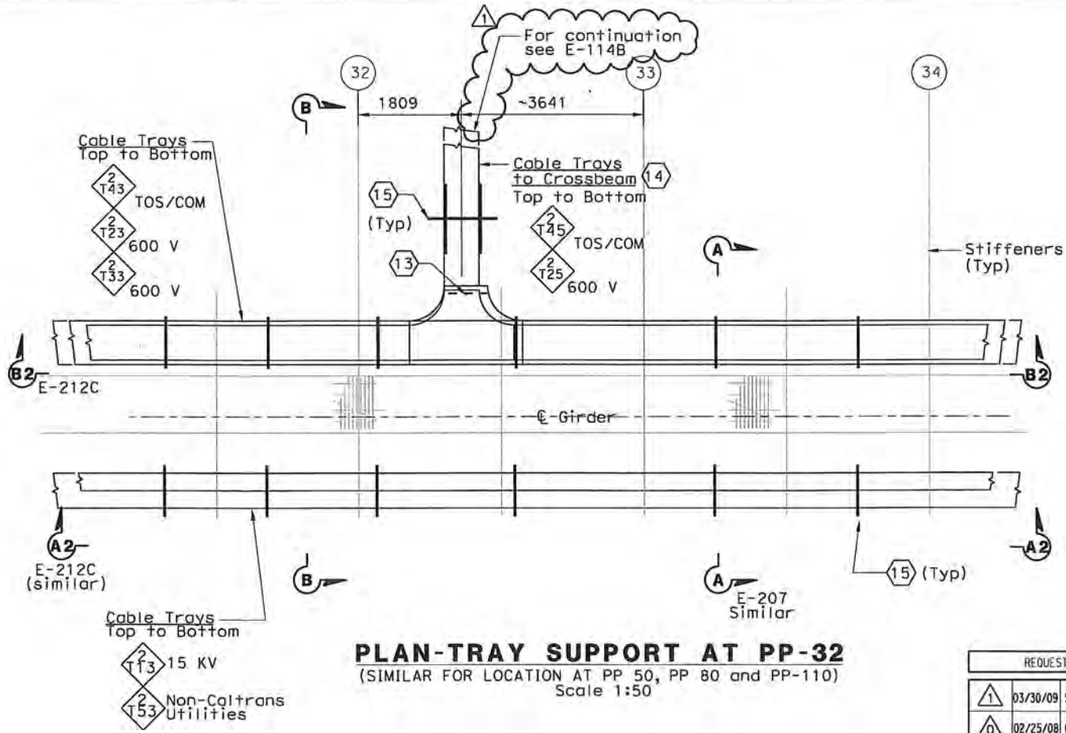

PLAN-TRAY SUPPORT AT PP-32

(SIMILAR FOR LOCATION AT PP 50, PP 80 and PP-110)
Scale 1:50

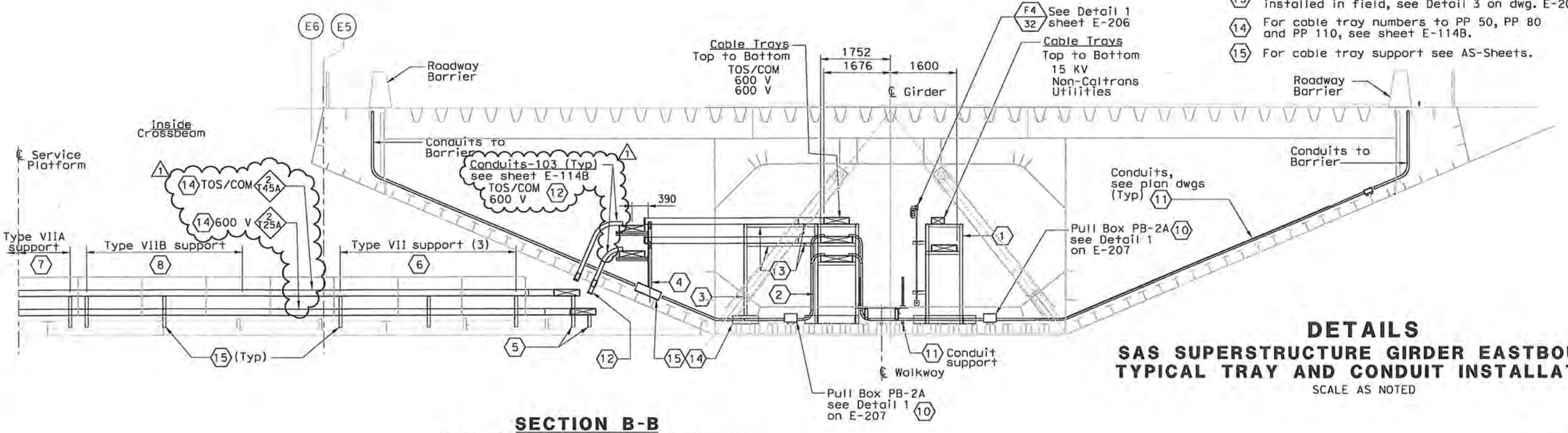

SECTION B-B

(Typical Cable Tray Support and Crossbeam)
PP 32, PP 50, PP 80 and PP-110
Scale 1:50

DETAILS

SAS SUPERSTRUCTURE GIRDER EASTBOUND TYPICAL TRAY AND CONDUIT INSTALLATION

SCALE AS NOTED

E-207B

FOR REVISION ONLY

MARK	DATE	DESCRIPTIONS	BY	CH'D	CCO#
		REQUEST FOR INFORMATION NOT ADDRESSED IN THIS CCO REMAIN IN FORCE			
1	03/30/09	SERVICE PLATFORM ELECTRICAL CHANGES	RG	FW	55
0	02/25/08	CABLE TRAY CHANGES	TW	RG SE	42S1

REVISIONS

CONTRACT CHANGE ORDER NO. 55
SHEET 61 OF 90

DIST	COUNTY	ROUTE	KILOMETER POST TOTAL PROJECT	SHEET No	TOTAL SHEETS
04	SF	80	13.2/13.9	232 S2R1	1204

REGISTERED ELECTRICAL ENGINEER 2/22/08 DATE

PLANS APPROVAL DATE

REGISTERED PROFESSIONAL ENGINEER S. A. ESTOQUE, JR. No. E-10151 Exp. 12/31/2008 ELECTRICAL STATE OF CALIFORNIA

PB AMERICAS, Inc.
A Parsons Brinckerhoff Company
303 Second St., Suite 700N
San Francisco, CA 94107-1317

The State of California or its officers or agents shall not be responsible for the accuracy or completeness of electronic copies of this plan sheet.

Caltrans now has a web site! To get to the web site, go to http://www.dot.ca.gov

REGISTERED PROFESSIONAL ENGINEER FADI WALIEDDINE No. 11465 Exp. 12/31/2009 ELECTRICAL STATE OF CALIFORNIA

SHEET NOTES:

1. Type I, for cable tray supports details, see AS sheets.
2. Type II, for cable tray supports details, see AS sheets.
3. Type V, for cable tray supports details, see AS sheets.
4. Type VI, for cable tray supports details, see AS sheets.
5. The Contractor to provide cable tray support at each ends of cable tray fitting as required.
6. Type VII, for cable tray supports details, see AS sheets.
7. Type VIIA, for cable tray supports details, see AS sheets.
8. Type VIIB, for cable tray supports details, see AS sheets
9. Deleted.
10. Pull Box PB-2A shall be located on top of stiffener. The Contractor shall provide strut channel for support installed in field.
11. The Contractor shall provide strut channel on top of stiffener for conduit support and installed in field.
12. The Contractor to provide insulated grounding bushing at each end of the conduit.
13. The Contractor to provide secondary support installed in field, see Detail 3 on dwg. E-207D.
14. For cable tray numbers to PP 50, PP 80 and PP 110, see sheet E-114B.
15. For cable tray support see AS-Sheets.

STATE OF CALIFORNIA - DEPARTMENT OF TRANSPORTATION
Caltrans

DESIGN OVERSIGHT: BEHZAD GOLEMOHAMMADI

CALCULATED/DESIGNED BY | CHECKED BY

DATE | REVISED BY | DATE REVISED

LAST REVISION 00-00-00

DATE PLOTTED => 3/31/2009
TIME PLOTTED => 2:39:36 PM

THIS PLAN ACCURATE FOR ELECTRICAL WORK ONLY.

ALL DIMENSIONS ARE IN MILLIMETERS UNLESS OTHERWISE SHOWN.

FOR REDUCED PLANS ORIGINAL SCALE IS IN MILLIMETERS 0 20 40 60 80

DGN FILE =>T:\13103\MS\pse\SAS Struc\CCO\SAS CCO55\04-0120f1_02S2S02R01.dgn
USERNAME =>garcior

CU 04251

EA 0120F1

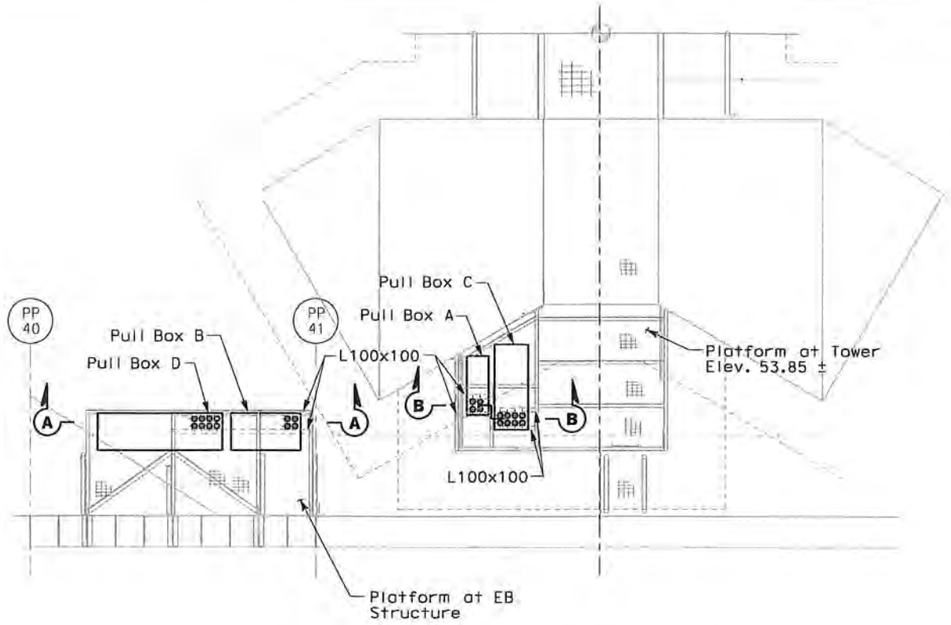

PLAN-PLATFORM AT ELEV 53.85
NO SCALE

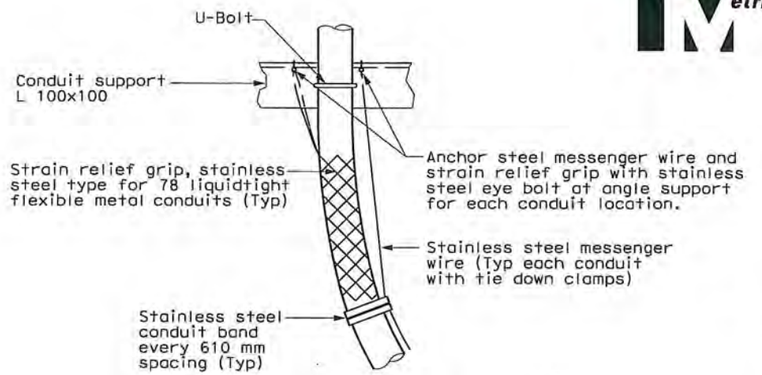

DETAIL 1
(TYPICAL)

Caltrans Metric

DIST	COUNTY	ROUTE	KILOMETER POST TOTAL PROJECT	SHEET No	TOTAL SHEETS
04	SF	80	13.2/13.9	271 S5	1204

REGISTERED ELECTRICAL ENGINEER DATE

REGISTERED PROFESSIONAL ENGINEER — FADI WALIEDDINE No. 11465 Exp. 12/31/2009 ELECTRICAL — STATE OF CALIFORNIA

PLANS APPROVAL DATE

PB AMERICAS, Inc.
A Parsons Brinckerhoff Company
303 Second St., Suite 700N
San Francisco, CA 94107-1317

The State of California or its officers or agents shall not be responsible for the accuracy or completeness of electronic copies of this plan sheet.

Caltrans now has a web site! To get to the web site, go to http://www.dot.ca.gov

NOTE :

1. For reference drawing see Sheet E-264A.

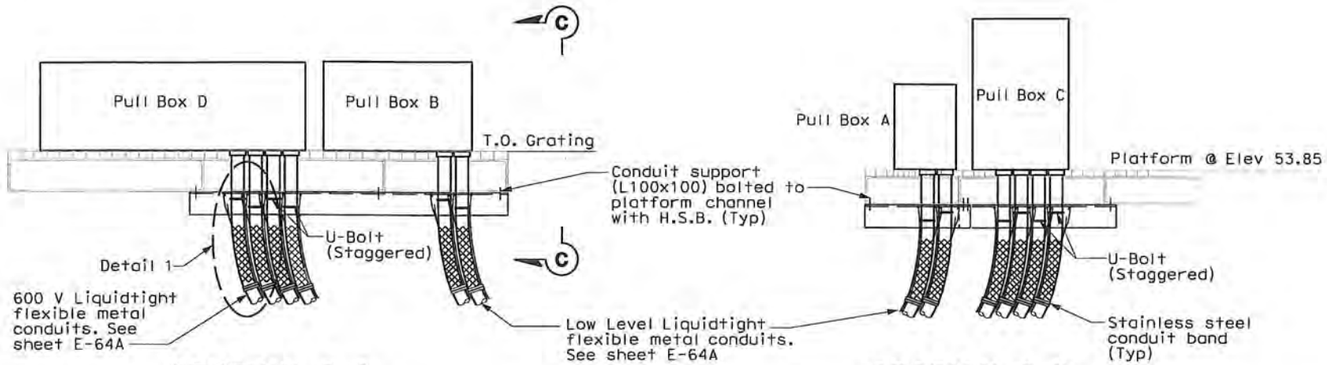

SECTION A-A
NO SCALE

SECTION B-B
NO SCALE

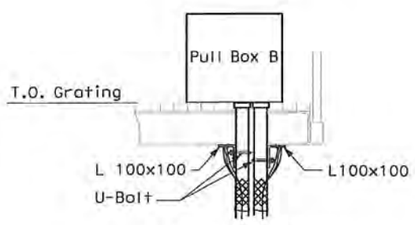

SECTION C-C
NO SCALE

REQUEST FOR INFORMATION NOT ADDRESSED IN THIS CCO REMAIN IN FORCE					
MARK	DATE	REVISIONS DESCRIPTIONS	BY	CH'D	CCO#
0	03/30/09	SERVICE PLATFORM ELECTRICAL CHANGES	RR RY	RG FW	55

CONTRACT CHANGE ORDER NO. 55
SHEET 62 OF 90

DETAILS
TOWER AND SUSPENSION CABLE
NO SCALE

E-264F

THIS PLAN ACCURATE FOR ELECTRICAL WORK ONLY.

ALL DIMENSIONS ARE IN MILLIMETERS UNLESS OTHERWISE SHOWN.

FOR REDUCED PLANS ORIGINAL SCALE IS IN MILLIMETERS 0 20 40 60 80

DGN FILE =>T:\13103\MS\pse\SAS Struc\CCO\SAS CCO55\04-0120f1_027ISO5.dgn
USERNAME =>garciar

CU 04251

EA 0120F1

LAST REVISION 00-00-00
DATE PLOTTED => 3/31/2009
TIME PLOTTED => 2:35:15 PM

STATE OF CALIFORNIA - DEPARTMENT OF TRANSPORTATION
Caltrans

DESIGN OVERSIGHT
BEHZAD GOLEMOHAMMADI

CALCULATED/ DESIGNED BY
CHECKED BY

DATE | REVISED BY | DATE REVISED

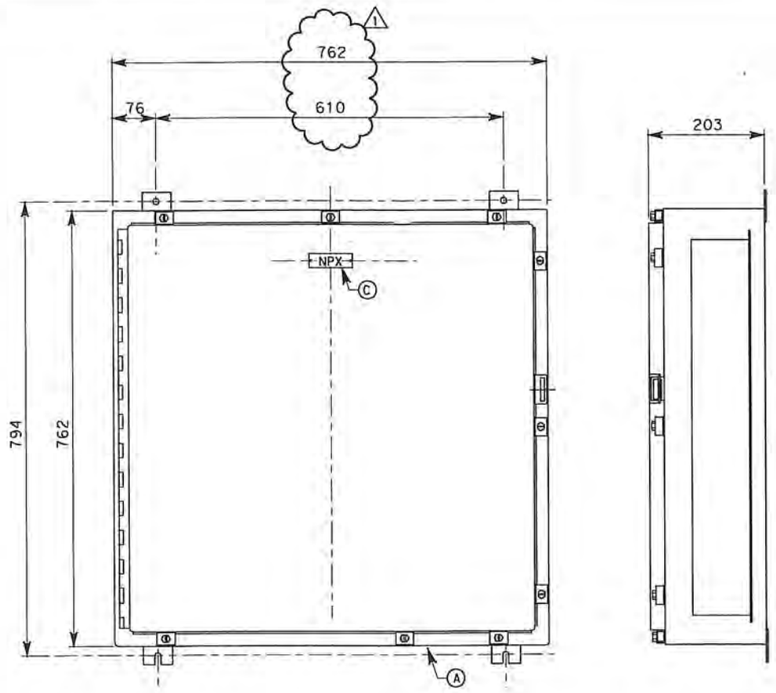

SCADA COMMUNICATION TERMINAL BOX
(5 REQUIRED)

MATERIAL LIST		DET.1
ITEM	DESCRIPTION	QTY (x5)
Ⓐ	Enclosure, Stainless ~~Steel~~, NEMA type 4X, with interior panel (PB-7B) 1	1
Ⓑ	Terminal blocks, rated 300 V, barrier type with stop screw terminals	(4) 66 pt
Ⓒ	Nameplate to be white lamicoid with black core, size 20 mm x 75 mm, lettering to be 3 mm condensed gothic.	as req'd
Ⓓ	Noise suppressor	100
Ⓔ	Terminal blocks, rated 300 V, barrier type with stop screw terminals	(2) 60 pt

NAMEPLATE SCHEDULE				WIRING DIAGRAM
ITEM	QTY	LINE No 1	LINE No 2	
NP1	1	SCADA Communication	Term. Box #Com-4	E-325
NP2	1	SCADA Communication	Term. Box #Com-5	E-324
NP3	1	SCADA Communication	Term. Box #Com-6	E-325
NP4	1	SCADA Communication	Term. Box #Com-7	E-325
NP5	1	SCADA Communication	Term. Box #Com-8	E-324

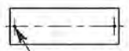

NOTE: Nameplates shall be mounted to the control panel with 4-40 stainless steel machine screws. The control panel to be drilled and tapped. (no self-tapping screws)

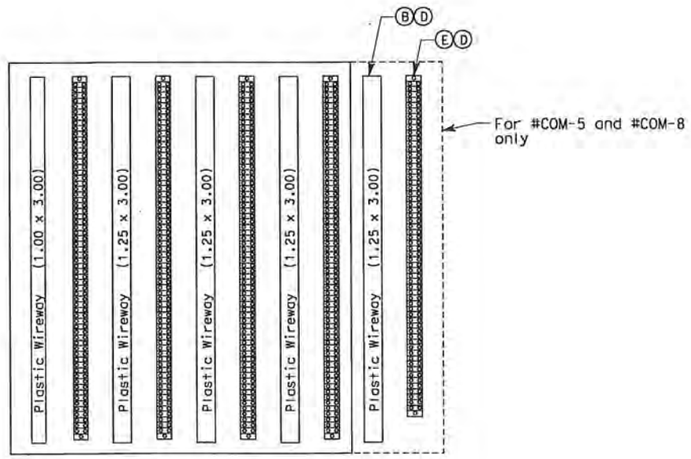

INSIDE PANEL LAYOUT

DETAILS
SCADA REMOTE TERMINAL UNIT SYSTEM
SCADA COMMUNICATION TERMINAL BOX LAYOUT
NO SCALE

E-321

DIST	COUNTY	ROUTE	KILOMETER POST TOTAL PROJECT	SHEET No	TOTAL SHEETS
04	SF	80	13.2/13.9	308 R1	1204

REGISTERED ELECTRICAL ENGINEER — 12/19/02 DATE

12-6-04
PLANS APPROVAL DATE

REGISTERED PROFESSIONAL ENGINEER — JENS ERLINGSSON No. 8249 Exp. 9/30/06 ELECTRICAL — STATE OF CALIFORNIA

PB POWER, Inc.
A Parsons Brinckerhoff Company
303 Second St., Suite 700N
San Francisco, CA 94107-1317

The State of California or its officers or agents shall not be responsible for the accuracy or completeness of electronic copies of this plan sheet.

Caltrans now has a web site! To get to the web site, go to http://www.dot.ca.gov

REGISTERED PROFESSIONAL ENGINEER — FADI WALIEDDINE No. 11465 Exp. 12/31/2009 ELECTRICAL — STATE OF CALIFORNIA

FOR REVISION ONLY
1

REQUEST FOR INFORMATION NOT ADDRESSED IN THIS CCO REMAIN IN FORCE

MARK	DATE	DESCRIPTIONS	BY	CH'D	CCO#
		REVISIONS			
1	03/30/09	SERVICE PLATFORM ELECTRICAL CHANGES	RR MP	RG FW	55

CONTRACT CHANGE ORDER NO. 55
SHEET 63 OF 90

CALCULATED/ DESIGNED BY	CHECKED BY	DATE	REVISED BY
EDC	JL	10/01	11/01
			DATE REVISED

STATE OF CALIFORNIA - DEPARTMENT OF TRANSPORTATION
Caltrans
DESIGN OVERSIGHT
BEHZAD GOLEMOHAMMADI

ALL DIMENSIONS ARE IN MILLIMETERS UNLESS OTHERWISE SHOWN

FOR REDUCED PLANS ORIGINAL SCALE IS IN MILLIMETERS 0 20 40 60 80

DGN FILE =>T:\13103\MS\pse\SAS Struc\CCO\SAS CCO55\04-0120f1_0308R01.dgn
USERNAME =>garciar

CU 04251

EA 0120F1

LAST REVISION 00-00-00
DATE PLOTTED => 3/31/2009
TIME PLOTTED => 2:34:36 PM

DATE	REVISED BY
8/02	DATE REVISED
PBP	AB

CALCULATED/ DESIGNED BY | CHECKED BY

DESIGN OVERSIGHT

BEHZAD GOLEMOHAMMADI

STATE OF CALIFORNIA - DEPARTMENT OF TRANSPORTATION

Caltrans

CONDUIT DATA

Conduit No	Reference	Size	Type	Total Fill (mm²)	Allowable Fill (mm²)	Included Cable No.	Conductor Type
1843	E-47	41	RGS conduit	0.00	534.55	Pull rope	Soft-Fiber Polyester
1844	E-47	41	RGS conduit	0.00	534.55	Pull rope	Soft-Fiber Polyester
1845	E-47	41	RGS conduit	0.00	534.55	Pull rope	Soft-Fiber Polyester
1846	E-48	41	RGS conduit	0.00	534.55	Pull rope	Soft-Fiber Polyester
1847	E-48	41	RGS conduit	0.00	534.55	Pull rope	Soft-Fiber Polyester
1848	E-48	41	RGS conduit	0.00	534.55	Pull rope	Soft-Fiber Polyester
1849	E-48	41	RGS conduit	0.00	534.55	Pull rope	Soft-Fiber Polyester
1850	E-48	41	RGS conduit	0.00	534.55	Pull rope	Soft-Fiber Polyester
1851	E-49	41	RGS conduit	0.00	534.55	Pull rope	Soft-Fiber Polyester
1852	E-49	41	RGS conduit	0.00	534.55	Pull rope	Soft-Fiber Polyester
1853	E-49	41	RGS conduit	0.00	534.55	Pull rope	Soft-Fiber Polyester
1854	E-49	41	RGS conduit	262.06	534.55		
						UP107-3A	2 + 1 gnd #12,#12, 600 V, RHH/RHW insulation
						Pull rope	Soft-Fiber Polyester
1855	E-49	41	RGS conduit	262.06	534.55		
						UP107-3A	2 + 1 gnd #12,#12, 600 V, RHH/RHW insulation
						Pull rope	Soft-Fiber Polyester
1856	E-50	41	RGS conduit	262.06	534.55		
						UP107-3A	2 + 1 gnd #12,#12, 600 V, RHH/RHW insulation
						Pull rope	Soft-Fiber Polyester
1857	E-50	41	RGS conduit	162.40	534.55	UP107-3A	2 + 1 gnd #12,#12, 600 V, RHH/RHW insulation
						Pull rope	Soft-Fiber Polyester
1858	E-50	41	RGS conduit	0.00	534.55		
						Pull rope	Soft-Fiber Polyester
1859	E-50	41	RGS conduit	0.00	534.55	Pull rope	Soft-Fiber Polyester
1860	E-50	41	RGS conduit	0.00	534.55		
						Pull rope	Soft-Fiber Polyester
1861	E-50	41	RGS conduit	265.64	534.55	Pull rope	Soft-Fiber Polyester
						S-1032-2	3 + 1 gnd #6, #8, 600 V, RHH/RHW insulation
1862	E-50, E-51	41	RGS conduit	265.64	534.55	Pull rope	Soft-Fiber Polyester
						S-1032-2	3 + 1 gnd #6, #8, 600 V, RHH/RHW insulation
1863	E-51	41	RGS conduit	265.64	534.55	Pull rope	Soft-Fiber Polyester
						S-1032-S	3 + 1 gnd #6, #8, 600 V, RHH/RHW insulation
1864	E-51	41	RGS conduit	0.00	534.55	Pull rope	Soft-Fiber Polyester
1865	E-51	41	RGS conduit	0.00	534.55	Pull rope	Soft-Fiber Polyester
1900	E-50	41	RGS conduit	0.00	534.55	Pull rope	Soft-Fiber Polyester
1901	E-50	41	RGS conduit	0.00	534.55	Pull rope	Soft-Fiber Polyester
1902	E-50	41	RGS conduit	0.00	534.55	Pull rope	Soft-Fiber Polyester
1903	E-51	41	RGS conduit	0.00	534.55	Pull rope	Soft-Fiber Polyester
1904	E-51	41	RGS conduit	0.00	534.55	Pull rope	Soft-Fiber Polyester
1905	E-51	41	RGS conduit	0.00	534.55	Pull rope	Soft-Fiber Polyester
1906	E-51	41	RGS conduit	0.00	534.55	Pull rope	Soft-Fiber Polyester

REQUEST FOR INFORMATION NOT ADDRESSED IN THIS CCO REMAIN IN FORCE

MARK	DATE	DESCRIPTIONS	BY	CH'D	CCO#
		REVISIONS			
4	03/30/09	SERVICE PLATFORM ELECTRICAL CHANGES	RY RR	RG MP	55
3	02/25/08	CABLE TRAY CHANGES	RR TW	RG	4251
2	03/04/08	BARRIER MODIFICATIONS	JS BM	RG SE	44
1	02/19/08	ELECTRICAL MODIFICATIONS	MP EL	RR	42

CONTRACT CHANGE ORDER NO. 55
SHEET 64 OF 90

MARRELL FLMIO TARAT
REGISTERED PROFESSIONAL ENGINEER
No. E 8651
Exp. 9/30/2008
ELECTRICAL
STATE OF CALIFORNIA
FOR REVISION ONLY
1

S. A. ESTOQUE, JR.
REGISTERED PROFESSIONAL ENGINEER
No. E-10151
Exp. 12/31/2008
ELECTRICAL
STATE OF CALIFORNIA
FOR REVISION ONLY
2 3

FADI WALIEDDINE
REGISTERED PROFESSIONAL ENGINEER
No. 11465
Exp. 12/31/2009
ELECTRICAL
STATE OF CALIFORNIA
FOR REVISION ONLY
4

Caltrans Metric

DIST	COUNTY	ROUTE	KILOMETER POST TOTAL PROJECT	SHEET NO	TOTAL SHEETS
04	SF	80	13.2/13.9	361 R4	1204

REGISTERED ELECTRICAL ENGINEER — 12/19/02 DATE

JENS ERLINGSSON
REGISTERED PROFESSIONAL ENGINEER
No. 8249
Exp. 9/30/06
ELECTRICAL
STATE OF CALIFORNIA

12-6-04
PLANS APPROVAL DATE

PB POWER, Inc.
A Parsons Brinckerhoff Company
303 Second St., Suite 700N
San Francisco, CA 94107-1317

The State of California or its officers or agents shall not be responsible for the accuracy or completeness of electronic copies of this plan sheet.

Caltrans now has a web site! To get to the web site, go to http://www.dot.ca.gov

CONDUIT DATA

Conduit No	Reference	Size	Type	Total Fill (mm²)	Allowable Fill (mm²)	Included Cable No.	Conductor Type
1907	E-51	41	RGS conduit	0.00	534.55	Pull rope	Soft-Fiber Polyester
1908	E-51	41	RGS conduit	0.00	534.55	Pull rope	Soft-Fiber Polyester
1950	E-50	41	RGS conduit	0.00	534.55	Pull rope	Soft-Fiber Polyester
1951	E-50	41	RGS conduit	0.00	534.55	Pull rope	Soft-Fiber Polyester
1952	E-50	41	RGS conduit	0.00	534.55	Pull rope	Soft-Fiber Polyester
1953	E-51	41	RGS conduit	0.00	534.55	Pull rope	Soft-Fiber Polyester
1954	E-51	41	RGS conduit	0.00	534.55	Pull rope	Soft-Fiber Polyester
1955	E-51	41	RGS conduit	0.00	534.55	Pull rope	Soft-Fiber Polyester
1956	E-51	41	RGS conduit	0.00	534.55	Pull rope	Soft-Fiber Polyester
1957	E-51	41	RGS conduit	0.00	534.55	Pull rope	Soft-Fiber Polyester
1958	E-51	41	RGS conduit	0.00	534.55	Pull rope	Soft-Fiber Polyester
1T13	E-96, E-101 E-126A	305	152.4 mm siderail ladder tray	2780.99	19354.80	1391	3-1/C #4/0 + 1/C #1/0 gnd, 15 kV, EPR insulation
						Pull rope	Soft-Fiber Polyester
1T14	E-20B, E-126	305	152.4 mm siderail ladder tray	2780.99	8387.08	1391	3-1/C #4/0 + 1/C #1/0 gnd, 15 kV, EPR insulation
						Pull rope	Soft-Fiber Polyester
1T23	E-114B (4)	610	152.4 mm siderail ladder tray	14012.37	18064.48		
						A-3010-1	1-3/C + gnd #2, 600 V, EPR insulation
						1115-2	1-3/C #16, 600 V, EPR insulation
						S-1031-1	1-3/C + gnd #2, 600 V, EPR insulation
						1115-1	1-3/C #14, 600 V, EPR insulation
						2201-1	1-2/C + gnd #8, 600 V, EPR insulation
						A-3009-3	1-3/C + gnd #6, 600 V, EPR insulation
						1106	1-3/C + gnd #6, 600 V, EPR insulation
						S-3056-5	1-4/C #14, 600 V, EPR insulation
						S-3056-7	1-2/C #14, 600 V, EPR insulation
						S-3056-8	1-4/C #14, 600 V, EPR insulation
						Pull rope	Soft-Fiber Polyester
						A-3010-3	1-3/C #6 + gnd 600 V, RHH/RHW insulation
						S-3051-1	1-3/C + gnd #4, 600 V, EPR insulation
						UP108-3	1-2/C + gnd #8, 600 V, EPR insulation
						1255-1	1-3/C #16 ,600V, EPR insulation
						A-3001-1	1-3/C + gnd #4, 600 V, EPR insulation
						A-3012-1	1-3/C + gnd #2, 600 V, EPR insulation
						A-3013-1	1-3/C + gnd #2, 600 V, EPR insulation
						S-3022-1	1-3/C + gnd #2, 600 V, EPR insulation
						A-3002-1	1-3/C + gnd #4, 600 V, EPR insulation
						UP107-6	1-2/C + gnd #8, 600 V, EPR insulation

For continuation, see next sheet.

CONDUIT AND TRAY SCHEDULE

E-406

LAST REVISION 00-00-00
DATE PLOTTED => 3/31/2009
TIME PLOTTED => 2:33:55 PM

FOR REDUCED PLANS ORIGINAL SCALE IS IN MILLIMETERS 0 20 40 60 80

DGN FILE =>T:\13103\MS\pse\SAS Struc\CCO\SAS CC055\04-0120F1_0361R04.dgn
USERNAME =>garciar

CU 04251

EA 0120F1

DIST	COUNTY	ROUTE	KILOMETER POST TOTAL PROJECT	SHEET No	TOTAL SHEETS
04	SF	80	13.2/13.9	362 R3	1204

Jens Erlingsson 12/19/02
REGISTERED ELECTRICAL ENGINEER DATE

12-6-04
PLANS APPROVAL DATE

REGISTERED PROFESSIONAL ENGINEER — JENS ERLINGSSON No. 8249 Exp. 9/30/06 ELECTRICAL — STATE OF CALIFORNIA

PB POWER, Inc.
A Parsons Brinckerhoff Company
303 Second St., Suite 700N
San Francisco, CA 94107-1317

The State of California or its officers or agents shall not be responsible for the accuracy or completeness of electronic copies of this plan sheet.

Caltrans now has a web site! To get to the web site, go to http://www.dot.ca.gov

Caltrans Metric

REQUEST FOR INFORMATION NOT ADDRESSED IN THIS CCO REMAIN IN FORCE					
3	03/30/09	SERVICE PLATFORM ELECTRICAL CHANGES	RY RR	RG MP	55
2	02/25/08	CABLE TRAY CHANGES	RR TW	RG	42S1
1	03/04/08	BARRIER MODIFICATIONS	JS BM	RG	44
MARK	DATE	DESCRIPTIONS REVISIONS	BY	CH'D	CCO#

CONTRACT CHANGE ORDER NO. 55
SHEET 65 OF 90

REGISTERED PROFESSIONAL ENGINEER — S. A. ESTOQUE, JR. No. E-10151 Exp. 12/31/2008 ELECTRICAL — STATE OF CALIFORNIA

FOR REVISION ONLY 1 2

REGISTERED PROFESSIONAL ENGINEER — FADI WALIEDDINE No. 11465 Exp. 12/31/2009 ELECTRICAL — STATE OF CALIFORNIA

FOR REVISION ONLY 3

CONDUIT DATA

Conduit No.	Reference	Size	Type	Total Fill (mm²)	Allowable Fill (mm²)	Included Cable No.	Conductor Type
						1117-1	1-3/C #14, 600 V, EPR insulation
						A-3009-1	1-3/C + gnd #2, 600 V, EPR insulation
						1202-4	1-3/C #14, 600 V, EPR insulation
						1117-2	1-3/C #16, 600 V, EPR insulation
						S-3021-1	1-3/C + gnd #4, 600 V, EPR insulation
						S-3023-1	1-3/C + gnd #4, 600 V, EPR insulation
						S-3056-1	1-3/C + gnd #6, 600 V, EPR insulation
						S-1031-3	1-3/C + gnd #4, 600 V, EPR insulation
						S-1032-1	1-3/C + gnd #4, 600 V, EPR insulation
						A-1035-1	1-3/C + gnd #6, 600 V, EPR insulation
						1202-3	1-7/C #16, 600 V, EPR insulation
						1099	1-3/C + gnd #2, 600 V, EPR insulation
						1098	1-3/C + gnd #2, 600 V, EPR insulation
						1097	1-3/C + gnd #2, 600 V, EPR insulation
						1096	1-3/C + gnd #2, 600 V, EPR insulation
						1095	1-3/C + gnd #2, 600 V, EPR insulation
						1117	1-3/C + gnd #2/0, 600 V, EPR insulation
						1256-1	1-3/C #16, 600 V, EPR insulation
						1202-1	1-2/C + gnd #8 ,600 V, EPR insulation
						1255-2	1-3/C #16, 600 V, EPR insulation
						A-3008-1	1-2/C + gnd #8, 600 V, EPR insulation
						1202-2	1-3/C #14, 600 V, EPR insulation
						A-3011-1	1-3/C + gnd #2, 600 V, EPR insulation
1T24	E-114	610	152.4 mm siderail ladder tray	1652.27	18064.48	UP104-7	1-2/C + gnd #8, 600 V, EPR insulation
						1095	1-3/C + gnd #2, 600 V, EPR insulation
						Pull rope	Soft-Fiber Polyester
						UP104-9	1-2/C + gnd #10, 600 V, EPR insulation
						UP104-8	1-2/C + gnd #8, 600 V, EPR insulation
						1255-1	1-3/C #16, 600 V, EPR insulation
						UP104-3	1-2/C + gnd #10, 600 V, EPR insulation
						UP204-1	1-2/C + gnd #10, 600 V, EPR insulation
						UP104-6	1-2/C + gnd #8 ,600 V, EPR insulation
1T25	E-114B (3)	610	152.4 mm siderail ladder tray	3092.69	18064.48	UP105-10	1-2/C + gnd #8, 600 V, EPR insulation
						1201-1	1-2/C + gnd #8, 600 V, EPR insulation
						1201-2	1-2/C + gnd #8, 600 V, EPR insulation
						1201-6	1-2/C + gnd #8, 600 V, EPR insulation
						1096	1-3/C + gnd #2, 600 V, EPR insulation
						1255-1	1-3/C #16, 600 V, EPR insulation
						1202-4	1-3/C #14, 600 V, EPR insulation
						UP105-8	1-2/C + gnd #8, 600 V, EPR insulation
						UP205-1	1-2/C + gnd #10, 600 V, EPR insulation
						1115-1	1-3/C #14, 600 V, EPR insulation
						1202-3	1-7/C #16, 600 V, EPR insulation
						1202-2	1-3/C #14, 600 V, EPR insulation
						1115-2	1-3/C #16, 600 V, EPR insulation
						1255-2	1-3/C #16, 600 V, EPR insulation
						Pull rope	Soft-Fiber Polyester
						UP105-3	1-2/C + gnd #10, 600 V, EPR insulation
						UP105-9	1-2/C + gnd #8, 600 V, EPR insulation
						UP105-7	1-2/C + gnd #8, 600 V, EPR insulation
						S-3056-5	1-4/C #14, 600 V, EPR insulation
						S-3056-7	1-2/C #14, 600 V, EPR insulation
1T26	E-116	610	152.4 mm siderail ladder tray	2773.72	18064.48	UP106-1	1-2/C + gnd #8, 600 V, EPR insulation
						UP106-8	1-2/C + gnd #8, 600 V, EPR insulation
						UP106-3	1-2/C + gnd #8, 600 V, EPR insulation
						1255-2	1-3/C #16, 600 V, EPR insulation
						UP206-1	1-2/C + gnd #10, 600 V, EPR insulation
						Pull rope	Soft-Fiber Polyester
						1202-2	1-3/C #14, 600 V, EPR insulation
						1202-3	1-7/C #16, 600 V, EPR insulation
						UP106-6	1-2/C + gnd #8, 600 V, EPR insulation
						UP106-7	1-2/C + gnd #8, 600 V, EPR insulation
						CCTVE01BA	TVP
						CCTVE01BB	TVCP
						UP106-9	1-2/C + gnd #8, 600 V, EPR insulation
						1097	1-3/C + gnd #2, 600 V, EPR insulation
						1202-4	1-3/C #14, 600 V, EPR insulation
						1202-1	1-2/C + gnd #8, 600 V, EPR insulation
1T27	E-117	610	152.4 mm siderail ladder tray	1726.55	18064.48	UP107-6	1-2/C + gnd #8, 600 V, EPR insulation
						Pull rope	Soft-Fiber Polyester
						UP107-7	1-2/C + gnd #8, 600 V, EPR insulation
						UP107-9	1-2/C + gnd #8, 600 V, EPR insulation
						1256-1	1-3/C #16 ,600V, EPR insulation
						UP107-8	1-2/C + gnd #8, 600 V, EPR insulation

CONDUIT DATA

Conduit No.	Reference	Size	Type	Total Fill (mm²)	Allowable Fill (mm²)	Included Cable No.	Conductor Type
						1098	1-3/C + gnd #2, 600 V, EPR insulation
						UP107-3	1-2/C + gnd #8, 600 V, EPR insulation
1T28	E-118	610	152.4 mm siderail ladder tray	3336.36	18064.48	UP108-8	1-2/C + gnd #8, 600 V, EPR insulation
						UP108-3	1-2/C + gnd #8, 600 V, EPR insulation
						UP108-10	1-2/C + gnd #8, 600 V, EPR insulation
						S-3056-8	1-4/C #14, 600 V, EPR insulation (3)
						Pull rope	Soft-Fiber Polyester
						UP108-7	1-2/C + gnd #8, 600 V, EPR insulation
						1117-2	1-3/C #16 ,600V, EPR insulation
						2201-5	1-3/C #14, 600 V, EPR insulation
						2201-3	1-3/C #14, 600 V, EPR insulation
						2201-1	1-2/C + gnd #8, 600 V, EPR insulation
						2201-4	1-9/C #16, 600 V, EPR insulation
						1118-2	1-3/C #16, 600 V, EPR insulation
						UP108-9	1-2/C + gnd #8, 600 V, EPR insulation
						UP108-12	1-2/C + gnd #8, 600 V, EPR insulation
						1117-1	1-3/C #14, 600 V, EPR insulation
						1118-1	1-3/C #14, 600 V, EPR insulation (3)
						1099	1-3/C + gnd #2, 600 V, EPR insulation
						1256-1	1-3/C #16, 600 V, EPR insulation
1T29	E-20B, E-126	610	152.4 mm siderail ladder tray	11507.41	18064.48	1106	1-3/C + gnd #6, 600 V, EPR insulation
						S-1032-1	1-3/C + gnd #4, 600 V, EPR insulation
						A-3002-1	1-3/C + gnd #4, 600 V, EPR insulation
						A-3001-1	1-3/C + gnd #4, 600 V, EPR insulation
						A-3013-1	1-3/C + gnd #2, 600 V, EPR insulation
						A-3012-1	1-3/C + gnd #2, 600 V, EPR insulation
						S-3023-1	1-3/C + gnd #4, 600 V, EPR insulation
						1097	1-3/C + gnd #2, 600 V, EPR insulation
						S-3051-1	1-3/C + gnd #4, 600 V, EPR insulation
						A-1035-1	1-3/C + gnd #6, 600 V, EPR insulation
						A-3011-1	1-3/C + gnd #2, 600 V, EPR insulation
						S-3021-1	1-3/C + gnd #4, 600 V, EPR insulation
						S-3022-1	1-3/C + gnd #2, 600 V, EPR insulation
						S-3056-1	1-3/C + gnd #6, 600 V, EPR insulation
						1098	1-3/C + gnd #2, 600 V, EPR insulation
						1096	1-3/C + gnd #2, 600 V, EPR insulation
						1095	1-3/C + gnd #2, 600 V, EPR insulation
						S-1031-1	1-3/C + gnd #2, 600 V, EPR insulation
						Pull rope	Soft-Fiber Polyester
						1099	1-3/C + gnd #2, 600 V, EPR insulation
						A-3008-1	1-2/C + gnd #8, 600 V, EPR insulation
						1117	1-3/C + gnd #2/0, 600 V, EPR insulation
						A-3010-1	1-3/C + gnd #2, 600 V, EPR insulation
						1115	1-3/C + gnd #1/0, 600 V, EPR insulation
						1115-1	1-3/C #14, 600 V, EPR insulation
						1115-2	1-3/C #16, 600 V, EPR insulation
						A-3009-1	1-3/C + gnd #2, 600 V, EPR insulation

For continuation, see next sheet.

CONDUIT AND TRAY SCHEDULE

E-407

DATE	REVISED BY	DATE REVISED
8/02	AB	8/02

CALCULATED/DESIGNED BY: PBP
CHECKED BY: AB

DESIGN OVERSIGHT: BEHZAD GOLEMOHAMMADI

STATE OF CALIFORNIA - DEPARTMENT OF TRANSPORTATION
Caltrans

LAST REVISION 00-00-00
DATE PLOTTED => 3/31/2009
TIME PLOTTED => 2:33:15 PM

FOR REDUCED PLANS ORIGINAL SCALE IS IN MILLIMETERS 0 20 40 60 80

DGN FILE =>T:\13103\WS\pse\SAS Struc\CCO\SAS CCO55\04-0120f1_0362R03.dgn
USERNAME =>garciar

CU 04251

EA 0120F1

CONDUIT DATA

Conduit No	Reference	Size	Type	Total Fill (mm²)	Allowable Fill (mm²)	Included Cable No.	Conductor Type
1T33	E-114B 3	610	152.4 mm siderail ladder tray	7720.94	18064.48	UP104-8	1-2/C + gnd #8, 600 V, EPR insulation
						UP108-12	1-2/C + gnd #8, 600 V, EPR insulation
						UP108-9	1-2/C + gnd #8, 600 V, EPR insulation
						A-1011-1	1-3/C + gnd #2, 600 V, EPR insulation
						A-1012-1	1-3/C + gnd #2, 600 V, EPR insulation
						UP104-3	1-2/C + gnd #10, 600 V, EPR insulation
						UP107-3	1-2/C + gnd #8, 600 V, EPR insulation
						UP105-9	1-2/C + gnd #8, 600 V, EPR insulation
						UP104-9	1-2/C + gnd #10, 600 V, EPR insulation
						Pull rope	Soft-Fiber Polyester
						UP108-4	1-2/C + gnd #8, 600 V, EPR insulation
						UP108-2	1-2/C + gnd #8, 600 V, EPR insulation
						UP108-7	1-2/C + gnd #8, 600 V, EPR insulation
						UP107-7	1-2/C + gnd #8, 600 V, EPR insulation
						UP106-7	1-2/C + gnd #8, 600 V, EPR insulation
						UP105-7	1-2/C + gnd #8, 600 V, EPR insulation
						A-1013-1	1-3/C + gnd #2, 600 V, EPR insulation
						UP107-9	1-2/C + gnd #8, 600 V, EPR insulation
						A-1014-1	1-3/C + gnd #2, 600 V, EPR insulation
						UP106-3	1-2/C + gnd #8, 600 V, EPR insulation
						UP105-3	1-2/C + gnd #10, 600 V, EPR insulation
						UP106-6	1-2/C + gnd #8, 600 V, EPR insulation
						UP105-10	1-2/C + gnd #8, 600 V, EPR insulation
						UP104-6	1-2/C + gnd #8, 600 V, EPR insulation
						UP107-8	1-2/C + gnd #8, 600 V, EPR insulation
						UP106-8	1-2/C + gnd #8, 600 V, EPR insulation
						UP105-8	1-2/C + gnd #8, 600 V, EPR insulation
						UP104-7	1-2/C + gnd #8, 600 V, EPR insulation
						UP108-8	1-2/C + gnd #8, 600 V, EPR insulation
						UP106-9	1-2/C + gnd #8, 600 V, EPR insulation
						UP108-10	1-2/C + gnd #8, 600 V, EPR insulation
1T39	E-20B, E-126	610	152.4 mm siderail ladder tray	1054.36	18064.48	A-1011-1	1-3/C + gnd #2, 600 V, EPR insulation
						A-1014-1	1-3/C + gnd #2, 600 V, EPR insulation
						Pull rope	Soft-Fiber Polyester
1T43	E-114B 3	610	152.4 mm siderail solid bottom tray	11370.25	38709.60	MVDSW04A	MVDS DLC
						1144	1 - 2 pair, shielded #18 with IS/OA , 300 V, PVC jacket
						1475-3C	12 Fiber, single mode fiberoptic cable
						1475-3A	12 Fiber, single mode fiberoptic cable
						1474-4	50 pair #18, shielded pairs, IS/OS shield 600 V, XLPE insul., PVC jacket
						1145	1 - 2 pair, shielded #18 with IS/OA , 300 V, PVC jacket
						1474-5	50 pair #18, shielded pairs, IS/OS shield 600 V, XLPE insul., PVC jacket
						1474-7	50 pair #18, shielded pairs, IS/OS shield 600 V, XLPE insul., PVC jacket
						1477-2	72 Fiber, single mode fiberoptic riser cable
						1475-3	72 Fiber, single mode fiberoptic riser cable
						MVDSW02A	MVDS DLC
						1475-3B	12 Fiber, single mode fiberoptic cable
						2900-472B	4 pair #22, shielded pairs, FEP insulation
						2900-182A	4 pair #22, shielded pairs, FEP insulation
						2900-182B	4 pair #22, shielded pairs, FEP insulation
						2900-202A	4 pair #22, shielded pairs, FEP insulation
						2900-282A	4 pair #22, shielded pairs, FEP insulation
						2900-342A	4 pair #22, shielded pairs, FEP insulation
						2900-392A	4 pair #22, shielded pairs, FEP insulation
						2900-462A	4 pair #22, shielded pairs, FEP insulation
						2900-472A	4 pair #22, shielded pairs, FEP insulation
						Pull rope	Soft-Fiber Polyester
						2900-472C	4 pair #22, shielded pairs, FEP insulation
						1474-8	50 pair #18, shielded pairs, IS/OS shield 600 V, XLPE insul., PVC jacket
						1473-5	50 pair #18, shielded pairs, IS/OS shield 600 V, XLPE insul., PVC jacket
						1473-7	50 pair #18, shielded pairs, IS/OS shield 600 V, XLPE insul., PVC jacket
						1473-10	50 pair #18, shielded pairs, IS/OS shield 600V, XLPE insul., PVC jacket

REQUEST FOR INFORMATION NOT ADDRESSED IN THIS CCO REMAIN IN FORCE					
3	03/30/09	SERVICE PLATFORM ELECTRICAL CHANGES	RY RR	RG MP	55
2	02/25/08	CABLE TRAY CHANGES	RR TW	RG	4251
1	03/04/08	BARRIER MODIFICATIONS	JS BM	RG	44
MARK	DATE	DESCRIPTIONS	BY	CH'D	CCO#
		REVISIONS			

CONTRACT CHANGE ORDER NO. 55
SHEET 66 OF 90

S. A. ESTOQUE, JR. REGISTERED PROFESSIONAL ENGINEER No. E-10151 Exp.12/31/2008 ELECTRICAL STATE OF CALIFORNIA

FOR REVISION ONLY 1 2

FADI WALIEDDINE REGISTERED PROFESSIONAL ENGINEER No. 11465 Exp.12/31/2009 ELECTRICAL STATE OF CALIFORNIA

FOR REVISION ONLY 3

Caltrans Metric

DIST	COUNTY	ROUTE	KILOMETER POST TOTAL PROJECT	SHEET No	TOTAL SHEETS
04	SF	80	13.2/13.9	363 R3	1204

Jens Erlingsson 12/19/02
REGISTERED ELECTRICAL ENGINEER DATE

12-6-04
PLANS APPROVAL DATE

JENS ERLINGSSON REGISTERED PROFESSIONAL ENGINEER No. 8249 Exp. 9/30/06 ELECTRICAL STATE OF CALIFORNIA

PB POWER, Inc.
A Parsons Brinckerhoff Company
303 Second St., Suite 700N
San Francisco, CA 94107-1317

The State of California or its officers or agents shall not be responsible for the accuracy or completeness of electronic copies of this plan sheet.

Caltrans now has a web site! To get to the web site, go to http://www.dot.ca.gov

CONDUIT DATA

Conduit No	Reference	Size	Type	Total Fill (mm²)	Allowable Fill (mm²)	Included Cable No.	Conductor Type
						1474-10	50 pair #18, shielded pairs, IS/OS shield 600 V, XLPE insul., PVC jacket
						2900-462B	4 pair #22, shielded pairs, FEP insulation
1T44	E-114A 3	610	152.4 mm siderail solid bottom tray	3785.76	38709.60	1473-5	50 pair #18, shielded pairs, IS/OS shield 600 V, XLPE insul., PVC jacket
						1474-5	50 pair #18, shielded pairs, IS/OS shield 600 V, XLPE insul., PVC jacket
						1475-3A	12 Fiber, single mode fiberoptic cable
						MVDSW02A	MVDS DLC
						Pull rope	Soft-Fiber Polyester
						1474-4	50 pair #18, shielded pairs, IS/OS shield 600 V, XLPE insul., PVC jacket
1T45	E-114B 3	610	152.4 mm siderail solid bottom tray	3563.45	38709.60	Pull rope	Soft-Fiber Polyester
						2900-182A	4 pair #22, shielded pairs, FEP insulation
						2910-10	4 pair #22, shielded pairs, 300 V, PE insulation
						2910-8	4 pair #22, shielded pairs, 300 V, PE insulation
						1473-5	50 pair #18, shielded pairs, IS/OS shield 600 V, XLPE insul., PVC jacket
						1474-5	50 pair #18, shielded pairs, IS/OS shield 600 V, XLPE insul., PVC jacket
						1474-5B	1 - 6 pair, shielded #18 with overall shield , 300 V, PVC jacket
						1474-5A	1 - 6 pair, shielded #18 with overall shield , 300 V, PVC jacket
						2900-472C	4 pair #22, shielded pairs, FEP insulation
						2900-182B	4 pair #22, shielded pairs, FEP insulation
						2900-472A	4 pair #22, shielded pairs, FEP insulation
						2900-462B	4 pair #22, shielded pairs, FEP insulation
						2900-462A	4 pair #22, shielded pairs, FEP insulation
						2900-392A	4 pair #22, shielded pairs, FEP insulation
						2900-342A	4 pair #22, shielded pairs, FEP insulation
						2900-282A	4 pair #22, shielded pairs, FEP insulation
						2910-7	4 pair #24, overall shielded, 30 V, PE insulation
						2900-472B	4 pair #22, shielded pairs, FEP insulation
						2900-202A	4 pair #22, shielded pairs, FEP insulation
1T46	E-98, E-114 3	610	152.4 mm siderail solid bottom tray	2757.87	38709.60	CCTVE01BD	TVL
						1474-7	50 pair #18, shielded pairs, IS/OS shield 600 V, XLPE insul., PVC jacket
						MVDSW03A	MVDS DLC
						CCTVE01BC	TVC
						1475-3B	12 Fiber, single mode fiberoptic cable
						Pull rope	Soft-Fiber Polyester
						1473-7	50 pair #18, shielded pairs, IS/OS shield 600 V, XLPE insul., PVC jacket

For continuation, see next sheet.

CONDUIT AND TRAY SCHEDULE

E-408

CALCULATED/DESIGNED BY: PBP
CHECKED BY: AB
DATE REVISED: DATE 8/02
REVISED BY: 8/02

DESIGN OVERSIGHT
BEHZAD GOLEMOHAMMADI

STATE OF CALIFORNIA - DEPARTMENT OF TRANSPORTATION
Caltrans

LAST REVISION 00-00-00
DATE PLOTTED => 3/31/2009
TIME PLOTTED => 2:32:35 PM

FOR REDUCED PLANS ORIGINAL SCALE IS IN MILLIMETERS 0 20 40 60 80

DGN FILE =>T:\13103\MS\pse\SAS Struc\CCO\SAS CCO55\04-0120f1_0363R03.dgn
USERNAME =>gorciar

CU 04251

EA 0120F1

DIST	COUNTY	ROUTE	KILOMETER POST TOTAL PROJECT	SHEET No	TOTAL SHEETS
04	SF	80	13.2/13.9	373 R3	1204

REGISTERED ELECTRICAL ENGINEER — 12/19/02 DATE

12-6-04
PLANS APPROVAL DATE

JENS ERLINGSSON No. 8249 Exp. 9/30/06 ELECTRICAL — REGISTERED PROFESSIONAL ENGINEER — STATE OF CALIFORNIA

PB POWER, Inc.
A Parsons Brinckerhoff Company
303 Second St., Suite 700N
San Francisco, CA 94107-1317

The State of California or its officers or agents shall not be responsible for the accuracy or completeness of electronic copies of this plan sheet.

Caltrans now has a web site! To get to the web site, go to: http://www.dot.ca.gov

REQUEST FOR INFORMATION NOT ADDRESSED IN THIS CCO REMAIN IN FORCE

MARK	DATE	DESCRIPTIONS	BY	CH'D	CCO#
		REVISIONS			
3	03/30/09	SERVICE PLATFORM ELECTRICAL CHANGES	RY RR	RG MP	55
2	02/25/08	CABLE TRAY CHANGES	TW	RG	42S1
1	03/04/08	BARRIER MODIFICATIONS	JS BM	RG SE	44

CONTRACT CHANGE ORDER NO. 55
SHEET 67 OF 90

REGISTERED PROFESSIONAL ENGINEER — S. A. ESTOQUE, JR. — No. E-10151 — Exp. 12/31/2008 ELECTRICAL — STATE OF CALIFORNIA

FOR REVISION ONLY
1 2

REGISTERED PROFESSIONAL ENGINEER — FADI WALIEDDINE — No. 11465 — Exp. 12/31/2009 ELECTRICAL — STATE OF CALIFORNIA

FOR REVISION ONLY
3

CONDUIT DATA

Conduit No	Reference	Size	Type	Total Fill (mm²)	Allowable Fill (mm²)	Included Cable No.	Conductor Type
2959	E-139	41	RGS conduit	0.00	534.55	Pull rope	Soft-Fiber Polyester
2960	E-139	41	RGS conduit	440.31	534.55	LP223-2,4A	3 + 1 gnd #6,#8, 600 V, RHH/RHW insulation
						Pull rope	Soft-Fiber Polyester
2961	E-139	41	RGS conduit	0.00	534.55	Pull rope	Soft-Fiber Polyester
2962	E-138	41	RGS conduit	0.00	534.55	Pull rope	Soft-Fiber Polyester
2963	E-138	41	RGS conduit	0.00	534.55	Pull rope	Soft-Fiber Polyester
2964	E-138	41	RGS conduit	0.00	534.55	Pull rope	Soft-Fiber Polyester
2965	E-138	41	RGS conduit	0.00	534.55	Pull rope	Soft-Fiber Polyester
2966	E-138	41	RGS conduit	0.00	534.55	Pull rope	Soft-Fiber Polyester
2967	E-138	41	RGS conduit	0.00	534.55	Pull rope	Soft-Fiber Polyester
2T13	E-181 Thru E-186 E-212A	305	152.4 mm siderail ladder tray	2780.99	8387.08	Pull rope	Soft-Fiber Polyester
						2391	3-1/C #4/0 + 1/C #1/0 gnd, 15kV, EPR insulation
2T14	E-212, E-21B	305	152.4 mm siderail ladder tray	2780.99	8387.08	Pull rope	Soft-Fiber Polyester
						2391	3-1/C #4/0 + 1/C #1/0 gnd, 15kV, EPR insulation
2T14A	E-21, E-21E	305	152.4 mm siderail ladder tray	0.00	12580.62		
2T14B	E-21, E-21E	305	152.4 mm siderail ladder tray	0.00	12580.62		
2T21	E182,E207C,E264	610	152.4 mm siderail ladder tray	0.00	16774.16		
2T23	E-114B (3)	760	152.4 mm siderail ladder tray	19079.92	22580.60	2202-2	1-3/C #14,600 V, EPR insulation
						A-3004-1	1-3/C + gnd #2,600 V, EPR insulation
						A-3003-1	1-3/C + gnd #4,600 V, EPR insulation
						A-2013-1	1-3/C + gnd #2,600 V, EPR insulation
						A-2012-1	1-3/C + gnd #2,600 V, EPR insulation
						2123	1-3/C + gnd #2,600 V, EPR insulation
						2202-3	1-7/C #16,600 V, EPR insulation
						2105	1-3/C + gnd #2,600 V, EPR insulation
						2106	1-3/C + gnd #2,600 V, EPR insulation
						2120-1	1-3/C #14,600 V, EPR insulation
						2120-2	1-3/C #14,600 V, EPR insulation
						2202-4	1-3/C #14,600 V, EPR insulation
						2104	1-3/C + gnd #2,600 V, EPR insulation
						2121	1-3/C + gnd #1/0,600 V, EPR insulation
						2204-1	1-3/C #16,600 V, EPR insulation
						UP204-7	1-2/C + gnd #8,600 V, EPR insulation
						2119-A	1-3/C + gnd 250 Kcmil,600 V, EPR insulation
						CCTVE01BA	TVP
						CCTVE01BB	TVCP
						CCTVE01AA	TVP
						2121-2	1-3/C #14,600 V, EPR insulation
						2201-2	1-2/C + gnd #8,600 V, EPR insulation
						2123-2	1-3/C + gnd #2/0,600 V, EPR insulation
						2123-3	1-3/C + gnd #2/0,600 V, EPR insulation
						1118	1-3/C + gnd #2/0,600 V, EPR insulation
						2095	1-3/C + gnd #2,600 V, EPR insulation
						2096	1-3/C + gnd #2,600 V, EPR insulation
						2097	1-3/C + gnd #2,600 V, EPR insulation
						2098	1-3/C + gnd #2,600 V, EPR insulation
						2099	1-3/C + gnd #2,600 V, EPR insulation
						S-3053-1	1-3/C + gnd #2,600 V, EPR insulation
						2107	1-3/C + gnd #2,600 V, EPR insulation
						2120	1-3/C + gnd #1/0,600 V, EPR insulation
						2201-6	1-2/C + gnd #8,600 V, EPR insulation
						1201-1	1-2/C + gnd #8,600 V, EPR insulation
						2202-1	1-2/C + gnd #8,600 V, EPR insulation
						2204-2	1-3/C #16,600 V, EPR insulation
						Pull rope	Soft-Fiber Polyester
						A-3041-1	1-3/C + gnd #2,600 V, EPR insulation
						S-3052-1	1-3/C + gnd #2,600 V, EPR insulation
						2125	1-3/C + gnd 250 Kcmil,600 V, EPR insulation
						2103	1-3/C + gnd #2,600 V, EPR insulation
						S-3056-9	1-4/C #14,600 V, EPR insulation
						CCTVE01AB	TVCP
						2121-1	1-3/C #14,600 V, EPR insulation
						S-3056-6	1-4/C #14,600 V, EPR insulation

CONDUIT DATA

Conduit No	Reference	Size	Type	Total Fill (mm²)	Allowable Fill (mm²)	Included Cable No.	Conductor Type
2T24	E-114, E-182	610	152.4 mm siderail ladder tray	2284.74	18064.48	LP219-2,4	1-3/C + gnd #6,600 V, EPR insulation
						LP219-6,8	1-3/C + gnd #6,600 V, EPR insulation
						Pull rope	Soft-Fiber Polyester
						UP204-7	1-2/C + gnd #8,600 V, EPR insulation
						UP204-1	1-2/C + gnd #10,600 V, EPR insulation
						UP204-8	1-2/C + gnd #8,600 V, EPR insulation
						2103	1-3/C + gnd #2,600 V, EPR insulation
						2095	1-3/C + gnd #2,600 V, EPR insulation
2T25	E-115, E-182	610	152.4 mm siderail ladder tray	3803.05	18064.48	UP205-7	1-2/C + gnd #8,600 V, EPR insulation
						UP205-1	1-2/C + gnd #10,600 V, EPR insulation
						LP220-6,8	1-3/C + gnd #6,600 V, EPR insulation
						LP220-2,4	1-3/C + gnd #6,600 V, EPR insulation
						Pull rope	Soft-Fiber Polyester
						S-3056-6	1-4/C #14,600 V, EPR insulation (3)
						2202-2	1-3/C #14,600 V, EPR insulation
						2120-1	1-3/C #14,600 V, EPR insulation
						2204-2	1-3/C #16,600 V, EPR insulation
						2121-2	1-3/C #14,600 V, EPR insulation
						2096	1-3/C + gnd #2,600 V, EPR insulation
						2204-1	1-3/C #16,600 V, EPR insulation
						2104	1-3/C + gnd #2,600 V, EPR insulation
						UP205-8	1-2/C + gnd #8,600 V, EPR insulation
						2202-4	1-3/C #14,600 V, EPR insulation
						2202-3	1-7/C #16,600 V, EPR insulation
						2120-2	1-3/C #14,600 V, EPR insulation
						2121-1	1-3/C #14,600 V, EPR insulation
2T26	E-117, E-183	610	152.4 mm siderail ladder tray	3296.85	18064.48	2202-1	1-2/C + gnd #8,600 V, EPR insulation
						CCTVE01BA	TVP
						LP221-2,4	1-3/C + gnd #6,600 V, EPR insulation
						Pull rope	Soft-Fiber Polyester
						CCTVE01AB	TVCP
						CCTVE01AA	TVP
						CCTVE01BB	TVCP
						LP221-6,8	1-3/C + gnd #6,600 V, EPR insulation
						UP206-7	1-2/C + gnd #8,600 V, EPR insulation
						UP207-1	1-2/C + gnd #10,600 V, EPR insulation
						UP206-1	1-2/C + gnd #10,600 V, EPR insulation
						2202-2	1-3/C #14,600 V, EPR insulation
						2105	1-3/C + gnd #2,600 V, EPR insulation
						2097	1-3/C + gnd #2,600 V, EPR insulation
						UP206-8	1-2/C + gnd #8,600 V, EPR insulation
						2202-4	1-3/C #14,600 V, EPR insulation
						2202-3	1-7/C #16,600 V, EPR insulation

For continuation, see next sheet.

CONDUIT AND TRAY SCHEDULE

E-418

STATE OF CALIFORNIA - DEPARTMENT OF TRANSPORTATION
Caltrans

DESIGN OVERSIGHT
BEHZAD GOLEMOHAMMADI

DATE	REVISED BY	DATE REVISED
8/02	AB	8/02

CALCULATED/DESIGNED BY — PBP
CHECKED BY — DATE

LAST REVISION 00-00-00
DATE PLOTTED => 3/31/2009
TIME PLOTTED => 21:31:45 PM

FOR REDUCED PLANS ORIGINAL SCALE IS IN MILLIMETERS 0 20 40 60 80

DGN FILE =>T:\13103\MS\pse\SAS Struc\CCO\SAS CC055\04-0120f1_03R03.dgn
USERNAME =>garcior

CU 04251

EA 0120F1

CONDUIT DATA

Conduit No	Reference	Size	Type	Total Fill (mm²)	Allowable Fill (mm²)	Included Cable No.	Conductor Type
2T27	E-118, E-184	610	152.4 mm siderail ladder tray	2157.86	18064.48	LP222-6,8	1-3/C + gnd #6,600 V, EPR insulation
						2098	1-3/C + gnd #2,600 V, EPR insulation
						2106	1-3/C + gnd #2,600 V, EPR insulation
						UP207-8	1-2/C + gnd #8,600 V, EPR insulation
						UP207-7	1-2/C + gnd #8,600 V, EPR insulation
						Pull rope	Soft-Fiber Polyester
						LP222-2,4	1-3/C + gnd #6,600 V, EPR insulation
2T28	E-119, E-185	610	152.4 mm siderail ladder tray	3847.88	18064.48	~~UP208-6~~	~~1-2/C + gnd #8,600 V, EPR insulation~~ 3
						Pull rope	Soft-Fiber Polyester
						~~LP223-2,4~~	~~1-3/C + gnd #6,600 V, EPR insulation~~ 3
						UP208-7	1-2/C + gnd #8,600 V, EPR insulation
						2107	1-3/C + gnd #2,600 V, EPR insulation
						LP223-6,8	1-3/C + gnd #6,600 V, EPR insulation
						2201-5	1-3/C #14,600 V, EPR insulation
						UP208-8	1-2/C + gnd #8,600 V, EPR insulation
						1118-1	1-3/C #14,600 V, EPR insulation
						2201-6	1-2/C + gnd #8,600 V, EPR insulation
						S-3056-9	1-4/C #14,600 V, EPR insulation
						2099	1-3/C + gnd #2,600 V, EPR insulation
						1118-2	1-3/C #16,600 V, EPR insulation
						2201-3	1-3/C #14,600 V, EPR insulation
						2201-2	1-2/C + gnd #8,600 V, EPR insulation
						2201-4	1-9/C #16,600 V, EPR insulation
2T29	E-212, E-218	610	152.4 mm siderail ladder tray	16623.79	18064.48	2123-3	1-3/C + gnd #2/0,600 V, EPR insulation
						Pull rope	Soft-Fiber Polyester
						2119-A	1-3/C + gnd 250 kcmil,600 V, EPR insulation
						2121	1-3/C + gnd #1/0,600 V, EPR insulation
						A-3004-1	1-3/C + gnd #2,600 V, EPR insulation
						A-3003-1	1-3/C + gnd #4,600 V, EPR insulation
						A-2012-1	1-3/C + gnd #2,600 V, EPR insulation
						2123	1-3/C + gnd #2,600 V, EPR insulation
						2105	1-3/C + gnd #2,600 V, EPR insulation
						2104	1-3/C + gnd #2,600 V, EPR insulation
						2125	1-3/C + gnd 250 kcmil,600 V, EPR insulation
						2123-2	1-3/C + gnd #2/0,600 V, EPR insulation
						2106	1-3/C + gnd #2,600 V, EPR insulation
						1118	1-3/C + gnd #2/0,600 V, EPR insulation
						2095	1-3/C + gnd #2,600 V, EPR insulation
						2096	1-3/C + gnd #2,600 V, EPR insulation
						2097	1-3/C + gnd #2,600 V, EPR insulation
						2098	1-3/C + gnd #2,600 V, EPR insulation
						2099	1-3/C + gnd #2,600 V, EPR insulation
						2103	1-3/C + gnd #2,600 V, EPR insulation
						2107	1-3/C + gnd #2,600 V, EPR insulation
						A-3041-1	1-3/C + gnd #2,600 V, EPR insulation
						S-3053-1	1-3/C + gnd #2,600 V, EPR insulation
						S-3052-1	1-3/C + gnd #2,600 V, EPR insulation
						2120	1-3/C + gnd #1/0,600 V, EPR insulation
						A-2013-1	1-3/C + gnd #2,600 V, EPR insulation
2T33	E-114B 3	760	152.4 mm siderail ladder tray	19081.45	22580.60	~~A-2011-1~~	~~1-3/C + gnd #2,600 V, EPR insulation~~
						UP208-2A	1-2/C + gnd #8,600 V, EPR insulation 3
						UP208-4A	1-2/C + gnd #8,600 V, EPR insulation
						~~UP208-6~~	~~1-2/C + gnd #8,600 V, EPR insulation~~
						Pull rope	Soft-Fiber Polyester
						LP219-2,4	1-3/C + gnd #6,600 V, EPR insulation
						LP219-6,8	1-3/C + gnd #6,600 V, EPR insulation
						LP220-2,4	1-3/C + gnd #6,600 V, EPR insulation
						LP220-6,8	1-3/C + gnd #6,600 V, EPR insulation
						LP221-2,4	1-3/C + gnd #6,600 V, EPR insulation
						A-3057-1	1-3/C + gnd #2,600 V, EPR insulation
						A-2014-1	1-3/C + gnd #2,600 V, EPR insulation
						UP204-8	1-2/C + gnd #8,600 V, EPR insulation
						UP205-8	1-2/C + gnd #8,600 V, EPR insulation
						UP207-8	1-2/C + gnd #8,600 V, EPR insulation
						UP205-1	1-2/C + gnd #10,600 V, EPR insulation
						UP207-7	1-2/C + gnd #8,600 V, EPR insulation
						A-3039-3	1-3/C + gnd #6,600 V, EPR insulation
						A-3040-3	1-3/C + gnd #6,600 V, EPR insulation
						A-3005-1	1-3/C + gnd #2,600 V, EPR insulation
						A-3006-1	1-3/C + gnd #4,600 V, EPR insulation
						A-3031-1	1-3/C + gnd #4,600 V, EPR insulation

REQUEST FOR INFORMATION NOT ADDRESSED IN THIS CCO REMAIN IN FORCE					
3	03/30/09	SERVICE PLATFORM ELECTRICAL CHANGES	RY RR	RG MP	55
2	02/25/08	CABLE TRAY CHANGES	TW	RG	42S1
1	03/04/08	BARRIER MODIFICATIONS	JS BM	RG SE	44
MARK	DATE	DESCRIPTIONS REVISIONS	BY	CH'D	CCO#

CONTRACT CHANGE ORDER NO. 55
SHEET 68 OF 90

REGISTERED PROFESSIONAL ENGINEER — S. A. ESTOQUE, JR. — No. E-10151 — Exp. 12/31/2008 ELECTRICAL — STATE OF CALIFORNIA

REGISTERED PROFESSIONAL ENGINEER — FADI WALIEDDINE — No. 11465 — Exp. 12/31/2009 ELECTRICAL — STATE OF CALIFORNIA

FOR REVISION ONLY 1 2 FOR REVISION ONLY 3

Caltrans Metric

DIST	COUNTY	ROUTE	KILOMETER POST TOTAL PROJECT	SHEET No	TOTAL SHEETS
04	SF	80	13.2/13.9	374 R3	1204

JENS ERLINGSSON 12/19/02
REGISTERED ELECTRICAL ENGINEER DATE

REGISTERED PROFESSIONAL ENGINEER — JENS ERLINGSSON — No. 8249 — Exp. 9/30/06 ELECTRICAL — STATE OF CALIFORNIA

12-6-04
PLANS APPROVAL DATE

PB POWER, Inc.
A Parsons Brinckerhoff Company
303 Second St., Suite 700N
San Francisco, CA 94107-1317

The State of California or its officers or agents shall not be responsible for the accuracy or completeness of electronic copies of this plan sheet.

Caltrans now has a web site! To get to the web site, go to: http://www.dot.ca.gov

CONDUIT DATA

Conduit No	Reference	Size	Type	Total Fill (mm²)	Allowable Fill (mm²)	Included Cable No.	Conductor Type
						A-3032-1	1-3/C + gnd #4,600 V, EPR insulation
						A-3039-1	1-3/C + gnd #2,600 V, EPR insulation
						A-3040-1	1-3/C + gnd #2,600 V, EPR insulation
						LP221-6,8	1-3/C + gnd #6,600 V, EPR insulation
						UP204-1	1-2/C + gnd #10,600 V, EPR insulation
						UP206-8	1-2/C + gnd #8,600 V, EPR insulation
						S-2032-1	1-3/C + gnd #4,600 V, EPR insulation
						A-3036-1	1-3/C + gnd #4,600 V, EPR insulation
						A-2035-1	1-3/C + gnd #6,600 V, EPR insulation
						A-2035-3	1-3/C + gnd #6,600 V, EPR insulation
						UP205-7	1-2/C + gnd #8,600 V, EPR insulation
						UP206-7	1-2/C + gnd #8,600 V, EPR insulation
						LP223-2,4	1-3/C + gnd #6,600 V, EPR insulation
						LP222-6,8	1-3/C + gnd #6,600 V, EPR insulation
						A-3035-1	1-3/C + gnd #4,600 V, EPR insulation
						~~A-3034-1~~	~~1-3/C + gnd #2,600 V, EPR insulation~~ 3
						UP207-1	1-2/C + gnd #10,600 V, EPR insulation
						S-2031-1	1-3/C + gnd #2,600 V, EPR insulation
						UP206-1	1-2/C + gnd #10,600 V, EPR insulation
						1118-1	1-3/C #14,600 V, EPR insulation
						1118-2	1-3/C #16,600 V, EPR insulation
						1201-2	1-2/C + gnd #8,600 V, EPR insulation
						LP223-6,8	1-3/C + gnd #6,600 V, EPR insulation
						UP208-7	1-2/C + gnd #8,600 V, EPR insulation
						LP222-2,4	1-3/C + gnd #6,600 V, EPR insulation
						1201-6	1-2/C + gnd #8,600 V, EPR insulation
						A-3043-1	1-3/C + gnd #2,600 V, EPR insulation
						A-3042-1	1-3/C + gnd #2,600 V, EPR insulation
						2119-B	1-3/C + gnd 250 kcmil,600 V, EPR insulation
						A-3033-1	1-3/C + gnd #2,600 V, EPR insulation
						UP208-8	1-2/C + gnd #8,600 V, EPR insulation
2T39	E-212, E-21	610	152.4 mm siderail ladder tray	9889.17	18064.48	A-3032-1	1-3/C + gnd #4,600 V, EPR insulation
						2119-B	1-3/C + gnd 250 kcmil,600 V, EPR insulation
						A-2035-1	1-3/C + gnd #6,600 V, EPR insulation
						S-2032-1	1-3/C + gnd #4,600 V, EPR insulation
						S-2031-1	1-3/C + gnd #2,600 V, EPR insulation
						A-3036-1	1-3/C + gnd #4,600 V, EPR insulation
						A-3035-1	1-3/C + gnd #4,600 V, EPR insulation
						A-3034-1	1-3/C + gnd #2,600 V, EPR insulation
						A-3033-1	1-3/C + gnd #2,600 V, EPR insulation
						Pull rope	Soft-Fiber Polyester
						A-3039-1	1-3/C + gnd #2,600 V, EPR insulation
						A-3042-1	1-3/C + gnd #2,600 V, EPR insulation
						A-3031-1	1-3/C + gnd #4,600 V, EPR insulation
						A-3006-1	1-3/C + gnd #4,600 V, EPR insulation
						A-3005-1	1-3/C + gnd #2,600 V, EPR insulation
						A-2014-1	1-3/C + gnd #2,600 V, EPR insulation
						A-2011-1	1-3/C + gnd #2,600 V, EPR insulation
						A-3057-1	1-3/C + gnd #2,600 V, EPR insulation
						A-3043-1	1-3/C + gnd #2,600 V, EPR insulation
						A-3040-1	1-3/C + gnd #2,600 V, EPR insulation

For continuation, see next sheet.

CONDUIT AND TRAY SCHEDULE

E-419

DESIGN OVERSIGHT	CALCULATED/ DESIGNED BY	CHECKED BY	DRAWN BY	CHECKED BY	DATE	REVISED BY	DATE REVISED
BEHZAD GOLEMOHAMMADI	PBP	AB	PBP	AB	8/02		8/02

STATE OF CALIFORNIA - DEPARTMENT OF TRANSPORTATION
Caltrans

LAST REVISION 00-00-00
DATE PLOTTED => 3/31/2009
TIME PLOTTED => 2:31:02 PM

FOR REDUCED PLANS ORIGINAL SCALE IS IN MILLIMETERS 0 20 40 60 80

DGN FILE =>T:\13103\MS\pse\SAS Struc\CCO\SAS CCO55\04-0120F1_0374R03.dgn
USERNAME =>garciar

CU 04251 EA 0120F1

CONDUIT DATA

Conduit No	Reference	Size	Type	Total Fill (mm²)	Allowable Fill (mm²)	Included Cable No.	Conductor Type
2T43	E-114B (3)	610		10659.55	38709.60	2900-152C	4 pair #22, shielded pairs, FEP insulation
						2900-292A	4 pair #22, shielded pairs, FEP insulation
						2900-272C	4 pair #22, shielded pairs, FEP insulation
						2900-272B	4 pair #22, shielded pairs, FEP insulation
						2900-272A	4 pair #22, shielded pairs, FEP insulation
						2900-192C	4 pair #22, shielded pairs, FEP insulation
						2900-192B	4 pair #22, shielded pairs, FEP insulation
						2900-192A	4 pair #22, shielded pairs, FEP insulation
						2900-172C	4 pair #22, shielded pairs, FEP insulation
						2900-172B	4 pair #22, shielded pairs, FEP insulation
						2900-172A	4 pair #22, shielded pairs, FEP insulation
						1473-6	50 pair #18, shielded pairs, IS/OS shield 600 V, XLPE insul., PVC jacket
						2900-162A	4 pair #22, shielded pairs, FEP insulation
						2900-332C	4 pair #22, shielded pairs, FEP insulation
						2900-152B	4 pair #22, shielded pairs, FEP insulation
						2900-152A	4 pair #22, shielded pairs, FEP insulation
						2900-142A	4 pair #22, shielded pairs, FEP insulation
						2910-8	4 pair #22, shielded pairs, 300 V, PE insulation
						2119-2	4 pair #22, shielded pairs, 300 V, PE insulation
						2475-3C	12 Fiber, single mode fiberoptic cable
						MVDSE03A	MVDS DLC
						MVDSE01A	MVDS DLC
						MVDSE02A	MVDS DLC
						2154	1 - 2 pair, shielded #18 with IS/OA, 300 V, PVC jacket
						2900-162B	4 pair #22, shielded pairs, FEP insulation
						2900-442A	4 pair #22, shielded pairs, FEP insulation
						2474-10	50 pair #18, shielded pairs, IS/OS shield 600 V, XLPE insul., PVC jacket
						1474-6	50 pair #18, shielded pairs, IS/OS shield 600 V, XLPE insul., PVC jacket
						1473-4	50 pair #18, shielded pairs, IS/OS shield 600 V, XLPE insul., PVC jacket
						2910-7	4 pair #24, overall shielded, 300V, PE insulation
						2910-3	4 pair #22, shielded pairs, FEP insulation
						2910-2	4 pair #22, shielded pairs, FEP insulation
						2910-12	4 pair #22, shielded pairs, 300 V, PE insulation
						2910-11	1-3/C #16,600 V, EPR insulation
						2900-482A	4 pair #22, shielded pairs, FEP insulation
						2900-452B	4 pair #22, shielded pairs, FEP insulation
						2900-452A	4 pair #22, shielded pairs, FEP insulation
						2900-332A	4 pair #22, shielded pairs, FEP insulation
						2900-442B	4 pair #22, shielded pairs, FEP insulation
						2900-332B	4 pair #22, shielded pairs, FEP insulation
						2900-432A	4 pair #22, shielded pairs, FEP insulation
						2900-422B	4 pair #22, shielded pairs, FEP insulation
						2900-422A	4 pair #22, shielded pairs, FEP insulation
						2900-412C	4 pair #22, shielded pairs, FEP insulation
						2900-412B	4 pair #22, shielded pairs, FEP insulation
						2900-412A	4 pair #22, shielded pairs, FEP insulation
						2900-402A	4 pair #22, shielded pairs, FEP insulation
						2900-382C	4 pair #22, shielded pairs, FEP insulation
						2900-382B	4 pair #22, shielded pairs, FEP insulation
						2900-382A	4 pair #22, shielded pairs, FEP insulation
						2148	1 - 2 pair, shielded #18 with IS/OA, 300 V, PVC jacket
						2900-442C	4 pair #22, shielded pairs, FEP insulation
						CCTVE01AD	TVL
						1473-8	50 pair #18, shielded pairs, IS/OS shield 600 V, XLPE insul., PVC jacket
						Pull rope	Soft-Fiber Polyester
						2475-3A	12 Fiber, single mode fiberoptic cable
						2475-3B	12 Fiber, single mode fiberoptic cable
						2475-3	72 Fiber, single mode fiberoptic riser cable
						CCTVE01BC	TVC
						CCTVE01BD	TVL
						CCTVE01AC	TVC
						2900-432B	4 pair #22, shielded pairs, FEP insulation
						MVDSW03A	MVDS DLC

REQUEST FOR INFORMATION NOT ADDRESSED IN THIS CCO REMAIN IN FORCE					
3	03/30/09	SERVICE PLATFORM ELECTRICAL CHANGES	RY RR	RG MP	55
2	02/25/08	CABLE TRAY CHANGES	TW	RG	4251
1	03/04/08	BARRIER MODIFICATIONS	JS BM	RG	44
MARK	DATE	DESCRIPTIONS REVISIONS	BY	CH'D	CCO#

Caltrans Metric

CONTRACT CHANGE ORDER NO. 55
SHEET 69 OF 90

REGISTERED PROFESSIONAL ENGINEER — S. A. ESTOQUE, JR. — No. E-10151 — Exp. 12/31/2008 ELECTRICAL — STATE OF CALIFORNIA

FOR REVISION ONLY
1 2

REGISTERED PROFESSIONAL ENGINEER — FADI WALIEDDINE — No. 11465 — Exp. 12/31/2009 ELECTRICAL — STATE OF CALIFORNIA

FOR REVISION ONLY
3

DIST	COUNTY	ROUTE	KILOMETER POST TOTAL PROJECT	SHEET No	TOTAL SHEETS
04	SF	80	13.2/13.9	375 R3	1204

12/19/02
REGISTERED ELECTRICAL ENGINEER DATE

REGISTERED PROFESSIONAL ENGINEER — JENS ERLINGSSON — No. 8249 — Exp. 9/30/06 ELECTRICAL — STATE OF CALIFORNIA

12-6-04
PLANS APPROVAL DATE

PB POWER, Inc.
A Parsons Brinckerhoff Company
303 Second St., Suite 700N
San Francisco, CA 94107-1317

The State of California or its officers or agents shall not be responsible for the accuracy or completeness of electronic copies of this plan sheet.

Caltrans now has a web site! To get to the web site, go to: http://www.dot.ca.gov

CONDUIT DATA

Conduit No	Reference	Size	Type	Total Fill (mm²)	Allowable Fill (mm²)	Included Cable No.	Conductor Type
						MVDSW03A	MVDS DLC
2T44	E-115, E-182	610	152.4 mm siderail solid bottom tray	5109.21	38709.60	2119-2	4 pair #22, shielded pairs, 300 V, PE insulation
						1473-4	50 pair #18, shielded pairs, IS/OS shield 600 V, XLPE insul., PVC jacket
						1474-5	50 pair #18, shielded pairs, IS/OS shield 600 V, XLPE insul., PVC jacket
						1474-4	50 pair #18, shielded pairs, IS/OS shield 600 V, XLPE insul., PVC jacket
						Pull rope	Soft-Fiber Polyester
						MVDSE01A	MVDS DLC
						2475-3A	12 Fiber, single mode fiberoptic cable
						1473-5	50 pair #18, shielded pairs, IS/OS shield 600 V, XLPE insul., PVC jacket
2T45	E-115, E-182	610	152.4 mm siderail solid bottom tray	7529.12	38709.60	2900-432B	4 pair #22, shielded pairs, FEP insulation
						2910-12	4 pair #22, shielded pairs, 300 V, PE insulation
						Pull rope	Soft-Fiber Polyester
						2900-412A	4 pair #22, shielded pairs, FEP insulation
						2910-11	1-3/C #16,600 V, EPR insulation
						2910-7	4 pair #24, overall shielded, 30V, PE insulation
						2910-10	4 pair #22, shielded pairs, 300 V, PE insulation
						2910-8	4 pair #22, shielded pairs, 300 V, PE insulation
						2900-422B	4 pair #22, shielded pairs, FEP insulation
						2900-422A	4 pair #22, shielded pairs, FEP insulation
						2900-412C	4 pair #22, shielded pairs, FEP insulation
						2900-412B	4 pair #22, shielded pairs, FEP insulation
						2900-382C	4 pair #22, shielded pairs, FEP insulation
						2900-402A	4 pair #22, shielded pairs, FEP insulation
						2900-272C	4 pair #22, shielded pairs, FEP insulation
						2900-382B	4 pair #22, shielded pairs, FEP insulation
						2900-382A	4 pair #22, shielded pairs, FEP insulation
						2900-332C	4 pair #22, shielded pairs, FEP insulation
						2900-332B	4 pair #22, shielded pairs, FEP insulation
						2900-332A	4 pair #22, shielded pairs, FEP insulation
						2900-292A	4 pair #22, shielded pairs, FEP insulation
						2900-172A	4 pair #22, shielded pairs, FEP insulation
						2900-192B	4 pair #22, shielded pairs, FEP insulation
						2900-142A	4 pair #22, shielded pairs, FEP insulation
						1474-5A	1 - 6 pair, shielded #18 with overall shield, 300 V, PVC jacket
						2910-3	4 pair #22, shielded pairs, FEP insulation
						2910-2	4 pair #22, shielded pairs, FEP insulation
						2900-482A	4 pair #22, shielded pairs, FEP insulation
						2900-452B	4 pair #22, shielded pairs, FEP insulation
						2155	1 - 2 pair, shielded #18 with IS/OA, 300 V, PVC jacket

For continuation, see next sheet

CONDUIT AND TRAY SCHEDULE

E-420

DATE	REVISED BY	DATE REVISED
8/02	AB	8/02

CALCULATED/DESIGNED BY: PBP
CHECKED BY

DESIGN OVERSIGHT: BEHZAD GOLEMOHAMMADI

STATE OF CALIFORNIA - DEPARTMENT OF TRANSPORTATION
Caltrans

FOR REDUCED PLANS ORIGINAL SCALE IS IN MILLIMETERS 0 20 40 60 80

DGN FILE =>T:\13103\MS\pse\SAS Struc\CCO\SAS CCO55\04-0120f1_0375R03.dgn
USERNAME =>garciar

CU 04251

EA 0120F1

LAST REVISION 00-00-00

DATE PLOTTED => 3/31/2009
TIME PLOTTED => 2:30:25 PM

DIST	COUNTY	ROUTE	KILOMETER POST TOTAL PROJECT	SHEET No	TOTAL SHEETS
04	SF	80	13.2/13.9	386 R2	1204

Jens Erlingsson 12/19/02
REGISTERED ELECTRICAL ENGINEER DATE

12-6-04
PLANS APPROVAL DATE

JENS ERLINGSSON No. 8249 Exp. 9/30/06 ELECTRICAL — REGISTERED PROFESSIONAL ENGINEER — STATE OF CALIFORNIA

PB POWER, Inc.
A Parsons Brinckerhoff Company
303 Second St., Suite 700N
San Francisco, CA 94107-1317

The State of California or its officers or agents shall not be responsible for the accuracy or completeness of electronic copies of this plan sheet.

Caltrans now has a web site! To get to the web site, go to http://www.dot.ca.gov

REQUEST FOR INFORMATION NOT ADDRESSED IN THIS CCO REMAIN IN FORCE

MARK	DATE	REVISIONS DESCRIPTIONS	BY	CH'D	CCO#
2	03/30/09	SERVICE PLATFORM ELECTRICAL CHANGES	RR RY	RG MP	55
1	03/04/08	BARRIER MODIFICATIONS	JS BM	RG SE	44

CONTRACT CHANGE ORDER NO. 55
SHEET 70 OF 90

REGISTERED PROFESSIONAL ENGINEER — S. A. ESTOQUE, JR. — No. E-10151 — Exp. 12/31/2008 ELECTRICAL — STATE OF CALIFORNIA

FOR REVISION ONLY 1

REGISTERED PROFESSIONAL ENGINEER — FADI WALIEDDINE — No. 11465 — Exp. 12/31/2009 ELECTRICAL — STATE OF CALIFORNIA

FOR REVISION ONLY 2

CONDUIT DATA

Conduit No	Reference	Size	Type	Total Fill (mm²)	Allowable Fill (mm²)	Included Cable No.	Conductor Type
3702	E-284, E-275	78	RGS-PVC coated conduit	436.32	1935.24	UP210-1B-1B	2 + 1 gnd #8,#10, 600 V, RHH/RHW insulation
						UP210-1B-2	2 + 1 gnd #12,#12, 600 V, RHH/RHW insulation
						Pull rope	Soft-Fiber Polyester
3703	E-284	53	RGS-PVC coated conduit	725.01	879.42	UP210-1B-3	2 + 1 gnd #8,#10, 600 V, RHH/RHW insulation
						UP210-1B-4	2 + 1 gnd #12,#12, 600 V, RHH/RHW insulation
						Pull rope	Soft-Fiber Polyester
						UP210-1B-3C	2 + 1 gnd #8,#10, 600 V, RHH/RHW insulation
3704	E-284, E-285	53	RGS-PVC coated conduit	436.32	879.42	UP210-1B-4	2 + 1 gnd #12,#12, 600 V, RHH/RHW insulation
						UP210-1B-3C	2 + 1 gnd #8,#10, 600 V, RHH/RHW insulation
						UP210-1B-3A	2 + 1 gnd #8,#10, 600 V, RHH/RHW insulation
						Pull rope	Soft-Fiber Polyester
3705	E-284, E-275	53	RGS-PVC coated conduit	315.59	879.42	UP210-1B-3B	2 + 1 gnd #8,#10, 600 V, RHH/RHW insulation
						UP210-1B-4	2 + 1 gnd #12,#12, 600 V, RHH/RHW insulation
						Pull rope	Soft-Fiber Polyester
						UP210-1B-3C	2 + 1 gnd #8, #10, 600 V, RHH/RHW insulation
3706	E-284, E-275	53	RGS-PVC coated conduit	241.67	879.42	UP210-1B-5	2 + 1 gnd #8, #10, 600 V, RHH/RHW insulation
						UP210-1B-5C	2 + 1 gnd #8, #10, 600 V, RHH/RHW insulation
						UP210-1B-5	2 + 1 gnd #12, #12, 600 V, RHH/RHW insulation
					2	Pull rope	Soft-Fiber Polyester
3707	E-284, E-275	53	RGS-PVC coated conduit	241.67	879.42	UP210-1B-6	2 + 1 gnd #12, #12 600 V, RHH/RHW insulation
						UP210-1B-5A	2 + 1 gnd #8, #10, 600 V, RHH/RHW insulation
						UP210-1B-5C	2 + 1 gnd #8, #10, 600 V, RHH/RHW insulation
					2	Pull rope	Soft-Fiber Polyester
3708	E-284, E-275	53	RGS-PVC coated conduit	241.67	879.42	UP210-1B-5B	2 + 1 gnd #8, #10, 600 V, RHH/RHW insulation
						UP210-1B-5C	2 + 1 gnd #8, #10, 600 V, RHH/RHW insulation
						UP210-1B-5	2 + 1 gnd #12, #12, 600 V, RHH/RHW insulation
					2	Pull rope	Soft-Fiber Polyester
3800	E-284, E-275	53	RGS-PVC coated conduit	387.11	879.42	UP210-1B-8	2 + 1 gnd #12,#12, 600 V, RHH/RHW insulation
						Pull rope	Soft-Fiber Polyester
						UP210-1B-7	2 + 1 gnd #8,#10, 600 V, RHH/RHW insulation
						UP210-1B-7C	2 + 1 gnd #8,#10, 600 V, RHH/RHW insulation
3801	E-284	53	RGS-PVC coated conduit	483.34	879.42	UP210-1B-8	2 + 1 gnd #12,#12, 600 V, RHH/RHW insulation
						Pull rope	Soft-Fiber Polyester
						UP210-1B-7A	2 + 1 gnd #8,#10, 600 V, RHH/RHW insulation
						UP210-1B-7C	2 + 1 gnd #8,#10, 600 V, RHH/RHW insulation
3802	E-284, E-275	78	RGS-PVC coated conduit	436.32	1935.24	Pull rope	Soft-Fiber Polyester
						UP210-1B-8	2 + 1 gnd #12,#12, 600 V, RHH/RHW insulation
						UP210-1B-7C	2 + 1 gnd #8,#10, 600 V, RHH/RHW insulation
						UP210-1B-7B	2 + 1 gnd #8,#10, 600 V, RHH/RHW insulation
3803	E-284, E-275	53	RGS-PVC coated conduit	725.01	879.42	UP210-1B-10	2 + 1 gnd #12,#12, 600 V, RHH/RHW insulation
						Pull rope	Soft-Fiber Polyester
						UP210-1B-9	2 + 1 gnd #8,#10, 600 V, RHH/RHW insulation
						UP210-1B-9C	2 + 1 gnd #8,#10, 600 V, RHH/RHW insulation
3804	E-284, E-285	78	RGS-PVC coated conduit	436.32	1935.24	Pull rope	Soft-Fiber Polyester
						UP210-1B-10	2 + 1 gnd #12,#12, 600 V, RHH/RHW insulation
						UP210-1B-9A	2 + 1 gnd #8,#10, 600 V, RHH/RHW insulation
						UP210-1B-9C	2 + 1 gnd #8,#10, 600 V, RHH/RHW insulation
3805	E-284, E-275	53	RGS-PVC coated conduit	337.90	879.42	UP210-1B-10	2 + 1 gnd #12,#12, 600 V, RHH/RHW insulation
						Pull rope	Soft-Fiber Polyester
						UP210-1B-9B	2 + 1 gnd #8,#10, 600 V, RHH/RHW insulation
						UP210-1B-9C	2 + 1 gnd #8,#10, 600 V, RHH/RHW insulation
3806	E-284, E-275	53	RGS-PVC coated conduit	241.67	879.42	UP210-1B-12	2 + 1 gnd #12, #12, 600 V, RHH/RHW insulation
						UP210-1B-11	2 + 1 gnd #8, #10, 600 V, RHH/RHW insulation
						UP210-1B-11C	2 + 1 gnd #8, #10, 600 V, RHH/RHW insulation
					2	Pull rope	Soft-Fiber Polyester
3807	E-284, E-275	53	RGS-PVC coated conduit	241.67	879.42	UP210-1B-11A	2 + 1 gnd #8, #10, 600 V, RHH/RHW insulation
						UP210-1B-11C	2 + 1 gnd #8, #10, 600 V, RHH/RHW insulation
						UP210-1B-12	2 + 1 gnd #12, #12, 600 V, RHH/RHW insulation
					2	Pull rope	Soft-Fiber Polyester

CONDUIT DATA

Conduit No	Reference	Size	Type	Total Fill (mm²)	Allowable Fill (mm²)	Included Cable No.	Conductor Type
3808	E-284, E-275	53	RGS-PVC coated conduit	241.67	879.42	UP210-1B-12	2 + 1 gnd #12, #12, 600 V, RHH/RHW insulation
						UP210-1B-11B	2 + 1 gnd #8, #10, 600 V, RHH/RHW insulation
						UP210-1B-11C	2 + 1 gnd #8, #10, 600 V, RHH/RHW insulation
4007A	E-71A	78	Liquidtight Flex. Metal Cond.		1935.24	Pull rope	Soft-Fiber Polyester
4009	E-71A 2	53	Liquidtight Flex. Metal Cond.	60.80	879.42	Pull rope	Soft-Fiber Polyester
						UP104-5	2 + 1 gnd #10,#10, 600 V, RHH/RHW insulation
4010	E-71A	53	Liquidtight Flex. Metal Cond.	98.42	879.42	UP104-12	2 + 1 gnd #12,#12, 600 V, RHH/RHW insulation
						Pull rope	Soft-Fiber Polyester
						UP104-10	2 + 1 gnd #12,#12, 600 V, RHH/RHW insulation
4029	E-72A	78	Liquidtight Flex. Metal Cond.	1217.21	1935.24	1201-5	1-3/C #14,600 V, EPR insulation
						UP105-15	1-2/C + gnd #8,600 V, EPR insulation
			2			Pull rope	Soft-Fiber Polyester
						1201-4	1-9/C #16,600 V, EPR insulation
						1201-3	1-3/C #14,600 V, EPR insulation
						1201-1	1-2/C + gnd #8,600 V, EPR insulation
						1201-6	1-2/C + gnd #8,600 V, EPR insulation
						1201-2	1-2/C + gnd #8,600 V, EPR insulation
					2		
					2		
			2				
4033	E-72A 2	53	Liquidtight Flex. Metal Cond.	481.89	879.42	Pull rope	Soft-Fiber Polyester
						UP105-5	2 + 1 gnd #12,#12, 600 V, RHH/RHW insulation
						UP105-13	1-2/C + gnd #12,600 V, EPR insulation
						UP105-11	1-2/C + gnd #12,600 V, EPR insulation
						UP105-15	1-2/C + gnd #8,600 V, EPR insulation
4034	E-72A	53	Liquidtight Flex. Metal Cond.	0.00	879.42	Pull rope	Soft-Fiber Polyester
4036	E-73A	53	Liquidtight Flex. Metal Cond.	276.67	879.42	UP106-5	2 + 1 gnd #12,#12, 600 V, RHH/RHW insulation
							1-2/C + gnd #8,600 V, EPR insulation
						Pull rope	Soft-Fiber Polyester

For continuation, see next sheet.

CONDUIT AND TRAY SCHEDULE

E-431

DATE	REVISED BY	DATE REVISED
8/02	PBP	8/02

CALCULATED/DESIGNED BY: AB
CHECKED BY:

DESIGN OVERSIGHT: BEHZAD GOLEMOHAMMADI

STATE OF CALIFORNIA - DEPARTMENT OF TRANSPORTATION
Caltrans

LAST REVISION 00-00-00
DATE PLOTTED => 3/31/2009
TIME PLOTTED => 2:29:52 PM

FOR REDUCED PLANS ORIGINAL SCALE IS IN MILLIMETERS 0 20 40 60 80

DGN FILE =>T:\13103\MS\pse\SAS Struc\CCO\SAS CCO55\04-0120F1_0346R02.dgn
USERNAME =>garciar

CU 04251

EA 0120F1

CONDUIT DATA

Conduit No	Reference	Size	Type	Total Fill (mm^2)	Allowable Fill (mm^2)	Included Cable No.	Conductor Type
4037	E-73A /2	53	Liquidtight Flex. Metal Cond.	227.46	879.42	Pull rope	Soft-Fiber Polyester
						UP106-10	1-2/c + gnd #8,600 V, EPR insulation
4040	E-73A /2	78	Liquidtight Flex. Metal Cond.	727.89	1935.24	1202-3	1-7/C #16,600 V, EPR insulation
						Pull rope	Soft-Fiber Polyester
						1202-4	1-3/C #14,600 V, EPR insulation
						1202-2	1-3/C #14,600 V, EPR insulation
						UP106-15	1-2/c + gnd #8,600 V, EPR insulation
						1202-1	1-2/c + gnd #8,600 V, EPR insulation
4076	E-74A /2	53	Liquidtight Flex. Metal Cond.	49.21	879.42	UP107-5	2 + 1 gnd #12,#12, 600 V, RHH/RHW insulation
						Pull rope	Soft-Fiber Polyester
4077	E-74A /2	53	Liquidtight Flex. Metal Cond.	205.22	879.42	UP107-10	1-2/c + gnd #12,600 V, EPR insulation
						UP207-10	1-3/C #12,600 V, EPR insulation
						Pull rope	Soft-Fiber Polyester
4101	E-75A /2	53	Liquidtight Flex. Metal Cond.	254.43	879.42	Pull rope	Soft-Fiber Polyester
						UP108-5	2 + 1 gnd #12,#12, 600 V, RHH/RHW insulation
						UP108-17	1-2/c + gnd #12,600 V, EPR insulation
						UP108-11	1-2/c + gnd #12,600 V, EPR insulation
4102	E-75A /2	53	Liquidtight Flex. Metal Cond.	0.00	879.42	Pull rope	Soft-Fiber Polyester
4104	E-75A	78	Liquidtight Flex. Metal Cond.	1217.21	2564.19	2201-4	1-9/C #16,600 V, EPR insulation
						2201-2	1-2/c + gnd #8,600 V, EPR insulation
						2201-3	1-3/C #14,600 V, EPR insulation
						Pull rope	Soft-Fiber Polyester
						UP208-15	1-2/c + gnd #8,600 V, EPR insulation
						2201-1	1-2/c + gnd #8,600 V, EPR insulation
						2201-6	1-2/c + gnd #8,600 V, EPR insulation
						2201-5	1-3/C #14,600 V, EPR insulation
4108	E-117	78	RGS-PVC coated conduit	0.00	1935.24	Pull rope	Soft-Fiber Polyester
4128	E-100	53	RGS conduit	0.00	879.42	Pull rope	Soft-Fiber Polyester
4148	E-100	53	RGS conduit	0.00	879.42	Pull rope	Soft-Fiber Polyester
4149	E-96	78	RGS conduit	648.58	1935.24	A-1011-2	1-3/c + gnd #6,600 V, EPR insulation
						A-1011-2	1-3/c + gnd #6,600 V, EPR insulation
						Pull rope	Soft-Fiber Polyester
4150	E-96	78	RGS conduit	648.58	1935.24	A-1011-2	1-3/c + gnd #6,600 V, EPR insulation
						A-1011-2	1-3/c + gnd #6,600 V, EPR insulation
						Pull rope	Soft-Fiber Polyester
4151	E-96	78	RGS conduit	648.58	1935.24	A-1011-2	1-3/c + gnd #6,600 V, EPR insulation
						A-1011-2	1-3/c + gnd #6,600 V, EPR insulation
						Pull rope	Soft-Fiber Polyester
4152	E-96	78	RGS conduit	648.58	1935.24	A-1011-2	1-3/c + gnd #6,600 V, EPR insulation
						A-1011-2	1-3/c + gnd #6,600 V, EPR insulation
						Pull rope	Soft-Fiber Polyester
4153	E-96	78	RGS conduit	648.58	1935.24	A-1011-2	1-3/c + gnd #6,600 V, EPR insulation
						A-1011-2	1-3/c + gnd #6,600 V, EPR insulation
						Pull rope	Soft-Fiber Polyester

REQUEST FOR INFORMATION NOT ADDRESSED IN THIS CCO REMAIN IN FORCE					
2	03/30/09	SERVICE PLATFORM ELECTRICAL CHANGES	RR RY	RG MP	55
1	03/04/08	BARRIER MODIFICATIONS	JS BM	RG SE	44
MARK	DATE	DESCRIPTIONS REVISIONS	BY	CH'D	CCO#

CONTRACT CHANGE ORDER NO. 55
SHEET 71 OF 90

FOR REVISION ONLY 1

FOR REVISION ONLY 2

Caltrans Metric

DIST	COUNTY	ROUTE	KILOMETER POST TOTAL PROJECT	SHEET No	TOTAL SHEETS
04	SF	80	13.2/13.9	387 R2	1204

Jens Erlingsson 12/19/02
REGISTERED ELECTRICAL ENGINEER DATE

12-6-04
PLANS APPROVAL DATE

REGISTERED PROFESSIONAL ENGINEER — JENS ERLINGSSON No. 8249 Exp. 9/30/06 ELECTRICAL — STATE OF CALIFORNIA

REGISTERED PROFESSIONAL ENGINEER — S. A. ESTOQUE, JR. No. E-10151 Exp. 12/31/2008 ELECTRICAL — STATE OF CALIFORNIA

REGISTERED PROFESSIONAL ENGINEER — FADI WALIEDDINE No. 11465 Exp. 12/31/2009 ELECTRICAL — STATE OF CALIFORNIA

PB POWER, Inc.
A Parsons Brinckerhoff Company
303 Second St., Suite 700N
San Francisco, CA 94107-1317

The State of California or its officers or agents shall not be responsible for the accuracy or completeness of electronic copies of this plan sheet.

Caltrans now has a web site! To get to the web site, go to http://www.dot.ca.gov

CONDUIT DATA

Conduit No	Reference	Size	Type	Total Fill (mm^2)	Allowable Fill (mm^2)	Included Cable No.	Conductor Type
4154	E-96	78	RGS conduit	648.58	1935.24	A-1011-2	1-3/c + gnd #6,600V, EPR insulation
						~~A-1011-2~~	~~1-3/c + gnd #6,600 V, EPR insulation~~
						2 Pull rope	Soft-Fiber Polyester
4155	E-97	78	RGS conduit	648.58	1935.24	A-1011-2	1-3/c + gnd #6,600 V, EPR insulation
						~~A-1011-2~~	~~1-3/c + gnd #6,600 V, EPR insulation~~
						2 Pull rope	Soft-Fiber Polyester
4156	E-97	78	RGS conduit	648.58	1935.24	A-1011-2	1-3/c + gnd #6,600 V, EPR insulation
						~~A-1011-2~~	~~1-3/c + gnd #6,600 V, EPR insulation~~
						2 Pull rope	Soft-Fiber Polyester
4157	E-97	78	RGS conduit	648.58	1935.24	A-1011-2	1-3/c + gnd #6,600 V, EPR insulation
						~~A-1011-2~~	~~1-3/c + gnd #6,600 V, EPR insulation~~
						2 Pull rope	Soft-Fiber Polyester
4158	E-97	78	RGS conduit	648.58	1935.24	A-1011-2	1-3/c + gnd #6,600 V, EPR insulation
						~~A-1011-2~~	~~1-3/c + gnd #6,600 V, EPR insulation~~
						2 Pull rope	Soft-Fiber Polyester
4159	E-97	78	RGS conduit	648.58	1935.24	A-1011-2	1-3/c + gnd #6,600 V, EPR insulation
						~~A-1011-2~~	~~1-3/c + gnd #6,600 V, EPR insulation~~
						2 Pull rope	Soft-Fiber Polyester
4160	E-97	78	RGS conduit	851.47	1935.24	A-1012-2	1-3/c + gnd #2 ,600V, EPR insulation
						~~A-1012-2~~	~~1-3/c + gnd #6,600 V, EPR insulation~~
						2 Pull rope	Soft-Fiber Polyester
4161	E-97	78	RGS conduit	648.58	1935.24	A-1012-2	1-3/c + gnd #6,600 V, EPR insulation
						~~A-1012-2~~	~~1-3/c + gnd #6,600 V, EPR insulation~~
						2 Pull rope	Soft-Fiber Polyester
4162	E-97	78	RGS conduit	648.58	1935.24	A-1012-2	1-3/c + gnd #6,600 V, EPR insulation
						~~A-1012-2~~	~~1-3/c + gnd #6,600 V, EPR insulation~~
						2 Pull rope	Soft-Fiber Polyester
4163	E-98	78	RGS conduit	648.58	1935.24	A-1012-2	1-3/c + gnd #6,600 V, EPR insulation
						~~A-1012-2~~	~~1-3/c + gnd #6,600 V, EPR insulation~~
						2 Pull rope	Soft-Fiber Polyester
4164	E-98	78	RGS conduit	648.58	1935.24	A-1012-2	1-3/c + gnd #6,600 V, EPR insulation
						~~A-1012-2~~	~~1-3/c + gnd #6,600 V, EPR insulation~~
						2 Pull rope	Soft-Fiber Polyester
4165	E-98	78	RGS conduit	648.58	1935.24	A-1012-2	1-3/c + gnd #6,600 V, EPR insulation
						~~A-1012-2~~	~~1-3/c + gnd #6,600 V, EPR insulation~~
						2 Pull rope	Soft-Fiber Polyester
4166	E-98	78	RGS conduit	648.58	1935.24	A-1012-2	1-3/c + gnd #6,600 V, EPR insulation
						~~A-1012-2~~	~~1-3/c + gnd #6,600 V, EPR insulation~~
						2 Pull rope	Soft-Fiber Polyester
4167	E-98	78	RGS conduit	648.58	1935.24	A-1012-2	1-3/c + gnd #6,600 V, EPR insulation
						~~A-1012-2~~	~~1-3/c + gnd #6,600 V, EPR insulation~~
						2 Pull rope	Soft-Fiber Polyester
4168	E-98	78	RGS conduit	648.58	1935.24	A-1012-2	1-3/c + gnd #6,600 V, EPR insulation
						~~A-1012-2~~	~~1-3/c + gnd #6,600 V, EPR insulation~~
						2 Pull rope	Soft-Fiber Polyester
4169	E-98	78	RGS conduit	648.58	1935.24	A-1012-2	1-3/c + gnd #6,600 V, EPR insulation
						~~A-1012-2~~	~~1-3/c + gnd #6,600 V, EPR insulation~~
						2 Pull rope	Soft-Fiber Polyester
4170	E-98	78	RGS conduit	648.58	1935.24	A-1012-2	1-3/c + gnd #6,600 V, EPR insulation
						~~A-1012-2~~	~~1-3/c + gnd #6,600 V, EPR insulation~~
						2 Pull rope	Soft-Fiber Polyester
4171	E-98	78	RGS conduit	648.58	1935.24	A-1012-2	1-3/c + gnd #6,600 V, EPR insulation
						~~A-1012-2~~	~~1-3/c + gnd #6,600 V, EPR insulation~~
						2 Pull rope	Soft-Fiber Polyester

For continuation, see next sheet.

CONDUIT AND TRAY SCHEDULE

E-432

DATE	REVISED BY	DATE REVISED
8/02	PBP	8/02

CALCULATED/DESIGNED BY: AB
CHECKED BY: BEHZAD GOLEMOHAMMADI
DESIGN OVERSIGHT

STATE OF CALIFORNIA - DEPARTMENT OF TRANSPORTATION
Caltrans

LAST REVISION 00-00-00
DATE PLOTTED => 3/31/2009
TIME PLOTTED => 2:29:16 PM

FOR REDUCED PLANS ORIGINAL SCALE IS IN MILLIMETERS 0 20 40 60 80

DGN FILE =>T:\13103\MS\pse\SAS Struc\CCO\SAS CC055\04-0120F1_0387R02.dgn
USERNAME =>garciar

CU 04251 EA 0120F1

CONDUIT DATA

Conduit No	Reference	Size	Type	Total Fill (mm²)	Allowable Fill (mm²)	Included Cable No.	Conductor Type
4172	E-99	78	RGS conduit	851.47	1935.24	A-1013-2	1-3/c + gnd #6,600 V, EPR insulation
						A-1013-1	1-3/c + gnd #2,600V, EPR insulation
						2 Pull rope	Soft-Fiber Polyester
4173	E-99	78	RGS conduit	648.58	1935.24	A-1013-2	1-3/c + gnd #6,600 V, EPR insulation
						A-1013-2	1-3/c + gnd #6,600 V, EPR insulation
						2 Pull rope	Soft-Fiber Polyester
4174	E-99	78	RGS conduit	648.58	1935.24	A-1013-2	1-3/c + gnd #6,600 V, EPR insulation
						A-1013-2	1-3/c + gnd #6,600 V, EPR insulation
						2 Pull rope	Soft-Fiber Polyester
4175	E-99	78	RGS conduit	648.58	1935.24	A-1013-2	1-3/c + gnd #6,600 V, EPR insulation
						A-1013-2	1-3/c + gnd #6,600 V, EPR insulation
						2 Pull rope	Soft-Fiber Polyester
4176	E-99	78	RGS conduit	648.58	1935.24	A-1013-2	1-3/c + gnd #6,600 V, EPR insulation
						A-1013-2	1-3/c + gnd #6,600 V, EPR insulation
						2 Pull rope	Soft-Fiber Polyester
4177	E-99	78	RGS conduit	648.58	1935.24	A-1013-2	1-3/c + gnd #6,600 V, EPR insulation
						A-1013-2	1-3/c + gnd #6,600 V, EPR insulation
						2 Pull rope	Soft-Fiber Polyester
4178	E-99	78	RGS conduit	648.58	1935.24	A-1013-2	1-3/c + gnd #6,600 V, EPR insulation
						A-1013-2	1-3/c + gnd #6,600 V, EPR insulation
						2 Pull rope	Soft-Fiber Polyester
4179	E-99	78	RGS conduit	648.58	1935.24	A-1013-2	1-3/c + gnd #6,600 V, EPR insulation
						A-1013-2	1-3/c + gnd #6,600 V, EPR insulation
						2 Pull rope	Soft-Fiber Polyester
4180	E-99	78	RGS conduit	648.58	1935.24	A-1013-2	1-3/c + gnd #6,600 V, EPR insulation
						A-1013-2	1-3/c + gnd #6,600 V, EPR insulation
						2 Pull rope	Soft-Fiber Polyester
4181	E-99	78	RGS conduit	648.58	1935.24	A-1013-2	1-3/c + gnd #6,600 V, EPR insulation
						A-1013-2	1-3/c + gnd #6,600 V, EPR insulation
						2 Pull rope	Soft-Fiber Polyester
4182	E-99	78	RGS conduit	648.58	1935.24	A-1013-2	1-3/c + gnd #6,600 V, EPR insulation
						A-1013-2	1-3/c + gnd #6,600 V, EPR insulation
						2 Pull rope	Soft-Fiber Polyester
4183	E-99	78	RGS conduit	648.58	1935.24	A-1013-2	1-3/c + gnd #6,600 V, EPR insulation
						A-1013-2	1-3/c + gnd #6,600 V, EPR insulation
						2 Pull rope	Soft-Fiber Polyester
4184	E-100	78	RGS conduit	648.58	1935.24	A-1013-2	1-3/c + gnd #6,600 V, EPR insulation
						A-1013-2	1-3/c + gnd #6,600 V, EPR insulation
						2 Pull rope	Soft-Fiber Polyester
4185	E-100	78	RGS conduit	851.47	1935.24	A-1014-2	1-3/c + gnd #6,600 V, EPR insulation
						A-1014-1	1-3/c + gnd #2,600V, EPR insulation
						2 Pull rope	Soft-Fiber Polyester
4186	E-100	78	RGS conduit	648.58	1935.24	A-1014-2	1-3/c + gnd #6,600 V, EPR insulation
						A-1014-2	1-3/c + gnd #6,600 V, EPR insulation
						2 Pull rope	Soft-Fiber Polyester
4187	E-100	78	RGS conduit	648.58	1935.24	A-1014-2	1-3/c + gnd #6,600 V, EPR insulation
						A-1014-2	1-3/c + gnd #6,600 V, EPR insulation
						2 Pull rope	Soft-Fiber Polyester
4188	E-100	78	RGS conduit	648.58	1935.24	A-1014-2	1-3/c + gnd #6,600 V, EPR insulation
						A-1014-2	1-3/c + gnd #6,600 V, EPR insulation
						2 Pull rope	Soft-Fiber Polyester
4189	E-100	78	RGS conduit	648.58	1935.24	A-1014-2	1-3/c + gnd #6,600 V, EPR insulation
						A-1014-2	1-3/c + gnd #6,600 V, EPR insulation
						2 Pull rope	Soft-Fiber Polyester
4190	E-100	78	RGS conduit	648.58	1935.24	A-1014-2	1-3/c + gnd #6,600 V, EPR insulation
						A-1014-2	1-3/c + gnd #6,600 V, EPR insulation
						2 Pull rope	Soft-Fiber Polyester
4191	E-100	78	RGS conduit	648.58	1935.24	A-1014-2	1-3/c + gnd #6,600 V, EPR insulation
						A-1014-2	1-3/c + gnd #6,600 V, EPR insulation
						2 Pull rope	Soft-Fiber Polyester
4192	E-96	78	RGS conduit	648.58	1935.24	A-1014-2	1-3/c + gnd #6,600 V, EPR insulation
						A-1014-2	1-3/c + gnd #6,600 V, EPR insulation
						2 Pull rope	Soft-Fiber Polyester
4193	E-97	78	RGS conduit	648.58	1935.24	A-1014-2	1-3/c + gnd #6,600 V, EPR insulation
						A-1014-2	1-3/c + gnd #6,600 V, EPR insulation
						2 Pull rope	Soft-Fiber Polyester
4194	E-101	78	RGS conduit	648.58	1935.24	A-1014-2	1-3/c + gnd #6,600 V, EPR insulation
						A-1014-2	1-3/c + gnd #6,600 V, EPR insulation
						2 Pull rope	Soft-Fiber Polyester
4195	E-101	78	RGS conduit	648.58	1935.24	A-1014-2	1-3/c + gnd #6,600 V, EPR insulation
						A-1014-2	1-3/c + gnd #6,600 V, EPR insulation
						2 Pull rope	Soft-Fiber Polyester
4196	E-101	78	RGS conduit	648.58	1935.24	A-1014-2	1-3/c + gnd #6,600 V, EPR insulation
						A-1014-2	1-3/c + gnd #6,600 V, EPR insulation
						2 Pull rope	Soft-Fiber Polyester
4197	E-101	78	RGS conduit	648.58	1935.24	A-1014-2	1-3/c + gnd #6,600 V, EPR insulation
						A-1014-2	1-3/c + gnd #6,600 V, EPR insulation
						2 Pull rope	Soft-Fiber Polyester

REQUEST FOR INFORMATION NOT ADDRESSED IN THIS CCO REMAIN IN FORCE

MARK	DATE	DESCRIPTIONS	BY	CH'D	CCO#
		REVISIONS			
2	03/30/09	SERVICE PLATFORM ELECTRICAL CHANGES	RR RY	RG MP	55
1	03/04/08	BARRIER MODIFICATIONS	JS BM	RG	44

CONTRACT CHANGE ORDER NO. 55
SHEET 72 OF 90

REGISTERED PROFESSIONAL ENGINEER — S. A. ESTOQUE, JR. — No. E-10151 — Exp. 12/31/2008 ELECTRICAL — STATE OF CALIFORNIA

FOR REVISION ONLY 1

REGISTERED PROFESSIONAL ENGINEER — FADI WALIEDDINE — No. 11465 — Exp. 12/31/2009 ELECTRICAL — STATE OF CALIFORNIA

FOR REVISION ONLY 2

Caltrans Metric

DIST	COUNTY	ROUTE	KILOMETER POST TOTAL PROJECT	SHEET No	TOTAL SHEETS
04	SF	80	13.2/13.9	388 R2	1204

Jens Erlingsson 12/19/02
REGISTERED ELECTRICAL ENGINEER DATE

REGISTERED PROFESSIONAL ENGINEER — JENS ERLINGSSON — No. 8249 — Exp. 9/30/06 ELECTRICAL — STATE OF CALIFORNIA

12-6-04
PLANS APPROVAL DATE

PB POWER, Inc.
A Parsons Brinckerhoff Company
303 Second St., Suite 700N
San Francisco, CA 94107-1317

The State of California or its officers or agents shall not be responsible for the accuracy or completeness of electronic copies of this plan sheet.

Caltrans now has a web site! To get to the web site, go to http://www.dot.ca.gov

CONDUIT DATA

Conduit No	Reference	Size	Type	Total Fill (mm²)	Allowable Fill (mm²)	Included Cable No.	Conductor Type
4198	E-101	78	RGS conduit	648.58	1935.24	A-1014-2	1-3/c + gnd #6,600 V, EPR insulation
						A-1014-2	1-3/c + gnd #6,600 V, EPR insulation
					2	Pull rope	Soft-Fiber Polyester
4199	E-101	78	RGS conduit	324.29	1935.24	A-1014-2	1-3/c + gnd #6,600 V, EPR insulation
						Pull rope	Soft-Fiber Polyester
4201	E-114	78	RGS conduit 2	62.07	1935.24	Pull rope	Soft-Fiber Polyester 2
						1255-1	1-3/C #16,600 V, EPR insulation
4202	E-114	78	RGS conduit	0.00	1935.24	Pull rope	Soft-Fiber Polyester
4203	E-114	53	RGS conduit	527.18	879.42		2
					2	1095	1-3/c + gnd #2,600 V, EPR insulation
							2
						Pull rope	Soft-Fiber Polyester
							2
4204	E-114	78	RGS conduit 2	0.00	1935.24	Pull rope	Soft-Fiber Polyester
4205	E-114	53	RGS conduit	0.00	1935.24	Pull rope	Soft-Fiber Polyester
4206	E-114	78	RGS conduit	150.44	1935.24	Pull rope	Soft-Fiber Polyester
						MVDSW02A	MVDS DLC
4208	E-114	78	RGS-PVC coated conduit	30.19	1935.24	1475-3A	12 Fiber, single mode fiberoptic cable
						Pull rope	Soft-Fiber Polyester
4208A	E-114	78	RGS-PVC coated conduit		1935.24	Pull rope	Soft-Fiber Polyester
4221	E-115	78	RGS conduit	946.99	1935.24	UP105-2	1-2/c + gnd #8,600 V, EPR insulation
						Pull rope	Soft-Fiber Polyester
						S-3056-7	1-2/C #14,600 V, EPR insulation
						S-3056-5	1-4/C #14,600 V, EPR insulation
						1255-1	1-3/C #16,600 V, EPR insulation
						1255-2	1-3/C #16,600 V, EPR insulation
						1115-2	1-3/C #16,600 V, EPR insulation
						1115-1	1-3/C #14,600 V, EPR insulation
						1202-4	1-3/C #14,600 V, EPR insulation
						1202-2	1-3/C #14,600 V, EPR insulation
						1202-3	1-7/C #16,600 V, EPR insulation
4222	E-115	78	RGS conduit	682.38	1935.24	Pull rope	Soft-Fiber Polyester
						1201-6	1-2/c + gnd #8,600 V, EPR insulation
						1201-2	1-2/c + gnd #8,600 V, EPR insulation
						1201-1	1-2/c + gnd #8,600 V, EPR insulation
4223	E-115	53	RGS conduit	527.18	879.42		2
		2			2		
						Pull rope	Soft-Fiber Polyester
						1095	1-3/c + gnd #2,600 V, EPR insulation 2

For continuation, see next sheet.

CONDUIT AND TRAY SCHEDULE

E-433

DESIGN OVERSIGHT — BEHZAD GOLEMOHAMMADI

CALCULATED/DESIGNED BY — PBP
CHECKED BY — AB

DATE	REVISED BY	DATE REVISED
8/02		

STATE OF CALIFORNIA - DEPARTMENT OF TRANSPORTATION
Caltrans

LAST REVISION 00-00-00
DATE PLOTTED => 3/31/2009
TIME PLOTTED => 2:28:35 PM

FOR REDUCED PLANS ORIGINAL SCALE IS IN MILLIMETERS 0 20 40 60 80

DGN FILE =>T:\13103\MS\pse\SAS Struc\CCO\SAS CCO55\04-0120F1_0388R02.dgn
USERNAME =>garcior

CU 04251

EA 0120F1

CONDUIT DATA

Conduit No	Reference	Size	Type	Total Fill (mm²)	Allowable Fill (mm²)	Included Cable No.	Conductor Type
4224	E-115	78	RGS conduit	227.46	1935.24	Pull rope	Soft-Fiber Polyester
						UP105-9	1-2/c + gnd #8,600 V, EPR insulation
4225	E-115	53	RGS conduit	317.80	1935.24		
						Pull rope	Soft-Fiber Polyester
						1474-5B	1 - 6 pair, shielded #18 with overall shield, 300 V, PVC jacket
						1474-5A	1 - 6 pair, shielded #18 with overall shield, 300 V, PVC jacket
4226	E-115	78	RGS conduit	0.00	1935.24	Pull rope	Soft-Fiber Polyester
4241	E-116	78	RGS conduit	562.50	1935.24	1255-2	1-3/C #16,600 V, EPR insulation
						1202-4	1-3/C #14,600 V, EPR insulation
						1202-3	1-7/C #16,600 V, EPR insulation
						1202-2	1-3/C #14,600 V, EPR insulation
						1202-1	1-2/c + gnd #8,600 V, EPR insulation
						Pull rope	Soft-Fiber Polyester
4242	E-116	78	RGS conduit	192.40	1935.24	CCTVE01BA	TVP
						CCTVE01BB	TVCP
						Pull rope	Soft-Fiber Polyester
4243	E-116	53	RGS conduit	527.18	879.42		
						Pull rope	Soft-Fiber Polyester
						1096	1-3/c + gnd #2,600 V, EPR insulation
4244	E-116	53	RGS conduit	527.18	879.42	Pull rope	Soft-Fiber Polyester
						1097	1-3/c + gnd #2,600 V, EPR insulation
4245	E-116	53	RGS conduit	0.00	1935.24	Pull rope	Soft-Fiber Polyester
4246	E-116	78	RGS conduit	324.26	1935.24	MVDSW03A	MVDS DLC
						Pull rope	Soft-Fiber Polyester
						CCTVE01BD	TVL
						CCTVE01BC	TVC
4248	E-116	78	RGS-PVC coated conduit	30.19	1935.24	Pull rope	Soft-Fiber Polyester
						1475-3B	12 Fiber, single mode fiberoptic cable
4261	E-117	78	RGS conduit	62.07	1935.24	Pull rope	Soft-Fiber Polyester
						1256-1	1-3/C #16,600 V, EPR insulation
4262	E-117	78	RGS conduit	0.00	1935.24	Pull rope	Soft-Fiber Polyester
4263	E-117	53	RGS conduit	527.18	879.42	Pull rope	Soft-Fiber Polyester
						1098	1-3/c + gnd #2,600 V, EPR insulation
4264	E-117	78	RGS conduit	0.00	1935.24	Pull rope	Soft-Fiber Polyester
4265	E-117	53	RGS conduit	150.44	1935.24	Pull rope	Soft-Fiber Polyester
						MVDSW04A	MVDS DLC
4266	E-117	78	RGS conduit	0.00	1935.24	Pull rope	Soft-Fiber Polyester
4268	E-117	78	RGS-PVC coated conduit	30.19	1935.24	Pull rope	Soft-Fiber Polyester
						1475-3C	12 Fiber, single mode fiberoptic cable
4281	E-118	78	RGS conduit	294.50	1935.24	1118-1	1-3/C #14,600 V, EPR insulation
						1117-1	1-3/C #14,600 V, EPR insulation
						1117-2	1-3/C #16,600 V, EPR insulation
						1118-2	1-3/C #16,600 V, EPR insulation
						Pull rope	Soft-Fiber Polyester

REQUEST FOR INFORMATION NOT ADDRESSED IN THIS CCO REMAIN IN FORCE

REVISIONS

MARK	DATE	DESCRIPTIONS	BY	CH'D	CCO#
2	03/30/09	SERVICE PLATFORM ELECTRICAL CHANGES	RR RY	RG MP	55
1	03/04/08	BARRIER MODIFICATIONS	JS BM	RG SE	44

CONTRACT CHANGE ORDER NO. 55
SHEET 73 OF 90

REGISTERED PROFESSIONAL ENGINEER — S. A. ESTOQUE, JR — No. E-10151 — Exp. 12/31/2008 — ELECTRICAL — STATE OF CALIFORNIA

FOR REVISION ONLY 1

REGISTERED PROFESSIONAL ENGINEER — FADI WALIEDDINE — No. 11465 — Exp. 12/31/2009 — ELECTRICAL — STATE OF CALIFORNIA

FOR REVISION ONLY 2

Caltrans Metric

DIST	COUNTY	ROUTE	KILOMETER POST TOTAL PROJECT	SHEET No	TOTAL SHEETS
04	SF	80	13.2/13.9	389 R2	1204

REGISTERED ELECTRICAL ENGINEER — 12/19/02 — DATE

REGISTERED PROFESSIONAL ENGINEER — JENS ERLINGSSON — No. 8249 — Exp. 9/30/06 — ELECTRICAL — STATE OF CALIFORNIA

12-6-04
PLANS APPROVAL DATE

PB POWER, Inc.
A Parsons Brinckerhoff Company
303 Second St., Suite 700N
San Francisco, CA 94107-1317

The State of California or its officers or agents shall not be responsible for the accuracy or completeness of electronic copies of this plan sheet.

Caltrans now has a web site! To get to the web site, go to http://www.dot.ca.gov

CONDUIT DATA

Conduit No	Reference	Size	Type	Total Fill (mm²)	Allowable Fill (mm²)	Included Cable No.	Conductor Type
4282	E-118	78	RGS conduit	1087.85	1935.24	2201-5	1-3/C #14,600 V, EPR insulation
						2201-1	1-2/c + gnd #8,600 V, EPR insulation
						2201-2	1-2/c + gnd #8,600 V, EPR insulation
						2201-6	1-2/c + gnd #8,600 V, EPR insulation
						Pull rope	Soft-Fiber Polyester
						2201-4	1-9/C #16,600 V, EPR insulation
						2201-3	1-3/C #14,600 V, EPR insulation
						S-3056-8	1-4/C #14,600 V, EPR insulation
4283	E-118	53	RGS conduit	527.18	879.42		
						1099	1-3/c + gnd #2,600 V, EPR insulation
						Pull rope	Soft-Fiber Polyester
4284	E-118	78	RGS conduit	454.92	1935.24	Pull rope	Soft-Fiber Polyester
						UP108-3	1-2/c + gnd #8,600 V, EPR insulation
						UP108-2	1-2/c + gnd #8,600 V, EPR insulation
4285	E-118	53	RGS conduit	317.80	1935.24	Pull rope	Soft-Fiber Polyester
						1474-8A	1 - 6 pair, shielded #18 with overall shield, 300 V, PVC jacket
						1474-8B	1 - 6 pair, shielded #18 with overall shield, 300 V, PVC jacket
4286	E-118	78	RGS conduit	0.00	1935.24	Pull rope	Soft-Fiber Polyester
4301	E-96	78	RGS conduit	366.10	1935.24	A-3001-1	1-3/c + gnd #4,600 V, EPR insulation
						Pull rope	Soft-Fiber Polyester
4303	E-96	41	RGS conduit	0.00	534.55	Pull rope	Soft-Fiber Polyester
4304	E-96	41	RGS conduit	212.85	534.55	Pull rope	Soft-Fiber Polyester
						A-3001-2	3 + 1 gnd #6,#8, 600 V, RHH/RHW insulation
4305	E-96	41	RGS conduit	0.00	534.55	Pull rope	Soft-Fiber Polyester
4306	E-96	41	RGS conduit	0.00	534.55	Pull rope	Soft-Fiber Polyester
4307	E-96	53	RGS conduit	0.00	879.42	Pull rope	Soft-Fiber Polyester
4308	E-96	53	RGS conduit	0.00	879.42	Pull rope	Soft-Fiber Polyester
4309	E-96	41	RGS conduit	0.00	534.55	Pull rope	Soft-Fiber Polyester
4310	E-96	41	RGS conduit	0.00	534.55	Pull rope	Soft-Fiber Polyester

For continuation, see next sheet.

CONDUIT AND TRAY SCHEDULE

E-434

DATE	REVISED BY	DATE REVISED
8/02	AB	8/02

CALCULATED/DESIGNED BY
CHECKED BY

DESIGN OVERSIGHT — BEHZAD GOLEMOHAMMADI

STATE OF CALIFORNIA - DEPARTMENT OF TRANSPORTATION — Caltrans

LAST REVISION 00-00-00
DATE PLOTTED => 3/31/2009
TIME PLOTTED => 2:27:57 PM

FOR REDUCED PLANS ORIGINAL SCALE IS IN MILLIMETERS 0 20 40 60 80

DGN FILE =>I:\13103\MS\pse\SAS Struc\CCO\SAS CCO55\04-0120F1_0389R02.dgn
USERNAME =>garciar

CU 04251

EA 0120F1

CONDUIT DATA

Conduit No	Reference	Size	Type	Total Fill (mm²)	Allowable Fill (mm²)	Included Cable No.	Conductor Type
4505	E-100	41	RGS conduit	0.00	534.55	Pull rope	Soft-Fiber Polyester
4506	E-100	41	RGS conduit	0.00	534.55	Pull rope	Soft-Fiber Polyester
4507	E-101	41	RGS conduit	0.00	534.55	Pull rope	Soft-Fiber Polyester
4508	E-99	41	RGS conduit	0.00	534.55	Pull rope	Soft-Fiber Polyester
4509	E-99	53	RGS conduit	0.00	879.42	Pull rope	Soft-Fiber Polyester
4510	E-99	53	RGS conduit	0.00	879.42	Pull rope	Soft-Fiber Polyester
4511	E-100	41	RGS conduit	0.00	534.55	Pull rope	Soft-Fiber Polyester
4512	E-100	41	RGS conduit	0.00	534.55	Pull rope	Soft-Fiber Polyester
4513	E-100	41	RGS conduit	0.00	534.55	Pull rope	Soft-Fiber Polyester
4514	E-100	41	RGS conduit	0.00	534.55	Pull rope	Soft-Fiber Polyester
4515	E-100	53	RGS conduit	0.00	879.42	Pull rope	Soft-Fiber Polyester
4516	E-100	53	RGS conduit	0.00	879.42	Pull rope	Soft-Fiber Polyester
4517	E-100	41	RGS conduit	0.00	534.55	Pull rope	Soft-Fiber Polyester
4518	E-100	41	RGS conduit	0.00	534.55	Pull rope	Soft-Fiber Polyester
4519	E-100	41	RGS conduit	0.00	534.55	Pull rope	Soft-Fiber Polyester
4520	E-100	41	RGS conduit	0.00	534.55	Pull rope	Soft-Fiber Polyester
4521	E-100	53	RGS conduit	481.21	879.42	Pull rope	Soft-Fiber Polyester
						S-1031-4	3 + 1 gnd #4, #8, 600 V, RHH/RHW insulation
						A-1035-4	3 + 1 gnd #6, #8, 600 V, RHH/RHW insulation
4522	E-100	53	RGS conduit	176.28	879.42	Pull rope	Soft-Fiber Polyester
						A-1035-4	3 + 1 gnd #6, #8, 600 V, RHH/RHW insulation
4523	E-100	41	RGS conduit	0.00	534.55	Pull rope	Soft-Fiber Polyester
4524	E-100	41	RGS conduit	0.00	534.55	Pull rope	Soft-Fiber Polyester
4525	E-100	53	RGS conduit	324.29	879.42	A-1013-2	1-3/C + gnd #6, 600 V, EPR insulation
						Pull rope	Soft-Fiber Polyester
4526	E-100	53	RGS conduit	648.58	879.42	A-1014-2	1-3/C + gnd #6, 600 V, EPR insulation
						Pull rope	Soft-Fiber Polyester
						A-1014-2	1-3/C + gnd #6, 600 V, EPR insulation
4527	E-100	41	RGS conduit	0.00	534.55	Pull rope	Soft-Fiber Polyester
4528	E-100	41	RGS conduit	0.00	534.55	Pull rope	Soft-Fiber Polyester
4531	E-100	41	RGS conduit	0.00	534.55	Pull rope	Soft-Fiber Polyester
4532	E-100	41	RGS conduit	0.00	534.55	Pull rope	Soft-Fiber Polyester
4533	E-100	53	RGS conduit	0.00	879.42	Pull rope	Soft-Fiber Polyester
4534	E-100	53	RGS conduit	0.00	879.42	Pull rope	Soft-Fiber Polyester
4535	E-100	41	RGS conduit	0.00	534.55	Pull rope	Soft-Fiber Polyester
4536	E-100	41	RGS conduit	0.00	534.55	Pull rope	Soft-Fiber Polyester
4537	E-100	41	RGS conduit	0.00	534.55	Pull rope	Soft-Fiber Polyester
4538	E-100	41	RGS conduit	0.00	534.55	Pull rope	Soft-Fiber Polyester
4539	E-100	53	RGS conduit	0.00	879.42	Pull rope	Soft-Fiber Polyester
4540	E-100	53	RGS conduit	0.00	879.42	Pull rope	Soft-Fiber Polyester
4541	E-100	41	RGS conduit	0.00	534.55	Pull rope	Soft-Fiber Polyester
4542	E-100	41	RGS conduit	0.00	534.55	Pull rope	Soft-Fiber Polyester
4543	E-100	41	RGS conduit	227.46	534.55	Pull rope	Soft-Fiber Polyester

REQUEST FOR INFORMATION NOT ADDRESSED IN THIS CCO REMAIN IN FORCE					
3	03/30/09	SERVICE PLATFORM ELECTRICAL CHANGES	RR RY	RG MP	55
2	03/04/08	BARRIER MODIFICATIONS	JS BM	RG SE	44
1	02/19/08	ELECTRICAL MODIFICATIONS	MP EL	RR	42
MARK	DATE	DESCRIPTIONS REVISIONS	BY	CH'D	CCO#

CONTRACT CHANGE ORDER NO. 55
SHEET 74 OF 90

RUSSELL FUMIO TAKATA, REGISTERED PROFESSIONAL ENGINEER, No. E 8651, Exp. 9/30/2008 ELECTRICAL, STATE OF CALIFORNIA
FOR REVISION ONLY 1

S. A. ESTOQUE, JR., REGISTERED PROFESSIONAL ENGINEER, No. E-10151, Exp. 12/31/2008 ELECTRICAL, STATE OF CALIFORNIA
FOR REVISION ONLY 2

FADI WALIEDDINE, REGISTERED PROFESSIONAL ENGINEER, No. 11465, Exp. 12/31/2009 ELECTRICAL, STATE OF CALIFORNIA
FOR REVISION ONLY 3

Caltrans Metric

DIST	COUNTY	ROUTE	KILOMETER POST TOTAL PROJECT	SHEET No.	TOTAL SHEETS
04	SF	80	13.2/13.9	393 R3	1204

REGISTERED ELECTRICAL ENGINEER — 12/19/02 DATE

JENS ERLINGSSON, REGISTERED PROFESSIONAL ENGINEER, No. 8249, Exp. 9/30/06 ELECTRICAL, STATE OF CALIFORNIA

12-6-04
PLANS APPROVAL DATE

PB POWER, Inc.
A Parsons Brinckerhoff Company
303 Second St., Suite 700N
San Francisco, CA 94107-1317

The State of California or its officers or agents shall not be responsible for the accuracy or completeness of electronic copies of this plan sheet.

Caltrans now has a web site! To get to the web site, go to http://www.dot.ca.gov

CONDUIT DATA

Conduit No	Reference	Size	Type	Total Fill (mm²)	Allowable Fill (mm²)	Included Cable No.	Conductor Type
4544	E-100	41	RGS conduit	0.00	534.55	Pull rope	Soft-Fiber Polyester
4545	E-100	53	RGS conduit	0.00	879.42	Pull rope	Soft-Fiber Polyester
4546	E-100	53	RGS conduit	0.00	879.42	Pull rope	Soft-Fiber Polyester
4547	E-100	41	RGS conduit	0.00	534.55		
						Pull rope	Soft-Fiber Polyester
4548	E-100	41	RGS conduit	0.00	534.55	Pull rope	Soft-Fiber Polyester
4549	E-100	41	RGS conduit	537.14	534.55	Pull rope	Soft-Fiber Polyester
						1106	1-3/C + gnd #6, 600 V, EPR insulation
						S-1032-2	3 + 1 gnd #6, #8, 600 V, RHH/RHW insulation
4550	E-100	41	RGS conduit	227.46	534.55	UP108-3	1-2/C + gnd #8, 600 V, EPR insulation
						Pull rope	Soft-Fiber Polyester
4551	E-100	53	RGS conduit	690.39	879.42	S-1032-1	1-3/C + gnd #4, 600 V, EPR insulation
						1106	1-3/C + gnd #6, 600 V, EPR insulation
						Pull rope	Soft-Fiber Polyester
4552	E-100	53	RGS conduit	227.46	879.42	UP108-3	1-2/C + gnd #8, 600 V, EPR insulation
						Pull rope	Soft-Fiber Polyester
4553	E-100	41	RGS conduit	0.00	534.55	Pull rope	Soft-Fiber Polyester
4554	E-100	41	RGS conduit	0.00	534.55	Pull rope	Soft-Fiber Polyester
4555	E-100	53	RGS conduit	648.58	879.42	Pull rope	Soft-Fiber Polyester
						A-1014-2	1-3/C + gnd #6, 600 V, EPR insulation
						A-1014-2	1-3/C + gnd #6, 600 V, EPR insulation
5001	E-71A 3	53	Liquidtight Flex. Metal Cond. 3	98.42	879.42	UP205-5	2 + 1 gnd #12,#12, 600 V, RHH/RHW insulation
						UP204-5	2 + 1 gnd #12,#12, 600 V, RHH/RHW insulation
						Pull rope	Soft-Fiber Polyester

For continuation, see next sheet.

CONDUIT AND TRAY SCHEDULE

E-438

DESIGN OVERSIGHT — BEHZAD GOLEMOHAMMADI
CALCULATED/DESIGNED BY — PBP
CHECKED BY — AB
DATE — 8/02
REVISED BY — DATE REVISED

STATE OF CALIFORNIA - DEPARTMENT OF TRANSPORTATION
Caltrans

LAST REVISION 00-00-00 — DATE PLOTTED => 3/31/2009 TIME PLOTTED => 2:27:25 PM

FOR REDUCED PLANS ORIGINAL SCALE IS IN MILLIMETERS 0 20 40 60 80

DGN FILE =>T:\13103\MS\pse\SAS Struc\CCO\SAS CC055\04-0120f1_0393R03.dgn
USERNAME =>garciar

CU 04251

EA 0120F1

DIST	COUNTY	ROUTE	KILOMETER POST TOTAL PROJECT	SHEET No	TOTAL SHEETS
04	SF	80	13.2/13.9	394 R2	1204

REGISTERED ELECTRICAL ENGINEER — 12/19/02 DATE

12-6-04
PLANS APPROVAL DATE

PB POWER, Inc.
A Parsons Brinckerhoff Company
303 Second St., Suite 700N
San Francisco, CA 94107-1317

JENS ERLINGSSON No. 8249 Exp. 9/30/06 ELECTRICAL — REGISTERED PROFESSIONAL ENGINEER — STATE OF CALIFORNIA

The State of California or its officers or agents shall not be responsible for the accuracy or completeness of electronic copies of this plan sheet.

Caltrans now has a web site! To get to the web site, go to http://www.dot.ca.gov

REQUEST FOR INFORMATION NOT ADDRESSED IN THIS CCO REMAIN IN FORCE

MARK	DATE	DESCRIPTIONS	BY	CH'D	CCO#
		REVISIONS			
2	03/30/09	SERVICE PLATFORM ELECTRICAL CHANGES	RR RY	RG MP	55
1	03/04/08	BARRIER MODIFICATIONS	JS BM	RG SE	44

Caltrans Metric

CONTRACT CHANGE ORDER NO. 55
SHEET 75 OF 90

REGISTERED PROFESSIONAL ENGINEER — S. A. ESTOQUE, JR — No. E-10151 — Exp. 12/31/2008 ELECTRICAL — STATE OF CALIFORNIA

REGISTERED PROFESSIONAL ENGINEER — FADI WALIEDDINE — No. 11465 — Exp. 12/31/2009 ELECTRICAL — STATE OF CALIFORNIA

FOR REVISION ONLY (1) FOR REVISION ONLY (2)

CONDUIT DATA

Conduit No	Reference	Size	Type	Total Fill (mm²)	Allowable Fill (mm²)	Included Cable No.	Conductor Type
5002	E-71A	53	Liquidtight Flex. Metal Cond.	0.00	879.42	Pull rope	Soft-Fiber Polyester
5004	E-71A	53	Liquidtight Flex. Metal Cond.	648.58	879.42	Pull rope	Soft-Fiber Polyester
						LP219-2,4	1-3/C + gnd #6, 600 V, EPR insulation
						LP219-6,8	1-3/C + gnd #6, 600 V, EPR insulation
5005	E-71A	53	Liquidtight Flex. Metal Cond.	0.00	879.42	Pull rope	Soft-Fiber Polyester
5006	E-71A	53	Liquidtight Flex. Metal Cond.	0.00	879.42	Pull rope	Soft-Fiber Polyester
5026	E-72A	53	Liquidtight Flex. Metal Cond.	205.22	879.42	UP205-9	1-2/C + gnd #12, 600 V, EPR insulation
						UP205-11	1-2/C + gnd #12, 600 V, EPR insulation
						Pull rope	Soft-Fiber Polyester
5027	E-72A	53	Liquidtight Flex. Metal Cond.	0.00	879.42	Pull rope	Soft-Fiber Polyester
5029	E-72A	53	Liquidtight Flex. Metal Cond.	648.58	879.42	LP220-2,4	1-3/C + gnd #6, 600 V, EPR insulation
						Pull rope	Soft-Fiber Polyester
						LP220-6,8	1-3/C + gnd #6, 600 V, EPR insulation
5030	E-72A	53	Liquidtight Flex. Metal Cond.	0.00	879.42	Pull rope	Soft-Fiber Polyester
5031	E-72A	53	Liquidtight Flex. Metal Cond.	0.00	879.42	Pull rope	Soft-Fiber Polyester
5051	E-73A	53	Liquidtight Flex. Metal Cond.	49.21	879.42	Pull rope	Soft-Fiber Polyester
						UP206-5	2+1gnd #12,#12, 600 V, RHH/RHW insulation
5053	E-73A	53	Liquidtight Flex. Metal Cond.	227.46	879.42	UP206-9	1-2/C + gnd #8, 600 V, EPR insulation
						Pull rope	Soft-Fiber Polyester
5054	E-73A	53	Liquidtight Flex. Metal Cond.	648.58	879.42	Pull rope	Soft-Fiber Polyester
						LP221-6,8	1-3/C + gnd #6, 600 V, EPR insulation
						LP221-2,4	1-3/C + gnd #6, 600 V, EPR insulation
5055	E-73A	53	Liquidtight Flex. Metal Cond.	0.00	879.42	Pull rope	Soft-Fiber Polyester
5056	E-73A	53	Liquidtight Flex. Metal Cond.	0.00	879.42	Pull rope	Soft-Fiber Polyester
5076	E-74A	53	Liquidtight Flex. Metal Cond.	49.21	879.42	UP207-5	2 + 1 gnd #12,#12, 600 V, RHH/RHW insulation
						Pull rope	Soft-Fiber Polyester
5077	E-74A	53	Liquidtight Flex. Metal Cond.	0.00	879.42	Pull rope	Soft-Fiber Polyester
5079	E-74A	53	Liquidtight Flex. Metal Cond.	648.58	879.42	LP222-6,8	1-3/C + gnd #6, 600 V, EPR insulation
						Pull rope	Soft-Fiber Polyester
						LP222-2,4	1-3/C + gnd #6, 600 V, EPR insulation
5080	E-74A	53	Liquidtight Flex. Metal Cond.	0.00	879.42	Pull rope	Soft-Fiber Polyester
5081	E-74A	53	Liquidtight Flex. Metal Cond.	0.00	879.42	Pull rope	Soft-Fiber Polyester
5082	E-117	78	RGS-PVC coated conduit	150.44	1935.24	Pull rope	Soft-Fiber Polyester
						MVDSE03A	MVDS DLC

CONDUIT DATA

Conduit No	Reference	Size	Type	Total Fill (mm²)	Allowable Fill (mm²)	Included Cable No.	Conductor Type
5101	E-75A	53	Liquidtight Flex. Metal Cond.	481.89	879.42	UP208-5	2 + 1 gnd #12,#12, 600 V, RHH/RHW insulation
						UP208-11	1-3/C #12, 600 V, EPR insulation
						UP208-15	1-2/C + gnd #8, 600 V, EPR insulation
						UP208-9	1-2/C + gnd #12, 600 V, EPR insulation
						Pull rope	Soft-Fiber Polyester
5102	E-75A	53	Liquidtight Flex. Metal Cond.	0.00	879.42	Pull rope	Soft-Fiber Polyester
5104	E-75A	53	Liquidtight Flex. Metal Cond.	648.58	879.42	LP223-2,4	1-3/C + gnd #6, 600 V, EPR insulation
						LP223-6,8	1-3/C + gnd #6, 600 V, EPR insulation
						Pull rope	Soft-Fiber Polyester
5105	E-75A	53	Liquidtight Flex. Metal Cond.	0.00	879.42	Pull rope	Soft-Fiber Polyester
5106	E-75A	53	Liquidtight Flex. Metal Cond.	0.00	879.42	Pull rope	Soft-Fiber Polyester
5201	E-114	78	RGS conduit	648.58	1935.24	Pull rope	Soft-Fiber Polyester
						LP219-2,4	1-3/C + gnd #6, 600 V, EPR insulation
						LP219-6,8	1-3/C + gnd #6, 600 V, EPR insulation
5202	E-114	53	RGS conduit	0.00	1935.24	Pull rope	Soft-Fiber Polyester
5203	E-71A, E-114	53	RGS conduit	527.18	879.42	2095	1-3/C + gnd #2, 600 V, EPR insulation
						Pull rope	Soft-Fiber Polyester
5204	E-114	78	RGS conduit	0.00	1935.24	Pull rope	Soft-Fiber Polyester
5205	E-114	53	RGS conduit	527.18	879.42	Pull rope	Soft-Fiber Polyester
						2103	1-3/C + gnd #2, 600 V, EPR insulation
5206	E-114	78	RGS conduit	1201.71	1935.24	1474-4	50 pair #18, shielded pairs, IS/OS shield 600 V, XLPE insul., PVC jacket
5206A	E-71A	41	Liquidtight Flex. Metal Cond.		534.55	Pull rope	Soft-Fiber Polyester
5207	E-114	78	RGS conduit	1352.15	1935.24	MVDSE01A	MVDS DLC
						1474-5	50 pair #18, shielded pairs, IS/OS shield 600 V, XLPE insul., PVC jacket
5207A		53	Liquidtight Flex. Metal Cond.		879.42	Pull rope	Soft-Fiber Polyester
5208	E-114	78	RGS conduit	30.19	1935.24	2475-3A	12 Fiber, single mode fiberoptic cable
						Pull rope	Soft-Fiber Polyester

For continuation, see next sheet.

CONDUIT AND TRAY SCHEDULE

E-439

DESIGN OVERSIGHT	CALCULATED/ DESIGNED BY	CHECKED BY	DATE REVISED	REVISED BY
BEHZAD GOLEMOHAMMADI	PBP	AB	8/02	DATE 8/02

STATE OF CALIFORNIA - DEPARTMENT OF TRANSPORTATION — Caltrans

LAST REVISION 00-00-00 — DATE PLOTTED => 3/31/2009 — TIME PLOTTED => 2:26:49 PM

FOR REDUCED PLANS ORIGINAL SCALE IS IN MILLIMETERS 0 20 40 60 80

DGN FILE =>T:\13103\MS\pse\SAS Struc\CCO\SAS CCO55\04-0120F1_0394R02.dgn
USERNAME =>garciar

CU 04251 — EA 0120F1

DIST	COUNTY	ROUTE	KILOMETER POST TOTAL PROJECT	SHEET No.	TOTAL SHEETS
04	SF	80	13.2/13.9	395 R2	1204

12/19/02
REGISTERED ELECTRICAL ENGINEER DATE

12-6-04
PLANS APPROVAL DATE

REGISTERED PROFESSIONAL ENGINEER — JENS ERLINGSSON No. 8249 Exp. 9/30/06 ELECTRICAL — STATE OF CALIFORNIA

PB POWER, Inc.
A Parsons Brinckerhoff Company
303 Second St., Suite 700N
San Francisco, CA 94107-1317

The State of California or its officers or agents shall not be responsible for the accuracy or completeness of electronic copies of this plan sheet.

Caltrans now has a web site! To get to the web site, go to http://www.dot.ca.gov

REQUEST FOR INFORMATION NOT ADDRESSED IN THIS CCO REMAIN IN FORCE					
2	03/30/09	SERVICE PLATFORM ELECTRICAL CHANGES	RR RY	RG MP	55
1	03/04/08	BARRIER MODIFICATIONS	JS BM	RG SE	44
MARK	DATE	DESCRIPTIONS REVISIONS	BY	CH'D	CCO#

Caltrans Metric

CONTRACT CHANGE ORDER NO. 55
SHEET 76 OF 90

REGISTERED PROFESSIONAL ENGINEER — S. A. ESTOQUE, JR. No. F-10151 Exp. 12/31/2008 ELECTRICAL — STATE OF CALIFORNIA

FOR REVISION ONLY 1

REGISTERED PROFESSIONAL ENGINEER — FADI WALIEDDINE No. 11465 Exp. 12/31/2009 ELECTRICAL — STATE OF CALIFORNIA

FOR REVISION ONLY 2

CONDUIT DATA

Conduit No	Reference	Size	Type	Total Fill (mm²)	Allowable Fill (mm²)	Included Cable No.	Conductor Type
5210	E-114	78	RGS conduit 2	1323.45	1935.24	Pull rope	Soft-Fiber Polyester
						2119-2	4 pair #22, shielded pairs, 300 V, PE insulation
2						1473-5	50 pair #18, shielded pairs, IS/OS shield 600 V, XLPE insul., PVC jacket
5210A	E-71A	41	Liquidtight Flex. Metal cond.		534.55	Pull rope	Soft-Fiber Polyester
5211	E-114	78	RGS conduit 2	0.00	1935.24	Pull rope	Soft-Fiber Polyester
5221	E-115	78	RGS conduit	272.97	1935.24	2202-2	1-3/C #14, 600 V, EPR insulation
						Pull rope	Soft-Fiber Polyester
						2202-3	1-7/C #16, 600 V, EPR insulation
						2202-4	1-3/C #14, 600 V, EPR insulation
5222	E-115	78	RGS conduit	1211.54	1935.24	LP220-2,4	1-3/C + gnd #6, 600 V, EPR insulation
						2121-1	1-3/C #14, 600 V, EPR insulation
						LP220-6,8	1-3/C + gnd #6, 600 V, EPR insulation
						Pull rope	Soft-Fiber Polyester
						S-3056-6	1-4/C #14, 600 V, EPR insulation
						2120-2	1-3/C #14, 600 V, EPR insulation
						2120-1	1-3/C #14, 600 V, EPR insulation
						2204-2	1-3/C #16, 600 V, EPR insulation
						2204-1	1-3/C #16, 600 V, EPR insulation
						2121-4	1-3/C #14, 600 V, EPR insulation
5223	E-115	78	RGS conduit	1235.86	1935.24	UP205-1	1-2/C + gnd #10 ,600 V, EPR insulation
						Pull rope	Soft-Fiber Polyester
						UP206-1	1-2/C + gnd #10 ,600 V, EPR insulation
						UP205-8	1-2/C + gnd #8, 600 V, EPR insulation
						2096	1-3/C + gnd #2, 600 V, EPR insulation
						UP205-7	1-2/C + gnd #8, 600 V, EPR insulation
5224	E-115	78	RGS conduit	227.46	1935.24	Pull rope	Soft-Fiber Polyester
						UP205-6	1-2/C + gnd #8, 600 V, EPR insulation
5225	E-115	53 2	RGS conduit	527.18	879.42 2	Pull rope	Soft-Fiber Polyester
						2104	1-3/C + gnd #2, 600 V, EPR insulation
5226	E-115	78	RGS conduit	1361.88	1935.24		
						2910-11	1-3/C #16, 600 V, EPR insulation
						1474-5	50 pair #18, shielded pairs, IS/OS shield 600 V, XLPE insul., PVC jacket
						2155	1-2 pair, shielded #18 with IS/OA, 300V PVC jacket
						Pull rope	Soft-Fiber Polyester
5227	E-115	78	RGS conduit	1201.71	1935.24	Pull rope	Soft-Fiber Polyester
						1474-6	50 pair #18, shielded pairs, IS/OS shield 600 V, XLPE insul., PVC jacket
5228	E-115	78	RGS conduit 2	1445.19	1935.24	2910-10	4 pair #22, shielded pairs, 300 V, PE insulation
						Pull rope	Soft-Fiber Polyester
						1473-5	50 pair #18, shielded pairs, IS/OS shield 600 V, XLPE insul., PVC jacket
						2910-12	4 pair #22, shielded pairs, 300 V, PE insulation
5229	E-115	78	RGS conduit	317.80	1935.24	1474-5A	1 - 6 pair, shielded #18 with overall shield, 300 V, PVC jacket
						Pull rope	Soft-Fiber Polyester
						1474-5B	1 - 6 pair, shielded #18 with overall shield, 300 V, PVC jacket
5230	E-114	78	RGS conduit	0.00	1935.24	Pull rope	Soft-Fiber Polyester
5231	E-114	78	RGS conduit	0.00	1935.24	Pull rope	Soft-Fiber Polyester
5232	E-114	78	RGS conduit	1201.71	1935.24	1473-4	50 pair #18, shielded pairs, IS/OS shield 600 V, XLPE insul., PVC jacket
						Pull rope	Soft-Fiber Polyester
5233	E-115	78	RGS conduit	0.00	1935.24	Pull rope	Soft-Fiber Polyester
5234	E-115	78	RGS conduit	0.00	1935.24	Pull rope	Soft-Fiber Polyester
5235	E-115	78	RGS conduit	1201.71	1935.24	Pull rope	Soft-Fiber Polyester
						1473-6	50 pair #18, shielded pairs, IS/OS shield 600 V, XLPE insul., PVC jacket

CONDUIT DATA

Conduit No	Reference	Size	Type	Total Fill (mm²)	Allowable Fill (mm²)	Included Cable No.	Conductor Type
5236	E-116	53	RGS conduit	0.00	1935.24	Pull rope	Soft-Fiber Polyester
5237	E-116	78	RGS conduit	0.00	1935.24	Pull rope	Soft-Fiber Polyester
5238	E-116	78	RGS conduit 2	1201.71	1935.24	1473-6	50 pair #18, shielded pairs, IS/OS shield 600 V, XLPE insul., PVC jacket
						Pull rope	Soft-Fiber Polyester
5241	E-116	78	RGS conduit	1027.61	1935.24	2202-3	1-7/C #16, 600 V, EPR insulation
						2202-2	1-3/C #14, 600 V, EPR insulation
						2202-4	1-3/C #14, 600 V, EPR insulation
						2105	1-3/C + gnd #2, 600 V, EPR insulation
						2202-1	1-2/C + gnd #8, 600 V, EPR insulation
						Pull rope	Soft-Fiber Polyester
5242	E-116	53 2	RGS conduit	192.40	1935.24	Pull rope	Soft-Fiber Polyester
						CCTVE01AB	TVCP
						CCTVE01AA	TVP
5243	E-116	53	RGS conduit 2	527.18	879.42	Pull rope	Soft-Fiber Polyester 2
						2097	1-3/C + gnd #2, 600 V, EPR insulation
5244	E-116	78	RGS conduit	648.58	1935.24	Pull rope	Soft-Fiber Polyester
						LP221-2,4	1-3/C + gnd #6, 600 V, EPR insulation
						LP221-6,8	1-3/C + gnd #6, 600 V, EPR insulation
5245	E-116	78	RGS conduit 2	727.89	1935.24	2202-1	1-2/C + gnd #8, 600 V, EPR insulation
						2202-2	1-3/C #14, 600 V, EPR insulation
						UP206-9	1-2/C + gnd #8, 600 V, EPR insulation
						2202-4	1-3/C #14, 600 V, EPR insulation
						2204-3	1-7/C #16, 600 V, EPR insulation
						Pull rope	Soft-Fiber Polyester
5246	E-116	78	RGS conduit	1201.71	1935.24	1474-6	50 pair #18, shielded pairs, IS/OS shield 600 V, XLPE insul., PVC jacket
						Pull rope	Soft-Fiber Polyester
5247	E-116	78	RGS conduit	1525.97	1935.24	Pull rope	Soft-Fiber Polyester
						MVDSE02A	MVDS DLC
						CCTVE01AD	TVL
						CCTVE01AC	TVC
						1474-7	50 pair #18, shielded pairs, IS/OS shield 600 V, XLPE insul., PVC jacket
5249	E-116	78	RGS-PVC coated conduit	30.19	1935.24	2475-3B	12 Fiber, single mode fiberoptic cable
						Pull rope	Soft-Fiber Polyester
5250	E-116	78	RGS conduit 2	1201.71	1935.24	1473-7	50 pair #18, shielded pairs, IS/OS shield 600 V, XLPE insul., PVC jacket
						Pull rope	Soft-Fiber Polyester

For continuation, see next sheet.

CONDUIT AND TRAY SCHEDULE

E-440

DESIGN OVERSIGHT	CALCULATED/ DESIGNED BY	DATE	REVISED BY	DATE REVISED
BEHZAD GOLEMOHAMMADI	PBP	8/02	AB	8/02
	CHECKED BY			

STATE OF CALIFORNIA - DEPARTMENT OF TRANSPORTATION
Caltrans

LAST REVISION 00-00-00
DATE PLOTTED => 3/31/2009
TIME PLOTTED => 2:26:18 PM

FOR REDUCED PLANS ORIGINAL SCALE IS IN MILLIMETERS 0 20 40 60 80

DGN FILE =>T:\t3103\MS\pse\SAS Struc\CCO\SAS CCO55\04-0120f1_0395R02.dgn
USERNAME =>garciar

CU 04251

EA 0120F1

CONDUIT DATA

Conduit No	Reference	Size	Type	Total Fill (mm²)	Allowable Fill (mm²)	Included Cable No.	Conductor Type
5251	E-116	78	RGS conduit (3)	0.00	1935.24	Pull rope	Soft-Fiber Polyester
5261	E-117	78	RGS conduit	648.58	1935.24	LP222-2,4	1-3/C + gnd #6, 600 V, EPR insulation
						Pull rope	Soft-Fiber Polyester
						LP222-6,8	1-3/C + gnd #6, 600 V, EPR insulation
5262	E-117	78	RGS conduit	0.00	1935.24	Pull rope	Soft-Fiber Polyester
5263	E-117	53 (3)	RGS conduit	527.18	879.42 (3)	2098	1-3/C + gnd #2, 600 V, EPR insulation (3)
						Pull rope	Soft-Fiber Polyester (3)
5264	E-117	78	RGS conduit	0.00	1935.24	Pull rope	Soft-Fiber Polyester
5265	E-117	53 (3)	RGS conduit	527.18	879.42 (3)	Pull rope	Soft-Fiber Polyester
						2106	1-3/C + gnd #2, 600 V, EPR insulation
5266	E-117	78	RGS conduit	0.00	1935.24	Pull rope	Soft-Fiber Polyester
5267	E-117	78	RGS conduit	1201.71	1935.24	Pull rope	Soft-Fiber Polyester
						1474-8	50 pair #18, shielded pairs, IS/OS shield 600 V, XLPE insul., PVC jacket
5269	E-117	78	RGS-PVC coated conduit	30.19	1935.24	2475-3C	12 Fiber, single mode fiberoptic cable
						Pull rope	Soft-Fiber Polyester
5270	E-117	78 (3)	RGS conduit	1201.71	1935.24	Pull rope	Soft-Fiber Polyester
						1473-7	50 pair #18, shielded pairs, IS/OS shield 600 V, XLPE insul., PVC jacket
5271	E-117	78	RGS conduit	1201.71	1935.24	Pull rope	Soft-Fiber Polyester
						1474-7	50 pair #18, shielded pairs, IS/OS shield 600 V, XLPE insul., PVC jacket
5272	E-117	78	RGS conduit	1201.71	1935.24	1473-8	50 pair #18, shielded pairs, IS/OS shield 600 V, XLPE insul., PVC jacket
						Pull rope	Soft-Fiber Polyester
5273	E-117	53	RGS conduit	0.00	1935.24	Pull rope	Soft-Fiber Polyester
5274	E-117	78	RGS conduit	150.44	1935.24	MVDSE03A	MVDS DLC
						Pull rope	Soft-Fiber Polyester
5275	E-118	78	RGS conduit	1201.71	1935.24	2474-10	50 pair #18, shielded pairs, IS/OS shield 600 V, XLPE insul., PVC jacket
						Pull rope	Soft-Fiber Polyester
5276	E-118	78	RGS conduit	0.00	1935.24	Pull rope	Soft-Fiber Polyester
5277	E-118	78	RGS conduit	1201.71	1935.24	1473-8	50 pair #18, shielded pairs, IS/OS shield 600 V, XLPE insul., PVC jacket
						Pull rope	Soft-Fiber Polyester
5281	E-118	78	RGS conduit	307.37	1935.24	2210-5	1-3/C #14, 600 V, EPR insulation
						Pull rope	Soft-Fiber Polyester
						2201-3	1-3/C #14, 600 V, EPR insulation
						2201-4	1-9/C #16, 600 V, EPR insulation
5282	E-118	78	RGS conduit	98.10	1935.24	S-3056-9	1-4/C #14, 600 V, EPR insulation
						Pull rope	Soft-Fiber Polyester
5283	E-118	53 (3)	RGS conduit	527.18	879.42 (3)	UP208-8	1-2/C + gnd #8, 600 V, EPR insulation
						Pull rope	Soft-Fiber Polyester (3)
						2099	1-3/C + gnd #2, 600 V, EPR insulation
5284	E-118	53 (3)	RGS conduit	682.38	1935.24	UP208-2	1-2/C + gnd #8, 600 V, EPR insulation
						Pull rope	Soft-Fiber Polyester
						UP208-4	1-2/C + gnd #8, 600 V, EPR insulation
						UP208-6	1-2/C + gnd #8, 600 V, EPR insulation
5285	E-118	78	RGS conduit	527.18	1935.24	2107	1-3/C + gnd #2, 600 V, EPR insulation
						Pull rope	Soft-Fiber Polyester

REQUEST FOR INFORMATION NOT ADDRESSED IN THIS CCO REMAIN IN FORCE

MARK	DATE	REVISIONS DESCRIPTIONS	BY	CH'D	CCO#
3	03/30/09	SERVICE PLATFORM ELECTRICAL CHANGES	RR RY	RG MP	55
2	03/04/08	BARRIER MODIFICATIONS	JS BM	RG SE	44
1	02/19/08	ELECTRICAL MODIFICATIONS	MP EL	RR	42

Caltrans Metric

DIST	COUNTY	ROUTE	KILOMETER POST TOTAL PROJECT	SHEET No	TOTAL SHEETS
04	SF	80	13.2/13.9	396 R3	1204

Jens Erlingsson 12/19/02
REGISTERED ELECTRICAL ENGINEER DATE

12-6-04
PLANS APPROVAL DATE

REGISTERED PROFESSIONAL ENGINEER JENS ERLINGSSON No. 8249 Exp. 9/30/06 ELECTRICAL STATE OF CALIFORNIA

PB POWER, Inc.
A Parsons Brinckerhoff Company
303 Second St., Suite 700N
San Francisco, CA 94107-1317

The State of California or its officers or agents shall not be responsible for the accuracy or completeness of electronic copies of this plan sheet.

Caltrans now has a web site! To get to the web site, go to http://www.dot.ca.gov

CONTRACT CHANGE ORDER NO. 55
SHEET 77 OF 90

REGISTERED PROFESSIONAL ENGINEER MARRELL FLAVIO TARANT No. E 8651 Exp. 9/30/2008 ELECTRICAL STATE OF CALIFORNIA
FOR REVISION ONLY (1)

REGISTERED PROFESSIONAL ENGINEER S. A. ESTOQUE, JR. No. E-10151 Exp. 12/31/2008 ELECTRICAL STATE OF CALIFORNIA
FOR REVISION ONLY (2)

REGISTERED PROFESSIONAL ENGINEER FADI WALIEDDINE No. 11465 Exp. 12/31/2009 ELECTRICAL STATE OF CALIFORNIA
FOR REVISION ONLY (3)

CONDUIT DATA

Conduit No	Reference	Size	Type	Total Fill (mm²)	Allowable Fill (mm²)	Included Cable No.	Conductor Type
5286	E-118	78 (4)	RGS conduit	1299.81	1935.24	2154	1 - 2 pair, shielded #18 with IS/OA, 300 V, PVC jacket
						1474-10	50 pair #18, shielded pairs, IS/OS shield 600 V, XLPE insul., PVC jacket
						Pull rope	Soft-Fiber Polyester
5287	E-118	53 (3)	RGS conduit	0.00	1935.24	Pull rope	Soft-Fiber Polyester
5289	E-118	78 (3)	RGS conduit	1201.71	1935.24	Pull rope	Soft-Fiber Polyester
						1473-10	50 pair #18, shielded pairs, IS/OS shield 600 V, XLPE insul., PVC jacket
5290	E-118	78 (3)	RGS conduit	1519.51	1935.24	1474-8A	1 - 6 pair, shielded #18 with overall shield, 300 V, PVC jacket
						1474-8B	1 - 6 pair, shielded #18 with overall shield, 300 V, PVC jacket
						1474-8	50 pair #18, shielded pairs, IS/OS shield 600 V, XLPE insul., PVC jacket
						Pull rope	Soft-Fiber Polyester
5299	E-182	41	RGS conduit	425.70	534.55	A-3032-2	3 + 1 gnd #6,#8, 600 V, RHH/RHW insulation
						A-3033-2	3 + 1 gnd #6,#8, 600 V, RHH/RHW insulation
					(3)	Pull rope	Soft-Fiber Polyester
5301	E-181	41	RGS conduit	0.00	534.55	Pull rope	Soft-Fiber Polyester
5302	E-181	41	RGS conduit	0.00	534.55	Pull rope	Soft-Fiber Polyester
5303	E-181	53	RGS conduit	648.58	879.42	A-3040-3	1-3/C + gnd #6, 600 V, EPR insulation
						Pull rope	Soft-Fiber Polyester
						A-3039-3	1-3/C + gnd #6, 600 V, EPR insulation
5304	E-181	53	RGS conduit	0.00	879.42	Pull rope	Soft-Fiber Polyester
5305	E-181	41	RGS conduit	212.85	534.55	Pull rope	Soft-Fiber Polyester
						LP219-2,4A	3 + 1 gnd #6,#8, 600 V, RHH/RHW insulation
5306	E-181	41	RGS conduit	440.31	534.55	UP205-6	1-2/C + gnd #8, 600 V, EPR insulation
						Pull rope	Soft-Fiber Polyester
						LP219-6,8A	3 + 1 gnd #6,#8, 600 V, RHH/RHW insulation
5307	E-181	53	RGS conduit	324.29	879.42	LP219-2,4	1-3/C + gnd #6, 600 V, EPR insulation
						Pull rope	Soft-Fiber Polyester
5308	E-181	53	RGS conduit	551.75	879.42	UP205-6	1-2/C + gnd #8, 600 V, EPR insulation
						Pull rope	Soft-Fiber Polyester
						LP219-6,8	1-3/C + gnd #6, 600 V, EPR insulation
5309	E-181	53	RGS conduit	98.10	879.42	Pull rope	Soft-Fiber Polyester
						2155	1 - 2 pair, shielded #18 with IS/OA, 300 V, PVC jacket
5310	E-181	53	RGS conduit	0.00	879.42	Pull rope	Soft-Fiber Polyester
5311	E-181	41	RGS conduit	126.88	534.55	S-2031-2	3 + 1 gnd #6,#8, 600 V, RHH/RHW insulation
						Pull rope	Soft-Fiber Polyester
						UP204-1	1-2/C + gnd #10, 600 V, EPR insulation

For continuation, see next sheet.

CONDUIT AND TRAY SCHEDULE

E-441

	REVISED BY	DATE REVISED
CALCULATED/ DESIGNED BY	PBP	DATE 8/02
CHECKED BY	AB	8/02

DESIGN OVERSIGHT: BEHZAD GOLEMOHAMMADI

STATE OF CALIFORNIA - DEPARTMENT OF TRANSPORTATION
Caltrans

LAST REVISION 00-00-00
DATE PLOTTED => 3/31/2009
TIME PLOTTED => 2:25:42 PM

FOR REDUCED PLANS ORIGINAL SCALE IS IN MILLIMETERS 0 20 40 60 80

DGN FILE =>T:\13103\MS\pse\SAS Struc\CCO\SAS CCO55\04-0120f1_0396R03.dgn
USERNAME =>gorciar

CU 04251 | EA 0120F1

CONDUIT DATA

Conduit No	Reference	Size	Type	Total Fill (mm²)	Allowable Fill (mm²)	Included Cable No.	Conductor Type
9060	E-366, E-367	78	RGS-PVC coated conduit	1090.66	1935.24	2900-323A	4 pair #22, shielded pairs, FEP insulation
(con't)						2900-363A	4 pair #22, shielded pairs, FEP insulation
						2900-363C	4 pair #22, shielded pairs, FEP insulation
						2900-313A	4 pair #22, shielded pairs, FEP insulation
						Pull rope	Soft-Fiber Polyester
						2900-223B	4 pair #22, shielded pairs, FEP insulation
						2900-363B	4 pair #22, shielded pairs, FEP insulation
						2900-353F	4 pair #22, shielded pairs, FEP insulation
						2900-353E	4 pair #22, shielded pairs, FEP insulation
						2900-353D	4 pair #22, shielded pairs, FEP insulation
						2900-353C	4 pair #22, shielded pairs, FEP insulation
						2900-353B	4 pair #22, shielded pairs, FEP insulation
						2900-353A	4 pair #22, shielded pairs, FEP insulation
						2900-223C	4 pair #22, shielded pairs, FEP insulation
9061	E-367	27	RGS-PVC coated conduit	142.26	229.03	2900-313C	4 pair #22, shielded pairs, FEP insulation
						Pull rope	Soft-Fiber Polyester
						2900-313B	4 pair #22, shielded pairs, FEP insulation
						2900-313A	4 pair #22, shielded pairs, FEP insulation
9062	E-365, E-367	78	RGS-PVC coated conduit	948.40	1935.24	Pull rope	Soft-Fiber Polyester
						2900-353B	4 pair #22, shielded pairs, FEP insulation
						2900-353C	4 pair #22, shielded pairs, FEP insulation
						2900-353D	4 pair #22, shielded pairs, FEP insulation
						2900-353F	4 pair #22, shielded pairs, FEP insulation
						2900-213B	4 pair #22, shielded pairs, FEP insulation
						2900-363C	4 pair #22, shielded pairs, FEP insulation
						2900-363B	4 pair #22, shielded pairs, FEP insulation
						2900-353E	4 pair #22, shielded pairs, FEP insulation
						2900-353A	4 pair #22, shielded pairs, FEP insulation
						2900-223C	4 pair #22, shielded pairs, FEP insulation
						2900-223B	4 pair #22, shielded pairs, FEP insulation
						2900-213C	4 pair #22, shielded pairs, FEP insulation
						2900-213A	4 pair #22, shielded pairs, FEP insulation
						2900-323E	4 pair #22, shielded pairs, FEP insulation
						2900-323D	4 pair #22, shielded pairs, FEP insulation
						2900-323C	4 pair #22, shielded pairs, FEP insulation
						2900-323B	4 pair #22, shielded pairs, FEP insulation
						2900-323A	4 pair #22, shielded pairs, FEP insulation
						2900-363A	4 pair #22, shielded pairs, FEP insulation
						2900-223A	4 pair #22, shielded pairs, FEP insulation
9064	E-367	41	RGS-PVC coated conduit	237.10	534.55	2900-323C	4 pair #22, shielded pairs, FEP insulation
						2900-323D	4 pair #22, shielded pairs, FEP insulation
						2900-323A	4 pair #22, shielded pairs, FEP insulation
						2900-323B	4 pair #22, shielded pairs, FEP insulation
						Pull rope	Soft-Fiber Polyester
						2900-323E	4 pair #22, shielded pairs, FEP insulation
9065	E-264A, E-366	27	RGS-PVC coated conduit	47.42	229.03	Pull rope	Soft-Fiber Polyester
						2900-292A	4 pair #22, shielded pairs, FEP insulation
9067	E-366A	27	RGS-PVC coated conduit	94.84	229.03	2900-373B	4 pair #22, shielded pairs, FEP insulation
						2900-373A	4 pair #22, shielded pairs, FEP insulation
						Pull rope	Soft-Fiber Polyester
9068	E-366A	41	RGS-PVC coated conduit	284.52	534.55		
						2900-263B	4 pair #22, shielded pairs, FEP insulation
						2900-263A	4 pair #22, shielded pairs, FEP insulation
						2900-253C	4 pair #22, shielded pairs, FEP insulation
						2900-253B	4 pair #22, shielded pairs, FEP insulation
						2900-253A	4 pair #22, shielded pairs, FEP insulation
						2900-243A	4 pair #22, shielded pairs, FEP insulation
						Pull rope	Soft-Fiber Polyester
9069	E-374	27	RGS conduit	47.42	229.03	Pull rope	Soft-Fiber Polyester
						2900-482A	4 pair #22, shielded pairs, FEP insulation
9070	E-366A	27	RGS-PVC coated conduit	142.26	229.03	2900-233A	4 pair #22, shielded pairs, FEP insulation
						2900-233B	4 pair #22, shielded pairs, FEP insulation
						2900-233C	4 pair #22, shielded pairs, FEP insulation

REQUEST FOR INFORMATION NOT ADDRESSED IN THIS CCO REMAIN IN FORCE

MARK	DATE	DESCRIPTIONS	BY	CH'D	CCO#
		REVISIONS			
2	03/30/09	SERVICE PLATFORM ELECTRICAL CHANGES	RR RY	RG MP	55
1	10/03/08	STRONG MOTION SYSTEM	RG	FW	74

CONTRACT CHANGE ORDER NO. 55
SHEET 78 OF 90

Caltrans Metric

REGISTERED PROFESSIONAL ENGINEER — FADI WALIEDDINE — No. 11465 — Exp. 12/31/2009 ELECTRICAL — STATE OF CALIFORNIA

FOR REVISION ONLY
1 2

DIST	COUNTY	ROUTE	KILOMETER POST TOTAL PROJECT	SHEET NO	TOTAL SHEETS
04	SF	80	13.2/13.9	403 R2	1204

Jens Erlingsson 12/19/02
REGISTERED ELECTRICAL ENGINEER DATE

REGISTERED PROFESSIONAL ENGINEER — JENS ERLINGSSON — No. 8249 — Exp. 9/30/06 ELECTRICAL — STATE OF CALIFORNIA

12-6-04
PLANS APPROVAL DATE

PB POWER, Inc.
A Parsons Brinckerhoff Company
303 Second St., Suite 700N
San Francisco, CA 94107-1317

The State of California or its officers or agents shall not be responsible for the accuracy or completeness of electronic copies of this plan sheet.

Caltrans now has a web site! To get to the web site, go to http://www.dot.ca.gov

CONDUIT DATA

Conduit No	Reference	Size	Type	Total Fill (mm²)	Allowable Fill (mm²)	Included Cable No.	Conductor Type
9230	E-115	78	RGS-PVC coated conduit 2	1754.54	1935.24	2900-442B	4 pair #22, shielded pairs, FEP insulation
						2900-402A	4 pair #22, shielded pairs, FEP insulation
						2900-412A	4 pair #22, shielded pairs, FEP insulation
						2900-412B	4 pair #22, shielded pairs, FEP insulation
						2900-412C	4 pair #22, shielded pairs, FEP insulation
						2900-422A	4 pair #22, shielded pairs, FEP insulation
						2900-422B	4 pair #22, shielded pairs, FEP insulation
						2900-442A	4 pair #22, shielded pairs, FEP insulation
						2900-332A	4 pair #22, shielded pairs, FEP insulation
						2900-442C	4 pair #22, shielded pairs, FEP insulation
						2900-452A	4 pair #22, shielded pairs, FEP insulation
						2900-452B	4 pair #22, shielded pairs, FEP insulation
						2900-482A	4 pair #22, shielded pairs, FEP insulation
						2910-2	4 pair #22, shielded pairs, FEP insulation
						2910-3	4 pair #22, shielded pairs, FEP insulation
						Pull rope	Soft-Fiber Polyester
						2900-382C	4 pair #22, shielded pairs, FEP insulation
						2900-432A	4 pair #22, shielded pairs, FEP insulation
						2900-172A	4 pair #22, shielded pairs, FEP insulation
						2900-152A	4 pair #22, shielded pairs, FEP insulation
						2900-332C	4 pair #22, shielded pairs, FEP insulation
						2900-142A	4 pair #22, shielded pairs, FEP insulation
						2900-382B	4 pair #22, shielded pairs, FEP insulation
						2900-152B	4 pair #22, shielded pairs, FEP insulation
						2900-152C	4 pair #22, shielded pairs, FEP insulation
						2900-162B	4 pair #22, shielded pairs, FEP insulation
						2900-172B	4 pair #22, shielded pairs, FEP insulation
						2900-172C	4 pair #22, shielded pairs, FEP insulation
						2900-272C	4 pair #22, shielded pairs, FEP insulation
						2900-382A	4 pair #22, shielded pairs, FEP insulation
						2900-162A	4 pair #22, shielded pairs, FEP insulation
						2900-292A	4 pair #22, shielded pairs, FEP insulation
						2900-192A	4 pair #22, shielded pairs, FEP insulation
						2900-272B	4 pair #22, shielded pairs, FEP insulation
						2900-272A	4 pair #22, shielded pairs, FEP insulation
						2900-192C	4 pair #22, shielded pairs, FEP insulation
						2900-192B	4 pair #22, shielded pairs, FEP insulation
						2900-332B	4 pair #22, shielded pairs, FEP insulation
9230A	E-115	78	RGS-PVC coated conduit		1935.24	Pull rope	Soft-Fiber Polyester 2
9231A	E-115	78	RGS-PVC coated conduit		1935.24	Pull rope	Soft-Fiber Polyester
9231B	E-115	78	RGS-PVC coated conduit		1935.24	Pull rope	Soft-Fiber Polyester
9232A	E-115	78	RGS-PVC coated conduit		1935.24	Pull rope	Soft-Fiber Polyester

For continuation, see next sheet.

CONDUIT AND TRAY SCHEDULE

E-448

DESIGN OVERSIGHT
BEHZAD GOLEMOHAMMADI

CALCULATED/DESIGNED BY
CHECKED BY

DATE	REVISED BY	DATE REVISED
8/02	PBP	8/02 AB

STATE OF CALIFORNIA - DEPARTMENT OF TRANSPORTATION
Caltrans

LAST REVISION 00-00-00
DATE PLOTTED => 3/31/2009
TIME PLOTTED => 2:24:48 PM

FOR REDUCED PLANS ORIGINAL SCALE IS IN MILLIMETERS 0 20 40 60 80

DGN FILE =>T:\13103\MS\pse\SAS Struc\CCO\SAS CCO55\04-0120F1_0403R02.dgn
USERNAME =>garciar

CU 04251 EA 0120F1

CONDUIT DATA

Conduit No	Reference	Size	Type	Total Fill (mm²)	Allowable Fill (mm²)	Included Cable No.	Conductor Type
4203A	E-71A	41	RGS-PVC coated conduit		879.42	Pull rope	Soft-Fiber Polyester
4203B	E-71A	41	RGS-PVC coated conduit		879.42	Pull rope	Soft-Fiber Polyester
4203C	E-71A	41	RGS-PVC coated conduit		879.42	Pull rope	Soft-Fiber Polyester
4203D	E-71A	53	Liquidtight Flex. Metal Cond.		879.42	Pull rope	Soft-Fiber Polyester
4204A	E-71A	53	Liquidtight Flex. Metal Cond.		879.42	Pull rope	Soft-Fiber Polyester
4205A	E-71A	78	Liquidtight Flex. Metal Cond.		1935.24	Pull rope	Soft-Fiber Polyester
4206A	E-71A	78	Liquidtight Flex. Metal Cond.		1935.24	Pull rope	Soft-Fiber Polyester
4207A	E-114	78	RGS conduit		1935.24	Pull rope	Soft-Fiber Polyester
4207B	E-114	78	RGS conduit		1935.24	Pull rope	Soft-Fiber Polyester
4207C	E-114	78	RGS conduit		1935.24	Pull rope	Soft-Fiber Polyester
4207D	E-114	78	RGS conduit		1935.24	Pull rope	Soft-Fiber Polyester
4207E	E-114	78	RGS conduit		1935.24	Pull rope	Soft-Fiber Polyester
4207F	E-114	53	RGS conduit		1935.24	Pull rope	Soft-Fiber Polyester
4207G	E-114	78	RGS conduit		1935.24	Pull rope	Soft-Fiber Polyester
4207H	E-114	78	RGS conduit		1935.24	Pull rope	Soft-Fiber Polyester
4209A	E-114A	78	RGS Conduit		1935.24	Pull rope	Soft-Fiber Polyester
4209B	E-114A	78	RGS Conduit		1935.24	Pull rope	Soft-Fiber Polyester
4209C	E-114A	78	RGS Conduit		1935.24	Pull rope	Soft-Fiber Polyester
4209D	E-114A	78	RGS Conduit		1935.24	Pull rope	Soft-Fiber Polyester
4209E	E-114A	78	RGS Conduit		1935.24	Pull rope	Soft-Fiber Polyester
4209F	E-114A	78	RGS Conduit		1935.24	Pull rope	Soft-Fiber Polyester
4209G	E-114A	78	RGS Conduit		1935.24	Pull rope	Soft-Fiber Polyester
4209H	E-114A	78	RGS Conduit		1935.24	Pull rope	Soft-Fiber Polyester
4209J	E-114A	78	RGS Conduit		1935.24	Pull rope	Soft-Fiber Polyester
4209K	E-114A	78	RGS Conduit		1935.24	Pull rope	Soft-Fiber Polyester
4209L	E-114A	78	RGS Conduit		1935.24	Pull rope	Soft-Fiber Polyester

REQUEST FOR INFORMATION NOT ADDRESSED IN THIS CCO REMAIN IN FORCE

MARK	DATE	DESCRIPTIONS	RR RY	RG MP	55
		REVISIONS	BY	CH'D	CCO#
0	03/30/09	SERVICE PLATFORM ELECTRICAL CHANGES			

CONTRACT CHANGE ORDER NO. 55
SHEET 79 OF 90

Caltrans Metric

DIST	COUNTY	ROUTE	KILOMETER POST TOTAL PROJECT	SHEET No	TOTAL SHEETS
04	SF	80	13.2/13.9	407 55	1204

REGISTERED ELECTRICAL ENGINEER — 6/12/08 DATE

REGISTERED PROFESSIONAL ENGINEER — FADI WALIEDDINE No. 11465 Exp. 12/31/2009 ELECTRICAL — STATE OF CALIFORNIA

PLANS APPROVAL DATE

PB AMERICAS, Inc.
A Parsons Brinckerhoff Company
303 Second St., Suite 700N
San Francisco, CA 94107-1317

The State of California or its officers or agents shall not be responsible for the accuracy or completeness of electronic copies of this plan sheet.

Caltrans now has a web site! To get to the web site, go to http://www.dot.ca.gov

CONDUIT DATA

Conduit No	Reference	Size	Type	Total Fill (mm)	Allowable Fill (mm)	Included Cable No.	Conductor Type
4209M	E-114A	78	RGS Conduit		1935.24	Pull rope	Soft-Fiber Polyester
4210A	E-115	78	RGS Conduit		1935.24	Pull rope	Soft-Fiber Polyester
4210B	E-115	78	RGS Conduit		1935.24	Pull rope	Soft-Fiber Polyester
4210C	E-115	78	RGS Conduit		1935.24	Pull rope	Soft-Fiber Polyester
4210D	E-115	78	RGS Conduit		1935.24	Pull rope	Soft-Fiber Polyester
4210E	E-115	78	RGS Conduit		1935.24	Pull rope	Soft-Fiber Polyester
4210F	E-115	53	RGS Conduit		1935.24	Pull rope	Soft-Fiber Polyester
4210G	E-115	78	RGS Conduit		1935.24	Pull rope	Soft-Fiber Polyester
4210H	E-115	78	RGS Conduit		1935.24	Pull rope	Soft-Fiber Polyester

CONDUIT AND TRAY SCHEDULE

E-449DA

DESIGN OVERSIGHT | CALCULATED/DESIGNED BY | CHECKED BY | DATE | REVISED BY | DATE REVISED

STATE OF CALIFORNIA - DEPARTMENT OF TRANSPORTATION — Caltrans

LAST REVISION 00-00-00

DATE PLOTTED => 3/31/2009
TIME PLOTTED => 2:24:09 PM

FOR REDUCED PLANS ORIGINAL SCALE IS IN MILLIMETERS 0 20 40 60 80

DGN FILE =>T:\13103\WS\pse\SAS Struc\CCO\SAS CC055\04-0120f1_0407S05.dgn
USERNAME =>garciar

CU 04251 | EA 0120F1

CONDUIT DATA

Conduit No	Reference	Size	Type	Total Fill (mm²)	Allowable Fill (mm²)	Included Cable No.	Conductor Type
4211A	E-114B	78	RGS Conduit		1935.24	Pull rope	Soft-Fiber Polyester
4211B	E-114B	78	RGS Conduit		1935.24	Pull rope	Soft-Fiber Polyester
4211C	E-114B	78	RGS Conduit		1935.24	Pull rope	Soft-Fiber Polyester
4211D	E-114B	78	RGS Conduit		1935.24	Pull rope	Soft-Fiber Polyester
4211E	E-114B	78	RGS Conduit		1935.24	Pull rope	Soft-Fiber Polyester
4211F	E-114B	78	RGS Conduit		1935.24	Pull rope	Soft-Fiber Polyester
4211G	E-114B	78	RGS Conduit		1935.24	Pull rope	Soft-Fiber Polyester
4211H	E-114B	78	RGS Conduit		1935.24	Pull rope	Soft-Fiber Polyester
4211J	E-114B	78	RGS Conduit		1935.24	Pull rope	Soft-Fiber Polyester
4211K	E-114B	78	RGS Conduit		1935.24	Pull rope	Soft-Fiber Polyester
4211L	E-114B	78	RGS Conduit		1935.24	Pull rope	Soft-Fiber Polyester
4211M	E-114B	78	RGS Conduit		1935.24	Pull rope	Soft-Fiber Polyester
4211N	E-114B	78	RGS Conduit		1935.24	Pull rope	Soft-Fiber Polyester
4211P	E-114B	78	RGS Conduit		1935.24	Pull rope	Soft-Fiber Polyester
4212A	E-116	78	RGS Conduit		1935.24	Pull rope	Soft-Fiber Polyester
4212B	E-116	78	RGS Conduit		1935.24	Pull rope	Soft-Fiber Polyester
4212C	E-116	78	RGS Conduit		1935.24	Pull rope	Soft-Fiber Polyester
4212D	E-116	78	RGS Conduit		1935.24	Pull rope	Soft-Fiber Polyester
4212E	E-116	78	RGS Conduit		1935.24	Pull rope	Soft-Fiber Polyester
4212F	E-116	78	RGS Conduit		1935.24	Pull rope	Soft-Fiber Polyester
4212G	E-116	78	RGS Conduit		1935.24	Pull rope	Soft-Fiber Polyester
4212H	E-116	78	RGS Conduit		1935.24	Pull rope	Soft-Fiber Polyester
4213A	E-114B	78	RGS Conduit		1935.24	Pull rope	Soft-Fiber Polyester
4213B	E-114B	78	RGS Conduit		1935.24	Pull rope	Soft-Fiber Polyester
4213C	E-114B	78	RGS Conduit		1935.24	Pull rope	Soft-Fiber Polyester
4213D	E-114B	78	RGS Conduit		1935.24	Pull rope	Soft-Fiber Polyester
4213E	E-114B	78	RGS Conduit		1935.24	Pull rope	Soft-Fiber Polyester
4213F	E-114B	78	RGS Conduit		1935.24	Pull rope	Soft-Fiber Polyester
4213G	E-114B	78	RGS Conduit		1935.24	Pull rope	Soft-Fiber Polyester

REQUEST FOR INFORMATION NOT ADDRESSED IN THIS CCO REMAIN IN FORCE

MARK	DATE	REVISIONS	RR RY / BY	RG MP / CH'D	55 / CCO#
1	03/30/09	SERVICE PLATFORM ELECTRICAL CHANGES			

CONTRACT CHANGE ORDER NO. 55
SHEET 80 OF 90

Caltrans Metric

DIST	COUNTY	ROUTE	KILOMETER POST TOTAL PROJECT	SHEET No	TOTAL SHEETS
04	SF	80	13.2/13.9	407 S6	1204

REGISTERED ELECTRICAL ENGINEER — 6/12/08 DATE

REGISTERED PROFESSIONAL ENGINEER — FADI WALIEDDINE No. 11465 Exp. 12/31/2009 ELECTRICAL — STATE OF CALIFORNIA

PLANS APPROVAL DATE

PB AMERICAS, Inc.
A Parsons Brinckerhoff Company
303 Second St., Suite 700N
San Francisco, CA 94107-1317

The State of California or its officers or agents shall not be responsible for the accuracy or completeness of electronic copies of this plan sheet.

Caltrans now has a web site! To get to the web site, go to http://www.dot.ca.gov

CONDUIT DATA

Conduit No	Reference	Size	Type	Total Fill (mm²)	Allowable Fill (mm²)	Included Cable No.	Conductor Type
4213H	E-114B	78	RGS Conduit		1935.24	Pull rope	Soft-Fiber Polyester
4213J	E-114B	78	RGS Conduit		1935.24	Pull rope	Soft-Fiber Polyester
4213K	E-114B	78	RGS Conduit		1935.24	Pull rope	Soft-Fiber Polyester
4213L	E-114B	78	RGS Conduit		1935.24	Pull rope	Soft-Fiber Polyester
4213M	E-114B	78	RGS Conduit		1935.24	Pull rope	Soft-Fiber Polyester
4213N	E-114B	78	RGS Conduit		1935.24	Pull rope	Soft-Fiber Polyester
4213P	E-114B	78	RGS Conduit		1935.24	Pull rope	Soft-Fiber Polyester
4214A	E-117	78	RGS Conduit		1935.24	Pull rope	Soft-Fiber Polyester
4214B	E-117	78	RGS Conduit		1935.24	Pull rope	Soft-Fiber Polyester
4214C	E-117	78	RGS Conduit		1935.24	Pull rope	Soft-Fiber Polyester
4214D	E-117	78	RGS Conduit		1935.24	Pull rope	Soft-Fiber Polyester
4214E	E-117	78	RGS Conduit		1935.24	Pull rope	Soft-Fiber Polyester
4214F	E-117	53	RGS Conduit		1935.24	Pull rope	Soft-Fiber Polyester
4214G	E-117	78	RGS Conduit		1935.24	Pull rope	Soft-Fiber Polyester
4214H	E-117	78	RGS Conduit		1935.24	Pull rope	Soft-Fiber Polyester

CONDUIT AND TRAY SCHEDULE

E-449DB

DESIGN OVERSIGHT
STATE OF CALIFORNIA - DEPARTMENT OF TRANSPORTATION
Caltrans

CALCULATED/ DESIGNED BY
CHECKED BY
DATE REVISED BY
DATE REVISED

LAST REVISION 00-00-00
DATE PLOTTED => 3/31/2009
TIME PLOTTED => 2:21:02 PM

FOR REDUCED PLANS ORIGINAL SCALE IS IN MILLIMETERS 0 20 40 60 80

DGN FILE =>T:\13103\WS\pse\SAS Struc\CCO\SAS CC055\04-0120f1_0407S06.dgn
USERNAME =>garclar

CU 04251

EA 0120F1

REVISED BY | DATE REVISED

CALCULATED/ DESIGNED BY | CHECKED BY

DESIGN OVERSIGHT

STATE OF CALIFORNIA - DEPARTMENT OF TRANSPORTATION

Caltrans

CONDUIT DATA

Conduit No	Reference	Size	Type	Total Fill (mm^2)	Allowable Fill (mm^2)	Included Cable No.	Conductor Type
4215A	E-114B	78	RGS Conduit		1935.24	Pull rope	Soft-Fiber Polyester
4215B	E-114B	78	RGS Conduit		1935.24	Pull rope	Soft-Fiber Polyester
4215C	E-114B	78	RGS Conduit		1935.24	Pull rope	Soft-Fiber Polyester
4215D	E-114B	78	RGS Conduit		1935.24	Pull rope	Soft-Fiber Polyester
4215E	E-114B	78	RGS Conduit		1935.24	Pull rope	Soft-Fiber Polyester
4215F	E-114B	78	RGS Conduit		1935.24	Pull rope	Soft-Fiber Polyester
4215G	E-114B	78	RGS Conduit		1935.24	Pull rope	Soft-Fiber Polyester
4215H	E-114B	78	RGS Conduit		1935.24	Pull rope	Soft-Fiber Polyester
4215J	E-114B	78	RGS Conduit		1935.24	Pull rope	Soft-Fiber Polyester
4215K	E-114B	78	RGS Conduit		1935.24	Pull rope	Soft-Fiber Polyester
4215L	E-114B	78	RGS Conduit		1935.24	Pull rope	Soft-Fiber Polyester
4215M	E-114B	78	RGS Conduit		1935.24	Pull rope	Soft-Fiber Polyester
4215N	E-114B	78	RGS Conduit		1935.24	Pull rope	Soft-Fiber Polyester
4215P	E-114B	78	RGS Conduit		1935.24	Pull rope	Soft-Fiber Polyester
4216A	E-118	78	RGS Conduit		1935.24	Pull rope	Soft-Fiber Polyester
4216B	E-118	78	RGS Conduit		1935.24	Pull rope	Soft-Fiber Polyester
4216C	E-118	78	RGS Conduit		1935.24	Pull rope	Soft-Fiber Polyester
4216D	E-118	78	RGS Conduit		1935.24	Pull rope	Soft-Fiber Polyester
4216E	E-118	78	RGS Conduit		1935.24	Pull rope	Soft-Fiber Polyester
4216F	E-118	53	RGS Conduit		1935.24	Pull rope	Soft-Fiber Polyester
4216G	E-118	78	RGS Conduit		1935.24	Pull rope	Soft-Fiber Polyester
4216H	E-118	78	RGS Conduit		1935.24	Pull rope	Soft-Fiber Polyester
4217A	E-114B	78	RGS Conduit		1935.24	Pull rope	Soft-Fiber Polyester
4217B	E-114B	78	RGS Conduit		1935.24	Pull rope	Soft-Fiber Polyester
4217C	E-114B	78	RGS Conduit		1935.24	Pull rope	Soft-Fiber Polyester
4217D	E-114B	78	RGS Conduit		1935.24	Pull rope	Soft-Fiber Polyester
4217E	E-114B	78	RGS Conduit		1935.24	Pull rope	Soft-Fiber Polyester
4217F	E-114B	78	RGS Conduit		1935.24	Pull rope	Soft-Fiber Polyester
4217G	E-114B	78	RGS Conduit		1935.24	Pull rope	Soft-Fiber Polyester

REQUEST FOR INFORMATION NOT ADDRESSED IN THIS CCO REMAIN IN FORCE

MARK	DATE	REVISIONS DESCRIPTIONS	RR RY BY	RG MP CH'D	55 CCO#
0	03/30/09	SERVICE PLATFORM ELECTRICAL CHANGES			

CONTRACT CHANGE ORDER NO. 55
SHEET 81 OF 90

Caltrans Metric

DIST	COUNTY	ROUTE	KILOMETER POST TOTAL PROJECT	SHEET No	TOTAL SHEETS
04	SF	80	13.2/13.9	407 S7	1204

6/12/08
REGISTERED ELECTRICAL ENGINEER DATE

PLANS APPROVAL DATE

REGISTERED PROFESSIONAL ENGINEER — FADI WALIEDDINE No. 11465 Exp. 12/31/2009 ELECTRICAL — STATE OF CALIFORNIA

PB AMERICAS, Inc.
A Parsons Brinckerhoff Company
303 Second St., Suite 700N
San Francisco, CA 94107-1317

The State of California or its officers or agents shall not be responsible for the accuracy or completeness of electronic copies of this plan sheet.

Caltrans now has a web site! To get to the web site, go to http://www.dot.ca.gov

CONDUIT DATA

Conduit No	Reference	Size	Type	Total Fill (mm)	Allowable Fill (mm)	Included Cable No.	Conductor Type
4217H	E-114B	78	RGS Conduit		1935.24	Pull rope	Soft-Fiber Polyester
4217J	E-114B	78	RGS Conduit		1935.24	Pull rope	Soft-Fiber Polyester
4217K	E-114B	78	RGS Conduit		1935.24	Pull rope	Soft-Fiber Polyester
4217L	E-114B	78	RGS Conduit		1935.24	Pull rope	Soft-Fiber Polyester
4217M	E-114B	78	RGS Conduit		1935.24	Pull rope	Soft-Fiber Polyester
4217N	E-114B	78	RGS Conduit		1935.24	Pull rope	Soft-Fiber Polyester
4217P	E-114B	78	RGS Conduit		1935.24	Pull rope	Soft-Fiber Polyester
4223A	E-72A	41	RGS-PVC coated conduit	308.53	879.42	Pull rope	Soft-Fiber Polyester
						1098-2	4-1/C #4 + G, 600 V, RHH/RHW insulation
4223B	E-72A	41	RGS-PVC coated conduit	262.68	879.42	Pull rope	Soft-Fiber Polyester
						1098-1	3/C #8 + G, 600 V, RHH/RHW insulation
4223C	E-72A	41	RGS-PVC coated conduit		879.42	Pull rope	Soft-Fiber Polyester
4223D	E-72A	53	Liquidtight Flex. Metal Cond.		879.42	Pull rope	Soft-Fiber Polyester
4224A	E-72A	78	Liquidtight Flex. Metal Cond.		1935.24	Pull rope	Soft-Fiber Polyester
4225A	E-72A	78	Liquidtight Flex. Metal Cond.		1935.24	Pull rope	Soft-Fiber Polyester
4226A	E-72A	78	Liquidtight Flex. Metal Cond.		1935.24	Pull rope	Soft-Fiber Polyester

CONDUIT AND TRAY SCHEDULE

E-449DC

LAST REVISION 00-00-00 | DATE PLOTTED => 3/31/2009 TIME PLOTTED => 2:20:17 PM

FOR REDUCED PLANS ORIGINAL SCALE IS IN MILLIMETERS 0 20 40 60 80

DGN FILE =>T:\13103\MS\pse\SAS Struc\CCO\SAS CCO55\04-0120F1_0407S07.dgn
USERNAME =>garcior

CU 04251 | EA 0120F1

CONDUIT DATA

Conduit No	Reference	Size	Type	Total Fill (mm²)	Allowable Fill (mm²)	Included Cable No.	Conductor Type
4243A	E-73A	41	RGS-PVC coated conduit	308.53	879.42	Pull rope	Soft-Fiber Polyester
						1097-2	4-1/C #4 + G, 600 V, RHH/RHW insulation
4243B	E-73A	41	RGS-PVC coated conduit	262.68	879.42	Pull rope	Soft-Fiber Polyester
						1097-1	3/C #8 + G, 600 V, RHH/RHW insulation
4243C	E-73A	41	RGS-PVC coated conduit		879.42	Pull rope	Soft-Fiber Polyester
4243D	E-73A	53	Liquidtight Flex. Metal Cond.		879.42	Pull rope	Soft-Fiber Polyester
4244A	E-73A	53	Liquidtight Flex. Metal Cond.		879.42	Pull rope	Soft-Fiber Polyester
4245A	E-73A	78	Liquidtight Flex. Metal Cond.		1935.24	Pull rope	Soft-Fiber Polyester
4246A	E-73A	78	Liquidtight Flex. Metal Cond.		1935.24	Pull rope	Soft-Fiber Polyester
4263A	E-74A	41	RGS-PVC coated conduit		879.42	Pull rope	Soft-Fiber Polyester
4263B	E-74A	41	RGS-PVC coated conduit		879.42	Pull rope	Soft-Fiber Polyester
4263C	E-74A	41	RGS-PVC coated conduit		879.42	Pull rope	Soft-Fiber Polyester
4263D	E-74A	53	Liquidtight Flex. Metal Cond.		879.42	Pull rope	Soft-Fiber Polyester
4264A	E-74A	53	Liquidtight Flex. Metal Cond.		879.42	Pull rope	Soft-Fiber Polyester
4265A	E-74A	78	Liquidtight Flex. Metal Cond.		1935.24	Pull rope	Soft-Fiber Polyester
4266A	E-74A	78	Liquidtight Flex. Metal Cond.		1935.24	Pull rope	Soft-Fiber Polyester
4283A	E-75A	41	RGS-PVC coated conduit		879.42	Pull rope	Soft-Fiber Polyester
4283B	E-75A	41	RGS-PVC coated conduit		879.42	Pull rope	Soft-Fiber Polyester
4283C	E-75A	41	RGS-PVC coated conduit		879.42	Pull rope	Soft-Fiber Polyester
4283D	E-75A	53	Liquidtight Flex. Metal Cond.		879.42	Pull rope	Soft-Fiber Polyester
4284A	E-75A	53	Liquidtight Flex. Metal Cond.		879.42	Pull rope	Soft-Fiber Polyester
4285A	E-75A	78	Liquidtight Flex. Metal Cond.		1935.24	Pull rope	Soft-Fiber Polyester

REQUEST FOR INFORMATION NOT ADDRESSED IN THIS CCO REMAIN IN FORCE

MARK	DATE	DESCRIPTIONS	RR RY	RG MP	55
		REVISIONS	BY	CH'D	CCO#
1	03/30/09	SERVICE PLATFORM ELECTRICAL CHANGES			

CONTRACT CHANGE ORDER NO. 55
SHEET 82 OF 90

Caltrans Metric

DIST	COUNTY	ROUTE	KILOMETER POST TOTAL PROJECT	SHEET No	TOTAL SHEETS
04	SF	80	13.2/13.9	407 58	1204

REGISTERED ELECTRICAL ENGINEER — 6/12/08 DATE

REGISTERED PROFESSIONAL ENGINEER — FADI WALIEDDINE No. 11465 Exp. 12/31/2009 ELECTRICAL — STATE OF CALIFORNIA

PLANS APPROVAL DATE

PB AMERICAS, Inc.
A Parsons Brinckerhoff Company
303 Second St., Suite 700N
San Francisco, CA 94107-1317

The State of California or its officers or agents shall not be responsible for the accuracy or completeness of electronic copies of this plan sheet.

Caltrans now has a web site! To get to the web site, go to http://www.dot.ca.gov

CONDUIT DATA

Conduit No	Reference	Size	Type	Total Fill (mm²)	Allowable Fill (mm²)	Included Cable No.	Conductor Type
4286A	E-75A	78	Liquidtight Flex. Metal Cond.		1935.24	Pull rope	Soft-Fiber Polyester
5200A	E-75A	78	Liquidtight Flex. Metal Cond.		1935.24	Pull rope	Soft-Fiber Polyester
5200B	E-75A	78	Liquidtight Flex. Metal Cond.		1935.24	Pull rope	Soft-Fiber Polyester
5203A	E-71A, E-114	41	RGS-PVC coated conduit		534.55	Pull rope	Soft-Fiber Polyester
5203B	E-71A, E-114	41	RGS-PVC coated conduit		534.55	Pull rope	Soft-Fiber Polyester
5203C	E-71A, E-114	41	RGS-PVC coated conduit		534.55	Pull rope	Soft-Fiber Polyester
5203D	E-71A	53	Liquidtight Flex. Metal Cond.		879.42	Pull rope	Soft-Fiber Polyester
5203E	E-71A	41	RGS-PVC coated conduit		534.55	Pull rope	Soft-Fiber Polyester
5204A	E-71A	53	Liquidtight Flex. Metal Cond.		879.42	Pull rope	Soft-Fiber Polyester
5205A	E-71A, E-114	41	RGS-PVC coated conduit		534.55	Pull rope	Soft-Fiber Polyester
5205B	E-71A	41	RGS-PVC coated conduit		534.55	Pull rope	Soft-Fiber Polyester
5205C	E-71A, E-114	41	RGS-PVC coated conduit		534.55	Pull rope	Soft-Fiber Polyester
5205D	E-71A	53	Liquidtight Flex. Metal Cond.		879.42	Pull rope	Soft-Fiber Polyester
5205E	E-71A	41	RGS-PVC coated conduit		534.55	Pull rope	Soft-Fiber Polyester
5207A	E-71A	78	Liquidtight Flex. Metal Cond.		1935.24	Pull rope	Soft-Fiber Polyester

CONDUIT AND TRAY SCHEDULE

E-449DD

DESIGN OVERSIGHT — STATE OF CALIFORNIA - DEPARTMENT OF TRANSPORTATION — Caltrans

CALCULATED/ DESIGNED BY | CHECKED BY

DATE REVISED | REVISED BY | DATE

LAST REVISION 00-00-00 — DATE PLOTTED => 3/31/2009 — TIME PLOTTED => 1:45:17 PM

FOR REDUCED PLANS ORIGINAL SCALE IS IN MILLIMETERS 0 20 40 60 80

DGN FILE =>T:\13103\MS\pse\SAS Struc\CCO\SAS CCO55\04-0120F1_0407S08.dgn
USERNAME =>garciar

CU 04251 | EA 0120F1

CONDUIT DATA

Conduit No	Reference	Size	Type	Total Fill (mm²)	Allowable Fill (mm²)	Included Cable No.	Conductor Type
5212A	E-114A	78	RGS Conduit		1935.24	Pull rope	Soft-Fiber Polyester
5212B	E-114A	53	RGS Conduit		1935.24	Pull rope	Soft-Fiber Polyester
5212C	E-114A	53	RGS Conduit		1935.24	Pull rope	Soft-Fiber Polyester
5212D	E-114A	78	RGS Conduit		1935.24	Pull rope	Soft-Fiber Polyester
5212E	E-114A	78	RGS Conduit		1935.24	Pull rope	Soft-Fiber Polyester
5212F	E-114A	78	RGS Conduit		1935.24	Pull rope	Soft-Fiber Polyester
5212G	E-114A	78	RGS Conduit		1935.24	Pull rope	Soft-Fiber Polyester
5212H	E-114A	78	RGS Conduit		1935.24	Pull rope	Soft-Fiber Polyester
5212J	E-114A	78	RGS Conduit		1935.24	Pull rope	Soft-Fiber Polyester
5212K	E-114A	78	RGS Conduit		1935.24	Pull rope	Soft-Fiber Polyester
5212L	E-114A	78	RGS Conduit		1935.24	Pull rope	Soft-Fiber Polyester
5212M	E-114A	78	RGS Conduit		1935.24	Pull rope	Soft-Fiber Polyester
5212N	E-114A	78	RGS Conduit		1935.24	Pull rope	Soft-Fiber Polyester
5212P	E-114A	78	RGS Conduit		1935.24	Pull rope	Soft-Fiber Polyester
5212Q	E-114A	78	RGS Conduit		1935.24	Pull rope	Soft-Fiber Polyester
5212R	E-114A	78	RGS Conduit		1935.24	Pull rope	Soft-Fiber Polyester
5212S	E-114A	78	RGS Conduit		1935.24	Pull rope	Soft-Fiber Polyester
5212T	E-114A	78	RGS Conduit		1935.24	Pull rope	Soft-Fiber Polyester
5212U	E-114A	78	RGS Conduit		1935.24	Pull rope	Soft-Fiber Polyester
5214A	E-115	78	RGS Conduit		1935.24	Pull rope	Soft-Fiber Polyester
5214B	E-115	78	RGS Conduit		1935.24	Pull rope	Soft-Fiber Polyester
5214C	E-115	78	RGS Conduit		1935.24	Pull rope	Soft-Fiber Polyester
5214D	E-115	78	RGS Conduit		1935.24	Pull rope	Soft-Fiber Polyester
5215A	E-114B	78	RGS Conduit		1935.24	Pull rope	Soft-Fiber Polyester
5215B	E-114B	78	RGS Conduit		1935.24	Pull rope	Soft-Fiber Polyester
5215C	E-114B	53	RGS Conduit		1935.24	Pull rope	Soft-Fiber Polyester
5215D	E-114B	78	RGS Conduit		1935.24	Pull rope	Soft-Fiber Polyester
5215E	E-114B	78	RGS Conduit		1935.24	Pull rope	Soft-Fiber Polyester
5215F	E-114B	78	RGS Conduit		1935.24	Pull rope	Soft-Fiber Polyester
5215G	E-114B	78	RGS Conduit		1935.24	Pull rope	Soft-Fiber Polyester
5215H	E-114B	78	RGS Conduit		1935.24	Pull rope	Soft-Fiber Polyester

REQUEST FOR INFORMATION NOT ADDRESSED IN THIS CCO REMAIN IN FORCE

MARK	DATE	REVISIONS	RR RY	RG FW	55
		DESCRIPTIONS	BY	CH'D	CCO#
0	03/30/09	SERVICE PLATFORM ELECTRICAL CHANGES			

CONTRACT CHANGE ORDER NO. 55
SHEET 83 OF 90

Caltrans Metric

DIST	COUNTY	ROUTE	KILOMETER POST TOTAL PROJECT	SHEET No.	TOTAL SHEETS
04	SF	80	13.2/13.9	407 S9	1204

REGISTERED ELECTRICAL ENGINEER — 6/12/08 DATE

REGISTERED PROFESSIONAL ENGINEER — FADI WALIEDDINE No. 11465 Exp. 12/31/2009 ELECTRICAL — STATE OF CALIFORNIA

PLANS APPROVAL DATE

PB AMERICAS, Inc.
A Parsons Brinckerhoff Company
303 Second St., Suite 700N
San Francisco, CA 94107-1317

The State of California or its officers or agents shall not be responsible for the accuracy or completeness of electronic copies of this plan sheet.

Caltrans now has a web site! To get to the web site, go to http://www.dot.ca.gov

CONDUIT DATA

Conduit No	Reference	Size	Type	Total Fill (mm²)	Allowable Fill (mm²)	Included Cable No.	Conductor Type
5215J	E-114B	78	RGS Conduit		1935.24	Pull rope	Soft-Fiber Polyester
5215K	E-114B	78	RGS Conduit		1935.24	Pull rope	Soft-Fiber Polyester
5215L	E-114B	78	RGS Conduit		1935.24	Pull rope	Soft-Fiber Polyester
5215M	E-114B	78	RGS Conduit		1935.24	Pull rope	Soft-Fiber Polyester
5216A	E-116	78	RGS Conduit		1935.24	Pull rope	Soft-Fiber Polyester
5216B	E-116	78	RGS Conduit		1935.24	Pull rope	Soft-Fiber Polyester
5216C	E-116	78	RGS Conduit		1935.24	Pull rope	Soft-Fiber Polyester
5216D	E-116	78	RGS Conduit		1935.24	Pull rope	Soft-Fiber Polyester
5216E	E-116	78	RGS Conduit		1935.24	Pull rope	Soft-Fiber Polyester
5217A	E-114B	78	RGS Conduit		1935.24	Pull rope	Soft-Fiber Polyester
5217B	E-114B	78	RGS Conduit		1935.24	Pull rope	Soft-Fiber Polyester
5217C	E-114B	78	RGS Conduit		1935.24	Pull rope	Soft-Fiber Polyester
5217D	E-114B	78	RGS Conduit		1935.24	Pull rope	Soft-Fiber Polyester
5217E	E-114B	78	RGS Conduit		1935.24	Pull rope	Soft-Fiber Polyester
5212F	E-114B	78	RGS Conduit		1935.24	Pull rope	Soft-Fiber Polyester
5217G	E-114B	78	RGS Conduit		1935.24	Pull rope	Soft-Fiber Polyester
5217H	E-114B	78	RGS Conduit		1935.24	Pull rope	Soft-Fiber Polyester
5217J	E-114B	78	RGS Conduit		1935.24	Pull rope	Soft-Fiber Polyester
5217K	E-114B	78	RGS Conduit		1935.24	Pull rope	Soft-Fiber Polyester
5217L	E-114B	78	RGS Conduit		1935.24	Pull rope	Soft-Fiber Polyester

CONDUIT AND TRAY SCHEDULE
E-449DE

DESIGN OVERSIGHT | CALCULATED/DESIGNED BY | CHECKED BY | DATE | REVISED BY | DATE REVISED

STATE OF CALIFORNIA - DEPARTMENT OF TRANSPORTATION
Caltrans

LAST REVISION 00-00-00 | DATE PLOTTED => 3/31/2009 | TIME PLOTTED => 1:40:18 PM

FOR REDUCED PLANS ORIGINAL SCALE IS IN MILLIMETERS 0 20 40 60 80

DGN FILE =>T:\13103\WS\pse\SAS Struc\CCO\SAS CC055\04-0120F1_0407S09.dgn
USERNAME =>garciar

CU 04251 | EA 0120F1

CONDUIT DATA

Conduit No	Reference	Size	Type	Total Fill (mm²)	Allowable Fill (mm²)	Included Cable No.	Conductor Type
5217M	E-114B	78	RGS Conduit		1935.24	Pull rope	Soft-Fiber Polyester
5217N	E-114B	78	RGS Conduit		1935.24	Pull rope	Soft-Fiber Polyester
5217P	E-114B	78	RGS Conduit		1935.24	Pull rope	Soft-Fiber Polyester
5218A	E-117	78	RGS Conduit		1935.24	Pull rope	Soft-Fiber Polyester
5218B	E-117	78	RGS Conduit		1935.24	Pull rope	Soft-Fiber Polyester
5218C	E-117	53	RGS Conduit		1935.24	Pull rope	Soft-Fiber Polyester
5218D	E-117	78	RGS Conduit		1935.24	Pull rope	Soft-Fiber Polyester
5218E	E-117	78	RGS Conduit		1935.24	Pull rope	Soft-Fiber Polyester
5219A	E-114B	78	RGS Conduit		1935.24	Pull rope	Soft-Fiber Polyester
5219B	E-114B	78	RGS Conduit		1935.24	Pull rope	Soft-Fiber Polyester
5219C	E-114B	78	RGS Conduit		1935.24	Pull rope	Soft-Fiber Polyester
5219D	E-114B	78	RGS Conduit		1935.24	Pull rope	Soft-Fiber Polyester
5219E	E-114B	78	RGS Conduit		1935.24	Pull rope	Soft-Fiber Polyester
5219F	E-114B	78	RGS Conduit		1935.24	Pull rope	Soft-Fiber Polyester
5219G	E-114B	78	RGS Conduit		1935.24	Pull rope	Soft-Fiber Polyester
5219H	E-114B	78	RGS Conduit		1935.24	Pull rope	Soft-Fiber Polyester
5219J	E-114B	78	RGS Conduit		1935.24	Pull rope	Soft-Fiber Polyester
5219K	E-114B	78	RGS Conduit		1935.24	Pull rope	Soft-Fiber Polyester
5219L	E-114B	78	RGS Conduit		1935.24	Pull rope	Soft-Fiber Polyester
5219M	E-114B	78	RGS Conduit		1935.24	Pull rope	Soft-Fiber Polyester
5219N	E-114B	78	RGS Conduit		1935.24	Pull rope	Soft-Fiber Polyester
5219P	E-114B	78	RGS Conduit		1935.24	Pull rope	Soft-Fiber Polyester
5220A	E-118	78	RGS Conduit		1935.24	Pull rope	Soft-Fiber Polyester
5220B	E-118	78	RGS Conduit		1935.24	Pull rope	Soft-Fiber Polyester
5220C	E-118	53	RGS Conduit		1935.24	Pull rope	Soft-Fiber Polyester
5220D	E-118	78	RGS Conduit		1935.24	Pull rope	Soft-Fiber Polyester
5220E	E-118	78	RGS Conduit		1935.24	Pull rope	Soft-Fiber Polyester

REQUEST FOR INFORMATION NOT ADDRESSED IN THIS CCO REMAIN IN FORCE

MARK	DATE	REVISIONS DESCRIPTIONS	BY	CH'D	CCO#
0	03/30/09	SERVICE PLATFORM ELECTRICAL CHANGES	RR RY	RG MP	55

CONTRACT CHANGE ORDER NO. 55
SHEET 84 OF 90

Caltrans Metric

DIST	COUNTY	ROUTE	KILOMETER POST TOTAL PROJECT	SHEET No	TOTAL SHEETS
04	SF	80	13.2/13.9	407 S10	1204

REGISTERED ELECTRICAL ENGINEER — 6/12/08 DATE

REGISTERED PROFESSIONAL ENGINEER
FADI WALIEDDINE
No. 11465
Exp. 12/31/2009
ELECTRICAL
STATE OF CALIFORNIA

PLANS APPROVAL DATE

PB AMERICAS, Inc.
A Parsons Brinckerhoff Company
303 Second St., Suite 700N
San Francisco, CA 94107-1317

The State of California or its officers or agents shall not be responsible for the accuracy or completeness of electronic copies of this plan sheet.

Caltrans now has a web site! To get to the web site, go to http://www.dot.ca.gov

CONDUIT DATA

Conduit No	Reference	Size	Type	Total Fill (mm)	Allowable Fill (mm)	Included Cable No.	Conductor Type
5223A	E-72A, E-115	41	RGS-PVC coated conduit		534.55	Pull rope	Soft-Fiber Polyester
5223B	E-72A	41	RGS-PVC coated conduit		534.55	Pull rope	Soft-Fiber Polyester
5223C	E-72A, E-115	41	RGS-PVC coated conduit		534.55	Pull rope	Soft-Fiber Polyester
5223D	E-72A	53	Liquidtight Flex. Metal Cond.		879.42	Pull rope	Soft-Fiber Polyester
5223E	E-72A	41	RGS-PVC coated conduit		534.55	Pull rope	Soft-Fiber Polyester
5224A	E-72	53	Liquidtight Flex. Metal Cond.		879.42	Pull rope	Soft-Fiber Polyester
5225A	E-72A, E-115	41	RGS-PVC coated conduit		534.55	Pull rope	Soft-Fiber Polyester
5225B	E-72A	41	RGS-PVC coated conduit		534.55	Pull rope	Soft-Fiber Polyester
5225C	E-72A, E-115	41	RGS-PVC coated conduit		534.55	Pull rope	Soft-Fiber Polyester
5225D	E-72A	53	Liquidtight Flex. Metal Cond.		879.42	Pull rope	Soft-Fiber Polyester
5225E	E-72A	41	RGS-PVC coated conduit		534.55	Pull rope	Soft-Fiber Polyester
5226A	E-72A	78	Liquidtight Flex. Metal Cond.		1935.24	Pull rope	Soft-Fiber Polyester
5227A	E-72A	78	Liquidtight Flex. Metal Cond.		1935.24	Pull rope	Soft-Fiber Polyester
5230A	E-71A	78	Liquidtight Flex. Metal Cond.		1935.24	Pull rope	Soft-Fiber Polyester
5231A	E-71A	78	Liquidtight Flex. Metal Cond.		1935.24	Pull rope	Soft-Fiber Polyester
5233A	E-72A	78	Liquidtight Flex. Metal Cond.		1935.24	Pull rope	Soft-Fiber Polyester
5234A	E-72A	41	Liquidtight Flex. Metal Cond.		534.55	Pull rope	Soft-Fiber Polyester
5235A	E-72A	41	Liquidtight Flex. Metal Cond.		534.55	Pull rope	Soft-Fiber Polyester
5236A	E-73A	78	Liquidtight Flex. Metal Cond.		1935.24	Pull rope	Soft-Fiber Polyester
5237A	E-73A	78	Liquidtight Flex. Metal Cond.		1935.24	Pull rope	Soft-Fiber Polyester
523BA	E-73A	41	Liquidtight Flex. Metal Cond.		534.55	Pull rope	Soft-Fiber Polyester

CONDUIT AND TRAY SCHEDULE

E-449DF

DESIGN OVERSIGHT
STATE OF CALIFORNIA - DEPARTMENT OF TRANSPORTATION
Caltrans

CALCULATED/ DESIGNED BY
CHECKED BY
DATE REVISED BY
DATE REVISED

LAST REVISION 00-00-00
DATE PLOTTED => 3/31/2009
TIME PLOTTED => 1:38:32 PM

FOR REDUCED PLANS ORIGINAL SCALE IS IN MILLIMETERS 0 20 40 60 80

DGN FILE =>I:\13103\MS\pse\SAS Struc\CCO\SAS CC055\04-0120f1_0407S10.dgn
USERNAME =>gorciar

CU 04251

EA 0120F1

CONDUIT DATA

Conduit No	Reference	Size	Type	Total Fill (mm²)	Allowable Fill (mm²)	Included Cable No.	Conductor Type
5241A	E-73A, E-117	41	RGS-PVC coated conduit		534.55	Pull rope	Soft-Fiber Polyester
5241B	E-73A	41	RGS-PVC coated conduit		534.55	Pull rope	Soft-Fiber Polyester
5241C	E-73A, E-117	41	RGS-PVC coated conduit		534.55	Pull rope	Soft-Fiber Polyester
5241D	E-73A	53	Liquidtight Flex. Metal Cond.		879.42	Pull rope	Soft-Fiber Polyester
5241E	E-73A	41	RGS-PVC coated conduit		534.55	Pull rope	Soft-Fiber Polyester
5243A	E-73A, E-117	41	RGS-PVC coated conduit	308.53	879.42	Pull rope	Soft-Fiber Polyester
						2097-2	4-1/C #4 + G, 600 V, RHH/RHW insulation
5243B	E-73A, E-117	41	RGS-PVC coated conduit	262.68	879.42	Pull rope	Soft-Fiber Polyester
						2097-1	3/C #8 + G, 600 V, RHH/RHW insulation
5243C	E-73A, E-117	41	RGS-PVC coated conduit	476.76	879.42	Pull rope	Soft-Fiber Polyester
						2097-3	4-1/C #4 + G, 600 V, RHH/RHW insulation
5243D	E-73A	53	Liquidtight Flex. Metal Cond.	624.31	879.42	Pull rope	Soft-Fiber Polyester
							1-4/C + G #2, 600V, EPR insulation
5243E	E-73A	41	RGS-PVC coated conduit		534.55	Pull rope	Soft-Fiber Polyester
5244A	E-73A	53	Liquidtight Flex. Metal Cond.		879.42	Pull rope	Soft-Fiber Polyester
5245A	E-73A	78	Liquidtight Flex. Metal Cond.		1935.24	Pull rope	Soft-Fiber Polyester
5246A	E-73A	41	Liquidtight Flex. Metal Cond.		534.55	Pull rope	Soft-Fiber Polyester
5247A	E-73A	78	Liquidtight Flex. Metal Cond.		1935.24	Pull rope	Soft-Fiber Polyester
5263A	E-74A	41	RGS-PVC coated conduit	308.53	534.55	Pull rope	Soft-Fiber Polyester
						2098-2	4-1/C #4 + G, 600 V, RHH/RHW insulation
5263B	E-74A	41	RGS-PVC coated conduit	262.68	534.55	Pull rope	Soft-Fiber Polyester
						2098-1	3/C #8 + G, 600 V, RHH/RHW insulation
5263C	E-74A	41	RGS-PVC coated conduit	476.76	534.55	Pull rope	Soft-Fiber Polyester
						2098-3	4-1/C #4 + G, 600 V, RHH/RHW insulation
5263D	E-74A	53	Liquidtight Flex. Metal Cond.		879.42	Pull rope	Soft-Fiber Polyester
5263E	E-74A	41	RGS-PVC coated conduit		534.55	Pull rope	Soft-Fiber Polyester

REQUEST FOR INFORMATION NOT ADDRESSED IN THIS CCO REMAIN IN FORCE

MARK	DATE	REVISIONS DESCRIPTIONS	RR RY	RG MP	55 CCO#
0	03/30/09	SERVICE PLATFORM ELECTRICAL CHANGES	BY	CH'D	

CONTRACT CHANGE ORDER NO. 55
SHEET 85 OF 90

Caltrans Metric

DIST	COUNTY	ROUTE	KILOMETER POST TOTAL PROJECT	SHEET No	TOTAL SHEETS
04	SF	80	13.2/13.9	407 S11	1204

REGISTERED ELECTRICAL ENGINEER — 6/12/08 DATE

REGISTERED PROFESSIONAL ENGINEER — FADI WALIEDDINE No. 11465 Exp.12/31/2009 ELECTRICAL — STATE OF CALIFORNIA

PLANS APPROVAL DATE

PB AMERICAS, Inc.
A Parsons Brinckerhoff Company
303 Second St., Suite 700N
San Francisco, CA 94107-1317

The State of California or its officers or agents shall not be responsible for the accuracy or completeness of electronic copies of this plan sheet.

Caltrans now has a web site! To get to the web site, go to http://www.dot.ca.gov

CONDUIT DATA

Conduit No	Reference	Size	Type	Total Fill (mm)	Allowable Fill (mm)	Included Cable No.	Conductor Type
5264A	E-74A	53	Liquidtight Flex. Metal Cond.		879.42	Pull rope	Soft-Fiber Polyester
5265A	E-74A	41	RGS-PVC coated conduit		534.55	Pull rope	Soft-Fiber Polyester
5265B	E-74A	41	RGS-PVC coated conduit		534.55	Pull rope	Soft-Fiber Polyester
5265C	E-74A	41	RGS-PVC coated conduit		534.55	Pull rope	Soft-Fiber Polyester
5265D	E-74A	53	Liquidtight Flex. Metal Cond.		879.42	Pull rope	Soft-Fiber Polyester
5265E	E-74A	41	RGS-PVC coated conduit		534.55	Pull rope	Soft-Fiber Polyester
5266A	E-74A	78	Liquidtight Flex. Metal Cond.		1935.24	Pull rope	Soft-Fiber Polyester
5270A	E-74A	41	Liquidtight Flex. Metal Cond.		534.55	Pull rope	Soft-Fiber Polyester
5271A	E-74A	41	Liquidtight Flex. Metal Cond.		534.55	Pull rope	Soft-Fiber Polyester

DATE | REVISED BY | DATE REVISED

CALCULATED/ DESIGNED BY | CHECKED BY

DESIGN OVERSIGHT

STATE OF CALIFORNIA - DEPARTMENT OF TRANSPORTATION
Caltrans

CONDUIT AND TRAY SCHEDULE
E-449DG

LAST REVISION 00-00-00 | DATE PLOTTED => 3/31/2009 | TIME PLOTTED => 1:37:27 PM

FOR REDUCED PLANS ORIGINAL SCALE IS IN MILLIMETERS 0 20 40 60 80

DGN FILE =>I:\13103\MS\pse\SAS Struc\CCO\SAS CC055\04-0120F1_0407S11.dgn
USERNAME =>garciar

CU 04251

EA 0120F1

CONDUIT DATA

Conduit No	Reference	Size	Type	Total Fill (mm²)	Allowable Fill (mm²)	Included Cable No.	Conductor Type
5272A	E-75A E-74A	78	Liquidtight Flex. Metal Cond.		1935.24	Pull rope	Soft-Fiber Polyester
5273A	E-74A	78	Liquidtight Flex. Metal Cond.		1935.24	Pull rope	Soft-Fiber Polyester
5283A	E-75A	41	RGS-PVC coated conduit	308.53	879.42	Pull rope	Soft-Fiber Polyester
						2098-2	4-1/C #4 + G, 600 V, RHH/RHW insulation
5283B	E-75A	41	RGS-PVC coated conduit	262.68	879.42	Pull rope	Soft-Fiber Polyester
						2098-1	3/C #8 + G, 600 V, RHH/RHW insulation
5283C	E-75A	41	RGS-PVC coated conduit	476.76	879.42	Pull rope	Soft-Fiber Polyester
						2098-3	4-1/C #4 + G, 600 V, RHH/RHW insulation
5283D	E-75A	53	Liquidtight Flex. Metal Cond.		879.42	Pull rope	Soft-Fiber Polyester
5283E	E-75A	41	Liquidtight Flex. Metal Cond.		534.55	Pull rope	Soft-Fiber Polyester
5284A	E-75A	53	RGS-PVC coated conduit		879.42	Pull rope	Soft-Fiber Polyester
5285A	E-75A, E-118	41	Liquidtight Flex. Metal Cond.		534.55	Pull rope	Soft-Fiber Polyester
5285B	E-75A	41	RGS-PVC coated conduit		534.55	Pull rope	Soft-Fiber Polyester
5285C	E-75A, E-118	41	RGS-PVC coated conduit		534.55	Pull rope	Soft-Fiber Polyester
5285D	E-75A	53	Liquidtight Flex. Metal Cond.		879.42	Pull rope	Soft-Fiber Polyester
5285E	E-75A	41	RGS-PVC coated conduit		534.55	Pull rope	Soft-Fiber Polyester
5286A	E-75A	78	Liquidtight Flex. Metal Cond.		1935.42	Pull rope	Soft-Fiber Polyester
5289A	E-75A	41	Liquidtight Flex. Metal Cond.		534.55	Pull rope	Soft-Fiber Polyester
5290A	E-75A	41	Liquidtight Flex. Metal Cond.		534.55	Pull rope	Soft-Fiber Polyester

REQUEST FOR INFORMATION NOT ADDRESSED IN THIS CCO REMAIN IN FORCE

MARK	DATE	REVISIONS DESCRIPTIONS	RR RY	RG MP	CH'D	CCO#
1	03/30/09	SERVICE PLATFORM ELECTRICAL CHANGES				55

CONTRACT CHANGE ORDER NO. 55
SHEET 86 OF 90

Caltrans Metric

DIST	COUNTY	ROUTE	KILOMETER POST TOTAL PROJECT	SHEET No	TOTAL SHEETS
04	SF	80	13.2/13.9	407 S12	1204

REGISTERED ELECTRICAL ENGINEER — 6/12/08 DATE

REGISTERED PROFESSIONAL ENGINEER — FADI WALIEDDINE No. 11465 Exp. 12/31/2009 ELECTRICAL — STATE OF CALIFORNIA

PLANS APPROVAL DATE

PB AMERICAS, Inc.
A Parsons Brinckerhoff Company
303 Second St., Suite 700N
San Francisco, CA 94107-1317

The State of California or its officers or agents shall not be responsible for the accuracy or completeness of electronic copies of this plan sheet.

Caltrans now has a web site! To get to the web site, go to http://www.dot.ca.gov

CONDUIT DATA

Conduit No	Reference	Size	Type	Total Fill (mm²)	Allowable Fill (mm²)	Included Cable No.	Conductor Type
5300A	E-114B	78	RGS Conduit		1935.24	Pull rope	Soft-Fiber Polyester
5300B	E-114B	78	RGS Conduit		1935.24	Pull rope	Soft-Fiber Polyester
5300C	E-114B	78	RGS Conduit		1935.24	Pull rope	Soft-Fiber Polyester
5300D	E-114B	78	RGS Conduit		1935.24	Pull rope	Soft-Fiber Polyester
5300E	E-114B	78	RGS Conduit		1935.24	Pull rope	Soft-Fiber Polyester
5300F	E-114B	78	RGS Conduit		1935.24	Pull rope	Soft-Fiber Polyester
5300G	E-114B	78	RGS Conduit		1935.24	Pull rope	Soft-Fiber Polyester
5300H	E-114B	78	RGS Conduit		1935.24	Pull rope	Soft-Fiber Polyester
5300J	E-114B	78	RGS Conduit		1935.24	Pull rope	Soft-Fiber Polyester
5300K	E-114B	78	RGS Conduit		1935.24	Pull rope	Soft-Fiber Polyester
5300L	E-114B	78	RGS Conduit		1935.24	Pull rope	Soft-Fiber Polyester
5300M	E-114B	78	RGS Conduit		1935.24	Pull rope	Soft-Fiber Polyester
5300N	E-114B	78	RGS Conduit		1935.24	Pull rope	Soft-Fiber Polyester
5300P	E-114B	78	RGS Conduit		1935.24	Pull rope	Soft-Fiber Polyester

CONDUIT AND TRAY SCHEDULE

E-449DH

DESIGN OVERSIGHT | CALCULATED/DESIGNED BY | CHECKED BY | DATE | REVISED BY | DATE REVISED

STATE OF CALIFORNIA - DEPARTMENT OF TRANSPORTATION
Caltrans

LAST REVISION 00-00-00
DATE PLOTTED => 3/31/2009
TIME PLOTTED => 1:35:56 PM

FOR REDUCED PLANS ORIGINAL SCALE IS IN MILLIMETERS 0 20 40 60 80

DGN FILE =>I:\13103\WS\pse\SAS Struc\CCO\SAS CC055\04-0120f1_0407S12.dgn
USERNAME =>garciar

CU 04251

EA 0120F1

CALCULATED/ DESIGNED BY	XXX
CHECKED BY	XXX
DATE	XXX
REVISED BY	XXX
DATE REVISED	XXX

DESIGN OVERSIGHT XXXXXXXXX

STATE OF CALIFORNIA - DEPARTMENT OF TRANSPORTATION

Caltrans

CONDUIT DATA

Conduit No	Reference	Size	Type	Total Fill (mm^2)	Allowable Fill (mm^2)	Included Cable No.	Conductor Type
1T4WA	E-71, E-71A	203	203x203mm stainless steel wireway		8387.08		
1T4WA1	E-71, E71A	203	203x203mm stainless steel wireway		8387.08		
1T4WB	E-71, E71A	150	152x152 mm stainless steel wireway		4193.54		
1T4WB1	E-71, E71A	150	152x152 mm stainless steel wireway		4193.54		
1T5WA	E-72, E-72A	203	203x203mm stainless steel wireway		8387.08		
1T5WA1	E-72, E-72A	203	203x203mm stainless steel wireway		8387.08		
1T5WB	E-72, E-72A	150	152x152 mm stainless steel wireway		4193.54		
1T5WB1	E-72, E-72A	150	152x152 mm stainless steel wireway		4193.54		
1T6WA	E-73, E-73A	203	203x203mm stainless steel wireway		8387.08		
1T6WA1	E-73, E-73A	203	203x203mm stainless steel wireway		8387.08		
1T6WB	E-73, E-73A	150	152x152 mm stainless steel wireway		4193.54		
1T6WB1	E-73, E-73A	150	152x152 mm stainless steel wireway		4193.54		
1T7WA	E-74, E-74A	203	203x203mm stainless steel wireway		8387.08		
1T7WA1	E-74, E-74A	203	203x203mm stainless steel wireway		8387.08		
1T7WB	E-74, E-74A	150	152x152 mm stainless steel wireway		4193.54		
1T7WB1	E-74, E-74A	150	152x152 mm stainless steel wireway		4193.54		
1T8WA	E-75, E-75A	203	203x203mm stainless steel wireway		8387.08		
1T8WA1	E-75, E-75A	203	203x203mm stainless steel wireway		8387.08		
1T8WB	E-75, E-75A	150	152x152 mm stainless steel wireway		4193.54		
1T8WB1	E-75, E-75A	150	152x152 mm stainless steel wireway		4193.54		
2T4EA	E-71, E-71A	203	203x203mm stainless steel wireway		8387.08		
2T4EA1	E-71, E-71A	203	203x203mm stainless steel wireway		8387.08		
2T4EB	E-71, E-71A	150	152x152 mm stainless steel wireway		4193.54		
2T4EB1	E-71, E-71A	150	152x152 mm stainless steel wireway		4193.54		
2T5EA	E-72, E-72A	203	203x203mm stainless steel wireway		8387.08		
2T5EA1	E-72, E-72A	203	203x203mm stainless steel wireway		8387.08		
2T5EB	E-72, E-72A	150	152x152 mm stainless steel wireway		4193.54		
2T5EB1	E-72, E-72A	150	152x152 mm stainless steel wireway		4193.54		
2T6EA	E-73, E-73A	203	203x203mm stainless steel wireway		8387.08		
2T6EA1	E-73, E-73A	203	203x203mm stainless steel wireway		8387.08		
2T6EB	E-73, E-73A	150	152x152 mm stainless steel wireway		4193.54		

REQUEST FOR INFORMATION NOT ADDRESSED IN THIS CCO REMAIN IN FORCE

MARK	DATE	DESCRIPTIONS	RR RY	RG MP	CH'D	CCO#
0	03/30/09	SERVICE PLATFORM ELECTRICAL CHANGES				55

REVISIONS

CONTRACT CHANGE ORDER NO. 55
SHEET 87 OF 90

Caltrans Metric

DIST	COUNTY	ROUTE	KILOMETER POST TOTAL PROJECT	SHEET No	TOTAL SHEETS
04	SF	80	13.2/13.9	407 S13	1204

REGISTERED ELECTRICAL ENGINEER — 6/12/08 DATE

REGISTERED PROFESSIONAL ENGINEER — FADI WALIEDDINE No. 11465 Exp. 12/31/2009 ELECTRICAL — STATE OF CALIFORNIA

PLANS APPROVAL DATE

PB AMERICAS, Inc.
A Parsons Brinckerhoff Company
303 Second St., Suite 700N
San Francisco, CA 94107-1317

The State of California or its officers or agents shall not be responsible for the accuracy or completeness of electronic copies of this plan sheet.

Caltrans now has a web site! To get to the web site, go to http://www.dot.ca.gov

CONDUIT DATA

Conduit No	Reference	Size	Type	Total Fill (mm)	Allowable Fill (mm)	Included Cable No.	Conductor Type
2T6EB1	E-73, E-73A	150	152x152 mm stainless steel wireway		4193.54		
2T7EA	E-74, E-74A	203	203x203mm stainless steel wireway		8387.08		
2T7EA1	E-74, E-74A	203	203x203mm stainless steel wireway		8387.08		
2T7EB	E-74, E-74A	150	152x152 mm stainless steel wireway		4193.54		
2T7EB1	E-74, E-74A	150	152x152 mm stainless steel wireway		4193.54		
2T8EA	E-75, E-75A	203	203x203mm stainless steel wireway		8387.08		
2T8EA1	E-75, E-75A	203	203x203mm stainless steel wireway		8387.08		
2T8EB	E-75, E-75A	150	152x152 mm stainless steel wireway		4193.54		
2T8EB1	E-75, E-75A	150	152x152 mm stainless steel wireway		4193.54		

CONDUIT AND TRAY SCHEDULE

E-449DJ

LAST REVISION 00-00-00

DATE PLOTTED => 3/31/2009
TIME PLOTTED => 1:35:21 PM

FOR REDUCED PLANS ORIGINAL SCALE IS IN MILLIMETERS 0 20 40 60 80

DGN FILE =>T:\13103\WS\pse\SAS Struc\CCO\SAS CCO55\04-0120f1_0407513.dgn
USERNAME =>garciar

CU 04251

EA 0120F1

CONDUIT DATA

Conduit No	Reference	Size	Type	Total Fill (mm²)	Allowable Fill (mm²)	Included Cable No.	Conductor Type
0T24	E-114	610	152.4 mm siderail ladder tray		16774.16		
1T24A	E-114, E-114A	610	152.4 mm siderail ladder tray		16774.16		
2T24A	E-114, E-114A	610	152.4 mm siderail ladder tray		16774.16		
2T24B	E-114A	610	152.4 mm siderail ladder tray		16774.16		
1T25A	E-114B, E-115	610	152.4 mm siderail ladder tray		16774.16		
1T25B	E-114B	610	152.4 mm siderail ladder tray		16774.16		
2T25A	E-115, E-118	610	152.4 mm siderail ladder tray		16774.16		
2T25B	E-115, E-118	610	152.4 mm siderail ladder tray		16774.16		
0T26	E-116	610	152.4 mm siderail ladder tray		16774.16		
1T26A	E-116	610	152.4 mm siderail ladder tray		16774.16		
1T26B	E-114B	610	152.4 mm siderail ladder tray		16774.16		
2T26A	E-114B, E-116	610	152.4 mm siderail ladder tray		16774.16		
2T26B	E-114B	610	152.4 mm siderail ladder tray		16774.16		
0T27	E-117	610	152.4 mm siderail ladder tray		16774.16		
1T27A	E-117	610	152.4 mm siderail ladder tray		16774.16		
1T27B	E-114B	610	152.4 mm siderail ladder tray		16774.16		
2T27A	E-114B, E-117	610	152.4 mm siderail ladder tray		16774.16		
2T27B	E-114B	610	152.4 mm siderail ladder tray		16774.16		

REQUEST FOR INFORMATION NOT ADDRESSED IN THIS CCO REMAIN IN FORCE

MARK	DATE	DESCRIPTIONS	RR RY	RG MP	55
		REVISIONS	BY	CH'D	CCO#
0	03/30/09	SERVICE PLATFORM ELECTRICAL CHANGES			

CONTRACT CHANGE ORDER NO. 55
SHEET 88 OF 90

Caltrans Metric

DIST	COUNTY	ROUTE	KILOMETER POST TOTAL PROJECT	SHEET No	TOTAL SHEETS
04	SF	80	13.2/13.9	407 S14	1204

REGISTERED ELECTRICAL ENGINEER — 6/12/08 DATE

REGISTERED PROFESSIONAL ENGINEER — FADI WALIEDDINE No. 11465 EXP. 12/31/2009 ELECTRICAL — STATE OF CALIFORNIA

PLANS APPROVAL DATE

PB AMERICAS, Inc.
A Parsons Brinckerhoff Company
303 Second St., Suite 700N
San Francisco, CA 94107-1317

The State of California or its officers or agents shall not be responsible for the accuracy or completeness of electronic copies of this plan sheet.

Caltrans now has a web site! To get to the web site, go to http://www.dot.ca.gov

CONDUIT DATA

Conduit No	Reference	Size	Type	Total Fill (mm)	Allowable Fill (mm)	Included Cable No.	Conductor Type
0T28	E-118	610	152.4 mm siderail ladder tray		16774.16		
1T28A	E-114B, E-118	610	152.4 mm siderail ladder tray		16774.16		
1T28B	E-114B	610	152.4 mm siderail ladder tray		16774.16		
2T28A	E-114B, E-118	610	152.4 mm siderail ladder tray		16774.16		
2T28B	E-114B	610	152.4 mm siderail ladder tray		16774.16		
0T44	E-114	610	152.4 mm siderail ladder tray		16774.16		
1T44A	E-114, E-114A	610	152.4 mm siderail ladder tray		16774.16		
1T44B	E-114B	610	152.4 mm siderail ladder tray		16774.16		
2T44A	E-114, E-114A,B	610	152.4 mm siderail ladder tray		16774.16		
2T44B	E-114A,E-114B	610	152.4 mm siderail ladder tray		16774.16		

CONDUIT AND TRAY SCHEDULE

E-449DK

DESIGN OVERSIGHT	CALCULATED/ DESIGNED BY	CHECKED BY	DRAWN BY	CHECKED BY	REVISED BY	DATE REVISED
XXXXXXXXXXX	XXX	XXX	XXX	XXX	XXX	XXX

STATE OF CALIFORNIA - DEPARTMENT OF TRANSPORTATION
Caltrans

LAST REVISION 00-00-00 — DATE PLOTTED => 3/31/2009 TIME PLOTTED => 1:34:46 PM

FOR REDUCED PLANS ORIGINAL SCALE IS IN MILLIMETERS 0 20 40 60 80

DGN FILE =>T:\13103\MS\pse\SAS Struc\CCO\SAS CC055\04-0120f1_0407S14.dgn
USERNAME =>garciar

CU 04251 | EA 0120F1

CONDUIT DATA

Conduit No	Reference	Size	Type	Total Fill (mm²)	Allowable Fill (mm²)	Included Cable No.	Conductor Type
0T45	E-115	610	152.4 mm siderail ladder tray		16774.16		
1T45A	E-114B, E-115	610	152.4 mm siderail ladder tray		16774.16		
1T45B	E-114B	610	152.4 mm siderail ladder tray		16774.16		
2T45	E-114B	610	152.4 mm siderail ladder tray		16774.16		
2T45A	E-114B, E-115	610	152.4 mm siderail ladder tray		16774.16		
2T45B	E-114B	610	152.4 mm siderail ladder tray		16774.16		
0T46	E-116	610	152.4 mm siderail ladder tray		16774.16		
1T46A	E-114A, E-116	610	152.4 mm siderail ladder tray		16774.16		
1T46B	E-114,E-114A,B	610	152.4 mm siderail ladder tray		16774.16		
2T46A	E-114B, E-116	610	152.4 mm siderail ladder tray		16774.16		
2T46B	E-114	610	152.4 mm siderail ladder tray		16774.16		
0T47	E-117	610	152.4 mm siderail ladder tray		16774.16		
1T47A	E-117	610	152.4 mm siderail ladder tray		16774.16		
1T47B	E-114	610	152.4 mm siderail ladder tray		16774.16		
2T47A	E-114B, E-117	610	152.4 mm siderail ladder tray		16774.16		
2T47B	E-114B	610	152.4 mm siderail ladder tray		16774.16		
0T48	E-118	610	152.4 mm siderail ladder tray		16774.16		
1T48A	E-118	610	152.4 mm siderail ladder tray		16774.16		
2T48A	E-114B, E-118	610	152.4 mm siderail ladder tray		16774.16		
2T48B	E-118	610	152.4 mm siderail ladder tray		16774.16		

REQUEST FOR INFORMATION NOT ADDRESSED IN THIS CCO REMAIN IN FORCE

MARK	DATE	REVISIONS DESCRIPTIONS	RR RY BY	RG MP CH'D	55 CCO#
0	03/30/09	SERVICE PLATFORM ELECTRICAL CHANGES			

CONTRACT CHANGE ORDER NO. 55
SHEET 89 OF 90

Caltrans Metric

DIST	COUNTY	ROUTE	KILOMETER POST TOTAL PROJECT	SHEET No	TOTAL SHEETS
04	SF	80	13.2/13.9	407 S15	1204

REGISTERED ELECTRICAL ENGINEER — 6/12/08 DATE

REGISTERED PROFESSIONAL ENGINEER — FADI WALIEDDINE No. 11465 exp. 12/31/2009 ELECTRICAL — STATE OF CALIFORNIA

PLANS APPROVAL DATE

PB AMERICAS, Inc.
A Parsons Brinckerhoff Company
303 Second St., Suite 700N
San Francisco, CA 94107-1317

The State of California or its officers or agents shall not be responsible for the accuracy or completeness of electronic copies of this plan sheet.

Caltrans now has a web site! To get to the web site, go to http://www.dot.ca.gov

CONDUIT DATA

Conduit No	Reference	Size	Type	Total Fill (mm)	Allowable Fill (mm)	Included Cable No.	Conductor Type

CONDUIT AND TRAY SCHEDULE

E-449DL

DESIGN OVERSIGHT — BEHZAD GOLEMOHAMMADI
CALCULATED/DESIGNED BY — XXX
CHECKED BY — XXX
DATE XXX
REVISED BY — XXX
DATE REVISED — XXX

STATE OF CALIFORNIA - DEPARTMENT OF TRANSPORTATION
Caltrans

FOR REDUCED PLANS ORIGINAL SCALE IS IN MILLIMETERS 0 20 40 60 80

DGN FILE =>T:\13103\MS\pse\SAS Struc\CCO\SAS CC055\04-0120f1_0407515.dgn
USERNAME =>garciar

CU 04251 | EA 0120F1

LAST REVISION 00-00-00 | DATE PLOTTED => 3/31/2009 | TIME PLOTTED => 1:34:11 PM

DIST.	COUNTY	ROUTE	KILOMETER POST TOTAL PROJECT	SHEET NO.	TOTAL SHEETS
04	SF	80	13.2/13.9	660R2	1204

George Baker
REGISTERED ENGINEER - CIVIL
1-27-03
PLANS APPROVAL DATE

The State of California or its officers or agents shall not be responsible for the accuracy or completeness of electronic copies of this plan sheet.

REGISTERED PROFESSIONAL ENGINEER George S. Baker No. C 57112 Exp. 12/31/05 CIVIL STATE OF CALIFORNIA

T.Y. LIN / MOFFATT & NICHOL
825 BATTERY STREET
SAN FRANCISCO, CA 94111

Caltrans now has a web site! To get to the web site, go to: http://www.dot.ca.gov

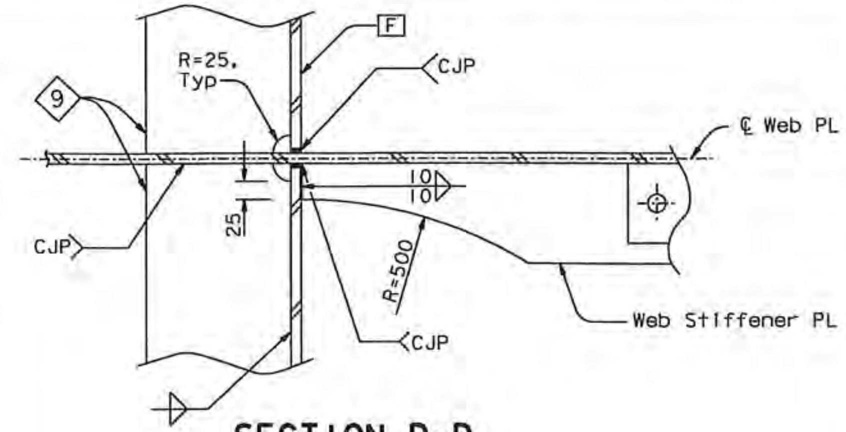

SECTION D-D
1:5

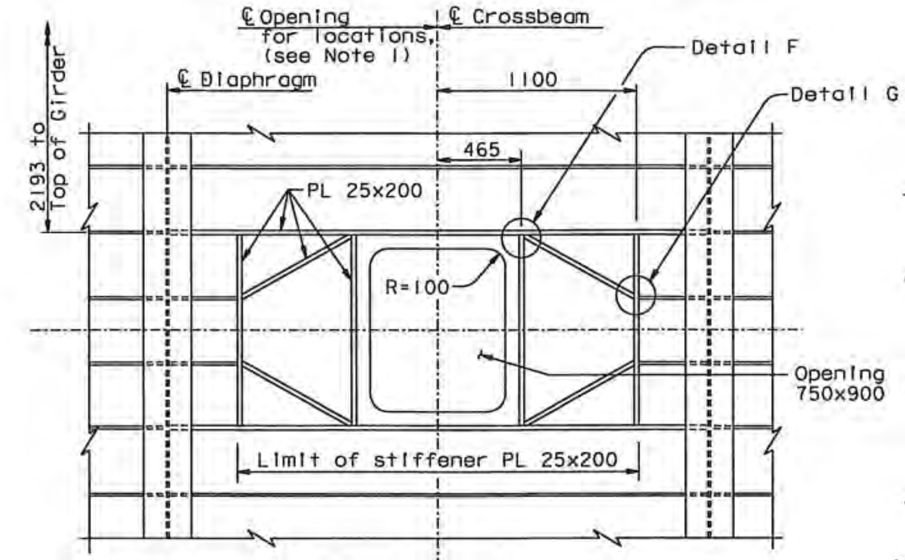

EXTERIOR WEB PLATES

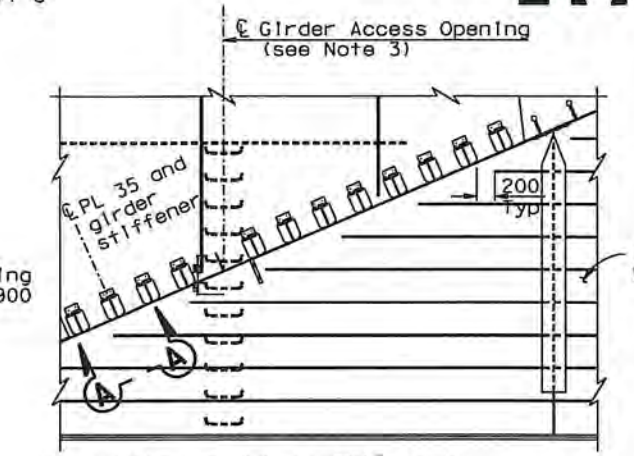

AT INTERIOR WEB PLATE ONLY (see Note 3)

DETAIL D
1:20

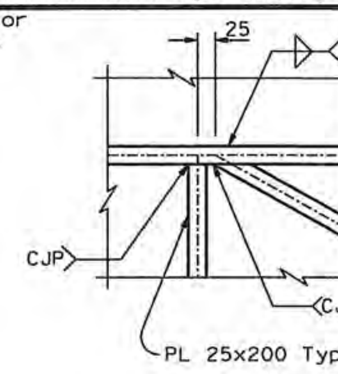

DETAIL F
1:5

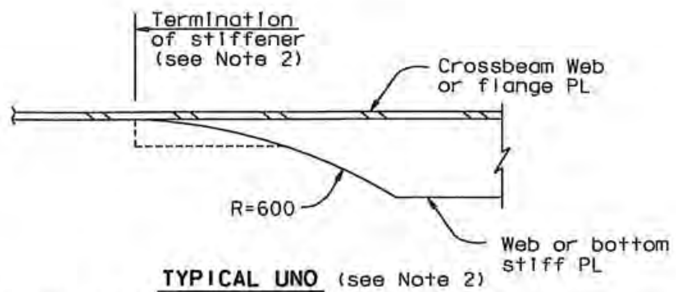

TYPICAL UNO (see Note 2)

STIFFENER TERMINATION DETAIL
1:10

Daniel J. Turner
REGISTERED PROFESSIONAL ENGINEER Daniel J. Turner No. C 65033 Exp. 06/30/09 CIVIL STATE OF CALIFORNIA

FOR REVISIONS ONLY

REQUESTS FOR INFORMATION NOT ADDRESSED IN THIS CCO REMAIN IN FORCE

MARK	DATE	DESCRIPTIONS	BY	CH'D	CCO#
2	06/13/08	SERVICE PLATFORM ELECTRICAL CHANGES	DT	GB	55
1	04/02/07	CROSSBEAM KINK	GB	DT	38

REVISIONS

CONTRACT CHANGE ORDER NO. 55
SHEET 90 OF 90

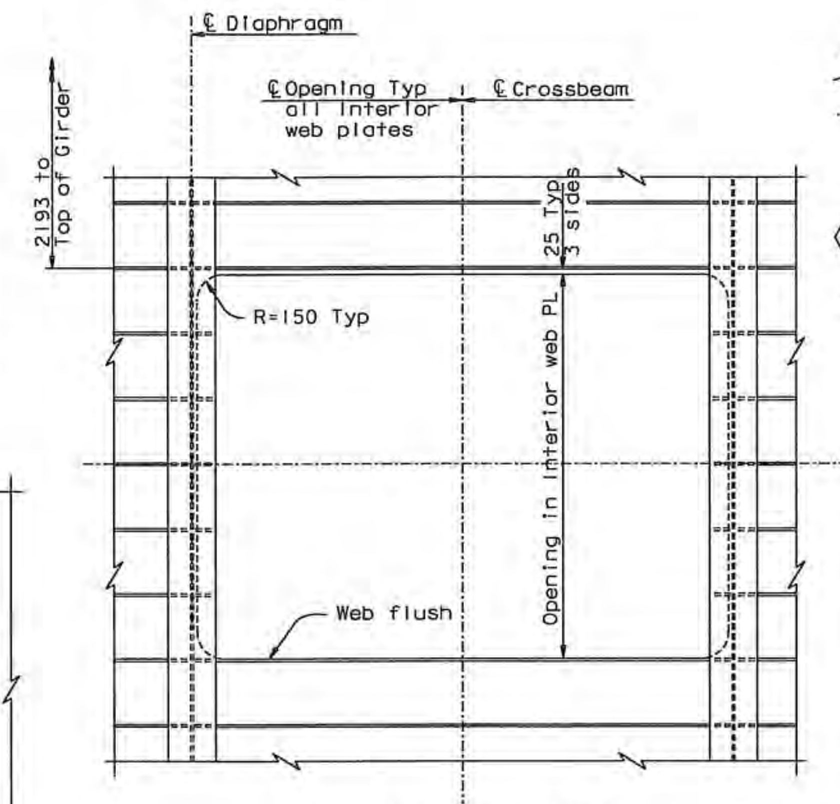

INTERIOR WEB PLATES

ACCESS OPENING IN CROSSBEAM WEB PLATES

DETAIL C
1:20

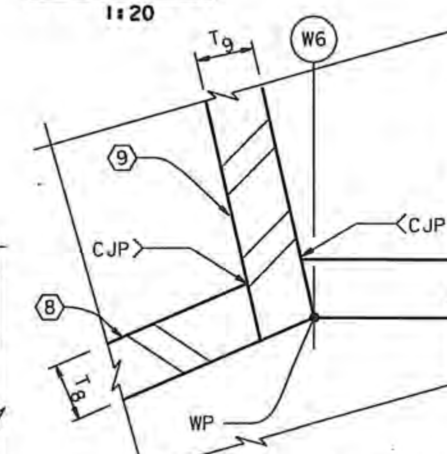

DETAIL E
1:1

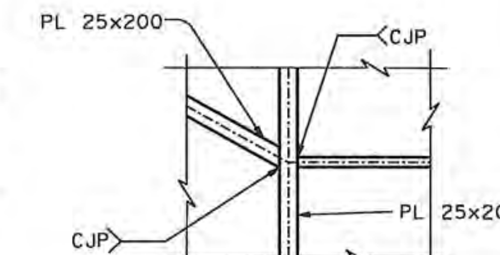

DETAIL G
1:5

14 (see Note 5)

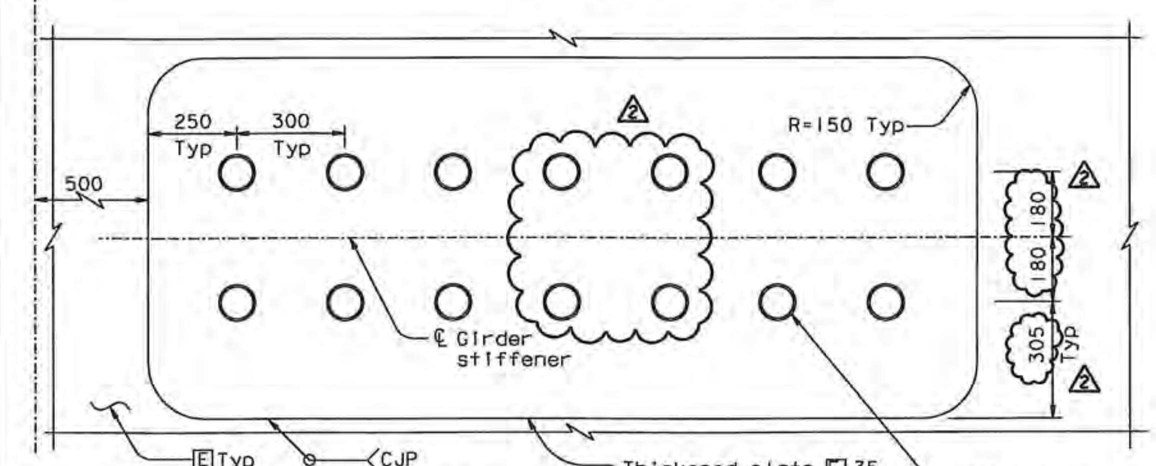

SECTION A-A (see Note 5)
1:10

NOTES:

1. For location of crossbeam access openings in exterior crossbeam web plates, see "Girder Access Details No.1" sheet.
2. For Stiffener termination details not shown, see "Typical Girder Details No.16" sheet.
3. For girder details at girder access opening, see "Typical Girder Details No.15" sheet.
4. For details not shown, see "Access Opening With Door At Vertical Face Of Tower Strut Facade" and "Access Opening Door Detail" on "Tower Access Details No.4" sheet.
5. At utility platform locations, panel points 14, 32, 50, 80, and 110, plate E shall be thickened as shown. The thickened plate shall be flush on the inside of the OBG. (2)
6. For pipe sleeve details, see "Utility Details No.1" sheet.

ALL DIMENSIONS ARE IN MILLIMETERS UNLESS OTHERWISE SHOWN

SAN FRANCISCO OAKLAND BAY BRIDGE
EAST SPAN SEISMIC SAFETY PROJECT
SELF-ANCHORED SUSPENSION BRIDGE (SUPERSTRUCTURE & TOWER)

TYPICAL CROSSBEAM DETAILS NO. 6

R. Valizadeh/V. Toan/Y.L./W.L./F.C.
DESIGN OVERSIGHT
SIGN OFF DATE 06/13/08

DESIGN	BY G. Baker	CHECKED P. Ritchie
DETAILS	BY D. Veytsman	CHECKED T. McMeans
QUANTITIES	BY G. Baker	CHECKED M. Roberts

PREPARED FOR THE STATE OF CALIFORNIA DEPARTMENT OF TRANSPORTATION

R. Manzanarez
PROJECT ENGINEER

BRIDGE NO. 34-0006L/R
KILOMETER POST 13.2/13.9

Rev. Date: 5-18-98

ORIGINAL SCALE IN MILLIMETERS FOR REDUCED PLANS 0 10 20 30 40 50 60 70 80 90 100

CU 04
EA 0120F1

DISREGARD PRINTS BEARING EARLIER REVISION DATES

REVISION DATES (PRELIMINARY STAGE ONLY)

SHEET 243R2

FILE => L:\BB\04-0120F1\SAS\Contract Plans and CCO\CCO\In Progress\CCO#55\Original 06-13-08\DGN\agcrs08.dgn

100% PS&E
USERNAME => vignatovsky DATE PLOTTED => 13 JUN 2008 TIME PLOTTED => 13:17:37

STATE OF CALIFORNIA - DEPARTMENT OF TRANSPORTATION

CONTRACT CHANGE ORDER

Change Requested by: Engineer

CCO: 56 **Suppl. No. 0** **Contract No. 04 – 0120F4** **Road** SF-80-13.2/13.9 **FED. AID LOC.:**

To: **AMERICAN BRIDGE/FLUOR ENTERPRISES INC A JOINT VENTURE**

You are directed to make the following changes from the plans and specifications or do the following described work not included in the plans and specifications for this contract. ***NOTE: This change order is not effective until approved by the Engineer.***

Description of work to be done, estimate of quantities and prices to be paid. (Segregate between additional work at contract price, agreed price and force account.) Unless otherwise stated, rates for rental of equipment cover only such time as equipment is actually used and no allowance will be made for idle time. This last percentage shown is the net accumulated increase or decrease from the original quantity in the Engineer's Estimate.

Adjustment of Compensation at Lump Sum:

Provide compensation for additional engineering expenses resulting from inconsistencies on plan Sheet 743 of 1204 of the Contract Plans. The cable suspender forces (Force "F") shown on the Suspender Schedule on Sheet 743 do not correspond with other information shown on the Contract Plans.

This Change Order provides compensation for additional engineering cost only, as indentified in ABF's Request for Change Order No. 16. This Change Order does not resolve associated issues identified in ABF-CAL-LTR-000763, dated December 3, 2008.

For this work, the Contractor will be paid the sum of $109,694.00. This sum constitutes full compensation, including markups, for this change.

Consideration of a time adjustment will be deferred until completion of the work specified herein. Determination of a commensurate time adjustment will be made in accordance with Section 10-1.13, "PROGRESS SCHEDULE (CRITICAL PATH METHOD)" and Section 10-1.14, "TIME-RELATED OVERHEAD" of the Special Provisions, as well as Section 8-1.07, "LIQUIDATED DAMAGES", of the Standard Specifications.

Cost of Adjustment of Compensation at Lump Sum $109,694.00

Estimated Cost: **Increase** ☒ **Decrease** ☐ **$109,694.00**

By reason of this order the time of completion will be adjusted as follows: **Deferred**

Submitted by

Signature Gary Pursell **Resident Engineer** Gary Pursell, Sup.T.E. **Date** 5/12/09

Approval Recommended by

Signature for **Supervising Bridge Engineer** Richard Morrow, Sup.T.E. **Date** 5/12/09

Engineer Approval by

Signature Gary Pursell **Supervising Transportation Engineer** Gary Pursell, Sup. T.E. **Date** 5/19/09

We the undersigned contractor, have given careful consideration to the change proposed and agree, if this proposal is approved, that we will provide all equipment, furnish the materials, except as otherwise be noted above, and perform all services necessary for the work above specified, and will accept as full payment therefor the prices shown above.

NOTE: If you, the contractor, do not sign acceptance of this order, your attention is directed to the requirements of the specifications as to proceeding with the ordered work and filing a written protest within the time therein specified.

Contractor Acceptance by

Signature (Print name and title) Michael D. Flowers Project Director **Date** 5-13-09

STATE OF CALIFORNIA - DEPARTMENT OF TRANSPORTATION

CONTRACT CHANGE ORDER MEMORANDUM

DATE: 5/18/2009 Page 1 of 1

TO: Pete Siegenthaler, Prin. TE / Gary Pursell, P.E., Sup T.E.	FILE: E.A. 04 - 0120F4
FROM: Gary Pursell, Sup.TE	CO-RTE-PM SF-80-13.2/13.9
	FED. NO.
CCO#: 56 SUPPLEMENT#: 0 Category Code: CHPT	CONTINGENCY BALANCE (incl. this change) $99,970,357.40
COST: $109,694.00 INCREASE ☑ DECREASE ☐	HEADQUARTERS APPROVAL REQUIRED? ☐ YES ☑ NO
SUPPLEMENTAL FUNDS PROVIDED: $0.00	IS THIS REQUEST IN ACCORDANCE WITH ENVIRONMENTAL DOCUMENTS? ☑ YES ☐ NO
CCO DESCRIPTION: Suspender Loads	PROJECT DESCRIPTION: CONSTRUCT SELF-ANCHORED SUSPENSION BRIDGE

Original Contract Time:	Time Adj. This Change:	Previously Approved CCO Time Adjustments:	Percentage Time Adjusted: (including this change)	Total # of Unreconciled Deferred Time CCO(s): (including this change)
2490 Day(s)	DEF Day(s)	30 Day(s)	1 %	7

THIS CHANGE ORDER PROVIDES FOR:

Additional Contractor engineering effort for modeling the bridge. This change also addresses engineering cost in Contractor submitted Request for Change Order (RFCO) 16.

The Contractor expended additional resources in an effort to resolve a conflict between Department provided suspender forces and the deck box girder moment diagram during the development of their bridge model. Contract plan sheet 743 provides suspender forces that correspond to the bridge deck box girder moment diagram. When these forces were used in the Contractors model they did not conform to the provided deck moment diagram limits. As a result of this plan sheet conflict the Departments Designer of Record provided revised suspender forces. The newly provided suspender forces will be used by the Contractor to model the bridge again and resolve the identified conflict.

For this change, the Contractor will receive a lump sum of $109,694.00, which can be financed from the contingency fund. A detailed analysis of this cost adjustment is on file in the project records.

Adjustment of contract time is deferred pending completion of the work specified in this change as it may affect the controlling operation.

This change order received concurrence from Rick Morrow (Structure Representative), Ken Terpstra (Project Manager), Mike Forner (Principal Construction Engineer) and Gary Pursell (Resident Engineer). Maintenance concurrence is not required for this change as this work is temporary in nature. Design

This change order was field approved by the Supervising Transportation Engineer, Gary Pursell, on May 19, 2008.

CONCURRED BY:			
Construction Engineer:	Res. Eng., Gary Pursell, Sup. TE	Date	1/4/08
Bridge Engineer:	Struct Rep, Rick Morrow, Sup TE	Date	1/4/08
Project Engineer:		Date	
Project Manager:	Proj Manager, Ken Terpstra	Date	6/30/08
FHWA Rep.:		Date	
Environmental:		Date	
Other (specify):	PCE, Mike Forner, Prin TE	Date	1/7/08
Other (specify):		Date	
District Prior Approval By:		Date	
HQ (Issue Approve) By:		Date	
Resident Engineer's Signature:	Gary Pursell	Date	5/19/09

ESTIMATE OF COST	THIS REQUEST	TOTAL TO DATE
ITEMS	$0.00	$0.00
FORCE ACCOUNT	$0.00	$0.00
AGREED PRICE	$0.00	$0.00
ADJUSTMENT	$109,694.00	$109,694.00
TOTAL	$109,694.00	$109,694.00

FEDERAL PARTICIPATION

☐ PARTICIPATING ☐ PARTICIPATING IN PART ☑ NONE
☐ NON-PARTICIPATING (MAINTENANCE) ☐ NON-PARTICIPATING

FEDERAL SEGREGATION (if more than one Funding Source or P.I.P. type)
☐ CCO FUNDED PER CONTRACT ☐ CCO FUNDED AS FOLLOWS

FEDERAL FUNDING SOURCE	PERCENT

ADA Notice: For individuals with sensory disabilities, this document is available in alternate formats. For information call: (916) 654-6410 or TDD (916) 654-3880 or write Records and Forms Management, 1120 N Street, MS-89, Sacramento, CA 95814.

CONTRACT CHANGE ORDER

Change Requested by: Contractor

CCO: 57	Suppl. No. 0	Contract No. 04 - 0120F4	Road SF-80-13.2/13.9	FED. AID LOC.:

To: AMERICAN BRIDGE/FLUOR ENTERPRISES INC A JOINT VENT

You are directed to make the following changes from the plans and specifications or do the following described work not included in the plans and specifications for this contract. ***NOTE: This change order is not effective until approved by the Engineer.***

Description of work to be done, estimate of quantities and prices to be paid. (Segregate between additional work at contract price, agreed price and force account.) Unless otherwise stated, rates for rental of equipment cover only such time as equipment is actually used and no allowance will be made for idle time. This last percentage shown is the net accumulated increase or decrease from the original quantity in the Engineer's Estimate.

Adjustment of Compensation at Lump Sum:

Perform the following work:

1. Revise Special Provisions Section 10-1.59 "STEEL STRUCTURES," subsection "Welding of HPS 485W Steels," as shown on sheet two (2) of this change order.

2. Revise Special Provisions Section 10-1.60 "CABLE SYSTEM," subsection "Cable Band Bolts," to provide a minimum of one bolt per heat treatment lot for cable band bolt testing as shown on sheet three (3) of this change order.

This change order resolves cost and time impacts associated with Contractor Request For Information (RFI) Numbers 902 987 and 1027.

For this work, the Contractor will be paid the sum of $0.00. This sum constitutes full compensation, including all markups, for this change.

There is no adjustment of contract time for this change.

Adjustment of Compensation at Lump Sum Price $0.00

Estimated Cost: **Increase** ☐ **Decrease** ☐ **$0.00**

By reason of this order the time of completion will be adjusted as follows: 0 days

Submitted by

Signature	Resident Engineer	Date
	Brian Boal for Gary Pursell, P.E., Sup.T.E.	4/16/08

Approval Recommended by

Signature	Supervising Bridge Engineer	Date
	Richard Morrow, P.E., Sup. BE	4/16/08

Engineer Approval by

Signature	Supervising Transportation Engineer	Date
	Gary Pursell, P.E., Sup. TE	9/18/08

We the undersigned contractor, have given careful consideration to the change proposed and agree, if this proposal is approved, that we will provide all equipment, furnish the materials, except as may otherwise be noted above, and perform all services necessary for the work above specified, and will accept as full payment therefor the prices shown above.

NOTE: If you, the contractor, do not sign acceptance of this order, your attention is directed to the requirements of the specifications as to proceeding with the ordered work and filing a written protest within the time therein specified.

Contractor Acceptance by

Signature	(Print name and title)	Date
	Michael D. Flowers	9.17.08

10-1.59 STEEL STRUCTURES

Welding of HPS 485W Steels

4. Qualification Testing: Weld procedure qualification test requirements for HPS 485W groove welds shall be evaluated using Welding Procedure Specification (WPS) Test Plates from the greatest thickness to be welded in production and, for formed members, the as-formed base metal representing the highest forming strain, i.e., lowest ratio of diameter to thickness of a tubular, to be used in fabrication. Testing shall conform to AWS D1.5 qualification requirements, except fillet weld procedures shall be qualified in each position used, macroetch specimens shall be taken and additional sets of Charpy V-Notch specimens shall be taken within one millimeter of both the inside and outside tubular surfaces and centered on the coarse-grained area of the heat affected zone (HAZ). The test results shall meet the following properties:

   Transverse tensile ultimate strength: ≥ 620 Mpa
   Transverse tensile ultimate strength – Deviation Saddles Post Weld Heat Treated: ≥ 600 MPa if the failure is initiated in the weld metal and ≥ 585 MPa if the failure is initiated in the base metal.
   All-Weld-Metal: yield strength: ≥ 485 MPa
   All-Weld-Metal: ultimate tensile strength: ≥ 620 Mpa
   All-Weld-Metal – Deviation Saddles: ultimate tensile strength after Post Weld Heat Treatment: ≥ 600 MPa
   All-Weld-Metal: percent elongation: ≥ 19% in 50 mm
   Charpy V-Notch: as specified under Materials above.

10-1.60 CABLE SYSTEM

Cable Band Bolts

Cable band bolts shall conform to the requirements of ASTM Designation: A354, Grade BC. Nuts shall conform to the requirements of ASTM Designation: A563. Washers shall conform to ASTM Designation: F436. Cable band bolts, nuts and washers shall be galvanized. The cable band bolts shall have drilled recesses in the center of the bolt head and the center of the bolt shank for extensometer length measurements. All bolts shall receive heat treatment after final machining.

Perform ~~T~~ tensile tests to failure on cable band bolts assemblies with nuts and washers ~~shall be performed on a minimum of 30 bolts, but not less than 6 per heat. If one bolt fails to meet the required strength two more bolts from the heat shall be tested. If both bolts meet the specified requirements, the heat will be accepted. If any two bolts from one heat fail to meet the requirements, the heat will be rejected.~~ Test a minimum of one bolt per heat treatment lot but not less than 30 bolts evenly distributed among heat treatment lots and not less than 6 bolts per mill heat evenly distributed among heat treatment lots. If a bolt fails to meet the required strength, test two more bolts from the same lot. If both bolts meet the required strength the lot is accepted. If two bolts from the same heat treatment lot fail to meet the required strength the lot is rejected. Test, for load extension and ultimate tensile strength, one bolt per lot of the bolts supplied for the Friction Test.

Tensile tests, to obtain load-extension curves, shall be carried out on five cable band bolts, but not less than one per heat. Test bolts from different heat treatment lots if possible or evenly among lots to the extent possible. The testing apparatus shall be proposed by the Contractor and approved by the Engineer. The load-extension curve shall be recorded continuously. The extension may be measured from the separation of the jaws of the test apparatus. The yield point of the tested specimen shall be compared to that of the specified yield point. If any of the tests does not meet the minimum requirements, two additional tests shall be conducted for that heat. Both tests shall pass the requirements or the heat will be rejected.

STATE OF CALIFORNIA - DEPARTMENT OF TRANSPORTATION

CONTRACT CHANGE ORDER MEMORANDUM

TO: Mike Forner, Prin. TE / Gary Pursell, P.E., Sup T.E.	FILE: **E.A.** 04 - 0120F4
	CO-RTE-PM SF-80-13.2/13.9
FROM: Gary Pursell, P.E., Sup.T.E.	**FED. NO.**
CCO#: **57** SUPPLEMENT#: **0** Category Code: **CHSA**	CONTINGENCY BALANCE (incl. this change) **$134,080,012.40**
COST: **$0.00** INCREASE ☐ DECREASE ☐	HEADQUARTERS APPROVAL REQUIRED? ☑ YES ☐ NO
SUPPLEMENTAL FUNDS PROVIDED: **$0.00**	IS THIS REQUEST IN ACCORDANCE WITH ENVIRONMENTAL DOCUMENTS? ☑ YES ☐ NO
CCO DESCRIPTION: Weld Strength and Cable Band Sampling	**PROJECT DESCRIPTION:** CONSTRUCT SELF-ANCHORED SUSPENSION BRIDGE

Original Contract Time:	Time Adj. This Change:	Previously Approved CCO Time Adjustments:	Percentage Time Adjusted: (including this change)	Total # of Unreconciled Deferred Time CCO(s): (including this change)
2490 Day(s)	**0** Day(s)	**30** Day(s)	**1** %	**2**

THIS CHANGE ORDER PROVIDES FOR:

Revising the Special Provisions Section 10-1.59, "STEEL STRUCTURES" subsection "Welding of HPS 485W Steels," to provide a minimum tensile strength requirement of 600 MPa if the failure is initiated in the weld metal and 585 MPa if the failure is initiated in the base metal, in lieu of the 620 MPa requirement, in the post weld heat-treated condition for the deviation saddles.

Revise Section 10-1.60, "CABLE SYSTEM" subsection "Cable Band Bolts," of the Special Provisions to provide a minimum of one bolt per heat treatment lot for cable band bolt testing.

The welding electrodes are commonly certified to a minimum tensile strength or 620 MPa but heat treatment is not considered. Presently, there are no AISI certified weld electrodes that meet the 620 MPa requirements for the post heat-treated condition. This change will allow the tensile strength to be reduced to a 600 MPa requirement, which is both achievable and sufficient for this application.

The Special Provisions require the Contractor to provide 30 cable band bolts per mill heat for testing. All 1,400 bolts are from a single heat, which will result in only 30 bolts being tested. This change will amend the Special Provisions to require the Contractor to provide a minimum of one bolt per heat treatment lot, which is estimated to be 40 lots. This change will provide a more uniform sampling of the cable band bolts to be tested and mitigate schedule risk of bolt failure.

This change order is done as a no cost change. A detailed cost analysis is in the project files.

No time adjustment is warranted, as this change order does not affect the controlling operation.

This change order has concurrence from Gary Pursell (Resident Engineer), Rick Morrow (Sup. Structure Rep), Mike Forner (Principal TE), Rob Kobal (HQ Oversight), Marwan Nader (Design of Record), Vankatesh Iyer (METS), Ken Terpstra (Project Manager) and Wenyi Long (Design Oversight).

This change order received an Issue and Approve from the Division of Construction on April 21, 2008. A copy is attached for reference.

ADA Notice: For individuals with sensory disabilities, this document is available in alternate formats. For information call: (916) 654-6410 or TDD (916) 654-3880 or write Records and Forms Management, 1120 N Street, MS-89, Sacramento, CA 95814.

CONCURRED BY:			
Construction Engineer:	Res. Eng., Gary Pursell, Sup. TE	Date	11/28/07
Bridge Engineer:	Struct Rep, Rick Morrow, Sup TE	Date	11/28/07
Project Engineer:	CT Oversight, Wenyi Long, P.E.	Date	12/10/07
Project Manager:	Proj Manager, Ken Terpstra	Date	4/8/08
FHWA Rep.:		Date	
Environmental:	HQ METS, Vanketesh Iyer, PhD	Date	11/29/07
Other (specify):	Design of Record, Marwan Nader,	Date	9/5/07
Other (specify):	HQ, Rob Kobal	Date	11/29/07
District Prior Approval By:		Date	
HQ (Issue Approve) By:	HQ, Ken Darby	Date	4/21/08
Resident Engineer's Signature:		Date	

Gary Pursell 9/18/08

ESTIMATE OF COST

	THIS REQUEST	TOTAL TO DATE
ITEMS	$0.00	$0.00
FORCE ACCOUNT	$0.00	$0.00
AGREED PRICE	$0.00	$0.00
ADJUSTMENT	$0.00	$0.00
TOTAL	$0.00	$0.00

FEDERAL PARTICIPATION

☐ PARTICIPATING ☐ PARTICIPATING IN PART ☑ NONE
☐ NON-PARTICIPATING (MAINTENANCE) ☐ NON-PARTICIPATING

FEDERAL SEGREGATION (if more than one Funding Source or P.I.P. type)
☑ CCO FUNDED PER CONTRACT ☐ CCO FUNDED AS FOLLOWS

FEDERAL FUNDING SOURCE	PERCENT

ADA Notice: For individuals with sensory disabilities, this document is available in alternate formats. For information call: (916) 654-6410 or TDD (916) 654-3880 or write Records and Forms Management, 1120 N Street, MS-89, Sacramento, CA 95814.

CONTRACT CHANGE ORDER

Change Requested by: Contractor

CCO: 57 **Suppl. No. 1** **Contract No. 04 – 0120F4** **Road** SF-80-13.2/13.9 **FED. AID LOC.:**

To: **AMERICAN BRIDGE/FLUOR ENTERPRISES INC A JOINT VENTURE**

You are directed to make the following changes from the plans and specifications or do the following described work not included in the plans and specifications for this contract. ***NOTE: This change order is not effective until approved by the Engineer.***

Description of work to be done, estimate of quantities and prices to be paid. (Segregate between additional work at contract price, agreed price and force account.) Unless otherwise stated, rates for rental of equipment cover only such time as equipment is actually used and no allowance will be made for idle time. This last percentage shown is the net accumulated increase or decrease from the original quantity in the Engineer's Estimate.

Perform casting weld repairs for the cable system steel casting components as described in this change order.

Adjustment of Compensation at Lump Sum:

Insert after the fourteenth (14th) paragraph of Section 10-1.60, "Cable System," subsection, "Materials and Fabrication," subsection, "Steel Castings," of the Special Provisions with the following:

Perform casting repairs by welding in accordance with either:

1. American Welding Society (AWS) D1.5 as modified by Section 8-3, "Welding" of these provisions, or
2. 2004 American Society of Mechanical Engineers (ASME) Boiler and Pressure Vessel Code, Section IX (ASME IX), for welding upgrades only, subject to review and approval of the Engineer.

Notify the Engineer at least 24 hours prior to the start of welding.

Submit Welding Procedure Specifications (WPS) qualifications and welder qualifications for upgrades per ASME IX for review and approval. WPS shall comply with ASTM A 488 and ASME IX as modified below:

1. Additional essential variables required for WPS other than SMAW shall include welding travel speed (limited to ±10%), heat input (limited to +10%, -30%), and, for FCAW, the brand name of the electrode.
2. Weld procedures with all supporting Procedure Qualification Records (PQR) shall be submitted in writing to the Engineer for each welding location.

Certified Welding Inspectors (CWI), qualified to the standards of the American Welding Society (AWS) QC1 shall perform visual Inspection. Other nondestructive (NDT) testing personnel shall be qualified to the standards of the American Society of Nondestructive Testing (ASNT) ASNT-TC-1A, (a version dated no earlier than 2001) or an equal, subject to review and approval by the Engineer. The NDT firm's written practice, shall be in accordance with ASNT-TC-1A (version as described previously), or an equal, subject to review and approval by the Engineer. Non-visual inspection shall be by ASNT Level II technicians or Level III personnel certified to act as Level II technicians, or an equal, subject to review and approval by the Engineer.

CONTRACT CHANGE ORDER

Change Requested by: Contractor

CCO: 57 **Suppl. No.** 1 **Contract No.** 04 – 0120F4 **Road** SF-80-13.2/13.9 **FED. AID LOC.:**

This change order resolves cost and time impacts associated with Contractor Request For Information (RFI) No. 1242 and Request for Change Order (RFCO) No. 26.

For this work, the Contractor agrees to perform this work at no additional cost to the Department.

Adjustment of Compensation at Lump Sum Price $0.00

Estimated Cost: Increase ☐ Decrease ☐ $0.00

By reason of this order the time of completion will be adjusted as follows: 0

Submitted by

Signature B Boal **Resident Engineer** Brian Boal for Gary Pursell, Sup.T.E. **Date** 12/18/08

Approval Recommended by

Signature R Morrow **Supervising Bridge Engineer** Richard Morrow, Sup. T.E. **Date** 12/19/08

Engineer Approval by

Signature Gary Pursell **Supervising Transportation Engineer** Gary Pursell, Sup.T.E. **Date** 1/23/09

We the undersigned contractor, have given careful consideration to the change proposed and agree, if this proposal is approved, that we will provide all equipment, furnish the materials, except as otherwise be noted above, and perform all services necessary for the work above specified, and will accept as full payment therefor the prices shown above.

NOTE: If you, the contractor, do not sign acceptance of this order, your attention is directed to the requirements of the specifications as to proceeding with the ordered work and filing a written protest within the time therein specified.

Contractor Acceptance by

Signature Michael D. Flowers **(Print name and title)** Project Director **Date** 1-21-09

STATE OF CALIFORNIA - DEPARTMENT OF TRANSPORTATION

CONTRACT CHANGE ORDER MEMORANDUM

DATE: 1/23/2009 Page 1 of 1

TO: Pete Siegenthaler, Prin. TE / Gary Pursell, P.E., Sup T.E.	FILE: E.A. 04 - 0120F4
FROM: Gary Pursell, P.E., Sup.T.E.	CO-RTE-PM SF-80-13.2/13.9
	FED. NO.
CCO#: 57 SUPPLEMENT#: 1 Category Code: CHSA	CONTINGENCY BALANCE (incl. this change) $134,080,012.40
COST: $0.00 INCREASE ☐ DECREASE ☐	HEADQUARTERS APPROVAL REQUIRED? ☑ YES ☐ NO
SUPPLEMENTAL FUNDS PROVIDED: $0.00	IS THIS REQUEST IN ACCORDANCE WITH ENVIRONMENTAL DOCUMENTS? ☑ YES ☐ NO
CCO DESCRIPTION: Cable Band Casting Welding	**PROJECT DESCRIPTION:** CONSTRUCT SELF-ANCHORED SUSPENSION BRIDGE

Original Contract Time:	Time Adj. This Change:	Previously Approved CCO Time Adjustments:	Percentage Time Adjusted: (including this change)	Total # of Unreconciled Deferred Time CCO(s): (including this change)
2490 Day(s)	0 Day(s)	30 Day(s)	1 %	5

THIS CHANGE ORDER PROVIDES FOR:

Revising Section 10-1.60, "Cable System," subsection, "Materials and Fabrication," subsection, "Steel Castings," of the Special Provisions to allow the Contractor to perform weld repairs in accordance with American Welding Society (AWS) D1.5 or American Society of Mechanical Engineers (ASME) Boiler and Pressure Vessel Code, Section IX. This change applies to cable system steel casting components, which consist of cable bands, cable strand sockets, suspender sockets, split collars, and suspender separators.

This change will incorporate industry standard steel casting weld repair specification into Special Provisions section 10-1.60, "Cable System," subsection, "Steel Castings." The industry standard repair method is already included in Special Provisions section 10-1.59, "Structural Steel," but was inadvertently omitted from the Cable System section. This change also resolves Contractor Request for Information (RFI) 1242 and Request for Change Order (RFCO) 26.

This is a Contractor requested change order. The Contractor agrees to perform this work at no additional cost to the Department. CCO 57S0 was also a Contractor requested change order at no cost. This will result in a cumulative amount of $0.00 for this change order. A detailed cost analysis is on file in the project records.

No time adjustment is warranted, as this change order does not affect the controlling operation.

This change order has concurrence from Gary Pursell (Resident Engineer), Rick Morrow (Sup. Structure Rep), Mike Forner (Principal TE), Patrick Treacy (HQ Oversight), Marwan Nader (Design of Record), Vankatesh Iyer (METS), Project Manager (Ken Terpstra) and Design Oversight (Wenyi Long). Maintenance concurrence is not required for this change.

The Resident Engineer received an Issue and Approve from Division of Construction for this change on 12/22/08.

CONCURRED BY:			
Construction Engineer:	Res. Eng., Gary Pursell, Sup. TE	Date	8/5/08
Bridge Engineer:	Struct Rep, Rick Morrow, Sup TE	Date	8/5/08
Project Engineer:	Design of Record, Marwan Nader,	Date	10/14/08
Project Manager:	Proj Manager, Ken Terpstra	Date	9/8/08
FHWA Rep.:	CT Oversight, Wenyi Long, P.E.	Date	10/14/08
Environmental:	PCE, Mike Forner, Prin TE	Date	8/11/08
Other (specify):	HQ, Patrick Treacy	Date	8/5/08
Other (specify):	HQ METS, Vanketesh Iyer, PhD	Date	10/15/08
District Prior Approval By:		Date	
HQ (Issue Approve) By:	HQ Bob Molera	Date	12/22/08
Resident Engineer's Signature: Gary Pursell		Date	1/23/09

ESTIMATE OF COST	THIS REQUEST	TOTAL TO DATE
ITEMS	$0.00	$0.00
FORCE ACCOUNT	$0.00	$0.00
AGREED PRICE	$0.00	$0.00
ADJUSTMENT	$0.00	$0.00
TOTAL	$0.00	$0.00

FEDERAL PARTICIPATION

☐ PARTICIPATING ☐ PARTICIPATING IN PART ☑ NONE
☐ NON-PARTICIPATING (MAINTENANCE) ☐ NON-PARTICIPATING

FEDERAL SEGREGATION (if more than one Funding Source or P.I.P. type)
☐ CCO FUNDED PER CONTRACT ☐ CCO FUNDED AS FOLLOWS

FEDERAL FUNDING SOURCE	PERCENT

ADA Notice: For individuals with sensory disabilities, this document is available in alternate formats. For information call: (916) 654-6410 or TDD (916) 654-3880 or write Records and Forms Management, 1120 N Street, MS-89, Sacramento, CA 95814.

STATE OF CALIFORNIA - DEPARTMENT OF TRANSPORTATION

CONTRACT CHANGE ORDER

Change Requested by: Engineer

CCO: 58 | Suppl. No. 0 | Contract No. 04 - 0120F4 | Road SF-80-13.2/13.9 | FED. AID LOC.:

To: AMERICAN BRIDGE/FLUOR ENTERPRISES INC A JOINT VENT

You are directed to make the following changes from the plans and specifications or do the following described work not included in the plans and specifications for this contract. ***NOTE: This change order is not effective until approved by the Engineer.***

Description of work to be done, estimate of quantities and prices to be paid. (Segregate between additional work at contract price, agreed price and force account.) Unless otherwise stated, rates for rental of equipment cover only such time as equipment is actually used and no allowance will be made for idle time. This last percentage shown is the net accumulated increase or decrease from the original quantity in the Engineer's Estimate.

Allow "Check Testing" of steel plate samples at local facility in lieu of shipping samples to Transportation Laboratory in Sacramento, California.

Adjustment of Compensation at Lump Sum:

Revise the first sentence of the sixth paragraph in Section 10-1.59 STEEL STRUCTURES, subsection "CHECK TESTING" as shown below:

From: "Check samples shall be delivered to the Transportation Laboratory at the Contractor's expense"

To: "Check samples shall be delivered to the Transportation Laboratory or a local facility as directed by the Engineer at the Contractor's expense."

For this work, the Contractor will credit the Department the sum of ($80,000.00). This price constitutes full compensation, including all markups, for the work of this change.

Cost of Adjustment of Compensation at Lump Sum .....($80,000.00)

Estimated Cost: Increase ☐ Decrease ☑ **($80,000.00)**

By reason of this order the time of completion will be adjusted as follows: 0 days

Submitted by

Signature	Resident Engineer	Date
Kamil Galen	for Brian Boal for ary Pursell, Sup.T.E.	5-19-09

Approval Recommended by

Signature	Supervising Bridge Engineer	Date
RC Morrow	Richard Morrow, Sup. BE	5/19/09

Engineer Approval by

Signature	Supervising Transportation Engineer	Date
Gary Pursell	Gary Pursell, Sup. TE	6/23/09

We the undersigned contractor, have given careful consideration to the change proposed and agree, if this proposal is approved, that we will provide all equipment, furnish the materials, except as may otherwise be noted above, and perform all services necessary for the work above specified, and will accept as full payment therefor the prices shown above.

NOTE: If you, the contractor, do not sign acceptance of this order, your attention is directed to the requirements of the specifications as to proceeding with the ordered work and filing a written protest within the time therein specified.

Contractor Acceptance by

Signature	(Print name and title)	Date
Michael D. Flavell	Michael D. Flavell Project Director	6/22/09

STATE OF CALIFORNIA - DEPARTMENT OF TRANSPORTATION

CONTRACT CHANGE ORDER MEMORANDUM

DATE: 6/23/2009 Page 1 of 1

TO: Pete Siegenthaler, Prin. TE / Gary Pursell, P.E., Sup T.E.

FROM: Gary Pursell, Sup.TE

FILE: E.A. 04 - 0120F4
CO-RTE-PM SF-80-13.2/13.9
FED. NO.

CCO#: 58 SUPPLEMENT#: 0 Category Code: CFSA

CONTINGENCY BALANCE (incl. this change) $66,520,081.40

COST: ($80,000.00) INCREASE ☐ DECREASE ☑

HEADQUARTERS APPROVAL REQUIRED? ☑ YES ☐ NO

SUPPLEMENTAL FUNDS PROVIDED: $0.00

IS THIS REQUEST IN ACCORDANCE WITH ENVIRONMENTAL DOCUMENTS? ☑ YES ☐ NO

CCO DESCRIPTION:
Shipping Check Samples

PROJECT DESCRIPTION:
CONSTRUCT SELF-ANCHORED SUSPENSION BRIDGE

Original Contract Time:	Time Adj. This Change:	Previously Approved CCO Time Adjustments:	Percentage Time Adjusted: (including this change)	Total # of Unreconciled Deferred Time CCO(s): (including this change)
2490 Day(s)	0 Day(s)	150 Day(s)	6 %	6

THIS CHANGE ORDER PROVIDES FOR:

Allowing "Check Testing" of steel plates to be performed locally in lieu of shipping samples to the Transportation Laboratory in Sacramento California.

This change Revises the first sentence of the sixth paragraph in Section 10-1.59 STEEL STRUCTURES, subsection "CHECK TESTING" from "Check samples shall be delivered to the Transportation Laboratory at the Contractor's expense" to "Check samples shall be delivered to the Transportation Laboratory or a local facility as directed by the Engineer at the Contractor's expense."

Special Provisions require the Contractor to ship steel plate check samples to the Transportation Laboratory in Sacramento. The Department has determined that the sample testing will be performed locally in China to obtain results in a timely manner. A saving of $80,000.00 will be realized by this change, which will be returned to the contingency fund. A detailed cost analysis is on file.

The change does not impact the critical path, therefore a time adjustment is not warranted.

This change order has concurrence from Gary Pursell (Resident Engineer), Rick Morrow (Sup. Structure Rep), Mike Forner (Principal TE), Patrick Treacy (HQ Oversight), Sang Le (HQ METS) and Ken Terpstra (Project Manager).

This change order originally received a Division of Construction Issue and Approve on April 16, 2009 and a Request for Information on May 20, 2009 (copies attached). The information requested has been resolved and the Engineer received a revised Issue and Approve (I&A) on June 18, 2009.

CONCURRED BY:

Construction Engineer:	Res. Eng., Gary Pursell, Sup. TE	Date	4/4/08
Bridge Engineer:	Struct Rep, Rick Morrow, Sup TE	Date	4/4/08
Project Engineer:		Date	
Project Manager:	Proj Manager, Ken Terpstra	Date	6/30/08
FHWA Rep.:		Date	
Environmental:	HQ METS, Sang Le	Date	6/11/09
Other (specify):	PCE, Michael Forner	Date	4/4/08
Other (specify):	HQ, Patrick Treacy	Date	4/4/08
District Prior Approval By:		Date	
HQ (Issue Approve) By:	HQ, Bob Molera	Date	6/18/09
Resident Engineer's Signature:	Gary Pursell	Date	6/23/09

ESTIMATE OF COST

	THIS REQUEST	TOTAL TO DATE
ITEMS	$0.00	$0.00
FORCE ACCOUNT	$0.00	$0.00
AGREED PRICE	$0.00	$0.00
ADJUSTMENT	($80,000.00)	($80,000.00)
TOTAL	($80,000.00)	($80,000.00)

FEDERAL PARTICIPATION

☐ PARTICIPATING ☐ PARTICIPATING IN PART ☑ NONE
☐ NON-PARTICIPATING (MAINTENANCE) ☐ NON-PARTICIPATING

FEDERAL SEGREGATION (if more than one Funding Source or P.I.P. type)
☐ CCO FUNDED PER CONTRACT ☐ CCO FUNDED AS FOLLOWS

FEDERAL FUNDING SOURCE	PERCENT

ADA Notice: For individuals with sensory disabilities, this document is available in alternate formats. For information call: (916) 654-6410 or TDD (916) 654-3880 or write Records and Forms Management, 1120 N Street, MS-89, Sacramento, CA 95814.

CONTRACT CHANGE ORDER

Change Requested by: Engineer

CCO: 59 **Suppl. No.** 0 **Contract No.** 04 – 0120F4 **Road** SF-80-13.2/13.9 **FED. AID LOC.:**

To: **AMERICAN BRIDGE/FLUOR ENTERPRISES INC A JOINT VENTURE**

You are directed to make the following changes from the plans and specifications or do the following described work not included in the plans and specifications for this contract. ***NOTE: This change order is not effective until approved by the Engineer.***

Description of work to be done, estimate of quantities and prices to be paid. (Segregate between additional work at contract price, agreed price and force account.) Unless otherwise stated, rates for rental of equipment cover only such time as equipment is actually used and no allowance will be made for idle time. This last percentage shown is the net accumulated increase or decrease from the original quantity in the Engineer's Estimate.

Adjustment of Compensation at Lump Sum Price:

ITEM 1.

Provide one hundred seventy eight (178) additional penetrations in the Orthotropic Box Girder (OBG), as listed in sheets two (2) through twelve (11) of this change order.

For this work, the contractor will be paid the sum of $54,014.00. This sum constitutes full compensation, including markups, for this change.

Adjustment of Compensation at Lump Sum Price..... $54,014.00

ITEM 2.

The items identified above in this change order have been paid as part of CCO 108 resolution. Therefore, the amount due under this change order will be adjusted by the amount paid under CCO 108 to prevent a double payment. Total amount paid under CCO 108, and to be credited to this change, is $54,014.00.

Adjustment of Compensation at Lump Sum Price..... <$54,014.00>

CHANGE ORDER COST AND TIME SUMMARY

(ITEM 1) Adjustment of Compensation for work pursuant to this change order	$54,014.00
(ITEM 2) Amount paid under CCO 108 for this change order	<$54,014.00>
Total net pay for this change order	$0.00

Contract time is not addressed in CCO 108 for work identified in this change order. Therefore, consideration of a time adjustment will be deferred until completion of the work specified herein. Determination of a commensurate time adjustment will be made in accordance with Section 10-1.13, "PROGRESS SCHEDULE (CRITICAL PATH METHOD)" and Section 10-1.14, "TIME-RELATED OVERHEAD" of the Special Provisions, as well as Section 8-1.07, "LIQUIDATED DAMAGES", of the Standard Specifications.

Estimated Cost: **Increase** ☐ **Decrease** ☐ **$0.00**

By reason of this order the time of completion will be adjusted as follows: **Differed**

Submitted by

Signature N. R **Resident Engineer** Bill Shedd for Gary Pursell, Sup.T.E. **Date** 6-2-10

Approval Recommended by

Signature Gary Pursell **Supervising Transportation Engineer** Gary Pursell, Sup.T.E. **Date** 6/2/10

Engineer Approval by

Signature Gary Pursell **Supervising Transportation Engineer** Gary Pursell, Sup.T.E. **Date** 6/30/10

We the undersigned contractor, have given careful consideration to the change proposed and agree, if this proposal is approved, that we will provide all equipment, furnish the materials, except as otherwise be noted above, and perform all services necessary for the work above specified, and will accept as full payment therefor the prices shown above.

NOTE: If you, the contractor, do not sign acceptance of this order, your attention is directed to the requirements of the specifications as to proceeding with the ordered work and filing a written protest within the time therein specified.

Contractor Acceptance by

Signature Michael O. Flowers **(Print name and title)** Michael O. Flowers Project Director **Date** 6-29-10

OBG-MEP PENETRATIONS EASTBOUND DECK

PIPE SLEEVE LOCATIONS

ADJACENT PANEL POINT	UPSTREAM OFFSET FROM PANELPOINT (mm)	PIPE NOMINAL SIZE	HOLE SIZE	PLATE THICKNESS	PURPOSE	SUB-ASSEMBLY DWG. NO.	Segment Location	PART DWG. NO.	Sub 952 OBG Penetration Layout / DWG. NO.
EASTBOUND DECK - NORTH SIDE (all penetrations are centered 1235mm from control line E5, per RFI-217R2, except as noted) ***TYPE 10 PLATES***									
11	3450	64	75	20	Future(AP)	DP 728	1BE	PL 1563	MEP P1
13	3380	64	75	20	Future(AP)	DP 729	2AE	PL 1564	MEP P1
17	3450	64	75	20	Future(AP)	DP 730	2BE	PL 1566	MEP P2
25	3450	64	75	20	Future(AP)	DP 36	4AE	PL 24	MEP P3
30	1850	64	75	20	Future(AP)	DP 629	5AE	PL 1126	MEP P3
37	1850	64	75	20	Future(AP)	DP 516	6AE	PL 840	MEP P4
43	3450	64	75	20	Future(AP)	DP 518	6CE	PL 843	MEP P5
50	1850	64	75	20	Future(AP)	DP 655A	7BE	PL 1302A	MEP P6
54	3450	64	75	20	Future(AP)	DP 656A	7CE	PL 1303	MEP P6
61	3450	64	75	20	Future(AP)	DP 659	8AE	PL 1306	MEP P7
66	3450	64	75	20	Future(AP)	DP 660A	8BE	PL 1308	MEP P8
72	1850	64	75	20	Future(AP)	DP 696	9AE	PL 1311	MEP P9
78	3450	64	75	20	Future(AP)	DP 698A	9CE	PL 1313	MEP P9
84	1850	64	75	20	Future(AP)	DP 700A	9EE	PL 1315	MEP P10
88	2020	64	75	20	Future(AP)	DP 702	10BE	PL 1317	MEP P11
90	3450	64	75	20	Future(AP)	DP 702A	10BE	PL 1318	MEP P11
96	3450	64	75	20	Future(AP)	DP 704A	11AE	PL 1320	MEP P12
97	3180	64	75	20	Future(AP)	DP 704A	11AE	PL 1320	MEP P12
97	3380	64	75	20	Future(AP)	DP 704A	11AE	PL 1320	MEP P12
105	3450	64	75	20	Future(AP)	DP 707	11DE	PL 1323	MEP P13
108	2000	64	75	20	Future(AP)	DP 708	11EE	PL 1324	MEP P13
108	2200	64	75	20	Future(AP)	DP 708	11EE	PL 1324	MEP P13
116	1850	64	75	20	Future(AP)	DP 3023A	12CE	PL 3023	MEP P14
122	4072	64	75	20	Future(AP)	DP3098	13CE	PL 3194	TBD

ADJACENT PANEL POINT	UPSTREAM OFFSET FROM PANELPOINT (mm)	PIPE NOMINAL SIZE	HOLE SIZE	PLATE THICKNESS	PURPOSE	SUB-ASSEMBLY DWG. NO.	Segment Location	PART DWG. NO.	Sub 952 OBG Penetration Layout / DWG. NO.
EASTBOUND DECK - SOUTH SIDE (all penetrations are centered 1349mm from control line E2, per RFI-217R2) **TYPE 2 PLATES**									
10	650	64	75	20	Future(AP)	DP 737	1AE	PL 1459	MEP P1
10	950	64	75	20	Future(AP)	DP 731	1BE	PL 1567	MEP P1
11	3450	64	75	20	Future(AP)	DP 731	1BE	PL 1567	MEP P1
17	3450	64	75	20	Future(AP)	DP 733	2BE	PL 1570	MEP P2
25	4350	64	75	20	Future(AP)	DP 46	4BE	PL 30	MEP P3
29	3450	64	75	20	Future(AP)	DP 632	5AE	PL 1135	MEP P3
35	3450	64	75	20	Future(AP)	DP 634	5CE	PL 1140	MEP P4
43	3450	64	75	20	Future(AP)	DP 637	6CE	PL 1164	MEP P5
47	4350	64	75	20	Future(AP)	DP 662	7AE	PL 1370	MEP P5
53	3450	64	75	20	Future(AP)	DP 664	7CE	PL 1372	MEP P6
59	3450	64	75	20	Future(AP)	DP 666	7EE	PL 1374	MEP P7
65	3450	64	75	20	Future(AP)	DP 668	8BE	PL 1377	MEP P8
71	3450	76	91	20	Future(AP)	DP 709	9AE	PL 1380	MEP P8
77	3450	64	75	20	Future(AP)	DP 711	9CE	PL 1382	MEP P9
83	3450	64	75	20	Future(AP)	DP 713	9EE	PL 1384	MEP P10
89	3450	64	75	20	Future(AP)	DP 715	10BE	PL 1386	MEP P11
95	3450	64	75	20	Future(AP)	DP 717	11AE	PL 1389	MEP P11
107	3450	64	75	20	Future(AP)	DP 721	11EE	PL 1393	MEP P13
113	950	64	75	20	Future(AP)	DP 3022*	12BE	PL 3022	MEP P14
115	950	64	75	20	Future(AP)	DP 3033	12CE	PL 3033*	MEP P14
117	3988	64	75	20	Future(AP)	DP 3082	13AE	PL 3178	MEP P14
117	4288	64	75	20	Future(AP)	DP 3082	13AE	PL 3178	MEP P14
123.5	1583	64	75	20	Future(AP)	DP3108	13CE	PL 3204A	TBD

OBG-MEP PENETRATIONS WESTBOUND DECK

PIPE SLEEVE LOCATIONS

ADJACENT PANEL POINT	UPSTREAM OFFSET FROM PANELPOINT (mm)	PIPE NOMINAL SIZE	HOLE SIZE	PLATE THICKNESS	PURPOSE	SUB-ASSEMBLY DWG. NO.	Segment Location	PART DWG. NO.	Sub 952 OBG Penetration Layout / DWG. NO.
WESTBOUND DECK - NORTH SIDE (all penetrations are centered 1235mm from control line W2, per RFI-217R2) TYPE 2 PLATES									
10	650	64	75	20	Future(AP)	DP 734	1AW	PL 1456	MEP P15
10	950	64	75	20	Future(AP)	DP 722	1BW	PL 1555	MEP P15
11	3450	64	75	20	Future(AP)	DP 722	1BW	PL 1555	MEP P15
17	3450	64	75	20	Future(AP)	DP 724	2BW	PL 1558	MEP P16
25	3450	64	75	20	Future(AP)	DP 33	4AW	PL 17	MEP P17
29	3450	64	75	20	Future(AP)	DP 620	5AW	PL 1109	MEP P17
35	3450	64	75	20	Future(AP)	DP 622	5CW	PL 1114	MEP P18
41	3450	64	75	20	Future(AP)	DP 624	6BW	PL 1148	MEP P19
47	3450	64	75	20	Future(AP)	DP 638	7AW	PL 1169	MEP P19
53	3450	64	75	20	Future(AP)	DP 640	7CW	PL 1171	MEP P20
59	3450	64	75	20	Future(AP)	DP 642	7EW	PL 1173	MEP P21
65	3450	64	75	20	Future(AP)	DP 644	8BW	PL 1176	MEP P22
71	3450	64	75	20	Future(AP)	DP 670	9AW	PL 1179	MEP P22
77	3450	64	75	20	Future(AP)	DP 672	9CW	PL 1181	MEP P23
83	3450	64	75	20	Future(AP)	DP 674	9EW	PL 1183	MEP P24
89	3450	64	75	20	Future(AP)	DP 676	10BW	PL 1185	MEP P25
95	3450	64	75	20	Future(AP)	DP 678	11AW	PL 1188	MEP P25
101	3450	64	75	20	Future(AP)	DP 680	11CW	PL 1190	MEP P26
107	3450	64	75	20	Future(AP)	DP 682	11EW	PL 1192	MEP P27
113	3450	64	75	20	Future(AP)	DP 3060	12BW	PL 3123	MEP P28
117	3179	64	75	20	Future(AP)	DP 3126	13AW	PL 3322	MEP P28
117	3479	64	75	20	Future(AP)	DP 3126	13AW	PL 3322	MEP P28
121	1726	64	75	20	Future(AP)	DP 3139	13BW	PL 3335	TBD
124	1726	64	75	20	Future(AP)	DP3153	13CW	PL 3349	TBD

ADJACENT PANEL POINT	UPSTREAM OFFSET FROM PANELPOINT (mm)	PIPE NOMINAL SIZE	HOLE SIZE	PLATE THICKNESS	PURPOSE	SUB-ASSEMBLY DWG. NO.	Segment Location	PART DWG. NO.	Sub 952 OBG Penetration Layout / DWG. NO.
WESTBOUND DECK - SOUTH SIDE (all penetrations are centered 1349mm from control line W5, per RFI-217R2, except as noted) ***TYPE 10 PLATES***									
11	3450	64	75	20	Future(AP)	DP 725	1BW	PL 1559	MEP P15
13	3380	64	75	20	Future(AP)	DP 726	2AW	PL 1560	MEP P15
17	3450	64	75	20	Future(AP)	DP 727	2BW	PL 1562	MEP P16
25	3450	64	75	20	Future(AP)	DP 35	4AW	PL 23	MEP P17
29	3450	64	75	20	Future(AP)	DP 626	5AW	PL 1117	MEP P17
37	3450	64	75	20	Future(AP)	DP 513	6AW	PL 835	MEP P18
41	3450	64	75	20	Future(AP)	DP 514	6BW	PL 837	MEP P19
47	3450	64	75	20	Future(AP)	DP 646	7AW	PL 1232	MEP P19
53	3450	64	75	20	Future(AP)	DP 648A	7CW	PL 1234	MEP P20
59	3450	64	75	20	Future(AP)	DP 650	7EW	PL 1236	MEP P21
65	3450	64	75	20	Future(AP)	DP 652A	8BW	PL 1239	MEP P22
71	3450	64	75	20	Future(AP)	DP 683	9AW	PL 1242	MEP P22
77	3450	64	75	20	Future(AP)	DP 685A	9CW	PL 1244	MEP P23
83	3450	64	75	20	Future(AP)	DP 687A	9EW	PL 1246	MEP P24
88	2020	64	75	20	Futue(AP)	DP 689	10BW	PL 1248	MEP P25
89	3450	64	75	20	Futue(AP)	DP 689	10BW	PL 1248	MEP P25
95	3450	64	75	20	Future(AP)	DP 691	11AW	PL 1251	MEP P25
97	3180	64	75	20	Future(AP)	DP 691A	11AW	PL 1251	MEP P26
97	3380	64	75	20	Future(AP)	DP 691A	11AW	PL 1251	MEP P26
101	3450	64	75	20	Future(AP)	DP 693	11CW	PL 1253	MEP P26
107	3450	64	75	20	Future(AP)	DP 695	11EW	PL 1255	MEP P27
108	2000	64	75	20	Future(AP)	DP 695	11EW	PL 1255	MEP P27
108	2200	64	75	20	Future(AP)	DP 695	11EW	PL 1255	MEP P27
113	3450	64	75	20	Future(AP)	DP 3050	12BW	PL 3113	MEP P28
120	1800	64	75	20	Future(AP)	DP 3129	13BW	PL 3325	TBD
120	2000	64	75	20	Future(AP)	DP 3129	13BW	PL 3325	TBD
121	700	64	75	20	Future(AP)	DP 3129	13BW	PL 3325	TBD
124	700	64	75	20	Future (AP)	DP 3142	13CW	PL 3338A	TBD

OBG-MEP PENETRATIONS INTERIOR SHEAR PLATES

PIPE SLEEVE LOCATIONS

ADJACENT PANEL POINT	UPSTREAM OFFSET FROM PANELPOINT (mm)	PIPE NOMINAL SIZE	HOLE SIZE	PLATE THICKNESS	PURPOSE	SUB-ASSEMBLY DWG. NO.	Segment Location	PART DWG. NO.	Sub 952 OBG Penetration Layout / DWG. NO.
EASTBOUND OBG - SOUTH SIDE (all penetrations are centered 400mm from top of plate D6 except as noted in comment block) ***OBG INTERIOR SHEAR PLATE {E3 LINE}***									
10	1550	64	75	18	Future(AP)	LD 30	1BE		MEP SV 1
10	1850	64	75	18	Future(AP)	LD 30	1BE		MEP SV 1
11	4050	64	75	18	Future(AP)	LD 30	1BE		MEP SV 1
113	650	64	75	18	Future(AP)	LD 3010	12BE	X 3122	MEP SV3
115	3150	64	75	18	Future(AP)	LD 3012	12CE	X 3130	MEP SV3
117	3988	64	75	18	Future(AP)	LD 3026	13AE	X 3453	MEP SV3
117	4288	64	75	18	Future(AP)	LD 3026	13AE	X 3453	MEP SV3
123	4250	64	75	18	Future(AP)	L 3037H	13CE	X 3687	TBD

ADJACENT PANEL POINT	UPSTREAM OFFSET FROM PANELPOINT (mm)	PIPE NOMINAL SIZE	HOLE SIZE	PLATE THICKNESS	PURPOSE	SUB-ASSEMBLY DWG. NO.	Segment Location	PART DWG. NO.	Sub 952 OBG Penetration Layout / DWG. NO.
EASTBOUND OBG - NORTH SIDE (all penetrations are centered 400mm from top of plate D6) ***OBG INTERIOR SHEAR PLATE {E4 LINE}***									
11	4050	64	75	18	Future(AP)	LD29	1BE		MEP SV1
13	4575	64	75	18	Future(AP)	LD 33	2AE		MEP SV1
116	1850	64	75	18	Future(AP)	LD 3011A	12CE	X 3131	MEP SV3
122	4243	64	75	18	Future(AP)	L3037E	13CE	X 3689	TBD

ADJACENT PANEL POINT	UPSTREAM OFFSET FROM PANELPOINT (mm)	PIPE NOMINAL SIZE	HOLE SIZE	PLATE THICKNESS	PURPOSE	SUB-ASSEMBLY DWG. NO.	Segment Location	PART DWG. NO.	Sub 952 OBG Penetration Layout / DWG. NO.
WESTBOUND OBG - SOUTH SIDE (all penetrations are centered 400mm from top of plate D6) ***OBG INTERIOR SHEAR PLATE {W4 LINE}***									
11	4050	64	75	18	Future(AP)	LD 28	1BW	X 3079	MEP SV 2
13	4575	64	75	18	Future(AP)	LD 32	2AW		MEP SV2
113	3450	64	75	18	Future(AP)	LD 3022	12BW	X3224	MEP SV4
120	1800	64	75	18	Future(AP)	LD3032	13BW	X 4107	TBD
120	2000	64	75	18	Future(AP)	LD3032	13BW	X 4107	TBD
121	700	64	75	18	Future(AP)	LD3032	13BW	X 4108	TBD
124	700	64	75	18	Future(AP)	LD3033A	13CW	X 4119	TBD

ADJACENT PANEL POINT	UPSTREAM OFFSET FROM PANELPOINT (mm)	PIPE NOMINAL SIZE	HOLE SIZE	PLATE THICKNESS	PURPOSE	SUB-ASSEMBLY DWG. NO.	Segment Location	PART DWG. NO.	Sub 952 OBG Penetration Layout / DWG. NO.
WESTBOUND OBG - NORTH SIDE (all penetrations are centered 400mm from top of plate D6) ***OBG INTERIOR SHEAR PLATE {W3 LINE}***									
10	1550	64	75	18	Future(AP)	LD 27	1BW		MEP SV 2
10	1850	64	75	18	Future(AP)	LD 27	1BW		MEP SV 2
11	4000	64	75	18	Future(AP)	LD 27	1BW		MEP SV 2
113	3450	64	75	18	Future(AP)	LD 3021	12BW	X3224	MEP SV4
117	3150	64	75	18	Future(AP)	LD3034	13AW	X 3757	MEP SV4
117	3450	64	75	18	Future(AP)	LD3034	13AW	X 3757	MEP SV4
121	1726	64	75	18	Future(AP)	LD3035	13BW	X 4110	TBD
124	1726	64	75	18	Future(AP)	LD3036A	13CW	X 4144	TBD

OBG-MEP PENETRATIONS BOTTOM PLATES

PIPE SLEEVE LOCATIONS

ADJACENT PANEL POINT	UPSTREAM OFFSET FROM PANELPOINT (mm)	PIPE NOMINAL SIZE	HOLE SIZE	PLATE THICKNESS	PURPOSE	SUB-ASSEMBLY DWG. NO.	Segment Location	PART DWG. NO.	Sub 952 OBG Penetration Layout / DWG. NO.
EASTBOUND OBG - NORTHSIDE - Bottom plate D6 (2945mm) ***(all penetrations are centered 1197mm off E4 line) {E4 LINE}***									
10	500	102	116	35	Future(AP)	BP 314	1AE	PL 1453	MEP DP1

ADJACENT PANEL POINT	UPSTREAM OFFSET FROM PANELPOINT (mm)	PIPE NOMINAL SIZE	HOLE SIZE	PLATE THICKNESS	PURPOSE	SUB-ASSEMBLY DWG. NO.	Segment Location	PART DWG. NO.	Sub 952 OBG Penetration Layout / DWG. NO.
EASTBOUND OBG - NORTHSIDE - Bottom plate D6 (2945mm) ***(all penetrations are centered 2132mm off E4 line) {E4 LINE}***									
10	500	102	116	35	Future(AP)	BP 314	1AE	PL 1453	MEP DP1

ADJACENT PANEL POINT	UPSTREAM OFFSET FROM PANELPOINT (mm)	PIPE NOMINAL SIZE	HOLE SIZE	PLATE THICKNESS	PURPOSE	SUB-ASSEMBLY DWG. NO.	Segment Location	PART DWG. NO.	Sub 952 OBG Penetration Layout / DWG. NO.
WESTBOUND OBG - CENTER - Bottom plate D6 (2610mm) ***(all penetrations are centered 813mm North off W line) {W LINE}***									
9	4500	102	116	35	Future(AP)	BP 309	1AW	PL1448	MEP DP15

ADJACENT PANEL POINT	UPSTREAM OFFSET FROM PANELPOINT (mm)	PIPE NOMINAL SIZE	HOLE SIZE	PLATE THICKNESS	PURPOSE	SUB-ASSEMBLY DWG. NO.	Segment Location	PART DWG. NO.	Sub 952 OBG Penetration Layout / DWG. NO.
WESTBOUND OBG - CENTER - Bottom plate D6 (2610mm) ***(all penetrations are centered 927mm South off W line) {W LINE}***									
9	4500	102	116	35	Future(AP)	BP 309	1AW	PL1448	MEP DP15

ADJACENT PANEL POINT	UPSTREAM OFFSET FROM PANELPOINT (mm)	PIPE NOMINAL SIZE	HOLE SIZE	PLATE THICKNESS	PURPOSE	SUB-ASSEMBLY DWG. NO.	Segment Location	PART DWG. NO.	Sub 952 OBG Penetration Layout / DWG. NO.
EASTBOUND OBG - NORTHSIDE - Bottom plate D6 (2945mm) ***(all penetrations are centered 2591mm off E4 line) {E4 LINE}***									
119	4600	76	91	35	Future(AP)	BP 3033	13AE	PL 3218B	MEP DP14

ADJACENT PANEL POINT	UPSTREAM OFFSET FROM PANELPOINT (mm)	PIPE NOMINAL SIZE	HOLE SIZE	PLATE THICKNESS	PURPOSE	SUB-ASSEMBLY DWG. NO.	Segment Location	PART DWG. NO.	Sub 952 OBG Penetration Layout / DWG. NO.
EASTBOUND OBG - SOUTHSIDE - Bottom plate D6 (2945mm) ***(all penetrations are centered 1123mm off E3 line) {E3 LINE}***									
119	4600	102	116	35	Future(AP)	BP 3033	13AE	PL 3220B	MEP DP14
EASTBOUND OBG - SOUTHSIDE - Bottom plate D6 (2945mm) ***(all penetrations are centered 2128mm off E3 line) {E3 LINE}***									
119	4850	102	116	35	Future(AP)	BP 3033	13AE	PL 3220B	MEP DP14

ADJACENT PANEL POINT	UPSTREAM OFFSET FROM PANELPOINT (mm)	PIPE NOMINAL SIZE	HOLE SIZE	PLATE THICKNESS	PURPOSE	SUB-ASSEMBLY DWG. NO.	Segment Location	PART DWG. NO.	Sub 952 OBG Penetration Layout / DWG. NO.
WESTBOUND OBG - NORTHSIDE - Bottom plate D6 (2945mm) ***(all penetrations are centered 2591mm off E4 line) {E3 LINE}***									
119	4600	76	91	35	Future(AP)	L 3045H	13AW	PL3364B	MEP DP28

ADJACENT PANEL POINT	UPSTREAM OFFSET FROM PANELPOINT (mm)	PIPE NOMINAL SIZE	HOLE SIZE	PLATE THICKNESS	PURPOSE	SUB-ASSEMBLY DWG. NO.	DWG. REVISION OR DRAWN DATE	PART DWG. NO.	Sub 952 OBG Penetration Layout / DWG. NO.
WESTBOUND OBG - SOUTHSIDE - Bottom plate D6 (2945mm) ***(all penetrations are centered 1123mm off W4 line) {W4 LINE}***									
119	4600	102	116	35	Future(AP)	L 3045G	13AW	PL3362B	MEP DP28
WESTBOUND OBG - SOUTHSIDE - Bottom plate D6 (2945mm) (all penetrations are centered 2128mm off W4 line) {W4 LINE}									
119	4850	102	116	35	Future(AP)	L 3045G	13AW	PL3362B	MEP DP28

OBG-MEP PENETRATIONS SIDE PLATES

PIPE SLEEVE LOCATIONS

ADJACENT PANEL POINT	OFFSET FROM PANELPOINT (mm)	PIPE NOMINAL SIZE	HOLE SIZE	PLATE THICKNESS	PURPOSE	CONDUIT NUMBER	SUB-ASSEMBLY DWG. NO.	Segment Location	PART DWG. NO.	Sub 952 OBG Penetration Layout / DWG. NO.
EASTBOUND - NORTH SIDE Sideplate E7 (2550mm) @ Crossbeams with service platforms. (Centerline of doubler plate with 14 penetrations is located 1650mm east of PP at start of crossbeam between the first and third stiffiner towards E4) (3355mm from E4)										
14	2550	127mm	144	20	Platform Feed	Future(AP)	SP 300	2AE	PL 1548	MEP DP1
14	2550	127mm	144	20	Platform Feed	Future(AP)	SP 300	2AE	PL 1548	MEP DP1
14	750	127mm	144	20	Platform Feed	Future(AP)	SP 300	2AE	PL 1548	MEP DP1
14	750	127mm	144	20	Platform Feed	Future(AP)	SP 300	2AE	PL 1548	MEP DP1
32	2550	127mm	144	16	Platform Feed	Future(AP)	SP 562	5BE	PL 993	MEP DP4
32	2550	127mm	144	16	Platform Feed	Future(AP)	SP 562	5BE	PL 993	MEP DP4
32	750	127mm	144	16	Platform Feed	Future(AP)	SP 562	5BE	PL 993	MEP DP4
32	750	127mm	144	16	Platform Feed	Future(AP)	SP 562	5BE	PL 993	MEP DP4
50	1650	127mm	144	16	Platform Feed	Future(AP)	SP 571	7BE	PL 1020	MEP DP6
50	1650	127mm	144	16	Platform Feed	Future(AP)	SP 571	7BE	PL 1020	MEP DP6
50	750	127mm	144	16	Platform Feed	Future(AP)	SP 571	7BE	PL 1020	MEP DP6
50	750	127mm	144	16	Platform Feed	Future(AP)	SP 571	7BE	PL 1020	MEP DP6
80	1650	127mm	144	16	Platform Feed	Future(AP)	SP 586	9DE	PL 1065	MEP DP10
80	1650	127mm	144	16	Platform Feed	Future(AP)	SP 586	9DE	PL 1065	MEP DP10
80	750	127mm	144	16	Platform Feed	Future(AP)	SP 586	9DE	PL 1065	MEP DP10
80	750	127mm	144	16	Platform Feed	Future(AP)	SP 586	9DE	PL 1065	MEP DP10
110	1650	127mm	144	16	Platform Feed	Future(AP)	SP 3003A	12AE	PL 3051	MEP DP13
110	1650	127mm	144	16	Platform Feed	Future(AP)	SP 3003A	12AE	PL 3051	MEP DP13
110	750	127mm	144	16	Platform Feed	Future(AP)	SP 3003A	12AE	PL 3051	MEP DP13
110	750	127mm	144	16	Platform Feed	Future(AP)	SP 3003A	12AE	PL 3051	MEP DP13

ADJACENT PANEL POINT	OFFSET FROM PANELPOINT (mm)	PIPE NOMINAL SIZE	HOLE SIZE	PLATE THICKNESS	PURPOSE	CONDUIT NUMBER	SUB-ASSEMBLY DWG. NO.	Segment Location	PART DWG. NO.	Sub 952 OBG Penetration Layout / DWG. NO.
WESTBOUND - SOUTH SIDE Sideplate E8 (Centered between the two stiffeners)										
41	2950	51	62		GND	N/A	SP 83	6BW	PL 850	MEP DP19
41	3200	51	62		GND	N/A	SP 83	6BW	PL 850	MEP DP19

ADJACENT PANEL POINT	OFFSET FROM PANELPOINT (mm)	PIPE NOMINAL SIZE	HOLE SIZE	PLATE THICKNESS	PURPOSE	CONDUIT NUMBER	SUB-ASSEMBLY DWG. NO.	Segment Location	PART DWG. NO.	Sub 952 OBG Penetration Layout / DWG. NO.
WESTBOUND - SOUTH SIDE Sideplate E7 (2550mm) @ Crossbeams with service platforms. (Centerline of doubler plate with 14 penetrations is located 1650mm east of PP at start of crossbeam between the first and third stiffiner towards W4) (3355mm from W4)										
14	2550	127mm	144	20	Platform Feed	Future(AP)	SP 193	2AW	PL 1533	MEP DP15
14	2550	127mm	144	20	Platform Feed	Future(AP)	SP 193	2AW	PL 1533	MEP DP15
14	750	127mm	144	20	Platform Feed	Future(AP)	SP 193	2AW	PL 1533	MEP DP15
14	750	127mm	144	20	Platform Feed	Future(AP)	SP 193	2AW	PL 1533	MEP DP15
32	2550	127mm	144	16	Platform Feed	Futue(AP)	SP 510	5BW	PL 592	MEP DP18
32	2550	127mm	144	16	Platform Feed	Futue(AP)	SP 510	5BW	PL 592	MEP DP18
32	750	127mm	144	16	Platform Feed	Futue(AP)	SP 510	5BW	PL 592	MEP DP18
32	750	127mm	144	16	Platform Feed	Futue(AP)	SP 510	5BW	PL 592	MEP DP18
50	1650	127mm	144	16	Platform Feed	Future(AP)	SP 519	7BW	PL 617	MEP DP20
50	1650	127mm	144	16	Platform Feed	Future(AP)	SP 519	7BW	PL 617	MEP DP20
50	1650	127mm	144	16	Platform Feed	Future(AP)	SP 519	7BW	PL 617	MEP DP20
50	1650	127mm	144	16	Platform Feed	Future(AP)	SP 519	7BW	PL 617	MEP DP20
80	1650	127mm	144	16	Platform Feed	Future(AP)	SP 732	9DW	PL 662	MEP DP24
80	1650	127mm	144	16	Platform Feed	Future(AP)	SP 732	9DW	PL 662	MEP DP24
80	1650	127mm	144	16	Platform Feed	Future(AP)	SP 732	9DW	PL 662	MEP DP24
80	1650	127mm	144	16	Platform Feed	Future(AP)	SP 732	9DW	PL 662	MEP DP24
110	1650	127mm	144	16	Platform Feed	Future(AP)	SP 3036A	12AW	PL 3152A	MEP DP27
110	1650	127mm	144	16	Platform Feed	Future(AP)	SP 3036A	12AW	PL 3152A	MEP DP27
110	1650	127mm	144	16	Platform Feed	Future(AP)	SP 3036A	12AW	PL 3152A	MEP DP27
110	1650	127mm	144	16	Platform Feed	Future(AP)	SP 3036A	12AW	PL 3152A	MEP DP27

STATE OF CALIFORNIA - DEPARTMENT OF TRANSPORTATION

CONTRACT CHANGE ORDER MEMORANDUM

DATE: 6/10/2008 Page 1 of 1

TO: Pete Siegenthaler, Prin TE /	FILE: E.A. 04 - 0120F4
M: Gary Pursell, Sup. TE	CO-RTE-PM SF-80-13.2/13.9
	FED. NO.

CCO#: 59	SUPPLEMENT#: 0	Category Code: ~~CBRT~~ CHPT	CONTINGENCY BALANCE (incl. this change) $80,269,899.40
COST: $0.00	INCREASE ☐ DECREASE ☐		HEADQUARTERS APPROVAL REQUIRED? ☐ YES ☑ NO
SUPPLEMENTAL FUNDS PROVIDED: $0.00			IS THIS REQUEST IN ACCORDANCE WITH ENVIRONMENTAL DOCUMENTS? ☑ YES ☐ NO

CCO DESCRIPTION:
Additional OBG Penetrations

PROJECT DESCRIPTION:
CONSTRUCT SELF-ANCHORED SUSPENSION BRIDGE

Original Contract Time:	Time Adj. This Change:	Previously Approved CCO Time Adjustments:	Percentage Time Adjusted: (including this change)	Total # of Unreconciled Deferred Time CCO(s): (including this change)
2490 Day(s)	DEF 0 Day(s)	227 Day(s)	9 %	6

THIS CHANGE ORDER PROVIDES FOR:

Reimbursing the Contractor for detailing and fabrication costs due to additional Orthotropic Box Girder (OBG) MEP penetrations along the deck, side plates, shear plates, bottom plates and crossbeam plates.

This work is not covered by any contract items. Therefore, payment for this work will be at Adjustment of Compensation at Lump Sum for the amount of $54,014.00. Since the cost, of $54,014.00 in this change, is included in Contract Change Order 108 Supplement 1 (CCO 108S1) Claim Settlement Report No. 1 resolution costs the net payment in this change order is zero.

Contract time is not addressed in CCO 108 for work identified in this change order. Therefore, consideration of a time adjustment will be deferred until completion of the work specified herein. Determination of a commensurate time adjustment will be made in accordance with Section 10-1.13, "PROGRESS SCHEDULE (CRITICAL PATH METHOD)" and Section 10-1.14, "TIME-RELATED OVERHEAD" of the Special Provisions, as well as Section 8-1.07, "LIQUIDATED DAMAGES", of the Standard Specifications.

This change order received concurrence from Gary Pursell (Resident Engineer), Rick Morrow (Sup. Structure Rep), Peter Siegenthaler (Principal TE), Rich Foley (HQ Oversight), Ken Terpstra (Project Manager), Richard Land (Chief Engineer), Jon Tapping (HQ Coordinator), Tony Anziano (Toll Bridge Program Manager), Brian Maroney (Project Engineer), Wenyi Long (Design Oversight), and Lina Ellis (Structure Maintenance).

Claims Settlement Report (CSR) No. 1, for this project, revises the authority to "Issue and Approve" the changes listed in CCO 108S1 Appendices A & B. The authority to "Issue and Approve" the changes listed in Appendices A & B for the values of time and money contemplated therein has been delegated to the District for approval, therefore approval of this change order by the Headquarters CCO Desk will not be required. Since this change order is included in CCO 108S1 no Headquarters CCO Desk "Issue and Approve" is required, a copy of CCO 108S1 is attached for reference

CONCURRED BY:			
Construction Engineer:	Res. Eng., Gary Pursell, Sup. TE	Date	4/2/08
Bridge Engineer:	Struct Rep, Rick Morrow, Sup TE	Date	4/2/08
Project Engineer:	CT Oversight, Wenyi Long, P.E.	Date	8/24/09
Project Manager:	Proj Manager, Ken Terpstra	Date	12/21/09
FHWA Rep.:	HQ, Patrick Treacy	Date	4/3/08
Environmental:	PCE, Michael Forner	Date	4/2/08
Other (specify):	Design of Record, Marwan Nader,	Date	1/9/08
Other (specify):	Struct Maint, Bill Zanetich, P.E.	Date	8/24/09
District Prior Approval By:		Date	
HQ (Issue Approve) By:		Date	
Resident Engineer's Signature:	Gary Pursell	Date	7/6/10

ESTIMATE OF COST		
	THIS REQUEST	TOTAL TO DATE
ITEMS	$0.00	$0.00
FORCE ACCOUNT	$0.00	$0.00
AGREED PRICE	$0.00	$0.00
ADJUSTMENT	$0.00	$0.00
TOTAL	$0.00	$0.00

FEDERAL PARTICIPATION

☐ PARTICIPATING ☐ PARTICIPATING IN PART ☑ NONE
☐ NON-PARTICIPATING (MAINTENANCE) ☐ NON-PARTICIPATING

FEDERAL SEGREGATION (if more than one Funding Source or P.I.P. type)
☑ CCO FUNDED PER CONTRACT ☐ CCO FUNDED AS FOLLOWS

FEDERAL FUNDING SOURCE PERCENT

ADA Notice: For individuals with sensory disabilities, this document is available in alternate formats. For information call: (916) 654-6410 or TDD (916) 654-3880 or write Records and Forms Management, 1120 N Street, MS-89, Sacramento, CA 95814.

STATE OF CALIFORNIA - DEPARTMENT OF TRANSPORTATION

CONTRACT CHANGE ORDER

Change Requested by: Engineer

CCO: 60 **Suppl. No. 0** **Contract No. 04 – 0120F4** **Road** SF-80-13.2/13.9 **FED. AID LOC.:**

To: **AMERICAN BRIDGE/FLUOR ENTERPRISES INC A JOINT VENTURE**

You are directed to make the following changes from the plans and specifications or do the following described work not included in the plans and specifications for this contract. ***NOTE: This change order is not effective until approved by the Engineer.***

Description of work to be done, estimate of quantities and prices to be paid. (Segregate between additional work at contract price, agreed price and force account.) Unless otherwise stated, rates for rental of equipment cover only such time as equipment is actually used and no allowance will be made for idle time. This last percentage shown is the net accumulated increase or decrease from the original quantity in the Engineer's Estimate.

Purchase cable band assembly and transport as described below:

Extra Work at Lump Sum:

Perform the following work after the cable band friction tests are complete:

1. Provide the 3.5M PWS cable (as is) and the B4 cable band full size model (as is) used in the friction test to the Department.
2. Clean and paint the inside of the cable band before storage as directed by the Engineer.

For this work, the Contractor agrees to accept a lump sum of $56,209.00. This sum constitutes full compensation, including all markups, for this work.

Cost of Extra Work at Lump Sum $56,209.00

Extra Work at Force Account:

Transport the cable assembly, fabricate display support and perform miscellaneous handling and modifications as directed by the Engineer.

Labor, equipment and material approved by the Engineer, as necessary will be paid in accordance with the provisions of Section 4-1.03D, "Extra Work" of the Standard Specifications and Section 5-1.24, "Force Account Payment" of the Special Provisions.

Estimated cost of Extra Work at Force Account $60,000.00

Estimated Cost: **Increase** ☒ **Decrease** ☐ **$116,209.00**

By reason of this order the time of completion will be adjusted as follows: **0 days**

Submitted by

Signature Gary Pursell **Resident Engineer** Gary Pursell, Sup.T.E. **Date** 08/19/08

Approval Recommended by

Signature R. J. Morrow **Supervising Bridge Engineer** Richard Morrow, Sup.T.E. **Date** 8/19/08

Engineer Approval by

Signature Gary Pursell **Supervising Transportation Engineer** Gary Pursell, Sup.T.E. **Date** 9/5/08

We the undersigned contractor, have given careful consideration to the change proposed and agree, if this proposal is approved, that we will provide all equipment, furnish the materials, except as otherwise be noted above, and perform all services necessary for the work above specified, and will accept as full payment therefor the prices shown above.

NOTE: If you, the contractor, do not sign acceptance of this order, your attention is directed to the requirements of the specifications as to proceeding with the ordered work and filing a written protest within the time therein specified.

Contractor Acceptance by

Signature Michael D. Flowers **(Print name and title)** Michael D. Flowers Project Director **Date** 9-2-08

STATE OF CALIFORNIA - DEPARTMENT OF TRANSPORTATION

CONTRACT CHANGE ORDER MEMORANDUM

TO: Mike Forner, Prin. TE / Gary Pursell, P.E., Sup T.E.	FILE: E.A. 04 - 0120F4 CO-RTE-PM SF-80-13.2/13.9 FED. NO.
FROM: Gary Pursell, P.E., Sup.T.E.	
CCO#: 60 SUPPLEMENT#: 0 Category Code: CXXX	CONTINGENCY BALANCE (incl. this change) $134,066,258.40
COST: $116,209.00 INCREASE ☑ DECREASE ☐	HEADQUARTERS APPROVAL REQUIRED? ☐ YES ☑ NO
SUPPLEMENTAL FUNDS PROVIDED: $0.00	IS THIS REQUEST IN ACCORDANCE WITH ENVIRONMENTAL DOCUMENTS? ☑ YES ☐ NO
CCO DESCRIPTION: Cable Display	**PROJECT DESCRIPTION:** CONSTRUCT SELF-ANCHORED SUSPENSION BRIDGE

Original Contract Time:	Time Adj. This Change:	Previously Approved CCO Time Adjustments:	Percentage Time Adjusted: (including this change)	Total # of Unreconciled Deferred Time CCO(s): (including this change)
2490 Day(s)	0 Day(s)	30 Day(s)	1 %	2

THIS CHANGE ORDER PROVIDES FOR:
Purchasing, transporting, cleaning, painting, and fabricating display support for the cable band mock-up assembly.

The contract requires the Contractor to perform a friction test utilizing a mock-up assembly which consists of a section of the main cable and a cable band. The contract specifications allow the Contractor to reuse the cable band from the assembly in the permanent structure. Toll Bridge Management has directed the Department to obtain the mock-up assembly when testing is complete for use in a future public display. Cable strands displayed in the assembly will be painted different colors to illustrate the movements of the strands during cable compaction. The strand arrangement differs from typical bridge cables and will be of interest to both the public and the bridge engineering community.

For obtaining the cable assembly, cleaning and painting the inside of the cable band, the Contractor will receive a lump sum payment of $56,209.00. Additional cost to transport the cable assembly, fabricate display support and perform misc. handling and modifications as directed by the Engineer, will be paid for as Extra Work at Force Account for an estimated amount of $60,000.00. A detailed cost analysis is on file.

The total estimated cost of this Contract Change Order is $116,209.00, which can be financed from the contingency fund.

No adjustment of contract time is warranted, as this change does not affect the controlling operation.

This change order received concurrence from Rick Morrow (Structure Representative), Ken Terpstra (Project Manager), Mike Forner (Principal Construction Engineer) and Ken Brown (Division of Maintenance).

The Resident Engineer approved this Change Order on September 5, 2008.

CONCURRED BY:		
Construction Engineer:	Res. Eng., Gary Pursell, Sup. TE	Date 1/14/08
Bridge Engineer:	Struct Rep, Rick Morrow, Sup TE	Date 1/10/08
Project Engineer:		Date
Project Manager:	Proj Manager, Ken Terpstra	Date 1/8/08
FHWA Rep.:		Date
Environmental:		Date
Other (specify):	PCE, Mike Forner, Prin TE	Date 1/29/08
Other (specify):	Maint, Ken Brown	Date 12/18/07
District Prior Approval By:		Date
HQ (Issue Approve) By:		Date
Resident Engineer's Signature:	Gary Pursell 9/5/08	Date

ESTIMATE OF COST		
	THIS REQUEST	TOTAL TO DATE
ITEMS	$0.00	$0.00
FORCE ACCOUNT	$60,000.00	$60,000.00
AGREED PRICE	$56,209.00	$56,209.00
ADJUSTMENT	$0.00	$0.00
TOTAL	$116,209.00	$116,209.00

FEDERAL PARTICIPATION

☐ PARTICIPATING ☐ PARTICIPATING IN PART ☑ NONE
☐ NON-PARTICIPATING (MAINTENANCE) ☐ NON-PARTICIPATING

FEDERAL SEGREGATION (if more than one Funding Source or P.I.P. type)
☐ CCO FUNDED PER CONTRACT ☐ CCO FUNDED AS FOLLOWS

FEDERAL FUNDING SOURCE	PERCENT

ADA Notice: For individuals with sensory disabilities, this document is available in alternate formats. For information call: (916) 654-6410 or TDD (916) 654-3880 or write Records and Forms Management, 1120 N Street, MS-89, Sacramento, CA 95814.

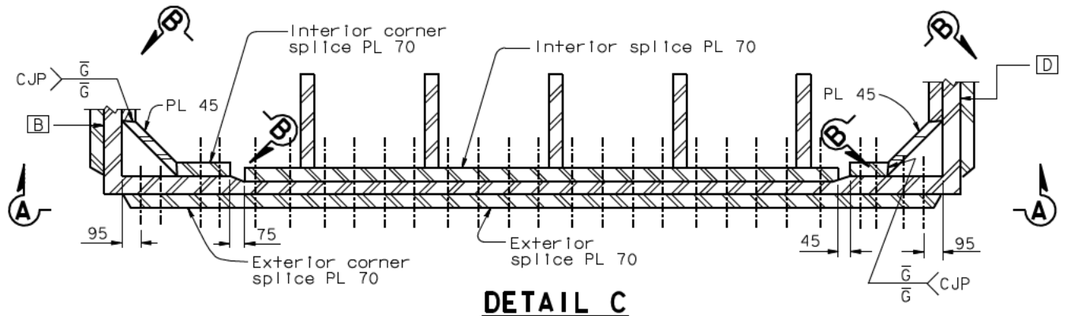

DETAIL C
1:15

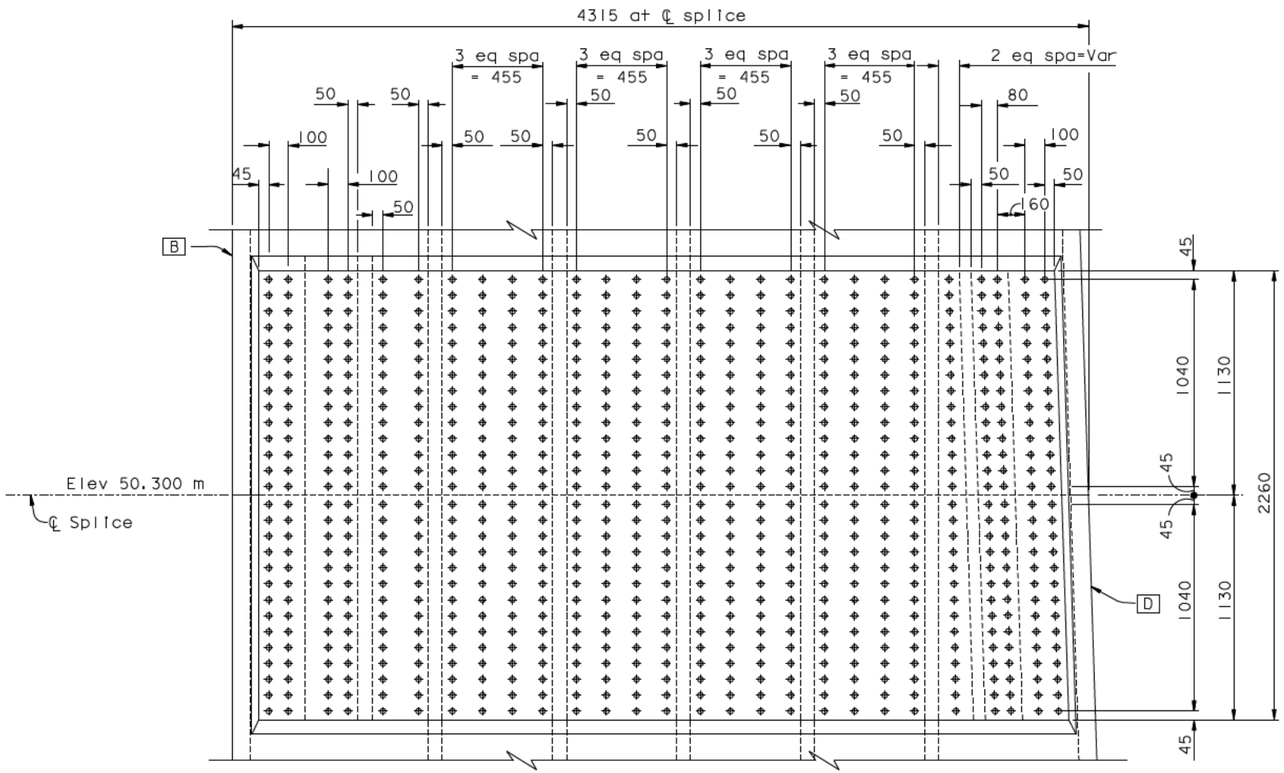

ELEVATION A-A
1:15

TOWER SKIN PLATE C

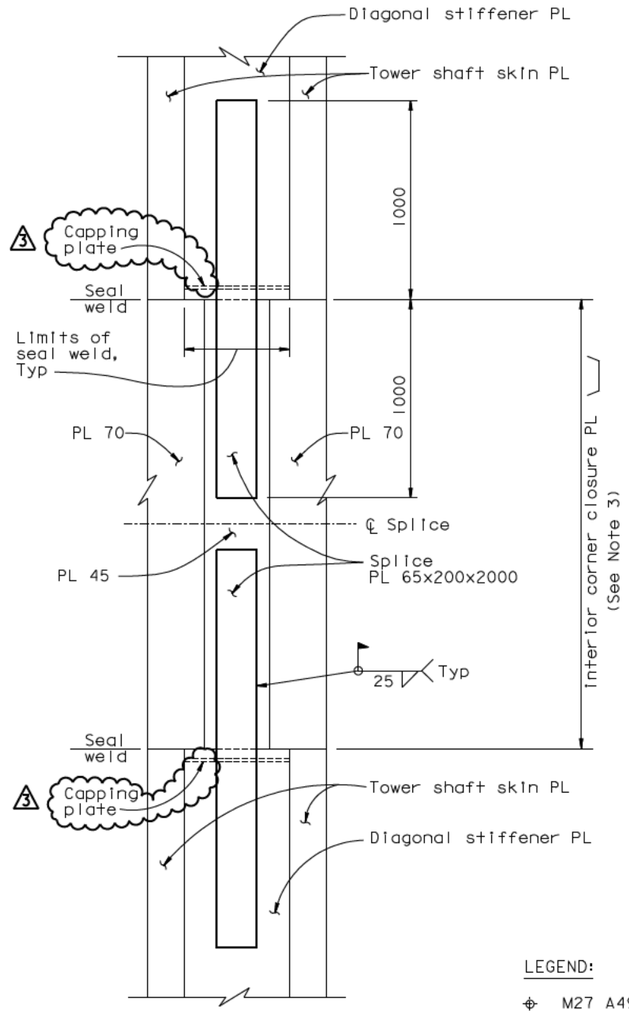

ELEVATION B-B
1:15

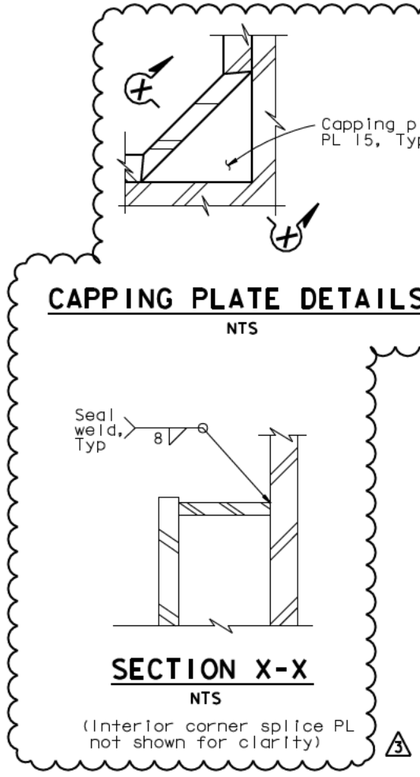

CAPPING PLATE DETAILS
NTS

SECTION X-X
NTS

(Interior corner splice PL not shown for clarity)

3

LEGEND:

⊕ M27 A490-X HS Bolts

NOTES:

1. The tower splice connections are designed as slip critical connections with class B contact surface (slip coefficient 0.5). The Contractor shall ensure that the flatness requirements are met at the faying surfaces.
2. Elevation view of adjacent skin plate not shown
3. The length of the interior corner splice plate shall be adjusted to ensure the 45 mm minimum bolt edge distance (in the vertical direction).

REQUESTS FOR INFORMATION NOT ADDRESSED IN THIS CCO REMAIN IN FORCE				
3	10/08/08	U-RIB & TOWER CORNER SEALING	MN	NV	69
2	07/25/08	TOWER DOUBLER PLATE & SPLICE CORNER DETAILS	MN	NV	62
1	06/23/06	SPLICE PLATES PER ISM	MN	NV	21
MARK	DATE	DESCRIPTIONS	BY	CH'D	CCO#
		REVISIONS			

CONTRACT CHANGE ORDER NO. ____
SHEET ___ OF ___

ALL DIMENSIONS ARE IN MILLIMETERS UNLESS OTHERWISE SHOWN

DIST.	COUNTY	ROUTE	KILOMETER POST TOTAL PROJECT	SHEET NO.	TOTAL SHEETS
04	SF	80	13.2/13.9	544R3	1204

REGISTERED ENGINEER - CIVIL
12-6-04
PLANS APPROVAL DATE
Marwan N. Nader, No. C 054426, Exp. 12/31/09, CIVIL, REGISTERED PROFESSIONAL ENGINEER, STATE OF CALIFORNIA

The State of California or its officers or agents shall not be responsible for the accuracy or completeness of electronic copies of this plan sheet.

T.Y. LIN / MOFFATT & NICHOL
825 BATTERY STREET
SAN FRANCISCO, CA 94111

Caltrans now has a web site! To get to the web site, go to: http://www.dot.ca.gov

R. Valizadeh/V. Toan/Y.L./W.L./F.C.	DESIGN	BY M. Nader	CHECKED M. Gulyas
DESIGN OVERSIGHT	DETAILS	BY J. Lopez	CHECKED N. Vo
Roya Valizadeh / Vong Toan / Y. Liu	QUANTITIES	BY L. Rus	CHECKED Y. Zhang
SIGN OFF DATE 10/08/08			

PREPARED FOR THE STATE OF CALIFORNIA
DEPARTMENT OF TRANSPORTATION

R. Manzanarez
PROJECT ENGINEER

BRIDGE NO. 34-0006L/R
KILOMETER POST 13.2/13.9

CU 04
EA 0120F1

SAN FRANCISCO OAKLAND BAY BRIDGE
EAST SPAN SEISMIC SAFETY PROJECT
SELF-ANCHORED SUSPENSION BRIDGE
(SUPERSTRUCTURE & TOWER)

TOWER SPLICE DETAILS NO.5

Rev. Date: 5-18-98

ORIGINAL SCALE IN MILLIMETERS FOR REDUCED PLANS 0 10 20 30 40 50 60 70 80 90 100

DISREGARD PRINTS BEARING EARLIER REVISION DATES

REVISION DATES (PRELIMINARY STAGE ONLY): 08/22/99 | 05/31/01 | 04/30/02 | 07/31/02 | 12/19/02

SHEET 127R3 OF

FILE -> I:\bb\04-0120F1\sas\contract plans and cco\cco\In progress\cco#69\update 10-08-08\dgn\aetsp05.dgn

100 % PS&E
DATE PLOTTED => 08 OCT 2008
TIME PLOTTED => 11:27:00
USERNAME => dwinrow

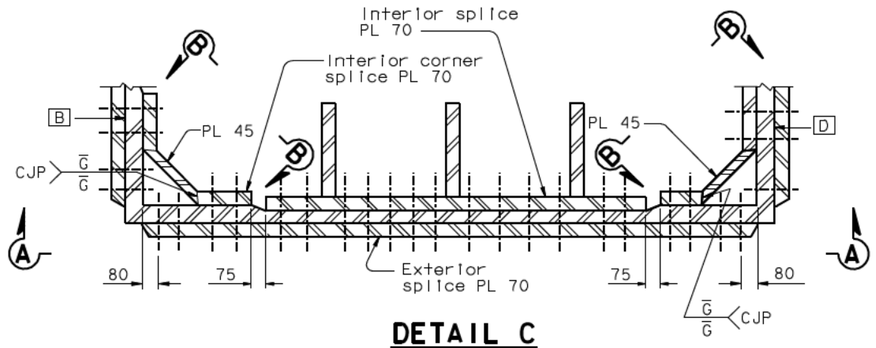

DETAIL C
1:15

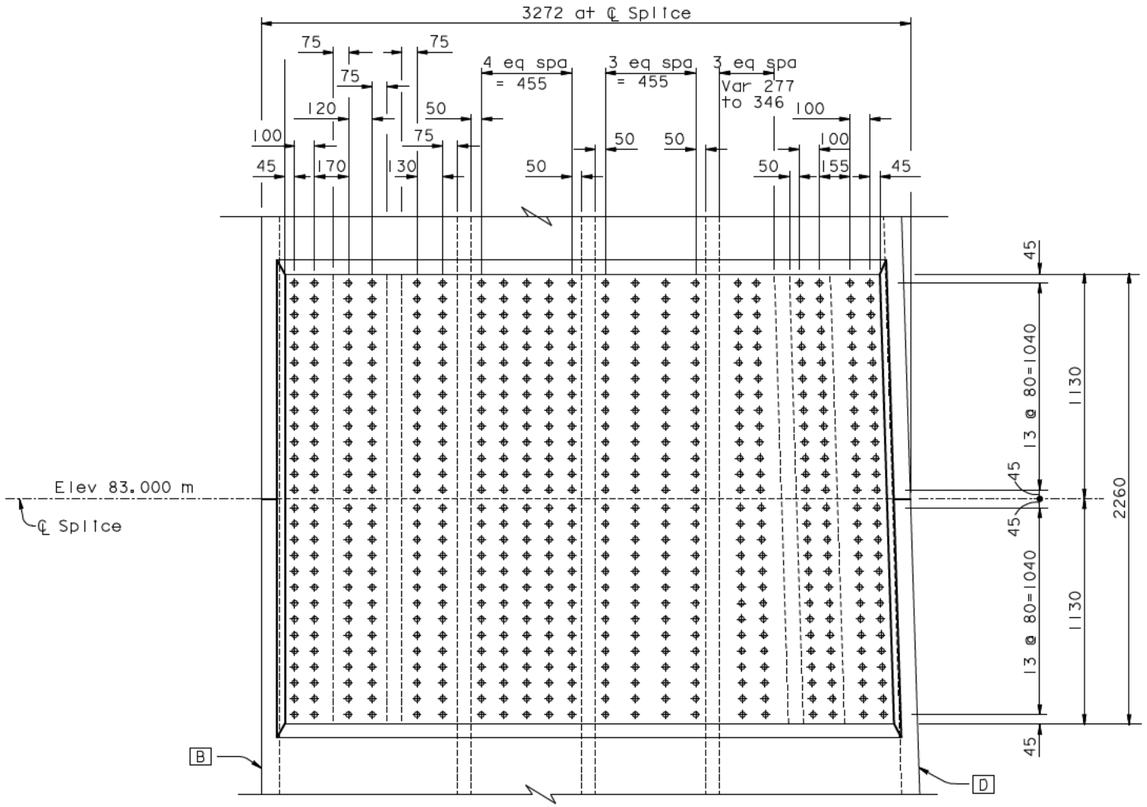

ELEVATION A-A
1:15

TOWER SKIN PLATE C

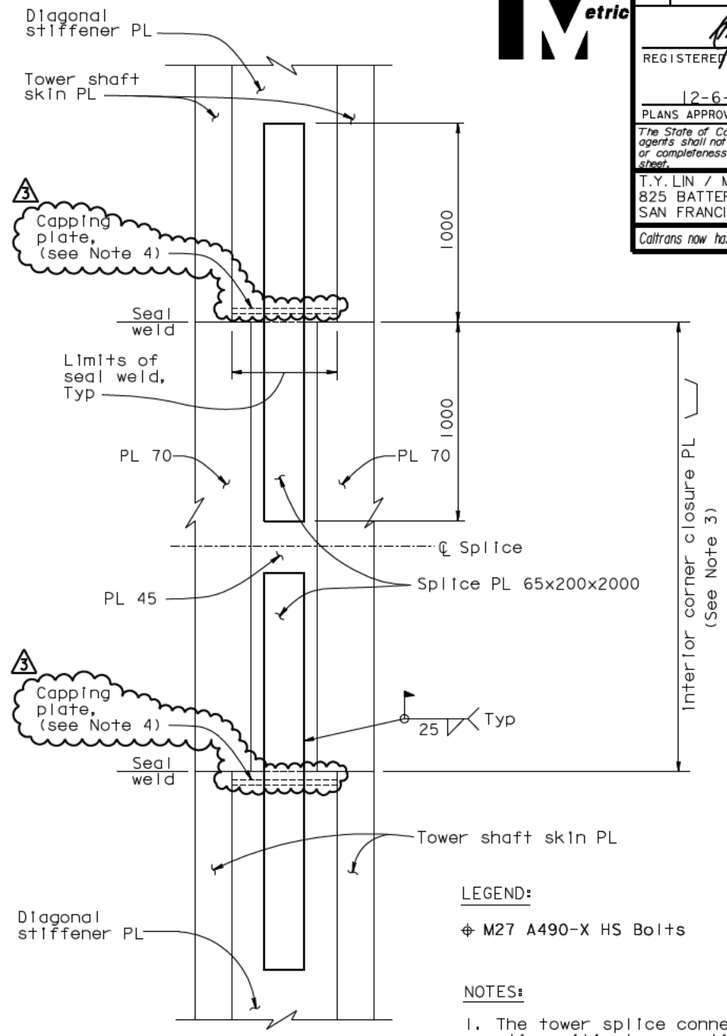

ELEVATION B-B
1:15

LEGEND:

⊕ M27 A490-X HS Bolts

NOTES:

1. The tower splice connections are designed as slip critical connections with class B contact surface (slip coefficient 0.5). The Contractor shall ensure that the flatness requirements at the faying surfaces and the geometry control are met.
2. Elevation view of adjacent skin plate not shown for clarity.
3. The length of the interior corner splice plate shall be adjusted to ensure the 45 mm minimum bolt edge distance (in the vertical direction).
4. (3) For Capping Plate Details, see "Tower Splice Details No.5" sheet.

MARK	DATE	REVISIONS	BY	CH'D	CCO#
3	10/03/08	U-RIB & TOWER CORNER SEALING	MN	NV	69
2	07/25/08	TOWER DOUBLER PLATE & SPLICE CORNER DETAILS	MN	NV	62
1	06/23/06	SPLICE PLATES PER ISM	MN	NV	21

REQUESTS FOR INFORMATION NOT ADDRESSED IN THIS CCO REMAIN IN FORCE

CONTRACT CHANGE ORDER NO. ____
SHEET ___ OF ___

DIST.	COUNTY	ROUTE	KILOMETER POST TOTAL PROJECT	SHEET NO.	TOTAL SHEETS
04	SF	80	13.2/13.9	549R3	1204

REGISTERED ENGINEER - CIVIL
12-6-04
PLANS APPROVAL DATE
Marwan N. Nader No. C 054426 Exp. 12/31/09 CIVIL
REGISTERED PROFESSIONAL ENGINEER STATE OF CALIFORNIA

The State of California or its officers or agents shall not be responsible for the accuracy or completeness of electronic copies of this plan sheet.

T.Y. LIN / MOFFATT & NICHOL
825 BATTERY STREET
SAN FRANCISCO, CA 94111

Caltrans now has a web site! To get to the web site, go to: http://www.dot.ca.gov

ALL DIMENSIONS ARE IN MILLIMETERS UNLESS OTHERWISE SHOWN

DESIGN	BY M. Nader	CHECKED N. Vo	PREPARED FOR THE STATE OF CALIFORNIA DEPARTMENT OF TRANSPORTATION	R. Manzanarez PROJECT ENGINEER	BRIDGE NO. 34-0006L/R
DETAILS	BY C. Choi	CHECKED N. Vo			KILOMETER POST 13.2/13.9
QUANTITIES	BY C. Choi	CHECKED N. Vo			

R. Valizadeh/V. Toan/Y.L./W.L./F.C.
DESIGN OVERSIGHT
SIGN OFF DATE 10/03/08

SAN FRANCISCO OAKLAND BAY BRIDGE
EAST SPAN SEISMIC SAFETY PROJECT
SELF-ANCHORED SUSPENSION BRIDGE (SUPERSTRUCTURE & TOWER)

TOWER SPLICE DETAILS NO. 10

Rev. Date: 5-18-98

ORIGINAL SCALE IN MILLIMETERS FOR REDUCED PLANS 0 10 20 30 40 50 60 70 80 90 100

CU 04
EA 0120F1

DISREGARD PRINTS BEARING EARLIER REVISION DATES

REVISION DATES (PRELIMINARY STAGE ONLY): 08/02/99 | 05/31/01 | 04/08/02 | 07/31/02 | 12/19/02

SHEET 132R3 OF

FILE -> I:\bb\04-0120F1\sas\contract plans and cco\cco\In progress\cco#69\orig\final 10-03-08\dgn\detspl0.dgn

USERNAME => vignatovs DATE PLOTTED => 03 OCT 2008 TIME PLOTTED => 11:25:37

100 % PS&E

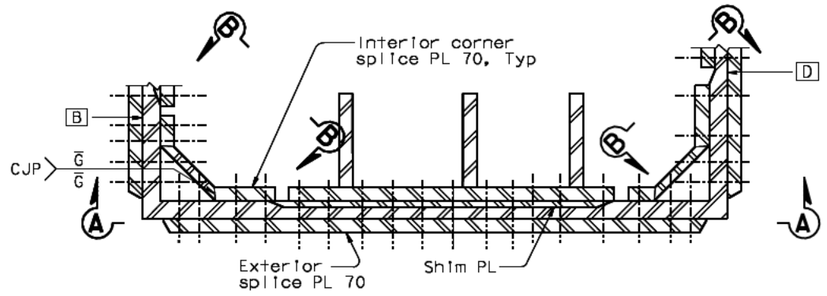

DETAIL C
1:15

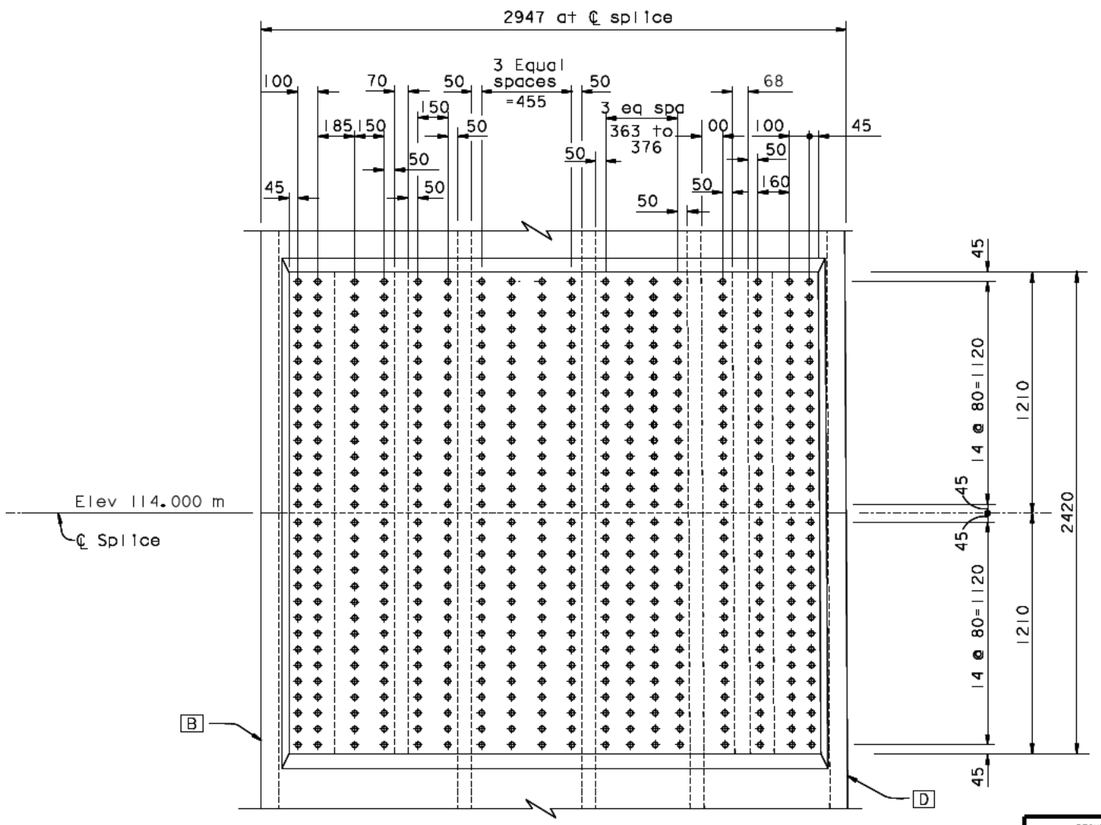

ELEVATION A-A
1:15

TOWER SKIN PLATE C

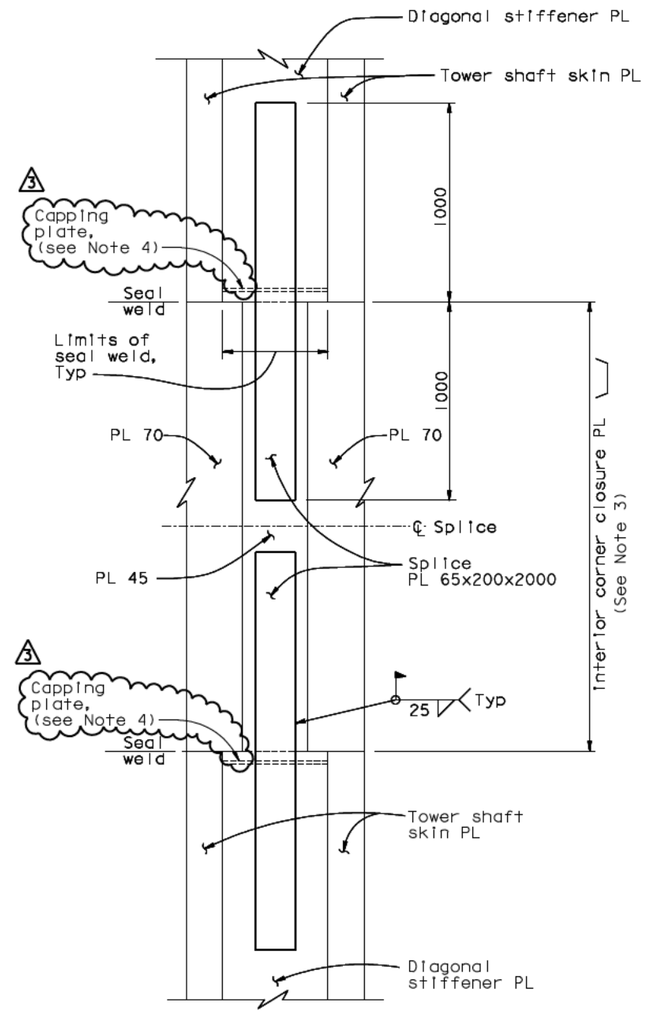

ELEVATION B-B
1:15

LEGEND:

⊕ M27 A490-X HS Bolts

NOTES:

1. The tower splice connections are designed as slip critical connections with class B contact surface (slip coefficient 0.5). The Contractor shall ensure that the flatness requirements at the faying surfaces and the geometry control are met.
2. Elevation view of adjacent skin plate not shown for clarity.
3. The length of the interior corner splice plate shall be adjusted to ensure the 45 mm minimum bolt edge distance (in the vertical direction).
4. (3) For Capping Plate Details, see "Tower Splice Details No.5" sheet.

MARK	DATE	DESCRIPTIONS	BY	CH'D	CCO#
		REVISIONS			
3	10/03/08	U-RIB & TOWER CORNER SEALING	MN	NV	69
2	07/25/08	TOWER DOUBLER PLATE & SPLICE CORNER DETAILS	MN	NV	62
1	06/23/06	SPLICE PLATES PER ISM	MN	NV	21

REQUESTS FOR INFORMATION NOT ADDRESSED IN THIS CCO REMAIN IN FORCE

CONTRACT CHANGE ORDER NO. ____
SHEET ____ OF ____

ALL DIMENSIONS ARE IN MILLIMETERS UNLESS OTHERWISE SHOWN

DIST.	COUNTY	ROUTE	KILOMETER POST TOTAL PROJECT	SHEET NO.	TOTAL SHEETS
04	SF	80	13.2/13.9	554R3	1204

REGISTERED ENGINEER - CIVIL
12-6-04
PLANS APPROVAL DATE

REGISTERED PROFESSIONAL ENGINEER — Marwan N. Nader — No. C 054426 — Exp. 12/31/09 — CIVIL — STATE OF CALIFORNIA

The State of California or its officers or agents shall not be responsible for the accuracy or completeness of electronic copies of this plan sheet.

T.Y. LIN / MOFFATT & NICHOL
825 BATTERY STREET
SAN FRANCISCO, CA 94111

Caltrans now has a web site! To get to the web site, go to: http://www.dot.ca.gov

R. Valizadeh/V. Toan/Y.L./W.L./F.C.	DESIGN	BY M. Nader	CHECKED N. Vo	PREPARED FOR THE STATE OF CALIFORNIA DEPARTMENT OF TRANSPORTATION	R. Manzanarez
DESIGN OVERSIGHT	DETAILS	BY J. Lopez	CHECKED N. Vo		PROJECT ENGINEER
SIGN OFF DATE 10/03/08	QUANTITIES	BY J. Lopez	CHECKED N. Vo		

BRIDGE NO. 34-0006L/R
KILOMETER POST 13.2/13.9

SAN FRANCISCO OAKLAND BAY BRIDGE
EAST SPAN SEISMIC SAFETY PROJECT
SELF-ANCHORED SUSPENSION BRIDGE
(SUPERSTRUCTURE & TOWER)

TOWER SPLICE DETAILS NO. 15

Rev. Date: 5-18-98

ORIGINAL SCALE IN MILLIMETERS FOR REDUCED PLANS 0 10 20 30 40 50 60 70 80 90 100

CU 04
EA 0120F1

DISREGARD PRINTS BEARING EARLIER REVISION DATES

REVISION DATES (PRELIMINARY STAGE ONLY): 08/22/08 | 05/27/01 | 04/20/02 | 07/24/02 | 12/19/02

SHEET 137R3 OF

FILE -> I:\bb\04-012001\sas\contract plans and cco\cco\In progress\cco#69\original 10-03-08\dgn\aetsp15.dgn

USERNAME => vlignotov\$DATE PLOTTED => 03 OCT 2008 TIME PLOTTED => 11:26:28

100 % PS&E

DIST.	COUNTY	ROUTE	KILOMETER POST TOTAL PROJECT	SHEET NO.	TOTAL SHEETS
04	SF	80	13.2/13.9	607R1	1204

REGISTERED ENGINEER - CIVIL

12-6-04
PLANS APPROVAL DATE

REGISTERED PROFESSIONAL ENGINEER — Marwan N. Nader — No. C 054426 — Exp. 12/31/09 — CIVIL — STATE OF CALIFORNIA

The State of California or its officers or agents shall not be responsible for the accuracy or completeness of electronic copies of this plan sheet.

T.Y. LIN / MOFFATT & NICHOL
825 BATTERY STREET
SAN FRANCISCO, CA 94111

Caltrans now has a web site! To get to the web site, go to: http://www.dot.ca.gov

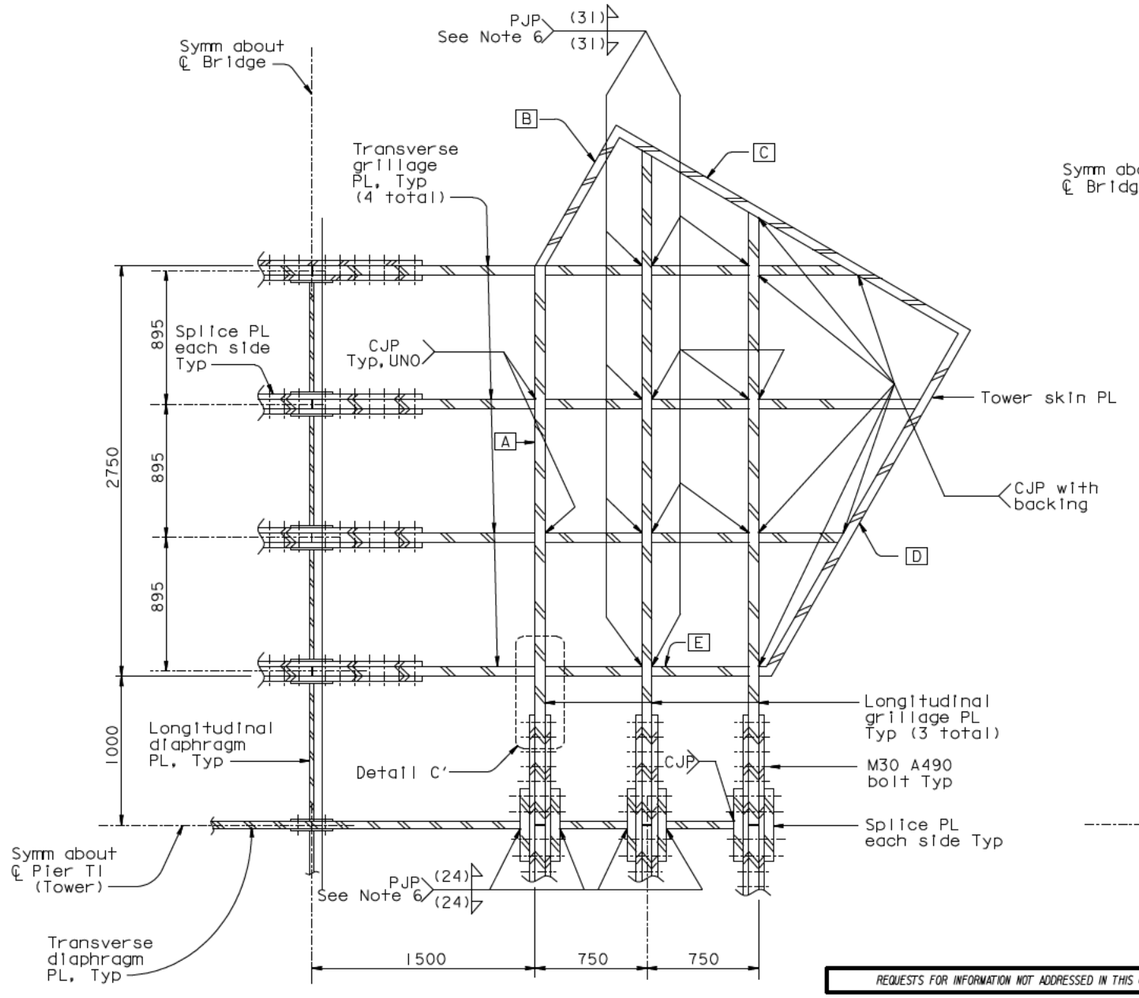

DETAIL C
1:20

(Between Elevation 149.850 m & 147.500 m, see Note 3)

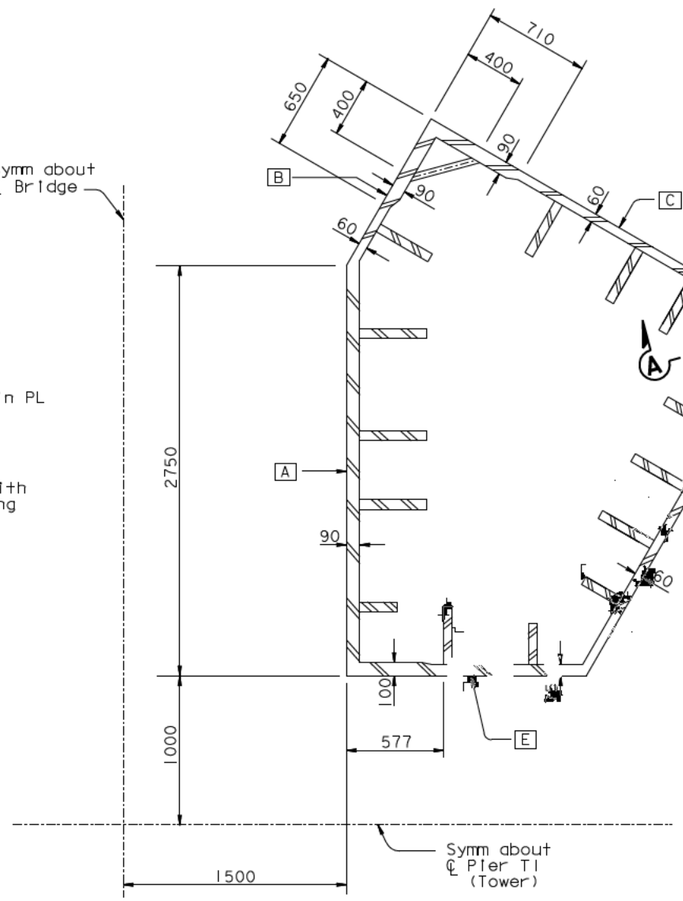

DETAIL D
1:20

(Tower Shaft Between Elev 144.420 m & 144.000 m)

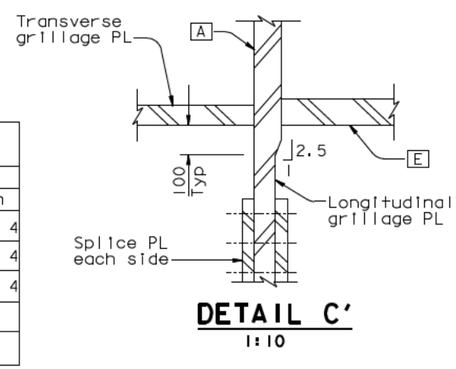

DETAIL C'
1:10

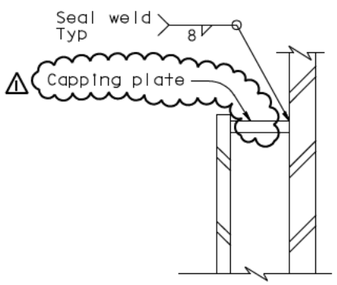

SECTION A-A
1:10

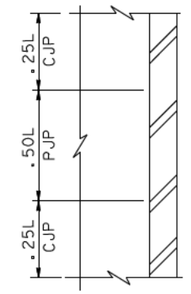

DETAIL A
NTS

NOTES:

1. See schedule A in conjunction with Detail D for tower PL and stiffener size between elevations 144.000 m and 150.900 m.
2. ⚠ End of diagonal stiffener shall be sealed with a capping plate with no copes. This detail also applies at the ends of every lift where bolted splices occur at elevations 50.30 m, 83.00 m and 114.00 m. See "Tower Splice Details No.5, No.10 and No.15" sheets.
3. Details at elevation 147.500 m are not shown for clarity. For details at elevation 147.500 m, see Section L-L and Section M-M on "Tower Saddle Grillage Details No.6" sheet.
4. For stiffener size, see "Tower Splice Details No.19" sheet.
5. For location of stiffeners between elevations 144.000 m and 147.500 m, the stiffeners shall be extended straight using the layout shown on "Tower Shaft Details No.3" through "Tower Shaft Details No.7" sheets.
6. The top and bottom 25% of the weld length shall be CJP (see Detail A).

SCHEDULE A
TOWER PL & STIFFENER SIZES BETWEEN ELEVATION 144.000 & 150.900 m (see Note 1)

ELEVATION (m)	A		B		C		D		E	
	Thick mm	Stiff mm	Thick mm	Stiff mm	Thick mm	Stiff mm	Thick mm	Stiff mm	Thick mm	Stiff mm
144.000 to 144.420	Detail D	see Note 4	Detail D	see Note 4	Detail D	see Note 4	Detail D	see Note 4	Detail D	see Note 4
144.420 to 145.070	90	see Note 4	90	see Note 4	90	see Note 4	90	see Note 4	90	see Note 4
145.070 to 147.500	90	see Note 4	90	see Note 4	90	see Note 4	90	see Note 4	90	see Note 4
147.500 to 148.500**	90	-	90	-	90	-	90	-	90	-
148.500 to 150.900	70	-	60	-	60	-	60	-	65	-

** See detail C' for transition in thickness between tower shaft skin PL A and longitudinal grillage PL.

MARK	DATE	DESCRIPTIONS	BY	CH'D	CCO#
		REQUESTS FOR INFORMATION NOT ADDRESSED IN THIS CCO REMAIN IN FORCE			
⚠1	10/08/08	U-RIB & TOWER CORNER SEALING	MN	NV	69
		REVISIONS			

CONTRACT CHANGE ORDER NO. ____
SHEET ____ OF ____

ALL DIMENSIONS ARE IN MILLIMETERS UNLESS OTHERWISE SHOWN

100 % PS&E
DATE PLOTTED => 08 OCT 2008
TIME PLOTTED => 11:00:20
USERNAME => Owinrow

R. Vallzadeh/V. Toan/Y.L./W.L./F.C.
DESIGN OVERSIGHT
SIGN OFF DATE 10/08/08

	BY	CHECKED
DESIGN	M. Nader	R. Mayrbaurl
DETAILS	R. Kanitkar	R. Mayrbaurl
QUANTITIES	R. Kanitkar	Y. Zhang

PREPARED FOR THE STATE OF CALIFORNIA
DEPARTMENT OF TRANSPORTATION

R. Manzanarez
PROJECT ENGINEER

BRIDGE NO. 34-0006L/R
KILOMETER POST 13.2/13.9

CU 04
EA 0120F1

SAN FRANCISCO OAKLAND BAY BRIDGE
EAST SPAN SEISMIC SAFETY PROJECT
SELF-ANCHORED SUSPENSION BRIDGE
(SUPERSTRUCTURE & TOWER)

TOWER SADDLE GRILLAGE DETAILS NO.3

Rev. Date: 5-18-98

ORIGINAL SCALE IN MILLIMETERS FOR REDUCED PLANS 0 10 20 30 40 50 60 70 80 90 100

DISREGARD PRINTS BEARING EARLIER REVISION DATES

REVISION DATES (PRELIMINARY STAGE ONLY): 01/15/99 05/18/99 08/20/99 05/31/01 04/08/02 07/01/02 12/19/02 11/13/05

SHEET 90R1 OF

FILE => L:\BB\04-012001\SAS\Contract Plans and CCO\CCO\In Progress\CCO#69\Update 10-08-08\DGN\aecsg03.dgn

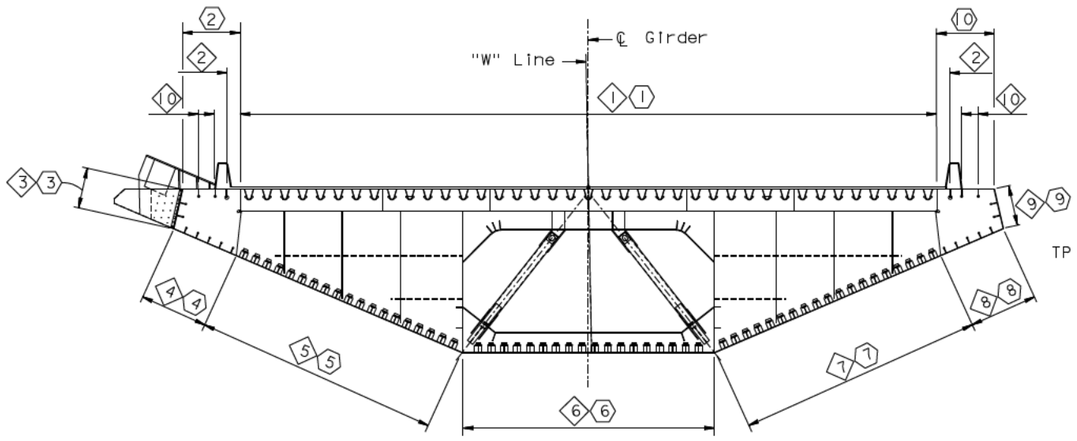

("W" LINE SECTION TYPE 1A SHOWN)

SECTION AT FLOORBEAM

1:100

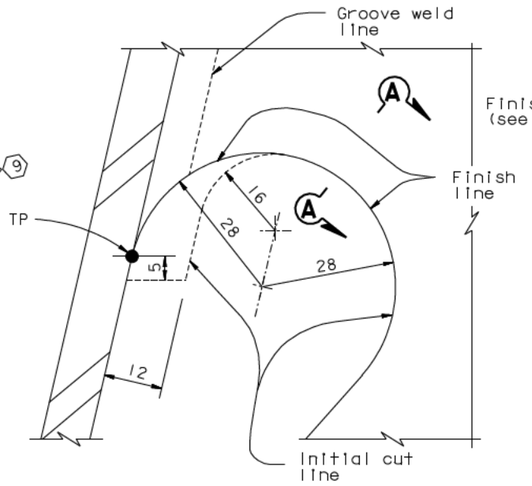

DETAIL A

NTS

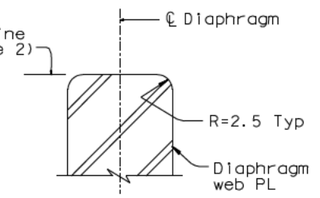

GRINDING DETAIL SECTION A-A

NTS

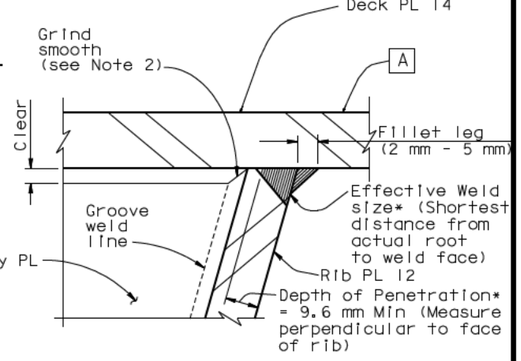

DETAIL B (Typical)

NTS

*NOTE: Depth of Penetration & Effective Weld size shall be measured on macroetch specimens without the 3 mm deduction per D1.5, Sections 2.3.1.3 and 2.3.4.

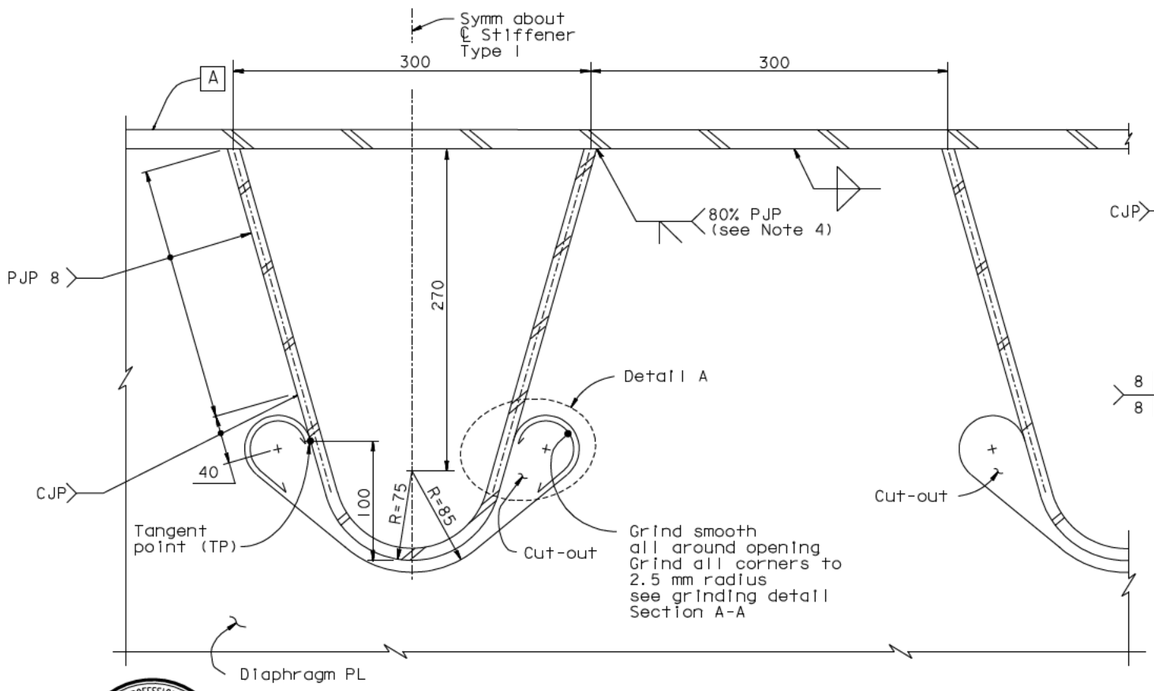

DETAIL TYPE 1

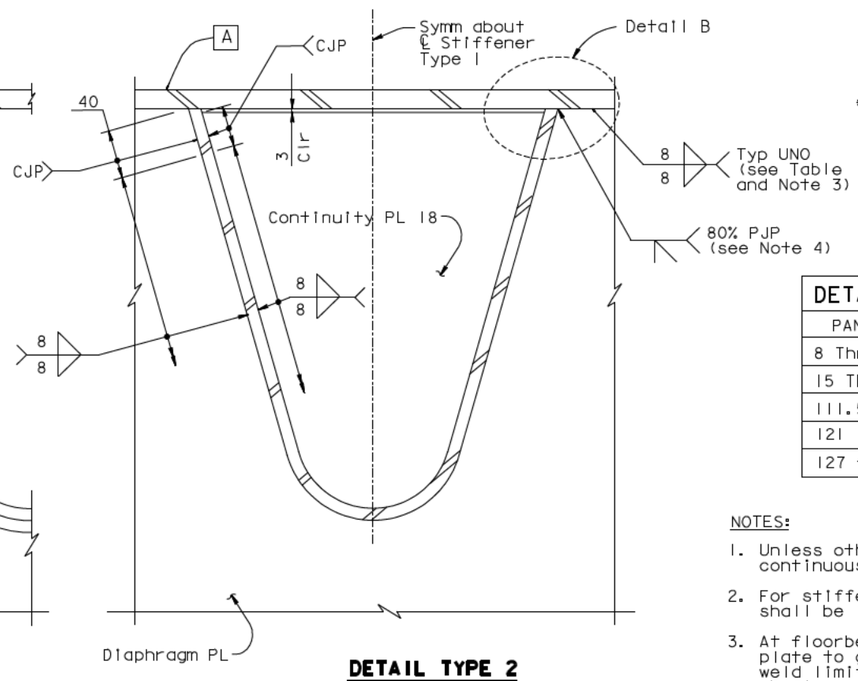

DETAIL TYPE 2

DETAIL TYPE LOCATION TABLE		
PANEL POINT	DETAIL TYPE	WELD
8 Thru 14.5	2	As Shown
15 Thru 111	1	As Shown
111.5 Thru 120.5	2	As Shown
121 Thru 126.5	2	See Note 3
127 to Hinge A	2	As Shown

NOTES:

1. Unless otherwise indicated, stiffener type 1 is continuous through floorbeam diaphragm plate.
2. For stiffener type 1, finish surface of cut-out shall be in accordance with ANSI 500 roughness.
3. At floorbeam cable opening, weld of diaphragm plate to girder Plate A shall be CJP. For CJP weld limits, see "Floorbeam At East Transition" sheets.
4. Closed ribs shall be sealed with diaphragm. See Diaphragm Detail on "Typical Girder Details No.11" sheet.

⚠1 STIFFENER DETAIL AT FLOORBEAM (See Table)

1:2.5

ALL DIMENSIONS ARE IN MILLIMETERS UNLESS OTHERWISE SHOWN

CONTRACT CHANGE ORDER NO. ____
SHEET ___ OF ___

FOR REVISIONS ONLY

REQUESTS FOR INFORMATION NOT ADDRESSED IN THIS CCO REMAIN IN FORCE

Daniel J. Turner — REGISTERED PROFESSIONAL ENGINEER — No. C 65033 — Exp. 06/30/09 — CIVIL — STATE OF CALIFORNIA

DIST.	COUNTY	ROUTE	KILOMETER POST TOTAL PROJECT	SHEET NO.	TOTAL SHEETS
04	SF	80	13.2/13.9	628R1	1204

George Baker
REGISTERED ENGINEER - CIVIL

12-6-04
PLANS APPROVAL DATE

REGISTERED PROFESSIONAL ENGINEER — George S. Baker — No. C57112 — Exp. 12/31/05 — CIVIL — STATE OF CALIFORNIA

The State of California or its officers or agents shall not be responsible for the accuracy or completeness of electronic copies of this plan sheet.

T.Y. LIN / MOFFATT & NICHOL
825 BATTERY STREET
SAN FRANCISCO, CA 94111

Caltrans now has a web site! To get to the web site, go to: http://www.dot.ca.gov

MARK	DATE	REVISIONS	BY	CH'D	CCO#
1	10/03/08	U-RIB & TOWER CORNER SEALING	DT	NV	69

	BY	CHECKED
DESIGN	G. Baker	P. Ritchie
DETAILS	S. Camo	T. McMeans
QUANTITIES	G. Baker	M. Roberts

PREPARED FOR THE STATE OF CALIFORNIA
DEPARTMENT OF TRANSPORTATION

R. Manzanarez
PROJECT ENGINEER

BRIDGE NO. 34-0006L/R
KILOMETER POST 13.2/13.9

R. Valizadeh/V. Toan/Y.L./W.L./F.C.
DESIGN OVERSIGHT
SIGN OFF DATE 10/03/08

Rev. Date: 5-18-98

ORIGINAL SCALE IN MILLIMETERS FOR REDUCED PLANS 0 10 20 30 40 50 60 70 80 90 100

CU 04
EA 0120F1

DISREGARD PRINTS BEARING EARLIER REVISION DATES

REVISION DATES (PRELIMINARY STAGE ONLY): 01/15/99 05/15/99 08/02/99 05/31/01 04/08/02 07/01/02 12/19/02

SHEET 211R1 OF

FILE -> I:\bb\04-012001\sas\contract plans and cco\cco\cco#69\update 10-08-08\dgn\agdkd03.dgn

SAN FRANCISCO OAKLAND BAY BRIDGE
EAST SPAN SEISMIC SAFETY PROJECT
SELF-ANCHORED SUSPENSION BRIDGE
(SUPERSTRUCTURE & TOWER)

TYPICAL GIRDER DETAILS NO. 4

USERNAME => v:\gnotovs\ DATE PLOTTED => 07 NOV 2008 TIME PLOTTED => 10:17:28

100% PS&E

STATE OF CALIFORNIA - DEPARTMENT OF TRANSPORTATION

CONTRACT CHANGE ORDER

Change Requested by: Engineer

CCO: 61 **Suppl. No. 0** **Contract No. 04 – 0120F4** **Road** SF-80-13.2/13.9 **FED. AID LOC.:**

To: **AMERICAN BRIDGE/FLUOR ENTERPRISES INC A JOINT VENTURE**

You are directed to make the following changes from the plans and specifications or do the following described work not included in the plans and specifications for this contract. ***NOTE: This change order is not effective until approved by the Engineer.***

Description of work to be done, estimate of quantities and prices to be paid. (Segregate between additional work at contract price, agreed price and force account.) Unless otherwise stated, rates for rental of equipment cover only such time as equipment is actually used and no allowance will be made for idle time. This last percentage shown is the net accumulated increase or decrease from the original quantity in the Engineer's Estimate.

Adjustment of Compensation at Lump Sum Price:

Revise electrical warning systems on SAS Main Tower, Pier E2, Pier E3, and along Skyway Piers including, but not limited to, navigation marker lights and relay cabinets, aviation light, fog detection panels, fog bells and horns, associated pull boxes, and conductors, conduits, and mounts for the navigation lights.

All new exterior surfaces and any areas of damaged existing paint shall be cleaned, primed, and finish painted in accordance with Special Provisions Section 10-1.69 "CLEAN AND PAINT STRUCTURAL STEEL."

Revise Special Provisions Section 10-3.14 "LIGHTING," subsection "NAVIGATION WARNING SYSTEM" and subsection "FOG DETECTION SYSTEM" as shown on sheets 2 through 6 of this change order.

The following revised plan sheets detail the changes addressed in this change order: 83R3, 83S4R1, 83S5, 86S17, 86S18, 86S19, 86S20, 86S21R1, 93R11, 128R3, 129R3, 138R2, 138S1R3, 142R4, 170R5, 201R3, 202R3, 203R3, 212R4, 261S8R1, 281R1, 291R2, 292R2, 292S1R2, 293R5, 293S1, 293S2, 293S3R1, 293S4R1, 293S5, 293S6, 294R3, 294S1, 294S2, 294S3R2, 294S4, 294S5, 294S6, 294S7, 294S8R1, 294S9R1, 294S10, 294S11R1, 294S12R1, 294S13R1, 294S14R1, 294S15, 294S16, 294S17, 294S18, 295R4, 296R2, 297R3, 298R2, 298S1, 299R4, 300R3, 301R1, 311R2, 312R2, 314R2, 361R6, 362R5, 363R7, 364R5, 369S1R2, 369S2R1, 369S3R1, 369S4R1, 369S5R1, 369S6R1, 373R6, 373S1, 374R9, 375R7, 376R6, 376S1R1, 386R7, 386S2R1, 387R4, 388R5, 389R5, 395R8, 400R8, 401R3, 401S1R2, 401S2R2, 405R2, 406R2, 407R8, 407S6R4, 407S7R3, 407S9R3, 407S11R2, 407S12R5, 407S13R2, 407S14R2, and 407S15R2 (of 1204) as shown on sheets 7 through 104 of this change order.

This change order resolves the costs associated with Contractor Request for Information (RFI) numbers 873R0, 1334R0, 1334R1, 1404R3, 2593, and 2666 with respect to changes listed above.

For this work, the Contractor will receive a lump sum price of $998,928.00. This sum constitutes full and complete compensation for furnishing all labor, material, tools and incidentals including all markups by reason of this change.

Adjustment of Compensation at Lump Sum.....$998,928.00

Estimated Cost: Increase ☒ Decrease ☐ $998,928.00

By reason of this order the time of completion will be adjusted as follows: 0 Days

Submitted by

Signature **Resident Engineer** Darryl Schram, Senior T.E. **Date** 1/18/13

Approval Recommended by

Signature **Supervising Transportation Engineer** William Casey, Supervising T.E. **Date** 1-18-13

Engineer Approval by

Signature **Supervising Transportation Engineer** William Casey, Supervising T.E. **Date** 2-5-13

We the undersigned contractor, have given careful consideration to the change proposed and agree, if this proposal is approved, that we will provide all equipment, furnish the materials, except as otherwise be noted above, and perform all services necessary for the work above specified, and will accept as full payment therefore the prices shown above.

NOTE: If you, the contractor, do not sign acceptance of this order, your attention is directed to the requirements of the specifications as to proceeding with the ordered work and filing a written protest within the time therein specified.

Contractor Acceptance by

Signature (Print name and title) BRIAN A. PETERSEN - PROJECT DIRECTOR **Date** 01 FEB 13

STATE OF CALIFORNIA - DEPARTMENT OF TRANSPORTATION

CONTRACT CHANGE ORDER MEMORANDUM

DATE: 1/22/2013 Page 1 of 1

TO: Tony Anziano, Program Manager /	FILE: **E.A.** 04 - 0120F4
FROM: Darryl Schram, Senior TE	**CO-RTE-PM** SF-80-13.2/13.9
	FED. NO.
CCO#: **61** SUPPLEMENT#: **0** Category Code: **CBSA**	CONTINGENCY BALANCE (incl. this change) **$93,692,438.99**
COST: **$998,928.00** INCREASE ☑ DECREASE ☐	HEADQUARTERS APPROVAL REQUIRED? ☑ YES ☐ NO
SUPPLEMENTAL FUNDS PROVIDED: **$0.00**	IS THIS REQUEST IN ACCORDANCE WITH ENVIRONMENTAL DOCUMENTS? ☑ YES ☐ NO
CCO DESCRIPTION: SAS/Skyway Electrical Warning Systems	**PROJECT DESCRIPTION:** CONSTRUCT SELF-ANCHORED SUSPENSION BRIDGE

Original Contract Time:	Time Adj. This Change:	Previously Approved CCO Time Adjustments:	Percentage Time Adjusted: (including this change)	Total # of Unreconciled Deferred Time CCO(s): (including this change)
2490 Day(s)	**0** Day(s)	**501** Day(s)	**20** %	**3**

THIS CHANGE ORDER PROVIDES FOR:

Revising electrical warning systems on SAS Main Tower, Pier E2, Pier E3, and along Skyway Piers including navigation marker lights and relay cabinets, aviation light, fog detection panels, fog bells and horns, associated pull boxes, and conductors, conduits, and mounts for the navigation lights.

Revising Special Provisions Section 10-3.14 "LIGHTING," subsection "NAVIGATION WARNING SYSTEM" and subsection "FOG DETECTION SYSTEM."

The electrical warning system was not finalized and approved by the United States Coast Guard (USCG) before the SAS project was put out to bid. The navigation and aviation warning system and fog detection system will be revised to meet USCG requirements. Navigation fixtures will be changed from incandescent bulbs to LED in order to reduce power consumption and maintenance costs. The navigation warning system fixtures, conductors, and electrical enclosures will be modified to accommodate the use of LED.

This change order resolves the costs associated with Contractor Request for Information (RFI) numbers 873R0, 1334R0, 1334R1, 1404R3, 1901R1, 2593, and 2666 with respect to changes listed above.

The total cost of this change order is $998,928.00 lump sum, which can be financed from the contingency fund. A detailed cost analysis is on file.

There will be no time adjustment for this change, as it does not affect the controlling operation.

This change order has concurrence from William Casey (Supervising TE), Rich Foley (HQ Oversight), Ken Terpstra (Project Manager), Lina Ellis (Maintenance), and Jing Chen (District Design).

CONCURRED BY:			
Construction Engineer:	William Casey, Sup TE	Date	6/1/12
Bridge Engineer:		Date	
Project Engineer:	District Design, Jing Chen	Date	6/5/12
Project Manager:	Proj Manager, Ken Terpstra	Date	6/28/12
FHWA Rep.:		Date	
Environmental:		Date	
Other (specify):	Struct. Maint, Lina Ellis	Date	6/5/12
Other (specify):	HQ, Rich Foley	Date	6/4/12
District Prior Approval By:	HQ, Bob Molera	Date	9/22/09
HQ (Issue Approve) By:		Date	
Resident Engineer's Signature:		Date	1/23/13

ESTIMATE OF COST

	THIS REQUEST	TOTAL TO DATE
ITEMS	$0.00	$0.00
FORCE ACCOUNT	$0.00	$0.00
AGREED PRICE	$0.00	$0.00
ADJUSTMENT	$998,928.00	$998,928.00
TOTAL	$998,928.00	$998,928.00

FEDERAL PARTICIPATION

☐ PARTICIPATING ☐ PARTICIPATING IN PART ☑ NONE
☐ NON-PARTICIPATING (MAINTENANCE) ☐ NON-PARTICIPATING

FEDERAL SEGREGATION (if more than one Funding Source or P.I.P. type)
☐ CCO FUNDED PER CONTRACT ☐ CCO FUNDED AS FOLLOWS

FEDERAL FUNDING SOURCE	PERCENT

ADA Notice: For individuals with sensory disabilities, this document is available in alternate formats. For information call: (916) 654-6410 or TDD (916) 654-3880 or write Records and Forms Management, 1120 N Street, MS-89, Sacramento, CA 95814.

NOTES:

1. The contractor shall verify all controlling field dimensions before ordering or fabricating any material.
2. For structural notes, see sheet AS-1.
3. For electrical panel support locations, see electrical plans.
4. For callbox locations, see electrical sheets, sheet E-397.
5. Unless otherwise noted, all framing elements are L76x76x6.4.
6. For electrical enclosure support, use Unistrut P2000 or approved equal. Attach to frame per manufacturer's recommendations. Locate to suit.

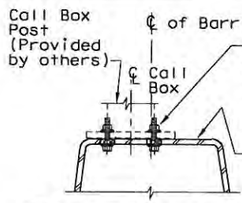

D — SECTION
NO SCALE

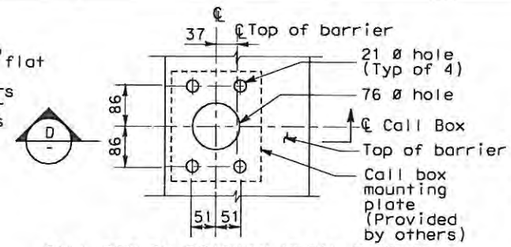

CALL BOX ON ROADWAY METAL BARRIER

I / AS-2 — DETAIL
NO SCALE

REQUEST FOR INFORMATION NOT ADDRESSED IN THIS CCO REMAIN IN FORCE					
3	08/03/09	ELECTRICAL WARNING SYSTEMS	GB	MSO	61
2	03/30/09	SERVICE PLATFORM ELECTRICAL CHANGES	NK	MSO	55
1	03/04/08	BARRIER MODIFICATIONS.	EL	MI	44
MARK	DATE	DESCRIPTIONS	BY	CH'D	CCO#
		REVISIONS			

CONTRACT CHANGE ORDER NO. 61
SHEET 7 OF 104

DIST	COUNTY	ROUTE	KILOMETER POST TOTAL PROJECT	SHEET No	TOTAL SHEETS
04	SF	80	13.2/13.9	83R3	1204

REGISTERED CIVIL ENGINEER 4/02/04
12-6-04
PLANS APPROVAL DATE

Registered Professional Engineer — Mee Shing Owyang — No. 24960 — Exp. 12/31/05 — CIVIL — State of California

The State of California or its officers or agents shall not be responsible for the accuracy or completeness of electronic copies of this plan sheet.

Parsons Brinckerhoff Quade & Douglas, Inc.
303 Second Street, Suite 700N
San Francisco, CA 94107

Caltrans now has a web site! To get to the web site, go to: http://www.dot.ca.gov

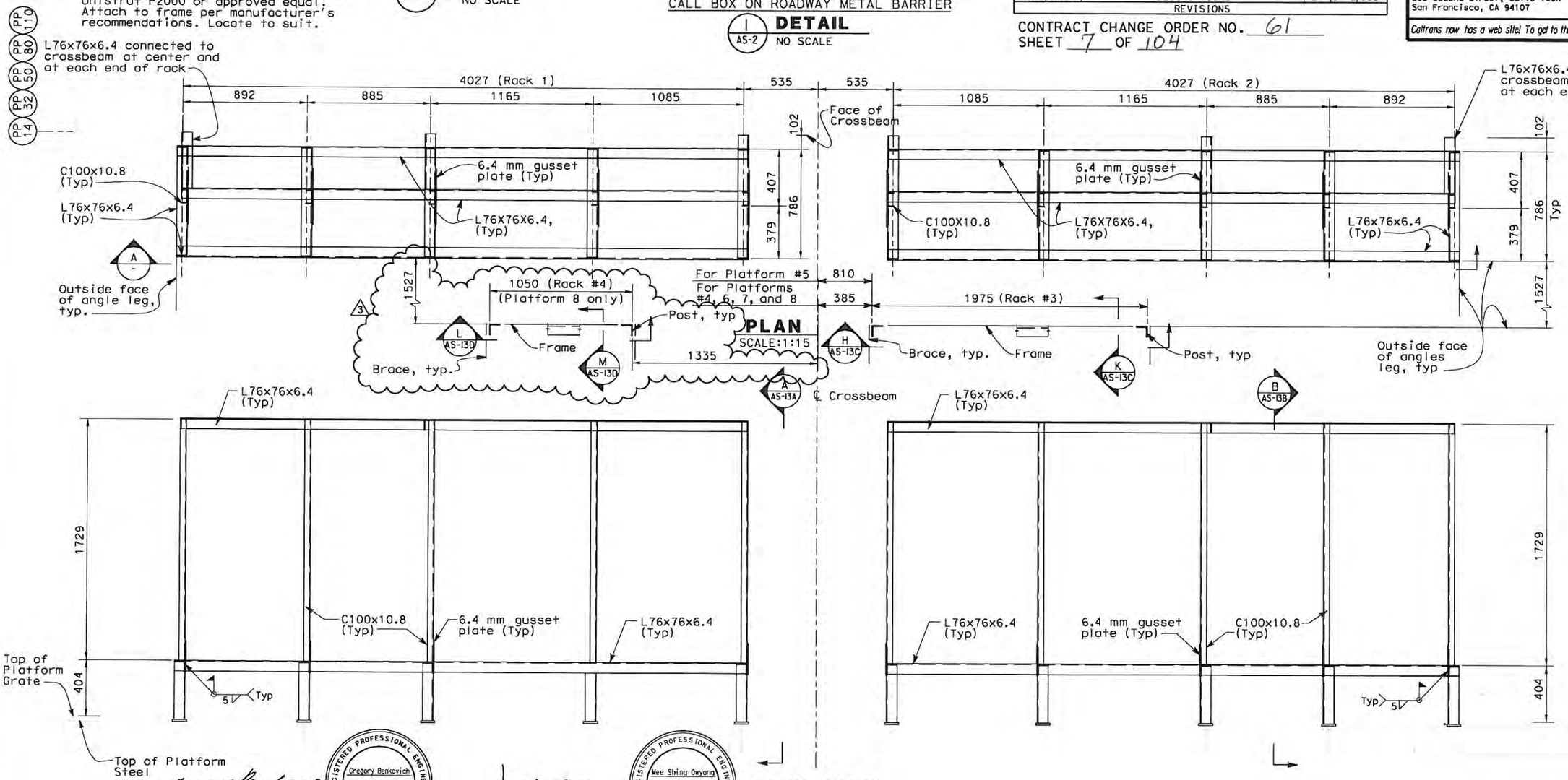

FOR REVISION ONLY 3 — Gregory Benkovich, No. 40518, Exp. 3/31/11, CIVIL, State of California

FOR REVISION ONLY 1 2 — Mee Shing Owyang, No. 24960, Exp. 12/31/09, CIVIL, State of California

ALL DIMENSIONS ARE IN MILLIMETERS UNLESS OTHERWISE SHOWN

BoB Zandipour, DESIGN OVERSIGHT	DESIGN	BY N. King	CHECKED M. S. Owyang	PREPARED FOR THE STATE OF CALIFORNIA DEPARTMENT OF TRANSPORTATION
SIGN OFF DATE	DETAILS	BY L. Reyes	CHECKED M. S. Owyang	
DESIGN DETAIL SHEET (METRIC) (REV. 3/1/98)	QUANTITIES	BY	CHECKED	PROJECT ENGINEER

ORIGINAL SCALE IN MILLIMETERS FOR REDUCED PLANS 0 10 20 30 40 50 60 70 80 90 100

BRIDGE NO.	SAS SUPERSTRUCTURE
34-0006	
KILOMETER POST 13.2/13.9	ELECTRICAL PANEL SUPPORT SECTIONS — AS-13

CU 04251
EA 0120F1

DISREGARD PRINTS BEARING EARLIER REVISION DATES →

REVISION DATES (PRELIMINARY STAGE ONLY) | SHEET | OF

FILE => T:\13103\MS\pse\SAS Struc\CCO\SAS CC061\2009-08-03_Issued for Submittal\04-0120f1_0083R03.dgn

USERNAME => llorico DATE PLOTTED => 8/13/2009 TIME PLOTTED => 3:39:45 PM

BFREQUEST

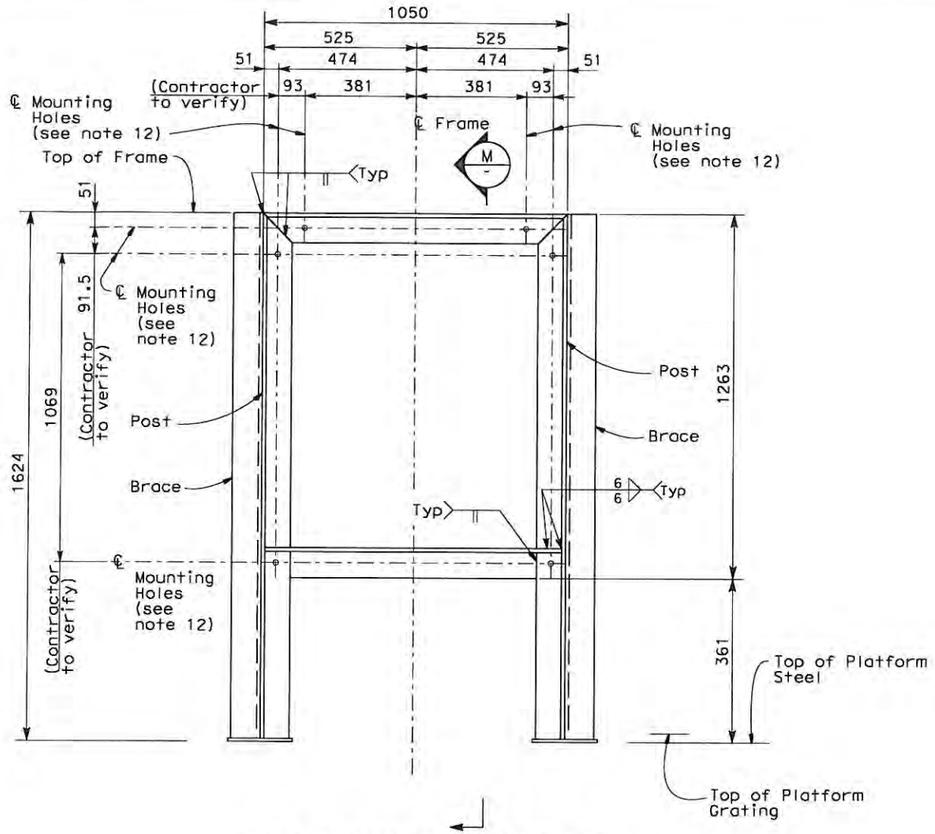

RACK #4 (FOG DETECTION PANEL)

L / AS-13 SECTION
NOT TO SCALE

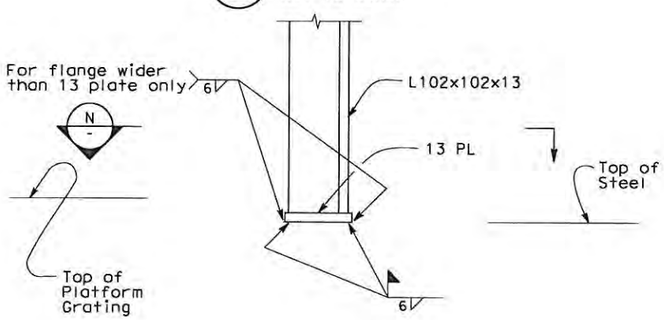

I / - DETAIL
NOT TO SCALE

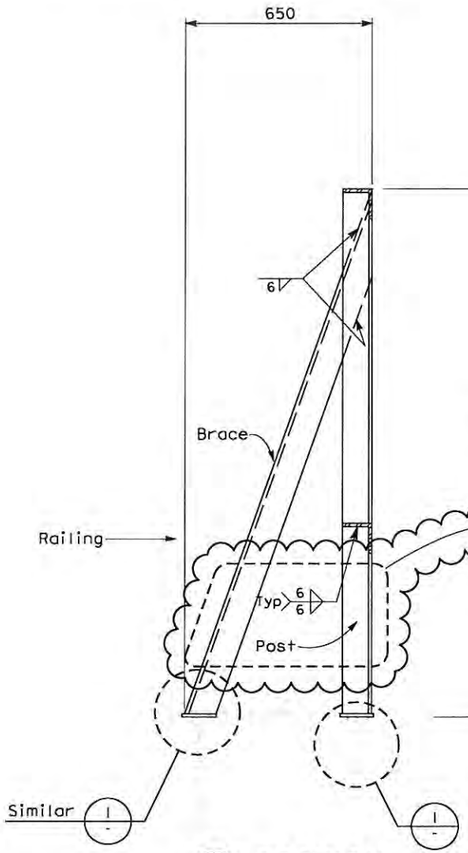

M / - SECTION
NOT TO SCALE

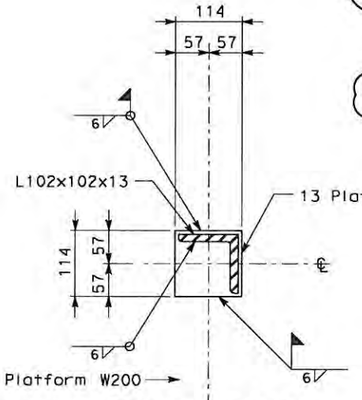

N / - SECTION
NOT TO SCALE

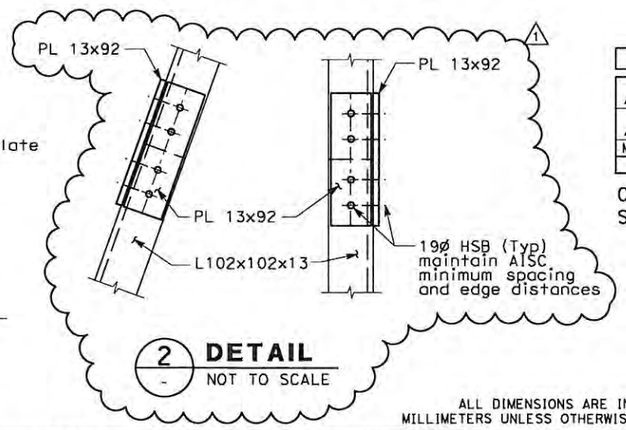

2 / - DETAIL
NOT TO SCALE

ALL DIMENSIONS ARE IN MILLIMETERS UNLESS OTHERWISE SHOWN

Caltrans Metric

DIST	COUNTY	ROUTE	KILOMETER POST TOTAL PROJECT	SHEET NO	TOTAL SHEETS
04	SF	80	13.2/13.9	83S4 R1	1204

Gregory Benkovich 10/01/08
REGISTERED CIVIL ENGINEER

PLANS APPROVAL DATE

REGISTERED PROFESSIONAL ENGINEER — Gregory Benkovich — No. 40518 — Exp. 3/31/11 — CIVIL — STATE OF CALIFORNIA

The State of California or its officers or agents shall not be responsible for the accuracy or completeness of electronic copies of this plan sheet.

PB AMERICAS, Inc.
303 Second Street, Suite 700N
San Francisco, CA 94107

Caltrans now has a web site! To get to the web site, go to: http://www.dot.ca.gov

REGISTERED PROFESSIONAL ENGINEER — Mee Shing Owyang — No. 24960 — Exp. 12/31/11 — CIVIL — STATE OF CALIFORNIA

FOR REVISION ONLY
1

NOTES:

1. The contractor shall verify all controlling field dimensions before ordering or fabricating any material.
2. Unless otherwise noted, all framing elements are L102x102x13.
3. All structural steel shall be AASHTO M270M Grade 36.
4. Steel pipe shall be ASTM A-53 grade B.
5. All bolts shall be conforming to ASTM A325 and shall be 19.05 mm diameter unless noted otherwise on plans.
6. All welded connections shall conform to the requirements of AASHTO/ AWS D1.5 Bridge Welding Code. Weld electrodes shall be E70XX.
7. All structural steel shall be Hot-dipped galvanized.
8. Electrical panel support designed for uniformly distributed wind load on vertical surface of 2.4 kPa (50psf).
9. Design weight of electrical panel assumed 544 kg (1200 lbs).
10. For structural notes, see sheet AS-1.
11. Contractor has the option to perform welds shown on this drawing in the shop or in the field.
12. Before drilling mounting holes in support frame, contractor shall verify location of the mounting holes in electrical panel.

REQUEST FOR INFORMATION NOT ADDRESSED IN THIS CCO REMAIN IN FORCE					
1	01/07/11	ELECTRICAL WARNING SYSTEMS	NK	MSO	61
0	08/03/09	ELECTRICAL WARNING SYSTEMS	GB	RD	61
MARK	DATE	DESCRIPTIONS	BY	CH'D	CCO#
		REVISIONS			

CONTRACT CHANGE ORDER NO. 61
SHEET 8 OF 104

Bob Zandipour, DESIGN OVERSIGHT		DESIGN	L. Guggemos	G. Benkovich	PREPARED FOR THE STATE OF CALIFORNIA DEPARTMENT OF TRANSPORTATION
SIGN OFF DATE		DETAILS	O. Langhirt	W. S. Owyang	
DESIGN DETAIL SHEET (METRIC) (REV. 3/1/98)		QUANTITIES			

Brady Nadell, PROJECT ENGINEER

BRIDGE NO. 34-0006
KILOMETER POST 13.2/13.9

CU 04251
EA 0120F1

DISREGARD PRINTS BEARING EARLIER REVISION DATES →

SAS SUPERSTRUCTURE
ELECTRICAL PANEL SUPPORT SECTIONS SHEET 4

AS-13D

REVISION DATES (PRELIMINARY STAGE ONLY) | SHEET | OF

ORIGINAL SCALE IN MILLIMETERS FOR REDUCED PLANS 0 10 20 30 40 50 60 70 80 90 100

FILE => T:\13103\WS\pse\SAS Struc\CCO\SAS CCO61\Draft 6 - 2011.01.07_Issued for Submittal\04-0120F1_0083S04R01.dgn

$FREQUEST

USERNAME => llorica DATE PLOTTED => 2/17/2011 TIME PLOTTED => 4:49:00 PM

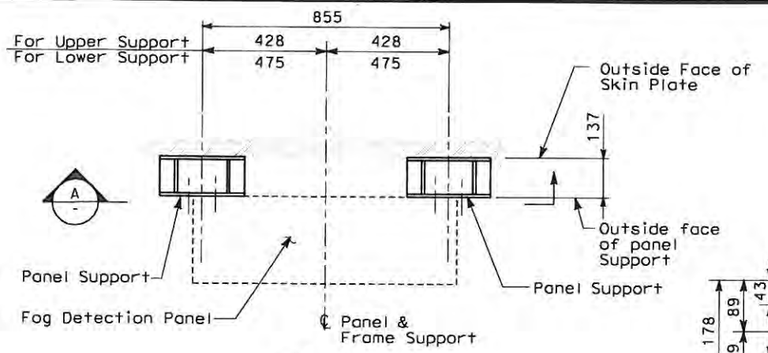

PLAN
SCALE: 1:10

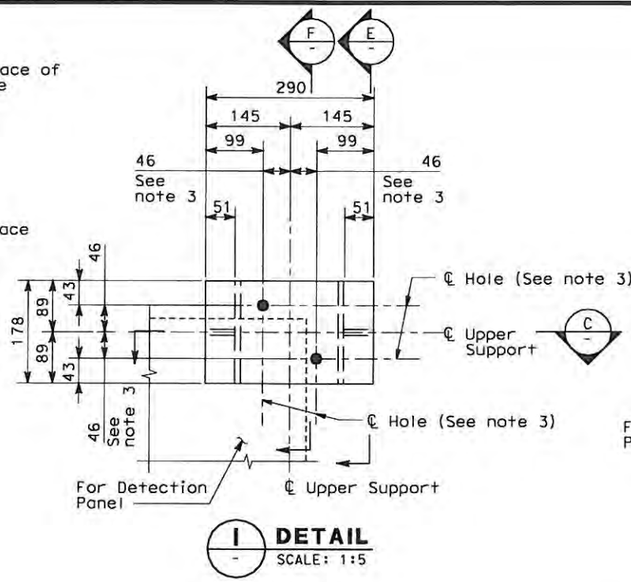

1 DETAIL
SCALE: 1:5

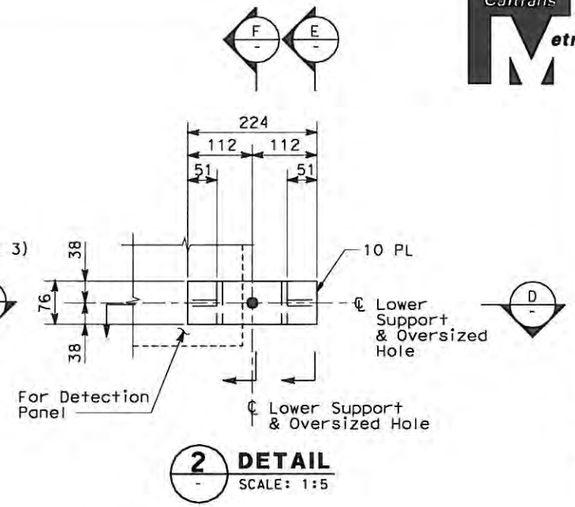

2 DETAIL
SCALE: 1:5

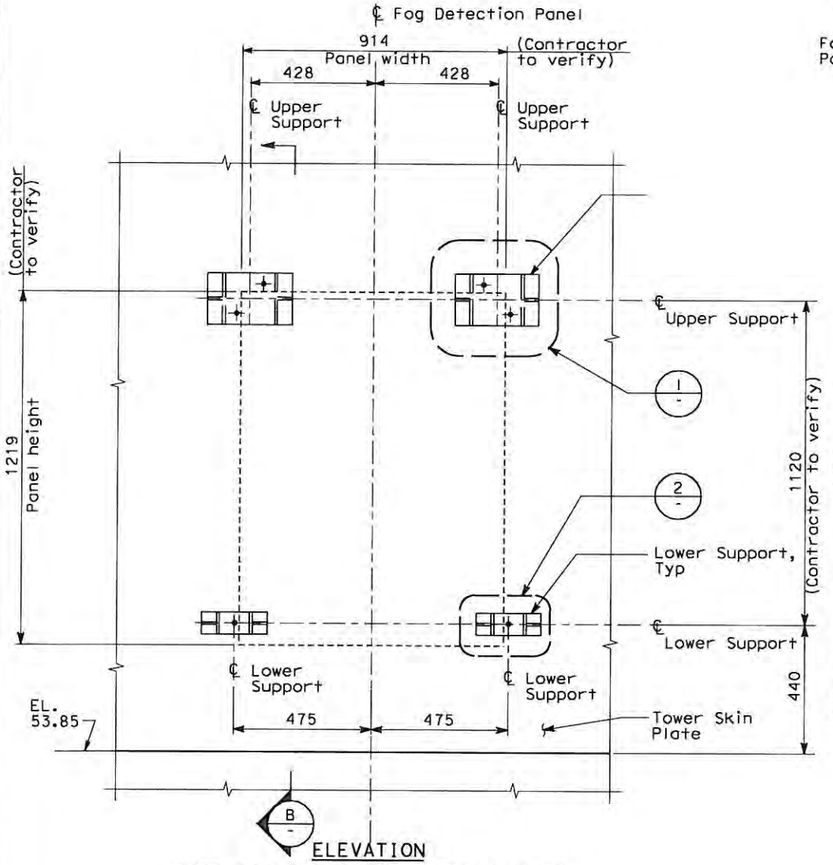

ELEVATION
(FOR FOG DETECTION PANEL FDP-5)

A SECTION
SCALE: 1:10

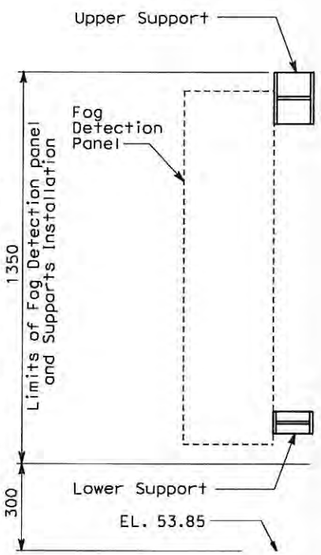

B SECTION
SCALE: 1:10

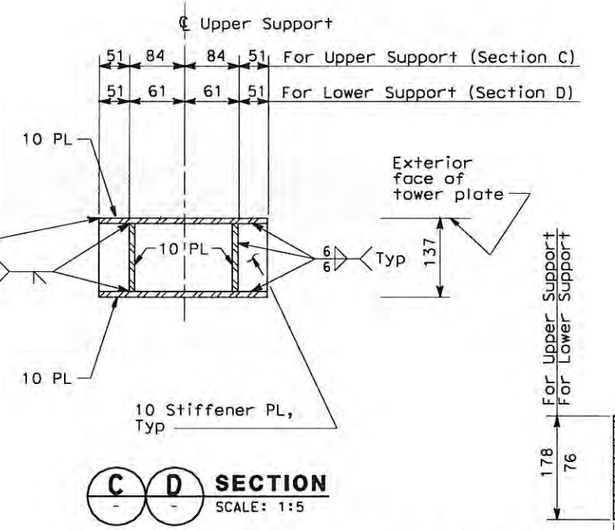

C D SECTION
SCALE: 1:5

E SECTION
SCALE: 1:5

F SECTION
SCALE: 1:5

Caltrans Metric

DIST	COUNTY	ROUTE	KILOMETER POST TOTAL PROJECT	SHEET No	TOTAL SHEETS
04	SF	80	13.2/13.9	83S5	1204

Gregory Benkovich 10/01/08
REGISTERED CIVIL ENGINEER

PLANS APPROVAL DATE

REGISTERED PROFESSIONAL ENGINEER — Gregory Benkovich — No. C40518 — Exp. 3/31/11 — CIVIL — STATE OF CALIFORNIA

The State of California or its officers or agents shall not be responsible for the accuracy or completeness of electronic copies of this plan sheet.

Parsons Brinckerhoff Quade & Douglas, Inc.
303 Second Street, Suite 700N
San Francisco, CA 94107

Caltrans now has a web site! To get to the web site, go to: http://www.dot.ca.gov

NOTES:

1. The Contractor shall verify all Controlling Field Dimensions before Ordering or Fabricating any Material.
2. All structural steel shall be AASHTO M270M grade 36.
3. Before drilling holes contractor shall verify diameter and location of the holes for the bolts to mount the Fog Detection Panel.
4. All welded connections shall conform to the requirements of AASHTO/AWS D1.5 Bridge Welding Code. Weld electrodes shall be E70XX.
5. All structural steel shall be Hot-dipped galvanized.
6. Electrical panel support designed for uniformly distributed wind load on vertical surface of 2.4 kPA (50psf).
7. Design weight of electrical panel assumed 385 kg (850 lbs).

REQUEST FOR INFORMATION NOT ADDRESSED IN THIS CCO REMAIN IN FORCE

MARK	DATE	DESCRIPTIONS	BY	CH'D	CCO#
		REVISIONS			
0	08/03/09	ELECTRICAL WARNING SYSTEMS	GB	RD	61

CONTRACT CHANGE ORDER NO. 61
SHEET 9 OF 104

ALL DIMENSIONS ARE IN MILLIMETERS UNLESS OTHERWISE SHOWN

Bob Zandipour
DESIGN OVERSIGHT
SIGN OFF DATE

	BY	CHECKED
DESIGN	L. Guggemos	G. Benkovich
DETAILS	O. Langhirt	G. Benkovich
QUANTITIES		

PREPARED FOR THE STATE OF CALIFORNIA
DEPARTMENT OF TRANSPORTATION

Brady Nadell
PROJECT ENGINEER

BRIDGE NO. 34-0006
KILOMETER POST 13.2/13.9

CU 04251
EA 0120F1

SAS SUPERSTRUCTURE
ELECTRICAL PANEL SUPPORT
AS-13E

DESIGN DETAIL SHEET (METRIC) (REV. 3/1/98)
ORIGINAL SCALE IN MILLIMETERS FOR REDUCED PLANS 0 10 20 30 40 50 60 70 80 90 100
DISREGARD PRINTS BEARING EARLIER REVISION DATES
REVISION DATES (PRELIMINARY STAGE ONLY)
SHEET OF

FILE => T:\13103\MS\pse\SAS Struc\CCO\SAS CC061\2009-08-03_Issued for Submittal\04-0120f1_0083S05.dgn

#REQUEST
USERNAME => lloricoa DATE PLOTTED => 8/13/2009 TIME PLOTTED => 3:39:28 PM

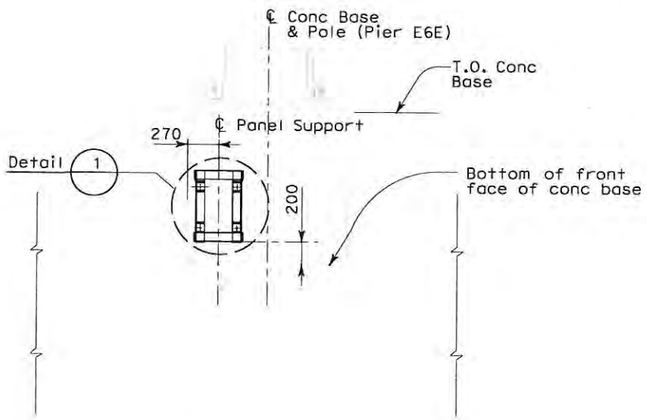

FRONT ELEVATION
SCALE: 1:25

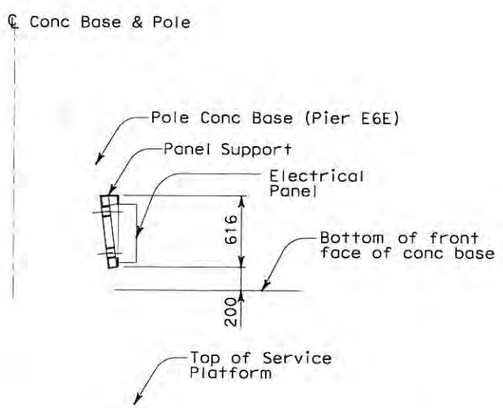

SIDE ELEVATION
SCALE: 1:25

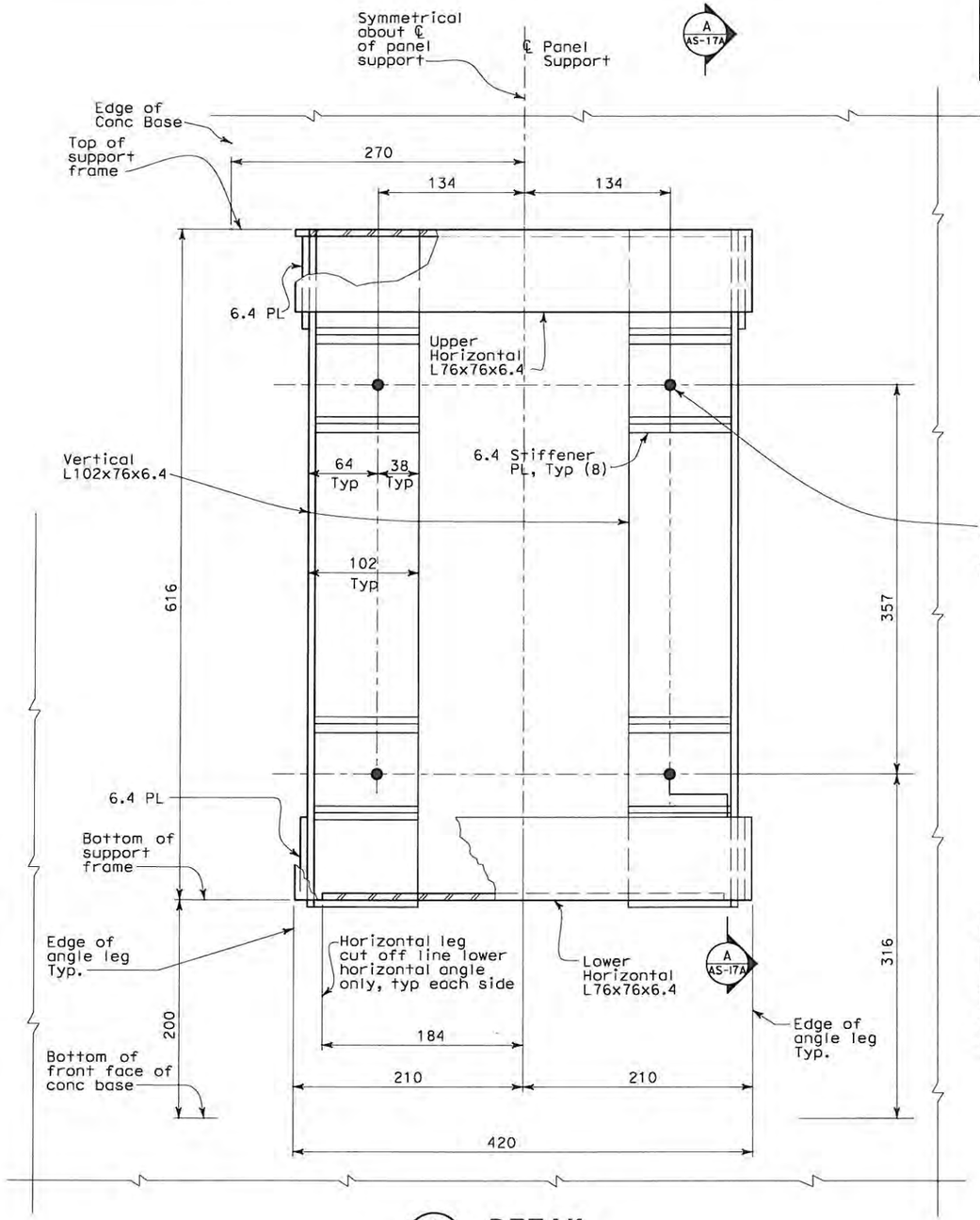

DETAIL 1
NOT TO SCALE

Caltrans Metric

DIST	COUNTY	ROUTE	KILOMETER POST TOTAL PROJECT	SHEET No	TOTAL SHEETS
04	SF	80	13.2/13.9	86 S17	1204

Gregory Benkovich 10/01/08
REGISTERED CIVIL ENGINEER

PLANS APPROVAL DATE

REGISTERED PROFESSIONAL ENGINEER — Gregory Benkovich — No. C40518 — Exp. 3/31/11 CIVIL — STATE OF CALIFORNIA

The State of California or its officers or agents shall not be responsible for the accuracy or completeness of electronic copies of this plan sheet.

Parsons Brinckerhoff Quade & Douglas, Inc.
303 Second Street, Suite 700N
San Francisco, CA 94107

Caltrans now has a web site! To get to the web site, go to: http://www.dot.ca.gov

NOTES:
1. The contractor shall verify all controlling field dimensions before ordering or fabricating any material.
2. All structural steel shall be AASHTO M270M Grade 36.
3. All structural steel shall be hot-dipped galvanized.
4. To avoid damage to existing reinforcement before drilling holes for Mechanical Expansion Anchors, Contractor shall verify location of the existing reinforcement in concrete pedestal.
5. Design weight of electrical panel assumed 91 kg (200 lbs).

REQUEST FOR INFORMATION NOT ADDRESSED IN THIS CCO REMAIN IN FORCE					
MARK	DATE	REVISIONS DESCRIPTIONS	BY	CH'D	CCO#
0	08/03/09	ELECTRICAL WARNING SYSTEMS	GB	RD	61

CONTRACT CHANGE ORDER NO. 61
SHEET 10 OF 104

ALL DIMENSIONS ARE IN MILLIMETERS UNLESS OTHERWISE SHOWN

Bob Zandipour
DESIGN OVERSIGHT
SIGN OFF DATE

	BY	CHECKED
DESIGN	G. Benkovich	R. Donikian
DETAILS	M. Nelson	G. Benkovich
QUANTITIES	G. Benkovich	R. Donikian

PREPARED FOR THE STATE OF CALIFORNIA
DEPARTMENT OF TRANSPORTATION

Brady Nadell
PROJECT ENGINEER

BRIDGE NO. 34-0006
KILOMETER POST 13.2/13.9

STRUCTURE - EASTBOUND
SERVICE PLATFORM TYPE II - PLANS & ELEVATIONS
AS-17

DESIGN DETAIL SHEET (METRIC) (REV. 3/1/98)

ORIGINAL SCALE IN MILLIMETERS FOR REDUCED PLANS 0 10 20 30 40 50 60 70 80 90 100

CU 04251
EA 0120F1

DISREGARD PRINTS BEARING EARLIER REVISION DATES

REVISION DATES (PRELIMINARY STAGE ONLY)

SHEET OF

FILE => T:\13103\MS\pse\SAS Struc\CCO\SAS CCO61\2009-08-03_Issued for Submittal\04-0120f1_0086S17.dgn

USERNAME => garciar DATE PLOTTED => 8/14/2009 TIME PLOTTED => 9:26:09 AM

@REQUEST

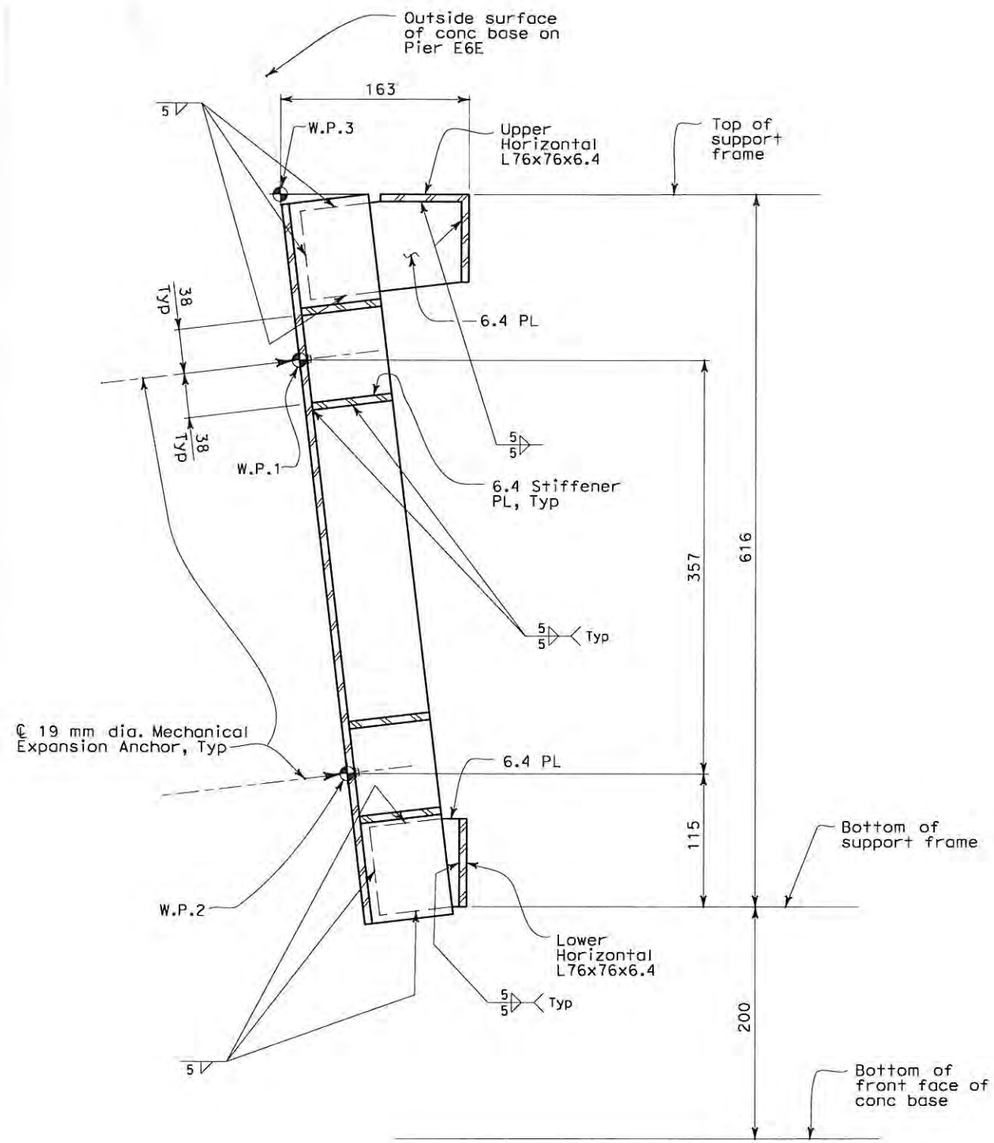

A / AS-17 **SECTION**
NOT TO SCALE

Caltrans Metric

DIST	COUNTY	ROUTE	KILOMETER POST TOTAL PROJECT	SHEET No	TOTAL SHEETS
04	SF	80	13.2/13.9	86 S18	1204

Gregory Benkovich 10/01/08
REGISTERED CIVIL ENGINEER DATE

PLANS APPROVAL DATE

REGISTERED PROFESSIONAL ENGINEER — Gregory Benkovich — No. C40518 — Exp. 3/31/11 — CIVIL — STATE OF CALIFORNIA

The State of California or its officers or agents shall not be responsible for the accuracy or completeness of electronic copies of this plan sheet.

Parsons Brinckerhoff Quade & Douglas, Inc.
303 Second Street, Suite 700N
San Francisco, CA 94107

Caltrans now has a web site! To get to the web site, go to: http://www.dot.ca.gov

NOTES:

1. The contractor shall verify all controlling field dimensions before ordering or fabricating any material.
2. All structural steel shall be AASHTO M270M Grade 36.
3. All structural steel shall be hot-dipped galvanized.

REQUEST FOR INFORMATION NOT ADDRESSED IN THIS CCO REMAIN IN FORCE

MARK	DATE	REVISIONS DESCRIPTIONS	BY	CH'D	CCO#
0	08/03/09	ELECTRICAL WARNING SYSTEMS	GB	RD	61

CONTRACT CHANGE ORDER NO. 61
SHEET 11 OF 104

ALL DIMENSIONS ARE IN MILLIMETERS UNLESS OTHERWISE SHOWN

Bob Zandipour
DESIGN OVERSIGHT
SIGN OFF DATE

	BY	CHECKED
DESIGN	G. Benkovich	R. Donikian
DETAILS	M. Nelson	G. Benkovich
QUANTITIES	G. Benkovich	R. Donikian

PREPARED FOR THE STATE OF CALIFORNIA DEPARTMENT OF TRANSPORTATION

Brady Nadell
PROJECT ENGINEER

BRIDGE NO.	KILOMETER POST
34-0006	13.2/13.9

STRUCTURE - EASTBOUND
SERVICE PLATFORM TYPE II - PLANS & ELEVATIONS

AS-17A

DESIGN DETAIL SHEET (METRIC) (REV. 3/1/98)

ORIGINAL SCALE IN MILLIMETERS FOR REDUCED PLANS 0 10 20 30 40 50 60 70 80 90 100

CU 04251
EA 0120F1

DISREGARD PRINTS BEARING EARLIER REVISION DATES →

REVISION DATES (PRELIMINARY STAGE ONLY)

SHEET OF

FILE => T:\13103\MS\pse\SAS Struc\CCO\SAS CC061\2009-08-03_Issued for Submittal\04-0120f1_0086S18.dgn

USERNAME => garcior DATE PLOTTED => 8/14/2009 TIME PLOTTED => 9:41:51 AM

*REQUEST

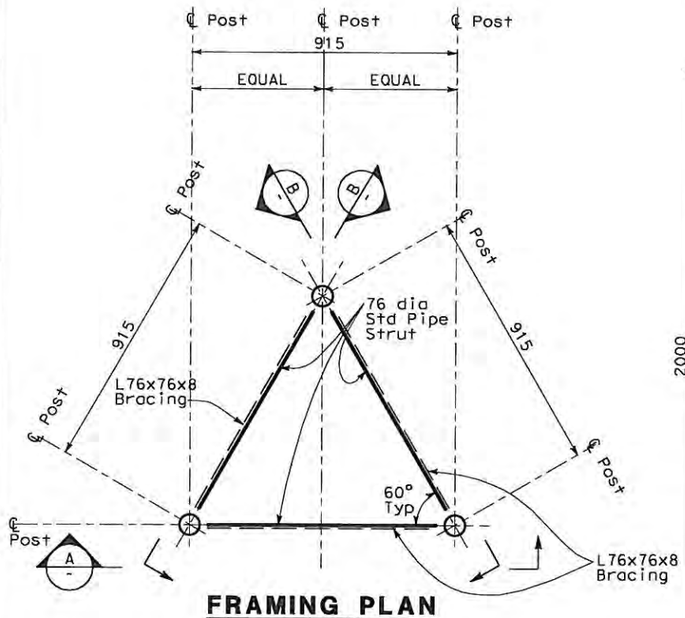

FRAMING PLAN
SCALE 1:10

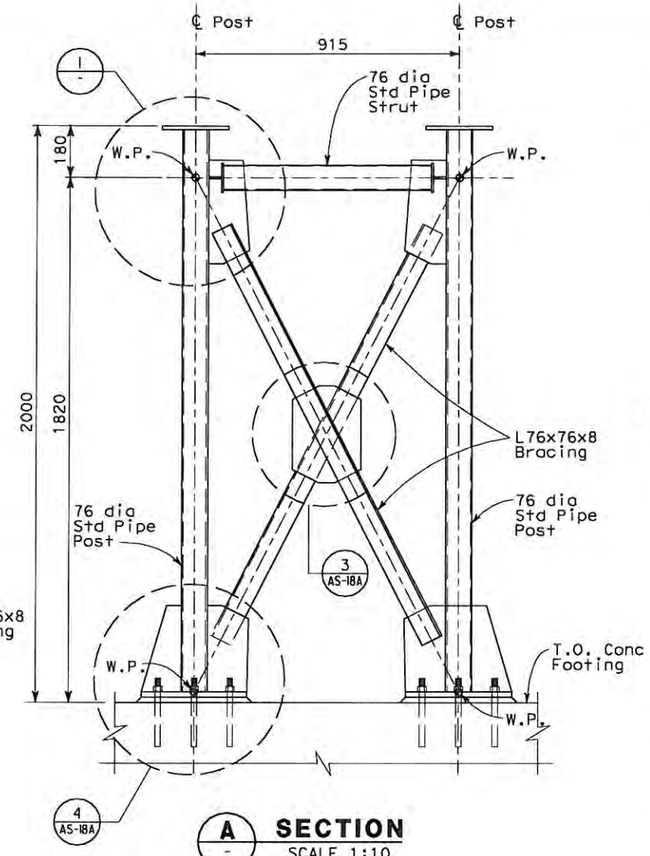

A SECTION
SCALE 1:10

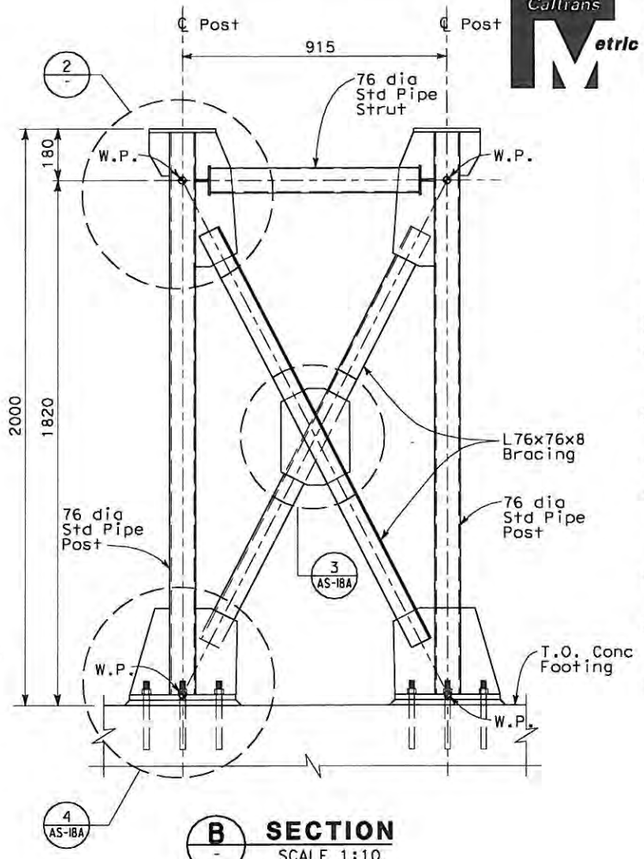

B SECTION
SCALE 1:10

Caltrans Metric

DIST	COUNTY	ROUTE	KILOMETER POST TOTAL PROJECT	SHEET No	TOTAL SHEETS
04	SF	80	13.2/13.9	86 S19	1204

Gregory Benkovich 10/01/08
REGISTERED CIVIL ENGINEER

REGISTERED PROFESSIONAL ENGINEER
Gregory Benkovich
No. C40518
Exp. 3/31/11
CIVIL
STATE OF CALIFORNIA

PLANS APPROVAL DATE

The State of California or its officers or agents shall not be responsible for the accuracy or completeness of electronic copies of this plan sheet.

Parsons Brinckerhoff Quade & Douglas, Inc.
303 Second Street, Suite 700N
San Francisco, CA 94107

Caltrans now has a web site! To get to the web site, go to: http://www.dot.ca.gov

NOTES:

1. The contractor shall verify all controlling field dimensions before ordering or fabricating any material.
2. All structural steel shall be AASHTO M270M Grade 36.
3. Steel pipe shall be ASTM A-53 grade B
4. All welded connections shall conform to the requirements of AASHTO/AWS D1.5 Bridge Welding Code. Weld electrodes shall be E70XX.
5. All structural steel shall be Hot-dipped galvanized.
6. Fog Bell support designed for uniformly distributed wind load on vertical surface of 2.4 kPa (50psf).
7. Design weight of fog bell system assumed 270 kg (600 lbs).

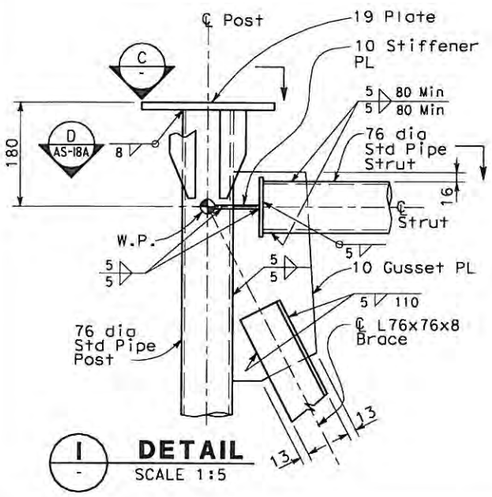

1 DETAIL
SCALE 1:5

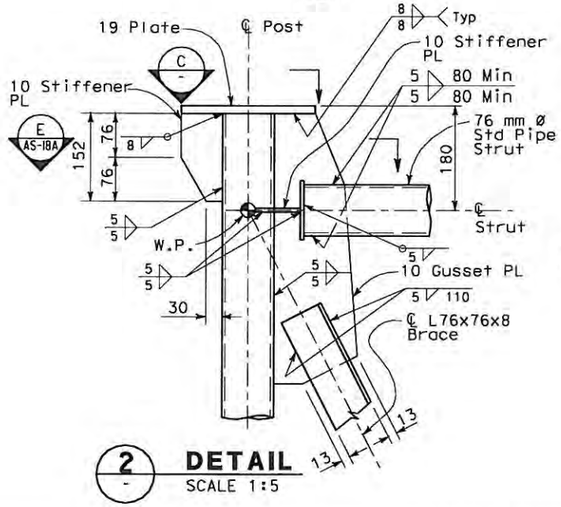

2 DETAIL
SCALE 1:5

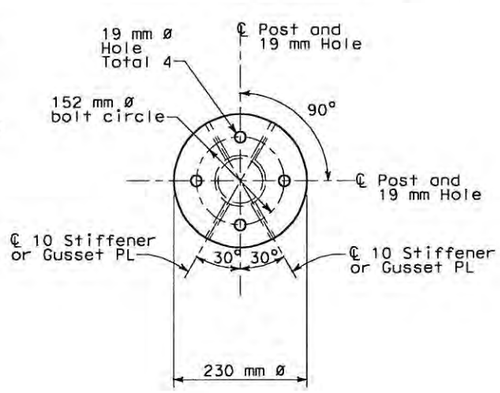

C SECTION
SCALE 1:5

ALL DIMENSIONS ARE IN MILLIMETERS UNLESS OTHERWISE SHOWN

REQUEST FOR INFORMATION NOT ADDRESSED IN THIS CCO REMAIN IN FORCE

MARK	DATE	DESCRIPTIONS	BY	CH'D	CCO#
		REVISIONS			
0	08/03/09	ELECTRICAL WARNING SYSTEMS	GB	RD	61

CONTRACT CHANGE ORDER NO. 61
SHEET 12 OF 104

Bob Zandipour
DESIGN OVERSIGHT

SIGN OFF DATE

DESIGN DETAIL SHEET (METRIC) (REV. 3/1/98)

	BY	CHECKED
DESIGN	G. Benkovich	R. Danikian
DETAILS	BY	G. Benkovich
QUANTITIES	BY	CHECKED

ORIGINAL SCALE IN MILLIMETERS FOR REDUCED PLANS 0 10 20 30 40 50 60 70 80 90 100

PREPARED FOR THE
STATE OF CALIFORNIA
DEPARTMENT OF TRANSPORTATION

Brady Nadell
PROJECT ENGINEER

CU 04251
EA 0120F1

BRIDGE NO. 34-0006
KILOMETER POST 13.2/13.9

DISREGARD PRINTS BEARING EARLIER REVISION DATES →

REVISION DATES (PRELIMINARY STAGE ONLY)

STRUCTURE - EASTBOUND
FOG BELL SUPPORT SHEET 1

AS-18

SHEET OF

FILE => T:\13103\MS\pse\SAS Struc\CCO\SAS CCO61\2009-08-03_Issued for Submittal\04-0120f1_0086S19.dgn

DATE PLOTTED => 8/11/2009 TIME PLOTTED => 3:26:51 PM
USERNAME => fusco
$FREQUEST

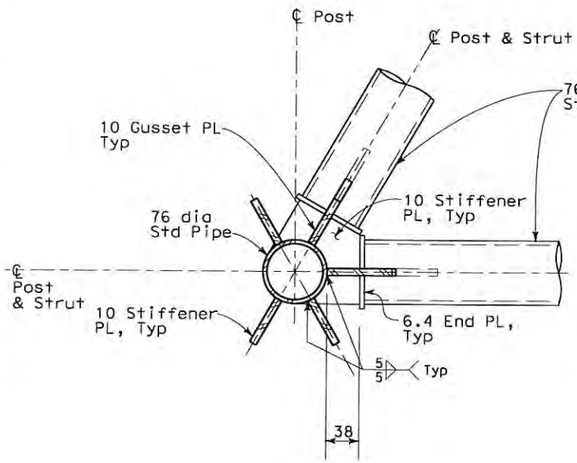

D AS-18 **SECTION**
SCALE 1:4

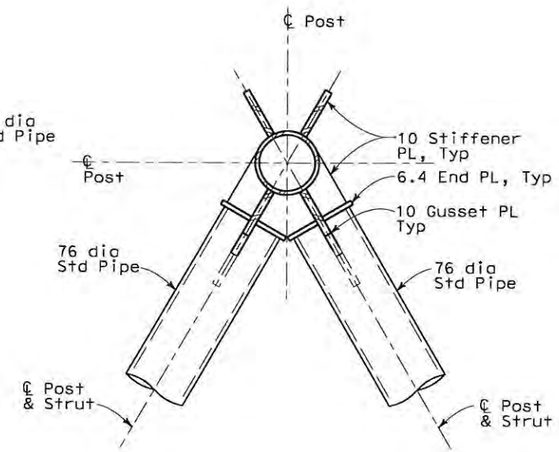

Rotated 120°

E AS-18 **SECTION**
SCALE 1:4

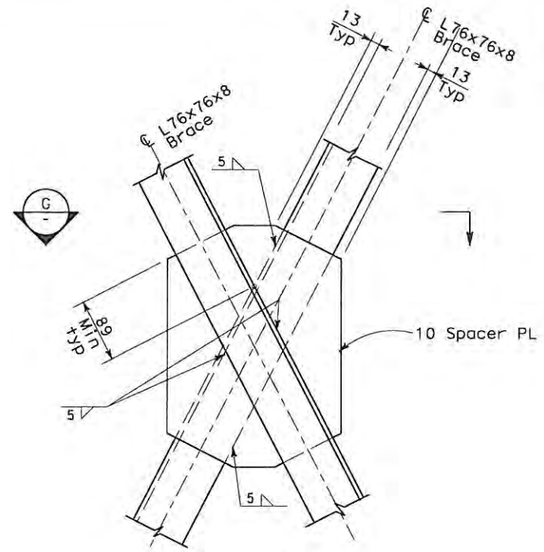

3 AS-18 **DETAIL**
SCALE 1:4

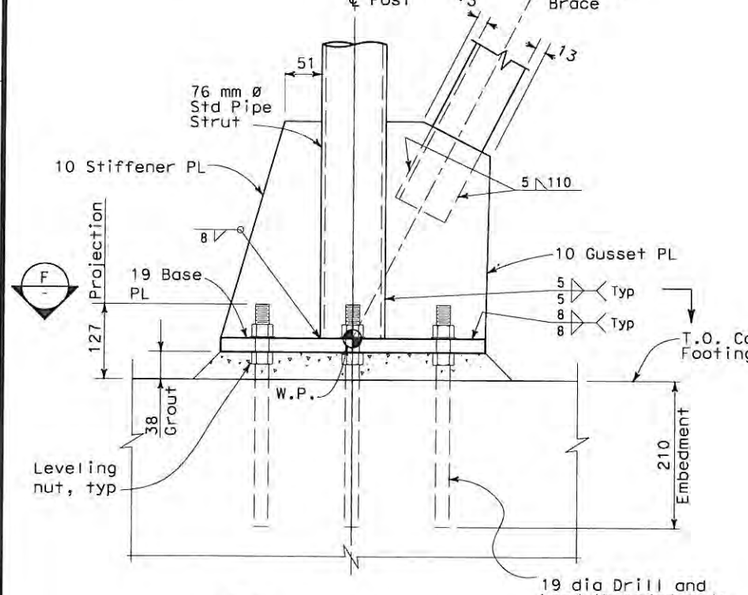

4 AS-18 **DETAIL**
SCALE 1:4

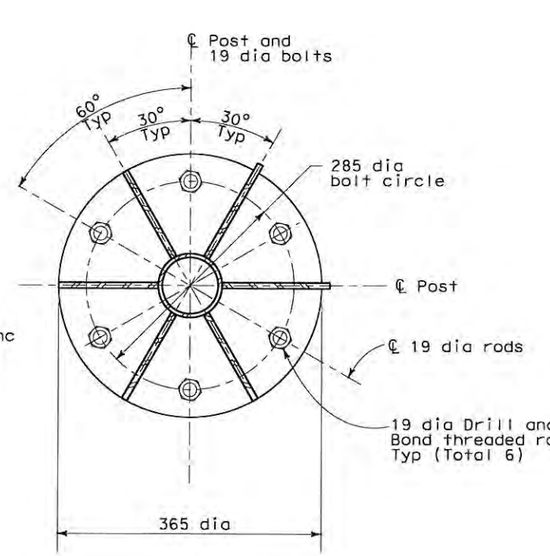

F - **SECTION**
SCALE 1:4

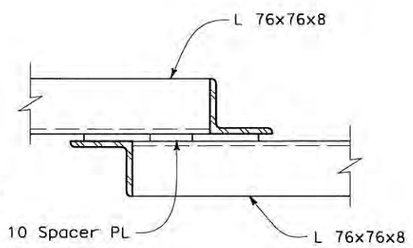

G - **SECTION**
SCALE 1:4

ALL DIMENSIONS ARE IN MILLIMETERS UNLESS OTHERWISE SHOWN

NOTE:

1. The contractor shall verify all controlling field dimensions before ordering or fabricating any material.
2. The contractor shall verify location of existing rebars in concrete pile cap before drilling holes for "drill and bond" threaded rods installation to avoid damage to the existing reinforcement.
3. For "drill and bond" threaded rods the contractor shall use "HILTI" HIT RE 500 Epoxy Adhesive Anchor or approved equal.

DIST	COUNTY	ROUTE	KILOMETER POST TOTAL PROJECT	SHEET No	TOTAL SHEETS
04	SF	80	13.2/13.9	86 S20	1204

Caltrans Metric

Gregory Benkovich 10/01/08
REGISTERED CIVIL ENGINEER

PLANS APPROVAL DATE

REGISTERED PROFESSIONAL ENGINEER — Gregory Benkovich — No. C40518 — Exp. 3/31/11 CIVIL — STATE OF CALIFORNIA

The State of California or its officers or agents shall not be responsible for the accuracy or completeness of electronic copies of this plan sheet.

Parsons Brinckerhoff Quade & Douglas, Inc.
303 Second Street, Suite 700N
San Francisco, CA 94107

Caltrans now has a web site! To get to the web site, go to: http://www.dot.ca.gov

REQUEST FOR INFORMATION NOT ADDRESSED IN THIS CCO REMAIN IN FORCE					
MARK	DATE	DESCRIPTIONS	BY	CH'D	CCO#
		REVISIONS			
0	08/03/09	ELECTRICAL WARNING SYSTEMS	GB	RD	61

CONTRACT CHANGE ORDER NO. 61
SHEET 13 OF 104

Bob Zandipour, DESIGN OVERSIGHT	DESIGN — BY G. Benkovich — CHECKED R. Donikian	PREPARED FOR THE STATE OF CALIFORNIA DEPARTMENT OF TRANSPORTATION	BRIDGE NO. 34-0006
SIGN OFF DATE	DETAILS — BY F. Ricafrente — CHECKED G. Benkovich	Brady Nadell, PROJECT ENGINEER	KILOMETER POST 13.2/13.9
DESIGN DETAIL SHEET (METRIC) (REV. 3/1/98)	QUANTITIES — BY — CHECKED	CU 04251 EA 0120F1	DISREGARD PRINTS BEARING EARLIER REVISION DATES →

SAS SUPERSTRUCTURE
FOG BELL SUPPORT SHEET 2
AS-18A

REVISION DATES (PRELIMINARY STAGE ONLY) | SHEET | OF

ORIGINAL SCALE IN MILLIMETERS FOR REDUCED PLANS 0 10 20 30 40 50 60 70 80 90 100

FILE => T:\13103\MS\pse\SAS Struc\CCO\SAS CCO61\2009-08-03_Issued for Submittal\04-0120f1_0086S20.dgn

USERNAME => garciar DATE PLOTTED => 8/5/2009 TIME PLOTTED => 12:41:02 PM

9F REQUEST

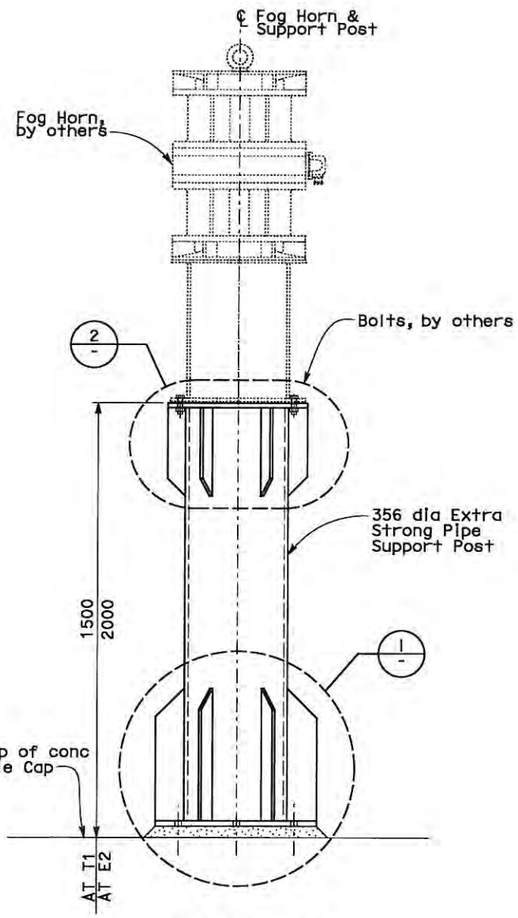

ELEVATION
FOG HORN SUPPORT
SCALE 1:10

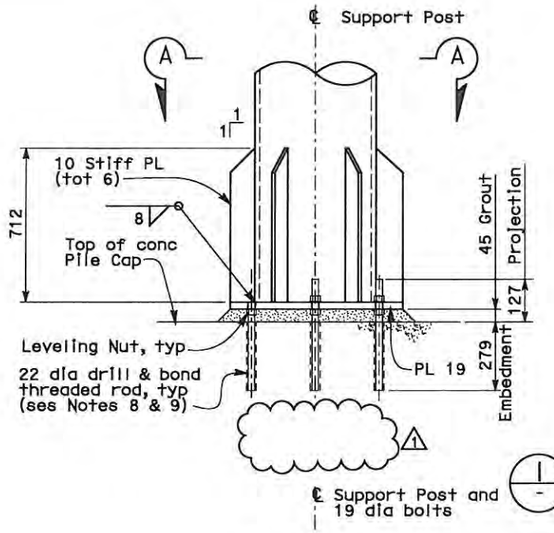

1 **DETAIL**
NO SCALE

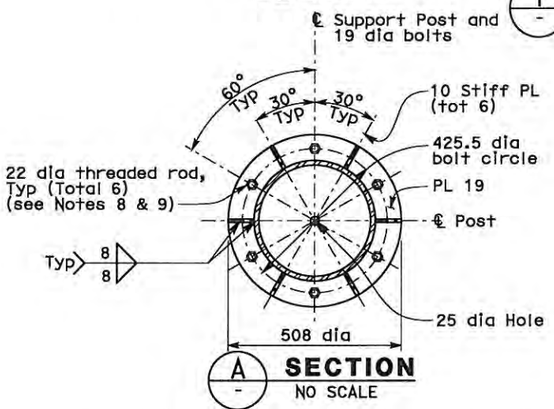

A **SECTION**
NO SCALE

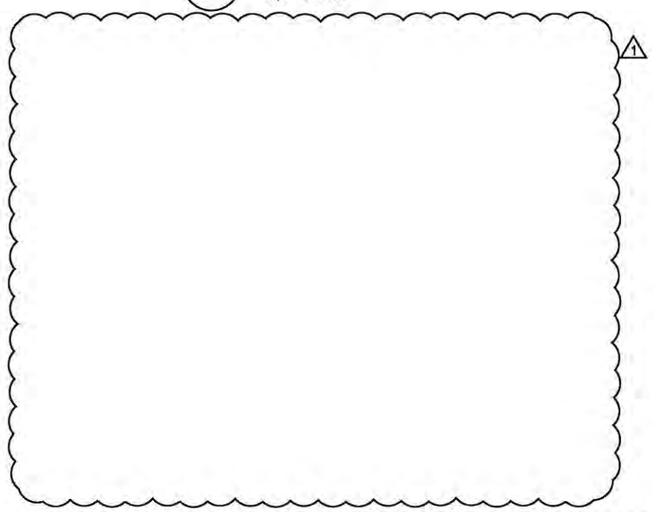

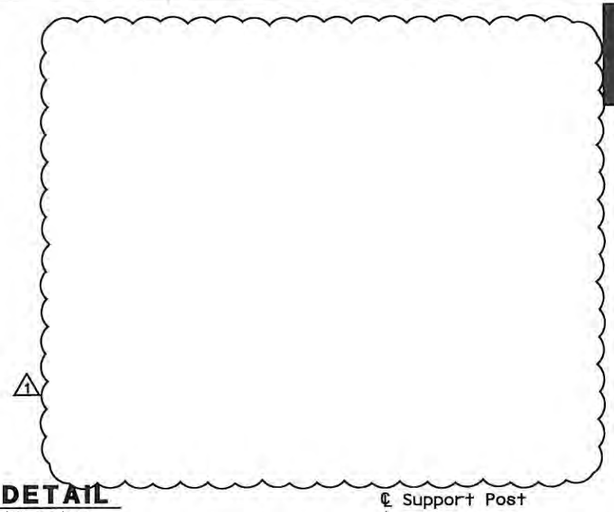

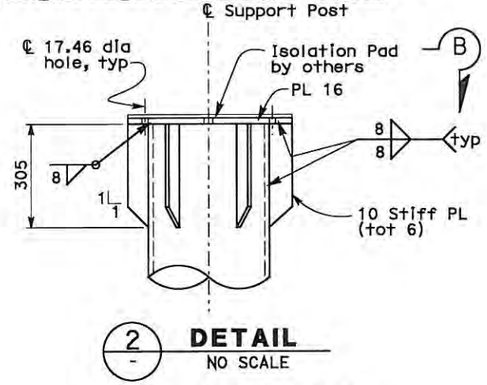

2 **DETAIL**
NO SCALE

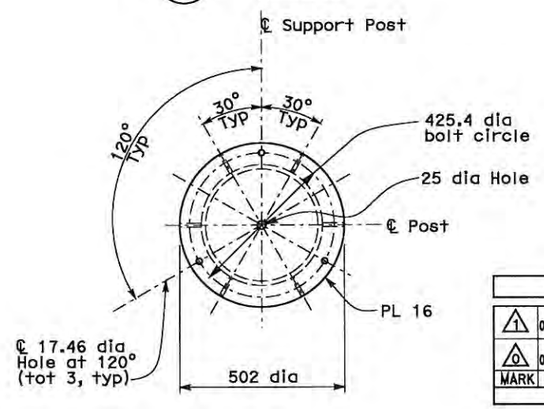

B **SECTION**
NO SCALE

ALL DIMENSIONS ARE IN MILLIMETERS UNLESS OTHERWISE SHOWN

DIST	COUNTY	ROUTE	KILOMETER POST TOTAL PROJECT	SHEET No	TOTAL SHEETS
04	SF	80	13.2/13.9	86 S21R1	1204

Gregory Benkovich 10/01/08
REGISTERED CIVIL ENGINEER

PLANS APPROVAL DATE

The State of California or its officers or agents shall not be responsible for the accuracy or completeness of electronic copies of this plan sheet.

REGISTERED PROFESSIONAL ENGINEER — Gregory Benkovich — No. C40518 — Exp. 3/31/11 — CIVIL — STATE OF CALIFORNIA

Parsons Brinckerhoff Quade & Douglas, Inc.
303 Second Street, Suite 700N
San Francisco, CA 94107

Caltrans now has a web site! To get to the web site, go to: http://www.dot.ca.gov

NOTES:

1. The contractor shall verify all controlling field dimensions before ordering or fabricating any material.
2. All structural steel shall be AASHTO M270M Grade 36.
3. Steel pipe shall be ASTM A-53 grade B
4. All welded connections shall conform to the requirements of AASHTO/AWS D1.5 Bridge Welding Code. Weld electrodes shall be E70XX.
5. All structural steel shall be Hot-dipped galvanized.
6. Fog horn support designed for uniformly distributed wind load on vertical surface of 2.4 kPa (50psf).
7. Design weight of fog horn system assumed 113 kg (250 lbs).
8. The contractor shall verify location of existing rebars in concrete pile cap before drilling holes for "drill and bond" threaded rods installation to avoid damage to the existing reinforcement.
9. For "drill and bond" threaded rods the contractor shall use "HILTI" HIT RE 500 Epoxy Adhesive Anchor or approved equal.

REGISTERED PROFESSIONAL ENGINEER — Nick Charles King Jr — No. 78599 — CIVIL — STATE OF CALIFORNIA

1

FOR REVISION ONLY

REQUEST FOR INFORMATION NOT ADDRESSED IN THIS CCO REMAIN IN FORCE

MARK	DATE	DESCRIPTIONS	BY	CH'D	CCO#
		REVISIONS			
1	05/29/12	ELECTRICAL WARNING SYSTEMS	RR	RG	61
0	08/27/09	ELECTRICAL WARNING SYSTEMS	GB	RD	61

CONTRACT CHANGE ORDER NO. 61
SHEET 14 OF 104

Bob Zandipour
DESIGN OVERSIGHT

SIGN OFF DATE

	BY	CHECKED
DESIGN	A. Guggemos	G. Benkovich
DETAILS	E. Cantiller	G. Benkovich
QUANTITIES		

PREPARED FOR THE STATE OF CALIFORNIA
DEPARTMENT OF TRANSPORTATION

Brady Nadell
PROJECT ENGINEER

BRIDGE NO. 34-0006
KILOMETER POST 13.2/13.9

STRUCTURE - EASTBOUND
FOG HORN SUPPORT SHEET 1

AS-19

DESIGN DETAIL SHEET (METRIC) (REV. 3/1/98)

ORIGINAL SCALE IN MILLIMETERS FOR REDUCED PLANS 0 10 20 30 40 50 60 70 80 90 100

CU 04251
EA 0120F1

DISREGARD PRINTS BEARING EARLIER REVISION DATES →

REVISION DATES (PRELIMINARY STAGE ONLY) | SHEET | OF

FILE => 04-0120f1_0086S21R01.dgn

T:\13103\WS\pse\SAS Struc\CCO\SAS CCO61\Draft 7 - 2012.05.04_Issued for Submittal\04-0120f1_0086S21R01.dgn

USERNAME => llorico DATE PLOTTED => 30-MAY-2012 TIME PLOTTED => 11:06

DIST	COUNTY	ROUTE	KILOMETER POST TOTAL PROJECT	SHEET No	TOTAL SHEETS
04	SF	80	13.2/13.9	93R11	1204

12/19/02
REGISTERED ELECTRICAL ENGINEER DATE

12-6-04
PLANS APPROVAL DATE

JENS ERLINGSSON No. 8249 Exp. 9/30/06 ELECTRICAL — REGISTERED PROFESSIONAL ENGINEER — STATE OF CALIFORNIA

PB POWER, Inc.
A Parsons Brinckerhoff Company
303 Second St., Suite 700N
San Francisco, CA 94107-1317

The State of California or its officers or agents shall not be responsible for the accuracy or completeness of electronic copies of this plan sheet.

Caltrans now has a web site! To get to the web site, go to http://www.dot.ca.gov

Metric

TRAFFIC OPERATIONS SYSTEMS (TOS)

AVO	Analog Video Output
CCR	Camera Control Receiver
CCU	Camera Control Unit
CIA	Controller Interface Assembly
COMM	Communication
FDU	Fiber Distribution Unit
F/O	Fiber Optic
FODM	Fiber Optic Data Modem
FDC	Fiber Optic Drop Cable
FPC	Fiber Optic Pigtail Cable
FSC	Fiber Splice Closure
FTC	Fiber Optic Trunkline Cable
IF	Input File
MVDS	Microwave Vehicle Detection Sensor
PDA	Power Distribution Assembly
PL	Preformed Loop Detection Station
SCA	Serial Cable Assembly
SMFO	Single Mode Fiber Optic
TB	Terminal Box
TSC	Trunkline Splice Closure
TVCP	CCTV Camera Control Power Cable
TVC	CCTV Camera Control Cable
TVL	CCTV Camera Video Cable
TVP	CCTV Camera Power Cable
VTDD	Video Transmitter Duplex Data

PROJECT NOTES

1. 27C, 2#12 + #12 G.
2. 27C, 2#10 + #10 G.
3. 27C, 4#10 + #10 G.
4. 27C, 3#10 + #10 G.
5. 27C (Type 4), 2#12 + #12 G.
6. 27C (Type 4), 2#10 + #10 G.
7. 41C, 2-6 pairs #18, IS/OA.
8. 78C, 50 Pairs #18, IS/OA.
9. 27C, 3/C #6 + #8G.
10. 21C, 2-1 pair #18 (for Call Box signal) shielded pairs and overall shield.
11. 21C, 3#12 (for Call Box power).
12. 21C, (4) 1 pair #18 (for Call Box signal). Part of (2) 1-2 pairs #18, shielded pairs and overall shield.
13. 78C, 2#2 + #6 G and 2#10 + #10 G (for CMS Power).
14. 78C, Harness #4 and Harness #5 (for CMS Signal).
15. 41C, Cable type TVP and TVCP (for CCTV Power).
16. 41C, Cable type TVC and TVL (for CCTV Control Signal).
18. 41C, Cable type MVDS DLC (for MVDS Signal).
20. 78C, Cable type 10 DLC (for Preformed Loop Signal).
21. 27C (Liquidtight flexible metal conduit) 6#10 + #10 G.
22. 27C (Liquidtight flexible metal conduit) 3#10 + #10 G.
23. 27C, 7#10 + #10 G.
24. 27C, 6#10 + #10 G.

FADI WALIEDDINE No. 11465 Exp. 12/31/2009 ELECTRICAL — REGISTERED PROFESSIONAL ENGINEER — STATE OF CALIFORNIA

FOR REVISION ONLY 4 5 6

SYN YEE CHIN No. 18186 Exp. 09/30/2011 ELECTRICAL — REGISTERED PROFESSIONAL ENGINEER — STATE OF CALIFORNIA

FOR REVISION ONLY 7 8 9 10

PROJECT NOTES (Continuation)

25. 27C, 7#10 + #10 G.
26. 41C, 3#6 + #8 G.
27. 41C, 3#8 + #10 G.
28. 21C, PVC coated - 2#10 + #10 G.
29. 21C, PVC coated, 3#12 (for Call Box Power).
30. 500 kcmil Bare Copper Wire.
31. 250 kcmil Bare Copper Wire.
32. #4/0 Bare Copper Wire.
33. #2 Bare Copper Wire.
34. 41C, 3#6 + #8 G, 3#8 + #10 G.
35. 41C, 6#8 + #10 G.
36. 21C, PVC coated, 1-2 pairs #18, shielded pairs and overall shield (For Call Box signal).
37. 16C, (Liquidtight flexible metal conduit) 2#12 + #12G, (for Bike Path lighting).
38. 16C, Liquidtight flexible metal conduit with PVC overall jacket 1-2 pairs #18, shielded pairs and overall shield (for Call Box signal).
39. 16C, Liquidtight flexible metal conduit with PVC overall jacket 3#12, (for Call Box power).
40. 78C, Cable Type A Fiber Optic.
41. 21C, (Liquidtight flexible metal conduit) 2#10 + 10 G.
42. 27C, 2#12 + #12G, 2#10 + #10G.
43. 21C, (Liquidtight flexible metal conduit) 2#12 + 12 G.
44. 41C, 2#12 + #12 G, 6#10 + #10 G.
45. 27C, 2#12 + #12 G, 4#10 + #10 G.
46. 27C, Liquidtight flexible metal conduit, 4#10 + #10G.
47. 41C, Liquidtight flexible metal conduit, (MVDS DLC).
48. 27C, 3#6 + #8G. Liquidtight flexible metal conduit.
49. 21C, PVC coated, 2#10 + #10G & 2/C #14
50. 21C Liquidtight flexible metal conduit 3#14 + #14G (Aviation AV-2 only)
51. 41C Liquidtight flexible metal conduit 3#6 + #8G, 2/C #14
52. 41C, Liquidtight flexible metal conduit 4#10 + 2#10 G
53. 41C, PVC coated 4#10 + 2#10 G
54. 27C, 4#10 + 2#10 G.
55. 41C, 6#10 + 2#10 G 2#12 + #12 G
56. 21C, 2#10 + #10 G
57. 41C, 6#10 + 2#10 G
58. 21C, 2#12 + #12 G
59. 21C, 3#10 + #10 G
60. 41C, 8#10 + 3#10 G 2#12 + #12 G
61. 27C, 3#10 + 2#10 G 2#12 + #12 G
62. 41C, 6#10 + 3#10 G
63. 41C, 8#10 + 3#10 G
64. 41C, 6#10 + 2#10 G, 2#12 + #12 G
65. 21C, 4#10 + #10 G
66. 41C, 9#10 + 3#10 G
67. 21C, (Liquidtight flexible metal conduit) 2#10 + #10G, EPR Insulation.
68. 16C, RGS (conduit by others) 2#12 + #12G

DAVID H. OTO No. 10689 Exp. 06/30/2013 ELECTRICAL — REGISTERED PROFESSIONAL ENGINEER — STATE OF CALIFORNIA

FOR REVISION ONLY 1

MARRELL FUMIO TAKAKI No. E 8651 Exp. 9/30/2008 ELECTRICAL — REGISTERED PROFESSIONAL ENGINEER — STATE OF CALIFORNIA

FOR REVISION ONLY 1

S. A. ESTOQUE, JR. No. E-10151 Exp. 12/31/2009 ELECTRICAL — REGISTERED PROFESSIONAL ENGINEER — STATE OF CALIFORNIA

FOR REVISION ONLY 2 3

GENERAL NOTES

1. Conduit routing is diagrammatic. Pull box locations shall be located as shown on plan drawings. The Contractor shall provide additional pull boxes as required. Exact locations of equipment and devices may be adjusted depending on field conditions or by the Engineer.
2. Minimum size of conduits shall be 21 mm. Exposed conduits shall be PVC coated rigid galvanized steel, and conduits located inside girder shall be rigid galvanized steel. (unless noted otherwise)
3. Conduit fittings for 78 mm conduits and larger shall have a 610 mm minimum bending radius.
4. All conduits, including spares, shall be provided with pull wires prior to cable installations.
5. All equipment and devices shall be provided with nameplate tags per drawings.
6. All feeders and branch circuits shall be provided with ground wire.
7. 15 kV splice boxes shall be installed as shown and permanently marked "DANGER-HIGH VOLTAGE-KEEP OUT". The letters shall be block type and at least 50 mm in height.
8. The Contractor shall label all conductors and cables per wiring diagrams.
9. Padlocks shall be installed on all cabinets located on the platforms to prevent unauthorized access.
10. Call boxes will be State-furnished. (The Contractor shall install and terminate conductors per wiring diagram.
11. Ladder type cable trays shall be installed for each 15 kV and 600 V systems.
12. Solid bottom cable trays shall be installed for each low level signals, CALTRANS communications, fiber optic systems, and for Non-Caltrans utilities.
13. For Strong Motion Detection System general notes, see sheet E-361.
14. All E sheets are accurate for electrical work only.
15. All dimensions are in millimeters unless otherwise shown.
16. All unused conductors inside pull boxes shall be taped and coiled.
17. "Similar" when shown on the plans means this detail is applicable to different structure and conduit sizes.
18. Electrical fixtures shall not be field welded to the box girders or crossbeams. All welding to the box girders and crossbeams shall be shown on the box girder and crossbeam shop drawings for review and approval by the Engineer.
19. All welding of electrical fixtures to the tower shall be shown on the tower shop drawings for review and approval by the Engineer.
20. All connections to steel elements of the self-anchored suspension bridge superstructure of electrical equipment and fixtures, including conduits, pull boxes, lighting fixtures, messenger cables and others, shall be shop welded or bolted. All connection details shall appear on the working drawings for review and approval by the Engineer.
21. Prior to ordering any cable tray support structures, the Contractor shall:
    - Refer to Structural sheets to determine the locations of cable tray support structures.
    - Determine, based upon field conditions, when and where to use cable tray vertical or horizontal bends, horizontal tees or reducers.
    - Refer to AS-sheets to determine the type of cable tray support to use based on field conditions.
    - Cable tray support structures shown on the AS-sheets are generic and may have to be adapted to suit field conditions.
    - All modifications to the cable tray support structures as shown on the AS-sheets shall be approved by the Resident Engineer.
22. All installation of electrical conduit, equipment or pull boxes shall be either shop welded or bolted.
23. All cable trays shall be securely anchored to support. Appropriate type of anchors (hold down brackets, hold down clamps or guides) shall be used to suit the cable tray type, location and supports. For similar attachment details, see TYPE I & II on E-122A and E-205A.
24. Contractor shall seal all wall penetrations with conduit within the dehumidified area using a rubber pipeseal that will expand to fill the gap between the penetration sleeve and conduit to create a seal. Caulking (silicone caulk) shall not be used at these locations.

REQUEST FOR INFORMATION NOT ADDRESSED IN THIS CCO REMAIN IN FORCE					
11	05/02/12	ELECTRICAL WARNING SYSTEMS	RR	RG	61
10	11/09/11	BIKE PATH CONDUIT	TW	NK	73
9	04/20/11	BIKE PATH CONDUIT	TW	RG	73
8	04/20/11	CABLE ELECTRICAL-LED AVIATION LIGHTS	RR	RG	72S1
7	07/16/10	BIKE PATH CONDUIT	TW	RG	73
6	12/23/09	TOWER BASE MEP	RR TW	RG FW	79
5	12/11/09	TOWER UTILITY PANELS	JS TW	RG FW	70
4	10/10/08	LIGHTING REVISIONS	RY AG	RG FW	43
3	09/24/08	CABLE ELECTRICAL	RR AG	RG SE	72
2	02/25/08	CABLE TRAY CHANGES	RG	SE	42S1
1	02/19/08	ELECTRICAL MODIFICATIONS	MP EL	RR	42
MARK	DATE	DESCRIPTIONS REVISIONS	BY	CH'D	CCO#

CONTRACT CHANGE ORDER NO. 61
SHEET 15 OF 104

DESIGN OVERSIGHT	CALCULATED/ DESIGNED BY	CHECKED BY	REVISED BY	DATE REVISED
BEHZAD GOLEMOHAMMADI	AB	JW	IAH	3/04
	DATE 08/02	09/02		

STATE OF CALIFORNIA - DEPARTMENT OF TRANSPORTATION — Caltrans

DATE PLOTTED => 04-MAY-2012
TIME PLOTTED => 13:50

00-00-00

ELECTRICAL NOTES AND ABBREVIATIONS

E-8

FOR REDUCED PLANS ORIGINAL 0 20 40 60 80

SCALE IS IN MILLIMETERS

DGN FILE =>04-0120f1_0093R11.dgn

USERNAME =>llorico

CU 04251

EA 0120F1

UTILITY PANEL UP-106 (CKT #1097)

Location: SAS SUPERSTRUCTURE SERVICE PLATFORM #6

LOAD DESCRIPTION	LTG	REC	OTH.	CB			CB	LTG	REC	OTH.	LOAD DESCRIPTION
Recept (1) Westbound North Barrier		180		20/1	1	A 2	20/1				Spare
Recept (2) Westbound South Barrier		360		20/1	3	B 4	20/1				Spare
Recept (2) Service Platform #6		360		20/1	5	C 6	20/1	820			Crossbeam Ltg (20)
Recept (2) Girder		360		20/1	7	A 8	20/1	1230			Girder Lighting (30)
Recept (5) Crossbeams		720		20/1	9	B 10	30/1			2000	Controller Cabinet #TOS-6WA
Spare				20/1	11	C 12	20/1				
Spare				20/1	13	A 14	20/1				Spare
Navigation Relay Cabinet #NAP-6W			600	20/1	15	B 16	20/1				Spare
Spare (2 3)				20/1	17	C 18	20/1				
				20/1	19	A 20	20/1				
Spare				20/1	21	B 22	20/1				Spare
				20/1	23	C 24	20/1				
TOTAL VA		1980	600 (2 3)					2050		2000	TOTAL VA

LOAD SUMMARY (INCLUDES .90 PF) (VA)

Lighting (At 100%): 2050
Gen Use (1st 10 kVA At 100% Plus 50% OF Remainder): 4580 (2 3)

TOTAL kVA: 6.630 (2 3)

BALANCE (kVA)

Phase A - 1.770
Phase B - 3.680 (2 3)
Phase C - 1.180

VOLTAGE: 208/120 V
PHASE/WIRES: 3-phase, 4-wire
BUS RATING: 100 A
MAIN: 60 A
MOUNTING: Surface
K.A.I.C.: 10

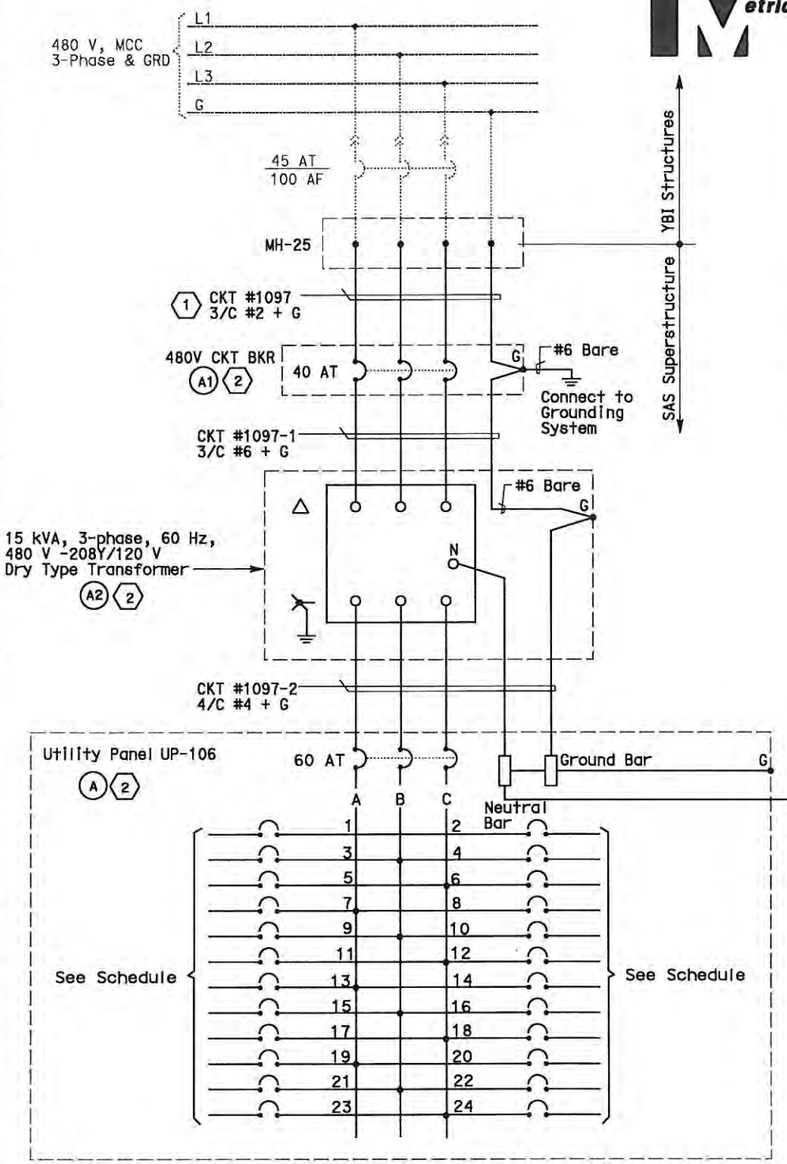

NOTES:

1. The Contractor shall provide nameplates and circuit schedules as shown.
2. Deleted.
3. References:
   - For circuit and conduit/cable tray schedules, see sheets starting at E-401.
   - For pull box schedule, see sheet E-83.
   - For crossbeam lighting plan, see sheet E-119.

SHEET NOTES:

1. The Contractor shall extend and coil 5 meters of cable in manhole 25. All cables shall be tagged with circuit numbers as shown. For location of manhole 25, see sheet E-11.
2. See sheet E-73 for Equipment Schedule.

DIST	COUNTY	ROUTE	KILOMETER POST TOTAL PROJECT	SHEET No	TOTAL SHEETS
04	SF	80	13.2/13.9	128 R3	1204

James Erlingsson 12/19/02
REGISTERED ELECTRICAL ENGINEER DATE

12-6-04
PLANS APPROVAL DATE

REGISTERED PROFESSIONAL ENGINEER — JENS ERLINGSSON No. 8249 Exp. 9/30/05 ELECTRICAL — STATE OF CALIFORNIA

PB POWER, Inc.
A Parsons Brinckerhoff Company
303 Second St., Suite 700N
San Francisco, CA 94107-1317

The State of California or its officers or agents shall not be responsible for the accuracy or completeness of electronic copies of this plan sheet.

Caltrans now has a web site! To get to the web site, go to http://www.dot.ca.gov

REGISTERED PROFESSIONAL ENGINEER — DAVID H. OTO No. 10699 Exp. 06/30/2013 ELECTRICAL — STATE OF CALIFORNIA

FOR REVISION ONLY (3)

REGISTERED PROFESSIONAL ENGINEER — FADI WALIEDDINE No. 11465 Exp. 12/31/2009 ELECTRICAL — STATE OF CALIFORNIA

FOR REVISION ONLY (1 2)

REQUEST FOR INFORMATION NOT ADDRESSED IN THIS CCO REMAIN IN FORCE					
3	05/02/12	ELECTRICAL WARNING SYSTEMS	RR	RG	61
2	04/10/09	ELECTRICAL WARNING SYSTEMS	RY RR	RG FW	61
1	03/30/09	SERVICE PLATFORM ELECTRICAL CHANGES	RR MP	RG FW	55
MARK	DATE	REVISIONS DESCRIPTIONS	BY	CH'D	CCO#

CONTRACT CHANGE ORDER NO. 61
SHEET 16 OF 104

DETAILS
SAS SUPERSTRUCTURE ROADWAY WESTBOUND
PANEL UP-106 SCHEDULE
NO SCALE

E-61

REVISED BY	DATE REVISED
JP	08/01
BL	12/01

CALCULATED/DESIGNED BY
CHECKED BY

DESIGN OVERSIGHT - BEHZAD GOLEMOHAMMADI

STATE OF CALIFORNIA - DEPARTMENT OF TRANSPORTATION
Caltrans

LAST REVISION 00-00-00
DATE PLOTTED => 04-MAY-2012
TIME PLOTTED => 13:50

FOR REDUCED PLANS ORIGINAL SCALE IS IN MILLIMETERS 0 20 40 60 80

DGN FILE =>04-0120F1_0128R03.dgn
USERNAME =>llorico

CU 04251 | EA 0120F1

UTILITY PANEL UP-107 (CKT #1098)

Location: SAS SUPERSTRUCTURE SERVICE PLATFORM 7

LOAD DESCRIPTION	LTG	REC	OTH.	CB		CB	LTG	REC	OTH.	LOAD DESCRIPTION
Spare				20/1	1 A 2	20/1				Spare
Recept (2) Westbound South Barrier		360		20/1	3 B 4	20/1				Spare
Recept (2) Service Platform #7		360		20/1	5 C 6	20/1	820			Crossbeam Ltg (20)
Recept (2) Girder		360		20/1	7 A 8	20/1	1230			Girder Lighting (30)
Recept (4) Crossbeams		720		20/1	9 B 10	30/1			2000	Controller Cabinet #TOS-7WA
Spare				20/1	11 C 12	20/1				Spare
TOTAL VA		1800	(2)(3)				2050		2000	TOTAL VA

LOAD SUMMARY (INCLUDES .90 PF) (VA)

Lighting (At 100%): 2050 (2)(3)
Gen Use (1st 10 kVA at 100% Plus 50% of Remainder): 3800 (2)(3)

TOTAL kVA: 5.850 (2)(3)

BALANCE (kVA)

Phase A - 1.590
Phase B - 3.080 (2)(3)
Phase C - 1.180

VOLTAGE: 208/120 V
PHASE/WIRES: 3-phase, 4-wire
BUS RATING: 100 A
MAIN: 60 A
MOUNTING: Surface
K.A.I.C.: 10

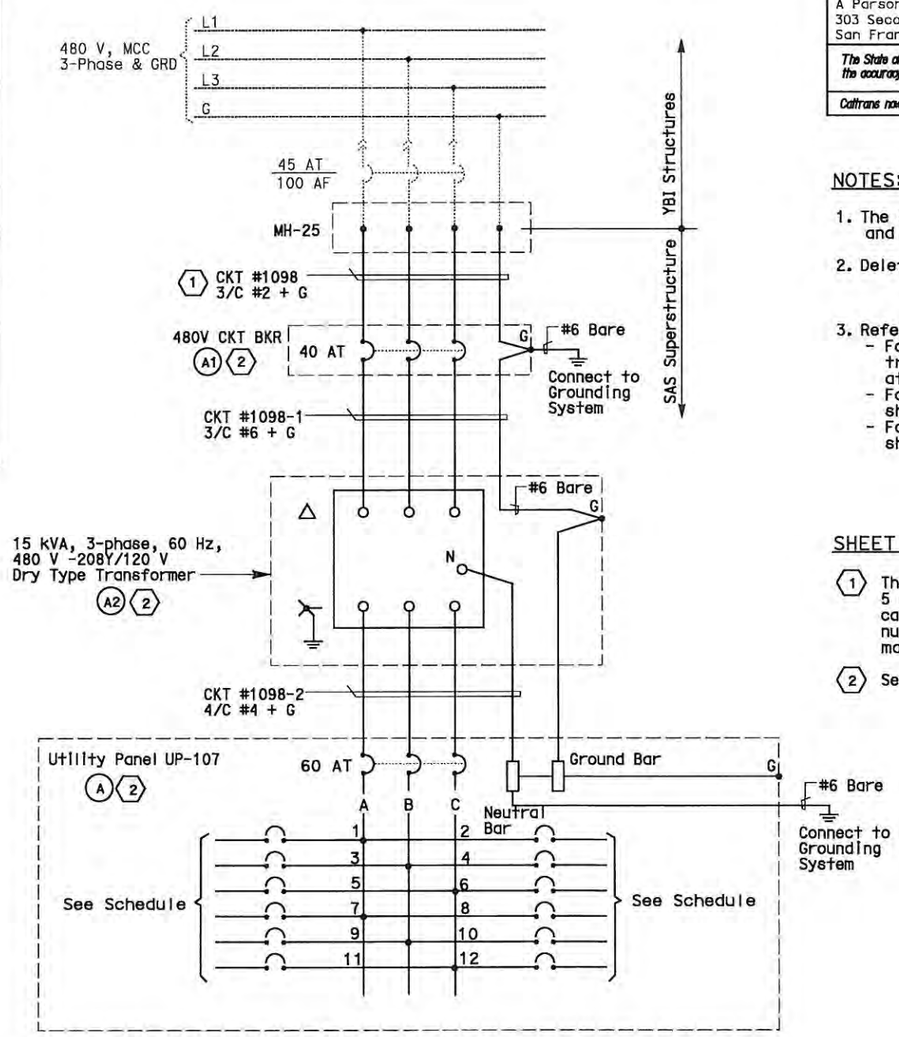

NOTES:

1. The Contractor shall provide nameplates and circuit schedules as shown.
2. Deleted.
3. References:
   - For circuit and conduit/cable tray schedules, see sheets starting at E-401.
   - For pull box schedule, see sheet E-83.
   - For crossbeam lighting plan, see sheet E-119.

SHEET NOTES:

(1) The Contractor shall extend and coil 5 meters of cable in manhole 25. All cables shall be tagged with circuit numbers as shown. For location of manhole 25, see sheet E-11.

(2) See sheet E-74 for Equipment Schedule.

DIST	COUNTY	ROUTE	KILOMETER POST TOTAL PROJECT	SHEET No	TOTAL SHEETS
04	SF	80	13.2/13.9	129 R3	1204

12/19/02
REGISTERED ELECTRICAL ENGINEER DATE

12-6-04
PLANS APPROVAL DATE

REGISTERED PROFESSIONAL ENGINEER — JENS ERLINGSSON No. 8249 Exp. 9/30/06 ELECTRICAL — STATE OF CALIFORNIA

PB POWER, Inc.
A Parsons Brinckerhoff Company
303 Second St., Suite 700N
San Francisco, CA 94107-1317

The State of California or its officers or agents shall not be responsible for the accuracy or completeness of electronic copies of this plan sheet.

Caltrans now has a web site! To get to the web site, go to http://www.dot.ca.gov

REGISTERED PROFESSIONAL ENGINEER — DAVID H. OTO No. 10699 Exp. 06/30/2013 ELECTRICAL — STATE OF CALIFORNIA
FOR REVISION ONLY (3)

REGISTERED PROFESSIONAL ENGINEER — FADI WALIEDDINE No. 11465 Exp. 12/31/2009 ELECTRICAL — STATE OF CALIFORNIA
FOR REVISION ONLY (1)(2)

REQUEST FOR INFORMATION NOT ADDRESSED IN THIS CCO REMAIN IN FORCE					
(3)	05/02/12	ELECTRICAL WARNING SYSTEMS	RR	RG	61
(2)	04/10/09	ELECTRICAL WARNING SYSTEMS	RY RR	RG FW	61
(1)	03/30/09	SERVICE PLATFORM ELECTRICAL CHANGES	RR MP	RG FW	55
MARK	DATE	DESCRIPTIONS	BY	CH'D	CCO#
		REVISIONS			

CONTRACT CHANGE ORDER NO. 61
SHEET 17 OF 104

DETAILS
SAS SUPERSTRUCTURE ROADWAY WESTBOUND
PANEL UP-107 SCHEDULE
NO SCALE

E-62

DESIGN OVERSIGHT	CALCULATED/ DESIGNED BY	CHECKED BY	DATE REVISED	REVISED BY
BEHZAD GOLEMOHAMMADI	JP	BL	08/01	IL/01

STATE OF CALIFORNIA - DEPARTMENT OF TRANSPORTATION
Caltrans

FOR REDUCED PLANS ORIGINAL SCALE IS IN MILLIMETERS 0 20 40 60 80

DGN FILE =>04-0120f1_0129R03.dgn
USERNAME =>llorico

CU 04251 | EA 0120F1

LAST REVISION 00-00-00
DATE PLOTTED => 04-MAY-2012
TIME PLOTTED => 13:50

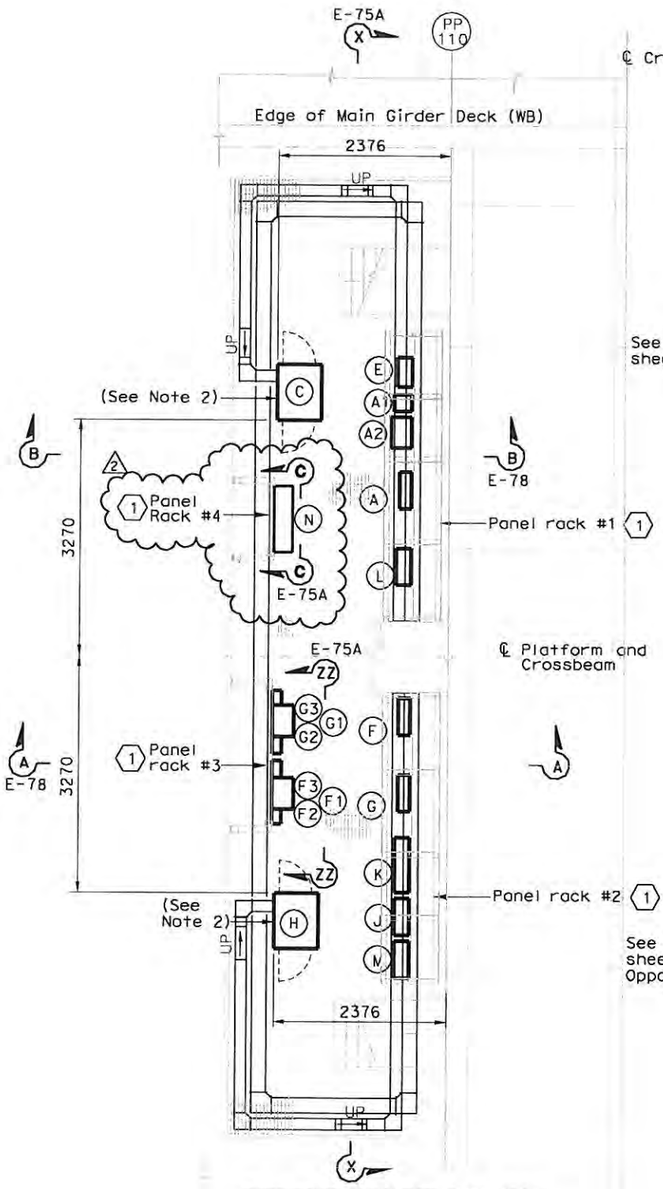

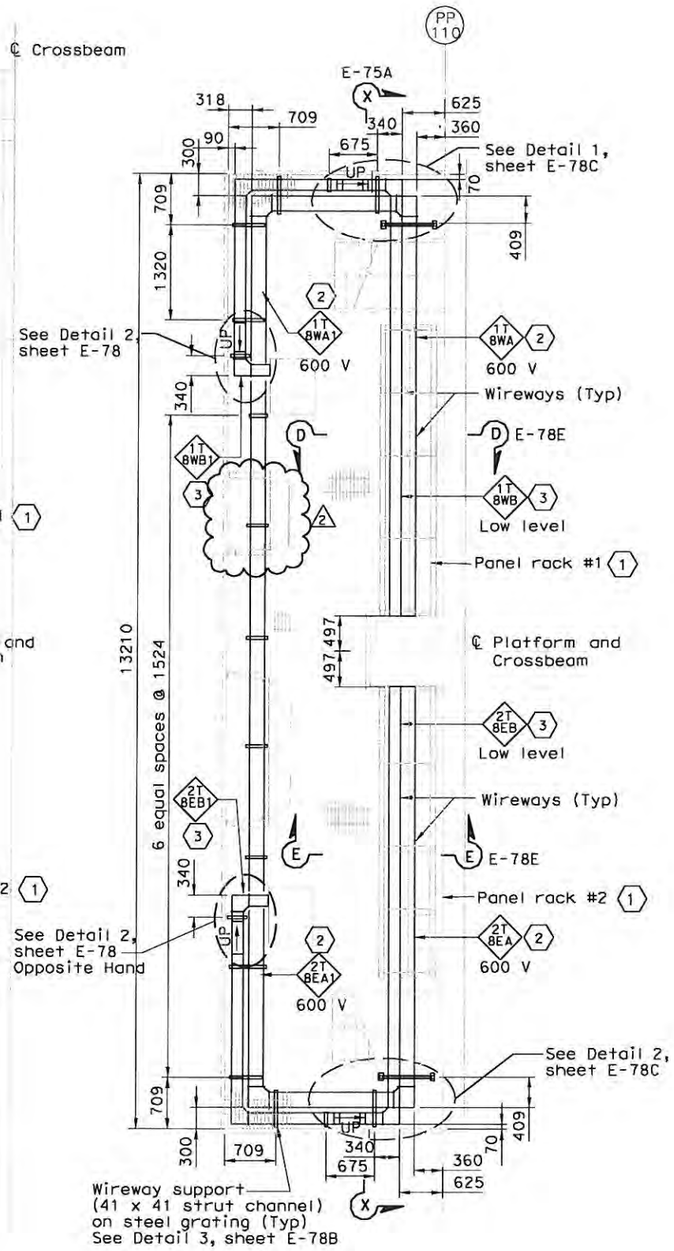

EQUIPMENT SCHEDULE:

Equipment for Westbound

- (A) Utility Panel, UP-108, 100A 208/120 V, 3-phase, 4-wire
- (A1) 480 V Breaker for (A2) (Nema 4X) Size: 495 H X 232 W X 124 D
- (A2) 15 kVA Transformer, 3 phase, 60 hertz 480 V-208/120 V, 3 phase (Nema 4X) Size: 375 H X 485 W X 311 D
- (C) Remote Terminal Unit RTU #11W Size: 1830 H X 940 W X 610 D
- (L) TOS/COM-8WA Pull Box (PB-2B)

Equipment for Eastbound

- (F) Utility Panel, UP-208, 100 A, MLO 208/120 V, 3-phase, 4-wire
- (F1) 480 V Breaker for (F2) (Nema 4X) Size: 495 H X 232 W X 124 D
- (F2) 15 kVA Transformer, 3 phase, 60 hertz 480 V-208/120 V, 3 phase (Nema 4X) Size: 375 H X 485 W X 311 D
- (F3) Enclosed circuit breaker 10 kAIC 240 V 3 phase in NEMA 4X enclosure.
- (G) Lighting Panel LP-223, 100 A, MLO 208/120 V, 3-phase, 4-wire
- (G1) 480 V Breaker for (G2) (Nema 4X) Size: 495 H X 232 W X 124 D
- (G2) 15 kVA Transformer, 3 phase, 60 hertz 480 V-208/120 V, 3 phase (Nema 4X) Size: 375 H X 485 W X 311 D
- (G3) Enclosed circuit breaker 10 kAIC 240 V 3 phase in NEMA 4X enclosure.
- (H) Remote Terminal Unit RTU #11E Size: 1830 H X 940 W X 610 D
- (M) TOS/COM-8EA Pull Box (PB-2B)

Equipment Common for Westbound/Eastbound

- (E) Navigation Relay Cabinet NAP-8 (PB-6C)
- (J) Telephone Terminal Box #TEL-8 (PB-7C)
- (K) Communication Terminal Box COM-8 (PB-7B)
- (2) (N) Fog Detection Panel FDP-6

SHEET NOTES:

1. For electrical panel support details, see AS-sheets.
2. 600 V Stainless steel wireway, Nema 4X with cover.
3. Low level Stainless steel wireway, Nema 4X with cover.

NOTES:

1. The contractor shall verify the sizes and mounting dimensions of all rack mounted equipment prior to the fabrication of service platform racks. The contractor shall also verify the wireway mounting dimensions and support locations and make adjustment as needed to suit field condition.
2. Contractor to provide cover plate and sealant to all cabinets with open bottom. Cover plate shall be of the same material. See Sheet E-78B for details.
3. References:
   - For platform 5 conduit, lighting and grounding plan, see sheet E-118.
   - For location of platform 8, see sheet E-50.
   - TOS are shown for conduit routing only. For typical details of TOS controller and devices, see sheets E-344 through E-361.
   - For schedule of utility panel UP-108, see sheet E-63.
   - For schedule of utility panel UP-208, see sheet E-154.
   - For schedule of lighting panel LP-223, see sheet E-157.
   - For typical panel arrangement details of SCADA communications terminal box, see sheet E-321.
   - For pull box schedule, see sheet E-83.
   - For circuit and conduit/cable tray schedules, see sheets starting at E-401.
   - For platform elevations, see sheet E-75A.

DIST	COUNTY	ROUTE	KILOMETER POST TOTAL PROJECT	SHEET No	TOTAL SHEETS
04	SF	80	13.2/13.9	138 R2	1204

Jens Erlingsson 12/19/02
REGISTERED ELECTRICAL ENGINEER DATE

12-6-04
PLANS APPROVAL DATE

REGISTERED PROFESSIONAL ENGINEER — JENS ERLINGSSON No. 8249 Exp. 9/30/06 ELECTRICAL — STATE OF CALIFORNIA

PB POWER, Inc.
A Parsons Brinckerhoff Company
303 Second St., Suite 700N
San Francisco, CA 94107-1317

The State of California or its officers or agents shall not be responsible for the accuracy or completeness of electronic copies of this plan sheet.

Caltrans now has a web site! To get to the web site, go to http://www.dot.ca.gov

REGISTERED PROFESSIONAL ENGINEER — FADI WALIEDDINE No. 11465 Exp. 12/31/2009 ELECTRICAL — STATE OF CALIFORNIA

FOR REVISION ONLY
1 2

MARK	DATE	DESCRIPTIONS	BY	CH'D	CCO#
		REVISIONS			
1	03/30/09	SERVICE PLATFORM ELECTRICAL CHANGES	RR MP	RG FW	55
2	04/10/09	ELECTRICAL WARNING SYSTEMS	RY RR	RG FW	61

CONTRACT CHANGE ORDER NO. 61
SHEET 18 OF 104

DETAILS
SAS SUPERSTRUCTURE ROADWAY WESTBOUND PLATFORM 8 ARRANGEMENT

SCALE AS NOTED

EQUIPMENT ARRANGEMENT PLAN
SCALE 1:40

WIREWAY PLAN
SCALE 1:40

E-75

DESIGN OVERSIGHT	CALCULATED/ DESIGNED BY	CHECKED BY	DATE	REVISED BY	DATE REVISED
BEHZAD GOLEHAMMADI	JP	BL	12/01	7/01	

STATE OF CALIFORNIA - DEPARTMENT OF TRANSPORTATION
Caltrans

THIS PLAN IS ACCURATE FOR ELECTRICAL WORK ONLY.

ALL DIMENSIONS ARE IN MILLIMETERS UNLESS OTHERWISE SHOWN.

FOR REDUCED PLANS ORIGINAL SCALE IS IN MILLIMETERS 0 20 40 60 80

DGN FILE =>T:\13103\WS\pse\SAS Struc\CCO\SAS CCO61\2009-04-10_Issued for Submittal\04-0120F1_D138R02.dgn
USERNAME =>llorico

CU 04251 | EA 0120F1

LAST REVISION 00-00-00
DATE PLOTTED => 4/10/2009
TIME PLOTTED => 9:15:33 AM

DIST	COUNTY	ROUTE	KILOMETER POST TOTAL PROJECT	SHEET No	TOTAL SHEETS
04	SF	80	13.2/13.9	138 S1R3	1204

REGISTERED ELECTRICAL ENGINEER — 6/12/08 DATE

REGISTERED PROFESSIONAL ENGINEER — FADI WALIEDDINE No. 11465 Exp. 12/31/2009 ELECTRICAL — STATE OF CALIFORNIA

PLANS APPROVAL DATE

PB AMERICAS, Inc.
A Parsons Brinckerhoff Company
303 Second St., Suite 700N
San Francisco, CA 94107-1317

The State of California or its officers or agents shall not be responsible for the accuracy or completeness of electronic copies of this plan sheet.

Caltrans now has a web site! To get to the web site, go to http://www.dot.ca.gov

DATE	REVISED BY	DATE REVISED
7/01	JP	12/01 BL

CALCULATED/ DESIGNED BY — CHECKED BY

DESIGN OVERSIGHT — BEHZAD GOLEMOHAMMADI

STATE OF CALIFORNIA - DEPARTMENT OF TRANSPORTATION — Caltrans

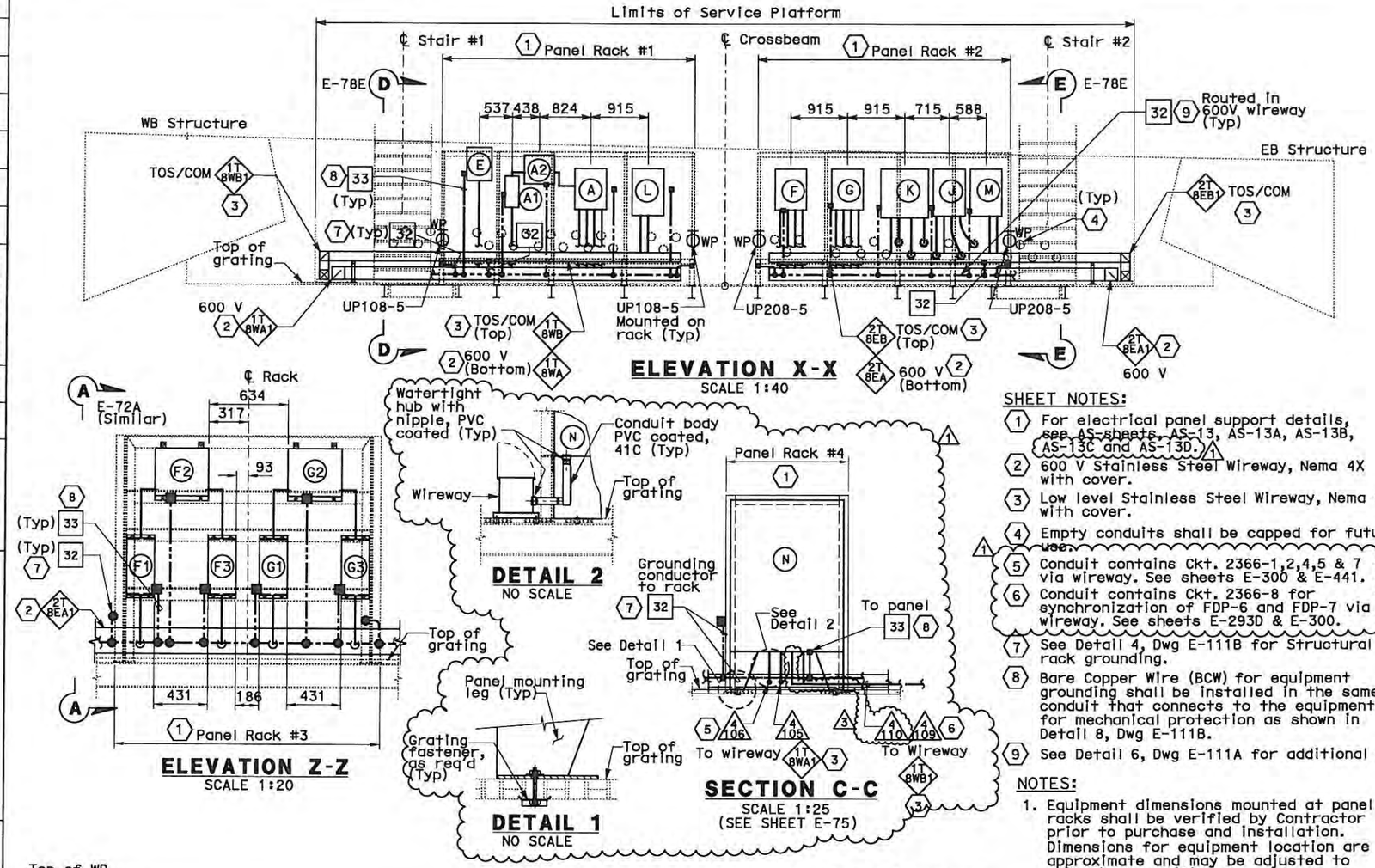

ELEVATION X-X
SCALE 1:40

ELEVATION Z-Z
SCALE 1:20

DETAIL 2
NO SCALE

DETAIL 1
NO SCALE

SECTION C-C
SCALE 1:25
(SEE SHEET E-75)

SHEET NOTES:

1. For electrical panel support details, see AS-sheets, AS-13, AS-13A, AS-13B, AS-13C and AS-13D.
2. 600 V Stainless Steel Wireway, Nema 4X with cover.
3. Low level Stainless Steel Wireway, Nema 4X with cover.
4. Empty conduits shall be capped for future use.
5. Conduit contains Ckt. 2366-1,2,4,5 & 7 via wireway. See sheets E-300 & E-441.
6. Conduit contains Ckt. 2366-8 for synchronization of FDP-6 and FDP-7 via wireway. See sheets E-293D & E-300.
7. See Detail 4, Dwg E-111B for Structural rack grounding.
8. Bare Copper Wire (BCW) for equipment grounding shall be installed in the same conduit that connects to the equipment for mechanical protection as shown in Detail 8, Dwg E-111B.
9. See Detail 6, Dwg E-111A for additional detail.

NOTES:

1. Equipment dimensions mounted at panel racks shall be verified by Contractor prior to purchase and installation. Dimensions for equipment location are approximate and may be adjusted to suit field condition.
2. (SP) Denotes spare pipe sleeve for 78 mm conduit. Contractor to provide plug at each ends

WESTBOUND — CONDUIT NUMBERS

A	Utility Panel, UP-108	4 283D, 4 284A, 4 101, 4 102
A1	Main Breaker for A2	4 283A, 4 283B
A2	15 kVA Transformer	4 283B, 4 283C
L	TOS/COM-8WA Pull Box	4 285A, 4 286A
E	Navigation Relay Cab. NAP-8	4 104, 3
N	Fog Detection Panel FDP-6	4 105, 4 106, 4 109, 4 110

EASTBOUND — CONDUIT NUMBERS

F	Utility Panel, UP-208	5 283D, 5 284A, 5 101, 5 102
F1	Main Breaker for F2	5 283A, 5 283B
F2	15 kVA Transformer	5 283B, 5 283C
F3	Feeder Breaker for F	5 283C, 5 283C
G	Lighting Panel LP-223	5 285D, 5 104, 5 105, 5 106
G1	Main Breaker for G2	5 285A, 5 285B
G2	15 kVA Transformer	5 285B, 5 285C
G3	Feeder Breaker for G	5 285C, 5 285E
J	Telephone Terminal Box #TEL-8	5 289, 5 289A, 5 277, 5 276
K	Communication Terminal Box #COM-8	5 290A, 5 286, 5 275, 5 290
M	TOS/COM-8EA Pull Box	5 286A, 5 200A, 5 200B

Top of WB — Top of Crossbeam — Top of EB

Limits of Service Platform

WB PIPE SLEEVES (See Structures for location)

EASTBOUND PIPE SLEEVES (See Structures for locations)

Pipe Sleeve (Part of Crossbeam Structure-Typ)

Pipe Sleeve (Part of Crossbeam Structure-Typ)

PIPE SLEEVE ELEVATION Y-Y
SCALE 1:20
(SEE SHEET E-118)

REGISTERED PROFESSIONAL ENGINEER — DAVID H. OTO No. 10699 Exp. 06/30/2013 ELECTRICAL — STATE OF CALIFORNIA

FOR REVISION ONLY

REGISTERED PROFESSIONAL ENGINEER — FADI WALIEDDINE No. 11465 Exp. 12/31/2009 ELECTRICAL — STATE OF CALIFORNIA

FOR REVISION ONLY

MARK	DATE	DESCRIPTIONS	BY	CH'D	CCO#
		REVISIONS			
		REQUEST FOR INFORMATION NOT ADDRESSED IN THIS CCO REMAIN IN FORCE			
3	05/02/12	ELECTRICAL WARNING SYSTEMS	RR	RG	61
2	11/20/09	ELECTRICAL GROUNDING	AWG RR	RG FW	75
1	08/03/09	ELECTRICAL WARNING SYSTEMS	RY RR	RG FW	61
0	03/30/09	SERVICE PLATFORM ELECTRICAL CHANGES	RR MP	RG FW	55

CONTRACT CHANGE ORDER NO. 61

SHEET 19 OF 104

DETAILS
SAS SUPERSTRUCTURE ROADWAY WESTBOUND PLATFORM 8 ARRANGEMENT
SCALE AS NOTED

E-75A

LAST REVISION 00-00-00 — DATE PLOTTED => 04-MAY-2012 — TIME PLOTTED => 13:50

THIS PLAN IS ACCURATE FOR ELECTRICAL WORK ONLY. ALL DIMENSIONS ARE IN MILLIMETERS UNLESS OTHERWISE SHOWN.

FOR REDUCED PLANS ORIGINAL SCALE IS IN MILLIMETERS 0 20 40 60 80

DGN FILE =>04-0120F1_0138S01R03.dgn
USERNAME =>florico

CU	EA
04251	0120F1

DIST	COUNTY	ROUTE	KILOMETER POST TOTAL PROJECT	SHEET NO	TOTAL SHEETS
04	SF	80	13.2/13.9	142 R4	1204

REGISTERED ELECTRICAL ENGINEER — 12/19/02 DATE

12-6-04
PLANS APPROVAL DATE

JENS ERLINGSSON No. 8249 Exp. 9/30/06 ELECTRICAL — REGISTERED PROFESSIONAL ENGINEER — STATE OF CALIFORNIA

PB POWER, Inc.
A Parsons Brinckerhoff Company
303 Second St., Suite 700N
San Francisco, CA 94107-1317

The State of California or its officers or agents shall not be responsible for the accuracy or completeness of electronic copies of this plan sheet.

Caltrans now has a web site! To get to the web site, go to http://www.dot.ca.gov

PULL BOXES

Location	Type	Pull Box Size	Enclosure Type	Nameplate Pull Box Cover	Remarks
Roadway Barrier	PB-Com			Low Voltage - Call Box	Caltrans standard ES-9C (PB-9A)
Roadway Barrier	PB-Ltg			600 V - Electrical	Caltrans standard ES-9C (PB-9)
Roadway and miscellaneous	PB-1B	304 L x 254 W x 127 D	NEMA 4X	600 V - Electrical	Located at main suspender cable
Roadway and miscellaneous	PB-1C	152 L x 152 W x 102 D	NEMA 4X	600 V - Electrical	Located at suspender brackets
Roadway	PB-1F	304 L x 304 W x 152 D	NEMA 4X	600 V - Electrical	Located at main suspender cable
Inside Girder Box	PB-2A	406 L x 254 W x 152 D	NEMA 12	600 V - Electrical	
Service Platform	PB-2B	762 L x 508 W x 203 D	NEMA 4X	600 V - Electrical	
Inside Girder Box	PB-2C	915 L x 610 W x 610 D	NEMA 12	600 V - Electrical	Electrical vault-embedded in conc. deck
Inside Girder Box	PB-2P	1067 L x 915 W x 305 D	NEMA 12	600 V - Electrical	Electrical vault-surface/pendant mounted
Inside Girder Box	PB-2L	152 L x 152 W x 102 D	NEMA 12	600 V - Electrical	For future light pipe and inside Piers E6W, E7W and E8W (4)

PULL BOXES

Location	Type	Pull Box Size	Enclosure Type	Nameplate Pull Box Cover	Remarks
"E" Line Girder access Platform	PB-2D	457 L x 457 W x 203 D	NEMA 4X	600 V - Electrical	For Base Tower power and lighting
Inside Dehumidification #2 Area	PB-2E	203 L x 203 W x 102 D	NEMA 12	600 V - Electrical	For Base Tower Dehumidification #2 power
Tower Base-Elevator Enclosure	PB-2F	203 L x 203 W x 102 D	NEMA 12	600 V - Electrical	For Elevator pit motor power
Tower Walkway Platform, EL. 93.35 m	PB-2G	457 L x 457 W x 203 D	NEMA 4X	600 V - Electrical	For Power and Lighting
Tower Walkway Platform, EL. 93.35 m	PB-2H	457 L x 457 W x 203 D	NEMA 4X	600 V - Electrical	For Power and Lighting
Elevator Enclosure-EL. 93.35 m	PB-2J	203 L x 203 W x 102 D	NEMA 4X	600 V - Electrical	For Power and Lighting
"E" Line Girder access Platform	PB-2K	305 L x 305 W x 152 D	NEMA 4X	600 V - Electrical	For Base Tower power and lighting
Tower Walkway Platform, EL. 53.0 m	PB-2R	203 L x 203 W x 102 D	NEMA 4X	600 V - Electrical	For Power - Booster Pump P1
Tower Vertical Runs	PB-4D	915 L x 610 W x 610 D	NEMA 12	600 V - Electrical	

SPLICE BOXES

Location	Type	Splice Box Size	Enclosure Type	Nameplate Splice Box Cover	Remarks
Inside Girder Box and Tower EL 63.0	PB-3A	1830 L x 915 W x 305 D	NEMA 12	Danger - High Voltage - Keep Out	
Inside Girder Box	PB-3B	813 L x 203 diameter	Cylindrical Housing	Fiber Optic	72 fibers to 12 fibers
Inside Girder Box	PB-3C	813 L x 203 diameter	Cylindrical Housing	Fiber Optic	72 fibers to 72 fibers

PANEL ENCLOSURES (1)

Location	Type	Cabinet/Terminal Box Size	Enclosure Type	Nameplate Cabinet/Terminal Cover	Remarks
Service Platform	PB-6C	See Panel Layout	NEMA 4X	See Panel Layout on E-305	For Navigation Relay Cabinet
Service Platform	PB-7B	See Panel Layout	NEMA 4X	See Panel Layout on E-321	For Scada Communication Terminal Box
Service Platform	PB-7C	762 H x 508 W x 203 D	NEMA 4X	Caltrans Telephone	Enclosure only - For Telephone Terminal Box
Inside Girder Box	PB-7D	508 H x 406 W x 203 D	NEMA 4X	Caltrans Telephone	Enclosure only - For Telephone Terminal Box
DELETED					

SAS SUPERSTRUCTURE WB

Location	Type	Pull Box Size	Enclosure Type	Nameplate Pull Box Cover	Remarks
Inside Light Pole	PB-2N	152 L x 152 W x 102 D	NEMA 12	TOS-MVDS	Cable Termination
Tower Platform	PB-2M	305 L x 305 W x 152 D	NEMA 12	TOS-MVDS	Cable Termination
Inside Dehumidification #1 Area	PB-TOS	203 L x 203 W x 102 D	NEMA 4X	TOS-COM	Dehumidification Unit #1

SHEET NOTE:

(1) Panel enclosures shall be provided with padlock provisions.

REQUEST FOR INFORMATION NOT ADDRESSED IN THIS CCO REMAIN IN FORCE

MARK	DATE	DESCRIPTIONS	BY	CH'D	CCO#
		REVISIONS			
4	08/03/09	ELECTRICAL WARNING SYSTEMS	RG	FW	61
3	03/30/09	SERVICE PLATFORM ELECTRICAL CHANGES	RR	RG FW	55
2	09/24/08	CABLE ELECTRICAL	RY AG	RG FW	72
1	02/19/08	ELECTRICAL MODIFICATIONS	MP EL	RR	42

CONTRACT CHANGE ORDER NO. 61
SHEET 20 OF 104

MARWELL FUMIO TAKATA No. E 8651 Exp. 9/30/2008 ELECTRICAL — REGISTERED PROFESSIONAL ENGINEER — STATE OF CALIFORNIA

FOR REVISION ONLY (1)

FADI WALIEDDINE No. 11465 Exp. 12/31/2009 ELECTRICAL — REGISTERED PROFESSIONAL ENGINEER — STATE OF CALIFORNIA

FOR REVISION ONLY (2)(3)(4)

DETAILS
SAS SUPERSTRUCTURE ROADWAY WESTBOUND PULLBOX SCHEDULES

E-83

REVISED BY	DATE REVISED
DATE 10/01	11/01
CALCULATED/DESIGNED BY: FK	BL
CHECKED BY	

DESIGN OVERSIGHT: BEHZAD GOLEMOHAMMADI

STATE OF CALIFORNIA - DEPARTMENT OF TRANSPORTATION — Caltrans

LAST REVISION 00-00-00 — DATE PLOTTED => 8/5/2009 — TIME PLOTTED => 8:59:42 AM

FOR REDUCED PLANS ORIGINAL SCALE IS IN MILLIMETERS 0 20 40 60 80

DGN FILE =>T:\13103\MS\pse\SAS Struc\CCO\SAS CC061\2009-08-03_Issued for Submittal\04-0120F1_0142R04.dgn
USERNAME =>llorico

CU 04251 EA 0120F1

DIST	COUNTY	ROUTE	KILOMETER POST TOTAL PROJECT	SHEET No	TOTAL SHEETS
04	SF	80	13.2/13.9	170 R5	1204

Jens Erlingsson 12/19/02
REGISTERED ELECTRICAL ENGINEER DATE

12-6-04
PLANS APPROVAL DATE

REGISTERED PROFESSIONAL ENGINEER — JENS ERLINGSSON No. 8249 Exp. 9/30/05 ELECTRICAL — STATE OF CALIFORNIA

PB POWER, Inc.
A Parsons Brinckerhoff Company
303 Second St., Suite 700N
San Francisco, CA 94107-1317

The State of California or its officers or agents shall not be responsible for the accuracy or completeness of electronic copies of this plan sheet.

Caltrans now has a web site! To get to the web site, go to http://www.dot.ca.gov

Metric

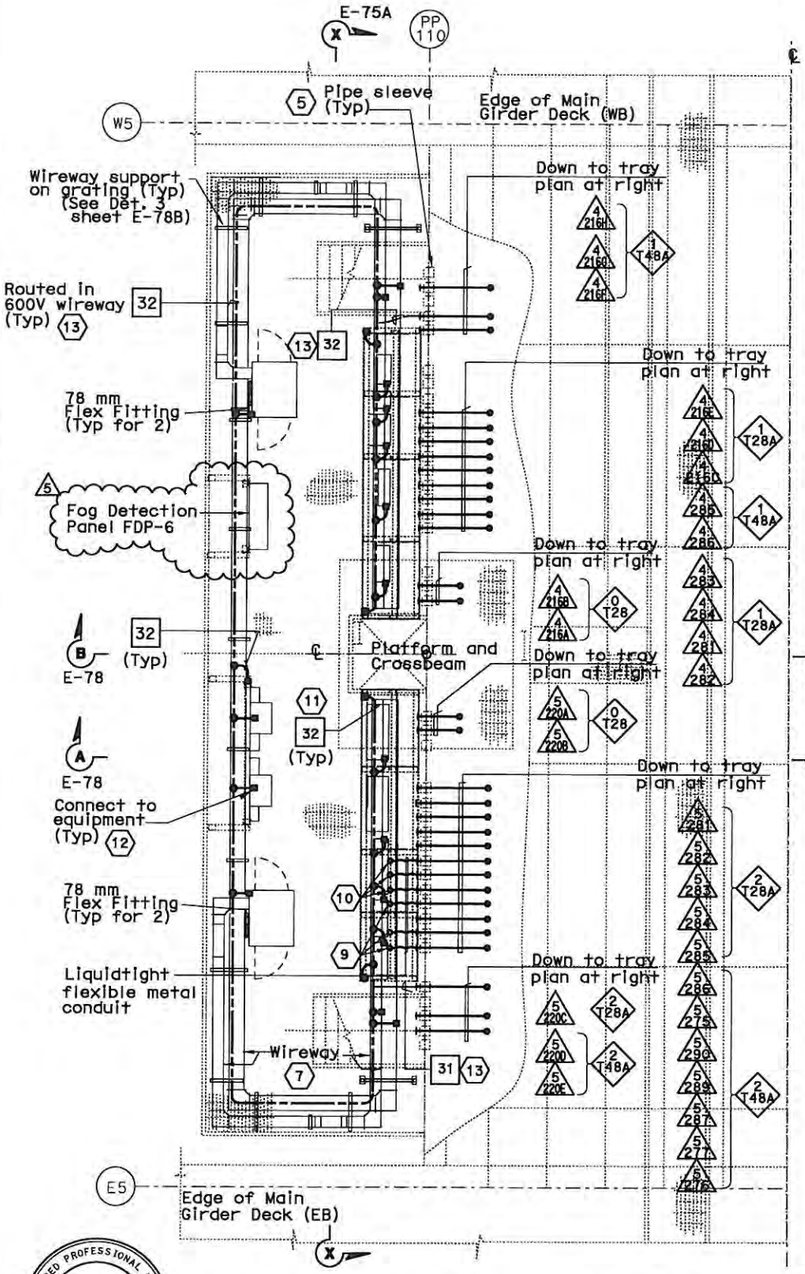

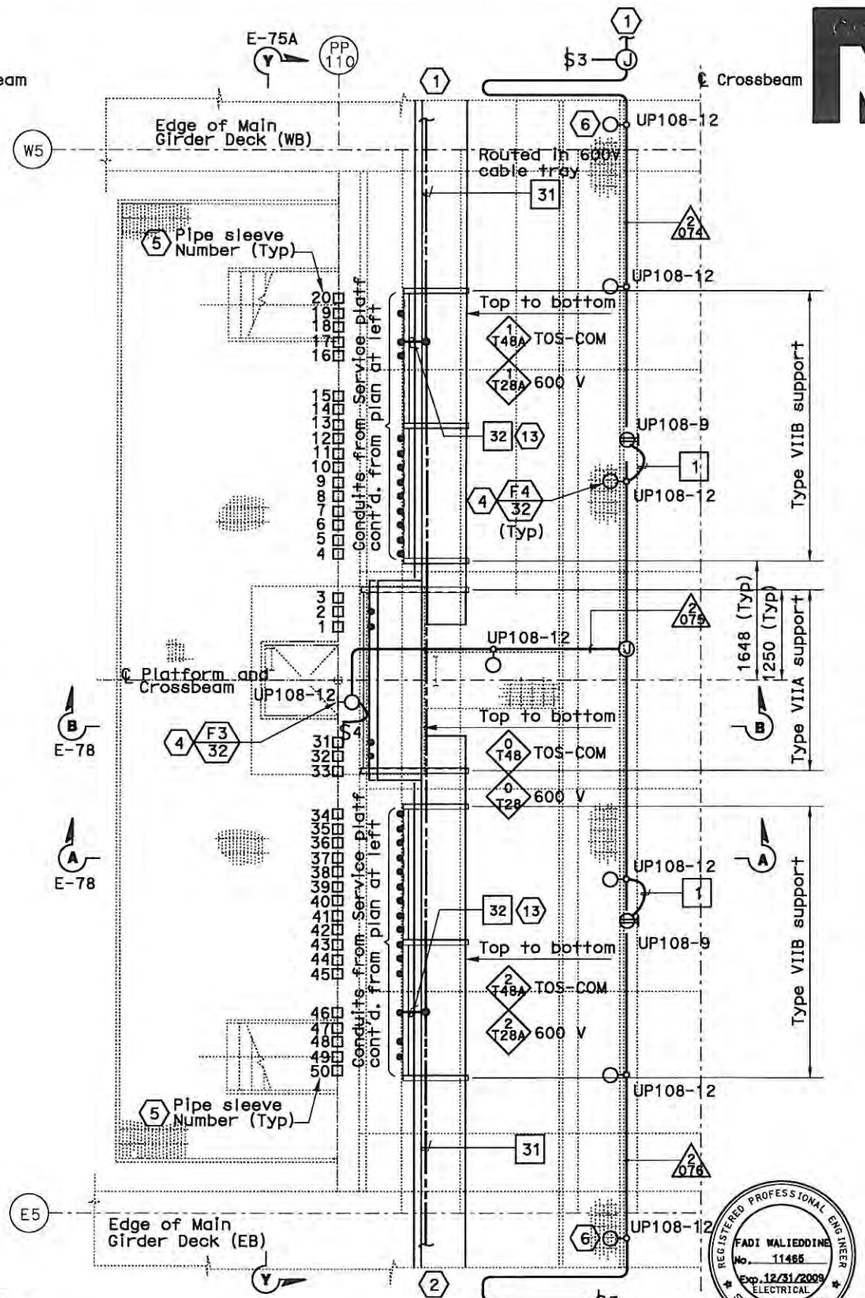

SHEET NOTES:

1. For continuation inside WB girder, see sheets E-100 and E-114B.
2. For continuation inside EB girder, see sheet E-185 and E-114B.
3. Deleted.
4. For typical lighting fixture installation see Details 2 and 3, sheet E-123.
5. Pipe sleeve without conduit going through is spare. Contractor to provide plug or cap at both ends. For location see Section Y-Y on sheet E-75A.
6. Locate light fixture approximate half way between girder wall and girder walkway.
7. For wireway numbers, see sheet E-75.
8. DELETED
9. Terminate conduits at Terminal Box #TEL-8.
10. Terminate conduits at Terminal Box #COM-8.
11. See Detail 4, Dwg E-111B for Structural rack grounding.
12. #2 Bare Copper Wire in conduit, For installation details, see sheet E-75A.
13. Ground conductor shall be protected from damage when exposed outside the structure. Route ground conductor in liquidtight flexible metal conduit for protection, unless noted otherwise on plans. For additional installation details, see Detail 6, sheet E-111A.

NOTES:

1. Reference:- For circuit, conduit/cable tray schedules, see sheets starting at E-401.
2. For wireway support details, see AS sheets.
3. For location of pipe sleeves at the utility platform crossbeams, see Typical Crossbeam Details sheets.

REQUEST FOR INFORMATION NOT ADDRESSED IN THIS CCO REMAIN IN FORCE

MARK	DATE	REVISIONS DESCRIPTIONS	BY	CH'D	CCO#
5	05/02/12	ELECTRICAL WARNING SYSTEMS	RR	RG	61
4	07/01/11	TOS MODIFICATIONS	RR	RG	81
3	11/20/09	ELECTRICAL GROUNDING	AWG RR	RG FW	75
2	06/25/09	SERVICE PLATFORM ELECTRICAL CHANGES	RR RY	RG FW	55
1	03/30/09	SERVICE PLATFORM ELECTRICAL CHANGES	RR MP	RG FW	55

REGISTERED PROFESSIONAL ENGINEER — DAVID H. OTO No. 10699 Exp. 06/30/2013 ELECTRICAL — STATE OF CALIFORNIA

5

FOR REVISION ONLY

WIREWAY AND CONDUIT PLAN AT SERVICE PLATFORM

SCALE 1:40

REGISTERED PROFESSIONAL ENGINEER — SYN YEE CHIN No. 18186 Exp. 09/30/2011 ELECTRICAL — STATE OF CALIFORNIA

4

Syn Yee Chin
FOR REVISION ONLY

CABLE TRAY AND CONDUIT PLAN INSIDE CROSSBEAM

SCALE 1:40

REGISTERED PROFESSIONAL ENGINEER — FADI WALIEDDINE No. 11485 Exp. 12/31/2009 ELECTRICAL — STATE OF CALIFORNIA

1 2 3

FOR REVISION ONLY

CONTRACT CHANGE ORDER NO. 61
SHEET 21 OF 104

DETAILS

SAS SUPERSTRUCTURE GIRDER WESTBOUND PLATFORM 8 CONDUIT, LIGHTING, AND GROUNDING PLAN

SCALE AS NOTED

E-118

STATE OF CALIFORNIA - DEPARTMENT OF TRANSPORTATION
DESIGN OVERSIGHT: BEHZAD GOLEMOHAMMADI
CALCULATED/DESIGNED BY: JP
CHECKED BY: BL
DATE REVISED BY: 7/01 REVISED BY; 12/01 DATE REVISED

THIS PLAN IS ACCURATE FOR ELECTRICAL WORK ONLY.

ALL DIMENSIONS ARE IN MILLIMETERS UNLESS OTHERWISE SHOWN.

FOR REDUCED PLANS ORIGINAL SCALE IS IN MILLIMETERS 0 20 40 60 80

DGN FILE =>04-0120f1_0170R05.dgn
USERNAME =>llorico

CU 04251 | EA 0120F1

DATE PLOTTED => 04-MAY-2012
TIME PLOTTED => 13:50

LAST REVISION 00-00-00

DIST	COUNTY	ROUTE	KILOMETER POST TOTAL PROJECT	SHEET No	TOTAL SHEETS
04	SF	80	13.2/13.9	201 R3	1204

12/19/02
REGISTERED ELECTRICAL ENGINEER DATE

12-6-04
PLANS APPROVAL DATE

PB POWER, Inc.
A Parsons Brinckerhoff Company
303 Second St., Suite 700N
San Francisco, CA 94107-1317

REGISTERED PROFESSIONAL ENGINEER — JENS ERLINGSSON — No. 8249 — Exp. 9/30/06 — ELECTRICAL — STATE OF CALIFORNIA

The State of California or its officers or agents shall not be responsible for the accuracy or completeness of electronic copies of this plan sheet.

Caltrans now has a web site! To get to the web site, go to http://www.dot.ca.gov

UTILITY PANEL UP-206 (CKT #2097)

Location: SAS SUPERSTRUCTURE SERVICE PLATFORM #6

LOAD DESCRIPTION	LTG	REC	OTH.	CB			CB	LTG	REC	OTH.	LOAD DESCRIPTION
Recept (2) Eastbound North Barrier		360		20/1	1	A 2	20/1				Spare
Spare				20/1	3	B 4	20/1				Spare
Recept (2) Service Platform #6		360		20/1	5	C 6	20/1				Spare
Recept (2) Girder		360		20/1	7	A 8	20/1	1230 [3]			Girder Lighting (30)
Navigation Relay Cabinet #NAP-6E			600	20/1	9	B 10	30/1			2000	Controller Cabinet #TOS-6EA
[2] [3] Spare				20/1	11	C 12	20/1				Spare
TOTAL VA		1080	600 [2] [3]					1230 [3]		2000	TOTAL VA

LOAD SUMMARY (INCLUDES .90 PF) (VA)

Lighting (At 100%): 1230 [3]
Gen Use (1st 10 kVA at 100% Plus 50% of remainder): 3680 [2] [3]

TOTAL kVA: 4.910 [2] [3]

BALANCE (kVA) [3]
Phase A - 1.950
Phase B - 2.600 [2] [3]
Phase C - 0.360 [3]

VOLTAGE: 208/120 V
PHASE/WIRES: 3-phase, 4-wire
BUS RATING: 100 A
MAIN: MAIN LUGS ONLY
MOUNTING: Surface
K.A.I.C.: 10

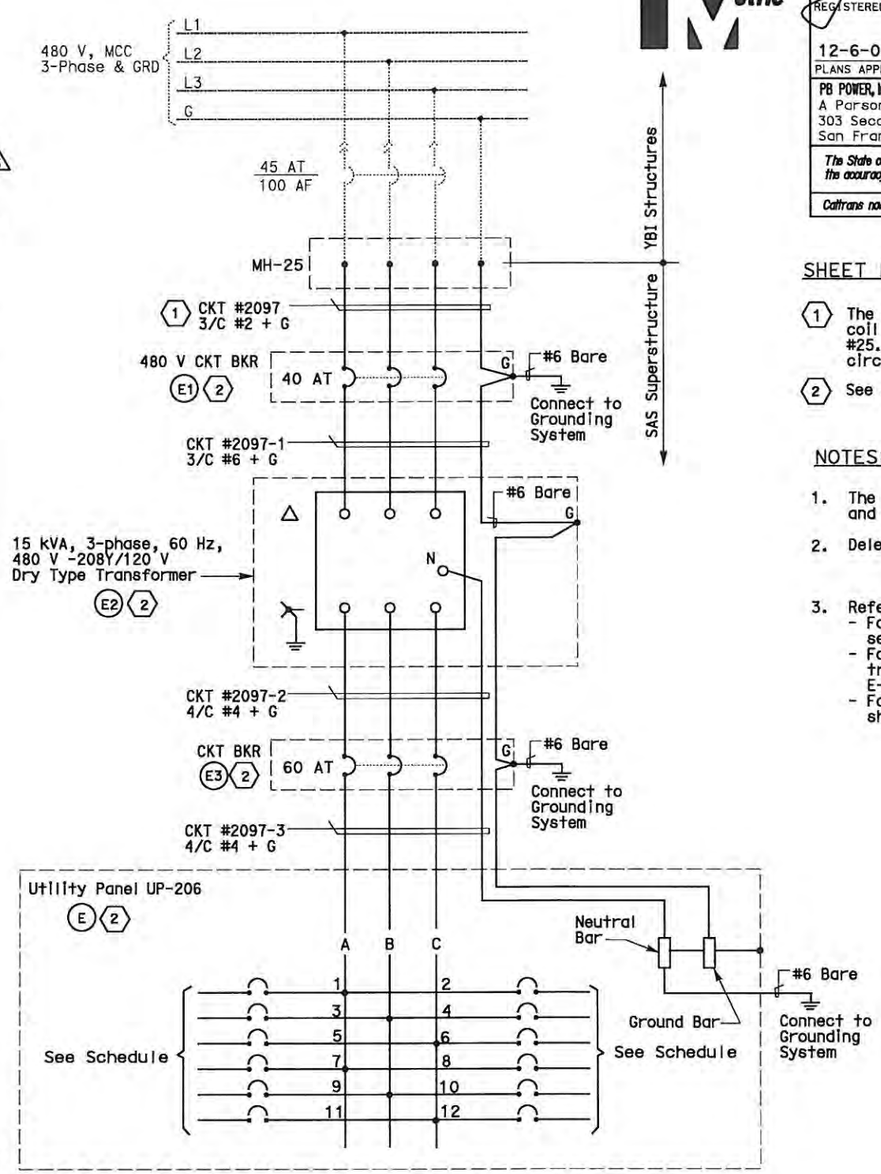

SHEET NOTES:

(1) The Contractor shall extend and coil 5.0 meters of cable in manhole #25. All cables shall be tagged with circuit numbers as shown.

(2) See sheet E-73 for Equipment Schedule.

NOTES:

1. The Contractor shall provide nameplates and circuit schedules as shown.
2. Deleted.
3. References:
   - For LVCC-B single line diagram, see sheets E-32 thru E-34.
   - For circuit and conduit/cable tray schedules, see sheets starting at E-401.
   - For pull box schedule, see sheet E-169.

REGISTERED PROFESSIONAL ENGINEER — DAVID H. OTO — No. 10699 — Exp. 06/30/2013 — ELECTRICAL — STATE OF CALIFORNIA
FOR REVISION ONLY [3]

REGISTERED PROFESSIONAL ENGINEER — FADI WALIEDDINE — No. 11465 — Exp. 12/31/2009 — ELECTRICAL — STATE OF CALIFORNIA
FOR REVISION ONLY [1] [2]

REQUEST FOR INFORMATION NOT ADDRESSED IN THIS CCO REMAIN IN FORCE					
[3]	05/02/12	ELECTRICAL WARNING SYSTEMS	RR	RG	61
[2]	04/10/09	ELECTRICAL WARNING SYSTEMS	RY RR	RG FW	61
[1]	03/30/09	SERVICE PLATFORM ELECTRICAL CHANGES	RR MP	RG FW	55
MARK	DATE	DESCRIPTIONS REVISIONS	BY	CH'D	CCO#

CONTRACT CHANGE ORDER NO. 61
SHEET 22 OF 104

DETAILS
SAS SUPERSTRUCTURE ROADWAY EASTBOUND
PANEL UP-206 SCHEDULE
NO SCALE

E-152

DATE	REVISED BY	DATE REVISED
09/01	JP	11/01 BL

CALCULATED/DESIGNED BY
CHECKED BY
DESIGN OVERSIGHT
BEHZAD GOLEMOHAMMADI

STATE OF CALIFORNIA - DEPARTMENT OF TRANSPORTATION
Caltrans

LAST REVISION 00-00-00
DATE PLOTTED => 04-MAY-2012
TIME PLOTTED => 13:50

FOR REDUCED PLANS ORIGINAL SCALE IS IN MILLIMETERS 0 20 40 60 80
DGN FILE =>04-0120f1_0201R03.dgn
USERNAME =>llorico
CU 04251
EA 0120F1

UTILITY PANEL UP-207 (CKT #2098)

Location: SAS SUPERSTRUCTURE SERVICE PLATFORM #7

LOAD DESCRIPTION	LTG	REC	OTH.	CB		CB	LTG	REC	OTH.	LOAD DESCRIPTION
Recept (1) Eastbound North Barrier		180		20/1	1 A 2	20/1				Spare
Spare				20/1	3 B 4	20/1				Spare
Recept (2) Service Platform #7		360		20/1	5 C 6	20/1				Spare
Recept (2) Girder		360		20/1	7 A 8	20/1	738			Girder Lighting (18)
Spare				20/1	9 B 10	30/1			2000	Controller Cabinet #TOS-7EA
Spare				20/1	11 C 12	20/1				Spare
TOTAL WATTS		900	(2)(3)				738		2000	TOTAL VA

LOAD SUMMARY (INCLUDES .90 PF) (VA)

Lighting (At 100%): 738
Gen Use (1st 10 kVA at 100% Plus 50% of remainder): 2900 (2)(3)

TOTAL kVA: 3.638 (2)(3)

BALANCE (kVA)

Phase A - 1.278
Phase B - 2.900
Phase C - 0.360 (2)(3)

VOLTAGE: 208/120 V
PHASE/WIRES: 3-phase, 4-wire
BUS RATING: 100 A
MAIN: MAIN LUGS ONLY
MOUNTING: Surface
K.A.I.C.: 10

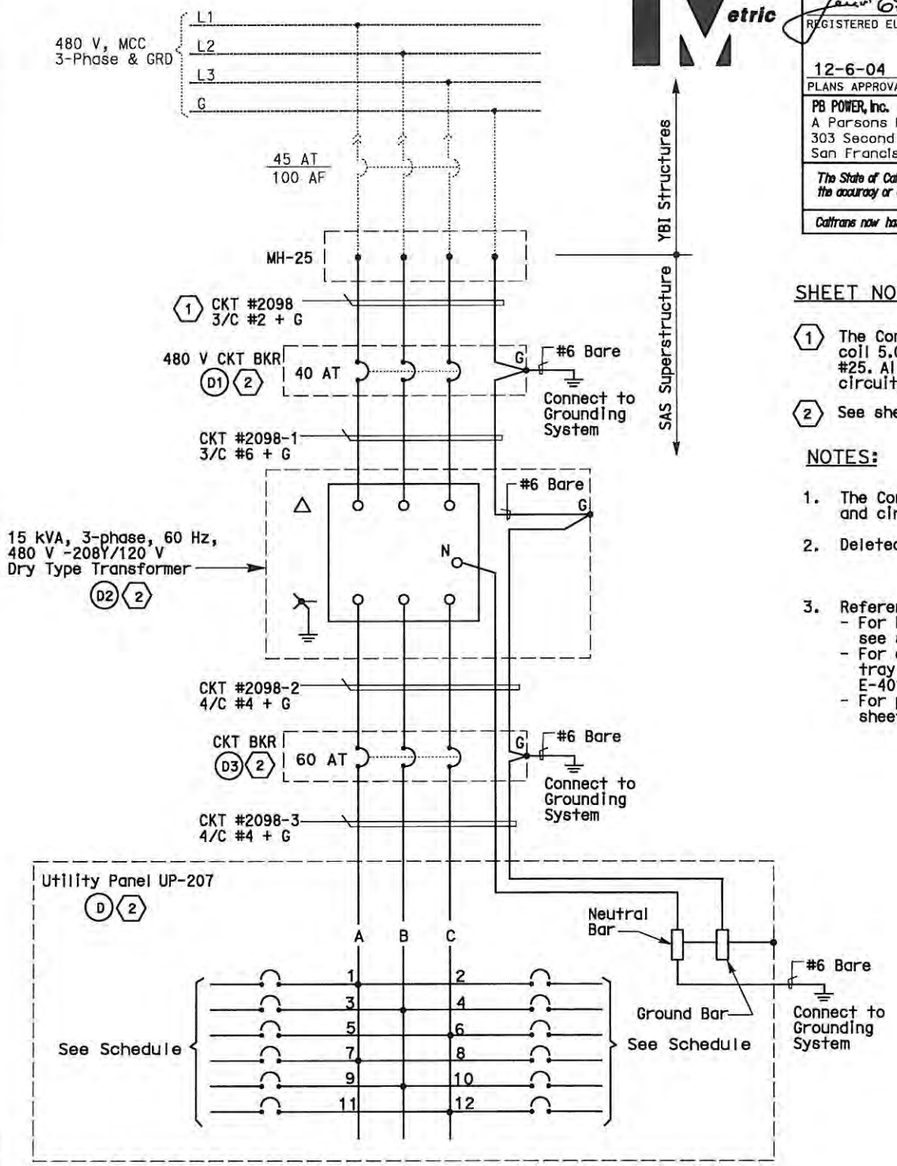

DIST	COUNTY	ROUTE	KILOMETER POST TOTAL PROJECT	SHEET No	TOTAL SHEETS
04	SF	80	13.2/13.9	202 R3	1204

12/19/02
REGISTERED ELECTRICAL ENGINEER DATE

JENS ERLINGSSON No. 8249 Exp. 9/30/06 ELECTRICAL — REGISTERED PROFESSIONAL ENGINEER — STATE OF CALIFORNIA

12-6-04
PLANS APPROVAL DATE

PB POWER, Inc.
A Parsons Brinckerhoff Company
303 Second St., Suite 700N
San Francisco, CA 94107-1317

The State of California or its officers or agents shall not be responsible for the accuracy or completeness of electronic copies of this plan sheet.

Caltrans now has a web site! To get to the web site, go to http://www.dot.ca.gov

SHEET NOTES:

(1) The Contractor shall extend and coil 5.0 meters of cable in manhole #25. All cables shall be tagged with circuit numbers as shown.

(2) See sheet E-74 for Equipment Schedule.

NOTES:

1. The Contractor shall provide nameplates and circuit schedules as shown.
2. Deleted.
3. References:
   - For LVCC-B single line diagram, see sheets E-32 thru E-34.
   - For circuit and conduit/cable tray schedules, see sheets starting at E-401.
   - For pull box schedule, see sheet E-169.

DAVID H. OTO No. 10699 Exp. 06/30/2013 ELECTRICAL — REGISTERED PROFESSIONAL ENGINEER — STATE OF CALIFORNIA

FOR REVISION ONLY (3)

FADI WALIEDDINE No. 11465 Exp. 12/31/2009 ELECTRICAL — REGISTERED PROFESSIONAL ENGINEER — STATE OF CALIFORNIA

FOR REVISION ONLY (1)(2)

REQUEST FOR INFORMATION NOT ADDRESSED IN THIS CCO REMAIN IN FORCE

MARK	DATE	DESCRIPTIONS	BY	CH'D	CCO#
		REVISIONS			
3	05/02/12	ELECTRICAL WARNING SYSTEMS	RR	RG	61
2	04/10/09	ELECTRICAL WARNING SYSTEMS	RY RR	RG FW	61
1	03/30/09	SERVICE PLATFORM ELECTRICAL CHANGES	RR MP	RG FW	55

CONTRACT CHANGE ORDER NO. 61
SHEET 23 OF 104

DETAILS
SAS SUPERSTRUCTURE ROADWAY EASTBOUND
PANEL UP-207 SCHEDULE
NO SCALE

E-153

DATE	REVISED BY	DATE REVISED
7/01	JP	12/01 BL

CALCULATED/DESIGNED BY
CHECKED BY

STATE OF CALIFORNIA - DEPARTMENT OF TRANSPORTATION
Caltrans

DESIGN OVERSIGHT
BEHZAD GOLEMOHAMMADI

LAST REVISION 00-00-00
DATE PLOTTED => 04-MAY-2012
TIME PLOTTED => 13:50

FOR REDUCED PLANS ORIGINAL SCALE IS IN MILLIMETERS 0 20 40 60 80

DGN FILE =>04-0120f1_0202R03.dgn
USERNAME =>llorico

CU 04251

EA 0120F1

UTILITY PANEL UP-208 (CKT #2099)

Location: SAS SUPERSTRUCTURE SERVICE PLATFORM #8

LOAD DESCRIPTION	LTG	REC	OTH.	CB		CB	LTG	REC	OTH.	LOAD DESCRIPTION
Recept (3) Eastbound North Barrier		540		20/1	1 A 2	20/1			10	CB-243A
Spare				20/1	3 B 4	20/1			10	CB-243B
Recept (2) Service Platform #8		360		20/1	5 C 6	20/1			20	CB-243C,CB-244C
Recept (3) Girder		540		20/1	7 A 8	20/1	984			Girder Lighting (24)
RTU-#11E (PLC Power Supply)			100	20/1	9 B 10	20/1	697			Girder Lighting (17)
RTU-#11E (Lighting & Receptacle)	105	180	150	20/1	11 C 12	30/1			2880	Fog Detection Panel FDP-6 (3)
Spare				20/1	13 A 14	20/1				Spare
Navigation Relay Cabinet # NAP-8			600	20/1	15 B 16	20/1				
Spare				20/1	17 C 18	20/1				
				20/1	19 A 20	20/1				
				20/1	21 B 22	20/1				
				20/1	23 C 24	20/1				
TOTAL VA	105	1620	850				1681		(3) 2920	TOTAL VA

LOAD SUMMARY (INCLUDES .90 PF) (VA)

Lighting (At 100%): 1786
Gen Use (1st 10 kVA at 100% Plus 50% of remainder): 5.390 (3)

TOTAL kVA: 7.176 (3)

BALANCE (kVA)

Phase A - 2.074
Phase B - ~~1.487~~ (3)
Phase C - 3.695

VOLTAGE: 208Y/120 V
PHASE/WIRES: 3-phase, 4-wire
BUS RATING: 100 A
MAIN: MAIN LUGS ONLY
MOUNTING: Surface
K.A.I.C.: 10

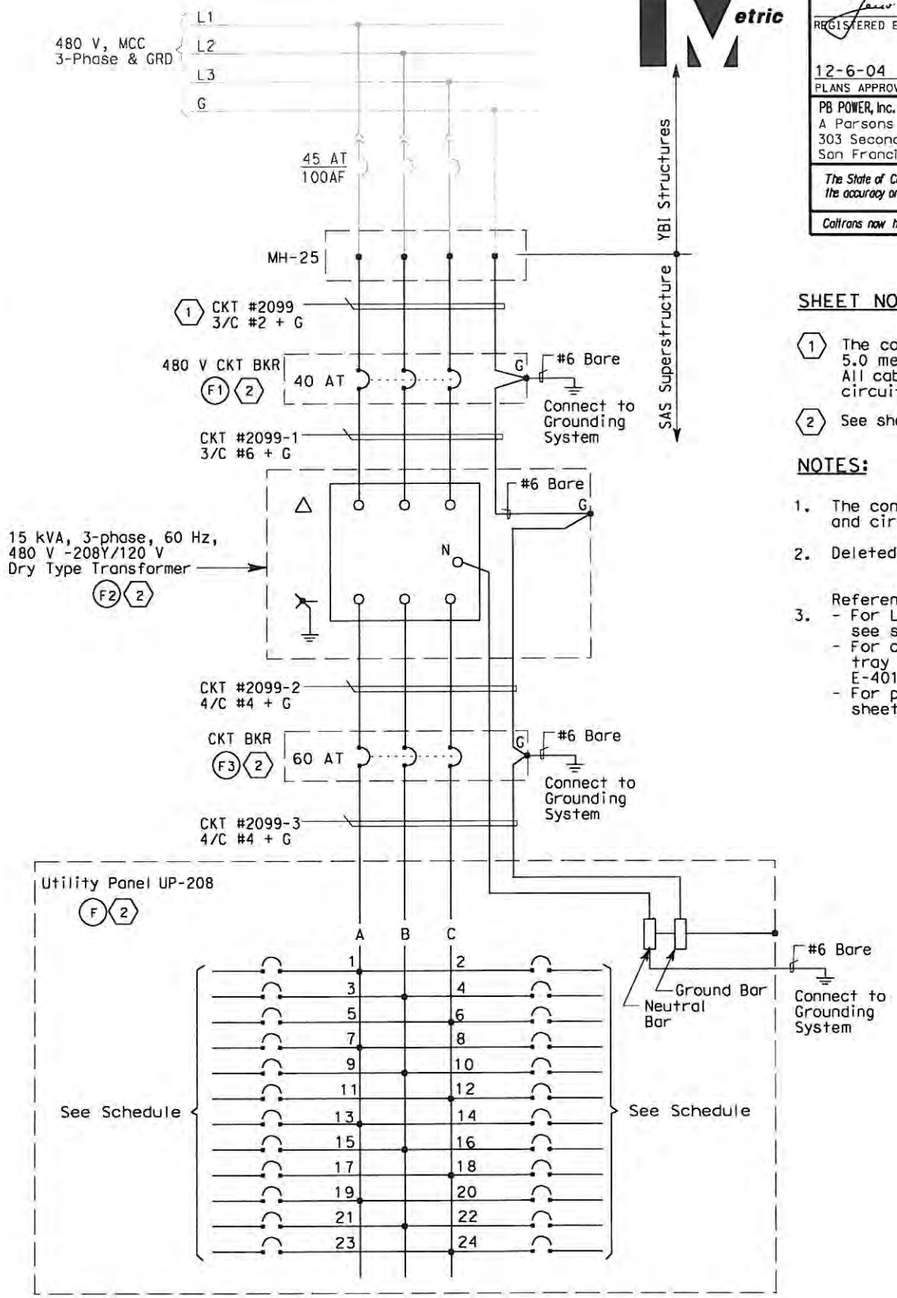

SHEET NOTES:

(1) The contractor shall extend and coil 5.0 meters of cable in manhole 25 All cables shall be tagged with circuit numbers as shown.

(2) See sheet E-75 for Equipment Schedule.

NOTES:

1. The contractor shall provide nameplates and circuit schedules as shown.
2. Deleted.
3. References:
   - For LVCC-B single line diagram, see sheets E-32 thru E-34.
   - For circuit and conduit/cable tray schedules, see sheets starting at E-401.
   - For pull box schedule, see sheet E-169.

DIST	COUNTY	ROUTE	KILOMETER POST TOTAL PROJECT	SHEET No	TOTAL SHEETS
04	SF	80	13.2/13.9	203 R3	1204

James Erlingsson 12/19/02
REGISTERED ELECTRICAL ENGINEER DATE

12-6-04
PLANS APPROVAL DATE

REGISTERED PROFESSIONAL ENGINEER — JENS ERLINGSSON No. 8249 Exp. 9/30/06 ELECTRICAL — STATE OF CALIFORNIA

PB POWER, Inc.
A Parsons Brinckerhoff Company
303 Second St., Suite 700N
San Francisco, CA 94107-1317

The State of California or its officers or agents shall not be responsible for the accuracy or completeness of electronic copies of this plan sheet.

Caltrans now has a web site! To get to the web site, go to http://www.dot.ca.gov

REQUEST FOR INFORMATION NOT ADDRESSED IN THIS CCO REMAIN IN FORCE					
(3)	04/10/09	ELECTRICAL WARNING SYSTEMS	RY RR	RG FW	61
(2)	03/30/09	SERVICE PLATFORM ELECTRICAL CHANGES	RR MP	RG FW	55
(1)	03/04/08	BARRIER MODIFICATIONS	JS BM	RG SE	44
MARK	DATE	DESCRIPTIONS REVISIONS	BY	CH'D	CCO#

CONTRACT CHANGE ORDER NO. (2)
SHEET 24 OF 104

REGISTERED PROFESSIONAL ENGINEER — S. A. ESTOQUE, JR. No. E-10151 Exp. 12/31/2006 ELECTRICAL — STATE OF CALIFORNIA
FOR REVISION ONLY (1)

REGISTERED PROFESSIONAL ENGINEER — FADI WALIEDDINE No. 11465 Exp. 12/31/2009 ELECTRICAL — STATE OF CALIFORNIA
FOR REVISION ONLY (2)(3)

THIS PLAN IS ACCURATE FOR ELECTRICAL WORK ONLY.

DETAILS
SAS SUPERSTRUCTURE ROADWAY EASTBOUND
PANEL UP-208 SCHEDULE

NO SCALE

E-154

DATE	REVISED BY	DATE REVISED
	EJL	2/04

CALCULATED/DESIGNED BY
CHECKED BY

DESIGN OVERSIGHT — BEHZAD GOLEMOHAMMADI

STATE OF CALIFORNIA - DEPARTMENT OF TRANSPORTATION — Caltrans

LAST REVISION 00-00-00
DATE PLOTTED => 4/10/2009
TIME PLOTTED => 9:20:18 AM

FOR REDUCED PLANS ORIGINAL SCALE IS IN MILLIMETERS 0 20 40 60 80

DGN FILE =>T:\13103\MS\pse\SAS Struc\CCO\SAS CC061\2009-04-10_Issued for Submittal\04-0120f1_0203R03.dgn
USERNAME =>florico
CU 04251 EA 0120F1

DIST	COUNTY	ROUTE	KILOMETER POST TOTAL PROJECT	SHEET No	TOTAL SHEETS
04	SF	80	13.2/13.9	212 R4	1204

Jens Erlingsson 12/19/02
REGISTERED ELECTRICAL ENGINEER DATE

12-6-04
PLANS APPROVAL DATE

REGISTERED PROFESSIONAL ENGINEER — JENS ERLINGSSON No. 8249 Exp. 9/30/06 ELECTRICAL — STATE OF CALIFORNIA

PB POWER, Inc.
A Parsons Brinckerhoff Company
303 Second St., Suite 700N
San Francisco, CA 94107-1317

The State of California or its officers or agents shall not be responsible for the accuracy or completeness of electronic copies of this plan sheet.

Caltrans now has a web site! To get to the web site, go to http://www.dot.ca.gov

PULL BOXES

Location	Type	Pull Box Size	Enclosure Type	Nameplate Pull Box Cover	Remarks
Roadway Barrier	PB-Com			Low Voltage - Call Box	Caltrans standard ES-9C (PB-9A)
Roadway Barrier	PB-Ltg			600 V - Electrical	Caltrans standard ES-9C (PB-9)
Roadway and miscellaneous	PB-1B	304 L x 254 W x 127 D	NEMA 4X	600 V - Electrical	Located at main suspender cable
Roadway and miscellaneous	PB-1C	152 L x 152 W x 102 D	NEMA 4X	600 V - Electrical	Located at suspender brackets
Bike Path	PB-1D	152 L x 203 W x 102 D	NEMA 4X	600 V - Electrical	
Bike Path	PB-1E	305 L x 254 W x 152 D	NEMA 4X	600 V - Electrical	
Roadway	PB-1F	304 L x 304 W x 152 D	NEMA 4X	600 V - Electrical	
Inside Girder Box	PB-2A	406 L x 254 W x 152 D	NEMA 12	600 V - Electrical	
Service Platform	PB-2B	762 L x 508 W x 203 D	NEMA 4X	600 V - Electrical	
Inside Girder Box	PB-2C	915 L x 610 W x 610 D	NEMA 12	600 V - Electrical	Electrical vault-embedded in conc. deck
Inside Girder Box	PB-2P	1067 L x 915 W x 305 D	NEMA 12	600 V - Electrical	~~Electrical vault-surface/pendant mounted~~
Inside Girder Box	PB-2L	152 L x 152 W x 102 D	NEMA 12	600 V - Electrical	4 Located inside Piers E6E, E7E and E8E

SPLICE BOXES

Location	Type	Splice Box Size	Enclosure Type	Nameplate Splice Box Cover	Remarks
Inside Girder Box	PB-3A	1830 L x 915 W x 305 D	NEMA 12	Danger - High Voltage - Keep Out	
Inside Girder Box	PB-3B	813 L x 203 diameter	Cylindrical Housing	Fiber Optic	72 fibers to 12 fibers
Inside Girder Box	PB-3C	813 L x 203 diameter	Cylindrical Housing	Fiber Optic	72 fibers to 72 fibers

PANEL ENCLOSURES (1)

Location	Type	Cabinet/Terminal Box Size	Enclosure Type	Nameplate Cabinet/Terminal Cover	Remarks
Service Platform	PB-6C	See Panel Layout	NEMA 4X	See Panel Layout on E-305	For Navigation Relay Cabinet
Service Platform	PB-7B	See Panel Layout	NEMA 4X	See Panel Layout on E-321	For Scada Communication Terminal Box
Service Platform	PB-7C	762 H x 508 W x 203 D	NEMA 4X	Caltrans Telephone	Enclosure only - For Telephone Terminal Box
Inside Girder Box	PB-7D		NEMA 12	Caltrans Telephone	Enclosure only - For Telephone Terminal Box
		DELETED			DELETED

SAS SUPERSTRUCTURE EB

Location	Type	Pull Box Size	Enclosure Type	Nameplate Pull Box Cover	Remarks
Inside Light Pole	PB-2N	152 L x 152 W x 102 D	NEMA 12	TOS-MVDS	Cable Termination
Tower Platform	PB-2M	305 L x 305 W x 152 D	NEMA 12	TOS-MVDS	Cable Termination

SHEET NOTE:

(1) Panel enclosures shall be provided with padlock provisions.

REGISTERED PROFESSIONAL ENGINEER — MARCELL FUMIO TAKEMY No. E 8651 Exp. 9/30/2008 ELECTRICAL — STATE OF CALIFORNIA

FOR REVISION ONLY (1)

REGISTERED PROFESSIONAL ENGINEER — FADI WALIEDDINE No. 11465 Exp. 12/31/2009 ELECTRICAL — STATE OF CALIFORNIA

FOR REVISION ONLY (2) (3) (4)

REQUEST FOR INFORMATION NOT ADDRESSED IN THIS CCO REMAIN IN FORCE

MARK	DATE	DESCRIPTIONS	BY	CH'D	CCO#
		REVISIONS			
4	08/03/09	ELECTRICAL WARNING SYSTEMS	RG	FW	61
3	03/30/09	SERVICE PLATFORM ELECTRICAL CHANGES	RR	RG FW	55
2	09/24/08	CABLE ELECTRICAL	RY AG	RG FW	72
1	02/19/08	ELECTRICAL MODIFICATIONS	MP EL	RR	42

CONTRACT CHANGE ORDER NO. 61
SHEET 25 OF 104

DETAILS
SAS SUPERSTRUCTURE ROADWAY EASTBOUND
PULLBOX SCHEDULES
NO SCALE

E-169

DESIGNED BY	CALCULATED BY	CHECKED BY	DATE	REVISED BY	DATE REVISED
JP	JP	BL	9/01		11/01

DESIGN OVERSIGHT
BEHZAD GOLEMOHAMMADI

STATE OF CALIFORNIA - DEPARTMENT OF TRANSPORTATION
Caltrans

FOR REDUCED PLANS ORIGINAL SCALE IS IN MILLIMETERS 0 20 40 60 80

DGN FILE =>T:\13103\MS\pse\SAS Struc\CCO\SAS CC061\2009-08-03_Issued for Submittal\04-0120F1_0212R04.dgn
USERNAME =>llorico

CU 04251 EA 0120F1

LAST REVISION 00-00-00
DATE PLOTTED => 8/5/2009
TIME PLOTTED => 9:00:23 AM

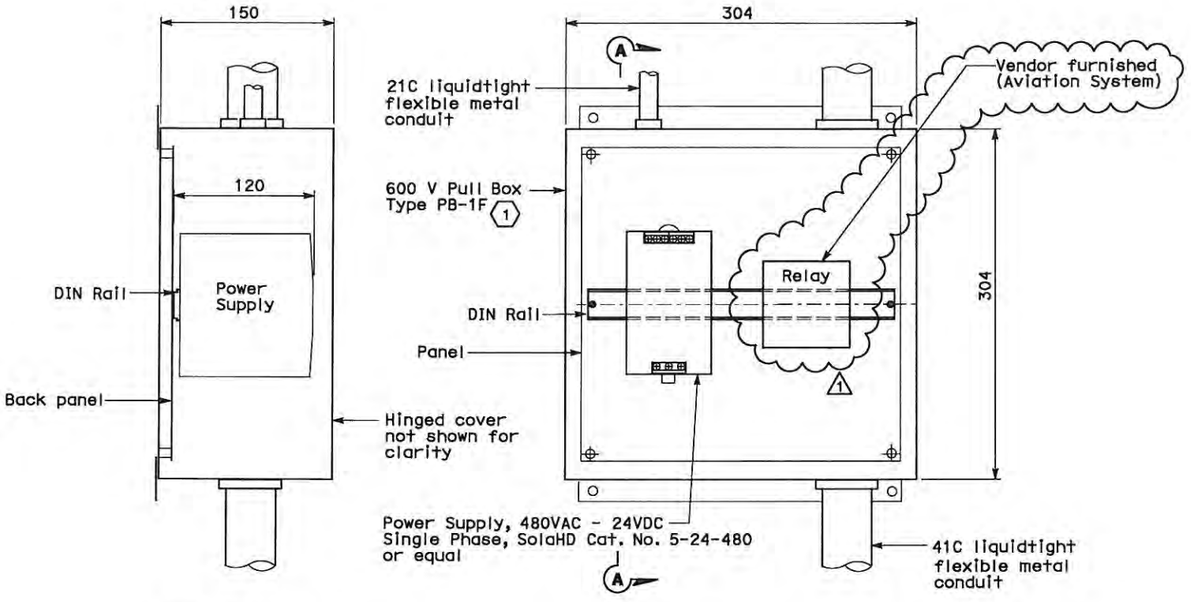

SECTION A-A

AVIATION LIGHTS (AV-2) POWER SUPPLY
MOUNTED INSIDE PULL BOX PB-1F

DETAIL 1
NTS

Metric

DIST	COUNTY	ROUTE	KILOMETER POST TOTAL PROJECT	SHEET No	TOTAL SHEETS
04	SF	80	13.2/13.9	261 S8R1	1204

Syn Yee Chin 01/07/11
REGISTERED ELECTRICAL ENGINEER DATE

REGISTERED PROFESSIONAL ENGINEER
SYN YEE CHIN
No. 18186
Exp. 09/30/2011
ELECTRICAL
STATE OF CALIFORNIA

PLANS APPROVAL DATE

PB AMERICAS, Inc.
A Parsons Brinckerhoff Company
303 Second St., Suite 700N
San Francisco, CA 94107-1317

The State of California or its officers or agents shall not be responsible for the accuracy or completeness of electronic copies of this plan sheet.

Caltrans now has a web site! To get to the web site, go to http://www.dot.ca.gov

SHEET NOTES:

(1) Pull Boxes located north and south side of main suspend cable at PP-22, PP-34, PP-52 & PP-68.

REGISTERED PROFESSIONAL ENGINEER
DAVID H. OTO
No. 10699
Exp. 06/30/2013
ELECTRICAL
STATE OF CALIFORNIA

FOR REVISION ONLY
1

REQUEST FOR INFORMATION NOT ADDRESSED IN THIS CCO REMAIN IN FORCE					
1	05/02/12	CABLE ELECTRICAL-LED AVIATION LIGHTS	RR	RG	61
0	01/07/11	CABLE ELECTRICAL-LED AVIATION LIGHTS	RR	RG	72S1
MARK	DATE	DESCRIPTIONS	BY	CH'D	CCO#
		REVISIONS			

CONTRACT CHANGE ORDER NO. 61
SHEET 26 OF 104

DETAILS
TOWER AND SUSPENSION CABLE
TYPICAL SUSPENSION CABLE LIGHTING
SCALE AS NOTED

E-251H

DESIGN OVERSIGHT	CALCULATED/ DESIGNED BY	DATE	REVISED BY	DATE REVISED
BEHZAD GOLEMOHAMMADI	CHECKED BY			

STATE OF CALIFORNIA - DEPARTMENT OF TRANSPORTATION
Caltrans

THIS PLAN ACCURATE FOR ELECTRICAL WORK ONLY.

ALL DIMENSIONS ARE IN MILLIMETERS UNLESS OTHERWISE SHOWN.

FOR REDUCED PLANS ORIGINAL SCALE IS IN MILLIMETERS 0 20 40 60 80

DGN FILE =>04-0120F1_0261S08R01.dgn
USERNAME =>llorico

CU 04251 EA 0120F1

LAST REVISION 00-00-00
DATE PLOTTED => 04-MAY-2012
TIME PLOTTED => 13:50

UTILITY PANEL UP-210 (CKT #2123)

Location: PIER 1 TOWER AT PLATFORM ELEV 53.85 m

LOAD DESCRIPTION	LTG	REC	OTH.	CB			CB	LTG	REC	OTH.	LOAD DESCRIPTION
Spare				20/1	1	A 2	30/1	2002			Tower Base LTG (14) @ EL. 9.0 m
Fog Detection Panel FDP-5			2880	30/1	3	B 4	20/1		900		Recept Tower Base (5) @ EL. 9.0 m
Sump Pump @ Elev 3.000 m Sump P-A			12	20/1	5	C 6	30/1	2145			Tower Base LTG (15) @ EL. 9.0 m
Sump Pump @ Elev 3.000 m Sump P-B			12	20/1	7	A 8	20/1		900		Recept Tower Base (5) @ EL. 9.0 m
Elevator Light & Fan			220	20/1	9	B 10	20/1	287			Platform LTG (7) @ EL. 53.85 m
Recept Platform (5) @ EL. 53.85 m		900		20/1	11	C 12	20/1			900	Strong Motion Recorder #3
Spare				20/1	13	A 14	20/1				Spare
				20/1	15	B 16	20/1				
↓				20/1	17	C 18	20/1				↓
TOTAL VA		900	3124 (1)					4434	1800	900	TOTAL VA

LOAD SUMMARY (INCLUDES .90PF) (VA)

Lighting (At 100%): 4434
Gen Use (1st 10 kVA at 100% Plus 50% of remainder): 6724 (1)

TOTAL kVA: 11.158 (1)

BALANCE (kVA)

Phase A - 2.914
Phase B - 4.287 (1)
Phase C - 3.957

VOLTAGE: 208/120 V
PHASE/WIRES: 3-Phase, 4-Wire
BUS RATING: 100 A
MAIN: 100 A Frame
MOUNTING: Surface
K.A.I.C.: 10

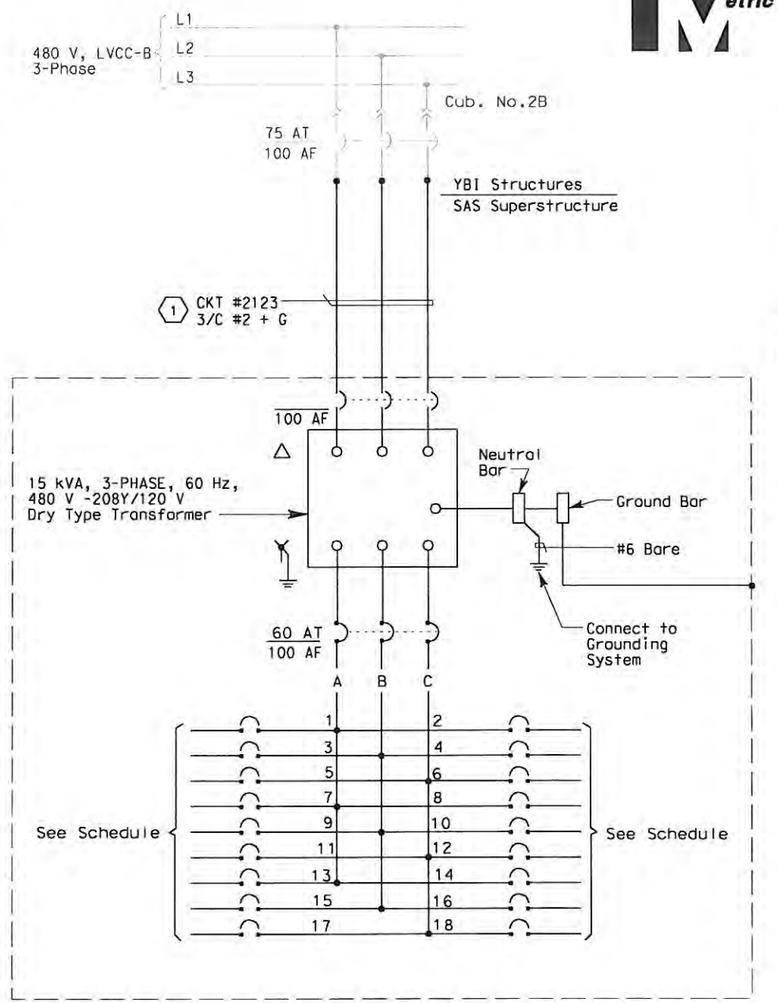

SHEET NOTES:

(1) The Contractor shall extend and coil 5 meters of cable in Manhole-25. All cables shall be tagged with circuit number as shown.

NOTES:

1. The Contractor shall provide nameplates and circuit schedules as shown.
2. Install transformer/panelboard inside a PB-8A enclosure (Fiberglass) to be sized by contractor.
3. References:
   - For conduit and cable tray schedules, see sheets starting at E-401.
   - For pull box schedules, see sheets E-83 and E-169.
   - For elevator pit circuits, see sheet E-265.
   - For LVCC-B single line diagram, see sheets E-32 through E-34.

DIST	COUNTY	ROUTE	KILOMETER POST TOTAL PROJECT	SHEET No	TOTAL SHEETS
04	SF	80	13.2/13.9	281 R1	1204

James Erlingsson 12/19/02
REGISTERED ELECTRICAL ENGINEER DATE

12-6-04
PLANS APPROVAL DATE

REGISTERED PROFESSIONAL ENGINEER — JENS ERLINGSSON No. 8249 Exp. 9/30/06 ELECTRICAL — STATE OF CALIFORNIA

PB POWER, Inc.
A Parsons Brinckerhoff Company
303 Second St., Suite 700N
San Francisco, CA 94107-1317

The State of California or its officers or agents shall not be responsible for the accuracy or completeness of electronic copies of this plan sheet.

Caltrans now has a web site! To get to the web site, go to http://www.dot.ca.gov

DATE	REVISED BY	DATE REVISED
10/01	AB	2/04
FK		EDC

CALCULATED/ DESIGNED BY
CHECKED BY

DESIGN OVERSIGHT
BEHZAD GOLEMOHAMMADI

STATE OF CALIFORNIA - DEPARTMENT OF TRANSPORTATION
Caltrans

REQUEST FOR INFORMATION NOT ADDRESSED IN THIS CCO REMAIN IN FORCE					
MARK	DATE	DESCRIPTIONS	BY	CH'D	CCO#
		REVISIONS			
1	04/10/09	ELECTRICAL WARNING SYSTEMS	JS TW	RG FW	61

CONTRACT CHANGE ORDER NO. 61
SHEET 37 OF 104

REGISTERED PROFESSIONAL ENGINEER — FADI WALIEDDINE No. 11465 Exp. 12/31/2009 ELECTRICAL — STATE OF CALIFORNIA

FOR REVISION ONLY (1)

DETAILS
TOWER AND SUSPENSION CABLE
PANEL UP-210 SCHEDULE

NO SCALE

E-278

LAST REVISION 00-00-00
DATE PLOTTED => 8/11/2009
TIME PLOTTED => 5:05:58 PM

FOR REDUCED PLANS ORIGINAL SCALE IS IN MILLIMETERS 0 20 40 60 80

DGN FILE =>T:\13103\MS\pse\SAS Struc\CCO\SAS CCO61\2009-08-03_Issued for Submittal\04-0120F1_0281R01.dgn
USERNAME =>llorico

CU 04251 | EA 0120F1

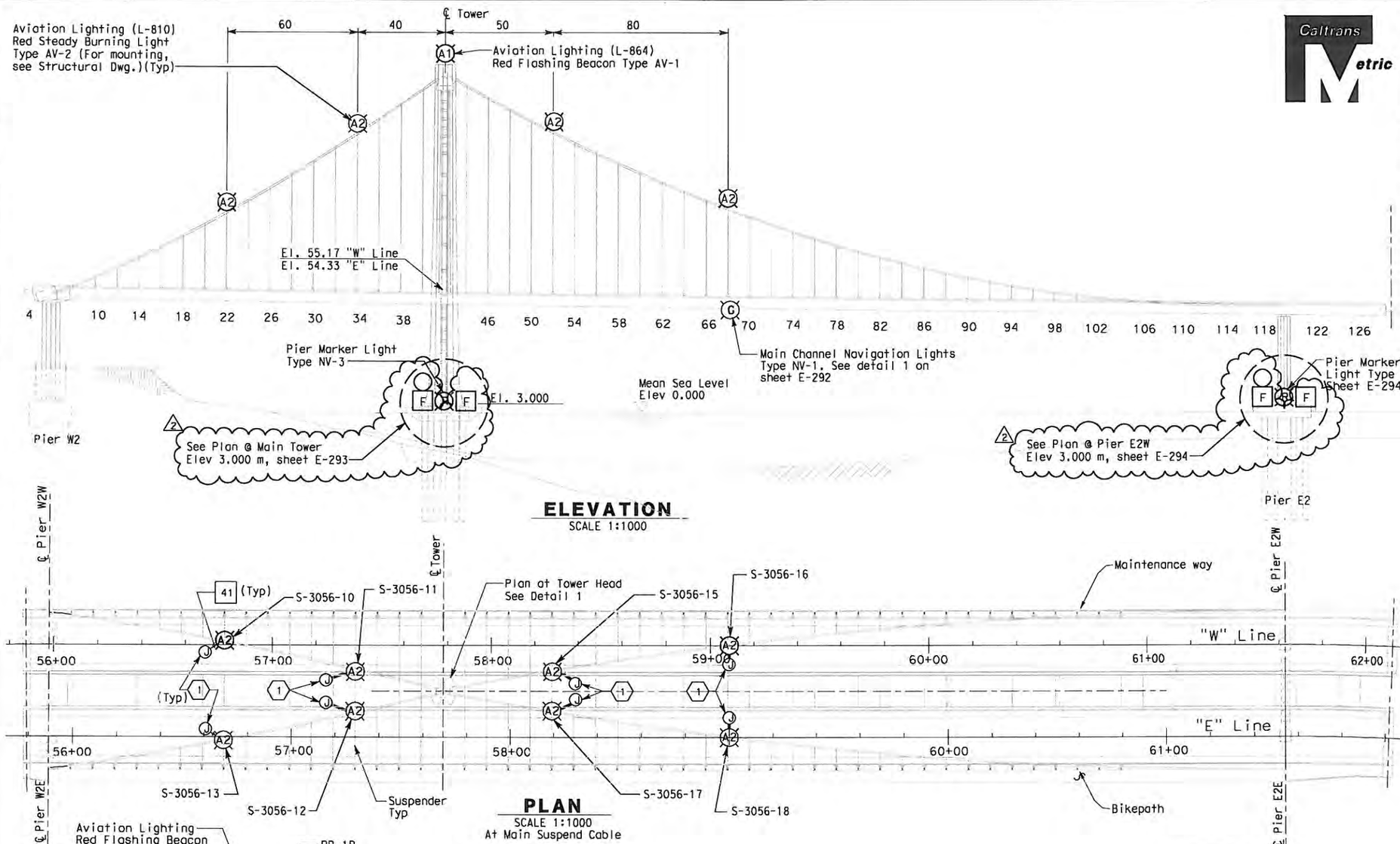

ELEVATION
SCALE 1:1000

PLAN
SCALE 1:1000
At Main Suspend Cable

DETAIL 1
SCALE 1:100
Plan at Tower Head El. 156.750

THIS PLAN IS ACCURATE FOR ELECTRICAL WORK ONLY.

ALL DIMENSIONS ARE IN METERS UNLESS OTHERWISE SHOWN.

FOR REDUCED PLANS ORIGINAL SCALE IS IN MILLIMETERS 0 20 40 60 80

DIST	COUNTY	ROUTE	KILOMETER POST TOTAL PROJECT	SHEET NO	TOTAL SHEETS
04	SF	80	13.2/13.9	291 R2	1204

Jens Erlingsson 12/19/02
REGISTERED ELECTRICAL ENGINEER DATE

12-6-04
PLANS APPROVAL DATE

REGISTERED PROFESSIONAL ENGINEER — JENS ERLINGSSON No. 8249 Exp. 9/30/06 ELECTRICAL — STATE OF CALIFORNIA

PB POWER, Inc.
A Parsons Brinckerhoff Company
303 Second St., Suite 700N
San Francisco, CA 94107-1317

The State of California or its officers or agents shall not be responsible for the accuracy or completeness of electronic copies of this plan sheet.

Caltrans now has a web site! To get to the web site, go to http://www.dot.ca.gov

SHEET NOTES:

(1) For pull box location and continuation of conduit routing of circuit, see sheets E-226 through E-228.

NOTES:

1. References:
   - For SAS Superstructure girder plan, see sheet E-292.
   - For tower plans, see sheet E-293.
   - For Pier 2 girder and footing plans, see sheet E-294.
   - For navigation and aviation lighting fixture schedule, see sheet E-297.
   - For circuit and conduit/cable tray schedules, see sheets starting at E-401.
2. For other related work not shown on this sheet, see Electrical Special Provisions.
3. For navigation and aviation warning connection diagram, see sheet E-303.

REGISTERED PROFESSIONAL ENGINEER — FADI WALIEDDINE No. 11465 Exp. 12/31/2009 ELECTRICAL — STATE OF CALIFORNIA

FOR REVISION ONLY (1)(2)

REQUEST FOR INFORMATION NOT ADDRESSED IN THIS CCO REMAIN IN FORCE					
(2)	04/10/09	ELECTRICAL WARNING SYSTEMS	RY RR	RG FW	61
(1)	09/24/08	CABLE ELECTRICAL	RR AG	RG FW	72
MARK	DATE	DESCRIPTIONS REVISIONS	BY	CH'D	CCO#

CONTRACT CHANGE ORDER NO. 61
SHEET 28 OF 104

NAVIGATION AND AVIATION WARNING SYSTEMS
SAS SUPERSTRUCTURE AND TOWER PLAN AND ELEVATION

SCALE AS NOTED

E-291

DESIGN OVERSIGHT	CALCULATED/ DESIGNED BY	DRAWN BY	CHECKED BY	DATE	REVISED BY	DATE REVISED
BEHZAD GOLEMOHAMMADI						

STATE OF CALIFORNIA - DEPARTMENT OF TRANSPORTATION
Caltrans

DGN FILE =>T:\13103\MS\pse\SAS Struc\CCO\SAS CCO61\2009-04-10_Issued for Submittal\04-0120F1_0291R02.dgn
USERNAME =>llorico
CU 04251 | EA 0120F1

LAST REVISION 00-00-00
DATE PLOTTED => 4/10/2009
TIME PLOTTED => 9:26:44 AM

DIST	COUNTY	ROUTE	KILOMETER POST TOTAL PROJECT	SHEET No.	TOTAL SHEETS
04	SF	80	13.2/13.9	292 R2	1204

REGISTERED ELECTRICAL ENGINEER — 12/19/02 — DATE

12-6-04
PLANS APPROVAL DATE

JENS ERLINGSSON No. 8249 Exp. 9/30/06 ELECTRICAL — REGISTERED PROFESSIONAL ENGINEER — STATE OF CALIFORNIA

PB POWER, Inc.
A Parsons Brinckerhoff Company
303 Second St., Suite 700N
San Francisco, CA 94107-1317

The State of California or its officers or agents shall not be responsible for the accuracy or completeness of electronic copies of this plan sheet.

Caltrans now has a web site! To get to the web site, go to http://www.dot.ca.gov

FADI WALIEDDINE No. 11465 Exp. 12/31/2009 ELECTRICAL — REGISTERED PROFESSIONAL ENGINEER — STATE OF CALIFORNIA

FOR REVISION ONLY (1)

SYN YEE CHIN No. 18186 Exp. 09/30/2011 ELECTRICAL — REGISTERED PROFESSIONAL ENGINEER — STATE OF CALIFORNIA

FOR REVISION ONLY (2)

Caltrans Metric

Top to Bottom (1)
1 T13 15 kV
1 T53 Non-Caltrans

Main Channel Marker Light Type NV-1

1647 mm

Top to Bottom (1)
1 T43 TOS/COM
1 T23 600 V
1 T33 600 V

Conduits down to Plan at Pier E2W Footing, See Detail 4, sheet E-294

W3 Line
W Line
W4 Line
#NAP-5
RTU #10W
UP-105
RTU #10E
Service Platform #6
Pier 1 Tower
UP-106 → #NAP-6W
UP-206 → #NAP-6E
Service Platform #5
E4 Line
E Line
E3 Line
Crossbeam (Typ)
3353 mm
Service Platform #7
Service Platform #8
#NAP-8
RTU #11W
UP-208
RTU #11E
Spare 8/141 8/142
Spare 8/242 8/243
E2W ℄
E2E ℄
280 mm Ø
21C
CT
58 59 60 61

Bike Path

Top to Bottom (2)
1 T43 TOS/COM
2 T23 600 V
2 T33 600 V

2 T13 15 kV (2)
2 T53 Non-Caltrans

Main Channel Marker Light Type NV-1

Conduits down to Plan at Pier E2E Footing, See Detail 4, sheet E-294

REQUEST FOR INFORMATION NOT ADDRESSED IN THIS CCO REMAIN IN FORCE					
2	01/07/11	ELECTRICAL WARNING SYSTEMS	TW	RG	61
1	08/03/09	ELECTRICAL WARNING SYSTEMS	RR RY	RG FW	61
MARK	DATE	DESCRIPTIONS	BY	CH'D	CCO#
		REVISIONS			

CONTRACT CHANGE ORDER NO. 61
SHEET 29 OF 104

SAS SUPERSTRUCTURE GIRDER CONDUIT PLAN

SHEET NOTES:

(1) For cable tray layout, see sheets E-97 thru E-101.
(2) For cable tray layout, see sheets E-182 thru E-186.
(3) Contractor shall field install strut channel to support the Monitoring Box on stiffeners.
(4) Contractor shall field install strut channel to support conduit on stiffeners.

NOTES:

1. References:
   - For SAS Superstructure and tower plan, and elevation, see sheet E-291.
   - For tower plans, see sheet E-293.
   - For Pier 2 girder and footing plans, see sheet E-294.
   - For navigation and aviation lighting fixture schedule, see sheet E-297.
   - For circuit and conduit/cable tray schedules, see sheets starting at E-401.
   - For platform 5 conduit, lighting and grounding plan, see sheet E-115.
   - For platform 6 conduit, lighting and grounding plan, see sheet E-116.
2. For other related work not shown on this sheet, see Electrical Special Provisions.

Counterweight

Navigation Light Extension, see E-292A
550
Main Channel Marker Light Type NV-1

SECTION B-B
NO SCALE

Navigation Light Monitoring Box (See Detail 1)
41C, RGS PVC coated conduit 1-2/C + gnd #10 (4) 1-2/C #14
Main channel marker light Type NV-1

SECTION A-A
SCALE 1:50

21C, Liquidtight flexible metal conduit connector
Navigation Light Monitoring Box (Vendor furnished)
41mm Strut channel (length as required) (3)
Conduit, see plan drawing (4)
Stiffeners (typ)

DETAIL - 1
(Typical Monitor Box support)

NAVIGATION AND AVIATION WARNING SYSTEMS
SAS SUPERSTRUCTURE GIRDER PLANS
SCALE 1:600

E-292

THIS PLAN IS ACCURATE FOR ELECTRICAL WORK ONLY.

ALL DIMENSIONS ARE IN METERS UNLESS OTHERWISE SHOWN.

STATE OF CALIFORNIA - DEPARTMENT OF TRANSPORTATION — Caltrans
DESIGN OVERSIGHT — BEHZAD GOLEMOHAMMADI
CALCULATED/DESIGNED BY — CHECKED BY
DATE — REVISED BY — DATE REVISED

LAST REVISION 00-00-00 — DATE PLOTTED => 2/17/2011 TIME PLOTTED => 4:39:01 PM

FOR REDUCED PLANS ORIGINAL SCALE IS IN MILLIMETERS 0 20 40 60 80

DGN FILE =>T:\13103\WS\pse\SAS Struc\CCO\SAS CCO61\Draft 6 - 2011.01.07_Issued for Submittal\04-0120F1_0292R02.dgn
USERNAME =>llorico
CU 04251
EA 0120F1

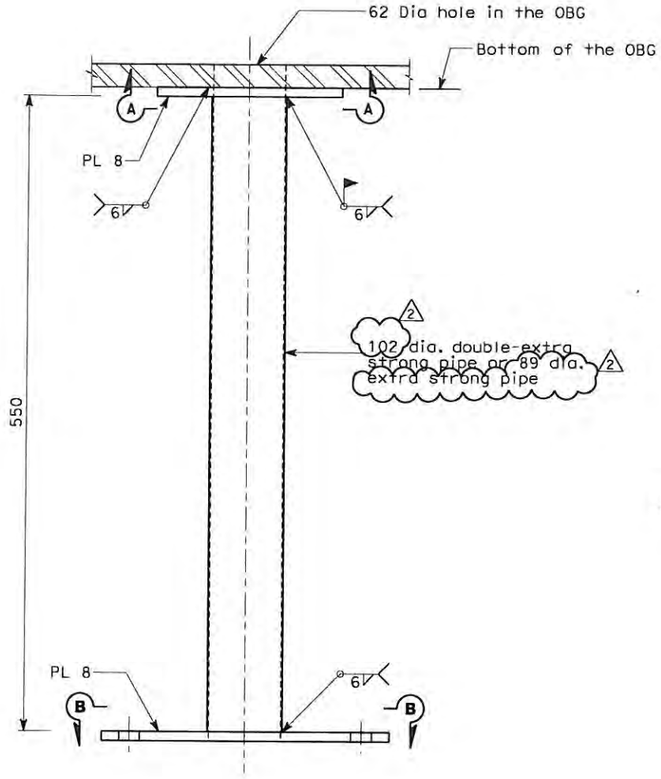

ELEVATION

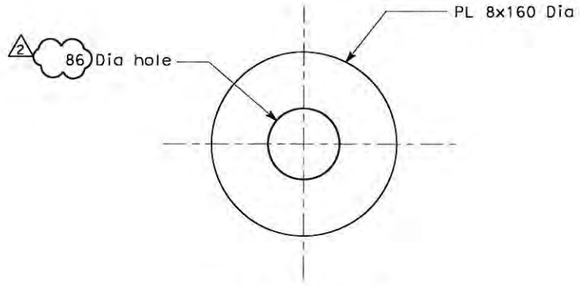

SECTION A-A

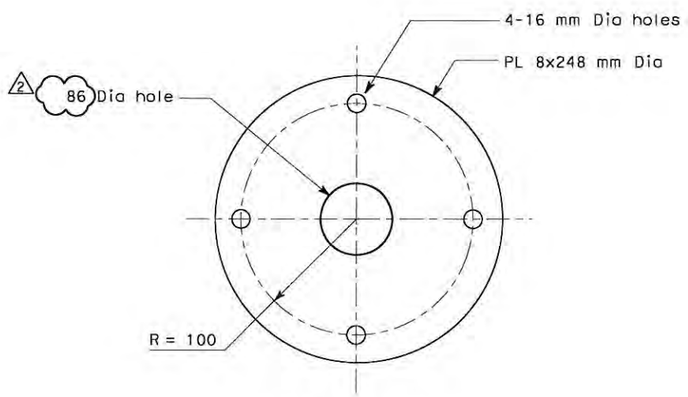

SECTION B-B

NAVIGATION LIGHT EXTENSION

SCALE 1:2.5

Caltrans Metric

DIST	COUNTY	ROUTE	KILOMETER POST TOTAL PROJECT	SHEET No	TOTAL SHEETS
04	SF	80	13.2/13.9	292 S1R2	1204

10/01/08
REGISTERED ELECTRICAL ENGINEER DATE

REGISTERED PROFESSIONAL ENGINEER — FADI WALIEDDINE No. 11465 Exp.12/31/2009 ELECTRICAL — STATE OF CALIFORNIA

PLANS APPROVAL DATE

PB AMERICAS, Inc.
A Parsons Brinckerhoff Company
303 Second St., Suite 700N
San Francisco, CA 94107-1317

The State of California or its officers or agents shall not be responsible for the accuracy or completeness of electronic copies of this plan sheet.

Caltrans now has a web site! To get to the web site, go to http://www.dot.ca.gov

REGISTERED PROFESSIONAL ENGINEER — AFIUDDIN A. MOHAMMED No. 71894 CIVIL — STATE OF CALIFORNIA
FOR REVISION ONLY
2

REGISTERED PROFESSIONAL ENGINEER — SYN YEE CHIN No. 18186 Exp.09/30/2011 ELECTRICAL — STATE OF CALIFORNIA
Syn Yee Chin
FOR REVISION ONLY
2
1

REQUEST FOR INFORMATION NOT ADDRESSED IN THIS CCO REMAIN IN FORCE					
2	06/14/12	ELECTRICAL WARNING SYSTEMS	TW	RG	61
1	01/07/11	ELECTRICAL WARNING SYSTEMS	TW	RG	61
0	04/10/09	ELECTRICAL WARNING SYSTEMS	RG	FW	61
MARK	DATE	DESCRIPTIONS	BY	CH'D	CCO#
		REVISIONS			

CONTRACT CHANGE ORDER NO. 61
SHEET 30 OF 104

NAVIGATION AND AVIATION WARNING SYSTEMS
SAS SUPERSTRUCTURE DETAILS

SCALE AS NOTED

E-292A

DESIGN OVERSIGHT	CALCULATED/ DESIGNED BY	DATE	REVISED BY	DATE REVISED
BEHZAD GOLEMOHAMMADI	CHECKED BY			

STATE OF CALIFORNIA - DEPARTMENT OF TRANSPORTATION
Caltrans

LAST REVISION 00-00-00
DATE PLOTTED => 6/14/2012
TIME PLOTTED => 11:37:05 PM

FOR REDUCED PLANS ORIGINAL SCALE IS IN MILLIMETERS 0 20 40 60 80

DGN FILE =>T:\13103\MS\pse\SAS Struc\CCO\SAS CCO61\CCO-61 (Temp 6-14-12)\04-0120F1_0292S01R02.dgn
USERNAME =>garciar

CU 04251 EA 0120F1

DIST	COUNTY	ROUTE	KILOMETER POST TOTAL PROJECT	SHEET NO	TOTAL SHEETS
04	SF	80	13.2/13.9	293 R5	1204

12/19/02
REGISTERED ELECTRICAL ENGINEER DATE

12-6-04
PLANS APPROVAL DATE

REGISTERED PROFESSIONAL ENGINEER — JENS ERLINGSSON No. 8249 Exp. 9/30/06 ELECTRICAL — STATE OF CALIFORNIA

PB POWER, Inc.
A Parsons Brinckerhoff Company
303 Second St., Suite 700N
San Francisco, CA 94107-1317

The State of California or its officers or agents shall not be responsible for the accuracy or completeness of electronic copies of this plan sheet.

Caltrans now has a web site! To get to the web site, go to http://www.dot.ca.gov

Caltrans Metric

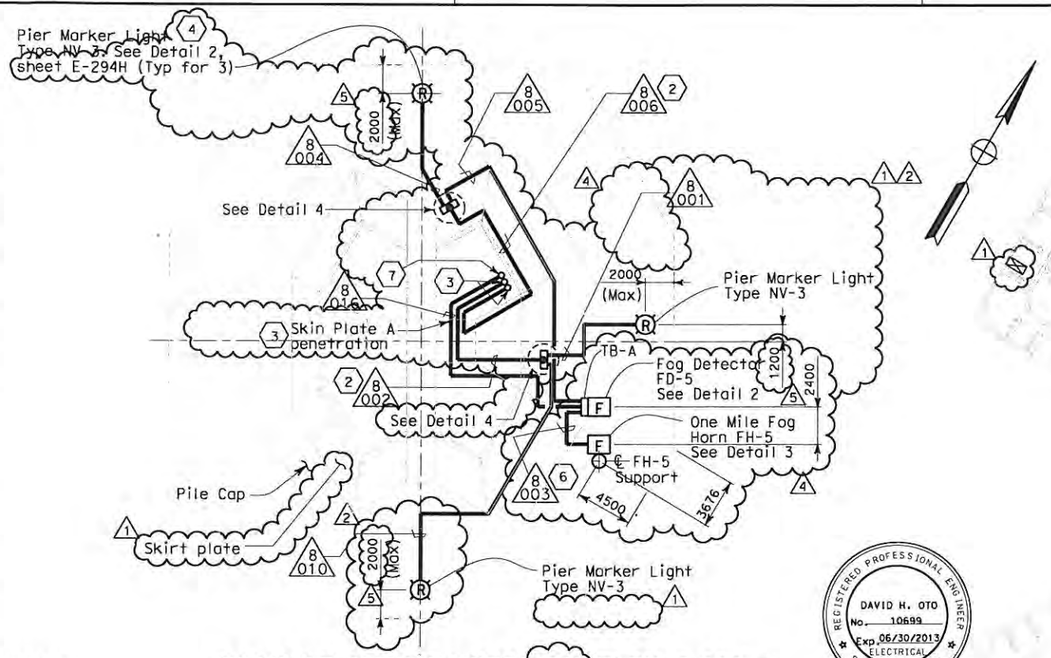

PLAN AT MAIN TOWER (T1) ELEV 3.000 m
NO SCALE

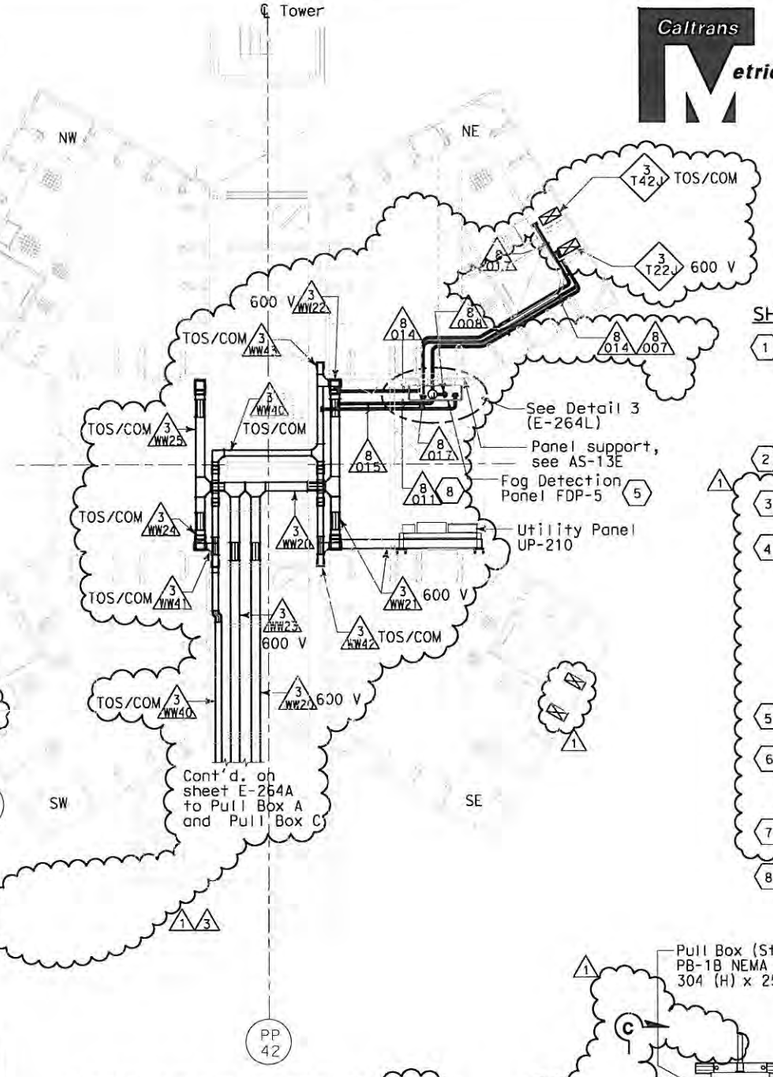

PLAN AT MAIN TOWER (T1) ELEV 53.85 m
SCALE 1:50

NOTES:

1. References:
   - For SAS Superstructure and tower plan and elevation, see sheet E-291.
   - For Pier 2 girder and footing plans, see sheet E-294.
   - For navigation and aviation lighting fixture schedule, see sheet E-297.
   - For conduit and cable tray schedules, see sheets starting at E-401.
   - For navigation and aviation warning systems connection diagram, see sheet E-303.
   - For fog detection system connection diagram, see sheet E-300.
2. For other related work not shown on this sheet, see Electrical Special Provisions.
3. For wireway layout details see sheet E-264J.

SHEET NOTES:

1. Deleted.
2. Route conduit on exterior surface of Tower skirt down to pull box.
3. Conduit up to cable troy T22A at elevation 13.5 m through skin plate A of NE shaft.
4. Red axis lights shall be attached to the channel-ward face of pier. Each light shall show through a horizontal arc of 180 degrees and shall be mounted on the navigational of pier as low as practicable but not lower than two feet above navigable high water, to show 90 degrees either side of a line parallel to the axis of the bridge.
5. For mounting and support see AS-13E.
6. Conduits #8003 and #8143 shall be installed to accommodate the termination of cables (ckt #2204-4 and ckt #2366-4 respectively) based on maximum cable length of 9000 mm.
7. Conduit up to cable tray T42A at elevation 13.5 m through skin plate A of NE shaft.
8. Install #2 Bare copper wire (bonding jumper) in conduit 011

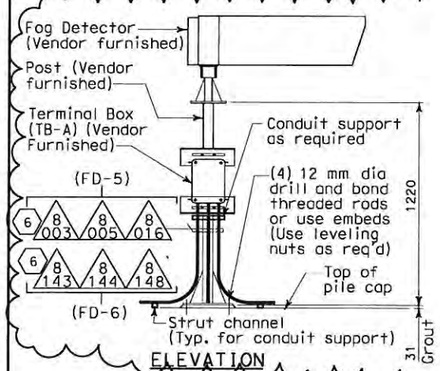

ELEVATION
FOG DETECTOR SYSTEM
DETAIL 2
NO SCALE
TYPICAL FOR FD-5 @ MAIN TOWER (T1) AND FD-6 @ PIER E2

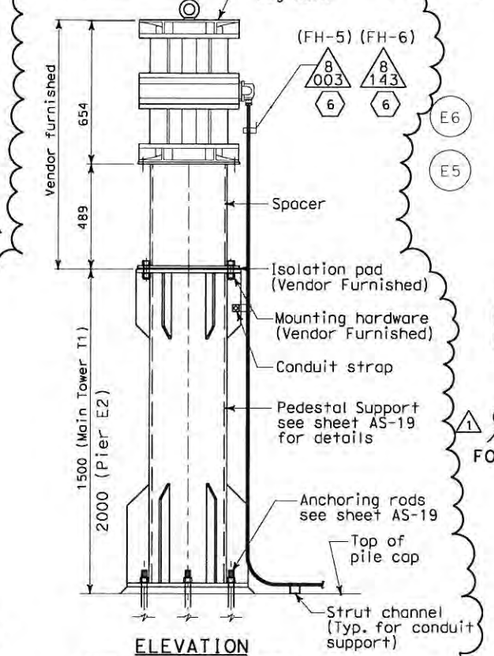

ELEVATION
ONE MILE FOG HORN
DETAIL 3
NO SCALE
TYPICAL FOR FH-5 @ MAIN TOWER (T1) AND FH-6 @ PIER E2

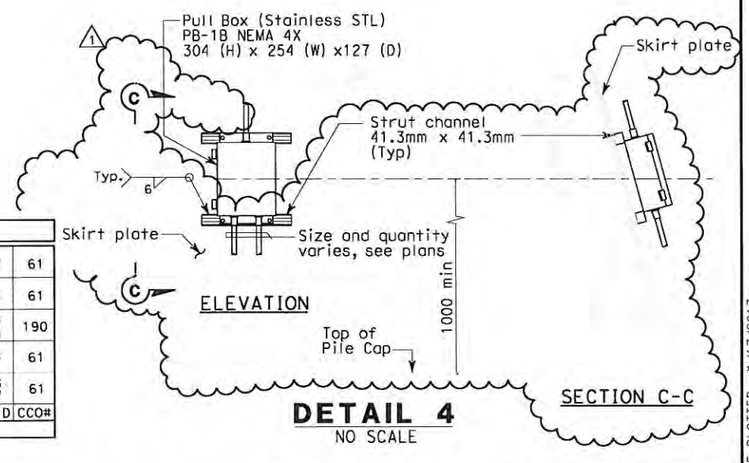

DETAIL 4
NO SCALE

MARK	DATE	DESCRIPTIONS	BY	CH'D	CCO#
		REVISIONS			
5	01/16/13	ELECTRICAL WARNING SYSTEMS	RR	RG	61
4	05/02/12	ELECTRICAL WARNING SYSTEMS	RR	RG	61
3	12/21/11	ELECTRICAL CHANGES FOR ELEVATION 53 IMPROVEMENTS	TW EC	RG RM	190
2	01/07/11	ELECTRICAL WARNING SYSTEMS	TW	RG	61
1	08/03/09	ELECTRICAL WARNING SYSTEMS	RY RR	RG FW	61

REQUEST FOR INFORMATION NOT ADDRESSED IN THIS CCO REMAIN IN FORCE

CONTRACT CHANGE ORDER NO. 61
SHEET 31 OF 104

NAVIGATION AND AVIATION WARNING SYSTEMS TOWER PLANS

SCALE AS NOTED

E-293

ALL DIMENSIONS ARE IN MILLIMETERS UNLESS OTHERWISE SHOWN.

REGISTERED PROFESSIONAL ENGINEER — DAVID H. OTO No. 10699 Exp. 06/30/2013 ELECTRICAL — STATE OF CALIFORNIA
FOR REVISION ONLY

REGISTERED PROFESSIONAL ENGINEER — SYN YEE CHIN No. 18186 Exp. 09/30/2013 ELECTRICAL — STATE OF CALIFORNIA
FOR REVISION ONLY

REGISTERED PROFESSIONAL ENGINEER — FADI WALIEDDINE No. 11465 Exp. 12/31/2009 ELECTRICAL — STATE OF CALIFORNIA
FOR REVISION ONLY

DESIGN OVERSIGHT: BEHZAD GOLEMOHAMMADI
CALCULATED/DESIGNED BY: RSIGHT
CHECKED BY: DH
DATE REVISED: 12-21-11
REVISED BY: DATE

STATE OF CALIFORNIA - DEPARTMENT OF TRANSPORTATION
Caltrans

THIS PLAN IS ACCURATE FOR ELECTRICAL WORK ONLY.

FOR REDUCED PLANS ORIGINAL SCALE IS IN MILLIMETERS 0 20 40 60 80

DGN FILE =>I:\13103\MS\pse\SAS Struc\CCO\SAS CC061\Draft 9 - 2013.01.16_Issued for Submittal\04-0120f1_0293R05.dgn
USERNAME =>GarciaR

CU 04251 | EA 0120F1

LAST REVISION 12-21-11 | DATE PLOTTED =>1/17/2013 | TIME PLOTTED => 3:05:14 PM

REQUEST FOR INFORMATION NOT ADDRESSED IN THIS CCO REMAIN IN FORCE					
0	08/03/09	ELECTRICAL WARNING SYSTEMS	RY RR	RG FW	61
MARK	DATE	DESCRIPTIONS	BY	CH'D	CCO#
		REVISIONS			

CONTRACT CHANGE ORDER NO. 61
SHEET 32 OF 104

DIST	COUNTY	ROUTE	KILOMETER POST TOTAL PROJECT	SHEET No	TOTAL SHEETS
04	SF	80	13.2/13.9	293 S1	1204

REGISTERED ELECTRICAL ENGINEER — 10/01/08 DATE

REGISTERED PROFESSIONAL ENGINEER — FADI WALIEDDINE No. 11465 Exp. 12/31/2009 ELECTRICAL — STATE OF CALIFORNIA

PLANS APPROVAL DATE

PB AMERICAS, Inc.
A Parsons Brinckerhoff Company
303 Second St., Suite 700N
San Francisco, CA 94107-1317

The State of California or its officers or agents shall not be responsible for the accuracy or completeness of electronic copies of this plan sheet.

Caltrans now has a web site! To get to the web site, go to http://www.dot.ca.gov

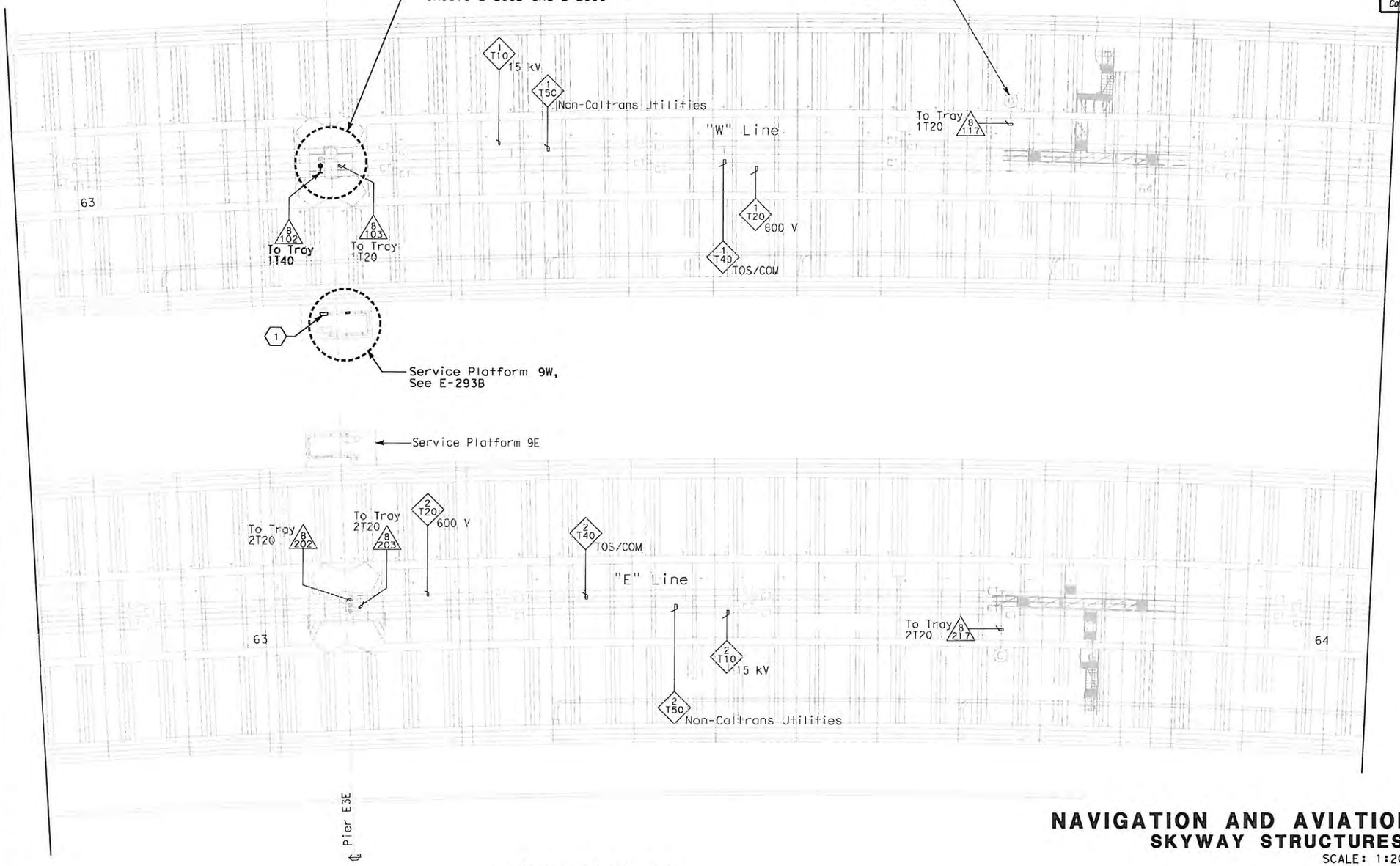

SHEET NOTES:

(1) Contractor to provide and install Fog Detection Panel FDP-7. For exact location, see Service Platform #9W Sheet E-293B.

(2) Contractor to provide and install Fog Detector FD-7 and Fog Bell FB-7. See Pier E3W Footing Plan Sheet E-293C.

NOTE:

1. Unless noted with sheet notes (1)(2), everything shown is furnished and installed under Skyway Contract.

NAVIGATION AND AVIATION WARNING SYSTEMS
SKYWAY STRUCTURES GIRDER PLANS

SCALE: 1:200

CONDUIT PLAN

THIS PLAN ACCURATE FOR ELECTRICAL WORK ONLY.

ALL DIMENSIONS ARE IN MILLIMETERS UNLESS OTHERWISE SHOWN

E-293A

STATE OF CALIFORNIA - DEPARTMENT OF TRANSPORTATION — Caltrans

DESIGN OVERSIGHT — BEHZAD GOLEMOHAMMADI

CALCULATED/ DESIGNED BY | CHECKED BY

DATE | REVISED BY | DATE REVISED

FOR REDUCED PLANS ORIGINAL SCALE IS IN MILLIMETERS 0 20 40 60 80

DGN FILE =>T:\13103\WS\pse\SAS Struc\CCO\SAS CCO61\2009-08-03_Issued for Submittal\04-0120F1_0293S01.dgn
USERNAME =>llorico

CU 04251 | EA 0120F1

LAST REVISION 00-00-00 | DATE PLOTTED => 8/5/2009 | TIME PLOTTED => 9:01:41 AM

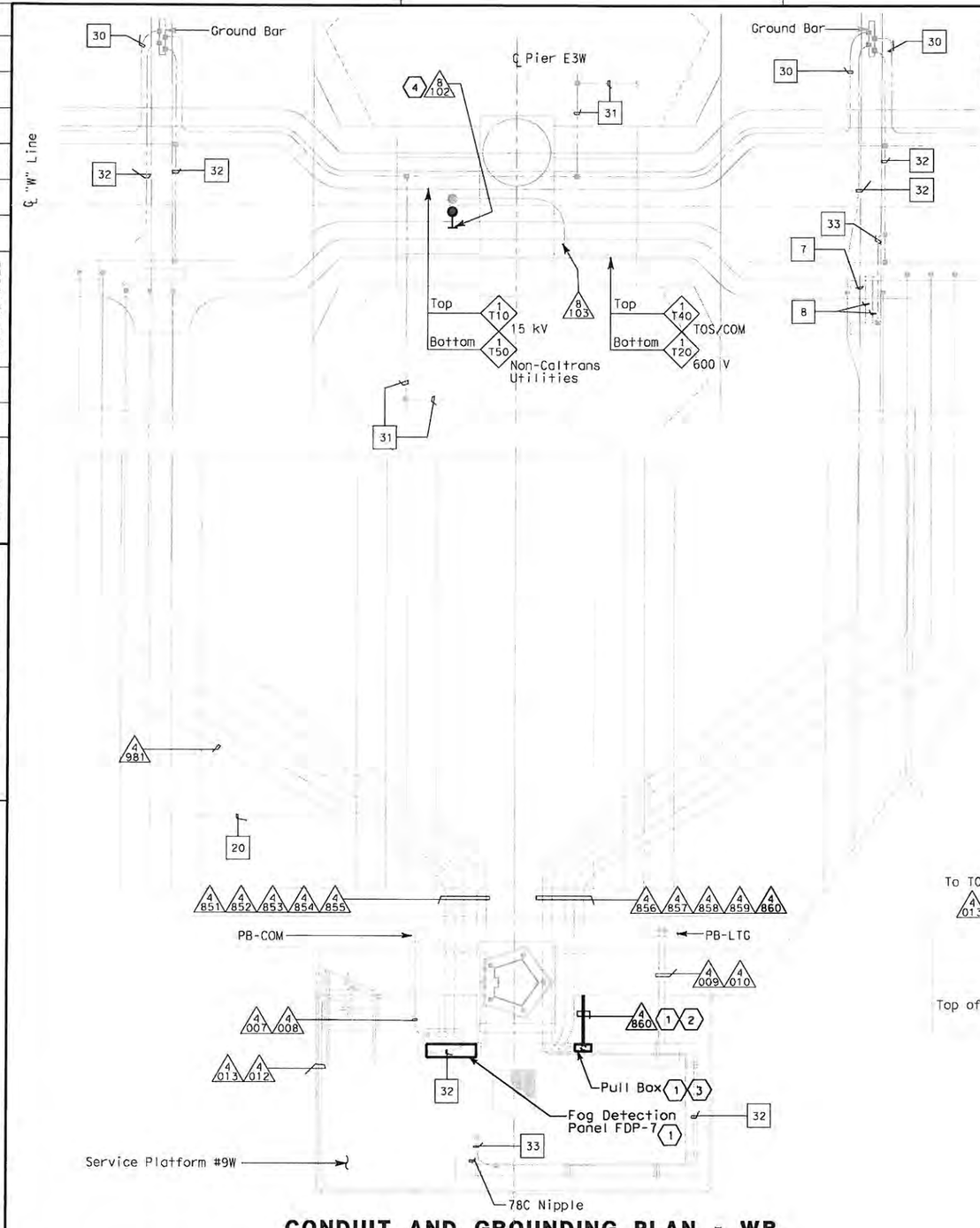

CONDUIT AND GROUNDING PLAN - WB
SCALE: 1:40

THIS PLAN ACCURATE FOR ELECTRICAL WORK ONLY.

REQUEST FOR INFORMATION NOT ADDRESSED IN THIS CCO REMAIN IN FORCE					
MARK	DATE	REVISIONS	BY	CH'D	CCO#
0	08/03/09	ELECTRICAL WARNING SYSTEMS	RG	FW	61

Caltrans Metric

CONTRACT CHANGE ORDER NO. 61
SHEET 33 OF 104

DIST	COUNTY	ROUTE	KILOMETER POST TOTAL PROJECT	SHEET NO	TOTAL SHEETS
04	SF	80	13.2/13.9	293 S2	1204

REGISTERED ELECTRICAL ENGINEER — 10/01/08 DATE

PLANS APPROVAL DATE

REGISTERED PROFESSIONAL ENGINEER — FADI WALIEDDINE No. 11465 Exp. 12/31/2009 ELECTRICAL — STATE OF CALIFORNIA

PB AMERICAS, Inc.
A Parsons Brinckerhoff Company
303 Second St., Suite 700N
San Francisco, CA 94107-1317

The State of California or its officers or agents shall not be responsible for the accuracy or completeness of electronic copies of this plan sheet.

Caltrans now has a web site! To get to the web site, go to http://www.dot.ca.gov

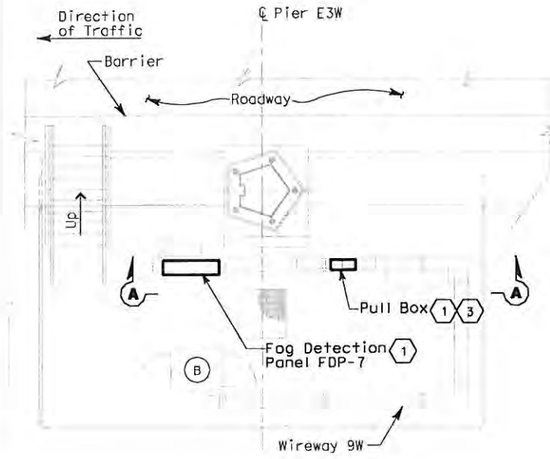

SHEET NOTES:

1. Furnished and installed per SAS Contract.
2. Existing conduit 4/860 shall be extended to the new pull box. Conduit shall be 78C liquidtight flexible metal conduit.
3. Locate to suit field condition.
4. Contractor to disconnect existing conduit #3102 from cable tray #1T20 and extend and reconnect to cable tray #1T40.

NOTES:

1. For general notes, see sheet E-294A.
2. Unless noted with sheet notes 1 2 3, everything shown is furnished and installed under Skyway Contract.
3. All outdoor conduit connections shall be watertighted with PVC coated conduit fittings.

SERVICE PLATFORM #9W EQUIPMENT ARRANGEMENT PLAN
SCALE: 1:40

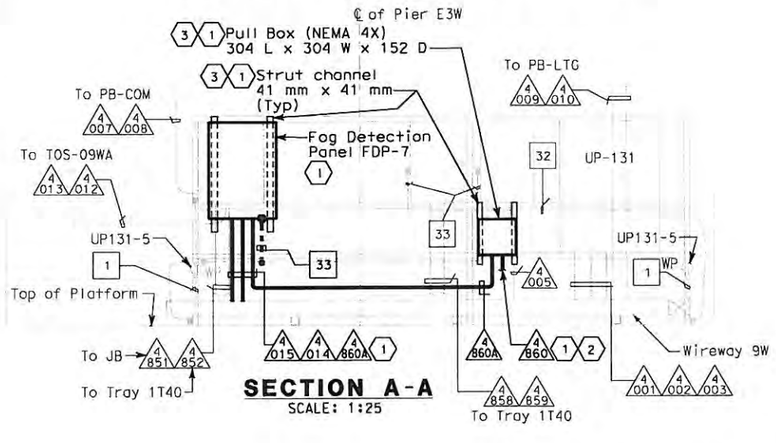

SECTION A-A
SCALE: 1:25

NAVIGATION AND AVIATION WARNING SYSTEMS
SKYWAY STRUCTURES SERVICE PLATFORM #9W
SCALE AS NOTED

E-293B

ALL DIMENSIONS ARE IN MILLIMETERS UNLESS OTHERWISE SHOWN

FOR REDUCED PLANS ORIGINAL SCALE IS IN MILLIMETERS 0 20 40 60 80

DGN FILE =>T:\13103\MS\pse\SAS Struc\CCO\SAS CC061\2009-08-03_Issued for Submittal\04-0120F1_0293S02.dgn
USERNAME =>llorico

CU 04251 EA 0120F1

ASF REVISION 00-00-00 DATE PLOTTED => 8/5/2009 TIME PLOTTED => 9:01:25 AM

STATE OF CALIFORNIA - DEPARTMENT OF TRANSPORTATION
Caltrans

DESIGN OVERSIGHT BEHZAD GOLEMOHAMMADI

CALCULATED/ DESIGNED BY | CHECKED BY

DATE | REVISED BY | DATE REVISED

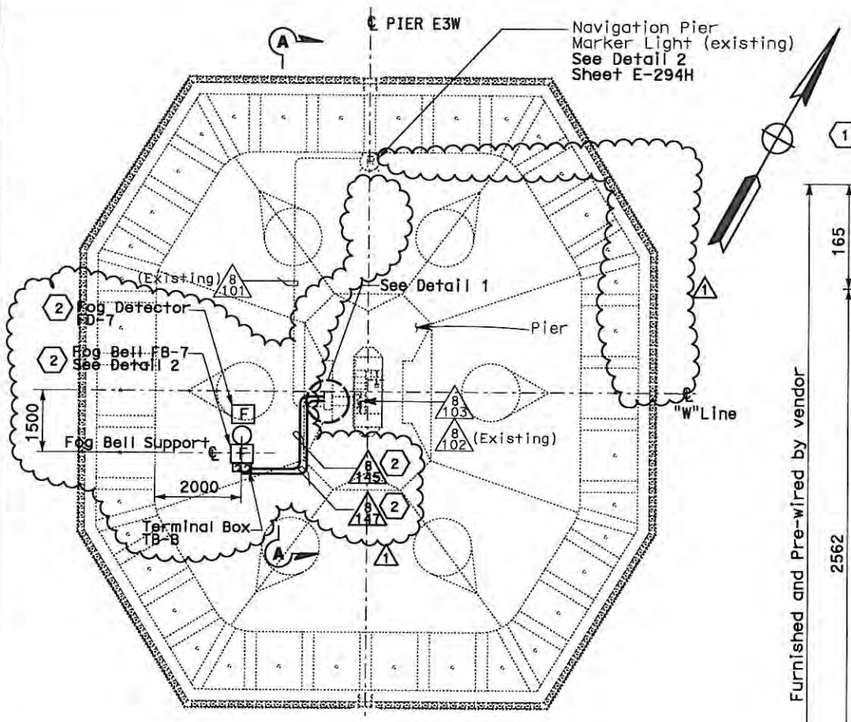

CONDUIT PLAN

PIER E3W FOOTING

NO SCALE

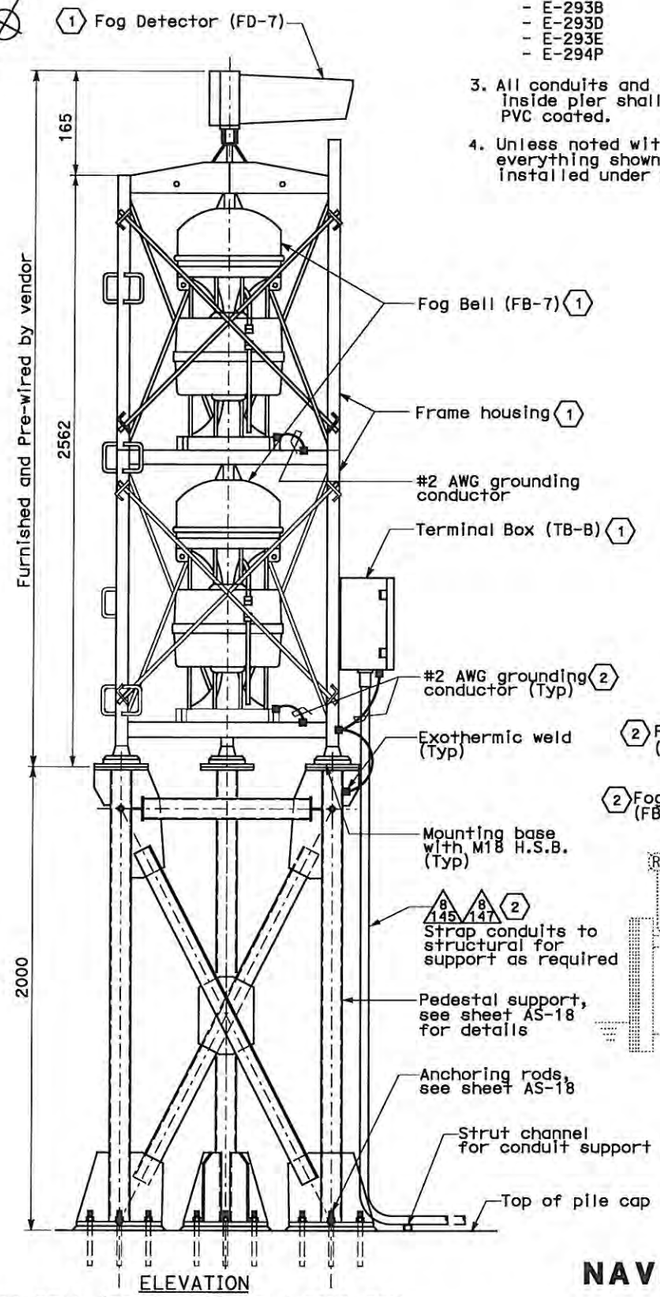

ELEVATION

FOG BELL (FB-7) SUPPORT @ PIER E3W

DETAIL 2

NO SCALE

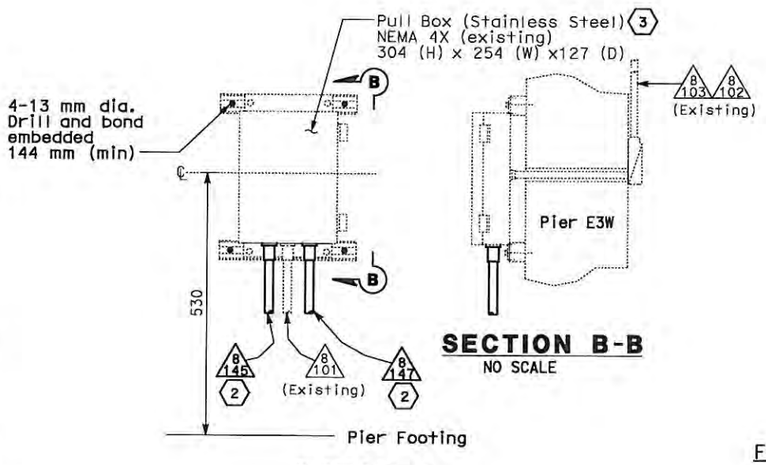

SECTION B-B

NO SCALE

DETAIL 1

NO SCALE

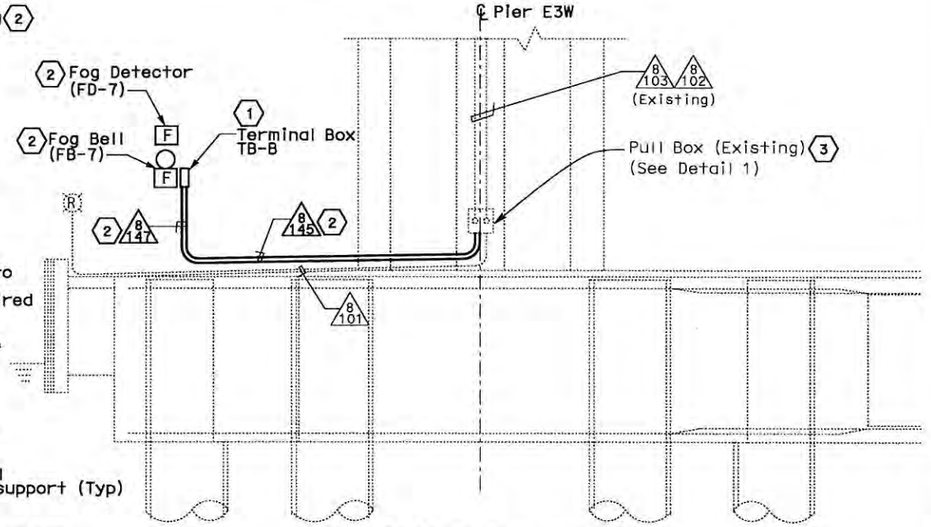

SECTION A-A

NO SCALE

NOTES:

1. For other related work shown on this drawing, see Electrical Special Provisions.
2. References:
   - E-293A
   - E-293B
   - E-293D
   - E-293E
   - E-294P
3. All conduits and fittings located outside or inside pier shall be rigid galvanized steel, PVC coated.
4. Unless noted with sheet notes 1 2, everything shown is furnished and installed under Skyway Contract.

SHEET NOTES:

1. Fog Detector, Bells, Terminal Box (TB-B) and frame housing are furnished and assembled by Vendor with the Detector and Bells pre-wired to TB-B. Actual mounting orientation of the equipment shall be per the vendor recommendation.
2. Furnished and Installed per SAS contract.
3. Furnished and Installed a separation barrier between the low level cable and lighting power cables inside pull box.

REQUEST FOR INFORMATION NOT ADDRESSED IN THIS CCO REMAIN IN FORCE					
1	05/02/12	ELECTRICAL WARNING SYSTEMS	RR	RG	61
0	08/03/09	ELECTRICAL WARNING SYSTEMS	RG	FW	61
MARK	DATE	DESCRIPTIONS	BY	CH'D	CCO#
		REVISIONS			

FOR REVISION ONLY 1

CONTRACT CHANGE ORDER NO. 61

SHEET 34 OF 104

DIST	COUNTY	ROUTE	KILOMETER POST TOTAL PROJECT	SHEET No	TOTAL SHEETS
04	SF	80	13.2/13.9	293 S3R1	1204

10/01/08

REGISTERED ELECTRICAL ENGINEER DATE

REGISTERED PROFESSIONAL ENGINEER — FADI WALIEDDINE — No. 11465 — Exp. 12/31/2009 ELECTRICAL — STATE OF CALIFORNIA

PLANS APPROVAL DATE

PB AMERICAS, Inc.
A Parsons Brinckerhoff Company
303 Second St., Suite 700N
San Francisco, CA 94107-1317

The State of California or its officers or agents shall not be responsible for the accuracy or completeness of electronic copies of this plan sheet.

Caltrans now has a web site! To get to the web site, go to http://www.dot.ca.gov

REGISTERED PROFESSIONAL ENGINEER — DAVID H. OTO — No. 10589 — Exp. 06/30/2013 ELECTRICAL — STATE OF CALIFORNIA

NAVIGATION AND AVIATION WARNING SYSTEMS
SKYWAY STRUCTURES SERVICE PIER E3

SCALE AS NOTED

ALL DIMENSIONS ARE IN MILLIMETERS UNLESS OTHERWISE SHOWN

THIS PLAN ACCURATE FOR ELECTRICAL WORK ONLY.

E-293C

STATE OF CALIFORNIA - DEPARTMENT OF TRANSPORTATION	DESIGN OVERSIGHT	CALCULATED/ DESIGNED BY	CHECKED BY	DATE	REVISED BY	DATE REVISED
Caltrans	BEHZAD GOLEMOHAMMADI					

LAST REVISION 00-00-00 — DATE PLOTTED => 04-MAY-2012 TIME PLOTTED => 13:50

FOR REDUCED PLANS ORIGINAL SCALE IS IN MILLIMETERS 0 20 40 60 80

DGN FILE =>04-0120f1_0293S03R1.dgn
USERNAME =>florico

CU 04251 | EA 0120F1

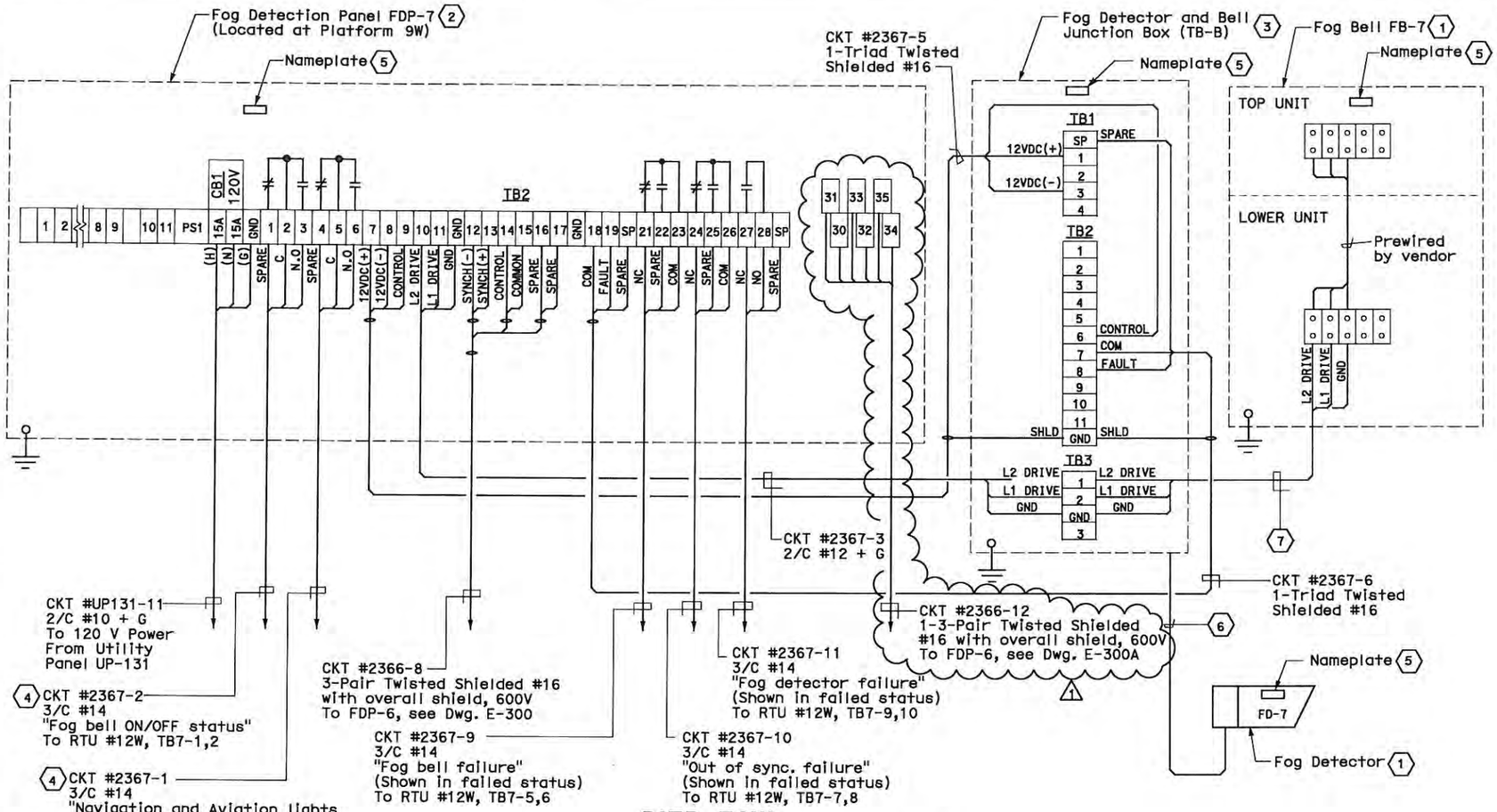

DIST	COUNTY	ROUTE	KILOMETER POST TOTAL PROJECT	SHEET No	TOTAL SHEETS
04	SF	80	13.2/13.9	293 S4R1	1204

10/01/08
REGISTERED ELECTRICAL ENGINEER DATE

REGISTERED PROFESSIONAL ENGINEER
FADI WALTEDDINE
No. 11465
Exp. 12/31/2009
ELECTRICAL
STATE OF CALIFORNIA

PLANS APPROVAL DATE

PB AMERICAS, Inc.
A Parsons Brinckerhoff Company
303 Second St., Suite 700N
San Francisco, CA 94107-1317

The State of California or its officers or agents shall not be responsible for the accuracy or completeness of electronic copies of this plan sheet.

Caltrans now has a web site! To get to the web site, go to http://www.dot.ca.gov

SHEET NOTES:

1. Fog Detector FD-7 and Fog Bell FB-7 shall be installed at the base of Pier E3W.
2. Fog Detection Panel FDP-7 shall be installed at the Service Platform #9W. Enclosure shall be NEMA 4X.
3. Junction box TB-B shall be NEMA 4X enclosure.
4. See Fog detection SCADA wiring diagram RTU #12W drawing E-293E for details.
5. Refer to Nameplate Schedule on this Dwg.
6. Cable (10/C #16 AWG S.O.) between Fog Detector and TB-B is furnished and installed by Vendor.
7. Cable (3/C #12 AWG) between TB-B and Fog Bell is furnished and installed by Vendor.

NOTES:

1. All spare conductors shall be coiled and taped at conductor ends unless terminated.
2. References:
   - For panel UP-131 schedule, see sheet E-293F.
   - For circuit and conduit/cable tray schedule, see sheet E-293G.

PIER E3W
FOG BELL AND FOG DETECTION SYSTEM

FOG SIGNAL SYNCHRONIZATION

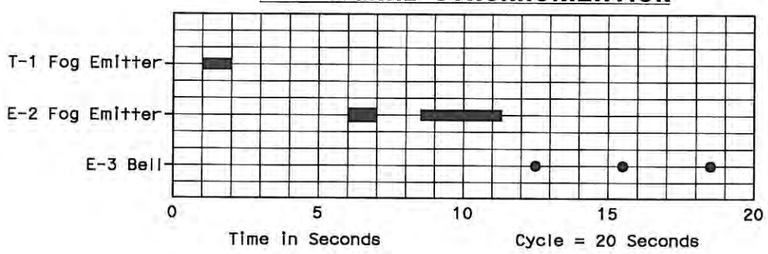

T-1: 1 second * ON, every 20 seconds
E-2: 1 second ON, 1.5 seconds OFF, 3 seconds ** ON, 14.5 seconds OFF
E-3: bell shall sound one stroke at second 12.5 and 15.5 and 18.5 in a 20

* A short blast is 1 second in duration
** A long blast is 3 seconds in duration

NAMEPLATE SCHEDULE			
ITEM	QTY	LINE No 1	LINE No 2
1	1	FOG DETECTION	PANEL FDP-7
2	1	FOG DETECTION	FOG DETECTOR FD-7
3	1	FOG DETECTION	FOG BELL FB-7

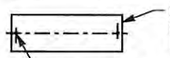

NOTE:
Nameplates shall be mounted to the enclosure door with 4-40 stainless steel machine screws. The enclosure door to be drilled and tapped. (no self-tapping screws)

REGISTERED PROFESSIONAL ENGINEER
DAVID H. OTO
No. 10699
Exp. 06/30/2013
ELECTRICAL
STATE OF CALIFORNIA

FOR REVISION ONLY

REQUEST FOR INFORMATION NOT ADDRESSED IN THIS CCO REMAIN IN FORCE					
1	05/02/12	ELECTRICAL WARNING SYSTEMS	RR	RG	61
0	08/03/09	ELECTRICAL WARNING SYSTEMS	RG	FW JE	61
MARK	DATE	DESCRIPTIONS	BY	CH'D	CCO#
		REVISIONS			

CONTRACT CHANGE ORDER NO. 61
SHEET 35 OF 104

DETAILS
NAVIGATION AND AVIATION WARNING SYSTEMS
SKYWAY STRUCTURES CONNECTION DIAGRAMS
NO SCALE

E-293D

DESIGN OVERSIGHT: BEHZAD GOLEMOHAMMADI
CALCULATED/DESIGNED BY
CHECKED BY
DATE REVISED BY
DATE
STATE OF CALIFORNIA - DEPARTMENT OF TRANSPORTATION
Caltrans

THIS PLAN ACCURATE FOR ELECTRICAL WORK ONLY.

FOR REDUCED PLANS ORIGINAL SCALE IS IN MILLIMETERS 0 20 40 60 80

DGN FILE =>04-0120f1_0293S04R1.dgn
USERNAME =>florico

CU 04251 | EA 0120F1

LAST REVISION 00-00-00
DATE PLOTTED => 04-MAY-2012
TIME PLOTTED => 13:50

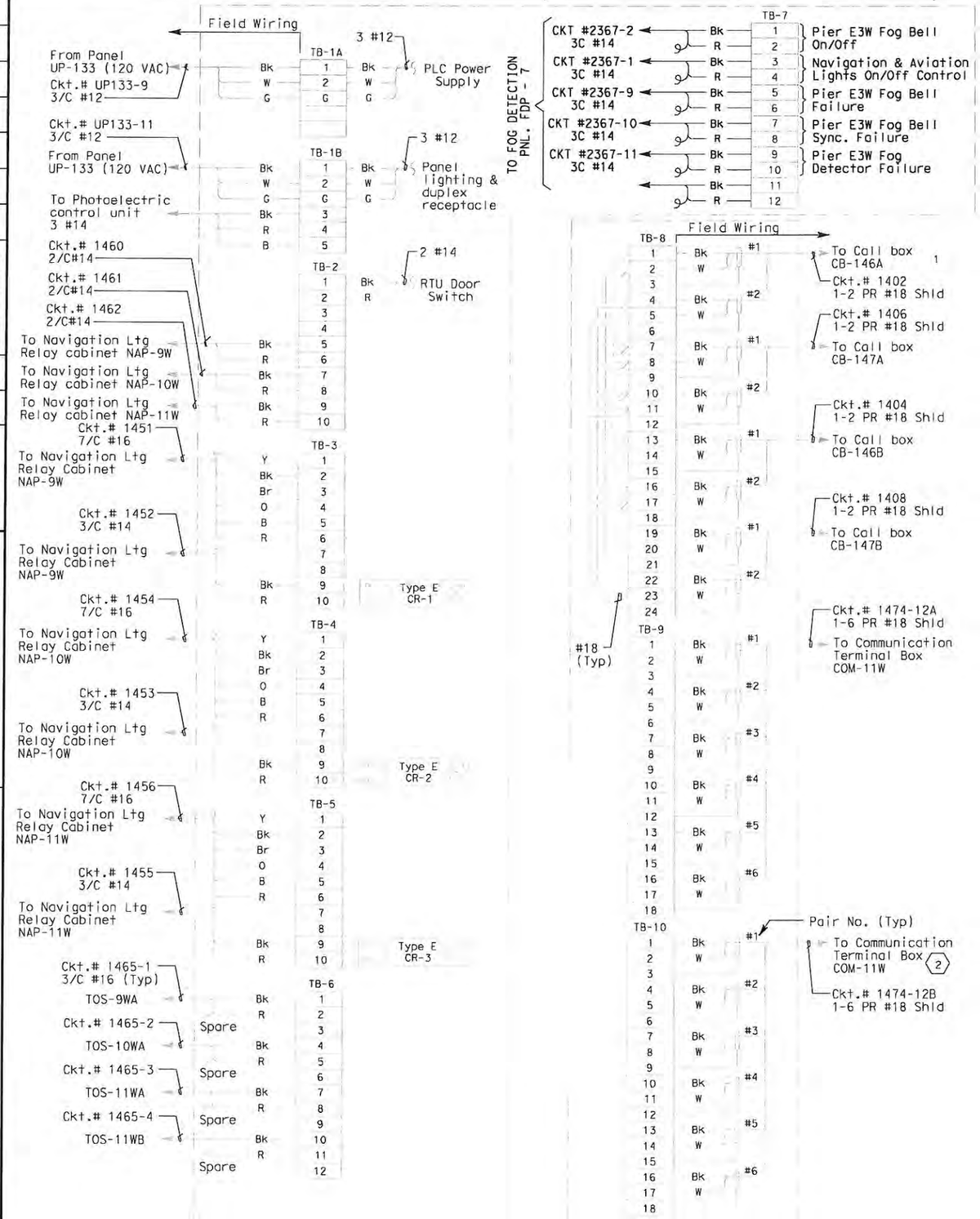

CONNECTION DIAGRAM - RTU #12W

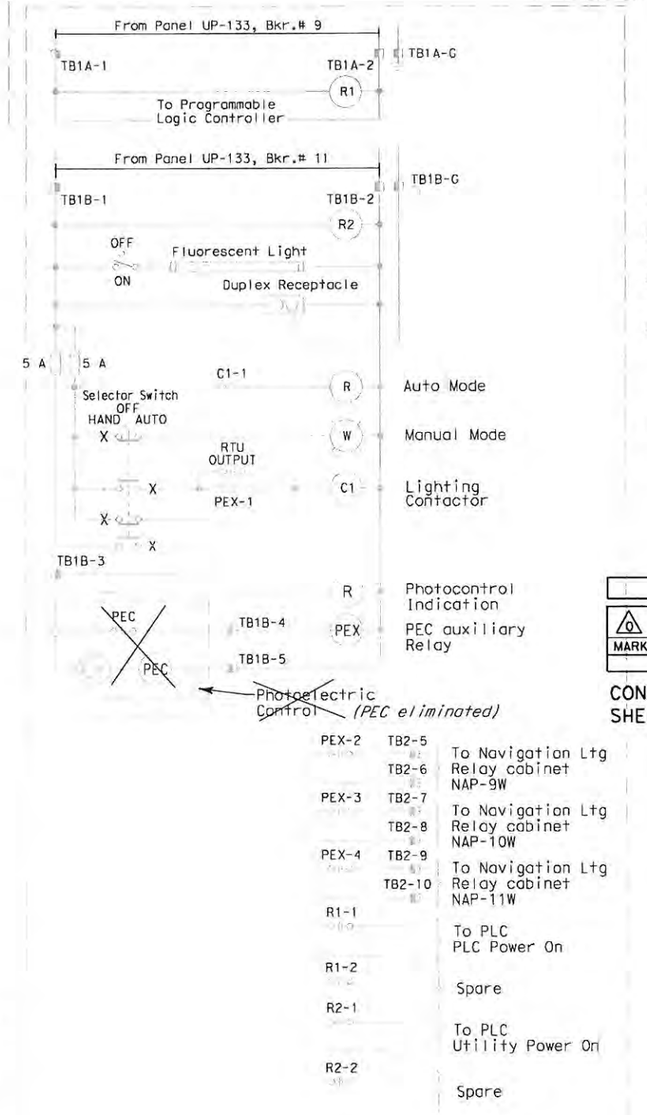

ELEMENTARY DIAGRAM - RTU #12W

DIST	COUNTY	ROUTE	KILOMETER POST TOTAL PROJECT	SHEET No	TOTAL SHEETS
04	SF	80	13.2/13.9	293 S5	1204

REGISTERED ELECTRICAL ENGINEER — 10/01/08 DATE

REGISTERED PROFESSIONAL ENGINEER — FADI WALIEDDINE No. 11465 Exp.12/31/2009 ELECTRICAL — STATE OF CALIFORNIA

PLANS APPROVAL DATE

PB AMERICAS, Inc.
A Parsons Brinckerhoff Company
303 Second St., Suite 700N
San Francisco, CA 94107-1317

The State of California or its officers or agents shall not be responsible for the accuracy or completeness of electronic copies of this plan sheet.

Caltrans now has a web site! To get to the web site, go to http://www.dot.ca.gov

SHEET NOTES:

1. For location of Fog Detection Panel, see Platform #9W, Sheet E-293B.
2. For connection to Fog Detection Panel see Dwg. No. E-293D.
3. Contractor to verify wiring and provide necessary internal connections as required for the additional I/O signal.

NOTES:

1. Unless noted with sheet notes (1)(2)(3), everything shown is furnished and installed under Skyway contract.

REQUEST FOR INFORMATION NOT ADDRESSED IN THIS CCO REMAIN IN FORCE

MARK	DATE	REVISIONS	BY	CH'D	CCO#
0	08/03/09	ELECTRICAL WARNING SYSTEMS	RG	JE FW	61

CONTRACT CHANGE ORDER NO. 61
SHEET 36 OF 104

DETAILS

NAVIGATION AND AVIATION WARNING SYSTEMS SKYWAY STRUCTURES RTU #12W ELEMENTARY AND CONNECTION DIAGRAMS

NO SCALE

E-293E

STATE OF CALIFORNIA - DEPARTMENT OF TRANSPORTATION — Caltrans
DESIGN OVERSIGHT — BEHZAD GOLEMOHAMMADI
CALCULATED/ DESIGNED BY — CHECKED BY
DATE — REVISED BY — DATE REVISED

LAST REVISION 00-00-00 — DATE PLOTTED => 8/5/2009 TIME PLOTTED => 9:05:37 AM

FOR REDUCED PLANS ORIGINAL SCALE IS IN MILLIMETERS 0 20 40 60 80

DGN FILE =>T:\13103\MS\pse\SAS Struc\CCO\SAS CC061\2009-08-03_Issued for Submittal\04-0120F1_0293S05.dgn
USERNAME =>llorico
CU 04251 | EA 0120F1

UTILITY PANEL UP-131 (Ckt.# 1321) (1)

Location: SKYWAY SERVICE PLATFORM #9W

LOAD DESCRIPTION	LTG	REC	OTH.	CB				CB	LTG	REC	OTH.	LOAD DESCRIPTION
RECEPT (4) Westbound North Barrier		720		20 1	1	A	2	20 1		180		RECEPT (1) Pier E3W Top of footing
RECEPT (4) Westbound South Barrier		720		20 1	3	B	4	20 1				Spare
RECEPT (2) Service Platform #9W		360		20 1	5	C	6	20 1	779			Pier E3W Ltg (1)
RECEPT (4) Girder		720		20 1	7	A	8	20 1	1435			Girder Ltg (35) (2)
NAP - 9W			600	20 1	9	B	10	20 1			2000	Controller Cabinet #TOS-09WA
Fog Detection Panel FDP-7 (2)(3)			1920	20 1	11	C	12	20 1				Spare
TOTAL VA	-	2520	2520						2214	180	2000	TOTAL VA

LOAD SUMMARY IN VA (INCLUDES .90 PF)

Lighting (At 100%): 2,214 VA
Gen Use (1st 10 kVA at 100% Plus 50% of remainder): 7.220 VA (2)

TOTAL kVA: 9.324 kVA
TOTAL A: 25.90 A at 208 V, 3ø (2)

BALANCE (kVA)

Phase A - 3.055
Phase B - 3.320
Phase C - 3.059 (2)

VOLTAGE: 208/120 V
PHASE/WIRES: 3 PH,4 W
BUS RATING: 100 A
MAIN: 60 A
MOUNTING: Surface in Fiberglass Enclosure
K.A.I.C.: 10

SHEET NOTES:

(1) Utility Panels are existing in Skyway Structures Service Platforms. Contractor to verify As-Built conditions.

(2) Contractor shall verify if existing circuit breaker is in good working condition. Replace as required.

(3) Connections to UP-131 breaker #11 are per SAS Contract only.

NOTE:

1. Unless noted with sheet notes (2)(3), everything shown is furnished and installed under Skyway Contract

DIST	COUNTY	ROUTE	KILOMETER POST TOTAL PROJECT	SHEET No	TOTAL SHEETS
04	SF	80	13.2/13.9	293 S6	1204

10/01/08
REGISTERED ELECTRICAL ENGINEER DATE

REGISTERED PROFESSIONAL ENGINEER
FADI WALIEDDINE
No. 11465
Exp. 12/31/2009
ELECTRICAL
STATE OF CALIFORNIA

PLANS APPROVAL DATE

PB AMERICAS, Inc.
A Parsons Brinckerhoff Company
303 Second St., Suite 700N
San Francisco, CA 94107-1317

The State of California or its officers or agents shall not be responsible for the accuracy or completeness of electronic copies of this plan sheet.

Caltrans now has a web site! To get to the web site, go to http://www.dot.ca.gov

REQUEST FOR INFORMATION NOT ADDRESSED IN THIS CCO REMAIN IN FORCE

MARK	DATE	DESCRIPTIONS	BY	CH'D	CCO#
		REVISIONS			
0	08/03/09	ELECTRICAL WARNING SYSTEMS	RY RR	RG FW	61

CONTRACT CHANGE ORDER NO. 61
SHEET 37 OF 104

DETAILS
NAVIGATION AND AVIATION WARNING SYSTEMS
SKYWAY STRUCTURES PANEL BOARD SCHEDULE

NO SCALE

E-293F

DESIGN OVERSIGHT: BEHZAD GOLEMOHAMMADI
CALCULATED/DESIGNED BY
CHECKED BY
DATE REVISED BY
DATE REVISED

STATE OF CALIFORNIA - DEPARTMENT OF TRANSPORTATION
Caltrans

LAST REVISION 00-00-00
DATE PLOTTED => 2/17/2011
TIME PLOTTED => 4:35:34 PM

FOR REDUCED PLANS ORIGINAL SCALE IS IN MILLIMETERS 0 20 40 60 80

DGN FILE =>T:\13103\WS\pse\SAS Struc\CCO\SAS CC061\Draft 6 - 2011.01.07_Issued for Submittal\04-0120f1_0293S06.dgn
USERNAME =>florico

CU 04251 EA 0120F1

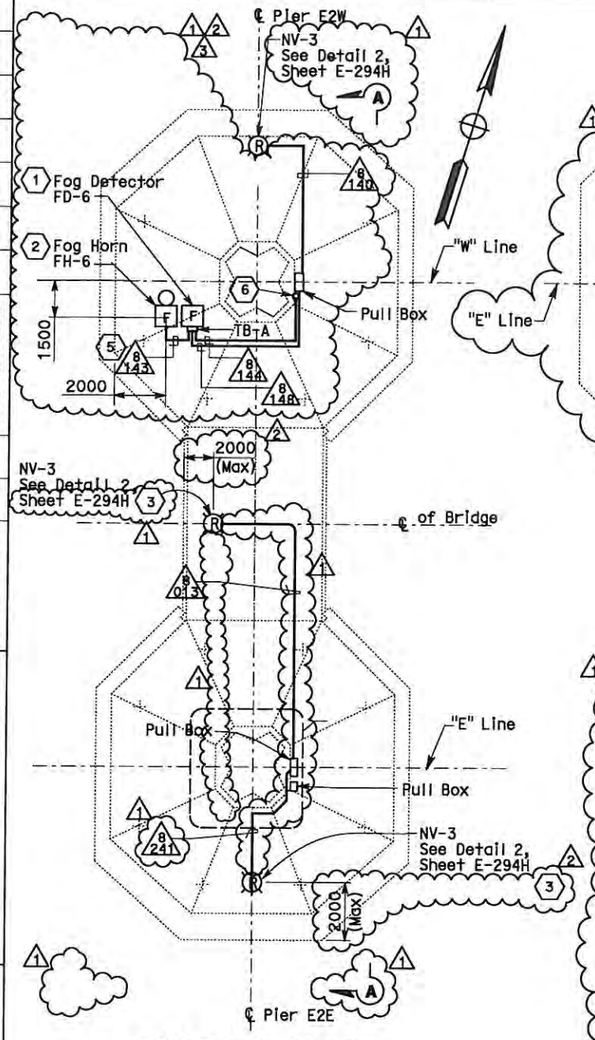

FOOTING PLAN
SCALE 1:250

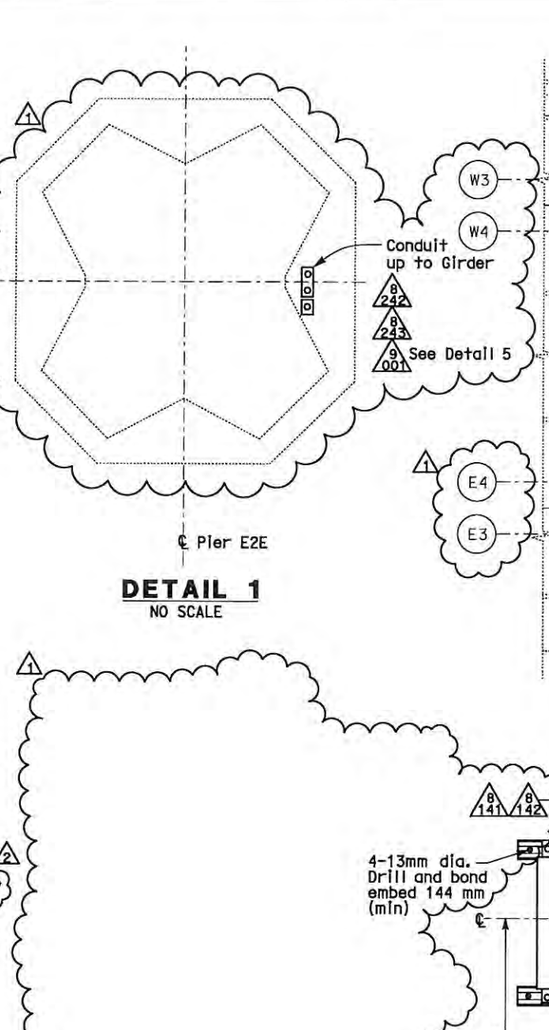

DETAIL 1
NO SCALE

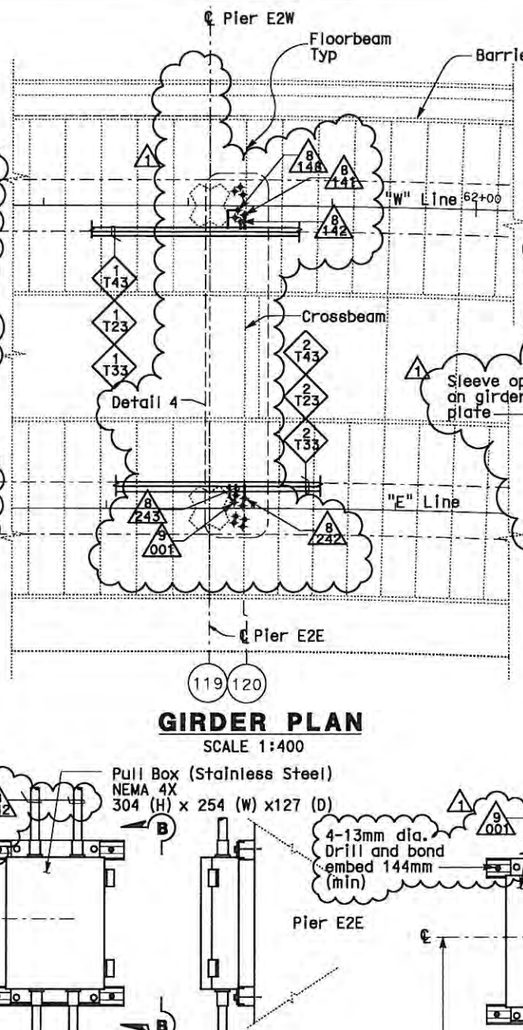

GIRDER PLAN
SCALE 1:400

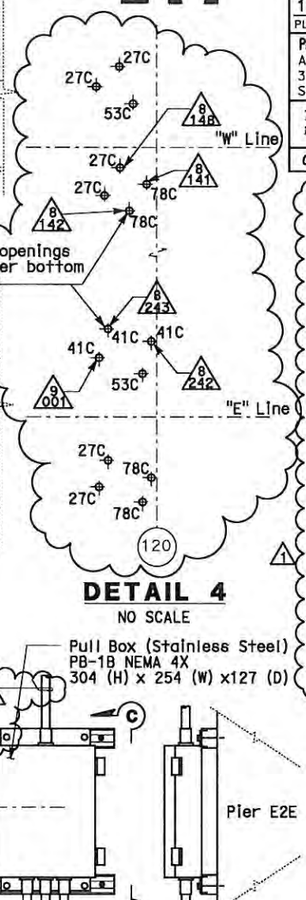

DETAIL 4
NO SCALE

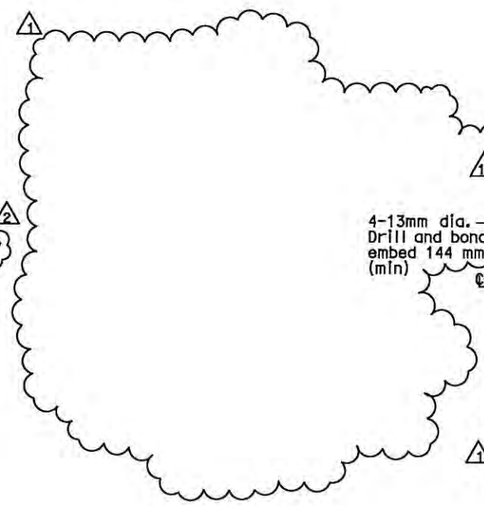

SECTION B-B
NO SCALE

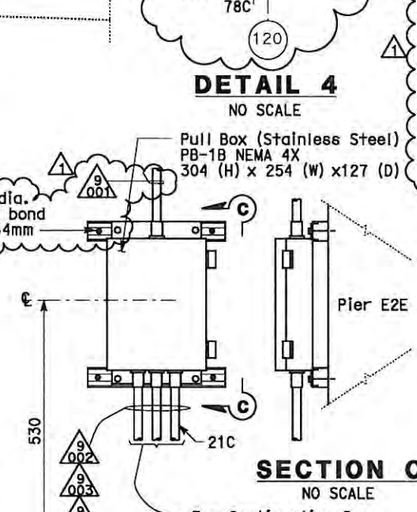

SECTION C-C
NO SCALE

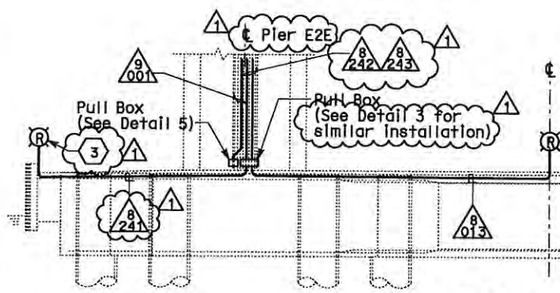

SECTION A-A
SCALE 1:200

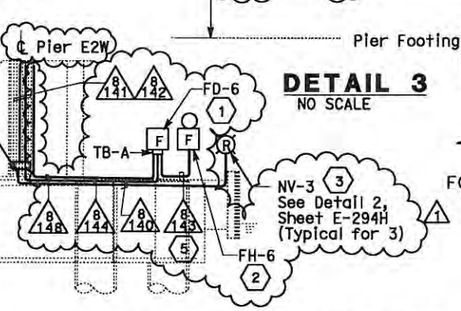

PIER 2 CONDUIT PLAN

DETAIL 3
NO SCALE

DETAIL 5
NO SCALE

SHEET NOTES:

1. Fog detector, see Detail 2, sheet E-293.
2. One mile fog horn, see Detail 3, sheet E-293.
3. Red axis lights shall be attached to the channel-ward face of pier. Each light shall show through a horizontal arc of 180 degrees and shall be mounted on the navigational pier as low as practicable but not lower than two feet above navigable high water, to show 90 degrees either side of a line parallel to the axis of the bridge.
4. Conduit penetration for Fog Detection and Navigation Systems.
5. Conduit #8143 shall be installed to accommodate the termination of cable (ckt #2366-4) based on maximum cable length of 9000 mm.
6. Conduit up to cable tray #1T43 inside the girder. Use conduit elbow fitting for pulling cable as required.

NOTES:

1. References:
   - For SAS Superstructure and tower plan and elevation, see sheet E-291.
   - For SAS Superstructure girder plan, see sheet E-292.
   - For navigation and aviation lighting fixture schedule, see sheet E-297.
   - For circuit and conduit/cable tray schedules, see sheets starting at E-401.
2. For other related work not shown on this sheet, see Electrical Special Provisions.

FOR REVISION ONLY

FOR REVISION ONLY

REQUEST FOR INFORMATION NOT ADDRESSED IN THIS CCO REMAIN IN FORCE					
3	05/02/12	ELECTRICAL WARNING SYSTEMS	RR	RG	61
2	01/07/11	ELECTRICAL WARNING SYSTEMS	TW	RG	61
1	08/03/09	ELECTRICAL WARNING SYSTEMS	RY RR	RG FW	61
MARK	DATE	DESCRIPTIONS REVISIONS	BY	CH'D	CCO#

CONTRACT CHANGE ORDER NO. 61
SHEET 38 OF 104

NAVIGATION AND AVIATION WARNING SYSTEMS
PIER 2 GIRDER AND FOOTING PLANS
SCALE AS NOTED

E-294

THIS PLAN IS ACCURATE FOR ELECTRICAL WORK ONLY.

ALL DIMENSIONS ARE IN MILLIMETERS UNLESS OTHERWISE SHOWN.

DIST	COUNTY	ROUTE	KILOMETER POST TOTAL PROJECT	SHEET No	TOTAL SHEETS
04	SF	80	13.2/13.9	294 R3	1204

REGISTERED ELECTRICAL ENGINEER — 12/19/02 DATE

12-6-04
PLANS APPROVAL DATE

REGISTERED PROFESSIONAL ENGINEER — JENS ERLINGSSON No. 8249 Exp. 9/30/06 ELECTRICAL — STATE OF CALIFORNIA

PB POWER, Inc.
A Parsons Brinckerhoff Company
303 Second St., Suite 700N
San Francisco, CA 94107-1317

The State of California or its officers or agents shall not be responsible for the accuracy or completeness of electronic copies of this plan sheet.

Caltrans now has a web site! To get to the web site, go to http://www.dot.ca.gov

REGISTERED PROFESSIONAL ENGINEER — FADI WALIEDDINE No. 11465 Exp. 12/31/2009 ELECTRICAL — STATE OF CALIFORNIA

REGISTERED PROFESSIONAL ENGINEER — DAVID H. OTO No. 10699 Exp. 05/30/2013 ELECTRICAL — STATE OF CALIFORNIA

DESIGN OVERSIGHT — BEHZAD GOLEMOHAMMADI
CALCULATED/DESIGNED BY
CHECKED BY
DATE REVISED BY
DATE REVISED

STATE OF CALIFORNIA - DEPARTMENT OF TRANSPORTATION
Caltrans

DATE PLOTTED => 04-MAY-2012
TIME PLOTTED => 13:50
LAST REVISION 00-00-00

FOR REDUCED PLANS ORIGINAL SCALE IS IN MILLIMETERS 0 20 40 60 80

DGN FILE =>04-0120f1_0294R03.dgn
USERNAME =>llorico

CU 04251

EA 0120F1

DIST	COUNTY	ROUTE	KILOMETER POST TOTAL PROJECT	SHEET No	TOTAL SHEETS
04	SF	80	13.2/13.9	294 S1	1204

REGISTERED ELECTRICAL ENGINEER — 10/01/08 DATE

PLANS APPROVAL DATE

REGISTERED PROFESSIONAL ENGINEER — FADI WALIEDDINE No. 11465 Exp. 12/31/2009 ELECTRICAL — STATE OF CALIFORNIA

PB AMERICAS, Inc.
A Parsons Brinckerhoff Company
303 Second St., Suite 700N
San Francisco, CA 94107-1317

The State of California or its officers or agents shall not be responsible for the accuracy or completeness of electronic copies of this plan sheet.

Caltrans now has a web site! To get to the web site, go to http://www.dot.ca.gov

Caltrans Metric

REQUEST FOR INFORMATION NOT ADDRESSED IN THIS CCO REMAIN IN FORCE					
MARK	DATE	DESCRIPTIONS	BY	CH'D	CCO#
0	08/03/09	ELECTRICAL WARNING SYSTEMS	MP RR	RG FW	61
		REVISIONS			

CONTRACT CHANGE ORDER NO. 61
SHEET 39 OF 104

DATE	REVISED BY	DATE REVISED

CALCULATED/DESIGNED BY
CHECKED BY

DESIGN OVERSIGHT
BEHZAD GOLEMOHAMMADI

STATE OF CALIFORNIA - DEPARTMENT OF TRANSPORTATION
Caltrans

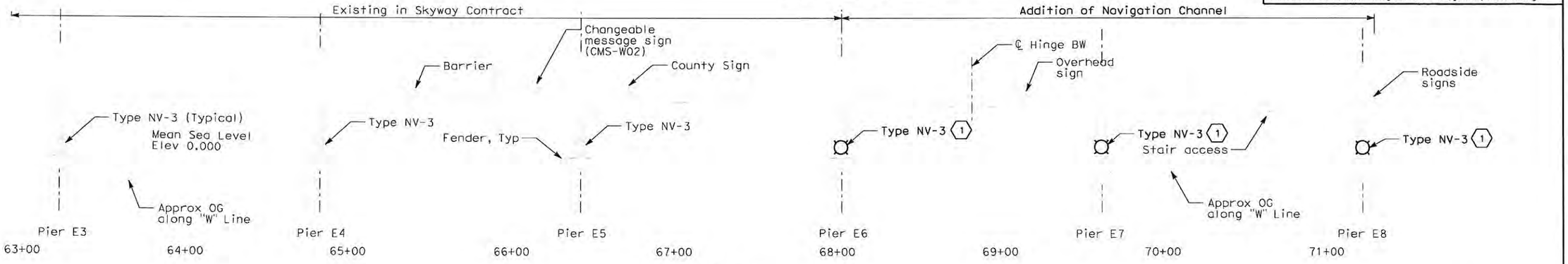

PROFILE

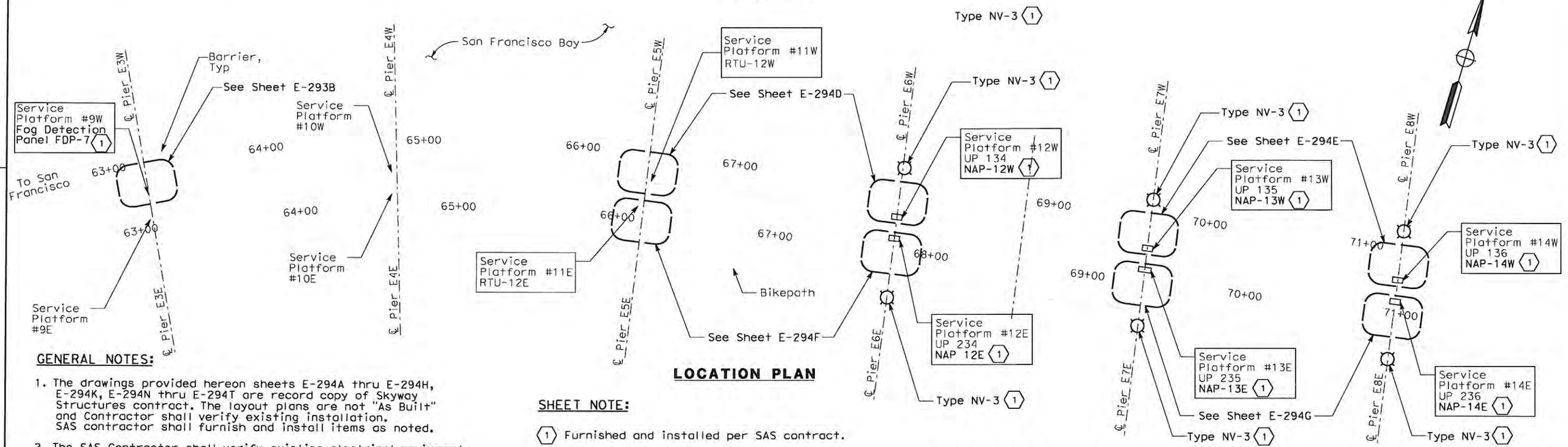

LOCATION PLAN

GENERAL NOTES:

1. The drawings provided hereon sheets E-294A thru E-294H, E-294K, E-294N thru E-294T are record copy of Skyway Structures contract. The layout plans are not "As Built" and Contractor shall verify existing installation. SAS contractor shall furnish and install items as noted.
2. The SAS Contractor shall verify existing electrical equipment or devices to ensure working compatibility with added Navigation Lighting Systems.
3. Unless noted with sheet note (1), everything shown is furnished and installed under Skyway Contract.

SHEET NOTE:

(1) Furnished and installed per SAS contract.

THIS PLAN ACCURATE FOR ELECTRICAL WORK ONLY.

NAVIGATION AND AVIATION WARNING SYSTEMS
SKYWAY STRUCTURES PLAN AND ELEVATIONS

NO SCALE

E-294A

FOR REDUCED PLANS ORIGINAL SCALE IS IN MILLIMETERS 0 20 40 60 80

DGN FILE =>T:\13103\MS\pse\SAS Struc\CCO\SAS CCO61\Draft 6 - 20
USERNAME =>llorico

1.01.07_Issued for Submittal\04-0120F1_0294S01.dgn

CU 04251 | EA 0120F1

LAST REVISION 00-00-00

DATE PLOTTED => 2/17/2011
TIME PLOTTED => 4:33:06 PM

DIST	COUNTY	ROUTE	KILOMETER POST TOTAL PROJECT	SHEET No	TOTAL SHEETS
04	SF	80	13.2/13.9	294 S2	1204

REGISTERED ELECTRICAL ENGINEER — 10/01/08 DATE

REGISTERED PROFESSIONAL ENGINEER — FADI WALIEDDINE No. 11465 Exp. 12/31/2009 ELECTRICAL — STATE OF CALIFORNIA

PLANS APPROVAL DATE

PB AMERICAS, Inc.
A Parsons Brinckerhoff Company
303 Second St., Suite 700N
San Francisco, CA 94107-1317

The State of California or its officers or agents shall not be responsible for the accuracy or completeness of electronic copies of this plan sheet.

Caltrans now has a web site! To get to the web site, go to http://www.dot.ca.gov

Caltrans Metric

DESIGN OVERSIGHT	CALCULATED/ DESIGNED BY	DATE	REVISED BY	DATE REVISED
BEHZAD GOLEMOHAMMADI	CHECKED BY			

STATE OF CALIFORNIA - DEPARTMENT OF TRANSPORTATION — Caltrans

Pier E5W

Service Platform #11W
See Sht E-294D
RTU-12W

Service Platform #11E
See Sht E-294F
RTU-12E

67 — "W" Line — 68

1 T20 600 V

2 T20 600 V

Service Platform #12E
See Sheet E-294F
UP-234
NAP-12E (1)

Service Platform #12W
See Sheet E-294D
UP-134
NAP-12W (1)

6 573 / 6 577 / 6 581 (2)

2 503 / 2 507 / 2 511 (3)

Matchline (See Below)

"E" Line

66 — 67 — 68

Pier E5E — Pier E6E

Bikeway

1 T22A

Pier E6W

Pier E7W — Pier E8W

℄ Hinge BW

69 — "W" Line — 70 — 71

1 T21 600 V

Service Platform #13E
See Sheet E-294G
UP-235
NAP-13E (1)

Service Platform #13W
See Sheet E-294E
UP-135
NAP-13W (1)

(E) Electrical Room West Bound

1 T22 600 V

Service Platform #14W
See Sheet E-294E
UP-136
NAP-14W (1)

Service Platform #14E
See Sheet E-294G
UP-236
NAP-14E (1)

℄ Hinge BE

Matchline (See Above)

"E" Line — "E" Line !

(E) Electrical Room East Bound

69 — 70 — 71

2 T21 600 V

2 T22 600 V

Bikeway

Pier E7E — Pier E8E

SHEET NOTE:

(1) Furnished and installed per SAS contract.

(2) For conduit layout, see Sheet E-294S.

(3) For conduit layout, see Sheet E-294T.

NOTES:

1. For general notes, see Sheet E-294A.
2. Unless noted with sheet note (1), everything shown is furnished and installed under Skyway contract.

REQUEST FOR INFORMATION NOT ADDRESSED IN THIS CCO REMAIN IN FORCE

MARK	DATE	REVISIONS DESCRIPTIONS	BY	CH'D	CCO#
0	08/03/09	ELECTRICAL WARNING SYSTEMS	MP RR	RG FW	61

CONTRACT CHANGE ORDER NO. 61

SHEET 40 OF 104

NAVIGATION AND AVIATION WARNING SYSTEMS
SKYWAY STRUCTURES GIRDER CONDUIT PLAN

SCALE: 1:400

E-294B

THIS PLAN ACCURATE FOR ELECTRICAL WORK ONLY.

ALL DIMENSIONS ARE IN MILLIMETERS UNLESS OTHERWISE SHOWN

FOR REDUCED PLANS ORIGINAL SCALE IS IN MILLIMETERS 0 20 40 60 80

DGN FILE =>T:\13103\WS\pse\SAS Struc\CCO\SAS CCO61\Draft 6 - 20 1.01.07_Issued for Submittal\04-0120F1_0294S02.dgn
USERNAME =>llorico

CU 04251 | EA 0120F1

LAST REVISION 00-00-00

DATE PLOTTED => 2/17/2011
TIME PLOTTED => 4:34:15 PM

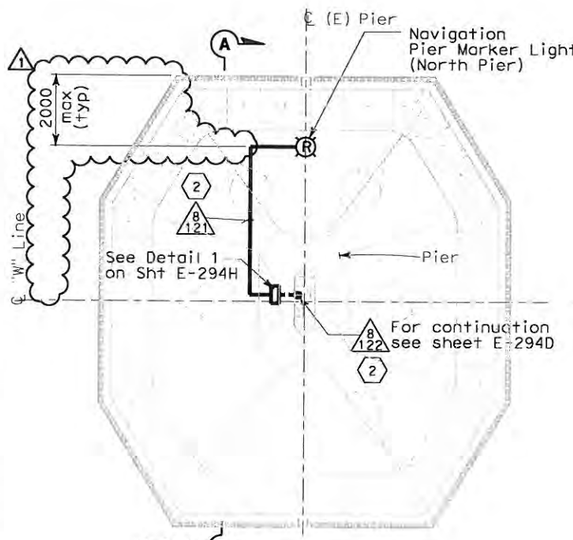

CONDUIT PLAN
PIER E6W FOOTING

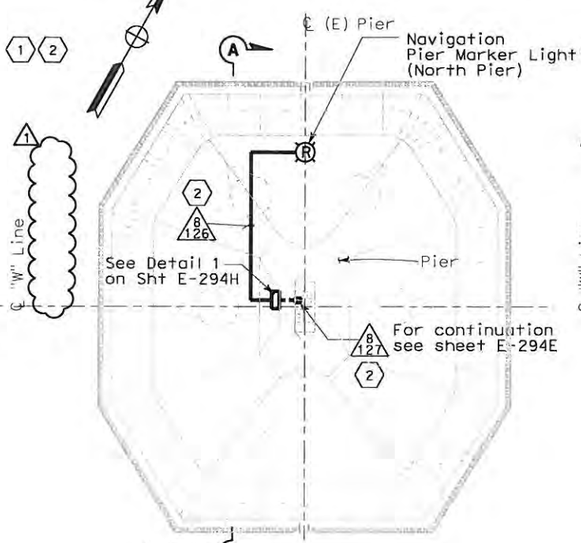

CONDUIT PLAN
PIER E7W FOOTING

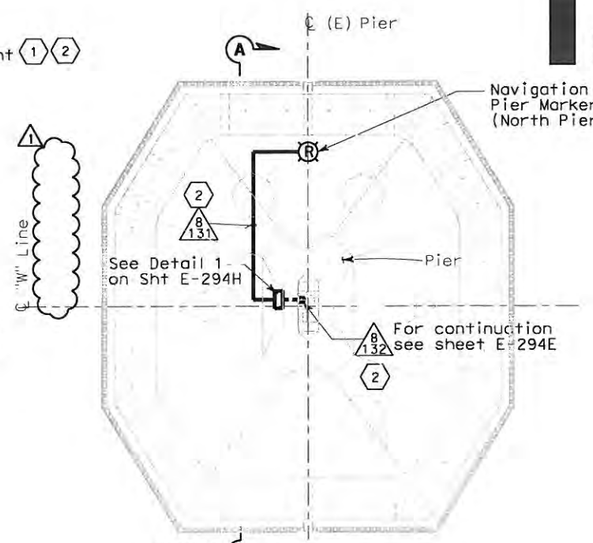

CONDUIT PLAN
PIER E8W FOOTING

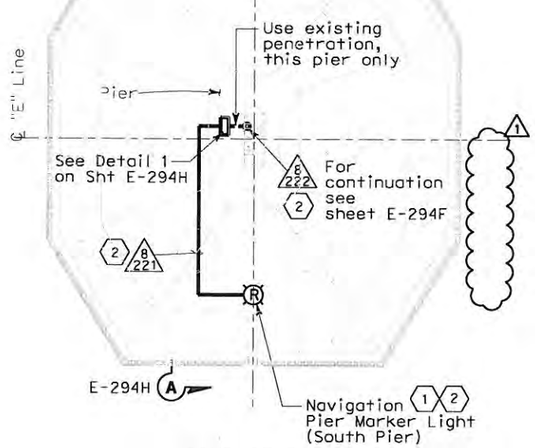

CONDUIT PLAN
PIER E6E FOOTING

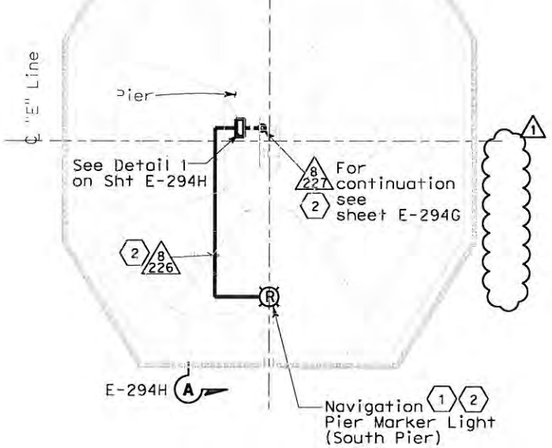

CONDUIT PLAN
PIER E7E FOOTING

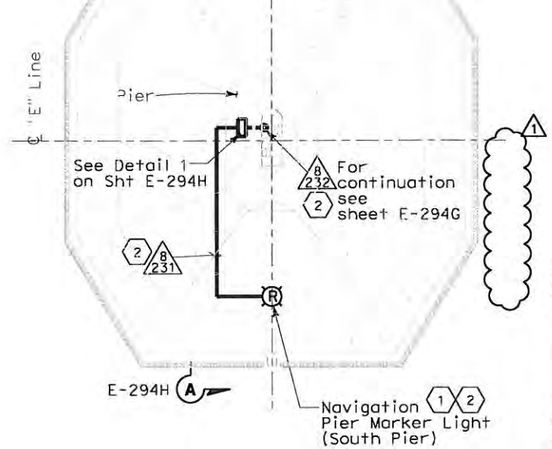

CONDUIT PLAN
PIER E8E FOOTING

SHEET NOTES:

(1) For type and installation details, see Sheet E-294H.

(2) Furnished and installed per SAS contract.

NOTES:

1. References:
   - For Circuit and Conduit/Cable Tray Schedules, see Sheet E-294S.
2. Unless noted with sheet notes (1) & (2) everything shown is furnished and installed under Skyway contract.
3. For General Notes, See Sheet E-294A

REGISTERED PROFESSIONAL ENGINEER
SYN YEE CHIN
No. 18186
Exp. 09/30/2013
ELECTRICAL
STATE OF CALIFORNIA
Syn Yee Chin
FOR REVISION ONLY
1 2

REQUEST FOR INFORMATION NOT ADDRESSED IN THIS CCO REMAIN IN FORCE					
2	06/14/12	ELECTRICAL WARNING SYSTEMS	TW	RG	61
1	01/07/11	ELECTRICAL WARNING SYSTEMS	NK	RG	61
0	04/10/09	ELECTRICAL WARNING SYSTEMS	MP RR	RG FW	61
MARK	DATE	DESCRIPTIONS	BY	CH'D	CCO#
REVISIONS					

CONTRACT CHANGE ORDER NO. 61
SHEET 41 OF 104

NAVIGATION AND AVIATION WARNING SYSTEMS
SKYWAY STRUCTURE PIER CONDUIT PLAN
NO SCALE

E-294C

DIST	COUNTY	ROUTE	KILOMETER POST TOTAL PROJECT	SHEET No	TOTAL SHEETS
04	SF	80	13.2/13.9	294 S3R2	1204

REGISTERED ELECTRICAL ENGINEER — 10/01/08 DATE

REGISTERED PROFESSIONAL ENGINEER
FADI WALIEDDINE
No. 11465
Exp. 12/31/2009
ELECTRICAL
STATE OF CALIFORNIA

PLANS APPROVAL DATE

PB AMERICAS, Inc.
A Parsons Brinckerhoff Company
303 Second St., Suite 700N
San Francisco, CA 94107-1317

The State of California or its officers or agents shall not be responsible for the accuracy or completeness of electronic copies of this plan sheet.

Caltrans now has a web site! To get to the web site, go to http://www.dot.ca.gov

STATE OF CALIFORNIA - DEPARTMENT OF TRANSPORTATION
Caltrans
DESIGN OVERSIGHT
BEHZAD GOLEMOHAMMADI
CALCULATED/ DESIGNED BY
CHECKED BY
DATE | REVISED BY | DATE REVISED

THIS PLAN ACCURATE FOR ELECTRICAL WORK ONLY.

ALL DIMENSIONS ARE IN MILLIMETERS UNLESS OTHERWISE SHOWN

FOR REDUCED PLANS ORIGINAL SCALE IS IN MILLIMETERS 0 20 40 60 80

DGN FILE =>T:\13103\MS\pse\SAS Struc\CCO\SAS CCO61\CCO-61 (Temp 6-14-12)\04-0120F1_0294S03R02.dgn
USERNAME =>garciar

CU 04251 | EA 0120F1

LAST REVISION 00-00-00 | DATE PLOTTED => 6/14/2012 | TIME PLOTTED => 1:48:51 PM

DIST	COUNTY	ROUTE	KILOMETER POST TOTAL PROJECT	SHEET No	TOTAL SHEETS
04	SF	80	13.2/13.9	294 S4	1204

REGISTERED ELECTRICAL ENGINEER — 10/01/08 DATE

REGISTERED PROFESSIONAL ENGINEER — FADI WALIEDDINE No. 11465 Exp. 12/31/2009 ELECTRICAL — STATE OF CALIFORNIA

PLANS APPROVAL DATE

PB AMERICAS, Inc.
A Parsons Brinckerhoff Company
303 Second St., Suite 700N
San Francisco, CA 94107-1317

The State of California or its officers or agents shall not be responsible for the accuracy or completeness of electronic copies of this plan sheet.

Caltrans now has a web site! To get to the web site, go to http://www.dot.ca.gov

Caltrans Metric

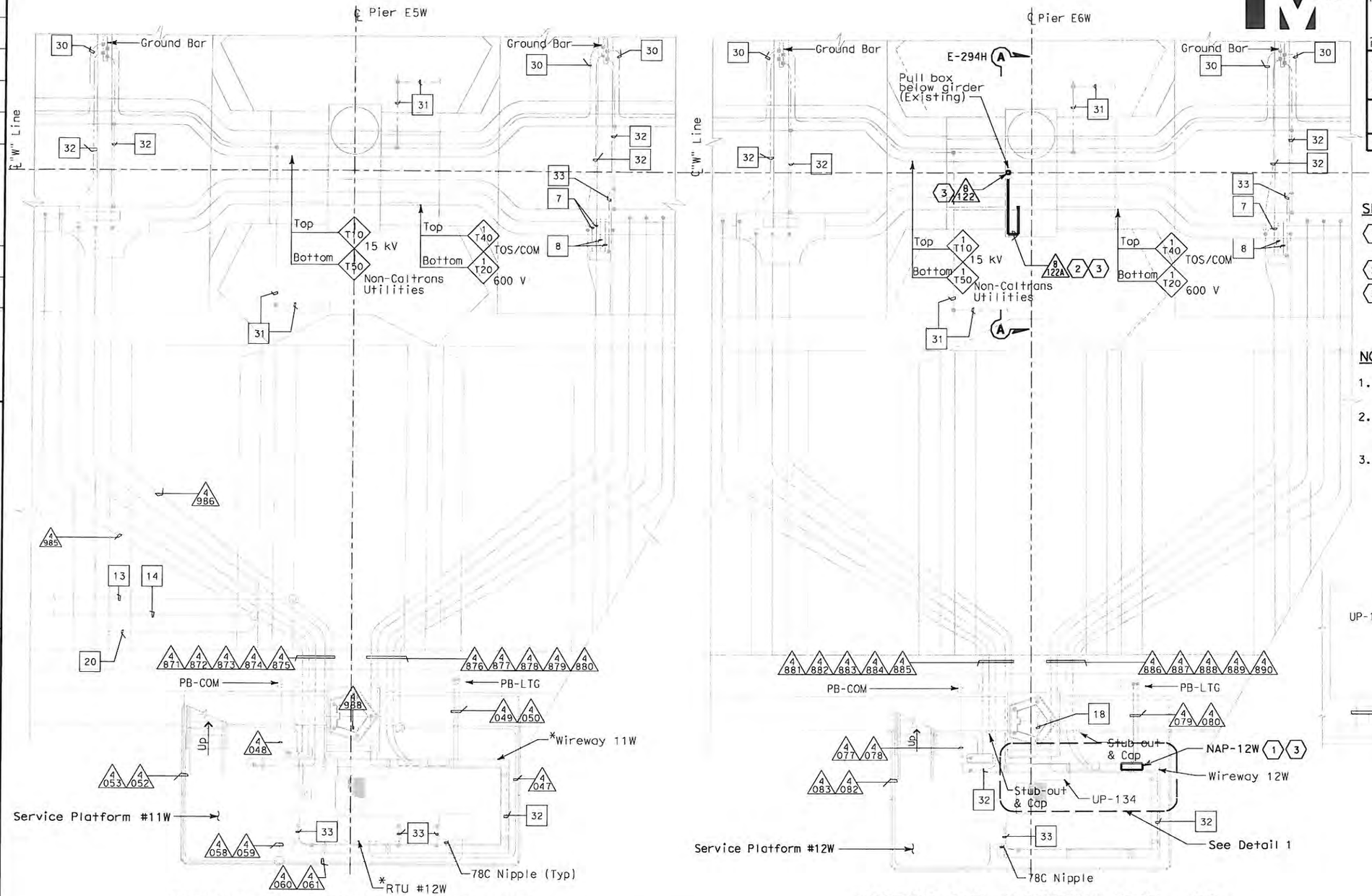

CONDUIT AND GROUNDING PLAN - WB
SCALE: 1:50

CONDUIT AND GROUNDING PLAN - WB
SCALE: 1:50

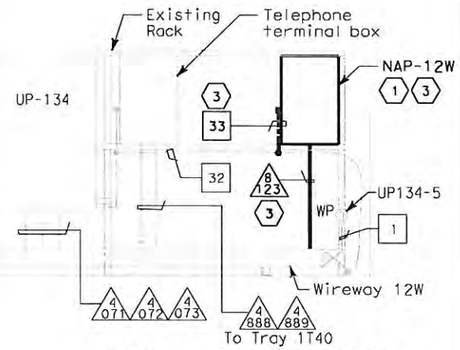

DETAIL 1 - SECTION
SCALE: 1:25

SHEET NOTES:

1. Mount to existing rack adjacent to Caltrans telephone box.
2. Continued to sheet E-294C.
3. Furnished and installed per SAS contract.

NOTES:

1. For general notes, see sheet E-294A.
2. Unless noted with sheet notes (1)(2)(3), everything is furnished and installed under Skyway contract.
3. All outdoor conduit connections shall be watertighted with PVC coated conduit fittings.

REQUEST FOR INFORMATION NOT ADDRESSED IN THIS CCO REMAIN IN FORCE						
0	04/10/09	ELECTRICAL WARNING SYSTEMS	MP RR	RG FW	61	
MARK	DATE	DESCRIPTIONS	BY	CH'D	CCO#	
REVISIONS						

CONTRACT CHANGE ORDER NO. 61
SHEET 42 OF 104

DETAILS
NAVIGATION AND AVIATION WARNING SYSTEMS
SKYWAY STRUCTURES SERVICE PLATFORM WESTBOUND
SCALE AS NOTED

E-294D

DESIGN OVERSIGHT — BEHZAD GOLEMOHAMMADI
STATE OF CALIFORNIA - DEPARTMENT OF TRANSPORTATION — Caltrans
CALCULATED/ DESIGNED BY — CHECKED BY
DATE — REVISED BY — DATE REVISED

THIS PLAN ACCURATE FOR ELECTRICAL WORK ONLY.

ALL DIMENSIONS ARE IN MILLIMETERS UNLESS OTHERWISE SHOWN

FOR REDUCED PLANS ORIGINAL SCALE IS IN MILLIMETERS 0 20 40 60 80

DGN FILE =>T:\13103\MS\pse\SAS Struc\CCO\SAS CCO61\2009-04-10_Issued for Submittal\04-0120F1_0294S04.dgn
USERNAME =>llorico

CU 04251 | EA 0120F1

LAST REVISION 00-00-00
DATE PLOTTED => 4/10/2009
TIME PLOTTED => 11:21:07 AM

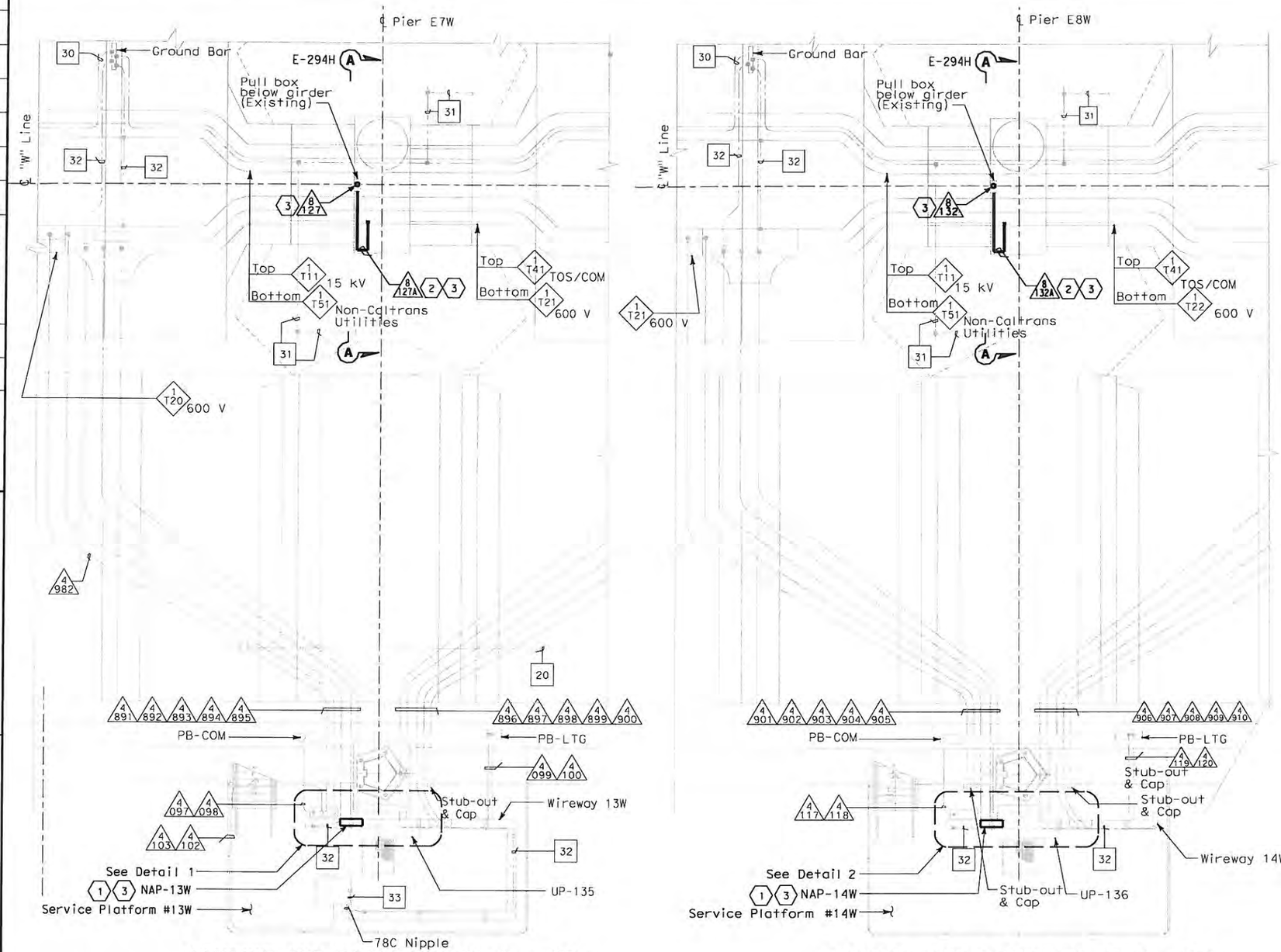

CONDUIT AND GROUNDING PLAN - WB

SCALE: 1:50

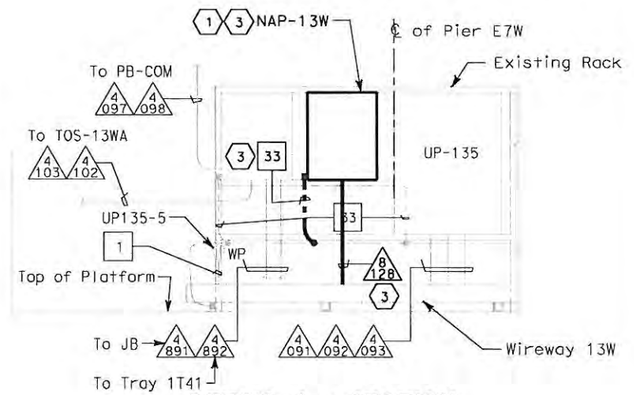

DETAIL 1 - SECTION

SCALE: 1:25

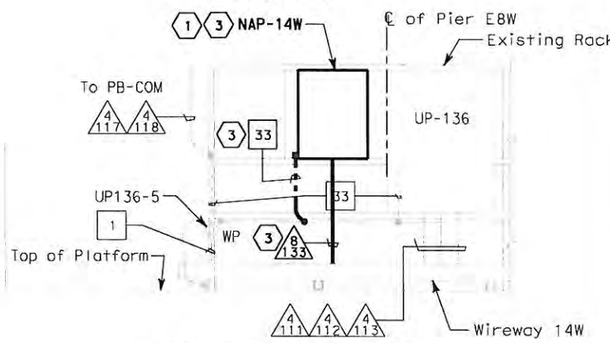

DETAIL 2 - SECTION

SCALE: 1:25

SHEET NOTES:

1. Mount to existing rack adjacent to Utility Panels.
2. Continued to sheet E-294C.
3. Furnished and installed per SAS contract.

NOTES:

1. For general notes, see sheet E-294A.
2. Unless noted with sheet notes 1, 2, 3, everything is furnished and installed under Skyway contract.
3. All outdoor conduit connections shall be watertighted with PVC coated conduit fittings.

DIST	COUNTY	ROUTE	KILOMETER POST TOTAL PROJECT	SHEET No	TOTAL SHEETS
04	SF	80	13.2/13.9	294 S5	1204

REGISTERED ELECTRICAL ENGINEER — 10/01/08 DATE

REGISTERED PROFESSIONAL ENGINEER — FADI WALIEDDINE No. 11465 Exp. 12/31/2009 ELECTRICAL — STATE OF CALIFORNIA

PLANS APPROVAL DATE

PB AMERICAS, Inc.
A Parsons Brinckerhoff Company
303 Second St., Suite 700N
San Francisco, CA 94107-1317

The State of California or its officers or agents shall not be responsible for the accuracy or completeness of electronic copies of this plan sheet.

Caltrans now has a web site! To get to the web site, go to http://www.dot.ca.gov

REQUEST FOR INFORMATION NOT ADDRESSED IN THIS CCO REMAIN IN FORCE					
MARK	DATE	REVISIONS DESCRIPTIONS	BY	CH'D	CCO#
0	04/10/09	ELECTRICAL WARNING SYSTEMS	MP RR	RG FW	61

CONTRACT CHANGE ORDER NO. 61
SHEET 43 OF 104

DETAILS
NAVIGATION AND AVIATION WARNING SYSTEMS
SKYWAY STRUCTURES SERVICE PLATFORM WESTBOUND

SCALE AS NOTED

E-294E

DESIGN OVERSIGHT	CALCULATED/ DESIGNED BY	CHECKED BY	DRAWN BY	DATE	REVISED BY	DATE REVISED
BEHZAD GOLEMOHAMMADI						

STATE OF CALIFORNIA - DEPARTMENT OF TRANSPORTATION — Caltrans

THIS PLAN ACCURATE FOR ELECTRICAL WORK ONLY.

ALL DIMENSIONS ARE IN MILLIMETERS UNLESS OTHERWISE SHOWN

FOR REDUCED PLANS ORIGINAL SCALE IS IN MILLIMETERS 0 20 40 60 80

DGN FILE =>T:\13103\MS\pse\SAS Struc\CCO\SAS CCO61\2009-04-10_Issued for Submittal\04-0120F1_0294S05.dgn
USERNAME =>lforico

CU 04251 | EA 0120F1

LAST REVISION 00-00-00 — DATE PLOTTED => 4/10/2009 TIME PLOTTED => 11:21:42 AM

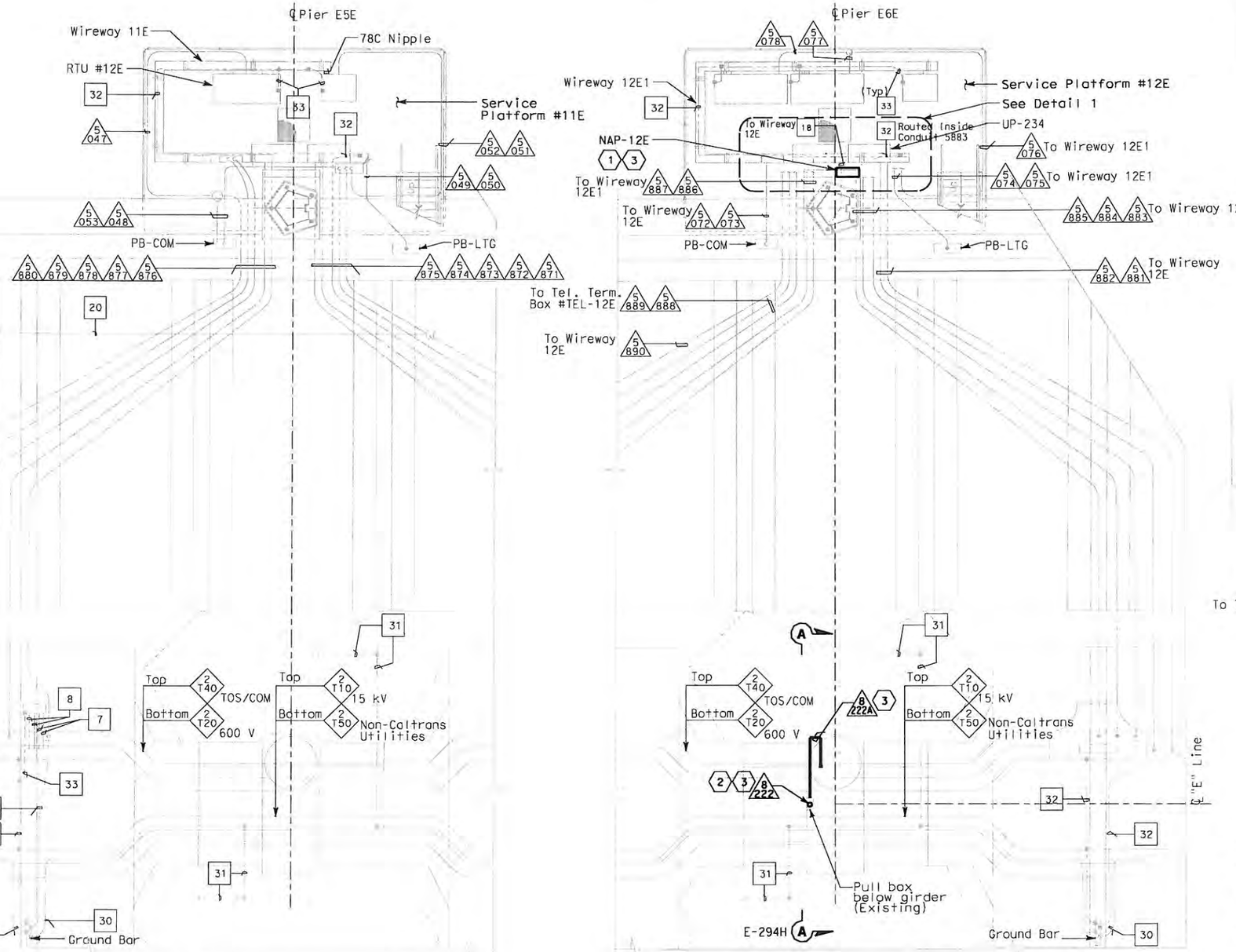

CONDUIT AND GROUNDING PLAN - EB
SCALE: 1:50

CONDUIT AND GROUNDING PLAN - EB
SCALE: 1:50

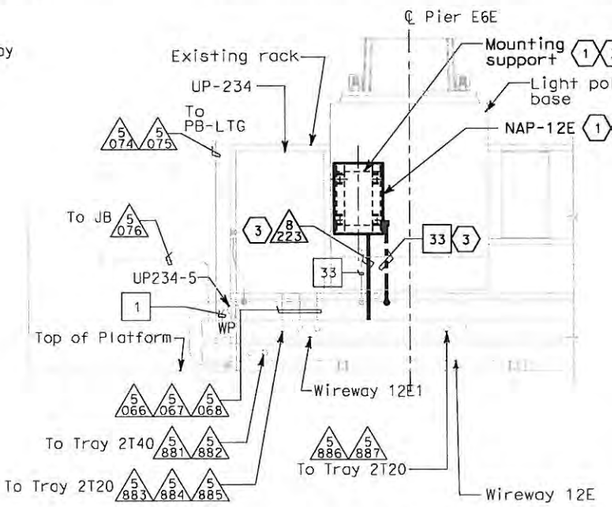

DETAIL 1 - SECTION
SCALE: 1:25

SHEET NOTES:

1. Mount to light pole base per the mounting support shown on Sheet AS-17.
2. Continued to Sheet E-294C.
3. Furnished and Installed per SAS contract.

NOTES:

1. For general notes, see sheet E-294A.
2. Unless noted with sheet notes (1)(2)(3), everything shown is furnished and installed under furnished and installed under Skyway Contract.
3. All outdoor conduit connections shall be watertighted with PVC coated conduit fittings.

DETAILS
NAVIGATION AND AVIATION WARNING SYSTEMS
SKYWAY STRUCTURES SERVICE PLATFORM EASTBOUND
SCALE AS NOTED

E-294F

DIST	COUNTY	ROUTE	KILOMETER POST TOTAL PROJECT	SHEET No	TOTAL SHEETS
04	SF	80	13.2/13.9	294 S6	1204

REGISTERED ELECTRICAL ENGINEER — 10/01/08 DATE

REGISTERED PROFESSIONAL ENGINEER — FADI WALIEDDINE No. 11465 Exp. 12/31/2009 ELECTRICAL — STATE OF CALIFORNIA

PLANS APPROVAL DATE

PB AMERICAS, Inc.
A Parsons Brinckerhoff Company
303 Second St., Suite 700N
San Francisco, CA 94107-1317

The State of California or its officers or agents shall not be responsible for the accuracy or completeness of electronic copies of this plan sheet.

Caltrans now has a web site! To get to the web site, go to http://www.dot.ca.gov

REQUEST FOR INFORMATION NOT ADDRESSED IN THIS CCO REMAIN IN FORCE					
MARK	DATE	REVISIONS	BY	CH'D	CCO#
0	04/10/09	ELECTRICAL WARNING SYSTEMS	MP RR	RG FW	61

CONTRACT CHANGE ORDER NO. 61
SHEET 44 OF 104

STATE OF CALIFORNIA - DEPARTMENT OF TRANSPORTATION — Caltrans

DESIGN OVERSIGHT — BEHZAD GOLEMOHAMMADI

CALCULATED/DESIGNED BY — CHECKED BY

DATE — REVISED BY — DATE REVISED

THIS PLAN ACCURATE FOR ELECTRICAL WORK ONLY.

ALL DIMENSIONS ARE IN MILLIMETERS UNLESS OTHERWISE SHOWN

FOR REDUCED PLANS ORIGINAL SCALE IS IN MILLIMETERS 0 20 40 60 80

DGN FILE =>T:\13103\MS\pse\SAS Struc\CCO\SAS CCO61\2009-04-10_Issued for Submittal\04-0120F1_0294S06.dgn
USERNAME =>llorico

CU 04251 | EA 0120F1

LAST REVISION 00-00-00 — DATE PLOTTED => 4/10/2009 TIME PLOTTED => 11:22:16 AM

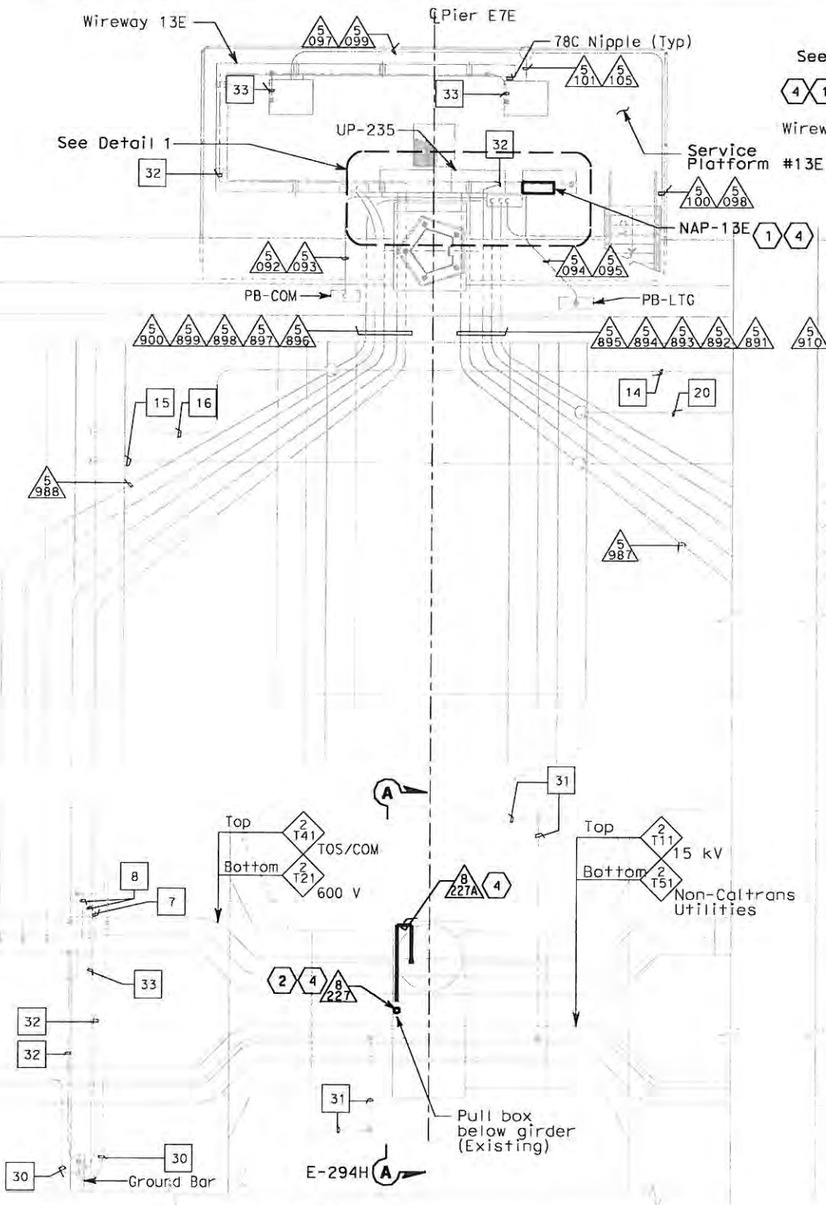

CONDUIT AND GROUNDING PLAN - EB
SCALE: 1:50

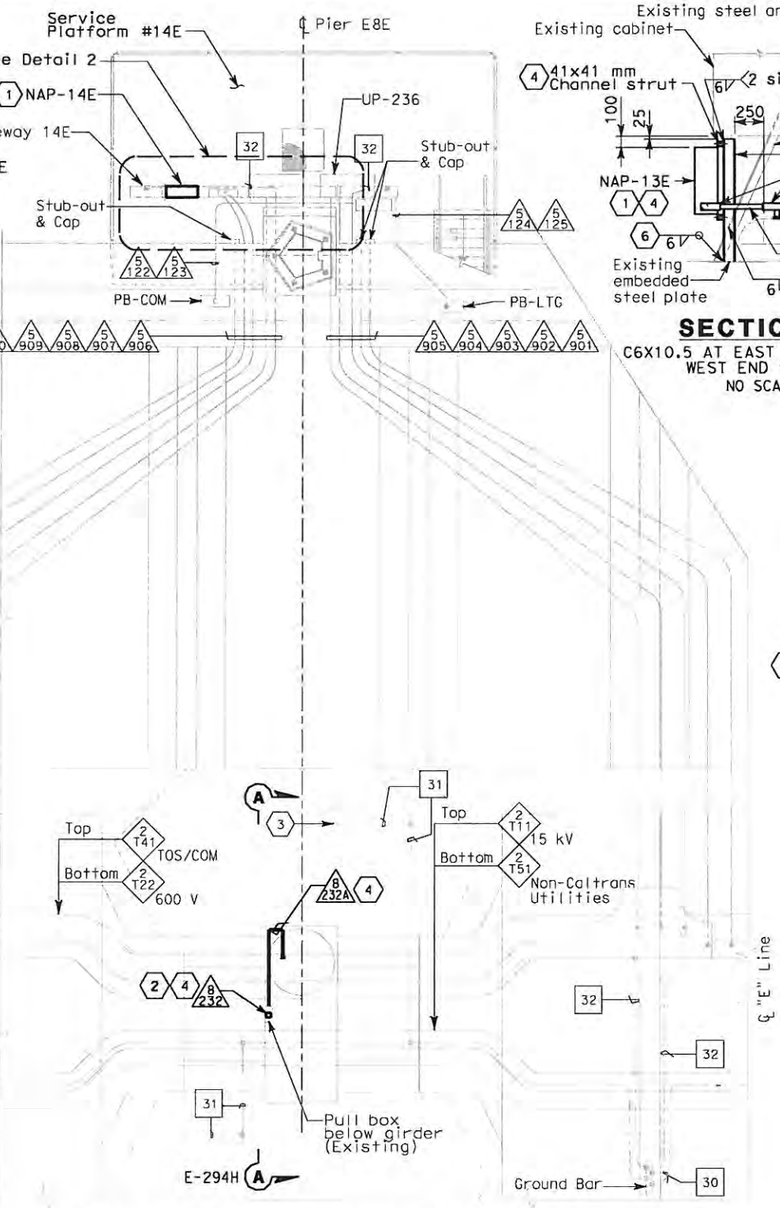

CONDUIT AND GROUNDING PLAN - EB
SCALE: 1:50

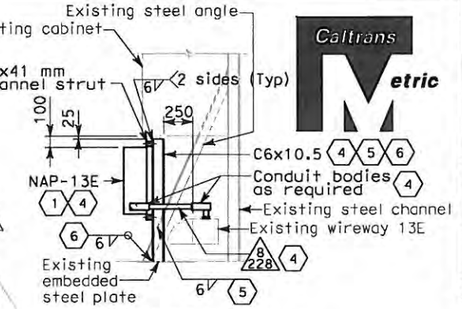

SECTION A-A
C6X10.5 AT EAST END AS SHOWN, WEST END SIMILAR.
NO SCALE

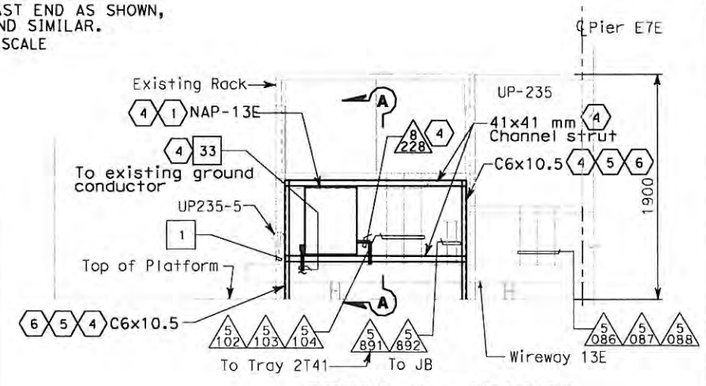

DETAIL 1 - SECTION
SCALE: 1:25

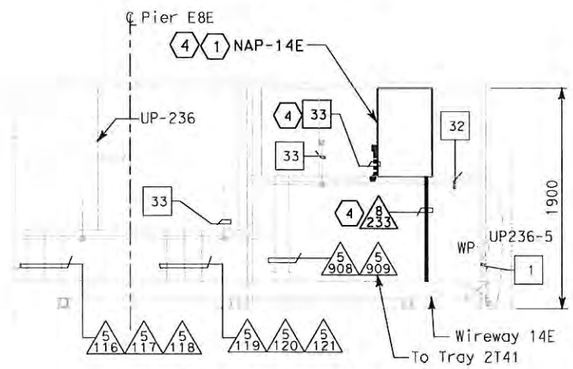

DETAIL 2 - SECTION
SCALE: 1:25

SHEET NOTES:

1. Mount to existing rack adjacent to Utility Panels.
2. Continued to Sheet E-294C.
3. The Contractor shall verify existing electrical equipment or devices to ensure working compatibility with added Navigation Lighting Systems.
4. Furnished and installed per SAS contract.
5. Place steel channel against existing angle steel and weld where they intersect as indicated.
6. Weld steel channel to existing embedded steel plate as indicated.

NOTES:

1. For general notes, see sheet E-294A.
2. Unless noted with sheet notes (1) thru (6), everything shown is furnished and installed under Skyway Contract.
3. All outdoor conduit connections shall be watertighted with PVC coated conduit fittings.

REQUEST FOR INFORMATION NOT ADDRESSED IN THIS CCO REMAIN IN FORCE					
0	04/10/09	ELECTRICAL WARNING SYSTEMS	MP RR	RG FW	61
MARK	DATE	DESCRIPTIONS	BY	CH'D	CCO#
REVISIONS					

CONTRACT CHANGE ORDER NO. 61
SHEET 45 OF 104

DETAILS
NAVIGATION AND AVIATION WARNING SYSTEMS
SKYWAY STRUCTURES SERVICE PLATFORM EASTBOUND
SCALE AS NOTED

E-294G

DIST	COUNTY	ROUTE	KILOMETER POST TOTAL PROJECT	SHEET No	TOTAL SHEETS
04	SF	80	13.2/13.9	294 S7	1204

REGISTERED ELECTRICAL ENGINEER — 10/01/08 DATE

REGISTERED PROFESSIONAL ENGINEER — FADI WALIEDDINE No. 11465 Exp. 12/31/2009 ELECTRICAL — STATE OF CALIFORNIA

PLANS APPROVAL DATE

PB POWER, Inc.
A Parsons Brinckerhoff Company
303 Second St., Suite 700N
San Francisco, CA 94107-1317

The State of California or its officers or agents shall not be responsible for the accuracy or completeness of electronic copies of this plan sheet.

Caltrans now has a web site! To get to the web site, go to http://www.dot.ca.gov

STATE OF CALIFORNIA - DEPARTMENT OF TRANSPORTATION — Caltrans
DESIGN OVERSIGHT — BEHZAD GOLEMOHAMMADI
CALCULATED/DESIGNED BY — KNIGHT
CHECKED BY — BEHZAD GOLEMOHAMMADI
DATE XX/XX — XX — REVISED BY
XX/XX — XX — DATE REVISED

LAST REVISION 00-00-00
DATE PLOTTED => 4/10/2009
TIME PLOTTED => 11:31:32 AM

THIS PLAN ACCURATE FOR ELECTRICAL WORK ONLY.

FOR REDUCED PLANS ORIGINAL SCALE IS IN MILLIMETERS 0 20 40 60 80

DGN FILE =>T:\13103\WS\pse\SAS Struc\CCO\SAS CC061\2009-04-10_Issued for Submittal\04-0120f1_0294S07.dgn
USERNAME =>llorico

CU 04251 EA 0120F1

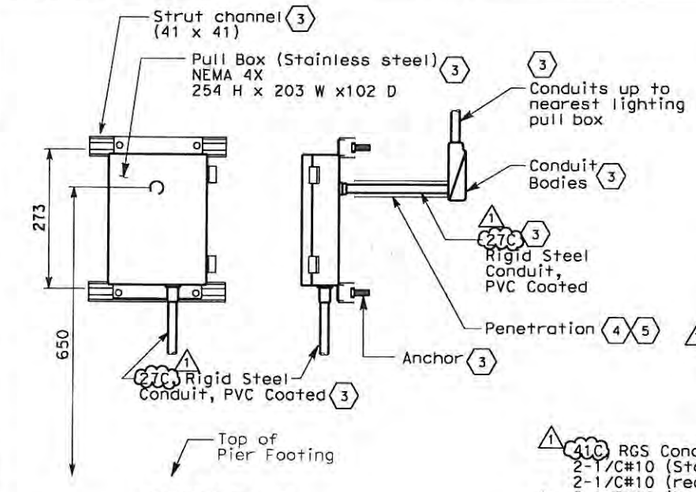

DETAIL 1
NOT TO SCALE

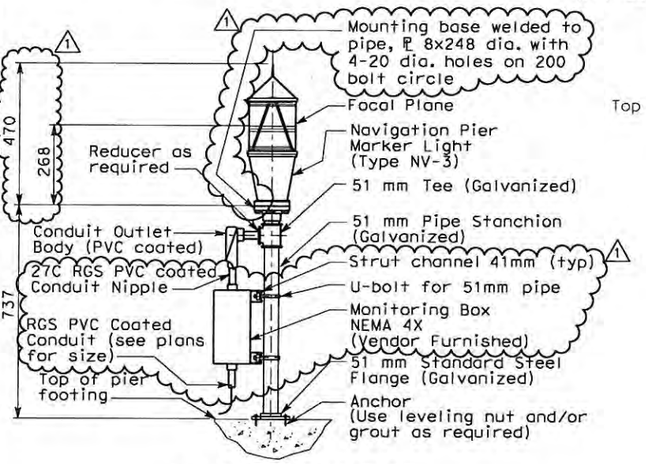

DETAIL 2 (1)(2)(3)
MOUNTED AT PIER FOOTING
NO SCALE

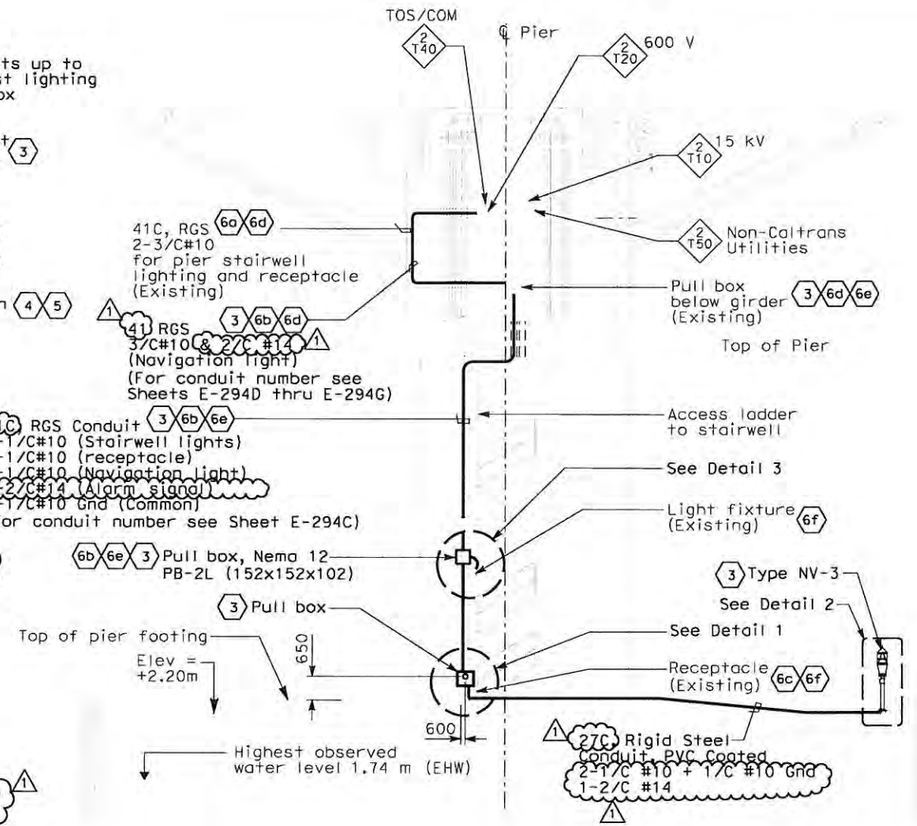

NAVIGATION LIGHTING SCHEDULE

TYPE	DESCRIPTION
NV-3 (1)	Pier Marker Navigation Light with LED, Red in color, with a 180-degree horizontal arc visibility. Housing shall be corrosion resistant and gasketed with remote lamp monitoring capability, 120VAC with 3x4 LED Array. Lights shall conform to the latest provisions of Title 33 CFR chapter 1, Section 118.60. Pharos Marine/Automatic Power Inc. Model FA-249LED or approved equivalent.

REQUEST FOR INFORMATION NOT ADDRESSED IN THIS CCO REMAIN IN FORCE					
1	01/07/11	ELECTRICAL WARNING SYSTEMS	TW	RG	61
0	08/03/09	ELECTRICAL WARNING SYSTEMS	RG	FW	61
MARK	DATE	DESCRIPTIONS	BY	CH'D	CCO#
		REVISIONS			

CONTRACT CHANGE ORDER NO. 61
SHEET 46 OF 104

TYPICAL DETAIL @ PIER E6E, E7E AND E8E (AS SHOWN)
(SIMILAR FOR WESTBOUND EXCEPT OPPOSITE HAND)

SECTION A-A
(SEE SHEET E-294C)
NO SCALE

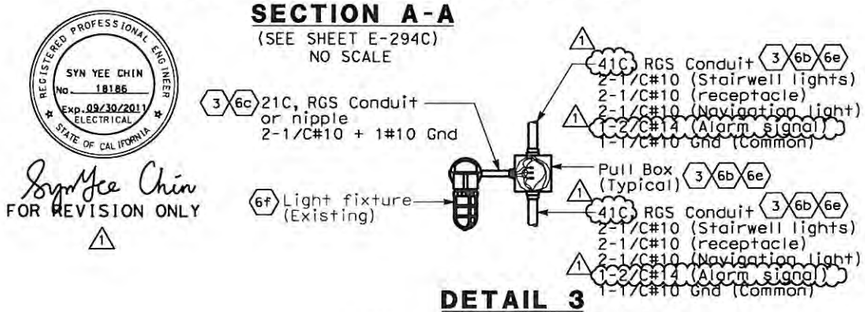

DETAIL 3
TYPICAL MOUNTING INSIDE STAIRWELL
NO SCALE

NOTES:
1. Reference:
   -For Pier Conduit Plan, see Sheet E-294C.
2. -For Circuit, Conduit, and Tray Schedule, see Sheet E-294S.
3. Unless noted with sheet notes (1) thru (6), everything shown is furnished and installed under Skyway Contract.
4. All outdoor conduit connections shall be watertighted with PVC coated conduit fittings.

DIST	COUNTY	ROUTE	KILOMETER POST TOTAL PROJECT	SHEET No	TOTAL SHEETS
04	SF	80	13.2/13.9	294 S8R1	1204

REGISTERED ELECTRICAL ENGINEER — 10/01/08 DATE
REGISTERED PROFESSIONAL ENGINEER — FADI WALIEDDINE No. 11465 Exp. 12/31/2009 ELECTRICAL — STATE OF CALIFORNIA
PLANS APPROVAL DATE

PB POWER, Inc.
A Parsons Brinckerhoff Company
303 Second St., Suite 700N
San Francisco, CA 94107-1317

The State of California or its officers or agents shall not be responsible for the accuracy or completeness of electronic copies of this plan sheet.

Caltrans now has a web site! To get to the web site, go to http://www.dot.ca.gov

SHEET NOTES:

(1) Pier footing wall mounted devices shall be secured to the concrete with manufacturer recommended mounting and approved by resident engineer.

(2) Red axis lights shall be attached to the channel-ward faces of the piers. Each light shall show through a horizontal arc of 180 degrees and shall be mounted on the navigational channel face of the pier as low as practicable but not lower than 2 feet above navigable high water, to show 90 degrees either side of a line parallel to the axis of the bridge, so as to be visible from an approaching vessel.

(3) Installed and furnished per SAS Contract.

(4) Core drill 41 mm diameter hole and seal opening gap after conduit is installed.

(5) For pier E6E, use existing penetration sleeve located on the west side face of the pier.

(6) Contractor shall replace the existing conduits and any fittings that connects the light fixtures and receptacle inside the stairwell. Rework shall be performed as follow.

a. Contractor to de-energize power to the stairwell light fixtures and receptacle. Disconnect all stairwell lighting and receptacle splices inside existing pull box located below the girder. Remove all existing wires, conduits, light fixtures/ J-boxes and receptacle inside the stairwell and up to the existing pull box below the girder. Existing light fixtures & J-boxes and receptacle shall be salvaged for re-installation.

b. Contractor shall furnish and install 1 (41C) rigid galvanized steel between the 600V cable tray and the existing pull box located below the girder. Contractor shall also furnish and 1 install (41C) rigid galvanized steel and pull boxes PB-2L inside stairwell along the same routing of the previous conduits. Conduits shall be connected to existing pull box below the girder and shall be routed through the same openings and penetrations where previous lighting conduits were installed at the stairwell landing.

c. Contractor shall re-install the light fixture J-boxes and shall furnish and install 21C, rigid galvanized steel or nipple between the light fixture J-box and the new pull box. Contractor shall also furnish and install 21C, rigid galvanized steel to receptacle.

d. Contractor shall pull the 2/C#10 with #10 gnd cable for the navigation light from the cable tray down to the existing pull box located below the girder. Cut to length for splice.

e. Contractor shall furnish and install 6-1/C#10 + 1C#10 gnd, 1 1-2/C#14 and splice conductors with the respective conductors in pull box located below the girder. Contractor shall pull all wires through the newly installed conduits to respective stairwell lighting fixtures, receptacle and pier navigation light. Loop and secure wires inside pull box to prevent slippage.

f. Contractor shall re-install the light fixtures & receptacle and connect the new wires. Light fixtures and receptacle shall be inspected for damage and replace as required prior to installation.

DETAILS
NAVIGATION AND AVIATION WARNING SYSTEMS
SKYWAY STRUCTURES DRAWING SECTIONS AND DETAILS
NO SCALE

E-294H

DESIGN OVERSIGHT — BEHZAD GOLEMOHAMMADI
CALCULATED/ DESIGNED BY — XX
CHECKED BY — XX
DATE REVISED — XX/XX
REVISED BY — DATE REVISED
STATE OF CALIFORNIA - DEPARTMENT OF TRANSPORTATION — Caltrans

LAST REVISION 00-00-00 — DATE PLOTTED => 2/17/2011 — TIME PLOTTED => 4:58:35 PM

FOR REDUCED PLANS ORIGINAL SCALE IS IN MILLIMETERS 0 20 40 60 80

DGN FILE =>T:\13103\MS\pse\SAS Struc\CCO\SAS CCO61\Draft 6 - 20 1.01.07_Issued for Submittal\04-0120f1_0294S08R01.dgn
USERNAME =>llorico
CU 04251 | EA 0120F1

DIST	COUNTY	ROUTE	KILOMETER POST TOTAL PROJECT	SHEET No	TOTAL SHEETS
04	SF	80	13.2/13.9	294 S9R1	1204

10/01/08
REGISTERED ELECTRICAL ENGINEER DATE

REGISTERED PROFESSIONAL ENGINEER — FADI WALIEDDINE — No. 11465 — Exp. 12/31/2009 ELECTRICAL — STATE OF CALIFORNIA

PLANS APPROVAL DATE

PB AMERICAS, Inc.
A Parsons Brinckerhoff Company
303 Second St., Suite 700N
San Francisco, CA 94107-1317

The State of California or its officers or agents shall not be responsible for the accuracy or completeness of electronic copies of this plan sheet.

Caltrans now has a web site! To get to the web site, go to http://www.dot.ca.gov

Metric

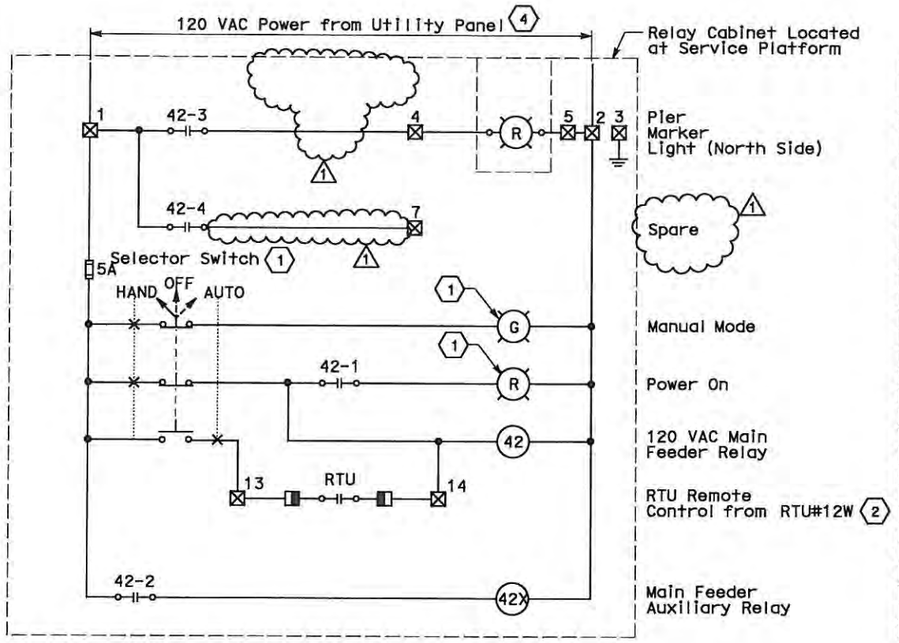

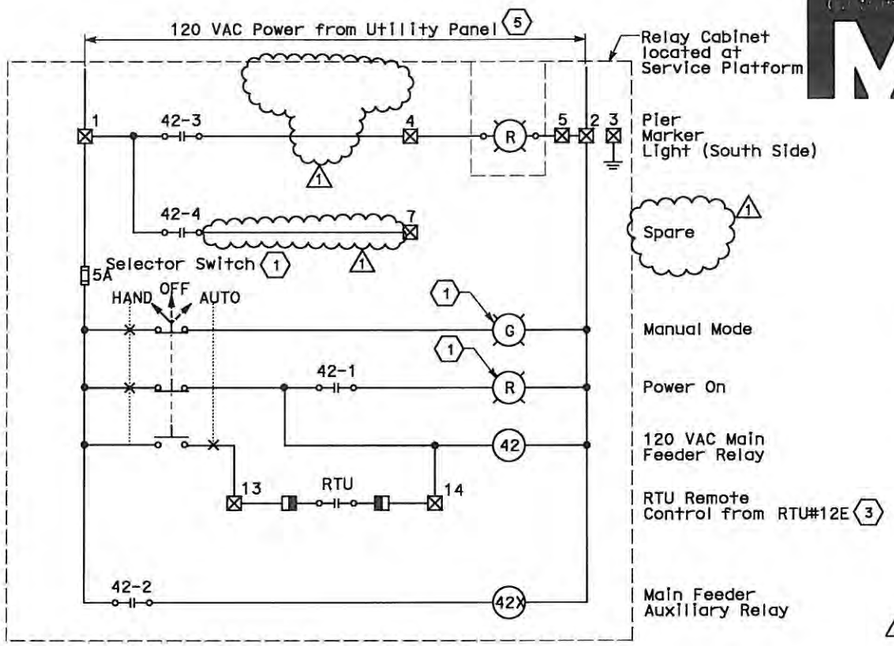

SHEET NOTES:

1. Locate device on the face of enclosure door panel.
2. Relays are located in RTU-12W, see sheet E-294N.
3. Relays are located in RTU-12E, see sheet E-294P.
4. Panel Board Schedule, see sheet E-294Q.
5. Panel Board Schedule, see sheet E-294R.
6. All components and related information shown on this dwg. are per SAS contract.
7. Relays are located inside vendor furnished monitoring box for marker lights.

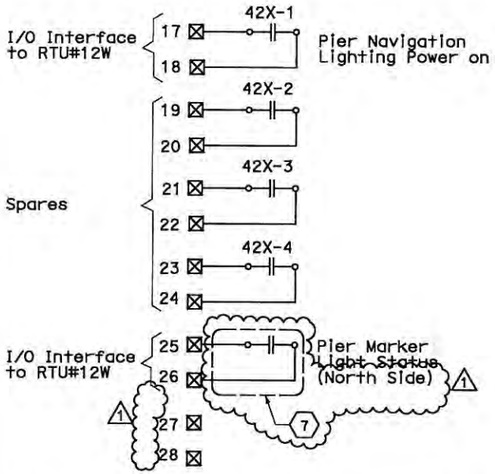

NAVIGATION LIGHTING RELAY CABINET - WB

Typical for NAP-12W, NAP-13W and NAP-14W 6

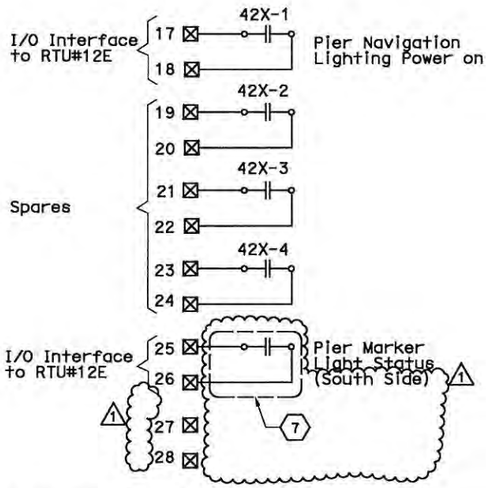

NAVIGATION LIGHTING RELAY CABINET - EB

Typical for NAP-12E, NAP-13E and NAP-14E 6

REGISTERED PROFESSIONAL ENGINEER — SYN YEE CHIN — No. 18186 — Exp. 09/30/2011 ELECTRICAL — STATE OF CALIFORNIA

Syn Yee Chin
FOR REVISION ONLY
1

NOTES:

1. References:
   - For Navigation Lighting Relay Panel general arrangement layout see sheet E-294M.
   - For connection diagrams see Sheet E-294L.
   - For types of Navigation Lighting Schedule, see sheet E-294H.

REQUEST FOR INFORMATION NOT ADDRESSED IN THIS CCO REMAIN IN FORCE					
1	01/07/11	ELECTRICAL WARNING SYSTEMS	TW	RG	61
0	08/03/09	ELECTRICAL WARNING SYSTEMS	RG	JE FW	61
MARK	DATE	DESCRIPTIONS	BY	CH'D	CCO#
		REVISIONS			

CONTRACT CHANGE ORDER NO. 61
SHEET 47 OF 104

DETAILS
NAVIGATION AND AVIATION WARNING SYSTEMS
SKYWAY STRUCTURES ELEMENTARY DIAGRAMS

NO SCALE

E-294J

STATE OF CALIFORNIA - DEPARTMENT OF TRANSPORTATION
DESIGN OVERSIGHT: BEHZAD GOLEMOHAMMADI
CALCULATED/DESIGNED BY
CHECKED BY
DATE REVISED BY
DATE REVISED

LAST REVISION 00-00-00
DATE PLOTTED => 11-JAN-2011
TIME PLOTTED => 14:00

FOR REDUCED PLANS ORIGINAL SCALE IS IN MILLIMETERS 0 20 40 60 80
DGN FILE =>04-0120f1_0294S09R01.dgn
USERNAME =>llorico
CU 04251
EA 0120F1

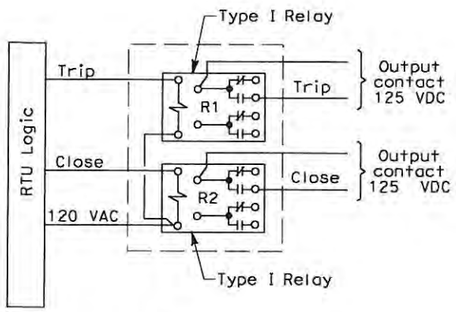

TYPE A

(For Breaker Control)

Relays with 2PDT 10 A rated contacts,
Coil-120 VAC

Relay R1 Momentary contact (close to trip breaker)
Relay R2 Momentary contact (close to close breaker)

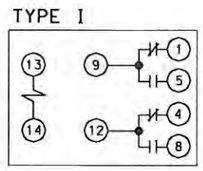

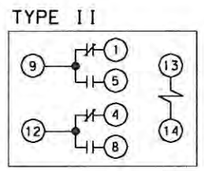

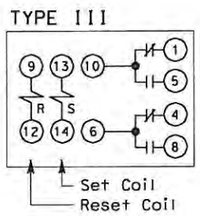

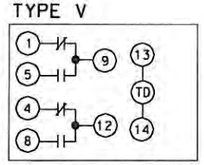

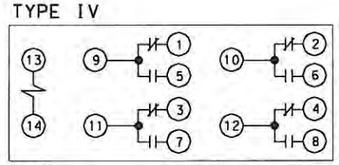

Time Delay Relay (Delay on Pick Up)
Range: 0.5 to 30 seconds

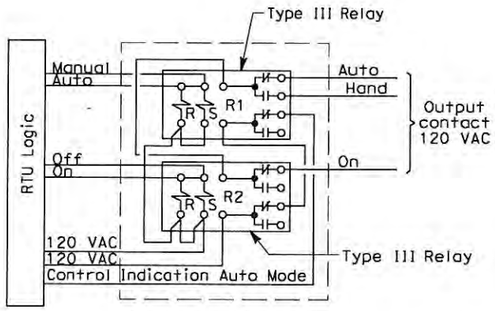

TYPE B

(For Lighting Control)

Relays with 2PDT 10 A rated contacts,
Coil-120 VAC

Relay R1 Energized (Manual mode)
Relay R1 De-energized (Auto mode)

Relay R2 Energized (Off mode)
Relay R2 De-energized (On mode)

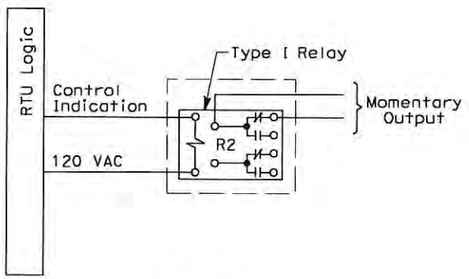

TYPE E

Typical indication interposing Relay
Coil-120 VAC

RELAY TYPE DESCRIPTION	
TYPE I	General purpose relay, Coil : 120 VAC Contacts: Double pole, double throw, 10 A rated
TYPE II	General purpose relay, Coil : 115 VAC Contacts: Double pole, double throw, 10 A rated
TYPE III	Latching purpose relay, Coil : 120 VAC Contacts: Double pole, double throw, 10 A rated
TYPE IV	General purpose relay, Coil : 115 VAC Contacts: 4 pole, double throw, 10 A rated
TYPE V	Timing relay, on-delay, Coil : 115 VAC Contacts: Double pole, double throw, 10 A rated

Caltrans Metric

DIST	COUNTY	ROUTE	KILOMETER POST TOTAL PROJECT	SHEET No	TOTAL SHEETS
04	SF	80	13.2/13.9	294 S10	1204

10/01/08
REGISTERED ELECTRICAL ENGINEER DATE

REGISTERED PROFESSIONAL ENGINEER
FADI WALIEDDINE
No. 11465
Exp. 12/31/2009
ELECTRICAL
STATE OF CALIFORNIA

PLANS APPROVAL DATE

PB AMERICAS, Inc.
A Parsons Brinckerhoff Company
303 Second St., Suite 700N
San Francisco, CA 94107-1317

The State of California or its officers or agents shall not be responsible for the accuracy or completeness of electronic copies of this plan sheet.

Caltrans now has a web site! To get to the web site, go to http://www.dot.ca.gov

NOTES:

1. References:
   -For Elementary Diagrams, see Sheet E-294J.
   -For Connection Diagrams, see Sheet E-294L.
2. All components and related information shown on this drawing are per SAS contract.

REQUEST FOR INFORMATION NOT ADDRESSED IN THIS CCO REMAIN IN FORCE

MARK	DATE	DESCRIPTIONS / REVISIONS	BY	CH'D	CCO#
0	04/10/09	ELECTRICAL WARNING SYSTEMS	MP RR	RG FW	61

CONTRACT CHANGE ORDER NO. 61
SHEET 48 OF 104

DETAILS
NAVIGATION AND AVIATION WARNING SYSTEMS
SKYWAY STRUCTURES TYPICAL RELAY WIRING DIAGRAM

NO SCALE

E-294K

STATE OF CALIFORNIA - DEPARTMENT OF TRANSPORTATION
Caltrans
DESIGN OVERSIGHT
BEHZAD GOLEMOHAMMADI
CALCULATED/ DESIGNED BY
CHECKED BY
DATE
REVISED BY
DATE REVISED

LAST REVISION 00-00-00
DATE PLOTTED => 4/10/2009
TIME PLOTTED => 11:33:46 AM

FOR REDUCED PLANS ORIGINAL SCALE IS IN MILLIMETERS 0 20 40 60 80

DGN FILE =>T:\13103\MS\pse\SAS Struc\CCO\SAS CCO61\2009-04-10_Issued for Submittal\04-0120F1_0294S10.dgn
USERNAME =>ilorico
CU 04251
EA 0120F1

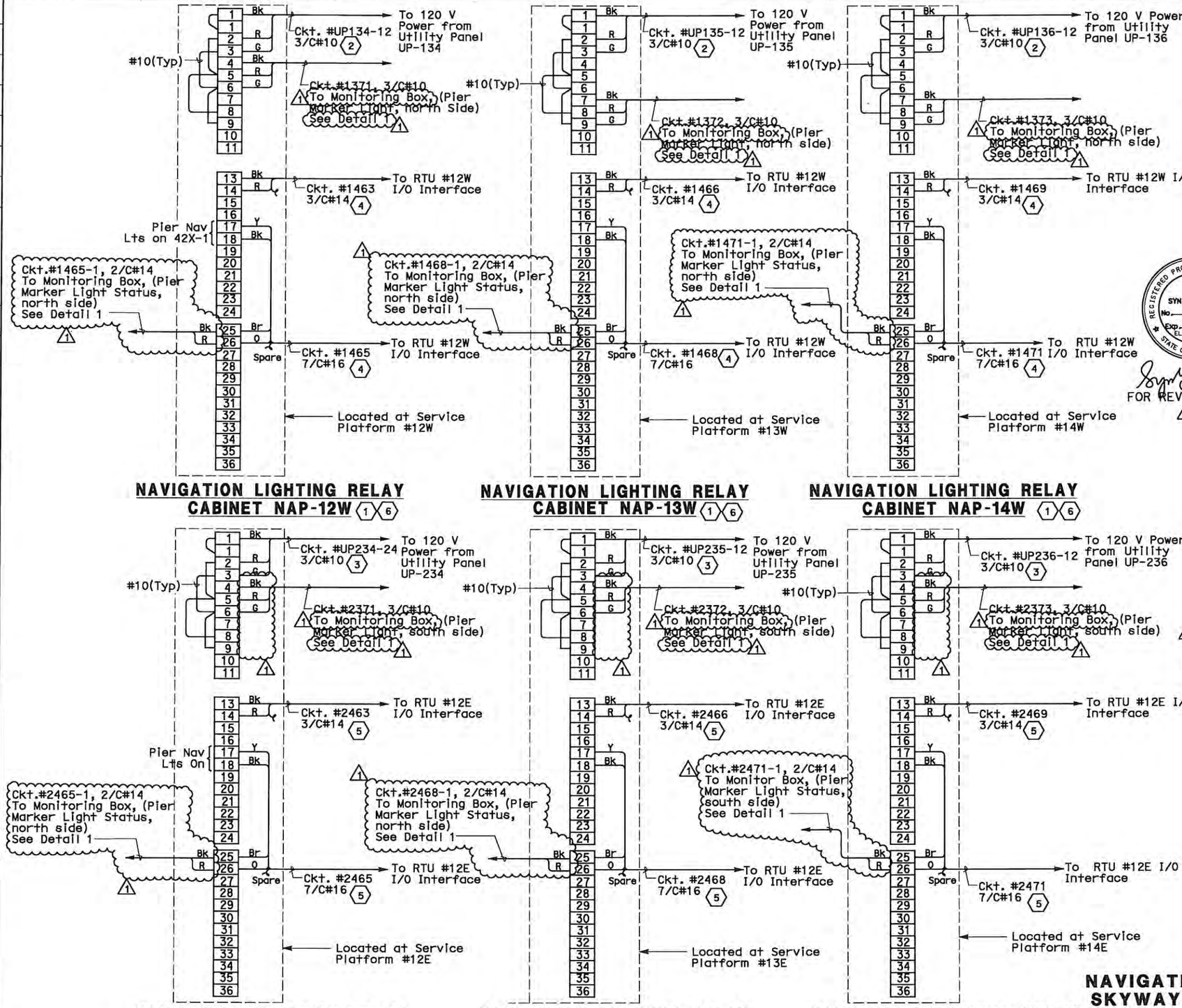

DIST	COUNTY	ROUTE	KILOMETER POST TOTAL PROJECT	SHEET No	TOTAL SHEETS
04	SF	80	13.2/13.9	294 S11R1	1204

10/01/08
REGISTERED ELECTRICAL ENGINEER DATE

FADI WALIEDDINE No. 11465 Exp. 12/31/2009 ELECTRICAL — REGISTERED PROFESSIONAL ENGINEER — STATE OF CALIFORNIA

PLANS APPROVAL DATE

PB AMERICAS, Inc.
A Parsons Brinckerhoff Company
303 Second St., Suite 700N
San Francisco, CA 94107-1317

The State of California or its officers or agents shall not be responsible for the accuracy or completeness of electronic copies of this plan sheet.

Caltrans now has a web site! To get to the web site, go to http://www.dot.ca.gov

SYN YEE CHIN No. 18186 Exp. 09/30/2011 ELECTRICAL — REGISTERED PROFESSIONAL ENGINEER — STATE OF CALIFORNIA

Syn Yee Chin
FOR REVISION ONLY (1)

SHEET NOTES:

(1) For Navigation Lighting Relay Cabinet Elementary Diagram, and general arrangement panel layout, see sheets E-294J and E-294M respectively.

(2) For Utility Panel Schedules, see sheet E-294Q.

(3) For Utility Panel Schedule, see sheet E-294R.

(4) Continued to Scada System Connection Diagram, see sheet E-294N.

(5) Continued to Scada System Connection Diagram, see sheet E-294P.

(6) All components and related information shown on this drawing are per SAS contract.

(1)(7) Contractor to connect incoming wires into the monitoring box per the vendor wiring diagram.

NOTES:

1. References:
   - For Circuit and Conduit/Cable Tray, Schedules, see Sheet E-294S.

2. All spare conductors shall be coiled and taped at conductor ends unless terminated.

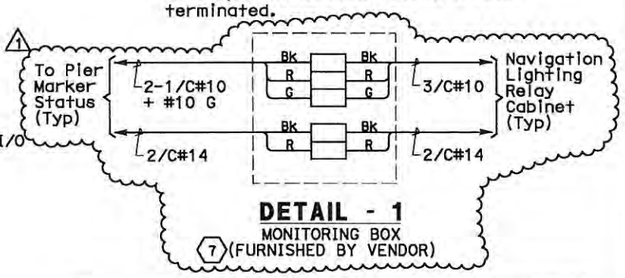

DETAIL - 1
MONITORING BOX (7) (FURNISHED BY VENDOR)

REQUEST FOR INFORMATION NOT ADDRESSED IN THIS CCO REMAIN IN FORCE					
(1)	01/07/11	ELECTRICAL WARNING SYSTEMS	TW	RG	61
(0)	08/03/09	ELECTRICAL WARNING SYSTEMS	RG	JE FW	61
MARK	DATE	DESCRIPTIONS REVISIONS	BY	CH'D	CCO#

CONTRACT CHANGE ORDER NO. 61
SHEET 49 OF 104

DETAILS
NAVIGATION AND AVIATION WARNING SYSTEMS SKYWAY STRUCTURES CONNECTION DIAGRAMS
NOT TO SCALE

E-294L

REVISED BY | DATE REVISED
CALCULATED/ DESIGNED BY | CHECKED BY
DESIGN OVERSIGHT: BEHZAD GOLEMOHAMMADI
STATE OF CALIFORNIA - DEPARTMENT OF TRANSPORTATION

LAST REVISION 00-00-00 | DATE PLOTTED => 11-JAN-2011 | TIME PLOTTED => 14:00

FOR REDUCED PLANS ORIGINAL SCALE IS IN MILLIMETERS 0 20 40 60 80
DGN FILE =>04-0120f1_0294S11R01.dgn
USERNAME =>florico
CU 04251
EA 0120F1

DIST	COUNTY	ROUTE	KILOMETER POST TOTAL PROJECT	SHEET No	TOTAL SHEETS
04	SF	80	13.2/13.9	294 S12R1	1204

REGISTERED ELECTRICAL ENGINEER — 10/01/08 DATE

REGISTERED PROFESSIONAL ENGINEER — FADI WALIEDDINE No. 11465 Exp. 12/31/2009 ELECTRICAL — STATE OF CALIFORNIA

PLANS APPROVAL DATE

PB AMERICAS, Inc.
A Parsons Brinckerhoff Company
303 Second St., Suite 700N
San Francisco, CA 94107-1317

The State of California or its officers or agents shall not be responsible for the accuracy or completeness of electronic copies of this plan sheet.

Caltrans now has a web site! To get to the web site, go to http://www.dot.ca.gov

Metric

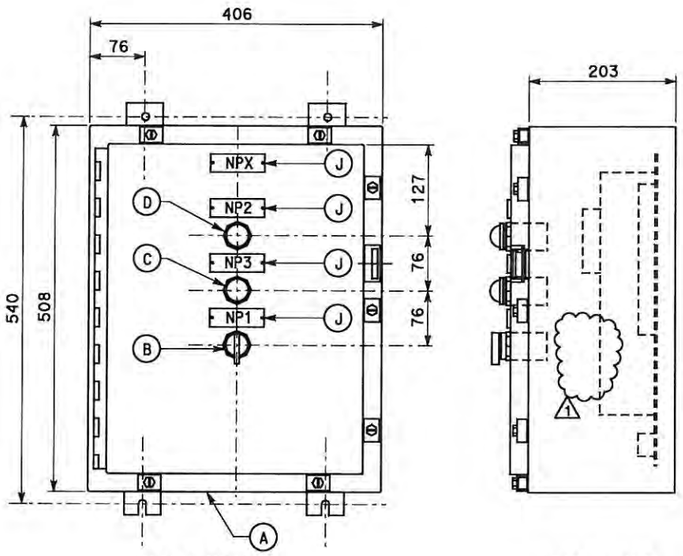

FRONT VIEW SIDE VIEW

FRONT PANEL

NAMEPLATE SCHEDULE			
ITEM	QTY	LINE No 1	LINE No 2
NP1	6	Lighting Control	Hand - Off - Auto
NP2	6	Lighting Control	Manual Mode
NP3	6	Lighting Control	Power On
NPX	1	Navigation Relay	Cabinet NAP-12W
NPX	1	Navigation Relay	Cabinet NAP-12E
NPX	1	Navigation Relay	Cabinet NAP-13W
NPX	1	Navigation Relay	Cabinet NAP-13E
NPX	1	Navigation Relay	Cabinet NAP-14W
NPX	1	Navigation Relay	Cabinet NAP-14E

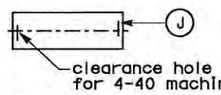

NOTE: Nameplates shall be mounted to the enclosure door, panel with 4-40 stainless steel machine screws. The enclosure door, panel to be drilled and tapped. (no self-tapping screws)

SHEET NOTE:

(1) Materials listed are quantities for each Navigation Relay Cabinet.

NOTES:

1. References:
   - For Elementary Diagrams, see sheet E-294J.
   - For Connection Diagrams, see sheet E-294L.
2. All components and related information shown on this drawing are per SAS Contract.

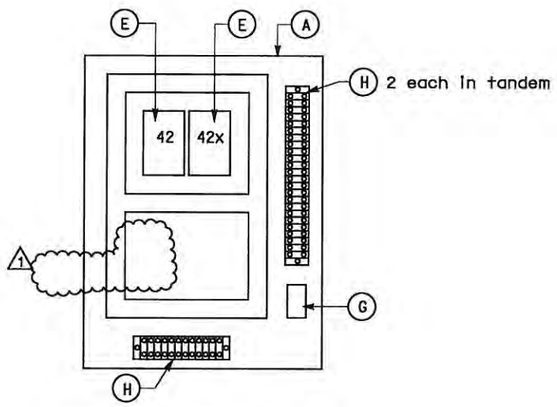

INSIDE PANEL LAYOUT

MATERIAL LIST (1)		
ITEM	DESCRIPTION	QTY
(A)	Enclosure, Stainless Steel Nema 4X with interior panel 423 x 330	1
(B)	Selector Switch, 3 position, corrosion resistant water-tight, 2 NO & 2 NC contacts. Legend: HAND-OFF-AUTO	1
(C)	Indication light, corrosion resistant, water-tight, transformer type 120 VAC, red lens Legend: Power On	1
(D)	Indication light, corrosion resistant, water-tight, transformer type 120 VAC, green lens Legend: MANUAL MODE	1
(E)	Relay, general purpose, 120 VAC coil, 4PDT, contact rating: 10 A contacts Relays: 42, 42X.	2
(F)	DELETED	
(G)	Fuse block, single pole, rated 30 A., with 5 A fuse	1
(H)	12 point terminal blocks, rated 600 V, 20 A, barrier type with screw terminals	3
(J)	Nameplates to be white lamicoid with black core, size 19 x 80 lettering to be 3 mm " condensed Gothic. (See above)	4

REGISTERED PROFESSIONAL ENGINEER — SYN YEE CHIN No. 18186 Exp. 09/30/2011 ELECTRICAL — STATE OF CALIFORNIA

Syn Yee Chin
FOR REVISION ONLY
1

REQUEST FOR INFORMATION NOT ADDRESSED IN THIS CCO REMAIN IN FORCE					
1	01/07/11	ELECTRICAL WARNING SYSTEMS	TW	RG	61
0	04/10/09	ELECTRICAL WARNING SYSTEMS	MP RR	RG FW	61
MARK	DATE	DESCRIPTIONS REVISIONS	BY	CH'D	CCO#

CONTRACT CHANGE ORDER NO. 61
SHEET 50 OF 104

DETAILS
NAVIGATION AND AVIATION WARNING SYSTEMS
SKYWAY STRUCTURES CABINET ARRANGEMENT

NO SCALE

E-294M

DATE	REVISED BY	DATE REVISED
CALCULATED/ DESIGNED BY	CHECKED BY	
DESIGN OVERSIGHT	BEHZAD GOLEMOHAMMADI	

STATE OF CALIFORNIA - DEPARTMENT OF TRANSPORTATION
Caltrans

LAST REVISION 00-00-00 — DATE PLOTTED => 11-JAN-2011 TIME PLOTTED => 14:00

FOR REDUCED PLANS ORIGINAL SCALE IS IN MILLIMETERS 0 20 40 60 80

DGN FILE =>04-0120f1_0294S12R01.dgn
USERNAME =>llorico

CU 04251 EA 0120F1

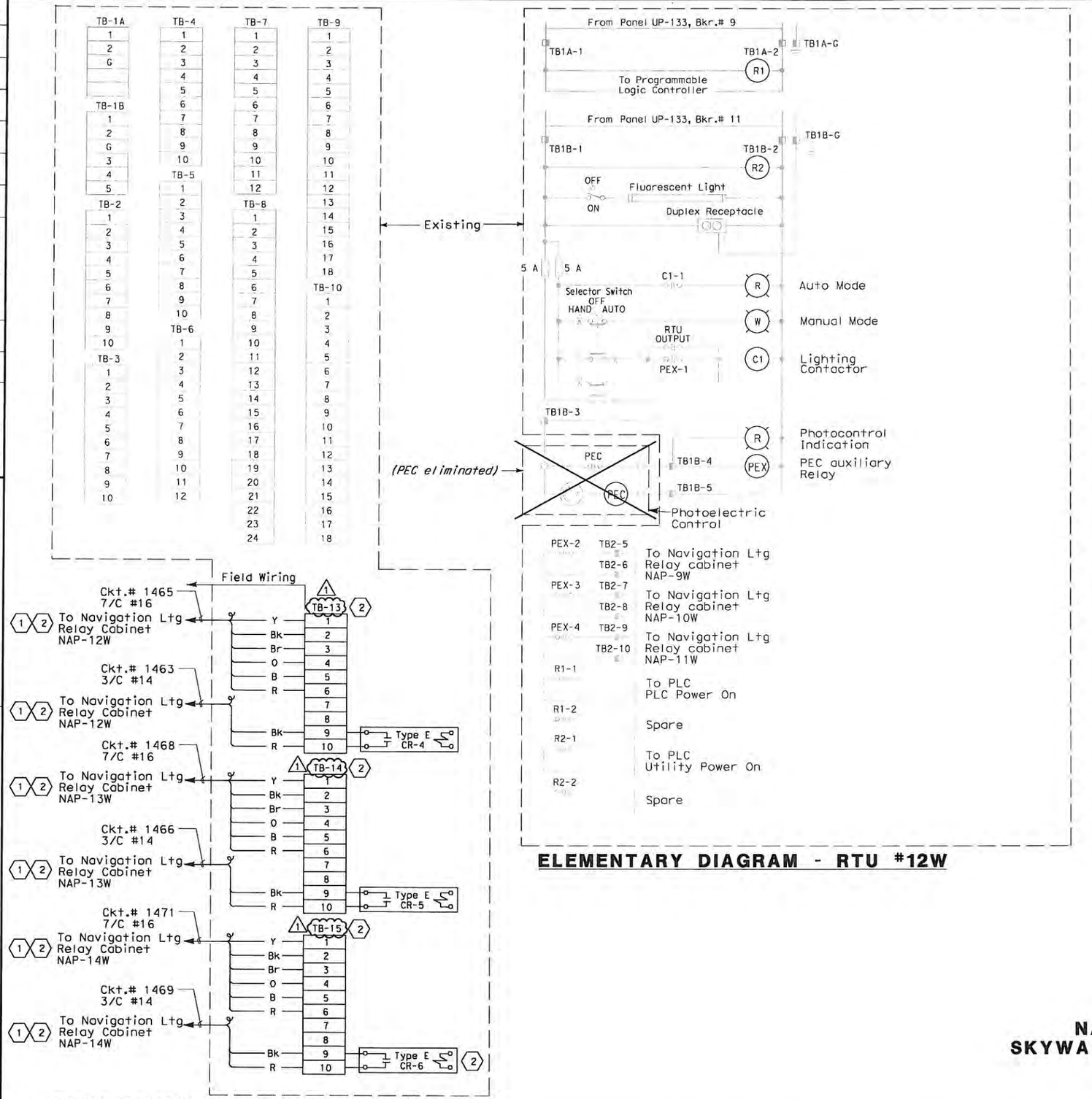

CONNECTION DIAGRAM - RTU #12W

ELEMENTARY DIAGRAM - RTU #12W

DIST	COUNTY	ROUTE	KILOMETER POST TOTAL PROJECT	SHEET NO	TOTAL SHEETS
04	SF	80	13.2/13.9	294 S13R1	1204

REGISTERED ELECTRICAL ENGINEER — 10/01/08 DATE

REGISTERED PROFESSIONAL ENGINEER — FADI WALIEDDINE No. 11465 Exp. 12/31/2009 ELECTRICAL — STATE OF CALIFORNIA

PLANS APPROVAL DATE

PB AMERICAS, Inc.
A Parsons Brinckerhoff Company
303 Second St., Suite 700N
San Francisco, CA 94107-1317

The State of California or its officers or agents shall not be responsible for the accuracy or completeness of electronic copies of this plan sheet.

Caltrans now has a web site! To get to the web site, go to http://www.dot.ca.gov

SHEET NOTES:

1. To Navigation System Connection Diagrams, see Sheet E-294L.
2. Furnished and installed per SAS Contract.

NOTES:

1. All spare conductors shall be coiled and taped at conductor ends unless terminated.
2. References:
   - For Navigation System Elementary Diagram, see sheet E-294J.
   - For circuit and conduit/cable tray schedules, see sheet E-294S.
3. Unless noted with sheet notes (1)(2), everything shown is furnished and installed under Skyway Contract.

REGISTERED PROFESSIONAL ENGINEER — SYN YEE CHIN No. 18186 Exp. 09/30/2011 ELECTRICAL — STATE OF CALIFORNIA

Syn Yee Chin
FOR REVISION ONLY

REQUEST FOR INFORMATION NOT ADDRESSED IN THIS CCO REMAIN IN FORCE					
1	02/26/10	ELECTRICAL WARNING SYSTEMS	RG	JE SYC	61
0	08/03/09	ELECTRICAL WARNING SYSTEMS	RG	JE FW	61
MARK	DATE	DESCRIPTIONS	BY	CH'D	CCO#
		REVISIONS			

CONTRACT CHANGE ORDER NO. 61
SHEET 51 OF 104

DETAILS
NAVIGATION AND AVIATION WARNING SYSTEMS
SKYWAY STRUCTURES SCADA RTU #12W WIRING DIAGRAM
NO SCALE

E-294N

STATE OF CALIFORNIA - DEPARTMENT OF TRANSPORTATION
DESIGN OVERSIGHT: BEHZAD GOLEMOHAMMADI
CALCULATED/DESIGNED BY
CHECKED BY
DATE REVISED BY
DATE REVISED

LAST REVISION 00-00-00
DATE PLOTTED => 2/25/2010
TIME PLOTTED => 4:44:51 PM

FOR REDUCED PLANS ORIGINAL SCALE IS IN MILLIMETERS 0 20 40 60 80

DGN FILE =>t:\13103\ms\pse\SAS Struc\CCO\SAS CCO61\2010-02-26_Submittal\04-0120F1_0294S13R01.dgn
USERNAME =>florico
CU 04251
EA 0120F1

DIST	COUNTY	ROUTE	KILOMETER POST TOTAL PROJECT	SHEET No	TOTAL SHEETS
04	SF	80	13.2/13.9	294 S14R1	1204

REGISTERED ELECTRICAL ENGINEER — 10/01/08 DATE

REGISTERED PROFESSIONAL ENGINEER — FADI WALIEDDINE No. 11465 Exp. 12/31/2009 ELECTRICAL — STATE OF CALIFORNIA

PLANS APPROVAL DATE

PB AMERICAS, Inc.
A Parsons Brinckerhoff Company
303 Second St., Suite 700N
San Francisco, CA 94107-1317

The State of California or its officers or agents shall not be responsible for the accuracy or completeness of electronic copies of this plan sheet.

Caltrans now has a web site! To get to the web site, go to http://www.dot.ca.gov

Caltrans Metric

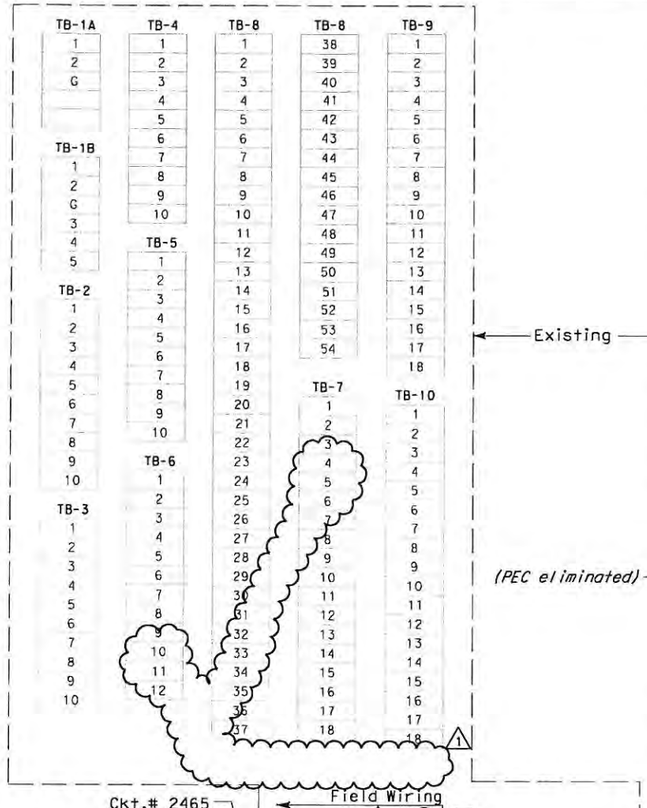

CONNECTION DIAGRAM - RTU #12E

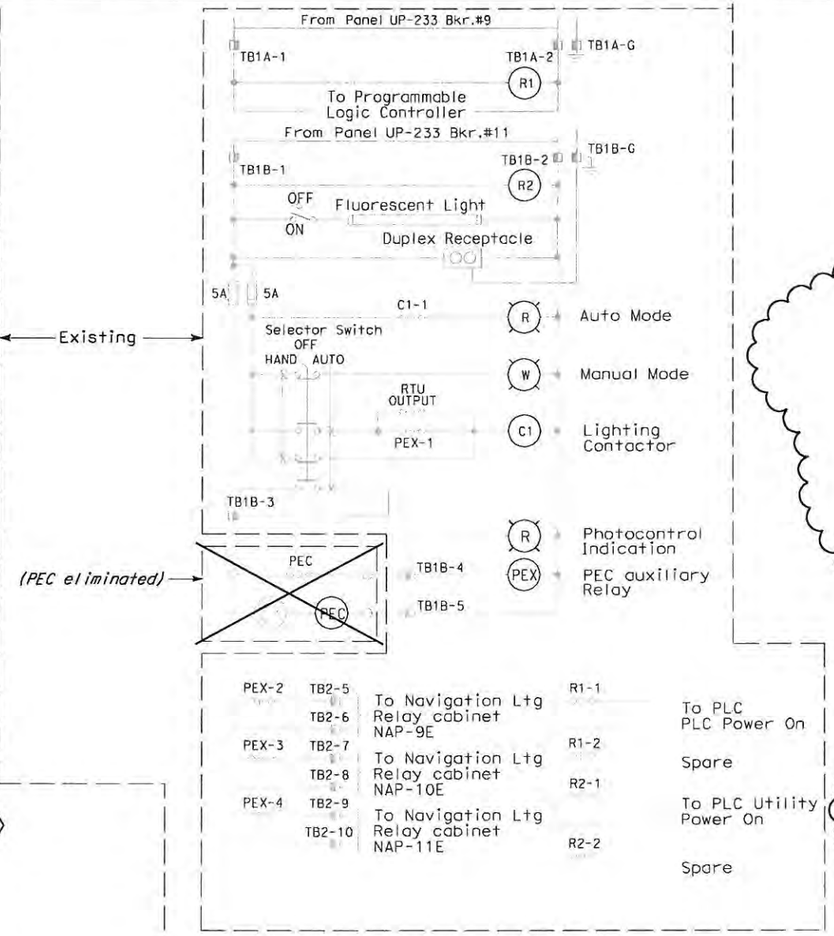

ELEMENTARY DIAGRAM - RTU #12E

SHEET NOTES:

1. To Navigation System Connection Diagrams, see sheet E-294L.
2. Deleted.
3. Furnished and installed per SAS Contract.

NOTES:

1. All spare conductors shall be coiled and taped at conductor ends unless terminated.
2. References:
   - For Navigation System Elementary Diagram, see sheet E-294J.
   - For circuit and conduit/cable tray schedules, see sheet E-294S.
3. Unless noted with sheet notes (1)(2)(3), everything shown is furnished and installed under Skyway Contract.

REGISTERED PROFESSIONAL ENGINEER — SYN YEE CHIN No. 18186 Exp. 09/30/2011 ELECTRICAL — STATE OF CALIFORNIA

Syn Yee Chin
FOR REVISION ONLY
1

MARK	DATE	DESCRIPTIONS	BY	CH'D	CCO#
		REVISIONS			
1	02/26/10	ELECTRICAL WARNING SYSTEMS	RG	JE SYC	61
0	08/03/09	ELECTRICAL WARNING SYSTEMS	RG	JE FW	61

CONTRACT CHANGE ORDER NO. 61
SHEET 52 OF 104

DETAILS
NAVIGATION AND AVIATION WARNING SYSTEMS
SKYWAY STRUCTURES SCADA RTU #12E WIRING DIAGRAM

NO SCALE

E-294P

CALCULATED/ DESIGNED BY			
CHECKED BY			
DATE REVISED			
REVISED BY			
DATE			

DESIGN OVERSIGHT
BEHZAD GOLEMOHAMMADI

STATE OF CALIFORNIA - DEPARTMENT OF TRANSPORTATION
Caltrans

LAST REVISION 00-00-00
DATE PLOTTED => 2/25/2010
TIME PLOTTED => 4:46:40 PM

FOR REDUCED PLANS ORIGINAL SCALE IS IN MILLIMETERS 0 20 40 60 80

DGN FILE =>t:\13103\ms\pse\SAS Struc\CCO\SAS CC061\2010-02-26_Submittal\04-0120F1_0294S14R01.dgn
USERNAME =>llorico

CU 04251 | EA 0120F1

UTILITY PANEL UP-134 (Ckt.# 1335) (1)

Location: SKYWAY SERVICE PLATFORM #12W (1)

LOAD DESCRIPTION		LTG	REC	OTH.	CB				CB	LTG	REC	OTH.	LOAD DESCRIPTION
RECEPT	(3) Westbound North Barrier		540		20/1	1	A	2	20/1		180		RECEPT (1) Pier E6W
RECEPT	(3) Westbound South Barrier		540		20/1	3	B	4	20/1				Spare
RECEPT	(2) Service Platform #12W		360		20/1	5	C	6	20/1	779			Pier E6W Ltg
RECEPT	(3) Girder		540		20/1	7	A	8	20/1	861			Girder Ltg (21)
Spare ↓					20/1	9	B	10	20/1			2000	Controller Cabinet #TOS-12WA
					20/1	11	C	12	20/1			600	Navigation Relay Cabinet #NAP - 12W (2)(3)
TOTAL VA		-	1980	-						1640	180	2600	TOTAL VA

LOAD SUMMARY IN VA (INCLUDES .90 PF)

Lighting (At 100%): 1,640 VA
Gen Use (1st 10 kVA at 100% Plus 50% of remainder): 4,760 VA (2)

TOTAL kVA: 6.400 kVA
TOTAL A: 18.30 A at 208 V, 3 ø (2)

BALANCE (kVA)

Phase A - 2.121
Phase B - 2.540
Phase C - 1.739 (2)

VOLTAGE: 208/120 V
PHASE/WIRES: 3 PH,4 W
BUS RATING: 100 A
MAIN: 60 A
MOUNTING: Surface in Fiberglass Enclosure
K.A.I.C.: 10

UTILITY PANEL UP-135 (Ckt.# 1324) (1)

Location: SKYWAY SERVICE PLATFORM #13W (1)

LOAD DESCRIPTION		LTG	REC	OTH.	CB				CB	LTG	REC	OTH.	LOAD DESCRIPTION
RECEPT	(3) Westbound North Barrier		540		20/1	1	A	2	20/1		180		RECEPT (1) Pier E7W
RECEPT	(3) Westbound South Barrier		540		20/1	3	B	4	20/1				Spare
RECEPT	(2) Service Platform #13W		360		20/1	5	C	6	20/1	779			Pier E7W Ltg
RECEPT	(2) Girder		360		20/1	7	A	8	20/1	1066			Girder Ltg (26)
Spare ↓					20/1	9	B	10	20/1			2000	Controller Cabinet #TOS-13WA
					20/1	11	C	12	20/1			600	Navigation Relay Cabinet #NAP - 13W (2)(3)
TOTAL VA		-	1800	-						1845	180	2600	TOTAL VA

LOAD SUMMARY IN VA (INCLUDES .90 PF)

Lighting (At 100%): 1,845 VA
Gen Use (1st 10 kVA at 100% Plus 50% of remainder): 4,580 VA (2)

TOTAL kVA: 6.425 kVA
TOTAL A: 18.36 A at 208 V, 3 ø (2)

BALANCE (kVA)

Phase A - 2.146
Phase B - 2.540
Phase C - 1.739 (2)

VOLTAGE: 208/120 V
PHASE/WIRES: 3 PH,4 W
BUS RATING: 100 A
MAIN: 60 A
MOUNTING: Surface in Fiberglass Enclosure
K.A.I.C.: 10

SHEET NOTES:

(1) Utility Panels are existing in Skyway Structures Service Platforms. Contractor to verify As-Built conditions.

(2) Contractor shall verify if existing circuit breaker is in good working condition. Replace as required.

(3) Connections to UP-134, UP-135 and UP-136 breaker # 12 are per SAS Contract only.

NOTE:

1. Unless noted with sheet notes (2)(3), everything shown is furnished and installed under Skyway Contract

UTILITY PANEL UP-136 (Ckt.# 1325) (1)

Location: SKYWAY SERVICE PLATFORM #14W (1)

LOAD DESCRIPTION		LTG	REC	OTH.	CB				CB	LTG	REC	OTH.	LOAD DESCRIPTION
RECEPT	(3) Westbound North Barrier		540		20/1	1	A	2	20/1		180		RECEPT (1) Pier E8W
RECEPT	(3) Westbound South Barrier		540		20/1	3	B	4	20/1				Spare
RECEPT	(2) Service Platform #14W		360		20/1	5	C	6	20/1	779			Pier E8W Ltg
RECEPT	(3) Girder		540		20/1	7	A	8	20/1	902			Girder Ltg (22)
Spare ↓					20/1	9	B	10	20/1				Spare
					20/1	11	C	12	20/1			600	Navigation Relay Cabinet #NAP - 14W (2)(3)
TOTAL VA		-	1980	-						1681	180	600	TOTAL VA

LOAD SUMMARY IN VA (INCLUDES .90 PF)

Lighting (At 100%): 1,681
Gen Use (1st 10 kVA at 100% Plus 50% of remainder): 2,760 VA (2)

TOTAL kVA: 4.441 kVA
TOTAL A: 12.84 A at 208 V, 3 ø (2)

BALANCE (kVA)

Phase A - 2.162
Phase B - 0.540
Phase C - 1.739 (2)

VOLTAGE: 208/120 V
PHASE/WIRES: 3 PH,4 W
BUS RATING: 100 A
MAIN: 60 A
MOUNTING: Surface in Fiberglass Enclosure
K.A.I.C.: 10

DIST	COUNTY	ROUTE	KILOMETER POST TOTAL PROJECT	SHEET No	TOTAL SHEETS
04	SF	80	13.2/13.9	294 S15	1204

10/01/08
REGISTERED ELECTRICAL ENGINEER DATE

REGISTERED PROFESSIONAL ENGINEER — FADI WALIEDDINE No. 11465 Exp.12/31/2009 ELECTRICAL — STATE OF CALIFORNIA

PLANS APPROVAL DATE

PB AMERICAS, Inc.
A Parsons Brinckerhoff Company
303 Second St., Suite 700N
San Francisco, CA 94107-1317

The State of California or its officers or agents shall not be responsible for the accuracy or completeness of electronic copies of this plan sheet.

Caltrans now has a web site! To get to the web site, go to http://www.dot.ca.gov

DATE	REVISED BY	DATE REVISED
CALCULATED/ DESIGNED BY		CHECKED BY
DESIGN OVERSIGHT	BEHZAD GOLEMOHAMMADI	

STATE OF CALIFORNIA - DEPARTMENT OF TRANSPORTATION
Caltrans

REQUEST FOR INFORMATION NOT ADDRESSED IN THIS CCO REMAIN IN FORCE

MARK	DATE	REVISIONS DESCRIPTIONS	BY	CH'D	CCO#
0	04/10/09	ELECTRICAL WARNING SYSTEMS	MP RR	RG FW	61

CONTRACT CHANGE ORDER NO. 61
SHEET 53 OF 104

DETAILS
NAVIGATION AND AVIATION WARNING SYSTEMS
SKYWAY STRUCTURES PANEL BOARD SCHEDULES WESTBOUND

NO SCALE

E-294Q

LAST REVISION 00-00-00 | DATE PLOTTED => 8/14/2009 | TIME PLOTTED => 10:07:41 AM

FOR REDUCED PLANS ORIGINAL SCALE IS IN MILLIMETERS 0 20 40 60 80

DGN FILE =>T:\13103\MS\pse\SAS Struc\CCO\SAS CC061\2009-08-03_Issued for Submittal\04-0120f1_0294S15.dgn
USERNAME =>garclar

CU 04251 | EA 0120F1

UTILITY PANEL UP-235 (Ckt.#2324) (1)

Location: SKYWAY SERVICE PLATFORM #13E (1)

LOAD DESCRIPTION	LTG	REC	OTH.	CB			CB	LTG	REC	OTH.	LOAD DESCRIPTION
Recept (3) Eastbound North Barrier		540		20/1	1	A 2	20/1		180		Recept (1) Pier E7E
Recept (4) Eastbound South Barrier		720		20/1	3	B 4	20/1				Spare
Recept (2) Service Platform		360		20/1	5	C 6	20/1	779			Pier E7E Ltg
Recept (2) Eastbound Girder Box		360		20/1	7	A 8	20/1	1066			Girder Ltg (26)
Spare ↓				20/1	9	B 10	20/1				Spare
				20/1	11	C 12	20/1			600	Navigation Relay Cabinet #NAP - 13E (2)(3)
TOTAL VA	-	1980	-					1845	180	600	TOTAL VA

LOAD SUMMARY IN VA (INCLUDES .90 PF)

Lighting (At 100%): 1,845 VA
Gen Use (1st 10 kVA at 100% Plus 50% of remainder): 2,760 VA (2)

TOTAL kVA: 4.605 kVA
TOTAL A: 13.30 A at 208 V, 3 ø

BALANCE (kVA)

Phase A - 2.146
Phase B - 0.720
Phase C - 1.739 (2)

VOLTAGE: 208/120 V
PHASE/WIRES: 3 PH,4 W
BUS RATING: 100 A
MAIN: 60 A
MOUNTING: Surface in Fiberglass Enclosure
K.A.I.C.: 10

UTILITY PANEL UP-236 (Ckt.# 2348) (1)

Location: SKYWAY SERVICE PLATFORM #14E (1)

LOAD DESCRIPTION	LTG	REC	OTH.	CB			CB	LTG	REC	OTH.	LOAD DESCRIPTION
Recept (3) Eastbound North Barrier		540		20/1	1	A 2	20/1		180		Recept (1) Pier E8E
Recept (3) Eastbound South Barrier		540		20/1	3	B 4	20/1				Spare
Recept (2) Service Platform		360		20/1	5	C 6	20/1	779			Pier E8E Ltg
Recept (3) Eastbound Girder Box		540		20/1	7	A 8	20/1	902			Girder Ltg (22)
Spare ↓				20/1	9	B 10	20/1				Spare
				20/1	11	C 12	20/1			600	Navigation Relay Cabinet #NAP - 14E (2)(3)
TOTAL VA	-	1980	-					1681	180	600	TOTAL VA

LOAD SUMMARY IN VA (INCLUDES .90 PF)

Lighting (At 100%): 1,681 VA
Gen Use (1st 10 kVA at 100% Plus 50% of remainder): 2,760 VA (2)

TOTAL kVA: 4.441 kVA
TOTAL A: 12.84 A at 208 V, 3 ø

BALANCE (kVA)

Phase A - 2.162
Phase B - 0.540
Phase C - 1.739 (2)

VOLTAGE: 208/120 V
PHASE/WIRES: 3 PH,4 W
BUS RATING: 100 A
MAIN: 60 A
MOUNTING: Surface in Fiberglass Enclosure
K.A.I.C.: 10

REQUEST FOR INFORMATION NOT ADDRESSED IN THIS CCO REMAIN IN FORCE

MARK	DATE	REVISIONS DESCRIPTIONS	BY	CH'D	CCO#
0	04/10/09	ELECTRICAL WARNING SYSTEMS	MP RR	RG FW	61

CONTRACT CHANGE ORDER NO. 61
SHEET 54 OF 104

SHEET NOTES:

(1) Utility Panels are existing in Skyway Structures Service Platforms. Contractor to verify As-Built conditions.

(2) Contractor to verify if existing circuit breaker is in good working condition. Replace as required.

(3) Connections to UP-234 and UP-236 breaker 12, connection to UP-235 breaker #24 are per SAS contract only.

NOTE:

1. Unless noted with sheet notes (2)(3), everything shown is furnished and installed under Skyway Contract

UTILITY PANEL UP-234 (Ckt.#2347) (1)

Location: SKYWAY SERVICE PLATFORM #12E (1)

LOAD DESCRIPTION	LTG	REC	OTH.	CB			CB	LTG	REC	OTH.	LOAD DESCRIPTION
Recept (3) Eastbound North Barrier		540		20/1	1	A 2	20/1		180		Recept (1) Pier E6E
Recept (3) Eastbound South Barrier		540		20/1	3	B 4	20/1				Spare
Recept (2) Service Platform		360		20/1	5	C 6	20/1	779			Pier E6E Ltg
Recept (4) Eastbound Girder Box		720		20/1	7	A 8	20/1	861			Girder Ltg (21)
Strong Motion Recorder Box #1A			900	20/1	9	B 10	20/1			2000	Controller Cabinet #TOS-12EA
Strong Motion Recorder Box #1B			300	20/1	11	C 12	20/1				Spare
Spare ↓				20/1	13	A 14	20/1				↓
				20/1	15	B 16	20/1				
				20/1	17	C 18	20/1				
Space ↓					19	A 20					Space ↓
					21	B 22					
					23	C 24				600	Navigation Relay Cabinet #NAP - 12E (2)(3)
TOTAL VA	-	2160	1200					1640	180	2600	TOTAL VA

LOAD SUMMARY IN VA (INCLUDES .90 PF)

Lighting (At 100%): 1,640 VA
Gen Use (1st 10 kVA at 100% Plus 50% of remainder): 6,140 VA (2)

TOTAL kVA: 7.780 kVA
TOTAL A: 22.12 A at 208 V, 3 ø

BALANCE (kVA)

Phase A - 2.301
Phase B - 3.440
Phase C - 2.039 (2)

VOLTAGE: 208/120 V
PHASE/WIRES: 3 PH,4 W
BUS RATING: 100 A
MAIN: 100 A
MOUNTING: Surface in Fiberglass Enclosure
K.A.I.C.: 10

Caltrans Metric

DIST	COUNTY	ROUTE	KILOMETER POST TOTAL PROJECT	SHEET No.	TOTAL SHEETS
04	SF	80	13.2/13.9	294 S16	1204

10/01/08
REGISTERED ELECTRICAL ENGINEER DATE

REGISTERED PROFESSIONAL ENGINEER — FADI WALIEDDINE No. 11465 Exp. 12/31/2009 ELECTRICAL — STATE OF CALIFORNIA

PLANS APPROVAL DATE

PB AMERICAS, Inc.
A Parsons Brinckerhoff Company
303 Second St., Suite 700N
San Francisco, CA 94107-1317

The State of California or its officers or agents shall not be responsible for the accuracy or completeness of electronic copies of this plan sheet.

Caltrans now has a web site! To get to the web site, go to http://www.dot.ca.gov

DETAILS
NAVIGATION AND AVIATION WARNING SYSTEMS
SKYWAY STRUCTURES PANEL BOARD SCHEDULES EASTBOUND

NO SCALE

E-294R

DESIGNED BY: BEHZAD GOLEMOHAMMADI
CALCULATED/DESIGNED BY:
CHECKED BY:
DATE REVISED:
REVISED BY:
DATE:
DESIGN OVERSIGHT
STATE OF CALIFORNIA - DEPARTMENT OF TRANSPORTATION
Caltrans

LAST REVISION 00-00-00
DATE PLOTTED => 8/11/2009
TIME PLOTTED => 5:09:54 PM

FOR REDUCED PLANS ORIGINAL SCALE IS IN MILLIMETERS 0 20 40 60 80

DGN FILE =>T:\13103\MS\pse\SAS Struc\CCO\SAS CC061\2009-08-03_Issued for Submittal\04-0120F1_0294S16.dgn
USERNAME =>florico
CU 04251 EA 0120F1

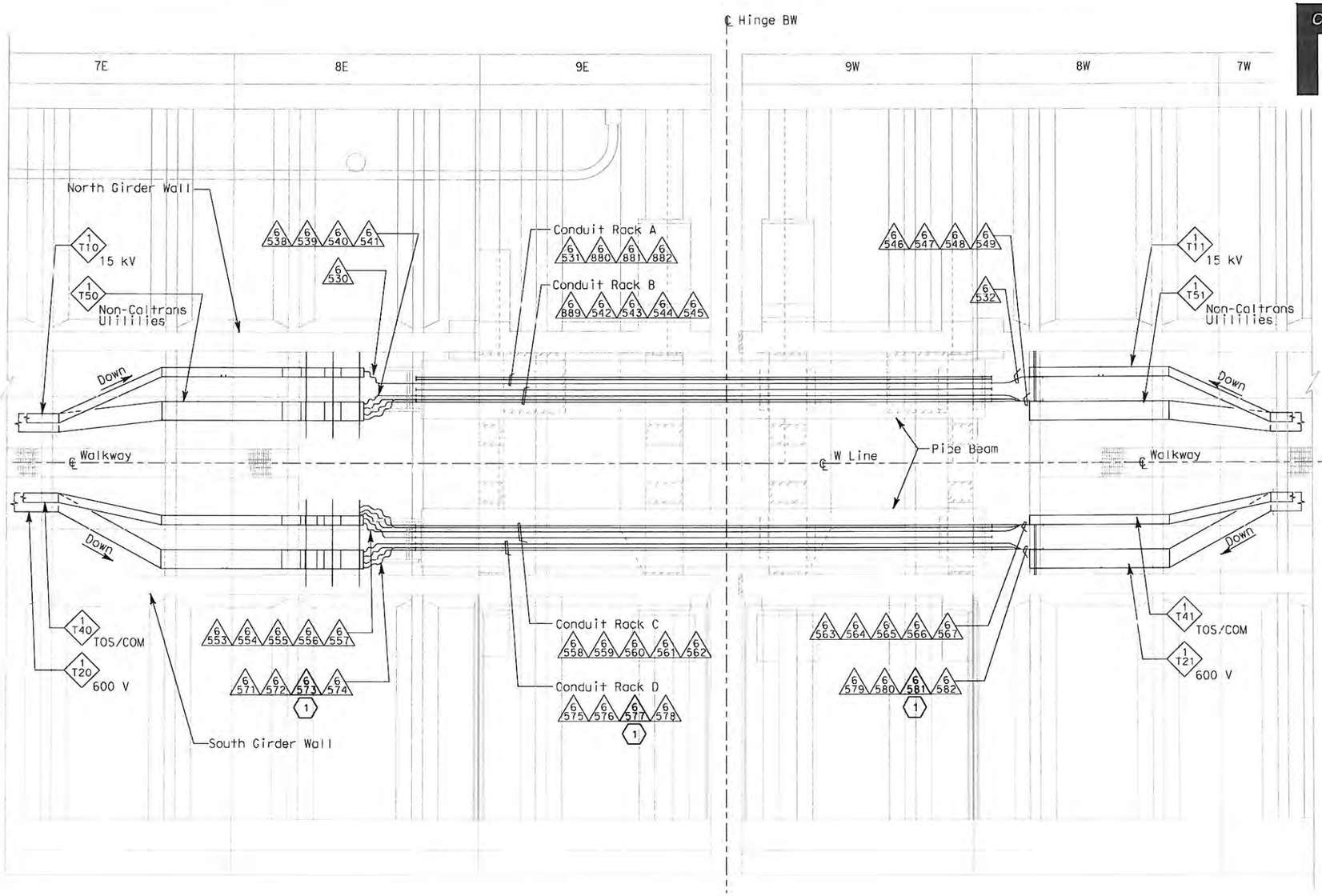

PLAN - HINGE BW

SCALE: 1:75

DIST	COUNTY	ROUTE	KILOMETER POST TOTAL PROJECT	SHEET No	TOTAL SHEETS
04	SF	80	13.2/13.9	294 S17	1204

REGISTERED ELECTRICAL ENGINEER — 4/10/09 DATE

REGISTERED PROFESSIONAL ENGINEER — FADI WALIEDDINE No. 11465 Exp. 12/31/2009 ELECTRICAL — STATE OF CALIFORNIA

PLANS APPROVAL DATE

PB AMERICAS, Inc.
A Parsons Brinckerhoff Company
303 Second St., Suite 700N
San Francisco, CA 94107-1317

The State of California or its officers or agents shall not be responsible for the accuracy or completeness of electronic copies of this plan sheet.

Caltrans now has a web site! To get to the web site, go to http://www.dot.ca.gov

SHEET NOTES:

(1) The intent of this plan sheet is to provide the routing information of the existing skyway conduits specified on Sheet E-294B.

NOTES:

1. For general notes, see sheet E-294A.
2. Unless noted otherwise, everything shown is existing that have been furnished and installed under Skyway Contract.

REQUEST FOR INFORMATION NOT ADDRESSED IN THIS CCO REMAIN IN FORCE					
0	04/10/09	ELECTRICAL WARNING SYSTEMS	RG	FW	61
MARK	DATE	DESCRIPTIONS	BY	CH'D	CCO#
REVISIONS					

CONTRACT CHANGE ORDER NO. 61
SHEET 55 OF 104

DETAILS
NAVIGATION AND AVIATION WARNING SYSTEMS
SKYWAY STRUCTURES HINGE BW

SCALE AS NOTED

E-294S

STATE OF CALIFORNIA - DEPARTMENT OF TRANSPORTATION — Caltrans

DESIGN OVERSIGHT — BEHZAD GOLEMOHAMMADI

CALCULATED/ DESIGNED BY — CHECKED BY

DATE — REVISED BY — DATE REVISED

THIS PLAN ACCURATE FOR ELECTRICAL WORK ONLY.

FOR REDUCED PLANS ORIGINAL SCALE IS IN MILLIMETERS 0 20 40 60 80

DGN FILE =>T:\13103\MS\pse\SAS Struc\CCO\SAS CCO61\2009-04-10_Issued for Submittal\04-0120F1_0294S17.dgn
USERNAME =>llorico

CU 04251 | EA 0120F1

LAST REVISION 00-00-00 — DATE PLOTTED => 4/10/2009 TIME PLOTTED => 11:42:26 AM

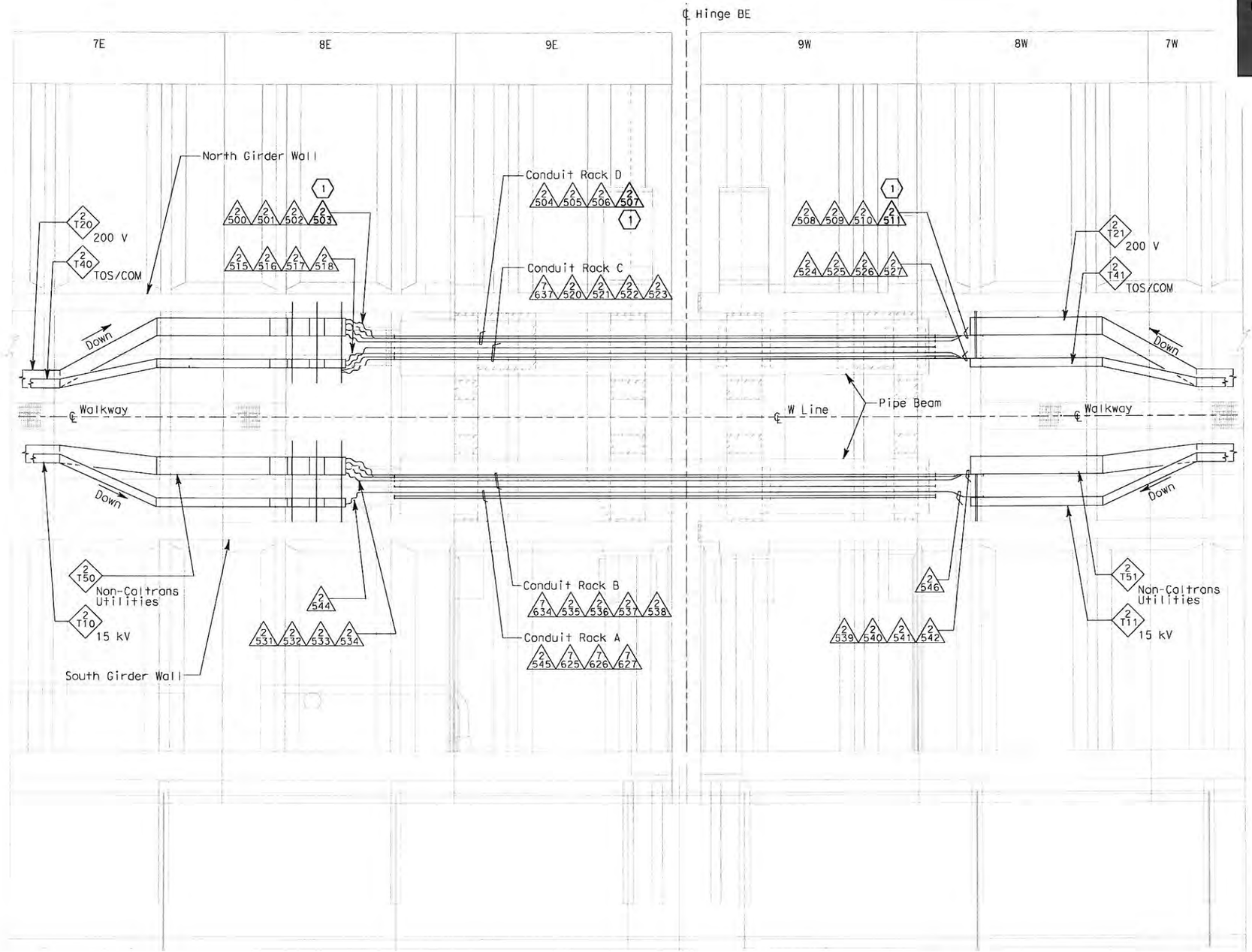

PLAN - HINGE BE
SCALE: 1:75

Caltrans Metric

DIST	COUNTY	ROUTE	KILOMETER POST TOTAL PROJECT	SHEET No	TOTAL SHEETS
04	SF	80	13.2/13.9	294 S18	1204

4/10/09
REGISTERED ELECTRICAL ENGINEER DATE

REGISTERED PROFESSIONAL ENGINEER — FADI WALIEDDINE No. 11465 EXP. 12/31/2009 ELECTRICAL — STATE OF CALIFORNIA

PLANS APPROVAL DATE

PB AMERICAS, Inc.
A Parsons Brinckerhoff Company
303 Second St., Suite 700N
San Francisco, CA 94107-1317

The State of California or its officers or agents shall not be responsible for the accuracy or completeness of electronic copies of this plan sheet.

Caltrans now has a web site! To get to the web site, go to http://www.dot.ca.gov

SHEET NOTES:

(1) The intent of this plan sheet is to provide the routing information of the existing skyway conduits specified on Sheet E-294B.

NOTES:

1. For general notes, see sheet E-294A.
2. Unless noted otherwise, everything shown is existing that have been furnished and installed under Skyway Contract.

REQUEST FOR INFORMATION NOT ADDRESSED IN THIS CCO REMAIN IN FORCE

MARK	DATE	REVISIONS DESCRIPTIONS	BY	CH'D	CCO#
0	04/10/09	ELECTRICAL WARNING SYSTEMS	RG	FW	61

CONTRACT CHANGE ORDER NO. 61
SHEET 56 OF 104

DETAILS
NAVIGATION AND AVIATION WARNING SYSTEMS
SKYWAY STRUCTURES HINGE BE
SCALE AS NOTED

E-294T

STATE OF CALIFORNIA - DEPARTMENT OF TRANSPORTATION
Caltrans

DESIGN OVERSIGHT: BEHZAD GOLEMOHAMMADI

CALCULATED/ DESIGNED BY	CHECKED BY	DATE	REVISED BY	DATE REVISED

THIS PLAN ACCURATE FOR ELECTRICAL WORK ONLY.

FOR REDUCED PLANS ORIGINAL SCALE IS IN MILLIMETERS 0 20 40 60 80

DGN FILE =>T:\13103\MS\pse\SAS Struc\CCO\SAS CCO61\2009-04-10_Issued for Submittal\04-0120F1_0294S18.dgn
USERNAME =>llorico
CU 04251
EA 0120F1

LAST REVISION 00-00-00
DATE PLOTTED => 4/10/2009
TIME PLOTTED => 11:45:56 AM

AVIATION AND NAVIGATION LIGHTING FIXTURE SCHEDULE

Type	Description	Remarks
AV-1	Main Tower Marker Light FAA L-864, medium intensity, flashing, red, obstruction light. The light shall consist of a red lantern with six marine signal lamps controlled by a six-place microprocessor lamp changer. The flashing shall be at a rate of 20 flashes per minute. Input power shall be 480 VAC, single phase and be input to a transder.	
AV-2	Main Cable Marker Light FAA L-810, steady, red, obstruction light. The light shall consist of a red lantern with four marine signal lamps controlled by a four-place microprocessor lamp changer. Incoming power shall be 480 VAC, single phase and shall be input to a transformer.	
NV-1	Main Channel Marker Navigation Light with LED Green in color, with a 360-degree horizontal arc visibility. Housing shall be corrosion resistant and gasketed with remote lamp monitoring capability, 120VAC with 3x4 LED Array. Pharos Marine/Automatic Power Inc. Model FA-249LED or approved equivalent. (4)	
NV-2	Channel Marker Navigation Light shall consist of a green lantern with a 360-degree horizontal arc, with six marine signal lamps controlled by a six-place microprocessor lamp changer. Incoming power shall be 120 VAC, single phase and shall be input to a transformer. The rectified output shall be at 12 VDC to power the lamps. The housing shall be corrosion-resistant and gasketed.	Not used in this contract.
NV-3	Pier Marker Navigation Light with LED, Red in color, with a 180-degree horizontal arc visibility. Housing shall be corrosion resistant and gasketed with remote lamp monitoring capability, 120VAC with 3x4 LED Array. Lights shall conform to the latest provisions of Title 33 CFR chapter 1, Section 118.60. Pharos Marine/Automatic Power Inc. Model FA-249LED or approved equivalent. (4)(1)	
NV-4	Red in color, with 360 degree visibility. Pharos Marine/Automatic Power FA-249 LED Bridge Lantern, 120VAC, with 3x4 LED Array, or approved equivalent.	To mark reduced vertical clearance under OBG Travelers.

DIST	COUNTY	ROUTE	KILOMETER POST TOTAL PROJECT	SHEET No	TOTAL SHEETS
04	SF	80	13.2/13.9	295 R4	1204

Jens Erlingsson 12/19/02
REGISTERED ELECTRICAL ENGINEER DATE

JENS ERLINGSSON No. 8249 Exp. 9/30/06 ELECTRICAL — REGISTERED PROFESSIONAL ENGINEER — STATE OF CALIFORNIA

12-6-04
PLANS APPROVAL DATE

PB POWER, Inc.
A Parsons Brinckerhoff Company
303 Second St., Suite 700N
San Francisco, CA 94107-1317

The State of California or its officers or agents shall not be responsible for the accuracy or completeness of electronic copies of this plan sheet.

Caltrans now has a web site! To get to the web site, go to http://www.dot.ca.gov

REQUEST FOR INFORMATION NOT ADDRESSED IN THIS CCO REMAIN IN FORCE					
4	01/07/11	ELECTRICAL WARNING SYSTEMS	TW	RG	61
3	10/15/10	TRAVELER MODIFICATIONS	NK	RG	137
2	08/13/10	TRAVELER MODIFICATIONS	TW	RG	137
1	04/10/09	ELECTRICAL WARNING SYSTEMS	RY RR	RG FW	61
MARK	DATE	DESCRIPTIONS	BY	CH'D	CCO#
REVISIONS					

CONTRACT CHANGE ORDER NO. 61
SHEET 57 OF 104

SYN YEE CHIN No. 18186 Exp. 09/30/2011 ELECTRICAL — REGISTERED PROFESSIONAL ENGINEER — STATE OF CALIFORNIA

Syn Yee Chin
FOR REVISION ONLY (2)(3)(4)

FADI WALIEDDINE No. 11465 Exp. 12/31/2009 ELECTRICAL — REGISTERED PROFESSIONAL ENGINEER — STATE OF CALIFORNIA

FOR REVISION ONLY (1)

DETAILS
NAVIGATION AND AVIATION WARNING SYSTEMS
LIGHTING FIXTURE SCHEDULE

NO SCALE

E-297

DESIGNED BY	CALCULATED/	CHECKED BY
KG	EDC	

DATE	REVISED BY	DATE REVISED
10/01		
11/01		

DESIGN OVERSIGHT: BEHZAD GOLEMOHAMMADI

STATE OF CALIFORNIA - DEPARTMENT OF TRANSPORTATION
Caltrans

LAST REVISION 00-00-00
DATE PLOTTED => 2/17/2011
TIME PLOTTED => 5:01:48 PM

FOR REDUCED PLANS ORIGINAL SCALE IS IN MILLIMETERS 0 20 40 60 80

DGN FILE =>T:\13103\MS\pse\SAS Struc\CCO\SAS CC061\Draft 6 - 2011.01.07_Issued for Submittal\04-0120F1_0295R04.dgn
USERNAME =>llorico
CU 04251
EA 0120F1

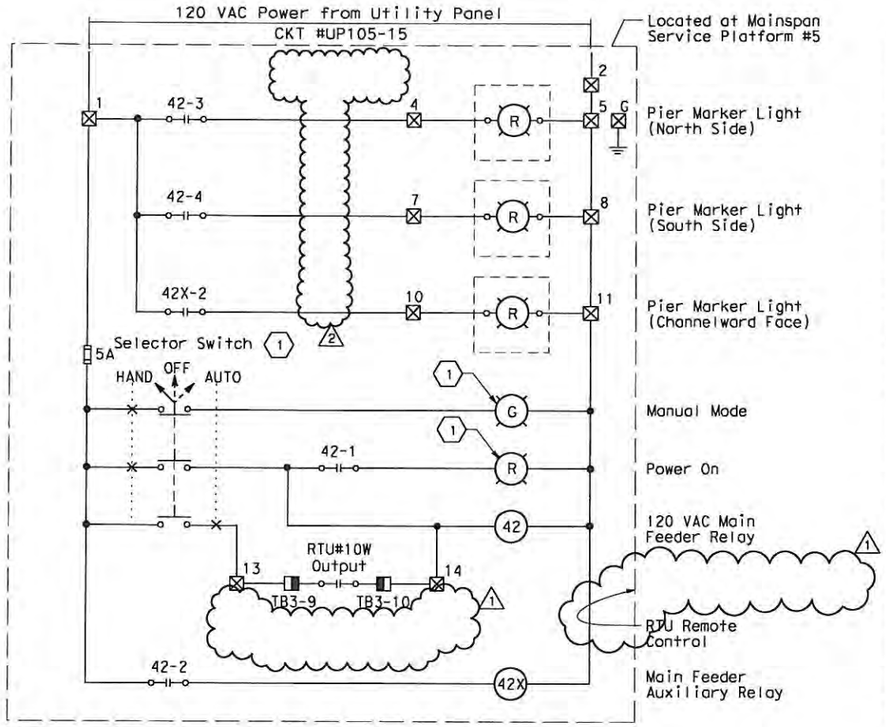

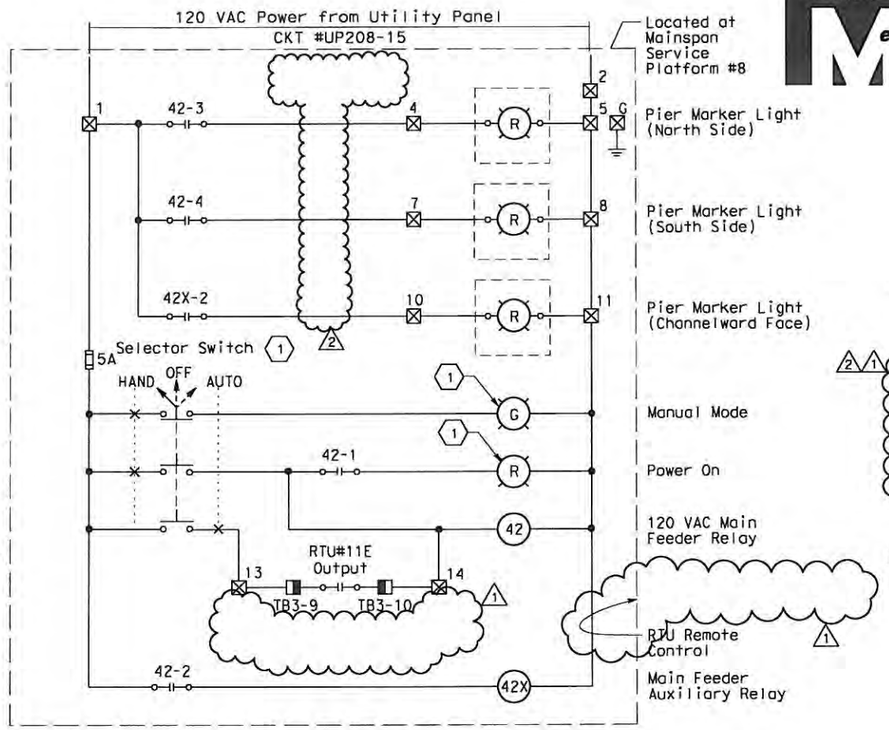

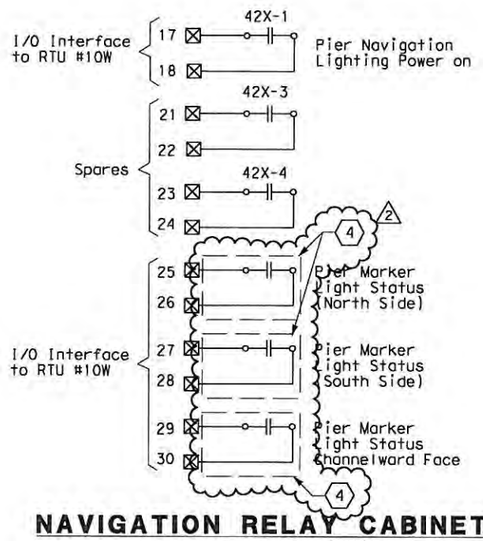

NAVIGATION RELAY CABINET #NAP-5
MAIN TOWER

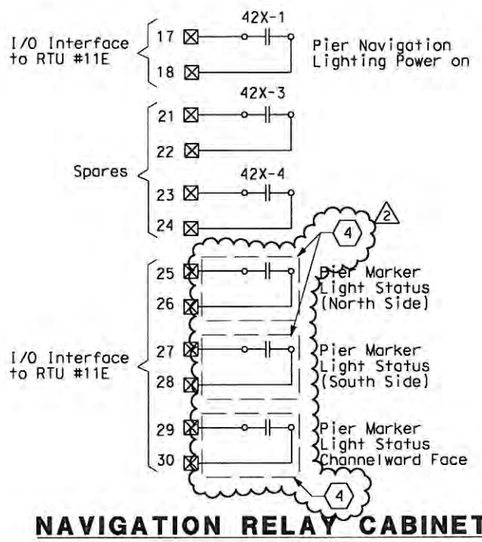

NAVIGATION RELAY CABINET #NAP-8
PIER E2

DIST	COUNTY	ROUTE	KILOMETER POST TOTAL PROJECT	SHEET No	TOTAL SHEETS
04	SF	80	13.2/13.9	296 R2	1204

12/19/02
REGISTERED ELECTRICAL ENGINEER DATE

JENS ERLINGSSON No. 8249 Exp. 9/30/06 ELECTRICAL — REGISTERED PROFESSIONAL ENGINEER — STATE OF CALIFORNIA

12-6-04
PLANS APPROVAL DATE

PB POWER, Inc.
A Parsons Brinckerhoff Company
303 Second St., Suite 700N
San Francisco, CA 94107-1317

The State of California or its officers or agents shall not be responsible for the accuracy or completeness of electronic copies of this plan sheet.

Caltrans now has a web site! To get to the web site, go to http://www.dot.ca.gov

SHEET NOTES:

1. Locate device at the face of enclosure door panel.
2. Deleted.
3. Deleted.
4. Relays are located inside vendor furnished monitoring box for marker lights.

NOTES:

1. References:
   - For navigation relay cabinet arrangement, see sheet E-305.
   - For navigation relay cabinet #NAP-5 and #NAP-8 connection diagrams, see sheet E-303.
   - For navigation and aviation fixture schedule, see sheet E-297.
   - For RTU #10W elementary and connection diagram, see sheet E-330.
   - For RTU #11E elementary and connection diagram, see sheet E-333.
   - For platform 5 arrangement, see sheet E-72.
   - For platform 8 arrangement, see sheet E-75.

SYN YEE CHIN No. 18186 Exp. 09/30/2011 ELECTRICAL — REGISTERED PROFESSIONAL ENGINEER — STATE OF CALIFORNIA

Syn Yee Chin
FOR REVISION ONLY
2

FADI WALIEDDINE No. 11465 Exp. 12/31/2009 ELECTRICAL — REGISTERED PROFESSIONAL ENGINEER — STATE OF CALIFORNIA

FOR REVISION ONLY
1

REQUEST FOR INFORMATION NOT ADDRESSED IN THIS CCO REMAIN IN FORCE					
2	01/07/11	ELECTRICAL WARNING SYSTEMS	TW	RG	61
1	08/03/09	ELECTRICAL WARNING SYSTEMS	RG	JE FW	61
MARK	DATE	DESCRIPTIONS	BY	CH'D	CCO#
		REVISIONS			

CONTRACT CHANGE ORDER NO. 61
SHEET 58 OF 104

DETAILS
NAVIGATION AND AVIATION WARNING SYSTEMS
NAVIGATION LIGHTING ELEMENTARY DIAGRAMS
NO SCALE

E-298

STATE OF CALIFORNIA - DEPARTMENT OF TRANSPORTATION
Caltrans
DESIGN OVERSIGHT: BEHZAD GOLEMOHAMMADI
CALCULATED/DESIGNED BY: EDC
CHECKED BY: KG
DATE: 10/01
REVISED BY: 11/01
DATE REVISED

LAST REVISION 00-00-00
DATE PLOTTED => 2/17/2011
TIME PLOTTED => 4:38:25 PM

FOR REDUCED PLANS ORIGINAL SCALE IS IN MILLIMETERS 0 20 40 60 80

DGN FILE =>T:\13103\MS\pse\SAS Struc\CCO\SAS CCO61\Draft 6 - 20[illegible]1.01.07_Issued for Submittal\04-0120f1_0296R02.dgn
USERNAME =>llorico
CU 04251
EA 0120F1

DIST	COUNTY	ROUTE	KILOMETER POST TOTAL PROJECT	SHEET NO	TOTAL SHEETS
04	SF	80	13.2/13.9	297 R3	1204

12/19/02
REGISTERED ELECTRICAL ENGINEER DATE

12-6-04
PLANS APPROVAL DATE

REGISTERED PROFESSIONAL ENGINEER — JENS ERLINGSSON — No. 8249 — Exp. 9/30/06 — ELECTRICAL — STATE OF CALIFORNIA

PB POWER, Inc.
A Parsons Brinckerhoff Company
303 Second St., Suite 700N
San Francisco, CA 94107-1317

The State of California or its officers or agents shall not be responsible for the accuracy or completeness of electronic copies of this plan sheet.

Caltrans now has a web site! To get to the web site, go to http://www.dot.ca.gov

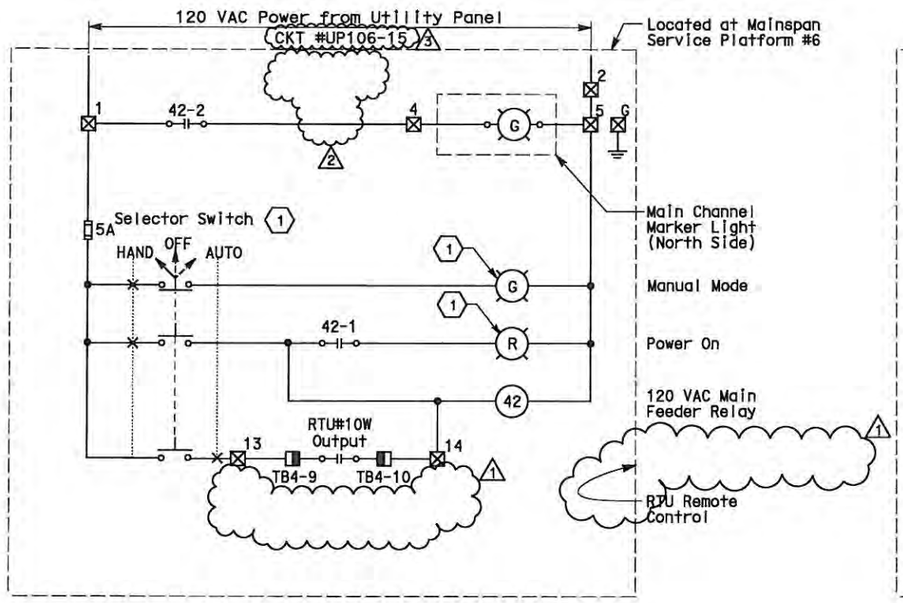

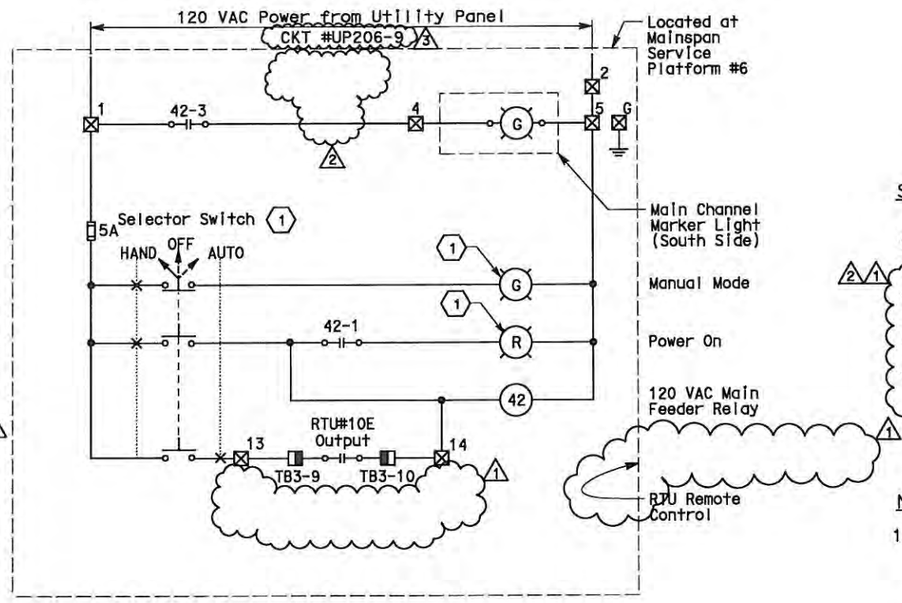

SHEET NOTES:

1. Locate device at the face of enclosure door panel.
2. Deleted.
3. Deleted.
4. Relays are located inside vendor furnished monitoring box for marker lights.

NOTES:

1. References:
   - For navigation relay cabinet arrangement, see sheet E-305.
   - For navigation relay cabinet #NAP-6W and #NAP-6E connection diagrams, see sheet E-303.
   - For navigation and aviation fixture schedule, see sheet E-297.
   - For RTU #10W elementary and connection diagram, see sheet E-330.
   - For RTU #10E elementary and connection diagram, see sheet E-331.
   - For platform 6 arrangement, see sheet E-73.

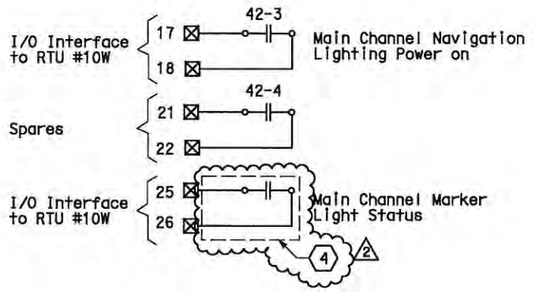

NAVIGATION RELAY CABINET #NAP-6W
MAIN CHANNEL MARKER LIGHT

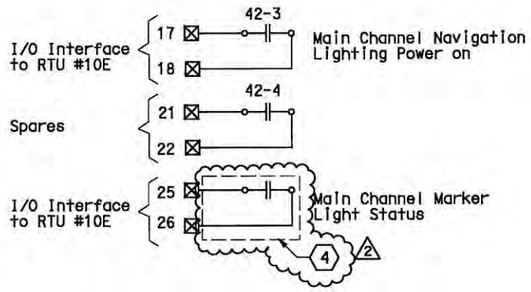

NAVIGATION RELAY CABINET #NAP-6E
MAIN CHANNEL MARKER LIGHT

REGISTERED PROFESSIONAL ENGINEER — FADI WALIEDDINE — No. 11465 — Exp. 12/31/2009 — ELECTRICAL — STATE OF CALIFORNIA
FOR REVISION ONLY 1

REGISTERED PROFESSIONAL ENGINEER — SYN YEE CHIN — No. 18186 — Exp. 09/30/2011 — ELECTRICAL — STATE OF CALIFORNIA
FOR REVISION ONLY 2

REGISTERED PROFESSIONAL ENGINEER — DAVID H. OTO — No. 10699 — Exp. 06/30/2013 — ELECTRICAL — STATE OF CALIFORNIA
FOR REVISION ONLY 3

REQUEST FOR INFORMATION NOT ADDRESSED IN THIS CCO REMAIN IN FORCE					
3	05/02/12	ELECTRICAL WARNING SYSTEMS	RR	RG	61
2	01/07/11	ELECTRICAL WARNING SYSTEMS	TW	RG	61
1	08/03/09	ELECTRICAL WARNING SYSTEMS	RG	JE FW	61
MARK	DATE	DESCRIPTIONS	BY	CH'D	CCO#
		REVISIONS			

CONTRACT CHANGE ORDER NO. 61
SHEET 59 OF 104

DETAILS
NAVIGATION AND AVIATION WARNING SYSTEMS
NAVIGATION LIGHTING ELEMENTARY DIAGRAMS
NO SCALE

E-299

DESIGN OVERSIGHT	CALCULATED/ DESIGNED BY	DATE	REVISED BY
BEHZAD GOLEMOHAMMADI	CHECKED BY	EDC 10/01	DATE REVISED
		KG 11/01	

STATE OF CALIFORNIA - DEPARTMENT OF TRANSPORTATION
Caltrans

FOR REDUCED PLANS ORIGINAL SCALE IS IN MILLIMETERS 0 20 40 60 80

DGN FILE =>04-0120f1_0297R03.dgn
USERNAME =>llorico

CU 04251 | EA 0120F1

LAST REVISION 00-00-00
DATE PLOTTED => 04-MAY-2012
TIME PLOTTED => 13:51

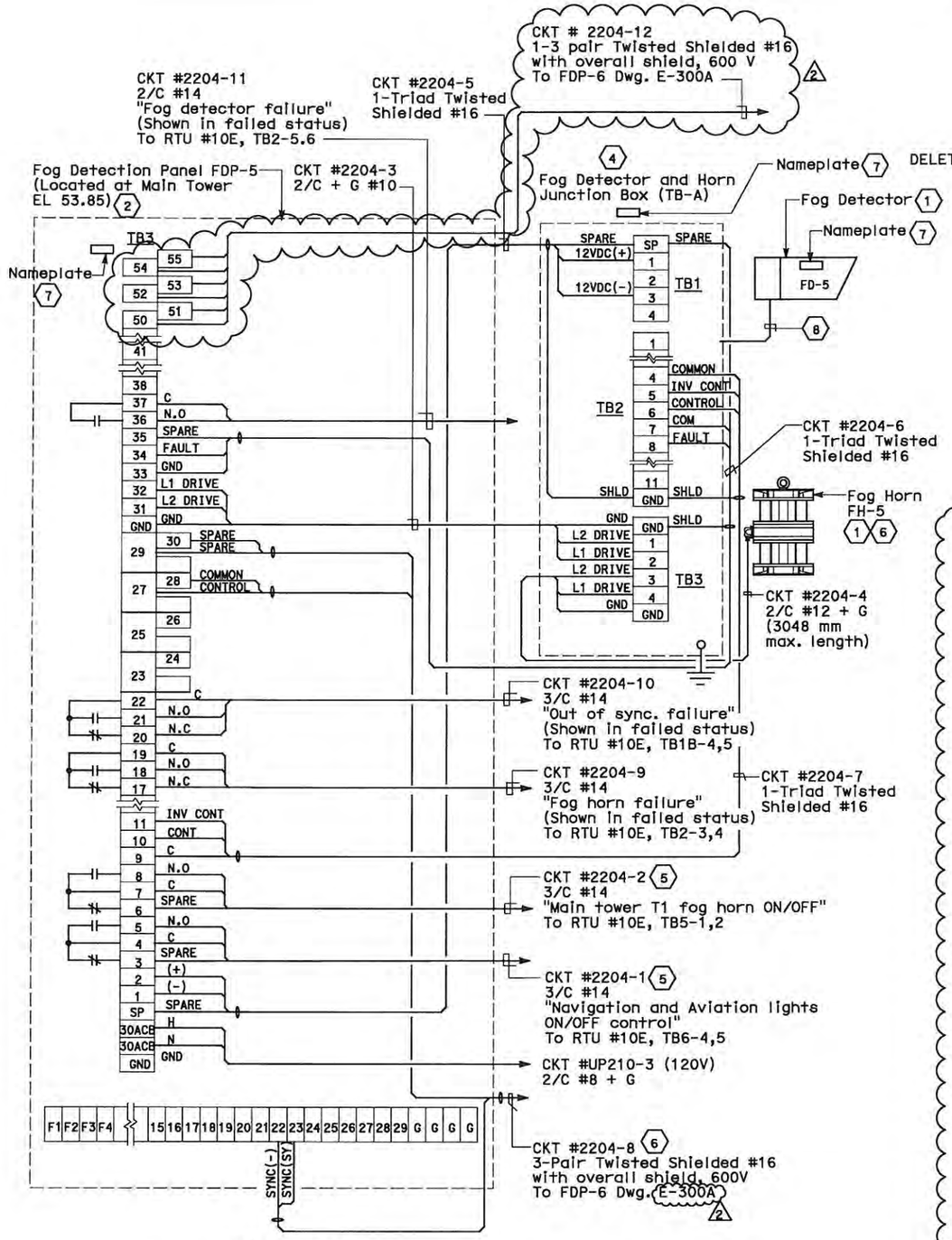

TOWER T1

FOG HORN AND FOG DETECTION SYSTEM

SHEET NOTES:

1. Fog Detector FD-5 and Fog Horn (FH-5) for Main Tower T1 shall be installed at the Tower Base.
2. Fog Detection Panel FDP-5 shall be Installed at the Main Tower T1 platform elevation 53.85 m Enclosure shall be Nema 4X.
3. DELETED
4. Junction Box (TB-A) shall be Nema 4X enclosure.
5. Fog Detection System at Main Tower T1, see SCADA Wiring Diagram RTU # 10E Sheet E-331. For Pier E2, see SCADA Wiring Diagram RTU # 11E. Sheet E-333.
6. Fog Horns FH-5 & FH-6 shall be synchronized in accordance with the chart shown on drawing E-293D.
7. Refer to Nameplate Schedules.
8. Cable (10/C #16 AWG Type S.O.) between Fog Detector and TB-A is furnished and installed by vendor.

NOTE:

1. For Fog Synchronization, see chart on dwg E-293D.

DIST	COUNTY	ROUTE	KILOMETER POST TOTAL PROJECT	SHEET No	TOTAL SHEETS
04	SF	80	13.2/13.9	298 R2	1204

Jens Ellingsson 12/19/02
REGISTERED ELECTRICAL ENGINEER DATE

12-6-04
PLANS APPROVAL DATE

PB AMERICAS, Inc.
A Parsons Brinckerhoff Company
303 Second St., Suite 700N
San Francisco, CA 94107-1317

REGISTERED PROFESSIONAL ENGINEER — JENS ERLINGSSON No. 8249 Exp. 9/30/06 ELECTRICAL — STATE OF CALIFORNIA

The State of California or its officers or agents shall not be responsible for the accuracy or completeness of electronic copies of this plan sheet.

Caltrans now has a web site! To get to the web site, go to http://www.dot.ca.gov

REGISTERED PROFESSIONAL ENGINEER — DAVID H. OTO No. 10699 Exp. 06/30/2013 ELECTRICAL — STATE OF CALIFORNIA
FOR REVISION ONLY 2

REGISTERED PROFESSIONAL ENGINEER — FADI WALIEDDINE No. 11465 Exp. 12/31/2009 ELECTRICAL — STATE OF CALIFORNIA
FOR REVISION ONLY 1

REQUEST FOR INFORMATION NOT ADDRESSED IN THIS CCO REMAIN IN FORCE

MARK	DATE	DESCRIPTIONS	BY	CH'D	CCO#
		REVISIONS			
2	05/02/12	ELECTRICAL WARNING SYSTEMS	RR	RG	61
1	08/03/09	ELECTRICAL WARNING SYSTEMS	RG	FW	61

CONTRACT CHANGE ORDER NO. 61
SHEET 60 OF 104

NAMEPLATE SCHEDULE

ITEM	QTY	LINE No 1	LINE No 2
1	1	FOG DETECTION	PANEL FDP-5
2	1	FOG DETECTION	PANEL FDP-6
3	1	FOG DETECTION	FOG DETECTOR FD-5
4	1	FOG DETECTION	FOG DETECTOR FD-6
5	1	FOG DETECTION	FOG HORN FH-5
6	1	FOG DETECTION	FOG HORN FH-6
7	1	FOG DETECTION	FOG HORN FH-5-TB1
8	1	FOG DETECTION	FOG HORN FH-6-TB1

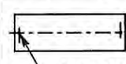

Nameplates to be white lamicoid with black core, size 19 mm x 80 mm, lettering to be 3 mm condensed gothic

clearance hole for 4-40 machine screw

NOTE:
Nameplates shall be mounted to the enclosure door with 4-40 stainless steel machine screws. The control panel to be drilled and tapped. (no self-tapping screws)

DETAILS
NAVIGATION AND AVIATION WARNING SYSTEMS
FOG DETECTION SYSTEM CONNECTIOM DIAGRAMS

ORIGINAL SHEET SUPERCEDED 1

NO SCALE

E-300

STATE OF CALIFORNIA - DEPARTMENT OF TRANSPORTATION
DESIGN OVERSIGHT: BEHZAD GOLEMOHAMMADI
CALCULATED/DESIGNED BY | CHECKED BY | EDC KG | DATE 10/01 11/01 | REVISED BY | DATE REVISED

LAST REVISION 00-00-00 | DATE PLOTTED => 04-MAY-2012 | TIME PLOTTED => 13:51

FOR REDUCED PLANS ORIGINAL SCALE IS IN MILLIMETERS 0 20 40 60 80

DGN FILE =>04-0120f1_0298R02.dgn
USERNAME =>llorico

CU 04251 | EA 0120F1

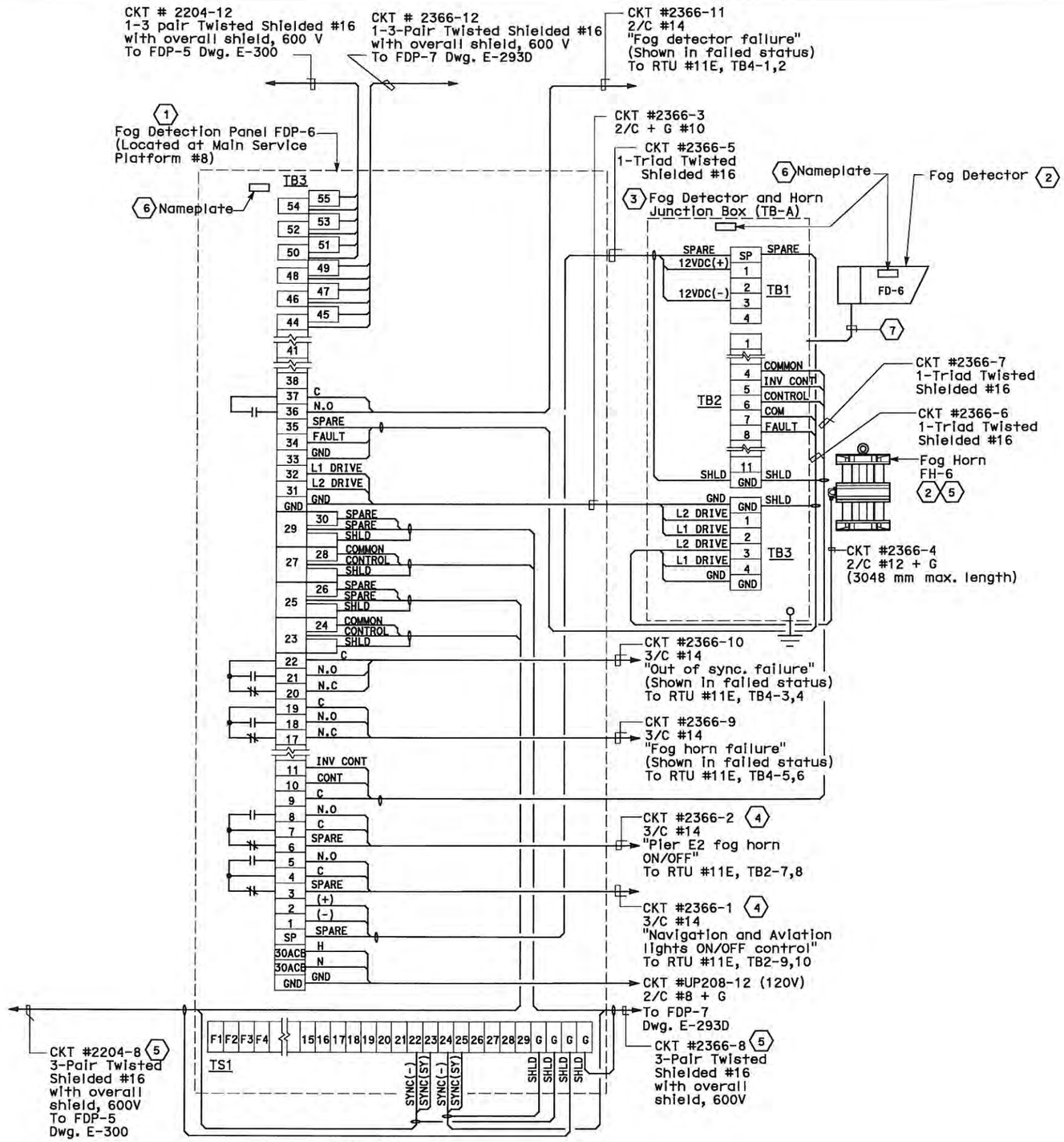

PIER E2

FOG HORN AND FOG DETECTION SYSTEM

DIST	COUNTY	ROUTE	KILOMETER POST TOTAL PROJECT	SHEET No	TOTAL SHEETS
04	SF	80	13.2/13.9	298 S1	1204

REGISTERED ELECTRICAL ENGINEER — 5-2-12 DATE

REGISTERED PROFESSIONAL ENGINEER — DAVID H. OTO No. 10699 Exp. 06/30/2013 ELECTRICAL — STATE OF CALIFORNIA

PLANS APPROVAL DATE

PB AMERICAS, Inc.
A Parsons Brinckerhoff Company
303 Second St., Suite 700N
San Francisco, CA 94107-1317

The State of California or its officers or agents shall not be responsible for the accuracy or completeness of electronic copies of this plan sheet.

Caltrans now has a web site! To get to the web site, go to http://www.dot.ca.gov

SHEET NOTES:

1. Fog Detection Panel FDP-6 shall be installed at the Service Platform #8. Enclosure shall be Nema 4X.
2. Fog Detector FD-6 and Fog Horn FH-6 shall be installed at the base of Pier E2.
3. Junction Box (TB-A) shall be Nema 4X enclosure.
4. Fog Detection System at Main Tower T1, see SCADA Wiring Diagram RTU # 10E Sheet E-331. For Pier E2, see SCADA Wiring Diagram RTU # 11E. Sheet E-333.
5. Fog Horns FH-5 & FH-6 shall be synchronized in accordance with the chart shown on drawing E-293D.
6. Refer to Nameplate Schedules.
7. Cable (10/C #16 AWG Type S.O.) between Fog Detector and TB-A is furnished and installed by vendor.

NOTE:

1. For Fog Synchronization, see chart on dwg E-293D.
2. For Nameplate Schedule see Dwg. E-300.

REQUEST FOR INFORMATION NOT ADDRESSED IN THIS CCO REMAIN IN FORCE

MARK	DATE	DESCRIPTIONS	BY	CH'D	CCO#
		REVISIONS			
0	05/02/12	ELECTRICAL WARNING SYSTEMS	RR	RG	61

CONTRACT CHANGE ORDER NO. 61
SHEET 61 OF 104

DETAILS
NAVIGATION AND AVIATION WARNING SYSTEMS
FOG DETECTION SYSTEM CONNECTIOM DIAGRAMS

NO SCALE

E-300A

REVISED BY	DATE REVISED
EDC	10/01
KG	11/01

CALCULATED/ DESIGNED BY
CHECKED BY

DESIGN OVERSIGHT
BEHZAD GOLEMOHAMMADI

STATE OF CALIFORNIA - DEPARTMENT OF TRANSPORTATION
Caltrans

LAST REVISION 00-00-00
DATE PLOTTED => 04-MAY-2012
TIME PLOTTED => 13:51

FOR REDUCED PLANS ORIGINAL SCALE IS IN MILLIMETERS 0 20 40 60 80

DGN FILE =>04-0120f1_0298S01.dgn
USERNAME =>llorico

CU 04251 | EA 0120F1

REQUEST FOR INFORMATION NOT ADDRESSED IN THIS CCO REMAIN IN FORCE					
4	05/02/12	ELECTRICAL WARNING SYSTEMS	RR	RG	61
3	01/07/11	CABLE ELECTRICAL-LED AVIATION LIGHTS	RR	RG	72S1
2	10/10/08	LIGHTING REVISIONS	RY AG	RG FW	43
1	09/24/08	CABLE ELECTRICAL	RR AG	RG SE	72
MARK	DATE	DESCRIPTIONS	BY	CH'D	CCO#
REVISIONS					

CONTRACT CHANGE ORDER NO. 61
SHEET 62 OF 104

SYN YEE CHIN, No. 18186, Exp. 09/30/2013, ELECTRICAL, STATE OF CALIFORNIA
Syn Yee Chin
FOR REVISION ONLY 2 3

S. A. ESTOQUE, No. E-10151, Exp. 12/31/2008, ELECTRICAL, STATE OF CALIFORNIA
FOR REVISION ONLY 1

DAVID H. OTO, No. 10699, Exp. 06/30/2013, ELECTRICAL, STATE OF CALIFORNIA 4
FOR REVISION ONLY

6 7 Fused disconnect splice connector (phase conductors only)

Lighting terminations

G

Power source

DETAIL-1
(TYP. FOR EACH LIGHT FIXTURE)

DIST	COUNTY	ROUTE	KILOMETER POST TOTAL PROJECT	SHEET No	TOTAL SHEETS
04	SF	80	13.2/13.9	299 R4	1204

James Ellingson 12/19/02
REGISTERED ELECTRICAL ENGINEER DATE

12-6-04
PLANS APPROVAL DATE

JENS ERLINGSSON, No. 8249, Exp. 9/30/06, ELECTRICAL, STATE OF CALIFORNIA

PB POWER, Inc.
A Parsons Brinckerhoff Company
303 Second St., Suite 700N
San Francisco, CA 94107-1317

The State of California or its officers or agents shall not be responsible for the accuracy or completeness of electronic copies of this plan sheet.

Caltrans now has a web site! To get to the web site, go to http://www.dot.ca.gov

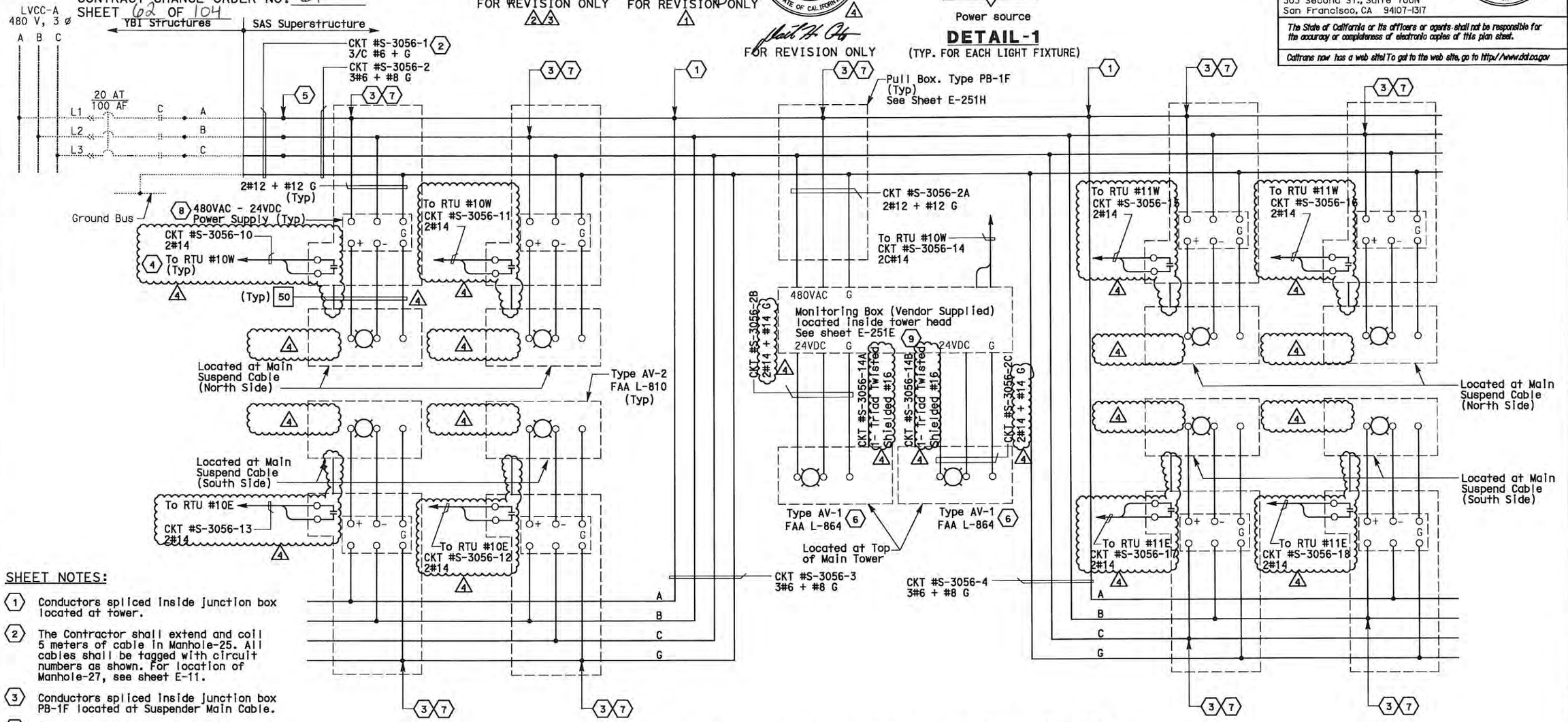

SAS SUPERSTRUCTURE AVIATION LIGHTING

SHEET NOTES:

1. Conductors spliced inside junction box located at tower.
2. The Contractor shall extend and coil 5 meters of cable in Manhole-25. All cables shall be tagged with circuit numbers as shown. For location of Manhole-27, see sheet E-11.
3. Conductors spliced inside junction box PB-1F located at Suspender Main Cable.
4. For connection to RTU #10W, #10E, #11W and #11E, see sheets E-330, E-331, E-332 and E-333 respectively.
5. Conductors spliced inside junction box PB-2A located inside girder.
6. Install 5A in-line fuse for AV-1 light fixture, inside PB-1B. PB-1B is located inside main tower NW quadrant at elev. 156.750, see Detail 1.
7. Install 5A in-line fuse per AV-2 light fixture, inside PB-1F located along the Suspender main cable, see Detail 1.
8. 480VAC-24VDC Power Supply located inside junction box PB-1F at Suspender Main Cable. See sheet E-251H for Detail.
9. Contractor to connect incoming wires into the Monitoring Box per the vendor wiring diagram.

NOTES:

1. References:
   - For Aviation and Navigation Lighting Fixture Schedule, see sheet E-297.
   - For circuit and conduit/cable tray schedules, see sheets starting at E-401.

DETAILS
NAVIGATION AND AVIATION WARNING SYSTEMS
AVIATION LIGHTING WIRING DIAGRAM

NO SCALE

E-301

CALCULATED/ DESIGNED BY	CHECKED BY	EDC	DATE	REVISED BY	DATE REVISED
BEHZAD GOLEMOHAMMADI	DESIGN OVERSIGHT	KG	10/01	II/01	

STATE OF CALIFORNIA - DEPARTMENT OF TRANSPORTATION
Caltrans

LAST REVISION 00-00-00
DATE PLOTTED => 04-MAY-2012
TIME PLOTTED => 13:51

FOR REDUCED PLANS ORIGINAL SCALE IS IN MILLIMETERS 0 20 40 60 80

DGN FILE =>04-0120f1_0299R04.dgn
USERNAME =>llorica

CU 04251 EA 0120F1

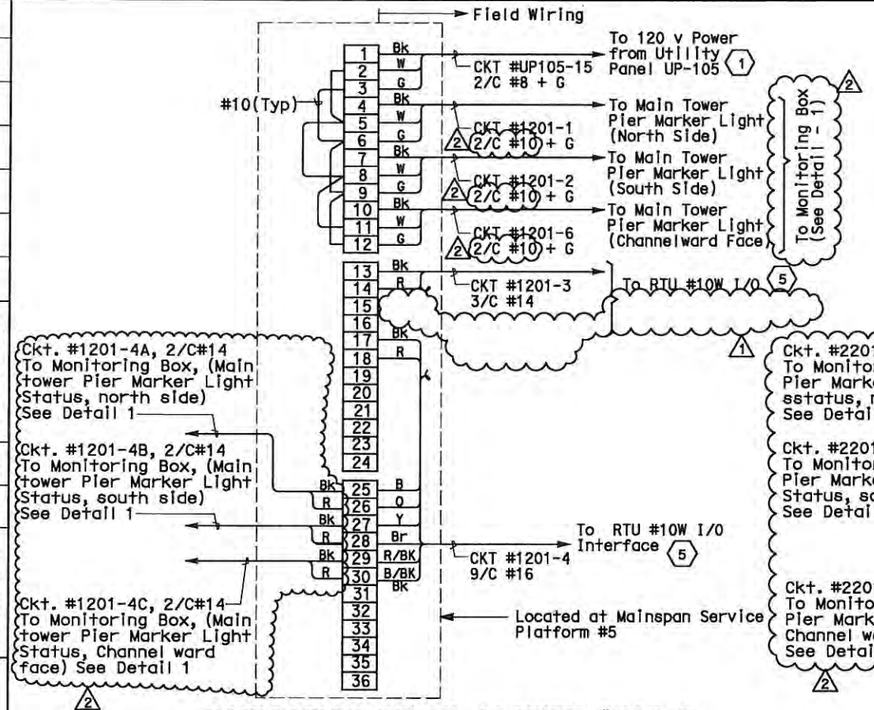

NAVIGATION RELAY CABINET #NAP-5
PIER MARKER LIGHTS

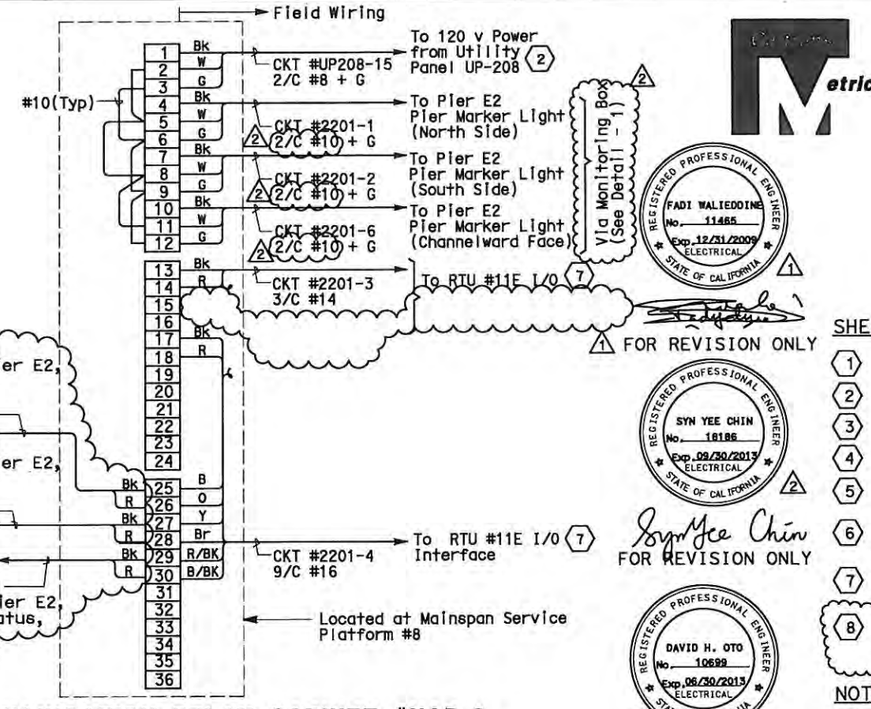

NAVIGATION RELAY CABINET #NAP-8
PIER MARKER LIGHTS

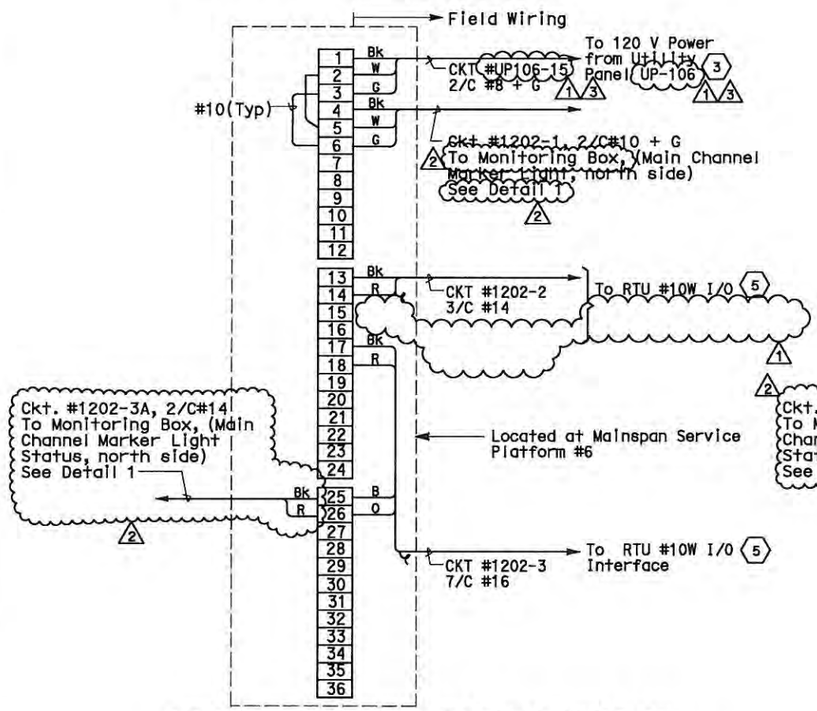

NAVIGATION RELAY CABINET #NAP-6W
MAIN CHANNEL MARKER LIGHTS

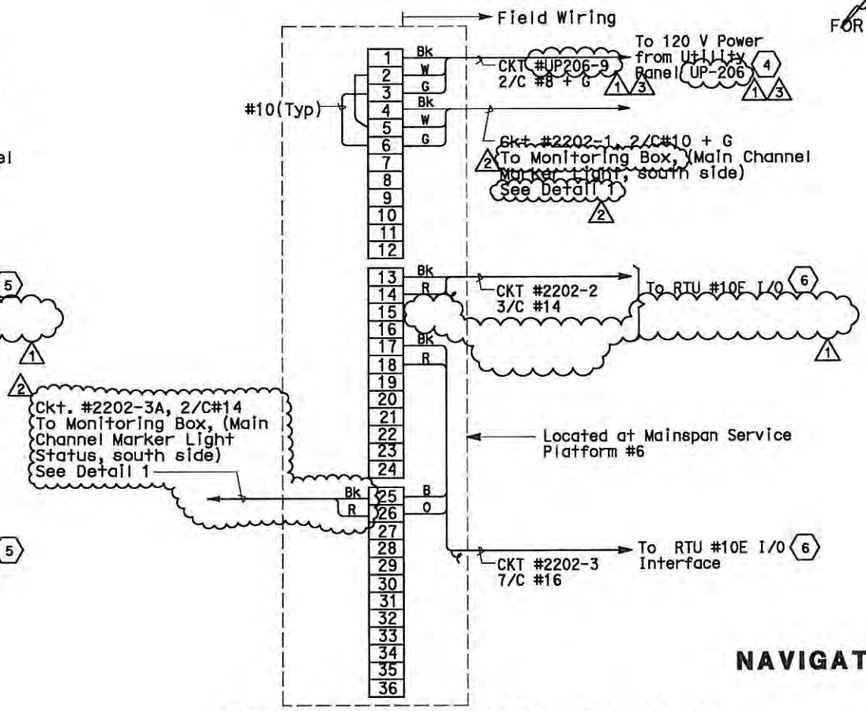

NAVIGATION RELAY CABINET #NAP-6E
MAIN CHANNEL MARKER LIGHTS

FOR REVISION ONLY (1)

FOR REVISION ONLY (2)

FOR REVISION ONLY (3)

DIST	COUNTY	ROUTE	KILOMETER POST TOTAL PROJECT	SHEET No	TOTAL SHEETS
04	SF	80	13.2/13.9	300 R3	1204

REGISTERED ELECTRICAL ENGINEER — 12/19/02 DATE

JENS ERLINGSSON No. 8249 Exp. 9/30/06 ELECTRICAL — STATE OF CALIFORNIA

12-6-04
PLANS APPROVAL DATE

PB POWER, Inc.
A Parsons Brinckerhoff Company
303 Second St., Suite 700N
San Francisco, CA 94107-1317

The State of California or its officers or agents shall not be responsible for the accuracy or completeness of electronic copies of this plan sheet.

Caltrans now has a web site! To get to the web site, go to http://www.dot.ca.gov

FADI WALIEDDINE No. 11485 Exp. 12/31/2009 ELECTRICAL — STATE OF CALIFORNIA

SYN YEE CHIN No. 18186 Exp. 09/30/2013 ELECTRICAL — STATE OF CALIFORNIA

DAVID H. OTO No. 10699 Exp. 06/30/2013 ELECTRICAL — STATE OF CALIFORNIA

SHEET NOTES:

(1) For Utility Panel Schedule, see sheet E-60.
(2) For Utility Panel Schedule, see sheet E-154.
(3) For Utility Panel Schedule, see sheet E-61.
(4) For Utility Panel Schedule, see sheet E-152.
(5) Continue to RTU #10W Scada System I/O Connection Diagram, see sheet E-330.
(6) Continue to RTU #10E Scada System I/O Connection Diagram, see sheet E-331.
(7) Continue to RTU #11E Scada System I/O Connection Diagram, see sheet E-333.
(8) Contractor to connect incoming wires into the monitoring box per the vendor wiring diagram.

NOTES:

1. All spare conductors shall be coiled and taped at conductor ends unless terminated.
2. References:
   - For navigation and aviation fixture schedule, see sheet E-297.
   - For navigation lighting elementary diagrams, see sheets E-298 and E-299.
   - For circuit and conduit/cable tray schedules, see sheets starting at E-401.

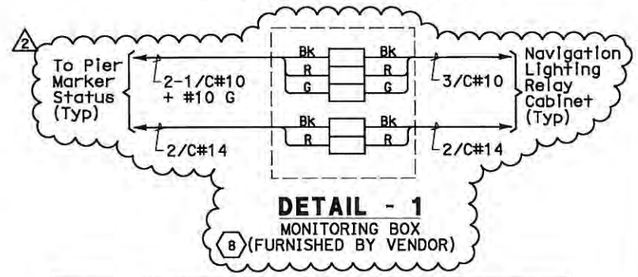

DETAIL - 1
MONITORING BOX (8) (FURNISHED BY VENDOR)

MARK	DATE	DESCRIPTIONS	BY	CH'D	CCO#
		REVISIONS			
3	05/02/12	ELECTRICAL WARNING SYSTEMS	RR	RG	61
2	01/07/11	ELECTRICAL WARNING SYSTEMS	TW	RG	61
1	08/03/09	ELECTRICAL WARNING SYSTEMS	RG	JE FW	61

REQUEST FOR INFORMATION NOT ADDRESSED IN THIS CCO REMAIN IN FORCE

CONTRACT CHANGE ORDER NO. 61
SHEET 63 OF 104

DETAILS
NAVIGATION AND AVIATION WARNING SYSTEMS CONNECTION DIAGRAMS
NO SCALE

E-303

REVISED BY	DATE REVISED
EDC	11/01
CALCULATED/ DESIGNED BY	KG
CHECKED BY	DATE 10/01

STATE OF CALIFORNIA - DEPARTMENT OF TRANSPORTATION
DESIGN OVERSIGHT
BEHZAD GOLEMOHAMMADI

LAST REVISION 00-00-00
DATE PLOTTED => 04-MAY-2012
TIME PLOTTED => 13:51

FOR REDUCED PLANS ORIGINAL SCALE IS IN MILLIMETERS 0 20 40 60 80

DGN FILE =>04-0120f1_0300R03.dgn
USERNAME =>llorico

CU 04251 | EA 0120F1

DIST	COUNTY	ROUTE	KILOMETER POST TOTAL PROJECT	SHEET No.	TOTAL SHEETS
04	SF	80	13.2/13.9	301 R1	1204

REGISTERED ELECTRICAL ENGINEER — 12/19/02 DATE

JENS ERLINGSSON No. 8249 Exp. 9/30/06 ELECTRICAL — REGISTERED PROFESSIONAL ENGINEER — STATE OF CALIFORNIA

12-6-04
PLANS APPROVAL DATE

PB POWER, Inc.
A Parsons Brinckerhoff Company
303 Second St., Suite 700N
San Francisco, CA 94107-1317

The State of California or its officers or agents shall not be responsible for the accuracy or completeness of electronic copies of this plan sheet.

Caltrans now has a web site! To get to the web site, go to http://www.dot.ca.gov

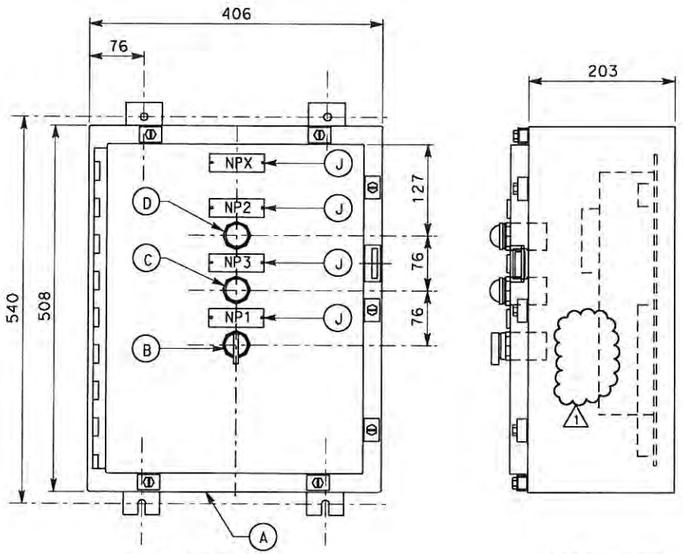

FRONT VIEW SIDE VIEW

FRONT PANEL

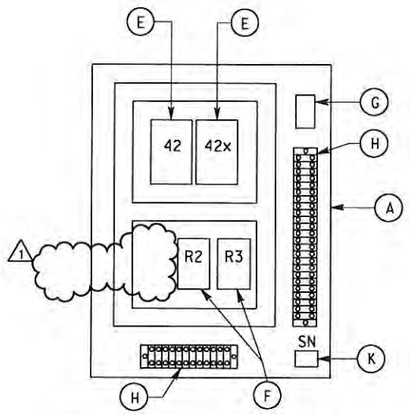

INSIDE PANEL LAYOUT

NAVIGATION RELAY CABINET GENERAL ARRANGEMENT

NAMEPLATE SCHEDULE

ITEM	QTY	LINE No 1	LINE No 2
NP1	4	Lighting Control	Hand - Off - Auto
NP2	4	Lighting Control	Manual Mode
NP3	4	Lighting Control	Power On
NPX	1	Navigation Relay	Cabinet #NAP-5
NPX	1	Navigation Relay	Cabinet #NAP-8
NPX	1	Navigation Relay	Cabinet #NAP-6W
NPX	1	Navigation Relay	Cabinet #NAP-6E

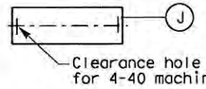

NOTE: Nameplates shall be mounted to the enclosure door, panel with 4-40 stainless steel machine screws. The enclosure door, panel to be drilled and tapped. (no self-tapping screws)

MATERIAL LIST (1)

ITEM	DESCRIPTION	QUANTITY #NAP-5	#NAP-8	#NAP-6W	#NAP-6E
A	Enclosure, Stainless Steel Nema 4X, 508 x 406 x 203, with interior panel 423 x 330	1	1	1	1
B	Selector Switch, 3 position, corrosion resistant water-tight, 2 NO & 2 NC contacts. Legend: HAND-OFF-AUTO	1	1	1	1
C	Indication light, corrosion resistant, water-tight, transformer type 120 VAC, red lens Legend: Power On	1	1	1	1
D	Indication light, corrosion resistant, water-tight, transformer type 120 VAC, green lens Legend: MANUAL MODE	1	1	1	1
E	Relay, general purpose, 120 VAC coil, 4PDT, 4 NO contact rating: 10 A contacts Relays: 42, 42X.	2	2	1	1
F	Deleted (1)				
G	Fuse block, single pole, rated 30 A, with 5 amp fuse	1	1	1	1
H	12 point terminal blocks, rated 600 V, 20 A, barrier type with screw terminals	3	3	3	3
J	Nameplates to be white lamicoid with black core, size 19 x 80 lettering to be 3 mm condensed Gothic. (See above)	1	1	1	1
K	Ground Lug/Bar	1	1	1	1

SHEET NOTES:

(1) Materials listed are quantities for each Navigation Relay Cabinet.

NOTES:

1. References:
   - For navigation lighting elementary diagrams, see sheets E-298 and E-299.
   - For connection diagrams, see sheet E-303.

REGISTERED PROFESSIONAL ENGINEER — SYN YEE CHIN No. 18186 Exp. 09/30/2011 ELECTRICAL — STATE OF CALIFORNIA

Syn Yee Chin
FOR REVISION ONLY
(1)

REQUEST FOR INFORMATION NOT ADDRESSED IN THIS CCO REMAIN IN FORCE

MARK	DATE	REVISIONS DESCRIPTIONS	BY	CH'D	CCO#
1	01/07/11	ELECTRICAL WARNING SYSTEMS	TW	RG	61

CONTRACT CHANGE ORDER NO. 61
SHEET 64 OF 104

DETAILS
NAVIGATION AND AVIATION WARNING SYSTEMS
CABINET ARRANGEMENT
NO SCALE

ALL DIMENSIONS IN MILIMETERS UNLESS OTHERWISE SHOWN.

E-305

CALCULATED/ DESIGNED BY	EDC	DATE 11/01	REVISED BY
CHECKED BY	KG	11/01	DATE REVISED

STATE OF CALIFORNIA - DEPARTMENT OF TRANSPORTATION — Caltrans
DESIGN OVERSIGHT — BEHZAD GOLEMOHAMMADI

FOR REDUCED PLANS ORIGINAL SCALE IS IN MILLIMETERS 0 20 40 60 80

DGN FILE =>T:\13103\MS\pse\SAS Struc\CCO\SAS CCO61\Draft 6 - 2011.01.07_Issued for Submittal\04-0120F1_0301R01.dgn
USERNAME =>llorico
CU 04251 EA 0120F1

LAST REVISION 00-00-00 DATE PLOTTED => 2/17/2011 TIME PLOTTED => 5:08:16 PM

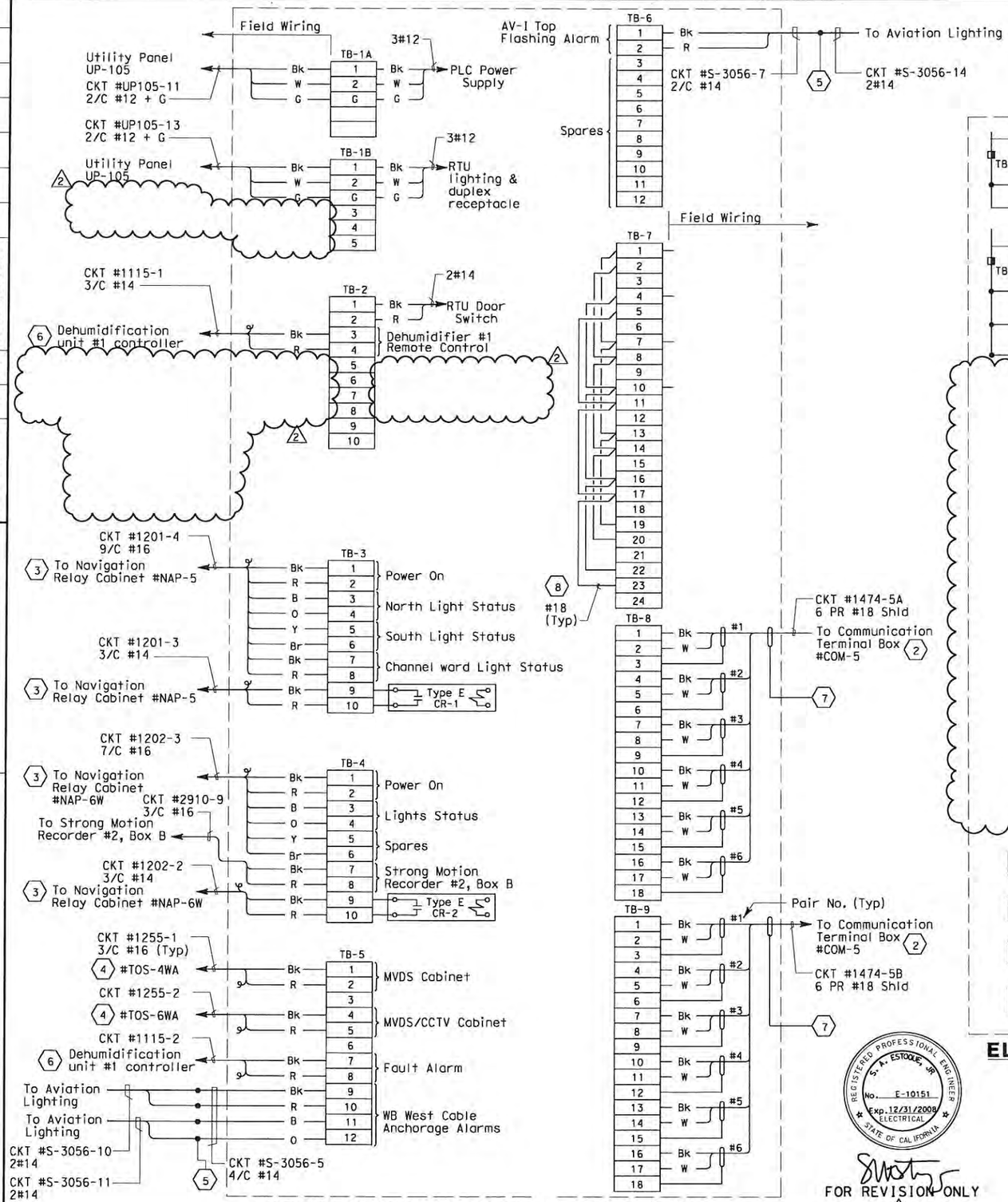

CONNECTION DIAGRAM - RTU #10W

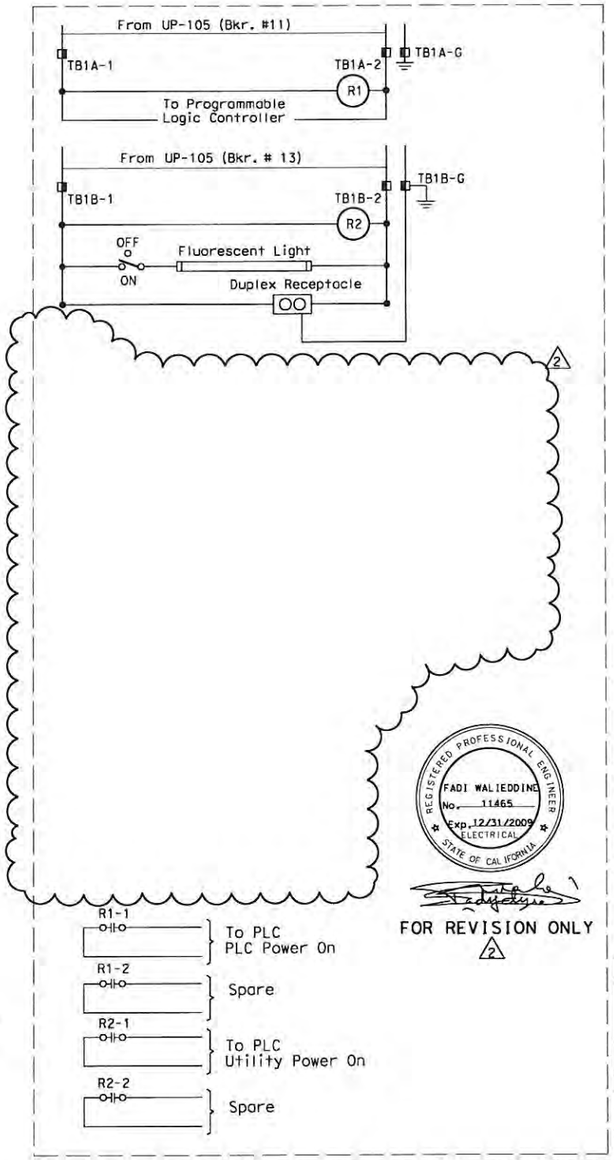

FOR REVISION ONLY △2

ELEMENTARY DIAGRAM - RTU #10W

(Navigation Lighting System)

FOR REVISION ONLY △1

THIS PLAN IS ACCURATE FOR ELECTRICAL WORK ONLY.

DIST	COUNTY	ROUTE	KILOMETER POST TOTAL PROJECT	SHEET No	TOTAL SHEETS
04	SF	80	13.2/13.9	311 R2	1204

REGISTERED ELECTRICAL ENGINEER — 12/19/02 DATE

JENS ERLINGSSON No. 8249 Exp. 9/30/06 ELECTRICAL — REGISTERED PROFESSIONAL ENGINEER — STATE OF CALIFORNIA

12-6-04
PLANS APPROVAL DATE

PB POWER, Inc.
A Parsons Brinckerhoff Company
303 Second St., Suite 700N
San Francisco, CA 94107-1317

The State of California or its officers or agents shall not be responsible for the accuracy or completeness of electronic copies of this plan sheet.

Caltrans now has a web site! To get to the web site, go to http://www.dot.ca.gov

SHEET NOTES:

1. Deleted.
2. For connection diagram to scada system, see sheet E-324.
3. For navigation system connection diagrams, see sheet E-303.
4. Connections to panel door switch. For remote alarm status to RTU.
5. Conductors spliced inside junction box PB-2A located inside the girder.
6. For connection diagram to dehumidification controller, see sheet E-79.
7. Field to tape cable overall shield wire.
8. The Contractor shall install resistors, approximately equal to the impedance (Zo) of the twised pairs, at the extreme ends of the multidrop network.

NOTES:

1. All spare conductors shall be coiled and taped at conductor ends unless terminated.
2. Terminate cable shields to low level ground bus.
3. References:
   - For UP-105 panel schedule, see sheet E-60.
   - For navigation system elementary diagram, see sheet E-298.
   - For RTU #10W panel layout, see sheet E-320.
   - For circuit and conduit/cable tray schedules, see sheets starting at E-401.
   - For strong motion detection system cable block diagrams, see sheet E-383.

REGISTERED PROFESSIONAL ENGINEER — FADI WALIEDDINE No. 11465 Exp. 12/31/2009 ELECTRICAL — STATE OF CALIFORNIA

REGISTERED PROFESSIONAL ENGINEER — S. A. ESTOQUE, JR. No. E-10151 Exp. 12/31/2008 ELECTRICAL — STATE OF CALIFORNIA

REQUEST FOR INFORMATION NOT ADDRESSED IN THIS CCO REMAIN IN FORCE

MARK	DATE	DESCRIPTIONS REVISIONS	BY	CH'D	CCO#
△2	08/03/09	ELECTRICAL WARNING SYSTEMS	RG	JE FW	61
△1	03/04/08	BARRIER MODIFICATIONS	JS BM	RG SE	44

CONTRACT CHANGE ORDER NO. 61
SHEET 65 OF 104

DETAILS
SCADA REMOTE TERMINAL UNIT SYSTEM
RTU #10W ELEMENTARY AND CONNECTION DIAGRAM

NO SCALE

E-330

DESIGN OVERSIGHT	CALCULATED/ DESIGNED BY	DRAWN BY	CHECKED BY
BEHZAD GOLEMOHAMMADI	EDC	JL	

REVISED BY	DATE REVISED
DATE 10/01	12/01

STATE OF CALIFORNIA - DEPARTMENT OF TRANSPORTATION
Caltrans

FOR REDUCED PLANS ORIGINAL SCALE IS IN MILLIMETERS 0 20 40 60 80

DGN FILE =>I:\13103\MS\pse\SAS Struc\CCO\SAS CCO61\2009-08-03_Issued for Submittal\04-0120f1_0311R02.dgn
USERNAME =>garciar

CU 04251 | EA 0120F1

LAST REVISION 00-00-00 | DATE PLOTTED => 8/14/2009 | TIME PLOTTED => 12:54:31 PM

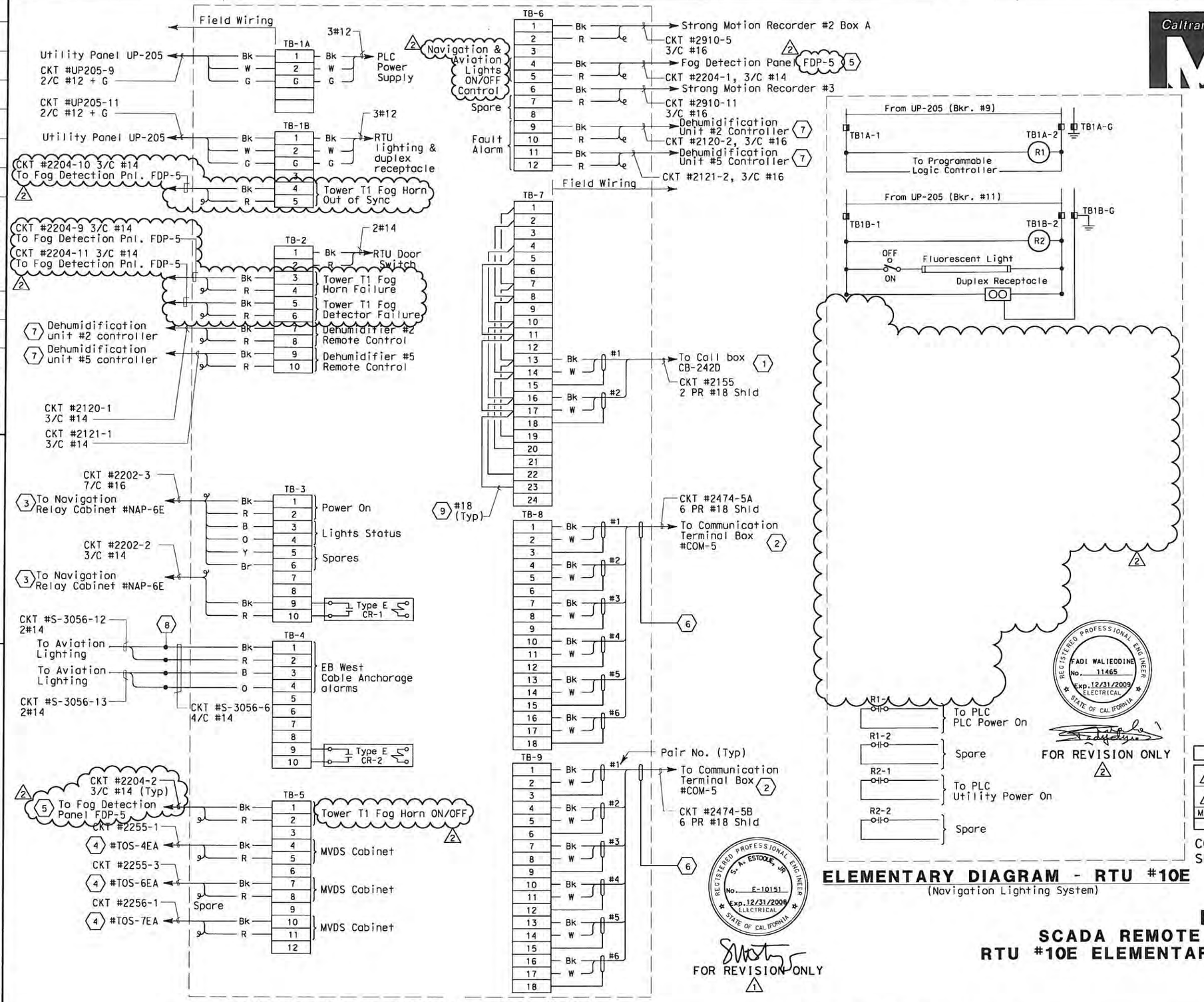

CONNECTION DIAGRAM - RTU #10E

ELEMENTARY DIAGRAM - RTU #10E

(Navigation Lighting System)

DETAILS

SCADA REMOTE TERMINAL UNIT SYSTEM
RTU #10E ELEMENTARY AND CONNECTION DIAGRAM

NO SCALE

DIST	COUNTY	ROUTE	KILOMETER POST TOTAL PROJECT	SHEET No	TOTAL SHEETS
04	SF	80	13.2/13.9	312 R2	1204

REGISTERED ELECTRICAL ENGINEER — 12/19/02 DATE

JENS ERLINGSSON No. 8249 Exp. 9/30/06 ELECTRICAL — REGISTERED PROFESSIONAL ENGINEER — STATE OF CALIFORNIA

12-6-04
PLANS APPROVAL DATE

PB POWER, Inc.
A Parsons Brinckerhoff Company
303 Second St., Suite 700N
San Francisco, CA 94107-1317

The State of California or its officers or agents shall not be responsible for the accuracy or completeness of electronic copies of this plan sheet.

Caltrans now has a web site! To get to the web site, go to http://www.dot.ca.gov

SHEET NOTES:

(1) For Connection Diagram to Call Boxes, see sheet E-399.

(2) For Connection Diagram to SCADA System, see sheet E-325.

(3) For Connection Diagram to Navigation System, see sheet E-303.

(4) Connections to panel door switch. For remote alarm status to RTU.

(5) For Connection Diagram to Fog Detection Panel, see sheet E-300.

(6) Field to tape cable overall shield wire.

(7) For Connection Diagram to Dehumidification Controllers, see sheet E-79.

(8) Conductors spliced inside junction box PB-2A located inside the girder.

(9) The Contractor shall install resistors, approximately equal to the impedance (Zo) of the twisted pairs, at the extreme ends of the multidrop network.

NOTES:

1. All spare conductors shall be coiled and taped at conductor ends unless terminated.
2. Terminate cable shields to low level ground bus.
3. References:
   - For UP-205 Panel Schedule, see sheet E-151.
   - For Navigation System Elementary Diagram, see sheet E-299.
   - For RTU #10E panel layout, see sheet E-320.
   - For Circuit and Conduit/Cable Tray Schedules, see sheets starting at E-401.
   - For Strong Motion Detection System Cable Block Diagrams, see sheets E-383 and E-384.

FADI WALIEDDINE No. 11465 Exp. 12/31/2009 ELECTRICAL — REGISTERED PROFESSIONAL ENGINEER — STATE OF CALIFORNIA

REQUEST FOR INFORMATION NOT ADDRESSED IN THIS CCO REMAIN IN FORCE

MARK	DATE	DESCRIPTIONS REVISIONS	BY	CH'D	CCO#
2	08/03/09	ELECTRICAL WARNING SYSTEMS	RG	JE FW	61
1	03/04/08	BARRIER MODIFICATIONS	JS BM	RG SE	44

CONTRACT CHANGE ORDER NO. 61
SHEET 66 OF 104

S. A. ESTOOLE, JR. No. E-10151 Exp. 12/31/2006 ELECTRICAL — REGISTERED PROFESSIONAL ENGINEER — STATE OF CALIFORNIA

CALCULATED/ DESIGNED BY	EDC	JL
CHECKED BY		

REVISED BY	DATE REVISED
DATE 10/01	12/01

STATE OF CALIFORNIA - DEPARTMENT OF TRANSPORTATION
DESIGN OVERSIGHT
BEHZAD GOLEMOHAMMADI

Caltrans

THIS PLAN IS ACCURATE FOR ELECTRICAL WORK ONLY.

FOR REDUCED PLANS ORIGINAL SCALE IS IN MILLIMETERS 0 20 40 60 80

DGN FILE =>I:\13103\MS\pse\SAS Struc\CCO\SAS CC061\2009-08-03_Issued for Submittal\04-0120F1_0312R02.dgn
USERNAME =>garciar

CU 04251 EA 0120F1

LAST REVISION 00-00-00
DATE PLOTTED => 8/14/2009
TIME PLOTTED => 10:14:48 AM

E-331

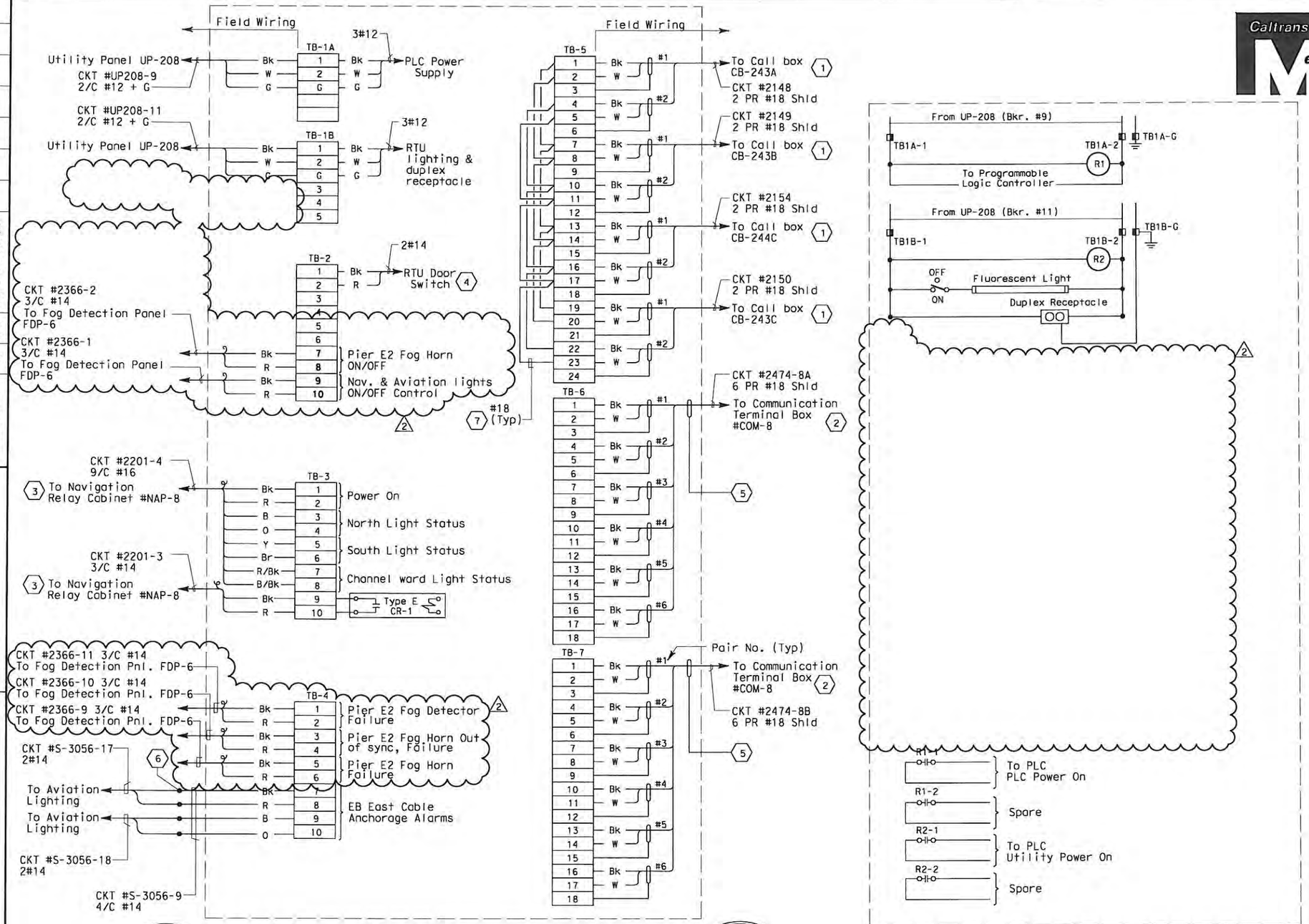

CONNECTION DIAGRAM - RTU #11E

ELEMENTARY DIAGRAM - RTU #11E

DIST	COUNTY	ROUTE	KILOMETER POST TOTAL PROJECT	SHEET No	TOTAL SHEETS
04	SF	80	13.2/13.9	314 R2	1204

12/19/02
REGISTERED ELECTRICAL ENGINEER DATE

12-6-04
PLANS APPROVAL DATE

REGISTERED PROFESSIONAL ENGINEER — JENS ERLINGSSON — No. 8249 — Exp. 9/30/06 — ELECTRICAL — STATE OF CALIFORNIA

PB POWER, Inc.
A Parsons Brinckerhoff Company
303 Second St., Suite 700N
San Francisco, CA 94107-1317

The State of California or its officers or agents shall not be responsible for the accuracy or completeness of electronic copies of this plan sheet.

Caltrans now has a web site! To get to the web site, go to http://www.dot.ca.gov

SHEET NOTES:

1. For connection diagram to call boxes, see sheet E-400.
2. For connection diagram to scada system, see Table A, sheet E-325.
3. For connection diagram to navigation system, see sheet E-303.
4. Connections to panel door switch. For remote alarm status to RTU.
5. Field to tape cable overall shield wire.
6. Conductors spliced inside junction box PB-2A located inside the girder.
7. The Contractor shall install resistors, approximately equal to the impedance (Zo) of the twisted pairs, at the extreme ends of the multidrop network.

NOTES:

1. All spare conductors shall be coiled and taped at conductor ends unless terminated.
2. Terminate cable shields to low level ground bus.
3. References:
   - For Up-208 panel schedule, see sheet E-154.
   - For navigation system elementary diagram, see sheet E-298.
   - For RTU #11E panel layout, see sheet E-320.
   - For circuit and conduit/cable tray schedules, see sheets starting at E-401.

REGISTERED PROFESSIONAL ENGINEER — S. A. ESTOQUE, JR. — No. E-10151 — Exp. 12/31/2008 — ELECTRICAL — STATE OF CALIFORNIA

FOR REVISION ONLY
1

MARK	DATE	DESCRIPTIONS	BY	CH'D	CCO#
		REVISIONS			
2	08/03/09	ELECTRICAL WARNING SYSTEMS	RG	JE FW	61
1	03/04/08	BARRIER MODIFICATIONS	JS BM	RG SE	44

REQUEST FOR INFORMATION NOT ADDRESSED IN THIS CCO REMAIN IN FORCE

CONTRACT CHANGE ORDER NO. 61
SHEET 67 OF 104

REGISTERED PROFESSIONAL ENGINEER — FADI WALIEDDINE — No. 11465 — Exp. 12/31/2009 — ELECTRICAL — STATE OF CALIFORNIA

FOR REVISION ONLY
2

DETAILS
SCADA REMOTE TERMINAL UNIT SYSTEM
RTU #11E ELEMENTARY AND CONNECTION DIAGRAM
NO SCALE

E-333

STATE OF CALIFORNIA - DEPARTMENT OF TRANSPORTATION
DESIGN OVERSIGHT
BEHZAD GOLEMOHAMMADI
CALCULATED/DESIGNED BY
CHECKED BY
EDC
DATE 10/01
REVISED BY
DATE REVISED
JL
11/01

LAST REVISION 00-00-00
DATE PLOTTED => 8/14/2009
TIME PLOTTED => 10:17:04 AM

FOR REDUCED PLANS ORIGINAL SCALE IS IN MILLIMETERS 0 20 40 60 80

DGN FILE =>I:\13103\MS\pse\SAS Struc\CCO\SAS CCO61\2009-08-03_Issued for Submittal\04-0120F1_0314R02.dgn
USERNAME =>garciar
CU 04251
EA 0120F1

DIST	COUNTY	ROUTE	KILOMETER POST TOTAL PROJECT	SHEET No	TOTAL SHEETS
04	SF	80	13.2/13.9	361 R6	1204

12/19/02
REGISTERED ELECTRICAL ENGINEER DATE

12-6-04
PLANS APPROVAL DATE

JENS ERLINGSSON No. 8249 Exp. 9/30/06 ELECTRICAL — REGISTERED PROFESSIONAL ENGINEER — STATE OF CALIFORNIA

PB POWER, Inc.
A Parsons Brinckerhoff Company
303 Second St., Suite 700N
San Francisco, CA 94107-1317

The State of California or its officers or agents shall not be responsible for the accuracy or completeness of electronic copies of this plan sheet.

Caltrans now has a web site! To get to the web site, go to http://www.dot.ca.gov

REQUEST FOR INFORMATION NOT ADDRESSED IN THIS CCO REMAIN IN FORCE

MARK	DATE	DESCRIPTIONS REVISIONS	BY	CH'D	CCO#
6	01/07/11	ELECTRICAL WARNING SYSTEMS	TW	RG	61
5	02/01/10	DEHUMIDIFIER SCADA INTERFACE	RR	RG FW	130
4	03/30/09	SERVICE PLATFORM ELECTRICAL CHANGES	RY RR	RG MP	55
3	02/25/08	CABLE TRAY CHANGES	RR TW	RG	42S1
2	03/04/08	BARRIER MODIFICATIONS	JS BM	RG SE	44
1	02/19/08	ELECTRICAL MODIFICATIONS	MP EL	RR	42

CONTRACT CHANGE ORDER NO. 61
SHEET 68 OF 104

HAROLL FUMIO TAKAKI No. E 8651 Exp. 8/30/2008 ELECTRICAL — REGISTERED PROFESSIONAL ENGINEER — STATE OF CALIFORNIA
FOR REVISION ONLY 1

S. A. ESTOQUE, JR. No. E-10151 Exp. 12/31/2008 ELECTRICAL — REGISTERED PROFESSIONAL ENGINEER — STATE OF CALIFORNIA
FOR REVISION ONLY 2 3

FADI WALIEDDINE No. 11465 Exp. 12/31/2009 ELECTRICAL — REGISTERED PROFESSIONAL ENGINEER — STATE OF CALIFORNIA
FOR REVISION ONLY 4 5

SYN YEE CHIN No. 18186 Exp. 09/30/2011 ELECTRICAL — REGISTERED PROFESSIONAL ENGINEER — STATE OF CALIFORNIA
FOR REVISION ONLY 6

CONDUIT DATA

Conduit No	Reference	Size	Type	Total Fill (mm²)	Allowable Fill (mm²)	Included Cable No.	Conductor Type
1843	E-47	41	RGS conduit	0.00	534.55	Pull rope	Soft-Fiber Polyester
1844	E-47	41	RGS conduit	0.00	534.55	Pull rope	Soft-Fiber Polyester
1845	E-47	41	RGS conduit	0.00	534.55	Pull rope	Soft-Fiber Polyester
1846	E-48	41	RGS conduit	0.00	534.55	Pull rope	Soft-Fiber Polyester
1847	E-48	41	RGS conduit	0.00	534.55	Pull rope	Soft-Fiber Polyester
1848	E-48	41	RGS conduit	0.00	534.55	Pull rope	Soft-Fiber Polyester
1849	E-48	41	RGS conduit	0.00	534.55	Pull rope	Soft-Fiber Polyester
1850	E-48	41	RGS conduit	0.00	534.55	Pull rope	Soft-Fiber Polyester
1851	E-49	41	RGS conduit	0.00	534.55	Pull rope	Soft-Fiber Polyester
1852	E-49	41	RGS conduit	0.00	534.55	Pull rope	Soft-Fiber Polyester
1853	E-49	41	RGS conduit	0.00	534.55	Pull rope	Soft-Fiber Polyester
1854	E-49	41	RGS conduit	262.06	534.55		
						UP107-3A	2 + 1 gnd #12,#12, 600 V, RHH/RHW Insulation
						Pull rope	Soft-Fiber Polyester
1855	E-49	41	RGS conduit	262.06	534.55		
						UP107-3A	2 + 1 gnd #12,#12, 600 V, RHH/RHW Insulation
						Pull rope	Soft-Fiber Polyester
1856	E-50	41	RGS conduit	262.06	534.55		
						UP107-3A	2 + 1 gnd #12,#12, 600 V, RHH/RHW Insulation
						Pull rope	Soft-Fiber Polyester
1857	E-50	41	RGS conduit	162.40	534.55	UP107-3A	2 + 1 gnd #12,#12, 600 V, RHH/RHW Insulation
						Pull rope	Soft-Fiber Polyester
1858	E-50	41	RGS conduit	0.00	534.55		
						Pull rope	Soft-Fiber Polyester
1859	E-50	41	RGS conduit	0.00	534.55	Pull rope	Soft-Fiber Polyester
1860	E-50	41	RGS conduit	0.00	534.55		
						Pull rope	Soft-Fiber Polyester
1861	E-50	41	RGS conduit	265.64	534.55	Pull rope	Soft-Fiber Polyester
						S-1032-2	3 + 1 gnd #6, #8, 600 V, RHH/RHW Insulation
1862	E-50, E-51	41	RGS conduit	265.64	534.55	Pull rope	Soft-Fiber Polyester
						S-1032-2	3 + 1 gnd #6, #8, 600 V, RHH/RHW Insulation
1863	E-51	41	RGS conduit	265.64	534.55	Pull rope	Soft-Fiber Polyester
						S-1032-S	3 + 1 gnd #6, #8, 600 V, RHH/RHW Insulation
1864	E-51	41	RGS conduit	0.00	534.55	Pull rope	Soft-Fiber Polyester
1865	E-51	41	RGS conduit	0.00	534.55	Pull rope	Soft-Fiber Polyester
1900	E-50	41	RGS conduit	0.00	534.55	Pull rope	Soft-Fiber Polyester
1901	E-50	41	RGS conduit	0.00	534.55	Pull rope	Soft-Fiber Polyester
1902	E-50	41	RGS conduit	0.00	534.55	Pull rope	Soft-Fiber Polyester
1903	E-51	41	RGS conduit	0.00	534.55	Pull rope	Soft-Fiber Polyester
1904	E-51	41	RGS conduit	0.00	534.55	Pull rope	Soft-Fiber Polyester
1905	E-51	41	RGS conduit	0.00	534.55	Pull rope	Soft-Fiber Polyester
1906	E-51	41	RGS conduit	0.00	534.55	Pull rope	Soft-Fiber Polyester

CONDUIT DATA

Conduit No	Reference	Size	Type	Total Fill (mm²)	Allowable Fill (mm²)	Included Cable No.	Conductor Type
1907	E-51	41	RGS conduit	0.00	534.55	Pull rope	Soft-Fiber Polyester
1908	E-51	41	RGS conduit	0.00	534.55	Pull rope	Soft-Fiber Polyester
1950	E-50	41	RGS conduit	0.00	534.55	Pull rope	Soft-Fiber Polyester
1951	E-50	41	RGS conduit	0.00	534.55	Pull rope	Soft-Fiber Polyester
1952	E-50	41	RGS conduit	0.00	534.55	Pull rope	Soft-Fiber Polyester
1953	E-51	41	RGS conduit	0.00	534.55	Pull rope	Soft-Fiber Polyester
1954	E-51	41	RGS conduit	0.00	534.55	Pull rope	Soft-Fiber Polyester
1955	E-51	41	RGS conduit	0.00	534.55	Pull rope	Soft-Fiber Polyester
1956	E-51	41	RGS conduit	0.00	534.55	Pull rope	Soft-Fiber Polyester
1957	E-51	41	RGS conduit	0.00	534.55	Pull rope	Soft-Fiber Polyester
1958	E-51	41	RGS conduit	0.00	534.55	Pull rope	Soft-Fiber Polyester
1T13	E-96, E-101 E-126A	305	152.4 mm siderail ladder tray	2780.99	19354.80	1391	3-1/C #4/0 + 1/C #1/0 gnd, 15 kV, EPR Insulation
						Pull rope	Soft-Fiber Polyester
1T14	E-208, E-126	305	152.4 mm siderail ladder tray	2780.99	8387.08	1391	3-1/C #4/0 + 1/C #1/0 gnd, 15 kV, EPR Insulation
						Pull rope	Soft-Fiber Polyester
1T23	E-114B	610	152.4 mm siderail ladder tray	13578.67 6	18064.48	1202-3A	1-2/C #14, 600 V, EPR Insulation 6
						A-3010-1	1-3/C + gnd #2, 600 V, EPR Insulation
						S-1031-1	1-3/C + gnd #2, 600 V, EPR Insulation
						2201-1 6	1-2/C + gnd #10, 600 V, EPR Insulation
						A-3009-3	1-3/C + gnd #6, 600 V, EPR Insulation
						2201-4A	1-2/C #14, 600 V, EPR Insulation 6
						1106	1-3/C + gnd #6, 600 V, EPR Insulation
						S-3056-5	1-4/C #14, 600 V, EPR Insulation
						S-3056-7	1-2/C #14, 600 V, EPR Insulation
						S-3056-8	1-4/C #14, 600 V, EPR Insulation
						Pull rope	Soft-Fiber Polyester
						A-3010-3	1-3/C #6 + gnd 600 V, RHH/RHW Insulation
						S-3051-1	1-3/C + gnd #4, 600 V, EPR Insulation
						UP108-3	1-2/C + gnd #8, 600 V, EPR Insulation
						1255-1	1-3/C #16 ,600V, EPR Insulation
						A-3001-1	1-3/C + gnd #4, 600 V, EPR Insulation
						A-3012-1	1-3/C + gnd #2, 600 V, EPR Insulation
						A-3013-1	1-3/C + gnd #2, 600 V, EPR Insulation
						S-3022-1	1-3/C + gnd #2, 600 V, EPR Insulation
						A-3002-1	1-3/C + gnd #4, 600 V, EPR Insulation
						UP107-6	1-2/C + gnd #8, 600 V, EPR Insulation

For continuation, see next sheet.

CONDUIT AND TRAY SCHEDULE

E-406

DESIGN OVERSIGHT	CALCULATED/ DESIGNED BY	DRAWN BY	CHECKED BY	DATE	REVISED BY	DATE REVISED
BEHZAD GOLEMOHAMMADI	PBP	AB		8/02		

STATE OF CALIFORNIA - DEPARTMENT OF TRANSPORTATION

FOR REDUCED PLANS ORIGINAL SCALE IS IN MILLIMETERS 0 20 40 60 80

DGN FILE =>04-0120f1_0361R06.dgn
USERNAME =>llorico

CU 04251

EA 0120F1

LAST REVISION 00-00-00

DATE PLOTTED => 11-JAN-2011
TIME PLOTTED => 14:01

CONDUIT DATA

Conduit No.	Reference	Size	Type	Total Fill (mm²)	Allowable Fill (mm²)	Included Cable No.	Conductor Type
						A-3009-1	1-3/C + gnd #2, 600 V, EPR Insulation (5)
						S-3021-1	1-3/C + gnd #4, 600 V, EPR Insulation
						S-3023-1	1-3/C + gnd #4, 600 V, EPR Insulation
						S-3056-1	1-3/C + gnd #6, 600 V, EPR Insulation
						S-1031-3	1-3/C + gnd #4, 600 V, EPR Insulation
						S-1032-1	1-3/C + gnd #4, 600 V, EPR Insulation
						A-1035-1	1-3/C + gnd #6, 600 V, EPR Insulation
						1202-3	1-7/C #16, 600 V, EPR Insulation
						1099	1-3/C + gnd #2, 600 V, EPR Insulation
						1098	1-3/C + gnd #2, 600 V, EPR Insulation
						1097	1-3/C + gnd #2, 600 V, EPR Insulation
						1096	1-3/C + gnd #2, 600 V, EPR Insulation
						1095	1-3/C + gnd #2, 600 V, EPR Insulation
						1117	1-3/C + gnd #2/0, 600 V, EPR Insulation
						1256-1	1-3/C #16, 600 V, EPR Insulation
						1202-1	1-2/C + gnd #10, 600 V, EPR Insulation (5)
						1255-2	1-3/C #16, 600 V, EPR Insulation
						A-3008-1	1-2/C + gnd #8, 600 V, EPR Insulation
						1202-2	1-3/C #14, 600 V, EPR Insulation
						A-3011-1	1-3/C + gnd #2, 600 V, EPR Insulation
1T24	E-114	610	152.4 mm siderail ladder tray	1652.27	18064.48	UP104-7	1-2/C + gnd #8, 600 V, EPR Insulation
						1095	1-3/C + gnd #2, 600 V, EPR Insulation
						Pull rope	Soft-Fiber Polyester
						UP104-9	1-2/C + gnd #10, 600 V, EPR Insulation
						UP104-8	1-2/C + gnd #8, 600 V, EPR Insulation
						1255-1	1-3/C #16, 600 V, EPR Insulation
						UP104-3	1-2/C + gnd #10, 600 V, EPR Insulation
						UP204-1	1-2/C + gnd #10, 600 V, EPR Insulation
						UP104-6	1-2/C + gnd #8 ,600 V, EPR Insulation (5)
1T25	E-114B	610	152.4 mm siderail ladder tray	2798.19	18064.48	UP105-10	1-2/C + gnd #8, 600 V, EPR Insulation
						1201-1	1-2/C + gnd #10, 600 V, EPR Insulation
						1201-2	1-2/C + gnd #10, 600 V, EPR Insulation
						1201-6	1-2/C + gnd #10, 600 V, EPR Insulation
						1096	1-3/C + gnd #2, 600 V, EPR Insulation
						1255-1	1-3/C #16, 600 V, EPR Insulation
						1202-4	1-3/C #14, 600 V, EPR Insulation
						UP105-8	1-2/C + gnd #8, 600 V, EPR Insulation
						UP205-1	1-2/C + gnd #10, 600 V, EPR Insulation
						1202-3	1-7/C #16, 600 V, EPR Insulation
						1202-2	1-3/C #14, 600 V, EPR Insulation
						Pull rope	Soft-Fiber Polyester
						UP105-3	1-2/C + gnd #10, 600 V, EPR Insulation
						UP105-9	1-2/C + gnd #8, 600 V, EPR Insulation
						UP105-7	1-2/C + gnd #8, 600 V, EPR Insulation
						S-3056-5	1-4/C #14, 600 V, EPR Insulation
						S-3056-7	1-2/C #14, 600 V, EPR Insulation
1T26	E-116	610	152.4 mm siderail ladder tray	2750.23 (5)	18064.48	UP106-1	1-2/C + gnd #8, 600 V, EPR Insulation
						UP106-8	1-2/C + gnd #8, 600 V, EPR Insulation
						UP106-3	1-2/C + gnd #8, 600 V, EPR Insulation
						1255-2	1-3/C #16, 600 V, EPR Insulation
						UP206-1	1-2/C + gnd #10, 600 V, EPR Insulation
						Pull rope	Soft-Fiber Polyester
						1202-2	1-3/C #14, 600 V, EPR Insulation
						1202-3	1-7/C #16, 600 V, EPR Insulation
						UP106-6	1-2/C + gnd #8, 600 V, EPR Insulation
						UP106-7	1-2/C + gnd #8, 600 V, EPR Insulation
						CCTVE01BA	TVP
						CCTVE01BB	TVCP
						UP106-9	1-2/C + gnd #8, 600 V, EPR Insulation
						1097	1-3/C + gnd #2, 600 V, EPR Insulation
						1202-4	1-3/C #14, 600 V, EPR Insulation
						1202-1	1-2/C + gnd #10, 600 V, EPR Insulation (5)
						1202-3A	1-2/C #14, 600 V, EPR Insulation (5)
1T27	E-117	610	152.4 mm siderail ladder tray	1726.55	18064.48	UP107-6	1-2/C + gnd #8, 600 V, EPR Insulation
						Pull rope	Soft-Fiber Polyester
						UP107-7	1-2/C + gnd #8, 600 V, EPR Insulation
						UP107-9	1-2/C + gnd #8, 600 V, EPR Insulation
						1256-1	1-3/C #16 ,600V, EPR Insulation
						UP107-8	1-2/C + gnd #8, 600 V, EPR Insulation
						1098	1-3/C + gnd #2, 600 V, EPR Insulation
						UP107-3	1-2/C + gnd #8, 600 V, EPR Insulation

REQUEST FOR INFORMATION NOT ADDRESSED IN THIS CCO REMAIN IN FORCE					
5	01/07/11	ELECTRICAL WARNING SYSTEMS	TW	RG	61
4	03/26/10	DEHUMIDIFIER SCADA INTERFACE	RR	RG FW	130
3	03/30/09	SERVICE PLATFORM ELECTRICAL CHANGES	RY RR	RG MP	55
2	02/25/08	CABLE TRAY CHANGES	RR TW	RG	42S1
1	03/04/08	BARRIER MODIFICATIONS	JS BM	RG	44
MARK	DATE	DESCRIPTIONS REVISIONS	BY	CH'D	CCO#

CONTRACT CHANGE ORDER NO. 61
SHEET 69 OF 104

DIST	COUNTY	ROUTE	KILOMETER POST TOTAL PROJECT	SHEET No	TOTAL SHEETS
04	SF	80	13.2/13.9	362 R5	1204

12/19/02
REGISTERED ELECTRICAL ENGINEER DATE

12-6-04
PLANS APPROVAL DATE

PB POWER, Inc.
A Parsons Brinckerhoff Company
303 Second St., Suite 700N
San Francisco, CA 94107-1317

REGISTERED PROFESSIONAL ENGINEER — JENS ERLINGSSON — No. 8249 — Exp. 9/30/06 ELECTRICAL — STATE OF CALIFORNIA

The State of California or its officers or agents shall not be responsible for the accuracy or completeness of electronic copies of this plan sheet.

Caltrans now has a web site! To get to the web site, go to http://www.dot.ca.gov

REGISTERED PROFESSIONAL ENGINEER — S. A. ESTOQUE JR — No. E-10161 — Exp. 12/31/2009 ELECTRICAL — STATE OF CALIFORNIA
FOR REVISION ONLY (1)(2)

REGISTERED PROFESSIONAL ENGINEER — FADI WALIEDDINE — No. 11465 — Exp. 12/31/2009 ELECTRICAL — STATE OF CALIFORNIA
FOR REVISION ONLY (3)

REGISTERED PROFESSIONAL ENGINEER — SYN YEE CHIN — No. 18186 — Exp. 09/30/2011 ELECTRICAL — STATE OF CALIFORNIA
Syn Yee Chin
FOR REVISION ONLY (4)(5)

CONDUIT DATA

Conduit No.	Reference	Size	Type	Total Fill (mm²)	Allowable Fill (mm²)	Included Cable No.	Conductor Type
1T28	E-118	610	152.4 mm siderail ladder tray	2851.38 (5)	18064.48	UP108-8	1-2/C + gnd #8, 600 V, EPR Insulation
						UP108-3	1-2/C + gnd #8, 600 V, EPR Insulation
						UP108-10	1-2/C + gnd #8, 600 V, EPR Insulation
						S-3056-8	1-4/C #14, 600 V, EPR Insulation (5)
						2201-4A	1-2/C #14, 600 V, EPR Insulation
						Pull rope	Soft-Fiber Polyester
						UP108-7	1-2/C + gnd #8, 600 V, EPR Insulation
						2201-5	1-3/C #14, 600 V, EPR Insulation (5)
						2201-1	1-2/C + gnd #10, 600 V, EPR Insulation
						UP108-9	1-2/C + gnd #8, 600 V, EPR Insulation
						UP108-12	1-2/C + gnd #8, 600 V, EPR Insulation
						1099	1-3/C + gnd #2, 600 V, EPR Insulation
						1256-1	1-3/C #16, 600 V, EPR Insulation
1T29	E-20B, E-126	610	152.4 mm siderail ladder tray	12114.34	18064.48	1106	1-3/C + gnd #6, 600 V, EPR Insulation
						S-1032-1	1-3/C + gnd #4, 600 V, EPR Insulation
						A-3002-1	1-3/C + gnd #4, 600 V, EPR Insulation
						A-3001-1	1-3/C + gnd #4, 600 V, EPR Insulation
						A-3013-1	1-3/C + gnd #2, 600 V, EPR Insulation
						A-3012-1	1-3/C + gnd #2, 600 V, EPR Insulation
						S-3023-1	1-3/C + gnd #4, 600 V, EPR Insulation
						1097	1-3/C + gnd #2, 600 V, EPR Insulation
						S-3051-1	1-3/C + gnd #4, 600 V, EPR Insulation
						A-1035-1	1-3/C + gnd #6, 600 V, EPR Insulation
						A-3011-1	1-3/C + gnd #2, 600 V, EPR Insulation
						S-3021-1	1-3/C + gnd #4, 600 V, EPR Insulation
						S-3022-1	1-3/C + gnd #2, 600 V, EPR Insulation
						S-3056-1	1-3/C + gnd #6, 600 V, EPR Insulation
						1098	1-3/C + gnd #2, 600 V, EPR Insulation
						1096	1-3/C + gnd #2, 600 V, EPR Insulation
						1095	1-3/C + gnd #2, 600 V, EPR Insulation
						S-1031-1	1-3/C + gnd #2, 600 V, EPR Insulation
						Pull rope	Soft-Fiber Polyester
						1099	1-3/C + gnd #2, 600 V, EPR Insulation
						A-3008-1	1-2/C + gnd #8, 600 V, EPR Insulation
						1117	1-3/C + gnd #2/0, 600 V, EPR Insulation
						A-3010-1	1-3/C + gnd #2, 600 V, EPR Insulation
						1115	1-3/C + gnd #1/0, 600 V, EPR Insulation
						A-3009-1	1-3/C + gnd #2, 600 V, EPR Insulation

For continuation, see next sheet.

CONDUIT AND TRAY SCHEDULE

E-407

REVISED BY	DATE REVISED
PBP	8/02

CALCULATED/DESIGNED BY: AB
CHECKED BY: BEHZAD GOLEMOHAMMADI
DESIGN OVERSIGHT

STATE OF CALIFORNIA - DEPARTMENT OF TRANSPORTATION
Caltrans

FOR REDUCED PLANS ORIGINAL SCALE IS IN MILLIMETERS 0 20 40 60 80

DGN FILE =>04-0120f1_0362R05.dgn
USERNAME =>llorico

CU 04251 | EA 0120F1

LAST REVISION 00-00-00
DATE PLOTTED => 11-JAN-2011
TIME PLOTTED => 14:01

DRAFT 1 (03/01/11)

STATE OF CALIFORNIA - DEPARTMENT OF TRANSPORTATION

Caltrans

DESIGN OVERSIGHT: BEHZAD GOLEMOHAMMADI

CALCULATED/DESIGNED BY: PBP | DATE: 8/02 | REVISED BY
CHECKED BY: AB | DATE REVISED: 8/02

CONDUIT DATA

Conduit No	Reference	Size	Type	Total Fill (mm²)	Allowable Fill (mm²)	Included Cable No.	Conductor Type
1T33	E-114B	610	152.4 mm siderail ladder tray	7720.94	18064.48	UP104-8	1-2/C + gnd #8, 600 V, EPR Insulation
						UP108-12	1-2/C + gnd #8, 600 V, EPR Insulation
						UP108-9	1-2/C + gnd #8, 600 V, EPR Insulation
						A-1011-1	1-3/C + gnd #2, 600 V, EPR Insulation
						A-1012-1	1-3/C + gnd #2, 600 V, EPR Insulation
						UP104-3	1-2/C + gnd #10, 600 V, EPR Insulation
						UP107-3	1-2/C + gnd #8, 600 V, EPR Insulation
						UP105-9	1-2/C + gnd #8, 600 V, EPR Insulation
						UP104-9	1-2/C + gnd #10, 600 V, EPR Insulation
						Pull rope	Soft-Fiber Polyester
						UP108-4	1-2/C + gnd #8, 600 V, EPR Insulation
						UP108-2	1-2/C + gnd #8, 600 V, EPR Insulation
						UP108-7	1-2/C + gnd #8, 600 V, EPR Insulation
						UP107-7	1-2/C + gnd #8, 600 V, EPR Insulation
						UP106-7	1-2/C + gnd #8, 600 V, EPR Insulation
						UP105-7	1-2/C + gnd #8, 600 V, EPR Insulation
						A-1013-1	1-3/C + gnd #2, 600 V, EPR Insulation
						UP107-9	1-2/C + gnd #8, 600 V, EPR Insulation
						A-1014-1	1-3/C + gnd #2, 600 V, EPR Insulation
						UP106-3	1-2/C + gnd #8, 600 V, EPR Insulation
						UP105-3	1-2/C + gnd #10, 600 V, EPR Insulation
						UP106-6	1-2/C + gnd #8, 600 V, EPR Insulation
						UP105-10	1-2/C + gnd #8, 600 V, EPR Insulation
						UP104-6	1-2/C + gnd #8, 600 V, EPR Insulation
						UP107-8	1-2/C + gnd #8, 600 V, EPR Insulation
						UP106-8	1-2/C + gnd #8, 600 V, EPR Insulation
						UP105-8	1-2/C + gnd #8, 600 V, EPR Insulation
						UP104-7	1-2/C + gnd #8, 600 V, EPR Insulation
						UP108-8	1-2/C + gnd #8, 600 V, EPR Insulation
						UP106-9	1-2/C + gnd #8, 600 V, EPR Insulation
						UP108-10	1-2/C + gnd #8, 600 V, EPR Insulation
1T39	E-20B, E-126	610	152.4 mm siderail ladder tray	1054.36	18064.48	A-1011-1	1-3/C + gnd #2, 600 V, EPR Insulation
						A-1014-1	1-3/C + gnd #2, 600 V, EPR Insulation
						Pull rope	Soft-Fiber Polyester
1T43	E-114B	610	152.4 mm siderail solid bottom tray	13733.84 (7)	38709.60	MVDSW04A	MVDS DLC
						1144	1 - 2 pair, shielded #18 with IS/OA , 300 V, PVC Jacket
						1475-3C	12 Fiber, single mode fiberoptic cable
						1475-3A	12 Fiber, single mode fiberoptic cable
						1474-4	50 pair #18, shielded pairs, IS/OS shield 600 V, XLPE Insul., PVC Jacket
						1145	1 - 2 pair, shielded #18 with IS/OA , 300 V, PVC Jacket
						1474-5	50 pair #18, shielded pairs, IS/OS shield 600 V, XLPE Insul., PVC Jacket
						1474-7	50 pair #18, shielded pairs, IS/OS shield 600 V, XLPE Insul., PVC Jacket
						1477-2	72 Fiber, single mode fiberoptic riser cable
						1475-3	72 Fiber, single mode fiberoptic riser cable
						MVDSW02A	MVDS DLC
						1115-1	1-2PR #18 Twisted Shielded w/overall shield
						1117-1	1-2PR #18 Twisted Shielded w/overall shield
						1475-3B	12 Fiber, single mode fiberoptic cable
						2900-472B	4 pair #22, shielded pairs, FEP Insulation
						2900-182A	4 pair #22, shielded pairs, FEP Insulation
						2900-182B	4 pair #22, shielded pairs, FEP Insulation
						2900-202A	4 pair #22, shielded pairs, FEP Insulation
						2900-282A	4 pair #22, shielded pairs, FEP Insulation
						2900-342A	4 pair #22, shielded pairs, FEP Insulation
						2900-392A	4 pair #22, shielded pairs, FEP Insulation
						2900-462A	4 pair #22, shielded pairs, FEP Insulation
						2900-472A	4 pair #22, shielded pairs, FEP Insulation
						Pull rope	Soft-Fiber Polyester
						2900-472C	4 pair #22, shielded pairs, FEP Insulation
						1474-8	50 pair #18, shielded pairs, IS/OS shield 600 V, XLPE Insul., PVC Jacket
						1473-5	50 pair #18, shielded pairs, IS/OS shield 600 V, XLPE Insul., PVC Jacket
						1473-7	50 pair #18, shielded pairs, IS/OS shield 600 V, XLPE Insul., PVC Jacket
						1473-10	50 pair #18, shielded pairs, IS/OS shield 600V, XLPE Insul., PVC Jacket
						1474-10	50 pair #18, shielded pairs, IS/OS shield 600 V, XLPE Insul., PVC Jacket
						2900-462B	4 pair #22, shielded pairs, FEP Insulation
						1479-1	72 Fiber, single mode fiber optic riser cable inside brown innerduct
						1479-2	72 Fiber, single mode fiber optic riser cable inside brown innerduct
						1481-2	12 Fiber, single mode fiber optic cable inside brown innerduct
						(7) 2366-12	1-3 pr #16, twisted shielded w/overall shield, 600V, PVC Insulation

REQUEST FOR INFORMATION NOT ADDRESSED IN THIS CCO REMAIN IN FORCE					
7	05/02/12	ELECTRICAL WARNING SYSTEMS	RR	RG	61
6	07/01/11	TOS MODIFICATIONS	RR	WB	81
5	03/01/11	BASE INTEGRATION	RSB	WB	150
4	03/26/10	DEHUMIDIFIER SCADA INTERFACE	RR	RG FW	130
3	03/30/09	SERVICE PLATFORM ELECTRICAL CHANGES	RY RR	RG MP	55
2	02/25/08	CABLE TRAY CHANGES	RR TW	RG	42S1
1	03/04/08	BARRIER MODIFICATIONS	JS BM	RG	44
MARK	DATE	DESCRIPTIONS	BY	CH'D	CCO#
		REVISIONS			

Metric

DIST	COUNTY	ROUTE	KILOMETER POST TOTAL PROJECT	SHEET No	TOTAL SHEETS
04	SF	80	13.2/13.9	363 R7	1204

12/19/02
REGISTERED ELECTRICAL ENGINEER DATE

REGISTERED PROFESSIONAL ENGINEER — JENS ERLINGSSON No. 8249 Exp. 9/30/06 ELECTRICAL — STATE OF CALIFORNIA

12-6-04
PLANS APPROVAL DATE

PB POWER, Inc.
A Parsons Brinckerhoff Company
303 Second St., Suite 700N
San Francisco, CA 94107-1317

The State of California or its officers or agents shall not be responsible for the accuracy or completeness of electronic copies of this plan sheet.

Caltrans now has a web site! To get to the web site, go to http://www.dot.ca.gov

CONTRACT CHANGE ORDER NO. 61
SHEET 70 OF 104

REGISTERED PROFESSIONAL ENGINEER — S. A. ESTOQUE, JR. No. E-10151 Exp. 12/31/2008 ELECTRICAL — STATE OF CALIFORNIA — 1 2
FOR REVISION ONLY

REGISTERED PROFESSIONAL ENGINEER — FADI WALIEDDINE No. 11465 Exp. 12/31/2009 ELECTRICAL — STATE OF CALIFORNIA — 3
FOR REVISION ONLY

REGISTERED PROFESSIONAL ENGINEER — SYN YEE CHIN No. 18186 Exp. 09/30/2011 ELECTRICAL — STATE OF CALIFORNIA — 4 5 6
FOR REVISION ONLY

REGISTERED PROFESSIONAL ENGINEER — DAVID H. OTO No. 10699 Exp. 06/30/2013 ELECTRICAL — STATE OF CALIFORNIA — 7
FOR REVISION ONLY

CONDUIT DATA

Conduit No	Reference	Size	Type	Total Fill (mm2)	Allowable Fill (mm2)	Included Cable No.	Conductor Type
1T44	E-114A	610	152.4 mm siderail solid bottom tray	3785.76	38709.60	1473-5	50 pair #18, shielded pairs, IS/OS shield 600 V, XLPE Insul., PVC Jacket
						1474-5	50 pair #18, shielded pairs, IS/OS shield 600 V, XLPE Insul., PVC Jacket
						1475-3A	12 Fiber, single mode fiberoptic cable
						MVDSW02A	MVDS DLC
						Pull rope	Soft-Fiber Polyester
						1474-4	50 pair #18, shielded pairs, IS/OS shield 600 V, XLPE Insul., PVC Jacket
1T45	E-114B	610	152.4 mm siderail solid bottom tray	2972.95	38709.60	Pull rope	Soft-Fiber Polyester
						2900-182A	4 pair #22, shielded pairs, FEP Insulation
						2910-10	4 pair #22, shielded pairs, 300 V, PE Insulation
						2910-8	4 pair #22, shielded pairs, 300 V, PE Insulation
						1473-5	50 pair #18, shielded pairs, IS/OS shield 600 V, XLPE Insul., PVC Jacket
						1474-5	50 pair #18, shielded pairs, IS/OS shield 600 V, XLPE Insul., PVC Jacket
						1474-5B	1 - 6 pair, shielded #18 with overall shield , 300 V, PVC Jacket
						1474-5A	1 - 6 pair, shielded #18 with overall shield , 300 V, PVC Jacket
						2900-472C	4 pair #22, shielded pairs, FEP Insulation
						2900-182B	4 pair #22, shielded pairs, FEP Insulation
						2900-472A	4 pair #22, shielded pairs, FEP Insulation
						2900-462B	4 pair #22, shielded pairs, FEP Insulation
						2900-462A	4 pair #22, shielded pairs, FEP Insulation
						2900-392A	4 pair #22, shielded pairs, FEP Insulation
						2900-342A	4 pair #22, shielded pairs, FEP Insulation
						2900-282A	4 pair #22, shielded pairs, FEP Insulation
						2910-7	4 pair #24, overall shielded, 30 V, PE Insulation
						2900-472B	4 pair #22, shielded pairs, FEP Insulation
						2900-202A	4 pair #22, shielded pairs, FEP Insulation
						1115-1	1-2PR #18 Twisted Shielded w/overall shield
1T46	E-98, E-114	610	152.4 mm siderail solid bottom tray	5211.36	38709.60	CCTVE01B	HCC
						1474-7	50 pair #18, shielded pairs, IS/OS shield 600 V, XLPE Insul., PVC Jacket
						MVDSW03A	MVDS DLC
						1475-3B	12 Fiber, single mode fiberoptic cable
						Pull rope	Soft-Fiber Polyester
						1473-7	50 pair #18, shielded pairs, IS/OS shield 600 V, XLPE Insul., PVC Jacket
						1479-1	72 Fiber, single mode fiber optic riser cable inside brown innerduct
						1479-2	72 Fiber, single mode fiber optic riser cable inside brown innerduct
						1481-2	12 Fiber, single mode fiber optic cable inside brown innerduct

For continuation, see next sheet.

CONDUIT AND TRAY SCHEDULE E-408

LAST REVISION 00-00-00 | DATE PLOTTED => 04-MAY-2012 | TIME PLOTTED => 13:51

FOR REDUCED PLANS ORIGINAL SCALE IS IN MILLIMETERS 0 20 40 60 80

DGN FILE =>04-0120F1_0363R07.dgn
USERNAME =>florico

CU 04251 | EA 0120F1

CONDUIT DATA

Conduit No	Reference	Size	Type	Total Fill (mm²)	Allowable Fill (mm²)	Included Cable No.	Conductor Type
1T47	E-117	610	152.4 mm siderail solid bottom tray	3785.76	38709.60	Pull rope	Soft-Fiber Polyester
						MVDSW04A	MVDS DLC
						1474-7	50 pair #18, shielded pairs, IS/OS shield 600 V, XLPE Insul., PVC Jacket
						1473-7	50 pair #18, shielded pairs, IS/OS shield 600 V, XLPE Insul., PVC Jacket
						1474-8	50 pair #18, shielded pairs, IS/OS shield 600 V, XLPE Insul., PVC Jacket
						1475-3C	12 Fiber, single mode fiberoptic cable
1T48	E-118	610	152.4 mm siderail solid bottom tray	2285.81 (5)	38709.60	Pull rope	Soft-Fiber Polyester
						1474-8A	1 - 6 pair, shielded #18 with overall shield , 300 V, PVC Jacket
						1474-8B	1 - 6 pair, shielded #18 with overall shield , 300 V, PVC Jacket
						1474-10	50 pair #18, shielded pairs, IS/OS shield 600 V, XLPE Insul., PVC Jacket
						1474-8	50 pair #18, shielded pairs, IS/OS shield 600 V, XLPE Insul., PVC Jacket
					(5)	1473-10	50 pair #18, shielded pairs, IS/OS shield 600 V, XLPE Insul., PVC Jacket
						2366-12	1-3 pr #16, twisted shielded w/overall shield, 600V
1T49	E-20B, E-126	305	152.4 mm siderail solid bottom tray	3698.65	19354.80	Pull rope	Soft-Fiber Polyester
						1474-4	50 pair #18, shielded pairs, IS/OS shield 600 V, XLPE Insul., PVC Jacket
						1475-3	72 Fiber, single mode fiber optic riser cable
						1477-2	72 Fiber, single mode fiber optic riser cable
						1115-1	1-2PR #18 Twisted Shielded w/overall shield
						1479-1	72 Fiber, single mode fiber optic riser cable inside brown innerduct
						1481-2	12 Fiber, single mode fiber optic cable inside brown innerduct
1T53	E-96, E-126A E-101	610	152.4 mm siderail solid bottom tray	0.00	16774.16	Pull rope	Soft-Fiber Polyester
1T54	E-20B, E-126	610	152.4 mm siderail ladder tray	0.00	16774.16	Pull rope	Soft-Fiber Polyester
2000	E-96	41	RGS conduit	323.69	534.55	UP104-7-1	1-2/C + gnd #8,600 V, EPR Insulation
						UP104-8-2	2 + 1 gnd #8,#10, 600 V, RHH/RHW Insulation
2001	E-96	53	RGS conduit	809.26	879.42	UP104-9	1-2/C + gnd #10,600 V, EPR Insulation
						UP104-8	1-2/C + gnd #8,600 V, EPR Insulation
						UP104-6	1-2/C + gnd #8,600 V, EPR Insulation
						UP104-7	1-2/C + gnd #8,600 V, EPR Insulation
2002	E-96	63	RGS conduit	905.49	1663.73	UP104-8-2	2 + 1 gnd #8,#10, 600 V, RHH/RHW Insulation
						UP104-6	1-2/C + gnd #8,600 V, EPR Insulation
						UP104-9	1-2/C + gnd #10,600 V, EPR Insulation
						UP104-7	1-2/C + gnd #8,600 V, EPR Insulation
						UP104-8	1-2/C + gnd #8,600 V, EPR Insulation
2003	E-96	41	RGS conduit	192.46	534.55	UP104-9-2	2 + 1 gnd #8,#10, 600 V, RHH/RHW Insulation
						UP104-6A	2 + 1 gnd #8,#10, 600 V, RHH/RHW Insulation
2004	E-96	53	RGS conduit	811.22	879.42	UP104-7	1-2/C + gnd #8,600 V, EPR Insulation
						UP104-8-1	3 + 1 gnd #8,#10, 600 V, RHH/RHW Insulation
						UP104-8-2	2 + 1 gnd #8,#10, 600 V, RHH/RHW Insulation
						UP104-9	1-2/C + gnd #10,600 V, EPR Insulation
						UP104-6	1-2/C + gnd #8,600 V, EPR Insulation
2005	E-96	41	RGS conduit	192.46	534.55	UP104-6b	2 + 1 gnd #8,#10, 600 V, RHH/RHW Insulation
						UP104-9-1	2 + 1 gnd #8,#10, 600 V, RHH/RHW Insulation
2006	E-96	53	RGS conduit	811.22	879.42	UP104-9	1-2/C + gnd #10,600 V, EPR Insulation
						UP104-6	1-2/C + gnd #8,600 V, EPR Insulation
						UP104-8-2	2 + 1 gnd #8,#10, 600 V, RHH/RHW Insulation
						UP104-8-1	3 + 1 gnd #8,#10, 600 V, RHH/RHW Insulation
						UP104-7	1-2/C + gnd #8,600 V, EPR Insulation
2007	E-97	41	RGS conduit	354.34	534.55	UP104-9	1-2/C + gnd #10,600 V, EPR Insulation
						UP104-6	1-2/C + gnd #8,600 V, EPR Insulation
2008	E-97	53	RGS conduit	456.88	879.42	UP104-8-2	2 + 1 gnd #8,#10, 600 V, RHH/RHW Insulation
						UP104-8-1	3 + 1 gnd #8,#10, 600 V, RHH/RHW Insulation
						UP105-7-1	1-2/C + gnd #8,600 V, EPR Insulation
2009	E-97	63	RGS conduit	909.84	1663.73	UP105-7	1-2/C + gnd #8,600 V, EPR Insulation
						UP105-9	1-2/C + gnd #8,600 V, EPR Insulation
						UP105-10	1-2/C + gnd #8,600 V, EPR Insulation
						UP105-8	1-2/C + gnd #8,600 V, EPR Insulation

REQUEST FOR INFORMATION NOT ADDRESSED IN THIS CCO REMAIN IN FORCE

MARK	DATE	DESCRIPTIONS	BY	CH'D	CCO#
5	05/02/12	ELECTRICAL WARNING SYSTEMS	RR	RG	61
4	03/01/11	BASE INTEGRATION	RSB	WB	150
3	02/01/10	DEHUMIDIFIER SCADA INTERFACE	RR	RG FW	130
2	02/25/08	CABLE TRAY CHANGES	TW	RG	42S1
1	03/04/08	BARRIER MODIFICATIONS	JS BM	RG SE	44

REVISIONS

CONTRACT CHANGE ORDER NO. 61
SHEET 71 OF 104

REGISTERED PROFESSIONAL ENGINEER — DAVID H. OTO — No. 10699 — Exp. 06/30/2013 — ELECTRICAL — STATE OF CALIFORNIA (5)
FOR REVISION ONLY

REGISTERED PROFESSIONAL ENGINEER — S. A. ESTOQUE, JR — No. E-10151 — Exp. 12/31/2008 — ELECTRICAL — STATE OF CALIFORNIA (1)(2)
FOR REVISION ONLY

REGISTERED PROFESSIONAL ENGINEER — FADI WALIEDDINE — No. 11465 — Exp. 12/31/2011 — ELECTRICAL — STATE OF CALIFORNIA (3)
FOR REVISION ONLY

REGISTERED PROFESSIONAL ENGINEER — SYN YEE CHIN — No. 18186 — Exp. 09/30/2011 — ELECTRICAL — STATE OF CALIFORNIA (4)
Syn Yee Chin
FOR REVISION ONLY

Metric

DIST	COUNTY	ROUTE	KILOMETER POST TOTAL PROJECT	SHEET No	TOTAL SHEETS
04	SF	80	13.2/13.9	364 R5	1204

12/19/02
REGISTERED ELECTRICAL ENGINEER DATE

12-6-04
PLANS APPROVAL DATE

REGISTERED PROFESSIONAL ENGINEER — JENS ERLINGSSON — No. 8249 — Exp. 9/30/06 — ELECTRICAL — STATE OF CALIFORNIA

PB POWER, Inc.
A Parsons Brinckerhoff Company
303 Second St., Suite 700N
San Francisco, CA 94107-1317

The State of California or its officers or agents shall not be responsible for the accuracy or completeness of electronic copies of this plan sheet.

Caltrans now has a web site! To get to the web site, go to http://www.dot.ca.gov

CONDUIT DATA

Conduit No	Reference	Size	Type	Total Fill (mm²)	Allowable Fill (mm²)	Included Cable No.	Conductor Type
2010	E-97	63	RGS conduit	1139.26	1663.73	UP104-8-2	2 + 1 gnd #8,#10, 600 V, RHH/RHW Insulation
						UP104-8-1	3 + 1 gnd #8,#10, 600 V, RHH/RHW Insulation
						UP105-8	1-2/C + gnd #8,600 V, EPR Insulation
						UP105-7	1-2/C + gnd #8,600 V, EPR Insulation
						UP105-9	1-2/C + gnd #8,600 V, EPR Insulation
						UP105-10	1-2/C + gnd #8,600 V, EPR Insulation
2011	E-97	41	RGS conduit	192.46	534.55	UP105-10A	2 + 1 gnd #8,#10, 600 V, RHH/RHW Insulation
						UP105-9-2	2 + 1 gnd #8,#10, 600 V, RHH/RHW Insulation
2012	E-97	63	RGS conduit	911.80	1663.73	UP105-9	1-2/C + gnd #8,600 V, EPR Insulation
						UP105-10	1-2/C + gnd #8,600 V, EPR Insulation
						UP105-8-1	3 + 1 gnd #8,#10, 600 V, RHH/RHW Insulation
						UP105-7	1-2/C + gnd #8,600 V, EPR Insulation
						UP105-8-2	2 + 1 gnd #8,#10, 600 V, RHH/RHW Insulation
2013	E-97	41	RGS conduit	192.46	534.55	UP105-10b	2 + 1 gnd #8,#10, 600 V, RHH/RHW Insulation
						UP105-9-1	2 + 1 gnd #8,#10, 600 V, RHH/RHW Insulation
2014	E-97	63	RGS conduit	911.80	1663.73	UP105-10	1-2/C + gnd #8,600 V, EPR Insulation
						UP105-8-1	3 + 1 gnd #8,#10, 600 V, RHH/RHW Insulation
						UP105-8-2	2 + 1 gnd #8,#10, 600 V, RHH/RHW Insulation
						UP105-7	1-2/C + gnd #8,600 V, EPR Insulation
						UP105-9	1-2/C + gnd #8,600 V, EPR Insulation
2015	E-97	41	RGS conduit	454.92	534.55	UP105-10	1-2/C + gnd #8,600 V, EPR Insulation
						UP105-9	1-2/C + gnd #8,600 V, EPR Insulation
2016	E-97	63	RGS conduit	229.42	1663.73	UP105-8-1	3 + 1 gnd #8,#10, 600 V, RHH/RHW Insulation
						UP105-8-2	2 + 1 gnd #8,#10, 600 V, RHH/RHW Insulation
2017	E-98	63	RGS conduit	909.84	1663.73	UP106-6	1-2/C + gnd #8,600 V, EPR Insulation
						UP106-8	1-2/C + gnd #8,600 V, EPR Insulation
						UP106-7	1-2/C + gnd #8,600 V, EPR Insulation
						UP106-9	1-2/C + gnd #8,600 V, EPR Insulation
2018	E-98	63	RGS conduit	1139.26	1663.73	UP106-7	1-2/C + gnd #8,600 V, EPR Insulation
						UP106-9	1-2/C + gnd #8,600 V, EPR Insulation
						UP106-6	1-2/C + gnd #8,600 V, EPR Insulation
						UP105-8-1	3 + 1 gnd #8,#10, 600 V, RHH/RHW Insulation
						UP105-8-2	2 + 1 gnd #8,#10, 600 V, RHH/RHW Insulation
						UP106-8	1-2/C + gnd #8,600 V, EPR Insulation
2019	E-98	41	RGS conduit	323.69	534.55	UP106-6A	1-2/C + gnd #8,600 V, EPR Insulation
						UP106-9-2	2 + 1 gnd #8,#10, 600 V, RHH/RHW Insulation
2020	E-98	63	RGS conduit	911.80	1663.73	UP106-6	1-2/C + gnd #8,600 V, EPR Insulation
						UP106-8-1	3 + 1 gnd #8,#10, 600 V, RHH/RHW Insulation
						UP106-7	1-2/C + gnd #8,600 V, EPR Insulation
						UP106-8-2	2 + 1 gnd #8,#10, 600 V, RHH/RHW Insulation
						UP106-9	1-2/C + gnd #8,600 V, EPR Insulation

For continuation, see next sheet.

CONDUIT AND TRAY SCHEDULE

E-409

DATE PLOTTED => 04-MAY-2012
TIME PLOTTED => 13:51
LAST REVISION 00-00-00

FOR REDUCED PLANS ORIGINAL SCALE IS IN MILLIMETERS 0 20 40 60 80

DGN FILE =>04-0120f1_0364R05.dgn
USERNAME =>llorico

CU 04251 | EA 0120F1

DRAFT 1 (03/01/11)
STATE OF CALIFORNIA - DEPARTMENT OF TRANSPORTATION
Caltrans

DESIGN OVERSIGHT: BEHZAD GOLEMOHAMMADI
CALCULATED/DESIGNED BY: PBP — CHECKED BY: AB
DATE 8/02 — REVISED BY — DATE REVISED 8/02

DIST	COUNTY	ROUTE	KILOMETER POST TOTAL PROJECT	SHEET No	TOTAL SHEETS
04	SF	80	13.2/13.9	369 S1R2	1204

10/01/08
REGISTERED ELECTRICAL ENGINEER DATE

PLANS APPROVAL DATE

PB AMERICAS, Inc.
A Parsons Brinckerhoff Company
303 Second St., Suite 700N
San Francisco, CA 94107-1317

REGISTERED PROFESSIONAL ENGINEER — FADI WALIEDDINE — No. 11465 — Exp. 12/31/2009 ELECTRICAL — STATE OF CALIFORNIA

The State of California or its officers or agents shall not be responsible for the accuracy or completeness of electronic copies of this plan sheet.

Caltrans now has a web site! To get to the web site, go to http://www.dot.ca.gov

REQUEST FOR INFORMATION NOT ADDRESSED IN THIS CCO REMAIN IN FORCE					
2	05/02/12	ELECTRICAL WARNING SYSTEMS	RR	RG	61
1	01/07/11	ELECTRICAL WARNING SYSTEMS	TW	RG	61
0	08/03/09	ELECTRICAL WARNING SYSTEMS	RY RR	RG FW	61
MARK	DATE	DESCRIPTIONS	BY	CH'D	CCO#
		REVISIONS			

Metric

CONTRACT CHANGE ORDER NO. 61
SHEET 72 OF 104

REGISTERED PROFESSIONAL ENGINEER — DAVID H. OTO — No. 10699 — Exp. 06/30/2013 ELECTRICAL — STATE OF CALIFORNIA

2 FOR REVISION ONLY

REGISTERED PROFESSIONAL ENGINEER — SYN YEE CHIN — No. 18186 — Exp. 09/30/2011 ELECTRICAL — STATE OF CALIFORNIA

1 FOR REVISION ONLY

CONDUIT DATA

Conduit No	Reference	Size	Type	Total Fill (mm²)	Allowable Fill (mm²)	Included Cable No.	Conductor Type
*4073	E-294D	78	RGS-PVC coated conduit	126.88	2564.19	UP134-12	1-3/C #10, 600 V EPR Insulation
						Pull rope	Soft-Fiber Polyester
*4093	E-294E	78	RGS-PVC coated conduit	126.88	2564.19	UP135-12	1-3/C #10, 600 V EPR Insulation
						Pull rope	Soft-Fiber Polyester
*4113	E-294E	78	RGS-PVC coated conduit	126.88	2564.19	UP136-12	1-3/C #10, 600 V EPR Insulation
						Pull rope	Soft-Fiber Polyester
*4876	E-294D, E-294L	78	RGS-PVC coated conduit	563.37	1935.24	1463	1-3/C #14, 600 V, EPR Insulation
						1465	1-7/C #16, 600 V, EPR Insulation
						1466	1-3/C #14, 600 V, EPR Insulation
						1468	1-7/C #16, 600 V, EPR Insulation
						1469	1-3/C #14, 600 V, EPR Insulation
						1471	1-7/C #16, 600 V, EPR Insulation
						Pull rope	Soft-Fiber Polyester
*4885	E-294D, E-294L	78	RGS-PVC coated conduit	391.74 1	1935.24	1371	1-3/C #10, 600 V, EPR Insulation
						1463	1-3/C #14, 600 V, EPR Insulation
						1465	1-7/C #16, 600 V, EPR Insulation
						Pull rope	Soft-Fiber Polyester
						1465-1	1-2/C #14, 600 V, EPR Insulation 1
*4895	E-294E, E-294L	78	RGS-PVC coated conduit	391.74 1	1935.24	1372	1-3/C #10, 600 V, EPR Insulation
						1466	1-3/C #14, 600 V, EPR Insulation
						1468	1-7/C #16, 600 V, EPR Insulation
						Pull rope	Soft-Fiber Polyester
						1468-1	1-2/C #14, 600 V, EPR Insulation 1
*4905	E-294E, E-294L	78	RGS-PVC coated conduit	391.74 1	1935.24	1373	1-3/C #10, 600 V, EPR Insulation
						1469	1-3/C #14, 600 V, EPR Insulation
						1471	1-7/C #16, 600 V, EPR Insulation
						Pull rope	Soft-Fiber Polyester
						1471-1	1-2/C #14, 600 V, EPR Insulation 1

CONDUIT DATA

Conduit No	Reference	Size	Type	Total Fill (mm)	Allowable Fill (mm)	Included Cable No.	Conductor Type
4105	E-75A, E-300	41	RGS-PVC coated conduit	354.34	534.55	Pull rope	Soft-Fiber Polyester
						UP208-12	1-2/C + Gnd #8, 600 V EPR Insulation
						2366-3	1-2/C + Gnd #10, 600 V EPR Insulation
4106	E-75A, E-300	41	RGS-PVC coated conduit	417.79	534.55	2366-1	1-3/C #14, 600 V, EPR Insulation
						2366-2	1-3/C #14, 600 V, EPR Insulation
						2366-9	1-3/C #14, 600 V, EPR Insulation
						2366-10	1-3/C #14, 600 V, EPR Insulation
						2366-11	1-2/C #14, 600 V, EPR Insulation
						Pull rope	Soft-Fiber Polyester
4109	E-293D, E-300	41	RGS-PVC coated conduit	404.00	534.55	2366-5	1-Triad #16 with overall shield 600 V, PVC Insulation
						2366-6	1-Triad #16 with overall shield 600 V, PVC Insulation
						2366-7	1-Triad #16 with overall shield 600 V, PVC Insulation
						2366-8	3-PR #16 with overall shield 600 V, PVC Insulation
						2204-8	3-PR #16 with overall shield 600 V, PVC Insulation
						Pull rope	Soft-Fiber Polyester
4110	E-293D, E-300	41	RGS-PVC coated conduit	257.36	534.55	2204-12	1-3-PR #16 twisted shielded with overall shield 600V, PVC Insulation
						2366-12	1-3-PR #16 twisted shielded with overall shield 600V, PVC Insulation

2

* INDICATES EXISTING CONDUITS ON PREVIOUS SKYWAY CONTRACT

CONDUIT AND TRAY SCHEDULE

E-414A

DESIGNED BY	CALCULATED/ DESIGNED BY	CHECKED BY	DRAWN BY	DATE	REVISED BY	DATE REVISED
DESIGN OVERSIGHT	XXX	XXX	XXX	XXX	XXX	XXX
BEHZAD GOLEMOHAMMADI	XXX	XXX	XXX	XXX	XXX	XXX

STATE OF CALIFORNIA - DEPARTMENT OF TRANSPORTATION
Caltrans

FOR REDUCED PLANS ORIGINAL SCALE IS IN MILLIMETERS 0 20 40 60 80

DGN FILE =>04-0120f1_0369S01R02.dgn
USERNAME =>florico

CU 04251

EA 0120F1

LAST REVISION 00-00-00
DATE PLOTTED => 04-MAY-2012
TIME PLOTTED => 13:51

DIST	COUNTY	ROUTE	KILOMETER POST TOTAL PROJECT	SHEET No	TOTAL SHEETS
04	SF	80	13.2/13.9	369 S2R1	1204

10/01/08
REGISTERED ELECTRICAL ENGINEER DATE

PLANS APPROVAL DATE

REGISTERED PROFESSIONAL ENGINEER — FADI WALIEDDINE — No. 11465 — Exp. 12/31/2009 ELECTRICAL — STATE OF CALIFORNIA

PB AMERICAS, Inc.
A Parsons Brinckerhoff Company
303 Second St., Suite 700N
San Francisco, CA 94107-1317

The State of California or its officers or agents shall not be responsible for the accuracy or completeness of electronic copies of this plan sheet.

Caltrans now has a web site! To get to the web site, go to http://www.dot.ca.gov

Metric

REQUEST FOR INFORMATION NOT ADDRESSED IN THIS CCO REMAIN IN FORCE

MARK	DATE	DESCRIPTIONS	BY	CH'D	CCO#
		REVISIONS			
1	01/07/11	ELECTRICAL WARNING SYSTEMS	TW	RG	61
0	08/03/09	ELECTRICAL WARNING SYSTEMS	RY RR	RG FW	61

CONTRACT CHANGE ORDER NO. 61
SHEET 73 OF 104

REGISTERED PROFESSIONAL ENGINEER — SYN YEE CHIN — No. 18186 — Exp. 09/30/2011 ELECTRICAL — STATE OF CALIFORNIA

Syn Yee Chin
FOR REVISION ONLY
1

CONDUIT DATA

Conduit No	Reference	Size	Type	Total Fill (mm²)	Allowable Fill (mm²)	Included Cable No.	Conductor Type
*6573	E-294B, E-294L	103	Liquidtight Flex Metal Conduit	375.58	3275.44	1466	1-3/C #14, 600 V, EPR Insulation
						1468	1-7/C #16, 600 V, EPR Insulation
						1469	1-3/C #14, 600 V, EPR Insulation
						1471	1-7/C #16, 600 V, EPR Insulation
						Pull rope	Soft-Fiber Polyester
*6577	E-294B, E-294L	103	RGS conduit	375.58	3324.51	1466	1-3/C #14, 600 V, EPR Insulation
						1468	1-7/C #16, 600 V, EPR Insulation
						1469	1-3/C #14, 600 V, EPR Insulation
						1471	1-7/C #16, 600 V, EPR Insulation
						Pull rope	Soft-Fiber Polyester
*6581	E-294B, E-294L	103	Liquidtight Flex Metal Conduit	375.58	3275.44	1466	1-3/C #14, 600 V, EPR Insulation
						1468	1-7/C #16, 600 V, EPR Insulation
						1469	1-3/C #14, 600 V, EPR Insulation
						1471	1-7/C #16, 600 V, EPR Insulation
						Pull rope	Soft-Fiber Polyester
8121	E-294C, E-294L	27 (1)	RGS-PVC coated conduit	1440.1 (1)	229.03	1371	2 + 1 gnd #10, #10, 600 V, RHH/RHW Insulation
						Pull rope	Soft-Fiber Polyester
						1465-1	1-2/C #14, 600 V, EPR Insulation
8122	E-294D, E-294H	41 (1)	RGS Conduit	218.96 (1)	229.03	1371	2 #10, 600 V, RHH/RHW Insulation
						UP134-2	2 #10, 600 V, RHH/RHW Insulation
						UP134-6	2 #10, 600 V, RHH/RHW Insulation
						1371 UP134-2 UP134-6	1 #10 gnd, 600 V, RHH/RHW Insulation
						Pull rope	Soft-Fiber Polyester
						1465-1	1-2/C #14, 600 V, EPR Insulation
8122A	E-294C, E-294D/L	41 (1)	RGS conduit	203.95 (1)	396.11	1371	1-3/C #10, 600 V, EPR Insulation
						Pull rope	Soft-Fiber Polyester
						1465-1	1-2/C #14, 600 V, EPR Insulation
8123	E-294D, E-294L E-294N	53 (1)	Liquidtight Flex Metal Conduit	518.62 (1)	837.71	1371	1-3/C #10, 600 V, EPR Insulation
						1463	1-3/C #14, 600 V, EPR Insulation
						1465	1-7/C #16, 600 V, EPR Insulation
						UP134-12	1-3/C #10 (1), 600 V, EPR Insulation
						Pull rope	Soft-Fiber Polyester
						1465-1	1-2/C #14, 600 V, EPR Insulation
8126	E-294C, E-294L	27 (1)	RGS-PVC coated conduit	144.01 (1)	229.03	1372	2 + 1 gnd #10, #10, 600 V, RHH/RHW Insulation
						Pull rope	Soft-Fiber Polyester
						1468-1	1-2/C #14, 600 V, EPR Insulation
8127	E-294E, E-294H	41 (1)	RGS conduit	218.96 (1)	229.03	1372	2 #10, 600 V, RHH/RHW Insulation
						UP135-2	2 #10, 600 V, RHH/RHW Insulation
						UP135-6	2 #10, 600 V, RHH/RHW Insulation
						1372 UP135-2 UP135-6	1 #10 gnd, 600 V, RHH/RHW Insulation
						Pull rope	Soft-Fiber Polyester
						1468-1	1-2/C #14, 600 V, EPR Insulation
8127A	E-294C, E-294L	41 (1)	RGS conduit	203.95 (1)	396.11	1372	1-3/C #10, 600 V, EPR Insulation
						Pull rope	Soft-Fiber Polyester
						1468-1	1-2/C #14, 600 V, EPR Insulation

CONDUIT DATA

Conduit No	Reference	Size	Type	Total Fill (mm²)	Allowable Fill (mm²)	Included Cable No.	Conductor Type
8128	E-294E, E-294L	53 (1)	Liquidtight Flex Metal Conduit	518.62 (1)	837.71	1372	1-3/C #10, 600 V, EPR Insulation
						1466	1-3/C #14, 600 V, EPR Insulation
						1468	1-7/C #16, 600 V, EPR Insulation
						UP135-12	1-3/C #10 (1), 600 V, EPR Insulation
						Pull rope	Soft-Fiber Polyester
						1468-1	1-2/C #14, 600 V, EPR Insulation
8131	E-294C, E-294L	27 (1)	RGS-PVC coated conduit	144.01 (1)	229.03	1373	2 + 1 gnd #10, #10, 600 V, RHH/RHW Insulation
						Pull rope	Soft-Fiber Polyester
						1471-1	1-2/C #14, 600 V, EPR Insulation
8132	E-294C, E-294L E-294E	41 (1)	RGS conduit	218.96 (1)	229.03	1373	2 #10, 600 V, RHH/RHW Insulation
						UP136-2	2 #10, 600 V, RHH/RHW Insulation
						UP136-6	2 #10, 600 V, RHH/RHW Insulation
						1373 UP136-2 UP136-6	1 #10 gnd, 600 V, RHH/RHW Insulation
						Pull rope	Soft-Fiber Polyester
						1471-1	1-2/C #14, 600 V, EPR Insulation
8132A	E-294E, E-294H	41 (1)	RGS conduit	203.95 (1)	396.11	1373	1-3/C #10, 600 V, EPR Insulation
						Pull rope	Soft-Fiber Polyester
						1471-1	1-2/C #14, 600 V, EPR Insulation
8133	E-294E, E-294L	53 (1)	Liquidtight Flex Metal Conduit	518.62 (1)	837.71	1373	1-3/C #10, 600 V, EPR Insulation
						1469	1-3/C #14, 600 V, EPR Insulation
						1471	1-7/C #16, 600 V, EPR Insulation
						UP136-12	1-3/C #10 (1), 600 V, EPR Insulation
						Pull rope	Soft-Fiber Polyester
						1471-1	1-2/C #14, 600 V, EPR Insulation

* INDICATES EXISTING CONDUITS ON PREVIOUS SKYWAY CONTRACT

CONDUIT AND TRAY SCHEDULE

E-414B

DATE	REVISED BY	DATE REVISED
XXX	XXX	XXX
XXX	XXX	XXX

CALCULATED/DESIGNED BY XXX
CHECKED BY XXX

DESIGN OVERSIGHT — BEHZAD GOLEMOHAMMADI

STATE OF CALIFORNIA - DEPARTMENT OF TRANSPORTATION — Caltrans

LAST REVISION 00-00-00
DATE PLOTTED => 11-JAN-2011
TIME PLOTTED => 14:01

FOR REDUCED PLANS ORIGINAL SCALE IS IN MILLIMETERS 0 20 40 60 80

DGN FILE =>04-0120f1_0369S02R01.dgn
USERNAME =>florico

CU 04251 | EA 0120F1

DIST	COUNTY	ROUTE	KILOMETER POST TOTAL PROJECT	SHEET No	TOTAL SHEETS
04	SF	80	13.2/13.9	369 S3R1	1204

10/01/08
REGISTERED ELECTRICAL ENGINEER DATE

PLANS APPROVAL DATE

REGISTERED PROFESSIONAL ENGINEER — FADI WALIEDDINE No. 11465 Exp. 12/31/2009 ELECTRICAL — STATE OF CALIFORNIA

PB AMERICAS, Inc.
A Parsons Brinckerhoff Company
303 Second St., Suite 700N
San Francisco, CA 94107-1317

The State of California or its officers or agents shall not be responsible for the accuracy or completeness of electronic copies of this plan sheet.

Caltrans now has a web site! To get to the web site, go to http://www.dot.ca.gov

Metric

REGISTERED PROFESSIONAL ENGINEER — SYN YEE CHIN No. 18186 Exp. 09/30/2011 ELECTRICAL — STATE OF CALIFORNIA

Syn Yee Chin
FOR REVISION ONLY
1

MARK	DATE	DESCRIPTIONS REVISIONS	BY	CH'D	CCO#
		REQUEST FOR INFORMATION NOT ADDRESSED IN THIS CCO REMAIN IN FORCE			
1	01/07/11	ELECTRICAL WARNING SYSTEMS	TW	RG	61
0	08/03/09	ELECTRICAL WARNING SYSTEMS	RY RR	RG FW	61

CONTRACT CHANGE ORDER NO. 61
SHEET 74 OF 104

CONDUIT DATA

Conduit No	Reference	Size	Type	Total Fill (mm²)	Allowable Fill (mm²)	Included Cable No.	Conductor Type
*1T20	E-294B, E-294D	610	6" siderail ladder tray	767.32 1	16774.16	1463	1-3/C #14, 600 V, EPR Insulation
						1465	1-7/C #16, 600 V, EPR Insulation
						1466	1-3/C #14, 600 V, EPR Insulation
						1468	1-7/C #16, 600 V, EPR Insulation
						1469	1-3/C #14, 600 V, EPR Insulation
						1471	1-7/C #16, 600 V, EPR Insulation
						1371	1-3/C #10, 600 V, EPR Insulation 1
						1465-1	1-2/C #14, 600 V, EPR Insulation
*1T21	E-294D, E-294E E-294G	610	6" siderail ladder tray	579.53 1	16774.16	1466	1-3/C #14, 600 V, EPR Insulation
						1468	1-7/C #16, 600 V, EPR Insulation
						1469	1-3/C #14, 600 V, EPR Insulation
						1471	1-7/C #16, 600 V, EPR Insulation
						1372	1-3/C #10, 600 V, EPR Insulation 1
						1468-1	1-2/C #14, 600 V, EPR Insulation
*1T22	E-294B, E-294E E-294G	610	6" siderail ladder tray	381.74 1	16774.16	1469	1-3/C #14, 600 V, EPR Insulation
						1471	1-7/C #16, 600 V, EPR Insulation
						1373	1-3/C #10, 600 V, EPR Insulation 1
						1471-1	1-2/C #14, 600 V, EPR Insulation
*1T22A	E-294B	910	6" siderail ladder tray	187.79	25161.24	1469	1-3/C #14, 600 V, EPR Insulation
						1471	1-7/C #16, 600 V, EPR Insulation
Wireway *11W	E-294D, E-294L, E-294N	203	8" x 8" Wireway, NEMA 4X	563.37	8258.05	1463	1-3/C #14, 600 V, EPR Insulation
						1465	1-7/C #16, 600 V, EPR Insulation
						1466	1-3/C #14, 600 V, EPR Insulation
						1468	1-7/C #16, 600 V, EPR Insulation
						1469	1-3/C #14, 600 V, EPR Insulation
						1471	1-3/C #14, 600 V, EPR Insulation
Wireway *12W	E-294D, E-294L, E-294N	203	8" x 8" Wireway, NEMA 4X	518.62 1	8258.05	1371	1-3/C #10, 600 V, EPR Insulation
						1463	1-3/C #14, 600 V, EPR Insulation
						1465	1-7/C #16, 600 V, EPR Insulation
						UP134-12	1-3/C #10, 600 V, EPR Insulation
						1465-1	1-2/C #14, 600 V, EPR Insulation 1
Wireway *13W	E-294E, E-294L, E-294N	203	8" x 8" Wireway, NEMA 4X	518.62 1	8258.05	1372	1-3/C #10, 600 V, EPR Insulation
						1466	1-3/C #14, 600 V, EPR Insulation
						1468	1-7/C #16, 600 V, EPR Insulation
						UP135-12	1-3/C #10, 600 V, EPR Insulation
						1468-1	1-2/C #14, 600 V, EPR Insulation 1

CONDUIT DATA

Conduit No	Reference	Size	Type	Total Fill (mm)	Allowable Fill (mm)	Included Cable No.	Conductor Type
Wireway *14W	E-294E, E-294L, E-294N	203	8" x 8" Wireway NEMA 4X	518.62 1	8258.05	1373	1-3/C #10, 600 V, EPR Insulation
						1469	1-3/C #14, 600 V, EPR Insulation
						1471	1-3/C #14, 600 V, EPR Insulation
						UP136-12	1-3/C #10, 600 V, EPR Insulation 1
						1471-1	1-2/C #14, 600 V, EPR Insulation

* INDICATES EXISTING CONDUITS ON PREVIOUS SKYWAY CONTRACT

CONDUIT AND TRAY SCHEDULE
E-414C

DESIGNED BY	CALCULATED/ DESIGNED BY	CHECKED BY	DRAWN BY	DATE	REVISED BY	DATE REVISED
DESIGN OVERSIGHT						
BEHZAD GOLEMOHAMMADI						
STATE OF CALIFORNIA - DEPARTMENT OF TRANSPORTATION						
Caltrans						

FOR REDUCED PLANS ORIGINAL SCALE IS IN MILLIMETERS 0 20 40 60 80

DGN FILE =>04-0120f1_0369S03R01.dgn
USERNAME =>llorico

CU 04251

EA 0120F1

LAST REVISION 00-00-00
DATE PLOTTED => 11-JAN-2011
TIME PLOTTED => 14:01

DIST	COUNTY	ROUTE	KILOMETER POST TOTAL PROJECT	SHEET No	TOTAL SHEETS
04	SF	80	13.2/13.9	369 S4R1	1204

10/01/08
REGISTERED ELECTRICAL ENGINEER DATE

PLANS APPROVAL DATE

REGISTERED PROFESSIONAL ENGINEER — FADI WALIEDDINE No. 11465 Exp. 12/31/2009 ELECTRICAL — STATE OF CALIFORNIA

PB AMERICAS, Inc.
A Parsons Brinckerhoff Company
303 Second St., Suite 700N
San Francisco, CA 94107-1317

The State of California or its officers or agents shall not be responsible for the accuracy or completeness of electronic copies of this plan sheet.

Caltrans now has a web site! To get to the web site, go to http://www.dot.ca.gov

REGISTERED PROFESSIONAL ENGINEER — SYN YEE CHIN No. 18186 Exp. 09/30/2011 ELECTRICAL — STATE OF CALIFORNIA

Syn Yee Chin
FOR REVISION ONLY
1

REQUEST FOR INFORMATION NOT ADDRESSED IN THIS CCO REMAIN IN FORCE

MARK	DATE	DESCRIPTIONS	BY	CH'D	CCO#
		REVISIONS			
1	01/07/11	ELECTRICAL WARNING SYSTEMS	TW	RG	61
0	08/03/09	ELECTRICAL WARNING SYSTEMS	RY RR	RG FW	61

CONTRACT CHANGE ORDER NO. 61
SHEET 75 OF 104

CONDUIT DATA

Conduit No	Reference	Size	Type	Total Fill (mm²)	Allowable Fill (mm²)	Included Cable No.	Conductor Type
*2503	E-294B, E-294L	103	Liquid tight metal conduit	375.58	3275.44	2466	1-3/C #14, 600 V, EPR Insulation
						2468	1-7/C #16, 600 V, EPR Insulation
						2469	1-3/C #14, 600 V, EPR Insulation
						2471	1-7/C #16, 600 V, EPR Insulation
						Pull rope	Soft-Fiber Polyester
*2507	E-294B, E-294L	103	RGS conduit	375.58	3324.51	2466	1-3/C #14, 600 V, EPR Insulation
						2468	1-7/C #16, 600 V, EPR Insulation
						2469	1-3/C #14, 600 V, EPR Insulation
						2471	1-7/C #16, 600 V, EPR Insulation
						Pull rope	Soft-Fiber Polyester
*2511	E-294B, E-294L	103	Liquid tight metal conduit	375.58	3275.44	2466	1-3/C #14, 600 V, EPR Insulation
						2468	1-7/C #16, 600 V, EPR Insulation
						2469	1-3/C #14, 600 V, EPR Insulation
						2471	1-7/C #16, 600 V, EPR Insulation
						Pull rope	Soft-Fiber Polyester
*5068	E-294F, E-294L	78	RGS-PVC coated conduit	126.88	2564.19	UP234-24	1-3/C #10, 600 V, EPR Insulation (1)
						Pull rope	Soft-Fiber Polyester
*5086	E-294G, E-294L	78	RGS-PVC coated conduit	126.88	2564.19	UP235-12	1-3/C #10, 600 V, EPR Insulation (1)
						Pull rope	Soft-Fiber Polyester
(1) *5121 *5118	E-294G, E-294L	78	RGS-PVC coated conduit	126.88	2564.19	UP236-12	1-3/C #10, 600 V, EPR Insulation (1)
						Pull rope	Soft-Fiber Polyester
*5876	E-294F, E-294L	78	RGS-PVC coated conduit	563.37	1935.24	2463	1-3/C #14, 600 V, EPR Insulation
						2465	1-7/C #16, 600 V, EPR Insulation
						2466	1-3/C #14, 600 V, EPR Insulation
						2468	1-7/C #16, 600 V, EPR Insulation
						2469	1-3/C #14, 600 V, EPR Insulation
						2471	1-7/C #16, 600 V, EPR Insulation
						Pull rope	Soft-Fiber Polyester
*5885	E-294F, E-294L	78	RGS-PVC coated conduit	391.74 (1)	1935.24	2371	1-3/C #10, 600 V, EPR Insulation
						2463	1-3/C #14, 600 V, EPR Insulation
						2465	1-7/C #16, 600 V, EPR Insulation
						Pull rope	Soft-Fiber Polyester
						2465-1	1-2/C #14, 600 V, EPR Insulation (1)

CONDUIT DATA

Conduit No	Reference	Size	Type	Total Fill (mm)	Allowable Fill (mm)	Included Cable No.	Conductor Type
*5897	E-294G, E-294L	78	RGS-PVC coated conduit	391.74 (1)	1935.24	2372	1-3/C #10, 600 V, EPR Insulation
						2466	1-3/C #14, 600 V, EPR Insulation
						2468	1-7/C #16, 600 V, EPR Insulation
						Pull rope	Soft-Fiber Polyester
						2468-1	1-2/C #14, 600 V, EPR Insulation (1)
*5905	E-294G, E-294L	78	RGS-PVC coated conduit	391.74 (1)	1935.24	2373	1-3/C #10, 600 V, EPR Insulation
						2469	1-3/C #14, 600 V, EPR Insulation
						2471	1-7/C #16, 600 V, EPR Insulation
						Pull rope	Soft-Fiber Polyester
						2471-1	1-2/C #14, 600 V, EPR Insulation (1)

* INDICATES EXISTING CONDUITS ON PREVIOUS SKYWAY CONTRACT

CONDUIT AND TRAY SCHEDULE
E-414D

DESIGN OVERSIGHT	CALCULATED/ DESIGNED BY	DATE	REVISED BY	DATE REVISED
BEHZAD GOLEMOHAMMADI	CHECKED BY	XXX	XXX	XXX

STATE OF CALIFORNIA - DEPARTMENT OF TRANSPORTATION
Caltrans

FOR REDUCED PLANS ORIGINAL SCALE IS IN MILLIMETERS 0 20 40 60 80

DGN FILE =>04-0120f1_0369S04R01.dgn
USERNAME =>florico

CU 04251	EA 0120F1

LAST REVISION 00-00-00
DATE PLOTTED => 11-JAN-2011
TIME PLOTTED => 14:02

DIST	COUNTY	ROUTE	KILOMETER POST TOTAL PROJECT	SHEET No	TOTAL SHEETS
04	SF	80	13.2/13.9	369 S5R1	1204

10/01/08
REGISTERED ELECTRICAL ENGINEER DATE

PLANS APPROVAL DATE

REGISTERED PROFESSIONAL ENGINEER — FADI WALIEDDINE — No. 11465 — Exp. 12/31/2009 — ELECTRICAL — STATE OF CALIFORNIA

PB AMERICAS, Inc.
A Parsons Brinckerhoff Company
303 Second St., Suite 700N
San Francisco, CA 94107-1317

The State of California or its officers or agents shall not be responsible for the accuracy or completeness of electronic copies of this plan sheet.

Caltrans now has a web site! To get to the web site, go to http://www.dot.ca.gov

Metric

REGISTERED PROFESSIONAL ENGINEER — SYN YEE CHIN — No. 18188 — Exp. 09/30/2011 — ELECTRICAL — STATE OF CALIFORNIA

Syn Yee Chin
FOR REVISION ONLY
1

REQUEST FOR INFORMATION NOT ADDRESSED IN THIS CCO REMAIN IN FORCE					
1	01/07/11	ELECTRICAL WARNING SYSTEMS	TW	RG	61
0	08/03/09	ELECTRICAL WARNING SYSTEMS	RY RR	RG FW	61
MARK	DATE	DESCRIPTIONS	BY	CH'D	CCO#
		REVISIONS			

CONTRACT CHANGE ORDER NO. 61
SHEET 76 OF 104

CONDUIT DATA

Conduit No	Reference	Size	Type	Total Fill (mm²)	Allowable Fill (mm²)	Included Cable No.	Conductor Type
8221	E-294C, E-294L	27	RGS-PVC coated conduit	1440.1	229.03	2371	2 + 1 gnd #10, #10, 600 V, RHH/RHW Insulation
						Pull rope	Soft-Fiber Polyester
						2465-1	1-2/C #14, 600 V, EPR Insulation
8222	E-294C, E-294F/L	41	RGS conduit	218.96	229.03	2371	2 #10, 600 V, RHH/RHW Insulation
						UP234-2	2 #10, 600 V, RHH/RHW Insulation
						UP234-6	2 #10, 600 V, RHH/RHW Insulation
						2371 UP234-2 UP234-6	1 #10 gnd, 600 V, RHH/RHW Insulation
						Pull rope	Soft-Fiber Polyester
						2465-1	1-2/C #14, 600 V, EPR Insulation
8222A	E-294C, E-294F/L	41	RGS conduit	203.95	396.11	2371	1-3/C #10, 600 V, EPR Insulation
						Pull rope	Soft-Fiber Polyester
						2465-1	1-2/C #14, 600 V, EPR Insulation
8223	E-294F, E-294L	53	Liquidtight Flex Metal Conduit	518.62	837.71	2371	1-3/C #10, 600 V, EPR Insulation
						2463	1-3/C #14, 600 V, EPR Insulation
						2465	1-7/C #16, 600 V, EPR Insulation
						UP234-24	1-3/C #10, 600 V, EPR Insulation
						Pull rope	Soft-Fiber Polyester
						2465-1	1-2/C #14, 600 V, EPR Insulation
8226	E-294C, E-294L	27	RGS-PVC coated conduit	144.01	229.03	2372	2 + 1 gnd #10, #10, 600 V, RHH/RHW Insulation
						Pull rope	Soft-Fiber Polyester
						2468-1	1-2/C #14, 600 V, EPR Insulation
8227	E-294C, E-294G/L	41	RGS conduit	218.96	229.03	2372	2 #10, 600 V, RHH/RHW Insulation
						UP235-2	2 #10, 600 V, RHH/RHW Insulation
						UP235-6	2 #10, 600 V, RHH/RHW Insulation
						2372 UP235-2 UP235-6	1 #10 gnd, 600 V, RHH/RHW Insulation
						Pull rope	Soft-Fiber Polyester
						2468-1	1-2/C #14, 600 V, EPR Insulation
8227A	E-294C, E-294G/L	41	RGS conduit	203.95	396.11	2372	1-3/C #10, 600 V, EPR Insulation
						Pull rope	Soft-Fiber Polyester
						2468-1	1-2/C #14, 600 V, EPR Insulation
8228	E-294G, E-294L	53	Liquidtight Flex Metal Conduit	518.62	837.71	2372	1-3/C #10, 600 V, EPR Insulation
						2466	1-3/C #14, 600 V, EPR Insulation
						2468	1-7C #16, 600 V, EPR Insulation
						UP235-12	1-3/C #10, 600 V, EPR Insulation
						Pull rope	Soft-Fiber Polyester
						2468-1	1-2/C #14, 600 V, EPR Insulation
8231	E-294C, E-294L	27	RGS-PVC coated conduit	144.01	229.03	2373	2 + 1 gnd #10, #10, 600 V, RHH/RHW Insulation
						Pull rope	Soft-Fiber Polyester
						2471-1	1-2/C #14, 600 V, EPR Insulation
8232	E-294C, E-294G/L	41	RGS conduit	218.96	229.03	2373	2 #10, 600 V, RHH/RHW Insulation
						UP236-2	2 #10, 600 V, RHH/RHW Insulation
						UP236-6	2 #10, 600 V, RHH/RHW Insulation
						2373 UP236-2 UP236-6	1 #10 gnd, 600 V, RHH/RHW Insulation
						Pull rope	Soft-Fiber Polyester
						2471-1	1-2/C #14, 600 V, EPR Insulation
8232A	E-294C, E-294G/L	41	RGS conduit	203.97	396.11	2373	1-3/C #10, 600 V, EPR Insulation
						Pull rope	Soft-Fiber Polyester
						2471-1	1-2/C #14, 600 V, EPR Insulation

CONDUIT DATA

Conduit No	Reference	Size	Type	Total Fill (mm²)	Allowable Fill (mm²)	Included Cable No.	Conductor Type
8233	E-294G, E-294L	53	Liquidtight Flex Metal Conduit	518.62	837.71	2373	1-3/C #10, 600 V, EPR Insulation
						2469	1-3/C #14, 600 V, EPR Insulation
						2471	1-7/C #16, 600 V, EPR Insulation
						UP236-12	1-3/C #10, 600 V, EPR Insulation
						Pull rope	Soft-Fiber Polyester
						2471-1	1-2/C #14, 600 V, EPR Insulation

* INDICATES EXISTING CONDUITS ON PREVIOUS SKYWAY CONTRACT

CONDUIT AND TRAY SCHEDULE

E-414E

DATE	REVISED BY	DATE REVISED
XXX	XXX	XXX
XXX	XXX	XXX

CALCULATED/ DESIGNED BY XXX
CHECKED BY XXX

DESIGN OVERSIGHT
BEHZAD GOLEMOHAMMADI

STATE OF CALIFORNIA - DEPARTMENT OF TRANSPORTATION
Caltrans

FOR REDUCED PLANS ORIGINAL SCALE IS IN MILLIMETERS 0 20 40 60 80

DGN FILE =>04-0120f1_0369S05R01.dgn
USERNAME =>llorico

CU 04251

EA 0120F1

LAST REVISION 00-00-00

DATE PLOTTED => 11-JAN-2011
TIME PLOTTED => 14:02

DIST	COUNTY	ROUTE	KILOMETER POST TOTAL PROJECT	SHEET No	TOTAL SHEETS
04	SF	80	13.2/13.9	369 S6R1	1204

10/01/08
REGISTERED ELECTRICAL ENGINEER DATE

PLANS APPROVAL DATE

REGISTERED PROFESSIONAL ENGINEER — FADI WALIEDDINE No. 11465 Exp. 12/31/2009 ELECTRICAL — STATE OF CALIFORNIA

PB AMERICAS, Inc.
A Parsons Brinckerhoff Company
303 Second St., Suite 700N
San Francisco, CA 94107-1317

The State of California or its officers or agents shall not be responsible for the accuracy or completeness of electronic copies of this plan sheet.

Caltrans now has a web site! To get to the web site, go to http://www.dot.ca.gov

REGISTERED PROFESSIONAL ENGINEER — SYN YEE CHIN No. 18186 Exp. 09/30/2011 ELECTRICAL — STATE OF CALIFORNIA

Syn Yee Chin
FOR REVISION ONLY
1

REQUEST FOR INFORMATION NOT ADDRESSED IN THIS CCO REMAIN IN FORCE

MARK	DATE	REVISIONS	BY	CH'D	CCO#
1	01/07/11	ELECTRICAL WARNING SYSTEMS	TW	RG	61
0	08/03/09	ELECTRICAL WARNING SYSTEMS	RY RR	RG FW	61

CONTRACT CHANGE ORDER NO. 61
SHEET 77 OF 104

CONDUIT DATA

Conduit No	Reference	Size	Type	Total Fill (mm²)	Allowable Fill (mm²)	Included Cable No.	Conductor Type
2T20	E-294B, E-294F	610	6" siderail ladder tray	767.32 1	16774.16	2371	1-3/C #10, 600 V, EPR Insulation
						2463	1-3/C #14, 600 V, EPR Insulation
						2465	1-7/C #16, 600 V, EPR Insulation
						2466	1-3/C #14, 600 V, EPR Insulation
						2468	1-7/C #16, 600 V, EPR Insulation
						2469	1-3/C #14, 600 V, EPR Insulation
						2471	1-7/C #16, 600 V, EPR Insulation
						2465-1	1-2/C #14, 600 V, EPR Insulation 1
2T21	E-294B, E-294E E-294G	760	6" siderail ladder tray	579.53 1	20967.70	2372	1-3/C #10, 600 V, EPR Insulation
						2466	1-3/C #14, 600 V, EPR Insulation
						2468	1-7/C #16, 600 V, EPR Insulation
						2469	1-3/C #14, 600 V, EPR Insulation
						2471	1-7/C #16, 600 V, EPR Insulation
						2468-1	1-2/C #14, 600 V, EPR Insulation 1
2T22	E-294B, E-294E E-294G	760	6" siderail ladder tray	391.74 1	20967.70	2373	1-3/C #10, 600 V, EPR Insulation
						2469	1-3/C #14, 600 V, EPR Insulation
						2471	1-7/C #16, 600 V, EPR Insulation
						2471-1	1-2/C #14, 600 V, EPR Insulation 1
2T22A	E-294B	910	6" siderail ladder tray	187.79	25161.24	2469	1-3/C #14, 600 V, EPR Insulation
						2471	1-7/C #16, 600 V, EPR Insulation
Wireway 11E	E-294F, E-294L E-294P	203	8" x 8" wireway, NEMA 4X	563.37	8258.05	2463	1-3/C #14, 600 V, EPR Insulation
						2465	1-7/C #16, 600 V, EPR Insulation
						2466	1-3/C #14, 600 V, EPR Insulation
						2468	1-7/C #16, 600 V, EPR Insulation
						2469	1-3/C #14, 600 V, EPR Insulation
						2471	1-7/C #16, 600 V, EPR Insulation
Wireway 12E1	E-294F	150	6" siderail ladder tray	518.62 1	4193.54	2371	1-3/C #10, 600 V, EPR Insulation
						2463	1-3/C #14, 600 V, EPR Insulation
						2465	1-7/C #16, 600 V, EPR Insulation
						UP234-24	1-3/C #10, 600 V, EPR Insulation 1
						2465-1	1-2/C #14, 600 V, EPR Insulation
Wireway 13E	E-294G	203	8" x 8" wireway, NEMA 4X	518.62 1	8258.05	2372	1-3/C #10, 600 V, EPR Insulation
						2466	1-3/C #14, 600 V, EPR Insulation
						2468	1-7/C #16, 600 V, EPR Insulation
						UP235-12	1-2/C + Gnd #10, 600 V, EPR Insulation
						2468-1	1-2/C #14, 600 V, EPR Insulation 1

CONDUIT DATA

Conduit No	Reference	Size	Type	Total Fill (mm)	Allowable Fill (mm)	Included Cable No.	Conductor Type
Wireway 14E	E-294G	203	8" x 8" wireway, NEMA 4X	518.62 1	8258.05	2373	1-3/C #10, 600 V, EPR Insulation
						2469	1-3/C #14, 600 V, EPR Insulation
						2471	1-7/C #16, 600 V, EPR Insulation
						UP236-12	1-2/C + Gnd #10, 600 V, EPR Insulation
						2471-1	1-2/C #14, 600 V, EPR Insulation 1

* INDICATES EXISTING CONDUITS ON PREVIOUS SKYWAY CONTRACT

CONDUIT AND TRAY SCHEDULE
E-414F

DATE	REVISED BY	DATE REVISED
XXX	XXX	XXX
XXX	XXX	XXX

CALCULATED/DESIGNED BY
CHECKED BY

DESIGN OVERSIGHT
BEHZAD GOLEMOHAMMADI

STATE OF CALIFORNIA - DEPARTMENT OF TRANSPORTATION
Caltrans

FOR REDUCED PLANS ORIGINAL SCALE IS IN MILLIMETERS 0 20 40 60 80

DGN FILE =>04-0120f1_0369S06R01.dgn
USERNAME =>llorico

CU 04251 | EA 0120F1

LAST REVISION 00-00-00
DATE PLOTTED => 11-JAN-2011
TIME PLOTTED => 14:02

DIST	COUNTY	ROUTE	KILOMETER POST TOTAL PROJECT	SHEET No	TOTAL SHEETS
04	SF	80	13.2/13.9	373 R6	1204

REGISTERED ELECTRICAL ENGINEER — 12/19/02 (DATE)

12-6-04
PLANS APPROVAL DATE

PB POWER, Inc.
A Parsons Brinckerhoff Company
303 Second St., Suite 700N
San Francisco, CA 94107-1317

REGISTERED PROFESSIONAL ENGINEER — JENS ERLINGSSON No. 8249 Exp. 9/30/06 ELECTRICAL — STATE OF CALIFORNIA

The State of California or its officers or agents shall not be responsible for the accuracy or completeness of electronic copies of this plan sheet.

Caltrans now has a web site! To get to the web site, go to: http://www.dot.ca.gov

Metric

REGISTERED PROFESSIONAL ENGINEER — SYN YEE CHIN No. 18186 Exp. 09/30/2011 ELECTRICAL — STATE OF CALIFORNIA

Syn Yee Chin
FOR REVISION ONLY
4 5 6

REGISTERED PROFESSIONAL ENGINEER — FADI WALIEDDINE No. 11465 Exp. 12/31/2009 ELECTRICAL — STATE OF CALIFORNIA

FOR REVISION ONLY
3

REGISTERED PROFESSIONAL ENGINEER — S. A. ESTOQUE, JR. No. E-10151 Exp. 12/31/2009 ELECTRICAL — STATE OF CALIFORNIA

FOR REVISION ONLY
1 2

MARK	DATE	REVISIONS DESCRIPTIONS	BY	CH'D	CCO#
6	01/07/11	ELECTRICAL WARNING SYSTEMS	TW	RG	61
5	06/11/10	BIKE PATH CONDUIT	TW	RG	73
4	03/26/10	DEHUMIDIFIER SCADA INTERFACE	RR	RG FW	130
3	03/30/09	SERVICE PLATFORM ELECTRICAL CHANGES	RY RR	RG MP	55
2	02/25/08	CABLE TRAY CHANGES	RR TW	RG	42S1
1	03/04/08	BARRIER MODIFICATIONS	JS BM	RG	44

REQUEST FOR INFORMATION NOT ADDRESSED IN THIS CCO REMAIN IN FORCE				
6	01/07/11	ELECTRICAL WARNING SYSTEMS	TW	RG	61
5	06/11/10	BIKE PATH CONDUIT	TW	RG	73
4	03/26/10	DEHUMIDIFIER SCADA INTERFACE	RR	RG FW	130
3	03/30/09	SERVICE PLATFORM ELECTRICAL CHANGES	RY RR	RG MP	55
2	02/25/08	CABLE TRAY CHANGES	RR TW	RG	42S1
1	03/04/08	BARRIER MODIFICATIONS	JS BM	RG	44

CONTRACT CHANGE ORDER NO. 61
SHEET 78 OF 104

CONDUIT DATA

Conduit No	Reference	Size	Type	Total Fill (mm²)	Allowable Fill (mm²)	Included Cable No.	Conductor Type
2959	E-139	41	RGS conduit	0.00	534.55	Pull rope	Soft-Fiber Polyester
2960	E-139	41	RGS conduit	0.00	534.55	Pull rope	Soft-Fiber Polyester
2961	E-139	41	RGS conduit	0.00	534.55	Pull rope	Soft-Fiber Polyester
2962	E-138	41	RGS conduit	0.00	534.55	Pull rope	Soft-Fiber Polyester
2963	E-138	41	RGS conduit	0.00	534.55	Pull rope	Soft-Fiber Polyester
2964	E-138	41	RGS conduit	0.00	534.55	Pull rope	Soft-Fiber Polyester
2965	E-138	41	RGS conduit	0.00	534.55	Pull rope	Soft-Fiber Polyester
2966	E-138	41	RGS conduit	0.00	534.55	Pull rope	Soft-Fiber Polyester
2967	E-138	41	RGS conduit	0.00	534.55	Pull rope	Soft-Fiber Polyester
2T13	E-181 Thru E-186	305	152.4 mm sliderail ladder tray	2780.99	8387.08	Pull rope	Soft-Fiber Polyester
	E-212A					2391	3-1/C #4/0 + 1/C #1/0 gnd, 15kV, EPR Insulation
2T14	E-212, E-21B	305	152.4 mm sliderail ladder tray	2780.99	8387.08	Pull rope	Soft-Fiber Polyester
						2391	3-1/C #4/0 + 1/C #1/0 gnd, 15kV, EPR Insulation
2T14A	E-21, E-21E	305	152.4 mm sliderail ladder tray	0.00	8387.08		
2T14B	E-21, E-21E	305	152.4 mm sliderail ladder tray	0.00	8387.08		
2T21	E182,E207C,E264	610	152.4 mm sliderail ladder tray	2120.21 (6)	16774.16	2121	1-3/C + gnd #1/0,600 V, EPR Insulation
						2120	1-3/C + gnd #1/0,600 V, EPR Insulation
						1201-1	1-2/C + gnd #10, 600 V, EPR Insulation (6)
						1201-2	1-2/C + gnd #10, 600 V, EPR Insulation
						1201-6	1-2/C + gnd #10, 600 V, EPR Insulation
						1201-4A	1-2/C #14, 600 V, EPR Insulation
						1201-4B	1-2/C #14, 600 V, EPR Insulation
						1201-4C	1-2/C #14, 600 V, EPR Insulation
2T23	E-114B	760	152.4 mm sliderail ladder tray	22305.81 (6)	22580.60	2202-2	1-3/C #14,600 V, EPR Insulation
						A-3004-1	1-3/C + gnd #2,600 V, EPR Insulation
						A-3003-1	1-3/C + gnd #4,600 V, EPR Insulation
						A-2013-1	1-3/C + gnd #2,600 V, EPR Insulation
						A-2012-1	1-3/C + gnd #2,600 V, EPR Insulation
						2123	1-3/C + gnd #2,600 V, EPR Insulation
						2202-3	1-7/C #16,600 V, EPR Insulation
						2105	1-3/C + gnd #2,600 V, EPR Insulation
						2106	1-3/C + gnd #2,600 V, EPR Insulation
						2202-4	1-3/C #14,600 V, EPR Insulation
						2104	1-3/C + gnd #2,600 V, EPR Insulation
						2121	1-3/C + gnd #1/0,600 V, EPR Insulation
						2204-1	1-3/C (#14,) 600 V, EPR Insulation
						UP204-7	1-2/C + gnd #8,600 V, EPR Insulation
						2119-A	1-3/C + gnd 250 Kcmil,600 V, EPR Insulation
						CCTVE01BA	TVP (6)
						CCTVE01BB	TVCP
						CCTVE01AA	TVP (6)
						2201-2	1-2/C + gnd #10,600 V, EPR Insulation
						2123-2	1-3/C + gnd #2/0,600 V, EPR Insulation
						2123-3	1-3/C + gnd #2/0,600 V, EPR Insulation
						1118	1-3/C + gnd #2/0,600 V, EPR Insulation
						2095	1-3/C + gnd #2,600 V, EPR Insulation
						2096	1-3/C + gnd #2,600 V, EPR Insulation
						2097	1-3/C + gnd #2,600 V, EPR Insulation
						2098	1-3/C + gnd #2,600 V, EPR Insulation
						2099	1-3/C + gnd #2,600 V, EPR Insulation
						S-3053-1	1-3/C + gnd #2,600 V, EPR Insulation
						2107	1-3/C + gnd #2,600 V, EPR Insulation
						2120	1-3/C + gnd #1/0,600 V, EPR Insulation
						2201-6	1-2/C + gnd #10,600 V, EPR Insulation
						1201-1	1-2/C + gnd #10,600 V, EPR Insulation
						2202-1	1-2/C + gnd #10,600 V, EPR Insulation
						1201-2	1-2/C + gnd #10,600 V, EPR Insulation (6)
						1201-6	1-2/C + gnd #10,600 V, EPR Insulation
						2204-2	1-3/C #16,600 V, EPR Insulation
						Pull rope	Soft-Fiber Polyester
						A-3041-1	1-3/C + gnd #2,600 V, EPR Insulation
						S-3052-1	1-3/C + gnd #2,600 V, EPR Insulation
						2125	1-3/C + gnd 250 Kcmil,600 V, EPR Insulation
						2103	1-3/C + gnd #2,600 V, EPR Insulation
						S-3056-9	1-4/C #14,600 V, EPR Insulation
						CCTVE01AB	TVCP
						S-3056-6	1-4/C #14,600 V, EPR Insulation (6)
						2202-3A	1-2/C #14, 600 V, EPR Insulation
						2201-4B	1-2/C #14, 600 V, EPR Insulation
						2201-4C	1-2/C #14, 600 V, EPR Insulation
						1201-4A	1-2/C #14, 600 V, EPR Insulation
						1201-4B	1-2/C #14, 600 V, EPR Insulation
						1201-4C	1-2/C #14, 600 V, EPR Insulation

CONDUIT DATA

Conduit No	Reference	Size	Type	Total Fill (mm²)	Allowable Fill (mm²)	Included Cable No.	Conductor Type
						LP219-2	1-2/C + gnd #6,600 V, EPR Insulation
						LP219-4	1-2/C + gnd #6,600 V, EPR Insulation
						LP220-2	1-2/C + gnd #6,600 V, EPR Insulation
						LP220-4	1-2/C + gnd #6,600 V, EPR Insulation
						LP221-2	1-2/C + gnd #6,600 V, EPR Insulation
						LP221-4	1-2/C + gnd #6,600 V, EPR Insulation
						LP222-2	1-2/C + gnd #6,600 V, EPR Insulation
						LP222-6	1-2/C + gnd #6,600 V, EPR Insulation
						LP223-2	1-2/C + gnd #6,600 V, EPR Insulation
						LP223-4	1-2/C + gnd #6,600 V, EPR Insulation
						LP223-6	1-2/C + gnd #6,600 V, EPR Insulation
						LP223-8	1-2/C + gnd #6,600 V, EPR Insulation
			(6)				

For continuation, see next sheet.

CONDUIT AND TRAY SCHEDULE

E-418

STATE OF CALIFORNIA - DEPARTMENT OF TRANSPORTATION — Caltrans

DESIGN OVERSIGHT — BEHZAD GOLEMOHAMMADI

CALCULATED/ DESIGNED BY — CHECKED BY

DATE	BY	REVISED BY	DATE REVISED
8/02	PBP	AB	8/02

LAST REVISION 00-00-00 — DATE PLOTTED => 11-JAN-2011 — TIME PLOTTED => 14:02

FOR REDUCED PLANS ORIGINAL SCALE IS IN MILLIMETERS 0 20 40 60 80

DGN FILE =>04-0120f1_0373R06.dgn
USERNAME =>florico

CU 04251 | EA 0120F1

CONDUIT DATA

Conduit No	Reference	Size	Type	Total Fill (mm²)	Allowable Fill (mm²)	Included Cable No.	Conductor Type
2T24	E-114, E-182	610	152.4 mm siderail ladder tray	2191.50	18064.48	LP219-2	1-2/C + gnd #6, 600 V, EPR Insulation
						LP219-4	1-2/C + gnd #6, 600 V, EPR Insulation
						Pull rope	Soft-Fiber Polyester
						UP204-7	1-2/C + gnd #8,600 V, EPR Insulation
						UP204-1	1-2/C + gnd #10,600 V, EPR Insulation
						UP204-8	1-2/C + gnd #8,600 V, EPR Insulation
						2103	1-3/C + gnd #2,600 V, EPR Insulation
						2095	1-3/C + gnd #2,600 V, EPR Insulation
2T25	E-115, E-182	610	152.4 mm siderail ladder tray	3155.19	18064.48	UP205-7	1-2/C + gnd #8,600 V, EPR Insulation
						UP205-1	1-2/C + gnd #10,600 V, EPR Insulation
						LP220-2	1-2/C + gnd #6,600 V, EPR Insulation
						LP220-4	1-2/C + gnd #6,600 V, EPR Insulation
						Pull rope	Soft-Fiber Polyester
						S-3056-6	1-4/C #14,600 V, EPR Insulation
						2202-2	1-3/C #14,600 V, EPR Insulation
						2204-2	1-3/C #16,600 V, EPR Insulation
						2096	1-3/C + gnd #2,600 V, EPR Insulation
						2204-1	1-3/C #14, 600 V, EPR Insulation
						2104	1-3/C + gnd #2,600 V, EPR Insulation
						UP205-8	1-2/C + gnd #8,600 V, EPR Insulation
						2202-3	1-7/C #16,600 V, EPR Insulation
						1201-1	1-2/C + gnd #10, 600 V, EPR Insulation
						1201-2	1-2/C + gnd #10, 600 V, EPR Insulation
						1201-6	1-2/C + gnd #10, 600 V, EPR Insulation
						1201-4A	1-2/C #14, 600 V, EPR Insulation
						1201-4B	1-2/C #14, 600 V, EPR Insulation
						1201-4C	1-2/C #14, 600 V, EPR Insulation
2T26	E-117, E-183	610	152.4 mm siderail ladder tray	3094.52	18064.48	2202-1	1-2/C + gnd #10, 600 V, EPR Insulation
						CCTVE01BA	TVP
						LP221-2	1-2/C + gnd #6,600 V, EPR Insulation
						Pull rope	Soft-Fiber Polyester
						CCTVE01AB	TVCP
						CCTVE01AA	TVP
						CCTVE01BB	TVCP
						LP221-4	1-2/C + gnd #6,600 V, EPR Insulation
						UP206-7	1-2/C + gnd #8,600 V, EPR Insulation
						UP207-1	1-2/C + gnd #10,600 V, EPR Insulation
						UP206-1	1-2/C + gnd #10,600 V, EPR Insulation
						2202-2	1-3/C #14, 600 V, EPR Insulation
						2105	1-3/C + gnd #2,600 V, EPR Insulation
						2097	1-3/C + gnd #2,600 V, EPR Insulation
						UP206-8	1-2/C + gnd #8,600 V, EPR Insulation
						2202-3	1-7/C #16,600 V, EPR Insulation
						2202-3A	1-2/C #14, 600 V, EPR Insulation

DATE	REVISED BY
XX	XX
XX/XX/10	XX/XX/10
DATE REVISED	

CALCULATED/DESIGNED BY
CHECKED BY

DESIGN OVERSIGHT
BEHZAD GOLEMOHAMMADI

STATE OF CALIFORNIA - DEPARTMENT OF TRANSPORTATION
Caltrans

Metric

DIST	COUNTY	ROUTE	KILOMETER POST TOTAL PROJECT	SHEET No	TOTAL SHEETS
04	SF	80	13.2/13.9	373 S1	1204

Syn Yee Chin 01/07/11
REGISTERED ELECTRICAL ENGINEER DATE

REGISTERED PROFESSIONAL ENGINEER — SYN YEE CHIN No. 18186 Exp. 09/30/2011 ELECTRICAL — STATE OF CALIFORNIA

PLANS APPROVAL DATE

PB AMERICAS, Inc.
A Parsons Brinckerhoff Company
303 Second St., Suite 700N
San Francisco, CA 94107-1317

The State of California or its officers or agents shall not be responsible for the accuracy or completeness of electronic copies of this plan sheet.

Caltrans now has a web site! To get to the web site, go to http://www.dot.ca.gov

REQUEST FOR INFORMATION NOT ADDRESSED IN THIS CCO REMAIN IN FORCE

MARK	DATE	DESCRIPTIONS	BY	CH'D	CCO#
		REVISIONS			
0	01/07/11	ELECTRICAL WARNING SYSTEMS	TW	RG	61

CONTRACT CHANGE ORDER NO. 61
SHEET 79 OF 104

CONDUIT DATA

Conduit No	Reference	Size	Type	Total Fill (mm²)	Allowable Fill (mm²)	Included Cable No.	Conductor Type

For continuation, see next sheet.

CONDUIT AND TRAY SCHEDULE

E-418A

LAST REVISION 00-00-00
DATE PLOTTED => 11-JAN-2011
TIME PLOTTED => 14:30

FOR REDUCED PLANS ORIGINAL SCALE IS IN MILLIMETERS 0 20 40 60 80

DGN FILE =>04-0120f1_0373S01.dgn
USERNAME =>llorico

CU 04251

EA 0120F1

CONDUIT DATA

Conduit No	Reference	Size	Type	Total Fill (mm2)	Allowable Fill (mm2)	Included Cable No.	Conductor Type
2T27	E-118, E-184	610	152.4 mm siderail ladder tray	2160.88	18064.48	LP222-6,8	1-3/C + gnd #6,600 V, EPR Insulation
						2098	1-3/C + gnd #2,600 V, EPR Insulation
						2106	1-3/C + gnd #2,600 V, EPR Insulation
						UP207-8	1-2/C + gnd #8,600 V, EPR Insulation
						UP207-7	1-2/C + gnd #8,600 V, EPR Insulation
						Pull rope	Soft-Fiber Polyester
						LP222-2,4	1-3/C + gnd #6,600 V, EPR Insulation
						UP207-1	1-2/C + gnd #10,600 V, EPR Insulation
2T28	E-119, E-185	610	152.4 mm siderail ladder tray	2833.85	18064.48		
						UP208-6	1-2/C + gnd #8,600 V, EPR Insulation
						Pull rope	Soft-Fiber Polyester
						LP223-2,4	1-3/C + gnd #6,600 V, EPR Insulation
						UP208-7	1-2/C + gnd #8,600 V, EPR Insulation
						2107	1-3/C + gnd #2,600 V, EPR Insulation
						LP223-6,8	1-3/C + gnd #6,600 V, EPR Insulation
						2201-5	1-3/C #14,600 V, EPR Insulation
						UP208-8	1-2/C + gnd #8,600 V, EPR Insulation
						2201-6	1-2/C + gnd #10,600 V, EPR Insulation
						S-3056-9	1-4/C #14,600 V, EPR Insulation
						2099	1-3/C + gnd #2,600 V, EPR Insulation
						2201-2	1-2/C + gnd #10,600 V, EPR Insulation
						2201-4B	1-2/C #14,600 V, EPR Insulation
						2201-4C	1-2/C #14,600 V, EPR Insulation
2T29	E-212, E-21B	610	152.4 mm siderail ladder tray	15115.43	18064.48	2123-3	1-3/C + gnd #2/0,600 V, EPR Insulation
						Pull rope	Soft-Fiber Polyester
						2119-A	1-3/C + gnd 250 kcmil,600 V, EPR Insulation
						A-3004-1	1-3/C + gnd #2,600 V, EPR Insulation
						A-3003-1	1-3/C + gnd #4,600 V, EPR Insulation
						A-2012-1	1-3/C + gnd #2,600 V, EPR Insulation
						2123	1-3/C + gnd #2,600 V, EPR Insulation
						2105	1-3/C + gnd #2,600 V, EPR Insulation
						2104	1-3/C + gnd #2,600 V, EPR Insulation
						2125	1-3/C + gnd 250 kcmil,600 V, EPR Insulation
						2123-2	1-3/C + gnd #2/0,600 V, EPR Insulation
						2106	1-3/C + gnd #2,600 V, EPR Insulation
						1118	1-3/C + gnd #2/0,600 V, EPR Insulation
						2095	1-3/C + gnd #2,600 V, EPR Insulation
						2096	1-3/C + gnd #2,600 V, EPR Insulation
						2097	1-3/C + gnd #2,600 V, EPR Insulation
						2098	1-3/C + gnd #2,600 V, EPR Insulation
						2099	1-3/C + gnd #2,600 V, EPR Insulation
						2103	1-3/C + gnd #2,600 V, EPR Insulation
						2107	1-3/C + gnd #2,600 V, EPR Insulation
						A-3041-1	1-3/C + gnd #2,600 V, EPR Insulation
						S-3053-1	1-3/C + gnd #2,600 V, EPR Insulation
						S-3052-1	1-3/C + gnd #2,600 V, EPR Insulation
						A-2013-1	1-3/C + gnd #2,600 V, EPR Insulation
2T33	E-114B	760	152.4 mm siderail ladder tray	17199.66	22580.60	A-2011-1	1-3/C + gnd #2,600 V, EPR Insulation
						UP208-2A	1-2/C + gnd #8,600 V, EPR Insulation
						UP208-4A	1-2/C + gnd #8,600 V, EPR Insulation
						UP208-6	1-2/C + gnd #8,600 V, EPR Insulation
						Pull rope	Soft-Fiber Polyester
						2121	1-3/C + gnd #1/0,600 V, EPR Insulation
						2120	1-3/C + gnd #1/0,600 V, EPR Insulation
						A-3057-1	1-3/C + gnd #2,600 V, EPR Insulation
						A-2014-1	1-3/C + gnd #2,600 V, EPR Insulation
						UP204-8	1-2/C + gnd #8,600 V, EPR Insulation
						UP205-8	1-2/C + gnd #8,600 V, EPR Insulation
						UP207-8	1-2/C + gnd #8,600 V, EPR Insulation
						UP205-1	1-2/C + gnd #10,600 V, EPR Insulation
						UP207-7	1-2/C + gnd #8,600 V, EPR Insulation
						A-3039-3	1-3/C + gnd #6,600 V, EPR Insulation
						A-3040-3	1-3/C + gnd #6,600 V, EPR Insulation
						A-3005-1	1-3/C + gnd #2,600 V, EPR Insulation
						A-3006-1	1-3/C + gnd #4,600 V, EPR Insulation
						A-3031-1	1-3/C + gnd #4,600 V, EPR Insulation

THIS PLAN ACCURATE FOR ELECTRICAL WORK ONLY.

REQUEST FOR INFORMATION NOT ADDRESSED IN THIS CCO REMAIN IN FORCE

MARK	DATE	DESCRIPTIONS REVISIONS	BY	CH'D	CCO#
9	05/02/12	ELECTRICAL WARNING SYSTEMS	RR	RG	61
8	12/21/11	ELECTRICAL CHANGE FOR ELEVATION 53 IMPROVEMENTS	TW	RG	190
7	03/24/11	BIKE PATH CONDUIT	TW	RG	73
6	01/07/11	ELECTRICAL WARNING SYSTEMS	TW	RG	61
5	06/11/10	BIKE PATH CONDUIT	TW	RG	73
4	02/01/10	DEHUMIDIFIER SCADA INTERFACE	RR	RG FW	130
3	03/30/09	SERVICE PLATFORM ELECTRICAL CHANGES	RY RR	RG MP	55
2	02/25/08	CABLE TRAY CHANGES	TW	RG	42S1
1	03/04/08	BARRIER MODIFICATIONS	JS BM	RG SE	44

CONTRACT CHANGE ORDER NO. 61
SHEET 80 OF 104

Metric

SYN YEE CHIN — No. 18186 — Exp. 09/30/2011 — ELECTRICAL — REGISTERED PROFESSIONAL ENGINEER — STATE OF CALIFORNIA

Syn Yee Chin
FOR REVISION ONLY
5 6 7

DAVID H. OTO — No. 10699 — Exp. 06/30/2013 — ELECTRICAL — REGISTERED PROFESSIONAL ENGINEER — STATE OF CALIFORNIA

FOR REVISION ONLY
8 9

FADI WALIEDDINE — No. 11485 — Exp. 12/31/2011 — ELECTRICAL — REGISTERED PROFESSIONAL ENGINEER — STATE OF CALIFORNIA

FOR REVISION ONLY
3 4

S. A. ESTOQUE, JR. — No. E-10151 — Exp. 12/31/2008 — ELECTRICAL — REGISTERED PROFESSIONAL ENGINEER — STATE OF CALIFORNIA

FOR REVISION ONLY
1 2

DIST	COUNTY	ROUTE	KILOMETER POST TOTAL PROJECT	SHEET No	TOTAL SHEETS
04	SF	80	13.2/13.9	374 R9	1204

Jens Erlingsson 12/19/02
REGISTERED ELECTRICAL ENGINEER DATE

JENS ERLINGSSON — No. 8249 — Exp. 9/30/06 — ELECTRICAL — REGISTERED PROFESSIONAL ENGINEER — STATE OF CALIFORNIA

12-6-04
PLANS APPROVAL DATE

PB POWER, Inc.
A Parsons Brinckerhoff Company
303 Second St., Suite 700N
San Francisco, CA 94107-1317

The State of California or its officers or agents shall not be responsible for the accuracy or completeness of electronic copies of this plan sheet.

Caltrans now has a web site! To get to the web site, go to: http://www.dot.ca.gov

CONDUIT DATA

Conduit No	Reference	Size	Type	Total Fill (mm2)	Allowable Fill (mm2)	Included Cable No.	Conductor Type
						A-3032-1	1-3/C + gnd #4,600 V, EPR Insulation
						A-3039-1	1-3/C + gnd #2,600 V, EPR Insulation
						A-3040-1	1-3/C + gnd #2,600 V, EPR Insulation
						UP204-1	1-2/C + gnd #10,600 V, EPR Insulation
						UP206-8	1-2/C + gnd #8,600 V, EPR Insulation
						S-2032-1	1-3/C + gnd #4,600 V, EPR Insulation
						A-3036-1	1-3/C + gnd #4,600 V, EPR Insulation
						A-2035-1	1-3/C + gnd #6,600 V, EPR Insulation
						A-2035-3	1-3/C + gnd #6,600 V, EPR Insulation
						UP205-7	1-2/C + gnd #8,600 V, EPR Insulation
						UP206-7	1-2/C + gnd #8,600 V, EPR Insulation
						A-3035-1	1-3/C + gnd #4,600 V, EPR Insulation
						A-3034-1	1-3/C + gnd #2,600 V, EPR Insulation
						UP207-1	1-2/C + gnd #10,600 V, EPR Insulation
						S-2031-1	1-3/C + gnd #2,600 V, EPR Insulation
						UP206-1	1-2/C + gnd #10,600 V, EPR Insulation
						1201-2	1-2/C + gnd #10,600 V, EPR Insulation
						UP208-7	1-2/C + gnd #8,600 V, EPR Insulation
						1201-6	1-2/C + gnd #10,600 V, EPR Insulation
						A-3043-1	1-3/C + gnd #2,600 V, EPR Insulation
						A-3042-1	1-3/C + gnd #2,600 V, EPR Insulation
						2119-B	1-3/C + gnd 250 kcmil,600 V, EPR Insulation
						A-3033-1	1-3/C + gnd #2,600 V, EPR Insulation
						UP208-8	1-2/C + gnd #8,600 V, EPR Insulation
2T39	E-212, E-21	610	152.4 mm siderail ladder tray	11397.53	18064.48	A-3032-1	1-3/C + gnd #4,600 V, EPR Insulation
						2119-B	1-3/C + gnd 250 kcmil,600 V, EPR Insulation
						A-2035-1	1-3/C + gnd #6,600 V, EPR Insulation
						S-2032-1	1-3/C + gnd #4,600 V, EPR Insulation
						S-2031-1	1-3/C + gnd #2,600 V, EPR Insulation
						A-3036-1	1-3/C + gnd #4,600 V, EPR Insulation
						A-3035-1	1-3/C + gnd #4,600 V, EPR Insulation
						A-3034-1	1-3/C + gnd #2,600 V, EPR Insulation
						A-3033-1	1-3/C + gnd #2,600 V, EPR Insulation
						Pull rope	Soft-Fiber Polyester
						A-3039-1	1-3/C + gnd #2,600 V, EPR Insulation
						A-3042-1	1-3/C + gnd #2,600 V, EPR Insulation
						A-3031-1	1-3/C + gnd #4,600 V, EPR Insulation
						A-3006-1	1-3/C + gnd #4,600 V, EPR Insulation
						A-3005-1	1-3/C + gnd #2,600 V, EPR Insulation
						A-2014-1	1-3/C + gnd #2,600 V, EPR Insulation
						A-2011-1	1-3/C + gnd #2,600 V, EPR Insulation
						A-3057-1	1-3/C + gnd #2,600 V, EPR Insulation
						A-3043-1	1-3/C + gnd #2,600 V, EPR Insulation
						A-3040-1	1-3/C + gnd #2,600 V, EPR Insulation
						2121	1-3/C + gnd #1/0,600 V, EPR Insulation
						2120	1-3/C + gnd #1/0,600 V, EPR Insulation

For continuation, see next sheet.

CONDUIT AND TRAY SCHEDULE E-419

DESIGN OVERSIGHT	CALCULATED/ DESIGNED BY	CHECKED BY	DATE	REVISED BY	DATE REVISED
BEHZAD GOLEMOHAMMADI	PBP	AB	8/02		

STATE OF CALIFORNIA - DEPARTMENT OF TRANSPORTATION
Caltrans

FOR REDUCED PLANS ORIGINAL SCALE IS IN MILLIMETERS 0 20 40 60 80

DGN FILE =>04-0120f1_0374R09.dgn
USERNAME =>llorico

CU 04251 | EA 0120F1

LAST REVISION 12-21-11
DATE PLOTTED => 04-MAY-2012
TIME PLOTTED => 13:51

DRAFT 1 (03/01/11)

STATE OF CALIFORNIA - DEPARTMENT OF TRANSPORTATION

Caltrans

DESIGN OVERSIGHT

BEHZAD GOLEMOHAMMADI

CALCULATED/ DESIGNED BY

CHECKED BY

DATE	REVISED BY
8/02	DATE REVISED
PBP	AB

CONDUIT DATA

Conduit No	Reference	Size	Type	Total Fill (mm²)	Allowable Fill (mm²)	Included Cable No.	Conductor Type
2T43	E-114B	610		7 10701.35	38709.60	2900-152C	4 pair #22, shielded pairs, FEP insulation
						2900-292A	4 pair #22, shielded pairs, FEP insulation
						2900-272C	4 pair #22, shielded pairs, FEP insulation
						2900-272B	4 pair #22, shielded pairs, FEP insulation
						2900-272A	4 pair #22, shielded pairs, FEP insulation
						2900-192C	4 pair #22, shielded pairs, FEP insulation
						2900-192B	4 pair #22, shielded pairs, FEP insulation
						2900-192A	4 pair #22, shielded pairs, FEP insulation
						2900-172C	4 pair #22, shielded pairs, FEP insulation
						2900-172B	4 pair #22, shielded pairs, FEP insulation
						2900-172A	4 pair #22, shielded pairs, FEP insulation
						1473-6	50 pair #18, shielded pairs, IS/OS shield 600 V, XLPE insul., PVC jacket
						2900-162A	4 pair #22, shielded pairs, FEP insulation
						2900-332C	4 pair #22, shielded pairs, FEP insulation
						2900-152B	4 pair #22, shielded pairs, FEP insulation
						2900-152A	4 pair #22, shielded pairs, FEP insulation
						2900-142A	4 pair #22, shielded pairs, FEP insulation
						2910-8	4 pair #22, shielded pairs, 300 V, PE insulation
						2119-2	4 pair #22, shielded pairs, 300 V, PE insulation
						2475-3C	12 fiber, single mode fiberoptic cable
						MVDSE03A	MVDS DLC
						MVDSE01A	MVDS DLC
						MVDSE02A	MVDS DLC
						4 2204-12	1-3 pair #16, twisted shielded with overall shield, 600V, PVC insulation
						2154	1 - 2 pair, shielded #18 with IS/OA, 300 V, PVC jacket
						2900-162B	4 pair #22, shielded pairs, FEP insulation
						2900-442A	4 pair #22, shielded pairs, FEP insulation
						2474-10	50 pair #18, shielded pairs, IS/OS shield 600 V, XLPE insul., PVC jacket
						1474-6	50 pair #18, shielded pairs, IS/OS shield 600 V, XLPE insul., PVC jacket
						1473-4	50 pair #18, shielded pairs, IS/OS shield 600 V, XLPE insul., PVC jacket
						2910-7	4 pair #24, overall shielded, 300V, PE insulation
						2910-3	4 pair #22, shielded pairs, FEP insulation
						2910-2	4 pair #22, shielded pairs, FEP insulation
						2910-12	4 pair #22, shielded pairs, 300 V, PE insulation
						2910-11	1-3/C #16,600 V, EPR insulation
						2900-482A	4 pair #22, shielded pairs, FEP insulation
						2900-452B	4 pair #22, shielded pairs, FEP insulation
						2900-452A	4 pair #22, shielded pairs, FEP insulation
						2900-332A	4 pair #22, shielded pairs, FEP insulation
						2900-442B	4 pair #22, shielded pairs, FEP insulation
						2900-332B	4 pair #22, shielded pairs, FEP insulation
						2900-432A	4 pair #22, shielded pairs, FEP insulation
						2900-422B	4 pair #22, shielded pairs, FEP insulation
						2900-422A	4 pair #22, shielded pairs, FEP insulation
						2900-412C	4 pair #22, shielded pairs, FEP insulation
						2900-412B	4 pair #22, shielded pairs, FEP insulation
						2900-412A	4 pair #22, shielded pairs, FEP insulation
						2900-402A	4 pair #22, shielded pairs, FEP insulation
						2900-382C	4 pair #22, shielded pairs, FEP insulation
						2900-382B	4 pair #22, shielded pairs, FEP insulation
						2900-382A	4 pair #22, shielded pairs, FEP insulation
						2148	1 - 2 pair, shielded #18 with IS/OA, 300 V, PVC jacket
						2900-442C	4 pair #22, shielded pairs, FEP insulation
						CCTVE01A	HCC
						1473-8	50 pair #18, shielded pairs, IS/OS shield 600 V, XLPE insul., PVC jacket
						Pull rope	Soft-Fiber Polyester
						2475-3A	12 fiber, single mode fiberoptic cable
						2475-3B	12 fiber, single mode fiberoptic cable
						2475-3	72 fiber, single mode fiberoptic riser cable
						CCTVE01B	HCC
						2900-432B	4 pair #22, shielded pairs, FEP insulation
						MVDSW03A	MVDS DLC
						2120-1	1-2PR #18 Twisted Shielded w/overall Shield
						1118-1	1-2PR #18 Twisted Shielded w/overall Shield
						2121-1	1-2PR #18 Twisted Shielded w/overall Shield
						2479-1	72 fiber, single mode fiber optic riser cable inside brown innerduct

REQUEST FOR INFORMATION NOT ADDRESSED IN THIS CCO REMAIN IN FORCE

MARK	DATE	DESCRIPTIONS	BY	CH'D	CCO#
		REVISIONS			
7	05/02/12	ELECTRICAL WARNING SYSTEMS	RR	RG	61
6	07/12/11	TOS MODIFICATIONS	RR	RG	81
5	03/01/11	BASE INTEGRATION	RSB	WB	150
4	03/26/10	DEHUMIDIFIER SCADA INTERFACE	RR	RG FW	130
3	03/30/09	SERVICE PLATFORM ELECTRICAL CHANGES	RY RR	RG MP	55
2	02/25/08	CABLE TRAY CHANGES	TW	RG	42S1
1	03/04/08	BARRIER MODIFICATIONS	JS BM	RG SE	44

Caltrans Metric

DIST	COUNTY	ROUTE	KILOMETER POST TOTAL PROJECT	SHEET No	TOTAL SHEETS
04	SF	80	13.2/13.9	375 R7	1204

REGISTERED ELECTRICAL ENGINEER — 12/19/02 DATE

12-6-04
PLANS APPROVAL DATE

REGISTERED PROFESSIONAL ENGINEER — JENS ERLINGSSON — No. 8249 — Exp. 9/30/06 ELECTRICAL — STATE OF CALIFORNIA

PB POWER, Inc.
A Parsons Brinckerhoff Company
303 Second St., Suite 700N
San Francisco, CA 94107-1317

The State of California or its officers or agents shall not be responsible for the accuracy or completeness of electronic copies of this plan sheet.

Caltrans now has a web site! To get to the web site, go to: http://www.dot.ca.gov

CONTRACT CHANGE ORDER NO. 61
SHEET 81 OF 104

REGISTERED PROFESSIONAL ENGINEER — DAVID H. OTO — No. 10699 — Exp. 06/30/2013 ELECTRICAL — STATE OF CALIFORNIA — 7
FOR REVISION ONLY

REGISTERED PROFESSIONAL ENGINEER — S. A. ESTOQUE, MR — No. E-10151 — Exp. 12/31/2009 ELECTRICAL — STATE OF CALIFORNIA — 1 2
FOR REVISION ONLY

REGISTERED PROFESSIONAL ENGINEER — FADI WALIEDDINE — No. 11465 — Exp. 12/31/2009 ELECTRICAL — STATE OF CALIFORNIA — 3
FOR REVISION ONLY

REGISTERED PROFESSIONAL ENGINEER — SYN YEE CHIN — No. 18186 — Exp. 09/30/2011 ELECTRICAL — STATE OF CALIFORNIA — 4 5 6
FOR REVISION ONLY

CONDUIT DATA

Conduit No	Reference	Size	Type	Total Fill (mm²)	Allowable Fill (mm²)	Included Cable No.	Conductor Type
						MVDSW03A	MVDS DLC
2T44	E-115, E-182	610	152.4 mm siderail solid bottom tray	5109.21	38709.60	2119-2	4 pair #22, shielded pairs, 300 V, PE insulation
						1473-4	50 pair #18, shielded pairs, IS/OS shield 600 V, XLPE insul., PVC jacket
						1474-5	50 pair #18, shielded pairs, IS/OS shield 600 V, XLPE insul., PVC jacket
						1474-4	50 pair #18, shielded pairs, IS/OS shield 600 V, XLPE insul., PVC jacket
						Pull rope	Soft-Fiber Polyester
						MVDSE01A	MVDS DLC
						2475-3A	12 fiber, single mode fiberoptic cable
						1473-5	50 pair #18, shielded pairs, IS/OS shield 600 V, XLPE insul., PVC jacket
2T45	E-115, E-182	610	152.4 mm siderail solid bottom tray	7725.32	38709.60	2900-432B	4 pair #22, shielded pairs, FEP insulation
						2910-12	4 pair #22, shielded pairs, 300 V, PE insulation
						Pull rope	Soft-Fiber Polyester
						2900-412A	4 pair #22, shielded pairs, FEP insulation
						2910-11	1-3/C #16,600 V, EPR insulation
						2910-7	4 pair #24, overall shielded, 30V, PE insulation
						2910-10	4 pair #22, shielded pairs, 300 V, PE insulation
						2910-8	4 pair #22, shielded pairs, 300 V, PE insulation
						2900-422B	4 pair #22, shielded pairs, FEP insulation
						2900-422A	4 pair #22, shielded pairs, FEP insulation
						2900-412C	4 pair #22, shielded pairs, FEP insulation
						2900-412B	4 pair #22, shielded pairs, FEP insulation
						2900-382C	4 pair #22, shielded pairs, FEP insulation
						2900-402A	4 pair #22, shielded pairs, FEP insulation
						2900-272C	4 pair #22, shielded pairs, FEP insulation
						2900-382B	4 pair #22, shielded pairs, FEP insulation
						2900-382A	4 pair #22, shielded pairs, FEP insulation
						2900-332C	4 pair #22, shielded pairs, FEP insulation
						2900-332B	4 pair #22, shielded pairs, FEP insulation
						2900-332A	4 pair #22, shielded pairs, FEP insulation
						2900-292A	4 pair #22, shielded pairs, FEP insulation
						2900-172A	4 pair #22, shielded pairs, FEP insulation
						2900-192B	4 pair #22, shielded pairs, FEP insulation
						2900-142A	4 pair #22, shielded pairs, FEP insulation
						1474-5A	1 - 6 pair, shielded #18 with overall shield, 300 V, PVC jacket
						2910-3	4 pair #22, shielded pairs, FEP insulation
						2910-2	4 pair #22, shielded pairs, FEP insulation
						2900-482A	4 pair #22, shielded pairs, FEP insulation
						2900-452B	4 pair #22, shielded pairs, FEP insulation
						2120-1	1-2PR #18 Twisted Shielded w/overall Shield
						2121-1	1-2PR #18 Twisted Shielded w/overall Shield
						2155	1 - 2 pair, shielded #18 with IS/OA, 300 V, PVC jacket

For continuation, see next sheet

CONDUIT AND TRAY SCHEDULE

E-420

LAST REVISION 00-00-00
DATE PLOTTED => 04-MAY-2012
TIME PLOTTED => 13:51

FOR REDUCED PLANS ORIGINAL SCALE IS IN MILLIMETERS 0 20 40 60 80

DGN FILE =>04-0120f1_0375R07.dgn
USERNAME =>llorico

CU 04251

EA 0120F1

DRAFT 1 (03/01/11)

STATE OF CALIFORNIA - DEPARTMENT OF TRANSPORTATION

Caltrans

DESIGN OVERSIGHT: BEHZAD GOLEMOHAMMADI

CALCULATED/DESIGNED BY | CHECKED BY | PBP | AB | DATE 8/02 | REVISED BY | DATE REVISED

CONDUIT DATA

Conduit No	Reference	Size	Type	Total Fill (mm²)	Allowable Fill (mm²)	Included Cable No.	Conductor Type
						2900-452A	4 pair #22, shielded pairs, FEP insulation
						2900-442A	4 pair #22, shielded pairs, FEP insulation
						2900-442C	4 pair #22, shielded pairs, FEP insulation
						2900-442B	4 pair #22, shielded pairs, FEP insulation
						2900-272A	4 pair #22, shielded pairs, FEP insulation
						2900-162A	4 pair #22, shielded pairs, FEP insulation
						2900-192C	4 pair #22, shielded pairs, FEP insulation
						1474-5	50 pair #18, shielded pairs, IS/OS shield 600 V, XLPE insul., PVC jacket
						2900-432A	4 pair #22, shielded pairs, FEP insulation
						2900-192A	4 pair #22, shielded pairs, FEP insulation
						2900-172C	4 pair #22, shielded pairs, FEP insulation
						2900-172B	4 pair #22, shielded pairs, FEP insulation
						2900-162B	4 pair #22, shielded pairs, FEP insulation
						2900-152C	4 pair #22, shielded pairs, FEP insulation
						2900-152B	4 pair #22, shielded pairs, FEP insulation
						2900-152A	4 pair #22, shielded pairs, FEP insulation
						1474-5B	1 - 6 pair, shielded #18 with overall shield, 300 V, PVC jacket
						1474-6	50 pair #18, shielded pairs, IS/OS shield 600 V, XLPE insul., PVC jacket
						1473-5	50 pair #18, shielded pairs, IS/OS shield 600 V, XLPE insul., PVC jacket
						1473-6	50 pair #18, shielded pairs, IS/OS shield 600 V, XLPE insul., PVC jacket
						2900-272B	4 pair #22, shielded pairs, FEP insulation
2T46	E-115, E-183	610	152.4 mm siderail solid bottom tray	6170.68	38709.60	1474-6	50 pair #18, shielded pairs, IS/OS shield 600 V, XLPE insul., PVC jacket
						Pull rope	Soft-Fiber Polyester
						MVDSE02A	MVDS DLC
						CCTVE01A	HCC
						MVDSW03A	MVDS DLC
						CCTVE01B	HCC
						1473-7	50 pair #18, shielded pairs, IS/OS shield 600 V, XLPE insul., PVC jacket
						1474-7	50 pair #18, shielded pairs, IS/OS shield 600 V, XLPE insul., PVC jacket
						1473-6	50 pair #18, shielded pairs, IS/OS shield 600 V, XLPE insul., PVC jacket
						2475-3B	12 Fiber, single mode fiber optic cable
						2479-1	72 Fiber, single mode fiber optic riser cable inside brown innerduct
2T47	E-117, E-184	610	152.4 mm siderail solid bottom tray	4987.47	38709.60	1474-7	50 pair #18, shielded pairs, IS/OS shield 600 V, XLPE insul., PVC jacket
						MVDSE03A	MVDS DLC
						2475-3C	12 Fiber, single mode fiber optic cable
						1473-8	50 pair #18, shielded pairs, IS/OS shield 600 V, XLPE insul., PVC jacket
						1473-7	50 pair #18, shielded pairs, IS/OS shield 600 V, XLPE insul., PVC jacket
						1474-8	50 pair #18, shielded pairs, IS/OS shield 600 V, XLPE insul., PVC jacket
						Pull rope	Soft-Fiber Polyester
2T48	E-118, E-185	610	152.4 mm siderail solid bottom tray	6 6945.53	38709.60	Pull rope	Soft-Fiber Polyester
						1474-10	50 pair #18, shielded pairs, IS/OS shield 600 V, XLPE insul., PVC jacket
						1474-8A	1 - 6 pair, shielded #18 with overall shield, 300 V, PVC jacket
						1474-8B	1 - 6 pair, shielded #18 with overall shield, 300 V, PVC jacket
						1474-8	50 pair #18, shielded pairs, IS/OS shield 600 V, XLPE insul., PVC jacket
						2154	1 - 2 pair, shielded #18 with IS/OA, 300 V, PVC jacket
						2148	1 - 2 pair, shielded #18 with IS/OA, 300 V, PVC jacket
						2149	1 - 2 pair, shielded #18 with IS/OA, 300 V, PVC jacket
						1473-10	50 pair #18, shielded pairs, IS/OS shield 600 V, XLPE insul., PVC jacket
						1473-8	50 pair #18, shielded pairs, IS/OS shield 600 V, XLPE insul., PVC jacket
						2474-10	50 pair #18, shielded pairs, IS/OS shield 600 V, XLPE insul., PVC jacket
						2150	1 - 2 pair, shielded #18 with IS/OA, 300 V, PVC jacket
						1118-1	1-2PR #18 Twisted Shielded w/overall shield
						6 2204-12	1-3 pair #16, twisted shielded with overall shield 600V, PVC insulation

REQUEST FOR INFORMATION NOT ADDRESSED IN THIS CCO REMAIN IN FORCE

MARK	DATE	DESCRIPTIONS	BY	CH'D	CCO#
		REVISIONS			
6	05/02/12	ELECTRICAL WARNING SYSTEMS	RR	RG	61
5	07/01/11	TOS MODIFICATIONS	RR	RG	81
4	03/01/11	BASE INTEGRATION	RSB	WB	150
3	03/26/10	DEHUMIDIFIER SCADA INTERFACE	TW	RG SYC	130
2	02/25/08	CABLE TRAY CHANGES	TW	RG	42S1
1	03/04/08	BARRIER MODIFICATIONS	JS BM	RG SE	44

CONTRACT CHANGE ORDER NO. 61
SHEET 82 OF 104

SYN YEE CHIN, No. 18186, Exp. 09/30/2011, ELECTRICAL, REGISTERED PROFESSIONAL ENGINEER, STATE OF CALIFORNIA

3 4 5 Syn Yee Chin
FOR REVISION ONLY

S. A. ESTOQUE, JR., No. E-10161, Exp. 12/31/2008, ELECTRICAL, REGISTERED PROFESSIONAL ENGINEER, STATE OF CALIFORNIA

1 2 S. Estoque
FOR REVISION ONLY

DAVID H. OTO, No. 10699, Exp. 06/30/2013, ELECTRICAL, REGISTERED PROFESSIONAL ENGINEER, STATE OF CALIFORNIA

6
FOR REVISION ONLY

DIST	COUNTY	ROUTE	KILOMETER POST TOTAL PROJECT	SHEET No	TOTAL SHEETS
04	SF	80	13.2/13.9	376 R6	1204

Jens Erlingsson 12/19/02
REGISTERED ELECTRICAL ENGINEER DATE

JENS ERLINGSSON, No. 8249, Exp. 9/30/06, ELECTRICAL, REGISTERED PROFESSIONAL ENGINEER, STATE OF CALIFORNIA

12-6-04
PLANS APPROVAL DATE

PB POWER, Inc.
A Parsons Brinckerhoff Company
303 Second St., Suite 700N
San Francisco, CA 94107-1317

The State of California or its officers or agents shall not be responsible for the accuracy or completeness of electronic copies of this plan sheet.

Caltrans now has a web site! To get to the web site, go to http://www.dot.ca.gov

CONDUIT DATA

Conduit No	Reference	Size	Type	Total Fill (mm²)	Allowable Fill (mm²)	Included Cable No.	Conductor Type
2T49	E-212, E-21B	305	152.4 mm siderail ladder tray	1904.72	19354.80	Pull rope	Soft-Fiber Polyester
						2900-152A	4 pair #22, shielded pairs, FEP insulation
						2900-152C	4 pair #22, shielded pairs, FEP insulation
						2900-162A	4 pair #22, shielded pairs, FEP insulation
						2900-162B	4 pair #22, shielded pairs, FEP insulation
						2910-2	4 pair #22, shielded pairs, FEP insulation
						2910-3	4 pair #22, shielded pairs, FEP insulation
						1473-4	50 pair #18, shielded pairs, IS/OS shield 600 V, XLPE insul., PVC jacket
						2475-3	72 Fiber, single mode fiberoptic riser cable
						2900-152B	4 pair #22, shielded pairs, FEP insulation
						2900-142A	4 pair #22, shielded pairs, FEP insulation
2T53	E-181 Thru E-186 E-212A	610	152.4 mm siderail solid bottom tray	0.00	38709.60	Pull rope	Soft-Fiber Polyester
2T54	E-212, E-21B	610	152.4 mm siderail ladder tray	0.00	16774.16	Pull rope	Soft-Fiber Polyester
3000		41	RGS conduit	323.69	534.55	UP204-8-2	2 + 1gnd #8,#10, 600 V, RHH/RHW insulation
						UP204-7-1	1-2/C + gnd #8,600 V, EPR insulation
3001		41	RGS conduit	454.92	534.55	UP204-7	1-2/C + gnd #8,600 V, EPR insulation
						UP204-8	1-2/C + gnd #8,600 V, EPR insulation
3002		53	RGS conduit	684.34	879.42	UP204-7	1-2/C + gnd #8,600 V, EPR insulation
						UP205-7-1	1-2/C + gnd #8,600 V, EPR insulation
						UP204-8-2	2 + 1gnd #8,#10, 600 V, RHH/RHW insulation
						UP204-8-1	3 + 1gnd #8,#10, 600 V, RHH/RHW insulation
3003		41	RGS conduit	454.92	534.55	UP205-8	1-2/C + gnd #8,600 V, EPR insulation
						UP205-7	1-2/C + gnd #8,600 V, EPR insulation
3004		53	RGS conduit	684.34	879.42	UP205-8-2	2 + 1gnd #8,#10, 600 V, RHH/RHW insulation
						UP205-8-1	3 + 1gnd #8,#10, 600 V, RHH/RHW insulation
						UP206-7-1	1-2/C + gnd #8,600 V, EPR insulation
						UP205-7	1-2/C + gnd #8,600 V, EPR insulation
3005		41	RGS conduit	454.92	534.55	UP206-8	1-2/C + gnd #8,600 V, EPR insulation
						UP206-7	1-2/C + gnd #8,600 V, EPR insulation
3006		53	RGS conduit	684.34	879.42	UP206-7	1-2/C + gnd #8,600 V, EPR insulation
						UP207-7-1	1-2/C + gnd #8,600 V, EPR insulation
						UP206-8-1	3 + 1gnd #8,#10, 600 V, RHH/RHW insulation
						UP206-8-2	2 + 1gnd #8,#10, 600 V, RHH/RHW insulation
3007		41	RGS conduit	454.92	534.55	UP207-8	1-2/C + gnd #8,600 V, EPR insulation
						UP207-7	1-2/C + gnd #8,600 V, EPR insulation
3008		53	RGS conduit	684.34	879.42	UP207-8-2	2 + 1gnd #8,#10, 600 V, RHH/RHW insulation
						UP207-8-1	3 + 1gnd #8,#10, 600 V, RHH/RHW insulation
						UP207-7	1-2/C + gnd #8,600 V, EPR insulation
						UP208-7-1	1-2/C + gnd #8,600 V, EPR insulation
3009		41	RGS conduit	454.92	534.55	UP208-8	1-2/C + gnd #8,600 V, EPR insulation
						UP208-7	1-2/C + gnd #8,600 V, EPR insulation

For continuation, see next sheet.

CONDUIT AND TRAY SCHEDULE

ALL DIMENSIONS ARE IN MILLIMETERS UNLESS OTHERWISE SHOWN

E-421

LAST REVISION 00-00-00 | DATE PLOTTED => 04-MAY-2012 | TIME PLOTTED => 13:51

FOR REDUCED PLANS ORIGINAL SCALE IS IN MILLIMETERS 0 20 40 60 80

DGN FILE =>04-0120f1_0376R06.dgn
USERNAME =>llorico

CU 04251 | EA 0120F1

CONDUIT DATA

Conduit No	Reference	Size	Type	Total Fill (mm^2)	Allowable Fill (mm^2)	Included Cable No.	Conductor Type
2T54A	E-21,E-21E	610	152.4 mm siderail solid bottom tray	0.00	16774.16	Pull rope	Soft-Fiber Polyester
2T54B	E-21,E-21E	610	152.4 mm siderail ladder tray	0.00	16774.16	Pull rope	Soft-Fiber Polyester
2T29A	E-21,E-21E	610	152.4 mm siderail ladder tray	0.00	16774.16		
2T29B	E-21,E-21E	610	152.4 mm siderail ladder tray	0.00	16774.16		
2T39A	E-21,E-21E	610	152.4 mm siderail ladder tray	0.00	16774.16		
2T39B	E-21,E-21E	610	152.4 mm siderail ladder tray	0.00	16774.16		
2T41	E182,E207C,E264	305	152.4 mm siderail solid bottom tray	1 128.68	8387.08	2204-12 Pull rope	1-3 pair #16, twisted shielded with overall shield 600V, PVC insulation Soft-Fiber Polyester
2T43A	E-212A	305	152.4 mm siderail solid bottom tray	0.00	8387.08		
2T43B	E-212A	305	152.4 mm siderail solid bottom tray	0.00	8387.08		
2T49A	E-21,E-21E	610	152.4 mm siderail solid bottom tray	0.00	16774.16		
2T49B	E-21,E-21E	610	152.4 mm siderail ladder tray	0.00	16774.16		

REQUEST FOR INFORMATION NOT ADDRESSED IN THIS CCO REMAIN IN FORCE

MARK	DATE	REVISIONS DESCRIPTIONS	BY	CH'D	CCO#
1	05/02/12	ELECTRICAL WARNING SYSTEMS	RR	RG	61
0	02/25/08	CABLE TRAY CHANGES	RR TW	RG	42S1

CONTRACT CHANGE ORDER NO. 61
SHEET 83 OF 104

FOR REVISION ONLY

DIST	COUNTY	ROUTE	KILOMETER POST TOTAL PROJECT	SHEET No	TOTAL SHEETS
04	SF	80	13.2/13.9	376 S1R1	1204

REGISTERED ELECTRICAL ENGINEER — 2/22/08 DATE

PLANS APPROVAL DATE

REGISTERED PROFESSIONAL ENGINEER — S. A. ESTOQUE, JR. — No. E-10161 — Exp. 12/31/2008 ELECTRICAL — STATE OF CALIFORNIA

PB AMERICAS, Inc.
A Parsons Brinckerhoff Company
303 Second St., Suite 700N
San Francisco, CA 94107-1317

The State of California or its officers or agents shall not be responsible for the accuracy or completeness of electronic copies of this plan sheet.

Caltrans now has a web site! To get to the web site, go to http://www.dot.ca.gov

REGISTERED PROFESSIONAL ENGINEER — DAVID H. OTO — No. 19691 — Exp. 06/30/2013 ELECTRICAL — STATE OF CALIFORNIA

CONDUIT DATA

Conduit No	Reference	Size	Type	Total Fill (mm^2)	Allowable Fill (mm^2)	Included Cable No.	Conductor Type

For continuation, see next sheet.

CONDUIT AND TRAY SCHEDULE

E-421A

DESIGN OVERSIGHT: BEHZAD GOLEMOHAMMADI
CALCULATED/DESIGNED BY
CHECKED BY
DRAWN BY
DATE REVISED
REVISED BY
DATE REVISED

STATE OF CALIFORNIA - DEPARTMENT OF TRANSPORTATION
Caltrans

LAST REVISION 00-00-00
DATE PLOTTED => 04-MAY-2012
TIME PLOTTED => 13:51

FOR REDUCED PLANS ORIGINAL SCALE IS IN MILLIMETERS 0 20 40 60 80

DGN FILE =>04-0120f1_0376S1R1.dgn
USERNAME =>liorico

CU 04251

EA 0120F1

DIST	COUNTY	ROUTE	KILOMETER POST TOTAL PROJECT	SHEET No	TOTAL SHEETS
04	SF	80	13.2/13.9	386 R7	1204

12/19/02
REGISTERED ELECTRICAL ENGINEER DATE

12-6-04
PLANS APPROVAL DATE

REGISTERED PROFESSIONAL ENGINEER — JENS ERLINGSSON No. 8249 Exp. 9/30/06 ELECTRICAL — STATE OF CALIFORNIA

PB POWER, Inc.
A Parsons Brinckerhoff Company
303 Second St., Suite 700N
San Francisco, CA 94107-1317

The State of California or its officers or agents shall not be responsible for the accuracy or completeness of electronic copies of this plan sheet.

Caltrans now has a web site! To get to the web site, go to http://www.dot.ca.gov

CONDUIT DATA

Conduit No	Reference	Size	Type	Total Fill (mm²)	Allowable Fill (mm2)	Included Cable No.	Conductor Type
3702	E-264B	78	RGS conduit	513.46	1935.24	Pull Rope	Soft-Fiber Polyester
						UP 210-14 & 18	1-4C#8 + gnd, 600V, EPR Insulation
						UP210-1B-3	1-2C#8 + gnd, 600V, EPR Insulation
3717	E-285	78 (6)	RGS conduit	991.65 (6)	1935.24 (6)	Pull Rope	Soft-Fiber Polyester
						UP210-1B-5	1-2C#12 + gnd, 600 V, EPR Insulation
						UP210-1A-5	1-2C#12 + gnd, 600 V, EPR Insulation
						UP210-1B-1A	1-2/C + gnd #8, 600 V, EPR Insulation
						UP210-1B-1B	1-2/C + gnd #8, 600 V, EPR Insulation
						UP210-1B-2/7	1-4/C + gnd #8, 600 V, EPR Insulation
						UP210-1B-4A	1-2/C + gnd #12, 600 V, EPR Insulation
3718	E-285	53	RGS conduit	858	879.42	Pull Rope	Soft-Fiber Polyester
						UP210-1B-3 & 4	1-4C#8 + gnd, 600 V, EPR Insulation
						UP210-1B-1 & 6	1-4C#8 + gnd, 600 V, EPR Insulation
						UP210-1B-9&10	1-4C#8 + gnd, 600 V, EPR Insulation
3719	E-285	53	RGS conduit	858	879.42	Pull Rope	Soft-Fiber Polyester
						UP210-1B-11&12	1-4C#8 + gnd, 600 V, EPR Insulation
						UP210-1B-13&14	1-4C#8 + gnd, 600 V, EPR Insulation
						UP210-1B-15&16	1-4C#8 + gnd, 600 V, EPR Insulation
3720	E-285, E-285A	53	RGS conduit	527.18	879.42	Pull Rope	Soft-Fiber Polyester
						2123-3	1-3C+gnd, #2, 600V, EPR Insulation
3721	E-285, E-285A	53	RGS conduit	704.81	879.42	Pull Rope	Soft-Fiber Polyester
						UP210-1B-5	2 + 1 gnd, #12, 600V, RHH/RHW Insulation
						UP210-1B-3 & 4	4 + 1 gnd, #8, 600V, RHH/RHW Insulation
						UP210-1B-1 & 6	4 + 1 gnd, #8, 600V, RHH/RHW Insulation
						UP210-1B-9&10	1-4C#8 + gnd, 600 V, EPR Insulation
3722	E-285, E-285A	53	RGS conduit	858	879.42	Pull Rope	Soft-Fiber Polyester
						UP210-1B-11&12	1-4C#8 + gnd, 600 V, EPR Insulation
						UP210-1B-13&14	1-4C#8 + gnd, 600 V, EPR Insulation
						UP210-1B-15&16	1-4C#8 + gnd, 600 V, EPR Insulation
3723	E-285, E-285A	53	RGS conduit	0.00	879.42	Pull Rope	Soft-Fiber Polyester
3724	E-285A	41 (6)	RGS Conduit	234.52	534.55	Pull Rope	Soft-Fiber Polyester
						2123-3A (6)	4-1/C #6, 600V, RHH/RHW Insulation
3725	E-285A	41	RGS Conduit	271.48	534.55	Pull Rope	Soft-Fiber Polyester
						2123-3B	4 + 1 gnd, #4, 600V, RHH/RHW Insulation
3800	E-284, E-264B	53	RGS-PVC coated conduit	491.22	879.42	UP210-16 & 20	1-4C#8 + gnd, 600 V, EPR Insulation
	E-264C, E-278					Pull rope	Soft-Fiber Polyester
						UP210-28	1-2C#12 + gnd, 600 V, EPR Insulation
						UP210-30	1-2C#12 + gnd, 600 V, EPR Insulation
3801	E-280, E-284A	53	RGS-PVC coated conduit	286	879.42	UP210-1B-11&12	1-4C#8 + gnd, 600 V, EPR Insulation
						Pull rope	Soft-Fiber Polyester
3802	E-264B	78 (6)	RGS conduit	1203.77	1935.24	Pull rope	Soft-Fiber Polyester
						UP210-16/20	1-4/C + gnd #8, 600 V, EPR Insulation
						UP210-1B-9A (6)	1-2/C + gnd #8, 600 V, EPR Insulation
						UP210-16A	1-2/C + gnd #8, 600 V, EPR Insulation
						UP210-16B	1-2/C + gnd #8, 600 V, EPR Insulation
						UP210-1B-9B	1-2/C + gnd #8, 600 V, EPR Insulation
						UP210-20A	1-2/C + gnd #12, 600 V, EPR Insulation

REQUEST FOR INFORMATION NOT ADDRESSED IN THIS CCO REMAIN IN FORCE

MARK	DATE	DESCRIPTIONS REVISIONS	BY	CH'D	CCO#
7	05/02/12	ELECTRICAL WARNING SYSTEMS	RR	RG	61
6	01/07/11	ELECTRICAL WARNING SYSTEMS	TW	RG	61
5	03/26/10	DEHUMIDIFIER SCADA INTERFACE	RR	RG SYC	130
4	09/18/09	TOWER UTILITY PANELS	SYC TW	RG FW	70
3	08/03/09	ELECTRICAL WARNING SYSTEMS	RY RR	RG FW	61
2	03/30/09	SERVICE PLATFORM ELECTRICAL CHANGES	RR RY	RG MP	55
1	03/04/08	BARRIER MODIFICATIONS	JS BM	RG SE	44

CONTRACT CHANGE ORDER NO. 61
SHEET 84 OF 104

REGISTERED PROFESSIONAL ENGINEER — DAVID H. OTO No. 10699 Exp. 06/30/2013 ELECTRICAL — STATE OF CALIFORNIA
FOR REVISION ONLY (7)

REGISTERED PROFESSIONAL ENGINEER — SYN YEE CHIN No. 18186 Exp. 09/30/2011 ELECTRICAL — STATE OF CALIFORNIA
FOR REVISION ONLY (5)(6)

REGISTERED PROFESSIONAL ENGINEER — FADI WALIEDDINE No. 11465 Exp. 12/31/2009 ELECTRICAL — STATE OF CALIFORNIA
FOR REVISION ONLY (2)(3)(4)

REGISTERED PROFESSIONAL ENGINEER — S. A. ESTOQUE, JR. No. E-10151 Exp. 12/31/2009 ELECTRICAL — STATE OF CALIFORNIA
FOR REVISION ONLY (1)

CONDUIT DATA

Conduit No	Reference	Size	Type	Total Fill (mm2)	Allowable Fill (mm2)	Included Cable No.	Conductor Type
4007A	E-71A	78	Liquidtight Flex. Metal Cond.		1935.24	Pull rope	Soft-Fiber Polyester
4009	E-71A	53	Liquidtight Flex. Metal Cond.	60.80	879.42	Pull rope	Soft-Fiber Polyester
						UP104-5	2 + 1 gnd #10,#10, 600 V, RHH/RHW Insulation
4010	E-71A	53	Liquidtight Flex. Metal Cond.	98.42	879.42	UP104-12	2 + 1 gnd #12,#12, 600 V, RHH/RHW Insulation
						Pull rope	Soft-Fiber Polyester
						UP104-10	2 + 1 gnd #12,#12, 600 V, RHH/RHW Insulation
4029	E-72A	78	Liquidtight Flex. Metal Cond.	1142.71 (3)(6)	1935.24 (3)	UP105-15	1-2/C + gnd #8,600 V, EPR Insulation
						Pull rope	Soft-Fiber Polyester
						1201-4	1-9/C #16,600 V, EPR Insulation
						1201-3	1-3/C #14,600 V, EPR Insulation
						1201-1	1-2/C + gnd #10,600 V, EPR Insulation
						1201-6	1-2/C + gnd #10,600 V, EPR Insulation
						1201-2	1-2/C + gnd #10,600 V, EPR Insulation
						1201-4A (6)	1-2/C #14,600 V, EPR Insulation
						1201-4B	1-2/C #14,600 V, EPR Insulation
						1201-4C	1-2/C #14,600 V, EPR Insulation
4033	E-72A	53	Liquidtight Flex. Metal Cond.	481.89	879.42	Pull rope	Soft-Fiber Polyester
						UP105-5	2 + 1 gnd #12,#12, 600 V, RHH/RHW Insulation
						UP105-13	1-2/C + gnd #12,600 V, EPR Insulation
						UP105-11	1-2/C + gnd #12,600 V, EPR Insulation
						UP105-15	1-2/C + gnd #8,600 V, EPR Insulation
4034	E-72A	53	Liquidtight Flex. Metal Cond.	0.00	879.42	Pull rope	Soft-Fiber Polyester
4036	E-73A	53	Liquidtight Flex. Metal Cond.	460.00	649.22	UP106-1	1-2/C + gnd #8,600 V, EPR Insulation
					(7)	UP106-15	1-2/C + gnd #8,600 V, EPR Insulation
						Pull rope	Soft-Fiber Polyester

For continuation, see next sheet.

CONDUIT AND TRAY SCHEDULE

E-431

STATE OF CALIFORNIA - DEPARTMENT OF TRANSPORTATION
DESIGN OVERSIGHT: BEHZAD GOLEMOHAMMADI
CALCULATED/DESIGNED BY: PBP
CHECKED BY: AB
DATE REVISED: 8/02
REVISED BY: DATE REVISED

LAST REVISION 00-00-00
DATE PLOTTED => 04-MAY-2012
TIME PLOTTED => 13:51

FOR REDUCED PLANS ORIGINAL SCALE IS IN MILLIMETERS 0 20 40 60 80
DGN FILE =>04-0120f1_0386R07.dgn
USERNAME =>florico
CU 04251
EA 0120F1

CONDUIT DATA

Conduit No	Reference	Size	Type	Total Fill (mm²)	Allowable Fill (mm²)	Included Cable No.	Conductor Type
3WW23	E-264/264B, E-281 E-293, E-366	152	152mmX152mm Wireway NEMA 4X	4590.41	9241.60	2121	1-3/C + gnd #1/0, 600V, EPR Insulation
						2123-3	1-3/C + gnd #2, 600V, EPR Insulation
						A-3057-1	1-3/C + gnd #2, 600V, EPR Insulation
						2125-A	1-3/C + gnd #1/0, 600V, EPR Insulation
						UP210-2 & 4	1-4/C + gnd #8, 600V, EPR Insulation
						UP210-14&18	1-4/C + gnd #8, 600V, EPR Insulation
						UP210-16&20	1-4/C + gnd #8, 600V, EPR Insulation
						UP210-21	1-2/C + gnd #8, 600V, EPR Insulation
						UP210-23	1-2/C + gnd #8, 600V, EPR Insulation
						UP210-26	1-2/C + gnd #8, 600V, EPR Insulation
						UP210-28	1-2/C + gnd #12, 600V, EPR Insulation
						UP210-30	1-2/C + gnd #12, 600V, EPR Insulation
						UP210-10	1-2/C + gnd #10, 600V, EPR Insulation
						UP210-11	1-2/C + gnd #12, 600V, EPR Insulation
						GFR	250 kcMil, bare copper wire, stranded
3WW24	E-264/264B, E-281 E-293, E-366	152	152mmX152mm Wireway NEMA 4X	3364.53	9241.60	2123-3	1-3/C + gnd #2, 600V, EPR Insulation
						2125-A	1-3/C + gnd #1/0, 600V, EPR Insulation
						A-3057-1	1-3/C + gnd #2, 600V, EPR Insulation
						UP210-2 & 4	1-4/C + gnd #8, 600V, EPR Insulation
						UP210-14&18	1-4/C + gnd #8, 600V, EPR Insulation
						UP210-21	1-2/C + gnd #8, 600V, EPR Insulation
						UP210-23	1-2/C + gnd #8, 600V, EPR Insulation
						UP210-26	1-2/C + gnd #8, 600V, EPR Insulation
						UP210-10	1-2/C + gnd #10, 600V, EPR Insulation
						UP210-11	1-2/C + gnd #12, 600V, EPR Insulation
						GFR	250 kcMil, bare copper wire, stranded
3WW25	E-264/264B, E-281 E-293, E-366	152	152mmX152mm Wireway NEMA 4X	1622.90	9241.60	UP210-16&20	1-4/C + gnd #8, 600V, EPR Insulation
						UP210-28	1-2/C + gnd #12, 600V, EPR Insulation
						UP210-30	1-2/C + gnd #12, 600V, EPR Insulation
						UP210-10	1-2/C + gnd #10, 600V, EPR Insulation
						UP210-11	1-2/C + gnd #12, 600V, EPR Insulation
						2121	1-3/C + gnd #1/0, 600V, EPR Insulation
						GFR	250 kcMil, bare copper wire, stranded
3WW40	E-264/264B, E-281 E-293, E-366	102	102mmX102mm Wireway NEMA 4X	1267.47 (1)	5304.5	2119-2	4 pair #22, shielded pairs,300 V,PE Insulation
						2120-1	1-2PR #18 Twisted Shielded w/overall shield
						2121-1	1-2PR #18 Twisted Shielded w/overall shield
						MVDSE02A	MVDS DLC
						MVDWE03A	MVDS DLC
						2204-8	3-Pr #16 with overall shield 600 V,PVC Insulation
						2910-7	4 pair #24, overall shielded, 300V, PE Insulation
						2910-8	4 pair #22, shielded pairs, 300V, PE Insulation
						2910-12	4 pair #22, shielded pairs, 300V, PE Insulation
						CCTVE01A	HCC
						~~CCTVE01B~~	~~HCC~~
					(1)	2204-12	3-Pr #16, twisted shielded w/overall shield 600 V,PVC Insulation
3WW41	E-264/264B, E-281 E-293, E-366	102	102mmX102mm Wireway NEMA 4X	72.50	5304.50	CCTVE01A	HCC

THIS PLAN ACCURATE FOR ELECTRICAL WORK ONLY.

REGISTERED PROFESSIONAL ENGINEER
DAVID H. OTO
No. 10699
Exp. 06/30/2013
ELECTRICAL
STATE OF CALIFORNIA

(1)
FOR REVISION ONLY

Caltrans Metric

DIST	COUNTY	ROUTE	KILOMETER POST TOTAL PROJECT	SHEET No	TOTAL SHEETS
04	SF	80	13.2/13.9	386 S2R1	1204

REGISTERED ELECTRICAL ENGINEER — 12/21/11 DATE

PLANS APPROVAL DATE

REGISTERED PROFESSIONAL ENGINEER
DAVID H. OTO
No. 10699
Exp. 06/30/2013
ELECTRICAL
STATE OF CALIFORNIA

PB AMERICAS, Inc.
A Parsons Brinckerhoff Company
303 Second St., Suite 700N
San Francisco, CA 94107-1317

The State of California or its officers or agents shall not be responsible for the accuracy or completeness of electronic copies of this plan sheet.

Caltrans now has a web site! To get to the web site, go to http://www.dot.ca.gov

MARK	DATE	DESCRIPTIONS	BY	CH'D	CCO#
		REVISIONS			
(1)	05/02/12	ELECTRICAL WARNING SYSTEMS	RR	RG	61
(0)	12/21/11	ELECTRICAL CHANGES FOR ELEVATION 53 IMPROVEMENTS	TW	RG	190

REQUEST FOR INFORMATION NOT ADDRESSED IN THIS CCO REMAIN IN FORCE

CONTRACT CHANGE ORDER NO. 61
SHEET 85 OF 104

CONDUIT DATA

Conduit No	Reference	Size	Type	Total Fill (mm²)	Allowable Fill (mm²)	Included Cable No.	Conductor Type
3WW42	E-264/264B, E-281 E-293, E-366	102	102mmX102mm Wireway NEMA 4X	491.21	5304.5	2120-1	1-2PR #18 Twisted Shielded w/overall shield
						2910-7	4 pair #24, overall shielded, 300V, PE Insulation
						2910-8	4 pair #22, shielded pairs, 300V, PE Insulation
						2910-12	4 pair #22, shielded pairs, 300V, PE Insulation
						CCTVE01B	HCC
3WW43	E-264/264B, E-281 E-293, E-366	102	102mmX102mm Wireway NEMA 4X	402.88 (1)	5304.5	2119-2	4 pair #22,shielded pairs,300 V,PE Insulation
						2121-1	1-2PR #18 Twisted Shielded w/overall shield
						2204-8	3-Pr #16, twisted shielded w/overall shield 600 V,PVC Insulation (1)
						2204-12	3-Pr #16, twisted shielded w/overall shield 600 V,PVC Insulation

For continuation, see next sheet.

CONDUIT AND TRAY SCHEDULE

E-431B

DATE	REVISED BY
XX/10	DATE REVISED
XX	XX/10

CALCULATED/DESIGNED BY
CHECKED BY

DESIGN OVERSIGHT
BEHZAD GOLEMOHAMMADI

STATE OF CALIFORNIA - DEPARTMENT OF TRANSPORTATION
Caltrans

LAST REVISION 12-21-11
DATE PLOTTED => 04-MAY-2012
TIME PLOTTED => 13:51

FOR REDUCED PLANS ORIGINAL SCALE IS IN MILLIMETERS 0 20 40 60 80

DGN FILE =>04-0120F1_0386S2R1.dgn
USERNAME =>llorico

CU 04251 | EA 0120F1

DIST	COUNTY	ROUTE	KILOMETER POST TOTAL PROJECT	SHEET No	TOTAL SHEETS
04	SF	80	13.2/13.9	387 R4	1204

REGISTERED ELECTRICAL ENGINEER — Jens Erlingsson — 12/19/02

12-6-04
PLANS APPROVAL DATE

PB POWER, Inc.
A Parsons Brinckerhoff Company
303 Second St., Suite 700N
San Francisco, CA 94107-1317

REGISTERED PROFESSIONAL ENGINEER — JENS ERLINGSSON — No. 8249 — Exp. 9/30/06 — ELECTRICAL — STATE OF CALIFORNIA

The State of California or its officers or agents shall not be responsible for the accuracy or completeness of electronic copies of this plan sheet.

Caltrans now has a web site! To get to the web site, go to http://www.dot.ca.gov

REQUEST FOR INFORMATION NOT ADDRESSED IN THIS CCO REMAIN IN FORCE					
4	01/07/11	ELECTRICAL WARNING SYSTEMS	TW	RG	61
3	08/03/09	ELECTRICAL WARNING SYSTEMS	RY RR	RG FW	61
2	03/30/09	SERVICE PLATFORM ELECTRICAL CHANGES	RR RY	RG MP	55
1	03/04/08	BARRIER MODIFICATIONS	JS BM	RG SE	44
MARK	DATE	DESCRIPTIONS REVISIONS	BY	CH'D	CCO#

CONTRACT CHANGE ORDER NO. 61
SHEET 86 OF 104

REGISTERED PROFESSIONAL ENGINEER — FADI WALIEDDINE — No. 11465 — Exp. 12/31/2009 — ELECTRICAL — STATE OF CALIFORNIA

FOR REVISION ONLY 2 3

REGISTERED PROFESSIONAL ENGINEER — SYN YEE CHIN — No. 18186 — Exp. 09/30/2011 — ELECTRICAL — STATE OF CALIFORNIA

FOR REVISION ONLY 4

REGISTERED PROFESSIONAL ENGINEER — S. A. ESTOQUE — No. E-10151 — Exp. 12/31/2009 — ELECTRICAL — STATE OF CALIFORNIA

FOR REVISION ONLY 1

CONDUIT DATA

Conduit No	Reference	Size	Type	Total Fill (mm^2)	Allowable Fill (mm^2)	Included Cable No.	Conductor Type
4037	E-73A	53	Liquidtight Flex. Metal Cond.	227.46	879.42	Pull rope	Soft-Fiber Polyester
						UP106-10	1-2/c + gnd #8,600 V, EPR Insulation
4040	E-73A	78	Liquidtight Flex. Metal Cond.	600.41 4 3	1935.24	1202-3	1-7/C #16,600 V, EPR Insulation
						Pull rope	Soft-Fiber Polyester 3
						1202-2	1-3/C #14,600 V, EPR Insulation
						UP106-15	1-2/c + gnd #8,600 V, EPR Insulation
						1202-1	1-2/c + gnd #10,600 V, EPR Insulation 4
						1202-3A	1-2/C #14,600 V, EPR Insulation 4
4076	E-74A	53	Liquidtight Flex. Metal Cond.	49.21	879.42	UP107-5	2 + 1 gnd #12,#12, 600 V, RHH/RHW Insulation
						Pull rope	Soft-Fiber Polyester
4077	E-74A	53	Liquidtight Flex. Metal Cond.	205.22	879.42	UP107-10	1-2/c + gnd #12,600 V, EPR Insulation
						UP207-10	1-3/C #12,600 V, EPR Insulation
						Pull rope	Soft-Fiber Polyester
4101	E-75A	53	Liquidtight Flex. Metal Cond.	254.43	879.42	Pull rope	Soft-Fiber Polyester
						UP108-5	2 + 1 gnd #12,#12, 600 V, RHH/RHW Insulation
						UP108-17	1-2/c + gnd #12,600 V, EPR Insulation
						UP108-11	1-2/c + gnd #12,600 V, EPR Insulation
4102	E-75A	53	Liquidtight Flex. Metal Cond.	0.00	879.42	Pull rope	Soft-Fiber Polyester
4104	E-75A	78	Liquidtight Flex. Metal Cond.	1042.71 4 3	2564.19	2201-4	1-9/C #16,600 V, EPR Insulation 4
						2201-2	1-2/c + gnd #10,600 V, EPR Insulation
						2201-3	1-3/C #14,600 V, EPR Insulation
						Pull rope	Soft-Fiber Polyester 4
						UP208-15	1-2/c + gnd #8,600 V, EPR Insulation
						2201-1	1-2/c + gnd #10,600 V, EPR Insulation
						2201-6	1-2/c + gnd #10,600 V, EPR Insulation 3
						2201-4A	1-2/C #14,600 V, EPR Insulation 4
						2201-4B	1-2/C #14,600 V, EPR Insulation
						2201-4C	1-2/C #14,600 V, EPR Insulation
4108	E-117	78	RGS-PVC coated conduit	0.00	1935.24	Pull rope	Soft-Fiber Polyester
4128	E-100	53	RGS conduit	0.00	879.42	Pull rope	Soft-Fiber Polyester
4148	E-100	78 4	RGS conduit	893.26 4	1499.81	Pull rope	Soft-Fiber Polyester
						A-3012-1	1-3/c + gnd #2,600 V, EPR Insulation
						S-3023-1	1-3/c + gnd #4,600 V, EPR Insulation 4
4149	E-96	78	RGS conduit	648.58	1935.24	A-1011-2	1-3/c + gnd #6,600 V, EPR Insulation
						A-1011-2	1-3/c + gnd #6,600 V, EPR Insulation
						Pull rope	Soft-Fiber Polyester
4150	E-96	78	RGS conduit	648.58	1935.24	A-1011-2	1-3/c + gnd #6,600 V, EPR Insulation
						A-1011-2	1-3/c + gnd #6,600 V, EPR Insulation
						Pull rope	Soft-Fiber Polyester
4151	E-96	78	RGS conduit	648.58	1935.24	A-1011-2	1-3/c + gnd #6,600 V, EPR Insulation
						A-1011-2	1-3/c + gnd #6,600 V, EPR Insulation
						Pull rope	Soft-Fiber Polyester
4152	E-96	78	RGS conduit	648.58	1935.24	A-1011-2	1-3/c + gnd #6,600 V, EPR Insulation
						A-1011-2	1-3/c + gnd #6,600 V, EPR Insulation
						Pull rope	Soft-Fiber Polyester
4153	E-96	78	RGS conduit	648.58	1935.24	A-1011-2	1-3/c + gnd #6,600 V, EPR Insulation
						A-1011-2	1-3/c + gnd #6,600 V, EPR Insulation
						Pull rope	Soft-Fiber Polyester
4154	E-96	78	RGS conduit	648.58	1935.24	A-1011-2	1-3/c + gnd #6,600V, EPR Insulation
						A-1011-2	1-3/c + gnd #6,600 V, EPR Insulation
						Pull rope	Soft-Fiber Polyester
4155	E-97	78	RGS conduit	648.58	1935.24	A-1011-2	1-3/c + gnd #6,600 V, EPR Insulation
						A-1011-2	1-3/c + gnd #6,600 V, EPR Insulation
						Pull rope	Soft-Fiber Polyester

CONDUIT DATA

Conduit No	Reference	Size	Type	Total Fill (mm^2)	Allowable Fill (mm^2)	Included Cable No.	Conductor Type
4156	E-97	78	RGS conduit	648.58	1935.24	A-1011-2	1-3/c + gnd #6,600 V, EPR Insulation
						A-1011-2	1-3/c + gnd #6,600 V, EPR Insulation
						Pull rope	Soft-Fiber Polyester
4157	E-97	78	RGS conduit	648.58	1935.24	A-1011-2	1-3/c + gnd #6,600 V, EPR Insulation
						A-1011-2	1-3/c + gnd #6,600 V, EPR Insulation
						Pull rope	Soft-Fiber Polyester
4158	E-97	78	RGS conduit	648.58	1935.24	A-1011-2	1-3/c + gnd #6,600 V, EPR Insulation
						A-1011-2	1-3/c + gnd #6,600 V, EPR Insulation
						Pull rope	Soft-Fiber Polyester
4159	E-97	78	RGS conduit	648.58	1935.24	A-1011-2	1-3/c + gnd #6,600 V, EPR Insulation
						A-1011-2	1-3/c + gnd #6,600 V, EPR Insulation
						Pull rope	Soft-Fiber Polyester
4160	E-97	78	RGS conduit	851.47	1935.24	A-1012-1	1-3/c + gnd #2 ,600V, EPR Insulation
						A-1012-2	1-3/c + gnd #6,600 V, EPR Insulation
						Pull rope	Soft-Fiber Polyester
4161	E-97	78	RGS conduit	648.58	1935.24	A-1012-2	1-3/c + gnd #6,600 V, EPR Insulation
						A-1012-2	1-3/c + gnd #6,600 V, EPR Insulation
						Pull rope	Soft-Fiber Polyester
4162	E-97	78	RGS conduit	648.58	1935.24	A-1012-2	1-3/c + gnd #6,600 V, EPR Insulation
						A-1012-2	1-3/c + gnd #6,600 V, EPR Insulation
						Pull rope	Soft-Fiber Polyester
4163	E-98	78	RGS conduit	648.58	1935.24	A-1012-2	1-3/c + gnd #6,600 V, EPR Insulation
						A-1012-2	1-3/c + gnd #6,600 V, EPR Insulation
						Pull rope	Soft-Fiber Polyester
4164	E-98	78	RGS conduit	648.58	1935.24	A-1012-2	1-3/c + gnd #6,600 V, EPR Insulation
						A-1012-2	1-3/c + gnd #6,600 V, EPR Insulation
						Pull rope	Soft-Fiber Polyester
4165	E-98	78	RGS conduit	648.58	1935.24	A-1012-2	1-3/c + gnd #6,600 V, EPR Insulation
						A-1012-2	1-3/c + gnd #6,600 V, EPR Insulation
						Pull rope	Soft-Fiber Polyester
4166	E-98	78	RGS conduit	648.58	1935.24	A-1012-2	1-3/c + gnd #6,600 V, EPR Insulation
						A-1012-2	1-3/c + gnd #6,600 V, EPR Insulation
						Pull rope	Soft-Fiber Polyester
4167	E-98	78	RGS conduit	648.58	1935.24	A-1012-2	1-3/c + gnd #6,600 V, EPR Insulation
						A-1012-2	1-3/c + gnd #6,600 V, EPR Insulation
						Pull rope	Soft-Fiber Polyester
4168	E-98	78	RGS conduit	648.58	1935.24	A-1012-2	1-3/c + gnd #6,600 V, EPR Insulation
						A-1012-2	1-3/c + gnd #6,600 V, EPR Insulation
						Pull rope	Soft-Fiber Polyester
4169	E-98	78	RGS conduit	648.58	1935.24	A-1012-2	1-3/c + gnd #6,600 V, EPR Insulation
						A-1012-2	1-3/c + gnd #6,600 V, EPR Insulation
						Pull rope	Soft-Fiber Polyester
4170	E-98	78	RGS conduit	648.58	1935.24	A-1012-2	1-3/c + gnd #6,600 V, EPR Insulation
						A-1012-2	1-3/c + gnd #6,600 V, EPR Insulation
						Pull rope	Soft-Fiber Polyester
4171	E-98	78	RGS conduit	648.58	1935.24	A-1012-2	1-3/c + gnd #6,600 V, EPR Insulation
						A-1012-2	1-3/c + gnd #6,600 V, EPR Insulation
						Pull rope	Soft-Fiber Polyester

For continuation, see next sheet.

CONDUIT AND TRAY SCHEDULE

E-432

DESIGNED BY	CALCULATED/ DESIGNED BY	CHECKED BY	DATE	REVISED BY	DATE REVISED
PBP		AB	8/02		

DESIGN OVERSIGHT — BEHZAD GOLEMOHAMMADI

STATE OF CALIFORNIA - DEPARTMENT OF TRANSPORTATION — Caltrans

FOR REDUCED PLANS ORIGINAL SCALE IS IN MILLIMETERS 0 20 40 60 80

DGN FILE =>04-0120f1_0387R04.dgn
USERNAME =>llorico

CU 04251 | EA 0120F1

LAST REVISION 00-00-00 — DATE PLOTTED => 14-JAN-2011 — TIME PLOTTED => 09:40

DIST	COUNTY	ROUTE	KILOMETER POST TOTAL PROJECT	SHEET No	TOTAL SHEETS
04	SF	80	13.2/13.9	388 R5	1204

Metric

12/19/02
REGISTERED ELECTRICAL ENGINEER DATE

12-6-04
PLANS APPROVAL DATE

REGISTERED PROFESSIONAL ENGINEER — JENS ERLINGSSON — No. 8249 — Exp. 9/30/06 ELECTRICAL — STATE OF CALIFORNIA

PB POWER, Inc.
A Parsons Brinckerhoff Company
303 Second St., Suite 700N
San Francisco, CA 94107-1317

The State of California or its officers or agents shall not be responsible for the accuracy or completeness of electronic copies of this plan sheet.

Caltrans now has a web site! To get to the web site, go to http://www.dot.ca.gov

REQUEST FOR INFORMATION NOT ADDRESSED IN THIS CCO REMAIN IN FORCE					
5	01/07/11	ELECTRICAL WARNING SYSTEMS	TW	RG	61
4	02/01/10	DEHUMIDIFIER SCADA INTERFACE	RR	RG FW	130
3	08/03/09	ELECTRICAL WARNING SYSTEMS	RY RR	RG FW	61
2	03/30/09	SERVICE PLATFORM ELECTRICAL CHANGES	RR RY	RG MP	55
1	03/04/08	BARRIER MODIFICATIONS	JS BM	RG	44
MARK	DATE	DESCRIPTIONS REVISIONS	BY	CH'D	CCO#

CONTRACT CHANGE ORDER NO. 61
SHEET 87 OF 104

REGISTERED PROFESSIONAL ENGINEER — SYN YEE CHIN — No. 18186 — Exp. 09/30/2011 ELECTRICAL — STATE OF CALIFORNIA

Syn Yee Chin
FOR REVISION ONLY
5

REGISTERED PROFESSIONAL ENGINEER — FADI WALIEDDINE — No. 11465 — Exp. 12/31/2011 ELECTRICAL — STATE OF CALIFORNIA

FOR REVISION ONLY
2 3 4

REGISTERED PROFESSIONAL ENGINEER — S. A. ESTOQUE, JR. — No. E-10151 — Exp. 12/31/2009 ELECTRICAL — STATE OF CALIFORNIA

FOR REVISION ONLY
1

CONDUIT DATA

Conduit No	Reference	Size	Type	Total Fill (mm²)	Allowable Fill (mm²)	Included Cable No.	Conductor Type
4172	E-99	78	RGS conduit	851.47	1935.24	A-1013-2	1-3/c + gnd #6,600 V, EPR Insulation
						A-1013-1	1-3/c + gnd #2,600V, EPR Insulation
						Pull rope	Soft-Fiber Polyester
4173	E-99	78	RGS conduit	648.58	1935.24	A-1013-2	1-3/c + gnd #6,600 V, EPR Insulation
						A-1013-2	1-3/c + gnd #6,600 V, EPR Insulation
						Pull rope	Soft-Fiber Polyester
4174	E-99	78	RGS conduit	648.58	1935.24	A-1013-2	1-3/c + gnd #6,600 V, EPR Insulation
						A-1013-2	1-3/c + gnd #6,600 V, EPR Insulation
						Pull rope	Soft-Fiber Polyester
4175	E-99	78	RGS conduit	648.58	1935.24	A-1013-2	1-3/c + gnd #6,600 V, EPR Insulation
						A-1013-2	1-3/c + gnd #6,600 V, EPR Insulation
						Pull rope	Soft-Fiber Polyester
4176	E-99	78	RGS conduit	648.58	1935.24	A-1013-2	1-3/c + gnd #6,600 V, EPR Insulation
						A-1013-2	1-3/c + gnd #6,600 V, EPR Insulation
						Pull rope	Soft-Fiber Polyester
4177	E-99	78	RGS conduit	648.58	1935.24	A-1013-2	1-3/c + gnd #6,600 V, EPR Insulation
						A-1013-2	1-3/c + gnd #6,600 V, EPR Insulation
						Pull rope	Soft-Fiber Polyester
4178	E-99	78	RGS conduit	648.58	1935.24	A-1013-2	1-3/c + gnd #6,600 V, EPR Insulation
						A-1013-2	1-3/c + gnd #6,600 V, EPR Insulation
						Pull rope	Soft-Fiber Polyester
4179	E-99	78	RGS conduit	648.58	1935.24	A-1013-2	1-3/c + gnd #6,600 V, EPR Insulation
						A-1013-2	1-3/c + gnd #6,600 V, EPR Insulation
						Pull rope	Soft-Fiber Polyester
4180	E-99	78	RGS conduit	648.58	1935.24	A-1013-2	1-3/c + gnd #6,600 V, EPR Insulation
						A-1013-2	1-3/c + gnd #6,600 V, EPR Insulation
						Pull rope	Soft-Fiber Polyester
4181	E-99	78	RGS conduit	648.58	1935.24	A-1013-2	1-3/c + gnd #6,600 V, EPR Insulation
						A-1013-2	1-3/c + gnd #6,600 V, EPR Insulation
						Pull rope	Soft-Fiber Polyester
4182	E-99	78	RGS conduit	648.58	1935.24	A-1013-2	1-3/c + gnd #6,600 V, EPR Insulation
						A-1013-2	1-3/c + gnd #6,600 V, EPR Insulation
						Pull rope	Soft-Fiber Polyester
4183	E-99	78	RGS conduit	648.58	1935.24	A-1013-2	1-3/c + gnd #6,600 V, EPR Insulation
						A-1013-2	1-3/c + gnd #6,600 V, EPR Insulation
						Pull rope	Soft-Fiber Polyester
4184	E-100	78	RGS conduit	648.58	1935.24	A-1013-2	1-3/c + gnd #6,600 V, EPR Insulation
						A-1013-2	1-3/c + gnd #6,600 V, EPR Insulation
						Pull rope	Soft-Fiber Polyester
4185	E-100	78	RGS conduit	851.47	1935.24	A-1014-2	1-3/c + gnd #6,600 V, EPR Insulation
						A-1014-1	1-3/c + gnd #2,600V, EPR Insulation
						Pull rope	Soft-Fiber Polyester
4186	E-100	78	RGS conduit	648.58	1935.24	A-1014-2	1-3/c + gnd #6,600 V, EPR Insulation
						A-1014-2	1-3/c + gnd #6,600 V, EPR Insulation
						Pull rope	Soft-Fiber Polyester
4187	E-100	78	RGS conduit	648.58	1935.24	A-1014-2	1-3/c + gnd #6,600 V, EPR Insulation
						A-1014-2	1-3/c + gnd #6,600 V, EPR Insulation
						Pull rope	Soft-Fiber Polyester
4188	E-100	78	RGS conduit	648.58	1935.24	A-1014-2	1-3/c + gnd #6,600 V, EPR Insulation
						A-1014-2	1-3/c + gnd #6,600 V, EPR Insulation
						Pull rope	Soft-Fiber Polyester
4189	E-100	78	RGS conduit	648.58	1935.24	A-1014-2	1-3/c + gnd #6,600 V, EPR Insulation
						A-1014-2	1-3/c + gnd #6,600 V, EPR Insulation
						Pull rope	Soft-Fiber Polyester
4190	E-100	78	RGS conduit	648.58	1935.24	A-1014-2	1-3/c + gnd #6,600 V, EPR Insulation
						A-1014-2	1-3/c + gnd #6,600 V, EPR Insulation
						Pull rope	Soft-Fiber Polyester
4191	E-100	78	RGS conduit	648.58	1935.24	A-1014-2	1-3/c + gnd #6,600 V, EPR Insulation
						A-1014-2	1-3/c + gnd #6,600 V, EPR Insulation
						Pull rope	Soft-Fiber Polyester
4192	E-96	78	RGS conduit	648.58	1935.24	A-1011-2	1-3/c + gnd #6,600 V, EPR Insulation
						A-1011-2	1-3/c + gnd #6,600 V, EPR Insulation
						Pull rope	Soft-Fiber Polyester
4193	E-97	78	RGS conduit	648.58	1935.24	A-1012-2	1-3/c + gnd #6,600 V, EPR Insulation
						A-1012-2	1-3/c + gnd #6,600 V, EPR Insulation
						Pull rope	Soft-Fiber Polyester
4194	E-101	78	RGS conduit	648.58	1935.24	A-1014-2	1-3/c + gnd #6,600 V, EPR Insulation
						A-1014-2	1-3/c + gnd #6,600 V, EPR Insulation
						Pull rope	Soft-Fiber Polyester
4195	E-101	78	RGS conduit	648.58	1935.24	A-1014-2	1-3/c + gnd #6,600 V, EPR Insulation
						A-1014-2	1-3/c + gnd #6,600 V, EPR Insulation
						Pull rope	Soft-Fiber Polyester
4196	E-101	78	RGS conduit	648.58	1935.24	A-1014-2	1-3/c + gnd #6,600 V, EPR Insulation
						A-1014-2	1-3/c + gnd #6,600 V, EPR Insulation
						Pull rope	Soft-Fiber Polyester
4197	E-101	78	RGS conduit	648.58	1935.24	A-1014-2	1-3/c + gnd #6,600 V, EPR Insulation
						A-1014-2	1-3/c + gnd #6,600 V, EPR Insulation
						Pull rope	Soft-Fiber Polyester

CONDUIT DATA

Conduit No	Reference	Size	Type	Total Fill (mm²)	Allowable Fill (mm²)	Included Cable No.	Conductor Type
4198	E-101	78	RGS conduit	648.58	1935.24	A-1014-2	1-3/c + gnd #6,600 V, EPR Insulation
						A-1014-2	1-3/c + gnd #6,600 V, EPR Insulation
						Pull rope	Soft-Fiber Polyester
4199	E-101	78	RGS conduit	324.29	1935.24	A-1014-2	1-3/c + gnd #6,600 V, EPR Insulation
						Pull rope	Soft-Fiber Polyester
4201	E-114	78	RGS conduit	62.07	1935.24	Pull rope	Soft-Fiber Polyester
						1255-1	1-3/C #16,600 V, EPR Insulation
4202	E-114	78	RGS conduit	0.00	1935.24	Pull rope	Soft-Fiber Polyester
4203	E-114	53	RGS conduit	527.18	879.42	1095	1-3/c + gnd #2,600 V, EPR Insulation
4204	E-114	78	RGS conduit	0.00	1935.24	Pull rope	Soft-Fiber Polyester
4205	E-114	53	RGS conduit	0.00	1935.24	Pull rope	Soft-Fiber Polyester
4206	E-114	78	RGS conduit	150.44	1935.24	Pull rope	Soft-Fiber Polyester
						MVDSW02A	MVDS DLC
4208	E-114	78	RGS conduit	30.19	1935.24	1475-3A	12 Fiber, single mode fiberoptic cable
						Pull rope	Soft-Fiber Polyester
4208A	E-114	78	RGS-PVC coated conduit		1935.24	Pull rope	Soft-Fiber Polyester
4221	E-115	78	RGS conduit	714.18 (3)	1935.24	UP105-2	1-2/c + gnd #8,600 V, EPR Insulation
						Pull rope	Soft-Fiber Polyester
						S-3056-7	1-2/C #14,600 V, EPR Insulation
						S-3056-5	1-4/C #14,600 V, EPR Insulation
						1255-1	1-3/C #16,600 V, EPR Insulation
						1255-2	1-3/C #16,600 V, EPR Insulation
						1202-2 (3)	1-3/C #14,600 V, EPR Insulation
						1202-3	1-7/C #16,600 V, EPR Insulation
4222	E-115	78	RGS conduit	611.85 (5)	1935.24	Pull rope	Soft-Fiber Polyester
						1201-6	1-2/C + gnd (#10,600 V, EPR Insulation
						1201-2	1-2/C + gnd (#10,600 V, EPR Insulation
						1201-1 (5)	1-2/C + gnd (#10,600 V, EPR Insulation
						1202-4A (5)	1-2/C #14,600 V, EPR Insulation
						1202-4B	1-2/C #14,600 V, EPR Insulation
						1202-4C	1-2/C #14,600 V, EPR Insulation
4223	E-115	53	RGS conduit	527.18	879.42	Pull rope	Soft-Fiber Polyester
						1096	1-3/c + gnd #2,600 V, EPR Insulation

For continuation, see next sheet.

CONDUIT AND TRAY SCHEDULE

E-433

STATE OF CALIFORNIA - DEPARTMENT OF TRANSPORTATION
Caltrans

DESIGN OVERSIGHT — BEHZAD GOLEMOHAMMADI

CALCULATED/ DESIGNED BY — PBP
CHECKED BY — AB

DATE	REVISED BY	DATE REVISED
8/02		

LAST REVISION 00-00-00
DATE PLOTTED => 11-JAN-2011
TIME PLOTTED => 14:02

FOR REDUCED PLANS ORIGINAL SCALE IS IN MILLIMETERS 0 20 40 60 80

DGN FILE =>04-0120f1_0388R05.dgn
USERNAME =>florico

CU 04251

EA 0120F1

DIST	COUNTY	ROUTE	KILOMETER POST TOTAL PROJECT	SHEET No	TOTAL SHEETS
04	SF	80	13.2/13.9	389 R5	1204

REGISTERED ELECTRICAL ENGINEER — 12/19/02 DATE

12-6-04
PLANS APPROVAL DATE

PB POWER, Inc.
A Parsons Brinckerhoff Company
303 Second St., Suite 700N
San Francisco, CA 94107-1317

REGISTERED PROFESSIONAL ENGINEER — JENS ERLINGSSON — No. 8249 — Exp. 9/30/06 ELECTRICAL — STATE OF CALIFORNIA

The State of California or its officers or agents shall not be responsible for the accuracy or completeness of electronic copies of this plan sheet.

Caltrans now has a web site! To get to the web site, go to http://www.dot.ca.gov

Metric

MARK	DATE	DESCRIPTIONS	BY	CH'D	CCO#
		REVISIONS			
5	01/07/11	ELECTRICAL WARNING SYSTEMS	TW	RG	61
4	03/26/10	DEHUMIDIFIER SCADA INTERFACE	RR	RG FW	130
3	08/03/09	ELECTRICAL WARNING SYSTEMS	RY RR	RG FW	61
2	03/30/09	SERVICE PLATFORM ELECTRICAL CHANGES	RR RY	RG MP	55
1	03/04/08	BARRIER MODIFICATIONS	JS BM	RG SE	44

REQUEST FOR INFORMATION NOT ADDRESSED IN THIS CCO REMAIN IN FORCE

CONTRACT CHANGE ORDER NO. 61
SHEET 88 OF 104

REGISTERED PROFESSIONAL ENGINEER — SYN YEE CHIN — No. 18186 — Exp. 09/30/2011 ELECTRICAL — STATE OF CALIFORNIA
Syn Yee Chin
FOR REVISION ONLY 4 5

REGISTERED PROFESSIONAL ENGINEER — FADI WALIEDDINE — No. 11465 — Exp. 12/31/2009 ELECTRICAL — STATE OF CALIFORNIA
FOR REVISION ONLY 2 3

REGISTERED PROFESSIONAL ENGINEER — S. A. ESTOQUE, JR. — No. E-10151 — Exp. 12/31/2008 ELECTRICAL — STATE OF CALIFORNIA
FOR REVISION ONLY 1

CONDUIT DATA

Conduit No	Reference	Size	Type	Total Fill (mm²)	Allowable Fill (mm²)	Included Cable No.	Conductor Type
4224	E-115	78	RGS conduit	227.46	1935.24	Pull rope	Soft-Fiber Polyester
						UP105-9	1-2/C + gnd #8,600 V, EPR Insulation
4225	E-115	53	RGS conduit	317.80	1935.24	Pull rope	Soft-Fiber Polyester
						1474-5B	1 - 6 pair, shielded #18 with overall shield, 300 V, PVC jacket
						1474-5A	1 - 6 pair, shielded #18 with overall shield, 300 V, PVC jacket
4226	E-115	78	RGS conduit	98.10	1935.24	Pull rope	Soft-Fiber Polyester
						1115-1	
4241	E-116	78	RGS conduit	446.81 3 5	1935.24	1255-2	1-3/C #16,600 V, EPR Insulation 3
						1202-3	1-7/C #16,600 V, EPR Insulation
						1202-2	1-3/C #14,600 V, EPR Insulation
						1202-1	1-2/C + gnd #10,600 V, EPR Insulation
						Pull rope	Soft-Fiber Polyester 5
						1202-3A	1-2/C #14,600 V, EPR Insulation 3
4242	E-116	78	RGS conduit	1013.69 5	1935.24	CCTVE01BA	TVP
						CCTVE01BB	TVCP
						Pull rope	Soft-Fiber Polyester
						UP106-6	1-2/C + gnd #8, 600 V, EPR Insulation 5
						UP106-8	1-2/C + gnd #8, 600 V, EPR Insulation
						2202-1	1-2/C + gnd #10, 600 V, EPR Insulation
						2202-3A	1-2/C #14,600 V, EPR Insulation
4243	E-116	53	RGS conduit	527.18	879.42	Pull rope	Soft-Fiber Polyester
						1096	1-3/C + gnd #2,600 V, EPR Insulation
4244	E-116	53	RGS conduit	527.18	879.42	Pull rope	Soft-Fiber Polyester
						1097	1-3/C + gnd #2,600 V, EPR Insulation
4245	E-116	53	RGS conduit	0.00	1935.24	Pull rope	Soft-Fiber Polyester
4246	E-116	78	RGS conduit	324.26	1935.24	MVDSW03A	MVDS DLC
						Pull rope	Soft-Fiber Polyester
						CCTVE01BD	TVL
						CCTVE01BC	TVC
4248	E-116	78	RGS-PVC coated conduit	30.19	1935.24	Pull rope	Soft-Fiber Polyester
						1475-3B	12 Fiber, single mode fiberoptic cable
4261	E-117	78	RGS conduit	62.07	1935.24	Pull rope	Soft-Fiber Polyester
						1256-1	1-3/C #16,600 V, EPR Insulation
4262	E-117	78	RGS conduit	0.00	1935.24	Pull rope	Soft-Fiber Polyester
4263	E-117	53	RGS conduit	527.18	879.42	Pull rope	Soft-Fiber Polyester
						1098	1-3/C + gnd #2,600 V, EPR Insulation
4264	E-117	78	RGS conduit	0.00	1935.24	Pull rope	Soft-Fiber Polyester
4265	E-117	53	RGS conduit	150.44	1935.24	Pull rope	Soft-Fiber Polyester
						MVDSW04A	MVDS DLC
4266	E-117	78	RGS conduit	0.00	1935.24	Pull rope	Soft-Fiber Polyester
4268	E-117	78	RGS-PVC coated conduit	30.19	1935.24	Pull rope	Soft-Fiber Polyester
						1475-3C	12 Fiber, single mode fiberoptic cable
4281	E-118	78	RGS conduit	0.00	1935.24	Pull rope	Soft-Fiber Polyester

CONDUIT DATA

Conduit No	Reference	Size	Type	Total Fill (mm²)	Allowable Fill (mm²)	Included Cable No.	Conductor Type
4282	E-118	78	RGS conduit	932.14 5 3	1935.24		3
						2201-1	1-2/C + gnd #10,600 V, EPR Insulation
						2201-2	1-2/C + gnd #10,600 V, EPR Insulation
						2201-6	1-2/C + gnd #10,600 V, EPR Insulation
						Pull rope	Soft-Fiber Polyester 5
						2201-4	1-9/C #16,600 V, EPR Insulation
						2201-3	1-3/C #14,600 V, EPR Insulation
						S-3056-8	1-4/C #14,600 V, EPR Insulation
						2201-4A	1-2/C #14,600 V, EPR Insulation 5
						2201-4B	1-2/C #14,600 V, EPR Insulation
						2201-4C	1-2/C #14,600 V, EPR Insulation
4283	E-118	53	RGS conduit	527.18	879.42	1099	1-3/C + gnd #2,600 V, EPR Insulation
						Pull rope	Soft-Fiber Polyester
4284	E-118	78	RGS conduit	454.92	1935.24	Pull rope	Soft-Fiber Polyester
						UP108-3	1-2/C + gnd #8,600 V, EPR Insulation
						UP108-2	1-2/C + gnd #8,600 V, EPR Insulation
4285	E-118	53	RGS conduit	317.80	1935.24	Pull rope	Soft-Fiber Polyester
						1474-8A	1 - 6 pair, shielded #18 with overall shield, 300 V, PVC jacket
						1474-8B	1 - 6 pair, shielded #18 with overall shield, 300 V, PVC jacket
4286	E-118	78	RGS conduit	98.10	1935.24	Pull rope	Soft-Fiber Polyester
						1117-1	1-2PR #18 Twisted Shielded w/overall Shield
4301	E-96	78	RGS conduit	366.10	1935.24	A-3001-1	1-3/C + gnd #4,600 V, EPR Insulation
						Pull rope	Soft-Fiber Polyester
4303	E-96	41	RGS conduit	0.00	534.55	Pull rope	Soft-Fiber Polyester
4304	E-96	41	RGS conduit	212.85	534.55	Pull rope	Soft-Fiber Polyester
						A-3001-2	3 + 1 gnd #6,#8, 600 V, RHH/RHW Insulation
4305	E-96	41	RGS conduit	0.00	534.55	Pull rope	Soft-Fiber Polyester
4306	E-96	41	RGS conduit	0.00	534.55	Pull rope	Soft-Fiber Polyester
4307	E-96	53	RGS conduit	0.00	879.42	Pull rope	Soft-Fiber Polyester
4308	E-96	53	RGS conduit	0.00	879.42	Pull rope	Soft-Fiber Polyester
4309	E-96	41	RGS conduit	0.00	534.55	Pull rope	Soft-Fiber Polyester
4310	E-96	41	RGS conduit	0.00	534.55	Pull rope	Soft-Fiber Polyester

For continuation, see next sheet.

CONDUIT AND TRAY SCHEDULE

E-434

CALCULATED/ DESIGNED BY	CHECKED BY	DATE	REVISED BY	DATE REVISED
PBP	AB	8/02		

DESIGN OVERSIGHT — BEHZAD GOLEMOHAMMADI

STATE OF CALIFORNIA - DEPARTMENT OF TRANSPORTATION — Caltrans

LAST REVISION 00-00-00 — DATE PLOTTED => 11-JAN-2011 — TIME PLOTTED => 14:02

FOR REDUCED PLANS ORIGINAL SCALE IS IN MILLIMETERS 0 20 40 60 80

DGN FILE =>04-0120f1_0389R05.dgn
USERNAME =>llorico

CU 04251

EA 0120F1

DIST	COUNTY	ROUTE	KILOMETER POST TOTAL PROJECT	SHEET No	TOTAL SHEETS
04	SF	80	13.2/13.9	395 R8	1204

Jens Erlingsson 12/19/02
REGISTERED ELECTRICAL ENGINEER DATE

12-6-04
PLANS APPROVAL DATE

REGISTERED PROFESSIONAL ENGINEER — JENS ERLINGSSON No. 8249 Exp. 9/30/06 ELECTRICAL — STATE OF CALIFORNIA

PB POWER, Inc.
A Parsons Brinckerhoff Company
303 Second St., Suite 700N
San Francisco, CA 94107-1317

The State of California or its officers or agents shall not be responsible for the accuracy or completeness of electronic copies of this plan sheet.

Caltrans now has a web site! To get to the web site, go to http://www.dot.ca.gov

Caltrans Metric

MARK	DATE	DESCRIPTIONS	BY	CH'D	CCO#
		REVISIONS			
8	05/02/12	ELECTRICAL WARNING SYSTEMS	RR	RG	61
7	07/01/11	TOS MODIFICATIONS	RR	RG	81
6	03/24/11	BIKE PATH CONDUIT	TW	RG	73
5	06/11/10	BIKE PATH CONDUIT	TW	RG	73
4	03/26/10	DEHUMIDIFIER SCADA INTERFACE	RR	RG FW	130
3	08/03/09	ELECTRICAL WARNING SYSTEMS	RY RR	RG FW	61
2	03/30/09	SERVICE PLATFORM ELECTRICAL CHANGES	RR RY	RG MP	55
1	03/04/08	BARRIER MODIFICATIONS	JS BM	RG SE	44

REQUEST FOR INFORMATION NOT ADDRESSED IN THIS CCO REMAIN IN FORCE

CONTRACT CHANGE ORDER NO. 61
SHEET 89 OF 104

REGISTERED PROFESSIONAL ENGINEER — S. A. ESTOQUE, JR. No. E-10151 Exp. 12/31/2008 ELECTRICAL — STATE OF CALIFORNIA — 1
FOR REVISION ONLY

REGISTERED PROFESSIONAL ENGINEER — FADI WALIEDDINE No. 11465 Exp. 12/31/2011 ELECTRICAL — STATE OF CALIFORNIA — 2 3
FOR REVISION ONLY

REGISTERED PROFESSIONAL ENGINEER — SYN YEE CHIN No. 18186 Exp. 09/30/2011 ELECTRICAL — STATE OF CALIFORNIA — 4 5 6 7
FOR REVISION ONLY

REGISTERED PROFESSIONAL ENGINEER — DAVID H. OTO No. 10699 Exp. 06/30/2013 ELECTRICAL — STATE OF CALIFORNIA — 8
FOR REVISION ONLY

CONDUIT DATA

Conduit No	Reference	Size	Type	Total Fill (mm²)	Allowable Fill (mm²)	Included Cable No.	Conductor Type
5210	E-114	78	RGS conduit	1323.45	1935.24	Pull rope	Soft-Fiber Polyester
						2119-2	4 pair #22, shielded pairs, 300 V, PE insulation
						1473-5	50 pair #18, shielded pairs, IS/OS shield 600 V, XLPE insul., PVC jacket
5210A	E-71A	41	Liquidtight Flex. Metal cond.		534.55	Pull rope	Soft-Fiber Polyester
5211	E-114	78	RGS conduit	0.00	1935.24	Pull rope	Soft-Fiber Polyester
5221	E-115	78	RGS conduit	187.79	1935.24	2202-2	1-3/C #14, 600 V, EPR insulation
						Pull rope	Soft-Fiber Polyester
						2202-3	1-7/C #16, 600 V, EPR insulation
5222	E-115	78	RGS conduit	830.76	1935.24	LP220-2,4	1-3/C + gnd #6, 600 V, EPR insulation
						LP220-6,8	1-3/C + gnd #6, 600 V, EPR insulation
						Pull rope	Soft-Fiber Polyester
						S-3056-6	1-4/C #14, 600 V, EPR insulation
						2204-2	1-3/C #14, 600 V, EPR insulation
						2204-1	1-3/C #14, 600 V, EPR insulation
5223	E-115	78	RGS conduit	1235.86	1935.24	UP205-1	1-2/C + gnd #10 ,600 V, EPR insulation
						Pull rope	Soft-Fiber Polyester
						UP206-1	1-2/C + gnd #10 ,600 V, EPR insulation
						UP205-8	1-2/C + gnd #8, 600 V, EPR insulation
						2096	1-3/C + gnd #2, 600 V, EPR insulation
						UP205-7	1-2/C + gnd #8, 600 V, EPR insulation
5224	E-115	78	RGS conduit	227.46	1935.24	Pull rope	Soft-Fiber Polyester
						UP205-6	1-2/C + gnd #8, 600 V, EPR insulation
5225	E-115	53	RGS conduit	527.18	879.42	Pull rope	Soft-Fiber Polyester
						2104	1-3/C + gnd #2, 600 V, EPR insulation
5226	E-115	78	RGS conduit	1558.08	1935.24	2120-1	1-2PR #18 Twisted Shielded w/overall Shield
						2121-1	1-2PR #18 Twisted Shielded w/overall Shield
						2910-11	1-3/C #16, 600 V, EPR insulation
						1474-5	50 pair #18, shielded pairs, IS/OS shield 600 V, XLPE insul., PVC jacket
						2155	1-2 pair, shielded #18 with IS/OA, 300V PVC jacket
						Pull rope	Soft-Fiber Polyester
5227	E-115	78	RGS conduit	1201.71	1935.24	Pull rope	Soft-Fiber Polyester
						1474-6	50 pair #18, shielded pairs, IS/OS shield 600 V, XLPE insul., PVC jacket
5228	E-115	78	RGS conduit	1445.19	1935.24	2910-10	4 pair #22, shielded pairs, 300 V, PE insulation
						Pull rope	Soft-Fiber Polyester
						1473-5	50 pair #18, shielded pairs, IS/OS shield 600 V, XLPE insul., PVC jacket
						2910-12	4 pair #22, shielded pairs, 300 V, PE insulation
5229	E-115	78	RGS conduit	317.80	1935.24	1474-5A	1 - 6 pair, shielded #18 with overall shield, 300 V, PVC jacket
						Pull rope	Soft-Fiber Polyester
						1474-5B	1 - 6 pair, shielded #18 with overall shield, 300 V, PVC jacket
5230	E-114	78	RGS conduit	0.00	1935.24	Pull rope	Soft-Fiber Polyester
5231	E-114	78	RGS conduit	0.00	1935.24	Pull rope	Soft-Fiber Polyester
5232	E-114	78	RGS conduit	1201.71	1935.24	1473-4	50 pair #18, shielded pairs, IS/OS shield 600 V, XLPE insul., PVC jacket
						Pull rope	Soft-Fiber Polyester
5233	E-115	78	RGS conduit	98.10	1935.24	Pull rope	Soft-Fiber Polyester
						2120-1	1-2PR #18 Twisted Shielded w/overall Shield
5234	E-115	78	RGS conduit	0.00	1935.24	Pull rope	Soft-Fiber Polyester
5235	E-115	78	RGS conduit	1201.71	1935.24	Pull rope	Soft-Fiber Polyester
						1473-6	50 pair #18, shielded pairs, IS/OS shield 600 V, XLPE insul., PVC jacket
5236	E-116	53	RGS conduit	0.00	1935.24	Pull rope	Soft-Fiber Polyester

CONDUIT DATA

Conduit No	Reference	Size	Type	Total Fill (mm²)	Allowable Fill (mm²)	Included Cable No.	Conductor Type
5237	E-116	78	RGS conduit	0.00	1935.24	Pull rope	Soft-Fiber Polyester
5238	E-116	78	RGS conduit	1201.71	1935.24	1473-6	50 pair #18, shielded pairs, IS/OS shield 600 V, XLPE insul., PVC jacket
						Pull rope	Soft-Fiber Polyester
5241	E-116	78	RGS conduit	942.43	1935.24	2202-3	1-7/C #16, 600 V, EPR insulation
						2202-2	1-3/C #14, 600 V, EPR insulation
						2105	1-3/C + gnd #2, 600 V, EPR insulation
						2202-1	1-2/C + gnd #8, 600 V, EPR insulation
						Pull rope	Soft-Fiber Polyester
5242	E-116	78 8	RGS conduit	420.73 8	1935.24 8	2255-3	1-3/C #14, 600 V, EPR insulation
						UP206-1	1-2/C + gnd #10, 600 V, EPR insulation
						UP206-9	1-2/C + gnd #8, 600 V, EPR insulation
						Pull rope	Soft-Fiber Polyester
5243	E-116	53	RGS conduit	527.18	879.42	Pull rope	Soft-Fiber Polyester
						2097	1-3/C + gnd #2, 600 V, EPR insulation
5244	E-116	78	RGS conduit	648.58	1935.24	Pull rope	Soft-Fiber Polyester
						LP221-2,4	1-3/C + gnd #6, 600 V, EPR insulation
						LP221-6,8	1-3/C + gnd #6, 600 V, EPR insulation
5245	E-116	78	RGS conduit	0.00 8	1935.24 8		
						Pull rope	Soft-Fiber Polyester
5246	E-116	78	RGS conduit	1201.71	1935.24	1474-6	50 pair #18, shielded pairs, IS/OS shield 600 V, XLPE insul., PVC jacket
						Pull rope	Soft-Fiber Polyester
5247	E-116	78	RGS conduit	1430.65	1935.24	Pull rope	Soft-Fiber Polyester
						MVDSE02A	MVDS DLC
						CCTVE01A	HCC
						1474-7	50 pair #18, shielded pairs, IS/OS shield 600 V, XLPE insul., PVC jacket
5249	E-116	78	RGS-PVC coated conduit	30.19	1935.24	2475-3B	12 Fiber, single mode fiberoptic cable
						Pull rope	Soft-Fiber Polyester
5250	E-116	78	RGS conduit	1201.71	1935.24	1473-7	50 pair #18, shielded pairs, IS/OS shield 600 V, XLPE insul., PVC jacket
						Pull rope	Soft-Fiber Polyester

For continuation, see next sheet.

CONDUIT AND TRAY SCHEDULE

E-440

THIS PLAN ACCURATE FOR ELECTRICAL WORK ONLY.

DESIGN OVERSIGHT	CALCULATED/ DESIGNED BY	CHECKED BY	DATE REVISED	REVISED BY
BEHZAD GOLEMOHAMMADI	PBP	AB	8/02	

STATE OF CALIFORNIA - DEPARTMENT OF TRANSPORTATION
Caltrans

FOR REDUCED PLANS ORIGINAL SCALE IS IN MILLIMETERS 0 20 40 60 80

DGN FILE =>T:\13103\MS\pse\SAS Struc\CCO\SAS CC061\Draft 7 - 2012.05.04_Issued for Submittal\04-0120f1_0395R08.dgn
USERNAME =>garciar

DATE PLOTTED => 5/4/2012
TIME PLOTTED => 2:22:46 PM

LAST REVISION 00-00-00

CU 04251 EA 0120F1

CONDUIT DATA

Conduit No.	Reference	Size	Type	Total Fill (mm²)	Allowable Fill (mm²)	Included Cable No.	Conductor Type
5529	E-185	53	RGS conduit	0.00	879.42	Pull rope	Soft-Fiber Polyester
5530	E-185	41	RGS conduit	0.00	534.55	Pull rope	Soft-Fiber Polyester
5531	E-185	41	RGS conduit	0.00	534.55	Pull rope	Soft-Fiber Polyester
5532	E-185	41	RGS conduit	0.00	534.55	Pull rope	Soft-Fiber Polyester
5533	E-185	53	RGS conduit	0.00	879.42	Pull rope	Soft-Fiber Polyester
5534	E-185	53	RGS conduit	0.00	879.42	Pull rope	Soft-Fiber Polyester
5535	E-185	53	RGS conduit	0.00	879.42	Pull rope	Soft-Fiber Polyester
5536	E-185	53	RGS conduit	0.00	879.42	Pull rope	Soft-Fiber Polyester
5537	E-185	53	RGS conduit	0.00	879.42	Pull rope	Soft-Fiber Polyester
5543	E-185	41	RGS conduit	212.85	534.55	Pull rope	Soft-Fiber Polyester
						LP223-2A,4A	3 +1 gnd #6, #8, 600V, RHH/RHW insulation
5544	E-185	41	RGS conduit	212.85	708.28	Pull rope	Soft-Fiber Polyester
						LP223-6A,8A	3 +1 gnd #6, #8, 600V, RHH/RHW insulation
5545	E-185	53	RGS conduit	205.22	681.55	Pull rope	Soft-Fiber Polyester
						UP208-6A	1-2/C + gnd #12, 600 V, EPR insulation
						UP208-6B	1-2/C + gnd #12, 600 V, EPR insulation
5546	E-212	103	RGS conduit	2780.99	3324.51	2391	3-1/C #4/0 + 1/C #1/0 gnd, 15 kV, EPR insulation
						Pull rope	Soft-Fiber Polyester
5547	E-185	53	RGS conduit	0.00	879.42	Pull rope	Soft-Fiber Polyester
5548	E-185	53	RGS conduit	0.00	879.42	Pull rope	Soft-Fiber Polyester
5549	E-185	41	RGS conduit	0.00	534.55	Pull rope	Soft-Fiber Polyester
5550	E-185	41	RGS conduit	212.85	534.55	Pull rope	Soft-Fiber Polyester
						A-2035-4-1	3 +1 gnd #6, #8, 600V, RHH/RHW insulation
5551	E-185	53	RGS conduit	281.45	879.42	Pull rope	Soft-Fiber Polyester
						A-2035-4	1-3/C + gnd #6, 600 V, EPR insulation
5552	E-185	53	RGS conduit	227.46	879.42	UP208-2A	1-2/C + gnd #8, 600 V, EPR insulation
						Pull rope	Soft-Fiber Polyester
5553	E-185	53	RGS conduit	98.10	879.42	Pull rope	Soft-Fiber Polyester
						2148	1 - 2 pair, shielded #18 with IS/OA, 300 V, PVC jacket
5554	E-185	53	RGS conduit	0.00	879.42	Pull rope	Soft-Fiber Polyester
5555	E-185	41	RGS conduit	527.18	534.55	A-2014-1	1-3/C + gnd #2, 600 V, EPR insulation
						Pull rope	Soft-Fiber Polyester
5556	E-185	53	RGS conduit	814.11	879.42	LP223-6,8	1-3/C + gnd #6, 600 V, EPR insulation
						Pull rope	Soft-Fiber Polyester
						UP208-6	1-2/C + gnd #8, 600 V, EPR insulation
						LP223-2,4	1-3/C + gnd #6, 600 V, EPR insulation
5557	E-186	53	RGS conduit	0.00	879.42	Pull rope	Soft-Fiber Polyester
5558	E-186	53	RGS conduit	0.00	879.42	Pull rope	Soft-Fiber Polyester
5597	E-185	53	RGS conduit	0.00	879.42	Pull rope	Soft-Fiber Polyester
7403	E-139	41	RGS conduit	0.00	534.55	Pull rope	Soft-Fiber Polyester
8001	E-293	41	RGS-PVC coated conduit	203.95	534.55	1201-6	1-2/C + gnd #10, 600 V, EPR insulation
						Pull rope	Soft-Fiber Polyester
						1201-4C	1-2/C #14, 600 V, EPR insulation
8002	E-293	41	RGS-PVC coated conduit	407.90	534.55	1201-6	1-2/C +gnd #10, 600 V, EPR insulation
						1201-2	1-2/C + gnd #10, 600 V, EPR insulation
						Pull rope	Soft-Fiber Polyester
						1201-4B	1-2/C #14, 600 V, EPR insulation
						1201-4C	1-2/C #14, 600 V, EPR insulation
8003	E-293	21	RGS-PVC coated conduit	102.61	185.01	2204-4	1-2/C + gnd #12, 600 V, EPR insulation
						Pull rope	Soft-Fiber Polyester
8004	E-293	41	RGS-PVC coated conduit	203.95	534.55	1201-1	1-2/C + gnd #10, 600 V, EPR insulation
						Pull rope	Soft-Fiber Polyester
						1201-4A	1-2/C #14, 600 V, EPR insulation
8005	E-293	41	RGS-PVC coated conduit	229.49	414.28	2204-3	1-2/C + gnd #10, 600 V, EPR insulation
						Pull rope	Soft-Fiber Polyester
						2204-4	1-2/C + gnd #12, 600 V, EPR insulation
8006	E-293, E-300	53	RGS-PVC coated conduit	433.44	879.42	2204-4	1-2/C + gnd #12, 600 V, EPR insulation
						2204-3	1-2/C + gnd #10, 600 V, EPR insulation
						1201-1	1-2/C + gnd #10, 600 V, EPR insulation
						Pull rope	Soft-Fiber Polyester
						1201-4A	1-2/C #14, 600 V, EPR insulation

REQUEST FOR INFORMATION NOT ADDRESSED IN THIS CCO REMAIN IN FORCE

MARK	DATE	DESCRIPTIONS	BY	CH'D	CCO#
		REVISIONS			
8	05/02/12	ELECTRICAL WARNING SYSTEMS	RR	RG	61
7	12/21/11	ELECTRICAL CHANGES FOR ELEVATION 53 IMPROVEMENTS	TW	RG	190
6	03/18/11	BIKE PATH CONDUIT	TW	RG	73
5	01/07/11	ELECTRICAL WARNING SYSTEMS	TW	RG	61
4	06/11/10	BIKE PATH CONDUIT	TW	RG	73
3	12/11/09	TOWER UTILITY PANELS	SYC	RG FW	70
2	08/03/09	ELECTRICAL WARNING SYSTEMS	JS TW	RG FW	61
1	03/04/08	BARRIER MODIFICATIONS	JS BM	RG SE	44

Caltrans Metric

DIST	COUNTY	ROUTE	KILOMETER POST TOTAL PROJECT	SHEET NO	TOTAL SHEETS
04	SF	80	13.2/13.9	400 R8	1204

REGISTERED ELECTRICAL ENGINEER — DATE 12/19/02

12-6-04
PLANS APPROVAL DATE

REGISTERED PROFESSIONAL ENGINEER — JENS ERLINGSSON — No. 8249 — Exp. 9/30/06 ELECTRICAL — STATE OF CALIFORNIA

PB POWER, Inc.
A Parsons Brinckerhoff Company
303 Second St., Suite 700N
San Francisco, CA 94107-1317

The State of California or its officers or agents shall not be responsible for the accuracy or completeness of electronic copies of this plan sheet.

Caltrans now has a web site! To get to the web site, go to http://www.dot.ca.gov

CONTRACT CHANGE ORDER NO. 61
SHEET 90 OF 104

REGISTERED PROFESSIONAL ENGINEER — DAVID H. OTO — No. 10699 — Exp. 06/30/2013 ELECTRICAL — STATE OF CALIFORNIA — 7 8

REGISTERED PROFESSIONAL ENGINEER — SYN YEE CHIN — No. 18186 — Exp. 09/30/2011 ELECTRICAL — STATE OF CALIFORNIA — 4 5 6

REGISTERED PROFESSIONAL ENGINEER — FADI WALIEDDINE — No. 11465 — Exp. 12/31/2009 ELECTRICAL — STATE OF CALIFORNIA — 2 3

REGISTERED PROFESSIONAL ENGINEER — S. A. ESTOQUE, JR. — No. E-10151 — Exp. 12/31/2009 ELECTRICAL — STATE OF CALIFORNIA — 1

FOR REVISION ONLY — FOR REVISION ONLY — FOR REVISION ONLY — FOR REVISION ONLY

CONDUIT DATA

Conduit No.	Reference	Size	Type	Total Fill (mm²)	Allowable Fill (mm²)	Included Cable No.	Conductor Type
8007	E-293, E-300	53	RGS-PVC coated conduit	229.49	684.55	Pull rope	Soft-Fiber Polyester
						2204-3	1-2/C + gnd #10, 600 V, EPR insulation
						2204-4	1-2/C + gnd #12, 600 V, EPR insulation
8008	E-293	53	RGS-PVC coated conduit	855.95	879.42	2204-9	1-3/C #14, 600 V, EPR insulation
						2204-2	1-3/C #14, 600 V, EPR insulation
						2204-1	1-3/C #14, 600 V, EPR insulation
						2204-10	1-3/C #14, 600 V, EPR insulation
						Pull rope	Soft-Fiber Polyester
						2204-11	1-3/C #14, 600 V, EPR insulation
						UP210-3	1-2/C + gnd #8, 600 V, EPR insulation
						2204-3	1-2/C + gnd #10, 600 V, EPR insulation
						2204-4	1-2/C + gnd #12, 600 V, EPR insulation
8010	E-293, E-264C	41	RGS-PVC coated conduit	203.95	534.55	1201-2	1-2/C + gnd #10, 600 V, EPR insulation
						Pull rope	Soft-Fiber Polyester
						1201-4B	1-2/C #14, 600 V, EPR insulation
8011	E-293	53	RGS-PVC coated conduit	677.23	879.42	UP210-3	1-2/C + gnd #8, 600 V, EPR insulation
						GFR	#2, bare copper wire, stranded
						2204-1	1-3/C #14, 600 V, EPR insulation
						2204-2	1-3/C #14, 600 V, EPR insulation
						2204-9	1-3/C #14, 600 V, EPR insulation
						2204-10	1-3/C #14, 600 V, EPR insulation
						2204-11	1-3/C #14, 600 V, EPR insulation
						Pull rope	Soft-Fiber Polyester
~~8012~~							
8013	E-294	41	RGS-PVC coated conduit	203.95	414.28	2201-6	1-2/C + gnd #10, 600 V, EPR insulation
						Pull rope	Soft-Fiber Polyester
						2201-4C	1-2/C #14, 600 V, EPR insulation
8014	E-293	53	RGS-PVC coated conduit	611.85	879.42	1201-6	1-2/C + gnd #10, 600 V, EPR insulation
						1201-2	1-2/C + gnd #10, 600 V, EPR insulation
						1201-1	1-2/C + gnd #10, 600 V, EPR insulation
						Pull rope	Soft-Fiber Polyester
						1201-4A	1-2/C #14, 600 V, EPR insulation
						1201-4B	1-2/C #14, 600 V, EPR insulation
						1201-4C	1-2/C #14, 600 V, EPR insulation
8015	E-293, E-300	41	RGS-PVC coated conduit	257.36	414.28	2204-8	3-Pr #16 with overall shield 600 V, PVC insulation
						2204-12	~~1-3 Pr #16 with overall shield 600 V, PVC insulation~~
						Pull rope	Soft-Fiber Polyester
8140	E-294	41	RGS-PVC coated conduit	203.95	534.55	Pull rope	Soft-Fiber Polyester
						2201-1	1-2/C + gnd #10, 600 V, EPR insulation
						2201-4A	1-2/C #14, 600 V, EPR insulation

8

For continuation, see next sheet.

CONDUIT AND TRAY SCHEDULE

E-445

REVISED BY | DATE REVISED
CALCULATED/ DESIGNED BY | CHECKED BY
DESIGN OVERSIGHT

STATE OF CALIFORNIA - DEPARTMENT OF TRANSPORTATION
Caltrans

LAST REVISION 12-21-11
DATE PLOTTED => 5/7/2012
TIME PLOTTED => 12:19:45 PM

FOR REDUCED PLANS ORIGINAL SCALE IS IN MILLIMETERS 0 20 40 60 80

DGN FILE =>04-0120F1_0400R08.dgn
USERNAME =>KoonC

CU 04251 | EA 0120F1

DIST	COUNTY	ROUTE	KILOMETER POST TOTAL PROJECT	SHEET No	TOTAL SHEETS
04	SF	80	13.2/13.9	401 R3	1204

REGISTERED ELECTRICAL ENGINEER — 12/19/02 DATE

12-6-04
PLANS APPROVAL DATE

REGISTERED PROFESSIONAL ENGINEER — JENS ERLINGSSON No. 8249 Exp. 9/30/06 ELECTRICAL — STATE OF CALIFORNIA

PB POWER, Inc.
A Parsons Brinckerhoff Company
303 Second St., Suite 700N
San Francisco, CA 94107-1317

The State of California or its officers or agents shall not be responsible for the accuracy or completeness of electronic copies of this plan sheet.

Caltrans now has a web site! To get to the web site, go to http://www.dot.ca.gov

Metric

REGISTERED PROFESSIONAL ENGINEER — SYN YEE CHIN No. 18186 Exp. 09/30/2011 ELECTRICAL — STATE OF CALIFORNIA

Syn Yee Chin
FOR REVISION ONLY 3

REGISTERED PROFESSIONAL ENGINEER — FADI WALIEDDINE No. 11465 Exp. 12/31/2009 ELECTRICAL — STATE OF CALIFORNIA

FOR REVISION ONLY 1 2

MARK	DATE	DESCRIPTIONS	BY	CH'D	CCO#
		REVISIONS			
3	01/07/11	ELECTRICAL WARNING SYSTEMS	TW	RG	61
2	08/03/09	ELECTRICAL WARNING SYSTEMS	RY RR	RG FW	61
1	09/24/08	CABLE ELECTRICAL	RR AG	RG FW	72

REQUEST FOR INFORMATION NOT ADDRESSED IN THIS CCO REMAIN IN FORCE

CONTRACT CHANGE ORDER NO. 61
SHEET 91 OF 104

CONDUIT DATA

Conduit No	Reference	Size	Type	Total Fill (mm²)	Allowable Fill (mm²)	Included Cable No.	Conductor Type
8241 2	E-294	41	RGS-PVC coated conduit	203.95 3	414.28	2201-2	1-2/C + gnd (#10) 600 V, EPR Insulation
						Pull rope	Soft-Fiber Polyester 3
						2201-4B	1-2/C #14, 600 V, EPR Insulation 3
8242 2	E-292, E-294	41	RGS-PVC coated conduit	203.95 3	414.28	Pull rope	Soft-Fiber Polyester 3
						2201-2	1-2/C + gnd #10, 600 V, EPR Insulation
						2201-4B	1-2/C #14, 600 V, EPR Insulation
8243 2	E-292, E-294	41	RGS-PVC coated conduit	203.95 3	414.28	Pull rope	Soft-Fiber Polyester 3
						2201-6	1-2/C + gnd (#10) 600 V, EPR Insulation 3
						2201-4C	1-2/C #14, 600 V, EPR Insulation 3
8303	E-291	41	Liquidtight flexible metal conduit	238.74	511.11	S-3056-2	3 + 1 gnd #6,#8, 600 V, RHH/RHW Insulation
						Pull rope	Soft-Fiber Polyester
						S-3056-14	1-2/C #14, 600 V, EPR Insulation
8304	E-291	41	RGS-PVC coated conduit	238.74	534.55	Pull rope	Soft-Fiber Polyester
						S-3056-2A	3 + 1 gnd #6,#8, 600 V, RHH/RHW Insulation
						S-3056-14	1-2/C #14, 600 V, EPR Insulation
8305	E-291	41	RGS-PVC coated conduit	238.74	534.55	S-3056-2	3 + 1 gnd #6,#8, 600 V, RHH/RHW Insulation
						Pull rope	Soft-Fiber Polyester
						S-3056-14	1-2/C #14, 600 V, EPR Insulation
8306	E-291	41	Liquidtight flexible metal conduit	212.85	511.11	S-3056-2	3 + 1 gnd #6,#8, 600 V, RHH/RHW Insulation
						Pull rope	Soft-Fiber Polyester
8313	E-291	41	Liquidtight flexible metal conduit	212.85	511.11	S-3056-3	3 + 1 gnd #6,#8, 600 V, RHH/RHW Insulation
						Pull rope	Soft-Fiber Polyester
8315	E-291	41	Liquidtight flexible metal conduit	212.85	511.11	Pull rope	Soft-Fiber Polyester
						S-3056-4	3 + 1 gnd #6,#8, 600 V, RHH/RHW Insulation
9001	E-371, E-294	41	RGS-PVC coated conduit	284.52	534.55	2900-422B	4 pair #22, shielded pairs, FEP Insulation
						2900-402A	4 pair #22, shielded pairs, FEP Insulation
						2900-412B	4 pair #22, shielded pairs, FEP Insulation
						2900-412C	4 pair #22, shielded pairs, FEP Insulation
						2900-422A	4 pair #22, shielded pairs, FEP Insulation
						2900-412A	4 pair #22, shielded pairs, FEP Insulation
						Pull rope	Soft-Fiber Polyester
9002 2	E-371, E-294	27	RGS-PVC coated conduit	47.42	229.03	2900-402A	4 pair #22, shielded pairs, FEP Insulation
						Pull rope	Soft-Fiber Polyester
9003 2	E-371, E-294	27	RGS-PVC coated conduit	142.26	229.03	2900-412A	4 pair #22, shielded pairs, FEP Insulation
						2900-412B	4 pair #22, shielded pairs, FEP Insulation
						2900-412C	4 pair #22, shielded pairs, FEP Insulation
						Pull rope	Soft-Fiber Polyester
9004 2	E-371, E-294	27	RGS-PVC coated conduit	94.84	229.03	Pull rope	Soft-Fiber Polyester
						2900-422A	4 pair #22, shielded pairs, FEP Insulation
						2900-422B	4 pair #22, shielded pairs, FEP Insulation
9005	E-362	27	RGS conduit	47.42	229.03	2900-142A	4 pair #22, shielded pairs, FEP Insulation
						Pull rope	Soft-Fiber Polyester
9006	E-362	27	RGS conduit	142.26	229.03	2900-152A	4 pair #22, shielded pairs, FEP Insulation
						2900-152B	4 pair #22, shielded pairs, FEP Insulation
						Pull rope	Soft-Fiber Polyester
						2900-152C	4 pair #22, shielded pairs, FEP Insulation
9007	E-362	27	RGS conduit	94.84	229.03	2900-162A	4 pair #22, shielded pairs, FEP Insulation
						2900-162B	4 pair #22, shielded pairs, FEP Insulation
						Pull rope	Soft-Fiber Polyester
9008	E-363	27	RGS conduit	94.84	229.03	2900-182A	4 pair #22, shielded pairs, FEP Insulation
						Pull rope	Soft-Fiber Polyester
						2900-182B	4 pair #22, shielded pairs, FEP Insulation
9009	E-363	27	RGS conduit	142.26	229.03	Pull rope	Soft-Fiber Polyester
						2900-172C	4 pair #22, shielded pairs, FEP Insulation
						2900-172A	4 pair #22, shielded pairs, FEP Insulation
						2900-172B	4 pair #22, shielded pairs, FEP Insulation

CONDUIT DATA

Conduit No	Reference	Size	Type	Total Fill (mm²)	Allowable Fill (mm²)	Included Cable No.	Conductor Type
9010	E-364	27	RGS conduit	47.42	229.03	2900-202A	4 pair #22, shielded pairs, FEP Insulation
						Pull rope	Soft-Fiber Polyester
9011	E-364	27	RGS conduit	142.26	229.03	Pull rope	Soft-Fiber Polyester
						2900-192A	4 pair #22, shielded pairs, FEP Insulation
						2900-192B	4 pair #22, shielded pairs, FEP Insulation
						2900-192C	4 pair #22, shielded pairs, FEP Insulation
9012	E-368	27	RGS conduit	47.42	229.03	2900-282A	4 pair #22, shielded pairs, FEP Insulation
						Pull rope	Soft-Fiber Polyester
9013	E-368	27	RGS conduit	142.26	229.03	2900-272A	4 pair #22, shielded pairs, FEP Insulation
						2900-272B	4 pair #22, shielded pairs, FEP Insulation
						2900-272C	4 pair #22, shielded pairs, FEP Insulation
						Pull rope	Soft-Fiber Polyester
9014	E-369	27	RGS conduit	47.42	229.03	Pull rope	Soft-Fiber Polyester
						2900-342A	4 pair #22, shielded pairs, FEP Insulation
9015	E-369	27	RGS conduit	142.26	229.03	2900-332A	4 pair #22, shielded pairs, FEP Insulation
						2900-332B	4 pair #22, shielded pairs, FEP Insulation
						2900-332C	4 pair #22, shielded pairs, FEP Insulation
						Pull rope	Soft-Fiber Polyester
9016	E-370	27	RGS conduit	47.42	229.03	2900-392A	4 pair #22, shielded pairs, FEP Insulation
						Pull rope	Soft-Fiber Polyester
9017	E-370	27	RGS conduit	142.26	229.03	2900-382A	4 pair #22, shielded pairs, FEP Insulation
						2900-382B	4 pair #22, shielded pairs, FEP Insulation
						2900-382C	4 pair #22, shielded pairs, FEP Insulation
						Pull rope	Soft-Fiber Polyester
9018	E-365	41	Liquidtight flexible metal conduit	142.26	511.11	Pull rope	Soft-Fiber Polyester
						2900-363A	4 pair #22, shielded pairs, FEP Insulation
						2900-363B	4 pair #22, shielded pairs, FEP Insulation
						2900-363C	4 pair #22, shielded pairs, FEP Insulation
9019	E-365	41	Liquidtight flexible metal conduit	284.52	511.11	2900-353B	4 pair #22, shielded pairs, FEP Insulation
						2900-353C	4 pair #22, shielded pairs, FEP Insulation
						2900-353D	4 pair #22, shielded pairs, FEP Insulation
						2900-353E	4 pair #22, shielded pairs, FEP Insulation
						2900-353F	4 pair #22, shielded pairs, FEP Insulation
						Pull rope	Soft-Fiber Polyester
						2900-353A	4 pair #22, shielded pairs, FEP Insulation
9020	E-365	41	Liquidtight flexible metal conduit	142.26	511.11	2900-223C	4 pair #22, shielded pairs, FEP Insulation
						2900-223A	4 pair #22, shielded pairs, FEP Insulation
						2900-223B	4 pair #22, shielded pairs, FEP Insulation
						Pull rope	Soft-Fiber Polyester
9021	E-365	41	Liquidtight flexible metal conduit	142.26	511.11	Pull rope	Soft-Fiber Polyester
						2900-213C	4 pair #22, shielded pairs, FEP Insulation
						2900-213B	4 pair #22, shielded pairs, FEP Insulation
						2900-213A	4 pair #22, shielded pairs, FEP Insulation

For continuation, see next sheet.

CONDUIT AND TRAY SCHEDULE

E-446

REVISED BY	DATE REVISED
PBP	AB
DATE 8/02	8/02
CALCULATED/ DESIGNED BY	CHECKED BY

DESIGN OVERSIGHT — BEHZAD GOLEMOHAMMADI

STATE OF CALIFORNIA - DEPARTMENT OF TRANSPORTATION — Caltrans

LAST REVISION 00-00-00 — DATE PLOTTED => 11-JAN-2011 TIME PLOTTED => 14:02

FOR REDUCED PLANS ORIGINAL SCALE IS IN MILLIMETERS 0 20 40 60 80

DGN FILE =>04-0120f1_0401R03.dgn
USERNAME =>llorico

CU 04251 | EA 0120F1

CONDUIT DATA

Conduit No	Reference	Size	Type	Total Fill (mm²)	Allowable Fill (mm²)	Included Cable No.	Conductor Type
3512	E-251D	21	Liquidtight flexible metal conduit	192.46	226.00	A-3008-3	2 + 1 gnd #12, #12, 600 V, RHH/RHW Insulation
						A-3008-4	2 + 1 gnd #12, #12, 600 V, RHH/RHW Insulation
						Pull rope	Soft-Fiber Polyester
3513	E-251D	21	RGS/PVC coated conduit	96.23	141.00	A-3008-3	2 + 1 gnd #12, #12, 600 V, RHH/RHW Insulation
						Pull rope	Soft-Fiber Polyester
3514	E-251D	21	RGS/PVC coated conduit	96.23	141.00	A-3008-4	2 + 1 gnd #12, #12, 600 V, RHH/RHW Insulation
						Pull rope	Soft-Fiber Polyester
8307	E-251E	41	RGS/PVC coated conduit	191.72 △2	534.55	S-3056-2B	2 #14 + gnd #14, 600 V, RHH/RHW Insulation
						S-3056-2C	2 #14 + gnd #14, 600 V, RHH/RHW Insulation △2
						S-3056-14A	1-Triad #16 with overall shield, 600V, PVC Insulation
						S-3056-14B	1-Triad #16 with overall shield, 600V, PVC Insulation
						Pull rope	Soft-Fiber Polyester
8308	E-251E	21	Liquidtight flexible metal conduit	95.86 △2	141.65	S-3056-2B	2 #14 + gnd #14, 600 V, RHH/RHW Insulation △2
						S-3056-14A	1-Triad #16 with overall shield, 600V, PVC Insulation
						Pull rope	Soft-Fiber Polyester
8309	E-251E	21	Liquidtight flexible metal conduit	95.86 △2	141.65	S-3056-2C	2 #14 + gnd #14, 600 V, RHH/RHW Insulation △2
						S-3056-14B	1-Triad #16 with overall shield, 600V, PVC Insulation
						Pull rope	Soft-Fiber Polyester
9071	E-251D	41	RGS/PVC coated conduit	284.52	534.55	2900-213A	4-pair # 22, shielded pairs, FEP Insulation
						2900-213B	4-pair # 22, shielded pairs, FEP Insulation
						2900-213C	4-pair # 22, shielded pairs, FEP Insulation
						2900-223A	4-pair # 22, shielded pairs, FEP Insulation
						2900-223B	4-pair # 22, shielded pairs, FEP Insulation
						2900-223C	4-pair # 22, shielded pairs, FEP Insulation
						Pull rope	Soft-Fiber Polyester
9072	E-251D	41	RGS/PVC coated conduit	426.78	534.55	2900-353A	4-pair # 22, shielded pairs, FEP Insulation
						2900-353B	4-pair # 22, shielded pairs, FEP Insulation
						2900-353C	4-pair # 22, shielded pairs, FEP Insulation
						2900-353D	4-pair # 22, shielded pairs, FEP Insulation
						2900-353E	4-pair # 22, shielded pairs, FEP Insulation
						2900-353F	4-pair # 22, shielded pairs, FEP Insulation
						2900-363A	4-pair # 22, shielded pairs, FEP Insulation
						2900-363B	4-pair # 22, shielded pairs, FEP Insulation
						2900-363C	4-pair # 22, shielded pairs, FEP Insulation
						Pull rope	Soft-Fiber Polyester

For continuation, see next sheet.

DAVID H. OTO — REGISTERED PROFESSIONAL ENGINEER — No. 10699 — Exp. 06/30/2013 — ELECTRICAL — STATE OF CALIFORNIA

FOR REVISION ONLY △2

SYN YEE CHIN — REGISTERED PROFESSIONAL ENGINEER — No. 18186 — Exp. 09/30/2013 — ELECTRICAL — STATE OF CALIFORNIA

FOR REVISION ONLY △1

DIST	COUNTY	ROUTE	KILOMETER POST TOTAL PROJECT	SHEET No	TOTAL SHEETS
04	SF	80	13.2/13.9	401 S1R2	1204

03/05/08
REGISTERED ELECTRICAL ENGINEER — DATE

REGISTERED PROFESSIONAL ENGINEER — S. A. ESTOQUE, JR. — No. E-10181 — Exp. 12/31/2008 — ELECTRICAL — STATE OF CALIFORNIA

PLANS APPROVAL DATE

PB AMERICAS, Inc.
A Parsons Brinckerhoff Company
303 Second St., Suite 700N
San Francisco, CA 94107-1317

The State of California or its officers or agents shall not be responsible for the accuracy or completeness of electronic copies of this plan sheet.

Caltrans now has a web site! To get to the web site, go to http://www.dot.ca.gov

REQUEST FOR INFORMATION NOT ADDRESSED IN THIS CCO REMAIN IN FORCE

MARK	DATE	DESCRIPTIONS	BY	CH'D	CCO#
		REVISIONS			
△2	05/02/12	ELECTRICAL WARNING SYSTEMS	RR	RG	61
△1	01/07/11	CABLE ELECTRICAL-LED AVIATION LIGHTS	RR	RG	72S1
△0	09/24/08	CABLE ELECTRICAL	RR AG	RG SE	72

CONTRACT CHANGE ORDER NO. 61
SHEET 92 OF 104

DATE	REVISED BY
3/08	SE

DATE REVISED	CHECKED BY
3/08	SE

CALCULATED/DESIGNED BY: BEHZAD GOLEMOHAMMADI
DESIGN OVERSIGHT

STATE OF CALIFORNIA - DEPARTMENT OF TRANSPORTATION
Caltrans

CONDUIT AND TRAY SCHEDULE

E-446A

LAST REVISION 00-00-00
DATE PLOTTED => 04-MAY-2012
TIME PLOTTED => 13:51

FOR REDUCED PLANS ORIGINAL SCALE IS IN MILLIMETERS 0 20 40 60 80

DGN FILE =>04-0120f1_0401S01R02.dgn
USERNAME =>llorico

CU 04251

EA 0120F1

CONDUIT DATA

Conduit No	Reference	Size	Type	Total Fill (mm²)	Allowable Fill (mm²)	Included Cable No.	Conductor Type
* 5002	E-293B	78	RGS- PVC Coated Conduit	1232.21	1935.24	UP231-9	1-3/C #10, 600V, EPR Insulation
						UP231-5	2 + 1 gnd #10, #10, 600V, RHH/RHW Insulation
						UP231-2	1-2/C+gnd #10, 600V, EPR Insulation
						UP231-6	1-2/C+gnd #10, 600V, EPR Insulation
						UP231-3A	1-2/C+gnd # 8, 600V, EPR Insulation
						UP231-10	2 + 1 gnd #12, #12, 600V, RHH/RHW Insulation
						UP231-7	1-2/C+gnd # 8, 600V, EPR Insulation
						UP231-1A	2 + 1 gnd # 8, #10, 600V, RHH/RHW Insulation
						UP231-11	1-2/C+gnd # 10, 600V, EPR Insulation
						Pull rope	Soft-Fiber Polyester
4014	E-293B,C,D	41	Liquidtight Flex Metal Conduit	27.13	534.55	UP231-11	1-2/C+gnd # 10, 600V, EPR Insulation
						Pull rope	Soft-Fiber Polyester
4015	E-293B,C,D	41	Liquidtight Flex Metal Conduit	528.51	534.55	2367-1	1-3/C #14, 600V, EPR Insulation
						2367-2	1-3/C #14, 600V, EPR Insulation
						2367-3	1-2/C+gnd #12, 600V, EPR Insulation
						2367-9	1-3/C #14, 600V, EPR Insulation
						2367-10	1-3/C #14, 600V, EPR Insulation
						2367-11	1-3/C #14, 600V, EPR Insulation
						Pull rope	Soft-Fiber Polyester
*4860	E-293B,D	78	Liquidtight Flex Metal Conduit	361.14	1928.98	2366-8	3- PR #16 with overall shield 600V, PVC Insulation
						2367-5	1- Triad #16 with overall shield 600V, PVC Insulation
				△2		2367-6	1- Triad #16 with overall shield 600V, PVC Insulation
						2366-12	1-3 PR #16 twisted shielded w/ overall shield, 600V
						Pull rope	Soft-Fiber Polyester △2
4860A	E-293B,D	41	RGS- PVC Coated Conduit	361.14	511.11	2366-8	3- PR #16 with overall shield 600V, PVC Insulation
						2367-5	1- Triad #16 with overall shield 600V, PVC Insulation
				△2		2367-6	1- Triad #16 with overall shield 600V, PVC Insulation
						2366-12	1-3 PR #16 twisted shielded w/ overall shield, 600V
						Pull rope	Soft-Fiber Polyester △2
* 5854	E-293B	78	RGS- PVC Coated Conduit	1088.16	1935.24	UP231-6	1-2/C+gnd #10, 600V, EPR Insulation
						UP231-3A	1-2/C+gnd # 8, 600V, EPR Insulation
						UP231-7	1-2/C+gnd # 8, 600V, EPR Insulation
						UP231-2	1-2/C+gnd #10, 600V, EPR Insulation
						UP231-7	1-2/C+gnd # 8, 600V, EPR Insulation
						2367-1	1-3/C #14, 600V, EPR Insulation
						2367-2	1-3/C #14, 600V, EPR Insulation
						Pull rope	Soft-Fiber Polyester
*8102	E-293B, E-293C, E-293D	41	RGS-PVC coated conduit	96.00	229.03	2367-5	1-Triad #16 with overall shield 600V, PVC Insulation
						2367-6	1-Triad #16 with overall shield 600V, PVC Insulation
						Pull rope	Soft-Fiber Polyester
8016	E-293, E-300	27	RGS-PVC coated conduit	144.00	229.03	2204-5	1-Triad #16 with overall shield 600V, PVC Insulation
						2204-6	1-Triad #16 with overall shield 600V, PVC Insulation
						2204-7	1-Triad #16 with overall shield 600V, PVC Insulation
						Pull rope	Soft-Fiber Polyester
8017	E-293, E-300	41	RGS-PVC coated conduit	274.00	534.55	2204-5	1-Triad #16 with overall shield 600V, PVC Insulation
						2204-6	1-Triad #16 with overall shield 600V, PVC Insulation
						2204-7	1-Triad #16 with overall shield 600V, PVC Insulation
						Pull rope	Soft-Fiber Polyester

MARK	DATE	REVISIONS DESCRIPTIONS	BY	CH'D	CCO#
△2	05/02/12	ELECTRICAL WARNING SYSTEMS	RR	RG	61
△1	01/07/11	ELECTRICAL WARNING SYSTEMS	TW	RG	61
△0	08/03/09	ELECTRICAL WARNING SYSTEMS	MP RR	RG FW	61

REQUEST FOR INFORMATION NOT ADDRESSED IN THIS CCO REMAIN IN FORCE

CONTRACT CHANGE ORDER NO. 61
SHEET 93 OF 104

DAVID H. OTO — REGISTERED PROFESSIONAL ENGINEER — No. 10699 — Exp. 06/30/2013 ELECTRICAL — STATE OF CALIFORNIA — △2 FOR REVISION ONLY

SYN YEE CHIN — REGISTERED PROFESSIONAL ENGINEER — No. 18186 — Exp. 09/30/2013 ELECTRICAL — STATE OF CALIFORNIA — △1 FOR REVISION ONLY

Metric

DIST	COUNTY	ROUTE	KILOMETER POST TOTAL PROJECT	SHEET No	TOTAL SHEETS
04	SF	80	13.2/13.9	401 S2R2	1204

10/01/08
REGISTERED ELECTRICAL ENGINEER DATE

FADI WALIEDDINE — REGISTERED PROFESSIONAL ENGINEER — No. 11465 — Exp. 12/31/2009 ELECTRICAL — STATE OF CALIFORNIA

PLANS APPROVAL DATE

PB POWER, Inc.
A Parsons Brinckerhoff Company
303 Second St., Suite 700N
San Francisco, CA 94107-1317

The State of California or its officers or agents shall not be responsible for the accuracy or completeness of electronic copies of this plan sheet.

Caltrans now has a web site! To get to the web site, go to http://www.dot.ca.gov

CONDUIT DATA

Conduit No	Reference	Size	Type	Total Fill (mm)	Allowable Fill (mm)	Included Cable No.	Conductor Type
8141	E-292, E-294	41	RGS-PVC coated conduit	203.95	414.28	2201-1	1-2/C + gnd #10, 600 V, EPR Insulation
						2201-1A	1-2/C #14, 600 V, EPR Insulation △1
8141A							
8142	E-292, E-294	41	RGS-PVC coated conduit	155.67	414.28	2336-5	1triad #16 with overall shield, 600V, PVC Insulation
				△1		2366-7	1triad #16 with overall shield, 600V, PVC Insulation
						Pull rope	Soft-Fiber Polyester
					△2	2366-6	1triad #16 with overall shield, 600V, PVC Insulation
8143	E-294, E-300	21	RGS-PVC coated conduit	102.61	185.01	2366-4	1-2/C + gnd #12, 600 V, EPR Insulation
				△2		Pull rope	Soft-Fiber Polyester
8144	E-292, E-294	41	RGS-PVC coated conduit	155.67	534.55		
						Pull rope	Soft-Fiber Polyester △1
						2366-5	1-Triad #16 with overall shield 600V, PVC Insulation
					△2	2366-6	1-Triad #16 with overall shield 600V, PVC Insulation
						2366-7	1-Triad #16 with overall shield 600V, PVC Insulation
8147	E-293C, E-293D	27	RGS-PVC coated conduit	103.78	177.49	2367-5	1-Triad #16 with overall shield 600V, PVC Insulation
				△2		2367-6	1-Triad #16 with overall shield 600V, PVC Insulation
						Pull rope	Soft-Fiber Polyester
8148	E-294	41 △2	RGS-PVC coated conduit	205.32 △2	414.28	2366-3	1-2/C + gnd #12, 600 V, EPR Insulation
						2366-4	1-2/C + gnd #12, 600 V, EPR Insulation
						Pull rope	Soft-Fiber Polyester

* Denotes existing conduit.

CONDUIT AND TRAY SCHEDULE

E-446B

REVISED BY | DATE REVISED
CALCULATED/ DESIGNED BY | DATE
CHECKED BY

DESIGN OVERSIGHT

STATE OF CALIFORNIA - DEPARTMENT OF TRANSPORTATION
Caltrans

LAST REVISION 00-00-00
DATE PLOTTED => 04-MAY-2012
TIME PLOTTED => 13:51

FOR REDUCED PLANS ORIGINAL SCALE IS IN MILLIMETERS 0 20 40 60 80

DGN FILE =>04-0120f1_0401S02R02.dgn
USERNAME =>llorico

CU 04251 | EA 0120F1

DIST	COUNTY	ROUTE	KILOMETER POST TOTAL PROJECT	SHEET No	TOTAL SHEETS
04	SF	80	13.2/13.9	405 R2	1204

REGISTERED ELECTRICAL ENGINEER — 2/6/04 DATE

12-6-04
PLANS APPROVAL DATE

JENS ERLINGSSON No. 8249 Exp. 9/30/06 ELECTRICAL — REGISTERED PROFESSIONAL ENGINEER — STATE OF CALIFORNIA

PB POWER, Inc.
A Parsons Brinckerhoff Company
303 Second St., Suite 700N
San Francisco, CA 94107-1317

The State of California or its officers or agents shall not be responsible for the accuracy or completeness of electronic copies of this plan sheet.

Caltrans now has a web site! To get to the web site, go to http://www.dot.ca.gov

REQUEST FOR INFORMATION NOT ADDRESSED IN THIS CCO REMAIN IN FORCE

MARK	DATE	REVISIONS	BY	CH'D	CCO#
2	05/02/12	ELECTRICAL WARNING SYSTEMS	RR	RG	61
1	03/01/11	BASE INTEGRATION	RSB	WB	150

CONTRACT CHANGE ORDER NO. 61
SHEET 94 OF 104

REGISTERED PROFESSIONAL ENGINEER — SYN YEE CHIN No. 18186 Exp. 09/30/2013 ELECTRICAL — STATE OF CALIFORNIA — 1

Syn Yee Chin
FOR REVISION ONLY

REGISTERED PROFESSIONAL ENGINEER — DAVID H. OTO No. 10699 Exp. 06/30/2013 ELECTRICAL — STATE OF CALIFORNIA — 2

David H. Oto
FOR REVISION ONLY

Metric

CONDUIT DATA (1)

Conduit No	Reference	Size	Type	Total Fill (mm²)	Allowable Fill (mm²)	Included Cable No.	Conductor Type
* 2471	E-186A, E-221C	103	RGS conduit	2403.42	2576.49	2473-10	50 pair #18, shielded pairs, IS/OS shield 600 V, XLPE insul., PVC jacket
						2474-10	50 pair #18, shielded pairs, IS/OS shield 600 V, XLPE insul., PVC jacket
* 2472	E-186A, E-221C	103	RGS conduit	323.65	4404.97	2475-3	72 Fiber, single mode fiber optic riser cable
* 2474	E-186A, E-221C	103	RGS conduit	3503.08	4404.97	2479-1	72 Fiber, single mode fiber optic riser cable inside brown innerduct
						Black Innerduct	25.4 mm Smoothwall black innerduct
						Blue Innerduct	25.4 mm Smoothwall blue innerduct
						White Innerduct	25.4 mm Smoothwall white innerduct
* 2491	E-186A, E-221C	103	RGS conduit	2628.48	3324.51	2391	3-1/C #4/0, 15 kV, EPR insulation
** 2493	Skyway Structure EB	103	RGS conduit	2628.48	3324.51	2391	3-1/C #4/0, 15 kV, EPR insulation
** 4858	Skyway Structure WB	78	RGS - PVC coated conduit	1201.71	2564.19	1473-10	50 pair #18, shielded pairs, IS/OS shield 600 V, XLPE insul., PVC jacket
** 5858	Skyway Structure EB	78	RGS - PVC coated conduit	1201.71	2564.19	2473-10	50 pair #18, shielded pairs, IS/OS shield 600 V, XLPE insul., PVC jacket
* 6501	E-101A, E-132C	103	RGS conduit	2628.48	3324.51	1391	3-1/C #4/0, 15 kV, EPR insulation
6502	E-101A, E-132C	103	Liquidtight flex metal conduit	2628.48	3275.44	1391	3-1/C #4/0, 15 kV, EPR insulation
** 6503	Skyway Structure WB	103	RGS conduit	2628.48	3324.51	1391	3-1/C #4/0, 15 kV, EPR insulation
6511	E-101A, E-132C	103	Liquidtight flex metal conduit	0.00	3275.44	Pull rope	Soft-fiber polyester
6512	E-101A, E-132C	103	Liquidtight flex metal conduit	0.00	3275.44	Pull rope	Soft-fiber polyester
6513	E-101A, E-132C	103	Liquidtight flex metal conduit	0.00	3275.44	Pull rope	Soft-fiber polyester
6514	E-101A, E-132C	103	Liquidtight flex metal conduit	0.00	3275.44	Pull rope	Soft-fiber polyester
* 6517	E-101A, E-132C	103	RGS conduit	2403.42	2576.49	1473-10	50 pair #18, shielded pairs, IS/OS shield 600 V, XLPE insul., PVC jacket
						1474-10	50 pair #18, shielded pairs, IS/OS shield 600 V, XLPE insul., PVC jacket
* 6518	E-101A, E-132C	103	RGS conduit	647.30	2576.49	1475-3	72 Fiber, single mode fiber optic riser cable
						1477-2	72 Fiber, single mode fiber optic riser cable
* 6520	E-101A, E-132C	103	RGS conduit	3503.08	4404.97	1479-2	72 Fiber, single mode fiber optic riser cable inside brown innerduct
						Black Innerduct	25.4 mm Smoothwall black innerduct
						Blue Innerduct	25.4 mm Smoothwall blue innerduct
						White Innerduct	25.4 mm Smoothwall white innerduct
2 * 6521	E-101A, E-132C	103	RGS conduit	126.68	4404.97	2366-12	1-3 pr #16 twisted shielded w/overall shield, 600V
6522	E-101A, E-132C	103	Liquidtight flex metal conduit	2403.42	2538.46	1473-10	50 pair #18, shielded pairs, IS/OS shield 600 V, XLPE insul., PVC jacket
						1474-10	50 pair #18, shielded pairs, IS/OS shield 600 V, XLPE insul., PVC jacket
6523	E-101A, E-132C	103	Liquidtight flex metal conduit	647.30	2538.46	1475-3	72 Fiber, single mode fiber optic riser cable
						1477-2	72 Fiber, single mode fiber optic riser cable
6524	E-101A, E-132C	103	Liquidtight flex metal conduit	0.00	3275.44	Pull rope	Soft-fiber polyester
6525	E-101A, E-132C	103	Liquidtight flex metal conduit	3503.08	4339.96	1479-2	72 Fiber, single mode fiber optic riser cable inside brown innerduct
						Black Innerduct	25.4 mm Smoothwall black innerduct
						Blue Innerduct	25.4 mm Smoothwall blue innerduct
						White Innerduct	25.4 mm Smoothwall white innerduct
6526	E-101A, E-132C	103	Liquidtight flex metal conduit	257.36 2	2538.46	2366-8	1-3 pr #16 twisted shielded w/overall shield, 600V
						2366-12	1-3 pr #16 twisted shielded w/overall shield, 600V
						Pull rope	Soft-fiber polyester

CONDUIT DATA

Conduit No	Reference	Size	Type	Total Fill (mm²)	Allowable Fill (mm²)	Included Cable No.	Conductor Type
7475	E-186A, E-221C	103	Liquidtight flex metal conduit	2403.42	2538.46	2473-10	50 pair #18, shielded pairs, IS/OS shield 600 V, XLPE insul., PVC jacket
						2474-10	50 pair #18, shielded pairs, IS/OS shield 600 V, XLPE insul., PVC jacket
7476	E-186A, E-221C	103	Liquidtight flex metal conduit	323.65	4339.96	2475-3	72 Fiber, single mode fiber optic riser cable
7477	E-186A, E-221C	103	Liquidtight flex metal conduit	0.00	3275.44	Pull rope	Soft-fiber polyester
7478	E-186A, E-221C	103	Liquidtight flex metal conduit	3503.08	4339.96	2479-1	72 Fiber, single mode fiber optic riser cable inside brown innerduct
						Black Innerduct	25.4 mm Smoothwall black innerduct
						Blue Innerduct	25.4 mm Smoothwall blue innerduct
						White Innerduct	25.4 mm Smoothwall white innerduct
7485	E-186A, E-221C	103	Liquidtight flex metal conduit	0.00	3275.44	Pull rope	Soft-fiber polyester
7486	E-186A, E-221C	103	Liquidtight flex metal conduit	0.00	3275.44	Pull rope	Soft-fiber polyester
7487	E-186A, E-221C	103	Liquidtight flex metal conduit	0.00	3275.44	Pull rope	Soft-fiber polyester
7488	E-186A, E-221C	103	Liquidtight flex metal conduit	0.00	3275.44	Pull rope	Soft-fiber polyester
7492	E-186A, E-221C	103	Liquidtight flex metal conduit	2628.48	3275.44	2391	3-1/C #4/0, 15 kV, EPR insulation
1T10	E-101A	305	152.4 mm siderail ladder tray	2628.48	8387.08	1391	3-1/C #4/0, 15 kV, EPR insulation

For continuation, see next sheet.

SHEET NOTES:

(1) (*) Conduit part of Pipe Beam, shown for information and cable routing. Contract 04-012024.

(**) Conduit in girder level, shown for information and cable routing. Contract 04-012024.

CONDUIT AND TRAY SCHEDULE

E-449A

DRAFT 1 (03/01/11)
STATE OF CALIFORNIA - DEPARTMENT OF TRANSPORTATION
Caltrans
DESIGN OVERSIGHT
BEHZAD GOLEMOHAMMADI
CALCULATED/ DESIGNED BY
CHECKED BY
PBP
DATE 1/04
REVISED BY
DATE REVISED
EJL 2/04
EJL 2/04

LAST REVISION 00-00-00
DATE PLOTTED => 04-MAY-2012
TIME PLOTTED => 13:51

FOR REDUCED PLANS ORIGINAL SCALE IS IN MILLIMETERS 0 20 40 60 80

DGN FILE =>04-0120f1_0405R02.dgn
USERNAME =>florico

CU 04251

EA 0120F1

CONDUIT DATA

Conduit No	Reference	Size	Type	Total Fill (mm^2)	Allowable Fill (mm^2)	Included Cable No.	Conductor Type
1T20	E-101A	610	152.4 mm siderail ladder tray	0.00	18064.08		
1T40	E-101A	305	152.4 mm siderail ladder tray	4055.17 2	8387.08	1473-10	50 pair #18, shielded pairs, IS/OS shield 600 V, XLPE insul., PVC jacket
						1474-10	50 pair #18, shielded pairs, IS/OS shield 600 V, XLPE insul., PVC jacket
						1477-2	72 Fiber, single mode fiber optic riser cable
						1475-3	72 Fiber, single mode fiber optic riser cable
						1479-2	72 Fiber, single mode fiber optic riser cable inside brown innerduct
					2	2366-12	1-3 pair #16 twisted shielded w/overall shield, 600V, PVC insulation
1T50	E-101A	610	152.4 mm siderail ladder tray	0.00	18064.08		
2T10	E-186A	305	152.4 mm siderail ladder tray	2628.48	8387.08	2391	3-1/C #4/0, 15 kV, EPR insulation
2T20	E-186A	610	152.4 mm siderail ladder tray	0.00	18064.08		
2T40	E-186A	305	152.4 mm siderail ladder tray	3602.84	8387.08	2473-10	50 pair #18, shielded pairs, IS/OS shield 600 V, XLPE insul., PVC jacket
						2474-10	50 pair #18, shielded pairs, IS/OS shield 600 V, XLPE insul., PVC jacket
						2475-3	72 Fiber, single mode fiber optic riser cable
						2479-1	72 Fiber, single mode fiber optic riser cable inside brown innerduct
2T50	E-186A	610	152.4 mm siderail ladder tray	0.00	18064.08		
** Conduit no. (see Project Note 8)	Skyway Structure WB	78	RGS conduit	1201.71	2564.19	1474-10	50 pair #18, shielded pairs, IS/OS shield 600 V, XLPE insul., PVC jacket
** Conduit no. (see Project Note 8)	Skyway Structure EB	78	RGS conduit	1201.71	2564.19	2474-10	50 pair #18, shielded pairs, IS/OS shield 600 V, XLPE insul., PVC jacket

REQUEST FOR INFORMATION NOT ADDRESSED IN THIS CCO REMAIN IN FORCE

MARK	DATE	REVISIONS	BY	CH'D	CCO#
2	05/02/12	ELECTRICAL WARNING SYSTEMS	RR	RG	61
1	03/01/11	BASE INTEGRATION	RSB	WB	150

CONTRACT CHANGE ORDER NO. 61
SHEET 95 OF 104

REGISTERED PROFESSIONAL ENGINEER — DAVID H. OTO — No. 10699 — Exp. 06/30/2013 ELECTRICAL — STATE OF CALIFORNIA — 2

FOR REVISION ONLY

REGISTERED PROFESSIONAL ENGINEER — SYN YEE CHIN — No. 18186 — Exp. 09/30/2013 ELECTRICAL — STATE OF CALIFORNIA — 1

FOR REVISION ONLY

Metric

DIST	COUNTY	ROUTE	KILOMETER POST TOTAL PROJECT	SHEET NO	TOTAL SHEETS
04	SF	80	13.2/13.9	406 R2	1204

REGISTERED ELECTRICAL ENGINEER — 2/6/04 DATE

REGISTERED PROFESSIONAL ENGINEER — JENS ERLINGSSON — No. 8249 — Exp. 9/30/06 ELECTRICAL — STATE OF CALIFORNIA

12-6-04
PLANS APPROVAL DATE

PB POWER, Inc.
A Parsons Brinckerhoff Company
303 Second St., Suite 700N
San Francisco, CA 94107-1317

The State of California or its officers or agents shall not be responsible for the accuracy or completeness of electronic copies of this plan sheet.

Caltrans now has a web site! To get to the web site, go to http://www.dot.ca.gov

SHEET NOTES:

1 (*) Conduit part of Pipe Beam, shown for information and cable routing. Contract 04-012024.

(**) Conduit in girder level, shown for information and cable routing. Contract 04-012024.

DESIGN OVERSIGHT — BEHZAD GOLEMOHAMMADI

CALCULATED/ DESIGNED BY — PBP
CHECKED BY — EJL
DATE 1/04 — 2/04
REVISED BY — EJL
DATE REVISED — 2/04

STATE OF CALIFORNIA - DEPARTMENT OF TRANSPORTATION
Caltrans

DRAFT 1 (03/01/11)

CONDUIT AND TRAY SCHEDULE

E-449B

LAST REVISION 00-00-00 — DATE PLOTTED => 04-MAY-2012 — TIME PLOTTED => 13:51

FOR REDUCED PLANS ORIGINAL SCALE IS IN MILLIMETERS 0 20 40 60 80

DGN FILE =>04-0120f1_0406R02.dgn
USERNAME =>llorico

CU 04251

EA 0120F1

DIST	COUNTY	ROUTE	KILOMETER POST TOTAL PROJECT	SHEET No	TOTAL SHEETS
04	SF	80	13.2/13.9	407 R8	1204

CONDUIT DATA

Conduit No	Reference	Size	Type	Total Fill (mm²)	Allowable Fill (mm²)	Included Cable No.	Conductor Type
3177A	E-264A	78	Liquidtight flex metal conduit	1281.36	1494.96	2119-B-1	1-3/C + gnd #1/0, 600V, EPR Insulation
						A-3057-1	1-3/C + gnd #2, 600V, EPR Insulation
3177B	E-264A	78	Liquidtight flex metal conduit	1804.65	1928.98	2119-B	3+1gnd, #250 kcmil, #1/0, 600V, EPR Insulation
						A-3057-1	1-3/C + gnd #2, 600V, EPR Insulation
3278A	E-264A	78	Liquidtight flex metal conduit	1870.61	1928.98	2123-2	1-3/C + gnd #2, 600V, EPR Insulation
						2123-3	1-3/C + gnd #2, 600V, EPR Insulation
						2910-11	1-3/C #16, 600V, EPR Insulation
						2123	1-3/C + gnd #1/0, 600V, EPR Insulation
3278B	E-264A	78	Liquidtight flex metal conduit	1870.61	1928.98	2123-2	1-3/C + gnd #2, 600V, EPR Insulation
						2123-3	1-3/C + gnd #2, 600V, EPR Insulation
						2910-11	1-3/C #16, 600V, EPR Insulation
						2123	1-3/C + gnd #1/0, 600V, EPR Insulation
3294A	E-264A	78	Liquidtight flex metal conduit	335.06	1494.96	Pull rope	Soft-fiber polyester
						GND	1-#250 kcmil, bare copper
						GND	1-#250 kcmil, bare copper
3294B	E-264A	78	Liquidtight flex metal conduit	335.06	1494.96	Pull rope	Soft-fiber polyester
						GND	1-#250 kcmil, bare copper
						GND	1-#250 kcmil, bare copper
3319A	E-264A	78	Liquidtight flex metal conduit	1508.36	1928.98	2121	1-3/C + gnd #1/0, 600V, EPR Insulation
						2120	1-3/C + gnd #1/0, 600V, EPR Insulation
3319B	E-264A	78	Liquidtight flex metal conduit	1508.36	1928.98	2121	1-3/C + gnd #1/0, 600V, EPR Insulation
						2120	1-3/C + gnd #1/0, 600V, EPR Insulation
3322A	E-264A	78	Liquidtight flex metal conduit	754.18	2555.90	2119-A-1	1-3/C + gnd #1/0, 600V, EPR Insulation
3322B	E-264A	78	Liquidtight flex metal conduit	1227.47	1928.98	2119-A	3+1gnd, #250 kcmil, #1/0, 600V, EPR Insulation
3330A	E-264A	78	Liquidtight flex metal conduit	0.00	1928.98	Pull rope	Soft-fiber polyester
3330B	E-264A	78	Liquidtight flex metal conduit	0.00	1928.98	Pull rope	Soft-fiber polyester
3339A	E-264A	78	Liquidtight flex metal conduit	754.18	2555.90	2125-A	1-3/C + gnd, #1/0, 600V, EPR Insulation
3339B	E-264A	78	Liquidtight flex metal conduit	1277.47	1928.98	2125	3+1gnd, #250 kcmil, #1/0, 600V, EPR Insulation
3348A	E-264A	78	Liquidtight flex metal conduit		1928.98	Pull rope	Soft-fiber polyester
3348B	E-264A	78	Liquidtight flex metal conduit		1928.98	Pull rope	Soft-fiber polyester
3349A	E-264A	78	Liquidtight flex metal conduit	496.22 (8)	1928.98	Pull rope	Soft-fiber polyester
						2120-1	1-2 pair #18 twisted shielded w/overall shield
						2121-1	1-2 pair #18 twisted shielded w/overall shield
						2204-8	1-3 pair #16 twisted shielded w/overall shield (8)
						2204-12	1-3 pair #16 twisted shielded w/overall shield
3349B	E-264A	78	Liquidtight flex metal conduit	496.22 (8)	1928.98	Pull rope	Soft-fiber polyester
						2120-1	1-2 pair #18 twisted shielded w/overall shield
						2121-1	1-2 pair #18 twisted shielded w/overall shield
						2204-8	1-3 pair #16 twisted shielded w/overall shield (8)
						2204-12	1-3 pair #16 twisted shielded w/overall shield
3359A	E-264A	78	Liquidtight flex metal conduit	457.88	1928.98	CCTVE01A	HCC
						MVDSE02A	MVDS DLC
						MVDSE03A	MVDS DLC
						CCTVE01B	HCC
3359B	E-264A	78	Liquidtight flex metal conduit	457.88	1928.98	CCTVE01A	HCC
						MVDSE02A	MVDS DLC
						MVDSE03A	MVDS DLC
						CCTVE01B	HCC

REQUEST FOR INFORMATION NOT ADDRESSED IN THIS CCO REMAIN IN FORCE

MARK	DATE	DESCRIPTIONS	BY	CH'D	CCO#
		REVISIONS			
8	05/02/12	ELECTRICAL WARNING SYSTEMS	RR	RG	61
7	12/21/11	ELECTRICAL CHANGES FOR ELEVATION 53 IMPROVEMENTS	TW	RG	190
6	11/07/11	PLATFORM MODIFICATIONS	RM	DO	206
5	07/01/11	TOS MODIFICATIONS	RR	RG	81
4	01/07/11	ELECTRICAL WARNING SYSTEMS	TW	RG	61
3	03/26/10	DEHUMIDIFIER SCADA INTERFACE	RR	RG FW	130
2	02/25/08	CABLE TRAY CHANGES	RG	SE	42S1
1	02/19/08	ELECTRICAL MODIFICATIONS	MP EL	RR	42

CONTRACT CHANGE ORDER NO. 101
SHEET 96 OF 104

Metric

12/19/02
REGISTERED ELECTRICAL ENGINEER DATE

JENS ERLINGSSON No. 8249 Exp. 9/30/06 ELECTRICAL — REGISTERED PROFESSIONAL ENGINEER — STATE OF CALIFORNIA

12-6-04
PLANS APPROVAL DATE

PB POWER, Inc.
A Parsons Brinckerhoff Company
303 Second St., Suite 700N
San Francisco, CA 94107-1317

The State of California or its officers or agents shall not be responsible for the accuracy or completeness of electronic copies of this plan sheet.

Caltrans now has a web site! To get to the web site, go to http://www.dot.ca.gov

DAVID H. OTO No. 10699 Exp. 06/30/2013 ELECTRICAL — REGISTERED PROFESSIONAL ENGINEER — STATE OF CALIFORNIA
FOR REVISION ONLY 6 7 8

SYN YEE CHIN No. 18186 Exp. 09/30/2011 ELECTRICAL — REGISTERED PROFESSIONAL ENGINEER — STATE OF CALIFORNIA
FOR REVISION ONLY 3 4 5

S. A. ESTOQUE, JR. No. E-10151 Exp. 12/31/2008 ELECTRICAL — REGISTERED PROFESSIONAL ENGINEER — STATE OF CALIFORNIA
FOR REVISION ONLY 1 2

CONDUIT DATA

Conduit No	Reference	Size	Type	Total Fill (mm²)	Allowable Fill (mm²)	Included Cable No.	Conductor Type
8011A	E-264A	78	Liquidtight flex metal conduit	1029.64	1928.98	Pull rope	Soft-fiber polyester
						1201-1	1-2/C + gnd #10, 600V, EPR Insulation
						1201-2	1-2/C + gnd #10, 600V, EPR Insulation
						1201-6	1-2/C + gnd #10, 600V, EPR Insulation
						1201-4A	1-2/C #14, 600V, EPR Insulation
						1201-4B	1-2/C #14, 600V, EPR Insulation
						1201-4C	1-2/C #14, 600V, EPR Insulation
						2204-2	1-3/C + gnd #14, 600V, EPR Insulation
						2204-1	1-3/C #14, 600V, EPR Insulation
						2204-9	1-3/C #14, 600V, EPR Insulation
						2204-10	1-3/C #14, 600V, EPR Insulation
						2204-11	1-3/C #14, 600V, EPR Insulation
8011B	E-264A	78	Liquidtight flex metal conduit	1029.64	1928.98	Pull rope	Soft-fiber polyester
						1201-1	1-2/C + gnd #10, 600V, EPR Insulation
						1201-2	1-2/C + gnd #10, 600V, EPR Insulation
						1201-6	1-2/C + gnd #10, 600V, EPR Insulation
						1201-4A	1-2/C #14, 600V, EPR Insulation
						1201-4B	1-2/C #14, 600V, EPR Insulation
						1201-4C	1-2/C #14, 600V, EPR Insulation
						2204-2	1-3/C + gnd #14, 600V, EPR Insulation
						2204-1	1-3/C #14, 600V, EPR Insulation
						2204-9	1-3/C #14, 600V, EPR Insulation
						2204-10	1-3/C #14, 600V, EPR Insulation
						2204-11	1-3/C #14, 600V, EPR Insulation
9057A	E-264A	78	Liquidtight flex metal conduit	415.45	1928.98	2910-12	4 pair #22, shielded pairs, 300V, PE Insulation
						2910-8	4 pair #22, shielded pairs, 300V, PE Insulation
						2910-7	4 pair #24, overall shielded, 300V, PE Insulation
						2119-2	4 pair #22, shielded pairs, 300V, PE Insulation
						2900-292A	4 pair #22, shielded pairs, FEP Insulation
9057B	E-264A	78	Liquidtight flex metal conduit	415.45	1928.98	2910-12	4 pair #22, shielded pairs, 300V, PE Insulation
						2910-8	4 pair #22, shielded pairs, 300V, PE Insulation
						2910-7	4 pair #24, overall shielded, 300V, PE Insulation
						2119-2	4 pair #22, shielded pairs, 300V, PE Insulation
						2900-292A	4 pair #22, shielded pairs, FEP Insulation
9057C	E-366	21	RGS - PVC coated conduit	62.07	187.69	2910-11	1-3/C #16, 600V, EPR Insulation

CONDUIT AND TRAY SCHEDULE E-449C

REVISED BY	DATE REVISED
EJL	JE
DATE 3/04	3/04

CALCULATED/DESIGNED BY — CHECKED BY

DESIGN OVERSIGHT — BEHZAD GOLEMOHAMMADI

STATE OF CALIFORNIA - DEPARTMENT OF TRANSPORTATION — Caltrans

LAST REVISION 12-21-11
DATE PLOTTED => 04-MAY-2012
TIME PLOTTED => 13:51

FOR REDUCED PLANS ORIGINAL SCALE IS IN MILLIMETERS 0 20 40 60 80

DGN FILE =>04-0120f1_0407R08.dgn
USERNAME =>florico

CU 04251 | EA 0120F1

DRAFT 1 (03/01/11)

STATE OF CALIFORNIA - DEPARTMENT OF TRANSPORTATION

Caltrans

DESIGN OVERSIGHT

CALCULATED/ DESIGNED BY

CHECKED BY

DATE

REVISED BY

DATE REVISED

CONDUIT DATA

Conduit No	Reference	Size	Type	Total Fill (mm²)	Allowable Fill (mm²)	Included Cable No.	Conductor Type
4211A	E-114B	78	RGS Conduit		1935.24	Pull rope	Soft-Fiber Polyester
4211B	E-114B	78	RGS Conduit		1935.24	Pull rope	Soft-Fiber Polyester
4211C	E-114B	78	RGS Conduit		1935.24	Pull rope	Soft-Fiber Polyester
4211D	E-114B	78	RGS Conduit	98.10	1935.24	Pull rope	Soft-Fiber Polyester
						1115-1	1-2PR #18 twisted shielded w/overall shield
4211E	E-114B	78	RGS Conduit		1935.24	Pull rope	Soft-Fiber Polyester
4211F	E-114B	78	RGS Conduit		1935.24	Pull rope	Soft-Fiber Polyester
4211G	E-114B	78	RGS Conduit		1935.24	Pull rope	Soft-Fiber Polyester
4211H	E-114B	78	RGS Conduit		1935.24	Pull rope	Soft-Fiber Polyester
4211J	E-114B	78	RGS Conduit		1935.24	Pull rope	Soft-Fiber Polyester
4211K	E-114B	78	RGS Conduit		1935.24	Pull rope	Soft-Fiber Polyester
4211L	E-114B	78	RGS Conduit		1935.24	Pull rope	Soft-Fiber Polyester
4211M	E-114B	78	RGS Conduit		1935.24	Pull rope	Soft-Fiber Polyester
4211N	E-114B	78	RGS Conduit		1935.24	Pull rope	Soft-Fiber Polyester
4211P	E-114B	78	RGS Conduit		1935.24	Pull rope	Soft-Fiber Polyester
4212A	E-116	78	RGS Conduit		1935.24	Pull rope	Soft-Fiber Polyester
4212B	E-116	78	RGS Conduit		1935.24	Pull rope	Soft-Fiber Polyester
4212C	E-116	78	RGS Conduit	4 208.67	1935.24	UP206-9	1-2/C + gnd #8, 600V, EPR Insulation
						Pull rope	Soft-Fiber Polyester
4212D	E-116	78	RGS Conduit		1935.24	Pull rope	Soft-Fiber Polyester
4212E	E-116	78	RGS Conduit		1935.24	Pull rope	Soft-Fiber Polyester
4212F	E-116	78	RGS Conduit		1935.24	Pull rope	Soft-Fiber Polyester
4212G	E-116	78	RGS Conduit	2627.31	2564.19	1479-1	72 Fiber, single mode fiber optic riser cable inside brown innerduct
						1479-2	72 Fiber, single mode fiber optic riser cable inside white innerduct
						2479-1	72 Fiber, single mode fiber optic riser cable inside black innerduct
4212H	E-116	78	RGS Conduit	2627.31	2564.19	1481-2	12 Fiber, single mode fiber optic cable inside white innerduct
						Brown Innerduct	25.4 mm Smoothwall brown innerduct
						Black Innerduct	25.4 mm Smoothwall black innerduct
4213A	E-114B	78	RGS Conduit	2627.31	2564.19	1481-2	12 Fiber, single mode fiber optic cable inside white innerduct
						Brown Innerduct	25.4 mm Smoothwall brown innerduct
						Black Innerduct	25.4 mm Smoothwall black innerduct
4213B	E-114B	78	RGS Conduit		1935.24	Pull rope	Soft-Fiber Polyester
4213C	E-114B	78	RGS Conduit	2627.31	2564.19	1479-1	72 Fiber, single mode fiber optic riser cable inside brown innerduct
						1479-2	72 Fiber, single mode fiber optic riser cable inside white innerduct
						Black Innerduct	25.4 mm Smoothwall black innerduct
4213D	E-114B	78	RGS Conduit		1935.24	Pull rope	Soft-Fiber Polyester
4213E	E-114B	78	RGS Conduit		1935.24	Pull rope	Soft-Fiber Polyester
4213F	E-114B	78	RGS Conduit		1935.24	Pull rope	Soft-Fiber Polyester
4213G	E-114B	78	RGS Conduit	77.07	1935.24	Pull rope	Soft-Fiber Polyester
						1202-3A	1-2/C #14, 600 V, EPR Insulation

REQUEST FOR INFORMATION NOT ADDRESSED IN THIS CCO REMAIN IN FORCE

MARK	DATE	REVISIONS DESCRIPTIONS	BY	CH'D	CCO#
4	05/02/12	BASE INTEGRATION	RR	RG	61
3	03/01/11	BASE INTEGRATION	RSB	WB	150
2	01/07/11	ELECTRICAL WARNING SYSTEMS	TW	RG	61
1	03/26/10	DEHUMIDIFIER SCADA INTERFACE	TW	RG SYC	130
0	03/30/09	SERVICE PLATFORM ELECTRICAL CHANGES	RR RY	RG MP	55

Metric

CONTRACT CHANGE ORDER NO. 61

SHEET 97 OF 104

REGISTERED PROFESSIONAL ENGINEER — DAVID H. OTO — No. 10699 — Exp. 06/30/2013 ELECTRICAL — STATE OF CALIFORNIA

4

FOR REVISION ONLY

REGISTERED PROFESSIONAL ENGINEER — SYN YEE CHIN — No. 18186 — Exp. 09/30/2013 ELECTRICAL — STATE OF CALIFORNIA

1 2 3

FOR REVISION ONLY

DIST	COUNTY	ROUTE	KILOMETER POST TOTAL PROJECT	SHEET No	TOTAL SHEETS
04	SF	80	13.2/13.9	407 S6R4	1204

6/12/08

REGISTERED ELECTRICAL ENGINEER DATE

REGISTERED PROFESSIONAL ENGINEER — FADI WALIEDDINE — No. 11465 — Exp. 12/31/2009 ELECTRICAL — STATE OF CALIFORNIA

PLANS APPROVAL DATE

PB AMERICAS, Inc.
A Parsons Brinckerhoff Company
303 Second St., Suite 700N
San Francisco, CA 94107-1317

The State of California or its officers or agents shall not be responsible for the accuracy or completeness of electronic copies of this plan sheet.

Caltrans now has a web site! To get to the web site, go to http://www.dot.ca.gov

CONDUIT DATA

Conduit No	Reference	Size	Type	Total Fill (mm)	Allowable Fill (mm)	Included Cable No.	Conductor Type
4213H	E-114B	78	RGS Conduit		1935.24	Pull rope	Soft-Fiber Polyester
4213J	E-114B	78	RGS Conduit		1935.24	Pull rope	Soft-Fiber Polyester
4213K	E-114B	78	RGS Conduit		1935.24	Pull rope	Soft-Fiber Polyester
4213L	E-114B	78	RGS Conduit		1935.24	Pull rope	Soft-Fiber Polyester
4213M	E-114B	78	RGS Conduit		1935.24	Pull rope	Soft-Fiber Polyester
4213N	E-114B	78	RGS Conduit		1935.24	Pull rope	Soft-Fiber Polyester
4213P	E-114B	78	RGS Conduit		1935.24	Pull rope	Soft-Fiber Polyester
4214A	E-117	78	RGS Conduit		1935.24	Pull rope	Soft-Fiber Polyester
4214B	E-117	78	RGS Conduit		1935.24	Pull rope	Soft-Fiber Polyester
4214C	E-117	78	RGS Conduit		1935.24	Pull rope	Soft-Fiber Polyester
4214D	E-117	78	RGS Conduit		1935.24	Pull rope	Soft-Fiber Polyester
4214E	E-117	78	RGS Conduit		1935.24	Pull rope	Soft-Fiber Polyester
4214F	E-117	53	RGS Conduit		1935.24	Pull rope	Soft-Fiber Polyester
4214G	E-117	78	RGS Conduit		1935.24	Pull rope	Soft-Fiber Polyester
4214H	E-117	78	RGS Conduit		1935.24	Pull rope	Soft-Fiber Polyester

CONDUIT AND TRAY SCHEDULE

E-449DB

LAST REVISION 00-00-00

DATE PLOTTED => 04-MAY-2012
TIME PLOTTED => 13:51

FOR REDUCED PLANS ORIGINAL SCALE IS IN MILLIMETERS 0 20 40 60 80

DGN FILE =>04-0120f1_0407S06R04.dgn
USERNAME =>llorico

CU 04251

EA 0120F1

CONDUIT DATA

Conduit No	Reference	Size	Type	Total Fill (mm²)	Allowable Fill (mm²)	Included Cable No.	Conductor Type
4215A	E-114B	78	RGS Conduit		1935.24	Pull rope	Soft-Fiber Polyester
4215B	E-114B	78	RGS Conduit		1935.24	Pull rope	Soft-Fiber Polyester
4215C	E-114B	78	RGS Conduit		1935.24	Pull rope	Soft-Fiber Polyester
4215D	E-114B	78	RGS Conduit		1935.24	Pull rope	Soft-Fiber Polyester
4215E	E-114B	78	RGS Conduit		1935.24	Pull rope	Soft-Fiber Polyester
4215F	E-114B	78	RGS Conduit		1935.24	Pull rope	Soft-Fiber Polyester
4215G	E-114B	78	RGS Conduit		1935.24	Pull rope	Soft-Fiber Polyester
4215H	E-114B	78	RGS Conduit		1935.24	Pull rope	Soft-Fiber Polyester
4215J	E-114B	78	RGS Conduit		1935.24	Pull rope	Soft-Fiber Polyester
4215K	E-114B	78	RGS Conduit		1935.24	Pull rope	Soft-Fiber Polyester
4215L	E-114B	78	RGS Conduit		1935.24	Pull rope	Soft-Fiber Polyester
4215M	E-114B	78	RGS Conduit		1935.24	Pull rope	Soft-Fiber Polyester
4215N	E-114B	78	RGS Conduit		1935.24	Pull rope	Soft-Fiber Polyester
4215P	E-114B	78	RGS Conduit		1935.24	Pull rope	Soft-Fiber Polyester
4216A	E-118	78	RGS Conduit		1935.24	Pull rope	Soft-Fiber Polyester
4216B	E-118	78	RGS Conduit		1935.24	Pull rope	Soft-Fiber Polyester
4216C	E-118	78	RGS Conduit		1935.24	Pull rope	Soft-Fiber Polyester
4216D	E-118	78	RGS Conduit		1935.24	Pull rope	Soft-Fiber Polyester
4216E	E-118	78	RGS Conduit		1935.24	Pull rope	Soft-Fiber Polyester
4216F	E-118	53	RGS Conduit		1935.24	Pull rope	Soft-Fiber Polyester
4216G	E-118	78	RGS Conduit	361.14 △3	1935.24	2366-5	1 triad #16 w/overall shield, 600V, PVC Insulation
						2366-7	1 triad #16 w/overall shield, 600V, PVC Insulation
					△3	2366-8	1-3pr #16 twisted shielded w/overall shield, 600V
						2366-12	1-3pr #16 twisted shielded w/overall shield, 600V
						Pull rope	Soft-Fiber Polyester
4216H	E-118	78	RGS Conduit	257.36 △3	1935.24	2204-8	1-3pr #16 twisted shielded w/overall shield, 600V
					△3	2204-12	1-3pr #16 twisted shielded w/overall shield, 600V
						Pull rope	Soft-Fiber Polyester
4217A	E-114B	78	RGS Conduit	98.10	1935.24	Pull rope	Soft-Fiber Polyester
						1117-1	1-2PR #18 twisted shielded w/overall shield
4217B	E-114B	78	RGS Conduit		1935.24	Pull rope	Soft-Fiber Polyester
4217C	E-114B	78	RGS Conduit	257.36 △3	1935.24	2366-8	1-3pr #16 twisted shielded w/overall shield, 600V
					△3	2366-12	1-3pr #16 twisted shielded w/overall shield, 600V
						Pull rope	Soft-Fiber Polyester
4217D	E-114B	78	RGS Conduit		1935.24	Pull rope	Soft-Fiber Polyester
4217E	E-114B	78	RGS Conduit		1935.24	Pull rope	Soft-Fiber Polyester
4217F	E-114B	78	RGS Conduit	203.95 △2	1499.81	Pull rope	Soft-Fiber Polyester
						2201-1	1-2/C + gnd #10, 600V, EPR Insulation
						2202-4A	1-2/C #14, 600V, EPR Insulation
4217G	E-114B	78	RGS Conduit		1935.24	Pull rope	Soft-Fiber Polyester

REQUEST FOR INFORMATION NOT ADDRESSED IN THIS CCO REMAIN IN FORCE

REVISIONS

MARK	DATE	DESCRIPTIONS	BY	CH'D	CCO#
△3	05/02/12	ELECTRICAL WARNING SYSTEMS	RR	RG	61
△2	01/07/11	ELECTRICAL WARNING SYSTEMS	TW	RG	61
△1	03/26/10	DEHUMIDIFIER SCADA INTERFACE	TW	RG SYC	130
△0	03/30/09	SERVICE PLATFORM ELECTRICAL CHANGES	RR RY	RG MP	55

CONTRACT CHANGE ORDER NO. 61
SHEET 98 OF 104

REGISTERED PROFESSIONAL ENGINEER — DAVID H. OTO — No. 10699 — Exp. 06/30/2013 ELECTRICAL — STATE OF CALIFORNIA

△3 FOR REVISION ONLY

REGISTERED PROFESSIONAL ENGINEER — SYN YEE CHIN — No. 18186 — Exp. 09/30/2011 ELECTRICAL — STATE OF CALIFORNIA

△1 △2 FOR REVISION ONLY

Metric

DIST	COUNTY	ROUTE	KILOMETER POST TOTAL PROJECT	SHEET NO	TOTAL SHEETS
04	SF	80	13.2/13.9	407 S7R3	1204

REGISTERED ELECTRICAL ENGINEER — 6/12/08 DATE

REGISTERED PROFESSIONAL ENGINEER — FADI WALIEDDINE — No. 11465 — Exp. 12/31/2009 ELECTRICAL — STATE OF CALIFORNIA

PLANS APPROVAL DATE

PB AMERICAS, Inc.
A Parsons Brinckerhoff Company
303 Second St., Suite 700N
San Francisco, CA 94107-1317

The State of California or its officers or agents shall not be responsible for the accuracy or completeness of electronic copies of this plan sheet.

Caltrans now has a web site! To get to the web site, go to http://www.dot.ca.gov

CONDUIT DATA

Conduit No	Reference	Size	Type	Total Fill (mm²)	Allowable Fill (mm²)	Included Cable No.	Conductor Type
4217H	E-114B	78	RGS Conduit		1935.24	Pull rope	Soft-Fiber Polyester
4217J	E-114B	78	RGS Conduit		1935.24	Pull rope	Soft-Fiber Polyester
4217K	E-114B	78	RGS Conduit		1935.24	Pull rope	Soft-Fiber Polyester
4217L	E-114B	78	RGS Conduit		1935.24	Pull rope	Soft-Fiber Polyester
4217M	E-114B	78	RGS Conduit		1935.24	Pull rope	Soft-Fiber Polyester
4217N	E-114B	78	RGS Conduit		1935.24	Pull rope	Soft-Fiber Polyester
4217P	E-114B	78	RGS Conduit		1935.24	Pull rope	Soft-Fiber Polyester
4223A	E-72A	41	RGS-PVC coated conduit	308.53	879.42	Pull rope	Soft-Fiber Polyester
						1098-2	4-1/C #4 + G, 600 V, RHH/RHW Insulation
4223B	E-72A	41	RGS-PVC coated conduit	262.68	879.42	Pull rope	Soft-Fiber Polyester
						1098-1	3/C #8 + G, 600 V, RHH/RHW Insulation
4223C	E-72A	41	RGS-PVC coated conduit		879.42	Pull rope	Soft-Fiber Polyester
4223D	E-72A	53	Liquidtight Flex. Metal Cond.		879.42	Pull rope	Soft-Fiber Polyester
4224A	E-72A	78	Liquidtight Flex. Metal Cond.		1935.24	Pull rope	Soft-Fiber Polyester
4225A	E-72A	78	Liquidtight Flex. Metal Cond.		1935.24	Pull rope	Soft-Fiber Polyester
4226A	E-72A	78	Liquidtight Flex. Metal Cond.		1935.24	Pull rope	Soft-Fiber Polyester

CONDUIT AND TRAY SCHEDULE

E-449DC

DATE REVISED | REVISED BY | DATE | CALCULATED/DESIGNED BY | CHECKED BY | DESIGN OVERSIGHT

STATE OF CALIFORNIA - DEPARTMENT OF TRANSPORTATION

LAST REVISION 00-00-00 — DATE PLOTTED => 04-MAY-2012 — TIME PLOTTED => 13:51

FOR REDUCED PLANS ORIGINAL SCALE IS IN MILLIMETERS 0 20 40 60 80

DGN FILE =>04-0120f1_0407S07R03.dgn
USERNAME =>llorico

CU 04251

EA 0120F1

DIST	COUNTY	ROUTE	KILOMETER POST TOTAL PROJECT	SHEET No	TOTAL SHEETS
04	SF	80	13.2/13.9	407 S9R3	1204

REGISTERED ELECTRICAL ENGINEER — 6/12/08 DATE

REGISTERED PROFESSIONAL ENGINEER — FADI WALIEDDINE No. 11465 Exp. 12/31/2009 ELECTRICAL — STATE OF CALIFORNIA

PLANS APPROVAL DATE

PB AMERICAS, Inc.
A Parsons Brinckerhoff Company
303 Second St., Suite 700N
San Francisco, CA 94107-1317

The State of California or its officers or agents shall not be responsible for the accuracy or completeness of electronic copies of this plan sheet.

Caltrans now has a web site! To get to the web site, go to http://www.dot.ca.gov

Metric

REGISTERED PROFESSIONAL ENGINEER — SYN YEE CHIN No. 18186 Exp. 09/30/2011 ELECTRICAL — STATE OF CALIFORNIA

Syn Yee Chin
FOR REVISION ONLY
1 2 3

REQUEST FOR INFORMATION NOT ADDRESSED IN THIS CCO REMAIN IN FORCE

MARK	DATE	DESCRIPTIONS	BY	CH'D	CCO#
		REVISIONS			
3	01/07/11	ELECTRICAL WARNING SYSTEMS	TW	RG	61
2	06/11/10	BIKE PATH CONDUIT	TW	RG	73
1	03/26/10	DEHUMIDIFIER SCADA INTERFACE	TW	RG SYC	130
0	03/30/09	SERVICE PLATFORM ELECTRICAL CHANGES	RR RY	RG FW	55

CONTRACT CHANGE ORDER NO. 61
SHEET 99 OF 104

CONDUIT DATA

Conduit No	Reference	Size	Type	Total Fill (mm²)	Allowable Fill (mm²)	Included Cable No.	Conductor Type
5212A	E-114A	78	RGS Conduit		1935.24	Pull rope	Soft-Fiber Polyester
5212B	E-114A	53	RGS Conduit		1935.24	Pull rope	Soft-Fiber Polyester
5212C	E-114A	53	RGS Conduit		1935.24	Pull rope	Soft-Fiber Polyester
5212D	E-114A	78	RGS Conduit		1935.24	Pull rope	Soft-Fiber Polyester
5212E	E-114A	78	RGS Conduit		1935.24	Pull rope	Soft-Fiber Polyester
5212F	E-114A	78	RGS Conduit	554.94	1499.81	Pull rope	Soft-Fiber Polyester
						LP219-2	1-2/C + gnd #6, 600 V, EPR Insulation
						LP219-4	1-2/C + gnd #6, 600 V, EPR Insulation
5212G	E-114A	78	RGS Conduit		1935.24	Pull rope	Soft-Fiber Polyester
5212H	E-114A	78	RGS Conduit		1935.24	Pull rope	Soft-Fiber Polyester
5212J	E-114A	78	RGS Conduit		1935.24	Pull rope	Soft-Fiber Polyester
5212K	E-114A	78	RGS Conduit		1935.24	Pull rope	Soft-Fiber Polyester
5212L	E-114A	78	RGS Conduit		1935.24	Pull rope	Soft-Fiber Polyester
5212M	E-114A	78	RGS Conduit		1935.24	Pull rope	Soft-Fiber Polyester
5212N	E-114A	78	RGS Conduit		1935.24	Pull rope	Soft-Fiber Polyester
5212P	E-114A	78	RGS Conduit		1935.24	Pull rope	Soft-Fiber Polyester
5212Q	E-114A	78	RGS Conduit		1935.24	Pull rope	Soft-Fiber Polyester
5212R	E-114A	78	RGS Conduit		1935.24	Pull rope	Soft-Fiber Polyester
5212S	E-114A	78	RGS Conduit		1935.24	Pull rope	Soft-Fiber Polyester
5212T	E-114A	78	RGS Conduit		1935.24	Pull rope	Soft-Fiber Polyester
5212U	E-114A	78	RGS Conduit		1935.24	Pull rope	Soft-Fiber Polyester
5214A	E-115	78	RGS Conduit		1935.24	Pull rope	Soft-Fiber Polyester
5214B	E-115	78	RGS Conduit		1935.24	Pull rope	Soft-Fiber Polyester
5214C	E-115	78	RGS Conduit		1935.24	Pull rope	Soft-Fiber Polyester
5214D	E-115	78	RGS Conduit		1935.24	Pull rope	Soft-Fiber Polyester
5215A	E-114B	78	RGS Conduit	196.20	1935.24	Pull rope	Soft-Fiber Polyester
						2120-1	1-2PR #18 twisted shielded w/overall shield
						2121-1	1-2PR #18 twisted shielded w/overall shield
5215B	E-114B	78	RGS Conduit		1935.24	Pull rope	Soft-Fiber Polyester
5215C	E-114B	53	RGS Conduit		1935.24	Pull rope	Soft-Fiber Polyester
5215D	E-114B	78	RGS Conduit		1935.24	Pull rope	Soft-Fiber Polyester
5215E	E-114B	78	RGS Conduit		1935.24	Pull rope	Soft-Fiber Polyester
5215F	E-114B	78	RGS Conduit	1174.15	1935.24	Pull rope	Soft-Fiber Polyester
						LP220-2	1-2/C + gnd #6, 600 V, EPR Insulation
						LP220-4	1-2/C + gnd #6, 600 V, EPR Insulation
						1201-1	1-2/C + gnd #10, 600 V, EPR Insulation
						1201-2	1-2/C + gnd #10, 600 V, EPR Insulation
						1201-6	1-2/C + gnd #10, 600 V, EPR Insulation
						1201-4A	1-2/C #14, 600 V, EPR Insulation
						1201-4B	1-2/C #14, 600 V, EPR Insulation
						1201-4C	1-2/C #14, 600 V, EPR Insulation
5215G	E-114B	78	RGS Conduit		1935.24	Pull rope	Soft-Fiber Polyester
5215H	E-114B	78	RGS Conduit		1935.24	Pull rope	Soft-Fiber Polyester

CONDUIT DATA

Conduit No	Reference	Size	Type	Total Fill (mm²)	Allowable Fill (mm²)	Included Cable No.	Conductor Type
5215J	E-114B	78	RGS Conduit		1935.24	Pull rope	Soft-Fiber Polyester
5215K	E-114B	78	RGS Conduit		1935.24	Pull rope	Soft-Fiber Polyester
5215L	E-114B	78	RGS Conduit		1935.24	Pull rope	Soft-Fiber Polyester
5215M	E-114B	78	RGS Conduit		1935.24	Pull rope	Soft-Fiber Polyester
5216A	E-116	78	RGS Conduit		1935.24	Pull rope	Soft-Fiber Polyester
5216B	E-116	78	RGS Conduit		1935.24	Pull rope	Soft-Fiber Polyester
5216C	E-116	78	RGS Conduit		1935.24	Pull rope	Soft-Fiber Polyester
5216D	E-116	78	RGS Conduit		1935.24	Pull rope	Soft-Fiber Polyester
5216E	E-116	78	RGS Conduit		1935.24	Pull rope	Soft-Fiber Polyester
5217A	E-114B	78	RGS Conduit		1935.24	Pull rope	Soft-Fiber Polyester
5217B	E-114B	78	RGS Conduit		1935.24	Pull rope	Soft-Fiber Polyester
5217C	E-114B	78	RGS Conduit		1935.24	Pull rope	Soft-Fiber Polyester
5217D	E-114B	78	RGS Conduit		1935.24	Pull rope	Soft-Fiber Polyester
5217E	E-114B	78	RGS Conduit		1935.24	Pull rope	Soft-Fiber Polyester
5217F	E-114B	78	RGS Conduit	738.73	1935.24	Pull rope	Soft-Fiber Polyester
						LP221-2	1-2/C + gnd #6, 600 V, EPR Insulation
						LP221-4	1-2/C + gnd #6, 600 V, EPR Insulation
						2202-3A	1-2/C #14, 600 V, EPR Insulation
						2202-1	1-2/C + gnd #10, 600 V, EPR Insulation
5217G	E-114B	78	RGS Conduit		1935.24	Pull rope	Soft-Fiber Polyester
5217H	E-114B	78	RGS Conduit		1935.24	Pull rope	Soft-Fiber Polyester
5217J	E-114B	78	RGS Conduit		1935.24	Pull rope	Soft-Fiber Polyester
5217K	E-114B	78	RGS Conduit		1935.24	Pull rope	Soft-Fiber Polyester
5217L	E-114B	78	RGS Conduit		1935.24	Pull rope	Soft-Fiber Polyester

CONDUIT AND TRAY SCHEDULE

E-449DE

DATE	REVISED BY	DATE REVISED
CALCULATED/ DESIGNED BY		
CHECKED BY		

DESIGN OVERSIGHT

STATE OF CALIFORNIA - DEPARTMENT OF TRANSPORTATION
Caltrans

FOR REDUCED PLANS ORIGINAL SCALE IS IN MILLIMETERS 0 20 40 60 80

DGN FILE =>04-0120f1_0407S09R03.dgn
USERNAME =>lorico

CU 04251 | EA 0120F1

LAST REVISION 00-00-00

DATE PLOTTED => 11-JAN-2011
TIME PLOTTED => 14:03

CONDUIT DATA

Conduit No	Reference	Size	Type	Total Fill (mm²)	Allowable Fill (mm²)	Included Cable No.	Conductor Type
5241A	E-73A, E-117	41	RGS-PVC coated conduit		534.55	Pull rope	Soft-Fiber Polyester
5241B	E-73A	41	RGS-PVC coated conduit		534.55	Pull rope	Soft-Fiber Polyester
5241C	E-73A, E-117	41	RGS-PVC coated conduit		534.55	Pull rope	Soft-Fiber Polyester
5241D	E-73A	53	Liquidtight Flex. Metal Cond.		879.42	Pull rope	Soft-Fiber Polyester
5241E	E-73A	41	RGS-PVC coated conduit		534.55	Pull rope	Soft-Fiber Polyester
5243A	E-73A, E-117	41	RGS-PVC coated conduit	308.53	879.42	Pull rope	Soft-Fiber Polyester
						2097-2	4-1/C #4 + G, 600 V, RHH/RHW Insulation
5243B	E-73A, E-117	41	RGS-PVC coated conduit	262.68	879.42	Pull rope	Soft-Fiber Polyester
						2097-1	3/C #8 + G, 600 V, RHH/RHW Insulation
5243C	E-73A, E-117	41	RGS-PVC coated conduit	476.76	879.42	Pull rope	Soft-Fiber Polyester
						2097-3	4-1/C #4 + G, 600 V, RHH/RHW Insulation
5243D	E-73A	53	Liquidtight Flex. Metal Cond.	624.31	879.42	Pull rope	Soft-Fiber Polyester
							1-4/C + G #2, 600V, EPR Insulation
5243E	E-73A	41	RGS-PVC coated conduit		534.55	Pull rope	Soft-Fiber Polyester
5244A	E-73A	53	Liquidtight Flex. Metal Cond.		879.42	Pull rope	Soft-Fiber Polyester
5245A	E-73A	78	Liquidtight Flex. Metal Cond.	643.07	1928.98	2202-2	1-3/C #14, 600 V, EPR Insulation (2)
						2202-1	1-2/C + gnd #10, 600 V, EPR Insulation (1) (2)
						2202-3A	1-2/C #14, 600 V, EPR Insulation
						2202-3	1-7/C #16, 600 V, EPR Insulation (2)
						UP206-9	1-2/C + gnd #8, 600 V, EPR Insulation
						Pull rope	Soft-Fiber Polyester
5246A	E-73A	41	Liquidtight Flex. Metal Cond.		534.55	Pull rope	Soft-Fiber Polyester
5247A	E-73A	78	Liquidtight Flex. Metal Cond.		1935.24	Pull rope	Soft-Fiber Polyester
5263A	E-74A	41	RGS-PVC coated conduit	308.53	534.55	Pull rope	Soft-Fiber Polyester
						2098-2	4-1/C #4 + G, 600 V, RHH/RHW Insulation
5263B	E-74A	41	RGS-PVC coated conduit	262.68	534.55	Pull rope	Soft-Fiber Polyester
						2098-1	3/C #8 + G, 600 V, RHH/RHW Insulation
5263C	E-74A	41	RGS-PVC coated conduit	476.76	534.55	Pull rope	Soft-Fiber Polyester
						2098-3	4-1/C #4 + G, 600 V, RHH/RHW Insulation
5263D	E-74A	53	Liquidtight Flex. Metal Cond.		879.42	Pull rope	Soft-Fiber Polyester
5263E	E-74A	41	RGS-PVC coated conduit		534.55	Pull rope	Soft-Fiber Polyester

REQUEST FOR INFORMATION NOT ADDRESSED IN THIS CCO REMAIN IN FORCE

MARK	DATE	DESCRIPTIONS	BY	CH'D	CCO#
		REVISIONS			
2	05/02/12	ELECTRICAL WARNING SYSTEMS	RR	RG	61
1	01/07/11	ELECTRICAL WARNING SYSTEMS	TW	RG	61
0	03/30/09	SERVICE PLATFORM ELECTRICAL CHANGES	RR RY	RG MP	55

CONTRACT CHANGE ORDER NO. 01
SHEET 100 OF 104

REGISTERED PROFESSIONAL ENGINEER — DAVID H. OTO — No. 10699 — Exp. 06/30/2013 ELECTRICAL — STATE OF CALIFORNIA
(2)
FOR REVISION ONLY

REGISTERED PROFESSIONAL ENGINEER — SYN YEE CHIN — No. 18186 — Exp. 09/30/2011 ELECTRICAL — STATE OF CALIFORNIA
(1)
FOR REVISION ONLY

Metric

DIST	COUNTY	ROUTE	KILOMETER POST TOTAL PROJECT	SHEET No	TOTAL SHEETS
04	SF	80	13.2/13.9	407 511R2	1204

REGISTERED ELECTRICAL ENGINEER — 6/12/08 DATE

REGISTERED PROFESSIONAL ENGINEER — FADI WALIEDDINE — No. 11465 — Exp. 12/31/2009 ELECTRICAL — STATE OF CALIFORNIA

PLANS APPROVAL DATE

PB AMERICAS, Inc.
A Parsons Brinckerhoff Company
303 Second St., Suite 700N
San Francisco, CA 94107-1317

The State of California or its officers or agents shall not be responsible for the accuracy or completeness of electronic copies of this plan sheet.

Caltrans now has a web site! To get to the web site, go to http://www.dot.ca.gov

CONDUIT DATA

Conduit No	Reference	Size	Type	Total Fill (mm)	Allowable Fill (mm)	Included Cable No.	Conductor Type
5264A	E-74A	53	Liquidtight Flex. Metal Cond.		879.42	Pull rope	Soft-Fiber Polyester
5265A	E-74A	41	RGS-PVC coated conduit		534.55	Pull rope	Soft-Fiber Polyester
5265B	E-74A	41	RGS-PVC coated conduit		534.55	Pull rope	Soft-Fiber Polyester
5265C	E-74A	41	RGS-PVC coated conduit		534.55	Pull rope	Soft-Fiber Polyester
5265D	E-74A	53	Liquidtight Flex. Metal Cond.		879.42	Pull rope	Soft-Fiber Polyester
5265E	E-74A	41	RGS-PVC coated conduit		534.55	Pull rope	Soft-Fiber Polyester
5266A	E-74A	78	Liquidtight Flex. Metal Cond.		1935.24	Pull rope	Soft-Fiber Polyester
5270A	E-74A	41	Liquidtight Flex. Metal Cond.		534.55	Pull rope	Soft-Fiber Polyester
5271A	E-74A	41	Liquidtight Flex. Metal Cond.		534.55	Pull rope	Soft-Fiber Polyester

CONDUIT AND TRAY SCHEDULE

E-449DG

DATE	REVISED BY	DATE REVISED
CALCULATED/ DESIGNED BY		CHECKED BY
DRAWN BY		

STATE OF CALIFORNIA - DEPARTMENT OF TRANSPORTATION — DESIGN OVERSIGHT

Caltrans

FOR REDUCED PLANS ORIGINAL SCALE IS IN MILLIMETERS 0 20 40 60 80

DGN FILE =>04-0120f1_0407S11R02.dgn
USERNAME =>llorico

CU 04251 | EA 0120F1

LAST REVISION 00-00-00 | DATE PLOTTED => 04-MAY-2012 | TIME PLOTTED => 13:51

CONDUIT DATA

Conduit No	Reference E-75A	Size	Type	Total Fill (mm²)	Allowable Fill (mm²)	Included Cable No.	Conductor Type
5272A	E-74A	78	Liquidtight Flex. Metal Cond.		1935.24	Pull rope	Soft-Fiber Polyester
5273A	E-74A	78	Liquidtight Flex. Metal Cond.		1935.24	Pull rope	Soft-Fiber Polyester
5283A	E-75A	41	RGS-PVC coated conduit	308.53	879.42	Pull rope	Soft-Fiber Polyester
						2098-2	4-1/C #4 + G, 600 V, RHH/RHW Insulation
5283B	E-75A	41	RGS-PVC coated conduit	262.68	879.42	Pull rope	Soft-Fiber Polyester
						2098-1	3/C #8 + G, 600 V, RHH/RHW Insulation
5283C	E-75A	41	RGS-PVC coated conduit	476.76	879.42	Pull rope	Soft-Fiber Polyester
						2098-3	4-1/C #4 + G, 600 V, RHH/RHW Insulation
5283D	E-75A	53	Liquidtight Flex. Metal Cond.		879.42	Pull rope	Soft-Fiber Polyester
5283E	E-75A	41	Liquidtight Flex. Metal Cond.		534.55	Pull rope	Soft-Fiber Polyester
5284A	E-75A	53	RGS-PVC coated conduit		879.42	Pull rope	Soft-Fiber Polyester
5285A	E-75A, E-118	41	Liquidtight Flex. Metal Cond.		534.55	Pull rope	Soft-Fiber Polyester
5285B	E-75A	41	RGS-PVC coated conduit		534.55	Pull rope	Soft-Fiber Polyester
5285C	E-75A, E-118	41	RGS-PVC coated conduit		534.55	Pull rope	Soft-Fiber Polyester
5285D	E-75A	53	Liquidtight Flex. Metal Cond.		879.42	Pull rope	Soft-Fiber Polyester
5285E	E-75A	41	RGS-PVC coated conduit		534.55	Pull rope	Soft-Fiber Polyester
5286A	E-75A	78	Liquidtight Flex. Metal Cond.		1935.42	Pull rope	Soft-Fiber Polyester
5289A	E-75A	41	Liquidtight Flex. Metal Cond.		534.55	Pull rope	Soft-Fiber Polyester
5290A	E-75A	53	Liquidtight Flex. Metal Cond.	676.50	837.71	Pull rope	Soft-Fiber Polyester
						1474-8A	1-6 pair, shield #18 with overall shld, 600, PVC jacket
						1474-8B	1-6 pair, shield #18 with overall shld, 600, PVC jacket
						2474-8A	1-6 pair, shield #18 with overall shld, 600, PVC jacket
						2474-8B	1-6 pair, shield #18 with overall shld, 600, PVC jacket
						GFR	#2, bare copper wire, stranded
5300A	E-114B	78	RGS Conduit	747.86 (5)	1935.24	1118-1	1-2PR #18 twisted shielded w/overall shield
						2148	1-2PR, shielded #18 with IS/OA, 600V, PVC jacket
					(5)	2149	1-2PR, shielded #18 with IS/OA, 600V, PVC jacket
						2150	1-2PR, shielded #18 with IS/OA, 600V, PVC jacket
						2154	1-2PR, shielded #18 with IS/OA, 600V, PVC jacket
						2204-8	1-3PR #16 twisted shielded w/overall shield
						2204-12	1-3PR #16 twisted shielded w/overall shield
						Pull rope	Soft-Fiber Polyester

REQUEST FOR INFORMATION NOT ADDRESSED IN THIS CCO REMAIN IN FORCE

MARK	DATE	DESCRIPTIONS	BY	CH'D	CCO#
		REVISIONS			
5	05/02/12	ELECTRICAL WARNING SYSTEMS	RR	RG	61
4	03/24/11	BIKE PATH CONDUIT	TW	RG	73
3	01/07/11	ELECTRICAL WARNING SYSTEMS	TW	RG	61
2	06/11/10	BIKE PATH CONDUIT	TW	RG	73
1	03/26/10	DEHUMIDIFIER SCADA INTERFACE	TW	RG SYC	130
0	03/30/09	SERVICE PLATFORM ELECTRICAL CHANGES	RR RY	RG MP	55

CONTRACT CHANGE ORDER NO. 61
SHEET 101 OF 104

REGISTERED PROFESSIONAL ENGINEER — DAVID H. OTO — No. 10699 — Exp. 06/30/2013 ELECTRICAL — STATE OF CALIFORNIA (5)

REGISTERED PROFESSIONAL ENGINEER — SYN YEE CHIN — No. 18186 — Exp. 09/30/2011 ELECTRICAL — STATE OF CALIFORNIA (1 2 3 4)

FOR REVISION ONLY FOR REVISION ONLY

CONDUIT DATA

Conduit No	Reference	Size	Type	Total Fill (mm²)	Allowable Fill (mm²)	Included Cable No.	Conductor Type
5300B	E-114B	78	RGS Conduit		1935.24	Pull rope	Soft-Fiber Polyester
5300C	E-114B	78	RGS Conduit		1935.24	Pull rope	Soft-Fiber Polyester
5300D	E-114B	78	RGS Conduit		1935.24	Pull rope	Soft-Fiber Polyester
5300E	E-114B	78	RGS Conduit		1935.24	Pull rope	Soft-Fiber Polyester
5300F	E-114B	78	RGS Conduit	534.78	1499.81	Pull rope	Soft-Fiber Polyester
						2201-2	1-2/C + gnd #10, 600 V, EPR Insulation
						2201-6	1-2/C + gnd #10, 600 V, EPR Insulation
						2201-4B	1-2/C #14, 600 V, EPR Insulation
						2201-4C	1-2/C #14, 600 V, EPR Insulation
5300G	E-114B	78	RGS Conduit		1935.24	Pull rope	Soft-Fiber Polyester
5300H	E-114B	78	RGS Conduit		1935.24	Pull rope	Soft-Fiber Polyester
5300J	E-114B	78	RGS Conduit		1935.24	Pull rope	Soft-Fiber Polyester
5300K	E-114B	78	RGS Conduit		1935.24	Pull rope	Soft-Fiber Polyester
5300L	E-114B	78	RGS Conduit		1935.24	Pull rope	Soft-Fiber Polyester
5300M	E-114B	78	RGS Conduit		1935.24	Pull rope	Soft-Fiber Polyester
5300N	E-114B	78	RGS Conduit		1935.24	Pull rope	Soft-Fiber Polyester
5300P	E-114B	78	RGS Conduit	562.30	1499.81	Pull rope	Soft-Fiber Polyester
						LP223-2,4	1-3/C + gnd #6, 600 V, EPR Insulation
						LP223-6,8	1-3/C + gnd #6, 600 V, EPR Insulation

Metric

DIST	COUNTY	ROUTE	KILOMETER POST TOTAL PROJECT	SHEET No	TOTAL SHEETS
04	SF	80	13.2/13.9	407 S12R5	1204

REGISTERED ELECTRICAL ENGINEER — 6/12/08 DATE

REGISTERED PROFESSIONAL ENGINEER — FADI WALIEDDINE — No. 11465 — Exp. 12/31/2009 ELECTRICAL — STATE OF CALIFORNIA

PLANS APPROVAL DATE

PB AMERICAS, Inc.
A Parsons Brinckerhoff Company
303 Second St., Suite 700N
San Francisco, CA 94107-1317

The State of California or its officers or agents shall not be responsible for the accuracy or completeness of electronic copies of this plan sheet.

Caltrans now has a web site! To get to the web site, go to http://www.dot.ca.gov

DATE | REVISED BY | DATE REVISED
CALCULATED/ DESIGNED BY
CHECKED BY
DESIGN OVERSIGHT
STATE OF CALIFORNIA - DEPARTMENT OF TRANSPORTATION
Caltrans

CONDUIT AND TRAY SCHEDULE E-449DH

LAST REVISION 00-00-00 | DATE PLOTTED => 04-MAY-2012 | TIME PLOTTED => 13:51

FOR REDUCED PLANS ORIGINAL SCALE IS IN MILLIMETERS 0 20 40 60 80

DGN FILE =>04-0120f1_0407S12R05.dgn
USERNAME =>florico

CU 04251 | EA 0120F1

DRAFT 1 (03/01/11)

STATE OF CALIFORNIA - DEPARTMENT OF TRANSPORTATION

Caltrans

DESIGN OVERSIGHT XXXXXXXXX

CALCULATED/ DESIGNED BY XXX | CHECKED BY XXX

DATE XXX | REVISED BY XXX | DATE REVISED XXX

CONDUIT DATA

Conduit No	Reference	Size	Type	Total Fill (mm²)	Allowable Fill (mm²)	Included Cable No.	Conductor Type
1T4WA	E-71, E-71A	203	203x203mm stainless steel wireway		8387.08		
1T4WA1	E-71, E71A	203	203x203mm stainless steel wireway		8387.08		
1T4WB	E-71, E71A	150	152x152 mm stainless steel wireway		4193.54		
1T4WB1	E-71, E71A	150	152x152 mm stainless steel wireway		4193.54		
1T5WA	E-72, E-72A	203	203x203mm stainless steel wireway		8387.08		
1T5WA1	E-72, E-72A	203	203x203mm stainless steel wireway		8387.08		
1T5WB	E-72, E-72A	150	152x152 mm stainless steel wireway		4193.54		
1T5WB1	E-72, E-72A	150	152x152 mm stainless steel wireway		4193.54		
1T6WA	E-73, E-73A	203	203x203mm stainless steel wireway	417.34 /2	8387.08 /2	UP106-15	1-2/C + gnd #8, 600V, EPR Insulation
						UP206-9	1-2/C + gnd #8, 600V, EPR Insulation
1T6WA1	E-73, E-73A	203	203x203mm stainless steel wireway		8387.08		
1T6WB	E-73, E-73A	150	152x152 mm stainless steel wireway	1001.14	4193.54	1479-1	72 Fiber, single mode fiber optic riser cable
						1479-2	72 Fiber, single mode fiber optic riser cable
						1481-2	12 Fiber, single mode fiber optic cable
						2479-1	72 Fiber, single mode fiber optic riser cable
1T6WB1	E-73, E-73A	150	152x152 mm stainless steel wireway	1001.14	4193.54	1479-1	72 Fiber, single mode fiber optic riser cable
						1479-2	72 Fiber, single mode fiber optic riser cable
						1481-2	12 Fiber, single mode fiber optic cable
						2479-1	72 Fiber, single mode fiber optic riser cable
1T7WA	E-74, E-74A	203	203x203mm stainless steel wireway		8387.08		
1T7WA1	E-74, E-74A	203	203x203mm stainless steel wireway		8387.08		
1T7WB	E-74, E-74A	150	152x152 mm stainless steel wireway		4193.54		
1T7WB1	E-74, E-74A	150	152x152 mm stainless steel wireway		4193.54		
1T8WA	E-75, E-75A	203	203x203mm stainless steel wireway		8387.08		
1T8WA1	E-75, E-75A	203	203x203mm stainless steel wireway		8387.08		
1T8WB	E-75, E-75A	150	152x152 mm stainless steel wireway	257.36 /2	4193.54	2204-12	1-3 pair #16, twisted shielded w/overall shield 600V, PVC Insulation
					/2	2366-12	1-3 pair #16, twisted shielded w/overall shield 600V, PVC Insulation
1T8WB1	E-75, E-75A	150	152x152 mm stainless steel wireway	257.36 /2	4193.54	2204-12	1-3 pair #16, twisted shielded w/overall shield 600V, PVC Insulation
						2366-12	1-3 pair #16, twisted shielded w/overall shield 600V, PVC Insulation
2T4EA	E-71, E-71A	203	203x203mm stainless steel wireway		8387.08		
2T4EA1	E-71, E-71A	203	203x203mm stainless steel wireway		8387.08		
2T4EB	E-71, E-71A	150	152x152 mm stainless steel wireway		4193.54		
2T4EB1	E-71, E-71A	150	152x152 mm stainless steel wireway		4193.54		

REQUEST FOR INFORMATION NOT ADDRESSED IN THIS CCO REMAIN IN FORCE

MARK	DATE	REVISIONS DESCRIPTIONS	BY	CH'D	CCO#
2	05/02/12	ELECTRICAL WARNING SYSTEMS	RR	RG	61
1	03/01/11	BASE INTEGRATION	RSB	WB	150
0	03/30/09	SERVICE PLATFORM ELECTRICAL CHANGES	RR RY	RG MP	55

CONTRACT CHANGE ORDER NO. 61
SHEET 102 OF 104

REGISTERED PROFESSIONAL ENGINEER — DAVID H. OTO — No. 10699 — Exp. 06/30/2013 ELECTRICAL — STATE OF CALIFORNIA — 2

REGISTERED PROFESSIONAL ENGINEER — SYN YEE CHIN — No. 18186 — Exp. 09/30/2011 ELECTRICAL — STATE OF CALIFORNIA — 1

FOR REVISION ONLY FOR REVISION ONLY

Metric

DIST	COUNTY	ROUTE	KILOMETER POST TOTAL PROJECT	SHEET No	TOTAL SHEETS
04	SF	80	13.2/13.9	407 S13R2	1204

REGISTERED ELECTRICAL ENGINEER — 6/12/08 DATE

REGISTERED PROFESSIONAL ENGINEER — FADI WALIEDDINE — No. 11465 — Exp. 12/31/2009 ELECTRICAL — STATE OF CALIFORNIA

PLANS APPROVAL DATE

PB AMERICAS, Inc.
A Parsons Brinckerhoff Company
303 Second St., Suite 700N
San Francisco, CA 94107-1317

The State of California or its officers or agents shall not be responsible for the accuracy or completeness of electronic copies of this plan sheet.

Caltrans now has a web site! To get to the web site, go to http://www.dot.ca.gov

CONDUIT DATA

Conduit No	Reference	Size	Type	Total Fill (mm)	Allowable Fill (mm)	Included Cable No.	Conductor Type
2T5EA	E-72, E-72A	203	203x203mm stainless steel wireway		8387.08		
2T5EA1	E-72, E-72A	203	203x203mm stainless steel wireway		8387.08		
2T5EB	E-72, E-72A	150	152x152 mm stainless steel wireway		4193.54		
2T5EB1	E-72, E-72A	150	152x152 mm stainless steel wireway		4193.54		
2T6EA	E-73, E-73A	203	203x203mm stainless steel wireway	208.67 /2	8387.08	UP206-9	1-2/C + gnd #8, 600V, EPR Insulation /2
2T6EA1	E-73, E-73A	203	203x203mm stainless steel wireway		8387.08		
2T6EB	E-73, E-73A	150	152x152 mm stainless steel wireway		4193.54		
2T6EB1	E-73, E-73A	150	152x152 mm stainless steel wireway		4193.54		
2T7EA	E-74, E-74A	203	203x203mm stainless steel wireway		8387.08		
2T7EA1	E-74, E-74A	203	203x203mm stainless steel wireway		8387.08		
2T7EB	E-74, E-74A	150	152x152 mm stainless steel wireway		4193.54		
2T7EB1	E-74, E-74A	150	152x152 mm stainless steel wireway		4193.54		
2T8EA	E-75, E-75A	203	203x203mm stainless steel wireway		8387.08		
2T8EA1	E-75, E-75A	203	203x203mm stainless steel wireway		8387.08		
2T8EB	E-75, E-75A	150	152x152 mm stainless steel wireway		4193.54		
2T8EB1	E-75, E-75A	150	152x152 mm stainless steel wireway		4193.54		

CONDUIT AND TRAY SCHEDULE

E-449DJ

LAST REVISION 00-00-00 — DATE PLOTTED => 04-MAY-2012 — TIME PLOTTED => 13:51

FOR REDUCED PLANS ORIGINAL SCALE IS IN MILLIMETERS 0 20 40 60 80

DGN FILE =>04-0120f1_0407S13R02.dgn
USERNAME =>llorico

CU 04251 | EA 0120F1

DIST	COUNTY	ROUTE	KILOMETER POST TOTAL PROJECT	SHEET No	TOTAL SHEETS
04	SF	80	13.2/13.9	407 S14R2	1204

REGISTERED ELECTRICAL ENGINEER — 6/12/08 DATE

PLANS APPROVAL DATE

PB AMERICAS, Inc.
A Parsons Brinckerhoff Company
303 Second St., Suite 700N
San Francisco, CA 94107-1317

FADI WALIEDDINE No. 11465 Exp. 12/31/2009 ELECTRICAL — REGISTERED PROFESSIONAL ENGINEER — STATE OF CALIFORNIA

The State of California or its officers or agents shall not be responsible for the accuracy or completeness of electronic copies of this plan sheet.

Caltrans now has a web site! To get to the web site, go to http://www.dot.ca.gov

Metric

MARK	DATE	DESCRIPTIONS	BY	CH'D	CCO#
		REVISIONS			
2	05/02/12	ELECTRICAL WARNING SYSTEMS	RR	RG	61
1	01/07/11	ELECTRICAL WARNING SYSTEMS	TW	RG	61
0	03/30/09	SERVICE PLATFORM ELECTRICAL CHANGES	RR RY	RG MP	55

REQUEST FOR INFORMATION NOT ADDRESSED IN THIS CCO REMAIN IN FORCE

CONTRACT CHANGE ORDER NO. 61
SHEET 103 OF 104

SYN YEE CHIN No. 18186 Exp. 09/30/2013 ELECTRICAL — REGISTERED PROFESSIONAL ENGINEER — STATE OF CALIFORNIA (1)
Syn Yee Chin
FOR REVISION ONLY

DAVID H. OTO No. 10699 Exp. 06/30/2013 ELECTRICAL — REGISTERED PROFESSIONAL ENGINEER — STATE OF CALIFORNIA (2)
David H. Oto
FOR REVISION ONLY

CONDUIT DATA

Conduit No	Reference	Size	Type	Total Fill (mm²)	Allowable Fill (mm²)	Included Cable No.	Conductor Type
0T24	E-114	610	152.4 mm siderail ladder tray		16774.16		
1T24A	E-114, E-114A	610	152.4 mm siderail ladder tray		16774.16		
2T24A	E-114, E-114A	610	152.4 mm siderail ladder tray		16774.16		
2T24B	E-114A	610	152.4 mm siderail ladder tray		16774.16		
0T25	E-115 (1)	610	152.4 mm siderail ladder tray		16774.16		
1T25A	E-114B, E-115	610	152.4 mm siderail ladder tray		16774.16		
1T25B	E-114B	610	152.4 mm siderail ladder tray		16774.16		
2T25A	E-115, E-118	610	152.4 mm siderail ladder tray		16774.16		
2T25B	E-115, E-118	610	152.4 mm siderail ladder tray		16774.16		
0T26	E-116	610	152.4 mm siderail ladder tray	208.67	16774.16	UP206-9	1-2/c + gnd #8, 600V, EPR Insulation (2)
1T26A	E-116	610	152.4 mm siderail ladder tray	208.67 (2)	16774.16	UP206-9	1-2/c + gnd #8, 600V, EPR Insulation
1T26B	E-114B	610	152.4 mm siderail ladder tray		16774.16		(2)
2T26A	E-114B, E-116	610	152.4 mm siderail ladder tray	208.67 (2)	16774.16	UP206-9	1-2/c + gnd #8, 600V, EPR Insulation (2)
2T26B	E-114B	610	152.4 mm siderail ladder tray		16774.16		
0T27	E-117	610	152.4 mm siderail ladder tray		16774.16		
1T27A	E-117	610	152.4 mm siderail ladder tray		16774.16		
1T27B	E-114B	610	152.4 mm siderail ladder tray		16774.16		
2T27A	E-114B, E-117	610	152.4 mm siderail ladder tray		16774.16		
2T27B	E-114B	610	152.4 mm siderail ladder tray		16774.16		

CONDUIT DATA

Conduit No	Reference	Size	Type	Total Fill (mm)	Allowable Fill (mm)	Included Cable No.	Conductor Type
0T28	E-118	610	152.4 mm siderail ladder tray		16774.16		
1T28A	E-114B, E-118	610	152.4 mm siderail ladder tray		16774.16		
1T28B	E-114B	610	152.4 mm siderail ladder tray		16774.16		
2T28A	E-114B, E-118	610	152.4 mm siderail ladder tray		16774.16		
2T28B	E-114B	610	152.4 mm siderail ladder tray		16774.16		
0T44	E-114	610	152.4 mm siderail ladder tray		16774.16		
1T44A	E-114, E-114A	610	152.4 mm siderail ladder tray		16774.16		
1T44B	E-114B	610	152.4 mm siderail ladder tray		16774.16		
2T44A	E-114, E-114A,B	610	152.4 mm siderail ladder tray		16774.16		
2T44B	E-114A,E-114B	610	152.4 mm siderail ladder tray		16774.16		

CONDUIT AND TRAY SCHEDULE

E-449DK

REVISED BY	DATE REVISED
XXX	XXX
XXX	XXX
DATE XXX	XXX
XXX	XXX
CALCULATED/ DESIGNED BY	CHECKED BY
DESIGN OVERSIGHT	XXXXXXXXXXX

STATE OF CALIFORNIA - DEPARTMENT OF TRANSPORTATION
Caltrans

FOR REDUCED PLANS ORIGINAL SCALE IS IN MILLIMETERS 0 20 40 60 80

DGN FILE =>04-0120f1_0407S14R02.dgn
USERNAME =>llorico

CU 04251

EA 0120F1

LAST REVISION 00-00-00
DATE PLOTTED => 04-MAY-2012
TIME PLOTTED => 13:51

DIST	COUNTY	ROUTE	KILOMETER POST TOTAL PROJECT	SHEET No	TOTAL SHEETS
04	SF	80	13.2/13.9	407 S15R2	1204

REGISTERED ELECTRICAL ENGINEER — 6/12/08 DATE

PLANS APPROVAL DATE

REGISTERED PROFESSIONAL ENGINEER — FADI WALIEDDINE No. 11465 Exp. 12/31/2009 ELECTRICAL — STATE OF CALIFORNIA

PB AMERICAS, Inc.
A Parsons Brinckerhoff Company
303 Second St., Suite 700N
San Francisco, CA 94107-1317

The State of California or its officers or agents shall not be responsible for the accuracy or completeness of electronic copies of this plan sheet.

Caltrans now has a web site! To get to the web site, go to http://www.dot.ca.gov

Metric

MARK	DATE	DESCRIPTIONS	BY	CH'D	CCO#
		REVISIONS			
2	05/02/12	ELECTRICAL WARNING SYSTEMS	RR	RG	61
1	03/01/11	BASE INTEGRATION	RSB	WB	150
0	03/30/09	SERVICE PLATFORM ELECTRICAL CHANGES	RR RY	RG MP	55

REQUEST FOR INFORMATION NOT ADDRESSED IN THIS CCO REMAIN IN FORCE

CONTRACT CHANGE ORDER NO. 61
SHEET 104 OF 104

REGISTERED PROFESSIONAL ENGINEER — DAVID H. OTO No. 10699 Exp. 06/30/2013 ELECTRICAL — STATE OF CALIFORNIA — 2

FOR REVISION ONLY

REGISTERED PROFESSIONAL ENGINEER — SYN YEE CHIN No. 18186 Exp. 09/30/2011 ELECTRICAL — STATE OF CALIFORNIA — 1

FOR REVISION ONLY

CONDUIT DATA

Conduit No	Reference	Size	Type	Total Fill (mm²)	Allowable Fill (mm²)	Included Cable No.	Conductor Type
0T45	E-115	610	152.4 mm siderail ladder tray		16774.16		
1T45A	E-114B, E-115	610	152.4 mm siderail ladder tray		16774.16		
1T45B	E-114B	610	152.4 mm siderail ladder tray		16774.16		
2T45	E-114B	610	152.4 mm siderail ladder tray		16774.16		
2T45A	E-114B, E-115	610	152.4 mm siderail ladder tray		16774.16		
2T45B	E-114B	610	152.4 mm siderail ladder tray		16774.16		
0T46	E-116	610	152.4 mm siderail ladder tray	875.77	16774.16	2479-1	72 Fiber, single mode fiber optic riser cable inside brown innerduct
1T46A	E-114A, E-116	610	152.4 mm siderail ladder tray	3503.08	16774.16	1479-1	72 Fiber, single mode fiber optic riser cable inside brown innerduct
						1479-2	72 Fiber, single mode fiber optic riser cable inside brown innerduct
						1481-2	12 Fiber, single mode fiber optic cable inside brown innerduct
						2479-1	72 Fiber, single mode fiber optic riser cable inside brown innerduct
1T46B	E-114,E-114A,B	610	152.4 mm siderail ladder tray	2627.31	16774.16	1479-1	72 Fiber, single mode fiber optic riser cable inside brown innerduct
						1479-2	72 Fiber, single mode fiber optic riser cable inside brown innerduct
						1481-2	12 Fiber, single mode fiber optic cable inside brown innerduct
2T46A	E-114B, E-116	610	152.4 mm siderail ladder tray	875.77	16774.16	2479-1	72 Fiber, single mode fiber optic riser cable inside brown innerduct
2T46B	E-114	610	152.4 mm siderail ladder tray	875.77	16774.16	2479-1	72 Fiber, single mode fiber optic riser cable inside brown innerduct
0T47	E-117	610	152.4 mm siderail ladder tray		16774.16		
1T47A	E-117	610	152.4 mm siderail ladder tray		16774.16		
1T47B	E-114	610	152.4 mm siderail ladder tray		16774.16		
2T47A	E-114B, E-117	610	152.4 mm siderail ladder tray		16774.16		
2T47B	E-114B	610	152.4 mm siderail ladder tray		16774.16		
0T48	E-118	610	152.4 mm siderail ladder tray	128.68	16774.16	2204-12	1-3 pair #16, twisted shielded with overall shield 600V, PVC Insulation
1T48A	E-118	610	152.4 mm siderail ladder tray	128.68	16774.16	2204-12	1-3 pair #16, twisted shielded with overall shield 600V, PVC Insulation
2T48A	E-114B, E-118	610	152.4 mm siderail ladder tray	128.68	16774.16	2204-12	1-3 pair #16, twisted shielded with overall shield 600V, PVC Insulation
2T48B	E-118	610	152.4 mm siderail ladder tray	128.68	16774.16	2204-12	1-3 pair #16, twisted shielded with overall shield 600V, PVC Insulation

CONDUIT DATA

Conduit No	Reference	Size	Type	Total Fill (mm)	Allowable Fill (mm)	Included Cable No.	Conductor Type

CONDUIT AND TRAY SCHEDULE

E-449DL

DATE	REVISED BY	CALCULATED/ DESIGNED BY	CHECKED BY
XXX	XXX	XXX	XXX
XXX	XXX	XXX	XXX

DESIGN OVERSIGHT — BEHZAD GOLEMOHAMMADI

STATE OF CALIFORNIA - DEPARTMENT OF TRANSPORTATION

Gibbons

DRAFT 1 (03/01/11)

FOR REDUCED PLANS ORIGINAL SCALE IS IN MILLIMETERS 0 20 40 60 80

DGN FILE =>04-0120f1_0407S15R02.dgn
USERNAME =>florico

CU 04251

EA 0120F1

LAST REVISION 00-00-00

DATE PLOTTED => 04-MAY-2012
TIME PLOTTED => 13:51

CONTRACT CHANGE ORDER

Change Requested by: Engineer

CCO: 62 **Suppl. No. 0** **Contract No. 04 – 0120F4** **Road** SF-80-13.2/13.9 **FED. AID LOC.:**

To: **AMERICAN BRIDGE/FLUOR ENTERPRISES INC A JOINT VENTURE**

You are directed to make the following changes from the plans and specifications or do the following described work not included in the plans and specifications for this contract. ***NOTE: This change order is not effective until approved by the Engineer.***

Description of work to be done, estimate of quantities and prices to be paid. (Segregate between additional work at contract price, agreed price and force account.) Unless otherwise stated, rates for rental of equipment cover only such time as equipment is actually used and no allowance will be made for idle time. This last percentage shown is the net accumulated increase or decrease from the original quantity in the Engineer's Estimate.

Adjustment of Compensation at Lump Sum Price:

ITEM 1.

Incorporate into the work the tower shaft and splice details shown on sheets 2 through 10 of this change order. The following revised contract plan sheets detail all changes: 539R3, 543R2, 544R2, 546R3, 548R2, 549R2, 551R2, 553R3 and 554R2 (of 1204).

This change order resolves the costs associated with Contractor Request For Information (RFI) Nos. 215, 478, 618, 618R1, 708, 708R1, 826, 995, 1028, 1047, 1054, 1145, 1149, 1149R1, 1254, 1327 and 1333 with respect to changes listed above.

For this work, the Contractor will receive a lump sum price of $241,251.00. This sum constitutes full and complete compensation for furnishing all labor, material, tools and incidentals including all markups by reason of this change.

Adjustment of Compensation at Lump Sum Price..... $241,251.00

ITEM 2.

The items identified above in this change order have been paid as part of CCO 108 resolution. Therefore, the amount due under this change order will be adjusted by the amount paid under CCO 108 to prevent a double payment. Total amount paid under CCO 108, and to be credited to this change, is $241,251.00.

Adjustment of Compensation at Lump Sum Price.....<$241,251.00>

CHANGE ORDER COST AND TIME SUMMARY

(ITEM 1) Adjustment of Compensation for work pursuant to this change order	$241,251.00
(ITEM 2) Amount paid under CCO 108 for this change order	<$241,251.00>
Total net pay for this change order	$0.00

Contract time is addressed in CCO 108 for all work identified in this change order. Therefore contract time will not be adjusted in this change order.

Estimated Cost: **Increase** ☐ **Decrease** ☐ **$ 0.00**

By reason of this order the time of completion will be adjusted as follows: 0 days

Submitted by

Signature Mark Woods **Resident Engineer** Mark Woods for Gary Pursell, Sup.T.E. **Date** 10 Feb 2010

Approval Recommended by

Signature Gary Pursell **Supervising Transportation Engineer** Gary Pursell, Sup.T.E. **Date** 2/10/10

Engineer Approval by

Signature Gary Pursell **Supervising Transportation Engineer** Gary Pursell, Sup.T.E. **Date** 2/23/10

We the undersigned contractor, have given careful consideration to the change proposed and agree, if this proposal is approved, that we will provide all equipment, furnish the materials, except as otherwise be noted above, and perform all services necessary for the work above specified, and will accept as full payment therefor the prices shown above.

NOTE: If you, the contractor, do not sign acceptance of this order, your attention is directed to the requirements of the specifications as to proceeding with the ordered work and filing a written protest within the time therein specified.

Contractor Acceptance by

Signature Michael D. Flowers **(Print name and title)** Michael D. Flowers Project Director **Date** 2-22-10

DIST	COUNTY	ROUTE	KILOMETER POST TOTAL PROJECT	SHEET NO.	TOTAL SHEETS
04	SF	80	13.2/13.9	539R3	1204

REGISTERED ENGINEER - CIVIL
12-6-04
PLANS APPROVAL DATE

T.Y. LIN / MOFFATT & NICHOL
825 BATTERY STREET
SAN FRANCISCO, CA 94111

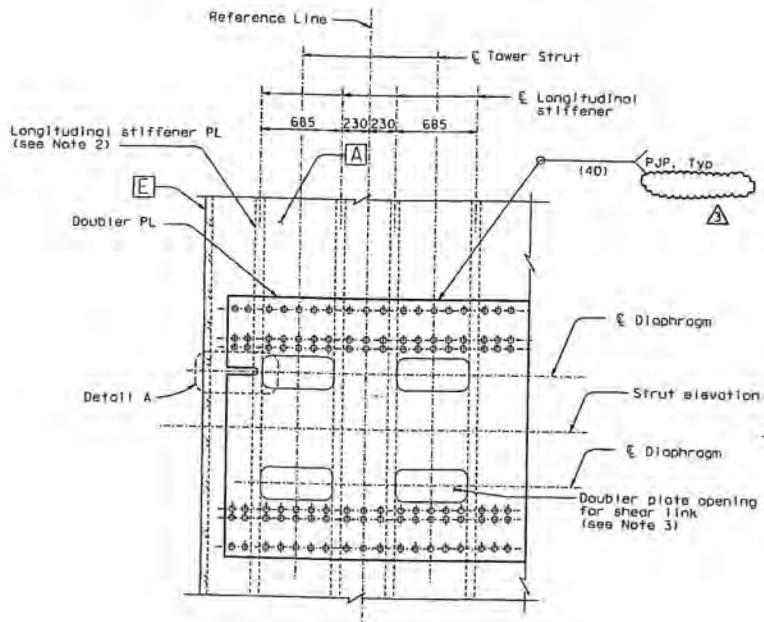

FOR STRUTS TYPE 1 AND TYPE 2
(Tower shaft opening for strut type 1 shown, strut type 2 similar)

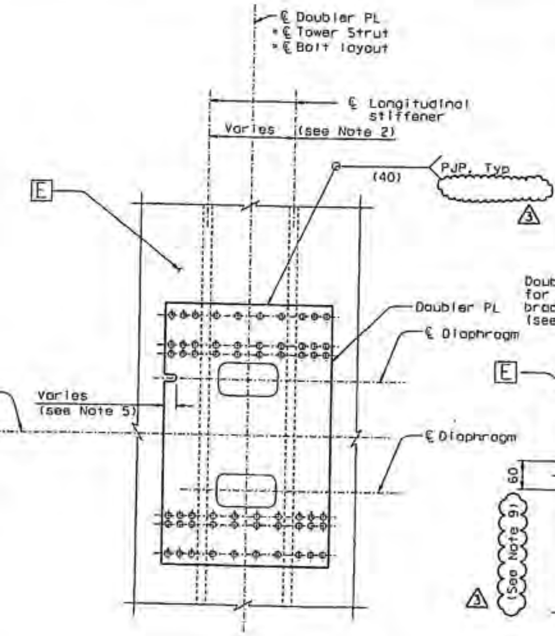

FOR STRUTS TYPE 3

BOLT LAYOUT (See Note 7 and 8)
1:20

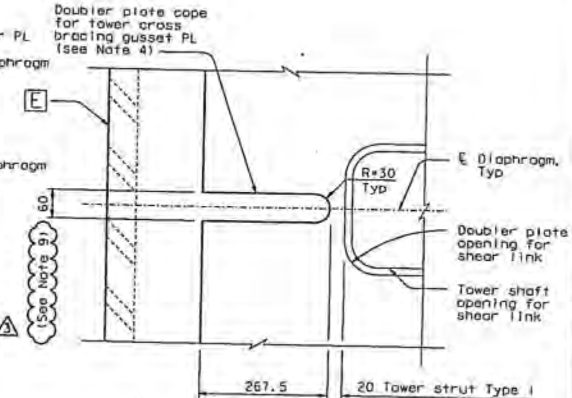

DETAIL A
1:5

LEGEND:

⊕ M24 A325-X HS Bolts

NOTES:

1. For doubler plate details, see "Tower Shaft Details No. 10" sheet.
2. For longitudinal stiffener spacing and size, see "Tower Shaft Details No. 3" and "Tower Shaft Details No. 7" sheets.
3. Seal weld all around doubler plate opening. For details, see "Tower Shaft Details No. 10" sheet.
4. Doubler plate cope is only located at tower cross bracing elevations. For tower cross bracing details, see "Tower Strut Details No. 9" sheet.
5. Cope doubler plate as necessary to accommodate cross bracing gusset plate.
6. Bolts for tower strut connection not shown for clarity. For tower strut connection details, see "Tower Strut Details" sheets.
7. For bolt layout, see "Tower Strut Facade Details" sheet.
8. For Reference Line definition, see "Tower Strut Facade Details" sheets.
9. At the Contractor's option and subject to the approval of the Engineer, cope width may be enlarged to facilitate installation of gusset plate to skin plate, provided that the enlarged cope is filled with insert plates joined by CJP welds to the doubler plate and the gusset plate.

REQUESTS FOR INFORMATION NOT ADDRESSED IN THIS CCO REMAIN IN FORCE

MARK	DATE	DESCRIPTIONS	BY	CH'D	CCO#
3	01/25/08	TOWER DOUBLER PLATE & SPLICE CORNER DETAILS	MN	HV	62
2	10/29/07	DOUBLER PLATE SEAL WELD	MN	HV	21
1	06/23/06	DOUBLER PLATE SEAL WELD	MN	HV	21

REVISIONS

CONTRACT CHANGE ORDER NO. 62
SHEET 2 OF 10

R. Valizadeh/V. Toan/Y.L./M.L./F.C.
DESIGN OVERSIGHT
SIGN OFF DATE 01/29/08
Rev. Date: 5-18-05

DESIGN	BY M. Nader	CHECKED M. Gulyas
DETAILS	BY L. Rus	CHECKED M. Gulyas
QUANTITIES	BY L. Rus	CHECKED Y. Zhang

ORIGINAL SCALE IN MILLIMETERS FOR REDUCED PLANS

PREPARED FOR THE
STATE OF CALIFORNIA
DEPARTMENT OF TRANSPORTATION

R. Manzanarez
PROJECT ENGINEER

ALL DIMENSIONS ARE IN MILLIMETERS UNLESS OTHERWISE SHOWN

BRIDGE NO. 34-0006L/R
KILOMETER POST 13.2/13.9

CU 04
EA 0120F1

DISREGARD PRINTS BEARING EARLIER REVISION DATES

SAN FRANCISCO OAKLAND BAY BRIDGE
EAST SPAN SEISMIC SAFETY PROJECT
SELF-ANCHORED SUSPENSION BRIDGE
(SUPERSTRUCTURE & TOWER)

TOWER SHAFT DETAILS NO. 11

SHEET 122R3

FILE => L:\88\04-0120\SAS\Contract Plans and CCO\CCO\In Progress\CCO#62\DGN\ont1012a.dgn

100 % PS&E

TIME PLOTTED => 09:18:18
DATE PLOTTED => 25 JUL 2008

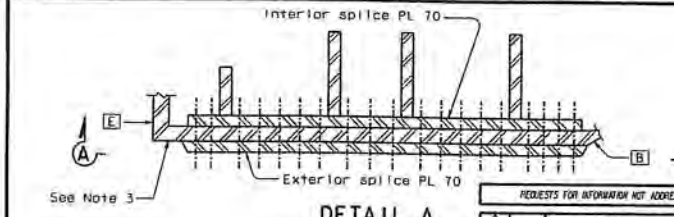

DETAIL A
1:15

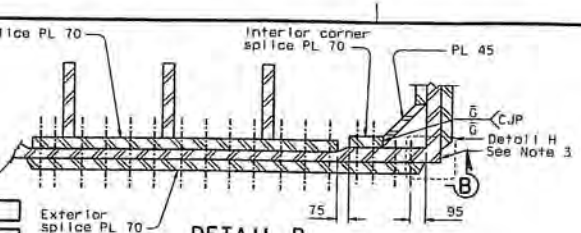

DETAIL B
1:15

REQUESTS FOR INFORMATION NOT ADDRESSED IN THIS CCO REMAIN IN FORCE				
2	08/15/08	LOWER CORNER PLATE & SPLICE CORNER DETAILS	MN	NV	62
1	05/21/08	SPLICE PLATES PER ISM	MN	NV	21
MARK	DATE	DESCRIPTIONS	BY	CH'D	CCO#
REVISIONS					

CONTRACT CHANGE ORDER NO. 82
SHEET 3 OF 10

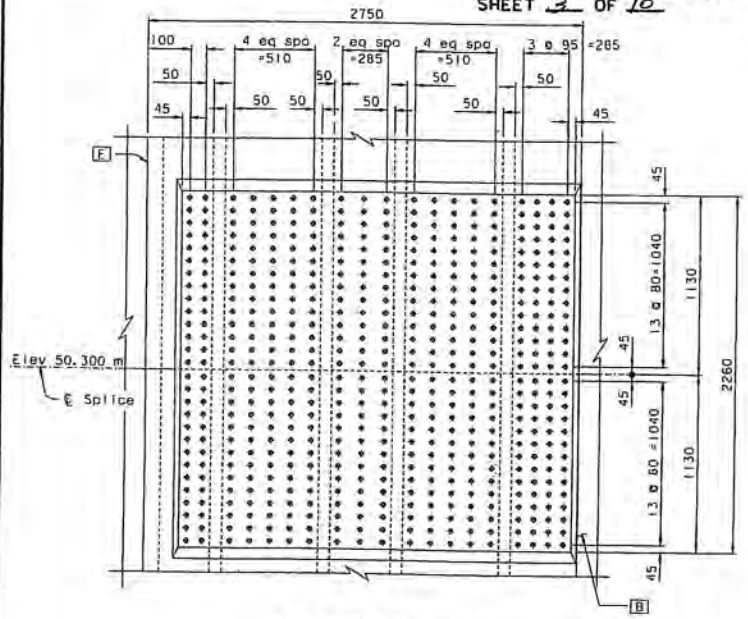

ELEVATION A-A
1:15

TOWER SKIN PLATE A

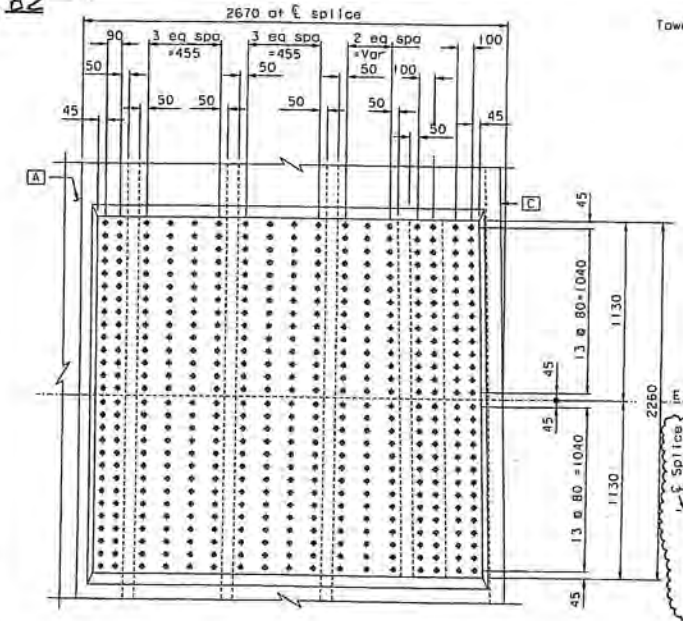

ELEVATION B-B
1:15

TOWER SKIN PLATE B

LEGEND:

⊕ M27 A490-X HS Bolts

+ 12 Dia cap screw drilled in tapped hole

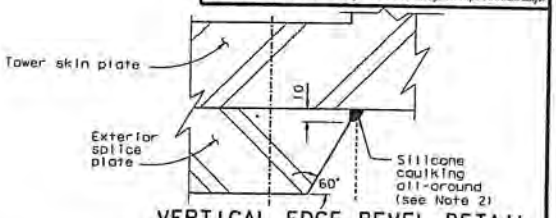

VERTICAL EDGE BEVEL DETAIL
(Typical all exterior splice plates)

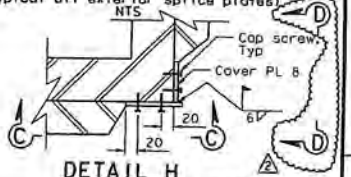

DETAIL H
NTS

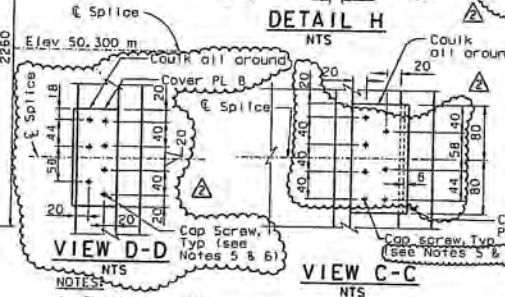

VIEW D-D
NTS

VIEW C-C
NTS

2 5. Whenever it is not practicable to have two screw rows, stagger the screw pattern using 3 bolts may be used subject to the approval of the Engineer.

6. Wherever it is not practicable to have cap screws, the cover plate shall be fillet seal welded to the splice plate.

NOTES:

1. The tower splice connections are designed as slip critical connections with class B contact surface (slip coefficient 0.5). The Contractor shall ensure that the flatness requirements are met at the faying surfaces.
2. Silicone caulk sealing shall be applied around the perimeter (horizontal and vertical edges) of all exterior splice plates.
3. Skin plate splice seam not covered by exterior splice plate shall be covered by cover plate and secured by cap screws with 8 mm all-around silicone caulk sealing (see Detail H). Corner CD is shown in Detail H. Corners AB, BC, DE and EA similar.
4. Elevation view of adjacent skin plate not shown for clarity.

DIST.	COUNTY	ROUTE	KILOMETER POST TOTAL PROJECT	SHEET NO.	TOTAL SHEETS
04	SF	80	13.2/13.9	543R2	1204

REGISTERED ENGINEER - CIVIL
12-6-04
PLANS APPROVAL DATE
The State of California or its officers or agents shall not be responsible for the accuracy or completeness of electronic copies of this plan sheet.
Marwan N. Nader, No. C 054426, Exp. 12/31/08, CIVIL, STATE OF CALIFORNIA, REGISTERED PROFESSIONAL ENGINEER

T.Y. LIN / MOFFATT & NICHOL
825 BATTERY STREET
SAN FRANCISCO, CA 94111

Caltrans now has a web site! To get to the web site, go to: http://www.dot.ca.gov

ALL DIMENSIONS ARE IN MILLIMETERS UNLESS OTHERWISE SHOWN

R. Vallzadeh/V. Tan/Y.L./N.L./F.C.
DESIGN OVERSIGHT
Ryan Vallz/Vanyi Tan/Y. Liu
SIGN OFF DATE 08/15/08
Rev. Date: 3-18-98

	BY	CHECKED
DESIGN:	M. Nader	M. Gulyas
DETAILS:	J. Lopez	N. Va
QUANTITIES:	J. Lopez	Y. Zhang

PREPARED FOR THE STATE OF CALIFORNIA
DEPARTMENT OF TRANSPORTATION

R. Manzanarez
PROJECT ENGINEER

CU 04
EA 0120F1

BRIDGE NO. 34-0006L/R
KILOMETER POST 13.2/13.9

SAN FRANCISCO OAKLAND BAY BRIDGE
EAST SPAN SEISMIC SAFETY PROJECT
SELF-ANCHORED SUSPENSION BRIDGE
(SUPERSTRUCTURE & TOWER)

TOWER SPLICE DETAILS NO. 4

DISREGARD PRINTS BEARING EARLIER REVISION DATES →

REVISION DATES (PRELIMINARY STAGE ONLY)

SHEET 12812

ORIGINAL SCALE IN MILLIMETERS FOR REDUCED PLANS 0 10 20 30 40 50 60 70 80 90 100

FILE => I:\SD\04-012001\sas\contract plans and cad\cad\in progress\cco+82\dgn\dets04.dgn

USERNAME => dwinrow DATE PLOTTED => 13 SEP 2008 TIME PLOTTED => 15:42:01

100 % PAPER

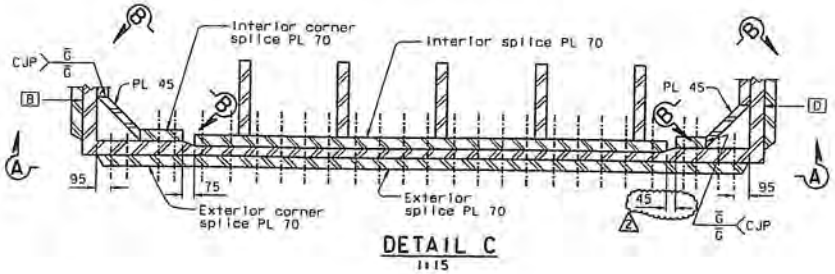

DETAIL C
1:15

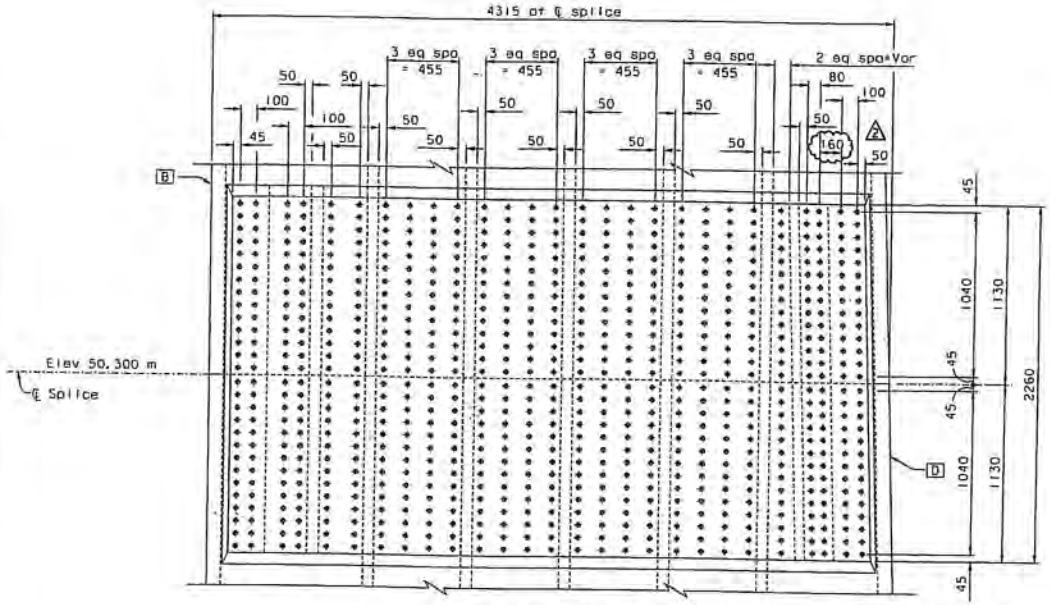

ELEVATION A-A
1:15

TOWER SKIN PLATE C

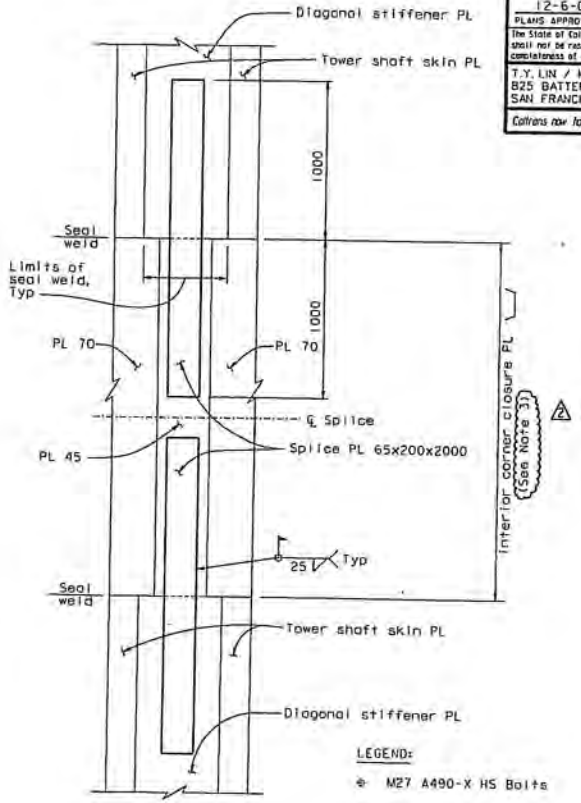

ELEVATION B-B
1:15

LEGEND:

⊕ M27 A490-X HS Bolts

NOTES:

1. The tower splice connections are designed as slip critical connections with class B contact surface (slip coefficient 0.5). The Contractor shall ensure that the flatness requirements are met at the faying surfaces.
2. Elevation view of adjacent skin plate not shown
3. The length of the interior corner splice plate shall be adjusted to ensure the 45 mm minimum bolt edge distance (in the vertical direction).

REQUESTS FOR INFORMATION NOT ADDRESSED IN THIS CCO REMAIN IN FORCE				
2	01/25/08	TOWER DOUBLER PLATE & SPLICE CORNER DETAILS	MN	NV	62
1	05/21/08	SPLICE PLATES PER ISM	MN	NV	21
MARK	DATE	DESCRIPTIONS	BY	CH'D	CCO#
REVISIONS					

CONTRACT CHANGE ORDER NO. 62
SHEET 4 OF 10

DIST.	COUNTY	ROUTE	KILOMETER POST TOTAL PROJECT	SHEET NO.	TOTAL SHEETS
04	SF	80	13.2/13.9	S44R2	1204

REGISTERED ENGINEER - CIVIL
12-6-04
PLANS APPROVAL DATE
Marwan N. Nader No. C 054426 Exp. 12/31/09 CIVIL STATE OF CALIFORNIA PROFESSIONAL ENGINEER
The State of California or its officers or agents shall not be responsible for the accuracy or completeness of electronic copies of this plan sheet.

T.Y. LIN / MOFFATT & NICHOL
825 BATTERY STREET
SAN FRANCISCO, CA 94111

Caltrans now has a web site! To get to the web site, go to: http://www.dot.ca.gov

ALL DIMENSIONS ARE IN MILLIMETERS UNLESS OTHERWISE SHOWN

DESIGN	BY M. Nader	CHECKED M. Gulyas	PREPARED FOR THE STATE OF CALIFORNIA DEPARTMENT OF TRANSPORTATION	R. Manzanarez PROJECT ENGINEER	BRIDGE NO. 34-0006L/R
DETAILS	BY J. Lopez	CHECKED N. Vo			KILOMETER POST 13.2/13.9
QUANTITIES	BY L. Rus	CHECKED Y. Zhang		CU 04 EA 0120F1	

R. Vallizadeh/Y. Tsan/Y.L./M.L./F.C.
DESIGN OVERSIGHT
STGN OFF DATE 01/29/08
Rev. Date: 5-15-08

ORIGINAL SCALE IN MILLIMETERS FOR REDUCED PLANS 0 10 20 30 40 50 60 70 80 90 100

DISREGARD PRINTS BEARING EARLIER REVISION DATES →

SAN FRANCISCO OAKLAND BAY BRIDGE
EAST SPAN SEISMIC SAFETY PROJECT
SELF-ANCHORED SUSPENSION BRIDGE (SUPERSTRUCTURE & TOWER)

TOWER SPLICE DETAILS NO. 5

REVISION DATES (PRELIMINARY STAGE ONLY)											SHEET	OF
10/08	10/08	10/08	10/08	10/08							127R2	

FILE => I:\DD\04-012001\eas\contract plans and contracts in progress\cco*62\dgn\eastsp05.dgn

USERNAME => v:\signtovs\DATE PLOTTED => 25 JUL 2008 TIME PLOTTED => 09:56:18

100 % PSAE

NOTES:

1. Weld of the longitudinal stiffener to the tower shaft skin plates beyond the length indicated shall be in accordance with Table I in "Tower Splice Details No. 2" sheet.
2. Perimeter of exterior splice plates shall be caulked.
3. Longitudinal stiffener splice plates shall be A709M HPS 485W steel.
4. Dimension shall be increased by 25 mm for (E1), (E2), (E3) to account for shim plate between skin plate and interior splice plate.
5. For elevation of end of stiffener PL see "Tower Shaft Details No. 7" sheet.

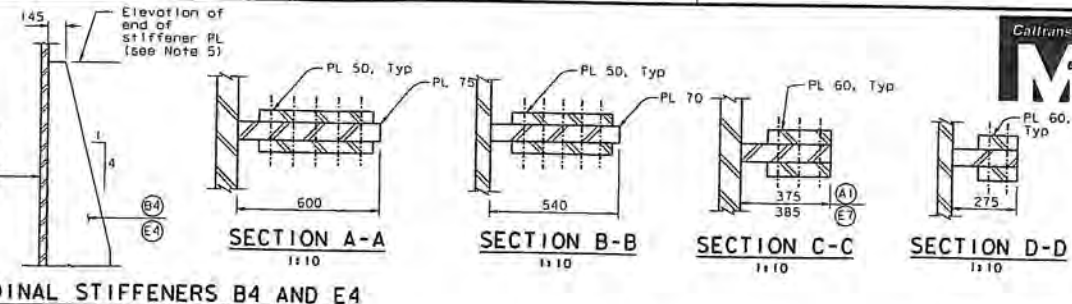

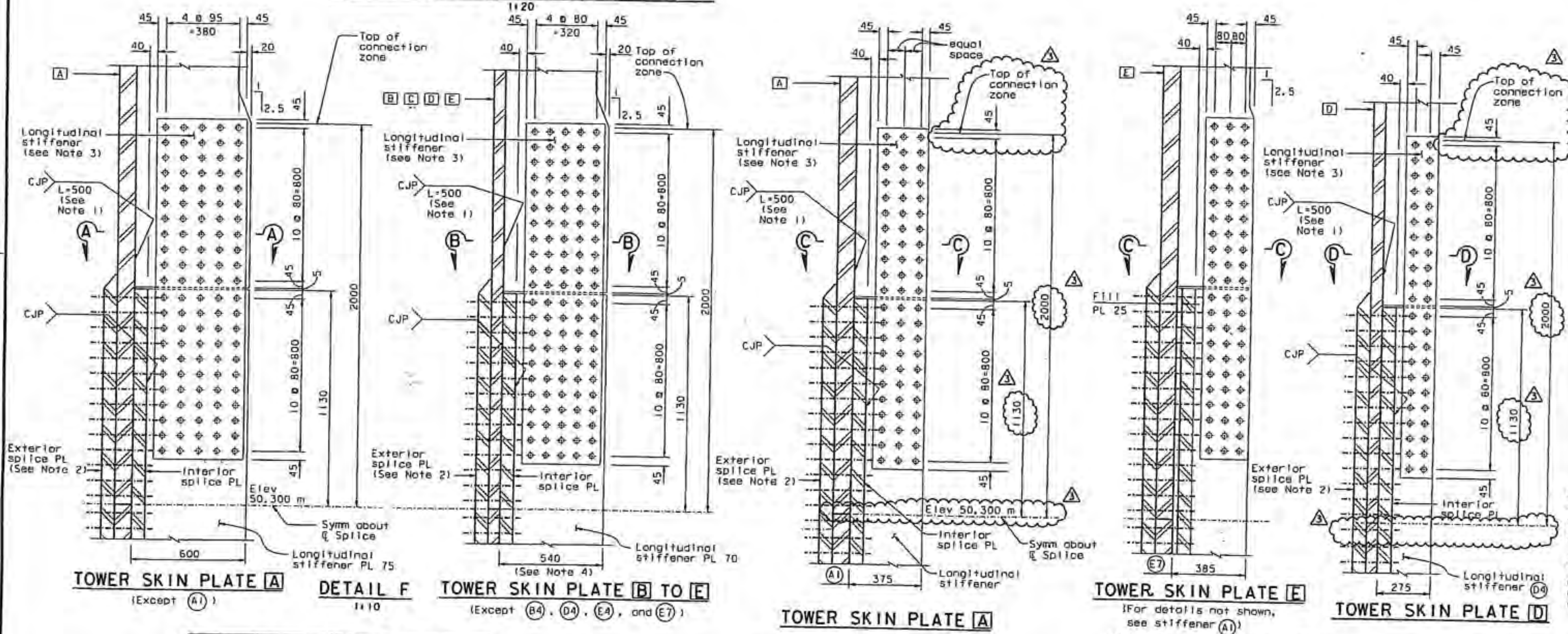

LEGEND:

⌖ M27 A490-X HS Bolt

ALL DIMENSIONS ARE IN MILLIMETERS UNLESS OTHERWISE SHOWN

REQUESTS FOR INFORMATION NOT ADDRESSED IN THIS CCO REMAIN IN FORCE

MARK	DATE	DESCRIPTIONS	BY	CH'D	CCO#
3	07/25/06	TOWER DOUBLER PLATE & SPLICE CORNER DETAILS	MN	NV	62
2	07/11/06	TOWER INTERNAL SHAFT	MN	NV	63
1	06/23/06	LONG STIFFENER GAP & MISC	MN	NV	21
		REVISIONS			

R. Valizadeh/V. Toan/T.L./M.L./F.C.
DESIGN OVERSIGHT
SIGN OFF DATE 07/25/06

CONTRACT CHANGE ORDER NO. 62
SHEET 5 OF 10

DESIGN	BY M. Nader	CHECKED M. Gulyas
DETAILS	BY L. Rus	CHECKED M. Gulyas
QUANTITIES	BY L. Rus	CHECKED Y. Zhang

PREPARED FOR THE STATE OF CALIFORNIA DEPARTMENT OF TRANSPORTATION

R. Manzanarez
PROJECT ENGINEER

BRIDGE NO. 34-0006L/R
KILOMETER POST 13.2/13.9

CU 04
EA 0120F1

SAN FRANCISCO OAKLAND BAY BRIDGE
EAST SPAN SEISMIC SAFETY PROJECT
SELF-ANCHORED SUSPENSION BRIDGE (SUPERSTRUCTURE & TOWER)

TOWER SPLICE DETAILS NO. 7

SHEET 12983

DIST	COUNTY	ROUTE	KILOMETER POST TOTAL PROJECT	SHEET NO.	TOTAL SHEETS
04	SF	80	13.2/13.9	546R3	1204

REGISTERED ENGINEER - CIVIL
12-6-04
PLANS APPROVAL DATE

Marwan N. Nader No. C 054426 Exp. 12/31/09 CIVIL

T.Y. LIN / MOFFATT & NICHOL
825 BATTERY STREET
SAN FRANCISCO, CA 94111

Caltrans now has a web site! To get to the web site, go to: http://www.dot.ca.gov

100 % PS&E

FILE => I:\bb\04-0120f1\sas\contract plans and cco\cco\in progress\cco#62\dgn\datsp07.dgn

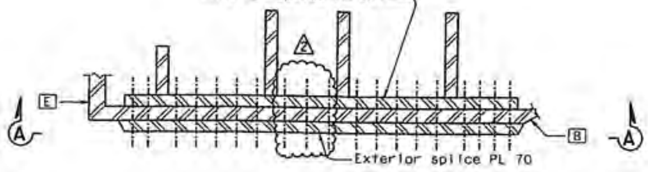

DETAIL A
1:15

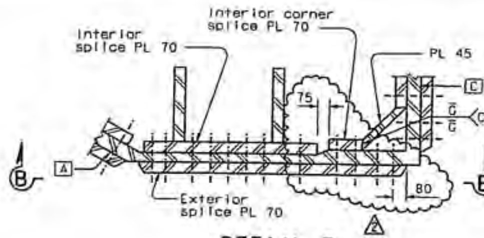

DETAIL B
1:15

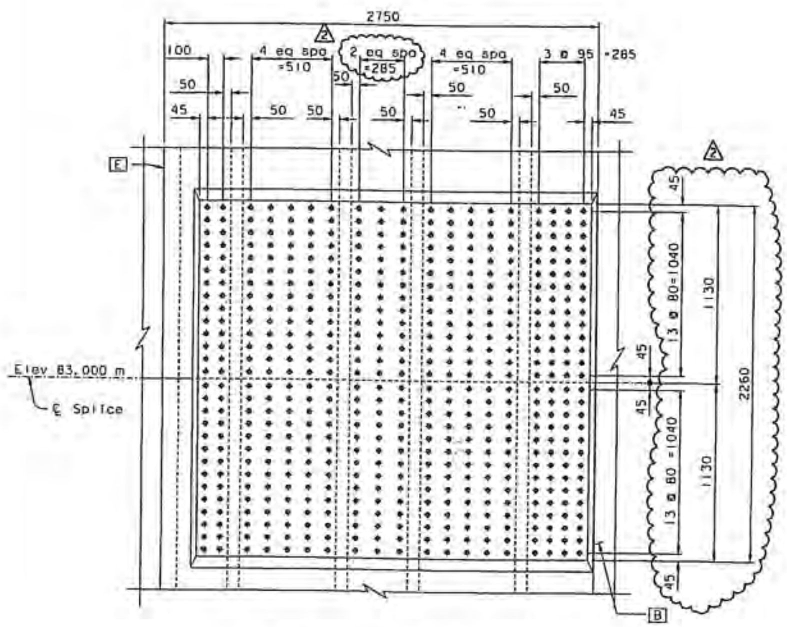

ELEVATION A-A
1:15

TOWER SKIN PLATE A

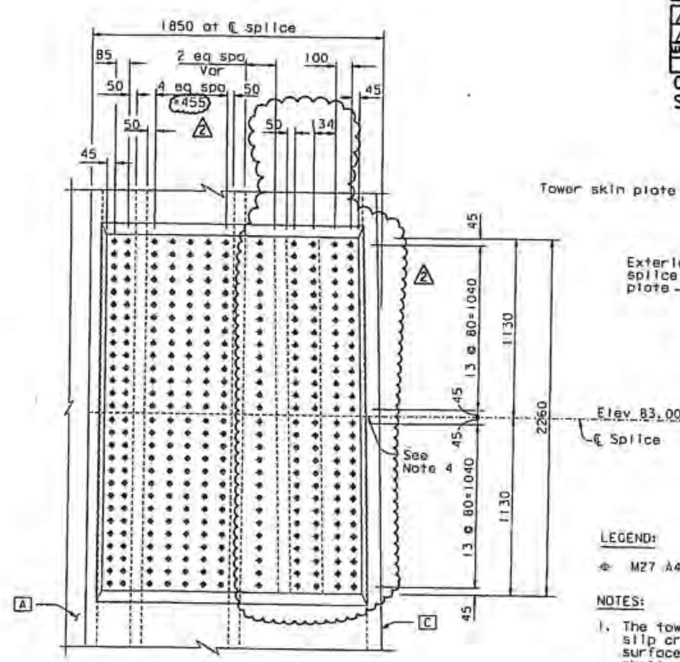

ELEVATION B-B
1:15

TOWER SKIN PLATE B

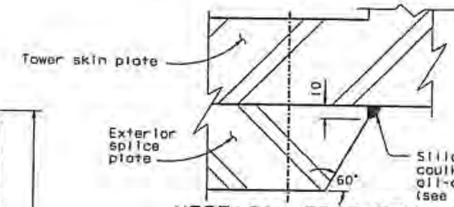

VERTICAL EDGE BEVEL DETAIL
(Typical all exterior splice plates)
NTS

LEGEND:

M27 A490-X HS Bolts

NOTES:

1. The tower splice connections are designed as slip critical connections with class B contact surface (slip coefficient 0.5). The Contractor shall ensure that the flatness requirements at the faying surfaces and the geometry control are met.
2. Silicone caulk sealing shall be applied around the perimeter (horizontal and vertical edges) of all exterior splice plates.
3. Elevation view of adjacent skin plate not shown for clarity.
4. For skin plate splice seam not covered by exterior splice plates, see details on "Tower Splice Details No. 4" sheet.

REQUESTS FOR INFORMATION NOT ADDRESSED IN THIS CCO REMAIN IN FORCE.

MARK	DATE	DESCRIPTIONS	BY	CH'D	CCO#
2	07/25/08	TOWER DOUBLER PLATE & SPLICE CORNER DETAILS	MN	NV	62
1	06/23/06	SPLICE PLATES PER ISM	MN	NV	21

REVISIONS

CONTRACT CHANGE ORDER NO. 62
SHEET 6 OF 10

DIST.	COUNTY	ROUTE	KILOMETER POST TOTAL PROJECT	SHEET NO.	TOTAL SHEETS
04	SF	80	13.2/13.9	548R2	1204

REGISTERED ENGINEER - CIVIL
12-6-04
PLANS APPROVAL DATE
The State of California or its officers or agents shall not be responsible for the accuracy or completeness of electronic copies of this plan sheet.
REGISTERED PROFESSIONAL ENGINEER Marwan N. Nader No. C 054426 Exp. 12/31/09 CIVIL STATE OF CALIFORNIA
T.Y. LIN / MOFFATT & NICHOL
825 BATTERY STREET
SAN FRANCISCO, CA 94111
Caltrans now has a web site! To get to the web site, go to: http://www.dot.ca.gov

ALL DIMENSIONS ARE IN MILLIMETERS UNLESS OTHERWISE SHOWN

R. Vaitzoden/Y. Toan/Y.L./W.L./F.C.
DESIGN OVERSIGHT
SIGN OFF DATE 07/25/08
Rev. Date 3-15-05

DESIGN	BY M. Nader	CHECKED N. Vo
DETAILS	BY C. Choi	CHECKED N. Vo
QUANTITIES	BY C. Choi	CHECKED N. Vo

ORIGINAL SCALE IN MILLIMETERS FOR REDUCED PLANS

PREPARED FOR THE
STATE OF CALIFORNIA
DEPARTMENT OF TRANSPORTATION

R. Manzanarez
PROJECT ENGINEER
BRIDGE NO. 34-0006L/R
KILOMETER POST 13.2/13.9
CU 04
EA 0120F1

SAN FRANCISCO OAKLAND BAY BRIDGE
EAST SPAN SEISMIC SAFETY PROJECT
SELF-ANCHORED SUSPENSION BRIDGE
(SUPERSTRUCTURE & TOWER)

TOWER SPLICE DETAILS NO. 9

DISREGARD PRINTS BEARING EARLIER REVISION DATES
SHEET 131R2

FILE => i:\bb\04-0120f1\sas\contract plans and cco\cco\in progress\cco62\dgn\ba1sp09.dgn
USERNAME => vlgrotovs DATE PLOTTED => 25 JUL 2008 TIME PLOTTED => 09:59:38
100 % PS&E

DIST.	COUNTY	ROUTE	KILOMETER POST TOTAL PROJECT	SHEET NO.	TOTAL SHEETS
04	SF	80	13.2/13.9	549R2	1204

REGISTERED ENGINEER - CIVIL

12-6-04

PLANS APPROVAL DATE

The State of California or its officers or agents shall not be responsible for the accuracy or completeness of electronic copies of this plan sheet.

Marwan N. Nader, No. C 054426, Exp. 12/31/09, CIVIL, STATE OF CALIFORNIA

T.Y. LIN / MOFFATT & NICHOL
825 BATTERY STREET
SAN FRANCISCO, CA 94111

Caltrans now has a web site! To get to the web site, go to: http://www.dot.ca.gov

Caltrans Metric

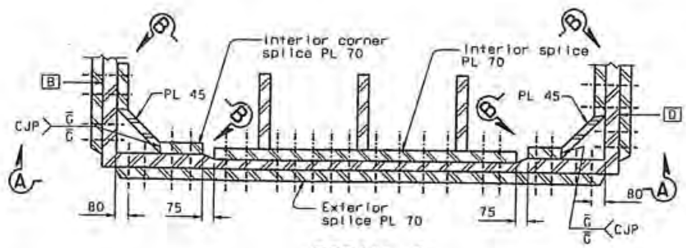

DETAIL C
1:15

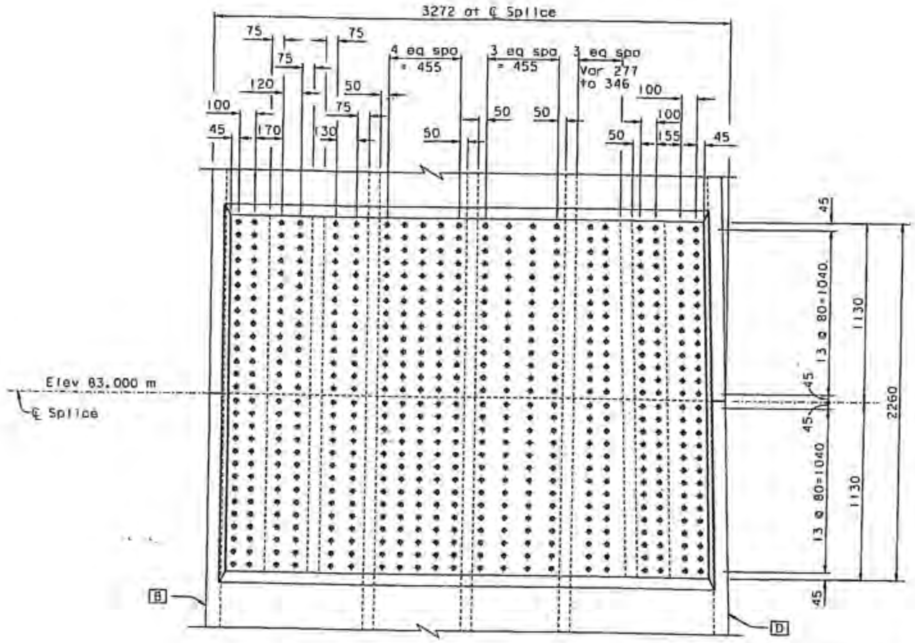

ELEVATION A-A
1:15

TOWER SKIN PLATE [C]

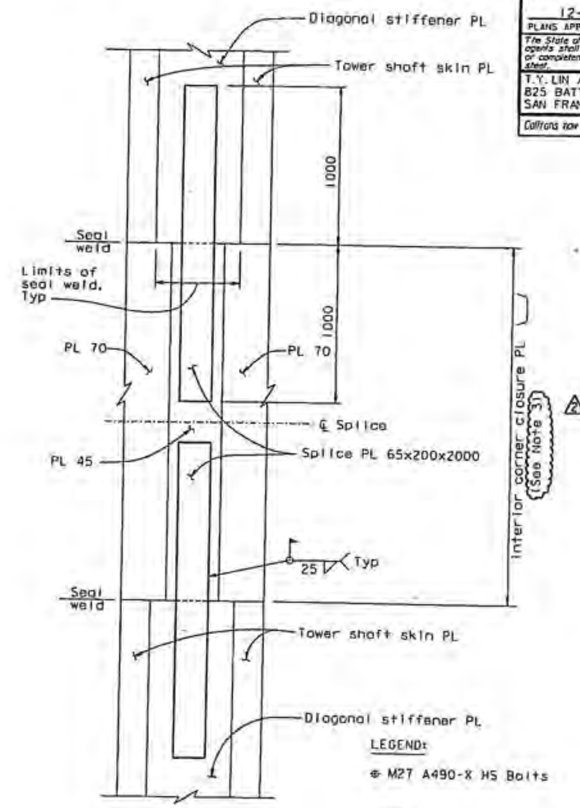

ELEVATION B-B
1:15

LEGEND:

⊕ M27 A490-X HS Bolts

NOTES:

1. The tower splice connections are designed as slip critical connections with class B contact surface (slip coefficient 0.5). The Contractor shall ensure that the flatness requirements at the faying surfaces and the geometry control are met.
2. Elevation view of adjacent skin plate not shown for clarity.
3. The length of the interior corner splice plate shall be adjusted to ensure the 45 mm minimum bolt edge distance (in the vertical direction). [2]

REQUESTS FOR INFORMATION NOT ADDRESSED IN THIS CCO REMAIN IN FORCE

MARK	DATE	DESCRIPTIONS	BY	CH'D	CCO#
2	07/25/08	TOWER DOUBLER PLATE & SPLICE CORNER DETAILS	MN	NV	62
1	06/23/06	SPLICE PLATES PER ISM	MN	NV	21

REVISIONS

CONTRACT CHANGE ORDER NO. 62
SHEET 7 OF 10

ALL DIMENSIONS ARE IN MILLIMETERS UNLESS OTHERWISE SHOWN

R. Valizadeh/V. Toan/T.L./N.L./F.C.
DESIGN OVERSIGHT
SIGN OFF DATE 07/29/08
Rev. Date: 5-18-06

DESIGN	BY M. Nader	CHECKED	N. Vo
DETAILS	BY C. Choi	CHECKED	N. Vo
QUANTITIES	BY C. Choi	CHECKED	N. Vo

PREPARED FOR THE
STATE OF CALIFORNIA
DEPARTMENT OF TRANSPORTATION

R. Manzanarez
PROJECT ENGINEER

BRIDGE NO. 34-0006L/R
KILOMETER POST 13.2/13.9

ORIGINAL SCALE IN MILLIMETERS FOR REDUCED PLANS 0 10 20 30 40 50 60 70 80 90 100

CU 04
EA 0120F1

DISREGARD PRINTS BEARING EARLIER REVISION DATES

SAN FRANCISCO OAKLAND BAY BRIDGE
EAST SPAN SEISMIC SAFETY PROJECT
SELF-ANCHORED SUSPENSION BRIDGE
(SUPERSTRUCTURE & TOWER)

TOWER SPLICE DETAILS NO. 10

SHEET 132R2

FILE => J:\bb\04-0120F1\sas\contract plans and cco\cco\in progress\cco#62\dgn\oetsp10.dgn

USERNAME => vlgnatov DATE PLOTTED => 25 JUL 2008 TIME PLOTTED => 10:01:24

100 % PS&E

NOTES:

1. Weld of the longitudinal stiffener to the tower shaft skin plates beyond the length indicated shall be in accordance with Table 1 in "Tower Splice Details No.2" sheet.
2. Perimeter of exterior splice plates shall be caulked.
3. Longitudinal stiffener splice plates shall be A709M HPS 485W steel.
4. Dimension shall be increased by 25 mm for (E1) and (E7) to account for shim plate between skin plate and interior splice plate.
5. For elevation of end of stiffener PL see "Tower Shaft Details No.7" sheet.

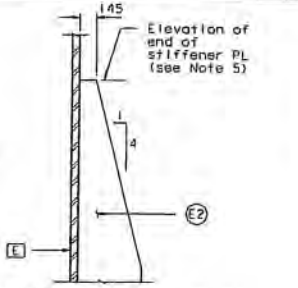

LONGITUDINAL STIFFENER E2
1:20

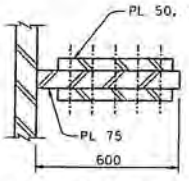

SECTION A-A
1:10

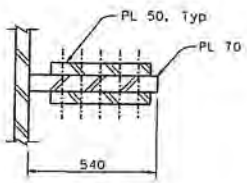

SECTION B-B
1:10

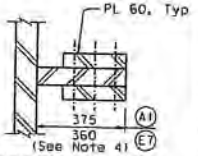

SECTION C-C
1:10

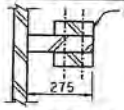

SECTION D-D
1:10

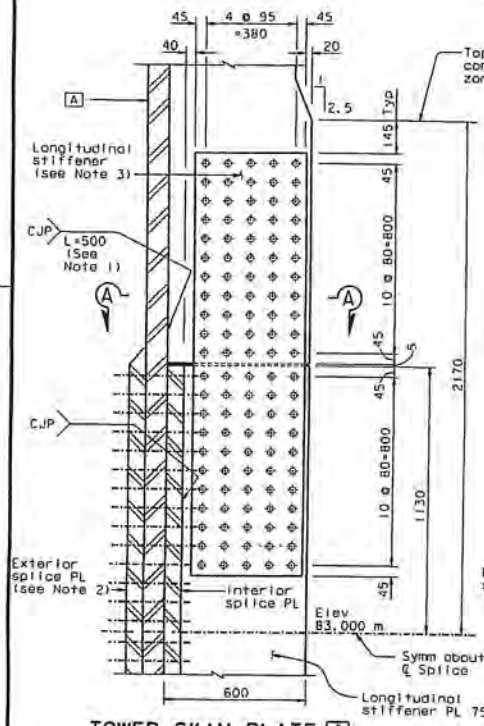

TOWER SKIN PLATE A
(Except (A1))

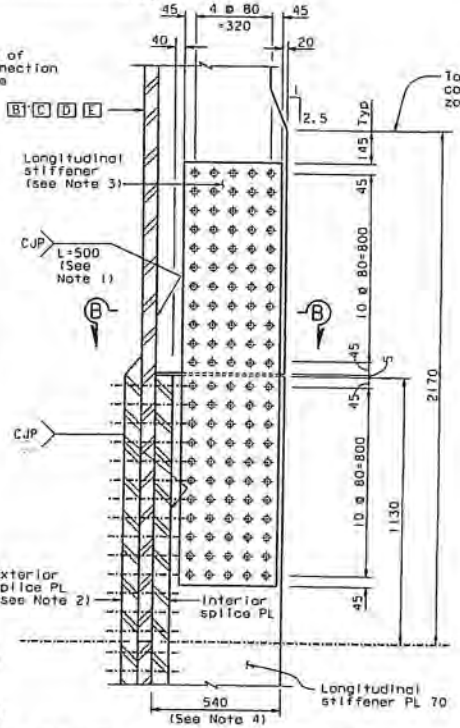

DETAIL F TOWER SKIN PLATES B TO E
1:10
(Except (E2), (E7) and (D4))

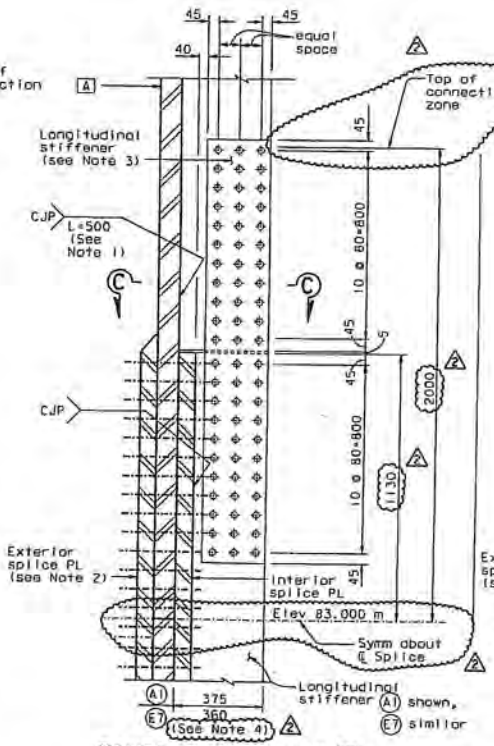

TOWER SKIN PLATE A
(Skin Plate E similar)

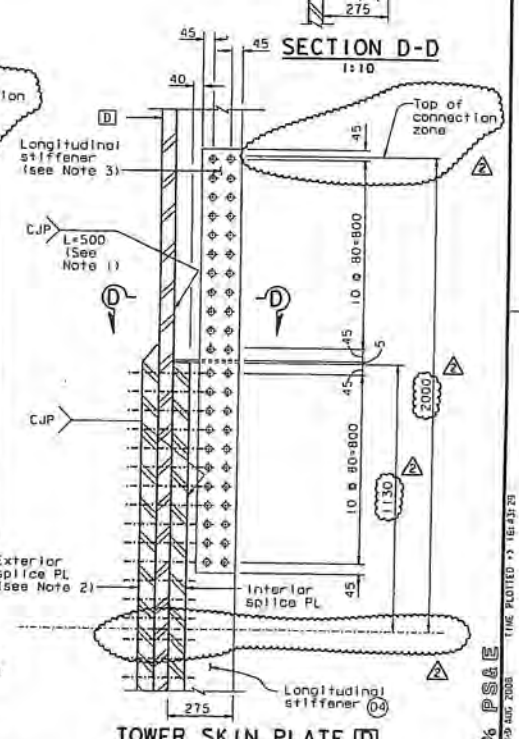

TOWER SKIN PLATE D

DETAIL F (For (A1) (E7) and (D4))
1:10

LEGEND:
M27 A490-X HS Bolt

ALL DIMENSIONS ARE IN MILLIMETERS UNLESS OTHERWISE SHOWN

DIST	COUNTY	ROUTE	KILOMETER POST TOTAL PROJECT	SHEET NO.	TOTAL SHEETS
04	SF	80	13.2/13.9	551R2	1204

REGISTERED ENGINEER - CIVIL
12-6-04
PLANS APPROVAL DATE
The State of California or its officers or agents shall not be responsible for the accuracy or completeness of electronic copies of this plan sheet.
Marwan M. Nader No. C 054426 Exp. 12/31/09 CIVIL STATE OF CALIFORNIA

T.Y. LIN / MOFFATT & NICHOL
825 BATTERY STREET
SAN FRANCISCO, CA 94111

Caltrans now has a web site! To get to the web site, go to: http://www.dot.ca.gov

MARK	DATE	DESCRIPTIONS	BY	CH'D	CCO#
2	08/15/08	TOWER DOUBLER PLATE & SPLICE CORNER DETAILS	MN	NV	62
1	06/24/08	LONG. STIFFENER GAP & MISC.	MN	NV	21

REVISIONS

REQUESTS FOR INFORMATION NOT ADDRESSED IN THIS CCO REMAIN IN FORCE

CONTRACT CHANGE ORDER NO. 62
SHEET 8 OF 10

	BY	CHECKED
DESIGN	M. Nader	N. Va
DETAILS	J. Lopez	N. Va
QUANTITIES	J. Lopez	N. Va

PREPARED FOR THE STATE OF CALIFORNIA
DEPARTMENT OF TRANSPORTATION

R. Manzanarez
PROJECT ENGINEER

CU 04
EA 0120F1

BRIDGE NO. 34-0006L/R
KILOMETER POST 13.2/13.9

SAN FRANCISCO OAKLAND BAY BRIDGE
EAST SPAN SEISMIC SAFETY PROJECT
SELF-ANCHORED SUSPENSION BRIDGE
(SUPERSTRUCTURE & TOWER)

TOWER SPLICE DETAILS NO. 12

SHEET 13482

R. Vallzadeh/V. Toan/Y. L./N. L./F. C.
DESIGN OVERSIGHT
Ron Vallzadeh / Vong Toan / Y. Liu
SIGN OFF DATE 08/19/08

Rev. Date: 5-12-05

ORIGINAL SCALE IN MILLIMETERS FOR REDUCED PLANS 0 10 20 30 40 50 60 70 80 90 100

FILE => I:\SB\04-0120F1\sos\contract plans and cco\cco\in progress\cco*62\dgn\doetsd12.dgn

USERNAME => DeVrow DATE PLOTTED => 16 AUG 2008 TIME PLOTTED => 16:43:28

100 % PS&E

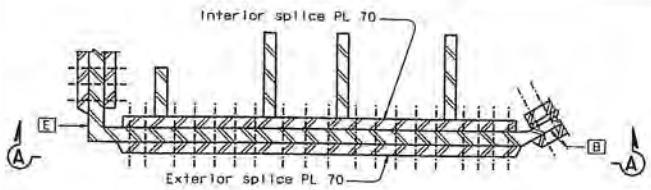

DETAIL A
1:15

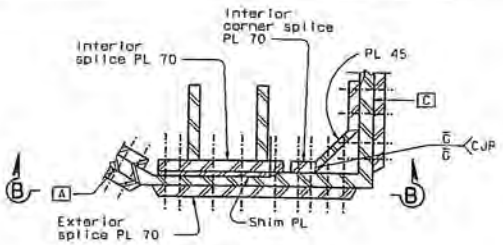

DETAIL B
1:15

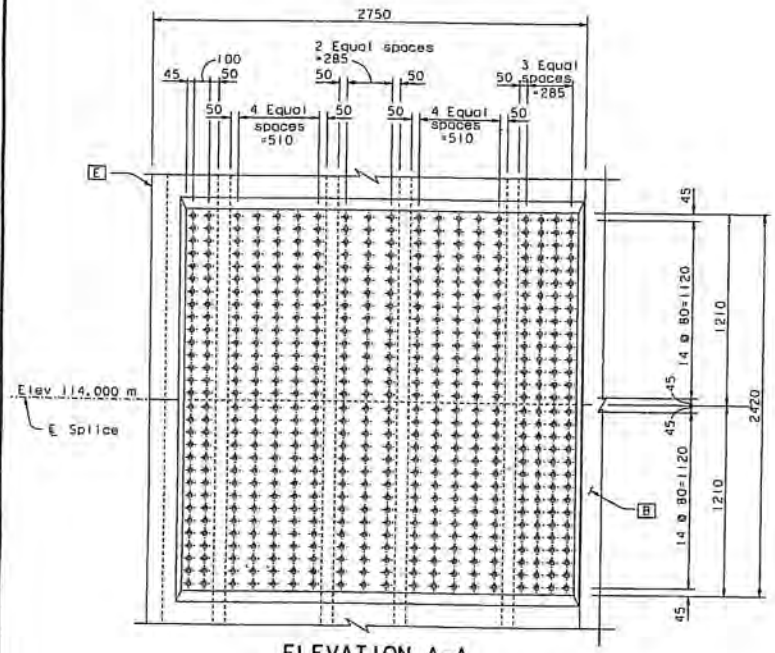

ELEVATION A-A
1:15

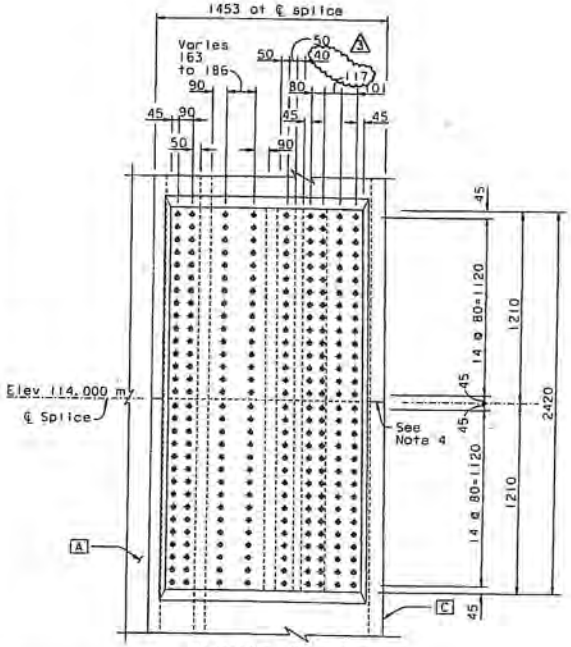

ELEVATION B-B
1:15

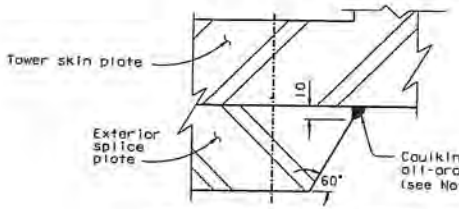

VERTICAL EDGE BEVEL DETAIL
(Typical all exterior splice plates)
NTS

TOWER SKIN PLATE A

TOWER SKIN PLATE B

LEGEND:

⊕ M27 A490-X HS Bolts

NOTES:

1. The tower splice connections are designed as slip critical connections with class B contact surface (slip coefficient 0.5). The Contractor shall ensure that the flatness requirements at the faying surfaces and the geometry control are met.
2. Caulk sealing shall be applied around the perimeter (horizontal and vertical edges) of all exterior splice plates.
3. Elevation view of adjacent skin plate not shown for clarity.
4. For skin plate splice seam not covered by exterior splice plates, see details on "Tower Splice Details No. 4" sheet.

REQUESTS FOR INFORMATION NOT ADDRESSED IN THIS CCO REMAIN IN FORCE				
3	01/25/08	TOWER BOULDER PLATE & SPLICE CORNER DETAILS	MN	NV	62
2	01/01/08	CAULKING	MN	NV	66
1	06/13/06	SPLICE PLATES PER ISM	MN	NV	21
MARK	DATE	DESCRIPTIONS	BY	CH'D	CCO#
REVISIONS					

CONTRACT CHANGE ORDER NO. 62
SHEET 9 OF 10

DIST	COUNTY	ROUTE	KILOMETER POST TOTAL PROJECT	SHEET NO.	TOTAL SHEETS
04	SF	80	13.2/13.9	55383	1204

REGISTERED ENGINEER - CIVIL
12-6-04
PLANS APPROVAL DATE
Marwan N. Nader No. C 054426 Exp. 12/31/09 CIVIL STATE OF CALIFORNIA
The State of California or its officers or agents shall not be responsible for the accuracy or completeness of electronic copies of this plan sheet.

T.Y. LIN / MOFFATT & NICHOL
825 BATTERY STREET
SAN FRANCISCO, CA 94111

Caltrans now has a web site! To get to the web site, go to: http://www.dot.ca.gov

R. Vallizadeh/V. Toon/Y.L./W.L./F.C.					
DESIGN OVERSIGHT					
Ron Vallizadeh/ Vergil Toon/ Y. Liu					
STEN OFF DATE 07/29/08					
Rev. Date: 5-15-08					
DESIGN	BY M. Nader	CHECKED N. Va	PREPARED FOR THE STATE OF CALIFORNIA DEPARTMENT OF TRANSPORTATION	R. Manzanarez PROJECT ENGINEER	BRIDGE NO. 34-0006L/R
DETAILS	BY J. Lopez	CHECKED N. Va			KILOMETER POST 13.2/13.9
QUANTITIES	BY J. Lopez	CHECKED N. Va			
ORIGINAL SCALE IN MILLIMETERS FOR REDUCED PLANS 0 10 20 30 40 50 60 70 80 90 100			CU 04 EA 0120F1	DISREGARD PRINTS BEARING EARLIER REVISION DATES →	REVISION DATES (PRELIMINARY STAGE ONLY)

ALL DIMENSIONS ARE IN MILLIMETERS UNLESS OTHERWISE SHOWN

SAN FRANCISCO OAKLAND BAY BRIDGE
EAST SPAN SEISMIC SAFETY PROJECT
SELF-ANCHORED SUSPENSION BRIDGE
(SUPERSTRUCTURE & TOWER)

TOWER SPLICE DETAILS NO. 14

SHEET 13683

FILE => I:\sbb\04-0120f1\sas\contract plans and eco\eco in progress\cco#62\dgn\sastspl4.dgn

USERNAME => vignatovs
DATE PLOTTED => 25 JUL 2008
TIME PLOTTED => 10:04:35

100 % PSAE

DIST.	COUNTY	ROUTE	KILOMETER POST TOTAL PROJECT	SHEET NO.	TOTAL SHEETS
04	SF	80	13.2/13.9	554R2	1204

REGISTERED ENGINEER - CIVIL
12-6-04
PLANS APPROVAL DATE

Marwan N. Nader, No. C 054426, Exp. 12/31/06, CIVIL, STATE OF CALIFORNIA

The State of California or its officers or agents shall not be responsible for the accuracy or completeness of electronic copies of this plan sheet.

T.Y. LIN / MOFFATT & NICHOL
825 BATTERY STREET
SAN FRANCISCO, CA 94111

Caltrans now has a web site! To get to the web site, go to: http://www.dot.ca.gov

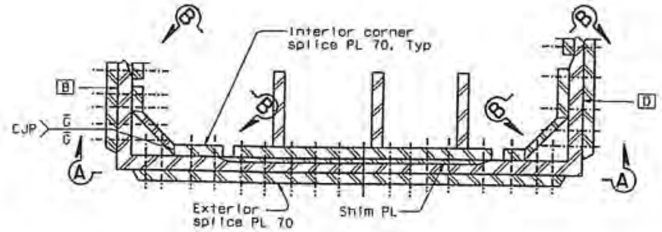

DETAIL C
1:15

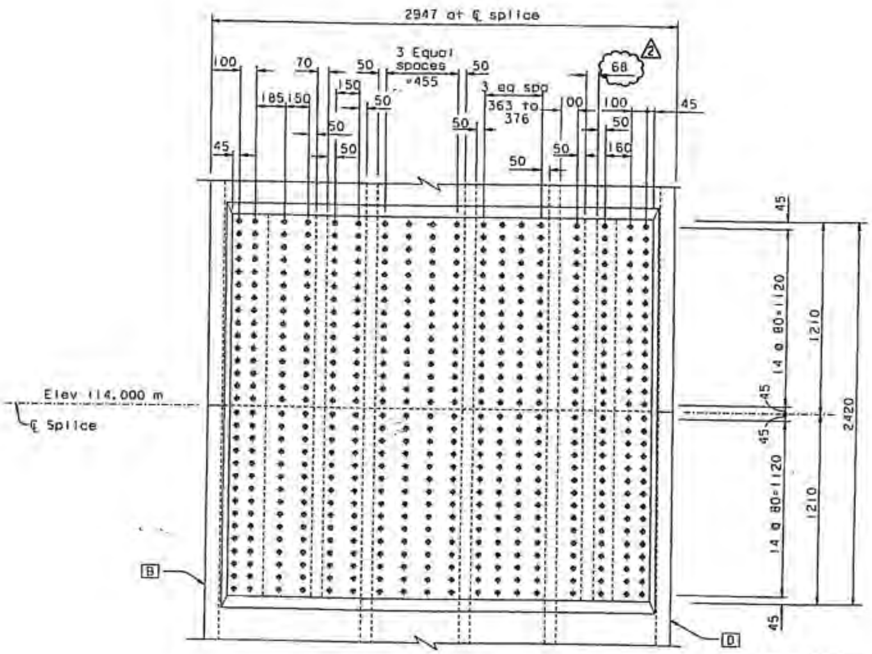

ELEVATION A-A
1:15

TOWER SKIN PLATE C

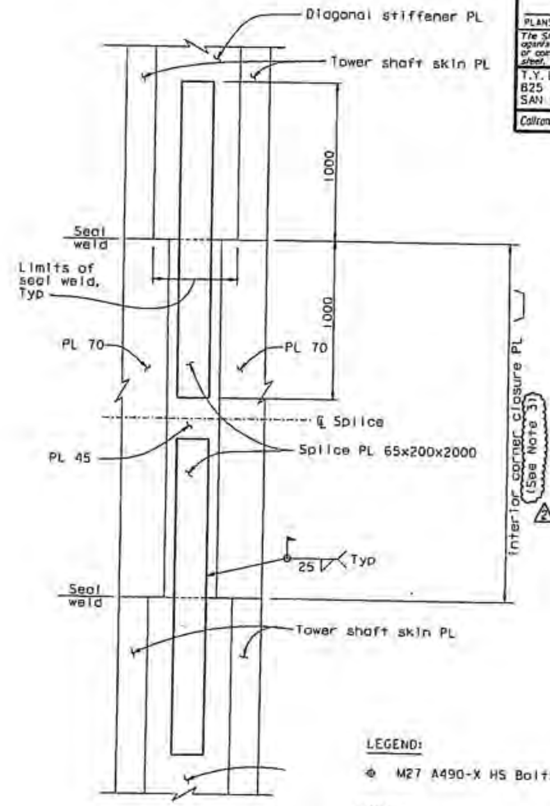

ELEVATION B-B
1:15

LEGEND:

⊕ M27 A490-X HS Bolts

NOTES:

1. The tower splice connections are designed as slip critical connections with class B contact surface (slip coefficient 0.5). The Contractor shall ensure that the flatness requirements at the faying surfaces and the geometry control are met.
2. Elevation view of adjacent skin plate not shown for clarity.
3. The length of the interior corner splice plate shall be adjusted to ensure the 45 mm minimum bolt edge distance (in the vertical direction).

REQUESTS FOR INFORMATION NOT ADDRESSED IN THIS CCO REMAIN IN FORCE

MARK	DATE	DESCRIPTIONS	BY	CH'D	CCO#
2	07/25/08	TOWER DOUBLER PLATE & SPLICE CORNER DETAILS	MN	NV	62
1	06/23/06	SPLICE PLATES PER ISM	MN	NV	21

REVISIONS

CONTRACT CHANGE ORDER NO. 62
SHEET 10 OF 10

ALL DIMENSIONS ARE IN MILLIMETERS UNLESS OTHERWISE SHOWN

R. Valizadeh/V. Toan/Y.L./M.L./F.C.
DESIGN OVERSIGHT
SIGN OFF DATE 07/25/08
Rev. Date: 5-15-95

DESIGN BY M. Nader CHECKED N. Vo
DETAILS BY J. Lopez CHECKED N. Vo
QUANTITIES BY J. Lopez CHECKED N. Vo

PREPARED FOR THE STATE OF CALIFORNIA DEPARTMENT OF TRANSPORTATION

R. Manzanarez
PROJECT ENGINEER

BRIDGE NO. 34-0006L/R
KILOMETER POST 13.2/13.9

ORIGINAL SCALE IN MILLIMETERS FOR REDUCED PLANS 0 10 20 30 40 50 60 70 80 90 100

CU 04
EA 0120F1

DISREGARD PRINTS BEARING EARLIER REVISION DATES

SAN FRANCISCO OAKLAND BAY BRIDGE
EAST SPAN SEISMIC SAFETY PROJECT
SELF-ANCHORED SUSPENSION BRIDGE
(SUPERSTRUCTURE & TOWER)

TOWER SPLICE DETAILS NO. 15

SHEET 137R2

FILE => I:\bb\04-0120f1\sas\contract plans and cco\cco\in progress\cco#62\dgn\cetsp15.dgn

100% PS&E

USERNAME => vignotovsmate PLOTTED => 25 JUL 2008 TIME PLOTTED => 10:06:28

STATE OF CALIFORNIA - DEPARTMENT OF TRANSPORTATION

CONTRACT CHANGE ORDER MEMORANDUM

DC-CEM-4903 (OLD HC-39 REV. 6/93) CT# 7541-3544-0

DATE: 3/16/2010

TO Pete Siegenthaler, Principal TE	FILE 04-0120F4 04-SF-80-13.2/13.9
FROM Gary Pursell, STE / Richard Morrow, SBE	
CCO NO. **62** / SUPPLEMENT NO. **0** / CATEGORY CODE **CHPA**	CONTINGENCY BALANCE (including this change) **$8,014,909.40**
$0.00 INCREASE ☒ DECREASE ☐	HEADQUARTERS APPROVAL REQUIRED? YES ☐ NO ☒
SUPPLEMENTAL FUNDS PROVIDED $	IS THIS REQUEST IN ACCORDANCE WITH ENVIRONMENTAL DOCUMENTS? YES ☒ NO ☐
CCO DESCRIPTION: Tower Doubler Plates and Splice Corner Plates	**PROJECT DESCRIPTION** CONSTRUCT SELF-ANCHORED SUSPENSION BRIDGE

Original Contract Time	Time Adj.: This Change	Previously Approved CCO Time Adjustments	Percentage Time Adjusted: (including this change)	Total # of Unreconciled Deferred Time CCO(s): (including this change)
2490 Day(s)	**0** Day(s)	**227** Day(s)	**9** %	**6**

THIS CHANGE ORDER PROVIDES FOR:

1. Enlarging doubler plate cope, weld cross bracing to skin plate, and restoring doubler plate to original dimensions.
2. Deleting cap screws, connecting the cover plates to the skin plates, that conflict with exterior tower corner splice cap screws.
3. Revising tower plan sheets in order to incorporate minor clarifications addressed in Department responses to Contractor Requests for Information (RFI's) 215, 478, 478R1, 618, 708, 708R1, 826, 995, 1028, 1047, 1054, 1145, 1149, 1149R1, 1254, 1327 and 1333.

The above listed changes are not addressed in the contract documentation and are being made for the following, respectively:

1. This change allows the doubler plate to be welded to the tower skin plate, prior to shaft assembly, in order to control skin plate distortion. Doubler plate cope shall be enlarged, to provide access for welding cross bracing to skin plate, and then be restored to its original dimensions.
2. Cap screws, installed along the exterior corners of the tower, that intrude on other cap screws shall be deleted to alleviate this conflict.
3. The Contractor and the Department have agreed to address RFI tower clarification issues, primarily involving plate and bolt spacing dimensions, by issuing revised plan sheets.

This work is not covered by any contract items. Therefore, payment for this work will be at Adjustment of Compensation at Lump Sum Price for the amount of $241,251.00. Since the cost, of $241,251.00 in this change, is included in Contract Change Order 108 Supplement 1 (CCO 108S1) Claim Settlement Report No. 1 resolution costs the net payment in this change order is zero.

A determination of the delay in completion of the contract due to work specified by this change order, has been made in CCO 108S1 and is part of the Claims Settlement Report (CSR) No. 1 for this project. Therefore, no adjustment of time is warranted by reason of this change order.

This change order received concurrences from Gary Pursell (Resident Engineer), Rick Morrow (Structure Rep.), Patrick Treacy (HQ Liaison), Peter Siegenthaler (Principal Engineer), Marwan Nader (Design of Record), Wenyi Long (OSCM Oversight), Lina Ellis (OSMI Oversight) and Ken Terpstra (Project Manager).

Claims Settlement Report (CSR) No. 1, for this project, revises the authority to "Issue and Approve" the changes listed in CCO 108S1 Appendices A & B. The authority to "Issue and Approve" the changes listed in Appendices A & B for the values of time and money contemplated therein has been delegated to the District for approval and approval of each of these change orders by the Headquarters CCO Desk will not be required. Since this change order is included in CCO 108S1 no Headquarters CCO Desk "Issue and Approve" is required, a copy of CCO 108S1 is attached for reference.

STATE OF CALIFORNIA - DEPARTMENT OF TRANSPORTATION

CONTRACT CHANGE ORDER MEMORANDUM

DC-CEM-4903 (OLD HC-39 REV. 6/93) CT# 7541-3544-0

DATE: 3/16/2010

CONCURRED BY:	
CONSTRUCTION ENGINEER Res. Eng. Gary Pursell, Sup. TE	DATE 4/02/08
SR. BRIDGE ENGINEER Rick Morrow, Sup. BE	DATE 4/02/08
FHWA REPRESENTATIVE	DATE
PROJECT MANAGER Proj. Manager, Ken Terpstra	DATE 12/08/08
OTHER (SPECIFY)	DATE
Design of Record, Marwan Nader	8/15/08
OSCM Oversight, Wenyi Long	1/27/09
OSMI Oversight, Lina Ellis	1/27/09
PCE, Michael Forner, Prin TE	DATE 4/02/08
DISTRICT PRIOR APPROVAL BY	DATE
HQ (ISSUE & APPROVE) (TO PROCEED) BY Bob Molera (ISSUE & APPROVE)	DATE 12/31/09
RESIDENT ENGINEER SIGNATURE Gary Pursell	DATE 3/16/10

ESTIMATE OF COST	THIS REQUEST	TOTAL TO DATE
ITEMS	$0.00	$0.00
FORCE ACCOUNT	$0.00	$0.00
AGREED PRICE	$0.00	$0.00
ADJUSTMENT	$0.00	$0.00
TOTAL	$0.00	$0.00

FEDERAL PARTICIPATION

☐ PARTICIPATING ☐ PARTICIPATING IN PART ☒ NONE

☐ NON-PARTICIPATING (MAINTENANCE) ☐ NON-PARTICIPATING

FEDERAL SEGREGATION (IF MORE THAN ONE FUNDING SOURCE OR P.I.P. TYPE)

☐ CCO FUNDED PER CONTRACT ☐ CCO FUNDED AS FOLLOWS

FEDERAL FUNDING SOURCE	PERCENT
———	———
———	———
———	———
———	———

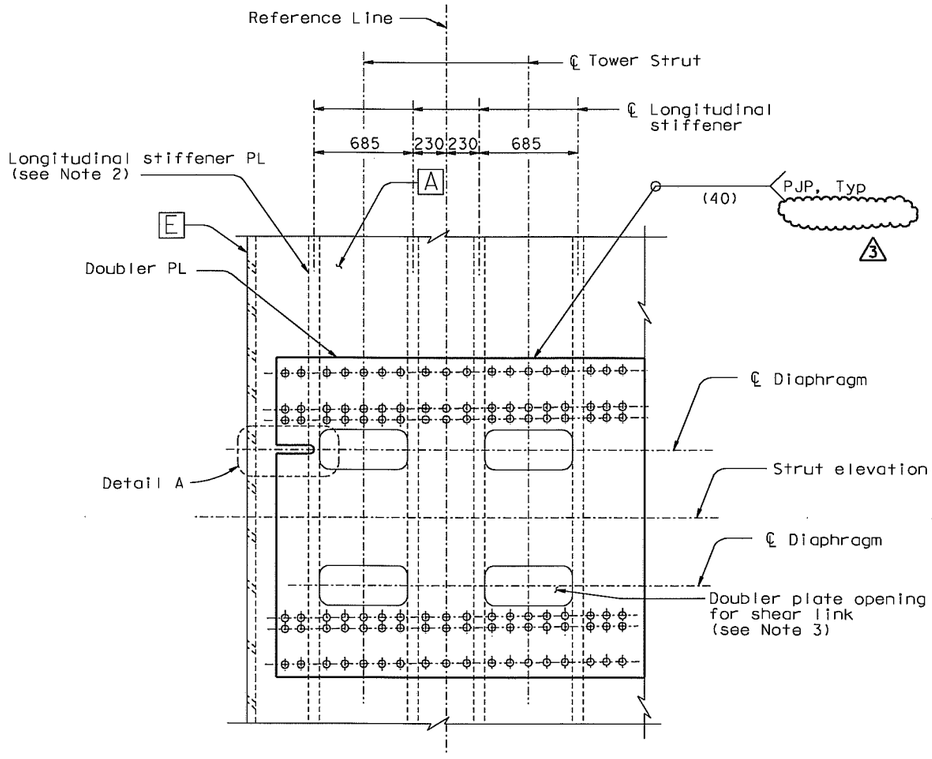

FOR STRUTS TYPE 1 AND TYPE 2

(Tower shaft opening for strut type 1 shown, strut type 2 similar)

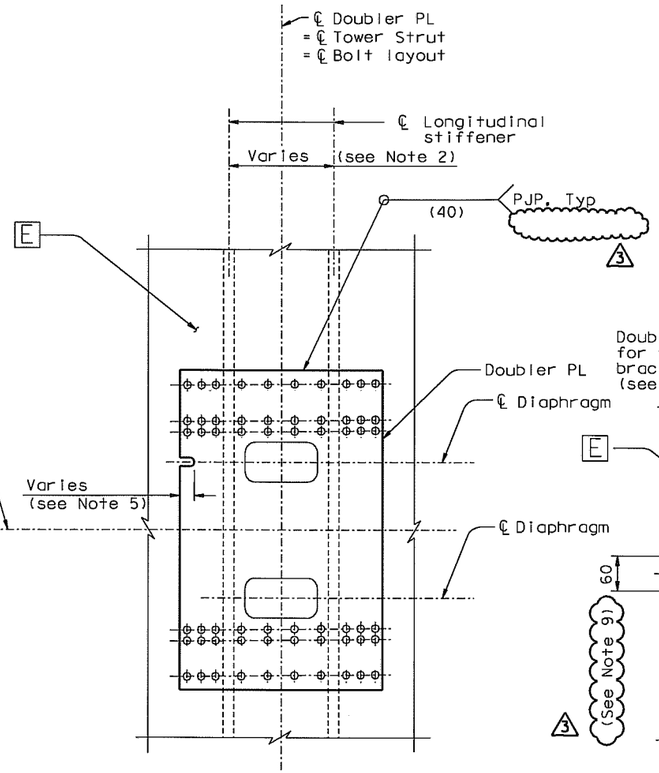

FOR STRUTS TYPE 3

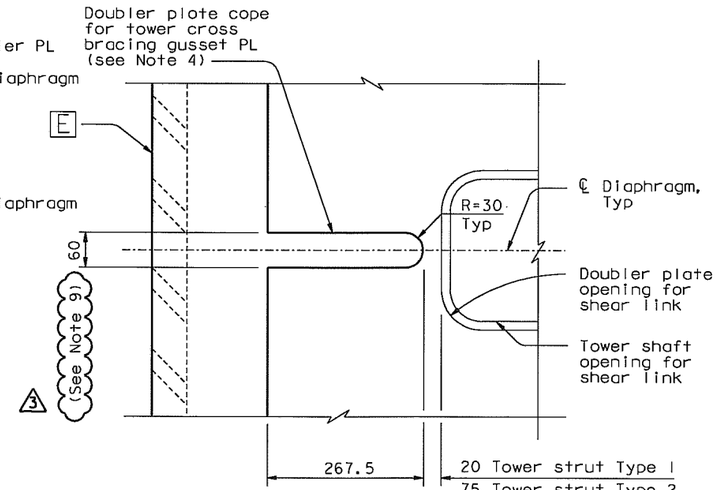

DETAIL A

1:5

BOLT LAYOUT (See Note 7 and 8)

1:20

LEGEND:

⌖ M24 A325-X HS Bolts

NOTES:

1. For doubler plate details, see "Tower Shaft Details No. 10" sheet.
2. For longitudinal stiffener spacing and size, see "Tower Shaft Details No. 3" and "Tower Shaft Details No. 7" sheets.
3. Seal weld all around doubler plate opening. For details, see "Tower Shaft Details No. 10" sheet.
4. Doubler plate cope is only located at tower cross bracing elevations. For tower cross bracing details, see "Tower Strut Details No. 9" sheet.
5. Cope doubler plate as necessary to accommodate cross bracing gusset plate.
6. Bolts for tower strut connection not shown for clarity. For tower strut connection details, see "Tower Strut Details" sheets.
7. For bolt layout, see "Tower Strut Facade Details" sheet.
8. For Reference Line definition, see "Tower Strut Facade Details" sheets.
9. At the Contractor's option and subject to the approval of the Engineer, cope width may be enlarged to facilitate installation of gusset plate to skin plate, provided that the enlarged cope is filled with insert plates joined by CJP welds to the doubler plate and the gusset plate.

REQUESTS FOR INFORMATION NOT ADDRESSED IN THIS CCO REMAIN IN FORCE					
3	01/25/08	TOWER DOUBLER PLATE & SPLICE CORNER DETAILS	MN	NV	62
2	02/28/07	DOUBLER PLATE SEAL WELD	MN	NV	21
1	06/23/06	DOUBLER PLATE SEAL WELD	MN	NV	21
MARK	DATE	DESCRIPTIONS	BY	CH'D	CCO#
		REVISIONS			

CONTRACT CHANGE ORDER NO. ____
SHEET ___ OF ___

ALL DIMENSIONS ARE IN MILLIMETERS UNLESS OTHERWISE SHOWN

DIST.	COUNTY	ROUTE	KILOMETER POST TOTAL PROJECT	SHEET NO.	TOTAL SHEETS
04	SF	80	13.2/13.9	539R3	1204

REGISTERED ENGINEER - CIVIL
12-6-04
PLANS APPROVAL DATE
The State of California or its officers or agents shall not be responsible for the accuracy or completeness of electronic copies of this plan sheet.

REGISTERED PROFESSIONAL ENGINEER — Marwan N. Nader — No. C 054426 — Exp. 12/31/09 — CIVIL — STATE OF CALIFORNIA

T.Y. LIN / MOFFATT & NICHOL
825 BATTERY STREET
SAN FRANCISCO, CA 94111

Caltrans now has a web site! To get to the web site, go to: http://www.dot.ca.gov

DESIGN	BY M. Nader	CHECKED M. Gulyas	PREPARED FOR THE STATE OF CALIFORNIA DEPARTMENT OF TRANSPORTATION
DETAILS	BY L. Rus	CHECKED M. Gulyas	
QUANTITIES	BY L. Rus	CHECKED Y. Zhang	

R. Valizadeh/V. Toan/Y.L./W.L./F.C.
DESIGN OVERSIGHT
SIGN OFF DATE 07/25/08

R. Manzanarez
PROJECT ENGINEER

BRIDGE NO. 34-0006L/R
KILOMETER POST 13.2/13.9

CU 04
EA 0120F1

SAN FRANCISCO OAKLAND BAY BRIDGE
EAST SPAN SEISMIC SAFETY PROJECT
SELF-ANCHORED SUSPENSION BRIDGE
(SUPERSTRUCTURE & TOWER)

TOWER SHAFT DETAILS NO. 11

Rev. Date: 5-18-98

ORIGINAL SCALE IN MILLIMETERS FOR REDUCED PLANS 0 10 20 30 40 50 60 70 80 90 100

DISREGARD PRINTS BEARING EARLIER REVISION DATES →

REVISION DATES (PRELIMINARY STAGE ONLY): 05/07/99 | 05/07/01 | 01/08/02 | 04/26/02 | 01/07/02 | 12/19/02

SHEET 122R3 OF

FILE => L:\BB\04-012001\SAS\Contract Plans and CCO\CCO\In Progress\CCO#62\DGN\aetld12a.dgn

100 % PS&E

USERNAME => vlignotovs DATE PLOTTED => 25 JUL 2008 TIME PLOTTED => 09:48:18

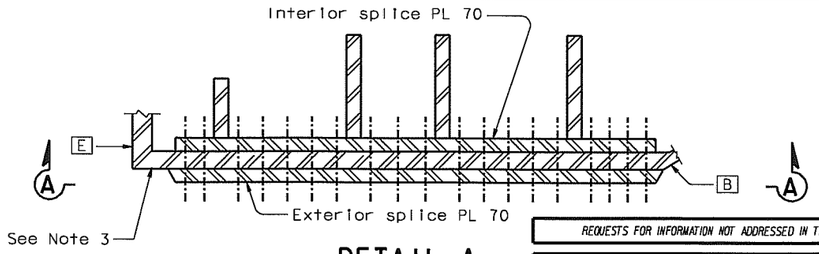

DETAIL A
1:15

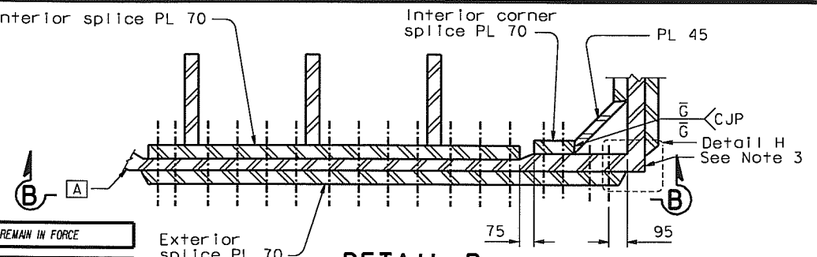

DETAIL B
1:15

REQUESTS FOR INFORMATION NOT ADDRESSED IN THIS CCO REMAIN IN FORCE

MARK	DATE	DESCRIPTIONS	BY	CH'D	CCO#
2	08/15/08	TOWER DOUBLER PLATE & SPLICE CORNER DETAILS	MN	NV	62
1	06/23/06	SPLICE PLATES PER ISM	MN	NV	21

REVISIONS

CONTRACT CHANGE ORDER NO.____
SHEET ____ OF ____

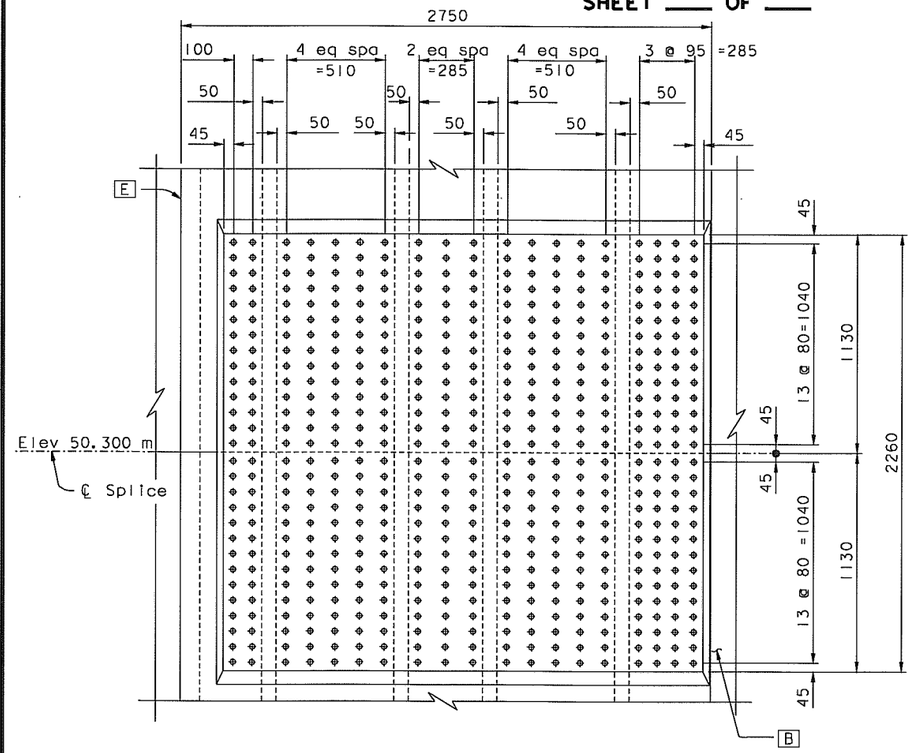

ELEVATION A-A
1:15

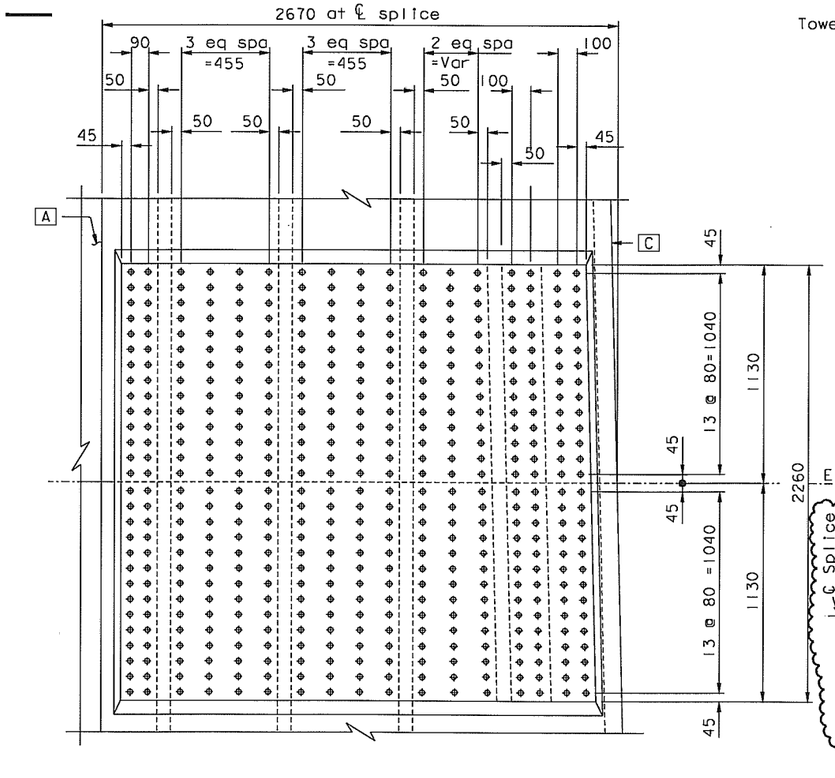

ELEVATION B-B
1:15

LEGEND:

⊕ M27 A490-X HS Bolts

\+ 12 Dia cap screw drilled in tapped hole

TOWER SKIN PLATE A

TOWER SKIN PLATE B

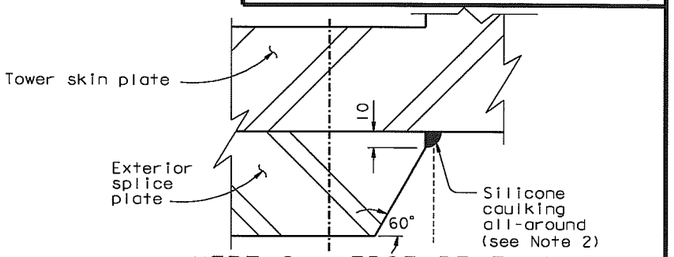

VERTICAL EDGE BEVEL DETAIL
(Typical all exterior splice plates)

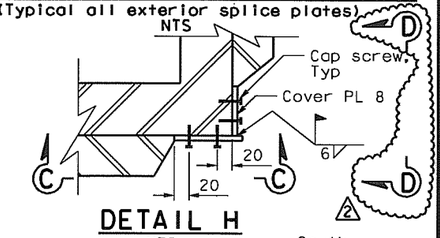

DETAIL H
NTS

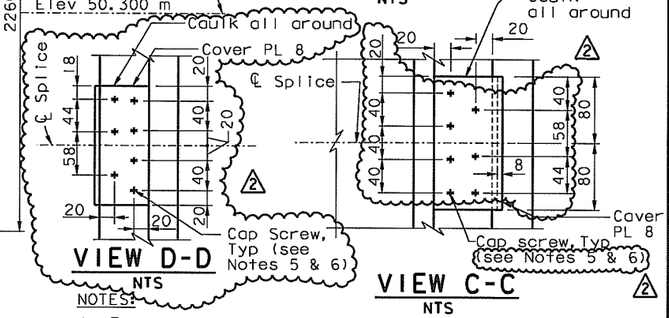

VIEW D-D
NTS

VIEW C-C
NTS

NOTES:

1. The tower splice connections are designed as slip critical connections with class B contact surface (slip coefficient 0.5). The Contractor shall ensure that the flatness requirements are met at the faying surfaces.
2. Silicone caulk sealing shall be applied around the perimeter (horizontal and vertical edges) of all exterior splice plates.
3. Skin plate splice seam not covered by exterior splice plate shall be covered by cover plate and secured by cap screws with 8 mm all-around silicone caulk sealing (see Detail H). Corner CD is shown in Detail H. Corners AB, BC, DE and EA similar.
4. Elevation view of adjacent skin plate not shown for clarity.

5. Whenever it is not practicable to have two screw rows, stagger the screw pattern using 3 bolts may be used subject to the approval of the Engineer.
6. Wherever it is not practicable to have cap screws, the cover plate shall be fillet seal welded to the splice plate.

DIST.	COUNTY	ROUTE	KILOMETER POST TOTAL PROJECT	SHEET NO.	TOTAL SHEETS
04	SF	80	13.2/13.9	543R2	1204

REGISTERED ENGINEER - CIVIL
12-6-04
PLANS APPROVAL DATE
REGISTERED PROFESSIONAL ENGINEER — Marwan N. Nader — No. C 054426 — Exp. 12/31/09 — CIVIL — STATE OF CALIFORNIA

The State of California or its officers or agents shall not be responsible for the accuracy or completeness of electronic copies of this plan sheet.

T.Y. LIN / MOFFATT & NICHOL
825 BATTERY STREET
SAN FRANCISCO, CA 94111

Caltrans now has a web site! To get to the web site, go to: http://www.dot.ca.gov

ALL DIMENSIONS ARE IN MILLIMETERS UNLESS OTHERWISE SHOWN

DESIGN	BY M. Nader	CHECKED M. Gulyas	PREPARED FOR THE STATE OF CALIFORNIA DEPARTMENT OF TRANSPORTATION	R. Manzanarez, PROJECT ENGINEER
DETAILS	BY J. Lopez	CHECKED N. Vo		
QUANTITIES	BY J. Lopez	CHECKED Y. Zhang		

R. Valizadeh/V. Toon/Y.L./W.L./F.C.
DESIGN OVERSIGHT
SIGN OFF DATE 08/15/08

Rev. Date: 5-18-98

ORIGINAL SCALE IN MILLIMETERS FOR REDUCED PLANS 0 10 20 30 40 50 60 70 80 90 100

CU 04
EA 0120F1

BRIDGE NO. 34-0006L/R
KILOMETER POST 13.2/13.9

DISREGARD PRINTS BEARING EARLIER REVISION DATES →

REVISION DATES (PRELIMINARY STAGE ONLY): 08/20/99 | 05/24/01 | 01/08/02 | 01/09/02 | 12/18/02 | 10/13/05 | 11/13/05

SHEET 126R2 OF

SAN FRANCISCO OAKLAND BAY BRIDGE
EAST SPAN SEISMIC SAFETY PROJECT
SELF-ANCHORED SUSPENSION BRIDGE
(SUPERSTRUCTURE & TOWER)

TOWER SPLICE DETAILS NO. 4

FILE => I:\bb\04-012001\sas\contract plans and cco\cco\In progress\cco#62\dgn\aetsp04.dgn

USERNAME => dwinrow DATE PLOTTED => 13 AUG 2008 TIME PLOTTED => 16:42:01

100 % PS&E

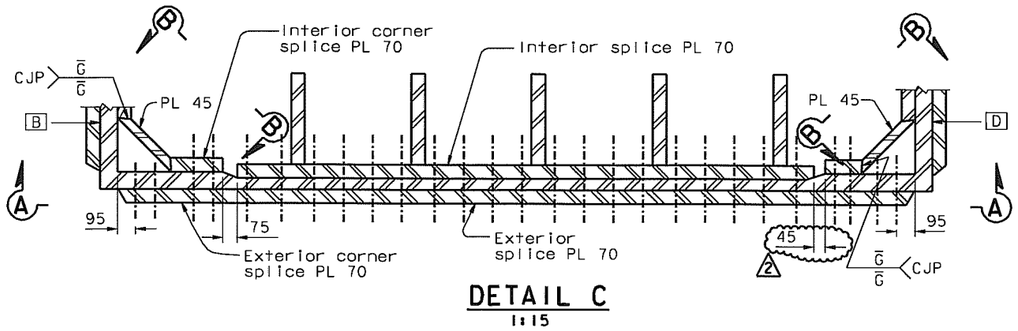

DETAIL C
1:15

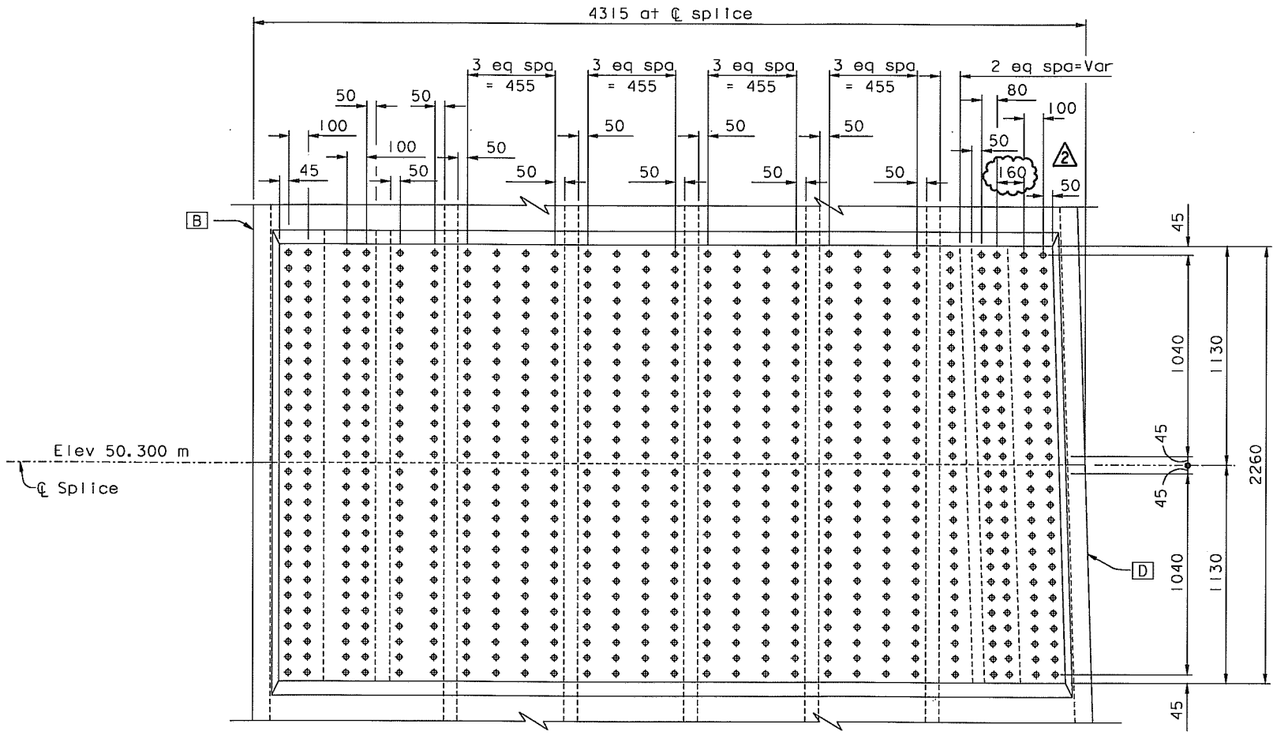

ELEVATION A-A
1:15

TOWER SKIN PLATE C

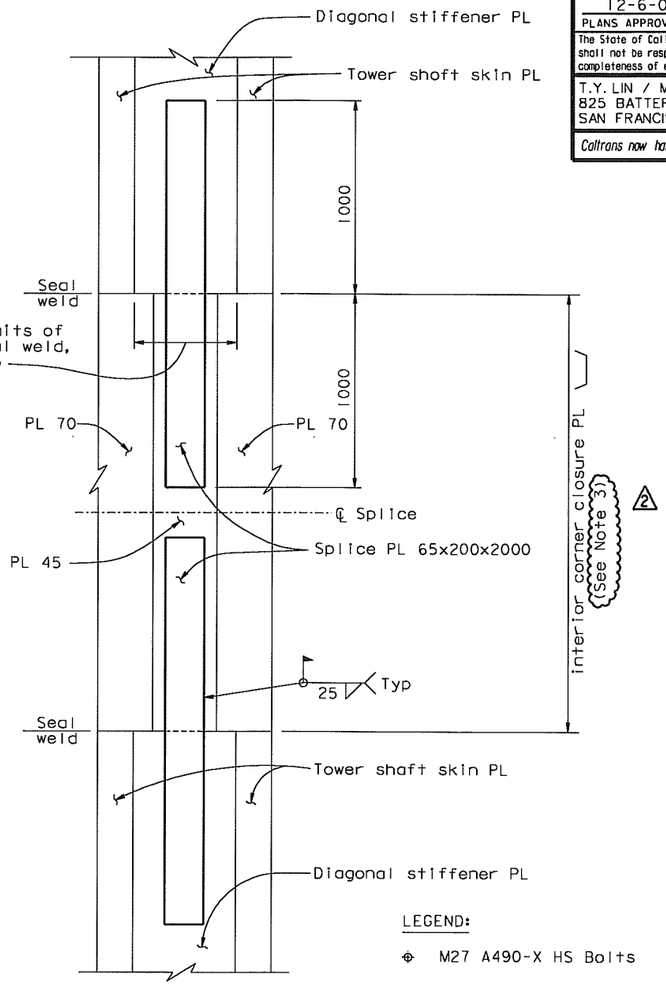

ELEVATION B-B
1:15

LEGEND:

⊕ M27 A490-X HS Bolts

NOTES:

1. The tower splice connections are designed as slip critical connections with class B contact surface (slip coefficient 0.5). The Contractor shall ensure that the flatness requirements are met at the faying surfaces.
2. Elevation view of adjacent skin plate not shown
3. The length of the interior corner splice plate shall be adjusted to ensure the 45 mm minimum bolt edge distance (in the vertical direction).

△2

REQUESTS FOR INFORMATION NOT ADDRESSED IN THIS CCO REMAIN IN FORCE					
△2	07/25/08	TOWER DOUBLER PLATE & SPLICE CORNER DETAILS	MN	NV	62
△1	06/23/06	SPLICE PLATES PER ISM	MN	NV	21
MARK	DATE	DESCRIPTIONS	BY	CH'D	CCO#
REVISIONS					

CONTRACT CHANGE ORDER NO. ____
SHEET ___ OF ___

ALL DIMENSIONS ARE IN MILLIMETERS UNLESS OTHERWISE SHOWN

DIST.	COUNTY	ROUTE	KILOMETER POST TOTAL PROJECT	SHEET NO.	TOTAL SHEETS
04	SF	80	13.2/13.9	544R2	1204

Caltrans Metric

REGISTERED ENGINEER - CIVIL
12-6-04
PLANS APPROVAL DATE
REGISTERED PROFESSIONAL ENGINEER — Marwan N. Nader — No. C 054426 — Exp. 12/31/09 — CIVIL — STATE OF CALIFORNIA

The State of California or its officers or agents shall not be responsible for the accuracy or completeness of electronic copies of this plan sheet.

T.Y. LIN / MOFFATT & NICHOL
825 BATTERY STREET
SAN FRANCISCO, CA 94111

Caltrans now has a web site! To get to the web site, go to: http://www.dot.ca.gov

R. Valizadeh/V. Toan/Y.L./W.L./F.C.		DESIGN	BY M. Nader	CHECKED M. Guiyas	PREPARED FOR THE STATE OF CALIFORNIA DEPARTMENT OF TRANSPORTATION
DESIGN OVERSIGHT		DETAILS	BY J. Lopez	CHECKED N. Vo	
SIGN OFF DATE 07/25/08		QUANTITIES	BY L. Rus	CHECKED Y. Zhang	

R. Manzanarez
PROJECT ENGINEER

BRIDGE NO.	34-0006L/R
KILOMETER POST	13.2/13.9

SAN FRANCISCO OAKLAND BAY BRIDGE
EAST SPAN SEISMIC SAFETY PROJECT
SELF-ANCHORED SUSPENSION BRIDGE
(SUPERSTRUCTURE & TOWER)

TOWER SPLICE DETAILS NO. 5

Rev. Date: 5-18-98

ORIGINAL SCALE IN MILLIMETERS FOR REDUCED PLANS 0 10 20 30 40 50 60 70 80 90 100

CU 04
EA 0120F1

DISREGARD PRINTS BEARING EARLIER REVISION DATES →

REVISION DATES (PRELIMINARY STAGE ONLY): 08/08/99 | 05/17/01 | 04/08/02 | 07/01/02 | 12/19/02

SHEET 127R2 OF

FILE => I:\bb\04-0120I\sas\contract plans and cco\cco\In progress\cco#62\dgn\oetsp05.dgn

100 % PS&E

TIME PLOTTED => 09:56:18
DATE PLOTTED => 25 JUL 2008
USERNAME => vignatova

NOTES:

1. Weld of the longitudinal stiffener to the tower shaft skin plates beyond the length indicated shall be in accordance with Table 1 in "Tower Splice Details No.2" sheet.
2. Perimeter of exterior splice plates shall be caulked.
3. Longitudinal stiffener splice plates shall be A709M HPS 485W steel.
4. Dimension shall be increased by 25 mm for (E1), (E2), (E3) to account for shim plate between skin plate and interior splice plate.
5. For elevation of end of stiffener PL see "Tower Shaft Details No.7" sheet.

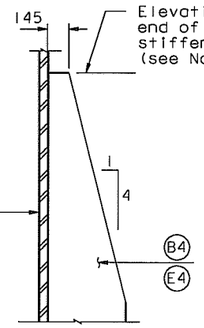

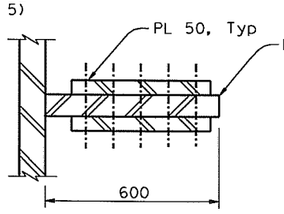

SECTION A-A
1:10

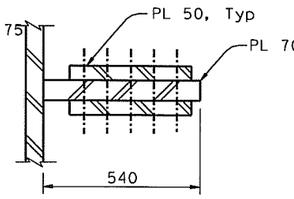

SECTION B-B
1:10

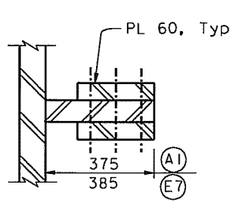

SECTION C-C
1:10

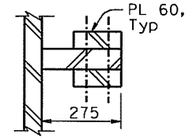

SECTION D-D
1:10

LONGITUDINAL STIFFENERS B4 AND E4

1:20

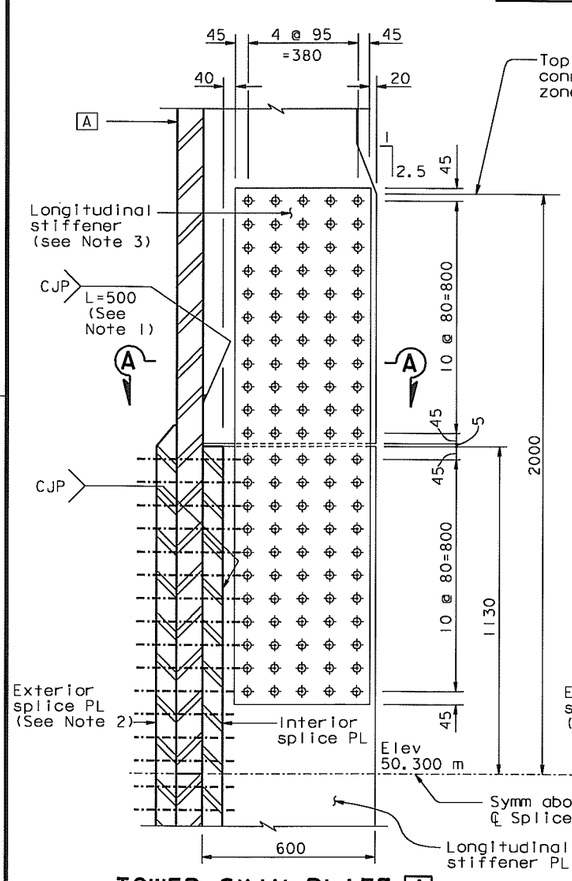

TOWER SKIN PLATE A
(Except (A1))

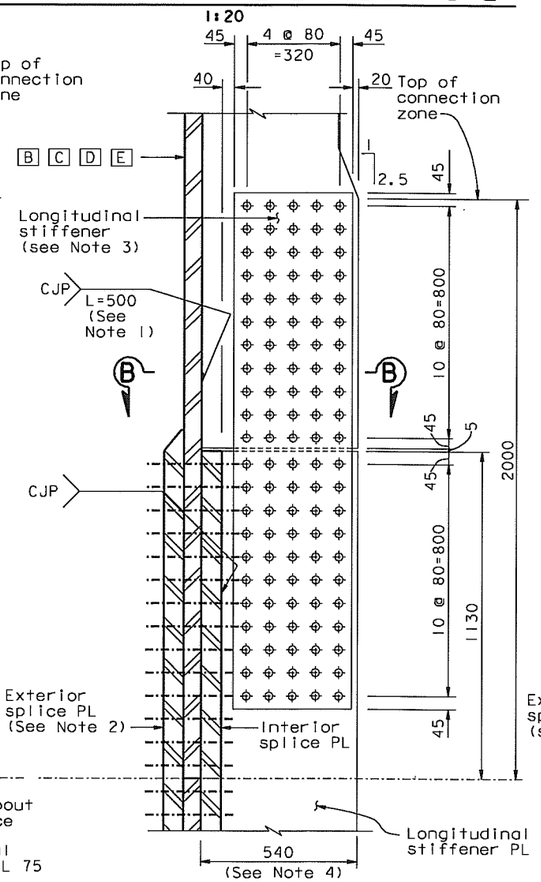

TOWER SKIN PLATE B TO E
(Except (B4), (D4), (E4), and (E7))

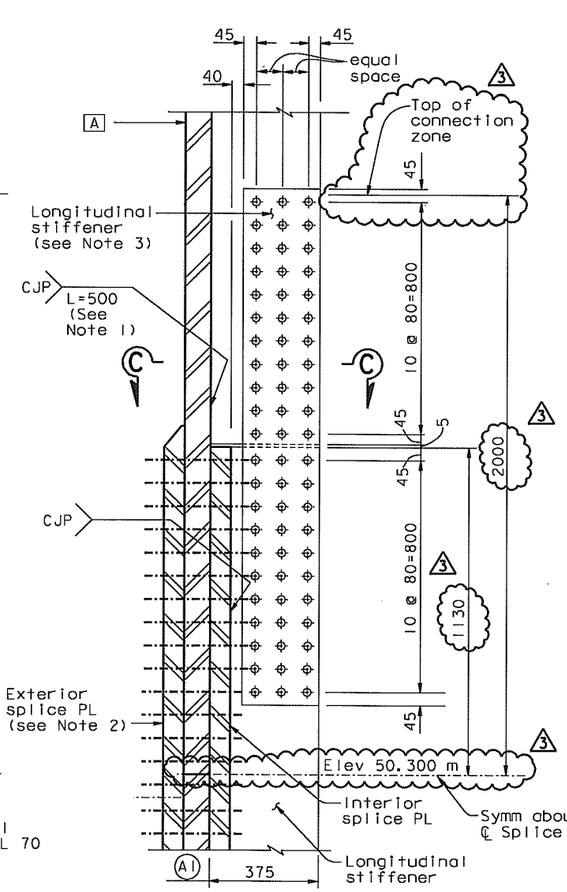

TOWER SKIN PLATE A

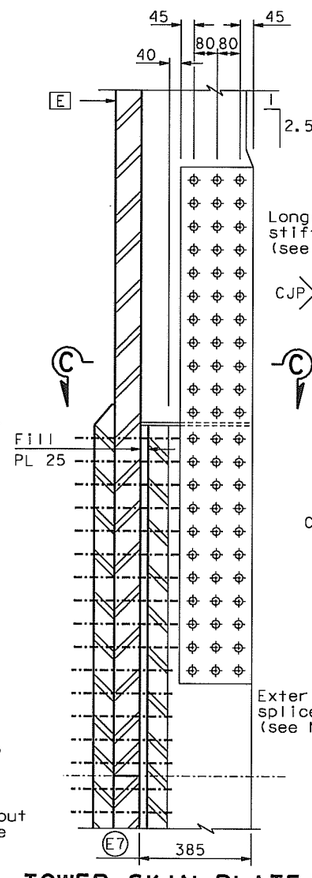

TOWER SKIN PLATE E
(For details not shown, see stiffener (A1))

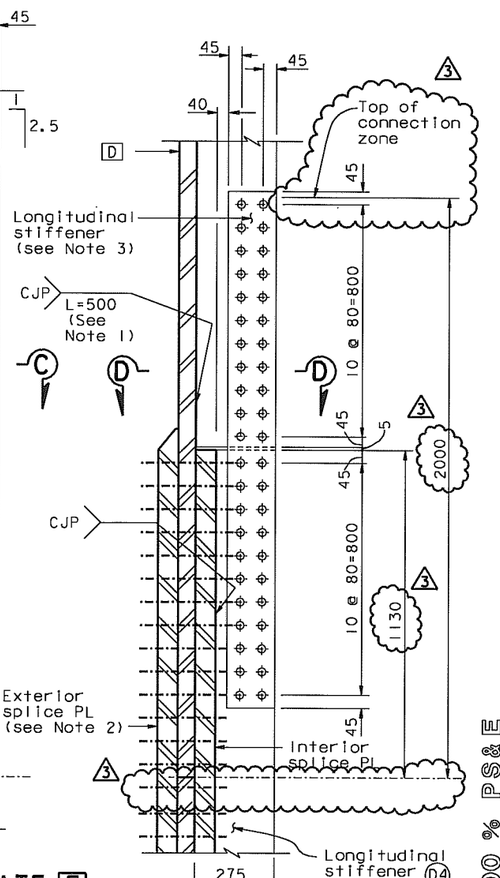

TOWER SKIN PLATE D

DETAIL F
1:10

DETAIL F (For (A1) (E7) and (D4))
1:10

LEGEND:

⌖ M27 A490-X HS Bolt

ALL DIMENSIONS ARE IN MILLIMETERS UNLESS OTHERWISE SHOWN

DIST.	COUNTY	ROUTE	KILOMETER POST TOTAL PROJECT	SHEET NO.	TOTAL SHEETS
04	SF	80	13.2/13.9	546R3	1204

REGISTERED ENGINEER - CIVIL

12-6-04
PLANS APPROVAL DATE

The State of California or its officers or agents shall not be responsible for the accuracy or completeness of electronic copies of this plan sheet.

REGISTERED PROFESSIONAL ENGINEER — Marwan N. Nader, No. C 054426, Exp. 12/31/09, CIVIL — STATE OF CALIFORNIA

T.Y. LIN / MOFFATT & NICHOL
825 BATTERY STREET
SAN FRANCISCO, CA 94111

Caltrans now has a web site! To get to the web site, go to: http://www.dot.ca.gov

REQUESTS FOR INFORMATION NOT ADDRESSED IN THIS CCO REMAIN IN FORCE

MARK	DATE	DESCRIPTIONS (REVISIONS)	BY	CH'D	CCO#
3	07/25/08	TOWER DOUBLER PLATE & SPLICE CORNER DETAILS	MN	NV	62
2	07/11/08	TOWER INTERNAL SHAFT	MN	NV	63
1	06/23/06	LONG STIFFENER GAP & MISC	MN	NV	21

CONTRACT CHANGE ORDER NO. ____
SHEET ____ OF ____

	BY	CHECKED
DESIGN	M. Nader	M. Gulyas
DETAILS	L. Rus	M. Gulyas
QUANTITIES	L. Rus	Y. Zhang

PREPARED FOR THE STATE OF CALIFORNIA
DEPARTMENT OF TRANSPORTATION

R. Manzanarez
PROJECT ENGINEER

BRIDGE NO. 34-0006L/R
KILOMETER POST 13.2/13.9

CU 04
EA 0120F1

R. Vallzadeh/V. Toan/Y.L./W.L./F.C.
DESIGN OVERSIGHT
SIGN OFF DATE 07/25/08

Rev. Date: 5-18-98

ORIGINAL SCALE IN MILLIMETERS FOR REDUCED PLANS 0 10 20 30 40 50 60 70 80 90 100

DISREGARD PRINTS BEARING EARLIER REVISION DATES

REVISION DATES (PRELIMINARY STAGE ONLY): 05/31/01 | 04/08/02 | 07/31/02 | 12/19/02 | 05/08/03 | 11/13/05

SAN FRANCISCO OAKLAND BAY BRIDGE
EAST SPAN SEISMIC SAFETY PROJECT
SELF-ANCHORED SUSPENSION BRIDGE
(SUPERSTRUCTURE & TOWER)

TOWER SPLICE DETAILS NO. 7

SHEET 129R3 OF

FILE => I:\bb\04-012001\sas\contract plans and cco\cco\In progress\cco*62\dgn\cetsp07.dgn

USERNAME => vlgnotovsi DATE PLOTTED => 25 JUL 2008 TIME PLOTTED => 09:57:48

100 % PS&E

DIST.	COUNTY	ROUTE	KILOMETER POST TOTAL PROJECT	SHEET NO.	TOTAL SHEETS
04	SF	80	13.2/13.9	548R2	1204

REGISTERED ENGINEER - CIVIL

12-6-04
PLANS APPROVAL DATE

REGISTERED PROFESSIONAL ENGINEER — Marwan N. Nader — No. C 054426 — Exp. 12/31/09 — CIVIL — STATE OF CALIFORNIA

The State of California or its officers or agents shall not be responsible for the accuracy or completeness of electronic copies of this plan sheet.

T.Y. LIN / MOFFATT & NICHOL
825 BATTERY STREET
SAN FRANCISCO, CA 94111

Caltrans now has a web site! To get to the web site, go to: http://www.dot.ca.gov

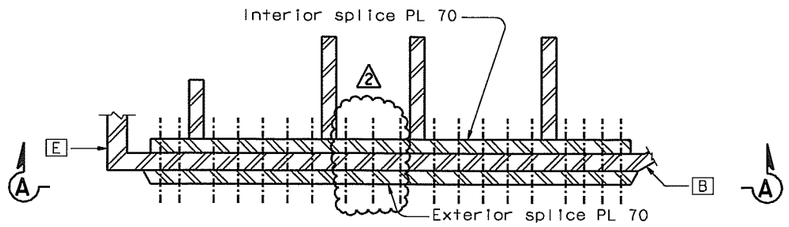

DETAIL A
1:15

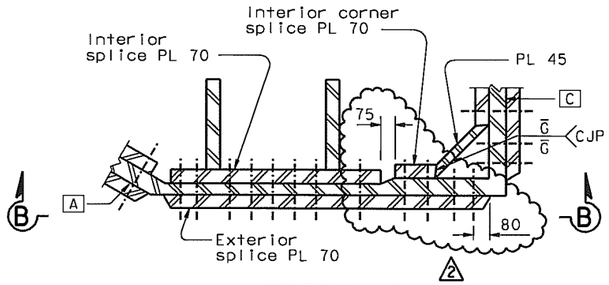

DETAIL B
1:15

REQUESTS FOR INFORMATION NOT ADDRESSED IN THIS CCO REMAIN IN FORCE					
2	07/25/08	TOWER DOUBLER PLATE & SPLICE CORNER DETAILS	MN	NV	62
1	06/21/06	SPLICE PLATES PER ISM	MN	NV	21
MARK	DATE	DESCRIPTIONS	BY	CH'D	CCO#
REVISIONS					

CONTRACT CHANGE ORDER NO. ___
SHEET ___ OF ___

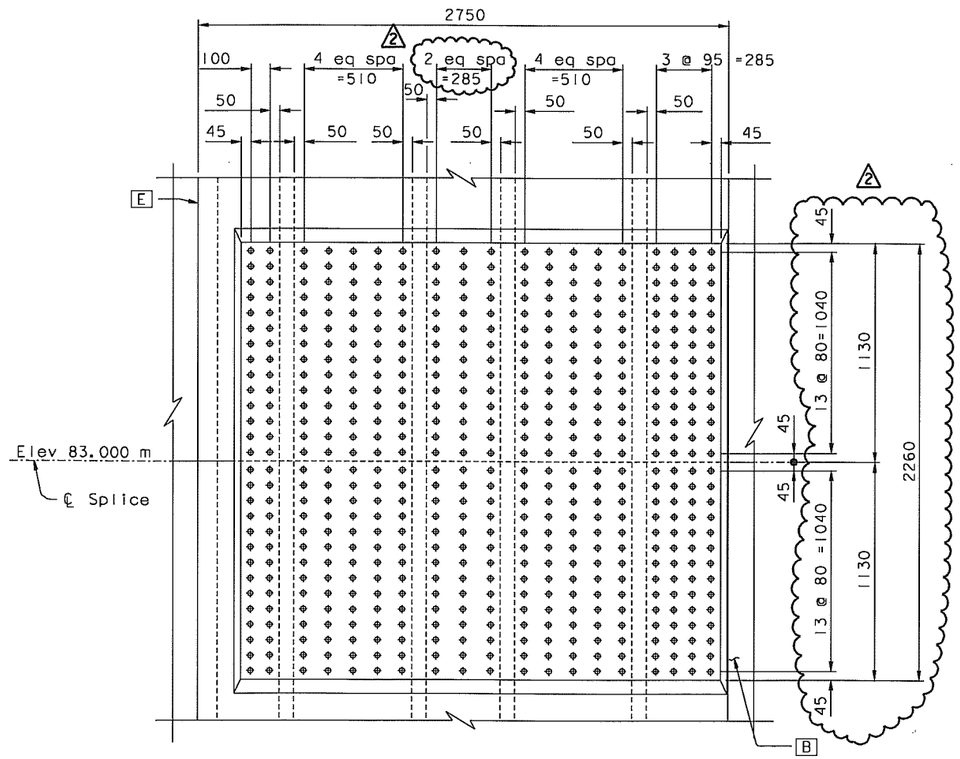

ELEVATION A-A
1:15

TOWER SKIN PLATE A

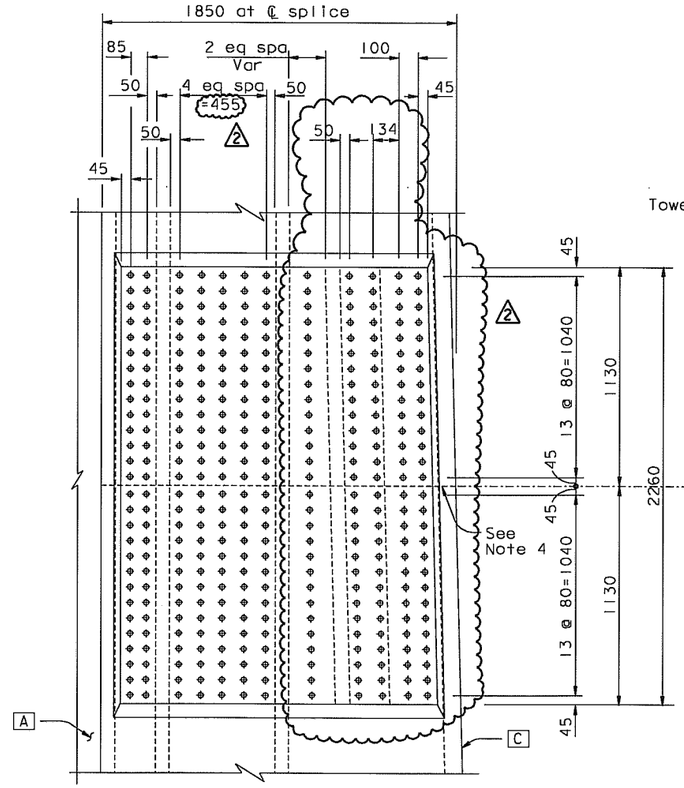

ELEVATION B-B
1:15

TOWER SKIN PLATE B

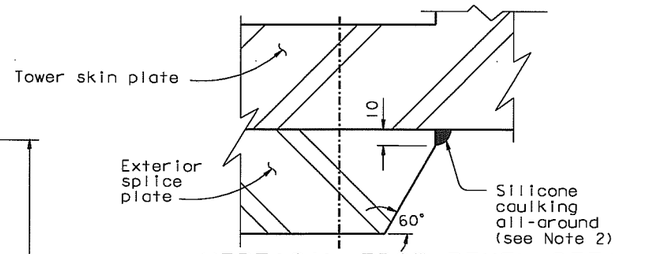

VERTICAL EDGE BEVEL DETAIL
(Typical all exterior splice plates)
NTS

LEGEND:

⊕ M27 A490-X HS Bolts

NOTES:

1. The tower splice connections are designed as slip critical connections with class B contact surface (slip coefficient 0.5). The Contractor shall ensure that the flatness requirements at the faying surfaces and the geometry control are met.
2. Silicone caulk sealing shall be applied around the perimeter (horizontal and vertical edges) of all exterior splice plates.
3. Elevation view of adjacent skin plate not shown for clarity.
4. For skin plate splice seam not covered by exterior splice plates, see details on "Tower Splice Details No. 4" sheet.

ALL DIMENSIONS ARE IN MILLIMETERS UNLESS OTHERWISE SHOWN

R. Valizadeh/V. Toan/Y.L./W.L./F.C. DESIGN OVERSIGHT Ryan Valizadeh / Vong Toan / Y. Liu SIGN OFF DATE 07/25/08		DESIGN BY M. Nader	CHECKED N. Va	PREPARED FOR THE STATE OF CALIFORNIA DEPARTMENT OF TRANSPORTATION	R. Manzanarez PROJECT ENGINEER
		DETAILS BY C. Choi	CHECKED N. Vo		BRIDGE NO. 34-0006L/R
		QUANTITIES BY C. Choi	CHECKED N. Vo		KILOMETER POST 13.2/13.9

SAN FRANCISCO OAKLAND BAY BRIDGE
EAST SPAN SEISMIC SAFETY PROJECT
SELF-ANCHORED SUSPENSION BRIDGE (SUPERSTRUCTURE & TOWER)

TOWER SPLICE DETAILS NO. 9

Rev. Date: 5-18-98

ORIGINAL SCALE IN MILLIMETERS FOR REDUCED PLANS 0 10 20 30 40 50 60 70 80 90 100

CU 04
EA 0120F1

DISREGARD PRINTS BEARING EARLIER REVISION DATES →

REVISION DATES (PRELIMINARY STAGE ONLY)										SHEET	OF
08/25/99	05/31/01	01/08/02	07/01/02	12/09/02	11/13/05					131R2	

FILE => I:\bb\04-012001\sas\contract plans and cco\cco\In progress\cco#62\dgn\aetsp09.dgn

USERNAME => vignatovsk DATE PLOTTED => 25 JUL 2008 TIME PLOTTED => 09:59:38

100 % PS&E

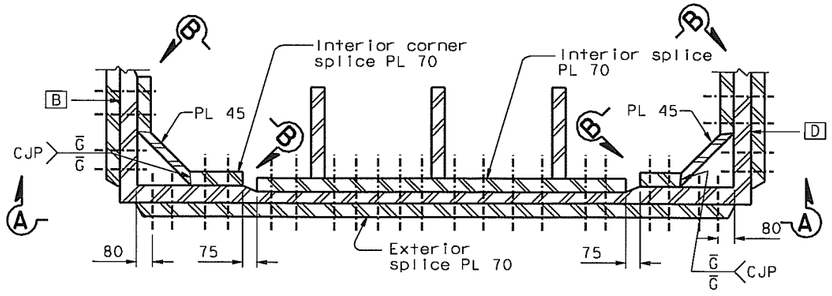

DETAIL C
1:15

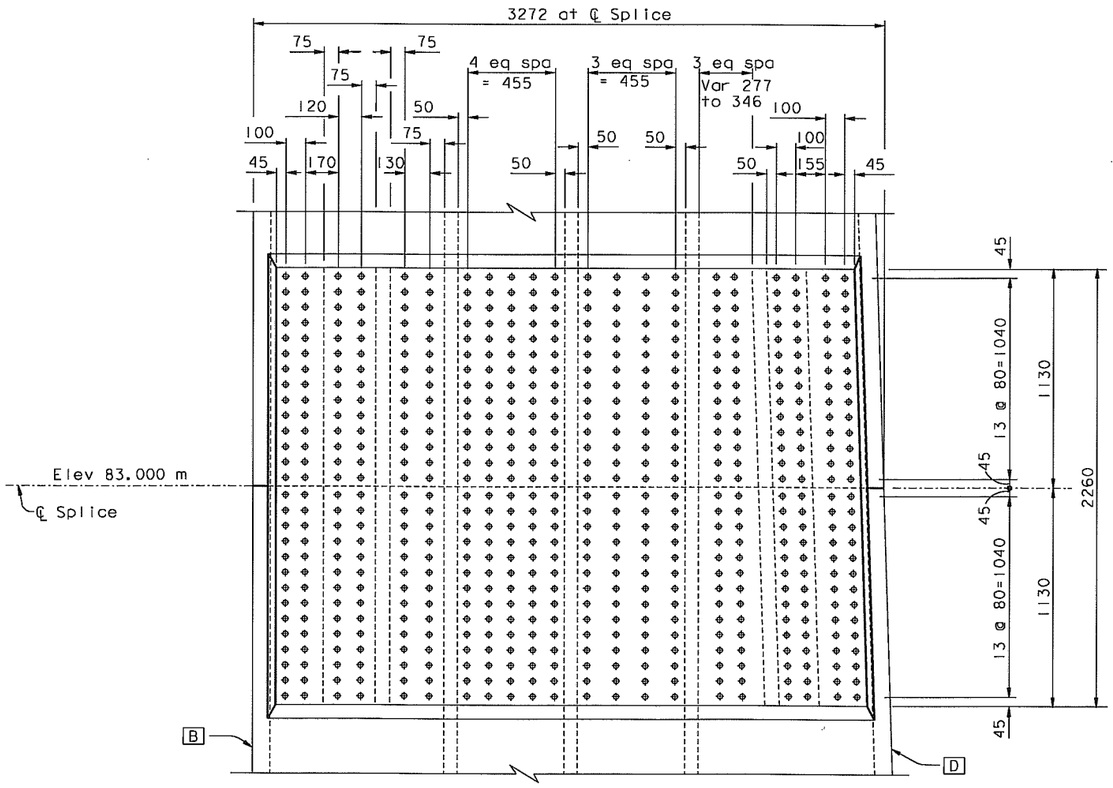

ELEVATION A-A
1:15

TOWER SKIN PLATE C

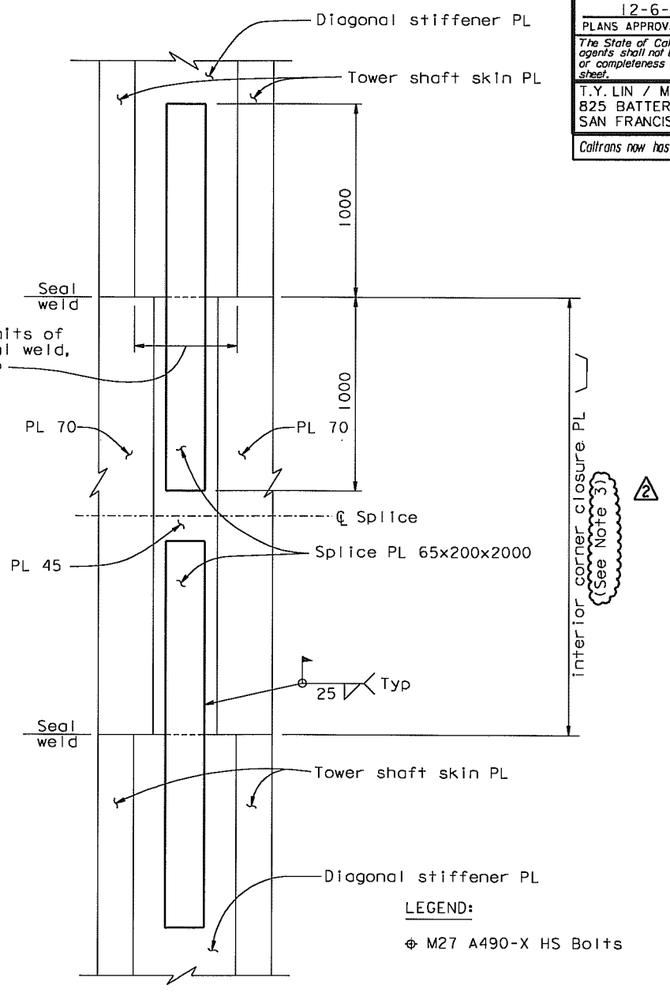

LEGEND:

⊕ M27 A490-X HS Bolts

ELEVATION B-B
1:15

NOTES:

1. The tower splice connections are designed as slip critical connections with class B contact surface (slip coefficient 0.5). The Contractor shall ensure that the flatness requirements at the faying surfaces and the geometry control are met.
2. Elevation view of adjacent skin plate not shown for clarity.
3. The length of the interior corner splice plate shall be adjusted to ensure the 45 mm minimum bolt edge distance (in the vertical direction).

MARK	DATE	REVISIONS DESCRIPTIONS	BY	CH'D	CCO#
2	01/25/08	TOWER DOUBLER PLATE & SPLICE CORNER DETAILS	MN	NV	62
1	06/23/06	SPLICE PLATES PER ISM	MN	NV	21

REQUESTS FOR INFORMATION NOT ADDRESSED IN THIS CCO REMAIN IN FORCE

CONTRACT CHANGE ORDER NO. ____
SHEET ___ OF ___

ALL DIMENSIONS ARE IN MILLIMETERS UNLESS OTHERWISE SHOWN

DIST.	COUNTY	ROUTE	KILOMETER POST TOTAL PROJECT	SHEET NO.	TOTAL SHEETS
04	SF	80	13.2/13.9	549R2	1204

REGISTERED ENGINEER - CIVIL
12-6-04
PLANS APPROVAL DATE
Marwan N. Nader No. C 054426 Exp. 12/31/09 CIVIL — REGISTERED PROFESSIONAL ENGINEER — STATE OF CALIFORNIA

The State of California or its officers or agents shall not be responsible for the accuracy or completeness of electronic copies of this plan sheet.

T.Y. LIN / MOFFATT & NICHOL
825 BATTERY STREET
SAN FRANCISCO, CA 94111

Caltrans now has a web site! To get to the web site, go to: http://www.dot.ca.gov

R. Valizadeh/V. Toon/Y.L./W.L./F.C.
DESIGN OVERSIGHT
Ryan Valizadeh / Vong Toon / Y. Liu
SIGN OFF DATE 07/29/08

Rev. Date: 5-18-98

	BY	CHECKED
DESIGN	M. Nader	N. Vo
DETAILS	C. Choi	N. Vo
QUANTITIES	C. Choi	N. Vo

PREPARED FOR THE STATE OF CALIFORNIA
DEPARTMENT OF TRANSPORTATION

R. Manzanarez
PROJECT ENGINEER

BRIDGE NO. 34-0006L/R
KILOMETER POST 13.2/13.9

CU 04
EA 0120F1

ORIGINAL SCALE IN MILLIMETERS FOR REDUCED PLANS 0 10 20 30 40 50 60 70 80 90 100

DISREGARD PRINTS BEARING EARLIER REVISION DATES →

REVISION DATES (PRELIMINARY STAGE ONLY): 08/02/99 | 05/31/01 | 04/08/02 | 07/01/02 | 12/19/02

SHEET 132R2 OF

SAN FRANCISCO OAKLAND BAY BRIDGE
EAST SPAN SEISMIC SAFETY PROJECT
SELF-ANCHORED SUSPENSION BRIDGE
(SUPERSTRUCTURE & TOWER)

TOWER SPLICE DETAILS NO. 10

FILE => I:\bb\04-012001\sas\contract plans and cco\cco\In progress\cco#62\dgn\aetspl0.dgn

USERNAME => vlgnatovis DATE PLOTTED => 25 JUL 2008 TIME PLOTTED => 10:01:24

100 % PS&E

NOTES:

1. Weld of the longitudinal stiffener to the tower shaft skin plates beyond the length indicated shall be in accordance with Table 1 in "Tower Splice Details No. 2" sheet.
2. Perimeter of exterior splice plates shall be caulked.
3. Longitudinal stiffener splice plates shall be A709M HPS 485W steel.
4. Dimension shall be increased by 25 mm for (E1) and (E7) to account for shim plate between skin plate and interior splice plate.
5. For elevation of end of stiffener PL see "Tower Shaft Details No. 7" sheet.

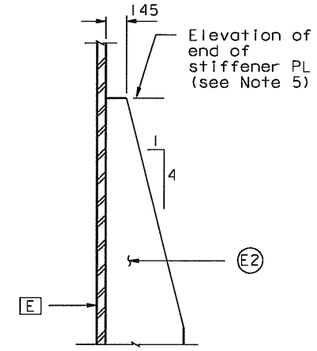

LONGITUDINAL STIFFENER E2
1:20

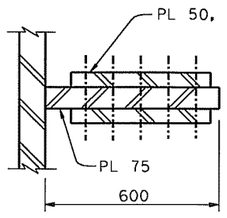

SECTION A-A
1:10

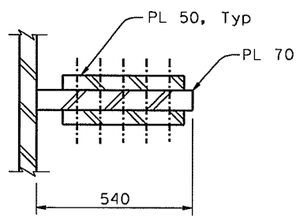

SECTION B-B
1:10

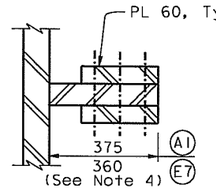

SECTION C-C
1:10

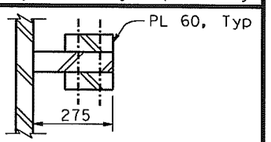

SECTION D-D
1:10

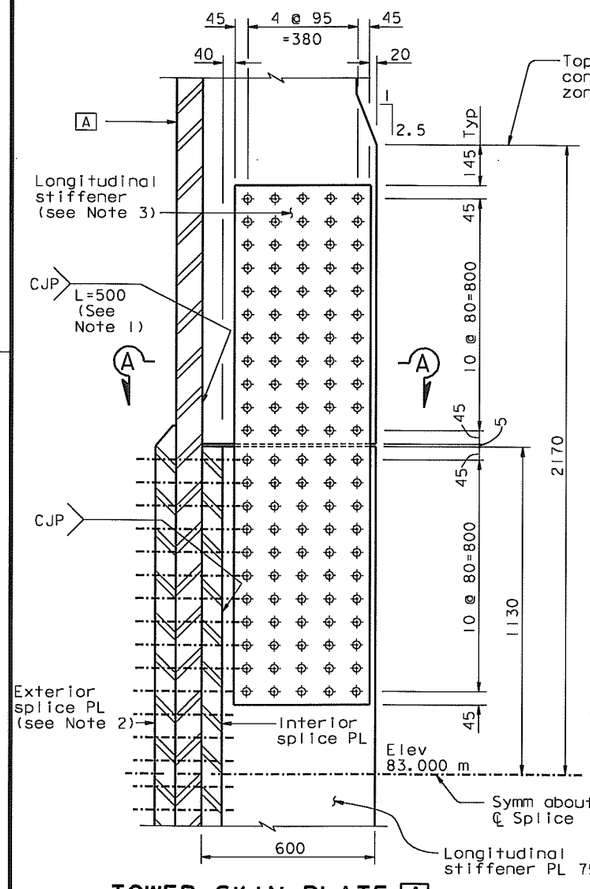

TOWER SKIN PLATE A
(Except (A1))

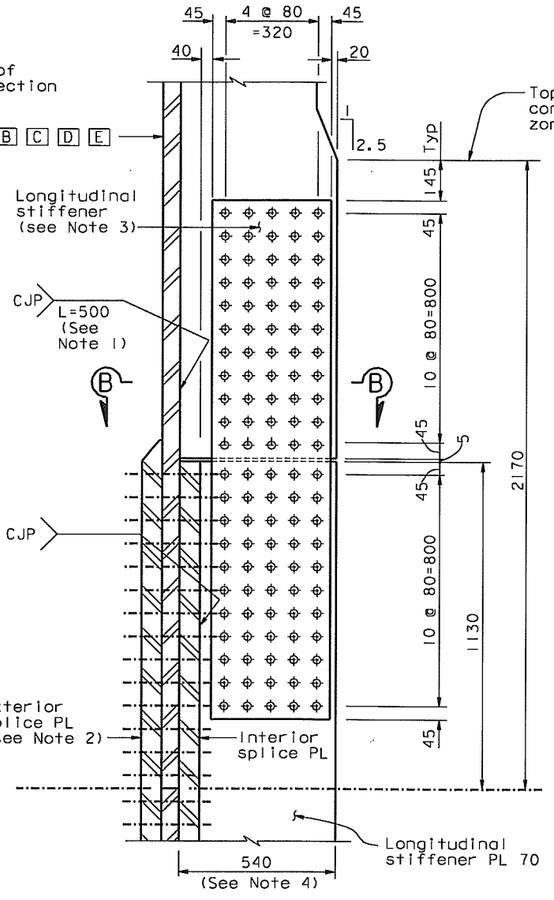

DETAIL F
1:10

TOWER SKIN PLATES B TO E
(Except (E2), (E7) and (D4))

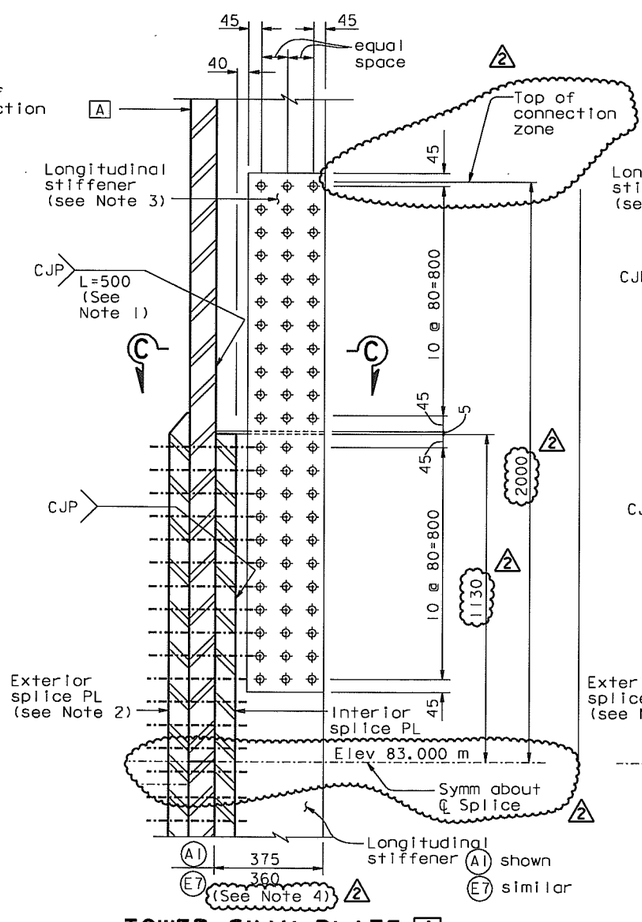

TOWER SKIN PLATE A
(Skin Plate E similar)

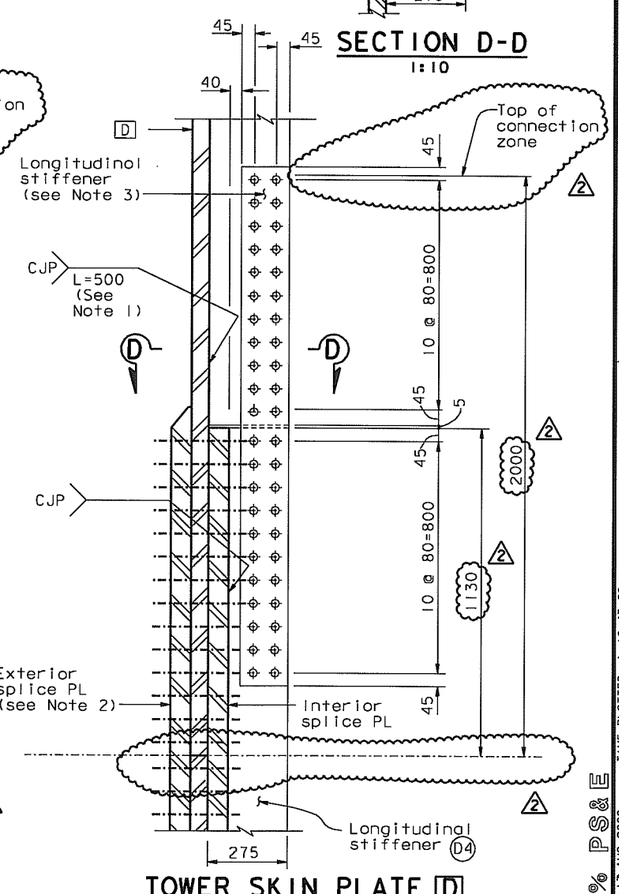

TOWER SKIN PLATE D

DETAIL F (For (A1) (E7) and (D4))
1:10

LEGEND:
M27 A490-X HS Bolt

ALL DIMENSIONS ARE IN MILLIMETERS UNLESS OTHERWISE SHOWN

REQUESTS FOR INFORMATION NOT ADDRESSED IN THIS CCO REMAIN IN FORCE

MARK	DATE	DESCRIPTIONS	BY	CH'D	CCO#
2	08/15/08	TOWER DOUBLER PLATE & SPLICE CORNER DETAILS	MN	NV	62
1	06/21/06	LONG. STIFFENER GAP & MISC.	MN	NV	21

REVISIONS

CONTRACT CHANGE ORDER NO. ____
SHEET ___ OF ___

	BY	CHECKED
DESIGN	M. Nader	N. Vo
DETAILS	J. Lopez	N. Vo
QUANTITIES	J. Lopez	N. Va

PREPARED FOR THE STATE OF CALIFORNIA DEPARTMENT OF TRANSPORTATION

R. Manzanarez
PROJECT ENGINEER

ORIGINAL SCALE IN MILLIMETERS FOR REDUCED PLANS 0 10 20 30 40 50 60 70 80 90 100

R. Valizadeh/V. Toan/Y.L./W.L./F.C.
DESIGN OVERSIGHT
SIGN OFF DATE 08/15/08

Rev. Date: 5-18-98

DIST	COUNTY	ROUTE	KILOMETER POST TOTAL PROJECT	SHEET NO.	TOTAL SHEETS
04	SF	80	13.2/13.9	551R2	1204

Caltrans Metric

REGISTERED ENGINEER - CIVIL
12-6-04
PLANS APPROVAL DATE
REGISTERED PROFESSIONAL ENGINEER — Marwan N. Nader — No. C 054426 — Exp. 12/31/09 — CIVIL — STATE OF CALIFORNIA

The State of California or its officers or agents shall not be responsible for the accuracy or completeness of electronic copies of this plan sheet.

T.Y. LIN / MOFFATT & NICHOL
825 BATTERY STREET
SAN FRANCISCO, CA 94111

Caltrans now has a web site! To get to the web site, go to: http://www.dot.ca.gov

BRIDGE NO. 34-0006L/R
KILOMETER POST 13.2/13.9
CU 04
EA 0120F1

SAN FRANCISCO OAKLAND BAY BRIDGE
EAST SPAN SEISMIC SAFETY PROJECT
SELF-ANCHORED SUSPENSION BRIDGE
(SUPERSTRUCTURE & TOWER)

TOWER SPLICE DETAILS NO. 12

DISREGARD PRINTS BEARING EARLIER REVISION DATES →

REVISION DATES (PRELIMINARY STAGE ONLY)						SHEET	OF
05/31/01	04/08/02	07/29/02	12/19/02	11/13/05		134R2	

FILE => I:\bb\04-0120F1\sas\contract plans and cco\cco\In progress\cco#62\dgn\detspl2.dgn

USERNAME => dwinrow DATE PLOTTED => 16 AUG 2008 TIME PLOTTED => 16:43:29

100 % PS&E

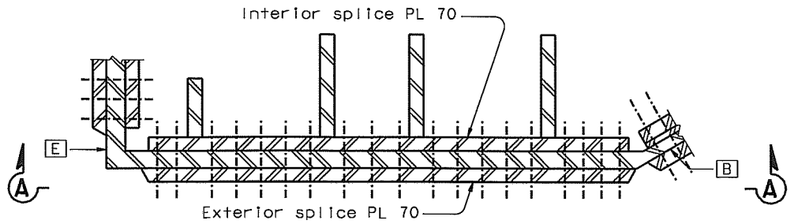

DETAIL A
1:15

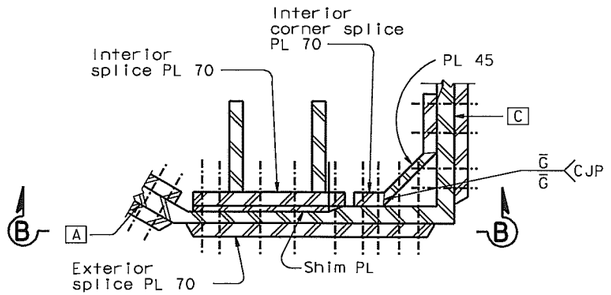

DETAIL B
1:15

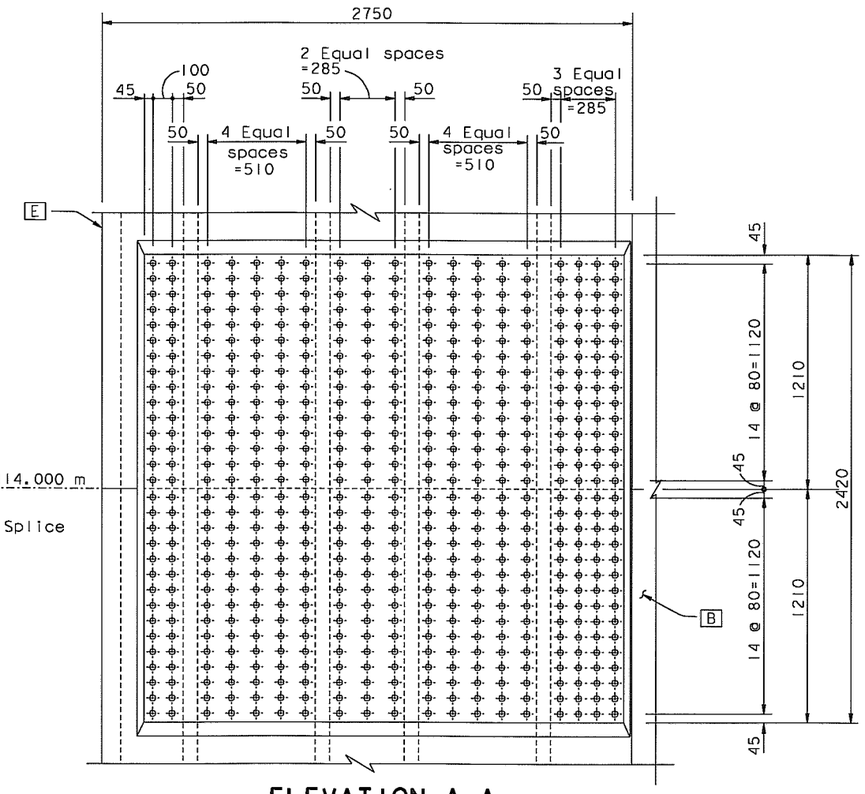

ELEVATION A-A
1:15

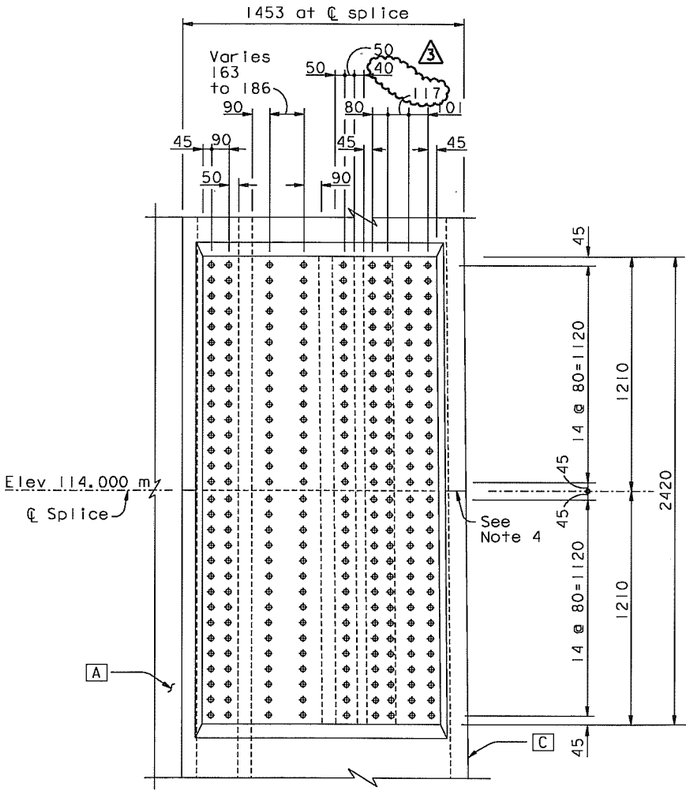

ELEVATION B-B
1:15

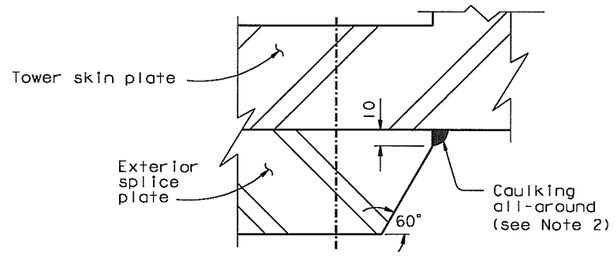

VERTICAL EDGE BEVEL DETAIL
(Typical all exterior splice plates)
NTS

TOWER SKIN PLATE A

TOWER SKIN PLATE B

MARK	DATE	DESCRIPTIONS	BY	CH'D	CCO#
		REVISIONS			
3	07/25/08	TOWER DOUBLER PLATE & SPLICE CORNER DETAILS	MN	NV	62
2	07/07/08	CAULKING	MN	NV	66
1	06/23/06	SPLICE PLATES PER ISM	MN	NV	21

REQUESTS FOR INFORMATION NOT ADDRESSED IN THIS CCO REMAIN IN FORCE

CONTRACT CHANGE ORDER NO. ___
SHEET ___ OF ___

LEGEND:

⊕ M27 A490-X HS Bolts

NOTES:

1. The tower splice connections are designed as slip critical connections with class B contact surface (slip coefficient 0.5). The Contractor shall ensure that the flatness requirements at the faying surfaces and the geometry control are met.
2. Caulk sealing shall be applied around the perimeter (horizontal and vertical edges) of all exterior splice plates.
3. Elevation view of adjacent skin plate not shown for clarity.
4. For skin plate splice seam not covered by exterior splice plates, see details on "Tower Splice Details No. 4" sheet.

ALL DIMENSIONS ARE IN MILLIMETERS UNLESS OTHERWISE SHOWN

DIST.	COUNTY	ROUTE	KILOMETER POST TOTAL PROJECT	SHEET NO.	TOTAL SHEETS
04	SF	80	13.2/13.9	553R3	1204

REGISTERED ENGINEER - CIVIL
12-6-04
PLANS APPROVAL DATE
Marwan N. Nader, No. C 054426, Exp. 12/31/09, CIVIL, STATE OF CALIFORNIA

The State of California or its officers or agents shall not be responsible for the accuracy or completeness of electronic copies of this plan sheet.

T.Y. LIN / MOFFATT & NICHOL
825 BATTERY STREET
SAN FRANCISCO, CA 94111

Caltrans now has a web site! To get to the web site, go to: http://www.dot.ca.gov

SAN FRANCISCO OAKLAND BAY BRIDGE
EAST SPAN SEISMIC SAFETY PROJECT
SELF-ANCHORED SUSPENSION BRIDGE (SUPERSTRUCTURE & TOWER)

TOWER SPLICE DETAILS NO. 14

DESIGN	BY M. Nader	CHECKED N. Vo	PREPARED FOR THE STATE OF CALIFORNIA DEPARTMENT OF TRANSPORTATION
DETAILS	BY J. Lopez	CHECKED N. Vo	
QUANTITIES	BY J. Lopez	CHECKED N. Vo	

R. Vallzadeh/V. Toan/Y.L./W.L./F.C.
DESIGN OVERSIGHT
SIGN OFF DATE 07/25/08

R. Manzanarez
PROJECT ENGINEER

BRIDGE NO. 34-0006L/R
KILOMETER POST 13.2/13.9

CU 04
EA 0120F1

DISREGARD PRINTS BEARING EARLIER REVISION DATES →
REVISION DATES (PRELIMINARY STAGE ONLY): 08/08/99 05/31/01 01/08/02 07/01/02 12/19/02

SHEET 136R3 OF

Rev. Date: 5-18-98

ORIGINAL SCALE IN MILLIMETERS FOR REDUCED PLANS 0 10 20 30 40 50 60 70 80 90 100

FILE => I:\bb\04-0120I\sas\contract plans and cco\cco\In progress\cco#62\dgn\aetspl4.dgn

100 % PS&E

USERNAME => vtgotovs DATE PLOTTED => 25 JUL 2008 TIME PLOTTED => 10:04:35

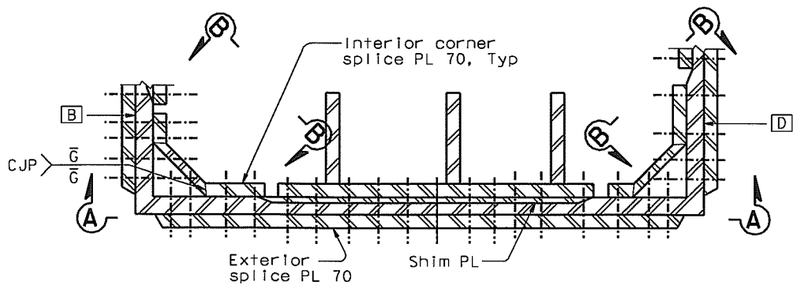

DETAIL C
1:15

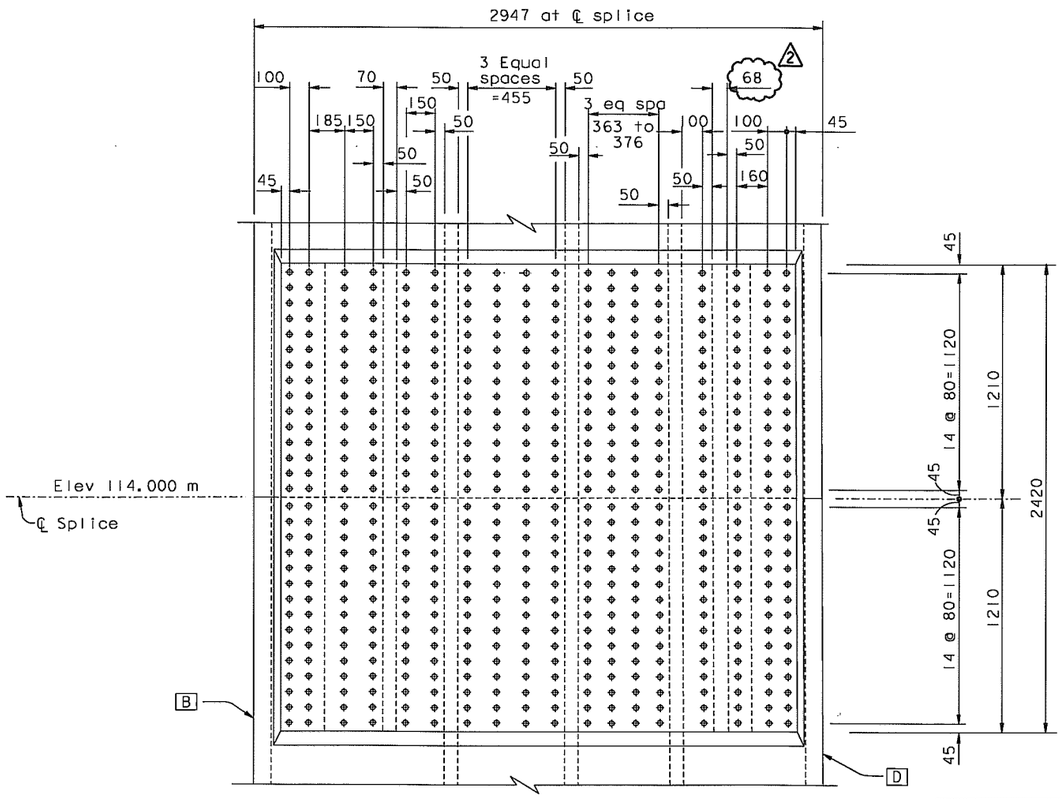

ELEVATION A-A
1:15

TOWER SKIN PLATE C

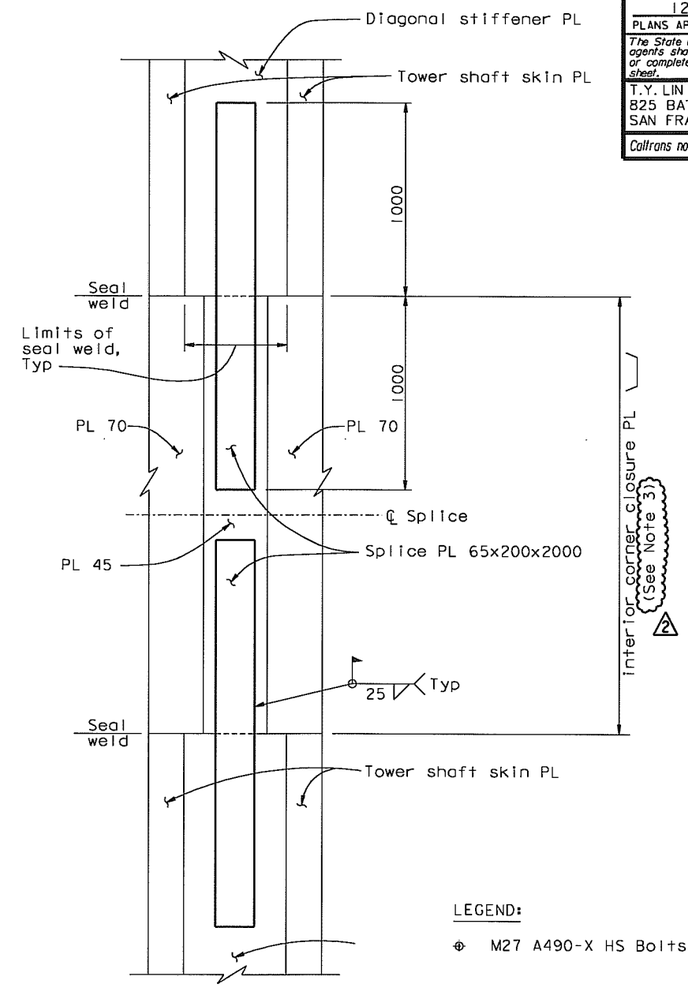

ELEVATION B-B
1:15

LEGEND:

⊕ M27 A490-X HS Bolts

NOTES:

1. The tower splice connections are designed as slip critical connections with class B contact surface (slip coefficient 0.5). The Contractor shall ensure that the flatness requirements at the faying surfaces and the geometry control are met.
2. Elevation view of adjacent skin plate not shown for clarity.
3. The length of the interior corner splice plate shall be adjusted to ensure the 45 mm minimum bolt edge distance (in the vertical direction).

MARK	DATE	DESCRIPTIONS	BY	CH'D	CCO#
		REVISIONS			
2	07/25/08	TOWER DOUBLER PLATE & SPLICE CORNER DETAILS	MN	NV	62
1	06/23/06	SPLICE PLATES PER ISM	MN	NV	21

REQUESTS FOR INFORMATION NOT ADDRESSED IN THIS CCO REMAIN IN FORCE

CONTRACT CHANGE ORDER NO. ____
SHEET ____ OF ____

ALL DIMENSIONS ARE IN MILLIMETERS UNLESS OTHERWISE SHOWN

DIST.	COUNTY	ROUTE	KILOMETER POST TOTAL PROJECT	SHEET NO.	TOTAL SHEETS
04	SF	80	13.2/13.9	554R2	1204

Caltrans Metric

REGISTERED ENGINEER - CIVIL
12-6-04
PLANS APPROVAL DATE

REGISTERED PROFESSIONAL ENGINEER — Marwan N. Nader — No. C 054426 — Exp. 12/31/09 — CIVIL — STATE OF CALIFORNIA

The State of California or its officers or agents shall not be responsible for the accuracy or completeness of electronic copies of this plan sheet.

T.Y. LIN / MOFFATT & NICHOL
825 BATTERY STREET
SAN FRANCISCO, CA 94111

Caltrans now has a web site! To get to the web site, go to: http://www.dot.ca.gov

R. Valizadeh/V. Toan/Y.L./W.L./F.C.	DESIGN	BY M. Nader	CHECKED N. Vo	PREPARED FOR THE STATE OF CALIFORNIA DEPARTMENT OF TRANSPORTATION	R. Manzanorez, PROJECT ENGINEER
DESIGN OVERSIGHT	DETAILS	BY J. Lopez	CHECKED N. Vo		BRIDGE NO. 34-0006L/R
SIGN OFF DATE 07/29/08	QUANTITIES	BY J. Lopez	CHECKED N. Vo		KILOMETER POST 13.2/13.9

SAN FRANCISCO OAKLAND BAY BRIDGE
EAST SPAN SEISMIC SAFETY PROJECT
SELF-ANCHORED SUSPENSION BRIDGE
(SUPERSTRUCTURE & TOWER)

TOWER SPLICE DETAILS NO. 15

Rev. Date: 5-18-98

ORIGINAL SCALE IN MILLIMETERS FOR REDUCED PLANS 0 10 20 30 40 50 60 70 80 90 100

CU 04
EA 0120F1

DISREGARD PRINTS BEARING EARLIER REVISION DATES →

REVISION DATES (PRELIMINARY STAGE ONLY): 08/06/99 | 05/24/01 | 04/08/02 | 07/01/02 | 12/19/02

SHEET 137R2 OF

FILE => I:\bb\04-0120I\sas\contract plans and cco\cco\In progress\cco#62\dgn\aetspl5.dgn

USERNAME => V\gntovs\RATE PLOTTED => 25 JUL 2008 TIME PLOTTED => 10:06:28

100 % PS&E

STATE OF CALIFORNIA - DEPARTMENT OF TRANSPORTATION

CONTRACT CHANGE ORDER

Change Requested by: Engineer

CCO: 63 **Suppl. No. 0** **Contract No. 04 – 0120F4** **Road** SF-80-13.2/13.9 **FED. AID LOC.:**

To: **AMERICAN BRIDGE/FLUOR ENTERPRISES INC A JOINT VENTURE**

You are directed to make the following changes from the plans and specifications or do the following described work not included in the plans and specifications for this contract. ***NOTE: This change order is not effective until approved by the Engineer.***

Description of work to be done, estimate of quantities and prices to be paid. (Segregate between additional work at contract price, agreed price and force account.) Unless otherwise stated, rates for rental of equipment cover only such time as equipment is actually used and no allowance will be made for idle time. This last percentage shown is the net accumulated increase or decrease from the original quantity in the Engineer's Estimate.

Adjustment of Compensation at Lump Sum Price:

ITEM 1.

Within the tower shaft, modify the longitudinal stiffeners, additional field welding channels in the diaphragm and cut holes in the diaphragm as shown on sheets two (2) through seven (7) of this change order. The following revised contract plan sheets detail all changes: 0546R2, 0556R2, 0583R2, 0590R1, 0591R1 and 0592R2 (of 1204).

This change order resolves the costs associated with Contractor Request For Information (RFI) Nos. 262, 262R1, 399, 544, 544R1, 885 and 1023 with respect to changes listed above.

For this work, the Contractor will receive a lump sum price of $700,000.00. This sum constitutes full and complete compensation for furnishing all labor, material, tools and incidentals including all markups by reason of this change.

Adjustment of Compensation at Lump Sum Price..... $700,000.00

ITEM 2.

The items identified above in this change order have been paid as part of CCO 108 resolution. Therefore, the amount due under this change order will be adjusted by the amount paid under CCO 108 to prevent a double payment. Total amount paid under CCO 108, and to be credited to this change, is $700,000.00.

Adjustment of Compensation at Lump Sum Price..... <$700,000.00>

CHANGE ORDER COST AND TIME SUMMARY

(ITEM 1) Adjustment of Compensation for work pursuant to this change order	$700,000.00
(ITEM 2) Amount paid under CCO 108 for this change order	<$700,000.00>
Total net pay for this change order	$0.00

Contract time is addressed in CCO 108 for all work identified in this change order. Therefore contract time will not be adjusted in this change order.

Estimated Cost: **Increase** ☒ **Decrease** ☐ **$0.00**

By reason of this order the time of completion will be adjusted as follows: **0 days**

Submitted by

Signature [signature] **Resident Engineer** Mark Woods for Gary Pursell, Sup.T.E. **Date** 10 Feb 2010

Approval Recommended by

Signature [signature] **Supervising Transportation Engineer** Gary Pursell, Sup.T.E. **Date** 2/10/10

Engineer Approval by

Signature [signature] **Supervising Transportation Engineer** Gary Pursell, Sup.T.E. **Date** 2/23/10

We the undersigned contractor, have given careful consideration to the change proposed and agree, if this proposal is approved, that we will provide all equipment, furnish the materials, except as otherwise be noted above, and perform all services necessary for the work above specified, and will accept as full payment therefor the prices shown above.

NOTE: If you, the contractor, do not sign acceptance of this order, your attention is directed to the requirements of the specifications as to proceeding with the ordered work and filing a written protest within the time therein specified.

Contractor Acceptance by

Signature [signature] (Print name and title) Michael D. Flowers Project Director **Date** 2-22-10

NOTES:

1. Weld of the longitudinal stiffener to the tower shaft skin plates beyond the length indicated shall be in accordance with Table I in "Tower Splice Details No. 2" sheet.
2. Perimeter of exterior splice plates shall be caulked.
3. Longitudinal stiffener splice plates shall be A709M HPS 485W steel.
4. Dimension shall be increased by 25 mm for (E1), (E2), (E3) (E5) to account for shim plate between skin plate and interior splice plate.
5. For elevation of end of stiffener PL see "Tower Shaft Details No. 7" sheet.

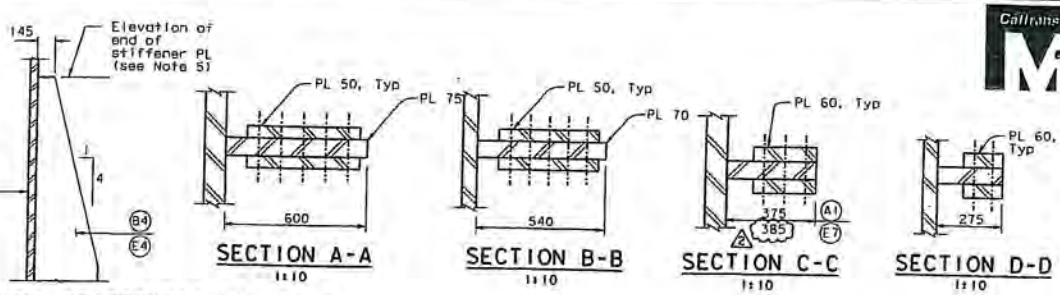

LONGITUDINAL STIFFENERS B4 AND E4

1:20

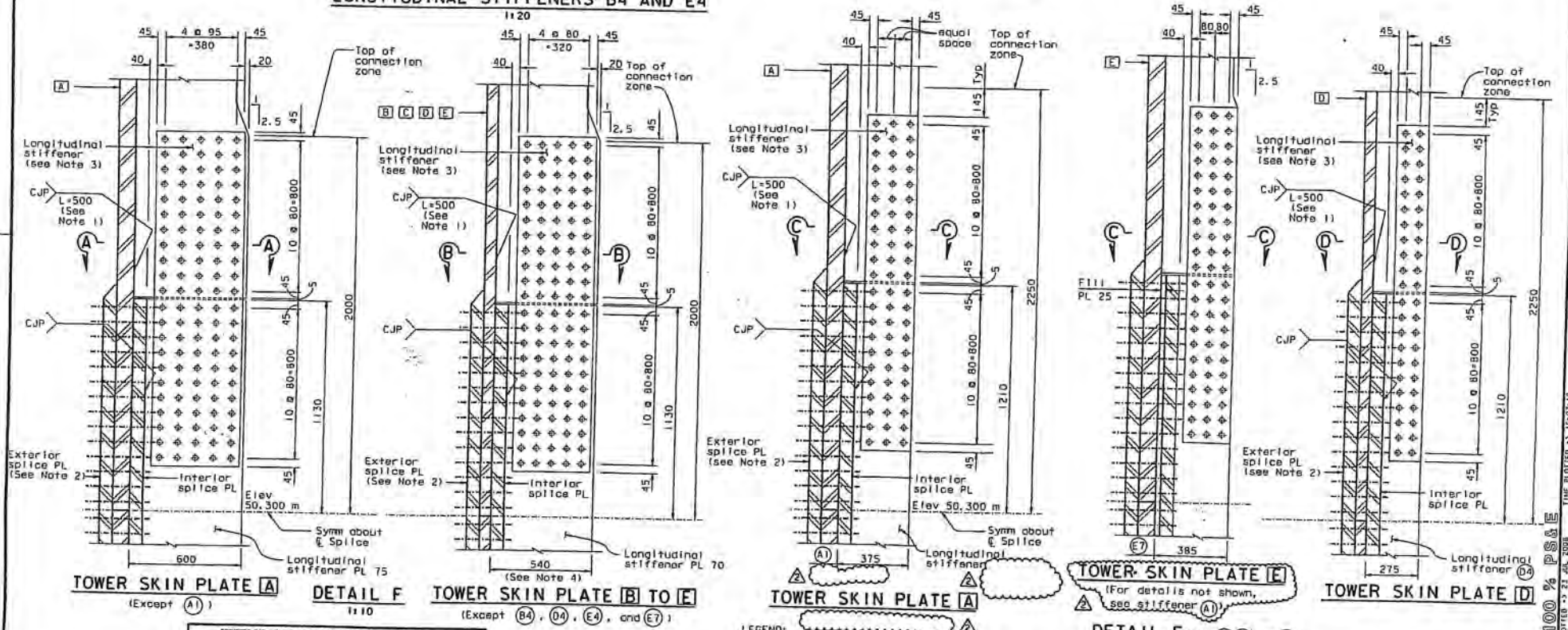

LEGEND:

M27 A490-X HS Bolt

ALL DIMENSIONS ARE IN MILLIMETERS UNLESS OTHERWISE SHOWN

REQUESTS FOR INFORMATION NOT ADDRESSED IN THIS CCO REMAIN IN FORCE

MARK	DATE	DESCRIPTIONS	BY	CH'D	CCO#
2	07/11/08	TOWER INTERNAL SHAFT	MN	NV	63
1	06/27/08	LONG STIFFENER GAP & MISC	MN	NV	21

REVISIONS

CONTRACT CHANGE ORDER NO. 63
SHEET 2 OF 7

	BY	CHECKED
DESIGN	M. Nader	M. Gulyas
DETAILS	L. Rus	M. Gulyas
QUANTITIES	L. Rus	Y. Zhang

PREPARED FOR THE STATE OF CALIFORNIA
DEPARTMENT OF TRANSPORTATION

R. Manzanarez
PROJECT ENGINEER

BRIDGE NO. 34-0006L/R
KILOMETER POST 13.2/13.9
CU 04
EA 0120F1

R. Vallzadeh/V. Toon/Y.L./N.L./F.C.
DESIGN OVERSIGHT
STOW OFF DATE 07/11/08

ORIGINAL SCALE IN MILLIMETERS FOR REDUCED PLANS 0 10 20 30 40 50 60 70 80 90 100

DISREGARD PRINTS BEARING EARLIER REVISION DATES

REVISION DATES (PRELIMINARY STAGE ONLY)

SAN FRANCISCO OAKLAND BAY BRIDGE
EAST SPAN SEISMIC SAFETY PROJECT
SELF-ANCHORED SUSPENSION BRIDGE
(SUPERSTRUCTURE & TOWER)

TOWER SPLICE DETAILS NO. 7

SHEET 128A2

FILE => I:\sbb\04-012001\sds\contract plans and con\contin progress\cco#63\dgn\sas07.dgn

DATE PLOTTED => 22 JUL 2008 TIME PLOTTED => 16:07:18

USERNAME => pbtom

100 % PS&E

Caltrans Metric

DIST.	COUNTY	ROUTE	KILOMETER POST TOTAL PROJECT	SHEET NO.	TOTAL SHEETS
04	SF	80	13.2/13.9	546R2	1204

REGISTERED ENGINEER - CIVIL

12-6-04
PLANS APPROVAL DATE

Marwan N. Nader
No. C 054426
Exp. 12/31/09
CIVIL
STATE OF CALIFORNIA

The State of California or its officers or agents shall not be responsible for the accuracy or completeness of electronic copies of this plan sheet.

T.Y. LIN / MOFFATT & NICHOL
825 BATTERY STREET
SAN FRANCISCO, CA 94111

Caltrans now has a web site! To get to the web site, go to: http://www.dot.ca.gov

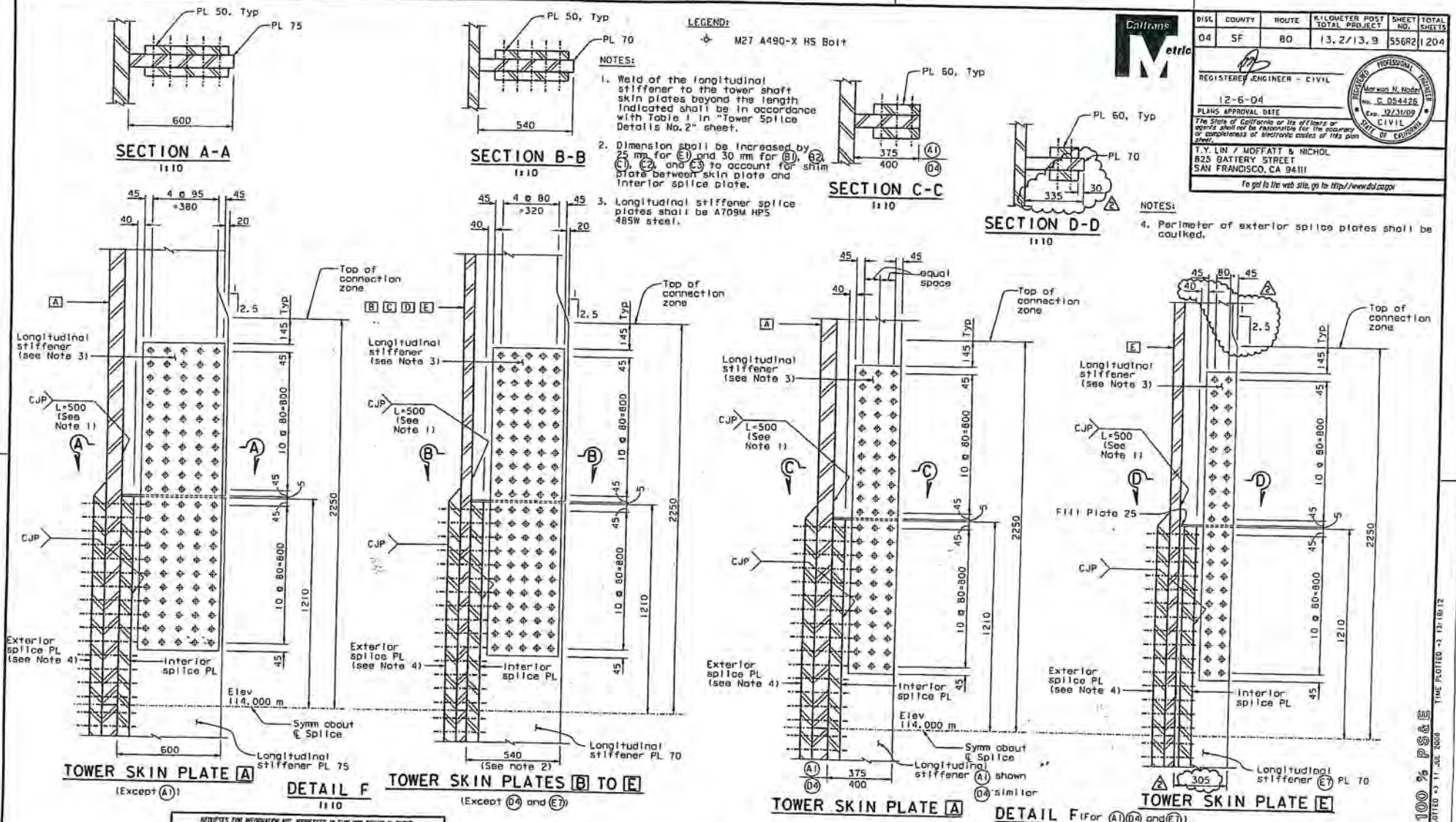

REQUESTS FOR INFORMATION NOT ADDRESSED IN THIS CCO REMAIN IN FORCE

MARK	DATE	DESCRIPTIONS	BY	CH'D	CCO#
2	07/11/08	TOWER INTERNAL SHAFT	MN	NV	63
1	06/27/06	LONG. STIFFENER GAP & MISC.	MN	NV	21
		REVISIONS			

CONTRACT CHANGE ORDER NO. 63
SHEET 3 OF 7

R. Vallizadeh/V. Toan/Y. L./N. L./F. E.
DESIGN OVERSIGHT
Ron Vallizadeh/Vinod Toan/Y. Liu
SIGN OFF DATE 07/11/08
Rev. Date: 3-10-98

	BY	CHECKED
DESIGN	M. Nader	N. Vo
DETAILS	J. Lopez	N. Vo
QUANTITIES	J. Lopez	N. Vo

ORIGINAL SCALE IN MILLIMETERS FOR REDUCED PLANS 0 10 20 30 40 50 60 70 80 90 100

PREPARED FOR THE STATE OF CALIFORNIA DEPARTMENT OF TRANSPORTATION

R. Manzanarez
PROJECT ENGINEER

CU 04
EA 0120F1

ALL DIMENSIONS ARE IN MILLIMETERS UNLESS OTHERWISE SHOWN

DISCARD PRINTS BEARING EARLIER REVISION DATES

DIST.	COUNTY	ROUTE	KILOMETER POST TOTAL PROJECT	SHEET NO.	TOTAL SHEETS
04	SF	80	13.2/13.9	556R2	1204

REGISTERED ENGINEER - CIVIL
12-6-04
PLANS APPROVAL DATE
The State of California or its officers or agents shall not be responsible for the accuracy or completeness of electronic copies of this plan sheet.
Marwan M. Nader No. C 054426 Exp. 12/31/09 CIVIL STATE OF CALIFORNIA PROFESSIONAL ENGINEER REGISTERED
T.Y. LIN / MOFFATT & NICHOL
825 BATTERY STREET
SAN FRANCISCO, CA 94111
To get to the web site, go to http://www.dot.ca.gov

BRIDGE NO. 34-0006L/R
KILOMETER POST 13.2/13.9

SAN FRANCISCO OAKLAND BAY BRIDGE
EAST SPAN SEISMIC SAFETY PROJECT
SELF-ANCHORED SUSPENSION BRIDGE
(SUPERSTRUCTURE & TOWER)

TOWER SPLICE DETAILS NO. 17

REVISION DATES (PRELIMINARY STAGE ONLY)
SHEET 139R2

100% PS&E
TIME PLOTTED: 13:18:12
USERNAME: vfonarev
DATE PLOTTED: 31 JUL 2008
FILE: z:\to\04-012001\eas\contract plans and cco\cco63\in progress\cco63\dgn\detspl7.dgn

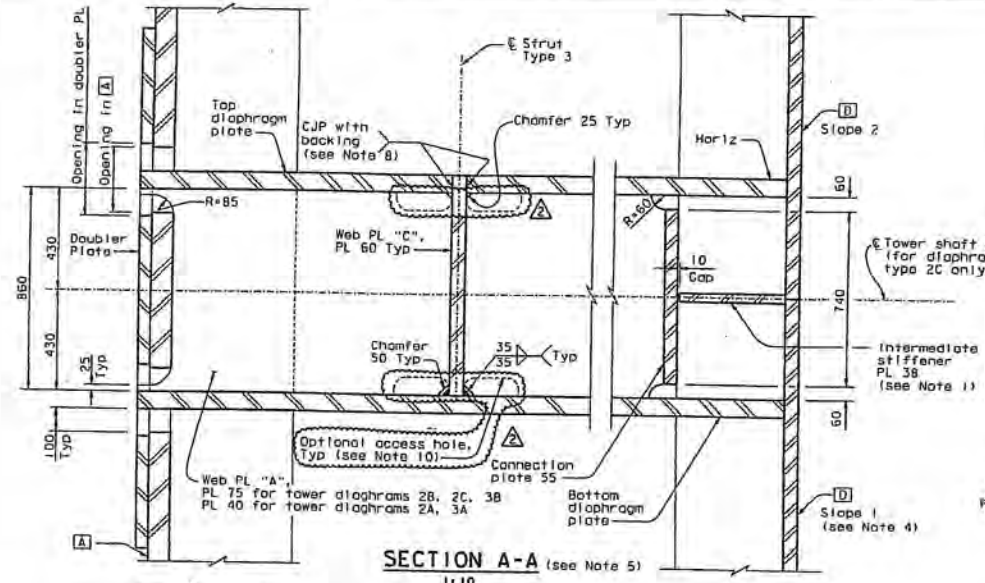

SECTION A-A (see Note 5)

1:10

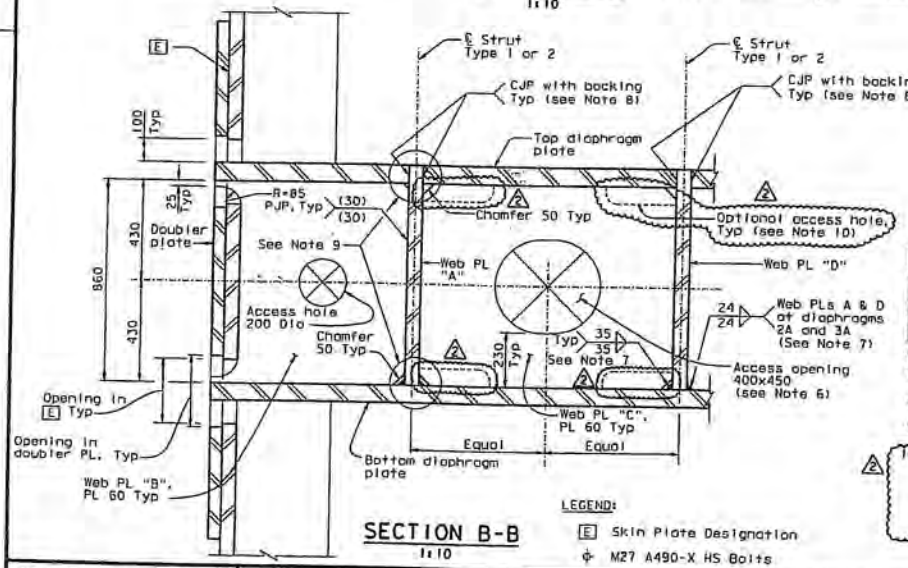

SECTION B-B

1:10

LEGEND:

E Skin Plate Designation

ϕ M27 A490-X HS Bolts

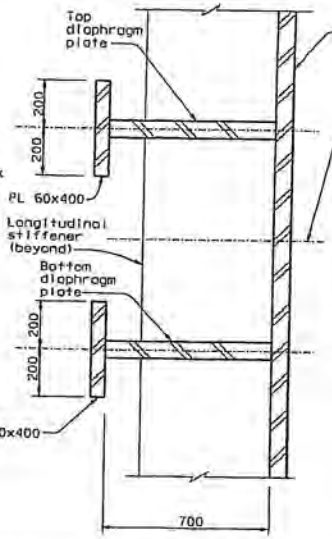

TYPE 3A AND 3B

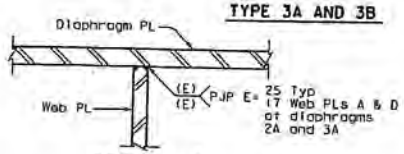

DETAIL A

1:10

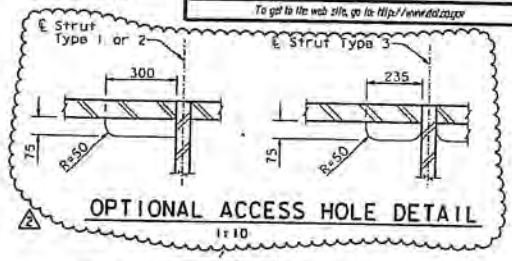

OPTIONAL ACCESS HOLE DETAIL

1:10

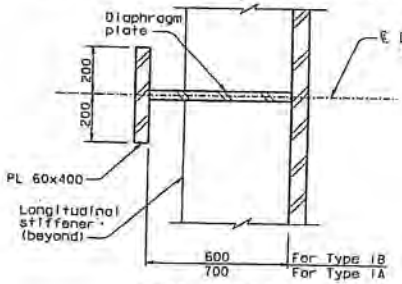

TYPE 1A AND 1B

SECTION C-C (Note: Fit lug plate not shown for clarity)

1:10

REQUESTS FOR INFORMATION NOT ADDRESSED IN THIS CCO REMAIN IN FORCE					
2	07/11/08	TOWER INTERNAL SHAFT	MN	NV	63
1	04/29/08	WEB PL TO DIAPHRAGM PL WELD	MN	NV	21
MARK	DATE	DESCRIPTIONS	BY	CH'D	CCO#
		REVISIONS			

CONTRACT CHANGE ORDER NO. 63
SHEET 4 OF 7

NOTES:

1. Intermediate stiffener plate only for diaphragm type 2C. For stiffener plate layout and details, see "Tower Diaphragm Details No. 12" sheet.
2. Tower strut flange splice is not shown for clarity.
3. For diaphragm locations, see "Tower Diaphragm Details No. 1" sheet.
4. For tower skin plate slope, see "Tower Shaft Details No. 5" and "Tower Shaft Details No. 6" sheets.
5. For inspection and access openings in web plate "A", see "Tower Diaphragm Details No. 9" sheet.
6. For access opening, see Detail B on "Tower Diaphragm Details No. 10" sheet.
7. An equivalent PJP weld is an acceptable alternative.
8. For alternate web plate to diaphragm plate weld, see Detail A.
9. Weld joint details shown at top and at bottom of web plate are interchangeable for all web plates.
10. At the Contractor's option, access holes may be provided to facilitate strut erection. Access holes for strut Type 3 apply at all tower strut elevations. Access holes for strut Type 1 apply at elevation 119 m. Access holes for strut Type 2 apply at elevation 143 m. See "Optional Access Hole Detail".

ALL DIMENSIONS ARE IN MILLIMETERS UNLESS OTHERWISE SHOWN

DIST	COUNTY	ROUTE	KILOMETER POST TOTAL PROJECT	SHEET NO.	TOTAL SHEETS
04	SF	80	13.2/13.8	583R2	1204

REGISTERED ENGINEER - CIVIL
12-6-04
PLANS APPROVAL DATE
The State of California or its officers or agents shall not be responsible for the accuracy or completeness of electronic copies of this plan sheet.

REGISTERED PROFESSIONAL ENGINEER — Marwan M. Nader — No. C 054426 — Exp. 12/31/09 — CIVIL — STATE OF CALIFORNIA

T.Y. LIN / MOFFATT & NICHOL
825 BATTERY STREET
SAN FRANCISCO, CA 94111

To get to the web site, go to: http://www.dot.ca.gov

DESIGN	BY M. Nader	CHECKED M. Gutyas
DETAILS	BY L. Rus	CHECKED M. Gutyas
QUANTITIES	BY L. Rus	CHECKED Y. Zhang

PREPARED FOR THE STATE OF CALIFORNIA DEPARTMENT OF TRANSPORTATION

R. Manzanarez
PROJECT ENGINEER

BRIDGE NO. 34-0006L/R
KILOMETER POST 13.2/13.9
CU 04
EA 0120F1

SAN FRANCISCO OAKLAND BAY BRIDGE
EAST SPAN SEISMIC SAFETY PROJECT
SELF-ANCHORED SUSPENSION BRIDGE
(SUPERSTRUCTURE & TOWER)

TOWER DIAPHRAGM DETAILS NO. 8

DISREGARD PRINTS BEARING EARLIER REVISION DATES

REVISION DATES (PRELIMINARY STAGE ONLY)							SHEET	OF
PLOT	DATE	DATE	DATE	DATE	DATE	DATE	166R2	

R. Vallizadeh/V. Taori/Y. L./M. L./F. C.
DESIGN OVERSIGHT
Ryan Vallizadeh / Vinay Taori / Y. Liu
SIGN OFF DATE 07/11/08

Rev. Date 5-18-88

ORIGINAL SCALE IN MILLIMETERS FOR REDUCED PLANS 0 10 20 30 40 50 60 70 80 90 100

FILE =3 i:\bb\04-012001\sas\contract plans and eco\cco\in progress\cca63\dgn\detail08.dgn

USERNAME =3 vfgonzalez PLOTTED =3 11 JUL 2008 TIME PLOTTED =3 13:19:20

100 % PSAE

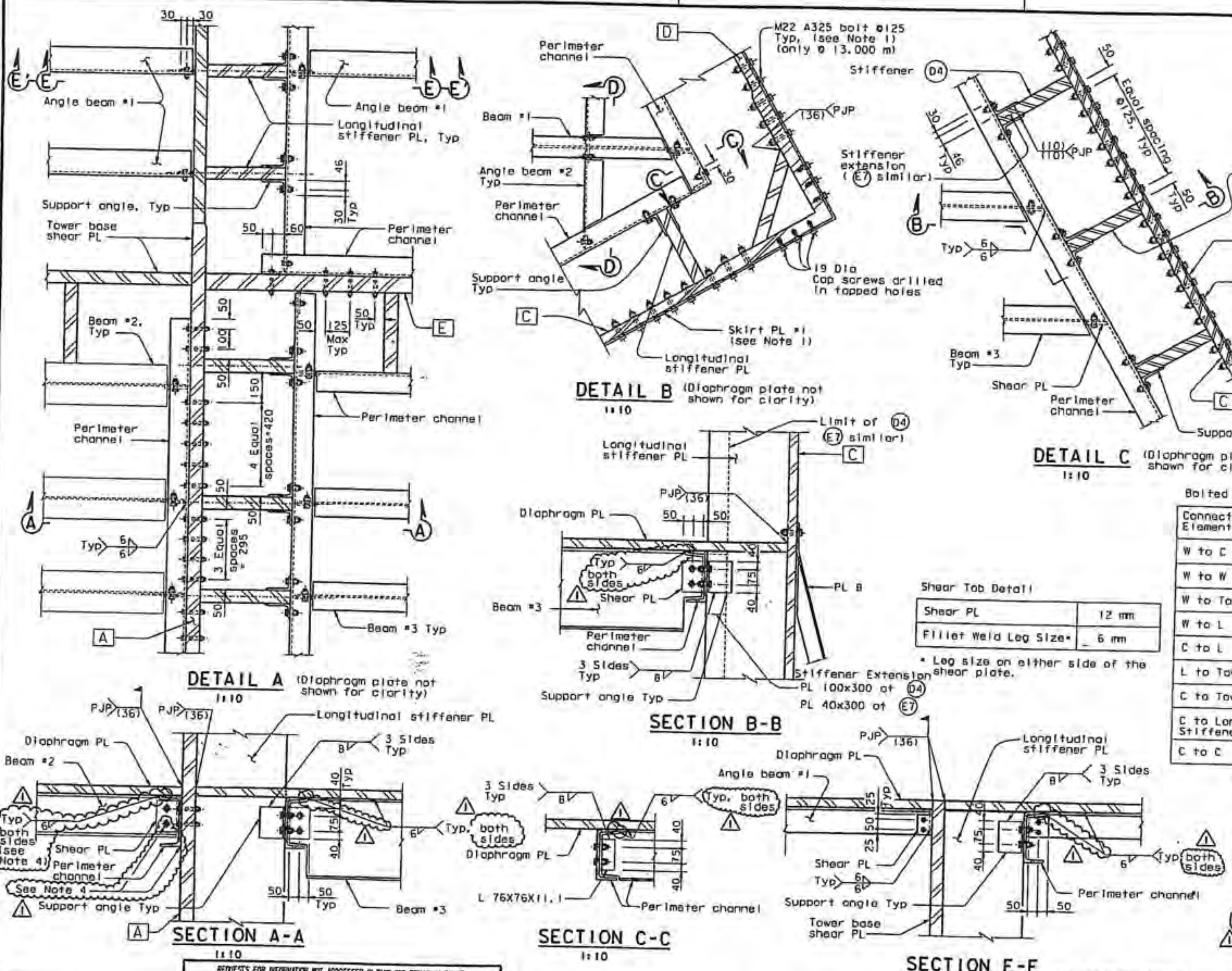

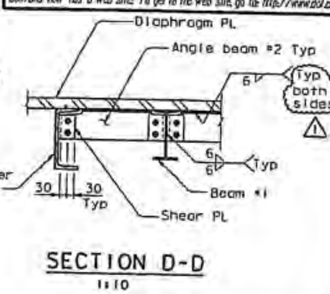

Bolted Connection Schedule

Connecting Elements	Bolts	Edge Distance	Bolt Spacing
W to C	2, M20 A325-X	40 mm	75 mm
W to W	2, M20 A325-X	40 mm	75 mm
W to Tower	2, M20 A325-X	40 mm	75 mm
W to L	2, M16 A325-X	25 mm	50 mm
C to L	2, M16 A325-X	25 mm	50 mm
L to Tower	2, M16 A325-X	25 mm	50 mm
C to Tower	M16 A325-X	Stitch Bolting Max=130 mm	
C to Longitudinal Stiffener	4, M20 A325-X	40 mm	75 mm
C to C	2, M20 A325-X	40 mm	75 mm

Shear Tab Detail

Shear PL	12 mm
Fillet Weld Leg Size*	6 mm

* Leg size on either side of the shear plate.

NOTES:

1. Tower skirt not shown for clarity. For tower skirt details, see "Tower Skirt Details" sheets.
2. Details shown in this sheet do not account for the 1% slope of diaphragm at elevation 13 m. The fabrication of these details shall account for this slope.
3. For section E'-E', see "Tower Diaphragm Details No. 17" sheet.
4. To facilitate erection, shim plates are allowed between perimeter channel and tower skin PL. Alternatively perimeter channels may be attached using field welds and bolts in slotted holes.

REQUESTS FOR INFORMATION NOT ADDRESSED IN THIS CCO REMAIN IN FORCE

ALL DIMENSIONS ARE IN MILLIMETERS UNLESS OTHERWISE SHOWN

DIST	COUNTY	ROUTE	KILOMETER POST TOTAL PROJECT	SHEET NO.	TOTAL SHEETS
04	SF	80	13.2/13.9	590R1	1204

REGISTERED ENGINEER - CIVIL
12-6-04
PLANS APPROVAL DATE

The State of California or its officers or agents shall not be responsible for the accuracy or completeness of electronic copies of this plan sheet.

Morwan N. Nader, No. C 054426, Exp. 12/31/07, CIVIL, STATE OF CALIFORNIA

T.Y. LIN / MOFFATT & NICHOL
825 BATTERY STREET
SAN FRANCISCO, CA 94111

Caltrans now has a web site! To get to the web site, go to: http://www.dot.ca.gov

R. Valizadeh/V. Taan/Y. L./M. L./F. C.
DESIGN OVERSIGHT

SIGN OFF DATE 07/11/08

MARK	DATE	DESCRIPTIONS	BY	CH'D	CCO#
1	6/11/08	TOWER INTERNAL SHAFT	MN	NV	63

REVISIONS

CONTRACT CHANGE ORDER NO. 63
SHEET 5 OF 7

DESIGN BY M. Nader — CHECKED M. Gulyas
DETAILS BY L. Rus — CHECKED M. Gulyas
QUANTITIES BY L. Rus — CHECKED Y. Zhang

PREPARED FOR THE STATE OF CALIFORNIA DEPARTMENT OF TRANSPORTATION

R. Manzanarez
PROJECT ENGINEER

BRIDGE NO. 34-0006L/R
KILOMETER POST 13.2/13.9

SAN FRANCISCO OAKLAND BAY BRIDGE
EAST SPAN SEISMIC SAFETY PROJECT
SELF-ANCHORED SUSPENSION BRIDGE
(SUPERSTRUCTURE & TOWER)

TOWER DIAPHRAGM DETAILS NO. 15

CU 04
EA 0120F1

DISREGARD PRINTS BEARING EARLIER REVISION DATES

SHEET 173R1

FILE => I:\bb\04-0120f1\sas\contract plans and cco\cco\in progress\cco#63\dgn\detdn12.dgn

USERNAME => vlgrotovsDATE PLOTTED => 11 JUL 2008 TIME PLOTTED => 13:20:52

100 % PS&E

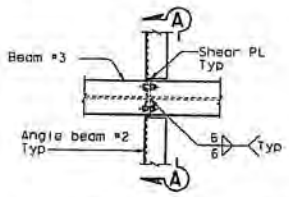

DETAIL D (Diaphragm plate not shown for clarity)
1:10

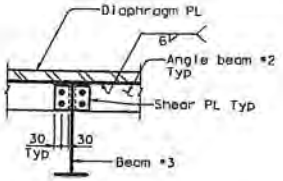

SECTION A-A
1:10

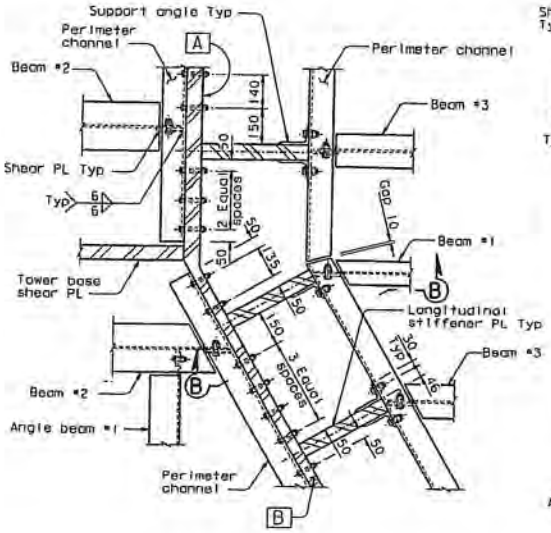

DETAIL F (Diaphragm plate not shown for clarity)
1:10

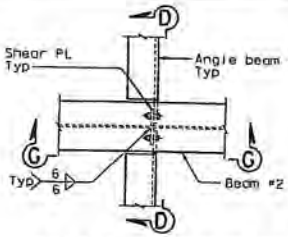

DETAIL G (Diaphragm plate not shown for clarity)
1:10

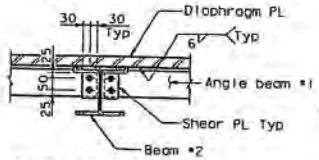

SECTION D-D
1:10

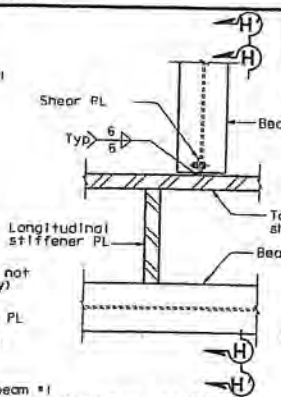

DETAIL H (Diaphragm plate not shown for clarity)
1:10

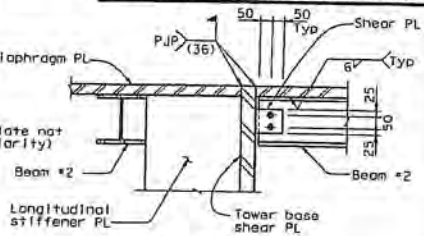

SECTION H-H
1:10

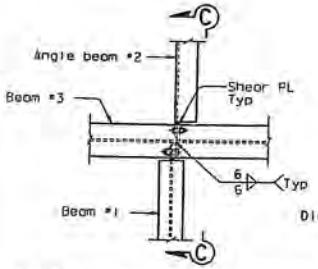

DETAIL E (Diaphragm plate not shown for clarity)
1:10

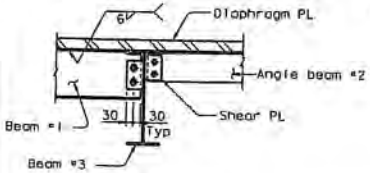

SECTION C-C
1:10

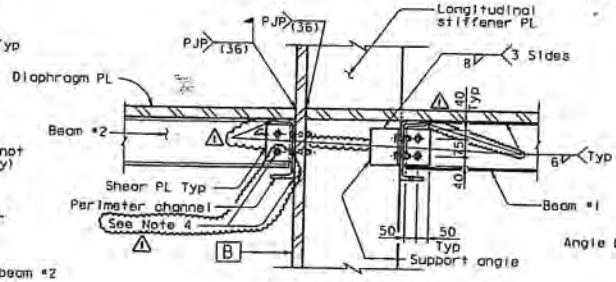

SECTION B-B
1:10

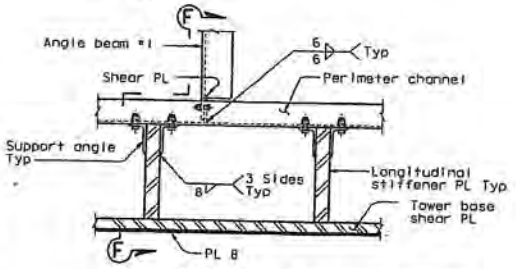

DETAIL J (Diaphragm plate not shown for clarity)
1:10

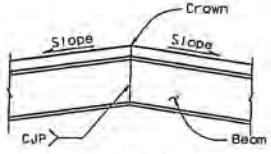

SECTION G-G
NTS
(Crown detail for diaphragm at Elev 13 m, Slope exaggerated for clarity)

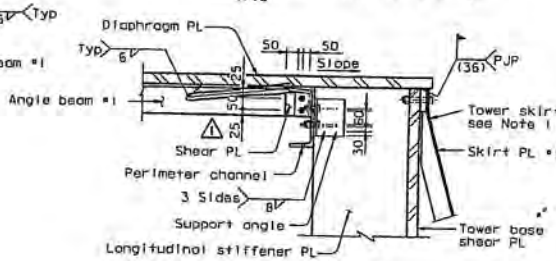

SECTION F-F
1:10

NOTES:

1. For tower skirt details, see "Tower Skirt Details" sheets.
2. Details shown in this sheet do not account for the 1% slope of diaphragm at elevation 13 m. The fabrication of these details shall account for this slope.
3. For section H'-H', see "Tower Diaphragm Details No. 15" sheet.
4. To facilitate erection, shim plates are allowed between perimeter channel and tower skin PL, alternatively perimeter channels may be attached using field welds and bolts in slotted holes.

ALL DIMENSIONS ARE IN MILLIMETERS UNLESS OTHERWISE SHOWN

REQUESTS FOR INFORMATION NOT ADDRESSED IN THIS CCO REMAIN IN FORCE

MARK	DATE	DESCRIPTIONS	MN BY	NV CH'D	63 CCO#
1	07/17/08	TOWER INTERNAL SHAFT			

REVISIONS

CONTRACT CHANGE ORDER NO. 63
SHEET 6 OF 7

DESIGN	M. Nader	M. Gulyas
DETAILS	L. Rus	M. Gulyas
QUANTITIES	L. Rus	Y. Zhang

PREPARED FOR THE STATE OF CALIFORNIA DEPARTMENT OF TRANSPORTATION

R. Manzanarez PROJECT ENGINEER

CU 04
EA 0120F1

BRIDGE NO. 34-0006L/R
KILOMETER POST 13.2/13.9

DISREGARD PRINTS BEARING EARLIER REVISION DATES

SAN FRANCISCO OAKLAND BAY BRIDGE
EAST SPAN SEISMIC SAFETY PROJECT
SELF-ANCHORED SUSPENSION BRIDGE
(SUPERSTRUCTURE & TOWER)

TOWER DIAPHRAGM DETAILS NO. 16

DIST.	COUNTY	ROUTE	KILOMETER POST TOTAL PROJECT	SHEET NO.	TOTAL SHEETS
04	SF	80	13.2/13.9	591R	1204

REGISTERED ENGINEER - CIVIL
12-6-04
PLANS APPROVAL DATE

The State of California or its officers or agents shall not be responsible for the accuracy or completeness of electronic copies of this plan sheet.

T.Y. LIN / MOFFATT & NICHOL
825 BATTERY STREET
SAN FRANCISCO, CA 94111

Caltrans now has a web site! To get to the web site, go to: http://www.dot.ca.gov

REVISION DATES (PRELIMINARY STAGE ONLY)

MONTH	MONTH	MONTH	MONTH	MONTH

SHEET 174R

FILE => I:\tb\04-0120f1\sos\contract plans and cco\cco\in progress\cco*63\dgn\osdsh13.dgn

USERNAME => vigonzal

DATE PLOTTED => 11 JUL 2008

TIME PLOTTED => 13:21:59

100 % PS&E

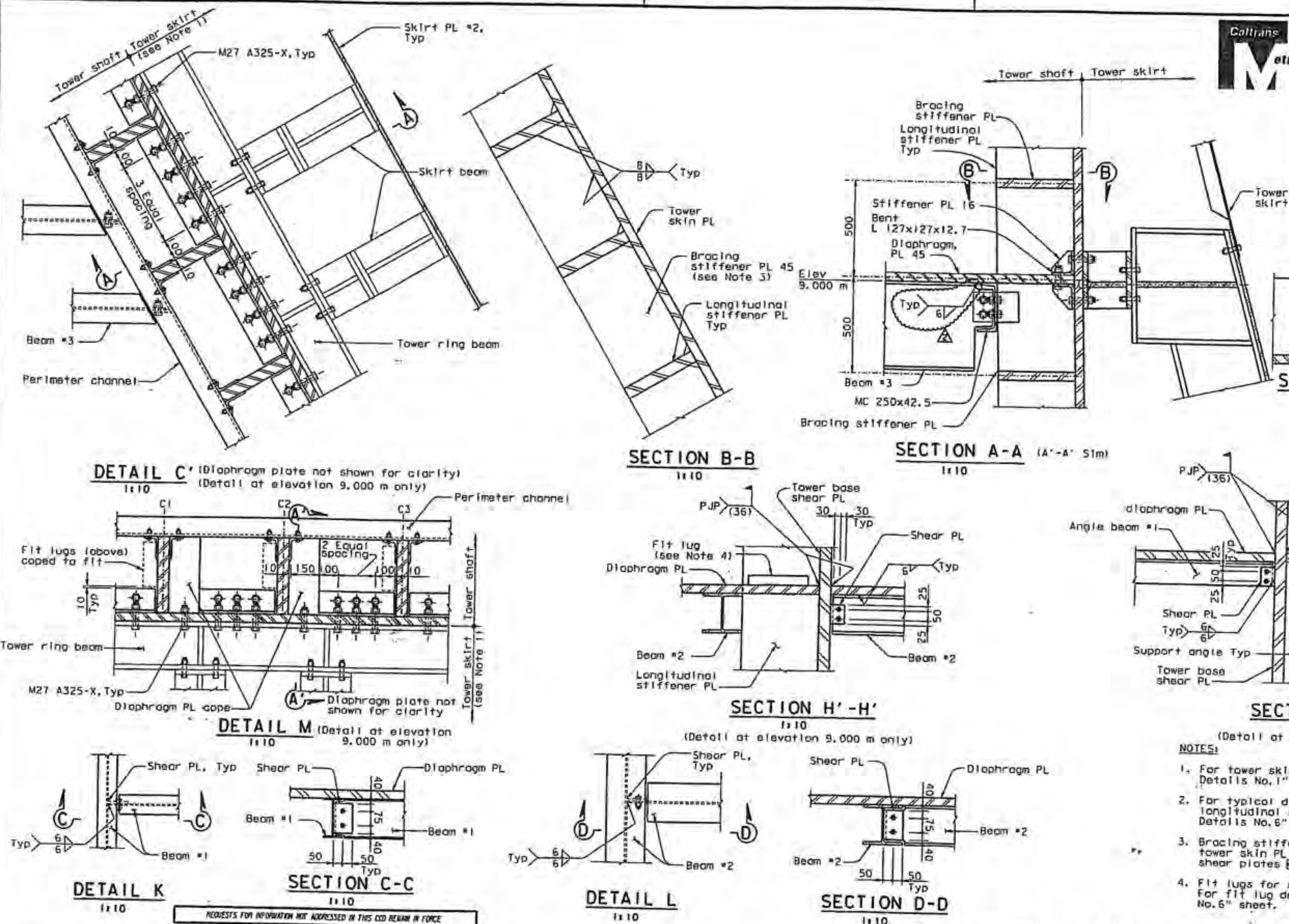

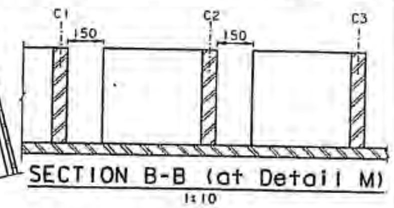

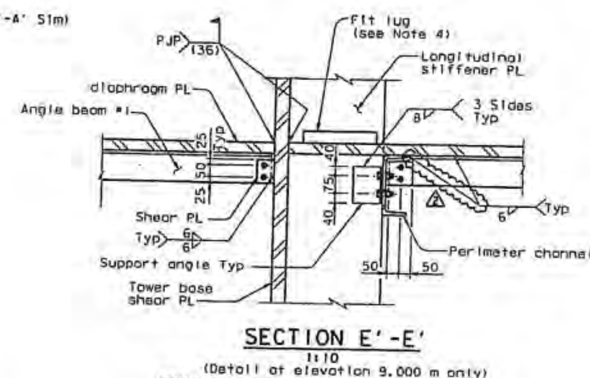

NOTES:

1. For tower skirt details, see "Tower Skirt Details No. 1" sheet.
2. For typical diaphragm cutout around tower longitudinal stiffeners, see "Tower Diaphragm Details No. 6" sheet.
3. Bracing stiffener plates shall be located along tower skin PL [C] and [D], and tower base shear plates [a] and [c].
4. Fit lugs for shear plates may be field welded. For fit lug details, see "Tower Diaphragm Details No. 6" sheet.

REQUESTS FOR INFORMATION NOT ADDRESSED IN THIS CCO REMAIN IN FORCE

MARK	DATE	DESCRIPTIONS	BY	CH'D	CCO#
2	07/11/08	TOWER INTERNAL SHAFT	NV	MN	63
1	09/01/07	ELECTRICAL MODIFICATIONS	NV	MN	42

REVISIONS

CONTRACT CHANGE ORDER NO. 63
SHEET 7 OF 7

R. Valizadeh/V. Toon/Y. L. /M. L. /F. C.
DESIGN OVERSIGHT
SIGN OFF DATE 07/11/08

	BY	CHECKED
DESIGN	M. Nader	M. Gulyas
DETAILS	L. Rus	M. Gulyas
QUANTITIES	L. Rus	Y. Zhang

PREPARED FOR THE STATE OF CALIFORNIA DEPARTMENT OF TRANSPORTATION

R. Manzanarez
PROJECT ENGINEER

ALL DIMENSIONS ARE IN MILLIMETERS UNLESS OTHERWISE SHOWN

ORIGINAL SCALE IN MILLIMETERS FOR REDUCED PLANS

CU 04
EA 0120F1

BRIDGE NO. 34-0006L/R
KILOMETER POST 13.2/13.9

SAN FRANCISCO OAKLAND BAY BRIDGE
EAST SPAN SEISMIC SAFETY PROJECT
SELF-ANCHORED SUSPENSION BRIDGE (SUPERSTRUCTURE & TOWER)

TOWER DIAPHRAGM DETAILS NO. 17

SHEET 175R2

DIST.	COUNTY	ROUTE	KILOMETER POST TOTAL PROJECT	SHEET NO.	TOTAL SHEETS
04	SF	80	13.2/13.9	592R2	1204

Caltrans Metric

REGISTERED ENGINEER - CIVIL
12-6-04
PLANS APPROVAL DATE
Marwan N. Nader No. C 054426 Exp. 12/31/09 CIVIL STATE OF CALIFORNIA

The State of California or its officers or agents shall not be responsible for the accuracy or completeness of electronic copies of this plan sheet.

T.Y. LIN / MOFFATT & NICHOL
825 BATTERY STREET
SAN FRANCISCO, CA 94111

Caltrans now has a web site! To get to the web site, go to: http://www.dot.ca.gov

FILE => I:\bb\04-0120F1\sas\contract plans and cco\cco\in progress\cco#63\dgn\detdh14.dgn

USERNAME => vlgnatovsky DATE PLOTTED => 11 JUL 2008 TIME PLOTTED => 13:23:44

100 % PS&E

STATE OF CALIFORNIA - DEPARTMENT OF TRANSPORTATION

CONTRACT CHANGE ORDER MEMORANDUM

DC-CEM-4903 (OLD HC-39 REV. 6/93) CT# 7541-3544-0

DATE: 3/16/2010 Page 1 of 1

TO Pete Siegenthaler, Principal TE	FILE 04-0120F4 04-SF-80-13.2/13.9
FROM Gary Pursell, STE / Richard Morrow, SBE	
CCO NO. **63** / SUPPLEMENT NO. **0** / CATEGORY CODE **CHPA**	CONTINGENCY BALANCE (including this change) **$8,014,909.40**
$0.00 INCREASE ☐ DECREASE ☐	HEADQUARTERS APPROVAL REQUIRED? YES ☐ NO ☒
SUPPLEMENTAL FUNDS PROVIDED $	IS THIS REQUEST IN ACCORDANCE WITH ENVIRONMENTAL DOCUMENTS? YES ☒ NO ☐
CCO DESCRIPTION: Tower Internal Shaft	**PROJECT DESCRIPTION** CONSTRUCT SELF-ANCHORED SUSPENSION BRIDGE

Original Contract Time	Time Adj.: This Change	Previously Approved CCO Time Adjustments	Percentage Time Adjusted: (including this change)	Total # of Unreconciled Deferred Time CCO(s): (including this change)
2490 Day(s)	**0** Day(s)	**227** Day(s)	**9** %	**6**

THIS CHANGE ORDER PROVIDES FOR:

Modifying the longitudinal stiffeners, additional field welded channels in the diaphragm, and cutting holes in the diaphragm within the tower shaft. This change revises the following contract plan sheets: 0546R2, 0556R2, 0583R2, 0590R1, 0591R1 and 0592R2 (of 1204).

This change order is needed to resolves Contractor Requests for Information (RFI) Nos. 262, 262R1, 399, 544, 544R1, 885 and 1023 with respect to changes listed above. These resolved RFI's address minor conflicts and other issues identified in the interior of the tower.

This work is not covered by any contract items. Therefore, payment for this work will be at Adjustment of Compensation at Lump Sum Price for the amount of $700,000.00. Since the cost, of $700,000.00 in this change, is included in Contract Change Order 108 Supplement 1 (CCO 108S1) Claim Settlement Report No. 1 resolution costs the net payment in this change order is zero.

A determination of the delay in completion of the contract due to work specified by this change order, has been made in CCO 108S1 and is part of the Claims Settlement Report (CSR) No. 1 for this project. Therefore, no adjustment of time is warranted by reason of this change order.

This change order received concurrence from Gary Pursell (Resident Engineer), Rick Morrow (Sup. Structure Rep), Peter Siegenthaler (Principal TE), Rich Foley (HQ Oversight), Ken Terpstra (Project Manager), Richard Land (Chief Engineer), Jon Tapping (HQ Coordinator), Tony Anziano (Toll Bridge Program Manager), Brian Maroney (Project Engineer), Wenyi Long (Design Oversight), and Lina Ellis (Structure Maintenance).

Claims Settlement Report (CSR) No. 1, for this project, revises the authority to "Issue and Approve" the changes listed in CCO 108S1 Appendices A & B. The authority to "Issue and Approve" the changes listed in Appendices A & B for the values of time and money contemplated therein has been delegated to the District for approval and approval of each of these change orders by the Headquarters CCO Desk will not be required. Since this change order is included in CCO 108S1 no Headquarters CCO Desk "Issue and Approve" is required, a copy of CCO 108S1 is attached for reference.

CONCURRED BY:	
CONSTRUCTION ENGINEER Res. Eng. Gary Pursell	DATE 12/21/09
SR. BRIDGE ENGINEER Rick Morrow	DATE 12/21/09
FHWA REPRESENTATIVE	DATE
PROJECT MANAGER Proj. Manager, Ken Terpstra	DATE 12/21/09
OTHER (SPECIFY) Chief Engineer, Richard Land	DATE 12/21/09
PCE, Peter Siegenthaler, Prin TE	DATE 12/21/09
DISTRICT PRIOR APPROVAL BY	DATE
HQ (ISSUE & APPROVE) (TO PROCEED) BY Bob Molera (ISSUE & APPROVE)	DATE 12/31/09
RESIDENT ENGINEER SIGNATURE Gary Pursell	DATE 3/16/10

ESTIMATE OF COST	THIS REQUEST	TOTAL TO DATE
ITEMS	$0.00	$0.00
FORCE ACCOUNT	$0.00	$0.00
AGREED PRICE	$0.00	$0.00
ADJUSTMENT	$0.00	$0.00
TOTAL	$0.00	$0.00

FEDERAL PARTICIPATION

☐ PARTICIPATING ☐ PARTICIPATING IN PART ☒ NONE

☐ NON-PARTICIPATING (MAINTENANCE) ☐ NON-PARTICIPATING

FEDERAL SEGREGATION (IF MORE THAN ONE FUNDING SOURCE OR P.I.P. TYPE)

☐ CCO FUNDED PER CONTRACT ☐ CCO FUNDED AS FOLLOWS

FEDERAL FUNDING SOURCE	PERCENT

HC-39 Word(Rev.9/96)

NOTES:

1. Weld of the longitudinal stiffener to the tower shaft skin plates beyond the length indicated shall be in accordance with Table 1 in "Tower Splice Details No.2" sheet.
2. Perimeter of exterior splice plates shall be caulked.
3. Longitudinal stiffener splice plates shall be A709M HPS 485W steel.
4. Dimension shall be increased by 25 mm for (E1), (E2), (E3) to account for shim plate between skin plate and interior splice plate. (2)
5. For elevation of end of stiffener PL see "Tower Shaft Details No.7" sheet.

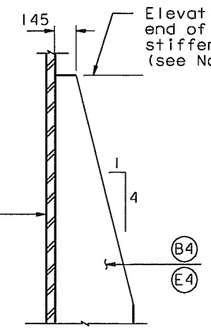

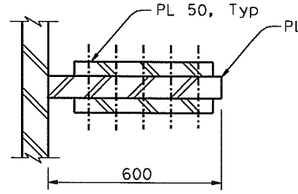

SECTION A-A
1:10

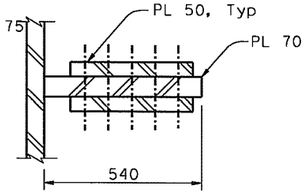

SECTION B-B
1:10

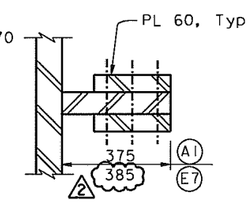

SECTION C-C
1:10

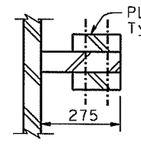

SECTION D-D
1:10

LONGITUDINAL STIFFENERS B4 AND E4
1:20

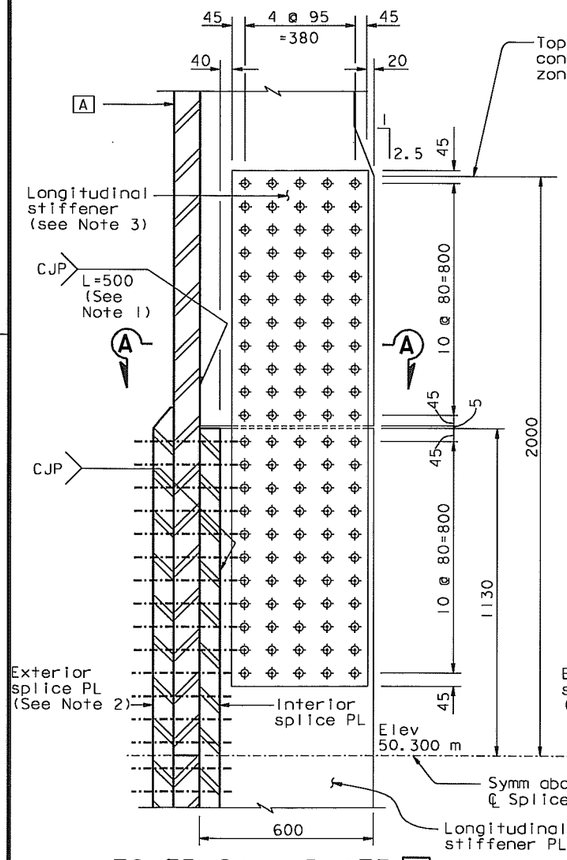

TOWER SKIN PLATE A
(Except A1)

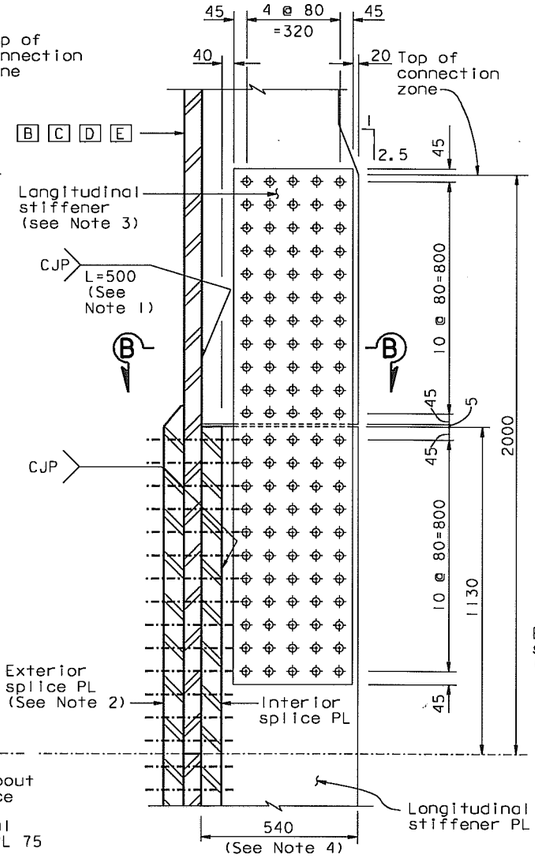

DETAIL F
1:10

TOWER SKIN PLATE B TO E
(Except B4, D4, E4, and E7)

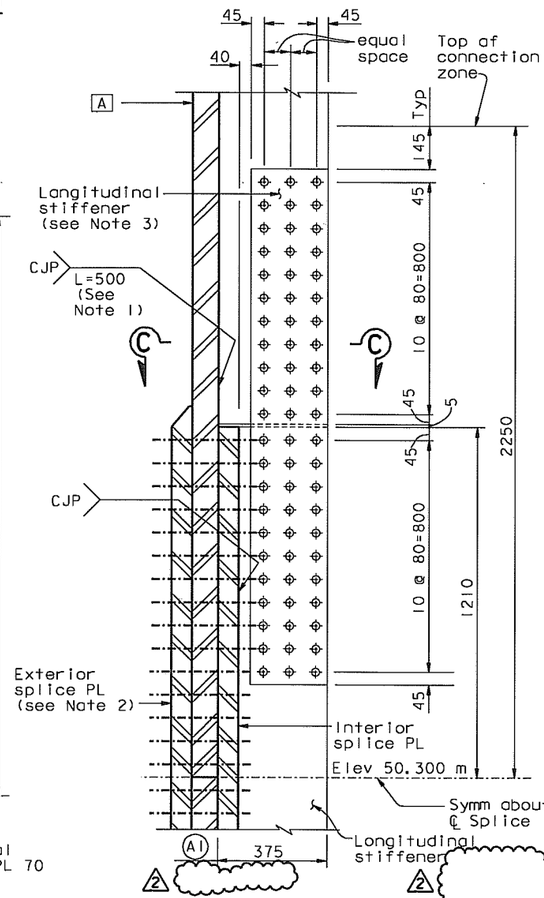

TOWER SKIN PLATE A

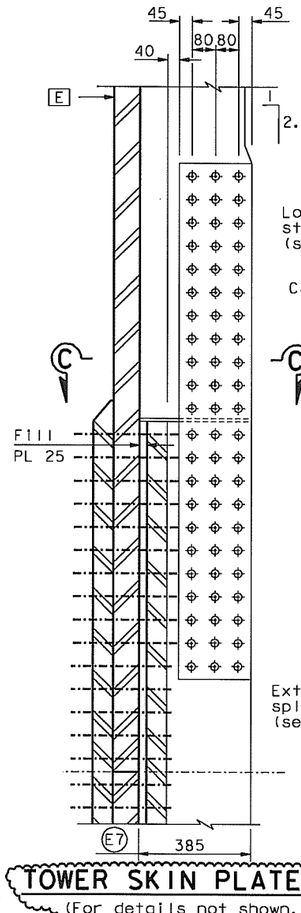

TOWER SKIN PLATE E
(For details not shown, see stiffener A1)

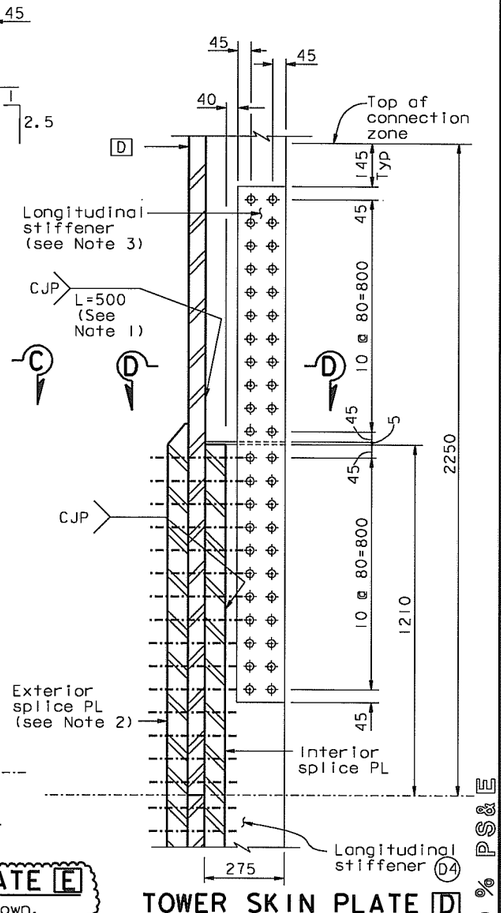

TOWER SKIN PLATE D

DETAIL F (For A1 E7 and D4)
1:10

LEGEND:
M27 A490-X HS Bolt

ALL DIMENSIONS ARE IN MILLIMETERS UNLESS OTHERWISE SHOWN

REQUESTS FOR INFORMATION NOT ADDRESSED IN THIS CCO REMAIN IN FORCE

MARK	DATE	DESCRIPTIONS	BY	CH'D	CCO#
2	07/11/08	TOWER INTERNAL SHAFT	MN	NV	63
1	06/23/06	LONG STIFFENER GAP & MISC	MN	NV	21

REVISIONS

CONTRACT CHANGE ORDER NO. ____
SHEET ____ OF ____

	BY	CHECKED
DESIGN	M. Nader	M. Gulyas
DETAILS	L. Rus	M. Gulyas
QUANTITIES	L. Rus	Y. Zhang

PREPARED FOR THE STATE OF CALIFORNIA
DEPARTMENT OF TRANSPORTATION

R. Manzanarez
PROJECT ENGINEER

CU 04
EA 0120F1

ORIGINAL SCALE IN MILLIMETERS FOR REDUCED PLANS 0 10 20 30 40 50 60 70 80 90 100

DISREGARD PRINTS BEARING EARLIER REVISION DATES →

R. Valizadeh/V. Toan/Y.L./W.L./F.C.
DESIGN OVERSIGHT
SIGN OFF DATE 07/11/08

Rev. Date: 5-18-98

DIST.	COUNTY	ROUTE	KILOMETER POST TOTAL PROJECT	SHEET NO.	TOTAL SHEETS
04	SF	80	13.2/13.9	546R2	1204

REGISTERED ENGINEER - CIVIL
12-6-04
PLANS APPROVAL DATE

REGISTERED PROFESSIONAL ENGINEER
Marwan N. Nader
No. C 054426
Exp. 12/31/09
CIVIL
STATE OF CALIFORNIA

The State of California or its officers or agents shall not be responsible for the accuracy or completeness of electronic copies of this plan sheet.

T.Y. LIN / MOFFATT & NICHOL
825 BATTERY STREET
SAN FRANCISCO, CA 94111

Caltrans now has a web site! To get to the web site, go to: http://www.dot.ca.gov

BRIDGE NO. 34-0006L/R
KILOMETER POST 13.2/13.9

SAN FRANCISCO OAKLAND BAY BRIDGE
EAST SPAN SEISMIC SAFETY PROJECT
SELF-ANCHORED SUSPENSION BRIDGE
(SUPERSTRUCTURE & TOWER)

TOWER SPLICE DETAILS NO. 7

REVISION DATES (PRELIMINARY STAGE ONLY): 05/31/01 | 01/08/02 | 01/09/02 | 12/18/02 | 05/08/03 | 11/13/05

SHEET 129R2 OF

FILE => I:\bb\04-0120F1\sas\contract plans and cco\cco\In progress\cco*63\dgn\aetsp07.dgn

USERNAME => ptom
DATE PLOTTED => 23 JUL 2008
TIME PLOTTED => 16:07:18

100 % PS&E

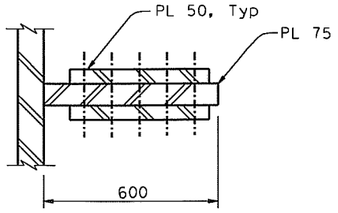

SECTION A-A
1:10

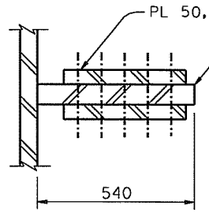

SECTION B-B
1:10

LEGEND:

⌖ M27 A490-X HS Bolt

NOTES:

1. Weld of the longitudinal stiffener to the tower shaft skin plates beyond the length indicated shall be in accordance with Table 1 in "Tower Splice Details No.2" sheet.
2. Dimension shall be increased by 25 mm for (E1) and 30 mm for (B1), (B2), (C1), (C2), and (C3) to account for shim plate between skin plate and interior splice plate.
3. Longitudinal stiffener splice plates shall be A709M HPS 485W steel.

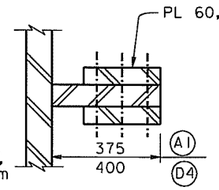

SECTION C-C
1:10

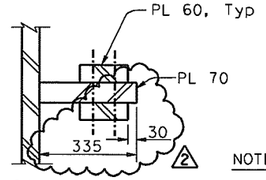

SECTION D-D
1:10

NOTES:

4. Perimeter of exterior splice plates shall be caulked.

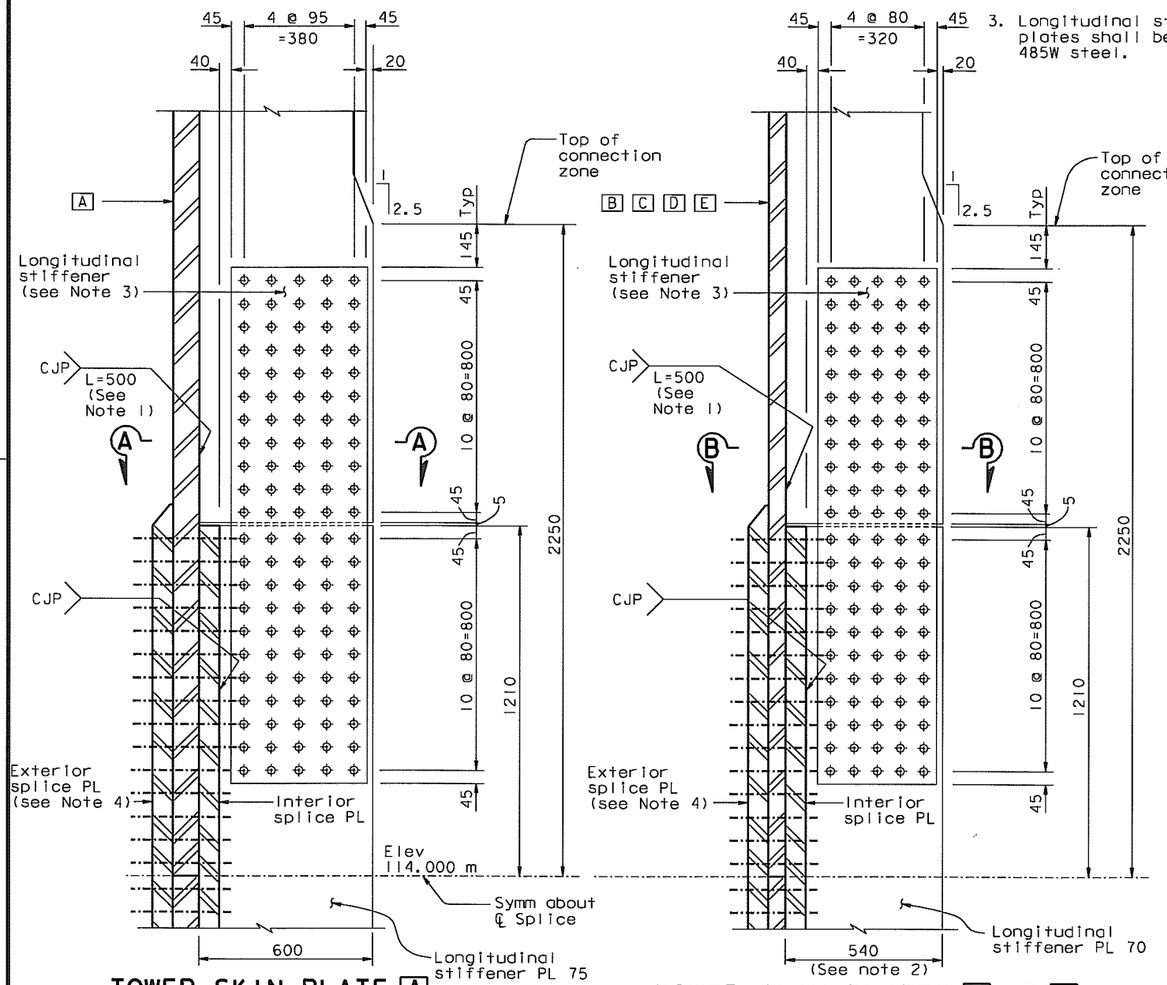

TOWER SKIN PLATE A
(Except A1)

TOWER SKIN PLATES B TO E
(Except D4 and E7)

TOWER SKIN PLATE A

TOWER SKIN PLATE E

DETAIL F
1:10

DETAIL F (For A1 D4 and E7)
1:10

ALL DIMENSIONS ARE IN MILLIMETERS UNLESS OTHERWISE SHOWN

DIST.	COUNTY	ROUTE	KILOMETER POST TOTAL PROJECT	SHEET NO.	TOTAL SHEETS
04	SF	80	13.2/13.9	556R2	1204

REGISTERED ENGINEER - CIVIL

12-6-04
PLANS APPROVAL DATE

REGISTERED PROFESSIONAL ENGINEER — Marwan N. Nader — No. C 054426 — Exp. 12/31/09 — CIVIL — STATE OF CALIFORNIA

The State of California or its officers or agents shall not be responsible for the accuracy or completeness of electronic copies of this plan sheet.

T.Y. LIN / MOFFATT & NICHOL
825 BATTERY STREET
SAN FRANCISCO, CA 94111

To get to the web site, go to: http://www.dot.ca.gov

REQUESTS FOR INFORMATION NOT ADDRESSED IN THIS CCO REMAIN IN FORCE

MARK	DATE	DESCRIPTIONS	BY	CH'D	CCO#
		REVISIONS			
2	07/11/08	TOWER INTERNAL SHAFT	MN	NV	63
1	06/23/06	LONG. STIFFENER GAP & MISC.	MN	NV	21

CONTRACT CHANGE ORDER NO. ____
SHEET ___ OF ___

	BY	CHECKED
DESIGN	M. Nader	N. Vo
DETAILS	J. Lopez	N. Vo
QUANTITIES	J. Lopez	N. Vo

PREPARED FOR THE STATE OF CALIFORNIA
DEPARTMENT OF TRANSPORTATION

R. Manzanarez
PROJECT ENGINEER

BRIDGE NO. 34-0006L/R
KILOMETER POST 13.2/13.9

SAN FRANCISCO OAKLAND BAY BRIDGE
EAST SPAN SEISMIC SAFETY PROJECT
SELF-ANCHORED SUSPENSION BRIDGE
(SUPERSTRUCTURE & TOWER)
TOWER SPLICE DETAILS NO. 17

R. Valizadeh/V. Toan/Y.L./W.L./F.C.
DESIGN OVERSIGHT
SIGN OFF DATE 07/11/08

Rev. Date: 5-18-98

ORIGINAL SCALE IN MILLIMETERS FOR REDUCED PLANS 0 10 20 30 40 50 60 70 80 90 100

CU 04
EA 0120F1

DISREGARD PRINTS BEARING EARLIER REVISION DATES →

REVISION DATES (PRELIMINARY STAGE ONLY): 05/31/01 | 04/08/02 | 07/01/02 | 12/18/02 | 11/13/05

SHEET 139R2 OF

FILE => I:\bb\04-012001\sas\contract plans and cco\cco\In progress\cco#63\dgn\detspl7.dgn

100 % PS&E

USERNAME => vignatovs DATE PLOTTED => 11 JUL 2008 TIME PLOTTED => 13:18:12

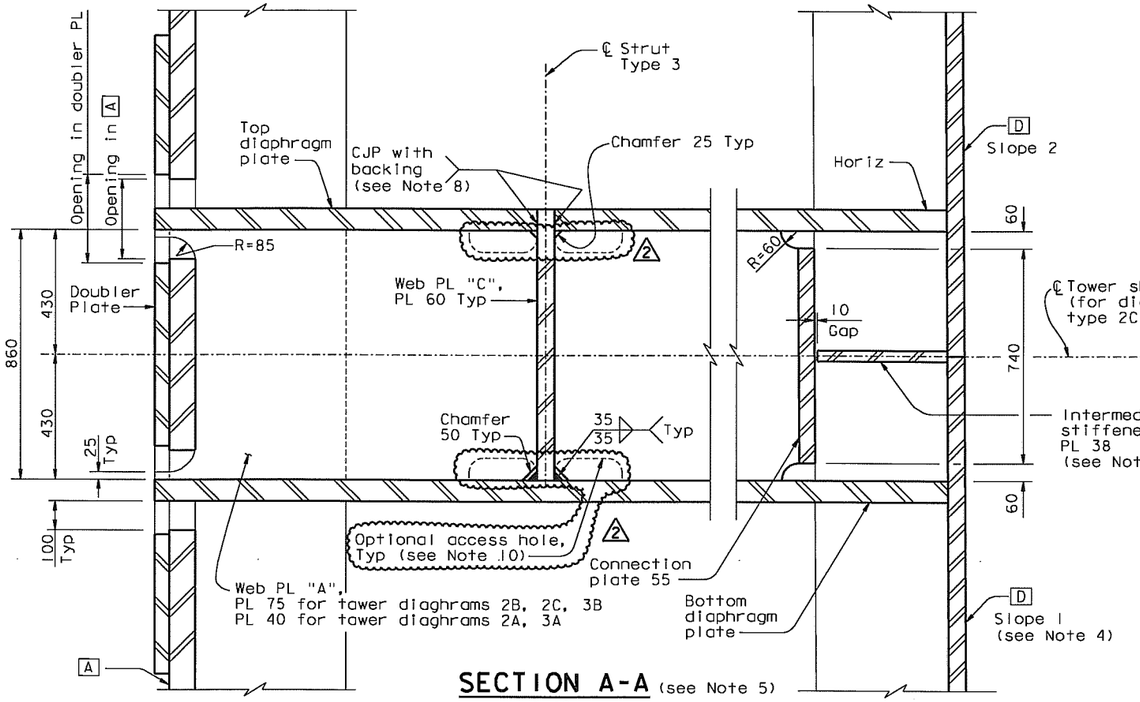

SECTION A-A (see Note 5)

1:10

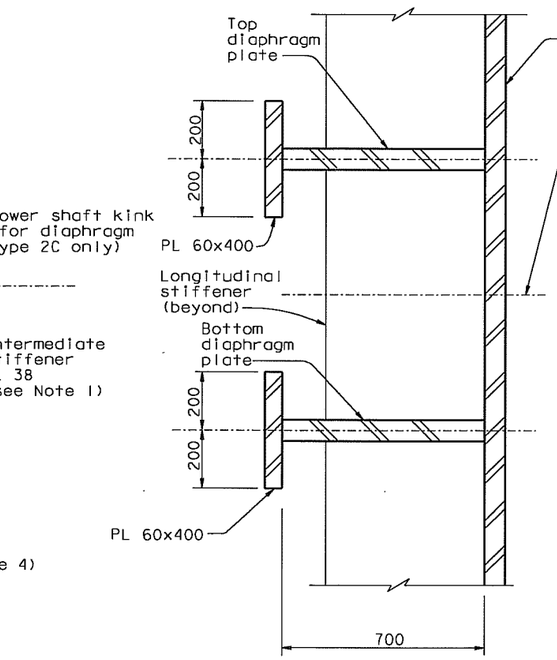

TYPE 3A AND 3B

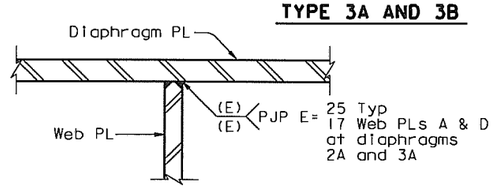

DETAIL A

1:10

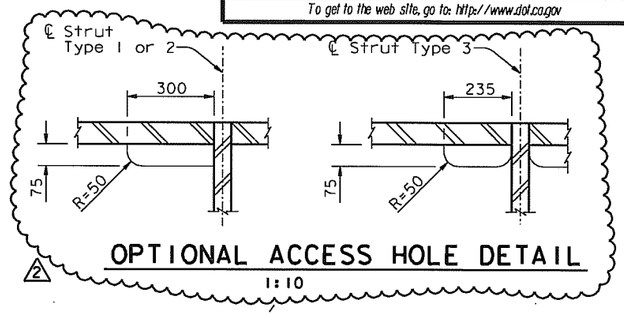

OPTIONAL ACCESS HOLE DETAIL

1:10

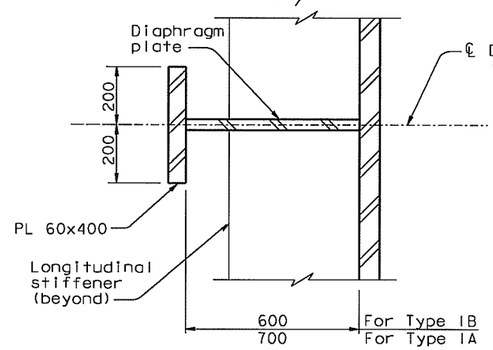

TYPE 1A AND 1B

SECTION C-C (Note: Fit lug plate not shown for clarity)

1:10

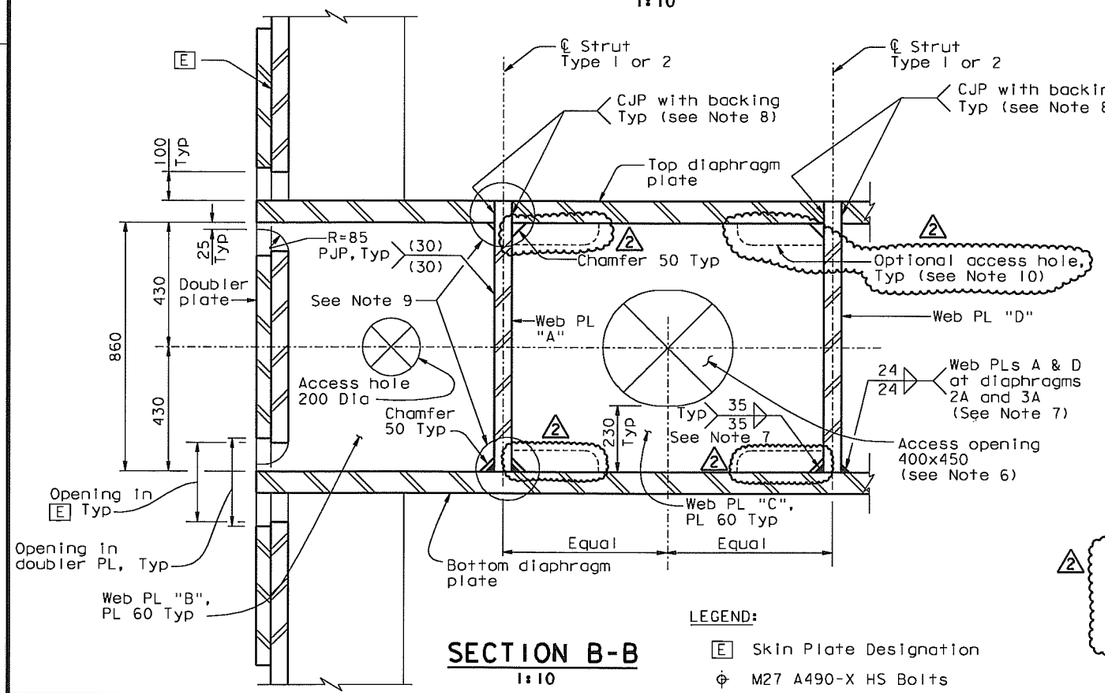

SECTION B-B

1:10

LEGEND:

E Skin Plate Designation

⌖ M27 A490-X HS Bolts

REQUESTS FOR INFORMATION NOT ADDRESSED IN THIS CCO REMAIN IN FORCE					
2	07/11/08	TOWER INTERNAL SHAFT	MN	NV	63
1	06/23/06	WEB PL TO DIAPHRAGM PL WELD	MN	NV	21
MARK	DATE	DESCRIPTIONS	BY	CH'D	CCO#
		REVISIONS			

CONTRACT CHANGE ORDER NO. ____
SHEET ___ OF ___

8. For alternate web plate to diaphragm plate weld, see Detail A.
9. Weld joint details shown at top and at bottom of web plate are interchangeable for all web plates.
2 10. At the Contractor's option, access holes may be provided to facilitate strut erection. Access holes for strut Type 3 apply at all tower strut elevations. Access holes for strut Type 1 apply at elevation 119 m. Access holes for strut Type 2 apply at elevation 143 m. See "Optional Access Hole Detail".

NOTES:

1. Intermediate stiffener plate only for diaphragm type 2C. For stiffener plate layout and details, see "Tower Diaphragm Details No.12" sheet.
2. Tower strut flonge splice is not shown for clarity.
3. For diaphragm locations, see "Tower Diaphragm Details No.1" sheet.
4. For tower skin plate slope, see "Tower Shaft Details No.5" and "Tower Shaft Details No.6" sheets.
5. For inspection and access openings in web plate "A", see "Tower Diaphragm Details No.9" sheet.
6. For access opening, see Detail B on "Tower Diaphragm Details No.10" sheet.
7. An equivalent PJP weld is an acceptable alternative.

ALL DIMENSIONS ARE IN MILLIMETERS UNLESS OTHERWISE SHOWN

Caltrans Metric

DIST.	COUNTY	ROUTE	KILOMETER POST TOTAL PROJECT	SHEET NO.	TOTAL SHEETS
04	SF	80	13.2/13.9	583R2	1204

REGISTERED ENGINEER - CIVIL

12-6-04
PLANS APPROVAL DATE

REGISTERED PROFESSIONAL ENGINEER Marwan N. Nader No. C 054426 Exp. 12/31/09 CIVIL STATE OF CALIFORNIA

The State of California or its officers or agents shall not be responsible for the accuracy or completeness of electronic copies of this plan sheet.

T.Y. LIN / MOFFATT & NICHOL
825 BATTERY STREET
SAN FRANCISCO, CA 94111

To get to the web site, go to: http://www.dot.ca.gov

R. Valizadeh/V. Toan/Y.L./W.L./F.C.	DESIGN	BY M. Nader	CHECKED M. Gulyas
DESIGN OVERSIGHT	DETAILS	BY L. Rus	CHECKED M. Gulyas
SIGN OFF DATE 07/11/08	QUANTITIES	BY L. Rus	CHECKED Y. Zhang

PREPARED FOR THE STATE OF CALIFORNIA DEPARTMENT OF TRANSPORTATION

R. Manzanarez
PROJECT ENGINEER

BRIDGE NO. 34-0006L/R
KILOMETER POST 13.2/13.9

SAN FRANCISCO OAKLAND BAY BRIDGE
EAST SPAN SEISMIC SAFETY PROJECT
SELF-ANCHORED SUSPENSION BRIDGE (SUPERSTRUCTURE & TOWER)

TOWER DIAPHRAGM DETAILS NO. 8

Rev. Date: 5-18-98

ORIGINAL SCALE IN MILLIMETERS FOR REDUCED PLANS 0 10 20 30 40 50 60 70 80 90 100

CU 04
EA 0120F1

DISREGARD PRINTS BEARING EARLIER REVISION DATES →

REVISION DATES (PRELIMINARY STAGE ONLY): 05/31/01 | 04/08/02 | 07/31/02 | 12/13/02 | 10/13/05 | 11/13/05

SHEET 166R2 OF

FILE => I:\bb\04-012001\sos\contract plans and cco\cco\In progress\cco*63\dgn\oetdh08.dgn

USERNAME => vignotovs DATE PLOTTED => 11 JUL 2008 TIME PLOTTED => 13:19:20

100 % PS&E

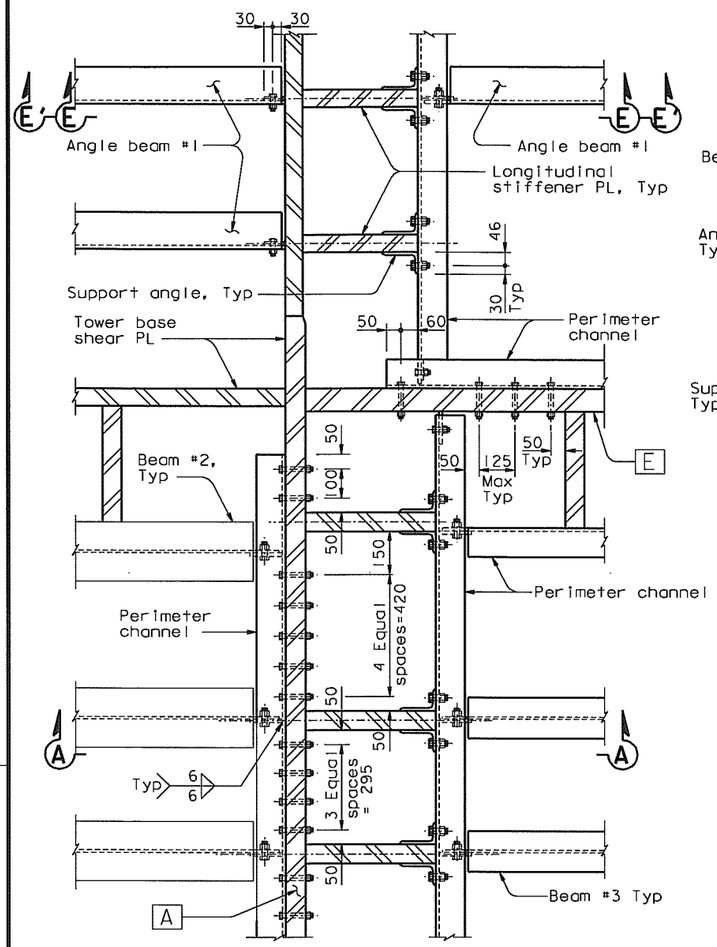

DETAIL A
1:10 (Diaphragm plate not shown for clarity)

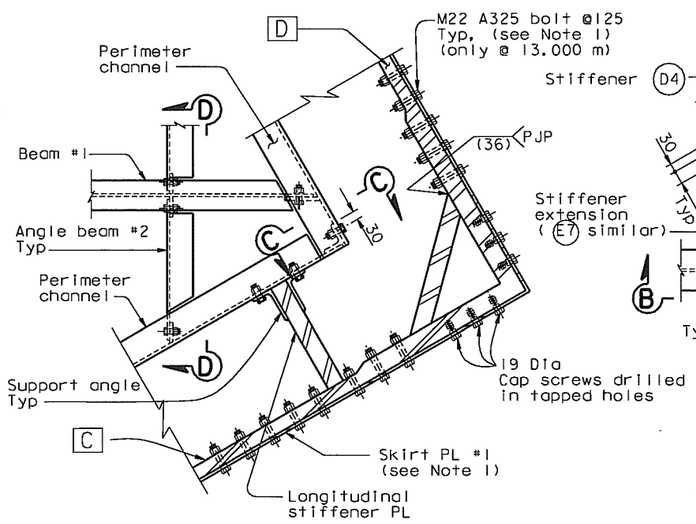

DETAIL B
1:10 (Diaphragm plate not shown for clarity)

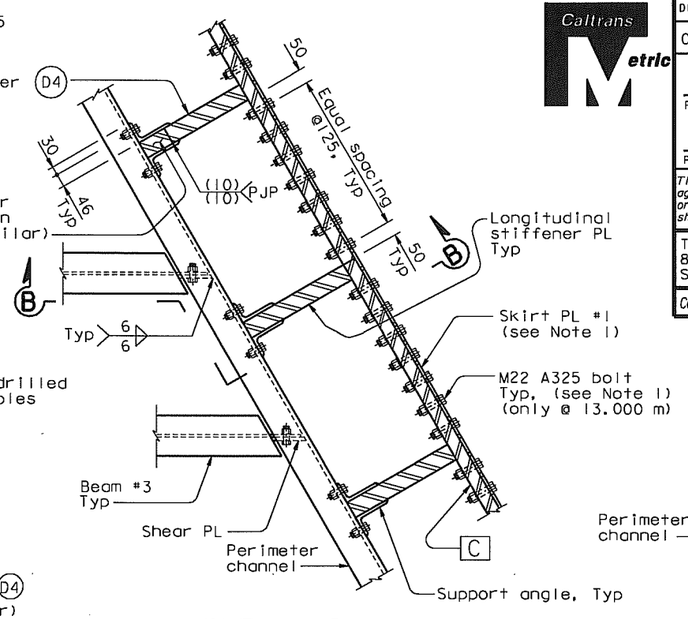

DETAIL C
1:10 (Diaphragm plate not shown for clarity)

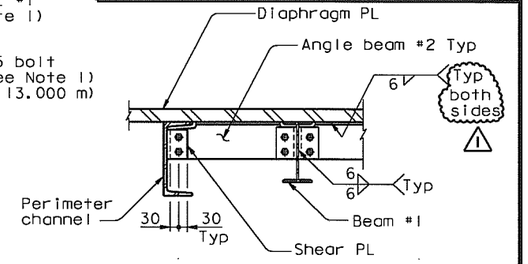

SECTION D-D
1:10

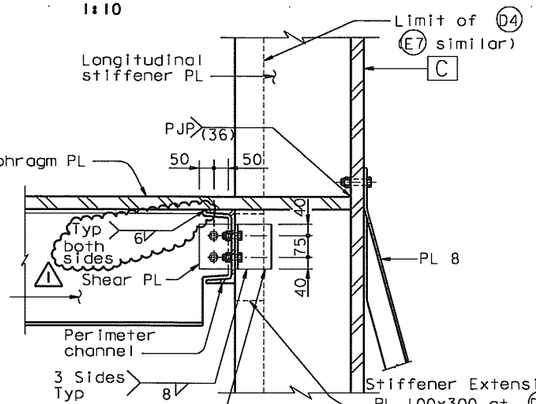

SECTION B-B
1:10

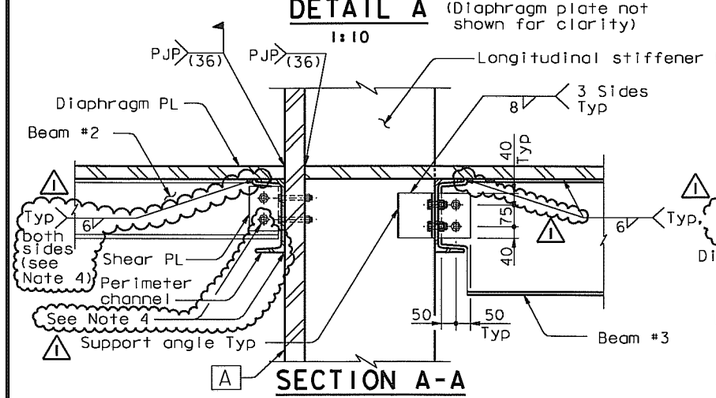

SECTION A-A
1:10

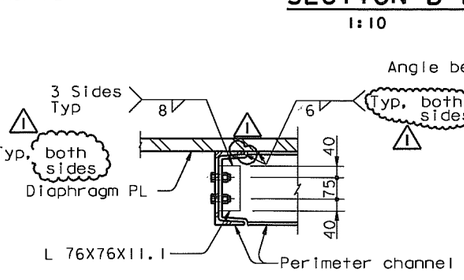

SECTION C-C
1:10

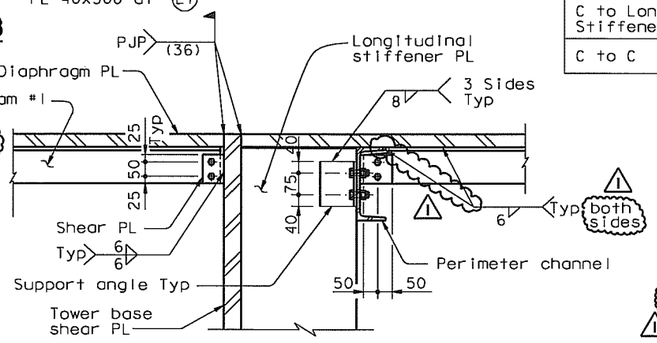

SECTION E-E
1:10

Bolted Connection Schedule

Connecting Elements	Bolts	Edge Distance	Bolt Spacing
W to C	2, M20 A325-X	40 mm	75 mm
W to W	2, M20 A325-X	40 mm	75 mm
W to Tower	2, M20 A325-X	40 mm	75 mm
W to L	2, M16 A325-X	25 mm	50 mm
C to L	2, M16 A325-X	25 mm	50 mm
L to Tower	2, M16 A325-X	25 mm	50 mm
C to Tower	M16 A325-X	Stitch Bolting Max=130 mm	
C to Longitudinal Stiffener	4, M20 A325-X	40 mm	75 mm
C to C	2, M20 A325-X	40 mm	75 mm

Shear Tab Detail

Shear PL	12 mm
Fillet Weld Leg Size*	6 mm

* Leg size on either side of the shear plate.

NOTES:

1. Tower skirt not shown for clarity. For tower skirt details, see "Tower Skirt Details" sheets.
2. Details shown in this sheet do not account for the 1% slope of diaphragm at elevation 13 m. The fabrication of these details shall account for this slope.
3. For section E'-E', see "Tower Diaphragm Details No.17" sheet.
4. To facilitate erection, shim plates are allowed between perimeter channel and tower skin PL, alternatively perimeter channels may be attached using field welds and bolts in slotted holes.

ALL DIMENSIONS ARE IN MILLIMETERS UNLESS OTHERWISE SHOWN

REQUESTS FOR INFORMATION NOT ADDRESSED IN THIS CCO REMAIN IN FORCE

DIST.	COUNTY	ROUTE	KILOMETER POST TOTAL PROJECT	SHEET NO.	TOTAL SHEETS
04	SF	80	13.2/13.9	590R1	1204

REGISTERED ENGINEER - CIVIL
12-6-04
PLANS APPROVAL DATE
REGISTERED PROFESSIONAL ENGINEER Marwan N. Nader No. C 054426 Exp. 12/31/09 CIVIL STATE OF CALIFORNIA

The State of California or its officers or agents shall not be responsible for the accuracy or completeness of electronic copies of this plan sheet.

T.Y. LIN / MOFFATT & NICHOL
825 BATTERY STREET
SAN FRANCISCO, CA 94111

Caltrans now has a web site! To get to the web site, go to: http://www.dot.ca.gov

R. Valizadeh/V. Toan/Y.L./W.L./F.C.
DESIGN OVERSIGHT
SIGN OFF DATE 07/11/08

Rev. Date: 5-18-98

MARK	DATE	REVISIONS	BY	CH'D	CCO#
1	07/11/08	TOWER INTERNAL SHAFT	MN	NV	63

CONTRACT CHANGE ORDER NO. ____
SHEET ____ OF ____

DESIGN	BY M. Nader	CHECKED M. Gulyas	
DETAILS	BY L. Rus	CHECKED M. Gulyas	
QUANTITIES	BY L. Rus	CHECKED Y. Zhang	

PREPARED FOR THE STATE OF CALIFORNIA
DEPARTMENT OF TRANSPORTATION

R. Manzanarez
PROJECT ENGINEER

CU 04
EA 0120F1

BRIDGE NO. 34-0006L/R
KILOMETER POST 13.2/13.9

SAN FRANCISCO OAKLAND BAY BRIDGE
EAST SPAN SEISMIC SAFETY PROJECT
SELF-ANCHORED SUSPENSION BRIDGE
(SUPERSTRUCTURE & TOWER)

TOWER DIAPHRAGM DETAILS NO. 15

DISREGARD PRINTS BEARING EARLIER REVISION DATES →
REVISION DATES (PRELIMINARY STAGE ONLY): 05/27/01 | 02/04/02 | 01/29/02 | 12/19/02 | 11/13/03

SHEET 173R1 OF

ORIGINAL SCALE IN MILLIMETERS FOR REDUCED PLANS 0 10 20 30 40 50 60 70 80 90 100

FILE => I:\bb\04-0120F1\sas\contract plans and cco\cco\in progress\cco*63\dgn\aetdh12.dgn

USERNAME => vignarovs DATE PLOTTED => 11 JUL 2008 TIME PLOTTED => 13:20:52

100 % PS&E

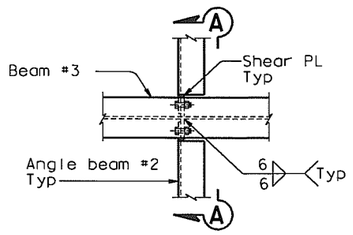

DETAIL D (Diaphragm plate not shown for clarity)
1:10

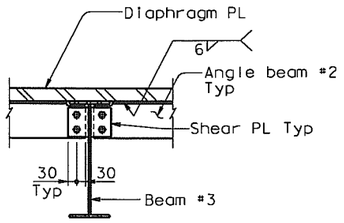

SECTION A-A
1:10

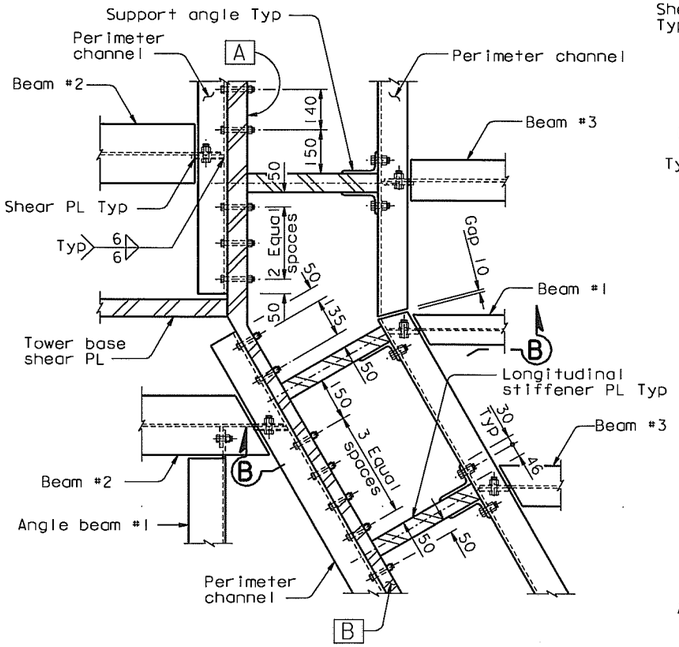

DETAIL F (Diaphragm plate not shown for clarity)
1:10

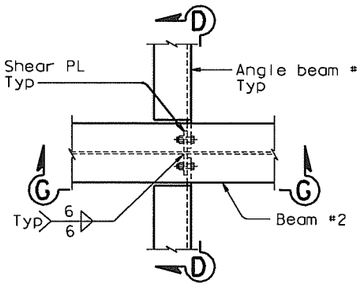

DETAIL G (Diaphragm plate not shown for clarity)
1:10

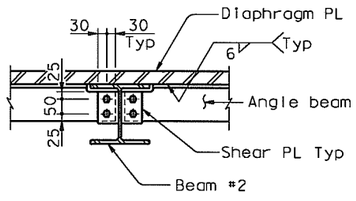

SECTION D-D
1:10

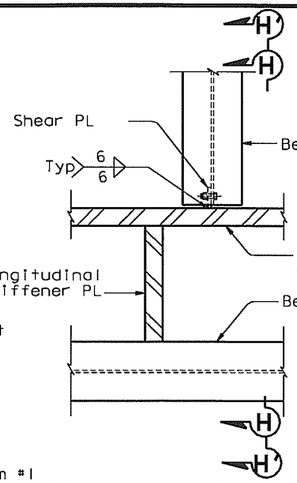

DETAIL H (Diaphragm plate not shown for clarity)
1:10

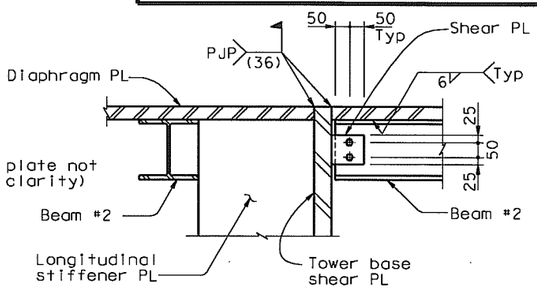

SECTION H-H
1:10

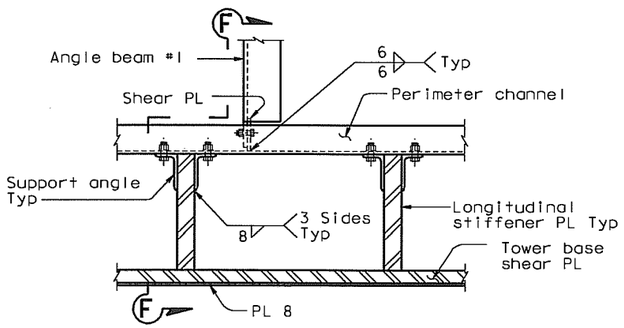

DETAIL J (Diaphragm plate not shown for clarity)
1:10

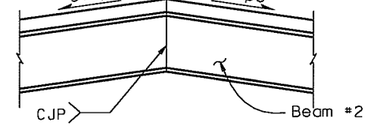

SECTION G-G
NTS
(Crown detail for diaphragm at Elev 13 m, Slope exaggerated for clarity)

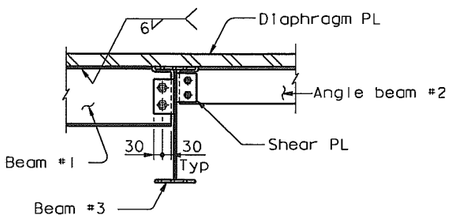

SECTION C-C
1:10

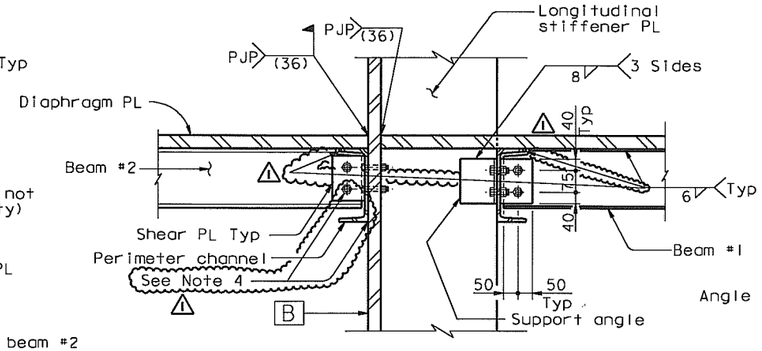

SECTION B-B
1:10

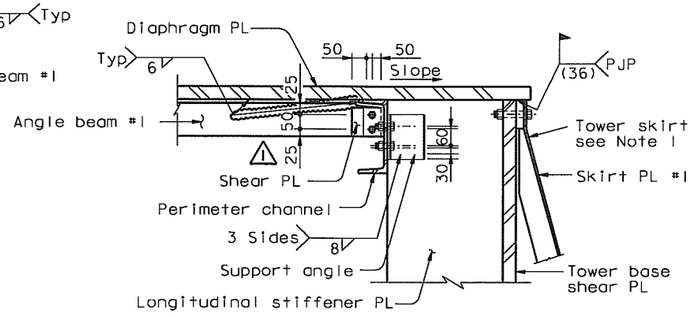

SECTION F-F
1:10

NOTES:

1. For tower skirt details, see "Tower Skirt Details" sheets.
2. Details shown in this sheet do not account for the 1% slope of diaphragm at elevation 13 m. The fabrication of these details shall account for this slope.
3. For section H'-H', see "Tower Diaphragm Details No. 15" sheet.
4. ⚠1 To facilitate erection, shim plates are allowed between perimeter channel and tower skin PL, alternatively perimeter channels may be attached using field welds and bolts in slotted holes.

DIST.	COUNTY	ROUTE	KILOMETER POST TOTAL PROJECT	SHEET NO.	TOTAL SHEETS
04	SF	80	13.2/13.9	591R1	1204

REGISTERED ENGINEER - CIVIL
12-6-04
PLANS APPROVAL DATE
REGISTERED PROFESSIONAL ENGINEER — Marwan N. Nader — No. C 054426 — Exp. 12/31/09 — CIVIL — STATE OF CALIFORNIA

The State of California or its officers or agents shall not be responsible for the accuracy or completeness of electronic copies of this plan sheet.

T.Y. LIN / MOFFATT & NICHOL
825 BATTERY STREET
SAN FRANCISCO, CA 94111

Caltrans now has a web site! To get to the web site, go to: http://www.dot.ca.gov

REQUESTS FOR INFORMATION NOT ADDRESSED IN THIS CCO REMAIN IN FORCE

ALL DIMENSIONS ARE IN MILLIMETERS UNLESS OTHERWISE SHOWN

MARK	DATE	REVISIONS DESCRIPTIONS	BY	CH'D	CCO#
⚠1	07/11/08	TOWER INTERNAL SHAFT	MN	NV	63

CONTRACT CHANGE ORDER NO. ____
SHEET ____ OF ____

DESIGN	BY M. Nader	CHECKED M. Gulyas	
DETAILS	BY L. Rus	CHECKED M. Gulyas	
QUANTITIES	BY L. Rus	CHECKED Y. Zhang	

R. Valizadeh/V. Toan/Y.L./W.L./F.C.
DESIGN OVERSIGHT
SIGN OFF DATE 07/11/08

Rev. Date: 5-18-98

PREPARED FOR THE STATE OF CALIFORNIA
DEPARTMENT OF TRANSPORTATION

R. Manzanarez
PROJECT ENGINEER

BRIDGE NO. 34-0006L/R
KILOMETER POST 13.2/13.9

CU 04
EA 0120F1

ORIGINAL SCALE IN MILLIMETERS FOR REDUCED PLANS 0 10 20 30 40 50 60 70 80 90 100

DISREGARD PRINTS BEARING EARLIER REVISION DATES →

REVISION DATES (PRELIMINARY STAGE ONLY): 05/31/01 | 01/08/02 | 07/01/02 | 12/19/02 | 11/13/05

SAN FRANCISCO OAKLAND BAY BRIDGE
EAST SPAN SEISMIC SAFETY PROJECT
SELF-ANCHORED SUSPENSION BRIDGE
(SUPERSTRUCTURE & TOWER)

TOWER DIAPHRAGM DETAILS NO. 16

SHEET 174R1 OF

FILE => I:\bb\04-0120O1\sas\contract plans and cco\cco\In progress\cco*63\dgn\aetdh13.dgn

USERNAME => vlgnotovs DATE PLOTTED => 11 JUL 2008 TIME PLOTTED => 13:21:58

100 % PS&E

DIST.	COUNTY	ROUTE	KILOMETER POST TOTAL PROJECT	SHEET NO.	TOTAL SHEETS
04	SF	80	13.2/13.9	592R2	1204

REGISTERED ENGINEER - CIVIL

12-6-04
PLANS APPROVAL DATE

Registered Professional Engineer — Marwan N. Nader — No. C 054426 — Exp. 12/31/09 — CIVIL — State of California

The State of California or its officers or agents shall not be responsible for the accuracy or completeness of electronic copies of this plan sheet.

T.Y. LIN / MOFFATT & NICHOL
825 BATTERY STREET
SAN FRANCISCO, CA 94111

Caltrans now has a web site! To get to the web site, go to: http://www.dot.ca.gov

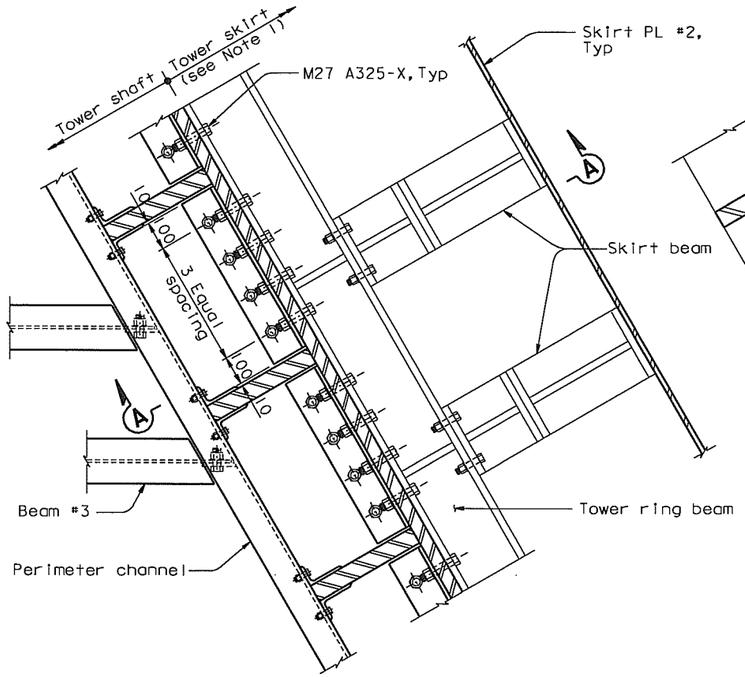

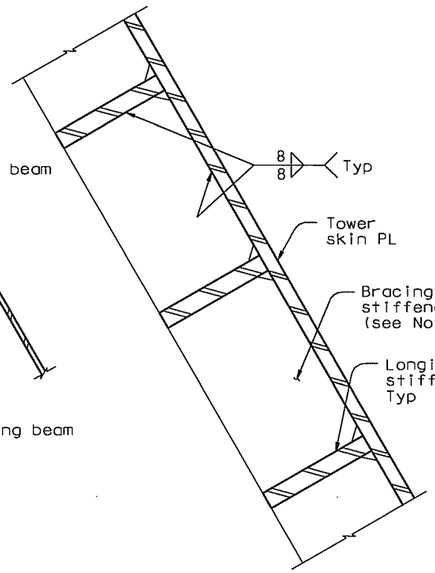

SECTION B-B
1:10

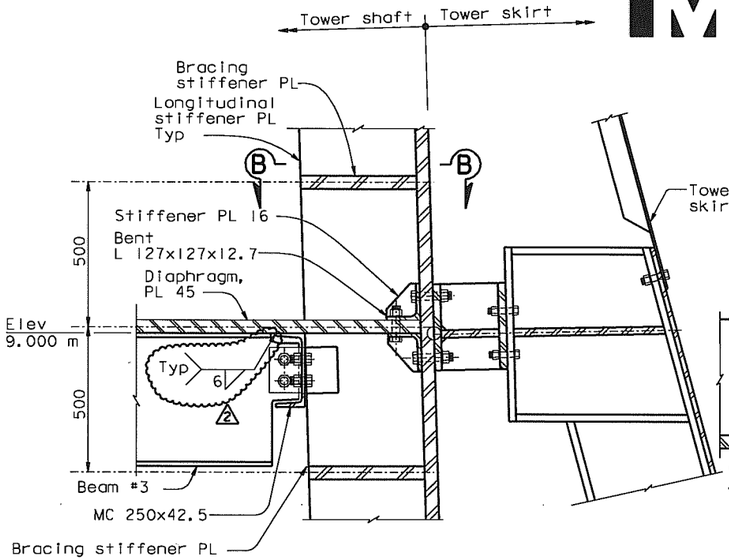

SECTION A-A (A'-A' Sim)
1:10

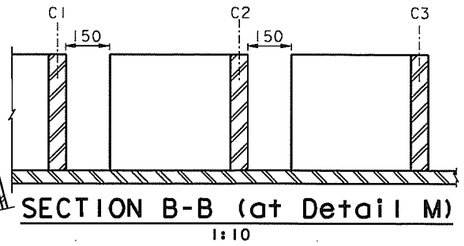

SECTION B-B (at Detail M)
1:10

DETAIL C' (Diaphragm plate not shown for clarity)
1:10
(Detail at elevation 9.000 m only)

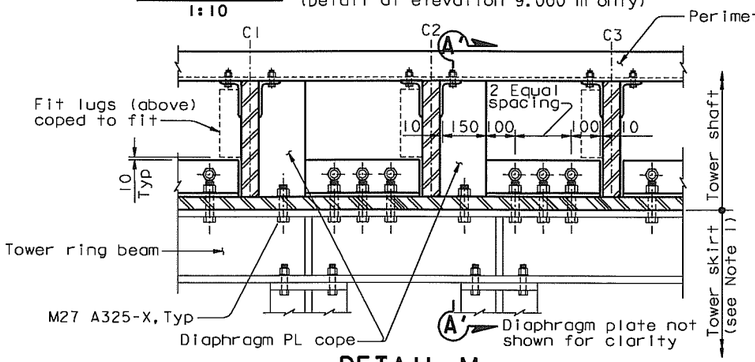

DETAIL M
1:10
(Detail at elevation 9.000 m only)

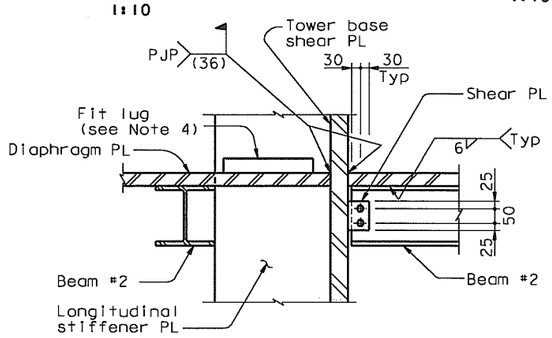

SECTION H'-H'
1:10
(Detail at elevation 9.000 m only)

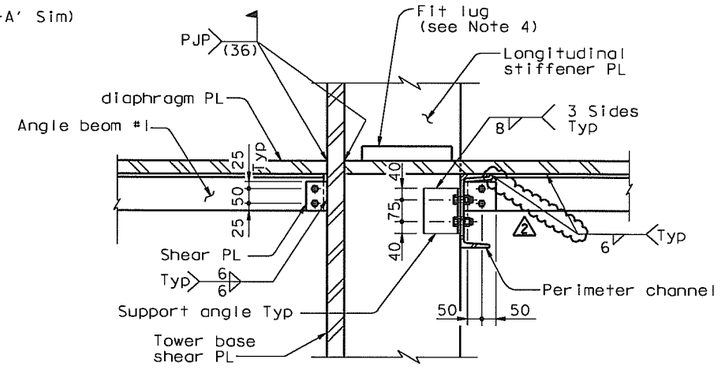

SECTION E'-E'
1:10
(Detail at elevation 9.000 m only)

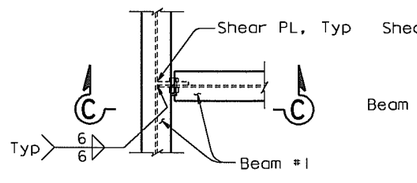

DETAIL K
1:10

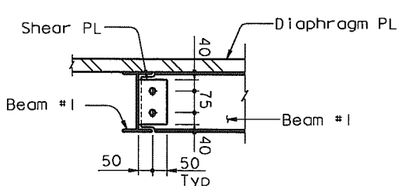

SECTION C-C
1:10

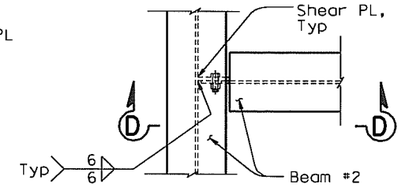

DETAIL L
1:10

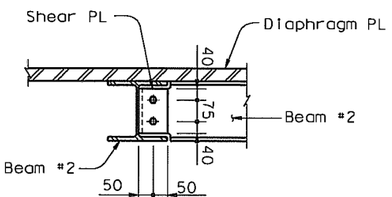

SECTION D-D
1:10

NOTES:

1. For tower skirt details, see "Tower Skirt Details No. 1" sheet.
2. For typical diaphragm cutout around tower longitudinal stiffeners, see "Tower Diaphragm Details No. 6" sheet.
3. Bracing stiffener plates shall be located along tower skin PL C and D, and tower base shear plates a1 and c.
4. Fit lugs for shear plates may be field welded. For fit lug details, see "Tower Diaphragm Details No. 6" sheet.

REQUESTS FOR INFORMATION NOT ADDRESSED IN THIS CCO REMAIN IN FORCE

MARK	DATE	DESCRIPTIONS	BY	CH'D	CCO#
		REVISIONS			
2	07/11/08	TOWER INTERNAL SHAFT	NV	MN	63
1	09/07/07	ELECTRICAL MODIFICATIONS	NV	MN	42

CONTRACT CHANGE ORDER NO. ____
SHEET ____ OF ____

	BY	CHECKED
DESIGN	M. Nader	M. Gulyas
DETAILS	L. Rus	M. Gulyas
QUANTITIES	L. Rus	Y. Zhang

R. Valizadeh/V. Toan/Y.L./W.L./F.C.
DESIGN OVERSIGHT
SIGN OFF DATE 07/11/08

Rev. Date: 5-18-98

ORIGINAL SCALE IN MILLIMETERS FOR REDUCED PLANS 0 10 20 30 40 50 60 70 80 90 100

ALL DIMENSIONS ARE IN MILLIMETERS UNLESS OTHERWISE SHOWN

PREPARED FOR THE STATE OF CALIFORNIA DEPARTMENT OF TRANSPORTATION

R. Manzanarez
PROJECT ENGINEER

BRIDGE NO. 34-0006L/R
KILOMETER POST 13.2/13.9

CU 04
EA 0120F1

DISREGARD PRINTS BEARING EARLIER REVISION DATES →

REVISION DATES (PRELIMINARY STAGE ONLY)								SHEET	OF
05/31/01	04/09/02	01/07/02	12/13/02	11/13/05				175R2	

SAN FRANCISCO OAKLAND BAY BRIDGE
EAST SPAN SEISMIC SAFETY PROJECT
SELF-ANCHORED SUSPENSION BRIDGE
(SUPERSTRUCTURE & TOWER)

TOWER DIAPHRAGM DETAILS NO. 17

FILE => I:\bb\04-012001\sas\contract plans and cco\cco\In progress\cco#63\dgn\aetdh14.dgn

100 % PS&E

USERNAME => vignarovsky DATE PLOTTED => 11 JUL 2008 TIME PLOTTED => 13:23:44

STATE OF CALIFORNIA - DEPARTMENT OF TRANSPORTATION

CONTRACT CHANGE ORDER

Change Requested by: Engineer

CCO: 64 **Suppl. No. 0** **Contract No. 04 – 0120F4** **Road** SF-80-13.2/13.9 **FED. AID LOC.:**

To: **AMERICAN BRIDGE/FLUOR ENTERPRISES INC A JOINT VENTURE**

You are directed to make the following changes from the plans and specifications or do the following described work not included in the plans and specifications for this contract. ***NOTE: This change order is not effective until approved by the Engineer.***

Description of work to be done, estimate of quantities and prices to be paid. (Segregate between additional work at contract price, agreed price and force account.) Unless otherwise stated, rates for rental of equipment cover only such time as equipment is actually used and no allowance will be made for idle time. This last percentage shown is the net accumulated increase or decrease from the original quantity in the Engineer's Estimate.

Adjustment of Compensation at Lump Sum:

ITEM 1.

Modify tower strut façade, clarify holes in cross-bracing flanges and boss plates, and correct fillet weld details as shown on sheets two (2) through five (5) of this change order. The following revised contract plan sheets detail all changes: 0573R1, 574R1, 575R2 and 920R1 (of 1204).

This change order resolves the costs associated with Contractor Request For Information (RFI) Nos. 71, 71R1, 183, 316, 316R1, 1023 and 1322 with respect to changes listed above.

For this work, the Contractor will receive a lump sum price of $400,000.00. This sum constitutes full and complete compensation for furnishing all labor, material, tools and incidentals including all markups by reason of this change.

Adjustment of Compensation at Lump Sum Price..... $400,000.00

ITEM 2.

The items identified above in this change order have been paid as part of CCO 108 resolution. Therefore, the amount due under this change order will be adjusted by the amount paid under CCO 108 to prevent a double payment. Total amount paid under CCO 108, and to be credited to this change, is $400,000.00.

Adjustment of Compensation at Lump Sum Price..... <$400,000.00>

CHANGE ORDER COST AND TIME SUMMARY

(ITEM 1) Adjustment of Compensation for work pursuant to this change order	$400,000.00
(ITEM 2) Amount paid under CCO 108 for this change order	<$400,000.00>
Total net pay for this change order	$0.00

Contract time is addressed in CCO 108 for all work identified in this change order. Therefore contract time will not be adjusted in this change order.

Estimated Cost: **Increase** ☐ **Decrease** ☐ **$0.00**

By reason of this order the time of completion will be adjusted as follows: **0 days**

Submitted by

Signature _____ **Resident Engineer** Mark Woods for Gary Pursell, Sup.T.E. **Date** 10 Feb 2010

Approval Recommended by

Signature _____ **Supervising Transportation Engineer** Gary Pursell, Sup.T.E. **Date** 2/10/10

Engineer Approval by

Signature _____ **Supervising Transportation Engineer** Gary Pursell, Sup.T.E. **Date** 2/23/10

We the undersigned contractor, have given careful consideration to the change proposed and agree, if this proposal is approved, that we will provide all equipment, furnish the materials, except as otherwise be noted above, and perform all services necessary for the work above specified, and will accept as full payment therefor the prices shown above.

NOTE: If you, the contractor, do not sign acceptance of this order, your attention is directed to the requirements of the specifications as to proceeding with the ordered work and filing a written protest within the time therein specified.

Contractor Acceptance by

Signature _____ (Print name and title) Michael D. Flowers Project Director **Date** 2-22-10

Caltrans now has a web site! To get to the web site, go to: http://www.dot.ca.gov

DIST.	COUNTY	ROUTE	KILOMETER POST TOTAL PROJECT	SHEET NO.	TOTAL SHEETS
04	SF	80	13.2/13.9	573R1	1204

REGISTERED ENGINEER - CIVIL
12-6-04
PLANS APPROVAL DATE

The State of California or its officers or agents shall not be responsible for the accuracy or completeness of electronic copies of this plan sheet.

Norman N. Nader, No. C 054426, Exp. 12/31/09, CIVIL, STATE OF CALIFORNIA

T.Y. LIN / MOFFATT & NICHOL
825 BATTERY STREET
SAN FRANCISCO, CA 94111

LEGEND:

- M24 A325-X Bolt
- O 24 Dia A307 Bolt

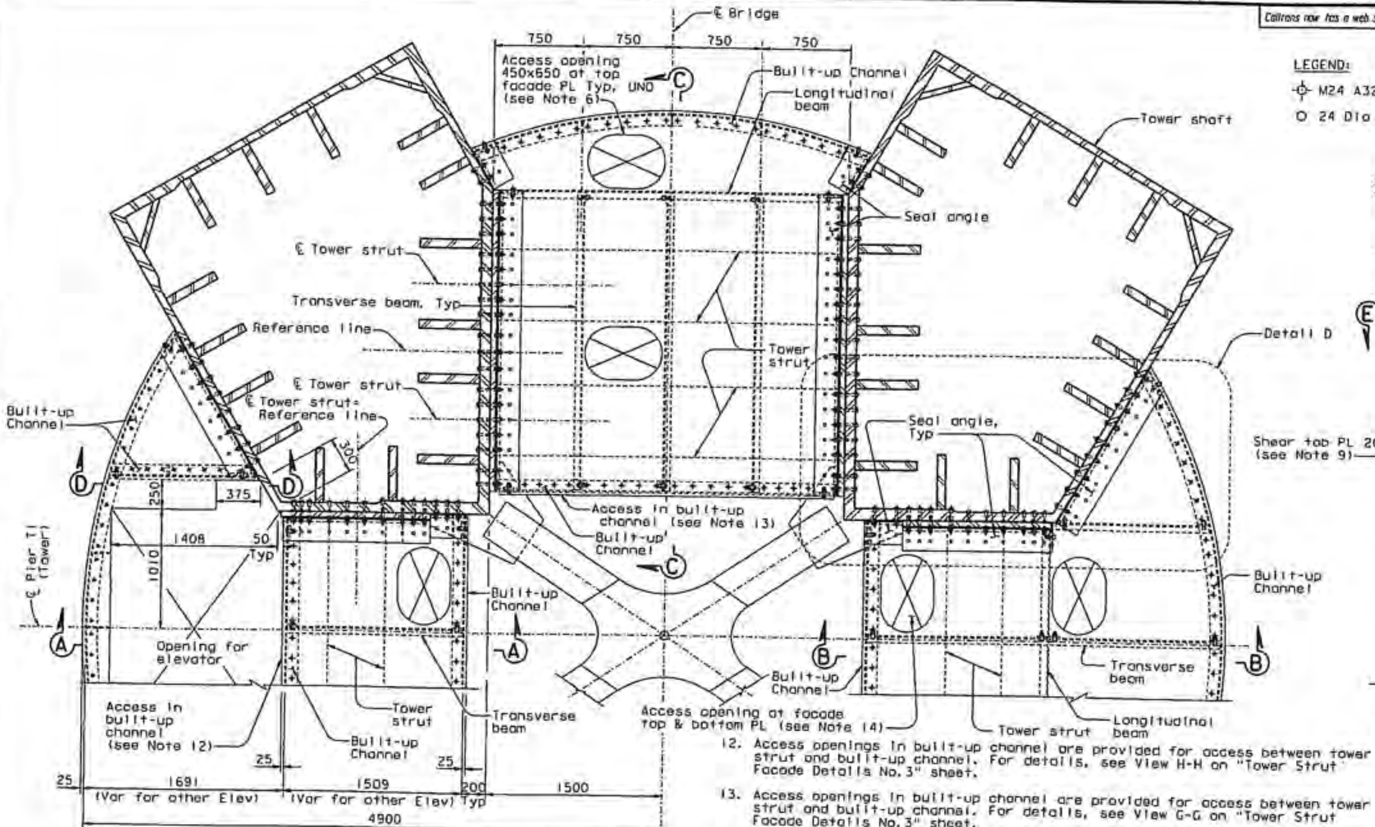

DETAIL A

1:20

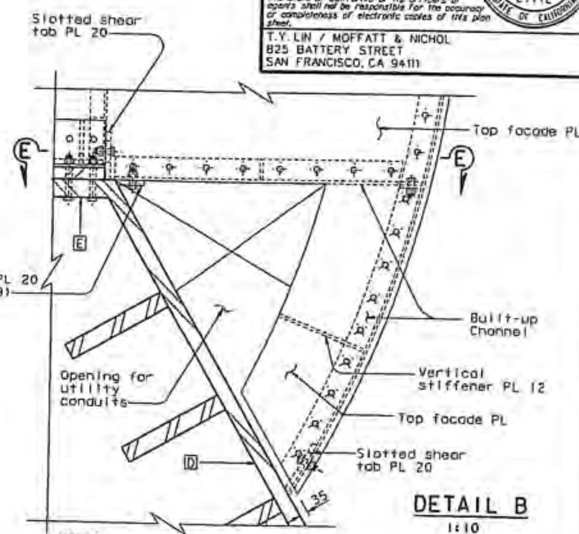

DETAIL B

1:10

NOTES:

1. For Detail D, see "Tower Strut Facade Details No.4" sheet.
2. For tower shaft details, see "Tower Shaft Details" sheets.
3. All bolts are A325 M24 unless noted otherwise.
4. For Section D-D and E-E, see "Tower Strut Facade Details No.3" sheet.
5. All details of tower strut facade shall account for the 1% slope of the tower top and bottom facade plates.
6. For access opening details, see "Tower Access Details" sheets. Access opening shall be located such that there is minimum interference with tower strut and tower strut facade framing system.
7. For details of built-up channel, see "Tower Strut Facade Details No.3" sheet.
8. Vertical plate of built-up channel at corner of plate D E shall be sloped to match the slope of edge of plate E.
9. Shear tab plate is similar to slotted shear tab plate but with standard holes. For details of slotted shear tab plate, see "Tower Strut Facade Details No.4" sheet.
10. Framing details and support at bottom of strut facade are similar to those at the top of strut facade, UNO.
11. For sealing details, see "Tower Strut Facade Details No.4" sheet.
12. Access openings in built-up channel are provided for access between tower strut and built-up channel. For details, see View H-H on "Tower Strut Facade Details No.3" sheet.
13. Access openings in built-up channel are provided for access between tower strut and built-up channel. For details, see View G-G on "Tower Strut Facade Details No.3" sheet.
14. Access opening in top and bottom facade PL shall be provided at this location for strut facade Type B also.

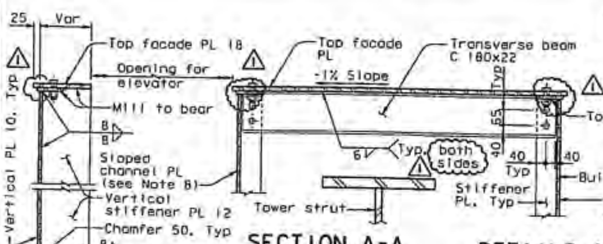

SECTION A-A

1:10

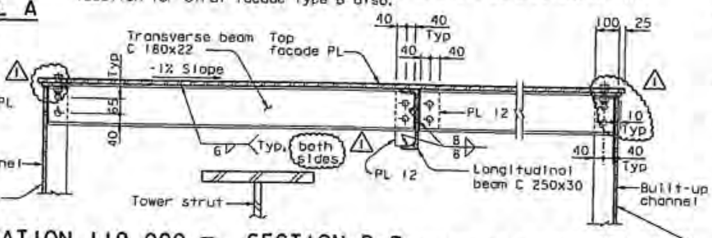

SECTION B-B (Section C-C similar)

1:10

DETAILS AT ELEVATION 119.000 m

(Other elevations similar)

ALL DIMENSIONS ARE IN MILLIMETERS UNLESS OTHERWISE SHOWN

REQUESTS FOR INFORMATION NOT ADDRESSED IN THIS CCO REMAIN IN FORCE

MARK	DATE	DESCRIPTIONS	BY	CH'D	CCO#
1	07/11/08	TOWER STRUT FACADES AND CROSS BRACING	MN	NV	64

REVISIONS

R. Valizadeh/V. Toan/Y. L./N. L./F. C.
DESIGN OVERSIGHT
SIGN OFF DATE 07/11/08

CONTRACT CHANGE ORDER NO. 64
SHEET 2 OF 5

DESIGN	BY M. Nader	CHECKED M. Gulyas
DETAILS	BY L. Rus	CHECKED M. Gulyas
QUANTITIES	BY L. Rus	CHECKED T. Zhang

PREPARED FOR THE STATE OF CALIFORNIA
DEPARTMENT OF TRANSPORTATION

R. Manzanarez
PROJECT ENGINEER

BRIDGE NO. 34-0006L/R
KILOMETER POST 13.2/13.9

CU 04
EA 0120F1

SAN FRANCISCO OAKLAND BAY BRIDGE
EAST SPAN SEISMIC SAFETY PROJECT
SELF-ANCHORED SUSPENSION BRIDGE
(SUPERSTRUCTURE & TOWER)

TOWER STRUT FACADE DETAILS NO. 2

ORIGINAL SCALE IN MILLIMETERS FOR REDUCED PLANS

DISREGARD PRINTS BEARING EARLIER REVISION DATES

SHEET 156R1

FILE => I:\bb\04-0120F1\sas\contract plans and cco\cco\in progress\cco-64\dgn\detail1.dgn

100 % PS&E

DATE PLOTTED => 11 JUL 2008 TIME PLOTTED => 13:16:49

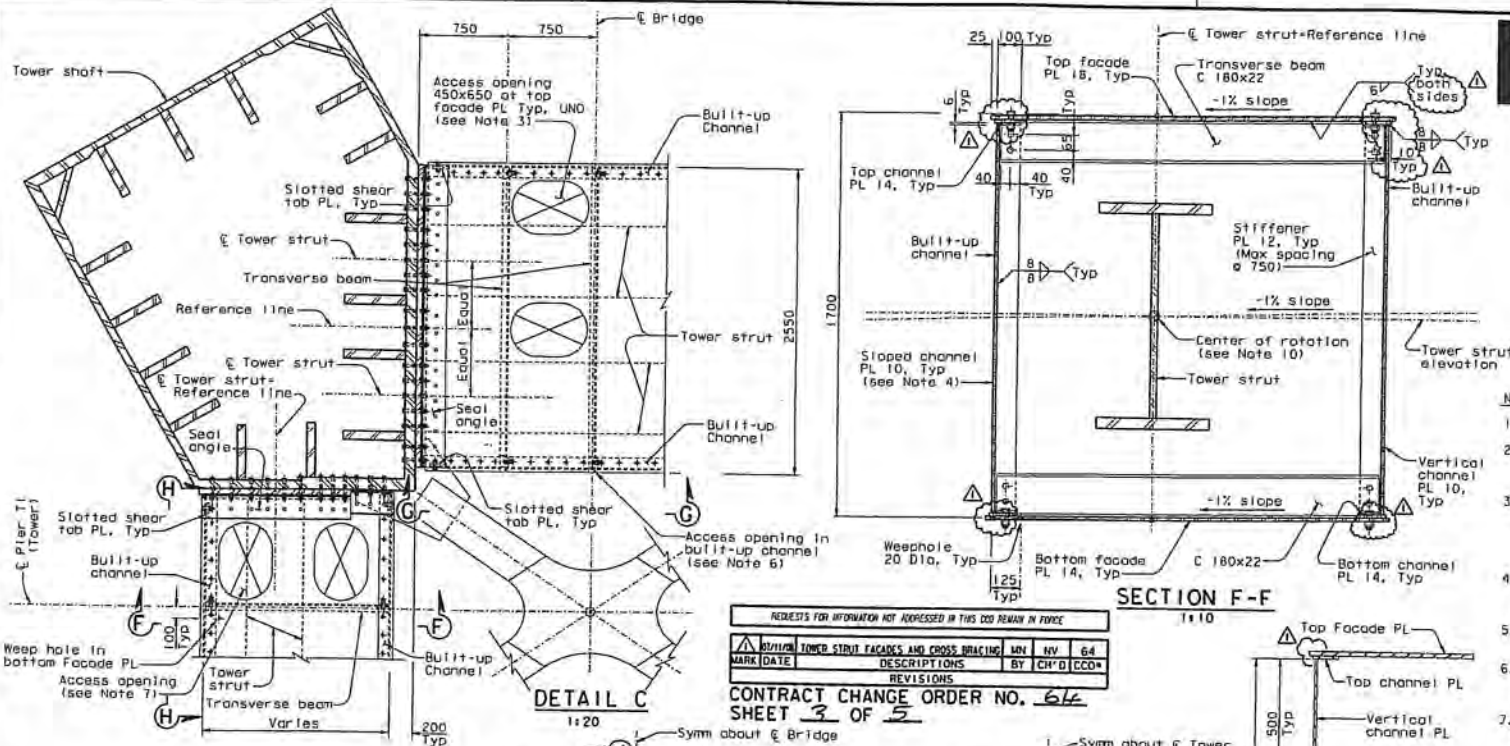

SECTION F-F
1:10

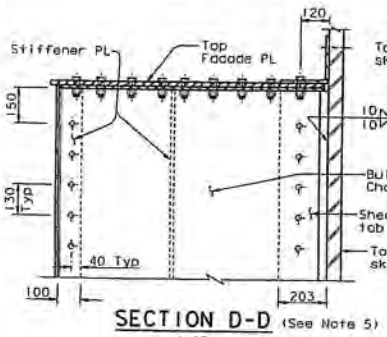

SECTION D-D (See Note 5)
1:10
(Section E-E similar)

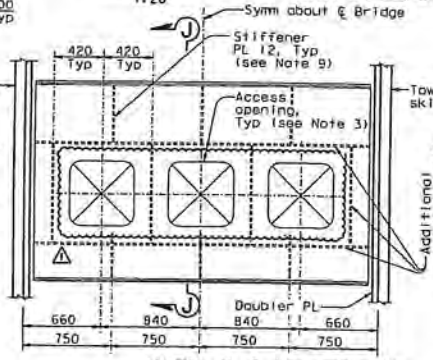

VIEW G-G (Seal angle not shown for clarity)
1:20

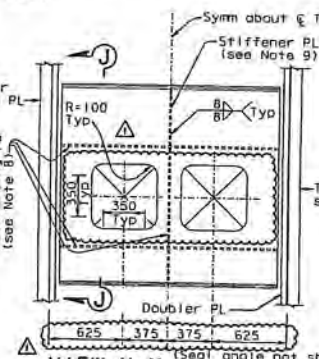

VIEW H-H (Seal angle not shown for clarity) (Access openings do not exist between elevation 18.000 m and 77.000 m)
1:20

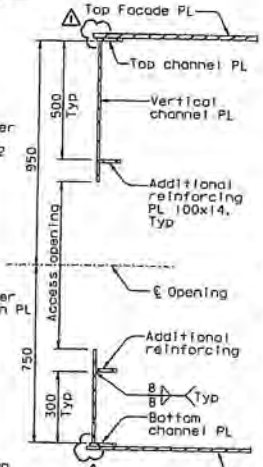

SECTION J-J
1:10

DETAIL AT ELEVATION 109.000 m (Other elevation similar)

REQUESTS FOR INFORMATION NOT ADDRESSED IN THIS CCO REMAIN IN FORCE

MARK	DATE	REVISIONS DESCRIPTIONS	BY	CH'D	CCO#
1	07/11/08	TOWER STRUT FACADES AND CROSS BRACING	MN	NV	64

CONTRACT CHANGE ORDER NO. 64
SHEET 3 OF 5

LEGEND:

⊕ M24 A325-X Bolt

O 24 Dia A307 Bolt

NOTES:

1. All bolts are A325 M24 unless noted otherwise.
2. All details of tower strut facade shall account for the 1% slope of the tower top and bottom facade plates.
3. For access opening details, see "Tower Access Details" sheets. Access opening shall be located such that there is minimum interference with tower strut and tower strut facade framing system.
4. Vertical plate of built-up channel at corner of plate D E shall be sloped to match the slope of edge of plate E
5. For tightening the bolts shown in Section D-D, the nuts may be tack welded.
6. Access openings in built-up channel are provided for access between tower strut and built-up channel, see View G-G.
7. This access opening is at tower strut facade between elevation 18 and 77 only. For access between tower strut and built-up channel, between elevations 89 to 109, access opening is provided in built-up channel instead, see View H-H.
8. Additional reinforcing plates are required for built-up channel with access openings.
9. Stiffener plates shall be terminated as required for openings in built-up channel.
10. The center of rotation shall be located at the intersection of the Reference line with the tower strut elevation line.
11. For sealing details, see "Tower Strut Facade Details No. 4" sheet.
12. For access in bottom facade PL, see Note 14 on "Tower Strut Facade Details No. 2" sheet.

ALL DIMENSIONS ARE IN MILLIMETERS UNLESS OTHERWISE SHOWN

DIST	COUNTY	ROUTE	KILOMETER POST TOTAL PROJECT	SHEET NO.	TOTAL SHEETS
04	SF	80	13.2/13.9	574R1	1204

REGISTERED ENGINEER - CIVIL
12-6-04
PLANS APPROVAL DATE
The State of California or its officers or agents shall not be responsible for the accuracy or completeness of electronic copies of this plan sheet.
Marwan N. Nader No. C 054426 Exp. 12/31/09 CIVIL STATE OF CALIFORNIA

T.Y. LIN / MOFFATT & NICHOL
825 BATTERY STREET
SAN FRANCISCO, CA 94111

Caltrans now has a web site! To get to the web site, go to: http://www.dot.ca.gov/

R. Vallizadeh/V. Toan/Y. L./N. L./F. C.
DESIGN OVERSIGHT
Sign Off Date 07/11/08

	BY	CHECKED
DESIGN	M. Nader	M. Gulyas
DETAILS	L. Rus	M. Gulyas
QUANTITIES	L. Rus	Y. Zhang

PREPARED FOR THE STATE OF CALIFORNIA
DEPARTMENT OF TRANSPORTATION

R. Manzanarez
PROJECT ENGINEER

CU 04
EA 0120F1

BRIDGE NO. 34-0006L/R
KILOMETER POST 13.2/13.9

SAN FRANCISCO OAKLAND BAY BRIDGE
EAST SPAN SEISMIC SAFETY PROJECT
SELF-ANCHORED SUSPENSION BRIDGE
(SUPERSTRUCTURE & TOWER)

TOWER STRUT FACADE DETAILS NO. 3

DISREGARD PRINTS BEARING EARLIER REVISION DATES

REVISION DATES (PRELIMINARY STAGE ONLY)

SHEET 574R1

ORIGINAL SCALE IN MILLIMETERS FOR REDUCED PLANS 0 10 20 30 40 50 60 70 80 90 100

FILE => I:\80\04-0120F1\ea01\contract plans and cco\cco\in progress\cco64\dgn\ostws12.dgn

USERNAME => ptcon
DATE PLOTTED => 31 JUL 2008
TIME PLOTTED => 13:19:54

100% PS&E

DIST.	COUNTY	ROUTE	KILOMETER POST TOTAL PROJECT	SHEET NO.	TOTAL SHEETS
04	SF	80	13.2/13.9	575R2	1204

REGISTERED ENGINEER - CIVIL

12-6-04

PLANS APPROVAL DATE

The State of California or its officers or agents shall not be responsible for the accuracy or completeness of electronic copies of this plan sheet.

REGISTERED PROFESSIONAL ENGINEER Marwan N. Nader No. C 054426 Exp. 12/31/09 CIVIL STATE OF CALIFORNIA

T.Y. LIN / MOFFATT & NICHOL
825 BATTERY STREET
SAN FRANCISCO, CA 94111

Caltrans now has a web site! To get to the web site, go to: http://www.dot.ca.gov

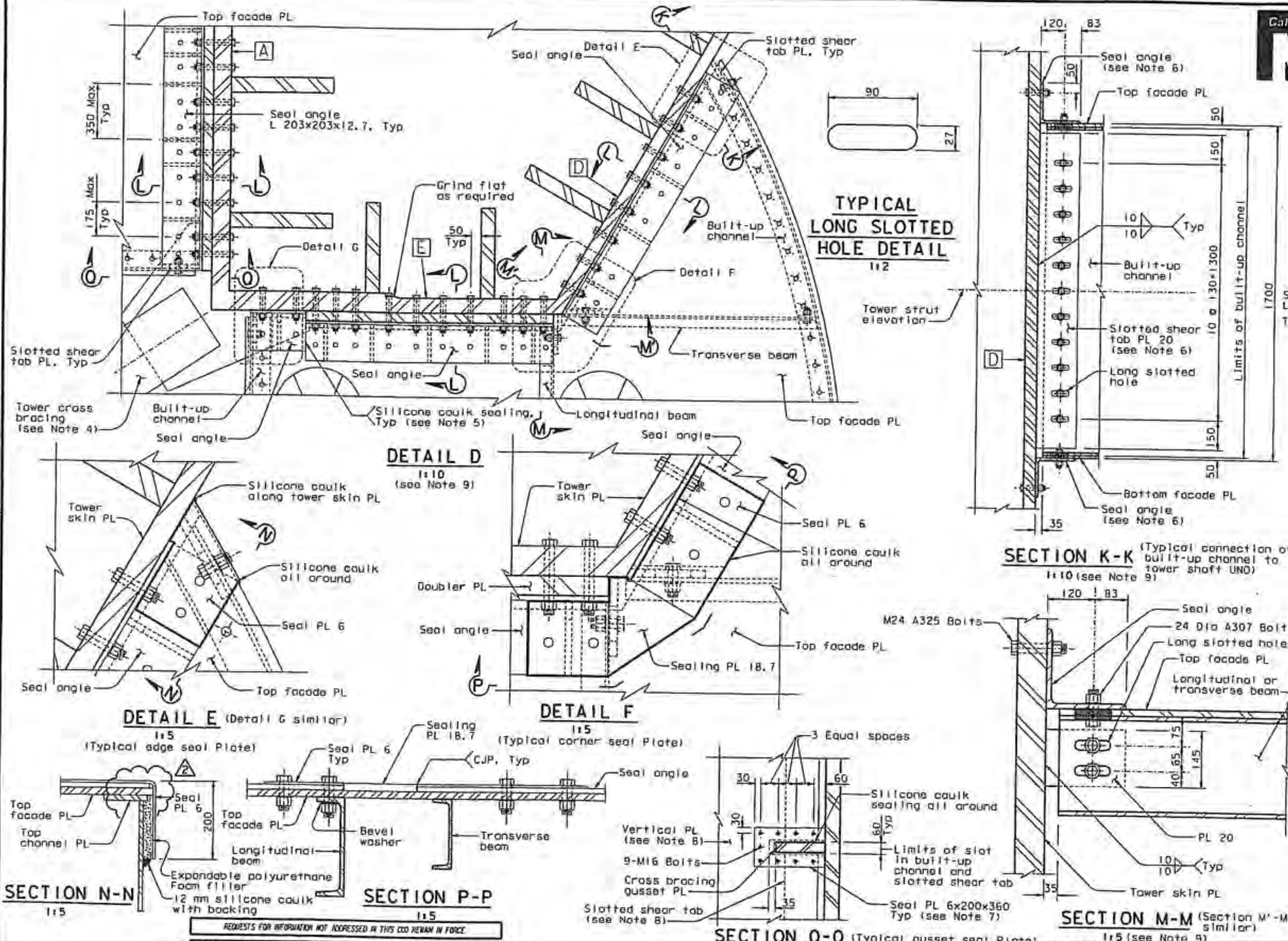

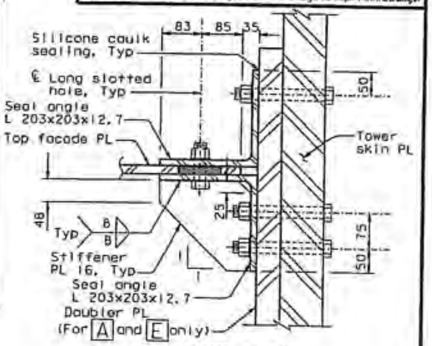

SECTION L-L
1:5 (see Note 9)

LEGEND:

- M24 A325-X Bolt
- 24 Dia A307 Bolt

NOTES:

1. All bolts are A325 M24 unless noted otherwise.
2. For details of built-up channel, see "Tower Strut Facade Details No. 3" sheet.
3. All details of tower strut facade shall account for the 1% slope of the tower top and bottom facade plates.
4. For tower cross bracing location, see "Tower Strut Details No. 9" sheet.
5. Seal plates and sealant material shall be placed such that the interior of the tower strut facade is properly sealed from the exterior.
6. PTFE film (0.5 thick) shall be applied on the faying surfaces between the slotted shear tab and the built-up channel plate, between the seal angle and the top facade PL, and between the seal angle and the bottom facade PL.
7. Seal plate shall be tight fit to the cross bracing gusset plate.
8. Cope vertical channel plate and slotted shear tab as necessary to accomodate cross bracing gusset plate. Slot location shall match slot in doubler plate. For doubler plate slot details, see "Tower Shaft Details No. 11" sheet.
9. For sealing plate details, see Details E, F and Sections N-N, P-P, O-O.

ALL DIMENSIONS ARE IN MILLIMETERS UNLESS OTHERWISE SHOWN

REQUESTS FOR INFORMATION NOT ADDRESSED IN THIS CCO REMAIN IN FORCE

MARK	DATE	DESCRIPTIONS	BY	CH'D	CCO#
2	07/11/08	TOWER STRUT FACADES AND CROSS BRACING	NV	MN	64
1	06/05/07	TOWER STRUT FACADE PTFE	NV	MN	48
		REVISIONS			

R. Valizadeh/V. Toan/Y. L...
DESIGN OVERSIGHT
SIGN OFF DATE 07/17/08

CONTRACT CHANGE ORDER NO. 64
SHEET 4 OF 5

DESIGN	BY M. Nader	CHECKED M. Gulyas
DETAILS	BY L. Rus	CHECKED M. Gulyas
QUANTITIES	BY L. Rus	CHECKED Y. Zhang

PREPARED FOR THE STATE OF CALIFORNIA
DEPARTMENT OF TRANSPORTATION

R. Manzanarez
PROJECT ENGINEER

BRIDGE NO. 34-0006L/R
KILOMETER POST 13.2/13.9

CU 04
EA 0120F1

SAN FRANCISCO OAKLAND BAY BRIDGE
EAST SPAN SEISMIC SAFETY PROJECT
SELF-ANCHORED SUSPENSION BRIDGE
(SUPERSTRUCTURE & TOWER)

TOWER STRUT FACADE DETAILS NO. 4

SHEET 158R2

ORIGINAL SCALE IN MILLIMETERS FOR REDUCED PLANS

DISREGARD PRINTS BEARING EARLIER REVISION DATES

FILE => i:\bb\04-0120f1\sas\contract plans and cco\cco\in progress\cco#64\dgn\cstws13.dgn

DATE PLOTTED => 11 JUL 2008 TIME PLOTTED => 13:21:37

100% PS&E

DIST.	COUNTY	ROUTE	KILOMETER POST TOTAL PROJECT	SHEET NO.	TOTAL SHEETS
04	SF	80	13.2/13.9	920R1	1204

REGISTERED ENGINEER - CIVIL

12-6-04

PLANS APPROVAL DATE

The State of California or its officers or agents shall not be responsible for the accuracy or completeness of electronic copies of this plan sheet.

PROFESSIONAL ENGINEER, Marwan N. Nader, No. C 054426, Exp. 12/31/09, CIVIL, STATE OF CALIFORNIA

T.Y. LIN / MOFFATT & NICHOL
825 BATTERY STREET
SAN FRANCISCO, CA 94111

Caltrans now has a web site! To get to the web site, go to: http://www.dot.ca.gov

Caltrans Metric

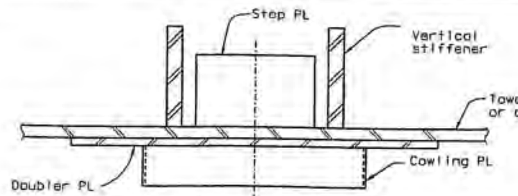

SECTION B-B
1:10

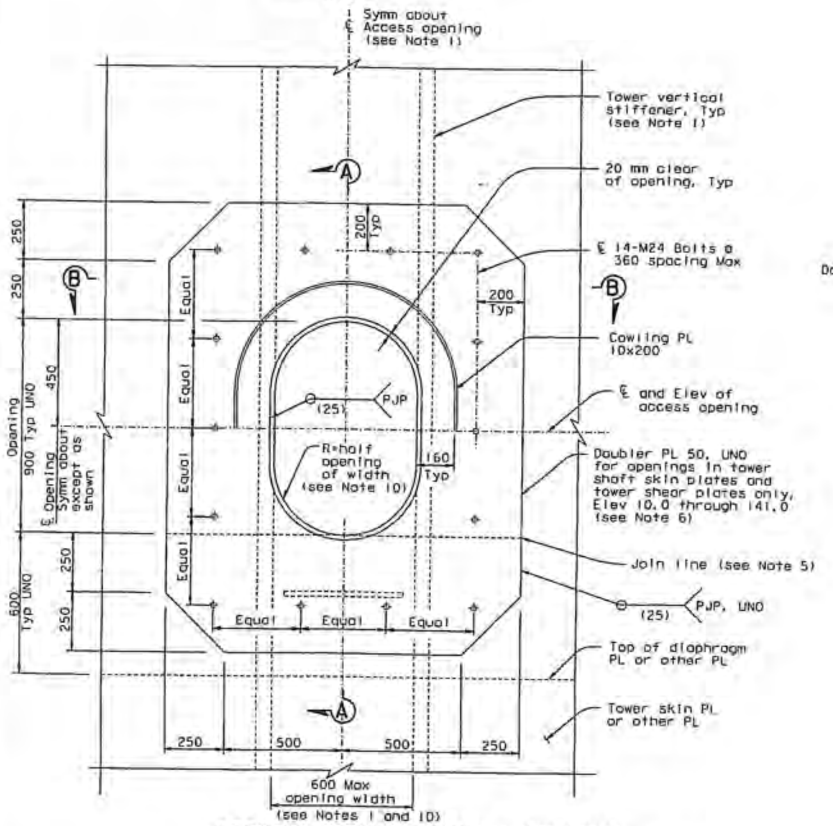

ACCESS OPENING DETAIL (see Note 6)
1:10
(Dehumidification access opening similar)

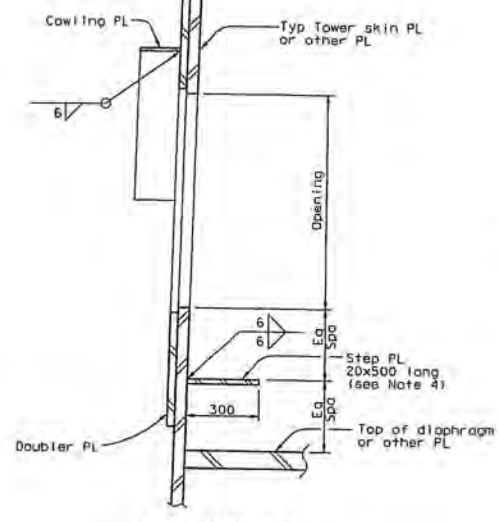

SECTION A-A
1:10

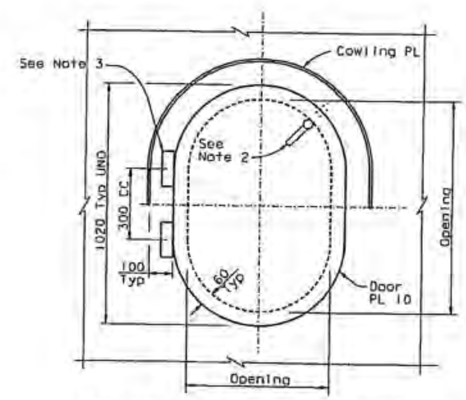

ACCESS OPENING DOOR DETAIL
1:10
(Dehumidification access opening door similar)

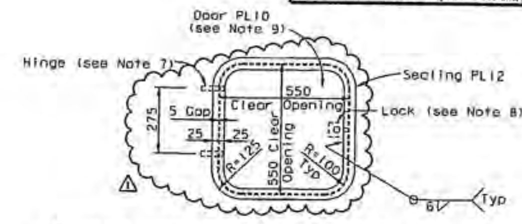

ACCESS OPENING WITH DOOR AT VERTICAL FACE OF TOWER STRUT FACADE

1:10

NOTES:

1. Width of opening is limited to clear distance between stiffeners. For location of access opening and stiffener spacing in tower, see "Tower Shaft Details" sheets.
2. Doors shall be secured by cam locks with locking L-handles and interior release.
3. Door hinges shall be stainless lift-off type with 16 mm pin size 150 kg rated capacity per hinge.
4. Use step PL where door sill is greater than 500 above landing.
5. For access openings at elevations 54.550, 90.550 and 140.550 omit doubler PL below join line. Connect upper portion to strut doubler PL using CJP welds at join line. For strut doubler PL, see "Tower Strut Details" sheets.
6. Access opening shown is for openings in tower shaft skin plates and shear plates. Access opening in tower skirt and tower head are similar. The doubler PL shall match the thickness of the penetrated skirt or tower head PL and shall be connected with a PJP weld 8 mm.
7. Contractor shall provide internally mounted pivot hinges. No part of hinge shall protrude beyond the outside surface of door or facade when door is closed. Hinges shall permit door to swing outwards at least 120°. Each hinge shall be rated to resist 900 N in any direction.
8. Contractor shall provide through-hole mounted cam lock with key. Lock shall be flush with outside face of door.
9. Door shall be flush with outside face of facade. Edges of door shall be sealed with 5x20 Neoprene seals.
10. Dehumidification access openings shall have R=50 mm typical. Dehumidification access openings at tower head only shall be 680 mm x 900 mm.

ALL DIMENSIONS ARE IN MILLIMETERS UNLESS OTHERWISE SHOWN

REQUESTS FOR INFORMATION NOT ADDRESSED IN THIS CCO REMAIN IN FORCE

MARK	DATE	DESCRIPTIONS	BY	CH'D	CCO#
1	01/11/08	TOWER STRUT FACADES AND CROSS BRACING	MN	NV	64

REVISIONS

R. Valizadeh/V. Taan/Y.L./W.L./F.C.
DESIGN OVERSIGHT
SIGN OFF DATE 01/11/08

CONTRACT CHANGE ORDER NO. 64
SHEET 5 OF 5

DESIGN: M. Nader — CHECKED: M. Gulyas
DETAILS: G. Baker — CHECKED: L. Rus
QUANTITIES: D. Turner — CHECKED: J. Leventini

PREPARED FOR THE STATE OF CALIFORNIA DEPARTMENT OF TRANSPORTATION

R. Manzanarez, PROJECT ENGINEER

BRIDGE NO. 34-0006L/R
KILOMETER POST 13.2/13.9

SAN FRANCISCO OAKLAND BAY BRIDGE
EAST SPAN SEISMIC SAFETY PROJECT
SELF-ANCHORED SUSPENSION BRIDGE
(SUPERSTRUCTURE & TOWER)

TOWER ACCESS DETAILS NO. 4

CU 04
EA 0120F1

SHEET 503R1

ORIGINAL SCALE IN MILLIMETERS FOR REDUCED PLANS

FILE => I:\bb\04-0120f1\sas\contract plans and cco\cco\in progress\cco#64\dgn\akacc05a.dgn

100 % PS&E
DATE PLOTTED => 11 JUL 2008
TIME PLOTTED => 13:22:47

STATE OF CALIFORNIA - DEPARTMENT OF TRANSPORTATION

CONTRACT CHANGE ORDER MEMORANDUM

DC-CEM-4903 (OLD HC-39 REV. 6/93) CT# 7541-3544-0

DATE: 3/16/2010 Page 1 of 1

TO
Pete Siegenthaler, Principal TE

FROM
Gary Pursell, STE / Richard Morrow, SBE

FILE
04-0120F4
04-SF-80-13.2/13.9

CCO NO.	SUPPLEMENT NO.	CATEGORY CODE
64	0	CHPA

CONTINGENCY BALANCE (including this change)
$8,014,909.40

$0.00 INCREASE ☐ DECREASE ☐

HEADQUARTERS APPROVAL REQUIRED?
YES ☐ NO ☒

SUPPLEMENTAL FUNDS PROVIDED
$

IS THIS REQUEST IN ACCORDANCE WITH ENVIRONMENTAL DOCUMENTS?
YES ☒ NO ☐

CCO DESCRIPTION:
Tower Strut Facade and Cross Bracing

PROJECT DESCRIPTION
CONSTRUCT SELF-ANCHORED SUSPENSION BRIDGE

Original Contract Time	Time Adj.: This Change	Previously Approved CCO Time Adjustments	Percentage Time Adjusted: (including this change)	Total # of Unreconciled Deferred Time CCO(s): (including this change)
2490 Day(s)	**0** Day(s)	**227** Day(s)	**9** %	**6**

THIS CHANGE ORDER PROVIDES FOR:

- Modifying tower strut facade by relocating access holes and increasing plate size.
- Clarifying diameter of hole located in cross-bracing flanges and boss plates.
- Correcting fillet weld specified between rolled sections and diaphragm plates.

Tower strut façade access holes will be relocated to avoid conflicts with other tower elements and plate size shall be increased to accommodate fillet weld. Additional Contractor requested information needed to clarify cross-bracing flange and boss plate hole diameter. Fillet weld callouts errors, between rolled sections and diaphragm plates, require plan sheet corrections. This change resolves Contractor RFI's 71R0, 71R1, 183R0, 316R0, 316R1 and 1023.

This work is not covered by any contract items. Therefore, payment for this work will be at Adjustment of Compensation at Lump Sum for the amount of $400,000.00. Since the cost, of $400,000.00 in this change, is included in Contract Change Order 108 Supplement 1 (CCO 108S1) Claim Settlement Report No. 1 resolution costs the net payment in this change order is zero.

A determination of the delay in completion of the contract due to work specified by this change order, has been made in CCO 108S1 and is part of the Claims Settlement Report (CSR) No. 1 for this project. Therefore, no adjustment of time is warranted by reason of this change order.

This change order received concurrence from Gary Pursell (Resident Engineer), Rick Morrow (Sup. Structure Rep), Peter Siegenthaler (Principal TE), Rich Foley (HQ Oversight), Ken Terpstra (Project Manager), Richard Land (Chief Engineer), Jon Tapping (HQ Coordinator), Tony Anziano (Toll Bridge Program Manager), Brian Maroney (Project Engineer), Marwan Nader (Design of Record), Wenyi Long (Design Oversight), and Lina Ellis (Structure Maintenance).

Claims Settlement Report (CSR) No. 1, for this project, revises the authority to "Issue and Approve" the changes listed in CCO 108S1 Appendices A & B. The authority to "Issue and Approve" the changes listed in Appendices A & B for the values of time and money contemplated therein has been delegated to the District for approval and approval of each of these change orders by the Headquarters CCO Desk will not be required. Since this change order is included in CCO 108S1 no Headquarters CCO Desk "Issue and Approve" is required, a copy of CCO 108S1 is attached for reference.

CONCURRED BY:	DATE
CONSTRUCTION ENGINEER Res. Eng. Gary Pursell	DATE 12/21/09
SR. BRIDGE ENGINEER Rick Morrow	DATE 12/21/09
FHWA REPRESENTATIVE	DATE
PROJECT MANAGER Proj. Manager, Ken Terpstra	DATE 12/21/09
OTHER (SPECIFY) Chief Engineer, Richard Land	DATE 12/21/09
PCE, Peter Siegenthaler, Prin TE	DATE 12/21/09
DISTRICT PRIOR APPROVAL BY	DATE
HQ (ISSUE & APPROVE) (TO PROCEED) BY Bob Molera (ISSUE & APPROVE)	DATE 12/31/09
RESIDENT ENGINEER SIGNATURE Gary Pursell	DATE 3/16/10

ESTIMATE OF COST	THIS REQUEST	TOTAL TO DATE
ITEMS	$0.00	$0.00
FORCE ACCOUNT	$0.00	$0.00
AGREED PRICE	$0.00	$0.00
ADJUSTMENT	$0.00	$0.00
TOTAL	$0.00	$0.00

FEDERAL PARTICIPATION

☐ PARTICIPATING ☐ PARTICIPATING IN PART ☒ NONE
☐ NON-PARTICIPATING (MAINTENANCE) ☐ NON-PARTICIPATING

FEDERAL SEGREGATION (IF MORE THAN ONE FUNDING SOURCE OR P.I.P. TYPE)
☐ CCO FUNDED PER CONTRACT ☐ CCO FUNDED AS FOLLOWS

FEDERAL FUNDING SOURCE	PERCENT

HC-39 Word(Rev.9/96)

Caltrans now has a web site! To get to the web site, go to: http://www.dot.ca.gov

DIST.	COUNTY	ROUTE	KILOMETER POST TOTAL PROJECT	SHEET NO.	TOTAL SHEETS
04	SF	80	13.2/13.9	573RI	1204

REGISTERED ENGINEER - CIVIL

12-6-04
PLANS APPROVAL DATE

The State of California or its officers or agents shall not be responsible for the accuracy or completeness of electronic copies of this plan sheet.

REGISTERED PROFESSIONAL ENGINEER — Marwan N. Nader — No. C 054426 — Exp. 12/31/09 — CIVIL — STATE OF CALIFORNIA

T.Y. LIN / MOFFATT & NICHOL
825 BATTERY STREET
SAN FRANCISCO, CA 94111

LEGEND:
- ⊕ M24 A325-X Bolt
- ○ 24 Dia A307 Bolt

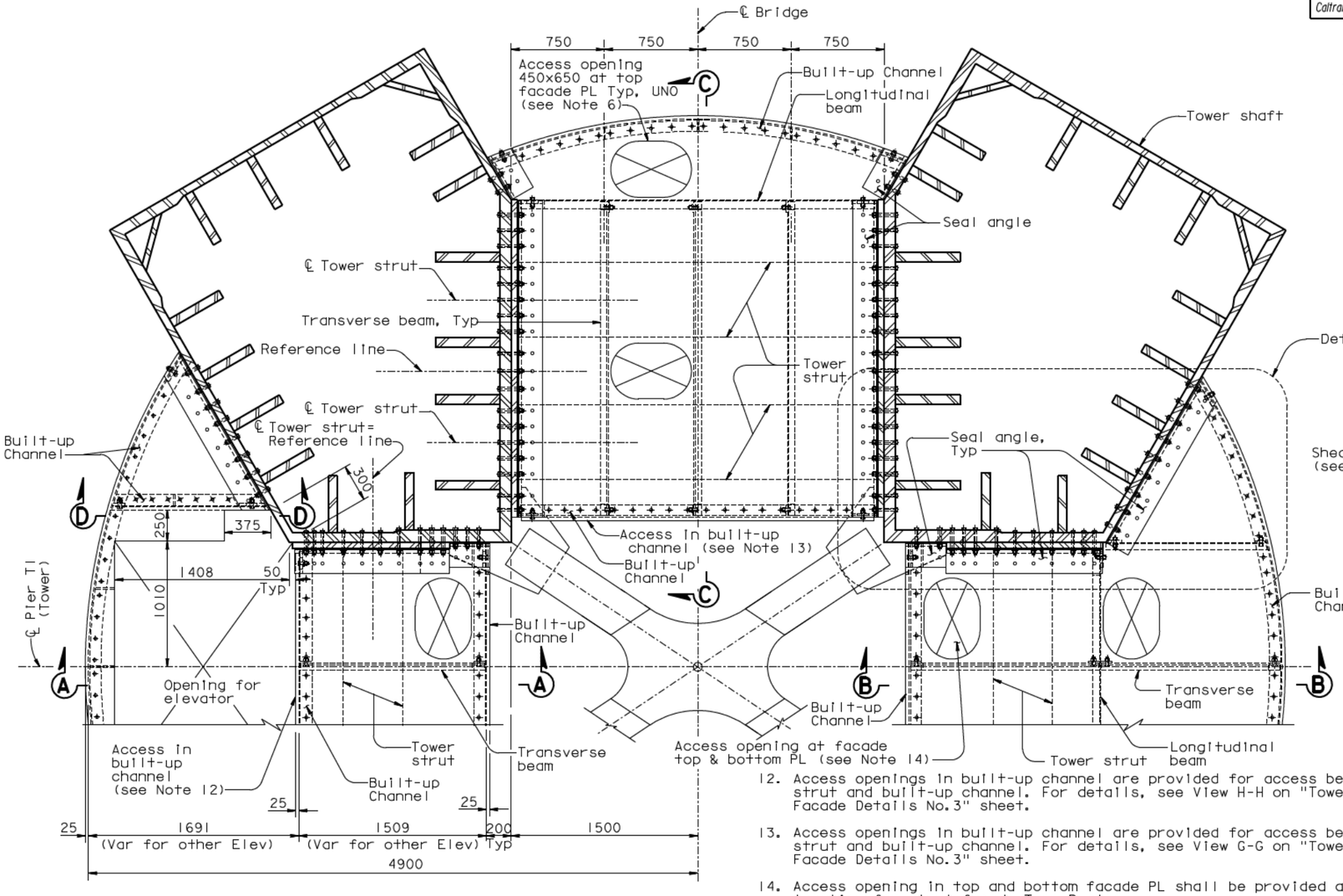

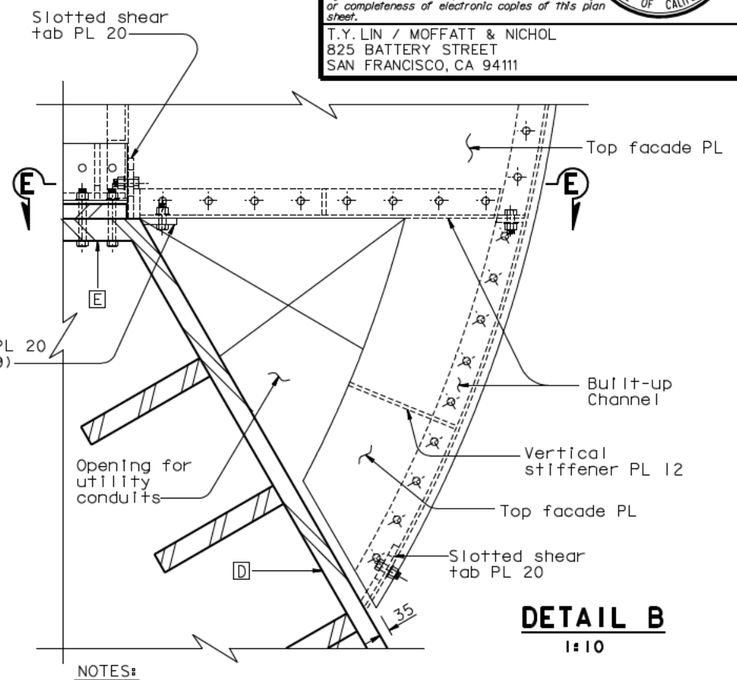

DETAIL B
1:10

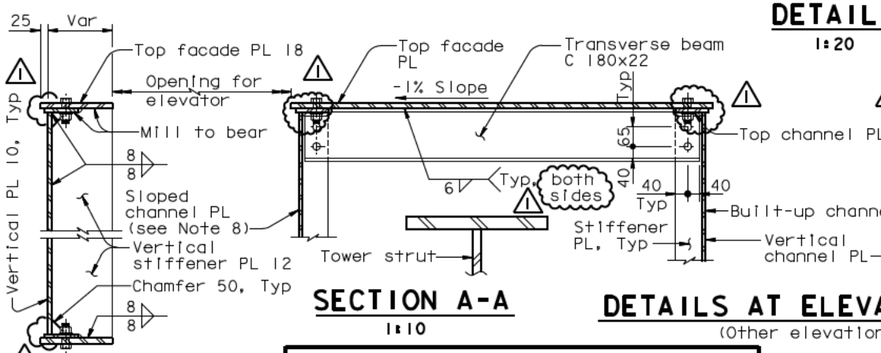

SECTION A-A
1:10

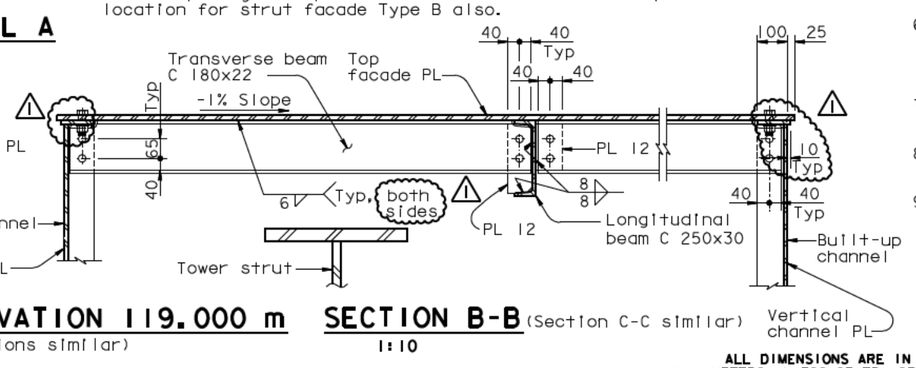

DETAILS AT ELEVATION 119.000 m
(Other elevations similar)

SECTION B-B
(Section C-C similar)
1:10

DETAIL A
1:20

NOTES:

1. For Detail D, see "Tower Strut Facade Details No.4" sheet.
2. For tower shaft details, see "Tower Shaft Details" sheets.
3. All bolts are A325 M24 unless noted otherwise.
4. For Section D-D and E-E, see "Tower Strut Facade Details No.3" sheet.
5. All details of tower strut facade shall account for the 1% slope of the tower top and bottom facade plates.
6. For access opening details, see "Tower Access Details" sheets. Access opening shall be located such that there is minimum interference with tower strut and tower strut facade framing system.
7. For details of built-up channel, see "Tower Strut Facade Details No.3" sheet.
8. Vertical plate of built-up channel at corner of plate D E shall be sloped to match the slope of edge of plate E.
9. Shear tab plate is similar to slotted shear tab plate but with standard holes. For details of slotted shear tab plate, see "Tower Strut Facade Details No.4" sheet.
10. Framing details and support at bottom of strut facade are similar to those at the top of strut facade, UNO.
11. For sealing details, see "Tower Strut Facade Details No.4" sheet.
12. Access openings in built-up channel are provided for access between tower strut and built-up channel. For details, see View H-H on "Tower Strut Facade Details No.3" sheet.
13. Access openings in built-up channel are provided for access between tower strut and built-up channel. For details, see View G-G on "Tower Strut Facade Details No.3" sheet.
14. Access opening in top and bottom facade PL shall be provided at this location for strut facade Type B also.

REQUESTS FOR INFORMATION NOT ADDRESSED IN THIS CCO REMAIN IN FORCE

ALL DIMENSIONS ARE IN MILLIMETERS UNLESS OTHERWISE SHOWN

MARK	DATE	DESCRIPTIONS	BY	CH'D	CCO#
1	07/11/08	TOWER STRUT FACADES AND CROSS BRACING	MN	NV	64

REVISIONS

CONTRACT CHANGE ORDER NO. ____
SHEET ___ OF ___

	BY	CHECKED
DESIGN	M. Nader	M. Gulyas
DETAILS	L. Rus	M. Gulyas
QUANTITIES	L. Rus	Y. Zhang

R. Valizadeh/V. Toan/Y.L./W.L./F.C.
DESIGN OVERSIGHT
SIGN OFF DATE 07/11/08

PREPARED FOR THE STATE OF CALIFORNIA
DEPARTMENT OF TRANSPORTATION

R. Manzanarez
PROJECT ENGINEER

BRIDGE NO. 34-0006L/R
KILOMETER POST 13.2/13.9

CU 04
EA 0120F1

SAN FRANCISCO OAKLAND BAY BRIDGE
EAST SPAN SEISMIC SAFETY PROJECT
SELF-ANCHORED SUSPENSION BRIDGE
(SUPERSTRUCTURE & TOWER)

TOWER STRUT FACADE DETAILS NO. 2

DISREGARD PRINTS BEARING EARLIER REVISION DATES

REVISION DATES (PRELIMINARY STAGE ONLY): 08/08/96 05/31/01 08/08/02 07/31/02 12/19/02

SHEET 156RI OF

ORIGINAL SCALE IN MILLIMETERS FOR REDUCED PLANS 0 10 20 30 40 50 60 70 80 90 100

Rev. Date: 5-18-98

FILE -> I:\bb\04-0120I\sas\contract plans and cco\cco\In progress\cco#64\dgn\aetwsII.dgn

USERNAME => pfom
DATE PLOTTED => 11 JUL 2008
TIME PLOTTED => 13:16:49
100% PS&E

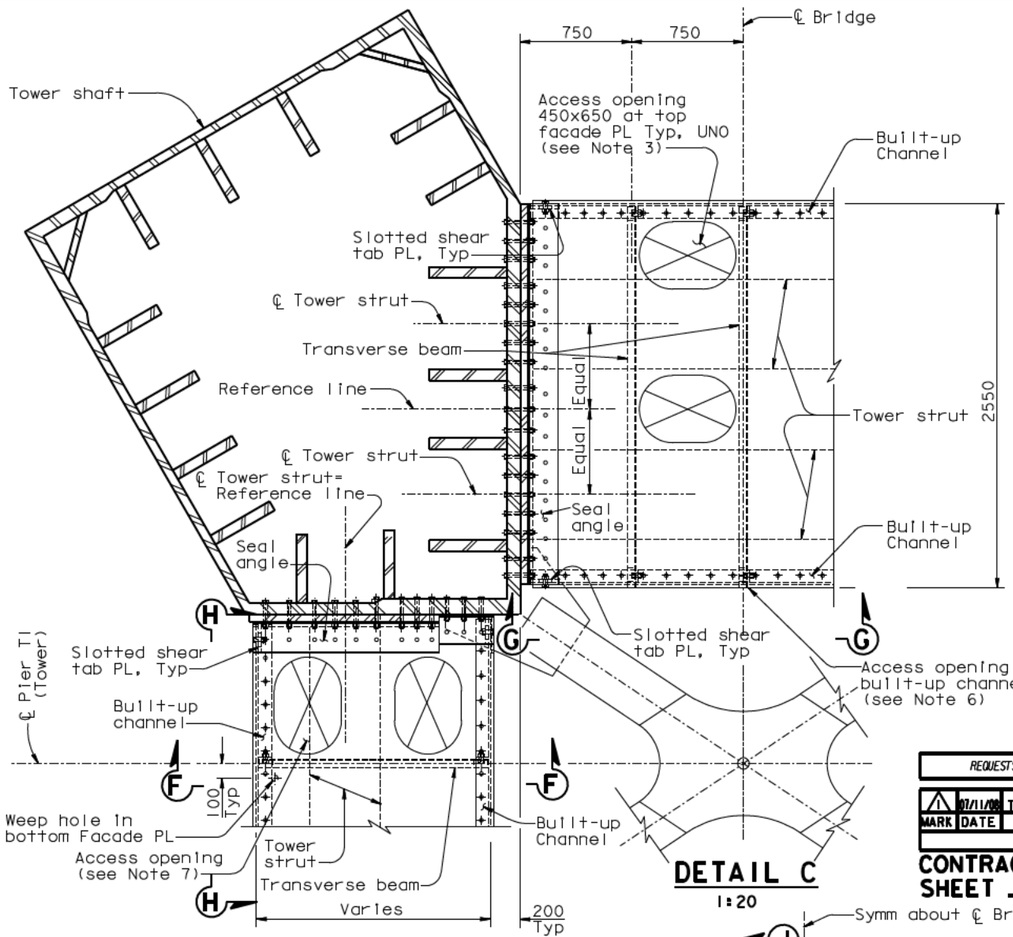

DETAIL C
1:20

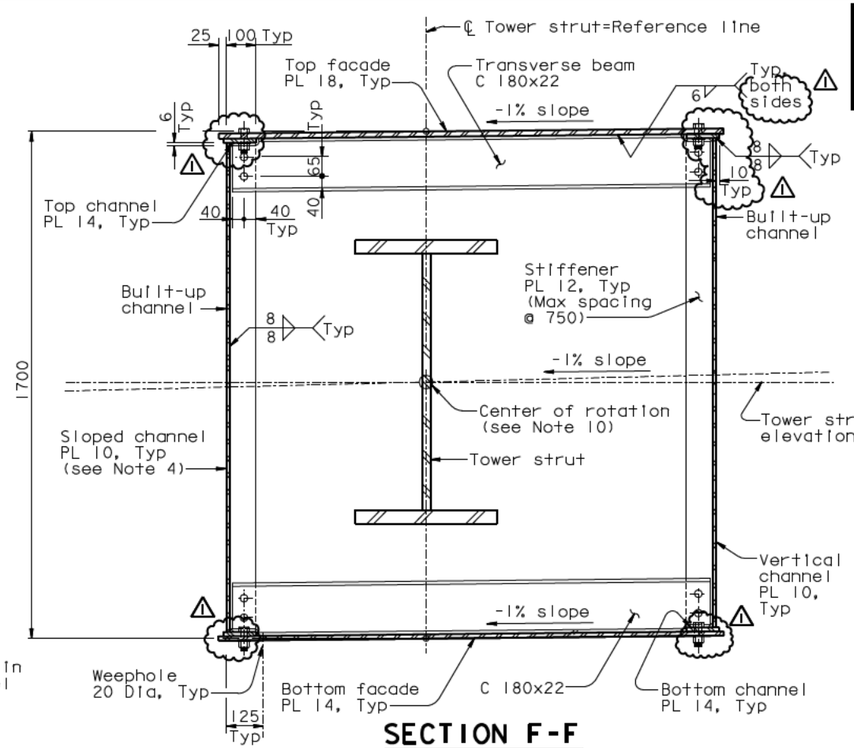

SECTION F-F
1:10

DIST.	COUNTY	ROUTE	KILOMETER POST TOTAL PROJECT	SHEET NO.	TOTAL SHEETS
04	SF	80	13.2/13.9	574R1	1204

REGISTERED ENGINEER - CIVIL

12-6-04
PLANS APPROVAL DATE

REGISTERED PROFESSIONAL ENGINEER — Marwan N. Nader, No. C 054426, Exp. 12/31/09, CIVIL, STATE OF CALIFORNIA

The State of California or its officers or agents shall not be responsible for the accuracy or completeness of electronic copies of this plan sheet.

T.Y. LIN / MOFFATT & NICHOL
825 BATTERY STREET
SAN FRANCISCO, CA 94111

Caltrans now has a web site! To get to the web site, go to: http://www.dot.ca.gov

LEGEND:

⊕ M24 A325-X Bolt

○ 24 Dia A307 Bolt

NOTES:

1. All bolts are A325 M24 unless noted otherwise.
2. All details of tower strut facade shall account for the 1% slope of the tower top and bottom facade plates.
3. For access opening details, see "Tower Access Details" sheets. Access opening shall be located such that there is minimum interference with tower strut and tower strut facade framing system.
4. Vertical plate of built-up channel at corner of plate D E shall be sloped to match the slope of edge of plate E.
5. For tightening the bolts shown in Section D-D, the nuts may be tack welded.
6. Access openings in built-up channel are provided for access between tower strut and built-up channel, see View G-G.
7. This access opening is at tower strut facade between elevation 18 and 77 only. For access between tower strut and built-up channel, between elevations 89 to 109, access opening is provided in built-up channel instead, see View H-H.
8. Additional reinforcing plates are required for built-up channel with access openings.
9. Stiffener plates shall be terminated as required for openings in built-up channel.
10. The center of rotation shall be located at the intersection of the Reference line with the tower strut elevation line.
11. For sealing details, see "Tower Strut Facade Details No.4" sheet.
12. For access in bottom facade PL, see Note 14 on "Tower Strut Facade Details No.2" sheet.

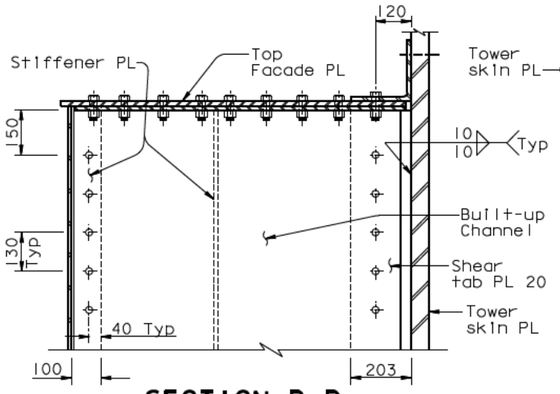

SECTION D-D (See Note 5)
1:10
(Section E-E similar)

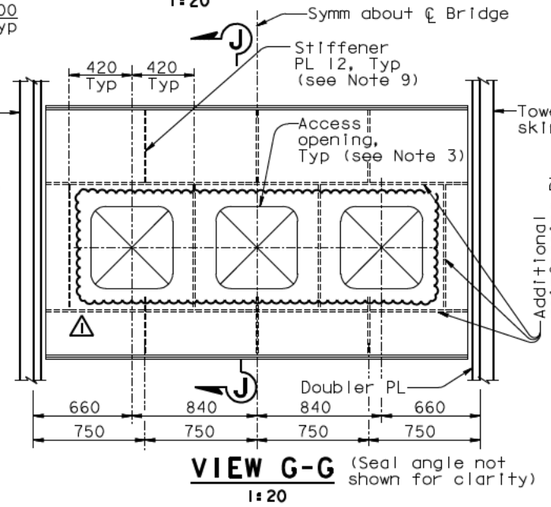

VIEW G-G (Seal angle not shown for clarity)
1:20

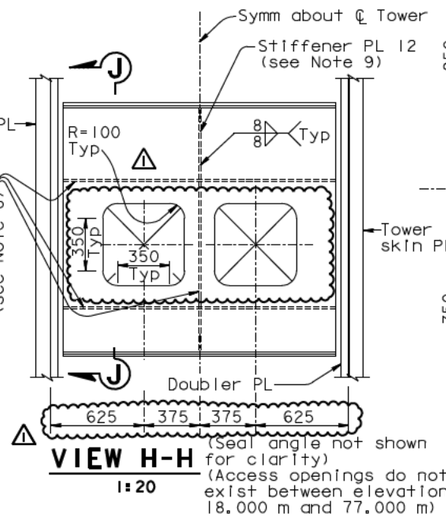

VIEW H-H (Seal angle not shown for clarity) (Access openings do not exist between elevation 18.000 m and 77.000 m)
1:20

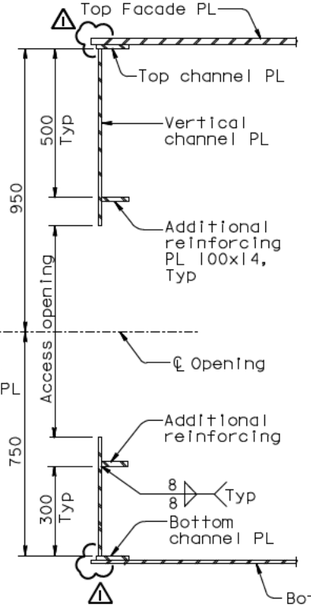

SECTION J-J
1:10

DETAIL AT ELEVATION 109.000 m (Other elevation similar)

ALL DIMENSIONS ARE IN MILLIMETERS UNLESS OTHERWISE SHOWN

REQUESTS FOR INFORMATION NOT ADDRESSED IN THIS CCO REMAIN IN FORCE

MARK	DATE	DESCRIPTIONS	BY	CH'D	CCO#
1	07/11/08	TOWER STRUT FACADES AND CROSS BRACING	MN	NV	64
		REVISIONS			

CONTRACT CHANGE ORDER NO. ____
SHEET ___ OF ___

R. Valizadeh/V. Toan/Y.L./W.L./F.C.
DESIGN OVERSIGHT
SIGN OFF DATE 07/11/08

	BY	CHECKED
DESIGN	M. Nader	M. Gulyas
DETAILS	L. Rus	M. Gulyas
QUANTITIES	L. Rus	Y. Zhang

PREPARED FOR THE STATE OF CALIFORNIA DEPARTMENT OF TRANSPORTATION

R. Manzanarez
PROJECT ENGINEER

BRIDGE NO. 34-0006L/R
KILOMETER POST 13.2/13.9

SAN FRANCISCO OAKLAND BAY BRIDGE
EAST SPAN SEISMIC SAFETY PROJECT
SELF-ANCHORED SUSPENSION BRIDGE (SUPERSTRUCTURE & TOWER)

TOWER STRUT FACADE DETAILS NO. 3

Rev. Date: 5-18-98

ORIGINAL SCALE IN MILLIMETERS FOR REDUCED PLANS 0 10 20 30 40 50 60 70 80 90 100

CU 04
EA 0120F1

DISREGARD PRINTS BEARING EARLIER REVISION DATES

REVISION DATES (PRELIMINARY STAGE ONLY): 05/31/01 | 04/05/02 | 07/01/02 | 12/19/02

SHEET 157R1 OF

FILE -> I:\bb\04-012001\sas\contract plans and cco\cco\in progress\cco#64\dgn\aetws12.dgn

USERNAME => ptom
DATE PLOTTED => 31 JUL 2008
TIME PLOTTED => 13:19:54
100% PS&E

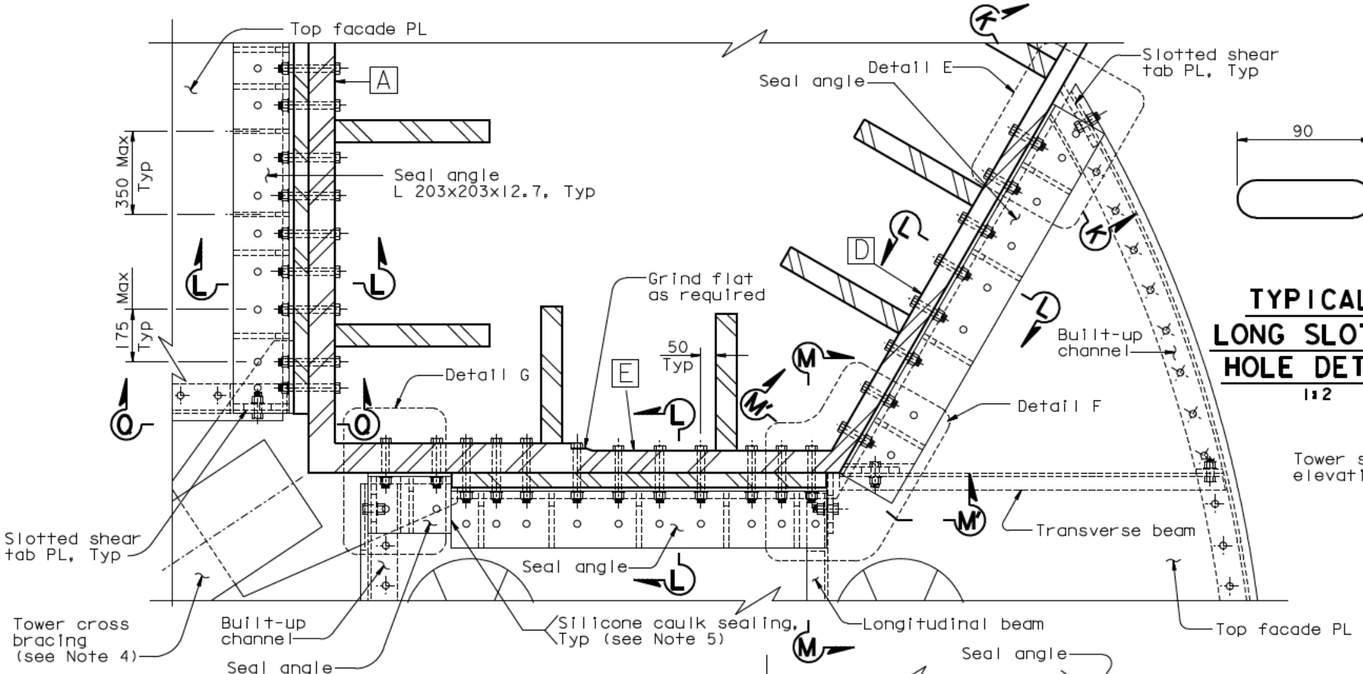

DETAIL D
1:10 (see Note 9)

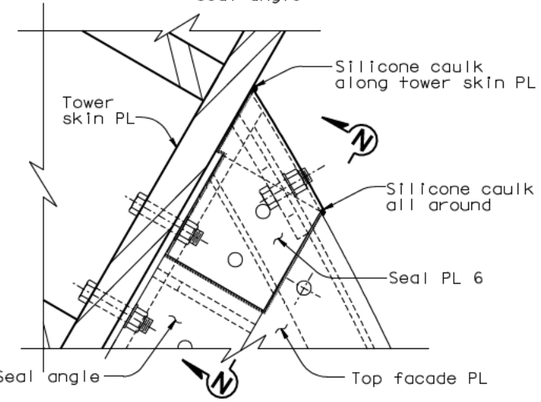

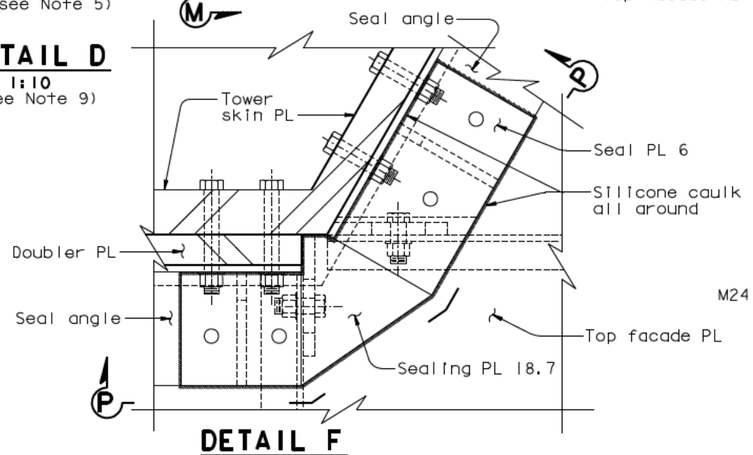

DETAIL E (Detail G similar)
1:5
(Typical edge seal Plate)

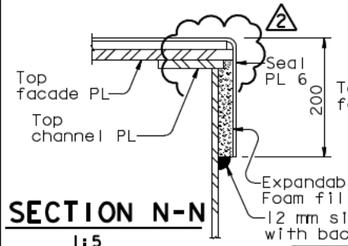

SECTION N-N
1:5

DETAIL F
1:5
(Typical corner seal Plate)

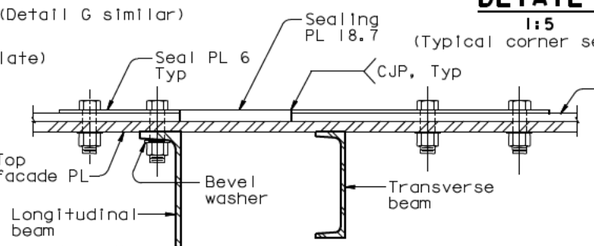

SECTION P-P
1:5

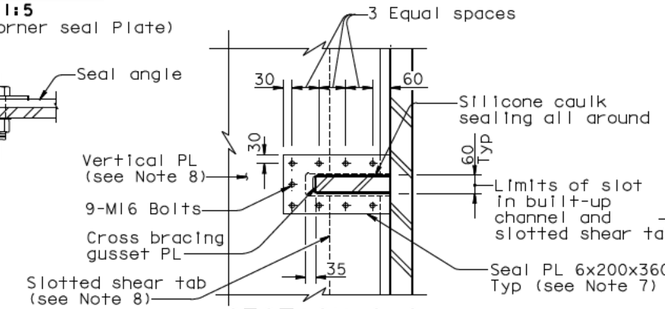

SECTION Q-Q (Typical gusset seal Plate)
1:10

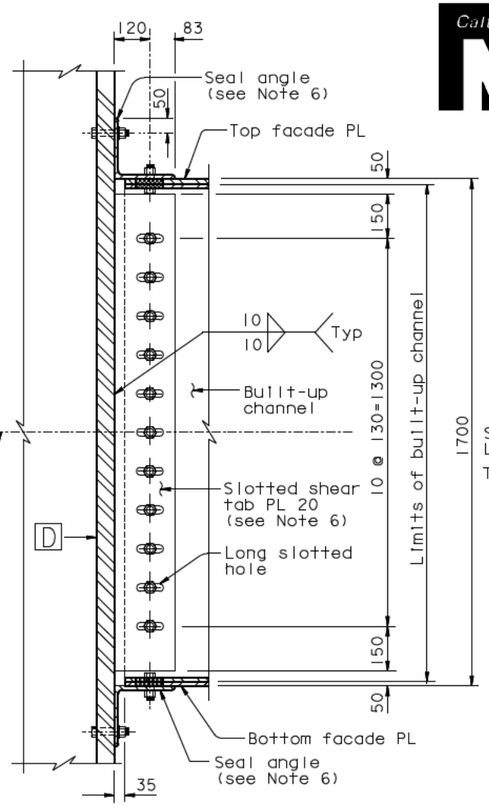

Tower strut elevation

SECTION K-K (Typical connection of built-up channel to tower shaft UNO)
1:10 (see Note 9)

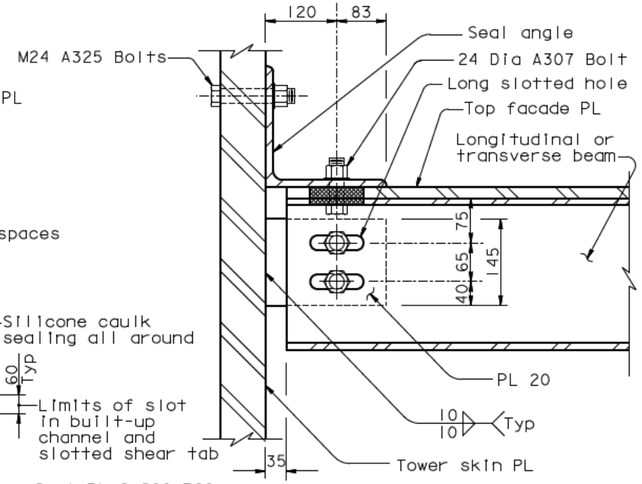

SECTION M-M (Section M'-M' similar)
1:5 (see Note 9)

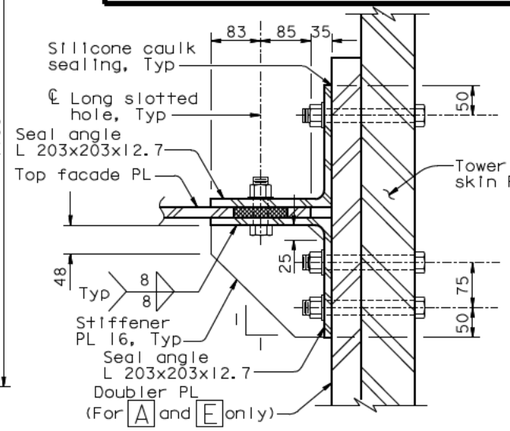

SECTION L-L
1:5 (see Note 9)

LEGEND:
- ⊕ M24 A325-X Bolt
- ○ 24 Dia A307 Bolt

NOTES:
1. All bolts are A325 M24 unless noted otherwise.
2. For details of built-up channel, see "Tower Strut Facade Details No.3" sheet.
3. All details of tower strut facade shall account for the 1% slope of the tower top and bottom facade plates.
4. For tower cross bracing location, see "Tower Strut Details No.9" sheet.
5. Seal plates and sealant material shall be placed such that the interior of the tower strut facade is properly sealed from the exterior.
6. PTFE film (0.5 thick) shall be applied on the faying surfaces between the slotted shear tab and the built-up channel plate, between the seal angle and the top facade PL, and between the seal angle and the bottom facade PL.
7. Seal plate shall be tight fit to the cross bracing gusset plate.
8. Cope vertical channel plate and slotted shear tab as necessary to accomodate cross bracing gusset plate. Slot location shall match slot in doubler plate . For doubler plate slot details, see "Tower Shaft Details No.11" sheet.
9. For sealing plate details, see Details E,F and Sections N-N, P-P, Q-Q.

DIST.	COUNTY	ROUTE	KILOMETER POST TOTAL PROJECT	SHEET NO.	TOTAL SHEETS
04	SF	80	13.2/13.9	575R2	1204

REGISTERED ENGINEER - CIVIL
12-6-04
PLANS APPROVAL DATE
Marwan N. Nader, No. C 054426, Exp. 12/31/09, CIVIL, REGISTERED PROFESSIONAL ENGINEER, STATE OF CALIFORNIA
The State of California or its officers or agents shall not be responsible for the accuracy or completeness of electronic copies of this plan sheet.

T.Y.LIN / MOFFATT & NICHOL
825 BATTERY STREET
SAN FRANCISCO, CA 94111

Caltrans now has a web site! To get to the web site, go to: http://www.dot.ca.gov

REQUESTS FOR INFORMATION NOT ADDRESSED IN THIS CCO REMAIN IN FORCE

MARK	DATE	REVISIONS	BY	CH'D	CCO#
2	07/11/08	TOWER STRUT FACADES AND CROSS BRACING	NV	MN	64
1	08/01/07	TOWER STRUT FACADE PTFE	NV	MN	48

CONTRACT CHANGE ORDER NO. ____
SHEET ___ OF ___

	BY	CHECKED
DESIGN	M. Nader	M. Gulyas
DETAILS	L. Rus	M. Gulyas
QUANTITIES	L. Rus	Y. Zhang

R. Valizadeh/V. Toan/Y. Liu
DESIGN OVERSIGHT
SIGN OFF DATE 07/11/08

PREPARED FOR THE STATE OF CALIFORNIA
DEPARTMENT OF TRANSPORTATION

R. Manzanarez
PROJECT ENGINEER

BRIDGE NO. 34-0006L/R
KILOMETER POST 13.2/13.9

CU 04
EA 0120F1

ALL DIMENSIONS ARE IN MILLIMETERS UNLESS OTHERWISE SHOWN

ORIGINAL SCALE IN MILLIMETERS FOR REDUCED PLANS 0 10 20 30 40 50 60 70 80 90 100

DISREGARD PRINTS BEARING EARLIER REVISION DATES

REVISION DATES (PRELIMINARY STAGE ONLY): 08/02/99, 05/31/01, 04/08/02, 04/26/02, 12/19/02

SAN FRANCISCO OAKLAND BAY BRIDGE
EAST SPAN SEISMIC SAFETY PROJECT
SELF-ANCHORED SUSPENSION BRIDGE
(SUPERSTRUCTURE & TOWER)

TOWER STRUT FACADE DETAILS NO. 4

SHEET 158R2 OF

Rev. Date: 5-18-98

FILE -> I:\bb\04-012001\sas\contract plans and cco\cco\In progress\cco#64\dgn\aetws13.dgn

DATE PLOTTED => 11 JUL 2008 TIME PLOTTED => 13:21:37
100 % PS&E
USERNAME => ptom

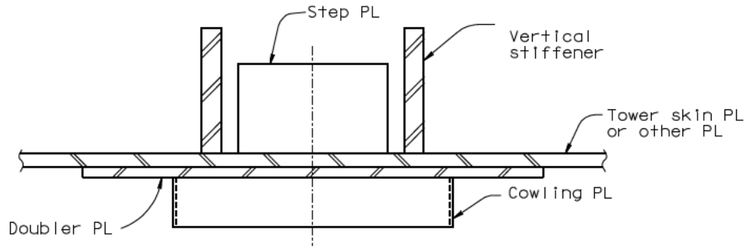

SECTION B-B
1:10

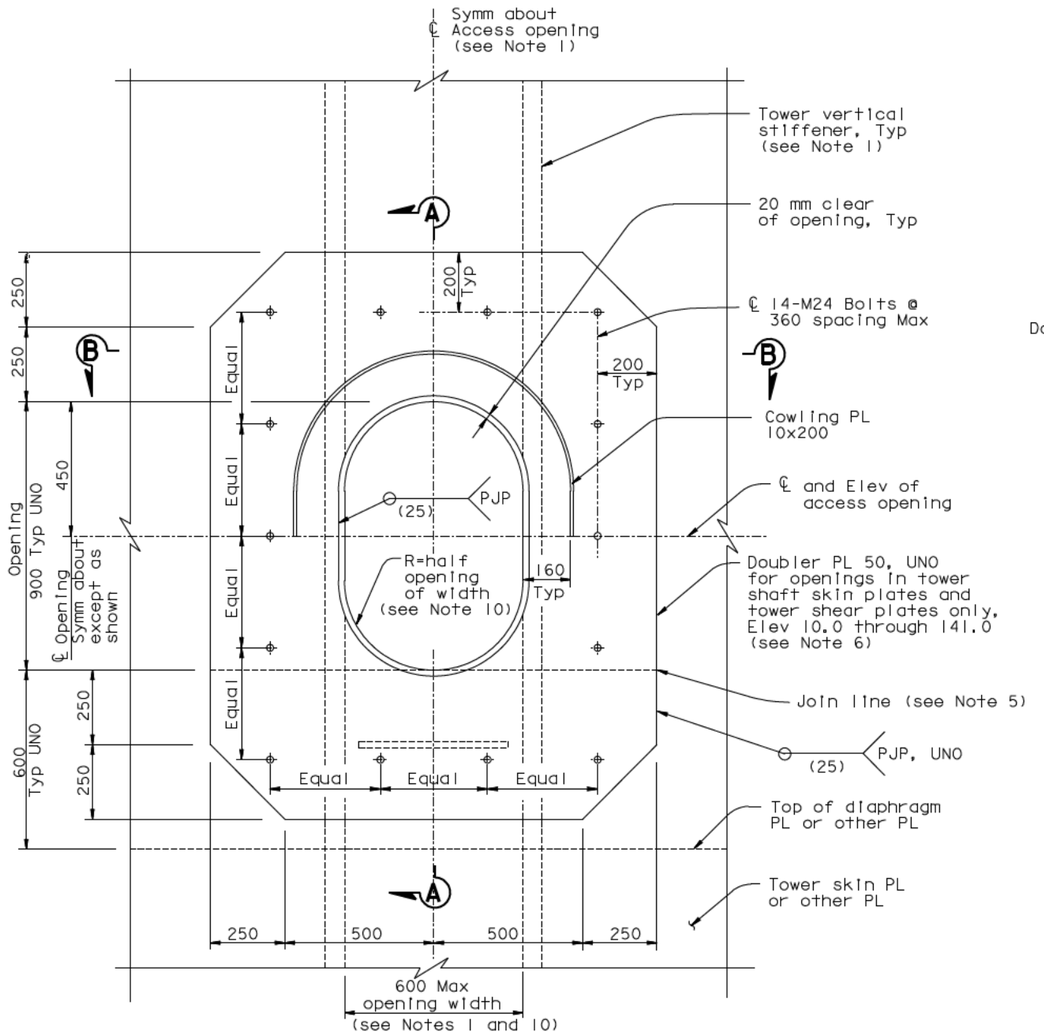

ACCESS OPENING DETAIL (see Note 6)
1:10
(Dehumidification access opening similar)

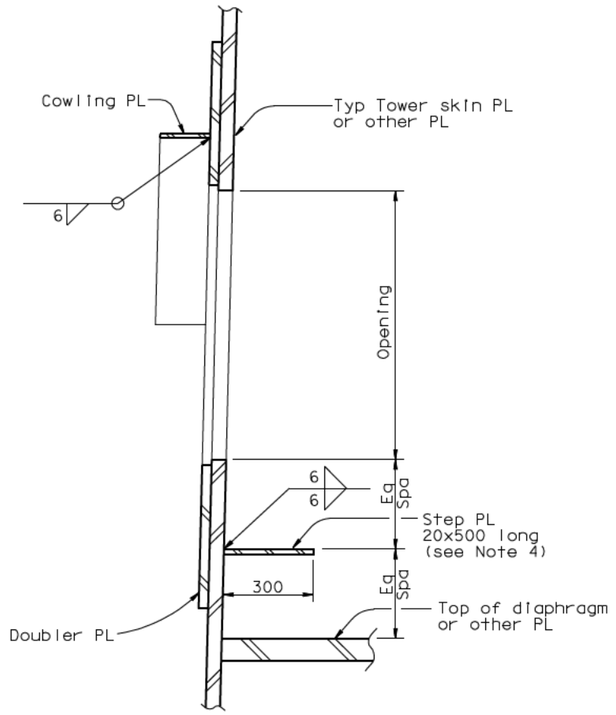

SECTION A-A
1:10

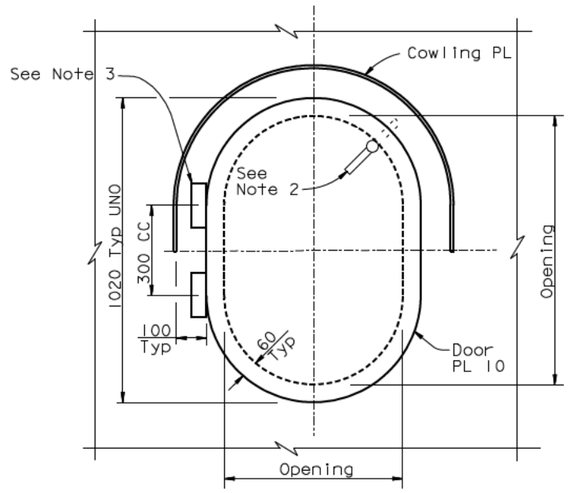

ACCESS OPENING DOOR DETAIL
1:10
(Dehumidification access opening door similar)

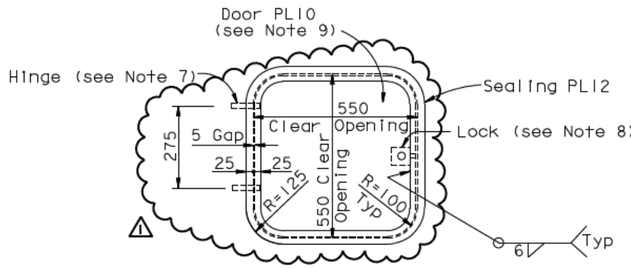

ACCESS OPENING WITH DOOR AT VERTICAL FACE OF TOWER STRUT FACADE
1:10

NOTES:

1. Width of opening is limited to clear distance between stiffeners. For location of access opening and stiffener spacing in tower, see "Tower Shaft Details" sheets.
2. Doors shall be secured by cam locks with locking L-handles and interior release.
3. Door hinges shall be stainless lift-off type with 16 mm pin size 150 kg rated capacity per hinge.
4. Use step PL where door sill is greater than 500 above landing.
5. For access openings at elevations 54.550, 90.550 and 140.550 omit doubler PL below join line. Connect upper portion to strut doubler PL using CJP welds at join line. For strut doubler PL, see "Tower Strut Details" sheets.
6. Access opening shown is for openings in tower shaft skin plates and shear plates. Access opening in tower skirt and tower head are similar. The doubler PL shall match the thickness of the penetrated skirt or tower head PL and shall be connected with a PJP weld 8 mm.
7. Contractor shall provide internally mounted pivot hinges. No part of hinge shall protrude beyond the outside surface of door or facade when door is closed. Hinges shall permit door to swing outwards at least 120°. Each hinge shall be rated to resist 900 N in any direction.
8. Contractor shall provide through-hole mounted cam lock with key. Lock shall be flush with outside face of door.
9. Door shall be flush with outside face of facade. Edges of door shall be sealed with 5x20 Neoprene seals.
10. Dehumidification access openings shall have R=50 mm typical. Dehumidification access openings at tower head only shall be 680 mm x 900 mm.

DIST.	COUNTY	ROUTE	KILOMETER POST TOTAL PROJECT	SHEET NO.	TOTAL SHEETS
04	SF	80	13.2/13.9	920R1	1204

REGISTERED ENGINEER - CIVIL
12-6-04
PLANS APPROVAL DATE
The State of California or its officers or agents shall not be responsible for the accuracy or completeness of electronic copies of this plan sheet.

REGISTERED PROFESSIONAL ENGINEER — Marwan N. Nader — No. C 054426 — Exp. 12/31/09 — CIVIL — STATE OF CALIFORNIA

T.Y.LIN / MOFFATT & NICHOL
825 BATTERY STREET
SAN FRANCISCO, CA 94111

Caltrans now has a web site! To get to the web site, go to: http://www.dot.ca.gov

REQUESTS FOR INFORMATION NOT ADDRESSED IN THIS CCO REMAIN IN FORCE

MARK	DATE	REVISIONS	BY	CH'D	CCO#
1	07/11/08	TOWER STRUT FACADES AND CROSS BRACING	MN	NV	64

CONTRACT CHANGE ORDER NO. ____
SHEET ___ OF ___

	BY	CHECKED
DESIGN	M. Nader	M. Gulyas
DETAILS	G. Baker	L. Rus
QUANTITIES	D. Turner	J. Leventini

R. Valizadeh/V. Toan/Y.L./W.L./F.C.
DESIGN OVERSIGHT
SIGN OFF DATE 07/11/08

PREPARED FOR THE STATE OF CALIFORNIA DEPARTMENT OF TRANSPORTATION

R. Manzanarez
PROJECT ENGINEER

ALL DIMENSIONS ARE IN MILLIMETERS UNLESS OTHERWISE SHOWN

BRIDGE NO. 34-0006L/R
KILOMETER POST 13.2/13.9

CU 04
EA 0120F1

SAN FRANCISCO OAKLAND BAY BRIDGE
EAST SPAN SEISMIC SAFETY PROJECT
SELF-ANCHORED SUSPENSION BRIDGE
(SUPERSTRUCTURE & TOWER)

TOWER ACCESS DETAILS NO. 4

DISREGARD PRINTS BEARING EARLIER REVISION DATES → 01/15/99 | 05/15/99 | 08/26/99 | 05/31/01 | 04/08/02 | 07/31/02 | 12/19/02

SHEET 503R1 OF

ORIGINAL SCALE IN MILLIMETERS FOR REDUCED PLANS 0 10 20 30 40 50 60 70 80 90 100

Rev. Date: 5-18-98

FILE -> I:\bb\04-0120I\sas\contract plans and cco\cco\In progress\cco#64\dgn\dkacc05a.dgn

USERNAME => ptom
DATE PLOTTED => 11 JUL 2008
TIME PLOTTED => 13:21:47
100 % PS&E

CONTRACT CHANGE ORDER

Change Requested by: Engineer

CCO: 64 **Suppl. No. 1** **Contract No. 04 – 0120F4** **Road** SF-80-13.2/13.9 **FED. AID LOC.:**

To: **AMERICAN BRIDGE/FLUOR ENTERPRISES INC A JOINT VENTURE**

You are directed to make the following changes from the plans and specifications or do the following described work not included in the plans and specifications for this contract. ***NOTE: This change order is not effective until approved by the Engineer.***

Description of work to be done, estimate of quantities and prices to be paid. (Segregate between additional work at contract price, agreed price and force account.) Unless otherwise stated, rates for rental of equipment cover only such time as equipment is actually used and no allowance will be made for idle time. This last percentage shown is the net accumulated increase or decrease from the original quantity in the Engineer's Estimate.

Adjustment of Compensation at Lump Sum:

ITEM 1.

Modify Tower strut facades and cross bracing including, but not limited, to the following:

- Adjust the Strut Façade grating support L152x89x12.7 to allow the support to fit
- Revise the connection between the Tower cross bracing and spherical bushing bearings
- Use closed cell backer rod in lieu of expandable polyurethane foam filler in the gap between the cover plate and façade side plate

Adjustment of Compensation at Lump Sum..... $21,843.00

Estimate of Increase in Contract Items at Contract Price:

ITEM 2.

Add walkway grating support shims, erection tabs, and new channels.

Item No. 82: MISCELLANEOUS METAL (BRIDGE)
379 KG (0.15%) @ $15.00 /KG =+$5,685.00 (0.15%)

The quantity increase shown herein for Item #82, when combined with the quantity shown in the Engineer's Estimate, and as modified by any previous change orders or revisions to dimensions made by the Engineer, shall be the final quantity for which payment will be made.

Total Cost for Increase in Contract Item..... $5,685.00

Estimate of Decrease in Contract Items at Contract Price:

ITEM 3.

Revise the shear tabs on Skin D at Strut Façade Type A in Lift 4.

Item No. 52: FURNISH STRUCTURAL STEEL (BRIDGE) (TOWER)
-825 KG (-0.01%) @ $10.00 /KG =-$8,250.00 (-0.01%)

Item No. 53: ERECT STRUCTURAL STEEL (BRIDGE) (TOWER)
-825 KG (-0.01%) @ $1.00 /KG =-$825.00 (-0.01%)

The quantity decreases shown herein for Items #52 and #53, when combined with the quantity shown in the Engineer's Estimate, and as modified by any previous change orders or revisions to dimensions made by the Engineer, shall be the final quantity for which payment will be made.

Total Credit for Decrease in Contract Item.....($9,075.00)

CONTRACT CHANGE ORDER

Change Requested by: Engineer

CCO: 64 Suppl. No. 1 Contract No. 04 – 0120F4 Road SF-80-13.2/13.9 **FED. AID LOC.:**

The following revised plan sheets detail the changes addressed in this change order: 570R2, 571R1, 573R3, 574R2, 575R5, 919R3, and 926R5 (of 1204) as shown on sheets 3 through 9 of this change order.

This change order resolves the costs associated with Contractor Request for Information (RFI) numbers 183R1, 188R0, 188R1, 316R0, 316R1, 1140, 1932, and TC-RFI-0152R0 with respect to changes listed above.

CHANGE ORDER COST AND TIME SUMMARY

(ITEM 1) Adjustment of Compensation at Lump Sum	$21,843.00
(ITEM 2) Increase in Contract Items at Contract Prices	$5,685.00
(ITEM 3) Decrease in Contract Items at Contract Prices	($9,075.00)
Total net pay for this change order	$18,453.00

This sum constitutes full and complete compensation for furnishing all labor, material, tools and incidentals including all markups by reason of this change.

Estimated Cost: Increase ☒ **Decrease** ☐ **$18,453.00**

By reason of this order the time of completion will be adjusted as follows: 0 Days

Submitted by

Signature _____ **Resident Engineer** Kannu Balan, Senior T.E. **Date** 11-18-11

Approval Recommended by

Signature _____ **Senior Bridge Engineer** Mark Woods, Senior B.E. **Date** 18 Nov. 2011

Engineer Approval by

Signature _____ **Supervising Transportation Engineer** William Casey, Sup. T.E. **Date** 12-2-11

We the undersigned contractor, have given careful consideration to the change proposed and agree, if this proposal is approved, that we will provide all equipment, furnish the materials, except as otherwise be noted above, and perform all services necessary for the work above specified, and will accept as full payment therefor the prices shown above.

NOTE: If you, the contractor, do not sign acceptance of this order, your attention is directed to the requirements of the specifications as to proceeding with the ordered work and filing a written protest within the time therein specified.

Contractor Acceptance by

Signature _____ (Print name and title) BRIAN A. PETERSEN - PROJECT DIRECTOR **Date** 29NOV11

STATE OF CALIFORNIA - DEPARTMENT OF TRANSPORTATION

CONTRACT CHANGE ORDER MEMORANDUM

TO: Tony Anziano, Program Manager /	FILE: **E.A.** 04 - 0120F4
FROM: Kannu Balan, Senior TE	**CO-RTE-PM** SF-80-13.2/13.9
	FED. NO.
CCO#: **64** SUPPLEMENT#: **1** Category Code: **CHPA**	CONTINGENCY BALANCE (incl. this change) **$144,666,259.58**
COST: **$18,453.00** INCREASE ☑ DECREASE ☐	HEADQUARTERS APPROVAL REQUIRED? ☐ YES ☑ NO
SUPPLEMENTAL FUNDS PROVIDED: **$0.00**	IS THIS REQUEST IN ACCORDANCE WITH ENVIRONMENTAL DOCUMENTS? ☑ YES ☐ NO
CCO DESCRIPTION: Tower Strut Facades and Cross Bracing	**PROJECT DESCRIPTION:** CONSTRUCT SELF-ANCHORED SUSPENSION BRIDGE

Original Contract Time:	Time Adj. This Change:	Previously Approved CCO Time Adjustments:	Percentage Time Adjusted: (including this change)	Total # of Unreconciled Deferred Time CCO(s): (including this change)
2490 Day(s)	**0** Day(s)	**501** Day(s)	**20** %	**3**

THIS CHANGE ORDER PROVIDES FOR:

Modifying the Tower strut facades and cross bracing including adjusting the strut façade grating support, revising the connection between the cross bracing and spherical bushing bearings, using closed cell backer rod in lieu of expandable polyurethane foam filler, and revising the shear tabs on Skin D at Strut Façade Type A in Lift 4.

The Strut Façade grating support is adjusted to remove interference with the 8mm weld of the Built-up channel. The tower cross bracing connection needs to be modified due to the pipe spacers and boss plates interfering with the retainer ring and M16 bolts during installation. The polyurethane foam needed to be trimmed back after it had set, which would have caused poor caulk adhesion. The shear tabs on Skin D are orientated perpendicular to the direction of movement, therefore modifications are needed to weaken the connection and minimize impact to the design movement.

This change order resolves the costs associated with Contractor Request for Information (RFI) numbers 183R1, 188R0, 188R1, 316R0, 316R1, 1140, 1932, and TC-RFI-0152R0 with respect to changes listed above.

The total cost of this change order is $18,453.00, which can be financed from the contingency fund. A detailed cost analysis is on file. The cumulative total of CCO 64S0 and CCO 64S1 is $18,453.00.

No time adjustment is warranted as this change order does not affect the controlling operation.

This change order has concurrence from Peter Siegenthaler (Principal TE), Rick Morrow (Sup. BE), Lina Ellis (Maintenance), and Wenyi Long (Bridge Design).

CONCURRED BY:		
Construction Engineer:	PCE, Pete Siegenthaler, Prin TE	Date 9/16/10
Bridge Engineer:	Rick Morrow, Sup BE	Date 9/16/10
Project Engineer:	CT Oversight, Wenyi Long, P.E.	Date 9/20/10
Project Manager:		Date
FHWA Rep.:		Date
Environmental:		Date
Other (specify):	Struct. Maint, Lina Ellis	Date 11/17/11
Other (specify):		Date
District Prior Approval By:		Date
HQ (Issue Approve) By:		Date
Resident Engineer's Signature:		Date 11-18-11

ESTIMATE OF COST

	THIS REQUEST	TOTAL TO DATE
ITEMS	($3,390.00)	($3,390.00)
FORCE ACCOUNT	$0.00	$0.00
AGREED PRICE	$0.00	$0.00
ADJUSTMENT	$21,843.00	$21,843.00
TOTAL	$18,453.00	$18,453.00

FEDERAL PARTICIPATION

☐ PARTICIPATING ☐ PARTICIPATING IN PART ☑ NONE
☐ NON-PARTICIPATING (MAINTENANCE) ☐ NON-PARTICIPATING

FEDERAL SEGREGATION (if more than one Funding Source or P.I.P. type)
☐ CCO FUNDED PER CONTRACT ☐ CCO FUNDED AS FOLLOWS

FEDERAL FUNDING SOURCE	PERCENT

ADA Notice: For individuals with sensory disabilities, this document is available in alternate formats. For information call: (916) 654-6410 or TDD (916) 654-3880 or write Records and Forms Management, 1120 N Street, MS-89, Sacramento, CA 95814.

DIST.	COUNTY	ROUTE	KILOMETER POST TOTAL PROJECT	SHEET NO.	TOTAL SHEETS
04	SF	80	13.2/13.9	570R2	1204

REGISTERED ENGINEER - CIVIL

12-6-04
PLANS APPROVAL DATE

Marwan N. Nader, No. C 054426, Exp. 12/31/11, CIVIL, STATE OF CALIFORNIA

The State of California or its officers or agents shall not be responsible for the accuracy or completeness of electronic copies of this plan sheet.

T.Y. LIN / MOFFATT & NICHOL
825 BATTERY STREET
SAN FRANCISCO, CA 94111

Caltrans now has a web site! To get to the web site, go to: http://www.dot.ca.gov

TABLE 1

CROSS BRACING LOCATION	
Cross bracing	Elevation (m)
1	48.067
2	53.467
3	65.467
4	77.467
5	89.467
6	99.467
7	109.467
8	119.467

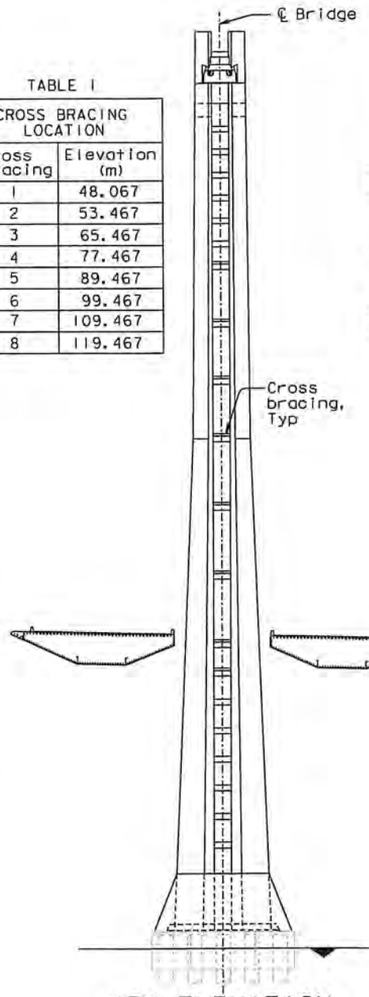

KEY ELEVATION
1:500

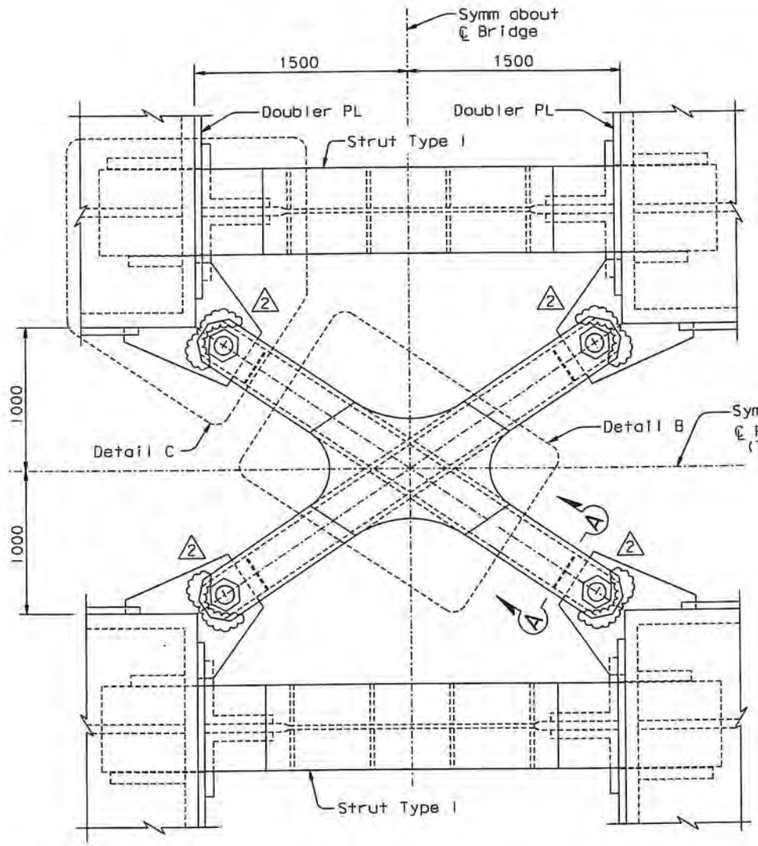

DETAIL A (see Note 1)

CROSS BRACING
1:20

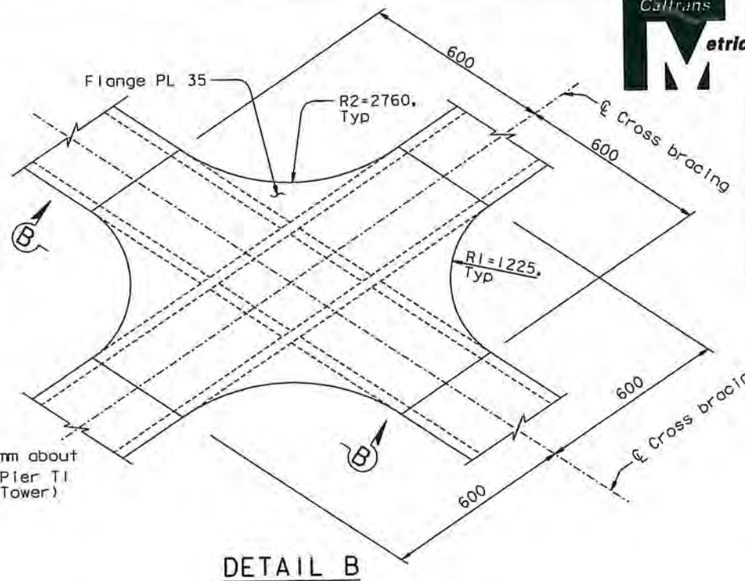

DETAIL B
1:10
(Dimensions of gusset plate are given parallel to ℄ of cross bracing)

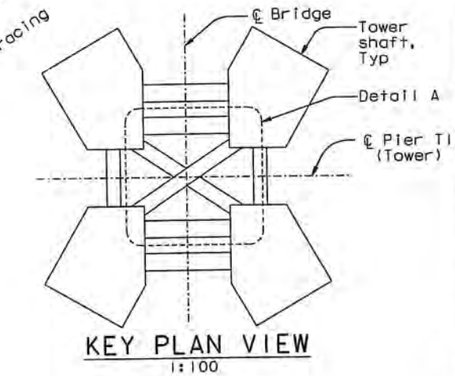

KEY PLAN VIEW
1:100

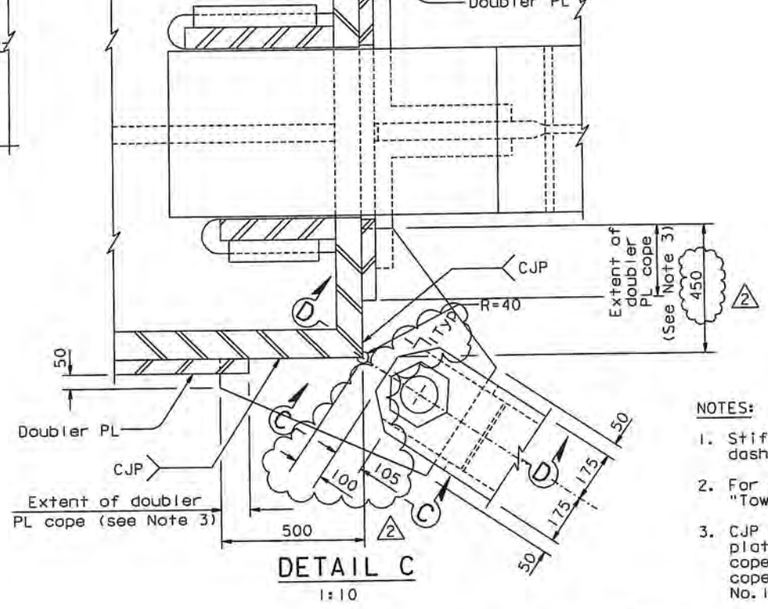

DETAIL C
1:10

NOTES:

1. Stiffeners inside tower shaft are shown in dashed line for clarity.
2. For Sections A-A, B-B, C-C and D-D, see "Tower Strut Details No.10" sheet.
3. CJP weld shall be provided between gusset plate and tower skin plate and in between cope of doubler plate. For doubler plate cope details, see "Tower Shaft Details No.11" sheet.

CONTRACT CHANGE ORDER NO. 6451
SHEET 3 OF 9

REQUESTS FOR INFORMATION NOT ADDRESSED IN THIS CCO REMAIN IN FORCE

ALL DIMENSIONS ARE IN MILLIMETERS UNLESS OTHERWISE SHOWN

MARK	DATE	DESCRIPTIONS	BY	CH'D	CCO#
2	10/08/10	TOWER STRUT FACADES AND CROSS BRACING	NV	MN	6451
1	06/23/06	FIT LUG AND MISC	MN	NV	21

REVISIONS

	BY		CHECKED
DESIGN	M. Nader		S. Camo
DETAILS	L. Rus		S. Camo
QUANTITIES	L. Rus		Y. Zhang

PREPARED FOR THE STATE OF CALIFORNIA
DEPARTMENT OF TRANSPORTATION

R. Manzanarez
PROJECT ENGINEER

R. Vallzadeh/V. Taan/Y.L./W.L./F.C.
DESIGN OVERSIGHT
SIGN OFF DATE 10/08/10

Rev. Date: 5-18-98

ORIGINAL SCALE IN MILLIMETERS FOR REDUCED PLANS 0 10 20 30 40 50 60 70 80 90 100

CU 04
EA 0120F1

BRIDGE NO. 34-0006L/R
KILOMETER POST 13.2/13.9

DISREGARD PRINTS BEARING EARLIER REVISION DATES →
REVISION DATES (PRELIMINARY STAGE ONLY): 05/15/99 | 08/02/99 | 05/15/01 | 04/08/02 | 07/29/02 | 12/30/02 | 11/13/03

SAN FRANCISCO OAKLAND BAY BRIDGE
EAST SPAN SEISMIC SAFETY PROJECT
SELF-ANCHORED SUSPENSION BRIDGE
(SUPERSTRUCTURE & TOWER)

TOWER STRUT DETAILS NO. 9

SHEET 153R2 OF

FILE => I:\bb\04-012001\sas\contract plans and cco\cco\cco*6451\2-revision 10-08-10\dgn\aetws09.dgn

100 % PS&E

DATE PLOTTED => 11 OCT 2010 TIME PLOTTED => 13:28:17

USERNAME => arivera

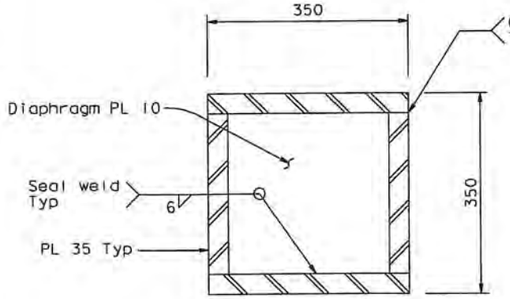

SECTION A-A
1:5

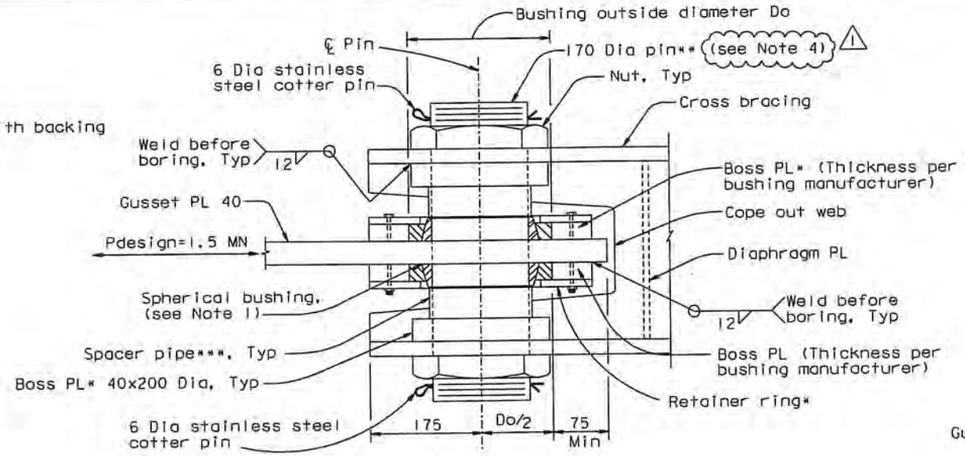

SECTION C-C
1:5

* A709M Grade 345
** A668 Grade F
*** A53 Grade B

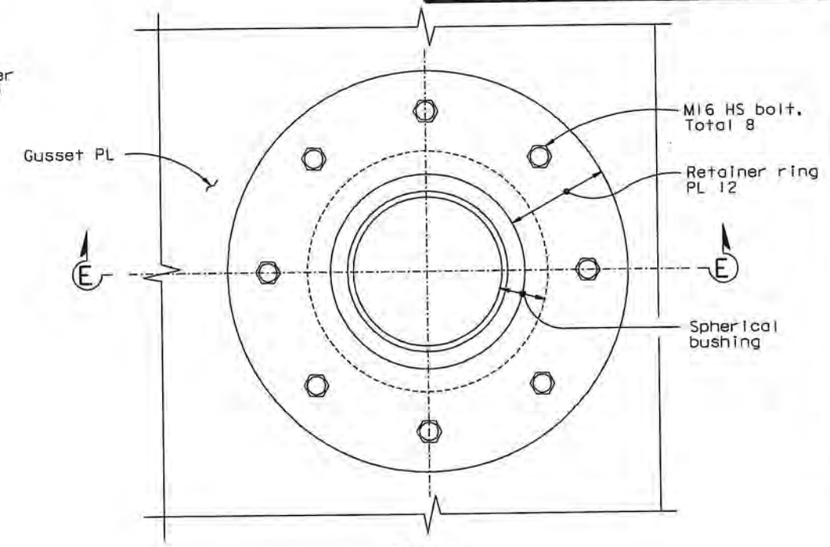

PLAN
1:2.5

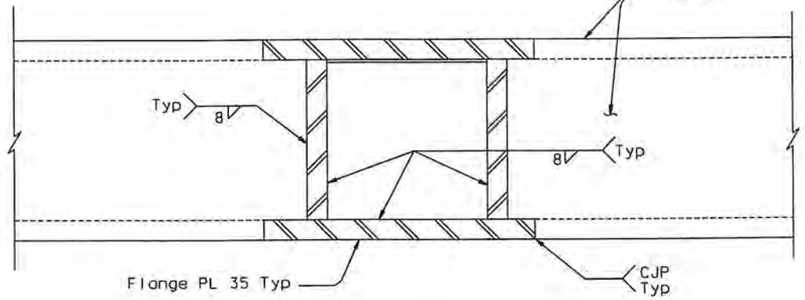

SECTION B-B
1:5

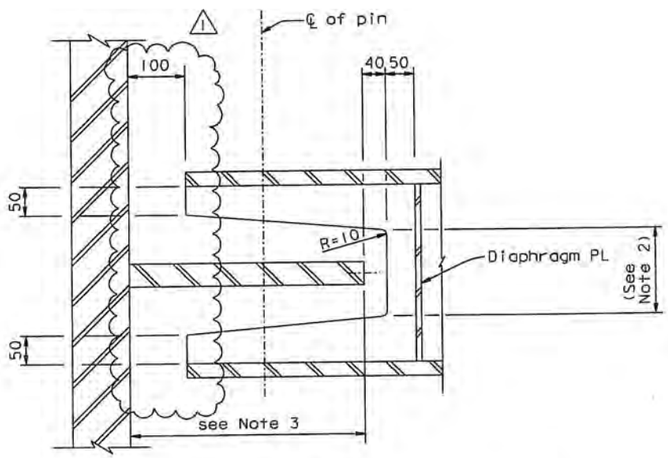

SECTION D-D (Pin not shown for clarity)
1:5

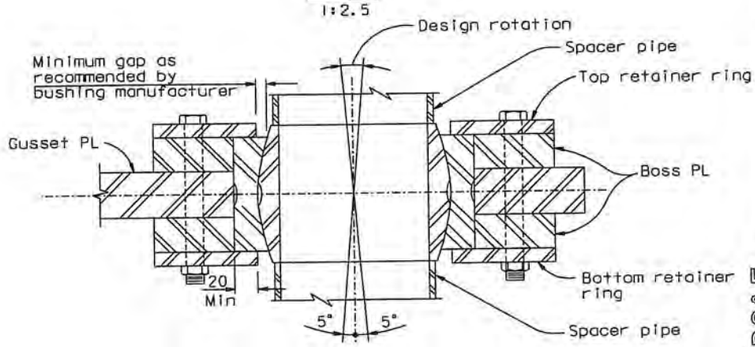

SECTION E-E
1:2.5

RETAINER RING DETAIL
(Pin not shown for clarity)

NOTES:

1. Maintenance-free steel spherical bushing shall accomodate a shaft diameter of 170 mm, a maximum angle of rotation of ±5 degrees (about a horizontal axis) and a maximum dynamic load of 1.5 MN. ⚠1
2. Cope out web as required to clear retainer rings and bolts.
3. Gusset plate shall be long enough to accomodate tolerance for distances between tower shafts.

⚠1 4. Pin hole diameter shall not exceed pin diameter by more than 0.8 mm per Caltrans Standard Specifications Section 55-3.15.

CONTRACT CHANGE ORDER NO. 6451
SHEET 4 OF 9

REQUESTS FOR INFORMATION NOT ADDRESSED IN THIS CCO REMAIN IN FORCE

DIST.	COUNTY	ROUTE	KILOMETER POST TOTAL PROJECT	SHEET NO.	TOTAL SHEETS
04	SF	80	13.2/13.9	571RI	1204

REGISTERED ENGINEER - CIVIL
Marwan N. Nader, No. C 054426, Exp. 12/31/11, CIVIL, REGISTERED PROFESSIONAL ENGINEER, STATE OF CALIFORNIA
12-6-04
PLANS APPROVAL DATE

The State of California or its officers or agents shall not be responsible for the accuracy or completeness of electronic copies of this plan sheet.

T.Y. LIN / MOFFATT & NICHOL
825 BATTERY STREET
SAN FRANCISCO, CA 94111

Caltrans now has a web site! To get to the web site, go to: http://www.dot.ca.gov

ALL DIMENSIONS ARE IN MILLIMETERS UNLESS OTHERWISE SHOWN

MARK	DATE	REVISIONS	BY	CH'D	CCO#
⚠1	10/08/10	TOWER STRUT FACADES AND CROSS BRACING	NV	MN	6451

R. Valizadeh/V. Toan/Y.L./W.L./F.C.
DESIGN OVERSIGHT
SIGN OFF DATE 10/08/10

Rev. Date: 5-18-98

	BY	CHECKED
DESIGN	M. Nader	S. Cano
DETAILS	L. Rus	S. Cano
QUANTITIES	L. Rus	Y. Zhang

PREPARED FOR THE STATE OF CALIFORNIA DEPARTMENT OF TRANSPORTATION

R. Manzanarez
PROJECT ENGINEER

BRIDGE NO. 34-0006L/R
KILOMETER POST 13.2/13.9

CU 04
EA 0120F1

DISREGARD PRINTS BEARING EARLIER REVISION DATES

REVISION DATES (PRELIMINARY STAGE ONLY): 05/27/10 | 08/06/10 | 07/01/10 | 12/15/10

SAN FRANCISCO OAKLAND BAY BRIDGE
EAST SPAN SEISMIC SAFETY PROJECT
SELF-ANCHORED SUSPENSION BRIDGE
(SUPERSTRUCTURE & TOWER)

TOWER STRUT DETAILS NO. 10

SHEET 154RI OF

ORIGINAL SCALE IN MILLIMETERS FOR REDUCED PLANS 0 10 20 30 40 50 60 70 80 90 100

FILE => I:\bb\04-0120f1\sas\contract plans and cco\cco\cco=6451\2-revision 10-08-10\dgn\oetws14.dgn

USERNAME => orivera DATE PLOTTED => 11 OCT 2010 TIME PLOTTED => 13:36:15

100 % PS&E

Caltrans now has a web site! To get to the web site, go to: http://www.dot.ca.gov

DIST.	COUNTY	ROUTE	KILOMETER POST TOTAL PROJECT	SHEET NO.	TOTAL SHEETS
04	SF	80	13.2/13.9	573R3	1204

REGISTERED ENGINEER - CIVIL

12-6-04
PLANS APPROVAL DATE

REGISTERED PROFESSIONAL ENGINEER — Marwan N. Nader — No. C 054426 — Exp. 12/31/11 — CIVIL — STATE OF CALIFORNIA

The State of California or its officers or agents shall not be responsible for the accuracy or completeness of electronic copies of this plan sheet.

T.Y. LIN / MOFFATT & NICHOL
825 BATTERY STREET
SAN FRANCISCO, CA 94111

LEGEND:
- ⊕ M24 A325-X Bolt
- O 24 Dia A307 Bolt

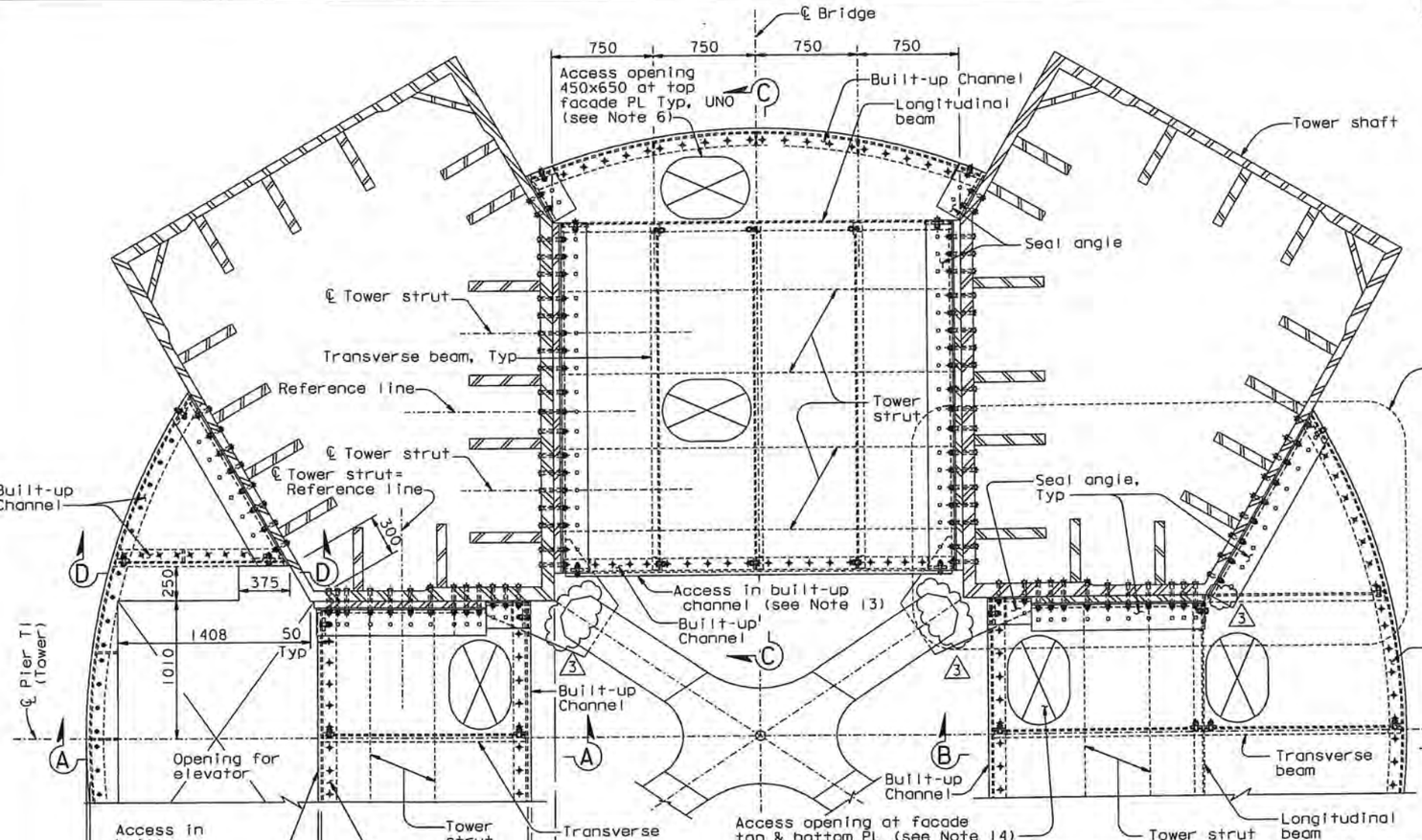

DETAIL A
1:20

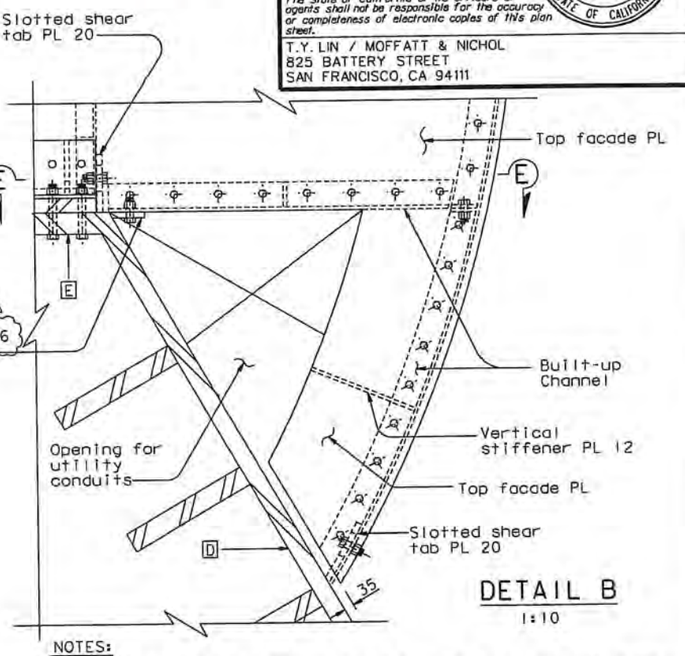

DETAIL B
1:10

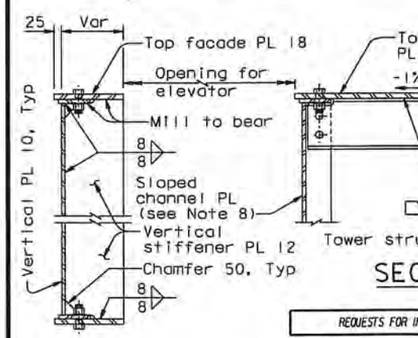

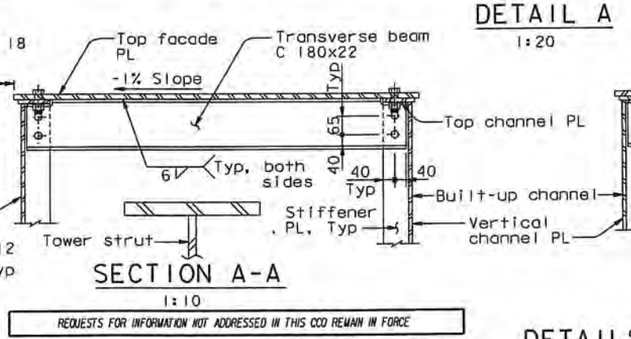

SECTION A-A
1:10

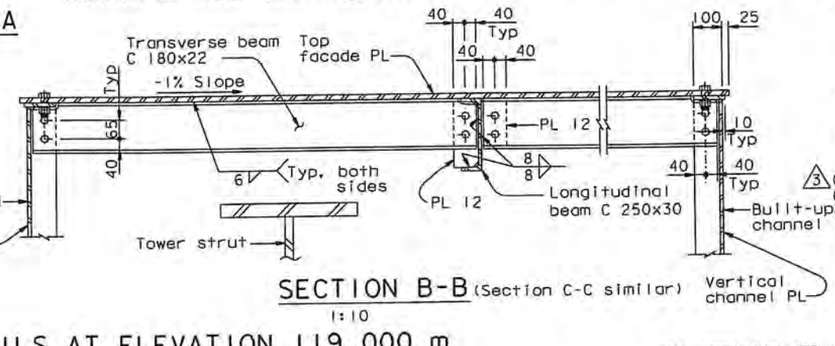

SECTION B-B (Section C-C similar)
1:10

NOTES:

1. For Detail D, see "Tower Strut Facade Details No. 4" sheet.
2. For tower shaft details, see "Tower Shaft Details" sheets.
3. All bolts are A325 M24 unless noted otherwise.
4. For Section D-D and E-E, see "Tower Strut Facade Details No. 3" sheet.
5. All details of tower strut facade shall account for the 1% slope of the tower top and bottom facade plates.
6. For access opening details, see "Tower Access Details" sheets. Access opening shall be located such that there is minimum interference with tower strut and tower strut facade framing system. Access openings may be offset subject to review and approval of the Engineer.
7. For details of built-up channel,. see "Tower Strut Facade Details No. 3" sheet.
8. Vertical plate of built-up channel at corner of plate D E shall be sloped to match the slope of edge of plate E.
9. (3) At the Contractor's option, an alternative material may be used for the Shear tab PL 6, subject to review and approval of the Engineer. Also, the Contractor may use standard oversize holes.
10. Framing details and support at bottom of strut facade are similar to those at the top of strut facade, UNO.
11. For sealing details, see "Tower Strut Facade Details No. 4" sheet.
12. Access openings in built-up channel are provided for access between tower strut and built-up channel. For details, see View H-H on "Tower Strut Facade Details No. 3" sheet.
13. Access openings in built-up channel are provided for access between tower strut and built-up channel. For details, see View G-G on "Tower Strut Facade Details No. 3" sheet.
14. Access opening in top and bottom facade PL shall be provided at this location for strut facade Type B also.

DETAILS AT ELEVATION 119.000 m
(Other elevations similar)

ALL DIMENSIONS ARE IN MILLIMETERS UNLESS OTHERWISE SHOWN

REQUESTS FOR INFORMATION NOT ADDRESSED IN THIS CCO REMAIN IN FORCE

MARK	DATE	DESCRIPTIONS	BY	CH'D	CCO#
		REVISIONS			
3	10/08/10	TOWER STRUT FACADES AND CROSS BRACING	NV	MN	645I
2	07/18/08	TOWER ACCESS	MN	NV	65
1	07/11/08	TOWER STRUT FACADES AND CROSS BRACING	MN	NV	64

CONTRACT CHANGE ORDER NO. 645I
SHEET 5 OF 9

	BY	CHECKED
DESIGN	M. Nader	M. Gulyas
DETAILS	L. Rus	M. Gulyas
QUANTITIES	L. Rus	Y. Zhang

PREPARED FOR THE STATE OF CALIFORNIA DEPARTMENT OF TRANSPORTATION

R. Manzanarez
PROJECT ENGINEER

CU 04
EA 0120F1

BRIDGE NO. 34-0006L/R
KILOMETER POST 13.2/13.9

SAN FRANCISCO OAKLAND BAY BRIDGE
EAST SPAN SEISMIC SAFETY PROJECT
SELF-ANCHORED SUSPENSION BRIDGE
(SUPERSTRUCTURE & TOWER)

TOWER STRUT FACADE DETAILS NO. 2

DISREGARD PRINTS BEARING EARLIER REVISION DATES

REVISION DATES (PRELIMINARY STAGE ONLY):
05/22/01 | 05/31/01 | 01/30/02 | 07/01/02 | 12/19/02

SHEET 156R3 OF

R. Valizadeh/V. Toan/Y.L./W.L./F.C.
DESIGN OVERSIGHT
SIGN OFF DATE 10/08/10

Rev. Date: 5-18-98

ORIGINAL SCALE IN MILLIMETERS FOR REDUCED PLANS 0 10 20 30 40 50 60 70 80 90 100

FILE => I:\bb\04-012001\sas\contract plans and cco\cco\cco=645i\2-revision 10-08-10\dgn\oatws11.dgn

USERNAME => crivera DATE PLOTTED => 11 OCT 2010 TIME PLOTTED => 13:33:59

100 % PS&E

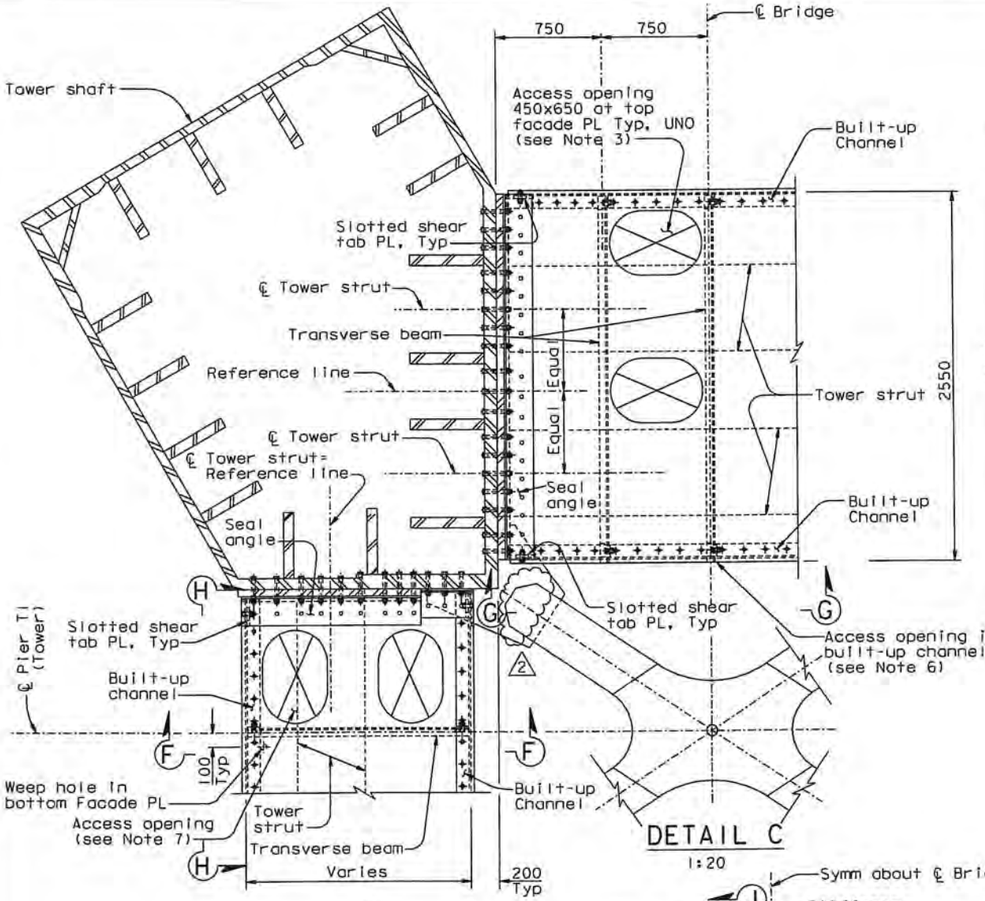

DETAIL C
1:20

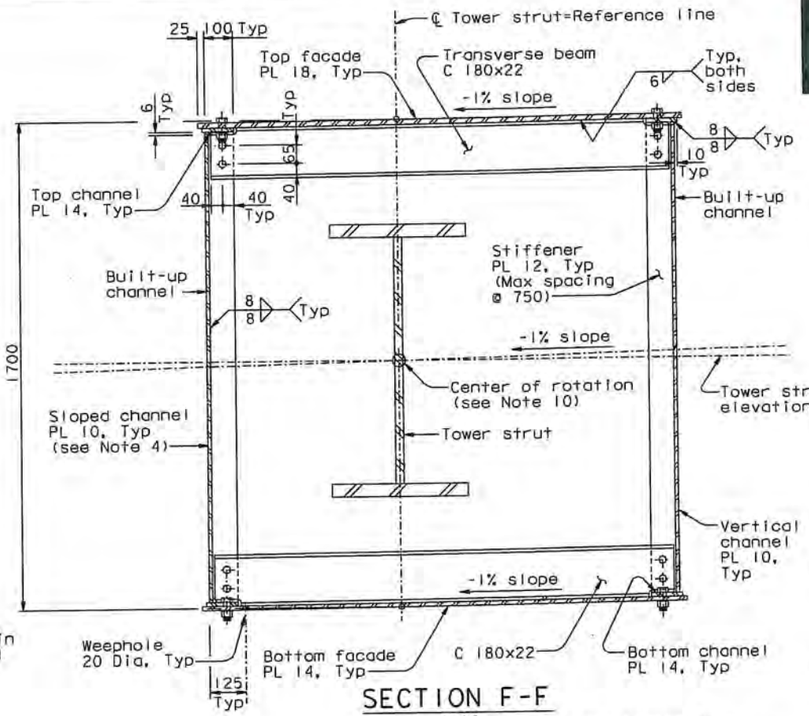

SECTION F-F
1:10

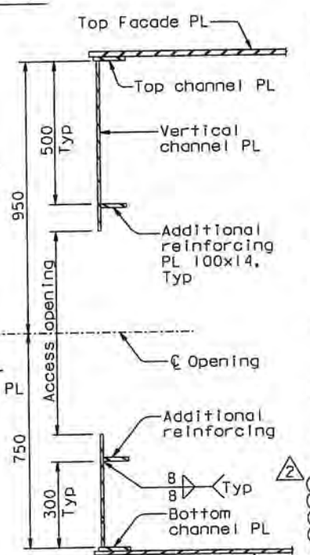

SECTION J-J
1:10

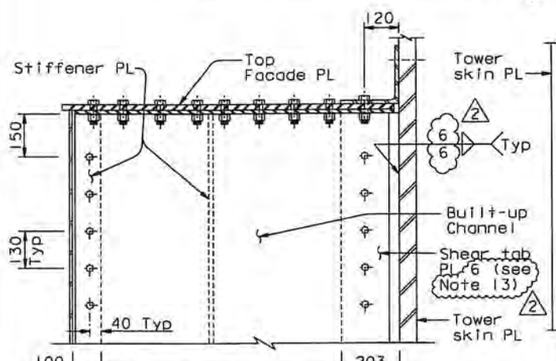

SECTION D-D (See Note 5)
1:10
(Section E-E similar)

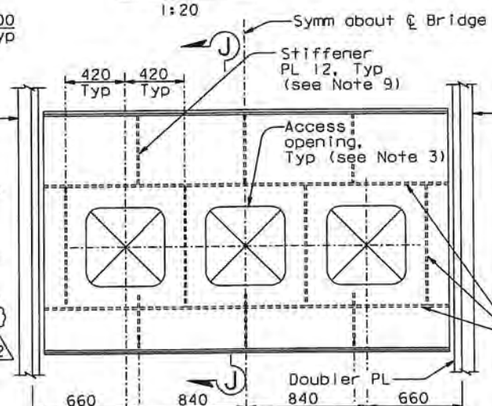

VIEW G-G (Seal angle not shown for clarity)
1:20

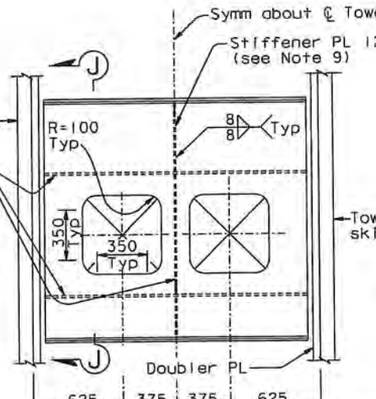

VIEW H-H (Seal angle not shown for clarity)
(Access openings do not exist between elevation 18.000 m and 77.000 m)
1:20

DETAIL AT ELEVATION 109.000 m (Other elevation similar)

LEGEND:

⊕ M24 A325-X Bolt

○ 24 Dia A307 Bolt

NOTES:

1. All bolts are A325 M24 unless noted otherwise.
2. All details of tower strut facade shall account for the 1% slope of the tower top and bottom facade plates.
3. For access opening details, see "Tower Access Details" sheets. Access opening shall be located such that there is minimum interference with tower strut and tower strut facade framing system.
4. Vertical plate of built-up channel at corner of plate D E shall be sloped to match the slope of edge of plate E.
5. For tightening the bolts shown in Section D-D, the nuts may be tack welded.
6. Access openings in built-up channel are provided for access between tower strut and built-up channel, see View G-G.
7. This access opening is at tower strut facade between elevation 18 and 77 only. For access between tower strut and built-up channel, between elevations 89 to 109, access opening is provided in built-up channel instead, see View H-H.
8. Additional reinforcing plates are required for built-up channel with access openings.
9. Stiffener plates shall be terminated as required for openings in built-up channel.
10. The center of rotation shall be located at the intersection of the Reference line with the tower strut elevation line.
11. For sealing details, see "Tower Strut Facade Details No.4" sheet.
12. For access in bottom facade PL, see Note 14 on "Tower Strut Facade Details No.2" sheet.
13. At the Contractor's option, an alternative material may be used for the Shear tab PL 6, subject to review and approval of the Engineer. Also, the Contractor may use standard oversize holes.

ALL DIMENSIONS ARE IN MILLIMETERS UNLESS OTHERWISE SHOWN

DIST.	COUNTY	ROUTE	KILOMETER POST TOTAL PROJECT	SHEET NO.	TOTAL SHEETS
04	SF	80	13.2/13.9	574R2	1204

REGISTERED ENGINEER - CIVIL
Marwan N. Nader, No. C 054426, Exp. 12/31/11, CIVIL, REGISTERED PROFESSIONAL ENGINEER, STATE OF CALIFORNIA
12-6-04
PLANS APPROVAL DATE

The State of California or its officers or agents shall not be responsible for the accuracy or completeness of electronic copies of this plan sheet.

T.Y. LIN / MOFFATT & NICHOL
825 BATTERY STREET
SAN FRANCISCO, CA 94111

Caltrans now has a web site! To get to the web site, go to: http://www.dot.ca.gov

REQUESTS FOR INFORMATION NOT ADDRESSED IN THIS CCO REMAIN IN FORCE

MARK	DATE	DESCRIPTIONS	BY	CH'D	CCO#
2	10/08/10	TOWER STRUT FACADES AND CROSS BRACING	NV	MN	645I
1	07/11/08	TOWER STRUT FACADES AND CROSS BRACING	MN	NV	64

REVISIONS

CONTRACT CHANGE ORDER NO. 645I
SHEET 6 OF 9

R. Vallizadeh/V. Toan/Y.L./W.L./F.C.
DESIGN OVERSIGHT
SIGN OFF DATE 10/08/10

Rev. Date: 5-18-98

	BY	CHECKED
DESIGN	M. Nader	M. Gulyas
DETAILS	L. Rus	M. Gulyas
QUANTITIES	L. Rus	Y. Zhang

ORIGINAL SCALE IN MILLIMETERS FOR REDUCED PLANS 0 10 20 30 40 50 60 70 80 90 100

PREPARED FOR THE STATE OF CALIFORNIA DEPARTMENT OF TRANSPORTATION

R. Manzanarez
PROJECT ENGINEER

CU 04
EA 0120F1

BRIDGE NO. 34-0006L/R
KILOMETER POST 13.2/13.9

DISREGARD PRINTS BEARING EARLIER REVISION DATES → REVISION DATES (PRELIMINARY STAGE ONLY)→ 05/2010 | 07/2010 | 12/15/10

SHEET 157R2 OF

SAN FRANCISCO OAKLAND BAY BRIDGE
EAST SPAN SEISMIC SAFETY PROJECT
SELF-ANCHORED SUSPENSION BRIDGE
(SUPERSTRUCTURE & TOWER)

TOWER STRUT FACADE DETAILS NO. 3

100% PS&E

USERNAME => orivera DATE PLOTTED => 31 OCT 2010 TIME PLOTTED => 13:14:43

FILE => I:\bb\04-012001\sas\contract plans and cco\cco\cco=645i\2-revision 10-08-10\dgn\detws12.dgn

DIST.	COUNTY	ROUTE	KILOMETER POST TOTAL PROJECT	SHEET NO.	TOTAL SHEETS
04	SF	80	13.2/13.9	575R5	1204

REGISTERED ENGINEER - CIVIL

12-6-04
PLANS APPROVAL DATE

The State of California or its officers or agents shall not be responsible for the accuracy or completeness of electronic copies of this plan sheet.

REGISTERED PROFESSIONAL ENGINEER — Marwan N. Nader, No. C 054426, Exp. 12/31/11, CIVIL, STATE OF CALIFORNIA

T.Y. LIN / MOFFATT & NICHOL
825 BATTERY STREET
SAN FRANCISCO, CA 94111

Caltrans now has a web site! To get to the web site, go to: http://www.dot.ca.gov

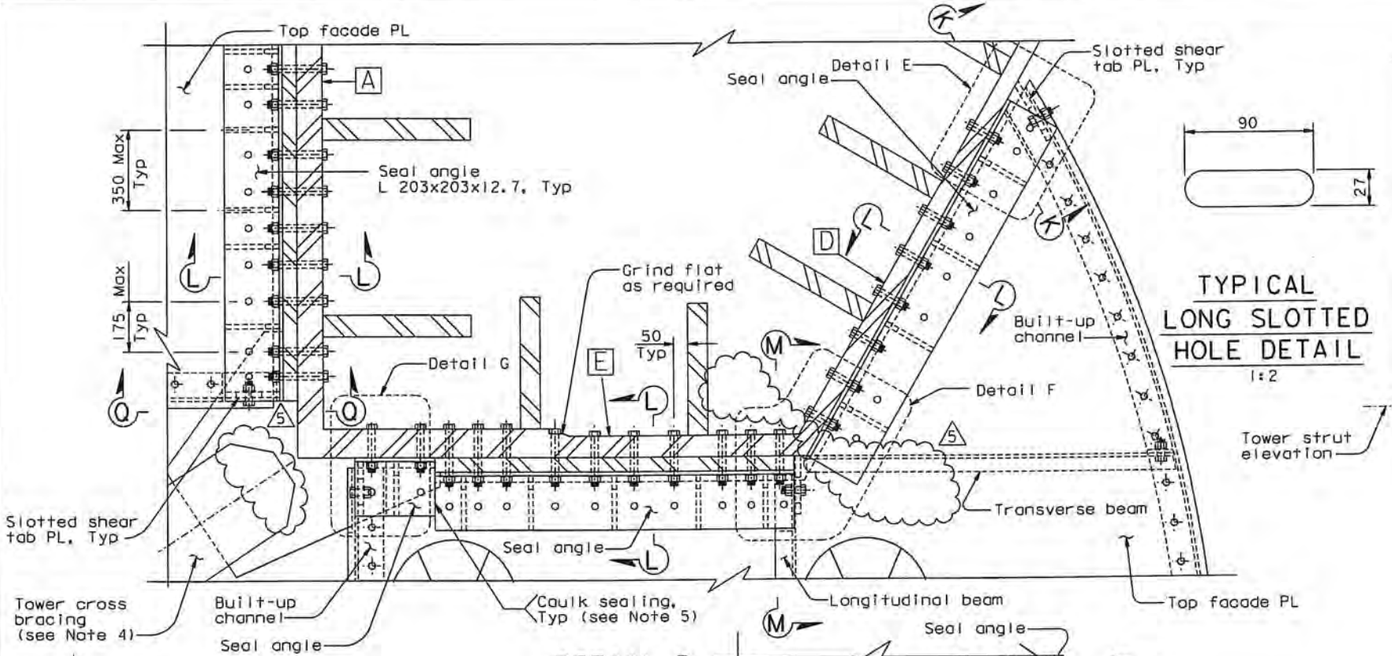

TYPICAL LONG SLOTTED HOLE DETAIL

1:2

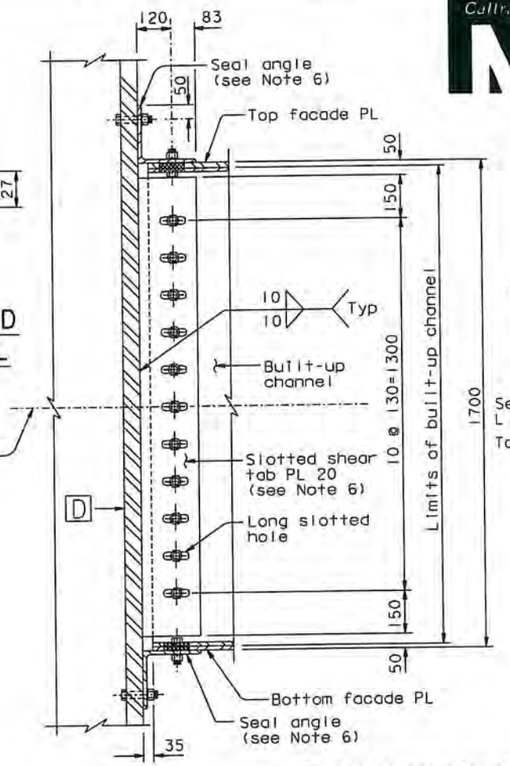

SECTION K-K

(Typical connection of built-up channel to tower shaft UNO)

1:10 (see Note 9)

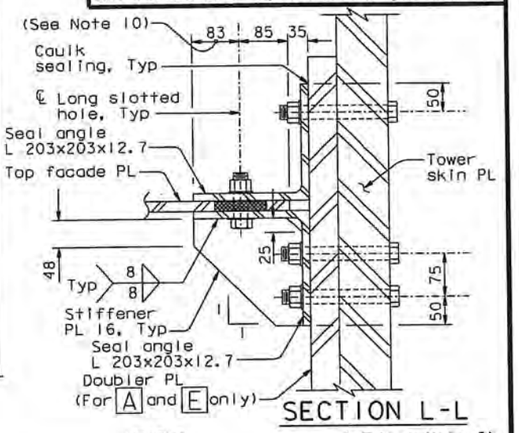

SECTION L-L

1:5 (see Note 9)

LEGEND:
- ⊕ M24 A325-X Bolt
- O 24 Dia A307 Bolt

NOTES:

1. All bolts are A325 M24 unless noted otherwise.
2. For details of built-up channel, see "Tower Strut Facade Details No.3" sheet.
3. All details of tower strut facade shall account for the 1% slope of the tower top and bottom facade plates.
4. For tower cross bracing location, see "Tower Strut Details No.9" sheet.
5. Seal plates and sealant material shall be placed such that the interior of the tower strut facade is properly sealed from the exterior.
6. PTFE film (0.5 thick) shall be applied on the faying surfaces between the slotted shear tab and the built-up channel plate, between the seal angle and the top facade PL, and between the seal angle and the bottom facade PL.
7. Seal plate shall be tight fit to the cross bracing gusset plate.
8. Cope vertical channel plate and slotted shear tab as necessary to accomodate cross bracing gusset plate. Slot location shall match slot in doubler plate . For doubler plate slot details, see "Tower Shaft Details No.11" sheet.
9. For sealing plate details, see Details E,F and Sections N-N, P-P, Q-Q.
10. At the Contractor's option, exterior sealing angle may be coped as required for clearance with access door cover plate to accommodate design movement, subject to review and approval of the Engineer.

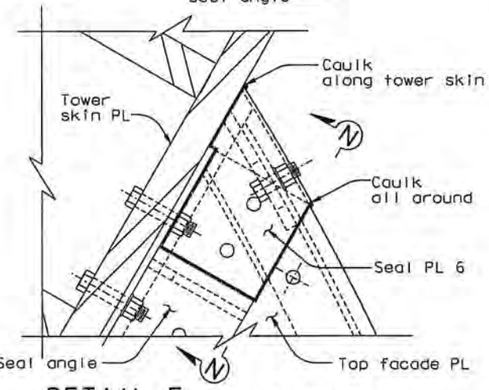

DETAIL E (Detail G similar)

1:5

(Typical edge seal PL)

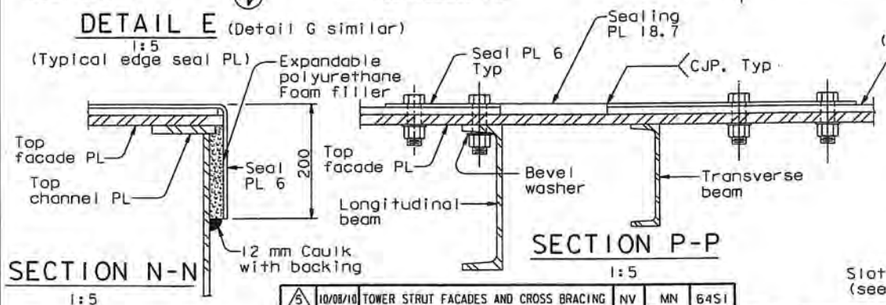

SECTION N-N

1:5

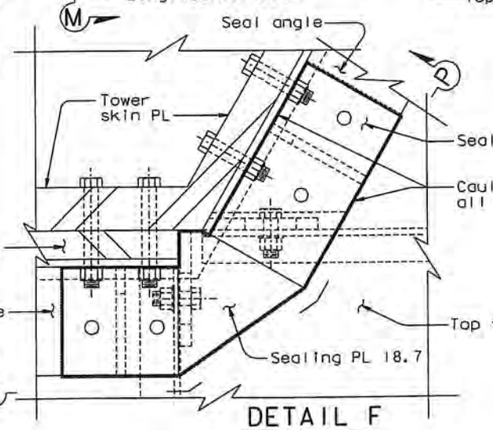

DETAIL F

1:5

(Typical corner seal PL)

SECTION P-P

1:5

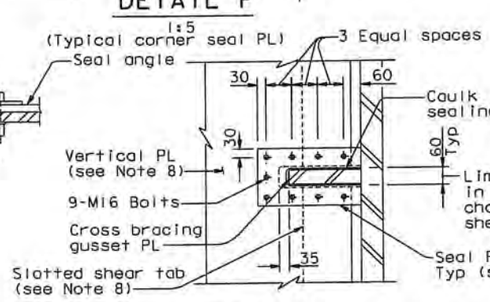

SECTION Q-Q (Typical gusset seal PL)

1:10

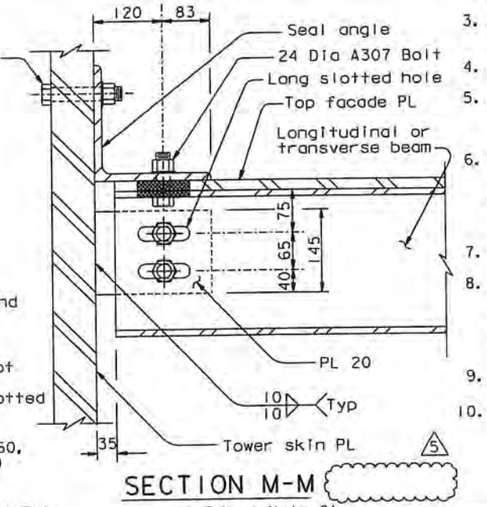

SECTION M-M

1:5 (see Note 9)

ALL DIMENSIONS ARE IN MILLIMETERS UNLESS OTHERWISE SHOWN

MARK	DATE	REVISIONS	BY	CH'D	CCO#
5	10/08/10	TOWER STRUT FACADES AND CROSS BRACING	NV	MN	64SI
4	10/17/08	CAULKING	NV	MN	66
3	10/01/08	TOWER ACCESS	NV	MN	65
2	07/11/08	TOWER STRUT FACADES AND CROSS BRACING	NV	MN	64
1	08/01/07	TOWER STRUT FACADE PTFE	NV	MN	48

REQUESTS FOR INFORMATION NOT ADDRESSED IN THIS CCO REMAIN IN FORCE

CONTRACT CHANGE ORDER NO. 64SI
SHEET 7 OF 9

R. Valizadeh/V. Toan/Y.L./W.L./F.C.
DESIGN OVERSIGHT
SIGN OFF DATE 10/08/10

Rev. Date: 5-18-98

	BY	CHECKED
DESIGN	M. Nader	M. Gulyas
DETAILS	L. Rus	M. Gulyas
QUANTITIES	L. Rus	Y. Zhang

ORIGINAL SCALE IN MILLIMETERS FOR REDUCED PLANS 0 10 20 30 40 50 60 70 80 90 100

PREPARED FOR THE STATE OF CALIFORNIA DEPARTMENT OF TRANSPORTATION

R. Manzanarez
PROJECT ENGINEER

BRIDGE NO. 34-0006L/R
KILOMETER POST 13.2/13.9

CU 04
EA 0120F1

DISREGARD PRINTS BEARING EARLIER REVISION DATES

REVISION DATES (PRELIMINARY STAGE ONLY): 05/2002 05/2002 05/2002 05/2002 12/19/02

SHEET 158R5 OF

SAN FRANCISCO OAKLAND BAY BRIDGE
EAST SPAN SEISMIC SAFETY PROJECT
SELF-ANCHORED SUSPENSION BRIDGE
(SUPERSTRUCTURE & TOWER)

TOWER STRUT FACADE DETAILS NO. 4

FILE => I:\bb\04-0120F1\sas\contract plans and cco\cco\cco#64si\2-revision 10-08-10\dgn\oatws13.dgn

100 % PS&E

DATE PLOTTED => 11 OCT 2010 TIME PLOTTED => 13:35:32

USERNAME => arivera

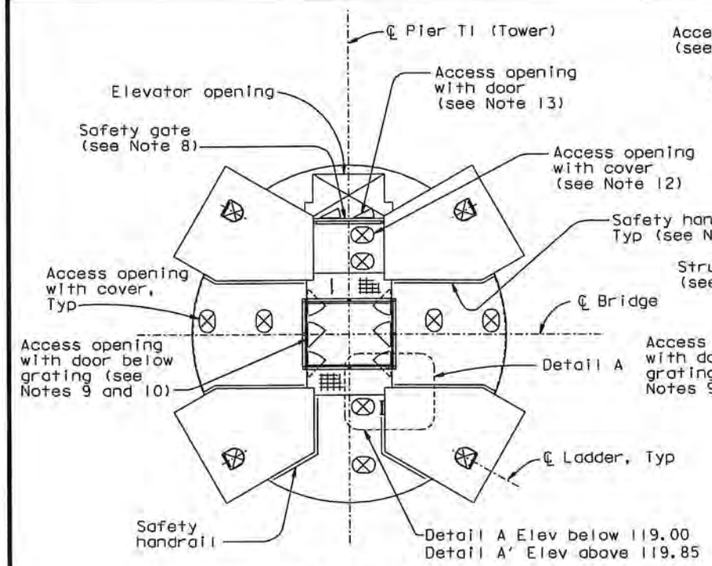

SECTION D-D

NTS

Typical for all tower strut facades UNO in Section E-E. Facade Type A is shown. Type B similar (see Notes 5 and 10)

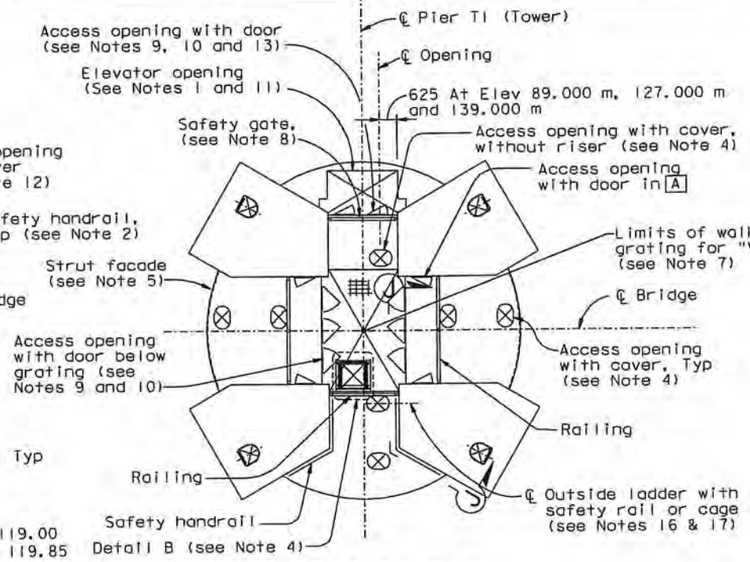

SECTION E-E

NTS

(Shown for tower strut facade corresponding to tower strut at Elev 139.000 m, safety gates and door locations at Elev 53.000 m, 89.000 m and 127.000 m are similar)

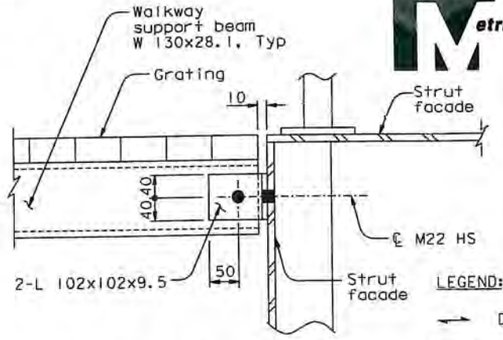

SECTION G-G

(Section G'-G' similar)

1:5

LEGEND:

- Direction of main reinforcement of grating
- Access opening
- A — Tower shaft skin plate A

NOTES:

1. For elevator opening details, see "Tower Strut Facade Details" sheets.
2. For railing and safety handrail details, see "Tower Access Details No.8" sheet.
3. For ladder details not shown, see "Tower Access Details No.7" sheet.
4. For Detail B and access cover details, see "Tower Access Details No.9" sheet. All covers are with risers, unless noted otherwise.
5. For strut facade, see "Tower Strut Facade Details" sheets.
6. Galvanized steel grating with fasteners to be provided by Contractor. Grating working load shall be 4.8 kN/m² (100psf) unless noted otherwise.
7. Gratings at elevations 53.000, 89.000 and 139.000 shall support "VAB" equipment, to be supplied by others. Walkway grating for "VAB" shall be galvanized steel grating with fasteners to be provided by Contractor. Grating working load shall be 14.8 kN/m² (300psf).
8. For Safety gate details, see "Road Plans" sheets.
9. For access opening and door details, see "Tower Access Details No.4" sheet. Access openings are without door unless noted otherwise.
10. For location of access openings in strut facade, see "Tower Strut Facade Details" sheets.
11. For location of elevator landing and safety enclosures, see "Tower Elevator Support Details" sheets.
12. This access opening is to be provided in strut facades from elevation 18.000 m to 77.000 m only.
13. These access openings are to be provided between elevation 89.000 m to 143.000 m.
14. For bottom face access opening provide door to swing in. Door shall open clear of obstructions. For other details, see door at vertical face of tower strut facade on "Tower Access Details No.4" sheet.
15. The Contractor shall provide ladders inside the front facades to align with the exterior ladder segments. Ladder do not penetrate the strut facade plates.

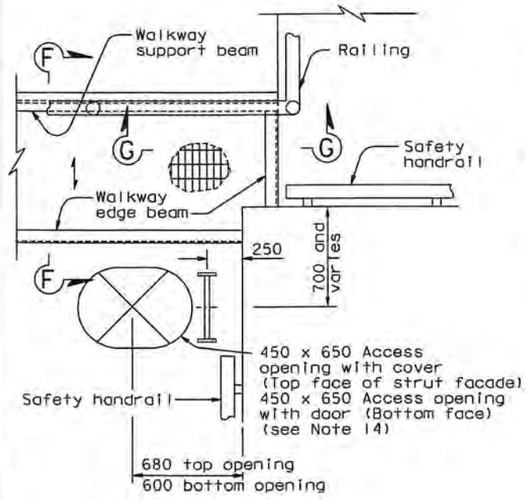

DETAIL A

1:20

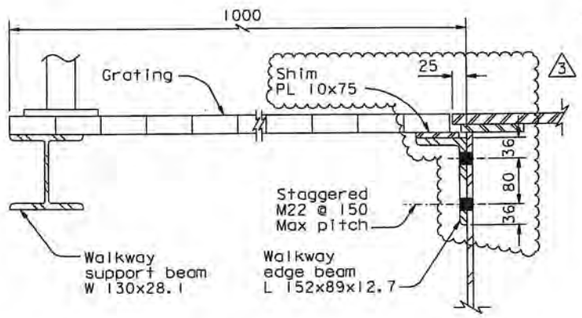

SECTION F-F

1:5

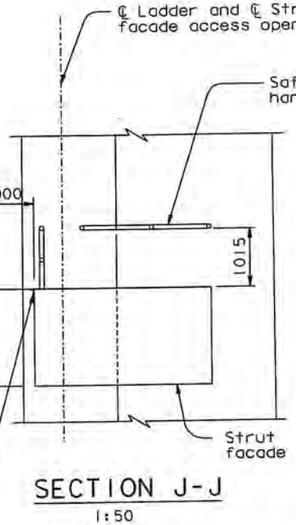

SECTION J-J

1:50

16. At locations where ladder lengths exceed 6.5 meters, contraction joints shall be provided. Ladder length is defined as the distance between the centerlines of the top and bottom end supports. Contraction joints shall be located below ladder supports unless noted otherwise. For contraction joint details, see "Tower Access Details No.7" sheet.
17. Ladder supports shall be spaced at 6 meters maximum.
18. For Section Z-Z and Detail A', see "Tower Access Details No.3A" sheet.

ALL DIMENSIONS ARE IN MILLIMETERS UNLESS OTHERWISE SHOWN

DIST.	COUNTY	ROUTE	KILOMETER POST TOTAL PROJECT	SHEET NO.	TOTAL SHEETS
04	SF	80	13.2/13.9	919R3	1204

REGISTERED ENGINEER - CIVIL

12-6-04
PLANS APPROVAL DATE

PROFESSIONAL ENGINEER — Marwan N. Nader — No. C 054426 — Exp. 12/31/11 — CIVIL — STATE OF CALIFORNIA

The State of California or its officers or agents shall not be responsible for the accuracy or completeness of electronic copies of this plan sheet.

T.Y. LIN / MOFFATT & NICHOL
825 BATTERY STREET
SAN FRANCISCO, CA 94111

Caltrans now has a web site! To get to the web site, go to: http://www.dot.ca.gov

CONTRACT CHANGE ORDER NO. 6451
SHEET 8 OF 9

REQUESTS FOR INFORMATION NOT ADDRESSED IN THIS CCO REMAIN IN FORCE

MARK	DATE	DESCRIPTIONS	BY	CH'D	CCO#
3	09/24/10	TOWER STRUT FACADES AND CROSS BRACING	NV	MN	6451
2	07/17/09	ELEVATOR DETAILS	TH	MN	85
1	07/18/08	TOWER ACCESS	NV	MN	65

REVISIONS

R. Vallzadeh/V. Toan/Y.L./W.L./F.C.
DESIGN OVERSIGHT
Sign Off Date 09/24/10

Rev. Date: 5-18-98

DESIGN BY M. Nader — CHECKED M. Gulyas
DETAILS BY G. Baker — CHECKED L. Rus
QUANTITIES BY D. Turner — CHECKED J. Leventini

PREPARED FOR THE STATE OF CALIFORNIA DEPARTMENT OF TRANSPORTATION

R. Manzanarez
PROJECT ENGINEER

BRIDGE NO. 34-0006L/R
KILOMETER POST 13.2/13.9

CU 04
EA 0120F1

DISREGARD PRINTS BEARING EARLIER REVISION DATES →

REVISION DATES (PRELIMINARY STAGE ONLY): 05/25/99 09/27/99 03/27/01 04/08/02 07/31/02 12/19/02

SHEET 502R3 OF

ORIGINAL SCALE IN MILLIMETERS FOR REDUCED PLANS 0 10 20 30 40 50 60 70 80 90 100

FILE => I:\bb\04-0120F1\sas\contract plans and cco\cco\cco*6451\1-original 09-24-10\dgn\akacc14.dgn

SAN FRANCISCO OAKLAND BAY BRIDGE
EAST SPAN SEISMIC SAFETY PROJECT
SELF-ANCHORED SUSPENSION BRIDGE
(SUPERSTRUCTURE & TOWER)

TOWER ACCESS DETAILS NO. 3

100% PS&E

USERNAME => dwinrow DATE PLOTTED => 24 SEP 2010 TIME PLOTTED => 09:28:57

DIST.	COUNTY	ROUTE	KILOMETER POST TOTAL PROJECT	SHEET NO.	TOTAL SHEETS
04	SF	80	13.2/13.9	926R5	1204

REGISTERED ENGINEER - CIVIL

Marwan N. Nader No. C 054426 Exp. 12/31/11 CIVIL STATE OF CALIFORNIA

12-6-04
PLANS APPROVAL DATE

The State of California or its officers or agents shall not be responsible for the accuracy or completeness of electronic copies of this plan sheet.

T.Y. LIN / MOFFATT & NICHOL
825 BATTERY STREET
SAN FRANCISCO, CA 94111

Caltrans now has a web site! To get to the web site, go to: http://www.dot.ca.gov

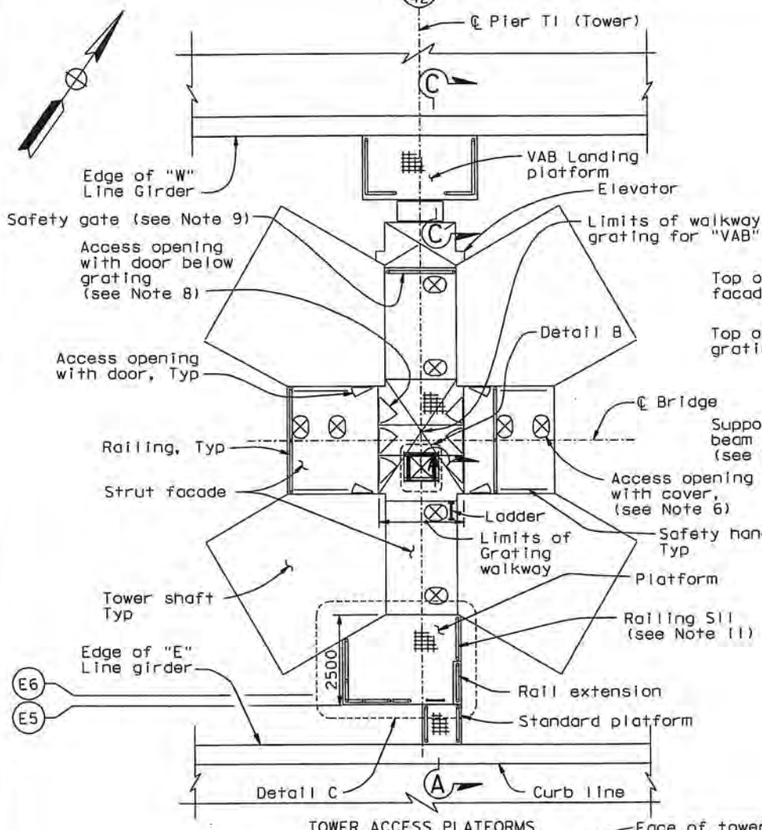

TOWER ACCESS PLATFORMS
SECTION F-F
NTS

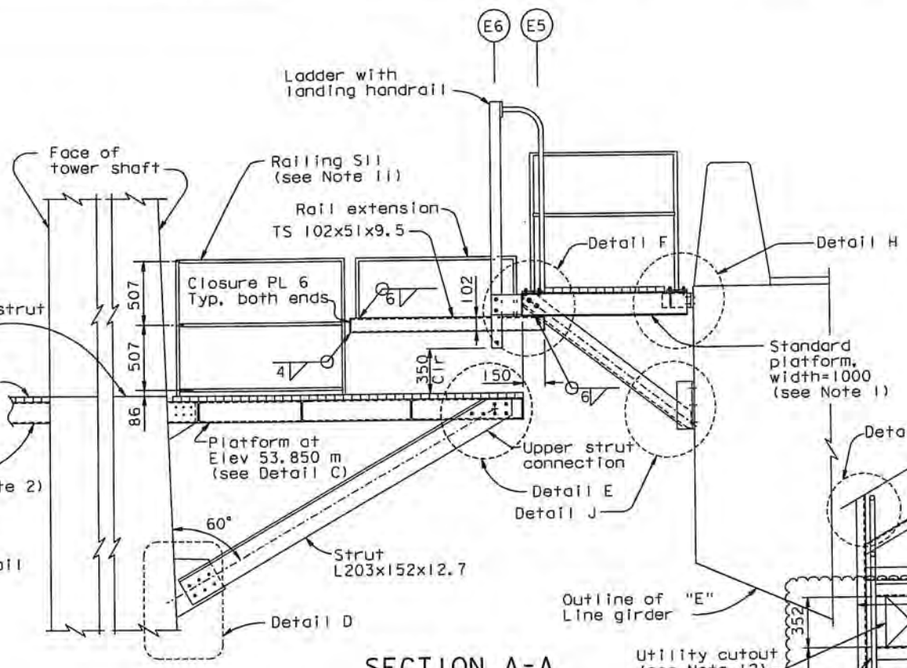

SECTION A-A
1:20

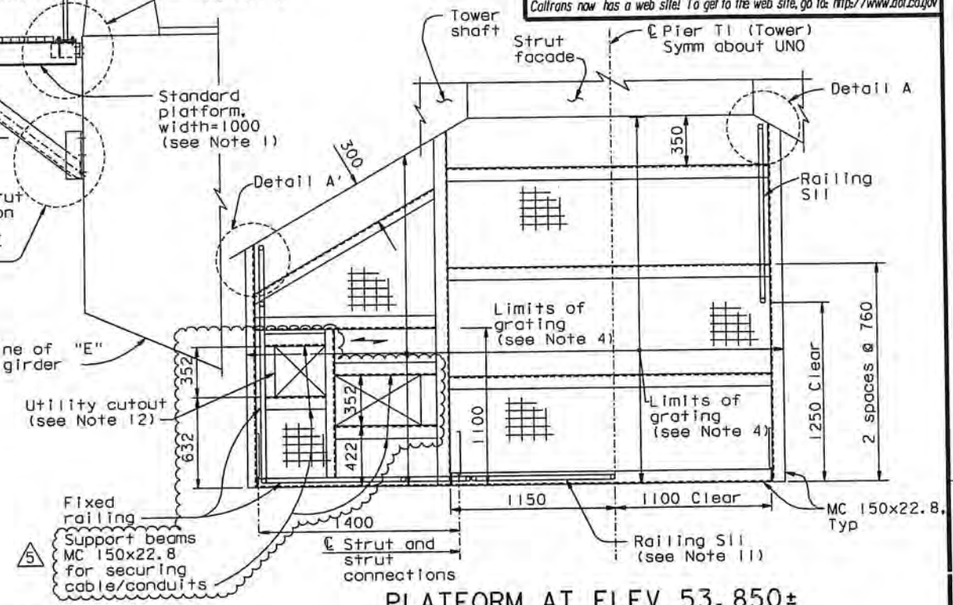

PLATFORM AT ELEV 53.850±
DETAIL C
1:20

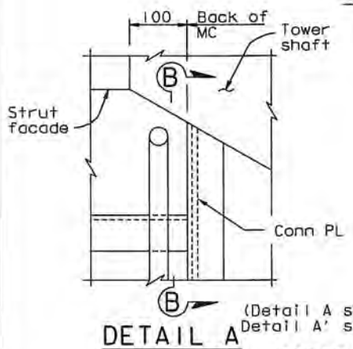

(Detail A shown, Detail A' similar)
DETAIL A
1:5

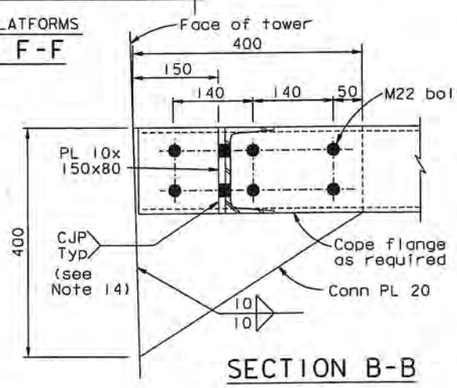

SECTION B-B
1:5

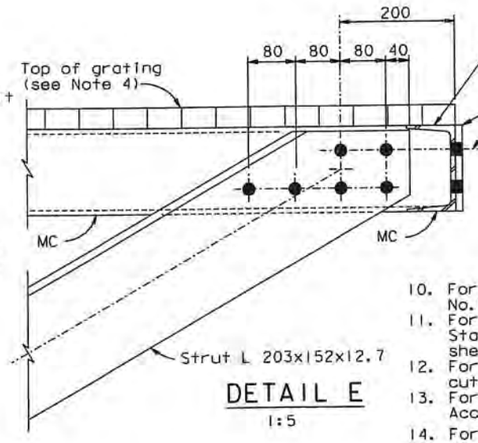

DETAIL E
1:5

LEGEND:

(E6) Girder Working Line 6 on "E" Line.

NOTES:

1. For standard platform details, see "Tower Access Details No.9" sheet.
2. For walkway support beam details, see "Tower Access Details No.3" sheet.
3. For railing details, see "Tower Access Details No.8" sheet.
4. Grating shall be galvanized steel grating with fasteners. Grating working load shall be 14.4 kN/m².
5. For Section C-C, Details D, see "Tower Access Details No. 11" sheet.
6. For access opening cover details, see "Tower Access Details No.9" sheet. All covers are with risers unless noted otherwise.
7. For location of Tower access opening in strut facade, see "Tower Strut Facade Details" sheets.
8. For access opening and door details, see "Tower Access Details No.4" sheet.
9. For safety gate details, see "Road Plans" sheets.
10. For Detail B, see "Tower Access Details No.9" sheet.
11. For Railing S11 see Index to Caltrans Standard Plans on "General Notes No.1" sheet.
12. For dimensions and locations of utility cutouts in grating, see "Road Plans".
13. For Details F, H and J, see "Tower Access Details No. 12" sheet.
14. For the shear plate that is connected to the channel on the front (open) side, a double-sided 6 mm fillet weld may be used. Shear plate shall be connected to channel flanges and web.

CONTRACT CHANGE ORDER NO. 64S1
SHEET 9 OF 9

REQUESTS FOR INFORMATION NOT ADDRESSED IN THIS CCO REMAIN IN FORCE

MARK	DATE	DESCRIPTIONS	BY	CH'D	CCO#
5	09/24/10	TOWER STRUT FACADES AND CROSS BRACING	NV	MN	64S1
4	09/25/09	HANDRAIL AND PLATFORMS	MN	TH	114
3	06/12/09	HANDRAIL	MN	TH	114
2	08/15/08	TOWER ACCESS	JD	MN	65
1	09/07/07	MECHANICAL MODIFICATIONS	JD	MN	31

REVISIONS

ALL DIMENSIONS ARE IN MILLIMETERS UNLESS OTHERWISE SHOWN

R. Vaiizadeh/V. Toan/Y.L./W.L./F.C.
DESIGN OVERSIGHT
SIGN OFF DATE 09/24/10

	BY	CHECKED
DESIGN	M. Nader	M. Gulyas
DETAILS	G. Baker	L. Rus
QUANTITIES	D. Turner	J. Leventini

PREPARED FOR THE STATE OF CALIFORNIA DEPARTMENT OF TRANSPORTATION

R. Manzanarez
PROJECT ENGINEER

BRIDGE NO. 34-0006L/R
KILOMETER POST 13.2/13.9

CU 04
EA 0120F1

SAN FRANCISCO OAKLAND BAY BRIDGE
EAST SPAN SEISMIC SAFETY PROJECT
SELF-ANCHORED SUSPENSION BRIDGE (SUPERSTRUCTURE & TOWER)

TOWER ACCESS DETAILS NO. 10

DISREGARD PRINTS BEARING EARLIER REVISION DATES →
REVISION DATES (PRELIMINARY STAGE ONLY) → 05/31/99 08/09/99 05/31/01 01/08/02 07/01/02 12/19/02

SHEET 509R5 OF

ORIGINAL SCALE IN MILLIMETERS FOR REDUCED PLANS 0 10 20 30 40 50 60 70 80 90 100

Rev. Date: 5-18-98

FILE => I:\bb\04-0120I\sas\contract plans and cco\cco\cco#64s1\1-original 09-24-10\dgn\akacc09.dgn

100 % PS&E
DATE PLOTTED => 24 SEP 2010 TIME PLOTTED => 09:32:32
USERNAME => dwinrow

CONTRACT CHANGE ORDER

Change Requested by: Engineer

CCO: 65 **Suppl. No. 0** **Contract No. 04 – 0120F4** **Road** SF-80-13.2/13.9 **FED. AID LOC.:**

To: **AMERICAN BRIDGE/FLUOR ENTERPRISES INC A JOINT VENTURE**

You are directed to make the following changes from the plans and specifications or do the following described work not included in the plans and specifications for this contract. ***NOTE: This change order is not effective until approved by the Engineer.***

Description of work to be done, estimate of quantities and prices to be paid. (Segregate between additional work at contract price, agreed price and force account.) Unless otherwise stated, rates for rental of equipment cover only such time as equipment is actually used and no allowance will be made for idle time. This last percentage shown is the net accumulated increase or decrease from the original quantity in the Engineer's Estimate.

Adjustment of Compensation at Lump Sum:

ITEM 1.

Modify tower access by relocating or deleting deflector plates, ladders, and removable grating covers, and providing ladder expansion joints.

The following revised and supplemental plan sheets detail all changes in this change order: 573R2, 575R3, 796R1, 917R1, 918R1, 919R1, 919S1, 920R2, 921R1, 923R1, 924R1, 925R1, 926R2, 929R4 and 932R2 (of 1204), as shown on sheets 2 through 16 of this change order.

This change order resolves the costs associated with Contractor Request For Information (RFI) Nos. 149, 150, 225R0, 225R1, 225R2, 239R0, 239R1, 707, 1001, 1011R0, 1011R1, 1011R2, 1034R0, 1034R1, 1034R2, 1045R0, 1045R1, 1045R2, 1184, 1187, 1189, 1281R1, 1312R0, 1312R1, 1312R2, 1312R3, 1319, 1362 and 1466 with respect to changes listed above.

Adjustment of Compensation at Lump Sum Price..... $50,000.00

ITEM 2.

The items identified above in this change order have been paid as part of CCO 108S1 resolution. Therefore, the amount due under this change order will be adjusted by the amount paid under CCO 108S1 to prevent a double payment. Total amount paid under CCO 108S1, and to be credited to this change, is $50,000.00.

Adjustment of Compensation at Lump Sum Price..... <$50,000.00>

CHANGE ORDER COST AND TIME SUMMARY

(ITEM 1) Adjustment of Compensation for work pursuant to this change order	$50,000.00
(ITEM 2) Amount paid under CCO 108S1 for this change order	<$50,000.00>
Total net pay for this change order	$0.00

Contract time is addressed in CCO 108S1 for all work identified in this change order. Therefore, contract time will not be adjusted in this change order.

Estimated Cost: Increase ☐ Decrease ☐ $0.00

By reason of this order the time of completion will be adjusted as follows: 0 days

Submitted by

Signature Kannu Bala — **Resident Engineer** Kannu Balan, Senior T.E. — **Date** 6-29-10

Approval Recommended by

Signature [signature] — **Supervising Bridge Engineer** Rick Morrow, Sup. B.E. — **Date** 6/30/10

Engineer Approval by

Signature [signature] FOR PURSELL — **Supervising Transportation Engineer** Gary Pursell, Sup. T.E. — **Date** 7/27/2010

We the undersigned contractor, have given careful consideration to the change proposed and agree, if this proposal is approved, that we will provide all equipment, furnish the materials, except as otherwise be noted above, and perform all services necessary for the work above specified, and will accept as full payment therefor the prices shown above.

NOTE: If you, the contractor, do not sign acceptance of this order, your attention is directed to the requirements of the specifications as to proceeding with the ordered work and filing a written protest within the time therein specified.

Contractor Acceptance by

Signature [signature] (Print name and title) Michael D. Flowers Project Director **Date** 7-23-10

Caltrans now has a web site! To get to the web site, go to: http://www.dot.ca.gov

DIST.	COUNTY	ROUTE	KILOMETER POST TOTAL PROJECT	SHEET NO.	TOTAL SHEETS
04	SF	80	13.2/13.9	573R2	1204

REGISTERED ENGINEER - CIVIL

12-6-04
PLANS APPROVAL DATE

REGISTERED PROFESSIONAL ENGINEER — Marwan N. Nader — No. C 054426 — Exp. 12/31/09 — CIVIL — STATE OF CALIFORNIA

The State of California or its officers or agents shall not be responsible for the accuracy or completeness of electronic copies of this plan sheet.

T.Y. LIN / MOFFATT & NICHOL
825 BATTERY STREET
SAN FRANCISCO, CA 94111

LEGEND:
- ⊕ M24 A325-X Bolt
- ○ 24 Dia A307 Bolt

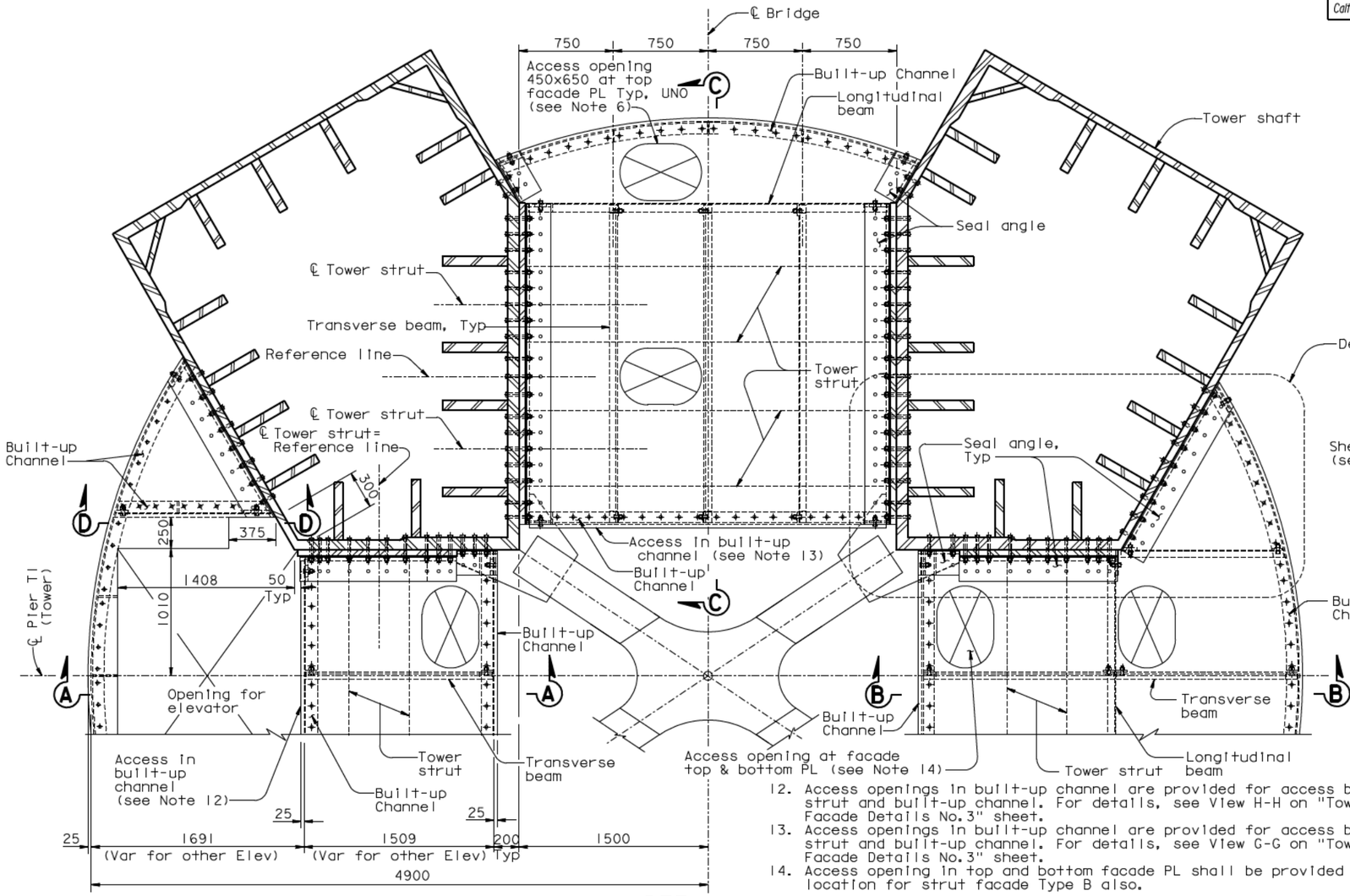

DETAIL A
1:20

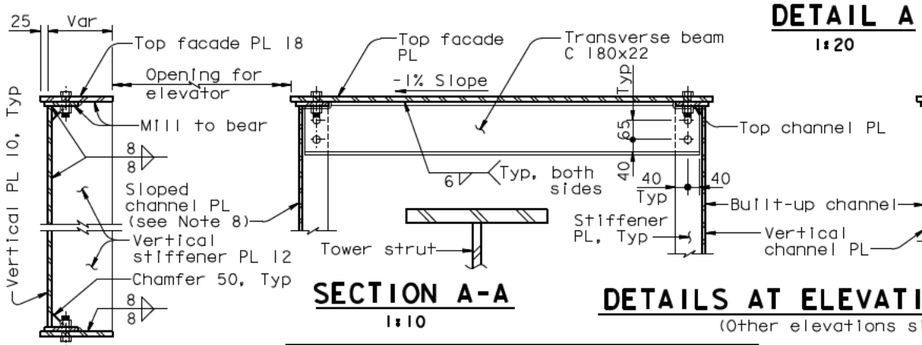

SECTION A-A
1:10

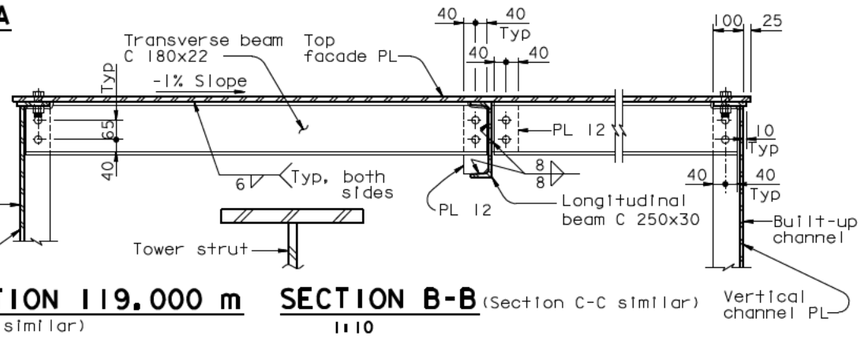

DETAILS AT ELEVATION 119.000 m
(Other elevations similar)

SECTION B-B (Section C-C similar)
1:10

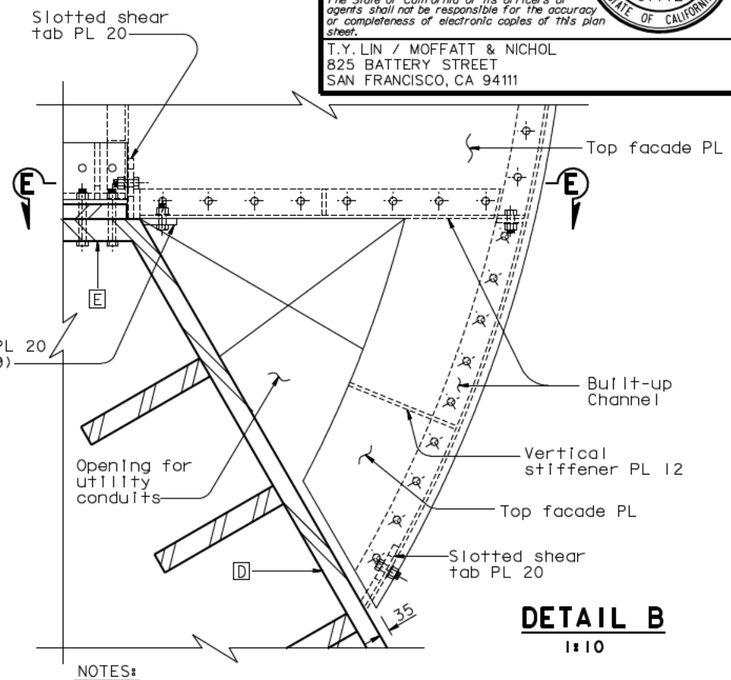

DETAIL B
1:10

NOTES:

1. For Detail D, see "Tower Strut Facade Details No.4" sheet.
2. For tower shaft details, see "Tower Shaft Details" sheets.
3. All bolts are A325 M24 unless noted otherwise.
4. For Section D-D and E-E, see "Tower Strut Facade Details No.3" sheet.
5. All details of tower strut facade shall account for the 1% slope of the tower top and bottom facade plates.
6. For access opening details, see "Tower Access Details" sheets. Access opening shall be located such that there is minimum interference with tower strut and tower strut facade framing system. Access openings may be offset subject to review and approval of the Engineer. 2
7. For details of built-up channel, see "Tower Strut Facade Details No.3" sheet.
8. Vertical plate of built-up channel at corner of plate D E shall be sloped to match the slope of edge of plate E.
9. Shear tab plate is similar to slotted shear tab plate but with standard holes. For details of slotted shear tab plate, see "Tower Strut Facade Details No.4" sheet.
10. Framing details and support at bottom of strut facade are similar to those at the top of strut facade, UNO.
11. For sealing details, see "Tower Strut Facade Details No.4" sheet.
12. Access openings in built-up channel are provided for access between tower strut and built-up channel. For details, see View H-H on "Tower Strut Facade Details No.3" sheet.
13. Access openings in built-up channel are provided for access between tower strut and built-up channel. For details, see View G-G on "Tower Strut Facade Details No.3" sheet.
14. Access opening in top and bottom facade PL shall be provided at this location for strut facade Type B also.

REQUESTS FOR INFORMATION NOT ADDRESSED IN THIS CCO REMAIN IN FORCE

MARK	DATE	DESCRIPTIONS	BY	CH'D	CCO#
		REVISIONS			
2	07/18/08	TOWER ACCESS	MN	NV	65
1	07/11/08	TOWER STRUT FACADES AND CROSS BRACING	MN	NV	64

CONTRACT CHANGE ORDER NO. ____
SHEET ___ OF ___

ALL DIMENSIONS ARE IN MILLIMETERS UNLESS OTHERWISE SHOWN

	BY	CHECKED
DESIGN	M. Nader	M. Gulyas
DETAILS	L. Rus	M. Gulyas
QUANTITIES	L. Rus	Y. Zhang

PREPARED FOR THE STATE OF CALIFORNIA DEPARTMENT OF TRANSPORTATION

R. Manzanarez
PROJECT ENGINEER

BRIDGE NO. 34-0006L/R
KILOMETER POST 13.2/13.9

CU 04
EA 0120F1

SAN FRANCISCO OAKLAND BAY BRIDGE
EAST SPAN SEISMIC SAFETY PROJECT
SELF-ANCHORED SUSPENSION BRIDGE (SUPERSTRUCTURE & TOWER)

TOWER STRUT FACADE DETAILS NO. 2

SHEET 156R2 OF

R. Valizadeh/V. Toan/Y.L./W.L./F.C.
DESIGN OVERSIGHT
SIGN OFF DATE 07/18/08

Rev. Date: 5-18-98

ORIGINAL SCALE IN MILLIMETERS FOR REDUCED PLANS 0 10 20 30 40 50 60 70 80 90 100

DISREGARD PRINTS BEARING EARLIER REVISION DATES

REVISION DATES (PRELIMINARY STAGE ONLY): 05/30/01 | 08/08/02 | 07/31/02 | 12/19/02

FILE -> L:\BB\04-012001\SAS\Contract Plans and CCO\CCO\In Progress\CCO#65\Update 10-07-08\DGN\detws11.dgn

100% PS&E
TIME PLOTTED => 11:54:11
DATE PLOTTED => 02 OCT 2008
USERNAME => dwinrow

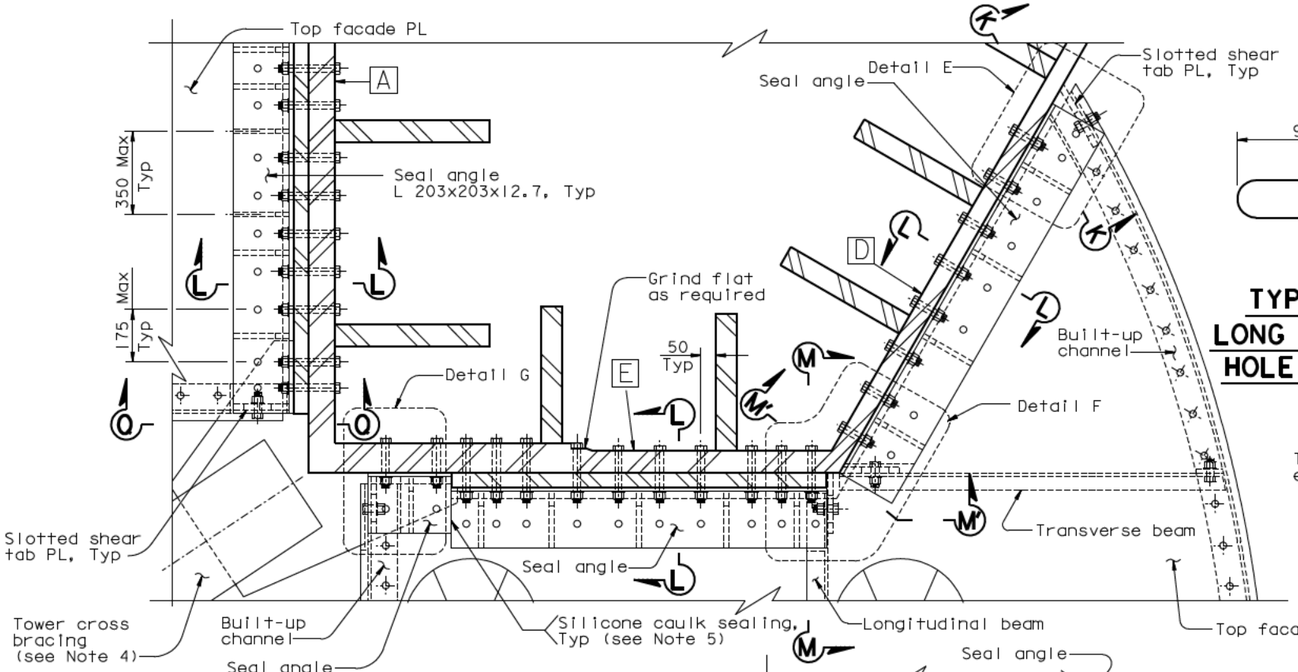

TYPICAL LONG SLOTTED HOLE DETAIL

1:2

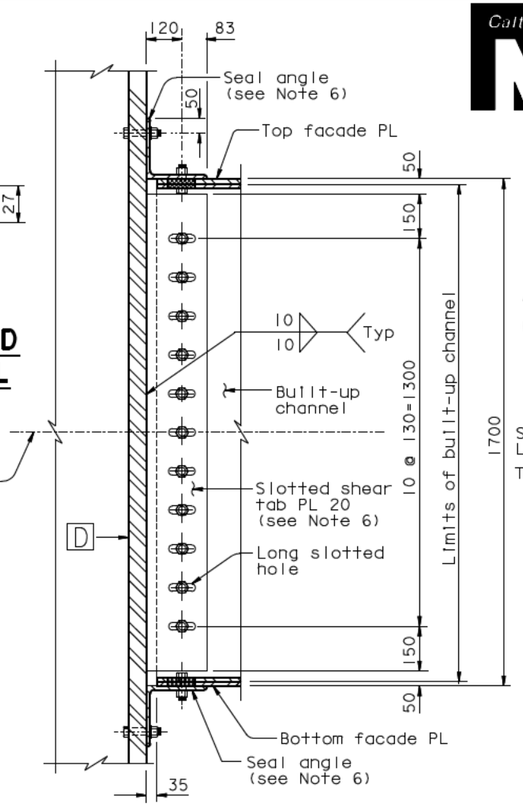

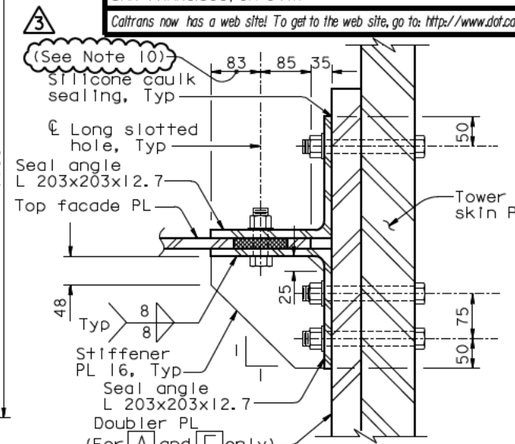

SECTION L-L

1:5 (see Note 9)

LEGEND:

⊕ M24 A325-X Bolt

○ 24 Dia A307 Bolt

NOTES:

1. All bolts are A325 M24 unless noted otherwise.
2. For details of built-up channel, see "Tower Strut Facade Details No.3" sheet.
3. All details of tower strut facade shall account for the 1% slope of the tower top and bottom facade plates.
4. For tower cross bracing location, see "Tower Strut Details No.9" sheet.
5. Seal plates and sealant material shall be placed such that the interior of the tower strut facade is properly sealed from the exterior.
6. PTFE film (0.5 thick) shall be applied on the faying surfaces between the slotted shear tab and the built-up channel plate, between the seal angle and the top facade PL, and between the seal angle and the bottom facade PL.
7. Seal plate shall be tight fit to the cross bracing gusset plate.
8. Cope vertical channel plate and slotted shear tab as necessary to accomodate cross bracing gusset plate. Slot location shall match slot in doubler plate . For doubler plate slot details, see "Tower Shaft Details No.11" sheet.
9. For sealing plate details, see Details E,F and Sections N-N,P-P,Q-Q.
10. At the Contractor's option, exterior sealing angle may be coped as required for clearance with access door cover plate to accommodate design movement, subject to review and approval of the Engineer.

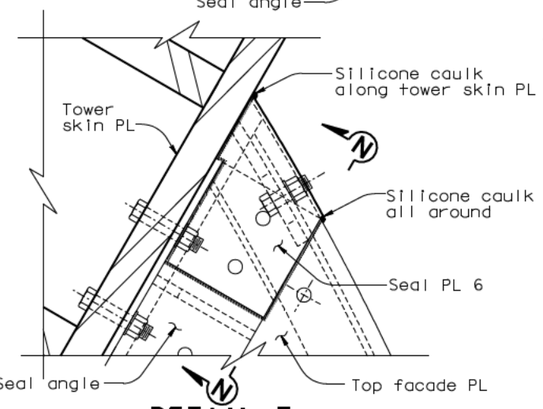

DETAIL E (Detail G similar)

1:5

(Typical edge seal Plate)

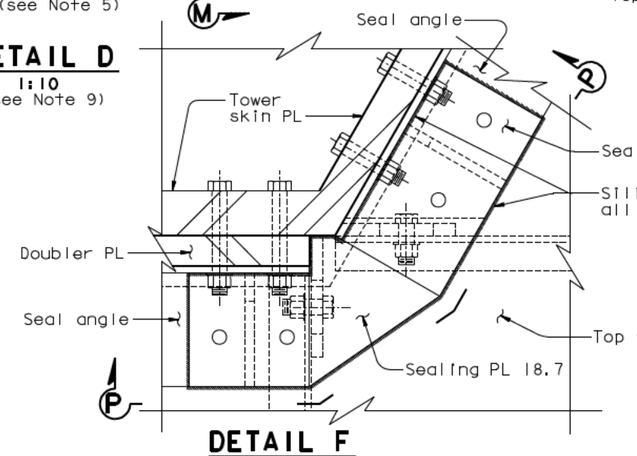

DETAIL F

1:5

(Typical corner seal Plate)

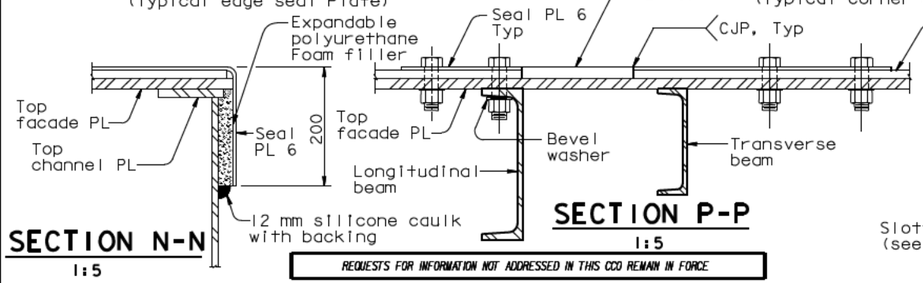

SECTION N-N

1:5

SECTION P-P

1:5

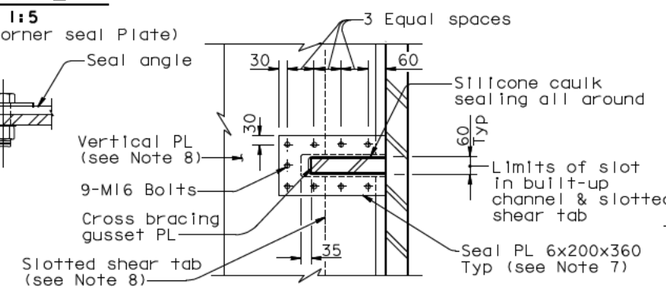

SECTION Q-Q (Typical gusset seal Plate)

1:10

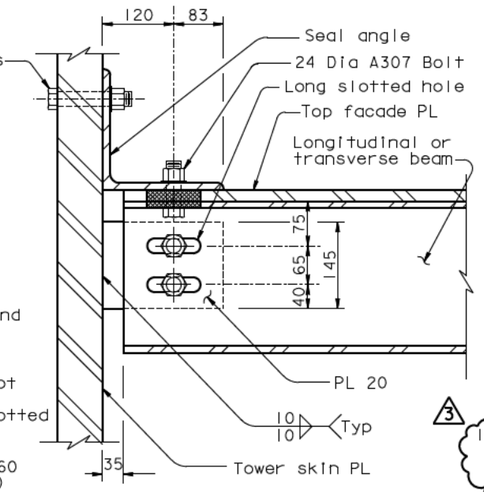

SECTION K-K (Typical connection of built-up channel to tower shaft UNO)

1:10 (see Note 9)

SECTION M-M (Section M'-M' similar)

1:5 (see Note 9)

ALL DIMENSIONS ARE IN MILLIMETERS UNLESS OTHERWISE SHOWN

DIST.	COUNTY	ROUTE	KILOMETER POST TOTAL PROJECT	SHEET NO.	TOTAL SHEETS
04	SF	80	13.2/13.9	575R3	1204

REGISTERED ENGINEER - CIVIL

12-6-04

PLANS APPROVAL DATE

REGISTERED PROFESSIONAL ENGINEER — Marwan N. Nader — No. C 054426 — Exp. 12/31/09 — CIVIL — STATE OF CALIFORNIA

The State of California or its officers or agents shall not be responsible for the accuracy or completeness of electronic copies of this plan sheet.

T.Y. LIN / MOFFATT & NICHOL
825 BATTERY STREET
SAN FRANCISCO, CA 94111

Caltrans now has a web site! To get to the web site, go to: http://www.dot.ca.gov

REQUESTS FOR INFORMATION NOT ADDRESSED IN THIS CCO REMAIN IN FORCE

MARK	DATE	DESCRIPTIONS	BY	CH'D	CCO#
		REVISIONS			
3	10/01/08	TOWER ACCESS	NV	MN	65
2	07/11/08	TOWER STRUT FACADES AND CROSS BRACING	NV	MN	64
1	08/01/07	TOWER STRUT FACADE PTFE	NV	MN	48

CONTRACT CHANGE ORDER NO. ____
SHEET ____ OF ____

	BY	CHECKED
DESIGN	M. Nader	M. Gulyas
DETAILS	L. Rus	M. Gulyas
QUANTITIES	L. Rus	Y. Zhang

PREPARED FOR THE STATE OF CALIFORNIA DEPARTMENT OF TRANSPORTATION

R. Manzanarez
PROJECT ENGINEER

CU 04
EA 0120F1

BRIDGE NO. 34-0006L/R
KILOMETER POST 13.2/13.9

SAN FRANCISCO OAKLAND BAY BRIDGE
EAST SPAN SEISMIC SAFETY PROJECT
SELF-ANCHORED SUSPENSION BRIDGE
(SUPERSTRUCTURE & TOWER)

TOWER STRUT FACADE DETAILS NO. 4

DISREGARD PRINTS BEARING EARLIER REVISION DATES

REVISION DATES (PRELIMINARY STAGE ONLY): 08/02/99 | 05/31/01 | 04/08/02 | 04/26/02 | 12/19/02

SHEET 158R3 OF

R. Vallzadeh/V. Toan/Y.L./W.L./F.C.
DESIGN OVERSIGHT
SIGN OFF DATE 10/01/08

Rev. Date: 5-18-98

ORIGINAL SCALE IN MILLIMETERS FOR REDUCED PLANS 0 10 20 30 40 50 60 70 80 90 100

FILE -> I:\bb\04-012001\sas\contract plans and cco\cco\In progress\cco#65\update 10-07-08\dgn\aetws13.dgn

USERNAME => dwinrow DATE PLOTTED => 02 OCT 2008 TIME PLOTTED => 11:56:41

100 % PS&E

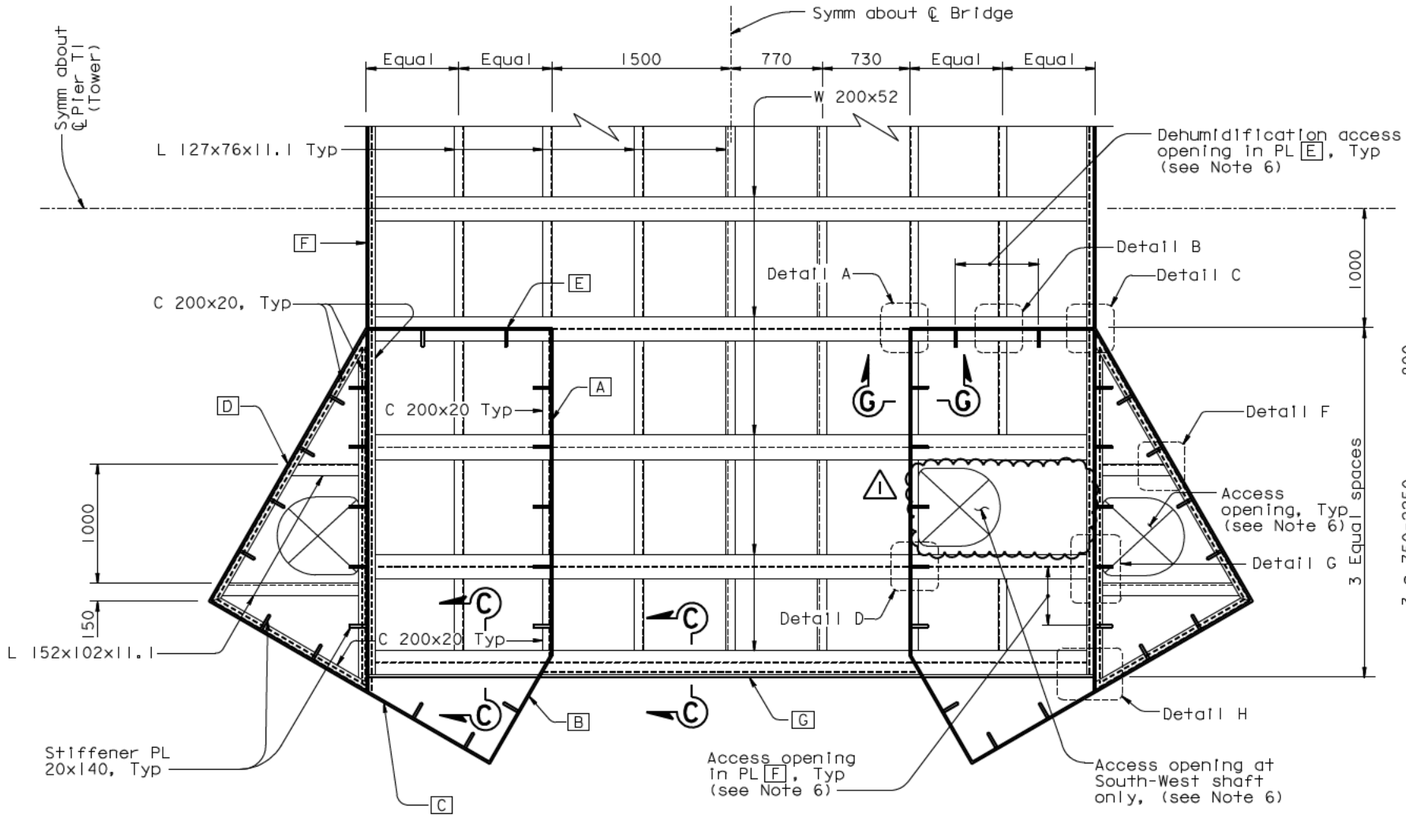

Tower head PL	Thickness
A to G	16

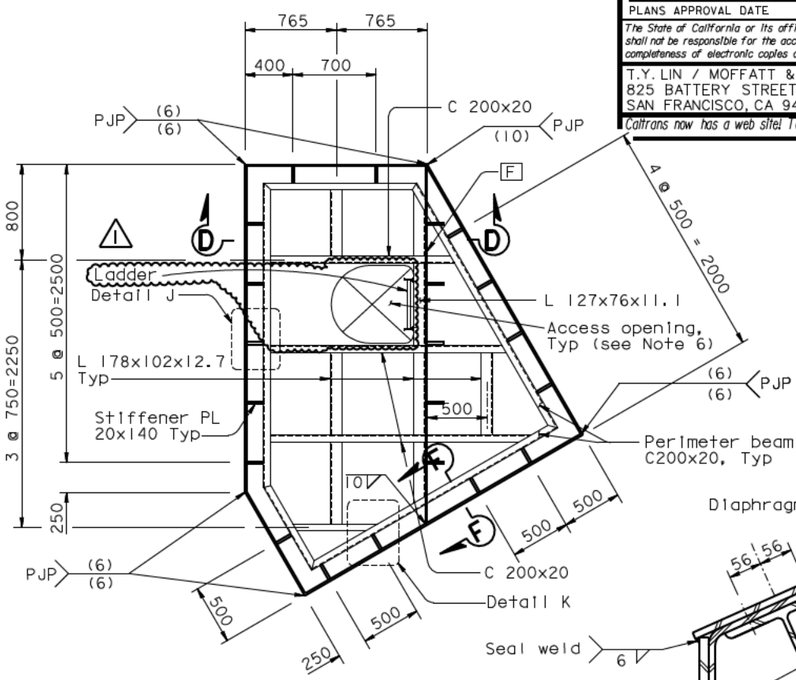

SECTION B-B (Framing plan at top of the Tower at Elev 160 m. Tower top PL not shown for clarity)
1:25

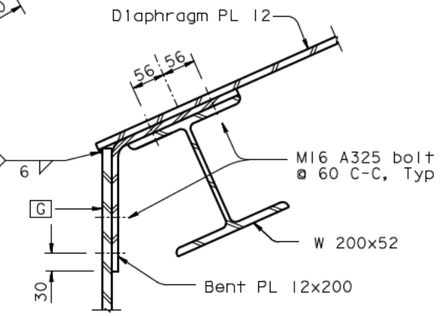

SECTION C-C (see Note 1)
1:5

SECTION E-E (Partial framing plan for tower head diaphragm, diaphragm PL not shown for clarity) (see Note 7)
1:25

LEGEND:

A Tower head skin PL A

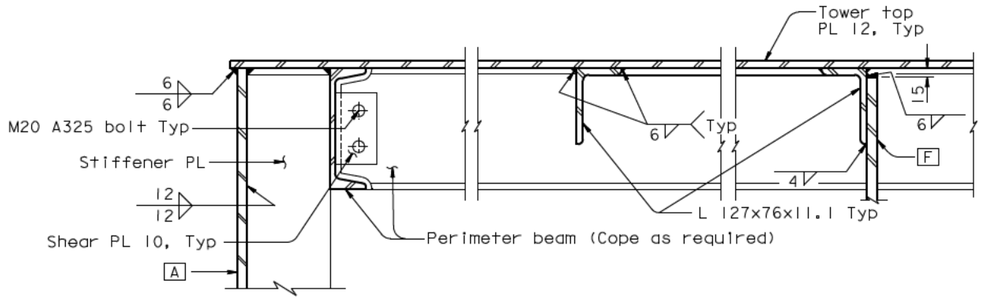

SECTION D-D
1:5

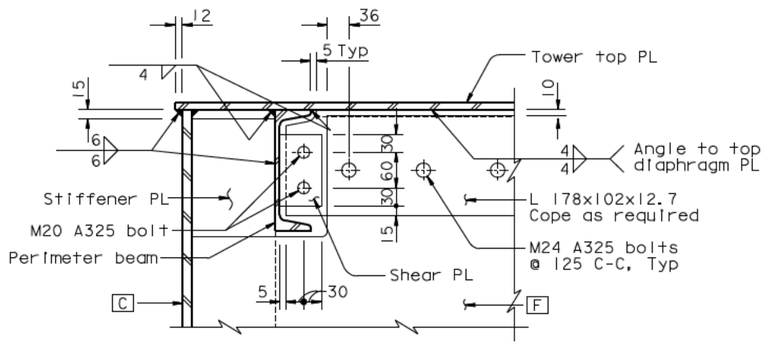

SECTION F-F
1:5

NOTES:

1. All details shall account for the actual slope and curvature of the tower head diaphragm and slope of tower top plate.
2. For Details A, B, C, D and Section G-G, see "Tower Head Details No.4" sheet.
3. For Details F, G and H, see "Tower Head Details No.5" sheet.
4. For Details J and K, see "Tower Head Details No.6" sheet.
5. For connection details, see schedule on "Tower Head Details No.4" sheet.
6. For tower access opening details, see "Tower Access Details" sheets.
7. Section E-E is shown rotated 90° counterclockwise.

ALL DIMENSIONS ARE IN MILLIMETERS UNLESS OTHERWISE SHOWN

DIST.	COUNTY	ROUTE	KILOMETER POST TOTAL PROJECT	SHEET NO.	TOTAL SHEETS
04	SF	80	13.2/13.9	796R1	1204

REGISTERED ENGINEER - CIVIL
12-6-04
PLANS APPROVAL DATE
The State of California or its officers or agents shall not be responsible for the accuracy or completeness of electronic copies of this plan sheet.
REGISTERED PROFESSIONAL ENGINEER — Marwan N. Nader — No. C 054426 — Exp. 12/31/09 — CIVIL — STATE OF CALIFORNIA

T.Y. LIN / MOFFATT & NICHOL
825 BATTERY STREET
SAN FRANCISCO, CA 94111

Caltrans now has a web site! To get to the web site, go to: http://www.dot.ca.gov

MARK	DATE	DESCRIPTIONS	BY	CH'D	CCO#
		REVISIONS			
1	07/18/08	TOWER ACCESS	NV	MN	65

REQUESTS FOR INFORMATION NOT ADDRESSED IN THIS CCO REMAIN IN FORCE

CONTRACT CHANGE ORDER NO. ____
SHEET ___ OF ___

R. Valizadeh/V. Toan/Y.L./W.L./F.C.
DESIGN OVERSIGHT
SIGN OFF DATE 07/18/08

DESIGN	BY M. Nader	CHECKED	S. Camo
DETAILS	BY R. Kanitkar	CHECKED	G. Baker
QUANTITIES	BY R. Kanitkar	CHECKED	Y. Zhang

PREPARED FOR THE STATE OF CALIFORNIA DEPARTMENT OF TRANSPORTATION

R. Manzanarez
PROJECT ENGINEER

BRIDGE NO. 34-0006L/R
KILOMETER POST 13.2/13.9

CU 04
EA 0120F1

SAN FRANCISCO OAKLAND BAY BRIDGE
EAST SPAN SEISMIC SAFETY PROJECT
SELF-ANCHORED SUSPENSION BRIDGE (SUPERSTRUCTURE & TOWER)

TOWER HEAD DETAILS NO. 3

Rev. Date: 5-18-98

ORIGINAL SCALE IN MILLIMETERS FOR REDUCED PLANS 0 10 20 30 40 50 60 70 80 90 100

DISREGARD PRINTS BEARING EARLIER REVISION DATES

REVISION DATES (PRELIMINARY STAGE ONLY): 08/22/99 | 05/31/01 | 04/08/02 | 07/01/02 | 12/18/02 | 11/13/05

SHEET 379R1 OF

FILE -> I:\bb\04-0120F1\sas\contract plans and cco\cco\In progress\cco#65\update 10-07-08\dgn\aghed03.dgn

USERNAME => dwinrow DATE PLOTTED => 02 OCT 2008 TIME PLOTTED => 11:58:45

100 % PS&E

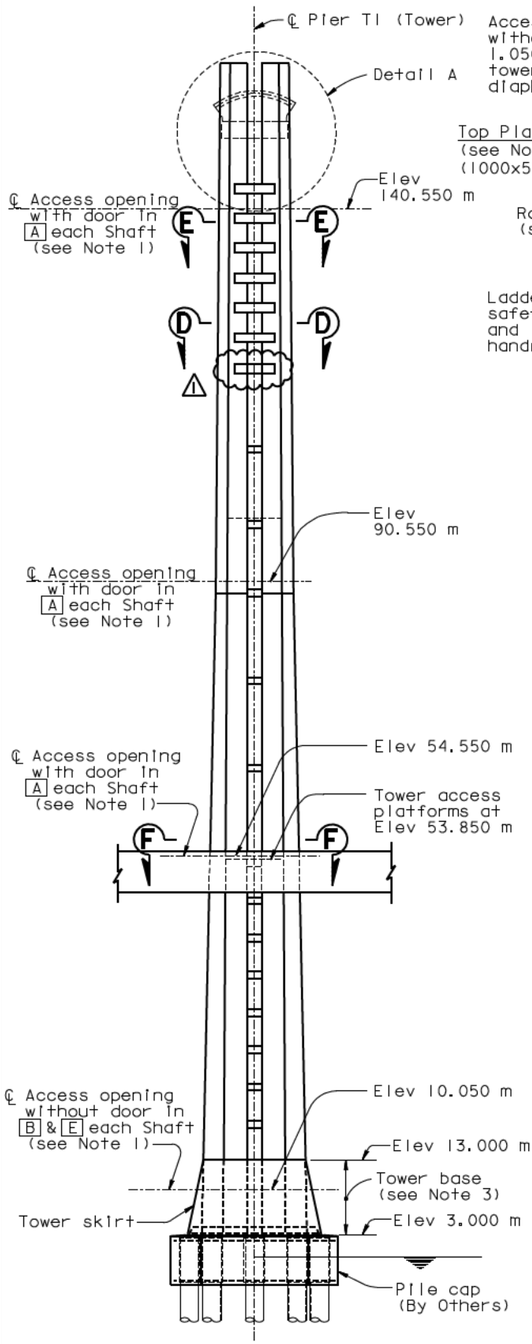

ELEVATION (Looking North)
1:400

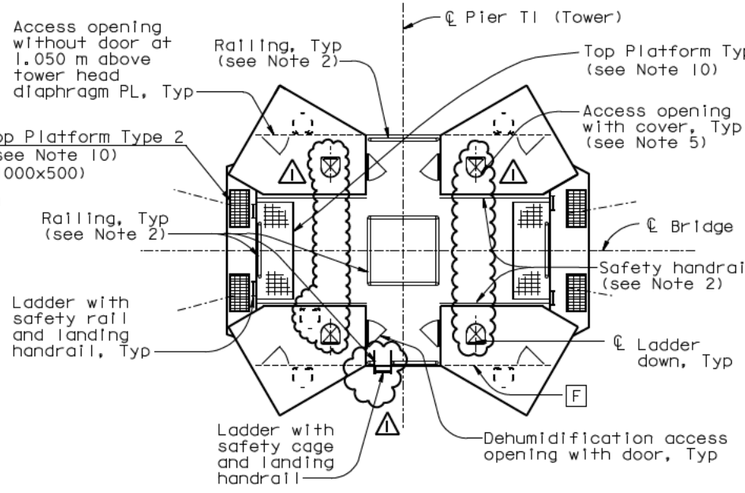

VIEW B-B (See Note 7)
1:80

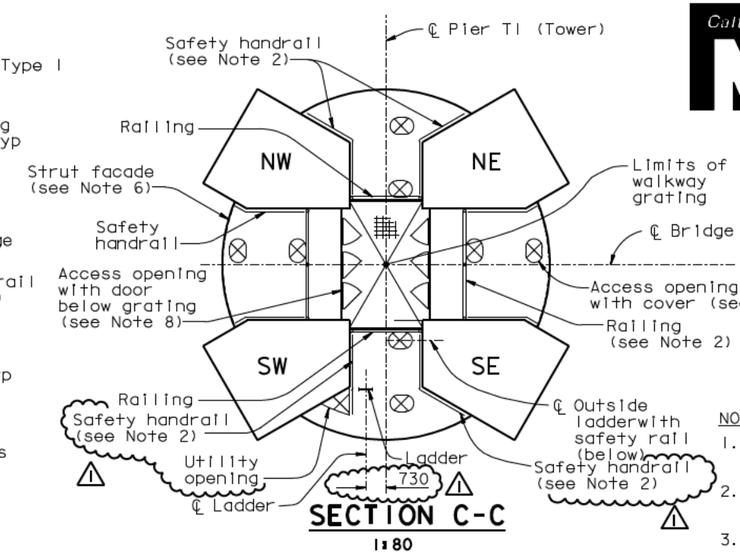

SECTION C-C
1:80

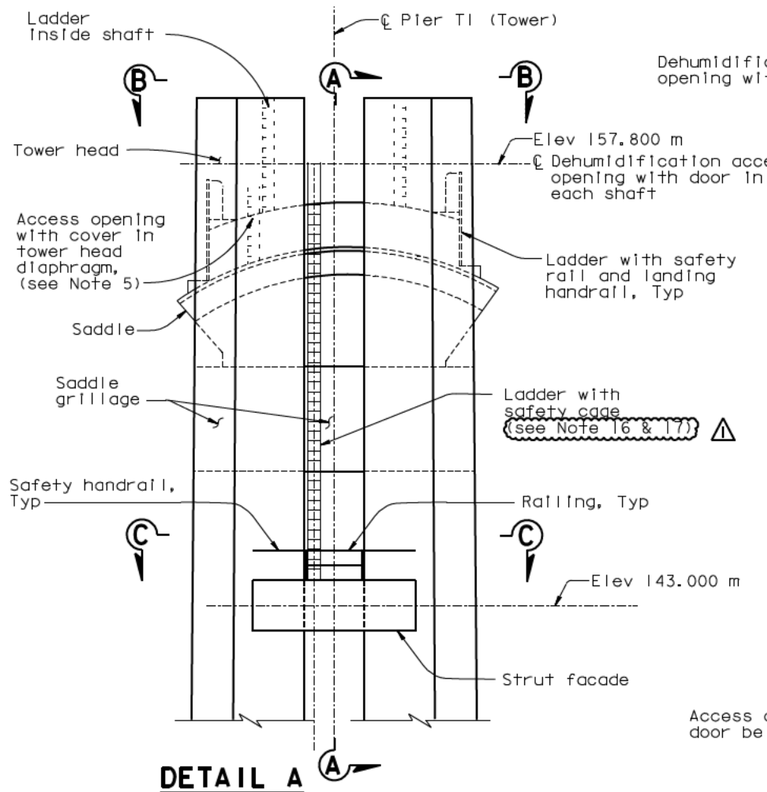

DETAIL A
1:100

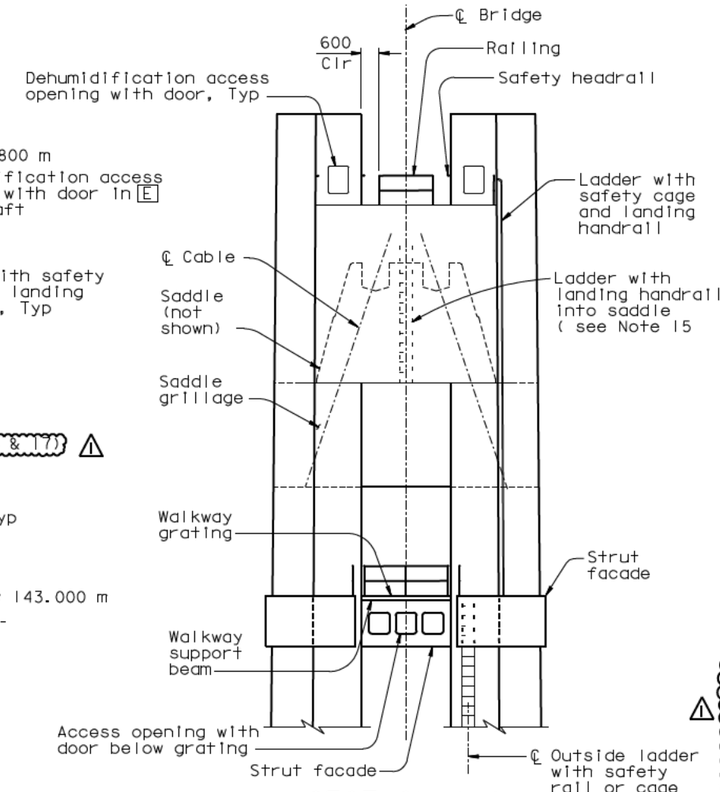

SECTION A-A
1:100

LEGEND:

▽ Access opening (see Notes 1,3,8 & 14)

A Tower shaft skin plate A

NOTES:

1. For location of access openings in tower shafts, see "Tower Shaft Details" sheets.
2. For railing and safety handrail details, see "Tower Access Details No.8" sheet.
3. For additional access details in tower base, see "Tower Access Details No.2" sheet.
4. For ladder details not shown, see "Tower Access Details No.7" sheet.
5. For access opening details, see Detail E on "Tower Access Details No.8" sheet. For cover details, see "Tower Access Details No.9" sheet.
6. For strut facade, see "Tower Strut Facade Details" sheets.
7. For location of access openings in tower head, see "Tower Head Details" sheets.
8. For access opening and door details, see "Tower Access Detail No.4" sheet. Access openings are without door unless noted otherwise.
9. For Section D-D and E-E, see "Tower Access Details No.3" sheet.
10. For Top Platform Types 1 and 2, see "Tower Access Detail No.9" sheet.
11. For Section F-F, see "Tower Access Details No.10" sheet.
12. For walkway grating and support beam, see "Tower Access Details No.3" sheet.
13. For access opening cover details, see "Tower Access Details No.9" sheet.
14. For location of access openings in strut facade, see "Tower Strut Facade Details" sheets.
15. For location of saddle access opening and ladder, see "Tower Saddle Housing Details" sheets.
16. At locations where ladder lengths exceed 6.5 meters, contraction joints shall be provided. Ladder length is defined as the distance between the centerlines of the top and bottom end supports. Contraction joints shall be located below ladder supports unless noted otherwise. For contraction joint details, see "Tower Access Details No.7" sheet.
17. Ladder supports shall be spaced at 6 meters maximum.

ALL DIMENSIONS ARE IN MILLIMETERS UNLESS OTHERWISE SHOWN

Caltrans Metric

DIST.	COUNTY	ROUTE	KILOMETER POST TOTAL PROJECT	SHEET NO.	TOTAL SHEETS
04	SF	80	13.2/13.9	917R1	1204

REGISTERED ENGINEER - CIVIL

12-6-04
PLANS APPROVAL DATE

REGISTERED PROFESSIONAL ENGINEER — Marwan N. Nader — No. C 054426 — Exp. 12/31/09 — CIVIL — STATE OF CALIFORNIA

The State of California or its officers or agents shall not be responsible for the accuracy or completeness of electronic copies of this plan sheet.

T.Y.LIN / MOFFATT & NICHOL
825 BATTERY STREET
SAN FRANCISCO, CA 94111

Caltrans now has a web site! To get to the web site, go to: http://www.dot.ca.gov

REQUESTS FOR INFORMATION NOT ADDRESSED IN THIS CCO REMAIN IN FORCE

MARK	DATE	REVISIONS	BY	CH'D	CCO#
1	07/18/08	TOWER ACCESS	NV	MN	65

CONTRACT CHANGE ORDER NO.____
SHEET ___ OF ___

	BY	CHECKED
DESIGN	M. Nader	M. Gulyas
DETAILS	G. Baker	L. Rus
QUANTITIES	D. Turner	J. Leventini

PREPARED FOR THE STATE OF CALIFORNIA
DEPARTMENT OF TRANSPORTATION

R. Manzanarez
PROJECT ENGINEER

BRIDGE NO. 34-0006L/R
KILOMETER POST 13.2/13.9

R. Vallzadeh/V.Toan/Y.L./W.L./F.C.
DESIGN OVERSIGHT
SIGN OFF DATE 07/18/08

Rev. Date: 5-18-98

ORIGINAL SCALE IN MILLIMETERS FOR REDUCED PLANS 0 10 20 30 40 50 60 70 80 90 100

CU 04
EA 0120F1

DISREGARD PRINTS BEARING EARLIER REVISION DATES

REVISION DATES (PRELIMINARY STAGE ONLY): 05/18/98 08/02/99 05/31/01 04/08/02 07/01/02 12/10/02 10/12/04

SHEET 500R1 OF

SAN FRANCISCO OAKLAND BAY BRIDGE
EAST SPAN SEISMIC SAFETY PROJECT
SELF-ANCHORED SUSPENSION BRIDGE
(SUPERSTRUCTURE & TOWER)

TOWER ACCESS DETAILS NO. 1

FILE -> I:\bb\04-012001\sas\contract plans and cco\cco\In progress\cco#65\update 10-07-08\dgn\akacc06.dgn

USERNAME => GWinrow DATE PLOTTED => 02 OCT 2008 TIME PLOTTED => 13:18:11

100 % PS&E

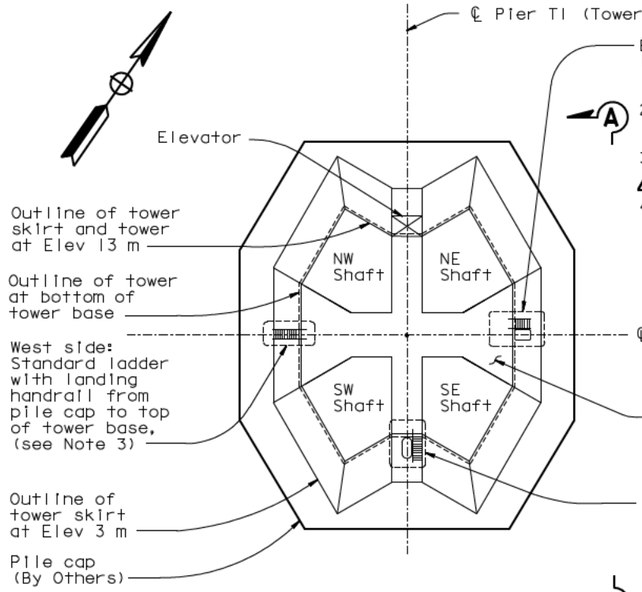

EXTERNAL PLAN VIEW AT ELEV 13.000 m

1:200

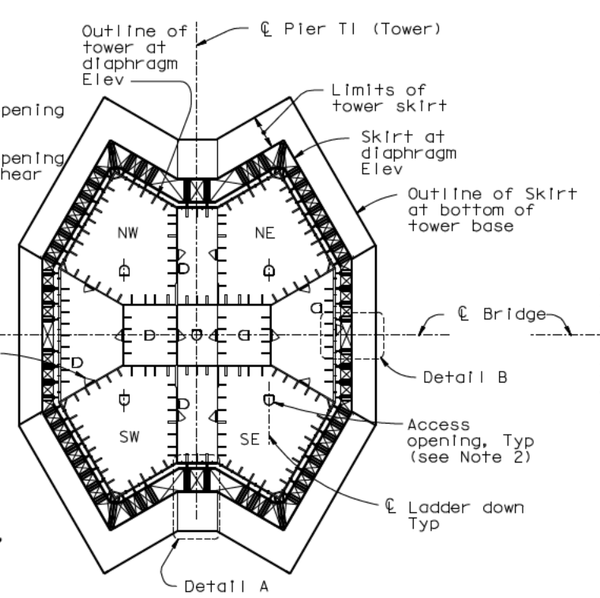

PLAN SECTION AT DIAPHRAGM AT ELEV 9.000 m

NTS

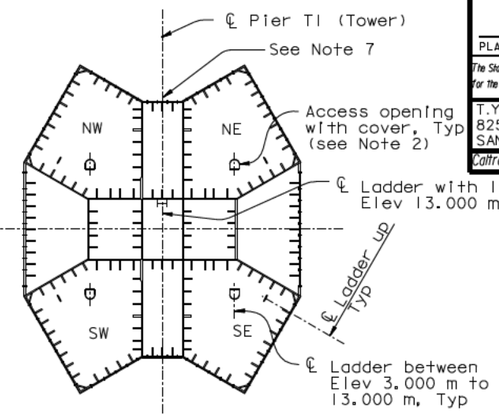

PLAN SECTION AT DIAPHRAGM AT ELEV 13.000 m

NTS

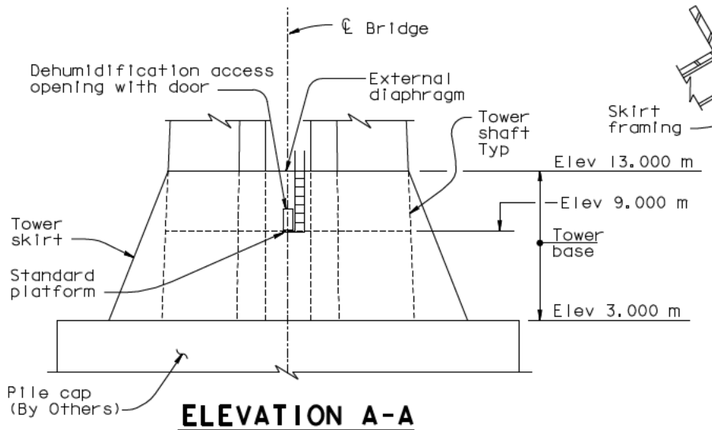

ELEVATION A-A

1:200

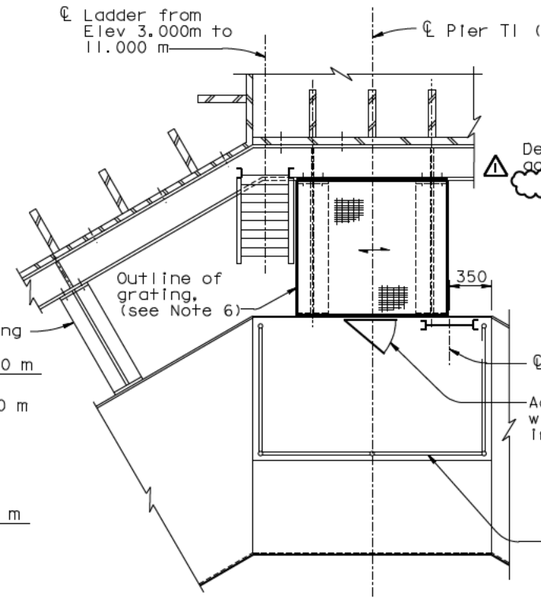

DETAIL A

1:25

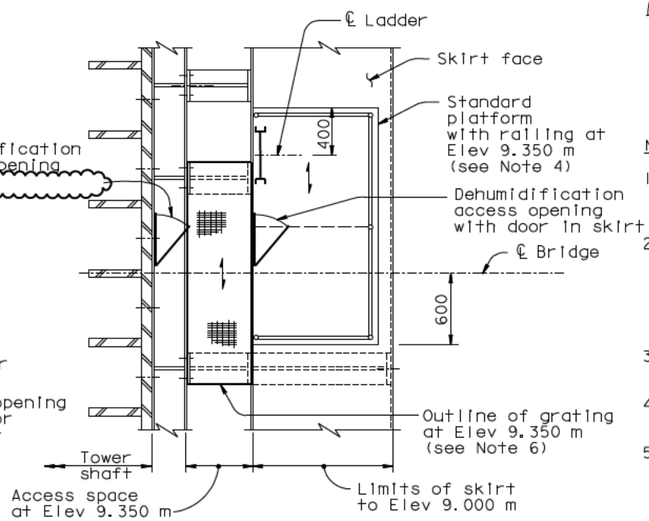

DETAIL B

1:25

LEGEND:

- Access opening (see Note 5)
- Direction of main reinforcement of grating
- A — Tower shaft skin plate A

NOTES:

1. For access opening in tower shafts, see "Tower Shaft Details" sheets. All openings at Elev 10.050 m UNO.
2. For access opening in diaphragms, see "Tower Diaphragm Details" sheets. For access opening details see Detail E on "Tower Access Details No.8" sheet. For cover details, see "Tower Access Details No.9" sheet.
3. For ladder details not shown, see "Tower Access Details No. 7" sheet.
4. For standard platform details, see "Tower Access Details No.9" sheet.
5. For access opening and door details, see "Tower Access Details No.4" sheet. Access openings are without door, unless noted otherwise.
6. Galvanized steel grating with fasteners to be provided by Contractor. Grating working load shall be 4.8 kN/m² (100psf) unless noted otherwise.
7. For elevator landing and safety enclosures, see "Tower Elevator Support Details" sheets.

DIST.	COUNTY	ROUTE	KILOMETER POST TOTAL PROJECT	SHEET NO.	TOTAL SHEETS
04	SF	80	13.2/13.9	918R1	1204

REGISTERED ENGINEER - CIVIL

12-6-04
PLANS APPROVAL DATE

REGISTERED PROFESSIONAL ENGINEER — Marwan N. Nader — No. C 054426 — Exp. 12/31/09 — CIVIL — STATE OF CALIFORNIA

The State of California or its officers or agents shall not be responsible for the accuracy or completeness of electronic copies of this plan sheet.

T.Y. LIN / MOFFATT & NICHOL
825 BATTERY STREET
SAN FRANCISCO, CA 94111

Caltrans now has a web site! To get to the web site, go to: http://www.dot.ca.gov

REQUESTS FOR INFORMATION NOT ADDRESSED IN THIS CCO REMAIN IN FORCE

ALL DIMENSIONS ARE IN MILLIMETERS UNLESS OTHERWISE SHOWN

MARK	DATE	REVISIONS	BY	CH'D	CCO#
1	07/18/08	TOWER ACCESS	NV	MN	65

CONTRACT CHANGE ORDER NO. ____
SHEET ___ OF ___

R. Valizadeh/V. Toan/Y.L./W.L./F.C.
DESIGN OVERSIGHT
SIGN OFF DATE 07/18/08

Rev. Date: 5-18-98

	BY	CHECKED
DESIGN	M. Nader	M. Gulyas
DETAILS	G. Baker	L. Rus
QUANTITIES	D. Turner	J. Leventini

PREPARED FOR THE STATE OF CALIFORNIA DEPARTMENT OF TRANSPORTATION

R. Manzanarez
PROJECT ENGINEER

BRIDGE NO. 34-0006L/R
KILOMETER POST 13.2/13.9

CU 04
EA 0120F1

SAN FRANCISCO OAKLAND BAY BRIDGE
EAST SPAN SEISMIC SAFETY PROJECT
SELF-ANCHORED SUSPENSION BRIDGE (SUPERSTRUCTURE & TOWER)

TOWER ACCESS DETAILS NO. 2

DISREGARD PRINTS BEARING EARLIER REVISION DATES

REVISION DATES (PRELIMINARY STAGE ONLY)							SHEET	OF
05/26/99	05/31/01	04/08/02	07/31/02	12/19/02			50 1R1	

ORIGINAL SCALE IN MILLIMETERS FOR REDUCED PLANS 0 10 20 30 40 50 60 70 80 90 100

FILE -> I:\bb\04-012001\sas\contract plans and cco\cco\in progress\cco#65\update 10-07-08\dgn\akacc10.dgn

USERNAME => dwinrow DATE PLOTTED => 02 OCT 2008 TIME PLOTTED => 13:28:32

100 % PS&E

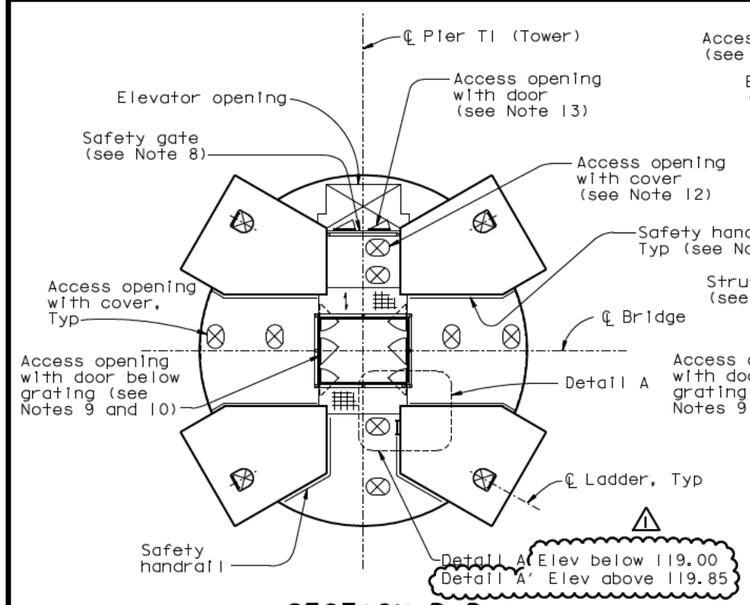

SECTION D-D

NTS

Typical for all tower strut facades UNO in Section E-E. Facade Type A is shown. Type B similar (see Notes 5 and 10)

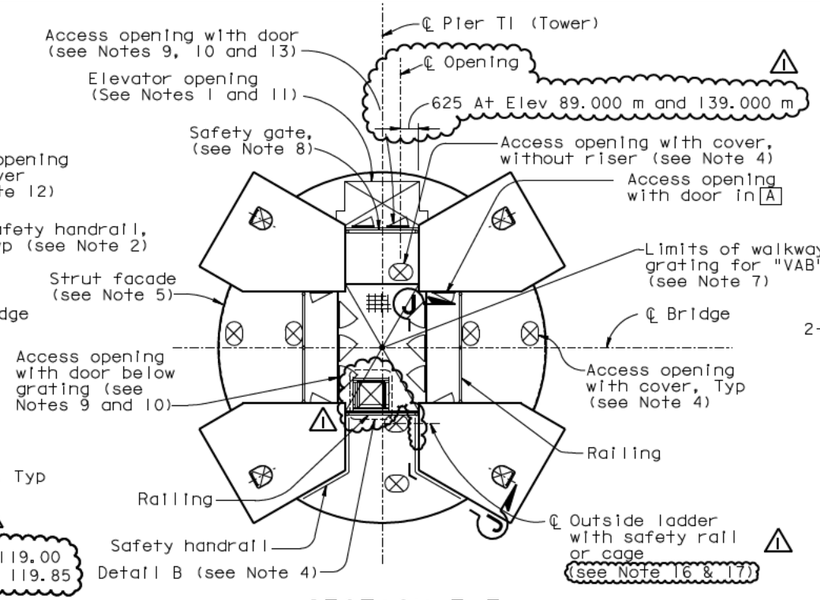

SECTION E-E

NTS

(Shown for tower strut facade corresponding to tower strut at Elev 139.000 m, safety gates and door locations at Elev 53.000 m and 89.000 m are similar)

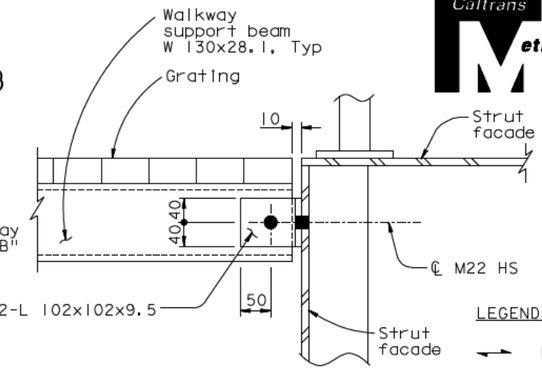

SECTION G-G

1:5

(Section G'-G' similar)

LEGEND:

- Direction of main reinforcement of grating
- Access opening
- A — Tower shaft skin plate A

NOTES:

1. For elevator opening details, see "Tower Strut Facade Details" sheets.
2. For railing and safety handrail details, see "Tower Access Details No.8" sheet.
3. For ladder details not shown, see "Tower Access Details No.7" sheet.
4. For Detail B and access cover details, see "Tower Access Details No.9" sheet. All covers are with risers, unless noted otherwise.
5. For strut facade, see "Tower Strut Facade Details" sheets.
6. Galvanized steel grating with fasteners to be provided by Contractor. Grating working load shall be 4.8 kN/m² (100psf) unless noted otherwise.
7. Gratings at elevations 53.000, 89.000 and 139.000 shall support "VAB" equipment, to be supplied by others. Walkway grating for "VAB" shall be galvanized steel grating with fasteners to be provided by Contractor. Grating working load shall be 14.8 kN/m² (300psf).
8. For Safety gate details, see "Road Plans" sheets.
9. For access opening and door details, see "Tower Access Details No.4" sheet. Access openings are without door unless noted otherwise.
10. For location of access openings in strut facade, see "Tower Strut Facade Details" sheets.
11. For location of elevator landing and safety enclosures, see "Tower Elevator Support Details" sheets.
12. This access opening is to be provided in strut facades from elevation 18.000 m to 77.000 m only.
13. These access openings are to be provided between elevation 89.000 m to 143.000 m.
14. For bottom face access opening provide door to swing in. Door shall open clear of obstructions. For other details, see door at vertical face of tower strut facade on "Tower Access Details No.4" sheet.
15. The Contractor shall provide ladders inside the front facades to align with the exterior ladder segments. Ladder do not penetrate the strut facade plates.

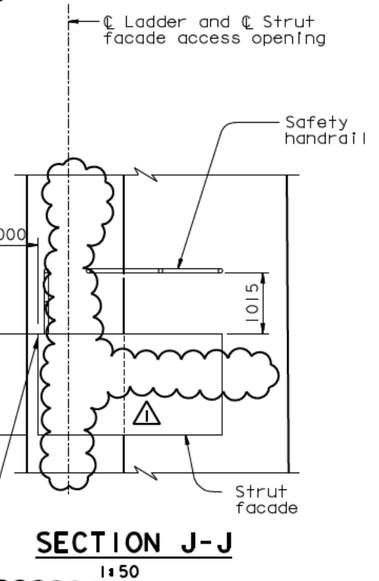

SECTION J-J

1:50

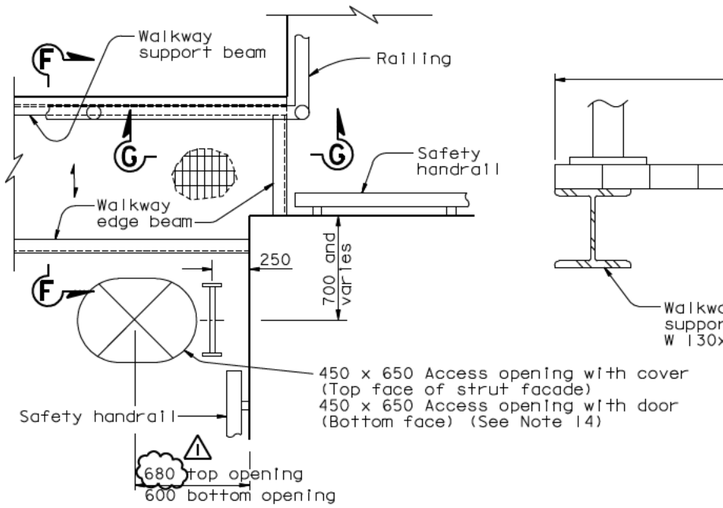

DETAIL A

1:20

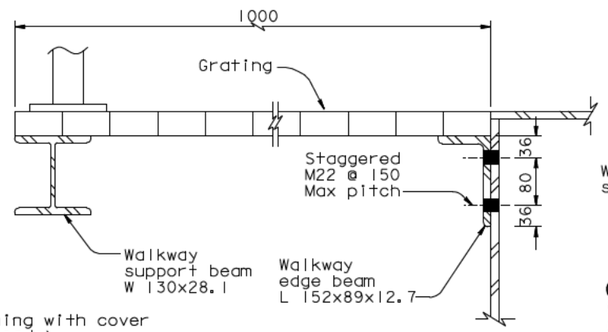

SECTION F-F

1:5

16. At locations where ladder lengths exceed 6.5 meters, contraction joints shall be provided. Ladder length is defined as the distance between the centerlines of the top and bottom end supports. Contraction joints shall be located below ladder supports unless noted otherwise. For contraction joint details, see "Tower Access Details No.7" sheet.
17. Ladder supports shall be spaced at 6 meters maximum.
18. For Section Z-Z and Detail A', see "Tower Access Details No.3A" sheet.

ALL DIMENSIONS ARE IN MILLIMETERS UNLESS OTHERWISE SHOWN

DIST.	COUNTY	ROUTE	KILOMETER POST TOTAL PROJECT	SHEET NO.	TOTAL SHEETS
04	SF	80	13.2/13.9	919R1	1204

REGISTERED ENGINEER - CIVIL

12-6-04
PLANS APPROVAL DATE

REGISTERED PROFESSIONAL ENGINEER — Marwan N. Nader, No. C 054426, Exp. 12/31/09, CIVIL, STATE OF CALIFORNIA

The State of California or its officers or agents shall not be responsible for the accuracy or completeness of electronic copies of this plan sheet.

T.Y. LIN / MOFFATT & NICHOL
825 BATTERY STREET
SAN FRANCISCO, CA 94111

Caltrans now has a web site! To get to the web site, go to: http://www.dot.ca.gov

REQUESTS FOR INFORMATION NOT ADDRESSED IN THIS CCO REMAIN IN FORCE

MARK	DATE	REVISIONS	NV BY	MN CH'D	65 CCO#
1	07/18/08	TOWER ACCESS			

CONTRACT CHANGE ORDER NO. ____
SHEET ___ OF ___

R. Vallizadeh/V. Toan/Y.L./W.L./F.C.
DESIGN OVERSIGHT
SIGN OFF DATE 07/18/08

Rev. Date: 5-18-98

	BY	CHECKED
DESIGN	M. Nader	M. Gulyas
DETAILS	G. Baker	L. Rus
QUANTITIES	D. Turner	J. Leventini

ORIGINAL SCALE IN MILLIMETERS FOR REDUCED PLANS 0 10 20 30 40 50 60 70 80 90 100

PREPARED FOR THE STATE OF CALIFORNIA DEPARTMENT OF TRANSPORTATION

R. Manzanarez
PROJECT ENGINEER

CU 04
EA 0120F1

BRIDGE NO. 34-0006L/R
KILOMETER POST 13.2/13.9

DISREGARD PRINTS BEARING EARLIER REVISION DATES

REVISION DATES (PRELIMINARY STAGE ONLY): 05/15/98 | 08/28/98 | 05/24/01 | 04/08/02 | 07/31/02 | 12/19/02

SAN FRANCISCO OAKLAND BAY BRIDGE
EAST SPAN SEISMIC SAFETY PROJECT
SELF-ANCHORED SUSPENSION BRIDGE
(SUPERSTRUCTURE & TOWER)

TOWER ACCESS DETAILS NO.3

SHEET 502R1 OF

FILE -> I:\bb\04-012001\sas\contract plans and cco\cco\In progress\cco#65\update 10-07-08\dgn\akacc14.dgn

USERNAME => dwinrow DATE PLOTTED => 02 OCT 2008 TIME PLOTTED => 13:30:52
100% PS&E

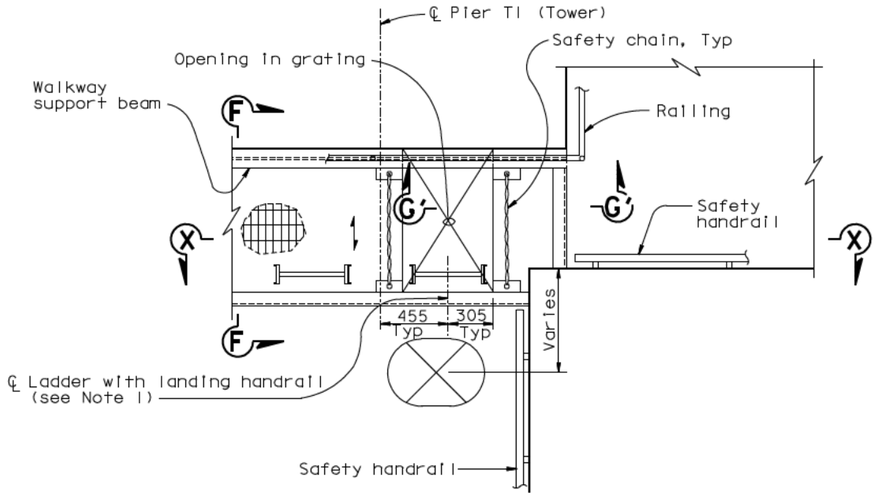

DETAIL A' (Elev 135.850 shown, other applicable Elevations similar)
1:20

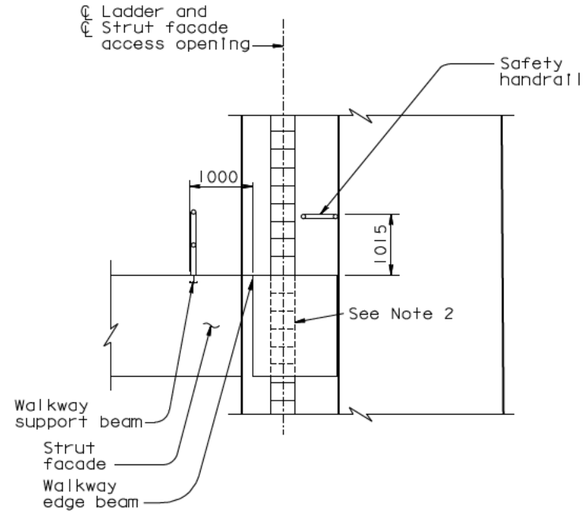

SECTION Z-Z
1:50

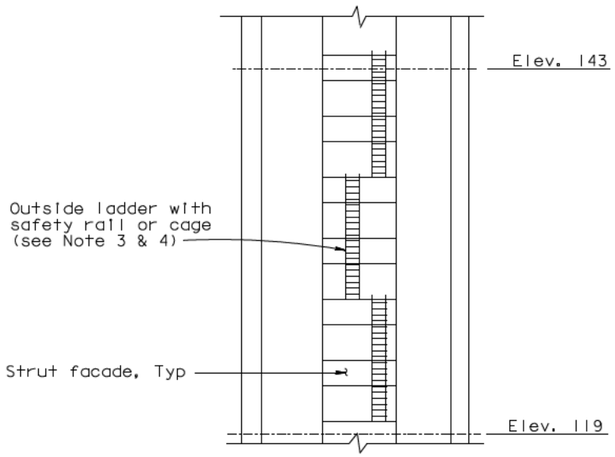

SECTION X-X
NTS

DIST.	COUNTY	ROUTE	KILOMETER POST TOTAL PROJECT	SHEET NO.	TOTAL SHEETS
04	SF	80	13.2/13.9	919SI	1204

REGISTERED ENGINEER - CIVIL
05-09-08
PLANS APPROVAL DATE
Marwan N. Nader No. C 054426 Exp. 12/31/09 CIVIL — REGISTERED PROFESSIONAL ENGINEER — STATE OF CALIFORNIA

The State of California or its officers or agents shall not be responsible for the accuracy or completeness of electronic copies of this plan sheet.

T.Y. LIN / MOFFATT & NICHOL
825 BATTERY STREET
SAN FRANCISCO, CA 94111

Caltrans now has a web site! To get to the web site, go to: http://www.dot.ca.gov

REQUESTS FOR INFORMATION NOT ADDRESSED IN THIS CCO REMAIN IN FORCE

MARK	DATE	REVISIONS	BY	CH'D	CCO#
1	07/18/08	TOWER ACCESS	NV	MN	65

CONTRACT CHANGE ORDER NO. ____
SHEET ___ OF ___

NOTES:

1. For landing handrail and ladder details, see "Tower Access Details No.7" sheet.
2. The Contractor shall provide ladders inside the front facades to align with the exterior ladder segments. Ladders do not penetrate the strut facade plates.
3. At locations where ladder lengths exceed 6.5 meters, contraction joints shall be provided. Ladder length is defined as the distance between the centerlines of the top and bottom end supports. Contraction joints shall be located below ladder supports unless noted otherwise. For contraction joint details, see "Tower Access Details No.7" sheet.
4. Ladder supports shall be spaced at 6 meters maximum.

100% PS&E
DATE PLOTTED => 02 OCT 2008 TIME PLOTTED => 13:31:46
USERNAME => dwinrow

ALL DIMENSIONS ARE IN MILLIMETERS UNLESS OTHERWISE SHOWN

R. Valizadeh/V. Toan/Y.L./W.L./F.C.
DESIGN OVERSIGHT
SIGN OFF DATE 07/18/08

	BY		CHECKED	
DESIGN	G. Baker		D. Hirschfeld	
DETAILS	D. Hirschfeld		H. Tazir	
QUANTITIES	D. Hirschfeld		H. Tazir	

PREPARED FOR THE STATE OF CALIFORNIA DEPARTMENT OF TRANSPORTATION

R. Manzanarez
PROJECT ENGINEER

BRIDGE NO. 34-0006L/R
KILOMETER POST 13.2/13.9

SAN FRANCISCO OAKLAND BAY BRIDGE
EAST SPAN SEISMIC SAFETY PROJECT
SELF-ANCHORED SUSPENSION BRIDGE (SUPERSTRUCTURE & TOWER)

TOWER ACCESS DETAILS NO. 3A

Rev. Date: 5-18-98

ORIGINAL SCALE IN MILLIMETERS FOR REDUCED PLANS 0 10 20 30 40 50 60 70 80 90 100

CU 04
EA 0120F1

DISREGARD PRINTS BEARING EARLIER REVISION DATES →

REVISION DATES (PRELIMINARY STAGE ONLY): 07/18/08

SHEET 502SI OF

FILE -> I:\bb\04-012001\sas\contract plans and cco\cco\In progress\cco#65\update 10-07-08\dgn\akacc14a.dgn

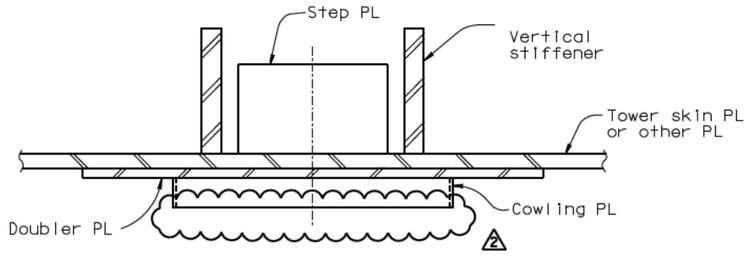

SECTION B-B

1:10

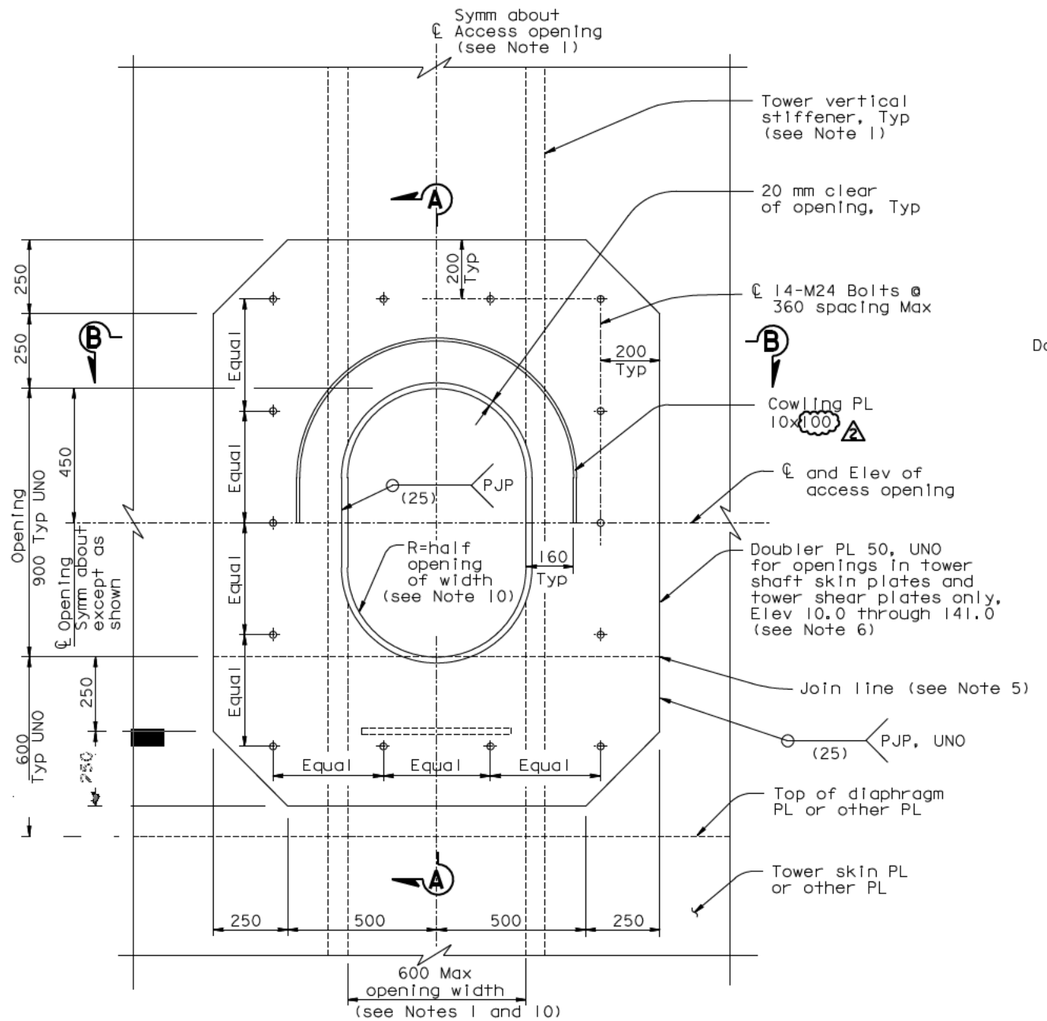

ACCESS OPENING DETAIL

(see Note 6)
(Dehumidification access opening similar)

1:10

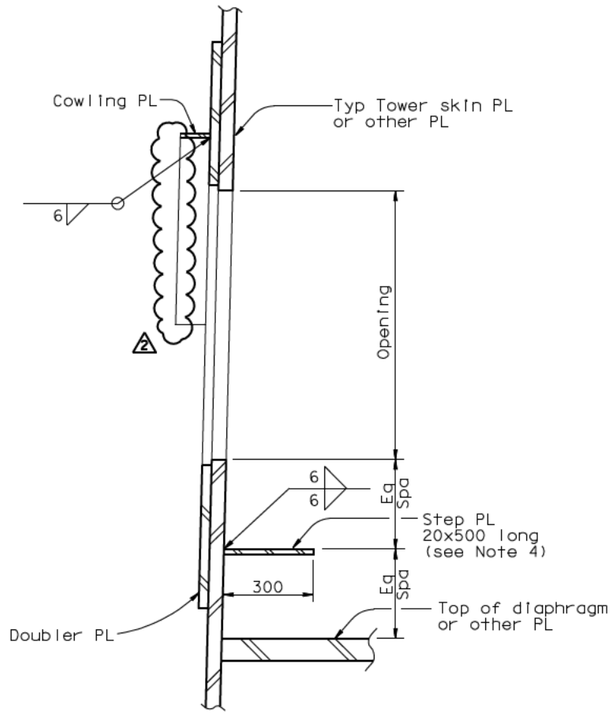

SECTION A-A

1:10

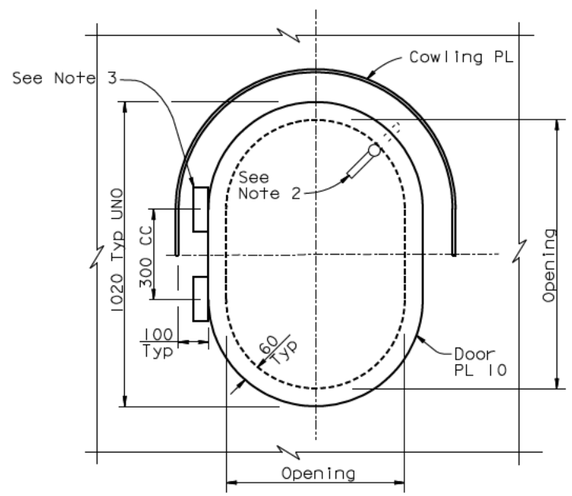

ACCESS OPENING DOOR DETAIL

1:10
(Dehumidification access opening door similar)

ALL DIMENSIONS ARE IN MILLIMETERS UNLESS OTHERWISE SHOWN

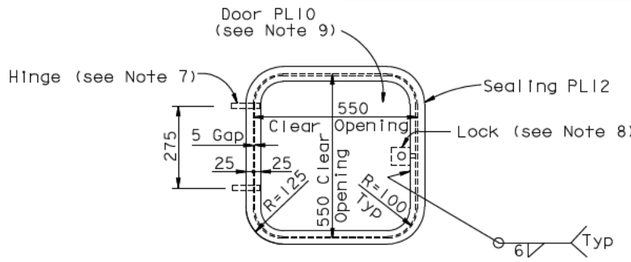

ACCESS OPENING WITH DOOR AT VERTICAL FACE OF TOWER STRUT FACADE

1:10

NOTES:

1. Width of opening is limited to clear distance between stiffeners. For location of access opening and stiffener spacing in tower, see "Tower Shaft Details" sheets.
2. Doors shall be secured by cam locks with locking L-handles and interior release.
3. Door hinges shall be stainless lift-off type with 16 mm pin size 150 kg rated capacity per hinge.
4. Use step PL where door sill is greater than 500 above landing.
5. For access openings at elevations 54.550, 90.550 and 140.550 omit doubler PL below join line. Connect upper portion to strut doubler PL using CJP welds at join line. For strut doubler PL, see "Tower Strut Details" sheets.
6. Access opening shown is for openings in tower shaft skin plates and shear plates. Access opening in tower skirt and tower head are similar. The doubler PL shall match the thickness of the penetrated skirt or tower head PL and shall be connected with a PJP weld 8 mm.
7. Contractor shall provide internally mounted pivot hinges. No part of hinge shall protrude beyond the outside surface of door or facade when door is closed. Hinges shall permit door to swing outwards at least 120°. Each hinge shall be rated to resist 900 N in any direction.
8. Contractor shall provide through-hole mounted cam lock with key. Lock shall be flush with outside face of door.
9. Door shall be flush with outside face of facade. Edges of door shall be sealed with 5x20 Neoprene seals.
10. Dehumidification access openings shall have R=50 mm typical. Dehumidification access openings at tower head only shall be 680 mm x 900 mm.

DIST.	COUNTY	ROUTE	KILOMETER POST TOTAL PROJECT	SHEET NO.	TOTAL SHEETS
04	SF	80	13.2/13.9	920R2	1204

Caltrans Metric

REGISTERED ENGINEER - CIVIL

12-6-04
PLANS APPROVAL DATE

REGISTERED PROFESSIONAL ENGINEER — Marwan N. Nader — No. C 054426 — Exp. 12/31/09 — CIVIL — STATE OF CALIFORNIA

The State of California or its officers or agents shall not be responsible for the accuracy or completeness of electronic copies of this plan sheet.

T.Y. LIN / MOFFATT & NICHOL
825 BATTERY STREET
SAN FRANCISCO, CA 94111

Caltrans now has a web site! To get to the web site, go to: http://www.dot.ca.gov

100 % PS&E

USERNAME => dwinrow DATE PLOTTED => 02 OCT 2008 TIME PLOTTED => 13:16:38

REQUESTS FOR INFORMATION NOT ADDRESSED IN THIS CCO REMAIN IN FORCE

MARK	DATE	REVISIONS DESCRIPTIONS	BY	CH'D	CCO#
2	08/15/08	TOWER ACCESS	MN	NV	65
1	07/11/08	TOWER STRUT FACADES AND CROSS BRACING	MN	NV	64

CONTRACT CHANGE ORDER NO. ____
SHEET ___ OF ___

	BY	CHECKED
DESIGN	M. Nader	M. Gulyas
DETAILS	G. Baker	L. Rus
QUANTITIES	D. Turner	J. Leventini

PREPARED FOR THE STATE OF CALIFORNIA
DEPARTMENT OF TRANSPORTATION

R. Manzanarez
PROJECT ENGINEER

BRIDGE NO. 34-0006L/R
KILOMETER POST 13.2/13.9

R. Valizadeh/V. Toan/Y.L./W.L./F.C.
DESIGN OVERSIGHT
SIGN OFF DATE 08/19/08

Rev. Date: 5-18-98

ORIGINAL SCALE IN MILLIMETERS FOR REDUCED PLANS 0 10 20 30 40 50 60 70 80 90 100

CU 04
EA 0120F1

DISREGARD PRINTS BEARING EARLIER REVISION DATES

REVISION DATES (PRELIMINARY STAGE ONLY)									SHEET	OF
01/18/99	05/18/99	08/26/99	05/24/01	09/28/02	07/29/02	12/19/02			503R2	

FILE -> I:\bb\04-0120I\sas\contract plans and cco\cco\In progress\cco#65\update 10-07-08\dgn\akacc05a.dgn

SAN FRANCISCO OAKLAND BAY BRIDGE
EAST SPAN SEISMIC SAFETY PROJECT
SELF-ANCHORED SUSPENSION BRIDGE
(SUPERSTRUCTURE & TOWER)

TOWER ACCESS DETAILS NO. 4

DIST.	COUNTY	ROUTE	KILOMETER POST TOTAL PROJECT	SHEET NO.	TOTAL SHEETS
04	SF	80	13.2/13.9	92IRI	1204

REGISTERED ENGINEER - CIVIL

12-6-04
PLANS APPROVAL DATE

REGISTERED PROFESSIONAL ENGINEER — Marwan N. Nader — No. C 054426 — Exp. 12/31/09 — CIVIL — STATE OF CALIFORNIA

The State of California or its officers or agents shall not be responsible for the accuracy or completeness of electronic copies of this plan sheet.

T.Y. LIN / MOFFATT & NICHOL
825 BATTERY STREET
SAN FRANCISCO, CA 94111

Caltrans now has a web site! To get to the web site, go to: http://www.dot.ca.gov

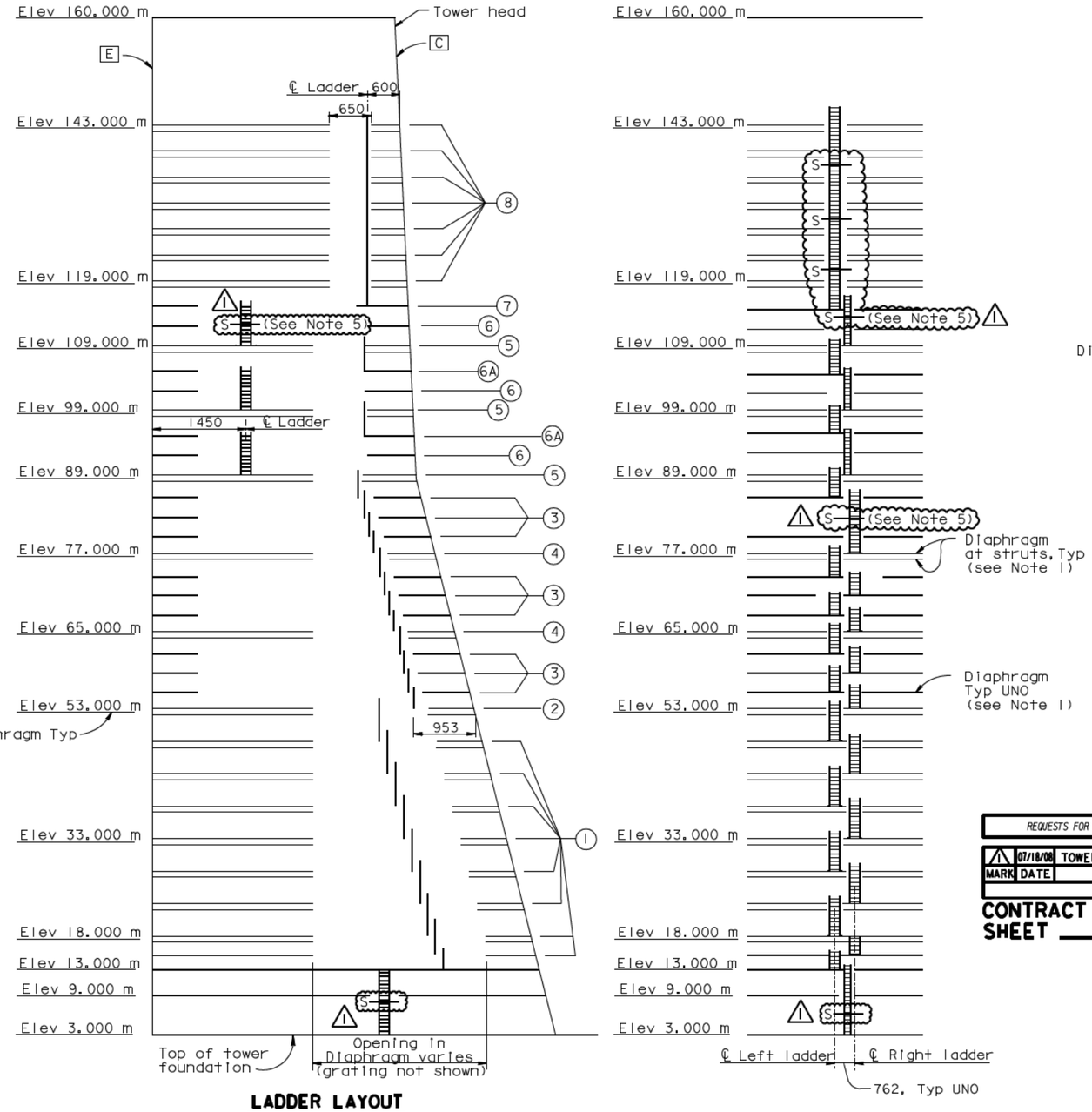

LADDER LAYOUT

SECTION A-A

Vertical 1:400
Horizontal 1:40

SECTION B-B

Vertical 1:400
Horizontal 1:100

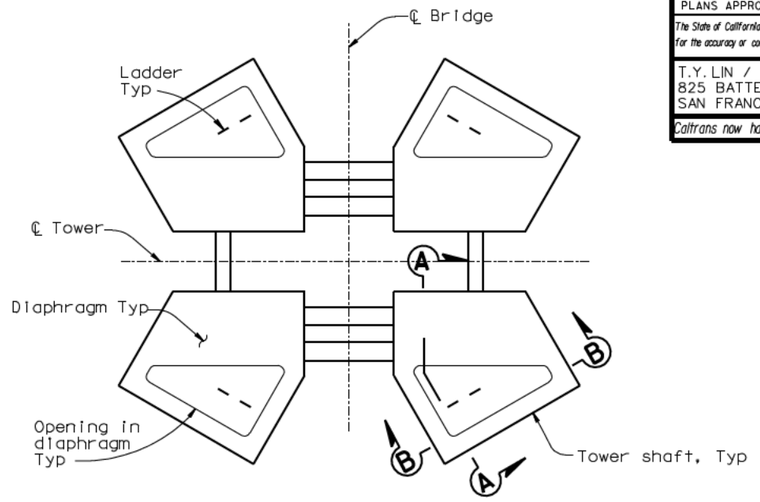

KEY PLAN

1:100

(Ladder platform Type 1 shown)

LEGEND:

(8) Ladder platform Type 8

[A] Tower Skin Plate A

⚠1 S Location of ladder contraction joint (see Note 3)

NOTES:

1. Elevations shown are given at CL diaphragm unless noted otherwise. For detail of diaphragms, see "Tower Diaphragm Details" sheets.
2. For details of ladder platforms, see "Tower Access Details No.6" sheet.
3. ⚠1 At locations where ladder lengths exceed 6.5 meters, contraction joints shall be provided. Ladder length is defined as the distance between the centerlines of the top and bottom end supports. Contraction joints shall be located below ladder supports unless noted otherwise. For contraction joint details, see "Tower Access Details No.7" sheet.
4. Ladder supports shall be spaced at 6 meters maximum.
5. Contraction joint shall be located above ladder supports at these locations.

REQUESTS FOR INFORMATION NOT ADDRESSED IN THIS CCO REMAIN IN FORCE

MARK	DATE	REVISIONS DESCRIPTIONS	BY	CH'D	CCO#
1	07/18/08	TOWER ACCESS	NV	MN	65

CONTRACT CHANGE ORDER NO. ____
SHEET ___ OF ___

ALL DIMENSIONS ARE IN MILLIMETERS UNLESS OTHERWISE SHOWN

R. Vallzadeh/V. Toan/Y.L./W.L./F.C.
DESIGN OVERSIGHT
SIGN OFF DATE 07/18/08

	BY	CHECKED
DESIGN	M. Nader	M. Gulyas
DETAILS	G. Baker	L. Rus
QUANTITIES	D. Turner	J. Leventini

PREPARED FOR THE STATE OF CALIFORNIA DEPARTMENT OF TRANSPORTATION

R. Manzanarez
PROJECT ENGINEER

BRIDGE NO. 34-0006L/R
KILOMETER POST 13.2/13.9

SAN FRANCISCO OAKLAND BAY BRIDGE
EAST SPAN SEISMIC SAFETY PROJECT
SELF-ANCHORED SUSPENSION BRIDGE
(SUPERSTRUCTURE & TOWER)

TOWER ACCESS DETAILS NO.5

Rev. Date: 5-18-98

ORIGINAL SCALE IN MILLIMETERS FOR REDUCED PLANS 0 10 20 30 40 50 60 70 80 90 100

CU 04
EA 0120F1

DISREGARD PRINTS BEARING EARLIER REVISION DATES →

REVISION DATES (PRELIMINARY STAGE ONLY)									SHEET	OF
05/13/99	09/27/99	05/31/01	04/04/02	07/01/02	12/19/02				504RI	

FILE -> I:\bb\04-012001\sas\contract plans and cco\cco\In progress\cco#65\update 10-07-08\dgn\akacc08.dgn

USERNAME => dwinrow DATE PLOTTED => 02 OCT 2008 TIME PLOTTED => 13:24:15

100 % PS&E

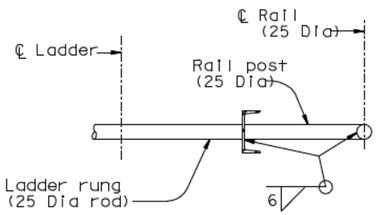

SECTION D-D
1:5

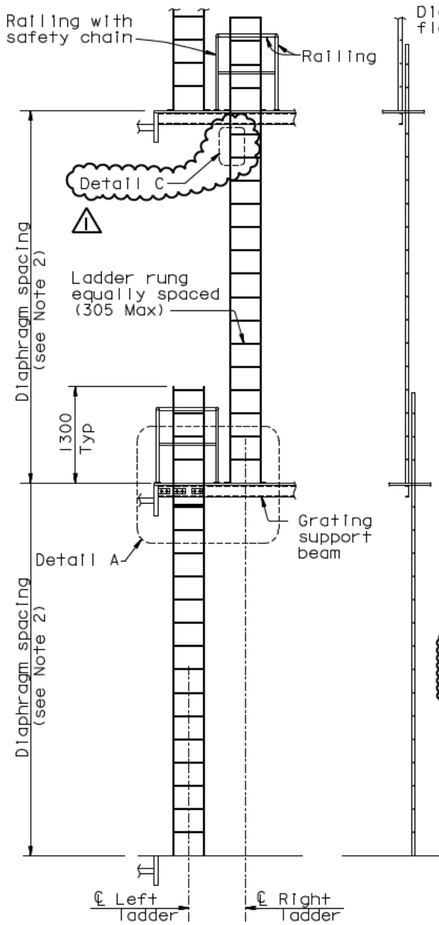

FRONT VIEW SIDE VIEW

TYPICAL LADDER DETAIL (Shown for ladder platform Type 1, see Note 3)
1:40

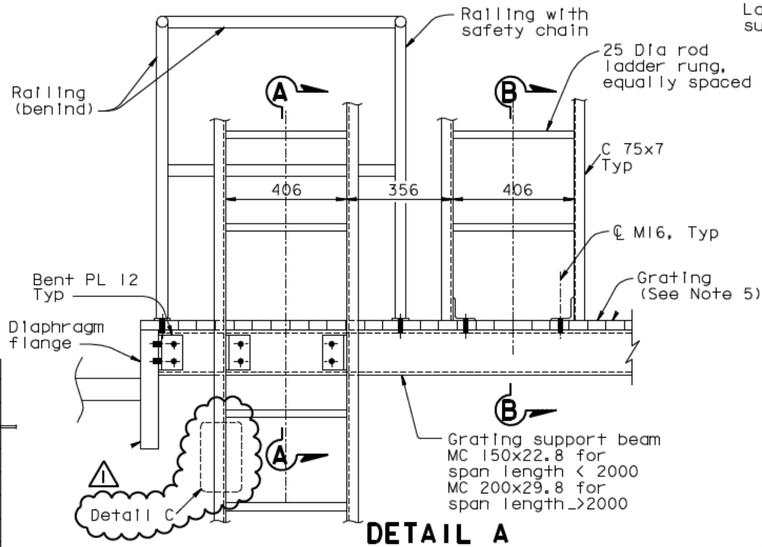

DETAIL A
1:10

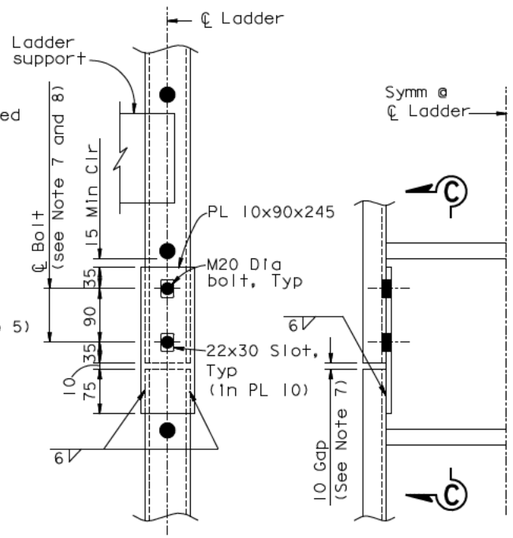

SECTION C-C DETAIL C

TYPICAL LADDER CONTRACTION JOINT DETAIL
1:5

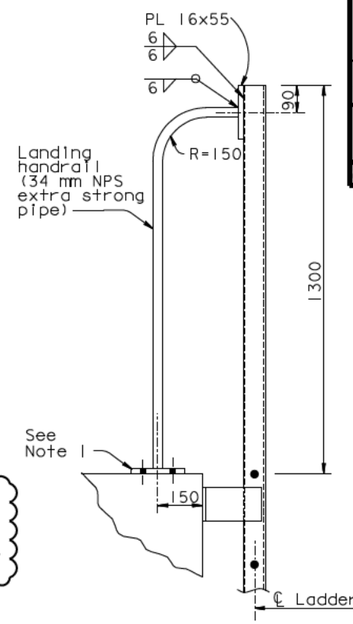

LANDING HANDRAIL DETAIL
1:10

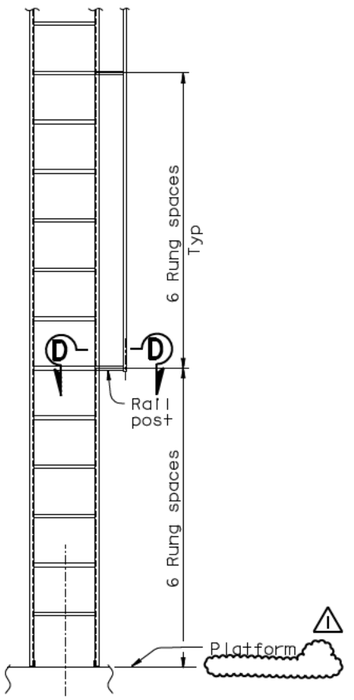

ELEVATION VIEW WITH LADDER AND SAFETY RAIL
1:20 (see Note 4)

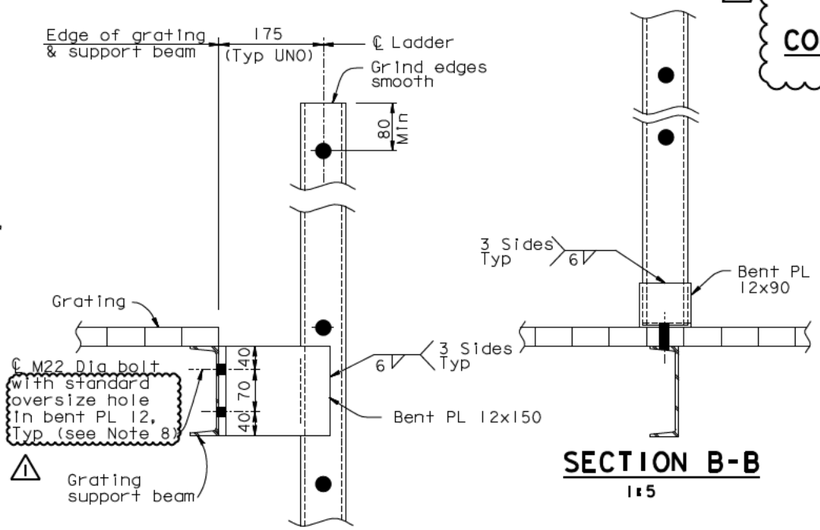

SECTION A-A
1:5

SECTION B-B
1:5

TYPICAL LADDER CONNECTIONS TO SUPPORT BEAM

7. Bolts shall be centered in the vertical slotted holes and the 10 mm gap shall be maintained prior to load transfer.
8. Bolts shall be installed snug-tight prior to load transfer and fully tensioned after load transfer.
9. At the Contractor's option, dimension may be adjusted to ensure ladder support is located between the first and second ladder rungs.

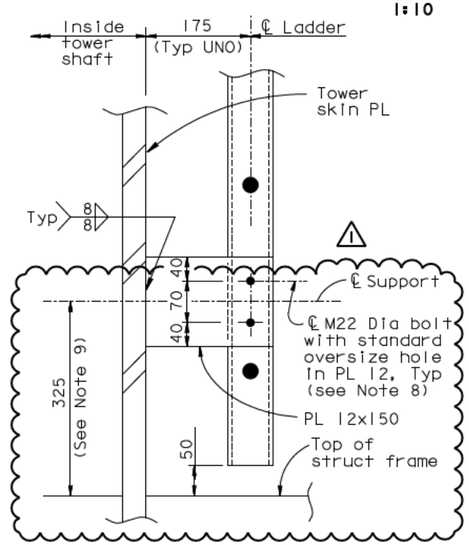

TYPICAL LADDER CONNECTIONS TO TOWER FACE
1:5

ALL DIMENSIONS ARE IN MILLIMETERS UNLESS OTHERWISE SHOWN

NOTES:

1. For railing base plate details, see "Tower Access Details No.8" sheet.
2. For diaphragm spacing, see "Tower Diaphragm Details" sheets.
3. Ladder connections vary. For typical ladder connections to diaphragm flange, see "Tower Access Details No.8" sheet.
4. For ladder runs longer than 10.00 m, safety cage shall be provided around ladder. For safety cage details, see "Tower Access Details No.16" sheet.
5. Galvanized steel grating with fasteners to be provided by Contractor. Grating working load shall be 4.8 kN/m² (100 psf).

DIST.	COUNTY	ROUTE	KILOMETER POST TOTAL PROJECT	SHEET NO.	TOTAL SHEETS
04	SF	80	13.2/13.9	923R1	1204

Caltrans Metric

REGISTERED ENGINEER - CIVIL

12-6-04
PLANS APPROVAL DATE

REGISTERED PROFESSIONAL ENGINEER — Marwan N. Nader — No. C 054426 — Exp. 12/31/09 — CIVIL — STATE OF CALIFORNIA

The State of California or its officers or agents shall not be responsible for the accuracy or completeness of electronic copies of this plan sheet.

T.Y. LIN / MOFFATT & NICHOL
825 BATTERY STREET
SAN FRANCISCO, CA 94111

Caltrans now has a web site! To get to the web site, go to: http://www.dot.ca.gov

REQUESTS FOR INFORMATION NOT ADDRESSED IN THIS CCO REMAIN IN FORCE

MARK	DATE	REVISIONS DESCRIPTIONS	BY	CH'D	CCO#
1	08/15/08	TOWER ACCESS	NV	MN	65

CONTRACT CHANGE ORDER NO. ____
SHEET ___ OF ___

	BY	CHECKED
DESIGN	M. Nader	M. Gulyas
DETAILS	G. Baker	L. Rus
QUANTITIES	D. Turner	J. Leventini

PREPARED FOR THE STATE OF CALIFORNIA DEPARTMENT OF TRANSPORTATION

R. Manzanarez
PROJECT ENGINEER

R. Vallizadeh/V. Toan/Y. L./W. L./F. C.
DESIGN OVERSIGHT
SIGN OFF DATE 08/15/08

Rev. Date: 5-18-98

ORIGINAL SCALE IN MILLIMETERS FOR REDUCED PLANS 0 10 20 30 40 50 60 70 80 90 100

CU 04
EA 0120F1

BRIDGE NO. 34-0006L/R
KILOMETER POST 13.2/13.9

DISREGARD PRINTS BEARING EARLIER REVISION DATES →

REVISION DATES (PRELIMINARY STAGE ONLY): 05/16/99 | 08/02/99 | 05/31/01 | 04/08/02 | 07/01/02 | 12/19/02

SHEET 506R1 OF

SAN FRANCISCO OAKLAND BAY BRIDGE
EAST SPAN SEISMIC SAFETY PROJECT
SELF-ANCHORED SUSPENSION BRIDGE
(SUPERSTRUCTURE & TOWER)

TOWER ACCESS DETAILS NO. 7

FILE -> I:\bb\04-012001\sas\contract plans and cco\cco\In progress\cco#65\update 10-07-08\dgn\akacc08b.dgn

USERNAME => dwinrow DATE PLOTTED => 02 OCT 2008 TIME PLOTTED => 13:25:16

100% PS&E

REQUESTS FOR INFORMATION NOT ADDRESSED IN THIS CCO REMAIN IN FORCE					
1	07/18/08	TOWER ACCESS	NV	MN	65
MARK	DATE	DESCRIPTIONS	BY	CH'D	CCO#
REVISIONS					

CONTRACT CHANGE ORDER NO. ____
SHEET ___ OF ___

DIST.	COUNTY	ROUTE	KILOMETER POST TOTAL PROJECT	SHEET NO.	TOTAL SHEETS
04	SF	80	13.2/13.9	924R1	1204

REGISTERED ENGINEER - CIVIL

12-6-04
PLANS APPROVAL DATE

The State of California or its officers or agents shall not be responsible for the accuracy or completeness of electronic copies of this plan sheet.

REGISTERED PROFESSIONAL ENGINEER — Marwan N. Nader — No. C 054426 — Exp. 12/31/09 — CIVIL — STATE OF CALIFORNIA

T.Y. LIN / MOFFATT & NICHOL
825 BATTERY STREET
SAN FRANCISCO, CA 94111

Caltrans now has a web site! To get to the web site, go to: http://www.dot.ca.gov

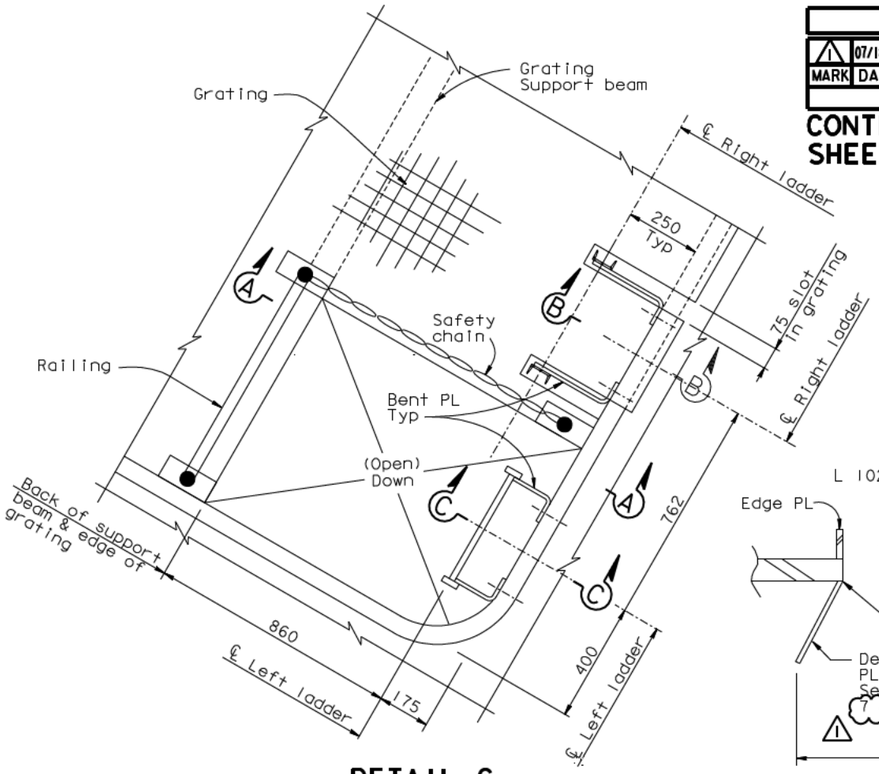

DETAIL C
1:10

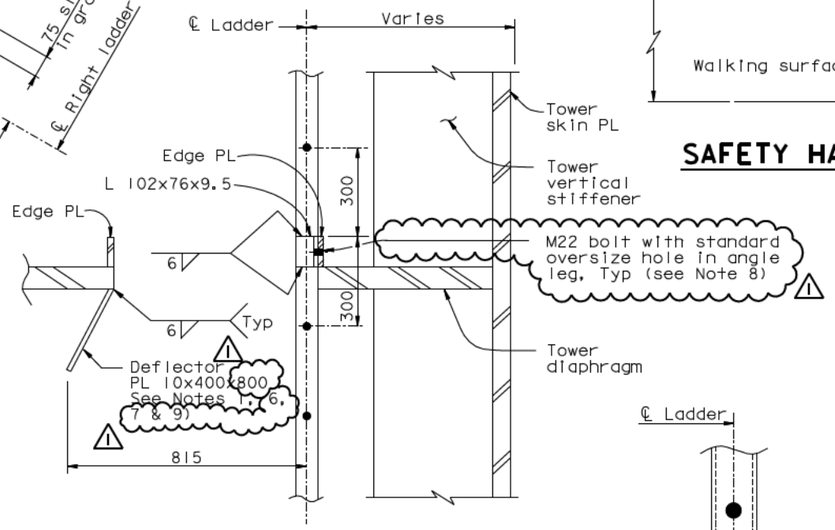

SECTION D-D
1:10

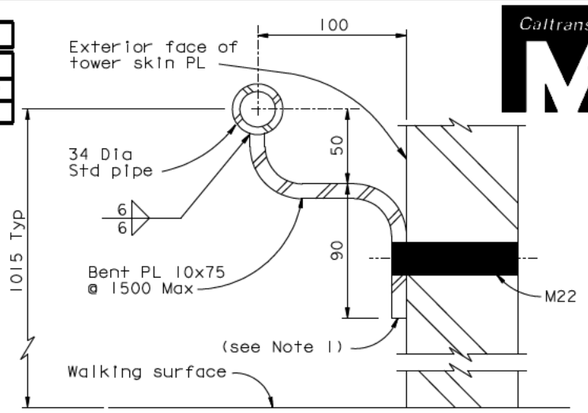

SAFETY HANDRAIL TYPICAL DETAIL
1:2

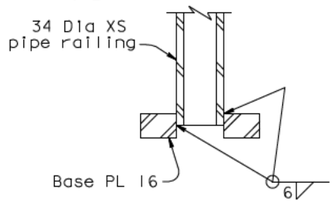

SECTION E-E

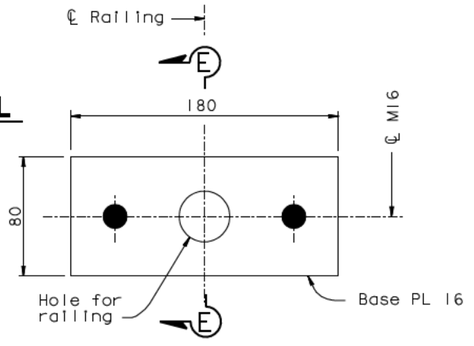

PLAN VIEW

RAILING BASE PLATE DETAILS
1:2

NOTES:

1. The Contractor shall detail typical connections to fit the supporting structure, and may submit alternative designs for review and approval of the Engineer.
2. For tower diaphragm dimensions, see "Tower Diaphragm Details" sheets.
3. For ladder details not shown, see "Tower Access Details No. 7" sheet.
4. Safety chain shall be galvanized chain with spring clip end fasteners. Chain and fasteners to be rated at 5 kN (1000 lb) breaking load.
5. Opening in grating and direction of ladder shall alternate as shown on Section B-B on "Tower Access Details No.5" sheet. Railing and safety chain shall enclose opening in grating.

1 6. Deflector plate may be omitted at the two ladder openings at elevation 9.000 m.
7. Deflector plate may be coped or slotted to clear longitudinal stiffeners.
8. Bolt shall be installed snug-tight prior to load transfer and fully tensioned after load transfer.
9. Deflector plates interfering with diaphragm web access openings at elevation 109.000 m and above shall be omitted.

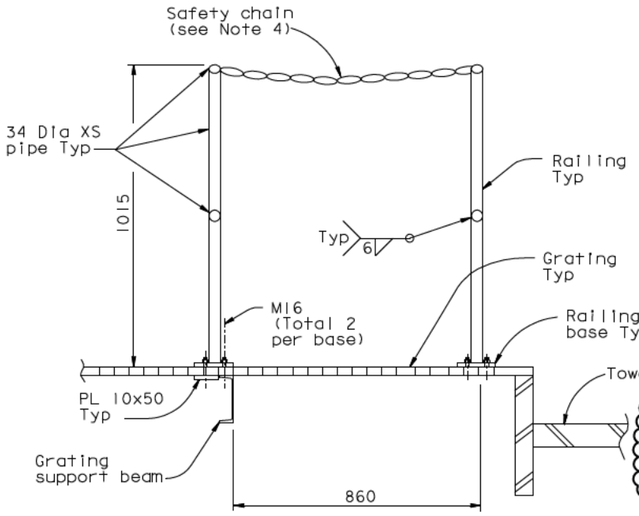

SECTION A-A
1:10

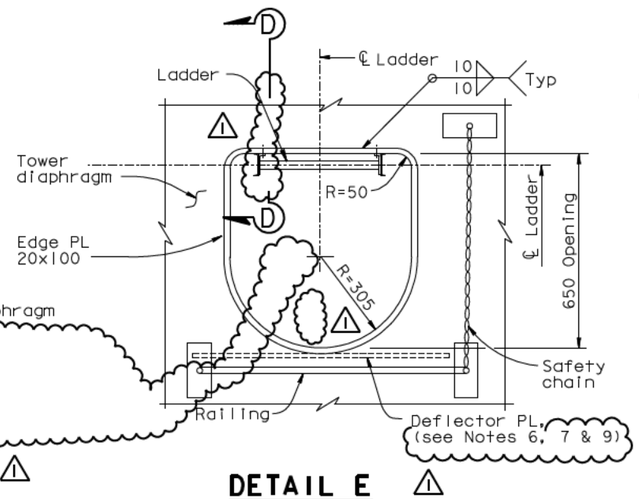

DETAIL E
1:10

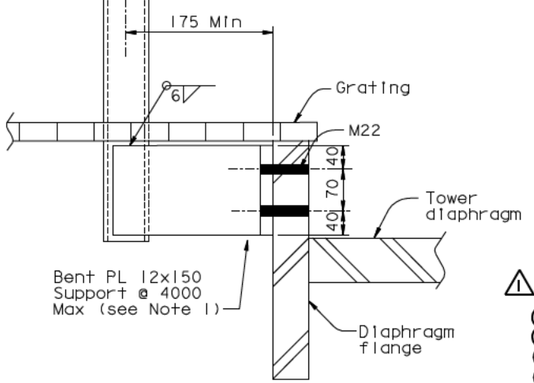

TYPICAL LADDER CONNECTION TO DIAPHRAGM FLANGE
SECTION B-B
1:5
(SECTION C-C similar)

ALL DIMENSIONS ARE IN MILLIMETERS UNLESS OTHERWISE SHOWN

100 % PS&E
DATE PLOTTED => 02 OCT 2008
TIME PLOTTED => 13:26:29

R. Vallizadeh/V. Toan/Y.L./W.L./F.C. DESIGN OVERSIGHT				PREPARED FOR THE STATE OF CALIFORNIA DEPARTMENT OF TRANSPORTATION	
Sign off date 7/18/08	DESIGN	BY M. Nader	CHECKED M. Gulyas		
	DETAILS	BY G. Baker	CHECKED L. Rus		
	QUANTITIES	BY D. Turner	CHECKED J. Leventini		

R. Manzanarez
PROJECT ENGINEER

BRIDGE NO. 34-0006L/R
KILOMETER POST 13.2/13.9

SAN FRANCISCO OAKLAND BAY BRIDGE
EAST SPAN SEISMIC SAFETY PROJECT
SELF-ANCHORED SUSPENSION BRIDGE (SUPERSTRUCTURE & TOWER)

TOWER ACCESS DETAILS NO. 8

Rev. Date: 5-18-98

ORIGINAL SCALE IN MILLIMETERS FOR REDUCED PLANS 0 10 20 30 40 50 60 70 80 90 100

CU 841
EA 612OF1

DISREGARD PRINTS BEARING EARLIER REVISION DATES

REVISION DATES (PRELIMINARY STAGE ONLY): 05/18/99 | 08/27/99 | 05/31/01 | 04/08/02 | 07/01/02 | 12/19/02

SHEET 507R1 OF

USERNAME => dwinrow

FILE -> I:\bb\04-012001\sas\contract plans and cco\cco\In progress\cco#65\update 10-07-08\dgn\akacc08c.dgn

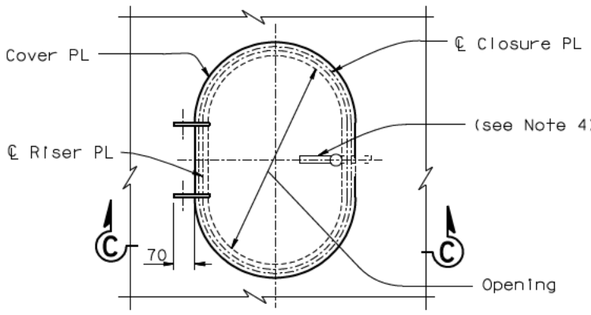

COVER DETAIL WITH RISER
1:10

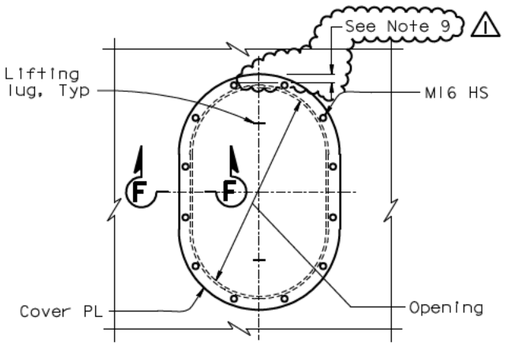

COVER DETAIL WITHOUT RISER
1:10
(See Note 1)

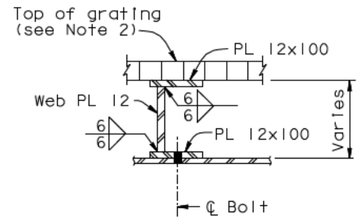

SECTION K-K
1:5

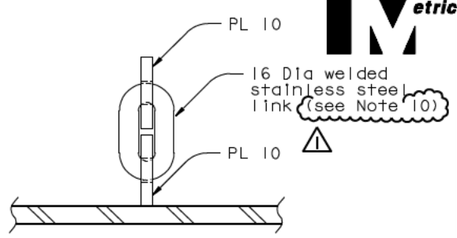

SECTION E-E
1:2.5

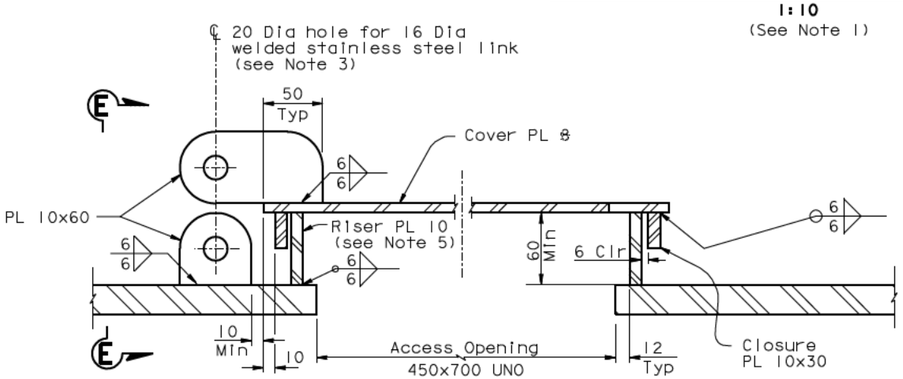

SECTION C-C
1:2.5

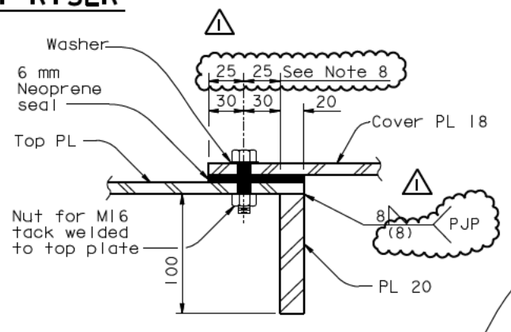

SECTION F-F
1:2.5

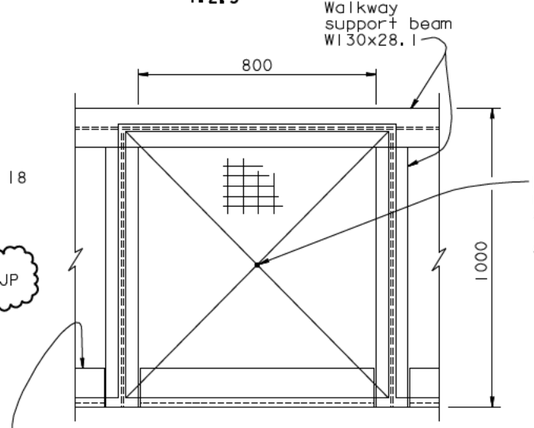

DETAIL B
1:10
(see Note 6)

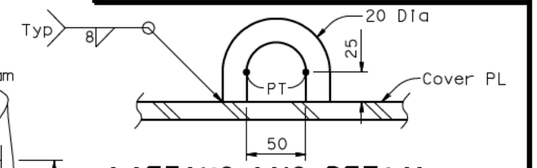

LIFTING LUG DETAIL
1:2.5

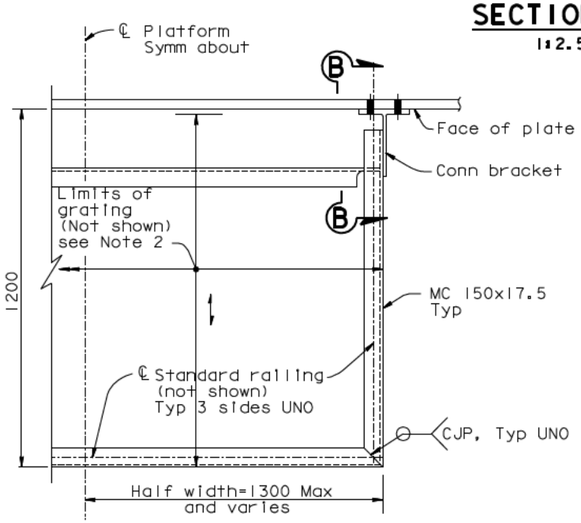

STANDARD PLATFORM DETAIL
1:10
(PLAN VIEW)

(See Note 5)
(See Note 11)

10. At the Contractor's option and subject to review and approval of the Engineer, a circular link may be used in lieu of the elliptical link.

11. At the Contractor's option, detail shown on "Alternative Section C-C" on sheet "Tower Access Details No.9A" may be used subject to review and approval of the Engineer.

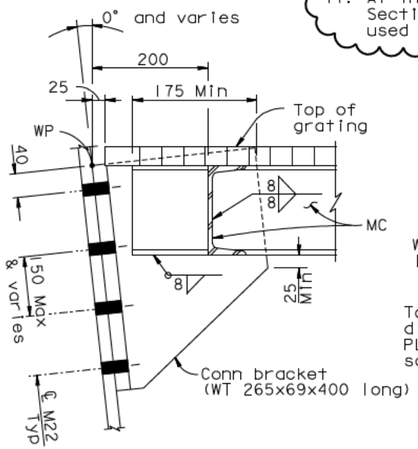

SECTION B-B
1:5

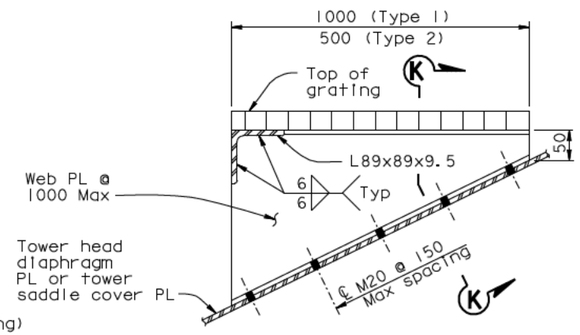

TOP PLATFORM DETAIL
(TYPE 2 SHOWN, TYPE 1 SIMILAR)
1:5
(ELEVATION)

LEGEND:

Direction of main reinforcement of grating

NOTES:

1. Cover detail without riser shall be used only for the top plates of strut facades adjacent to elevator at Elevations 53.850 m, 89.850 m, and 139.850 m.
2. Grating shall be galvanized steel grating with fasteners. Grating working load shall be 4.8 kN/m (100psf).
3. Welded link shall be installed so as to permit free rotation of access cover.
4. Access cover shall be secured by cam locks with locking L-handles and interior release.
5. Shape of cover to match access opening. Edge PL or riser shall be provided as noted.
6. For Detail B callout, see "Tower Access Details No.3" and Tower Access Details No.10" sheets.
7. Walkway support beam connection shall be as shown in Section G-G on "Tower Access Details No.3" sheet, and similar. Cope flange as necessary.
8. At the Contractor's option, size of cover plate may be reduced for openings at Elevations 89.850 m and 139.850 m.
9. At the Contractor's option, for openings at Elevations 89.950 m and 139.850 m, cover plate may be trimmed up to 20 mm for clearance with seal angle to accommodate design movement. M16 bolts shall be relocated to provide 20 mm edge distance, and a Max spacing of 200 mm.

ALL DIMENSIONS ARE IN MILLIMETERS UNLESS OTHERWISE SHOWN

REQUESTS FOR INFORMATION NOT ADDRESSED IN THIS CCO REMAIN IN FORCE

DIST.	COUNTY	ROUTE	KILOMETER POST TOTAL PROJECT	SHEET NO.	TOTAL SHEETS
04	SF	80	13.2/13.9	925R1	1204

REGISTERED ENGINEER - CIVIL
12-6-04
PLANS APPROVAL DATE
The State of California or its officers or agents shall not be responsible for the accuracy or completeness of electronic copies of this plan sheet.

REGISTERED PROFESSIONAL ENGINEER — Marwan N. Nader — No. C 054426 — Exp. 12/31/09 — CIVIL — STATE OF CALIFORNIA

T.Y. LIN / MOFFATT & NICHOL
825 BATTERY STREET
SAN FRANCISCO, CA 94111

Caltrans now has a web site! To get to the web site, go to: http://www.dot.ca.gov

MARK	DATE	DESCRIPTIONS	BY	CH'D	CCO#
1	07/18/08	TOWER ACCESS	NV	MN	65

REVISIONS

CONTRACT CHANGE ORDER NO. ____
SHEET ___ OF ___

	BY	CHECKED
DESIGN	M. Nader	M. Guiyas
DETAILS	G. Baker	L. Rus
QUANTITIES	D. Turner	J. Leventini

PREPARED FOR THE STATE OF CALIFORNIA DEPARTMENT OF TRANSPORTATION

R. Manzanarez
PROJECT ENGINEER

BRIDGE NO. 34-0006L/R
KILOMETER POST 13.2/13.9

R. Valizadeh/V. Toan/Y.L./W.L./F.C.
DESIGN OVERSIGHT
SIGN OFF DATE 07/18/08

Rev. Date: 5-18-98

ORIGINAL SCALE IN MILLIMETERS FOR REDUCED PLANS 0 10 20 30 40 50 60 70 80 90 100

CU 04
EA 0120F1

DISREGARD PRINTS BEARING EARLIER REVISION DATES

REVISION DATES (PRELIMINARY STAGE ONLY): 05/15/99 | 08/02/99 | 05/24/01 | 04/08/02 | 07/29/02 | 12/19/02

SHEET 508R1 OF

SAN FRANCISCO OAKLAND BAY BRIDGE
EAST SPAN SEISMIC SAFETY PROJECT
SELF-ANCHORED SUSPENSION BRIDGE
(SUPERSTRUCTURE & TOWER)

TOWER ACCESS DETAILS NO.9

FILE -> I:\bb\04-012001\sas\contract plans and cco\cco\In progress\cco#65\update 10-07-08\dgn\akacc07.dgn

USERNAME => dwinrow DATE PLOTTED => 02 OCT 2008 TIME PLOTTED => 13:22:52

100 % PS&E

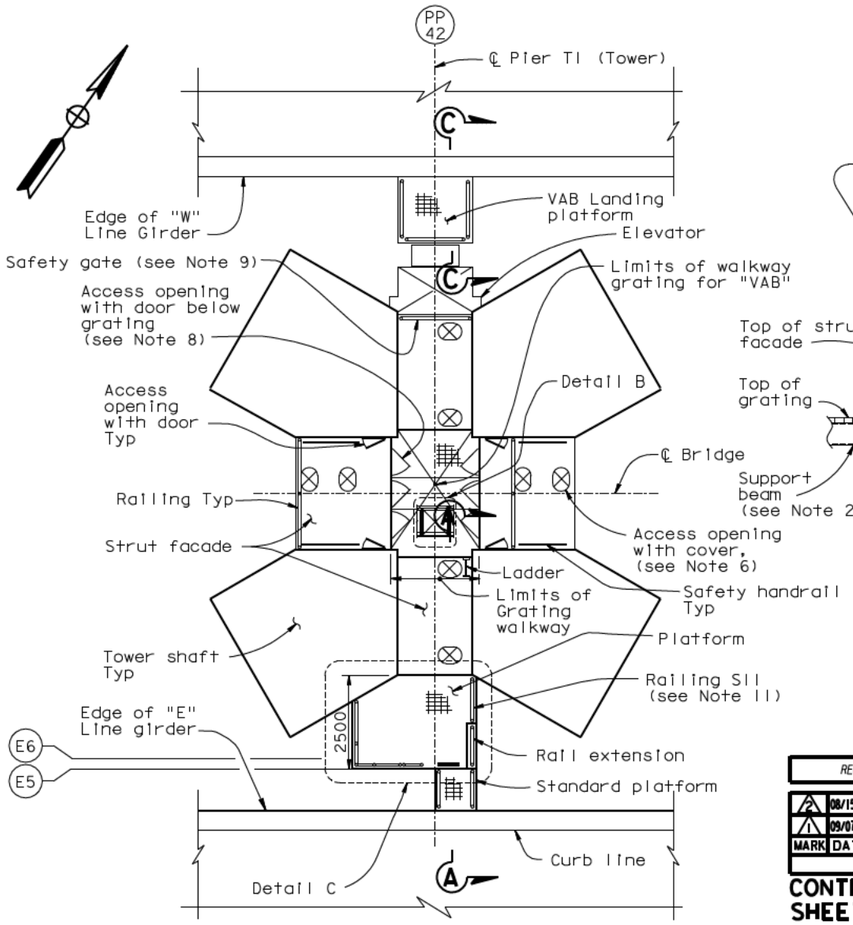

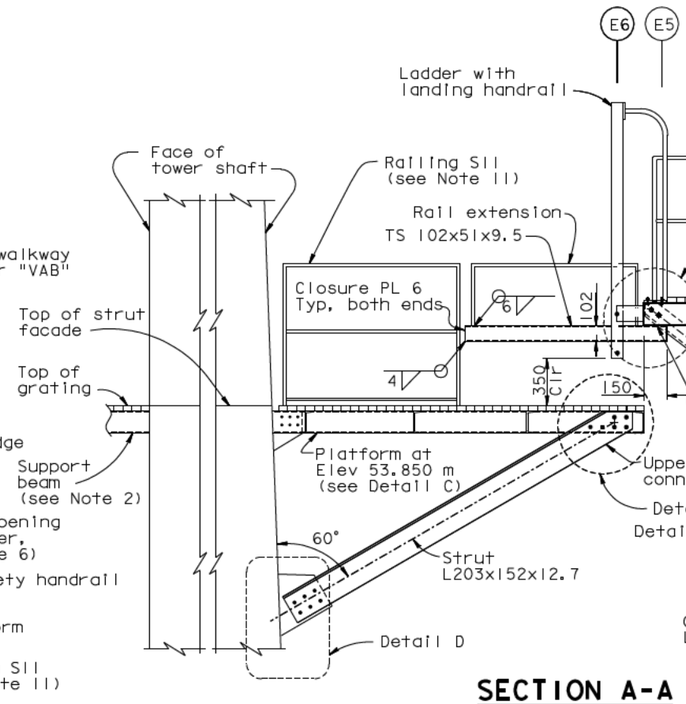

SECTION A-A
1:20

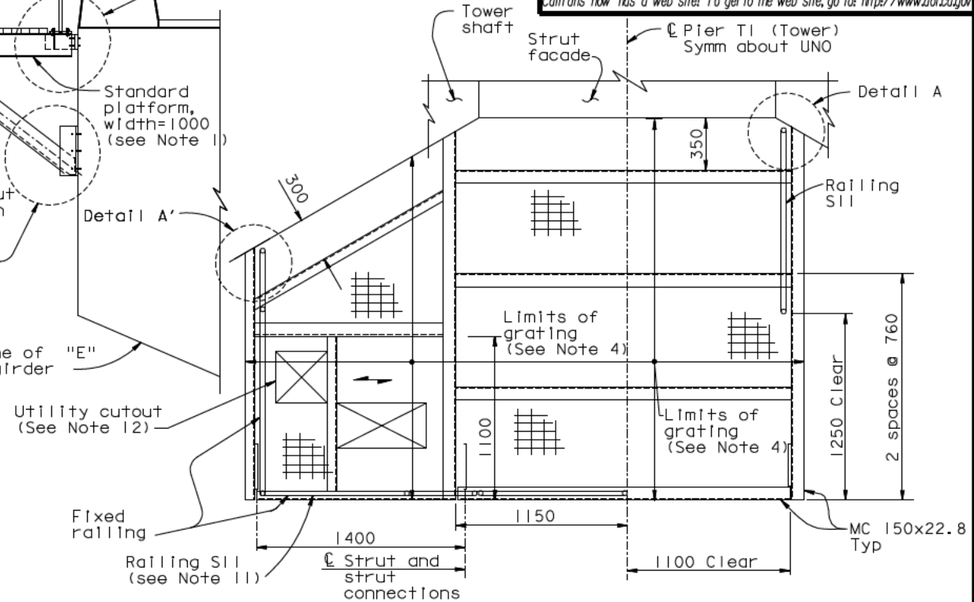

PLATFORM AT ELEV 53.850±
DETAIL C
1:20

REQUESTS FOR INFORMATION NOT ADDRESSED IN THIS CCO REMAIN IN FORCE					
2	08/15/08	TOWER ACCESS	JD	MN	65
1	09/07/07	MECHANICAL MODIFICATIONS	JD	MN	31
MARK	DATE	DESCRIPTIONS	BY	CH'D	CCO#
REVISIONS					

CONTRACT CHANGE ORDER NO. ____
SHEET ___ OF ___

TOWER ACCESS PLATFORMS

SECTION F-F
NTS

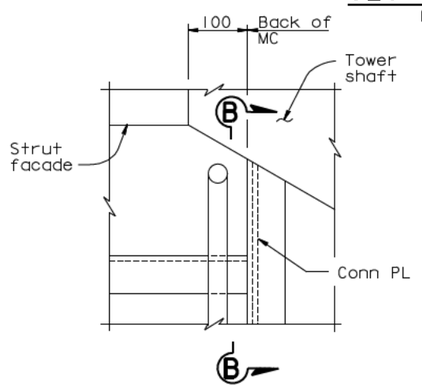

DETAIL A (Detail A shown, Detail A' similar)
1:5

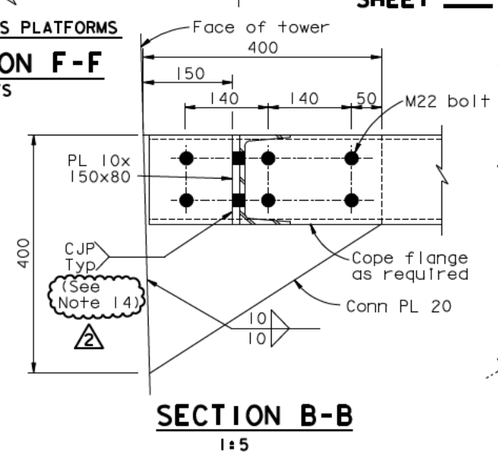

SECTION B-B
1:5

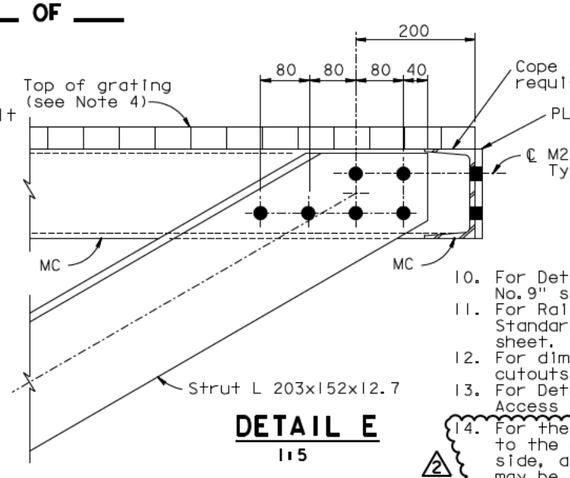

DETAIL E
1:5

LEGEND:

(E6) Girder Working Line 6 on "E" Line.

NOTES:

1. For standard platform details, see "Tower Access Details No.9" sheet.
2. For walkway support beam details, see "Tower Access Details No.3" sheet.
3. For railing details, see "Tower Access Details No.8" sheet.
4. Grating shall be galvanized steel grating with fasteners. Grating working load shall be 14.4 kN/m².
5. For Section C-C, Details D, see "Tower Access Details No. 11" sheet.
6. For access opening cover details, see "Tower Access Details No.9" sheet. All covers are with risers unless noted otherwise.
7. For location of Tower access opening in strut facade, see "Tower Strut Facade Details" sheets.
8. For access opening and door details, see "Tower Access Details No.4" sheet.
9. For safety gate details, see "Road Plans" sheets.
10. For Detail B, see "Tower Access Details No.9" sheet.
11. For Railing S11 see Index to Caltrans Standard Plans on "General Notes No.1" sheet.
12. For dimensions and locations of utility cutouts in grating, see "Road Plans".
13. For Details F, H and J, see "Tower Access Details No. 12" sheet.
14. For the shear plate that is connected to the channel on the front (open) side, a double-sided 6 mm fillet weld may be used. Shear plate shall be connected to channel flanges and web.

(2)

ALL DIMENSIONS ARE IN MILLIMETERS UNLESS OTHERWISE SHOWN

DIST.	COUNTY	ROUTE	KILOMETER POST TOTAL PROJECT	SHEET NO.	TOTAL SHEETS
04	SF	80	13.2/13.9	926R2	1204

Caltrans Metric

REGISTERED ENGINEER - CIVIL

12-6-04
PLANS APPROVAL DATE

REGISTERED PROFESSIONAL ENGINEER — Marwan N. Nader — No. C 054426 — Exp. 12/31/09 — CIVIL — STATE OF CALIFORNIA

The State of California or its officers or agents shall not be responsible for the accuracy or completeness of electronic copies of this plan sheet.

T.Y. LIN / MOFFATT & NICHOL
825 BATTERY STREET
SAN FRANCISCO, CA 94111

Caltrans now has a web site! To get to the web site, go to: http://www.dot.ca.gov

R. Vallzadeh/V. Toan/Y.L./W.L./F.C.
DESIGN OVERSIGHT
SIGN OFF DATE 08/15/08

	BY	CHECKED
DESIGN	M. Nader	M. Gulyas
DETAILS	G. Baker	L. Rus
QUANTITIES	D. Turner	J. Leventini

PREPARED FOR THE STATE OF CALIFORNIA
DEPARTMENT OF TRANSPORTATION

R. Manzanarez
PROJECT ENGINEER

BRIDGE NO. 34-0006L/R
KILOMETER POST 13.2/13.9

SAN FRANCISCO OAKLAND BAY BRIDGE
EAST SPAN SEISMIC SAFETY PROJECT
SELF-ANCHORED SUSPENSION BRIDGE
(SUPERSTRUCTURE & TOWER)

TOWER ACCESS DETAILS NO. 10

Rev. Date: 5-18-98

ORIGINAL SCALE IN MILLIMETERS FOR REDUCED PLANS 0 10 20 30 40 50 60 70 80 90 100

CU 04
EA 0120F1

DISREGARD PRINTS BEARING EARLIER REVISION DATES

REVISION DATES (PRELIMINARY STAGE ONLY): 05/15/98 | 09/02/98 | 05/31/01 | 04/08/02 | 07/01/02 | 12/19/02

SHEET 509R2 OF

FILE -> I:\bb\04-012001\sas\contract plans and cco\cco\In progress\cco#65\update 10-07-08\dgn\akacc09.dgn

DATE PLOTTED => 02 OCT 2008 TIME PLOTTED => 13:27:25
100 % PS&E
USERNAME => dwinrow

DIST.	COUNTY	ROUTE	KILOMETER POST TOTAL PROJECT	SHEET NO.	TOTAL SHEETS
04	SF	80	13.2/13.9	929R4	1204

REGISTERED ENGINEER - CIVIL

12-6-04
PLANS APPROVAL DATE

REGISTERED PROFESSIONAL ENGINEER — Marwan N. Nader — No. C 054426 — Exp. 12/31/09 — CIVIL — STATE OF CALIFORNIA

The State of California or its officers or agents shall not be responsible for the accuracy or completeness of electronic copies of this plan sheet.

T.Y. LIN / MOFFATT & NICHOL
825 BATTERY STREET
SAN FRANCISCO, CA 94111

Caltrans now has a web site! To get to the web site, go to: http://www.dot.ca.gov

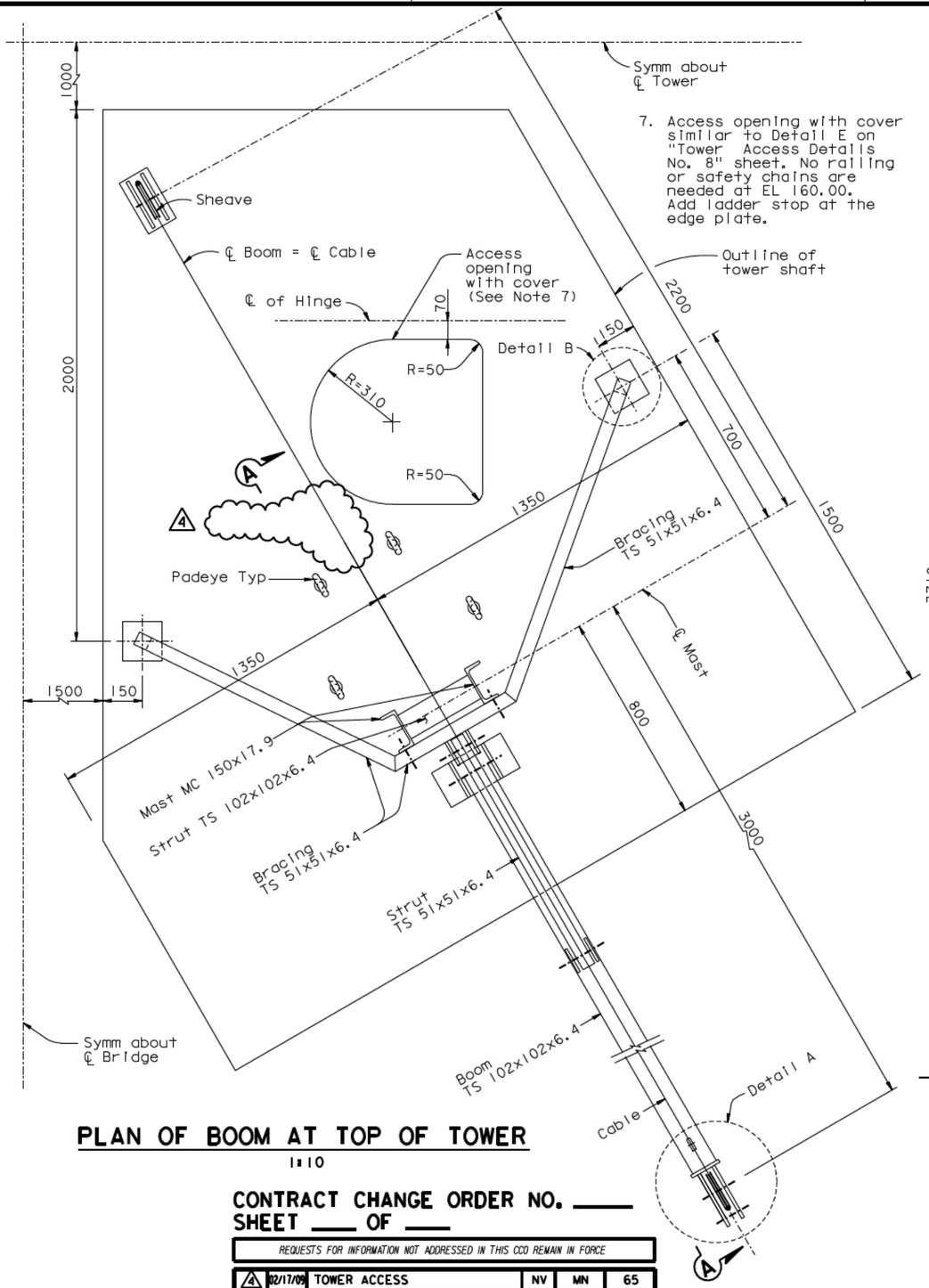

PLAN OF BOOM AT TOP OF TOWER

1:10

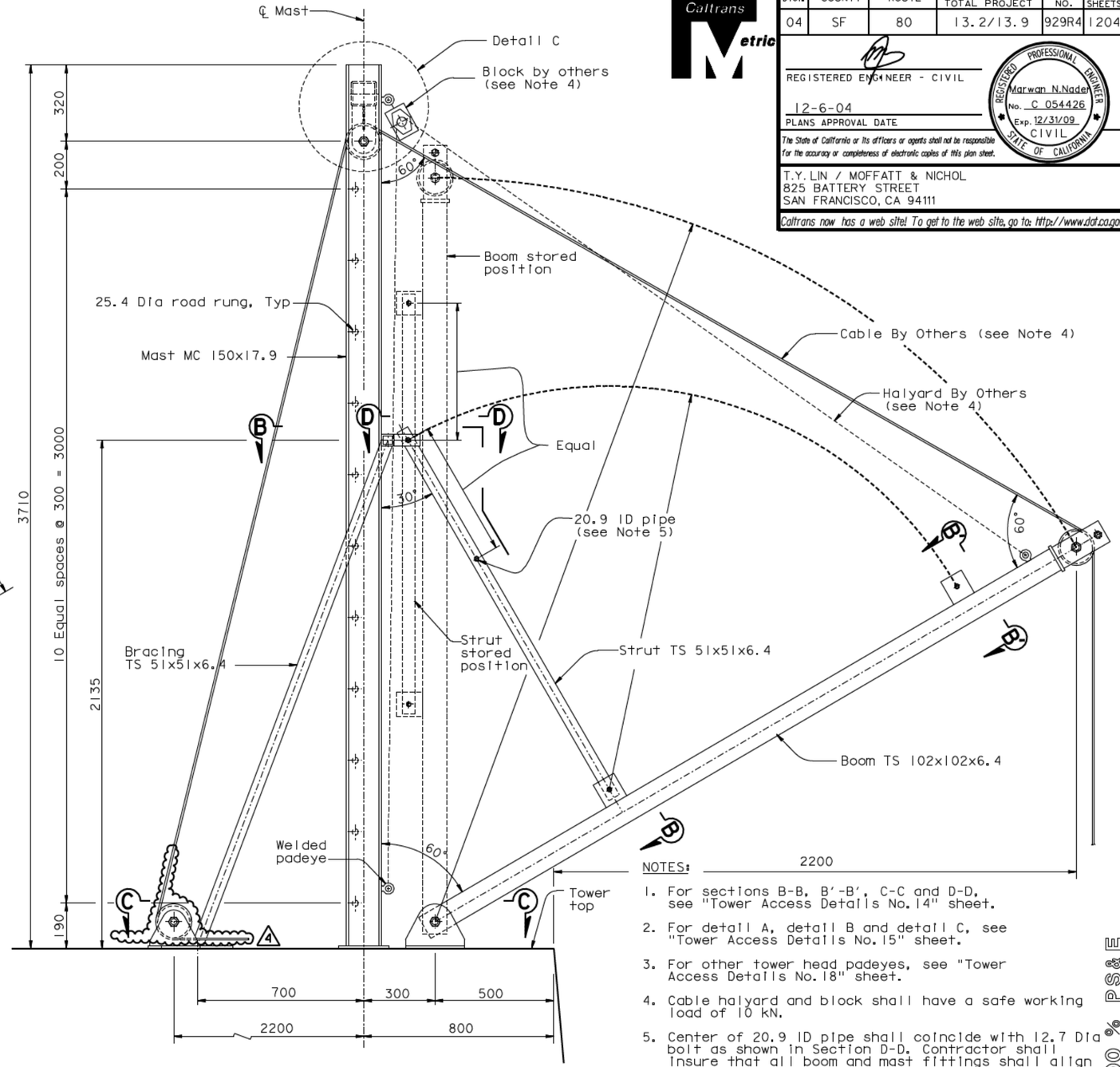

SECTION A-A

1:10

ALL DIMENSIONS ARE IN MILLIMETERS UNLESS OTHERWISE SHOWN

NOTES:

1. For sections B-B, B'-B', C-C and D-D, see "Tower Access Details No. 14" sheet.
2. For detail A, detail B and detail C, see "Tower Access Details No. 15" sheet.
3. For other tower head padeyes, see "Tower Access Details No. 18" sheet.
4. Cable halyard and block shall have a safe working load of 10 kN.
5. Center of 20.9 ID pipe shall coincide with 12.7 Dia bolt as shown in Section D-D. Contractor shall insure that all boom and mast fittings shall align in both stored and extended positions.
6. For Padeye typical detail and design force, see "Girder Access Details No. 10" sheet.

CONTRACT CHANGE ORDER NO. ____
SHEET ___ OF ___

REQUESTS FOR INFORMATION NOT ADDRESSED IN THIS CCO REMAIN IN FORCE

MARK	DATE	DESCRIPTIONS	BY	CH'D	CCO#
4	02/17/09	TOWER ACCESS	NV	MN	65
3	11/07/08	TOWER ACCESS	NV	MN	65
2	07/18/08	TOWER ACCESS	NV	MN	65
1	06/22/07	WELDED PADEYES	NV	MN	41

REVISIONS

R. Valizadeh/V. Toan/Y.L./W.L./F.C.
DESIGN OVERSIGHT
SIGN OFF DATE 02/17/09

	BY	CHECKED
DESIGN	M. Nader	N. Vo
DETAILS	G. Baker	N. Vo
QUANTITIES	G. Baker	N. Vo

PREPARED FOR THE STATE OF CALIFORNIA
DEPARTMENT OF TRANSPORTATION

R. Manzanarez
PROJECT ENGINEER

BRIDGE NO. 34-0006L/R
KILOMETER POST 13.2/13.9

CU 04
EA 0120F1

SAN FRANCISCO OAKLAND BAY BRIDGE
EAST SPAN SEISMIC SAFETY PROJECT
SELF-ANCHORED SUSPENSION BRIDGE
(SUPERSTRUCTURE & TOWER)

TOWER ACCESS DETAILS NO. 13

DISREGARD PRINTS BEARING EARLIER REVISION DATES →

REVISION DATES (PRELIMINARY STAGE ONLY): 04/08/02 07/01/02 12/19/02

SHEET 512R4 OF

Rev. Date: 5-18-98

ORIGINAL SCALE IN MILLIMETERS FOR REDUCED PLANS 0 10 20 30 40 50 60 70 80 90 100

FILE -> I:\bb\04-0120I\sas\contract plans and cco\cco\cco#65\revision 02-17-09\dgn\akacc13b.dgn

100 % PS&E — DATE PLOTTED => 18 FEB 2009 — TIME PLOTTED => 10:19:42
USERNAME => dwinrow

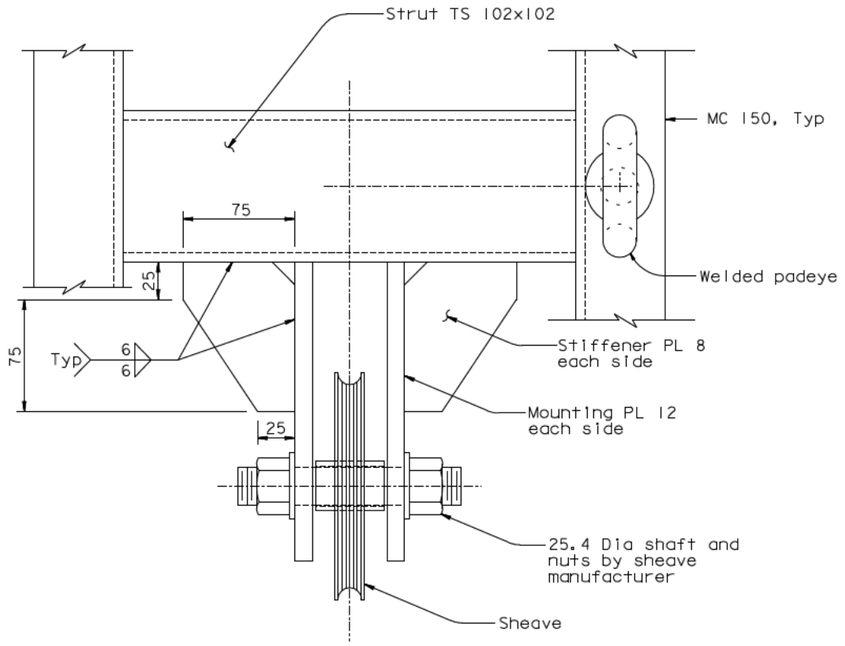

VIEW G-G
1:2

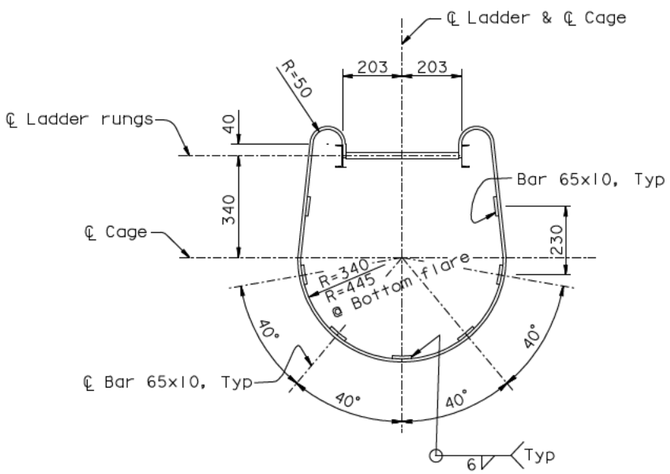

SECTION A-A (Rotated 90° clockwise)
1:10

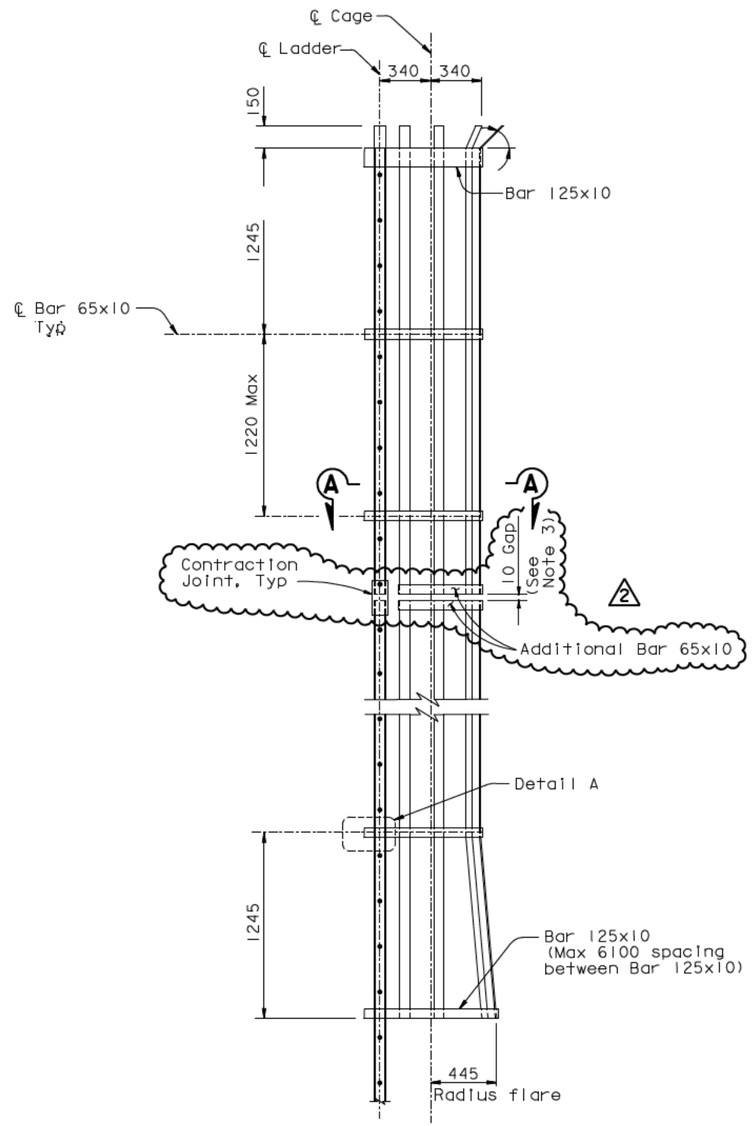

LADDER SAFETY CAGE ELEVATION
1:20

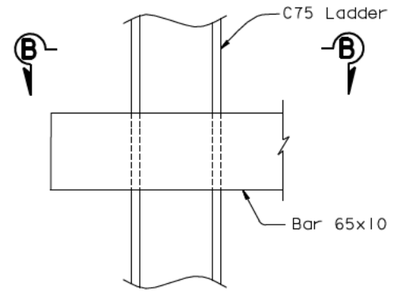

DETAIL A
1:2.5

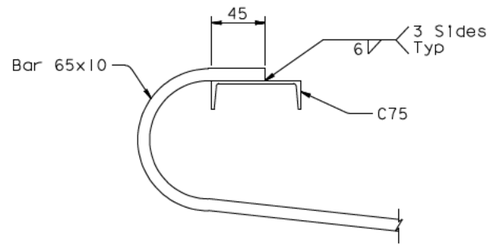

SECTION B-B
1:2.5

NOTES:

1. For ladder details, see "Tower Access Details No. 7" sheet.
2. For Padeye typical details and design force, see "Girder Access Details No. 10" sheet.
3. The 10 mm gap shall be centered between ladder rungs at contraction joint locations. For typical ladder contraction joint locations see "Tower Access Details No. 5" sheet.

2

100% PS&E

DIST.	COUNTY	ROUTE	KILOMETER POST TOTAL PROJECT	SHEET NO.	TOTAL SHEETS
04	SF	80	13.2/13.9	932R2	1204

REGISTERED ENGINEER - CIVIL

12-6-04
PLANS APPROVAL DATE

Marwan N. Nader
No. C 54426
Exp. 12/31/09
CIVIL
REGISTERED PROFESSIONAL ENGINEER
STATE OF CALIFORNIA

The State of California or its officers or agents shall not be responsible for the accuracy or completeness of electronic copies of this plan sheet.

T.Y. LIN / MOFFATT & NICHOL
825 BATTERY STREET
SAN FRANCISCO, CA 94111

Caltrans now has a web site! To get to the web site, go to: http://www.dot.ca.gov

REQUESTS FOR INFORMATION NOT ADDRESSED IN THIS CCO REMAIN IN FORCE

MARK	DATE	DESCRIPTIONS	BY	CH'D	CCO#
2	07/18/08	TOWER ACCESS	NV	MN	65
1	06/22/07	WELDED PADEYES	NV	MN	41

REVISIONS

CONTRACT CHANGE ORDER NO. ____
SHEET ___ OF ___

DESIGN	BY M. Nader	CHECKED	N. Vo
DETAILS	BY G. Baker	CHECKED	N. Vo
QUANTITIES	BY G. Baker	CHECKED	N. Vo

R. Valizadeh/V. Toan/Y.L./W.L./F.C.
DESIGN OVERSIGHT
SIGN OFF DATE 07/18/08

Rev. Date: 5-18-98

ORIGINAL SCALE IN MILLIMETERS FOR REDUCED PLANS 0 10 20 30 40 50 60 70 80 90 100

PREPARED FOR THE STATE OF CALIFORNIA
DEPARTMENT OF TRANSPORTATION

ALL DIMENSIONS ARE IN MILLIMETERS UNLESS OTHERWISE SHOWN

R. Manzanarez
PROJECT ENGINEER

CU 04
EA 0120F1

BRIDGE NO. 34-0006L/R
KILOMETER POST 13.2/13.9

DISREGARD PRINTS BEARING EARLIER REVISION DATES

REVISION DATES (PRELIMINARY STAGE ONLY)										SHEET	OF
04/08/02	07/01/02	12/19/02								515R2	

SAN FRANCISCO OAKLAND BAY BRIDGE
EAST SPAN SEISMIC SAFETY PROJECT
SELF-ANCHORED SUSPENSION BRIDGE
(SUPERSTRUCTURE & TOWER)

TOWER ACCESS DETAILS NO. 16

FILE -> I:\bb\04-012001\sas\contract plans and cco\cco\In progress\cco#65\update 10-07-08\dgn\akacc16b.dgn

USERNAME => dwinrow DATE PLOTTED => 02 OCT 2008 TIME PLOTTED => 13:33:01

STATE OF CALIFORNIA - DEPARTMENT OF TRANSPORTATION

CONTRACT CHANGE ORDER

Change Requested by: Engineer

CCO: 66 **Suppl. No. 0** **Contract No. 04 – 0120F4** **Road** SF-80-13.2/13.9 **FED. AID LOC.:**

To: **AMERICAN BRIDGE/FLUOR ENTERPRISES INC A JOINT VENTURE**

You are directed to make the following changes from the plans and specifications or do the following described work not included in the plans and specifications for this contract. ***NOTE: This change order is not effective until approved by the Engineer.***

Description of work to be done, estimate of quantities and prices to be paid. (Segregate between additional work at contract price, agreed price and force account.) Unless otherwise stated, rates for rental of equipment cover only such time as equipment is actually used and no allowance will be made for idle time. This last percentage shown is the net accumulated increase or decrease from the original quantity in the Engineer's Estimate.

Adjustment of Compensation at Lump Sum Price:

ITEM 1.

Change the silicon-based caulking to a non-silicone based caulking at painted structural steel areas as shown in this change order. Revise the fourth paragraph of Section 10-1.59 "STEEL STRUCTURES," subsection "FABRICATION," subsection "Bolted Connections" as shown on sheet 2 of this change order.

The following revised and supplemental plan sheets detail all changes in this change order: 542R2, 543R3, 547R2, 548R3, 552R2, 553R2, 558R2, 559R2, 575R4, 762R2, 825R2, 833R2, 834R2, 835R2, 836R2, 838R2 and 875R3 (of 1204) as shown on sheets 3 through 19 of this change order.

Adjustment of Compensation at Lump Sum Price..... $100,000.00

ITEM 2.

The items identified above in this change order have been paid as part of CCO 108S1 resolution. Therefore, the amount due under this change order will be adjusted by the amount paid under CCO 108S1 to prevent a double payment. Total amount paid under CCO 108S1, and to be credited to this change, is $100,000.00.

Adjustment of Compensation at Lump Sum Price..... <$100,000.00>

CHANGE ORDER COST AND TIME SUMMARY

(ITEM 1) Adjustment of Compensation for work pursuant to this change order	$100,000.00
(ITEM 2) Amount paid under CCO 108S1 for this change order	<$100,000.00>
Total net pay for this change order	$0.00

Contract time is addressed in CCO 108S1 for all work identified in this change order. Therefore, contract time will not be adjusted in this change order.

Estimated Cost: **Increase** ☐ **Decrease** ☐ **$0**

By reason of this order the time of completion will be adjusted as follows: **0 days**

Submitted by

Signature Kannu Balan **Resident Engineer** Kannu Balan, Senior.T.E. **Date** 6-23-10

Approval Recommended by

Signature for **Supervising Bridge Engineer** Richard Morrow, Sup.BE. **Date** 6/23/2010

Engineer Approval by

Signature Gary Pursell **Principal Transportation Engineer** Gary Pursell, Sup. T.E. **Date** 7/12/2010

We the undersigned contractor, have given careful consideration to the change proposed and agree, if this proposal is approved, that we will provide all equipment, furnish the materials, except as otherwise be noted above, and perform all services necessary for the work above specified, and will accept as full payment therefor the prices shown above.

NOTE: If you, the contractor, do not sign acceptance of this order, your attention is directed to the requirements of the specifications as to proceeding with the ordered work and filing a written protest within the time therein specified.

Contractor Acceptance by

Signature Michael D. Flowers **(Print name and title)** Michael D. Flowers, Project Director **Date** 7-7-10

The fourth paragraph of Section 10-1.59 "STEEL STRUCTURES," subsection "FABRICATION," subsection "Bolted Sections" is revised as follows:

"Alignment and contact for the tower shaft bolted splice shall conform to the requirements of AWS D1.5, Section 3.5.1.14, except that filler plates will not be permitted between the exterior face of the skin plates and the exterior splice plates. Attention is directed to section 10-1.59, "STEEL STRUCTURES," subsection "FABRICATION," subsection "Fabrication/Erection Procedure and Mock-Ups." The tower lift erection splice mock-up(s) shall demonstrate such contact. Splice plates may be heat bent to achieve contact. At the option of the Contractor, tower lift ends shall be milled to bear or shimmed such that the gap shall be no greater than 2 mm. Thermal cut surfaces shall meet the requirements of AWS D1.5, Section 3.2.2. Shimming of up to 5 mm thickness will be permitted. At any given location, the shim shall be a single thickness of steel. Gaps between shims and skin plates shall be filled with ~~silicone caulk~~ non-silicon type sealing compound conforming to the requirements in Federal Specification TT-S-230, Type II, or other approved material, prior to installation of the exterior splice plates. Over-size holes will not be permitted. The Contractor shall prepare a work plan that describes the procedure for meeting these requirements and that shall be approved by the Engineer before use. The work plan shall be demonstrated on the mock-up required above. The mating segments of each lift shall be mated at the fabrication site, and the required fit demonstrated, before moving each lift to the final assembly site. Bolted connections shall conform to the requirements in the Research Council on Structural Connections, "Specification for Structural Joints Using ASTM A325 or A490 Bolts," 2000 (RCSC Specification), with the following revisions:"

STATE OF CALIFORNIA - DEPARTMENT OF TRANSPORTATION

CONTRACT CHANGE ORDER MEMORANDUM

TO: Pete Siegenthaler, Prin TE /	FILE: **E.A.** 04 - 0120F4
FROM: Gary Pursell, Sup. TE	**CO-RTE-PM** SF-80-13.2/13.9
	FED. NO.
CCO#: **66** SUPPLEMENT#: **0** Category Code: **CHSA**	CONTINGENCY BALANCE (incl. this change) **$33,637,102.40**
COST: **$0.00** INCREASE ☐ DECREASE ☐	HEADQUARTERS APPROVAL REQUIRED? ☐ YES ☑ NO
SUPPLEMENTAL FUNDS PROVIDED: **$0.00**	IS THIS REQUEST IN ACCORDANCE WITH ENVIRONMENTAL DOCUMENTS? ☑ YES ☐ NO
CCO DESCRIPTION: Caulking	**PROJECT DESCRIPTION:** CONSTRUCT SELF-ANCHORED SUSPENSION BRIDGE

Original Contract Time:	Time Adj. This Change:	Previously Approved CCO Time Adjustments:	Percentage Time Adjusted: (including this change)	Total # of Unreconciled Deferred Time CCO(s): (including this change)
2490 Day(s)	**0** Day(s)	**227** Day(s)	**9** %	**6**

THIS CHANGE ORDER PROVIDES FOR:

Changing silicone caulking specified to polysulfide or polyurethane caulking at painted structural steel areas. In order to implement this change the fourth paragraph of Section 10-1.59 "STEEL STRUCTURES," subsection "FABRICATION," subsection "Bolted Sections" of the Special Provisions shall be revised along with deleting reference to silicone on plan sheets as shown and included with the change order.

METS informed the Division of Construction and the Designers of Record that paint will not adhere to the silicone caulk specified in the contract documentation. Therefore all parties concurred that silicone caulking, applied at painted structural steel areas, shall be changed to polysulfide or polyurethane. A non-silicon type sealing compound, polysulfide or polyurethane caulking, shall comply with July 1999 Standard Specifications, Section 59-2.12 "Painting" which requires conformance to the requirements of Federal Specification TT-S-230, Type II or other approved material.

Since the cost, of $100,000.00 in this change, is included in Contract Change Order 108 Supplement 1 (CCO 108S1) Claim Settlement Report No. 1 resolution costs the net payment in this change order is zero.

A determination of the delay in completion of the contract due to work specified by this change order, has been made in CCO 108S1 and is part of the Claims Settlement Report (CSR) No. 1 for this project. Therefore, no adjustment of time is warranted by reason of this change order.

This change order received concurrences from Gary Pursell (Resident Engineer), Rick Morrow (Structure Rep.), Patrick Treacy (HQ Liaison), Mike Forner (Principal Engineer), Marwan Nader (Design of Record), Lina Ellis (OSMI Oversight) and Ken Terpstra (Project Manager).

Claims Settlement Report (CSR) No. 1, for this project, revises the authority to "Issue and Approve" the changes listed in CCO 108S1 Appendices A & B. The authority to "Issue and Approve" the changes listed in Appendices A & B for the values of time and money contemplated therein has been delegated to the District for approval, therefore approval of this change order by the Headquarters CCO Desk will not be required. Since this change order is included in CCO 108S1 no Headquarters CCO Desk "Issue and Approve" is required, a copy of CCO 108S1 is attached for reference

ADA Notice: For individuals with sensory disabilities, this document is available in alternate formats. For information call: (916) 654-6410 or TDD (916) 654-3880 or write Records and Forms Management, 1120 N Street, MS-89, Sacramento, CA 95814.

CONCURRED BY:			
Construction Engineer:	Res. Eng., Gary Pursell, Sup. TE	Date	7/28/08
Bridge Engineer:	Struct Rep, Rick Morrow, Sup TE	Date	7/28/08
Project Engineer:	Design of Record, Marwan Nader,	Date	2/28/08
Project Manager:	Proj Manager, Ken Terpstra	Date	12/8/08
FHWA Rep.:	PCE, Michael Forner	Date	7/29/08
Environmental:	HQ, Patrick Treacy	Date	7/29/08
Other (specify):		Date	
Other (specify):	Struct. Maint, Lina Ellis	Date	10/16/08
District Prior Approval By:		Date	
HQ (Issue Approve) By:	HQ Bob Molera	Date	12/31/09
Resident Engineer's Signature:		Date	

Gary Pursell 6/23/10

ESTIMATE OF COST

	THIS REQUEST	TOTAL TO DATE
ITEMS	$0.00	$0.00
FORCE ACCOUNT	$0.00	$0.00
AGREED PRICE	$0.00	$0.00
ADJUSTMENT	$0.00	$0.00
TOTAL	$0.00	$0.00

FEDERAL PARTICIPATION

☐ PARTICIPATING ☐ PARTICIPATING IN PART ☑ NONE
☐ NON-PARTICIPATING (MAINTENANCE) ☐ NON-PARTICIPATING

FEDERAL SEGREGATION (if more than one Funding Source or P.I.P. type)
☐ CCO FUNDED PER CONTRACT ☐ CCO FUNDED AS FOLLOWS

FEDERAL FUNDING SOURCE PERCENT

ADA Notice: For individuals with sensory disabilities, this document is available in alternate formats. For information call: (916) 654-6410 or TDD (916) 654-3880 or write Records and Forms Management, 1120 N Street, MS-89, Sacramento, CA 95814.

DIST.	COUNTY	ROUTE	KILOMETER POST TOTAL PROJECT	SHEET NO.	TOTAL SHEETS
04	SF	80	13.2/13.9	542R2	1204

REGISTERED ENGINEER - CIVIL

12-6-04
PLANS APPROVAL DATE

The State of California or its officers or agents shall not be responsible for the accuracy or completeness of electronic copies of this plan sheet.

REGISTERED PROFESSIONAL ENGINEER — Marwan N. Nader — No. C 054426 — Exp. 12/31/09 — CIVIL — STATE OF CALIFORNIA

T.Y. LIN / MOFFATT & NICHOL
825 BATTERY STREET
SAN FRANCISCO, CA 94111

Caltrans now has a web site! To get to the web site, go to: http://www.dot.ca.gov

TABLE 1

Optional Tower Bolted Splice Locations

Splice	Elevation (m)
1	50.300
2	83.000
3	114.000
4	146.280

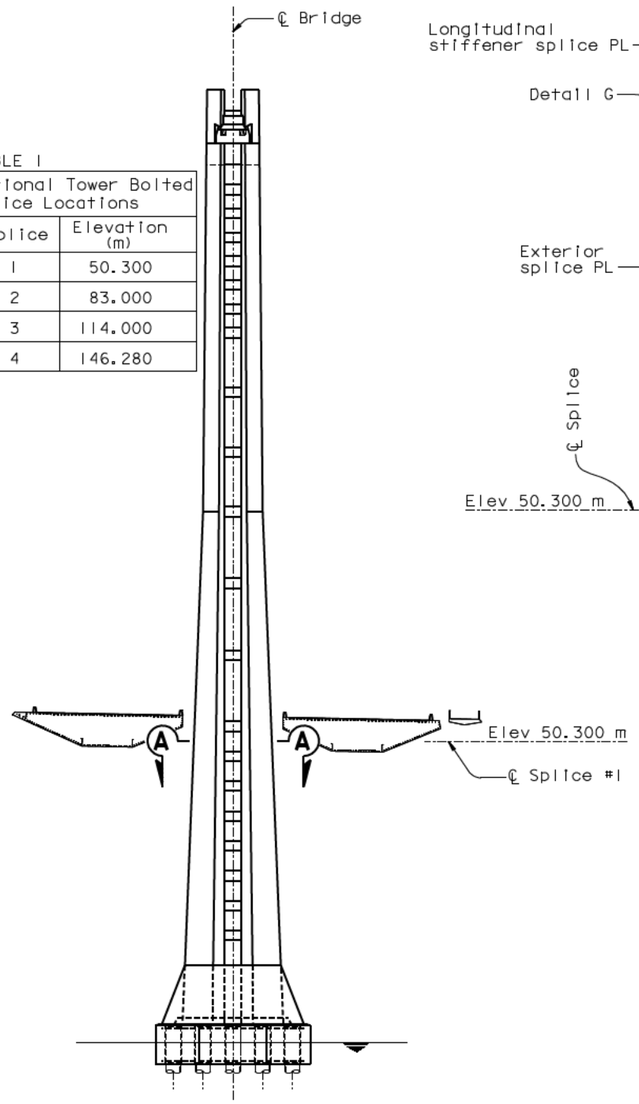

TOWER SPLICE LOCATION
1:500

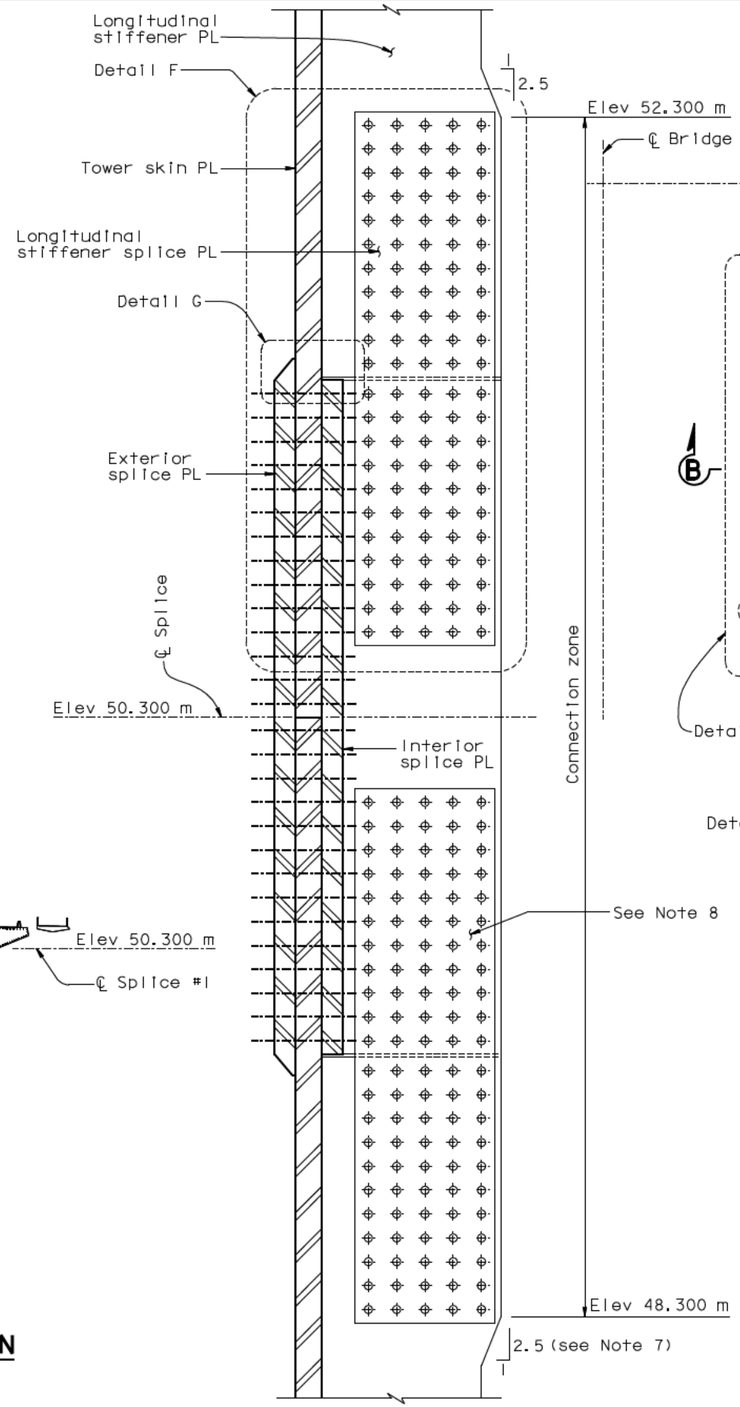

SECTION B-B
1:10

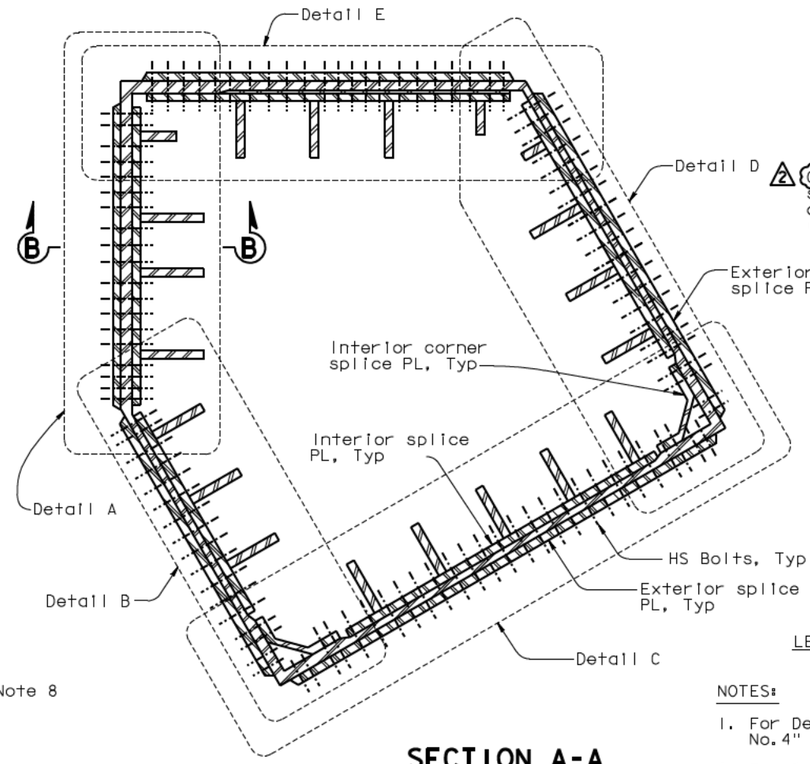

SECTION A-A
1:25

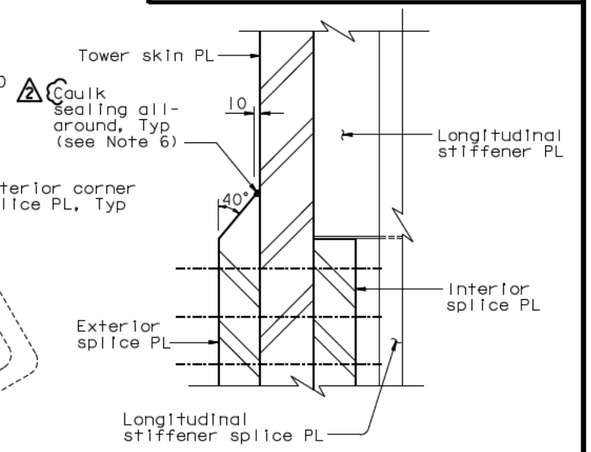

DETAIL G
1:5

LEGEND:

⊕ M27 A490-X HS Bolt

NOTES:

1. For Details A and B, see "Tower Splice Details No.4" sheet.
2. For Detail C, see "Tower Splice Details No.5" sheet.
3. For Details D and E, see "Tower Splice Details No. 6" sheet.
4. For Detail F, see "Tower Splice Details No.7" sheet.
5. The tower splice connections are designed as slip critical connections with class B contact surface (slip coefficient 0.5). The Contractor shall ensure that the flatness requirements are met at the faying surfaces.
2. 6. Caulk sealing shall be applied around the perimeter (horizontal and vertical edges) of all exterior splice plates.
7. Stiffeners A1, E7, and D4 shall not be tapered.
8. For stiffeners A1, B4, E4, E7, and D4, see "Tower Splice Details No.7" sheet.

TYPICAL TOWER SHAFT SPLICE #1

REQUESTS FOR INFORMATION NOT ADDRESSED IN THIS CCO REMAIN IN FORCE

MARK	DATE	DESCRIPTIONS	BY	CH'D	CCO#
		REVISIONS			
2	07/07/08	CAULKING	MN	NV	66
1	06/23/06	SPLICE PLATES PER ISM	MN	NV	21

CONTRACT CHANGE ORDER NO. ____
SHEET ___ OF ___

ALL DIMENSIONS ARE IN MILLIMETERS UNLESS OTHERWISE SHOWN

R. Valizadeh/V. Toan/Y.L./W.L./F.C.
DESIGN OVERSIGHT
SIGN OFF DATE 07/07/08

	BY		CHECKED	
DESIGN	M. Nader		M. Gulyas	
DETAILS	J. Lopez		N. Vo	
QUANTITIES	L. Rus		Y. Zhang	

PREPARED FOR THE STATE OF CALIFORNIA
DEPARTMENT OF TRANSPORTATION

R. Manzanarez
PROJECT ENGINEER

BRIDGE NO. 34-0006L/R
KILOMETER POST 13.2/13.9

SAN FRANCISCO OAKLAND BAY BRIDGE
EAST SPAN SEISMIC SAFETY PROJECT
SELF-ANCHORED SUSPENSION BRIDGE
(SUPERSTRUCTURE & TOWER)

TOWER SPLICE DETAILS NO. 3

Rev. Date: 5-18-98

ORIGINAL SCALE IN MILLIMETERS FOR REDUCED PLANS 0 10 20 30 40 50 60 70 80 90 100

CU 04
EA 0120F1

DISREGARD PRINTS BEARING EARLIER REVISION DATES →

REVISION DATES (PRELIMINARY STAGE ONLY): 05/28/01 | 04/26/02 | 07/29/02 | 12/19/02 | 10/13/05 | 11/23/05 | 12/07/05

SHEET 125R2 OF

FILE -> L:\BB\04-012001\SAS\Contract Plans and CCO\CCO\In Progress\CCO#66\DGN\aetsp03.dgn

USERNAME => vignatovs DATE PLOTTED => 03 JUL 2008 TIME PLOTTED => 13:40:01

100% PS&E

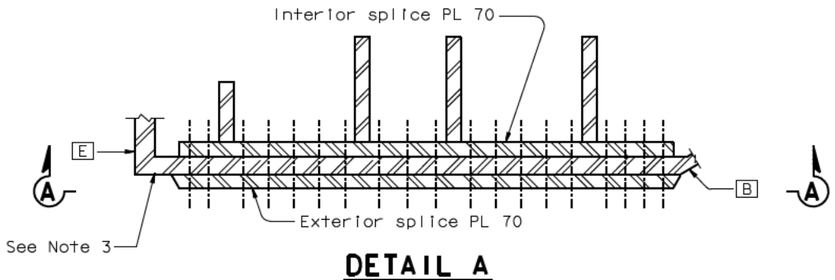

DETAIL A
1:15

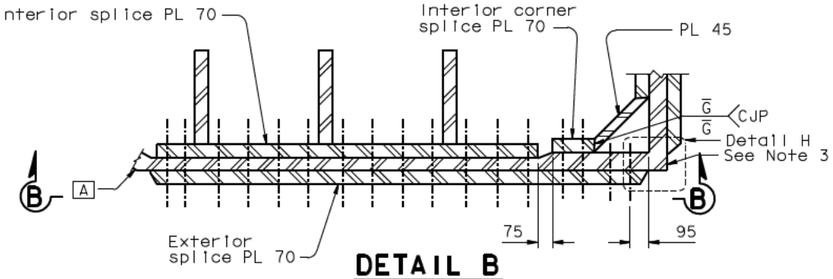

DETAIL B
1:15

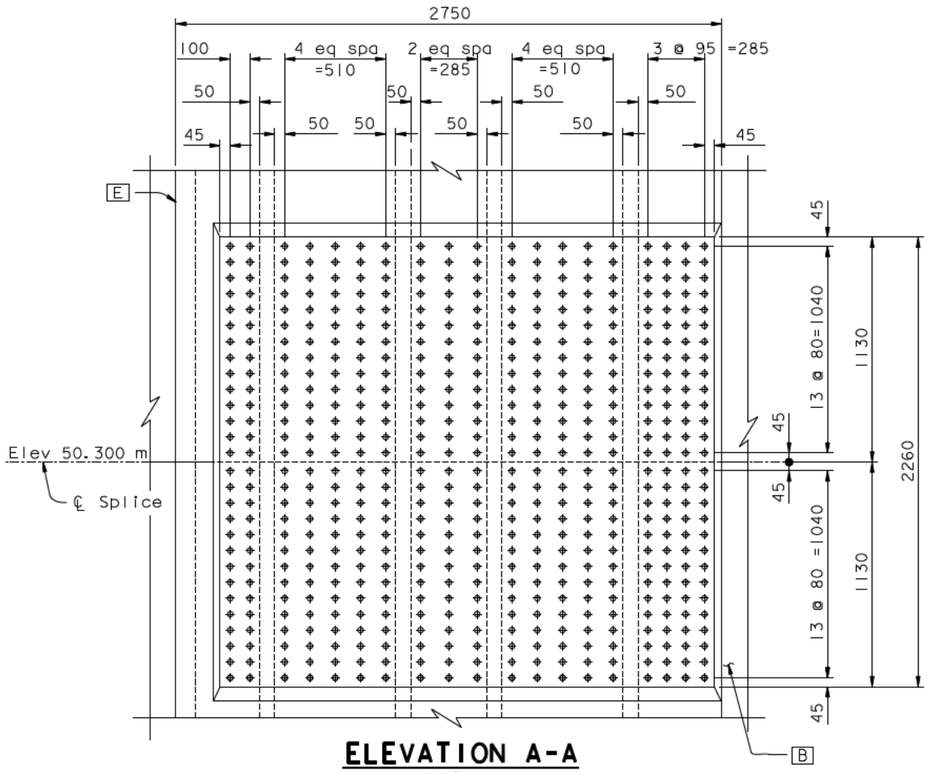

ELEVATION A-A
1:15

TOWER SKIN PLATE A

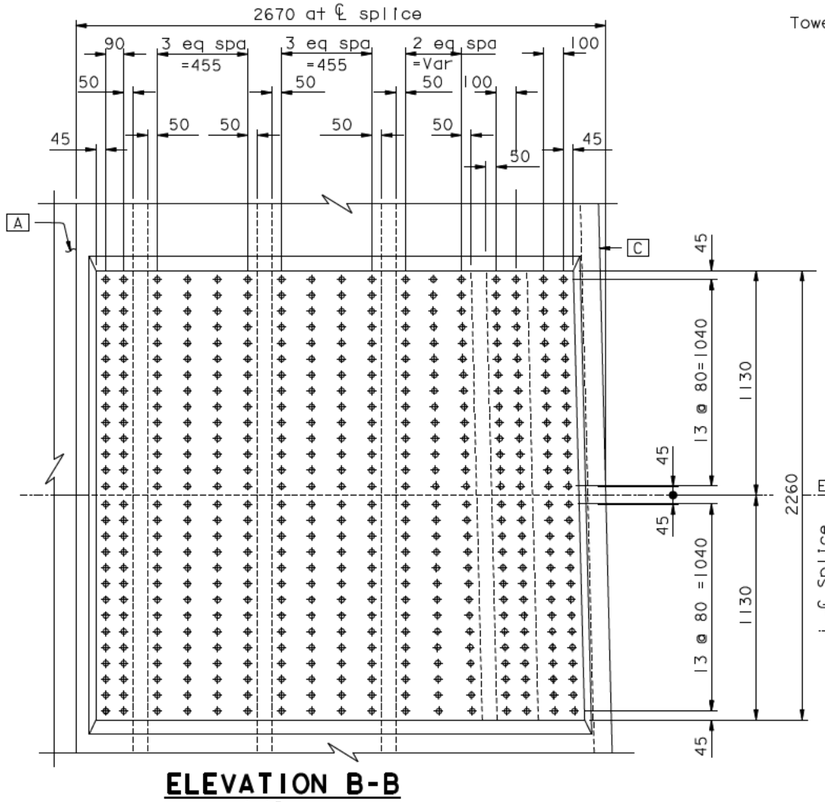

ELEVATION B-B
1:15

TOWER SKIN PLATE B

LEGEND:

⊕ M27 A490-X HS Bolts

\+ 12 Dia cap screw drilled in tapped hole

5. Whenever it is not practicable to have two screw rows, stagger the screw pattern using 3 bolts may be used subject to the approval of the Engineer.

6. Wherever it is not practicable to have cap screws, the cover plate shall be fillet seal welded to the splice plate.

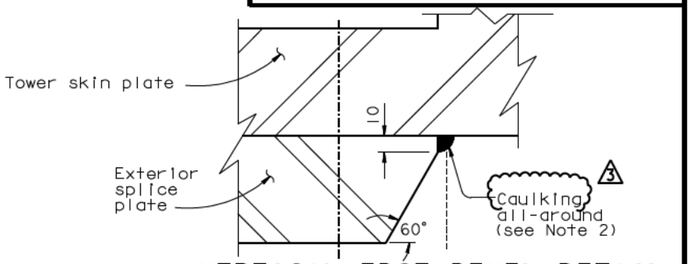

VERTICAL EDGE BEVEL DETAIL
(Typical all exterior splice plates)

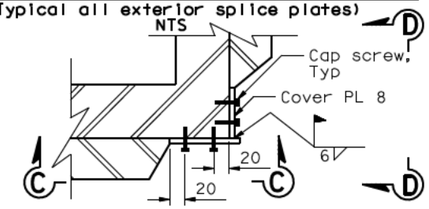

DETAIL H
NTS

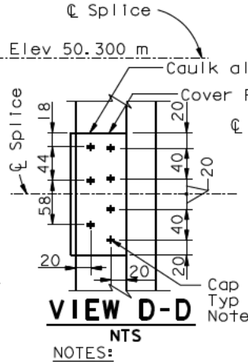

VIEW D-D
NTS

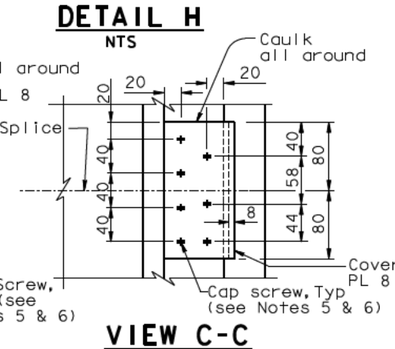

VIEW C-C
NTS

NOTES:

1. The tower splice connections are designed as slip critical connections with class B contact surface (slip coefficient 0.5). The Contractor shall ⚠3 ensure that the flatness requirements are met at the faying surfaces.
2. Caulk sealing shall be applied around the perimeter (horizontal and vertical edges) of all exterior splice plates.
3. Skin plate splice seam not covered by exterior splice plate shall be covered by cover plate and secured by cap screws with 8 mm all-around silicone caulk sealing (see Detail H). Corner CD is shown in Detail H. Corners AB, BC, DE and EA similar.
4. Elevation view of adjacent skin plate not shown for clarity.

DIST.	COUNTY	ROUTE	KILOMETER POST TOTAL PROJECT	SHEET NO.	TOTAL SHEETS
04	SF	80	13.2/13.9	543R3	1204

Caltrans Metric

REGISTERED ENGINEER - CIVIL

12-6-04
PLANS APPROVAL DATE

REGISTERED PROFESSIONAL ENGINEER — Marwan N. Nader — No. C 054426 — Exp. 12/31/09 — CIVIL — STATE OF CALIFORNIA

The State of California or its officers or agents shall not be responsible for the accuracy or completeness of electronic copies of this plan sheet.

T.Y. LIN / MOFFATT & NICHOL
825 BATTERY STREET
SAN FRANCISCO, CA 94111

Caltrans now has a web site! To get to the web site, go to: http://www.dot.ca.gov

REQUESTS FOR INFORMATION NOT ADDRESSED IN THIS CCO REMAIN IN FORCE					
⚠3	08/22/08	Caulking	MN	NV	66
⚠2	08/15/08	TOWER DOUBLER PLATE & SPLICE CORNER DETAILS	MN	NV	62
⚠1	06/23/06	SPLICE PLATES PER ISM	MN	NV	21
MARK	DATE	DESCRIPTIONS	BY	CH'D	CCO#
		REVISIONS			

CONTRACT CHANGE ORDER NO. ____
SHEET ____ OF ____

ALL DIMENSIONS ARE IN MILLIMETERS UNLESS OTHERWISE SHOWN

R. Valizadeh/V. Toan/Y.L./W.L./F.C.
DESIGN OVERSIGHT
SIGN OFF DATE 08/22/08

	BY		CHECKED	
DESIGN	M. Nader		M. Gulyas	
DETAILS	J. Lopez		N. Vo	
QUANTITIES	J. Lopez		Y. Zhang	

PREPARED FOR THE STATE OF CALIFORNIA DEPARTMENT OF TRANSPORTATION

R. Manzanarez
PROJECT ENGINEER

BRIDGE NO. 34-0006L/R
KILOMETER POST 13.2/13.9

SAN FRANCISCO OAKLAND BAY BRIDGE
EAST SPAN SEISMIC SAFETY PROJECT
SELF-ANCHORED SUSPENSION BRIDGE
(SUPERSTRUCTURE & TOWER)

TOWER SPLICE DETAILS NO. 4

Rev. Date: 5-18-98

ORIGINAL SCALE IN MILLIMETERS FOR REDUCED PLANS 0 10 20 30 40 50 60 70 80 90 100

CU 04
EA 0120F1

DISREGARD PRINTS BEARING EARLIER REVISION DATES

REVISION DATES (PRELIMINARY STAGE ONLY): 08/22/08 | 05/31/01 | 04/30/02 | 07/31/02 | 12/31/02 | 10/31/05 | 11/13/05

SHEET 126R3 OF

FILE -> L:\BB\04-012001\SAS\Contract Plans and CCO\CCO\In Progress\CCO#66\Revision 08-22-08\DGN\aetsp04.dgn

USERNAME => dwinrow DATE PLOTTED => 21 AUG 2008 TIME PLOTTED => 11:58:04

100% PS&E

REQUESTS FOR INFORMATION NOT ADDRESSED IN THIS CCO REMAIN IN FORCE					
2	07/07/08	CAULKING	MN	NV	66
1	06/23/08	SPLICE PLATES PER ISM	MN	NV	21
MARK	DATE	DESCRIPTIONS	BY	CH'D	CCO#
REVISIONS					

CONTRACT CHANGE ORDER NO.___
SHEET ___ OF ___

Caltrans Metric

DIST.	COUNTY	ROUTE	KILOMETER POST TOTAL PROJECT	SHEET NO.	TOTAL SHEETS
04	SF	80	13.2/13.9	547R2	1204

REGISTERED ENGINEER - CIVIL

12-6-04
PLANS APPROVAL DATE

REGISTERED PROFESSIONAL ENGINEER — Marwan N. Nader — No. C 054426 — Exp. 12/31/09 — CIVIL — STATE OF CALIFORNIA

The State of California or its officers or agents shall not be responsible for the accuracy or completeness of electronic copies of this plan sheet.

T.Y. LIN / MOFFATT & NICHOL
825 BATTERY STREET
SAN FRANCISCO, CA 94111

Caltrans now has a web site! To get to the web site, go to: http://www.dot.ca.gov

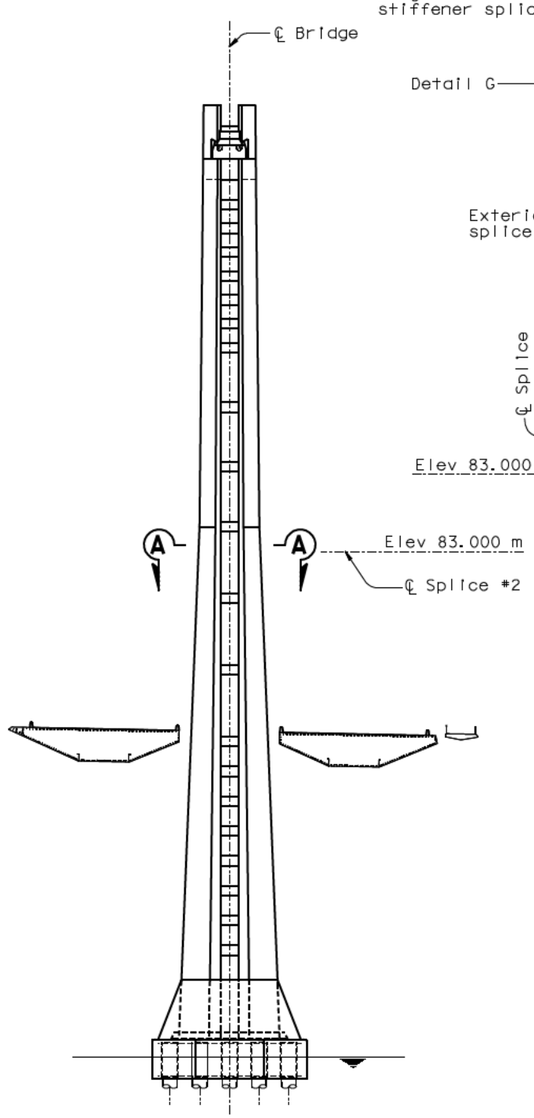

TOWER SPLICE LOCATION
1:500

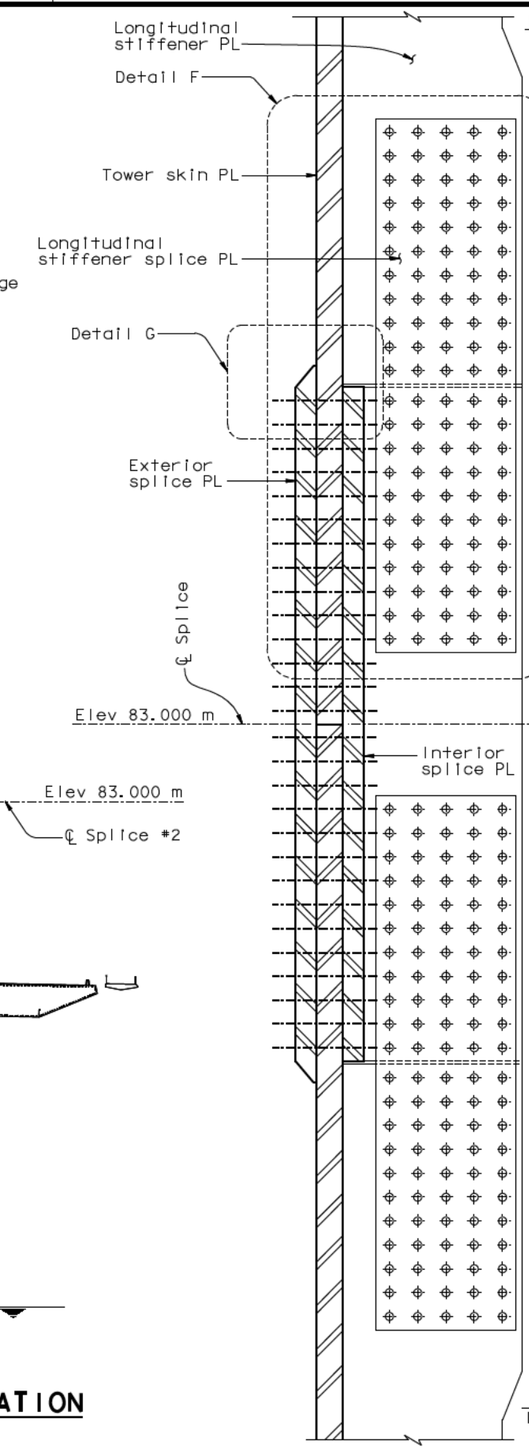

SECTION B-B (see Notes 6 and 7)
1:10

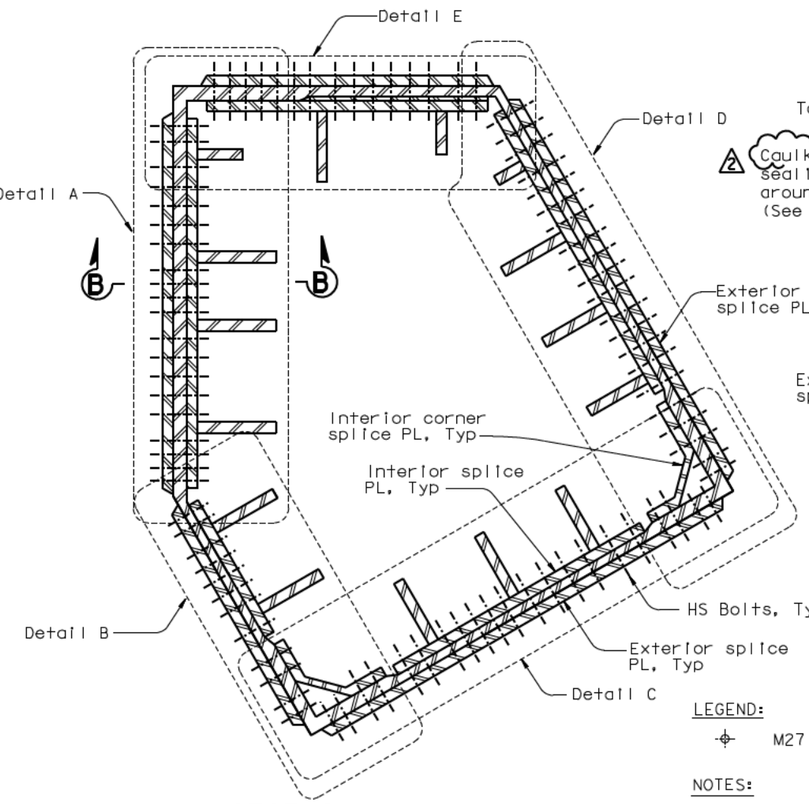

SECTION A-A
1:20

TYPICAL TOWER SHAFT SPLICE #2

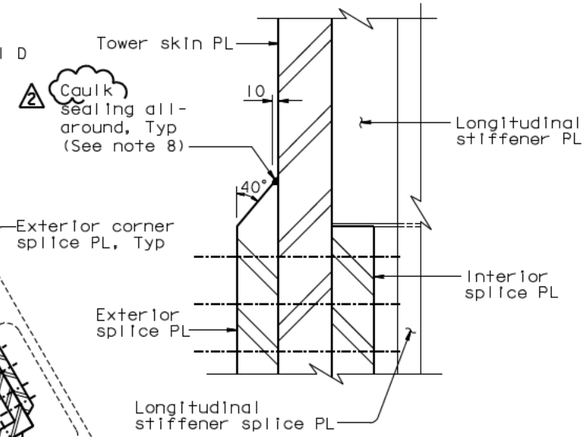

DETAIL G
1:5

LEGEND:

⊕ M27 A490-X HS Bolt

NOTES:

1. For Details A and B, see "Tower Splice Details No. 9" sheet.
2. For Detail C, see "Tower Splice Details No. 10" sheet.
3. For Details D and E, see "Tower Splice Details No. 11" sheet.
4. For Detail F, see "Tower Splice Details No. 12" sheet.
5. The tower splice connections are designed as slip critical connections with class B contact surface (slip coefficient 0.5). The Contractor shall ensure that the flatness requirements are met at the faying surfaces.
6. Stiffeners A1, E7, and D4 shall not be tapered.
7. For stiffeners A1, E2, E7, and D4, see"Tower Splice Details No. 12" sheet.
8. 2 Caulk sealing shall be applied around the perimeter (horizontal and vertical edges) of all exterior splice plates.

ALL DIMENSIONS ARE IN MILLIMETERS UNLESS OTHERWISE SHOWN

100% PS&E

USERNAME => v:\gnatovs\ DATE PLOTTED => 03 JUL 2008 TIME PLOTTED => 13:41:40

R. Vallzadeh/V. Toan/Y.L./W.L./F.C.	DESIGN	BY M. Nader	CHECKED N. Vo
DESIGN OVERSIGHT	DETAILS	BY J. Lopez	CHECKED N. Vo
SIGN OFF DATE 07/07/08	QUANTITIES	BY J. Lopez	CHECKED N. Vo

PREPARED FOR THE STATE OF CALIFORNIA
DEPARTMENT OF TRANSPORTATION

R. Manzanarez
PROJECT ENGINEER

BRIDGE NO. 34-0006L/R
KILOMETER POST 13.2/13.9

SAN FRANCISCO OAKLAND BAY BRIDGE
EAST SPAN SEISMIC SAFETY PROJECT
SELF-ANCHORED SUSPENSION BRIDGE (SUPERSTRUCTURE & TOWER)

TOWER SPLICE DETAILS NO. 8

Rev. Date: 5-18-98

ORIGINAL SCALE IN MILLIMETERS FOR REDUCED PLANS 0 10 20 30 40 50 60 70 80 90 100

CU 04
EA 0120F1

DISREGARD PRINTS BEARING EARLIER REVISION DATES

REVISION DATES (PRELIMINARY STAGE ONLY): 05/27/01 | 04/08/02 | 07/01/02 | 12/19/02 | 11/13/05

SHEET 130R2 OF

FILE -> I:\bb\04-012001\sas\contract plans and cco\cco\In progress\cco#66\dgn\aetsp08.dgn

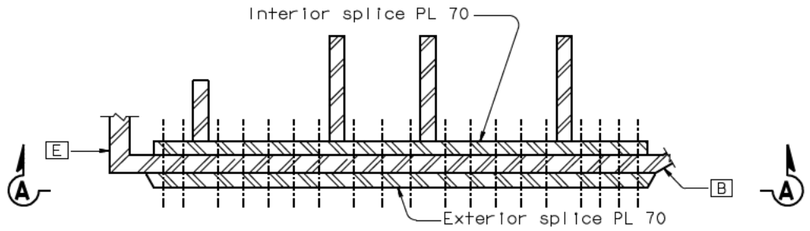

DETAIL A
1:15

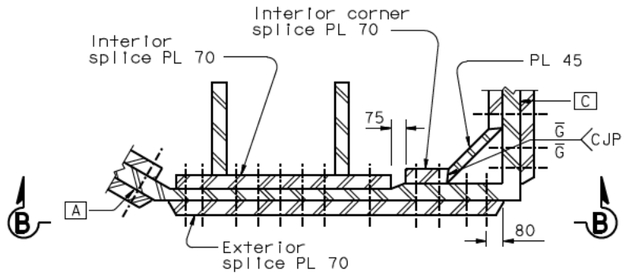

DETAIL B
1:15

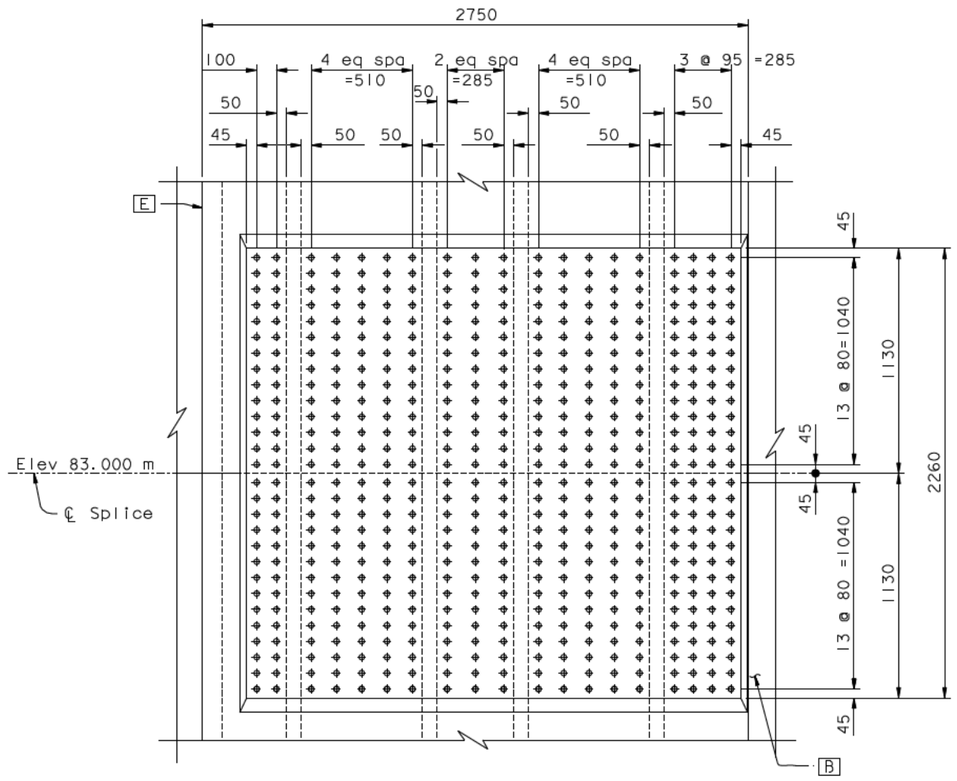

ELEVATION A-A
1:15

TOWER SKIN PLATE A

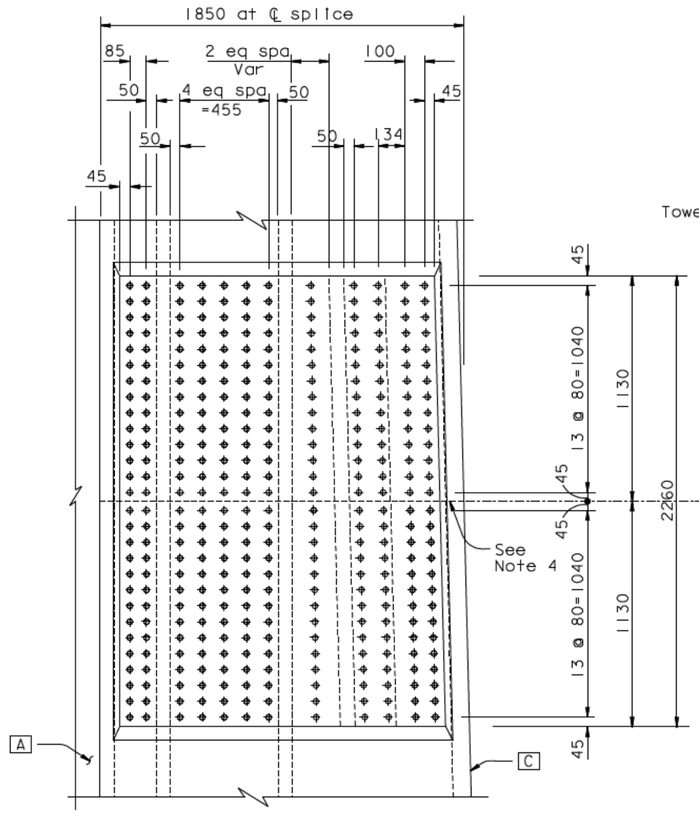

ELEVATION B-B
1:15

TOWER SKIN PLATE B

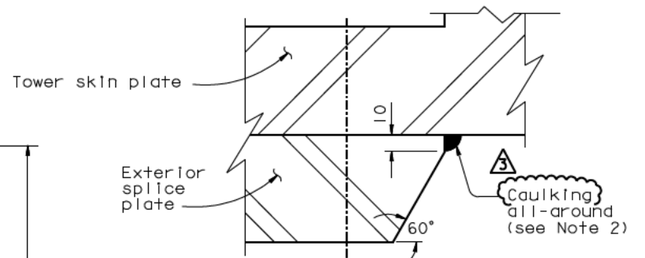

VERTICAL EDGE BEVEL DETAIL
(Typical all exterior splice plates)
NTS

LEGEND:

⊕ M27 A490-X HS Bolts

NOTES:

1. The tower splice connections are designed as slip critical connections with class B contact surface (slip coefficient 0.5). The Contractor shall ensure that the flatness requirements at the faying surfaces and the geometry control are met.
3. Caulk sealing shall be applied around the perimeter (horizontal and vertical edges) of all exterior splice plates.
3. Elevation view of adjacent skin plate not shown for clarity.
4. For skin plate splice seam not covered by exterior splice plates, see details on "Tower Splice Details No. 4" sheet.

DIST.	COUNTY	ROUTE	KILOMETER POST TOTAL PROJECT	SHEET NO.	TOTAL SHEETS
04	SF	80	13.2/13.9	548R3	1204

REGISTERED ENGINEER - CIVIL

12-6-04
PLANS APPROVAL DATE

REGISTERED PROFESSIONAL ENGINEER — Marwan N. Nader — No. C 054426 — Exp. 12/31/09 — CIVIL — STATE OF CALIFORNIA

The State of California or its officers or agents shall not be responsible for the accuracy or completeness of electronic copies of this plan sheet.

T.Y. LIN / MOFFATT & NICHOL
825 BATTERY STREET
SAN FRANCISCO, CA 94111

Caltrans now has a web site! To get to the web site, go to: http://www.dot.ca.gov

REQUESTS FOR INFORMATION NOT ADDRESSED IN THIS CCO REMAIN IN FORCE

MARK	DATE	REVISIONS	BY	CH'D	CCO#
3	10/31/08	CAULKING	MN	NV	66
2	07/25/08	TOWER DOUBLER PLATE & SPLICE CORNER DETAILS	MN	NV	62
1	06/23/06	SPLICE PLATES PER ISM	MN	NV	21

CONTRACT CHANGE ORDER NO. ___
SHEET ___ OF ___

ALL DIMENSIONS ARE IN MILLIMETERS UNLESS OTHERWISE SHOWN

R. Valizadeh/V. Toan/Y.L./W.L./F.C.
DESIGN OVERSIGHT
SIGN OFF DATE 10/31/08

	BY	CHECKED
DESIGN	M. Nader	N. Vo
DETAILS	C. Chol	N. Vo
QUANTITIES	C. Chol	N. Vo

PREPARED FOR THE STATE OF CALIFORNIA DEPARTMENT OF TRANSPORTATION

R. Manzanarez
PROJECT ENGINEER

CU 04
EA 0120F1

BRIDGE NO. 34-0006L/R
KILOMETER POST 13.2/13.9

SAN FRANCISCO OAKLAND BAY BRIDGE
EAST SPAN SEISMIC SAFETY PROJECT
SELF-ANCHORED SUSPENSION BRIDGE (SUPERSTRUCTURE & TOWER)

TOWER SPLICE DETAILS NO. 9

Rev. Date: 5-18-98

ORIGINAL SCALE IN MILLIMETERS FOR REDUCED PLANS 0 10 20 30 40 50 60 70 80 90 100

DISREGARD PRINTS BEARING EARLIER REVISION DATES → 08/30/99 05/31/01 04/30/02 07/31/02 12/31/02 11/13/05

SHEET 131R3 OF

FILE -> L:\BB\04-012001\SAS\Contract Plans and CCO\CCO\In Progress\CCO#66\Update 10-31-08\aetsp09.dgn

USERNAME => vignatovs DATE PLOTTED => 27 OCT 2008 TIME PLOTTED => 14:38:02

100 % PS&E

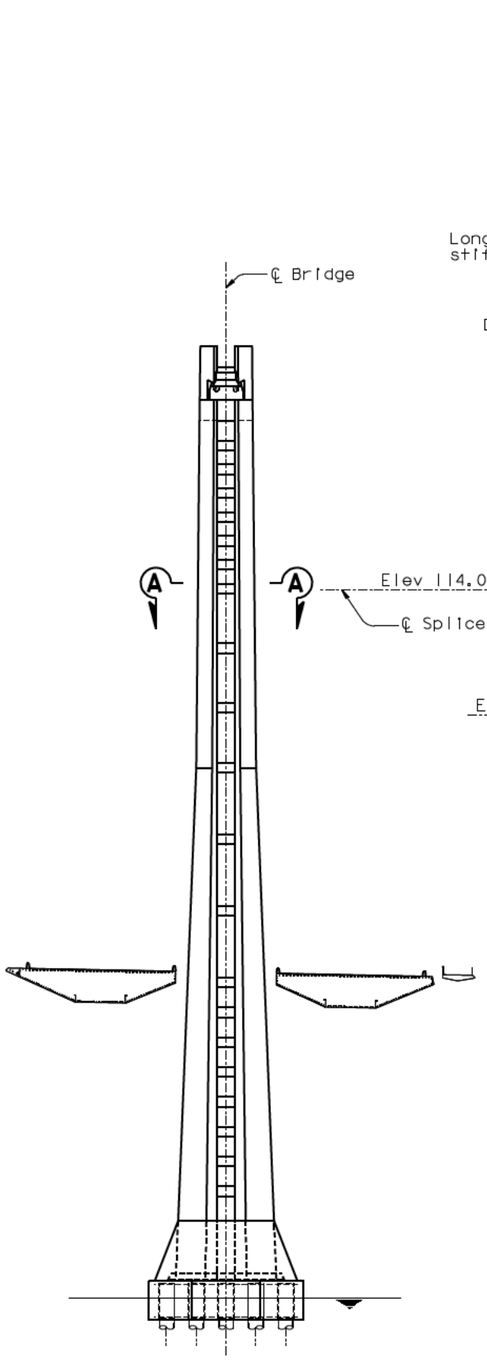

TOWER SPLICE LOCATION
1:500

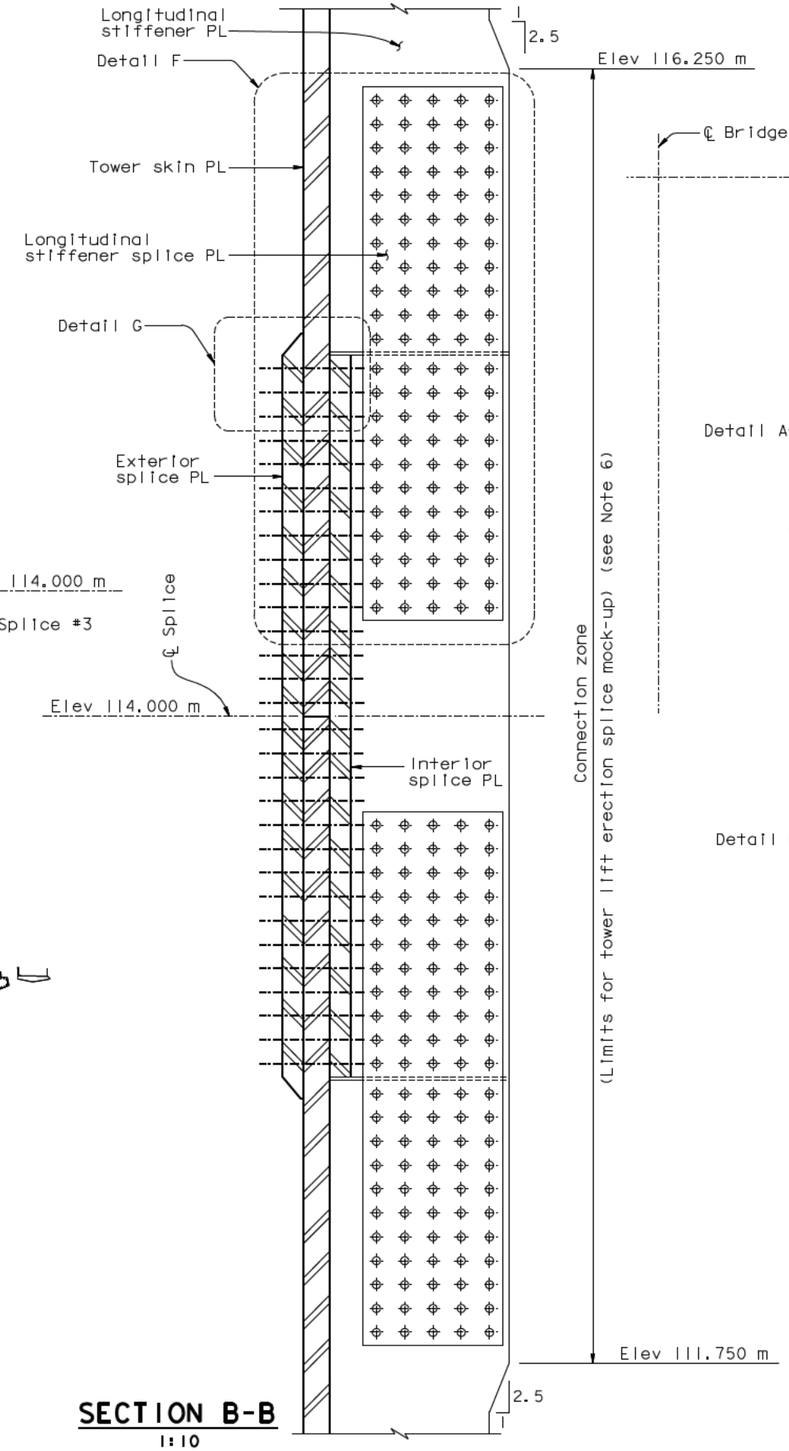

SECTION B-B
1:10

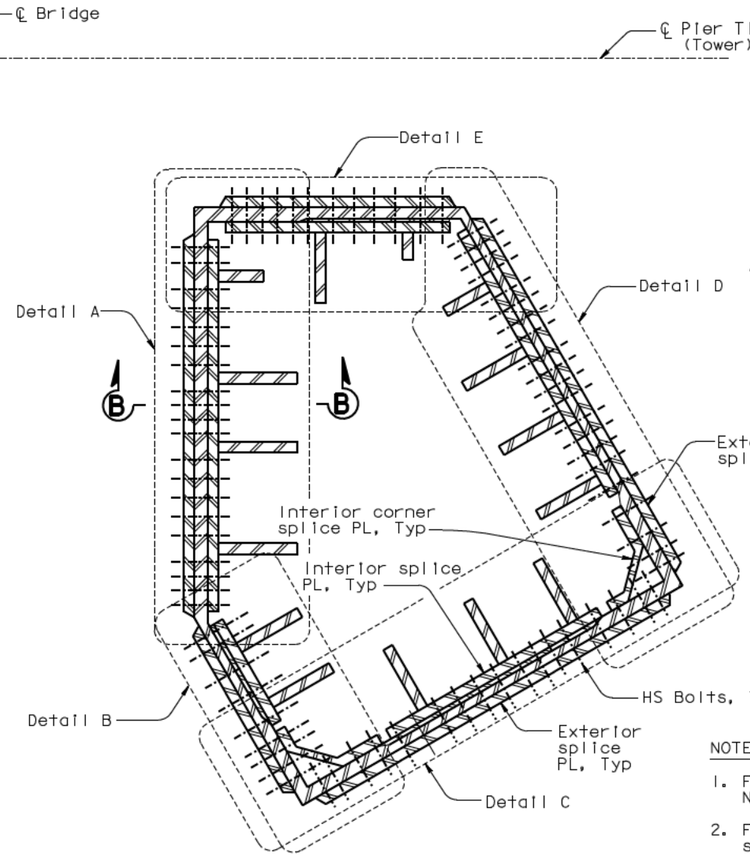

SECTION A-A
1:20

TYPICAL TOWER SHAFT SPLICE #3
(Limits for mock-up)
(see Note 6)

REQUESTS FOR INFORMATION NOT ADDRESSED IN THIS CCO REMAIN IN FORCE					
2	07/07/08	CAULKING	MN	NV	66
1	06/23/06	SPLICE PLATES PER ISM	MN	NV	21
MARK	DATE	DESCRIPTIONS	BY	CH'D	CCO#
REVISIONS					

CONTRACT CHANGE ORDER NO. ____
SHEET ____ OF ____

LEGEND:

⌖ M27 A490-X HS Bolt

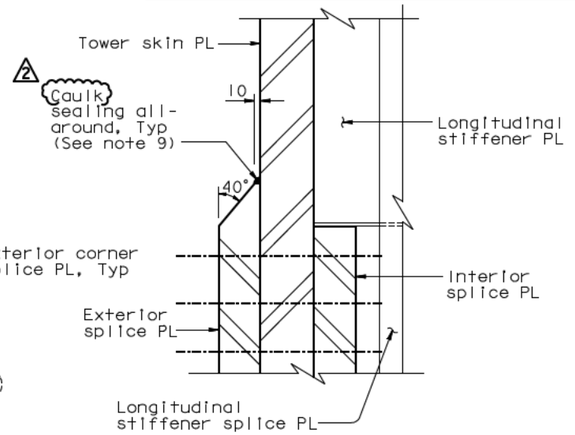

DETAIL G
1:5

NOTES:

1. For Details A and B, see "Tower Splice Details No.14" sheet.
2. For Detail C, see "Tower Splice Details No.15" sheet.
3. For Details D and E, see "Tower Splice Details No.16" sheet.
4. For Detail F, see "Tower Splice Details No.17" sheet.
5. The tower splice connections are designed as slip critical connections with class B contact surface (slip coefficient 0.5). The Contractor shall ensure that the flatness requirements are met at the faying surfaces.
6. Mock-up for tower lift erection splice shall be made for one shaft only. Limits shown apply to either all bolted, combined bolted and welded, or all welded splice.
7. Stiffeners A1, E7, and D4 shall not be tapered.
8. For stiffeners A1, E7, and D4 see "Tower Splice Details No.17" sheet.
9. Caulk sealing shall be applied around the perimeter (horizontal and vertical edges) of all exterior splice plates.

ALL DIMENSIONS ARE IN MILLIMETERS UNLESS OTHERWISE SHOWN

DIST.	COUNTY	ROUTE	KILOMETER POST TOTAL PROJECT	SHEET NO.	TOTAL SHEETS
04	SF	80	13.2/13.9	552R2	1204

Caltrans Metric

REGISTERED ENGINEER - CIVIL

12-6-04
PLANS APPROVAL DATE

REGISTERED PROFESSIONAL ENGINEER — Marwan N. Nader — No. C 054426 — Exp. 12/31/09 — CIVIL — STATE OF CALIFORNIA

The State of California or its officers or agents shall not be responsible for the accuracy or completeness of electronic copies of this plan sheet.

T.Y. LIN / MOFFATT & NICHOL
825 BATTERY STREET
SAN FRANCISCO, CA 94111

Caltrans now has a web site! To get to the web site, go to: http://www.dot.ca.gov

R. Vallzadeh/V. Toan/Y.L./W.L./F.C.
DESIGN OVERSIGHT
Ryo Vallzadeh / Vong Toan / Y. Liu
SIGN OFF DATE 07/07/08

DESIGN	BY M. Nader	CHECKED	N. Vo
DETAILS	BY J. Lopez	CHECKED	N. Vo
QUANTITIES	BY J. Lopez	CHECKED	N. Vo

PREPARED FOR THE STATE OF CALIFORNIA DEPARTMENT OF TRANSPORTATION

R. Manzanarez
PROJECT ENGINEER

BRIDGE NO. 34-0006L/R
KILOMETER POST 13.2/13.9

SAN FRANCISCO OAKLAND BAY BRIDGE
EAST SPAN SEISMIC SAFETY PROJECT
SELF-ANCHORED SUSPENSION BRIDGE
(SUPERSTRUCTURE & TOWER)

TOWER SPLICE DETAILS NO. 13

Rev. Date: 5-18-98

ORIGINAL SCALE IN MILLIMETERS FOR REDUCED PLANS 0 10 20 30 40 50 60 70 80 90 100

CU 04
EA 0120F1

DISREGARD PRINTS BEARING EARLIER REVISION DATES

REVISION DATES (PRELIMINARY STAGE ONLY): 05/31/01 | 04/08/02 | 07/09/02 | 12/19/02 | 11/13/05

SHEET 135R2 OF

FILE -> I:\bb\04-012001\sas\contract plans and cco\cco\In progress\cco#66\dgn\aetspl3.dgn

USERNAME => vignatovs DATE PLOTTED => 03 JUL 2008 TIME PLOTTED => 13:43:48

100 % PS&E

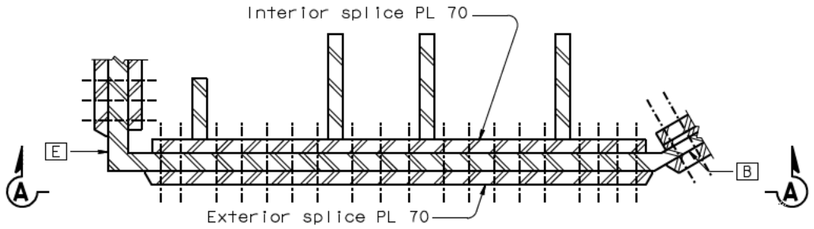

DETAIL A
1:15

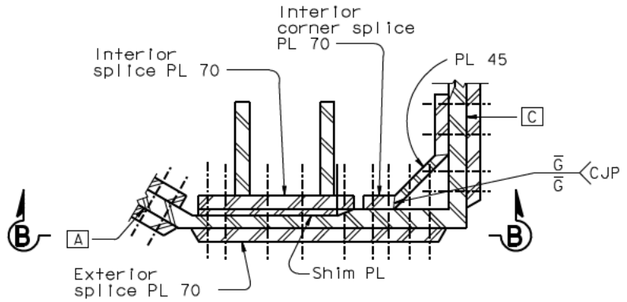

DETAIL B
1:15

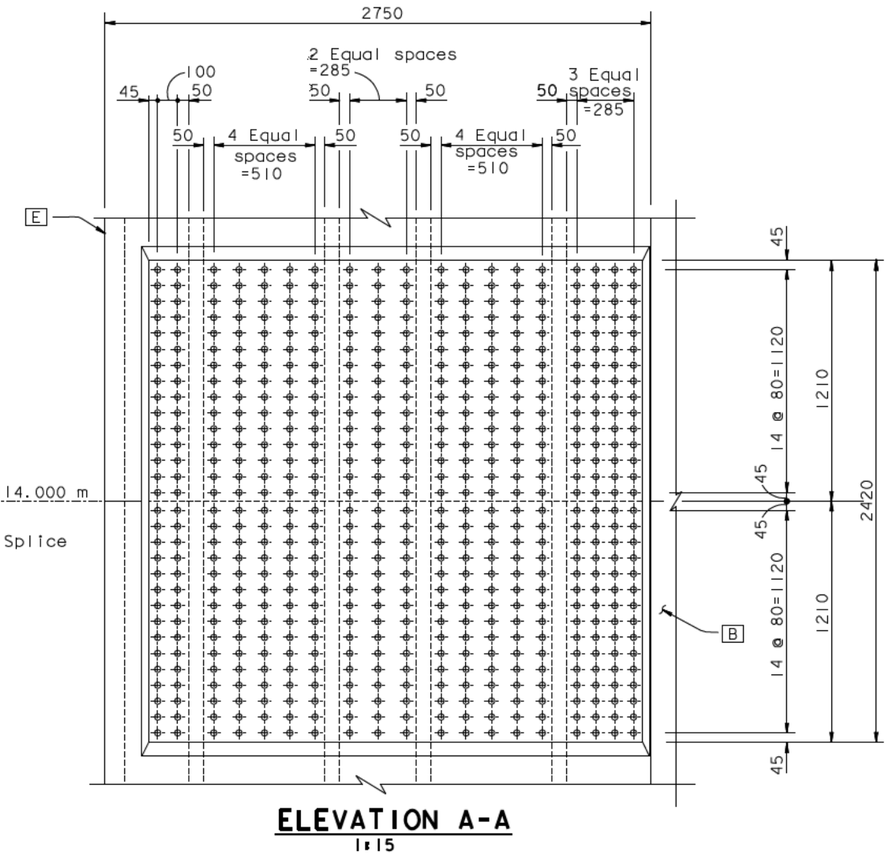

ELEVATION A-A
1:15

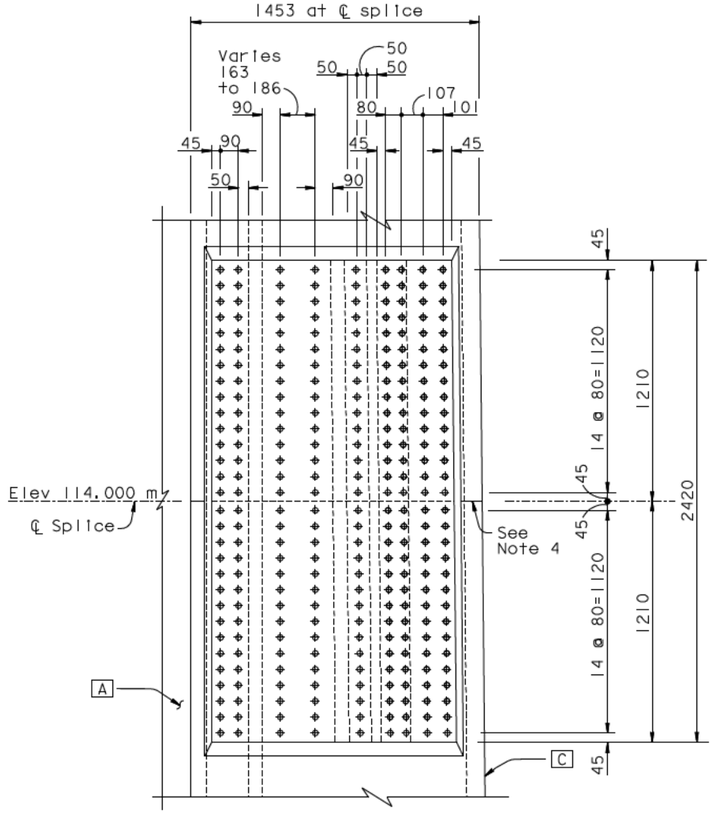

ELEVATION B-B
1:15

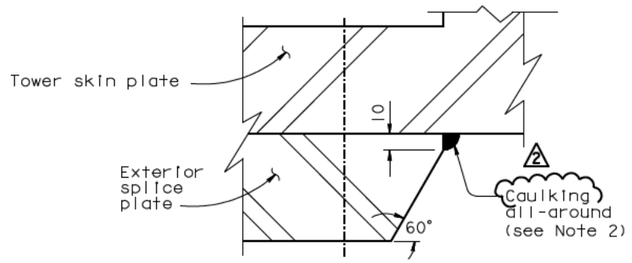

VERTICAL EDGE BEVEL DETAIL
(Typical all exterior splice plates)
NTS

TOWER SKIN PLATE A

TOWER SKIN PLATE B

REQUESTS FOR INFORMATION NOT ADDRESSED IN THIS CCO REMAIN IN FORCE					
2	07/07/08	CAULKING	MN	NV	66
1	06/23/06	SPLICE PLATES PER ISM	MN	NV	21
MARK	DATE	DESCRIPTIONS	BY	CH'D	CCO#
REVISIONS					

CONTRACT CHANGE ORDER NO. ____
SHEET ____ OF ____

LEGEND:

⊕ M27 A490-X HS Bolts

NOTES:

1. The tower splice connections are designed as slip critical connections with class B contact surface (slip coefficient 0.5). The Contractor shall ensure that the flatness requirements at the faying surfaces and the geometry control are met.
2. Caulk sealing shall be applied around the perimeter (horizontal and vertical edges) of all exterior splice plates.
3. Elevation view of adjacent skin plate not shown for clarity.
4. For skin plate splice seam not covered by exterior splice plates, see details on "Tower Splice Details No. 4" sheet.

ALL DIMENSIONS ARE IN MILLIMETERS UNLESS OTHERWISE SHOWN

DIST.	COUNTY	ROUTE	KILOMETER POST TOTAL PROJECT	SHEET NO.	TOTAL SHEETS
04	SF	80	13.2/13.9	553R2	1204

Caltrans Metric

REGISTERED ENGINEER - CIVIL

12-6-04
PLANS APPROVAL DATE

REGISTERED PROFESSIONAL ENGINEER — Marwan N. Nader — No. C 054426 — Exp. 12/31/09 — CIVIL — STATE OF CALIFORNIA

The State of California or its officers or agents shall not be responsible for the accuracy or completeness of electronic copies of this plan sheet.

T.Y. LIN / MOFFATT & NICHOL
825 BATTERY STREET
SAN FRANCISCO, CA 94111

Caltrans now has a web site! To get to the web site, go to: http://www.dot.ca.gov

R. Valizadeh/V. Toan/Y.L./W.L./F.C. DESIGN OVERSIGHT		DESIGN	BY M. Nader	CHECKED N. Vo	PREPARED FOR THE STATE OF CALIFORNIA DEPARTMENT OF TRANSPORTATION
Rza Valizadeh/ Vung Toan/ Y. Liu SIGN OFF DATE 07/07/08		DETAILS	BY J. Lopez	CHECKED N. Vo	
		QUANTITIES	BY J. Lopez	CHECKED N. Vo	

R. Manzanarez
PROJECT ENGINEER

BRIDGE NO. 34-0006L/R
KILOMETER POST 13.2/13.9

CU 04
EA 0120F1

DISREGARD PRINTS BEARING EARLIER REVISION DATES → 08/22/99 | 05/31/01 | 04/30/02 | 07/01/02 | 12/19/02

SAN FRANCISCO OAKLAND BAY BRIDGE
EAST SPAN SEISMIC SAFETY PROJECT
SELF-ANCHORED SUSPENSION BRIDGE
(SUPERSTRUCTURE & TOWER)

TOWER SPLICE DETAILS NO. 14

SHEET 136R2 OF

Rev. Date: 5-18-98

ORIGINAL SCALE IN MILLIMETERS FOR REDUCED PLANS 0 10 20 30 40 50 60 70 80 90 100

FILE -> I:\bb\04-012001\sas\contract plans and cco\cco\In progress\cco#66\dgn\aetspl4.dgn

USERNAME => ptom
DATE PLOTTED => 23 JUL 2008
TIME PLOTTED => 16:08:39
100 % PS&E

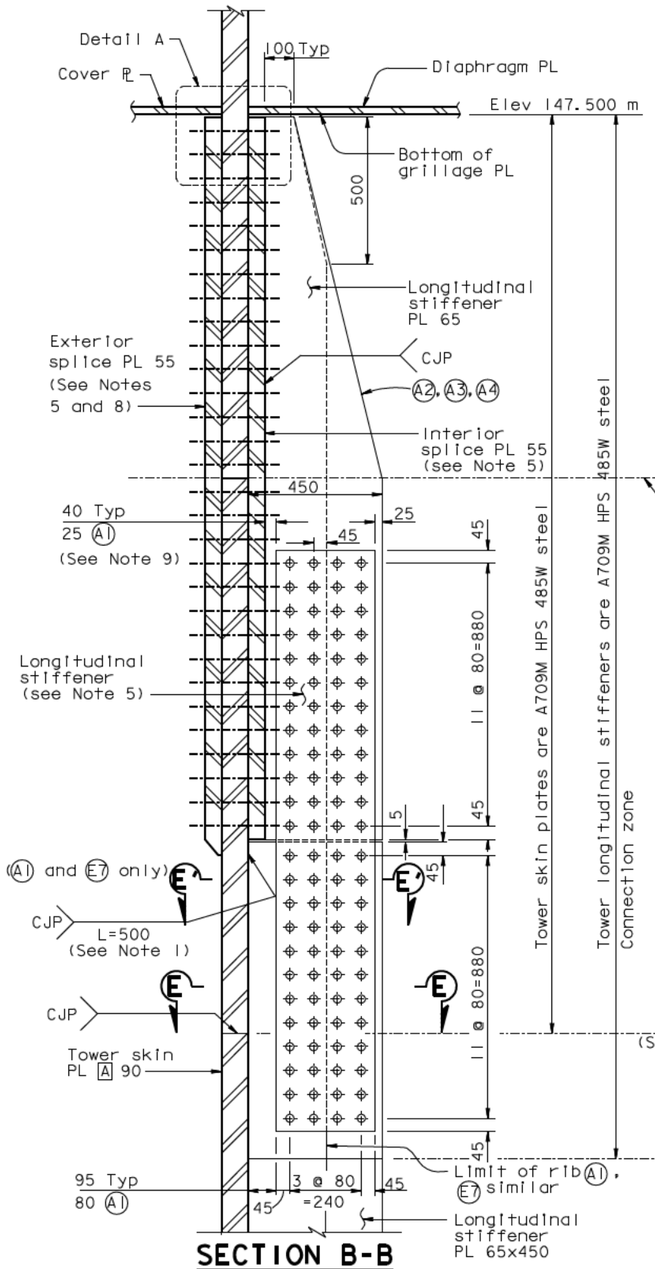

SECTION B-B

1:10

TOWER SKIN PLATE A

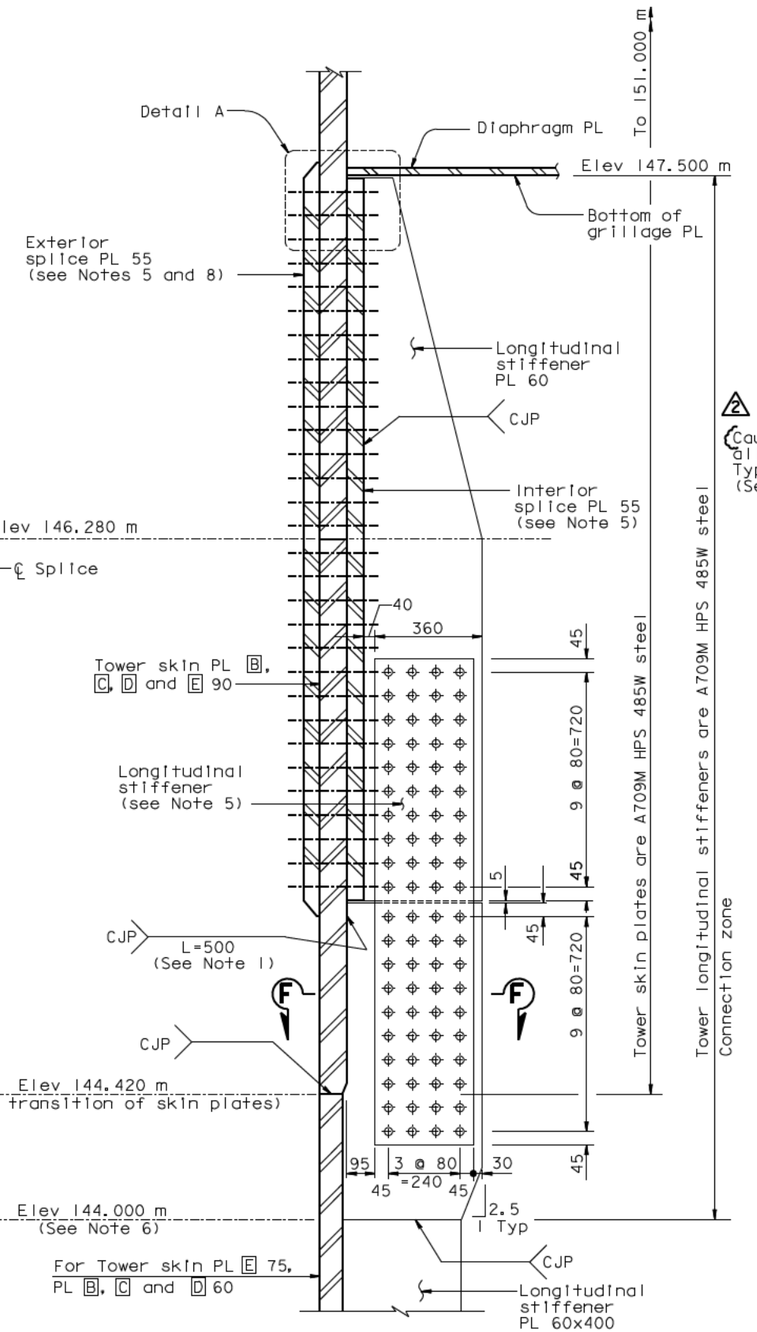

SECTION C-C

(Section D-D similar)

1:10

TOWER SKIN PLATE B TO E

(Except E7)

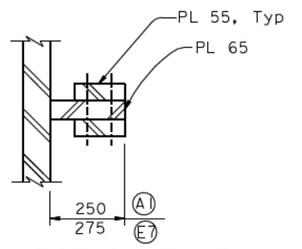

SECTION E'-E'

A1 and E7 only)

1:10

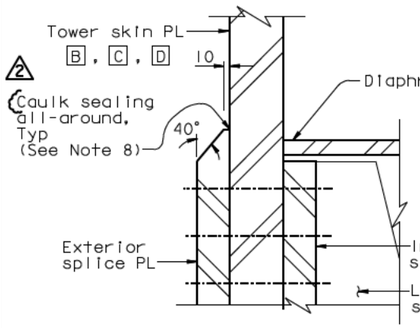

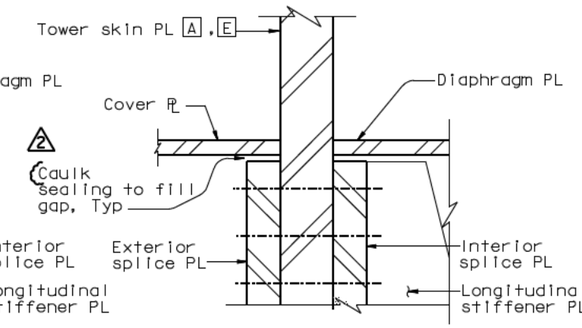

DETAIL A

(see Note 7)

1:5

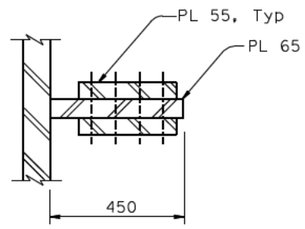

SECTION E-E

(A2, A3, A4)

1:10

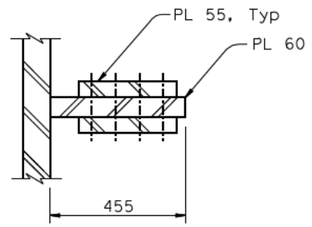

SECTION F-F

1:10

LEGEND:

⌖ M27 A490-X HS Bolt

NOTES:

1. Weld of longitudinal stiffener to the tower shaft skin plates beyond the length indicated shall be in accordance with Table 1 in "Tower Splice Details No.2" sheet.
2. Longitudinal stiffeners for skin plate "A" are 450 deep UNO. Longitudinal stiffeners for skin plates "B" through "E" are 455 deep UNO.
3. For tower grillage details, see "Tower Saddle Grillage Details" sheets.
4. For tower plate and stiffener sizes above elevation 144.000 m, see "Tower Saddle Grillage Details" sheets.
5. For splice #4, splice plates shall be A709M HPS 485W steel.
6. Elevation 144 corresponds to the change of stiffener size, see "Tower Shaft Details" sheets.
7. Longitudinal stiffeners B1 and D4 shall be coped at the top as shown on "Tower Saddle Grillage Details No.7" sheet.
2 8. Caulk sealing shall be applied around the perimeter (horizontal and vertical edges) of all exterior splice plates.
9. To facilitate installation of the bolted splice for longitudinal stiffener A1, the Contractor may use counterbore for the bolt head in the interior splice plate for the first bolt row on each side of the longitudinal stiffener. Each counterbore shall be 60 mm Dia and 10 mm deep. See Detail A on "Tower Splice Details No.16" sheet.

ALL DIMENSIONS ARE IN MILLIMETERS UNLESS OTHERWISE SHOWN

DIST.	COUNTY	ROUTE	KILOMETER POST TOTAL PROJECT	SHEET NO.	TOTAL SHEETS
04	SF	80	13.2/13.9	558R2	1204

REGISTERED ENGINEER - CIVIL

1-27-03

PLANS APPROVAL DATE

Marwan N. Nader No. C 054426 Exp. 12/31/09 CIVIL

The State of California or its officers or agents shall not be responsible for the accuracy or completeness of electronic copies of this plan sheet.

T.Y. LIN / MOFFATT & NICHOL
825 BATTERY STREET
SAN FRANCISCO, CA 94111

Caltrans now has a web site! To get to the web site, go to: http://www.dot.ca.gov

REQUESTS FOR INFORMATION NOT ADDRESSED IN THIS CCO REMAIN IN FORCE

MARK	DATE	DESCRIPTIONS	BY	CH'D	CCO#
		REVISIONS			
2	07/07/08	CAULKING	MN	NV	66
1	05/23/08	LONG. STIFFENER GAP & MISC.	MN	NV	21

CONTRACT CHANGE ORDER NO. ____
SHEET ___ OF ___

	BY	CHECKED
DESIGN	M. Nader	M. Gulyas
DETAILS	R. Kanitkar	M. Gulyas
QUANTITIES	R. Kanitkar	Y. Zhang

PREPARED FOR THE STATE OF CALIFORNIA DEPARTMENT OF TRANSPORTATION

R. Manzanarez
PROJECT ENGINEER

BRIDGE NO. 34-0006L/R
KILOMETER POST 13.2/13.9

CU 04
EA 0120F1

DISREGARD PRINTS BEARING EARLIER REVISION DATES

SAN FRANCISCO OAKLAND BAY BRIDGE
EAST SPAN SEISMIC SAFETY PROJECT
SELF-ANCHORED SUSPENSION BRIDGE
(SUPERSTRUCTURE & TOWER)

TOWER SPLICE DETAILS NO. 19

REVISION DATES (PRELIMINARY STAGE ONLY): 05/24/01 | 04/08/02 | 07/01/02 | 12/19/02 | 11/13/05

SHEET 141R2 OF

R. Valizadeh/V. Toan/Y.L./W.L./F.C.
DESIGN OVERSIGHT
SIGN OFF DATE 07/07/08

Rev. Date: 5-18-98

ORIGINAL SCALE IN MILLIMETERS FOR REDUCED PLANS 0 10 20 30 40 50 60 70 80 90 100

FILE -> I:\bb\04-012001\sas\contract plans and cco\cco\In progress\cco#66\dgn\aetspl9.dgn

USERNAME => vignotovs DATE PLOTTED => 03 JUL 2008 TIME PLOTTED => 13:45:04

100 % PS&E

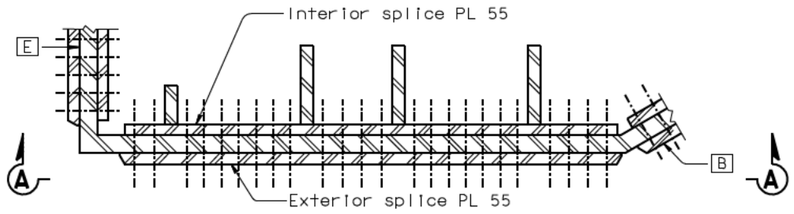

DETAIL A
1:15

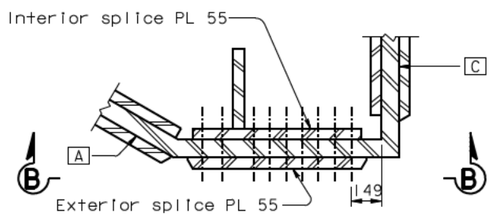

DETAIL B
1:15

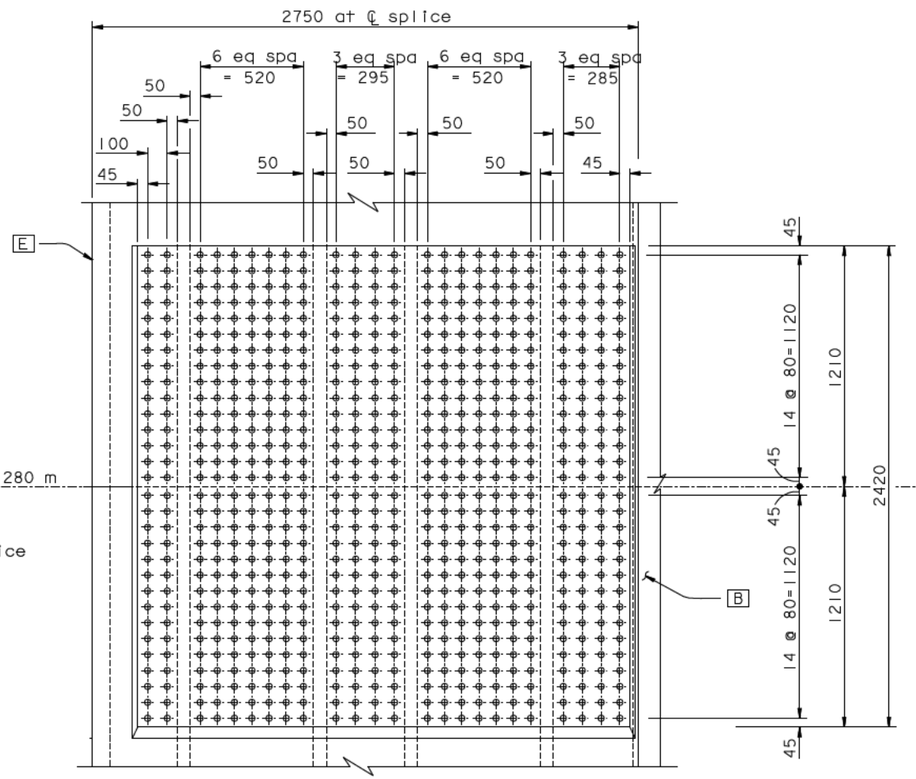

ELEVATION A-A
1:15

TOWER SKIN PLATE [A]

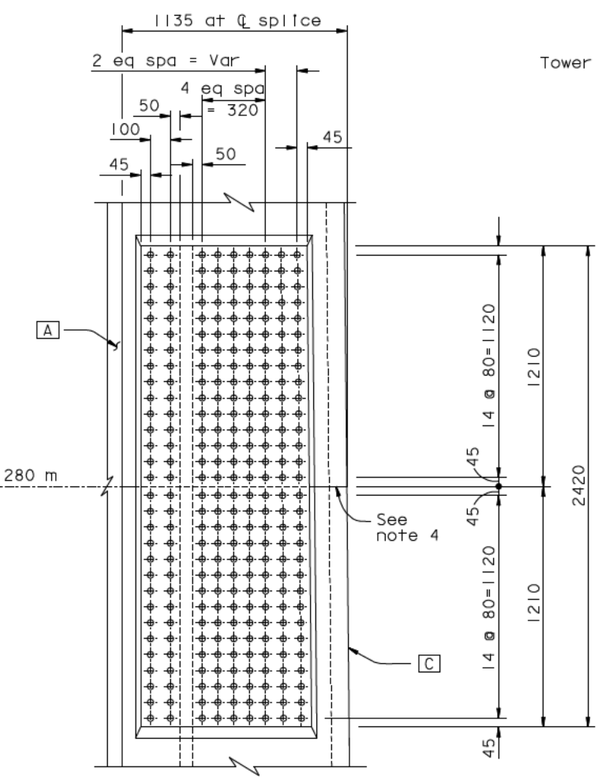

ELEVATION B-B
1:15

TOWER SKIN PLATE [B]

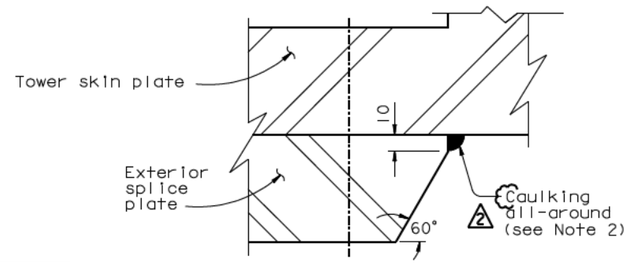

VERTICAL EDGE BEVEL DETAIL
(Typical all exterior splice plates)
NTS

LEGEND:

⌖ M27 A490-X HS Bolts

REQUESTS FOR INFORMATION NOT ADDRESSED IN THIS CCO REMAIN IN FORCE					
2	07/07/08	CAULKING	MN	NV	66
1	06/23/06	SPLICE PLATES PER ISM	MN	NV	21
MARK	DATE	DESCRIPTIONS	BY	CH'D	CCO#
		REVISIONS			

CONTRACT CHANGE ORDER NO. ___
SHEET ___ OF ___

NOTES:

1. The tower splice connections are designed as slip critical connections with class B contact surface (slip coefficient 0.5). The Contractor shall ensure that the flatness requirements at the faying surfaces and the geometry control are met.
2. Caulk sealing shall be applied around the perimeter (horizontal and vertical edges) of all exterior splice plates.
3. Elevation view of adjacent skin plate not shown for clarity.
4. For skin plate splice seam not covered by exterior splice plates, see details on "Tower Splice Details No. 4" sheet.

ALL DIMENSIONS ARE IN MILLIMETERS UNLESS OTHERWISE SHOWN

DIST.	COUNTY	ROUTE	KILOMETER POST TOTAL PROJECT	SHEET NO.	TOTAL SHEETS
04	SF	80	13.2/13.9	559R2	1204

REGISTERED ENGINEER - CIVIL
12-6-04
PLANS APPROVAL DATE
REGISTERED PROFESSIONAL ENGINEER — Marwan N. Nader — No. C 054426 — Exp. 12/31/09 — CIVIL — STATE OF CALIFORNIA

The State of California or its officers or agents shall not be responsible for the accuracy or completeness of electronic copies of this plan sheet.

T.Y. LIN / MOFFATT & NICHOL
825 BATTERY STREET
SAN FRANCISCO, CA 94111

Caltrans now has a web site! To get to the web site, go to: http://www.dot.ca.gov

R. Valizadeh/V. Toan/Y.L./W.L./F.C.	DESIGN	BY M. Nader	CHECKED M. Gulyas	PREPARED FOR THE STATE OF CALIFORNIA DEPARTMENT OF TRANSPORTATION
DESIGN OVERSIGHT	DETAILS	BY C. Chol	CHECKED N. Vo	R. Manzanarez PROJECT ENGINEER
SIGN OFF DATE 07/07/08	QUANTITIES	BY R. Kanitkar	CHECKED Y. Zhang	BRIDGE NO. 34-0006L/R; KILOMETER POST 13.2/13.9

SAN FRANCISCO OAKLAND BAY BRIDGE
EAST SPAN SEISMIC SAFETY PROJECT
SELF-ANCHORED SUSPENSION BRIDGE
(SUPERSTRUCTURE & TOWER)

TOWER SPLICE DETAILS NO. 20

Rev. Date: 5-18-98

ORIGINAL SCALE IN MILLIMETERS FOR REDUCED PLANS 0 10 20 30 40 50 60 70 80 90 100

CU 04
EA 0120F1

DISREGARD PRINTS BEARING EARLIER REVISION DATES

REVISION DATES (PRELIMINARY STAGE ONLY): 05/31/01 | 04/08/02 | 07/01/02 | 12/19/02 | 11/13/05

SHEET 142R2 OF

FILE => I:\bb\04-012001\sas\contract plans and cco\cco\In progress\cco#66\dgn\aetsp20.dgn

USERNAME => vignotovs DATE PLOTTED => 03 JUL 2008 TIME PLOTTED => 13:46:09

100 % PS&E

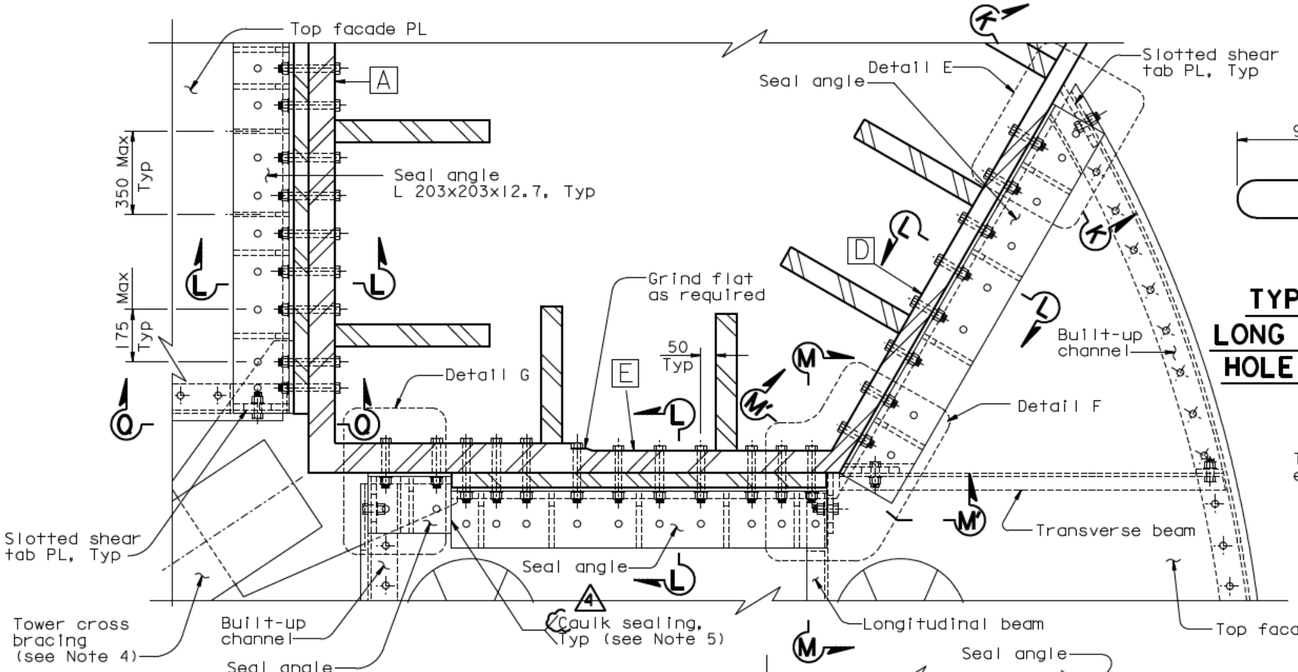

TYPICAL LONG SLOTTED HOLE DETAIL
1:2

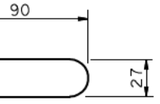

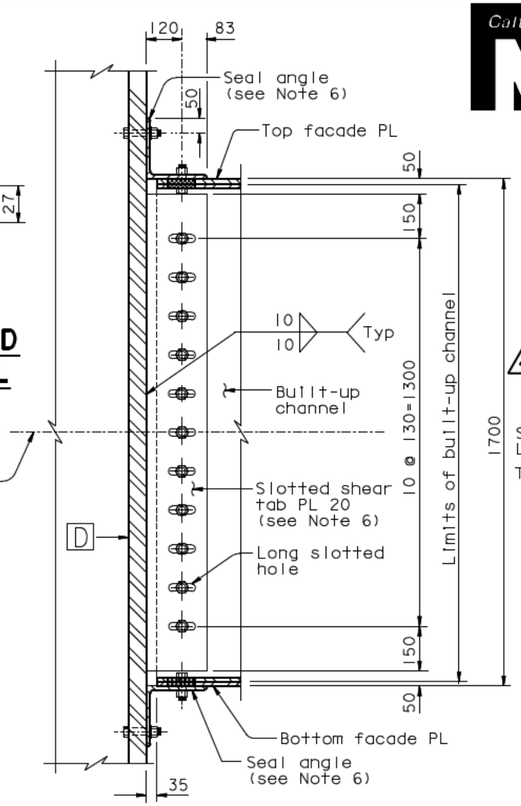

Tower strut elevation

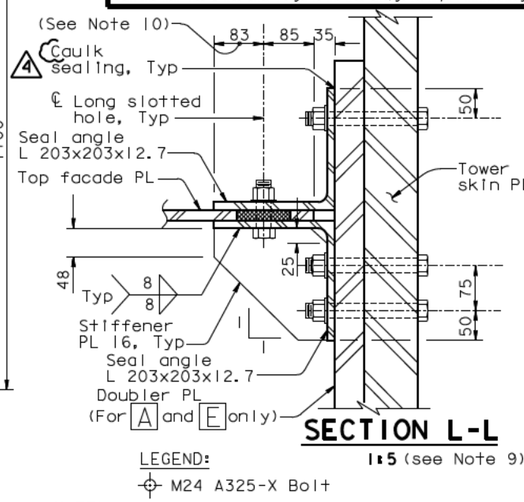

SECTION L-L
1:5 (see Note 9)

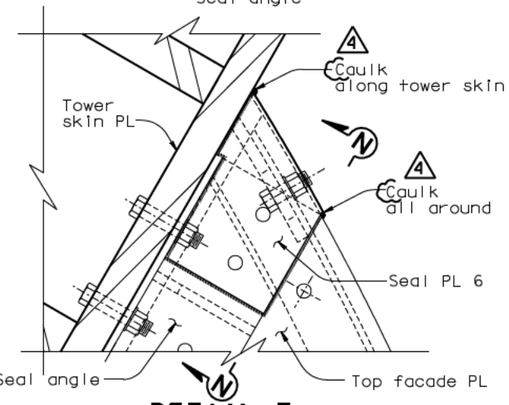

DETAIL E (Detail G similar)
1:5
(Typical edge seal Plate)

DETAIL D
1:10
(see Note 9)

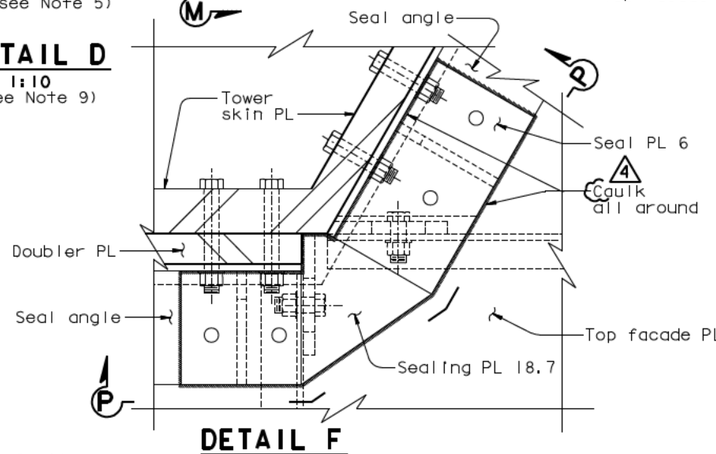

DETAIL F
1:5
(Typical corner seal Plate)

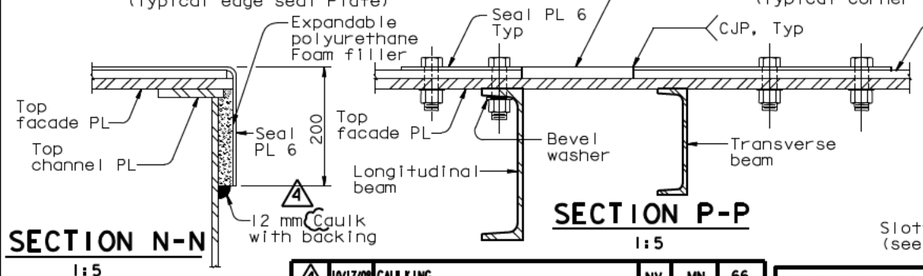

SECTION N-N
1:5

SECTION P-P
1:5

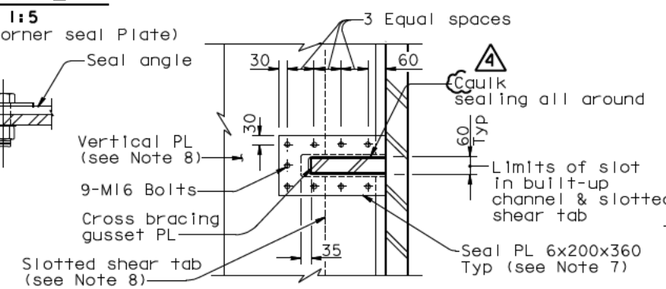

SECTION Q-Q (Typical gusset seal Plate)
1:10

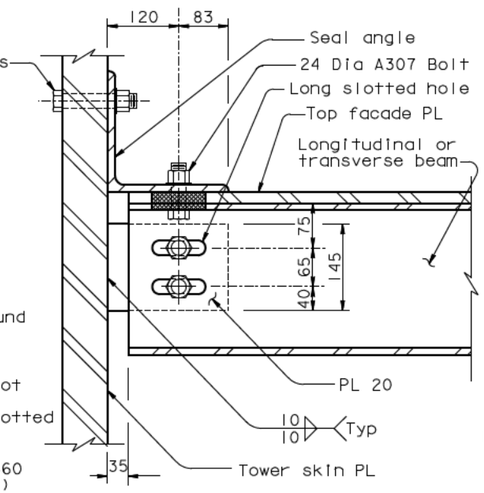

SECTION K-K (Typical connection of built-up channel to tower shaft UNO)
1:10 (see Note 9)

SECTION M-M (Section M'-M' similar)
1:5 (see Note 9)

ALL DIMENSIONS ARE IN MILLIMETERS UNLESS OTHERWISE SHOWN

LEGEND:
- ⊕ M24 A325-X Bolt
- ○ 24 Dia A307 Bolt

NOTES:
1. All bolts are A325 M24 unless noted otherwise.
2. For details of built-up channel, see "Tower Strut Facade Details No.3" sheet.
3. All details of tower strut facade shall account for the 1% slope of the tower top and bottom facade plates.
4. For tower cross bracing location, see "Tower Strut Details No.9" sheet.
5. Seal plates and sealant material shall be placed such that the interior of the tower strut facade is properly sealed from the exterior.
6. PTFE film (0.5 thick) shall be applied on the faying surfaces between the slotted shear tab and the built-up channel plate, between the seal angle and the top facade PL, and between the seal angle and the bottom facade PL.
7. Seal plate shall be tight fit to the cross bracing gusset plate.
8. Cope vertical channel plate and slotted shear tab as necessary to accomodate cross bracing gusset plate. Slot location shall match slot in doubler plate . For doubler plate slot details, see "Tower Shaft Details No.11" sheet.
9. For sealing plate details, see Details E,F and Sections N-N,P-P,Q-Q.
10. At the Contractor's option, exterior sealing angle may be coped as required for clearance with access door cover plate to accommodate design movement, subject to review and approval of the Engineer.

MARK	DATE	DESCRIPTIONS	BY	CH'D	CCO#
		REVISIONS			
4	10/17/08	CAULKING	NV	MN	66
3	10/01/08	TOWER ACCESS	NV	MN	65
2	07/11/08	TOWER STRUT FACADES AND CROSS BRACING	NV	MN	64
1	08/01/07	TOWER STRUT FACADE PTFE	NV	MN	48

REQUESTS FOR INFORMATION NOT ADDRESSED IN THIS CCO REMAIN IN FORCE

CONTRACT CHANGE ORDER NO. ____
SHEET ____ OF ____

	BY	CHECKED
DESIGN	M. Nader	M. Gulyas
DETAILS	L. Rus	M. Gulyas
QUANTITIES	L. Rus	Y. Zhang

PREPARED FOR THE STATE OF CALIFORNIA
DEPARTMENT OF TRANSPORTATION

R. Manzanarez
PROJECT ENGINEER

CU 04
EA 0120F1

BRIDGE NO. 34-0006L/R
KILOMETER POST 13.2/13.9

DISREGARD PRINTS BEARING EARLIER REVISION DATES

REVISION DATES (PRELIMINARY STAGE ONLY)							SHEET	OF
08/02/99	05/31/01	04/08/02	04/26/02	12/19/02			158R4	

R. Vallzadeh/V. Toan/Y.L./W.L./F.C.
DESIGN OVERSIGHT
SIGN OFF DATE 10/17/08

Rev. Date: 5-18-98

ORIGINAL SCALE IN MILLIMETERS FOR REDUCED PLANS 0 10 20 30 40 50 60 70 80 90 100

FILE -> L:\BB\04-012001\SAS\Contract Plans and CCO\CCO\In Progress\CCO#66\Revision 10-17-08\DGN\aetws13.dgn

SAN FRANCISCO OAKLAND BAY BRIDGE
EAST SPAN SEISMIC SAFETY PROJECT
SELF-ANCHORED SUSPENSION BRIDGE
(SUPERSTRUCTURE & TOWER)

TOWER STRUT FACADE DETAILS NO. 4

DIST.	COUNTY	ROUTE	KILOMETER POST TOTAL PROJECT	SHEET NO.	TOTAL SHEETS
04	SF	80	13.2/13.9	575R4	1204

REGISTERED ENGINEER - CIVIL
12-6-04
PLANS APPROVAL DATE

The State of California or its officers or agents shall not be responsible for the accuracy or completeness of electronic copies of this plan sheet.

REGISTERED PROFESSIONAL ENGINEER — Marwan N. Nader — No. C 054426 — Exp. 12/31/09 — CIVIL — STATE OF CALIFORNIA

T.Y. LIN / MOFFATT & NICHOL
825 BATTERY STREET
SAN FRANCISCO, CA 94111

Caltrans now has a web site! To get to the web site, go to: http://www.dot.ca.gov

100 % PS&E
DATE PLOTTED => 16 OCT 2008
TIME PLOTTED => 08:41:16
USERNAME => dwinrow

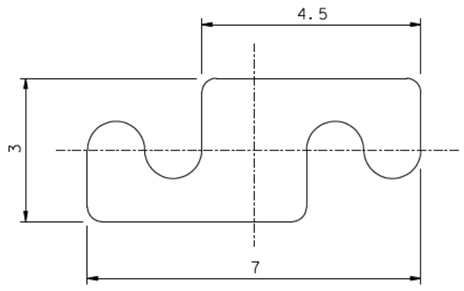

S-SHAPED WRAPPING WIRE
10:1

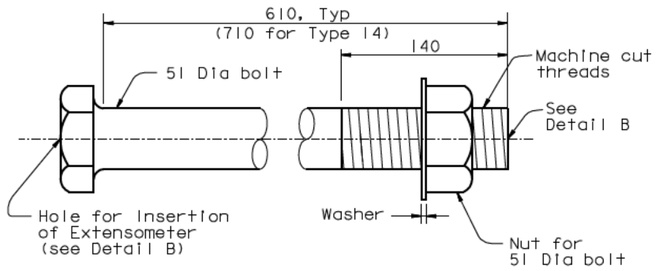

CABLE BAND BOLT
1:2.5

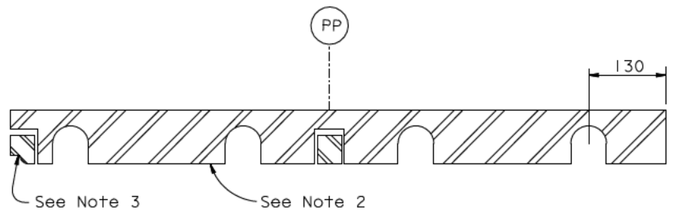

SECTION C-C
1:5

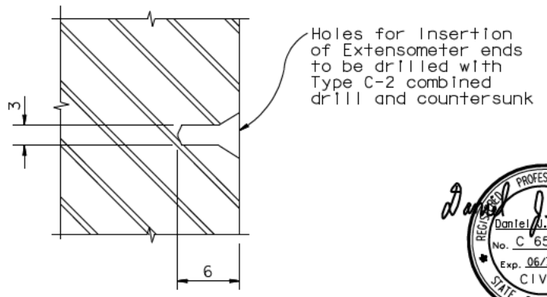

DETAIL B
NTS

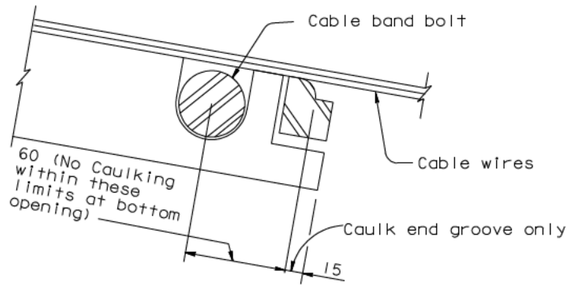

LOWER END CAULKING DETAIL
NTS

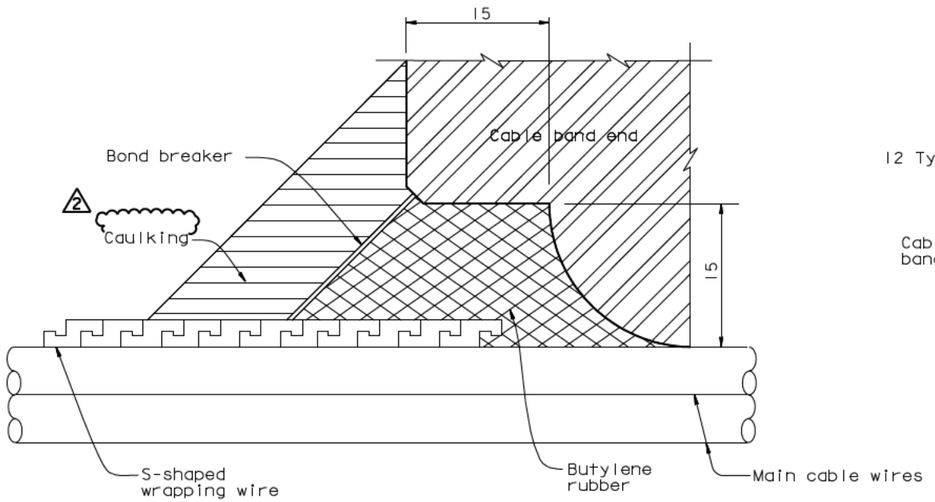

CAULKING GROOVE DETAIL
NTS

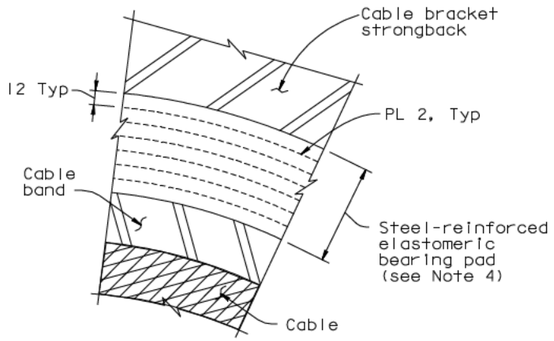

DETAIL A
1:2.5

REQUESTS FOR INFORMATION NOT ADDRESSED IN THIS CCO REMAIN IN FORCE					
2	07/07/08	CAULKING	AS	DT	66
1	04/16/07	CABLE SYSTEM	GB	DT	37
MARK	DATE	DESCRIPTIONS	BY	CH'D	CCO#
REVISIONS					

CONTRACT CHANGE ORDER NO. ___
SHEET ___ OF ___

NOTES:

1. For cable band bolts installation tension shall be 1.0 MN per bolt.
2. For typical details not shown, see "Cable Band Details No.3" sheet.
3. For other caulking groove details, see "Cable Band Details No.3" sheet.
4. Elastomeric bearing pad shall be vulcanized to both the strongback and the cable band.
5. For cable band bolt material, see "General Notes" sheets.

ALL DIMENSIONS ARE IN MILLIMETERS UNLESS OTHERWISE SHOWN

FOR REVISIONS ONLY

DIST.	COUNTY	ROUTE	KILOMETER POST TOTAL PROJECT	SHEET NO.	TOTAL SHEETS
04	SF	80	13.2/13.9	762R2	1204

Caltrans Metric

George Baker
REGISTERED ENGINEER - CIVIL
12-6-04
PLANS APPROVAL DATE

REGISTERED PROFESSIONAL ENGINEER — George S. Baker — No. C 57112 — Exp. 12/31/05 — CIVIL — STATE OF CALIFORNIA

The State of California or its officers or agents shall not be responsible for the accuracy or completeness of electronic copies of this plan sheet.

T.Y. LIN / MOFFATT & NICHOL
825 BATTERY STREET
SAN FRANCISCO, CA 94111

To get to the web site, go to: http://www.dot.ca.gov

Daniel J. Turner — REGISTERED PROFESSIONAL ENGINEER — Daniel J. Turner — No. C 65033 — Exp. 06/30/09 — CIVIL — STATE OF CALIFORNIA

R. Valizadeh/V. Toan/Y.L. /W.L. /F.C.
DESIGN OVERSIGHT
SIGN OFF DATE 07/07/08

	BY		CHECKED
DESIGN	G. Baker		T. McMeans
DETAILS	S. Camo		P. Ritchie
QUANTITIES	C. Mauch		C. Mibelli

PREPARED FOR THE STATE OF CALIFORNIA
DEPARTMENT OF TRANSPORTATION

R. Manzanarez
PROJECT ENGINEER

BRIDGE NO. 34-0006L/R
KILOMETER POST 13.2/13.9

SAN FRANCISCO OAKLAND BAY BRIDGE
EAST SPAN SEISMIC SAFETY PROJECT
SELF-ANCHORED SUSPENSION BRIDGE (SUPERSTRUCTURE & TOWER)
CABLE BAND DETAILS NO.5

Rev. Date: 5-18-98

ORIGINAL SCALE IN MILLIMETERS FOR REDUCED PLANS 0 10 20 30 40 50 60 70 80 90 100

CU 04
EA 0120F1

DISREGARD PRINTS BEARING EARLIER REVISION DATES →

REVISION DATES (PRELIMINARY STAGE ONLY): 05/15/99 | 08/02/99 | 05/24/01 | 04/08/02 | 07/01/02 | 12/19/02

SHEET 345R2 OF

FILE -> I:\bb\04-012001\sas\contract plans and cco\cco\In progress\cco#66\dgn\agcbd05.dgn

USERNAME => vigmatovs DATE PLOTTED => 03 JUL 2008 TIME PLOTTED => 13:47:36

100% PS&E

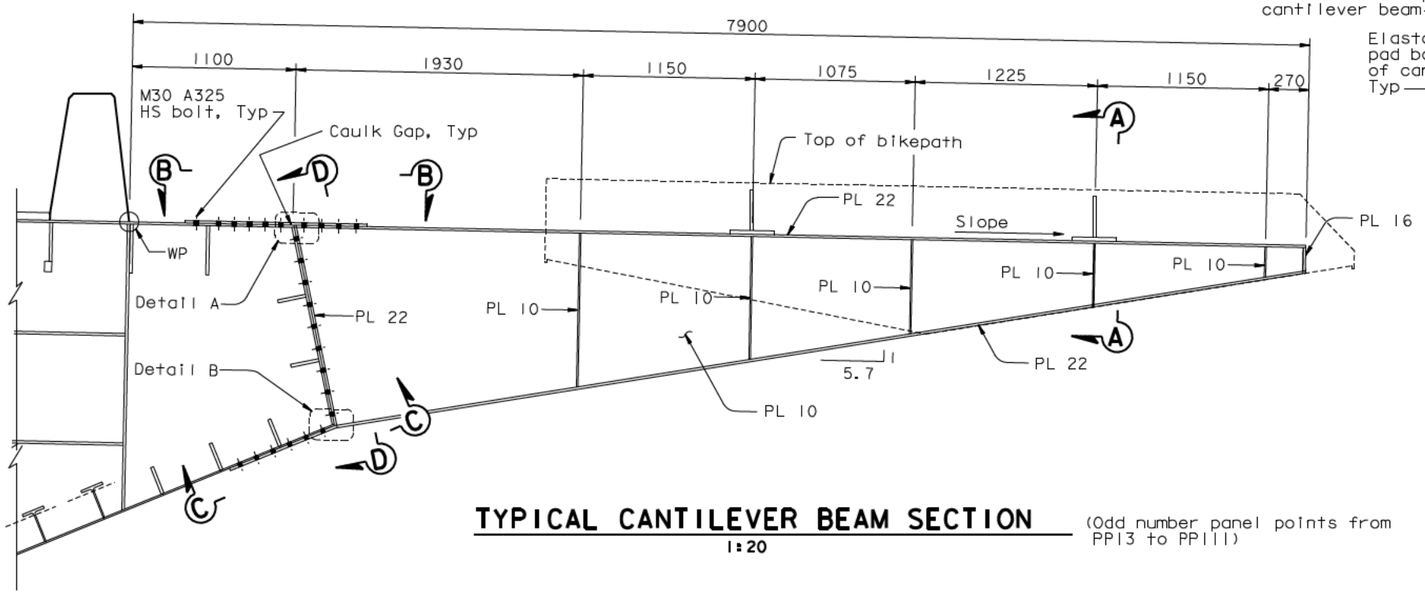

TYPICAL CANTILEVER BEAM SECTION

1:20

(Odd number panel points from PP13 to PP111)

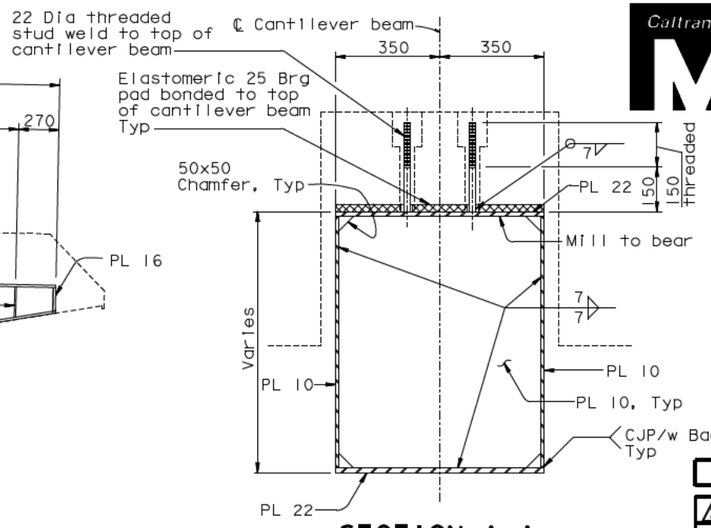

SECTION A-A

1:10

DIST.	COUNTY	ROUTE	KILOMETER POST TOTAL PROJECT	SHEET NO.	TOTAL SHEETS
04	SF	80	13.2/13.9	825R2	1204

REGISTERED ENGINEER - CIVIL

12-6-04

PLANS APPROVAL DATE

Tien Hung Ho, No. C 43990, Exp. 6/30/09, CIVIL, REGISTERED PROFESSIONAL ENGINEER, STATE OF CALIFORNIA

The State of California or its officers or agents shall not be responsible for the accuracy or completeness of electronic copies of this plan sheet.

T.Y. LIN / MOFFATT & NICHOL
825 BATTERY STREET
SAN FRANCISCO, CA 94111

Caltrans now has a web site! To get to the web site, go to: http://www.dot.ca.gov

REQUESTS FOR INFORMATION NOT ADDRESSED IN THIS CCO REMAIN IN FORCE

MARK	DATE	DESCRIPTIONS	BY	CH'D	CCO#
2	07/07/08	CAULKING	AS	TH	66
1	07/20/07	BIKEPATH BRACKETS	GB	TH	33
		REVISIONS			

CONTRACT CHANGE ORDER NO. ____
SHEET ___ OF ___

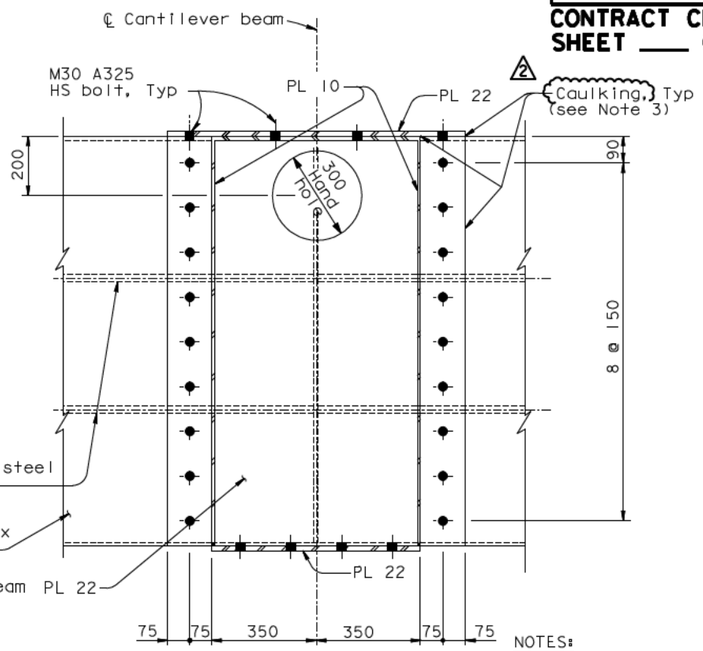

SECTION D-D

1:10

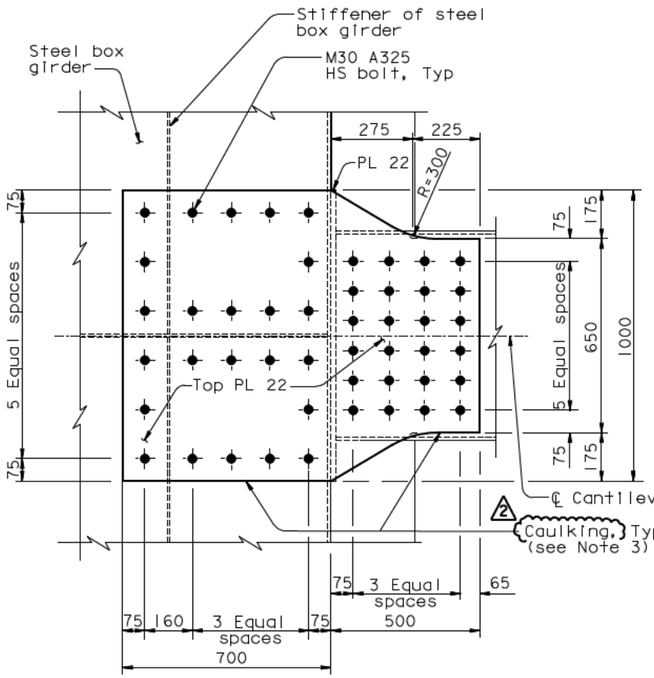

SECTION B-B

1:10

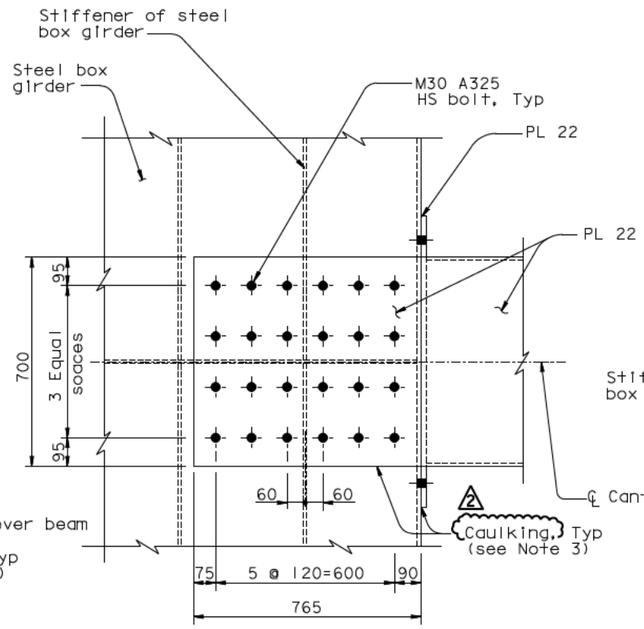

SECTION C-C

1:10

NOTES:

1. For location of typical cantilever beam, see "Bikepath Layout" sheets.
2. For Details A and B, see "Suspender Bracket Details No.2" sheet.
2. (2) Caulking shall be provided along all edges of bolted connection between bikepath cantilever beam and box girder.

ALL DIMENSIONS ARE IN MILLIMETERS UNLESS OTHERWISE SHOWN

R. Vallzadeh/V. Toan/Y.L./W.L./F.C.
DESIGN OVERSIGHT
SIGN OFF DATE 07/07/08

DESIGN	BY T. Ho	CHECKED T. McMeans	
DETAILS	BY R. Xu	CHECKED P. Ritchie	
QUANTITIES	BY C. Bernardo	CHECKED S. Shi	

PREPARED FOR THE STATE OF CALIFORNIA DEPARTMENT OF TRANSPORTATION

R. Manzanarez
PROJECT ENGINEER

BRIDGE NO. 34-0006L/R
KILOMETER POST 13.2/13.9

SAN FRANCISCO OAKLAND BAY BRIDGE EAST SPAN SEISMIC SAFETY PROJECT
SELF-ANCHORED SUSPENSION BRIDGE (SUPERSTRUCTURE & TOWER)
BIKEPATH DETAILS NO. 1

Rev. Date: 5-18-98

ORIGINAL SCALE IN MILLIMETERS FOR REDUCED PLANS 0 10 20 30 40 50 60 70 80 90 100

CU 04
EA 0120F1

DISREGARD PRINTS BEARING EARLIER REVISION DATES

REVISION DATES (PRELIMINARY STAGE ONLY)									SHEET	OF
05/15/98	08/02/99	05/31/01	04/08/02	07/01/02	12/15/02	11/13/05			408R2	

FILE -> I:\bb\04-012001\sas\contract plans and cco\cco\In progress\cco#66\dgn\agbwd01.dgn

USERNAME => vignatovs DATE PLOTTED => 03 JUL 2008 TIME PLOTTED => 13:48:22

100 % PS&E

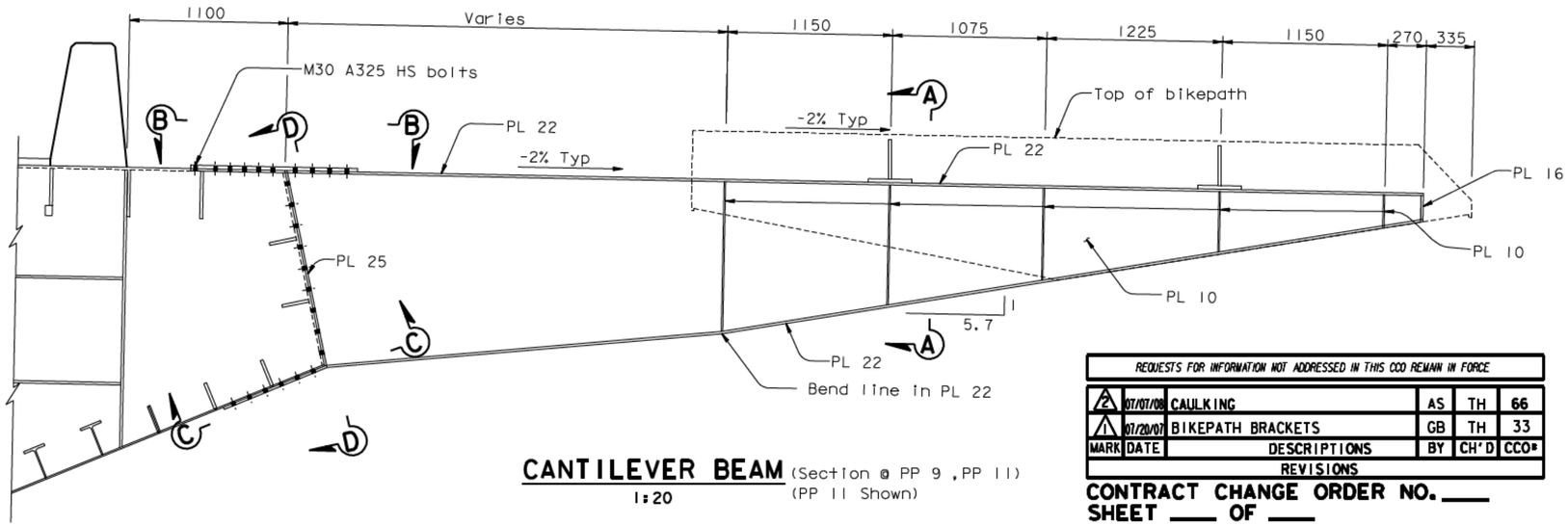

CANTILEVER BEAM
(Section @ PP 9 , PP 11)
(PP 11 Shown)
1:20

REQUESTS FOR INFORMATION NOT ADDRESSED IN THIS CCO REMAIN IN FORCE					
2	07/07/08	CAULKING	AS	TH	66
1	07/20/07	BIKEPATH BRACKETS	GB	TH	33
MARK	DATE	DESCRIPTIONS	BY	CH'D	CCO#
REVISIONS					

CONTRACT CHANGE ORDER NO. ___
SHEET ___ OF ___

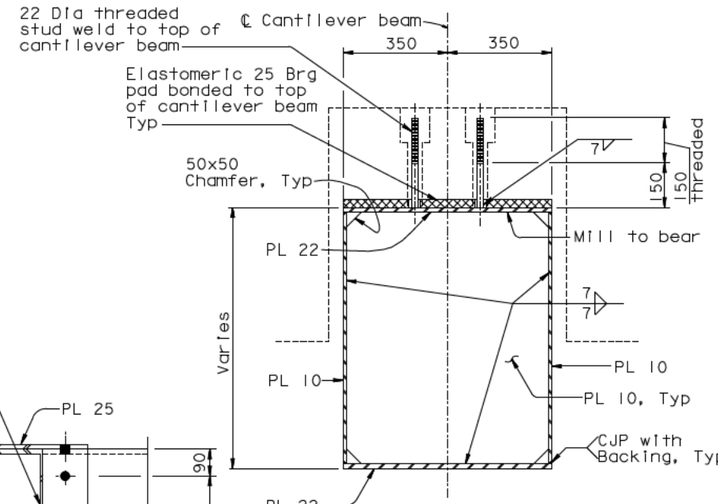

SECTION A-A
1:10

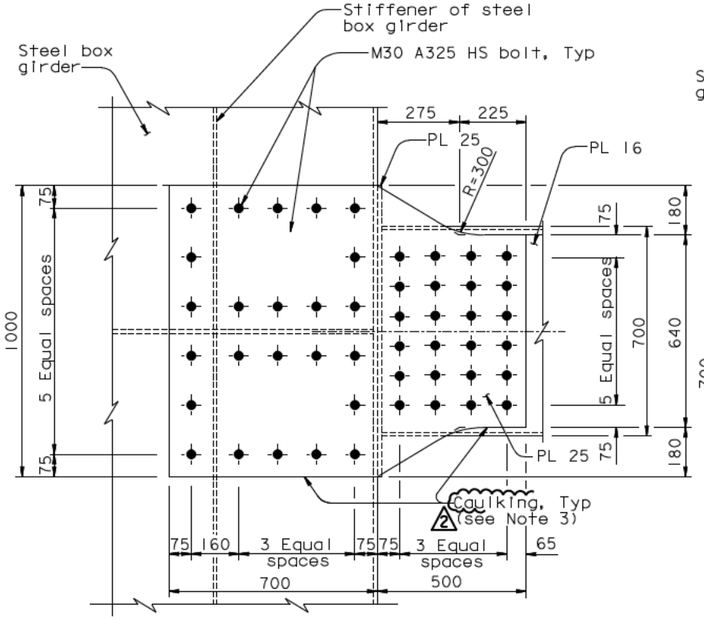

SECTION B-B
1:10

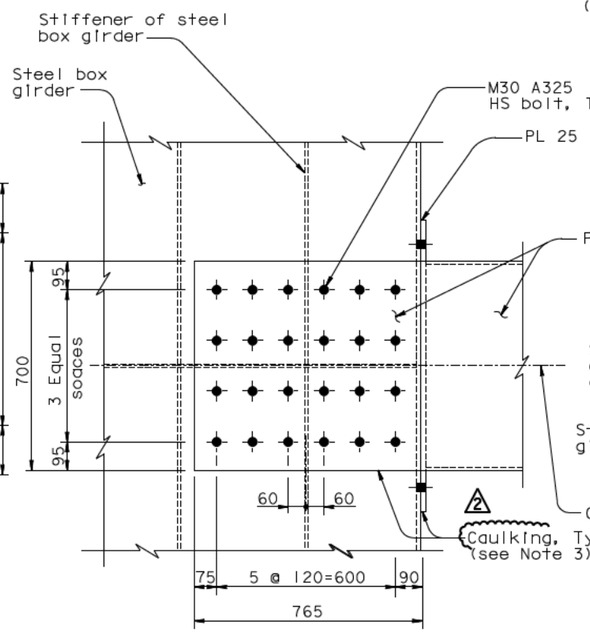

SECTION C-C
1:10

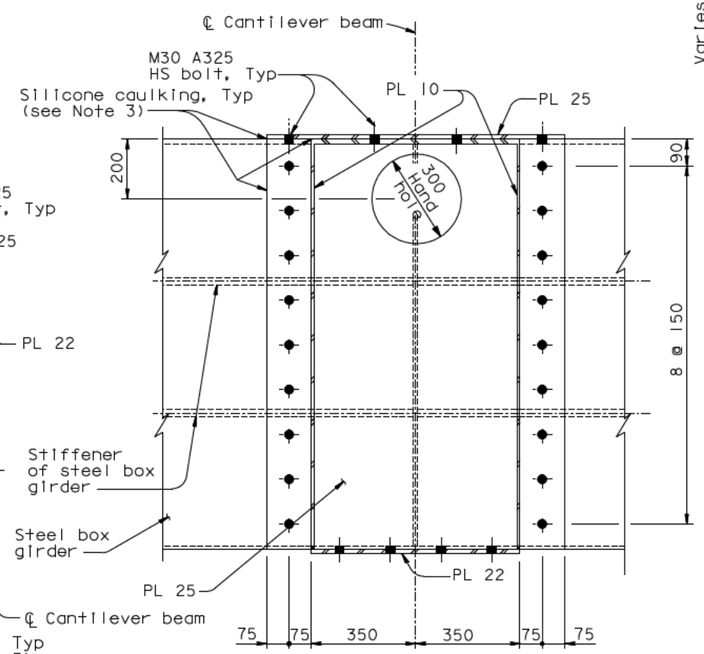

SECTION D-D
1:10

NOTES:

1. Bikepath deck similar to typical bikepath deck. For details, see "Bikepath Details No.3" sheet.
2. For details not shown, see "Bikepath Details No.1" sheet.
3. Caulking shall be provided along edges of bolted connection between bikepath cantilever beam and box girder.

ALL DIMENSIONS ARE IN MILLIMETERS UNLESS OTHERWISE SHOWN

DIST.	COUNTY	ROUTE	KILOMETER POST TOTAL PROJECT	SHEET NO.	TOTAL SHEETS
04	SF	80	13.2/13.9	833R2	1204

Caltrans Metric

REGISTERED ENGINEER - CIVIL
Tien Hung Ho No. C 43990 Exp. 6/30/09 CIVIL
REGISTERED PROFESSIONAL ENGINEER STATE OF CALIFORNIA
12-6-04
PLANS APPROVAL DATE

The State of California or its officers or agents shall not be responsible for the accuracy or completeness of electronic copies of this plan sheet.

T.Y. LIN / MOFFATT & NICHOL
825 BATTERY STREET
SAN FRANCISCO, CA 94111

To get to the web site, go to: http://www.dot.ca.gov

R. Valizadeh/V. Toan/Y.L./W.L./F.C.
DESIGN OVERSIGHT
SIGN OFF DATE 07/07/08

	BY	CHECKED
DESIGN	T. Ho	T. McMeans
DETAILS	R. Xu	P. Ritchie
QUANTITIES	C. Bernardo	S. Shi

PREPARED FOR THE STATE OF CALIFORNIA DEPARTMENT OF TRANSPORTATION

R. Manzanarez
PROJECT ENGINEER

BRIDGE NO. 34-0006L/R
KILOMETER POST 13.2/13.9

SAN FRANCISCO OAKLAND BAY BRIDGE
EAST SPAN SEISMIC SAFETY PROJECT
SELF-ANCHORED SUSPENSION BRIDGE (SUPERSTRUCTURE & TOWER)

BIKEPATH DETAILS NO. 9

Rev. Date: 5-18-98

ORIGINAL SCALE IN MILLIMETERS FOR REDUCED PLANS 0 10 20 30 40 50 60 70 80 90 100

CU 04
EA 0120F1

DISREGARD PRINTS BEARING EARLIER REVISION DATES

REVISION DATES (PRELIMINARY STAGE ONLY): 05/31/01 | 03/26/02 | 07/31/02 | 12/19/02 | 11/13/05

SHEET 416R2 OF

FILE -> I:\bb\04-012001\sas\contract plans and cco\cco\In progress\cco#66\dgn\agbwd09.dgn

USERNAME => vignatovsky DATE PLOTTED => 03 JUL 2008 TIME PLOTTED => 13:49:03

100% PS&E

REQUESTS FOR INFORMATION NOT ADDRESSED IN THIS CCO REMAIN IN FORCE

MARK	DATE	DESCRIPTIONS	BY	CH'D	CCO#
		REVISIONS			
1	07/20/07	BIKEPATH BRACKETS	GB	TH	33
2	07/07/08	CAULKING	AS	TH	66

CONTRACT CHANGE ORDER NO. ____
SHEET ___ OF ___

Caltrans Metric

DIST.	COUNTY	ROUTE	KILOMETER POST TOTAL PROJECT	SHEET NO.	TOTAL SHEETS
04	SF	80	13.2/13.9	834R2	1204

REGISTERED ENGINEER - CIVIL
12-6-04
PLANS APPROVAL DATE
The State of California or its officers or agents shall not be responsible for the accuracy or completeness of electronic copies of this plan sheet.

REGISTERED PROFESSIONAL ENGINEER — Tien Hung Ho, No. C 43990, Exp. 6/30/09, CIVIL, STATE OF CALIFORNIA

T.Y. LIN / MOFFATT & NICHOL
825 BATTERY STREET
SAN FRANCISCO, CA 94111

To get to the web site, go to: http://www.dot.ca.gov

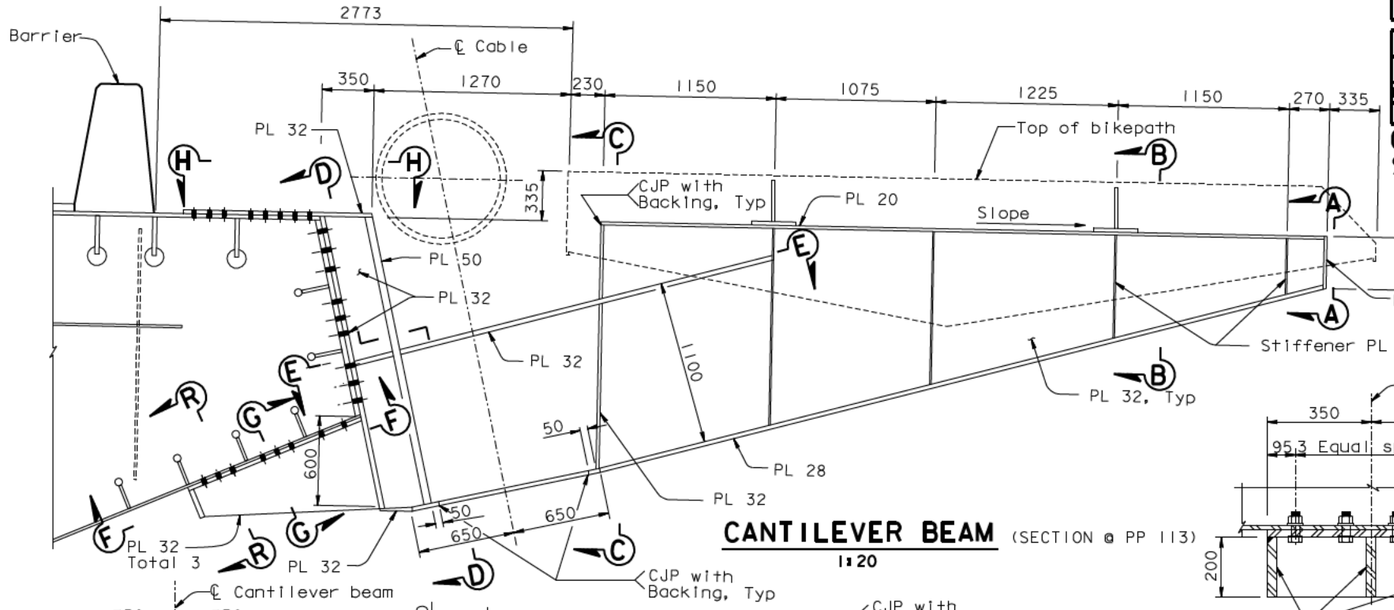

CANTILEVER BEAM (SECTION @ PP 113)
1:20

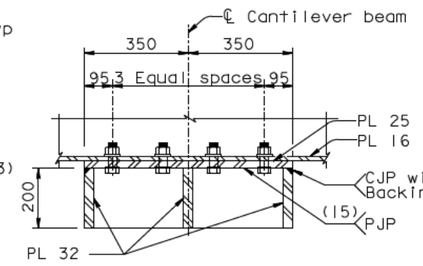

SECTION R-R
1:10

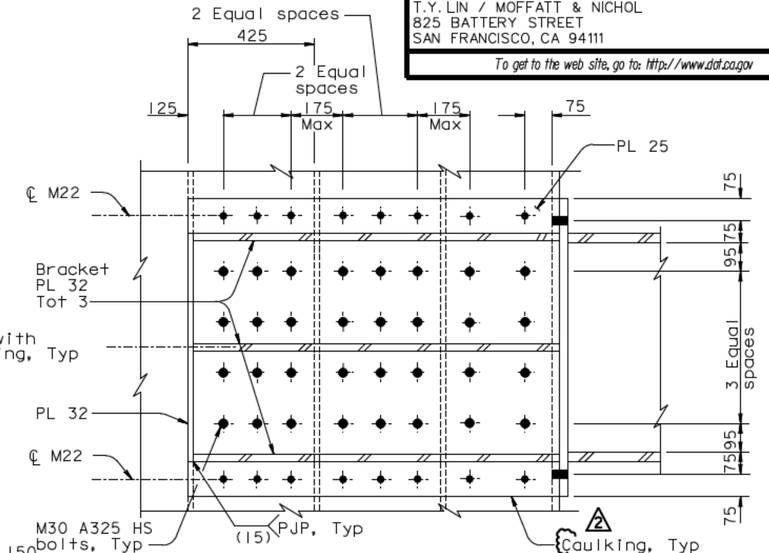

SECTION F-F
1:10

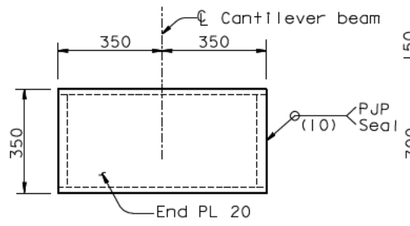

SECTION A-A
1:10

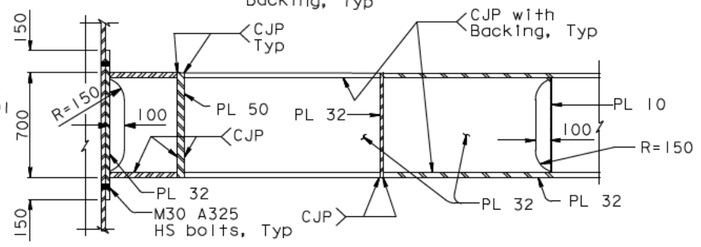

SECTION E-E
1:20

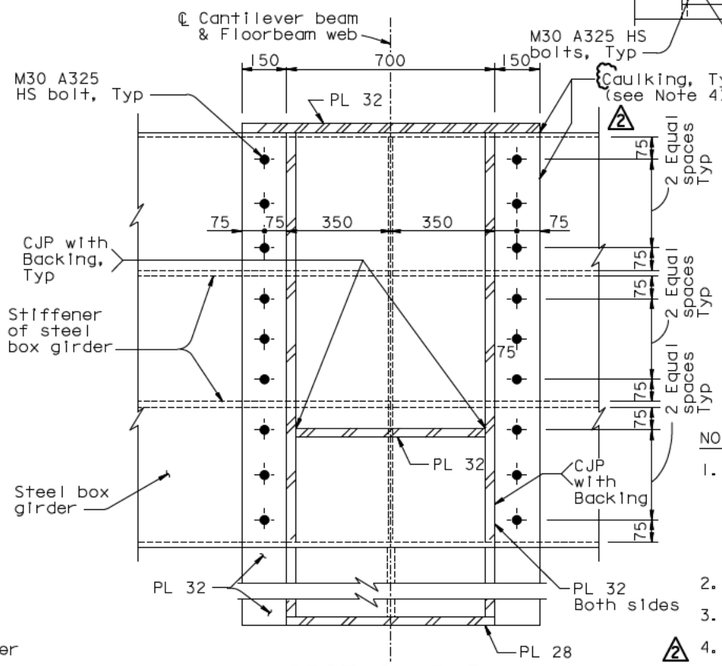

SECTION D-D
1:10

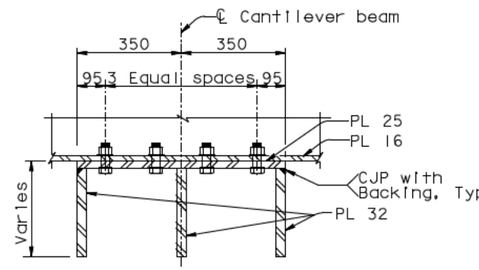

SECTION G-G
1:10

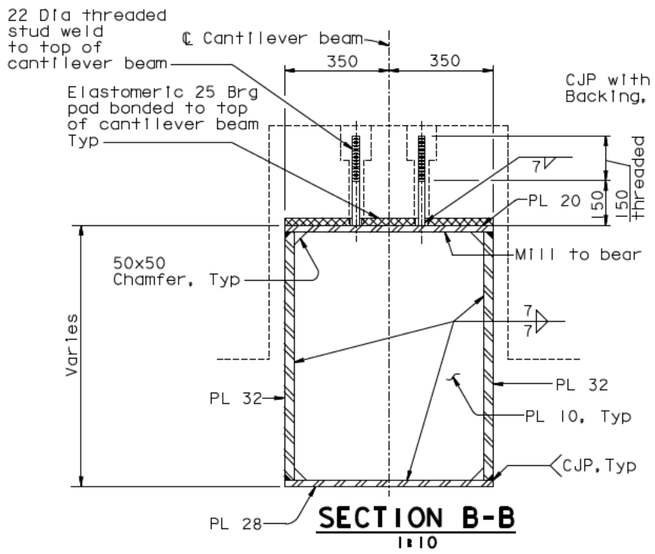

SECTION B-B
1:10

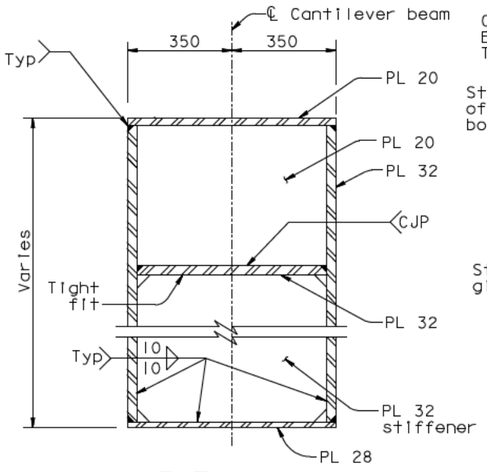

SECTION C-C
1:10

NOTES:

1. The cable location shown is based on the information provided in "Suspension Cable Layout" sheets. The Contractor shall verify these locations based on the "as built" cable profile described in "Construction Sequence" sheets. In the event of a conflict, bikepath bracket details may be revised and submitted to the Engineer for review and approval.
2. Bikepth deck similar to typical bikepath deck, for details, see "Bikepath Details No.3" sheets.
3. For Section H-H, see Section F-F of "Bikepath Details No.11" sheet.
4. Caulking shall be provided along all edges of bolted connection between bikepath cantilever beam and box girder.

ALL DIMENSIONS ARE IN MILLIMETERS UNLESS OTHERWISE SHOWN

100 % PS&E
TIME PLOTTED => 13:49:42
DATE PLOTTED => 03 JUL 2008
USERNAME => vlignatovsky

R. Vallzadeh/V. Toan/Y.L./W.L./F.C.
DESIGN OVERSIGHT
Roya Valizadeh / Vong Toan / Y. Liu
SIGN OFF DATE 07/07/08

	BY	CHECKED
DESIGN	T. Ho	T. McMeans
DETAILS	R. Xu	P. Ritchie
QUANTITIES	C. Bernardo	S. Shi

PREPARED FOR THE STATE OF CALIFORNIA DEPARTMENT OF TRANSPORTATION

R. Manzanarez
PROJECT ENGINEER

BRIDGE NO. 34-0006L/R
KILOMETER POST 13.2/13.9

CU 04
EA 0120F1

SAN FRANCISCO OAKLAND BAY BRIDGE
EAST SPAN SEISMIC SAFETY PROJECT
SELF-ANCHORED SUSPENSION BRIDGE (SUPERSTRUCTURE & TOWER)

BIKEPATH DETAILS NO. 10

Rev. Date: 5-18-98

ORIGINAL SCALE IN MILLIMETERS FOR REDUCED PLANS 0 10 20 30 40 50 60 70 80 90 100

DISREGARD PRINTS BEARING EARLIER REVISION DATES →

REVISION DATES (PRELIMINARY STAGE ONLY)									SHEET	OF
05/27/01	09/07/02	07/29/02	12/19/02	11/13/03					417R2	

FILE => I:\bb\04-012001\sas\contract plans and cco\cco\In progress\cco#66\dgn\agbwd10.dgn

DIST.	COUNTY	ROUTE	KILOMETER POST TOTAL PROJECT	SHEET NO.	TOTAL SHEETS
04	SF	80	13.2/13.9	835R2	1204

Caltrans Metric

REGISTERED ENGINEER - CIVIL

12-6-04
PLANS APPROVAL DATE

REGISTERED PROFESSIONAL ENGINEER — Tien Hung Ho — No. C 43990 — Exp. 6/30/09 — CIVIL — STATE OF CALIFORNIA

The State of California or its officers or agents shall not be responsible for the accuracy or completeness of electronic copies of this plan sheet.

T.Y. LIN / MOFFATT & NICHOL
825 BATTERY STREET
SAN FRANCISCO, CA 94111

To get to the web site, go to: http://www.dot.ca.gov

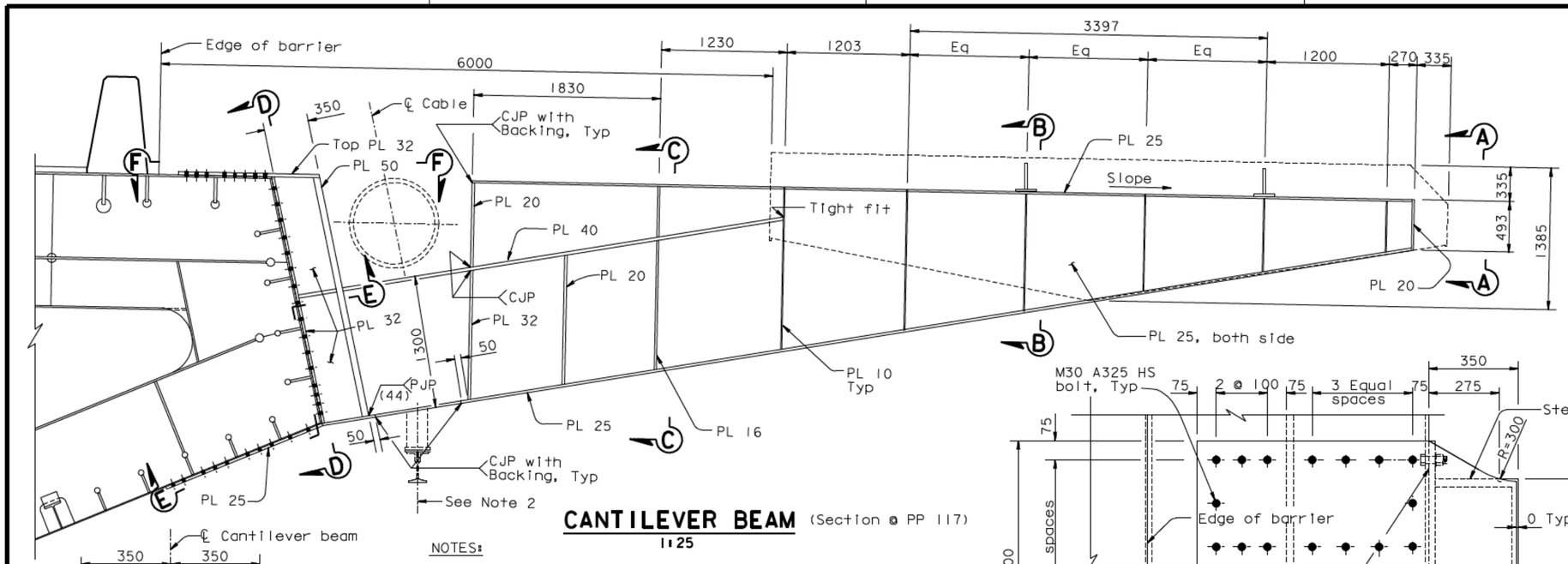

CANTILEVER BEAM (Section @ PP 117)
1:25

VIEW A-A
1:10

NOTES:

1. The cable location shown is based on the information provided in "Suspension Cable Layout" sheets. The Contractor shall verify these locations based on the "as built" cable profile described in "Construction Sequence" sheets. In the event of a conflict, bikepath bracket details may be revised and submitted to the Engineer for review and approval.
2. For location and details of traveler rail support, see "Traveler Rail Details No.13" sheet.
3. (2) Caulking shall be provided along all edges of bolted connection between bikepath cantilever beam and box girder.

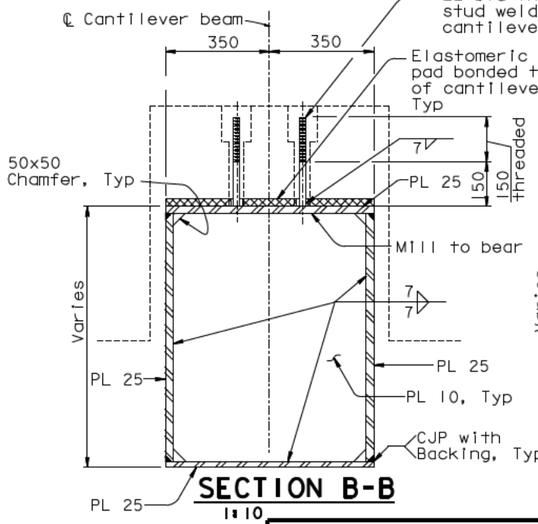

SECTION B-B
1:10

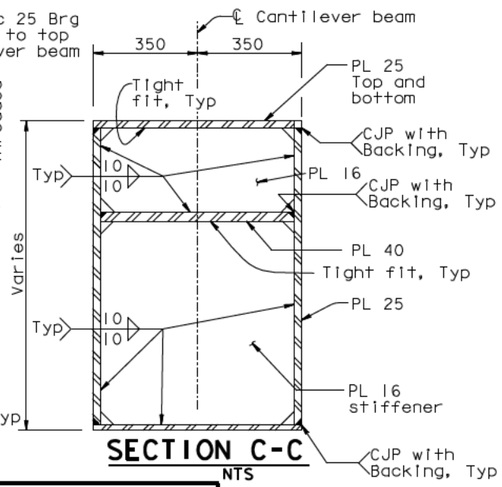

SECTION C-C
NTS

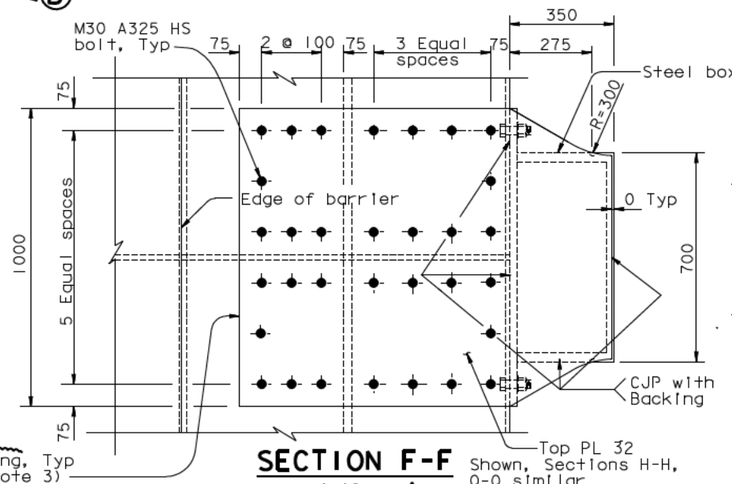

SECTION F-F
1:10

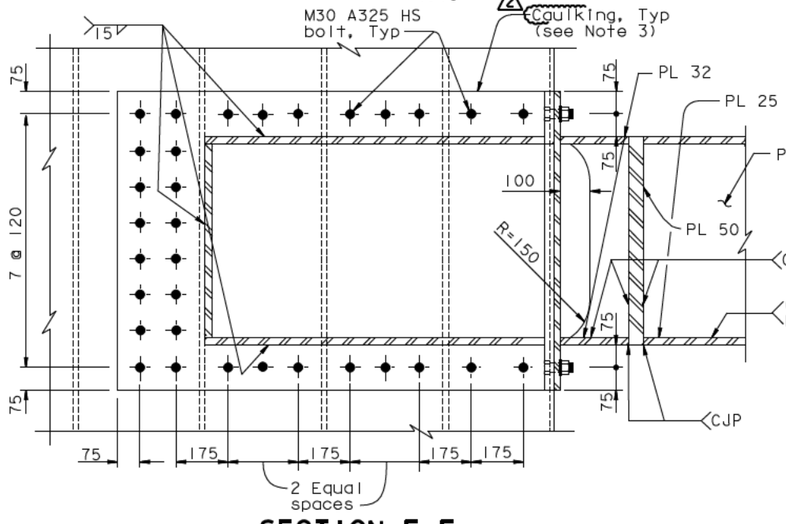

SECTION E-E
1:10

ALL DIMENSIONS ARE IN MILLIMETERS UNLESS OTHERWISE SHOWN

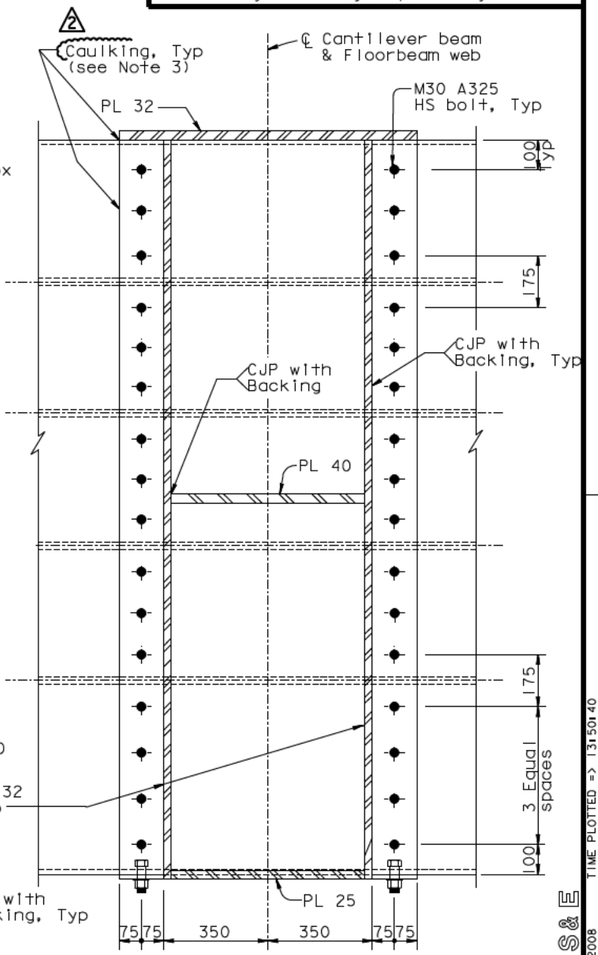

SECTION D-D
1:10

MARK	DATE	DESCRIPTIONS	BY	CH'D	CCO#
2	07/07/08	CAULKING	AS	TH	66
1	07/20/07	BIKEPATH BRACKETS	GB	TH	33

REVISIONS

REQUESTS FOR INFORMATION NOT ADDRESSED IN THIS CCO REMAIN IN FORCE

CONTRACT CHANGE ORDER NO. ____
SHEET ___ OF ___

	BY	CHECKED
DESIGN	T. Ho	T. McMeans
DETAILS	R. Xu	P. Ritchie
QUANTITIES	C. Bernardo	S. Shi

R. Vallzadeh/V. Toan/Y.L./W.L./F.C.
DESIGN OVERSIGHT
SIGN OFF DATE 07/07/08

Rev. Date: 5-18-98

PREPARED FOR THE STATE OF CALIFORNIA DEPARTMENT OF TRANSPORTATION

R. Manzanarez
PROJECT ENGINEER

CU 04
EA 0120F1

BRIDGE NO. 34-0006L/R
KILOMETER POST 13.2/13.9

DISREGARD PRINTS BEARING EARLIER REVISION DATES

SAN FRANCISCO OAKLAND BAY BRIDGE
EAST SPAN SEISMIC SAFETY PROJECT
SELF-ANCHORED SUSPENSION BRIDGE
(SUPERSTRUCTURE & TOWER)

BIKEPATH DETAILS NO. 11

REVISION DATES (PRELIMINARY STAGE ONLY)										SHEET	OF
05/24/01	04/08/02	07/01/02	12/19/02	11/13/05						418R2	

ORIGINAL SCALE IN MILLIMETERS FOR REDUCED PLANS 0 10 20 30 40 50 60 70 80 90 100

FILE -> I:\bb\04-012001\sas\contract plans and cco\cco\In progress\cco#66\dgn\agbwd11.dgn

USERNAME => v:\gnotovs\DATE PLOTTED => 03 JUL 2008 TIME PLOTTED => 13:50:40

100 % PS&E

DIST.	COUNTY	ROUTE	KILOMETER POST TOTAL PROJECT	SHEET NO.	TOTAL SHEETS
04	SF	80	13.2/13.9	836R2	1204

Tien Hung Ho
REGISTERED ENGINEER - CIVIL

12-6-04
PLANS APPROVAL DATE

The State of California or its officers or agents shall not be responsible for the accuracy or completeness of electronic copies of this plan sheet.

REGISTERED PROFESSIONAL ENGINEER — Tien Hung Ho — No. C 43990 — Exp. 06/30/09 — CIVIL — STATE OF CALIFORNIA

T.Y. LIN / MOFFATT & NICHOL
825 BATTERY STREET
SAN FRANCISCO, CA 94111

To get to the web site, go to: http://www.dot.ca.gov

CANTILEVER BEAM (PP 121)
1:20

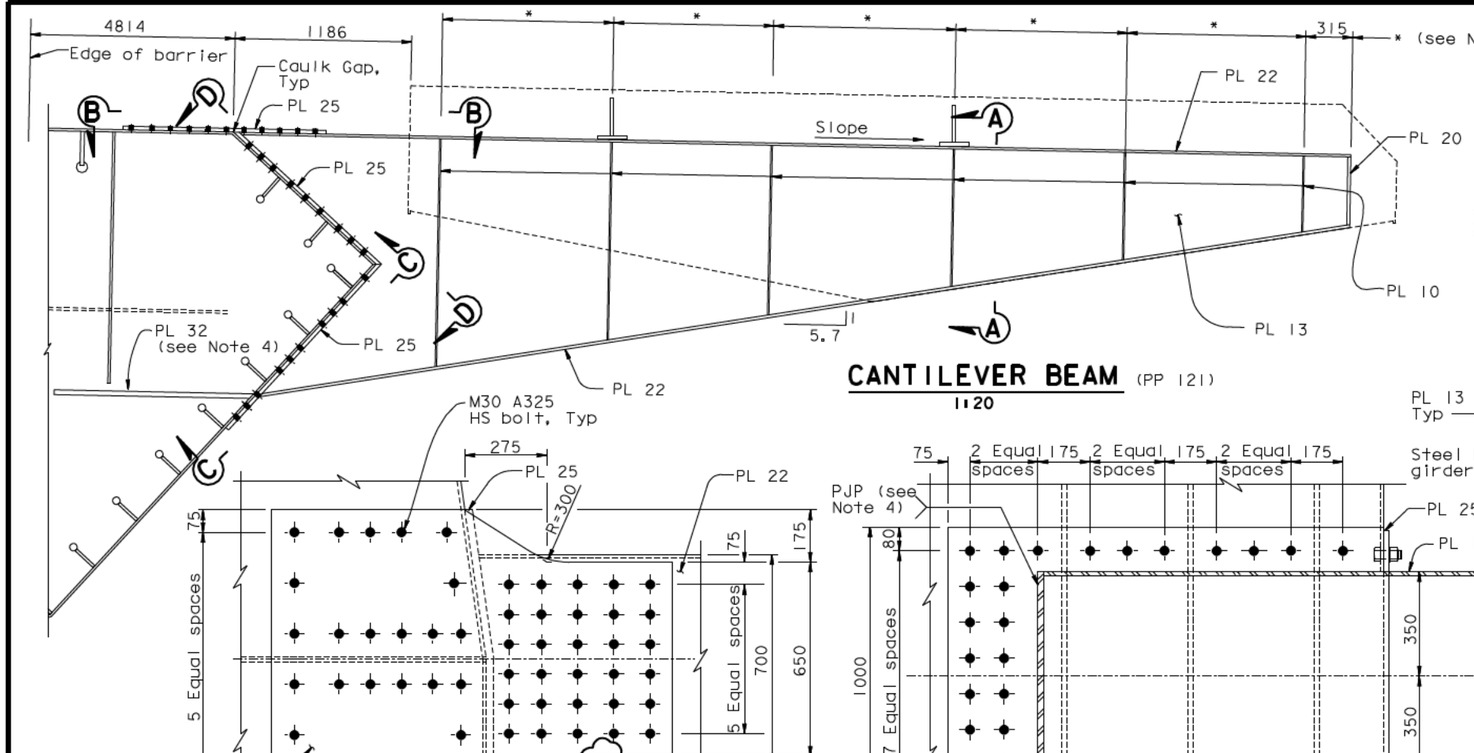

SECTION D-D
1:10

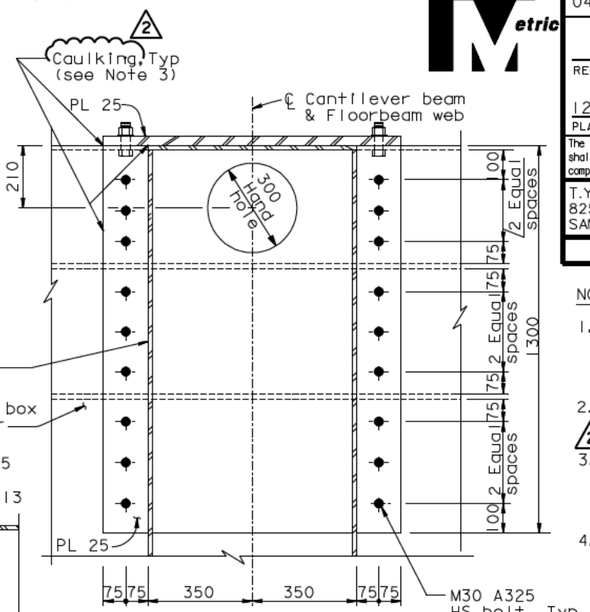

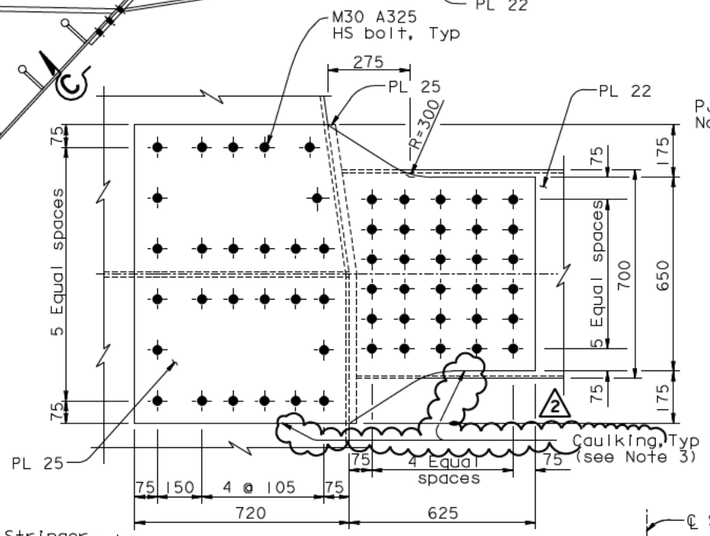

VIEW B-B
1:10

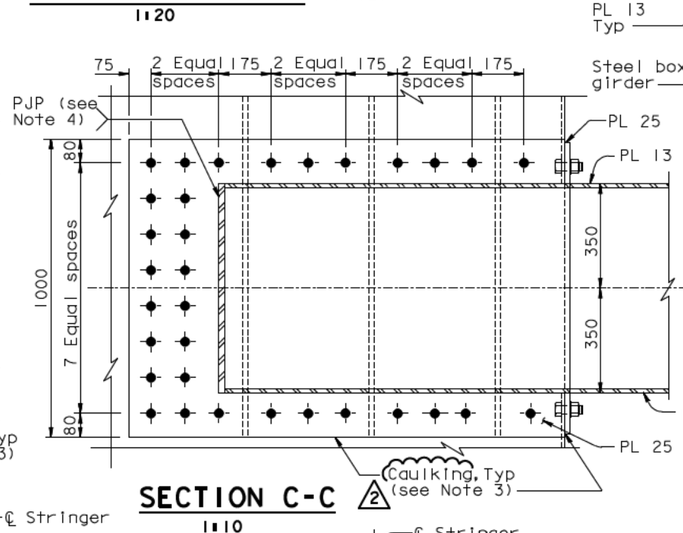

SECTION C-C
1:10

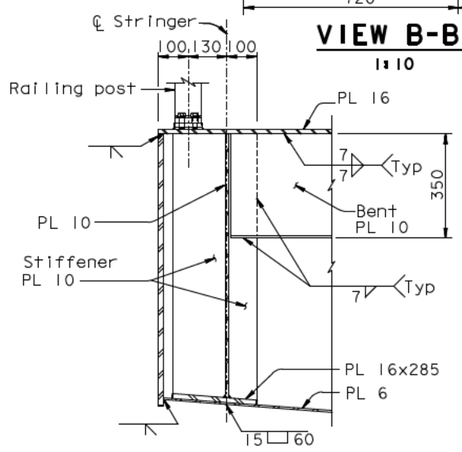

DETAIL E
1:10

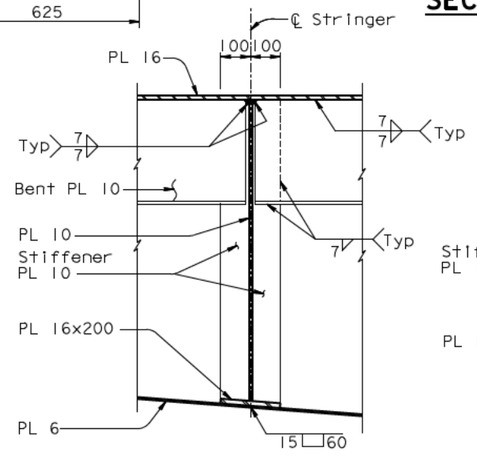

DETAIL F
1:10

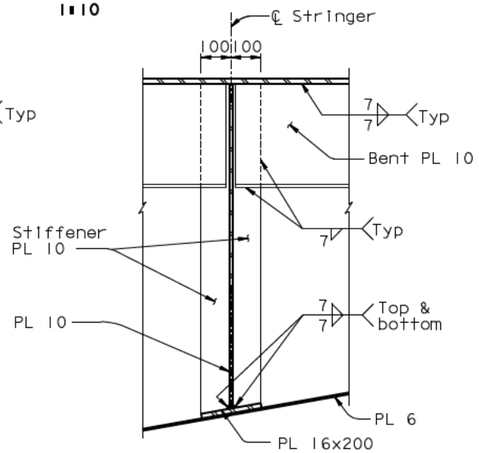

DETAIL G
1:10

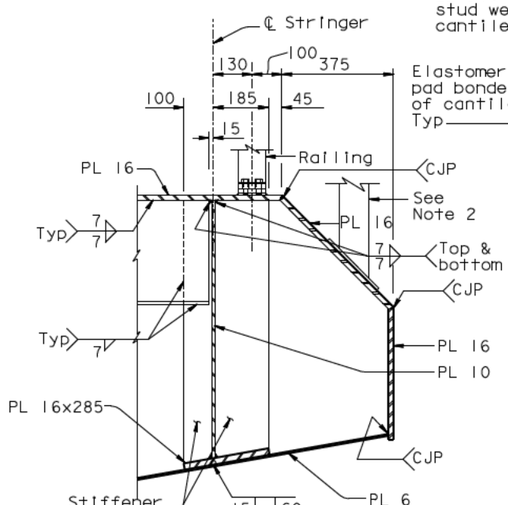

DETAIL H
1:10

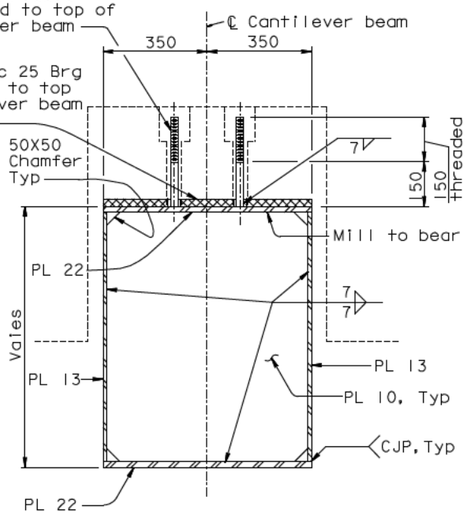

SECTION A-A
1:10

NOTES:

1. Stiffener plate spacing to match bikepath stringer spacing, see "Bikepath Framing Details No.5" sheet.
2. For call box support locations and details, see "Road Plans".
3. (2) Caulking shall be provided along all edges of bolted connection between bikepath cantilever beam and box girder.
4. For bikepath bracket stiffener, see Note 6 on "Floorbeam At East Transition No.4" sheet.

ALL DIMENSIONS ARE IN MILLIMETERS UNLESS OTHERWISE SHOWN

REQUESTS FOR INFORMATION NOT ADDRESSED IN THIS CCO REMAIN IN FORCE

MARK	DATE	DESCRIPTIONS	BY	CH'D	CCO#
2	07/07/08	CAULKING	AS	TH	66
1	07/20/07	BIKEPATH BRACKETS	GB	TH	33

REVISIONS

CONTRACT CHANGE ORDER NO.____
SHEET ___ OF ___

	BY	CHECKED
DESIGN	T. Ho	T. McMeans
DETAILS	R. Xu	P. Ritchie
QUANTITIES	C. Bernardo	S. Shi

PREPARED FOR THE STATE OF CALIFORNIA DEPARTMENT OF TRANSPORTATION

R. Manzanarez
PROJECT ENGINEER

BRIDGE NO. 34-0006L/R
KILOMETER POST 13.2/13.9

R. Vallzadeh/V. Toan/Y.L./W.L./F.C.
DESIGN OVERSIGHT
SIGN OFF DATE 07/07/08

Rev. Date: 5-18-98

ORIGINAL SCALE IN MILLIMETERS FOR REDUCED PLANS 0 10 20 30 40 50 60 70 80 90 100

CU 04
EA 0120F1

DISREGARD PRINTS BEARING EARLIER REVISION DATES

REVISION DATES (PRELIMINARY STAGE ONLY): 05/31/01 | 04/08/02 | 07/01/02 | 12/19/02 | 11/13/05

SHEET 419R2 OF

SAN FRANCISCO OAKLAND BAY BRIDGE
EAST SPAN SEISMIC SAFETY PROJECT
SELF-ANCHORED SUSPENSION BRIDGE (SUPERSTRUCTURE & TOWER)

BIKEPATH DETAILS NO. 12

FILE -> I:\bb\04-012001\sas\contract plans and cco\cco\In progress\cco#66\dgn\agbwd12.dgn

USERNAME => vignatovsky DATE PLOTTED => 03 JUL 2008 TIME PLOTTED => 13:51:25

100 % PS&E

DIST.	COUNTY	ROUTE	KILOMETER POST TOTAL PROJECT	SHEET NO.	TOTAL SHEETS
04	SF	80	13.2/13.9	838R2	1204

Caltrans Metric

REGISTERED ENGINEER - CIVIL

12-6-04
PLANS APPROVAL DATE

Tien Hung Ho, No. C 43990, Exp. 6/30/09, CIVIL, REGISTERED PROFESSIONAL ENGINEER, STATE OF CALIFORNIA

The State of California or its officers or agents shall not be responsible for the accuracy or completeness of electronic copies of this plan sheet.

T.Y. LIN / MOFFATT & NICHOL
825 BATTERY STREET
SAN FRANCISCO, CA 94111

To get to the web site, go to: http://www.dot.ca.gov

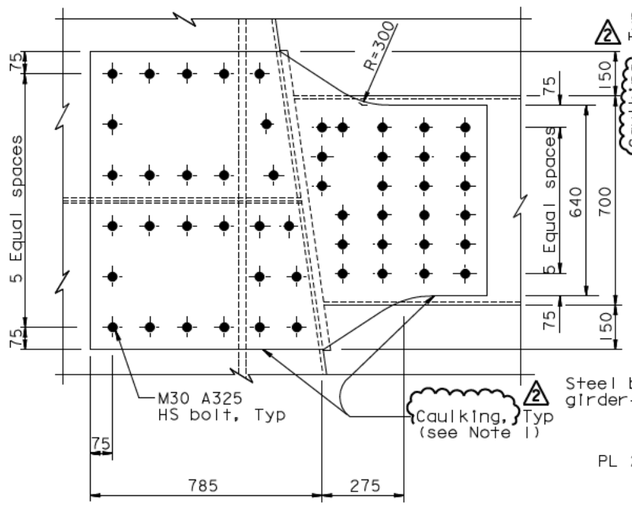

VIEW J-J
1:10

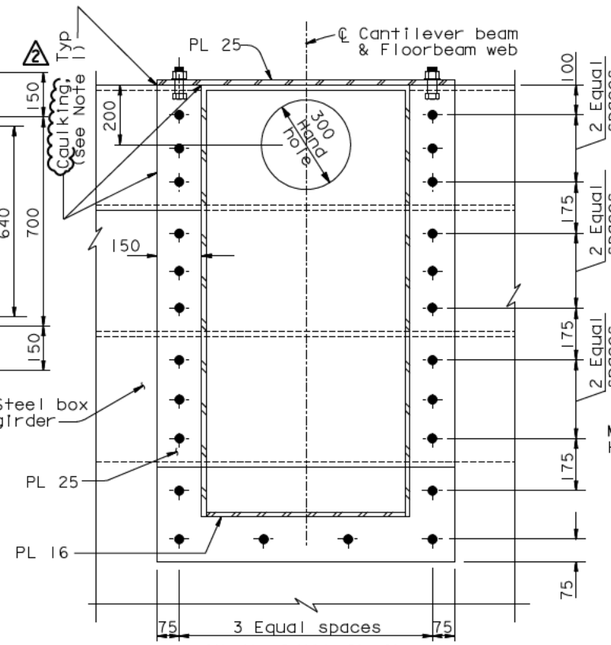

SECTION K-K
1:10

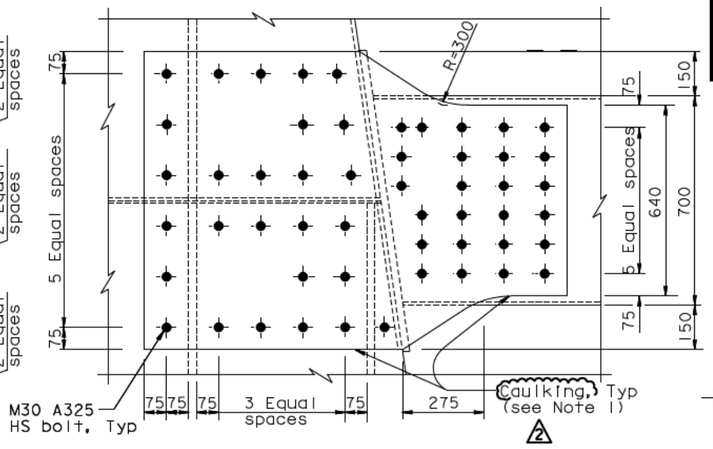

VIEW L-L
1:10

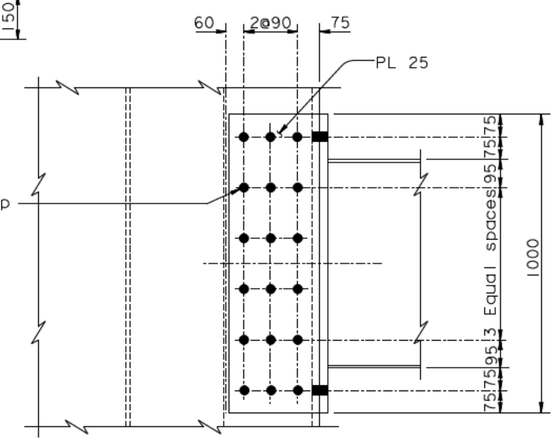

SECTION P-P
1:10

REQUESTS FOR INFORMATION NOT ADDRESSED IN THIS CCO REMAIN IN FORCE					
2	07/07/08	CAULKING	AS	TH	66
1	07/20/07	BIKEPATH BRACKETS	GB	TH	33
MARK	DATE	DESCRIPTIONS	BY	CH'D	CCO#
		REVISIONS			

CONTRACT CHANGE ORDER NO. ___
SHEET ___ OF ___

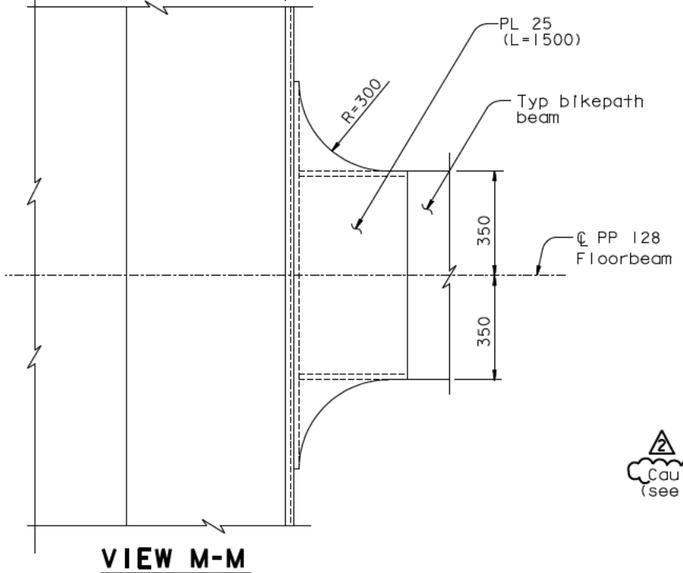

VIEW M-M
1:10

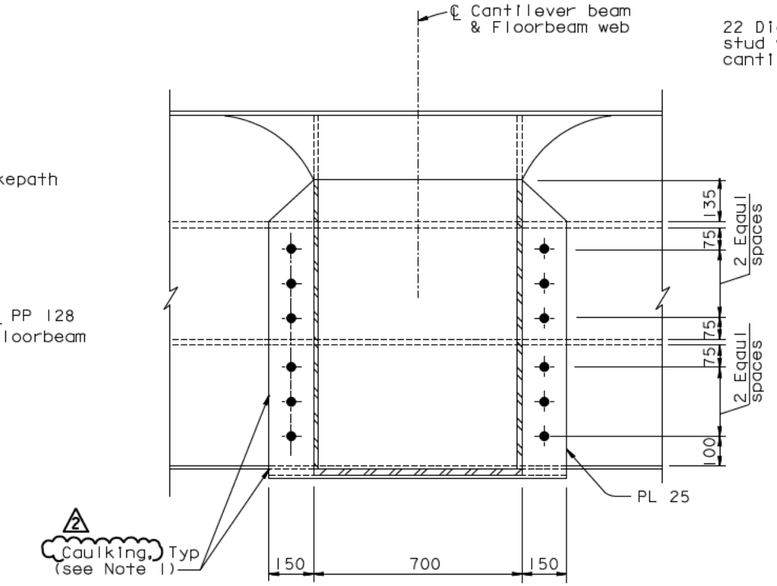

SECTION N-N
1:10

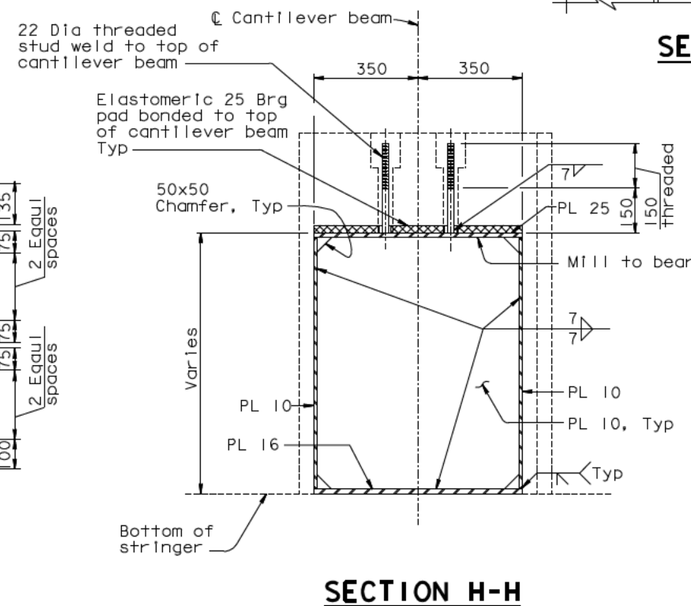

SECTION H-H
1:10

NOTES:

1. Caulking shall be provided along all edges of bolted connection between bikepath cantilever beam and box girder.

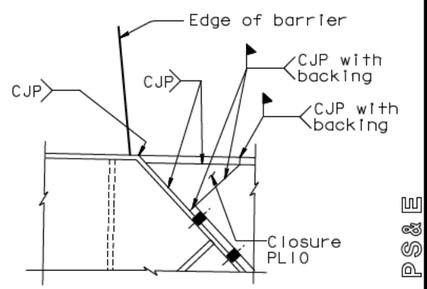

DETAIL A
1:5

ALL DIMENSIONS ARE IN MILLIMETERS UNLESS OTHERWISE SHOWN

SAN FRANCISCO OAKLAND BAY BRIDGE
EAST SPAN SEISMIC SAFETY PROJECT
SELF-ANCHORED SUSPENSION BRIDGE
(SUPERSTRUCTURE & TOWER)

BIKEPATH DETAILS NO. 14

R. Valizadeh/V. Toan/Y.L./W.L./F.C.
DESIGN OVERSIGHT
SIGN OFF DATE 07/07/08

DESIGN	BY T. Ho	CHECKED T. McMeans	
DETAILS	BY R. Xu	CHECKED P. Ritchie	
QUANTITIES	BY C. Bernardo	CHECKED S. Shi	

PREPARED FOR THE
STATE OF CALIFORNIA
DEPARTMENT OF TRANSPORTATION

R. Manzanarez
PROJECT ENGINEER

BRIDGE NO. 34-0006L/R
KILOMETER POST 13.2/13.9

CU 04
EA 0120F1

Rev. Date: 5-18-98

ORIGINAL SCALE IN MILLIMETERS FOR REDUCED PLANS 0 10 20 30 40 50 60 70 80 90 100

DISREGARD PRINTS BEARING EARLIER REVISION DATES

REVISION DATES (PRELIMINARY STAGE ONLY): 05/31/01 | 04/09/02 | 07/09/02 | 12/19/02 | 11/13/05

SHEET 42|R2 OF

100 % PS&E

USERNAME => vignatovsky DATE PLOTTED => 03 JUL 2008 TIME PLOTTED => 13:52:13

FILE -> I:\bb\04-012001\sas\contract plans and cco\cco\In progress\cco#66\dgn\agbwd14.dgn

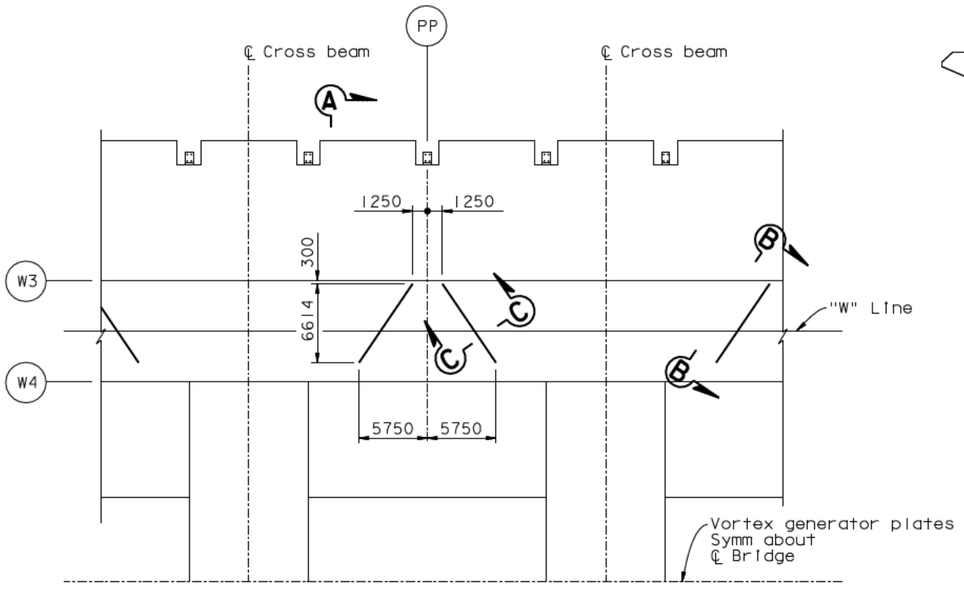

A DETAIL A
TYPICAL LAYOUT OF VORTEX GENERATOR PLATES
1:250
("W" Line shown, "E" Line similar)

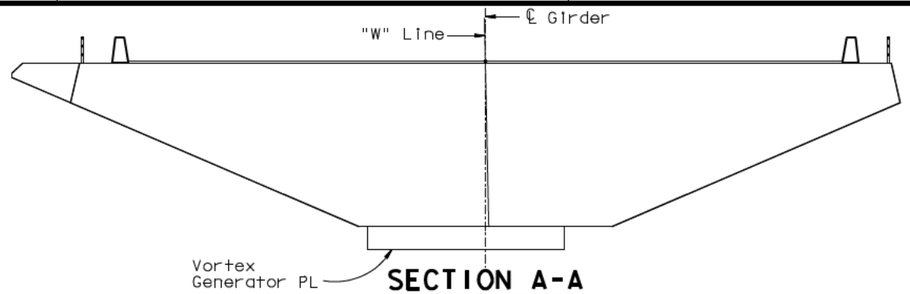

SECTION A-A
1:100

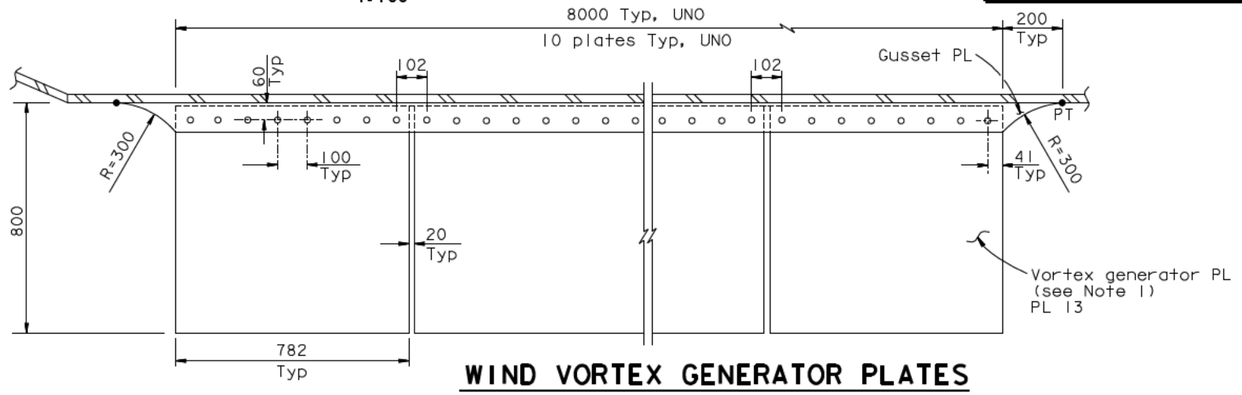

WIND VORTEX GENERATOR PLATES
VIEW B-B
1:10

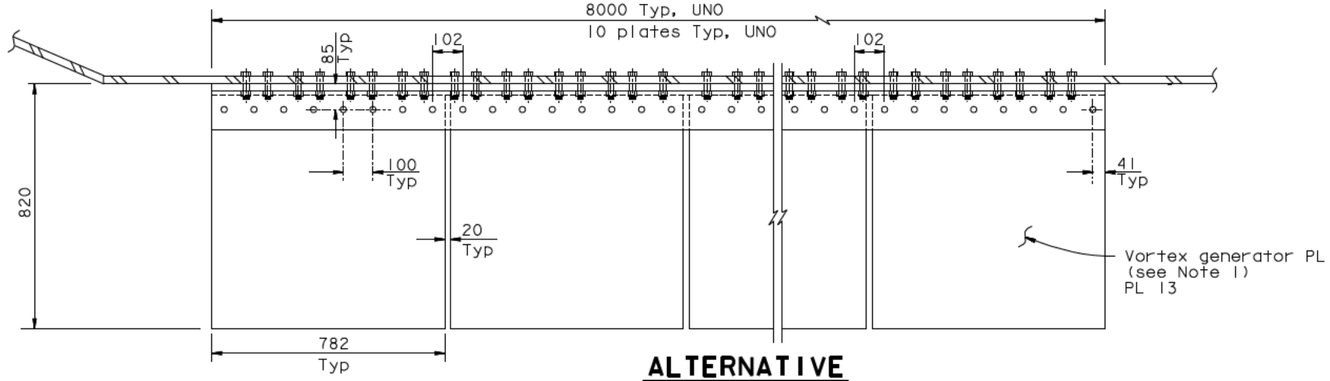

ALTERNATIVE
WIND VORTEX GENERATOR PLATES
VIEW B-B
1:10

NOTES:

1. A total of 704 vortex generator steel plates shall be fabricated and erected.
2. M20 HS bolts connecting L203x152x22.2 and box girder plate shall clear box girder stiffeners.
3. Installation of vortex generator steel plates shall not interfere with required clearances during construction of the bridge.

REQUESTS FOR INFORMATION NOT ADDRESSED IN THIS CCO REMAIN IN FORCE					
3	07/07/08	CAULKING	AS	MN	66
2	08/31/07	WIND VORTEX GENERATOR PLATES	JD	MN	26
1	07/26/07	WIND VORTEX GENERATOR PLATES	CC	MN	26
MARK	DATE	DESCRIPTIONS	BY	CH'D	CCO#
REVISIONS					

CONTRACT CHANGE ORDER NO. ____
SHEET ____ OF ____

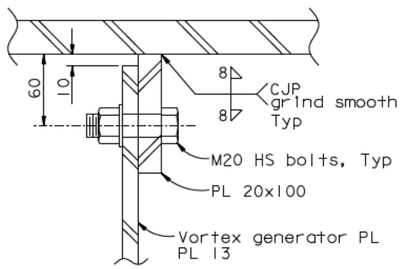

SECTION C-C
1:2.5

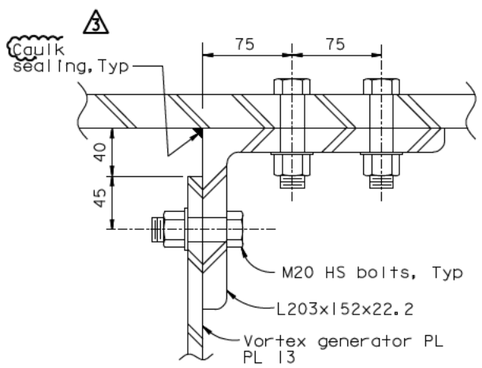

ALTERNATIVE
SECTION C-C
1:2.5

DIST.	COUNTY	ROUTE	KILOMETER POST TOTAL PROJECT	SHEET NO.	TOTAL SHEETS
04	SF	80	13.2/13.9	875R3	1204

REGISTERED ENGINEER - CIVIL
12-6-04
PLANS APPROVAL DATE
Marwan N. Nader, No. C 054426, Exp. 12/31/09, CIVIL, REGISTERED PROFESSIONAL ENGINEER, STATE OF CALIFORNIA

The State of California or its officers or agents shall not be responsible for the accuracy or completeness of electronic copies of this plan sheet.

T.Y. LIN / MOFFATT & NICHOL
825 BATTERY STREET
SAN FRANCISCO, CA 94111

Caltrans now has a web site! To get to the web site, go to: http://www.dot.ca.gov

ALL DIMENSIONS ARE IN MILLIMETERS UNLESS OTHERWISE SHOWN

SAN FRANCISCO OAKLAND BAY BRIDGE
EAST SPAN SEISMIC SAFETY PROJECT
SELF-ANCHORED SUSPENSION BRIDGE
(SUPERSTRUCTURE & TOWER)
WIND VORTEX GENERATOR PLATES DETAILS

R. Vallizadeh/V. Toan/Y.L./W.L./F.C.
DESIGN OVERSIGHT
SIGN OFF DATE 07/07/08

	BY	CHECKED
DESIGN	M. Nader	C. Selm
DETAILS	G. Baker	J. Lopez-Jara
QUANTITIES	C. Mibelli	J. Lopez-Jara

PREPARED FOR THE STATE OF CALIFORNIA DEPARTMENT OF TRANSPORTATION

R. Manzanarez
PROJECT ENGINEER

BRIDGE NO. 34-0006L/R
KILOMETER POST 13.2/13.9

CU 04
EA 0120F1

DISREGARD PRINTS BEARING EARLIER REVISION DATES

REVISION DATES (PRELIMINARY STAGE ONLY): 04/30/02 | 07/09/02 | 12/19/02

SHEET 458R3 OF

Rev. Date: 5-18-98

ORIGINAL SCALE IN MILLIMETERS FOR REDUCED PLANS 0 10 20 30 40 50 60 70 80 90 100

FILE -> I:\bb\04-0120F1\sas\contract plans and cco\cco\In progress\cco#66\dgn\akwvg03.dgn

100 % PS&E
TIME PLOTTED => 13:54:21
DATE PLOTTED => 03 JUL 2008
USERNAME => vignatovsky

DIST.	COUNTY	ROUTE	KILOMETER POST TOTAL PROJECT	SHEET NO.	TOTAL SHEETS
04	SF	80	13.2/13.9	542R2	1204

REGISTERED ENGINEER - CIVIL

12-6-04
PLANS APPROVAL DATE

The State of California or its officers or agents shall not be responsible for the accuracy or completeness of electronic copies of this plan sheet.

REGISTERED PROFESSIONAL ENGINEER — Marwan N. Nader — No. C 054426 — Exp. 12/31/09 — CIVIL — STATE OF CALIFORNIA

T.Y. LIN / MOFFATT & NICHOL
825 BATTERY STREET
SAN FRANCISCO, CA 94111

Caltrans now has a web site! To get to the web site, go to: http://www.dot.ca.gov

TABLE 1

Optional Tower Bolted Splice Locations

Splice	Elevation (m)
1	50.300
2	83.000
3	114.000
4	146.280

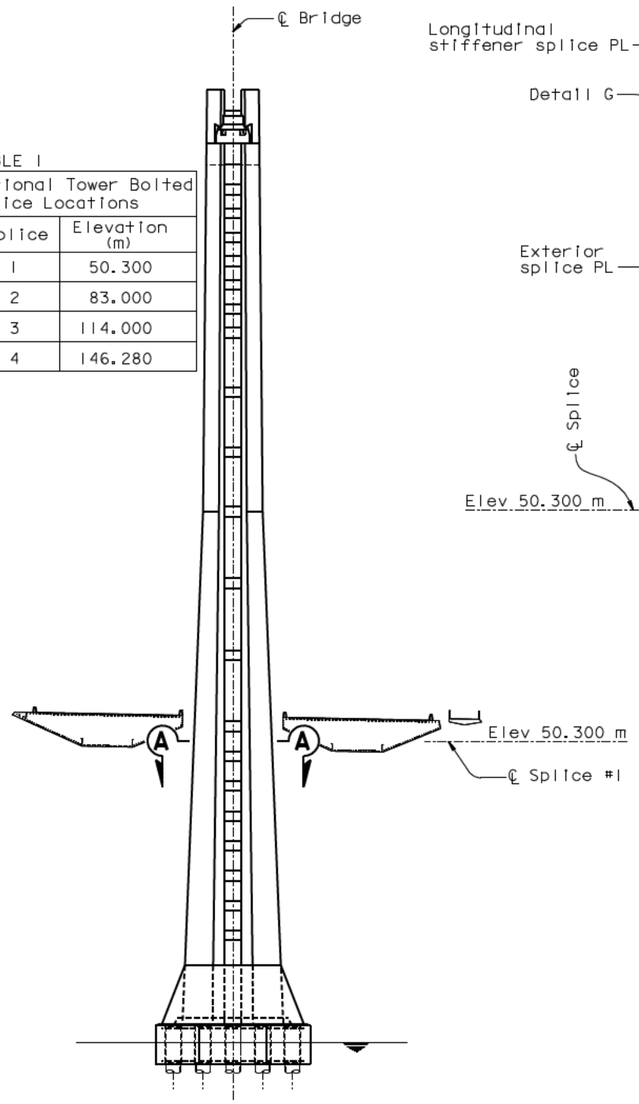

TOWER SPLICE LOCATION
1:500

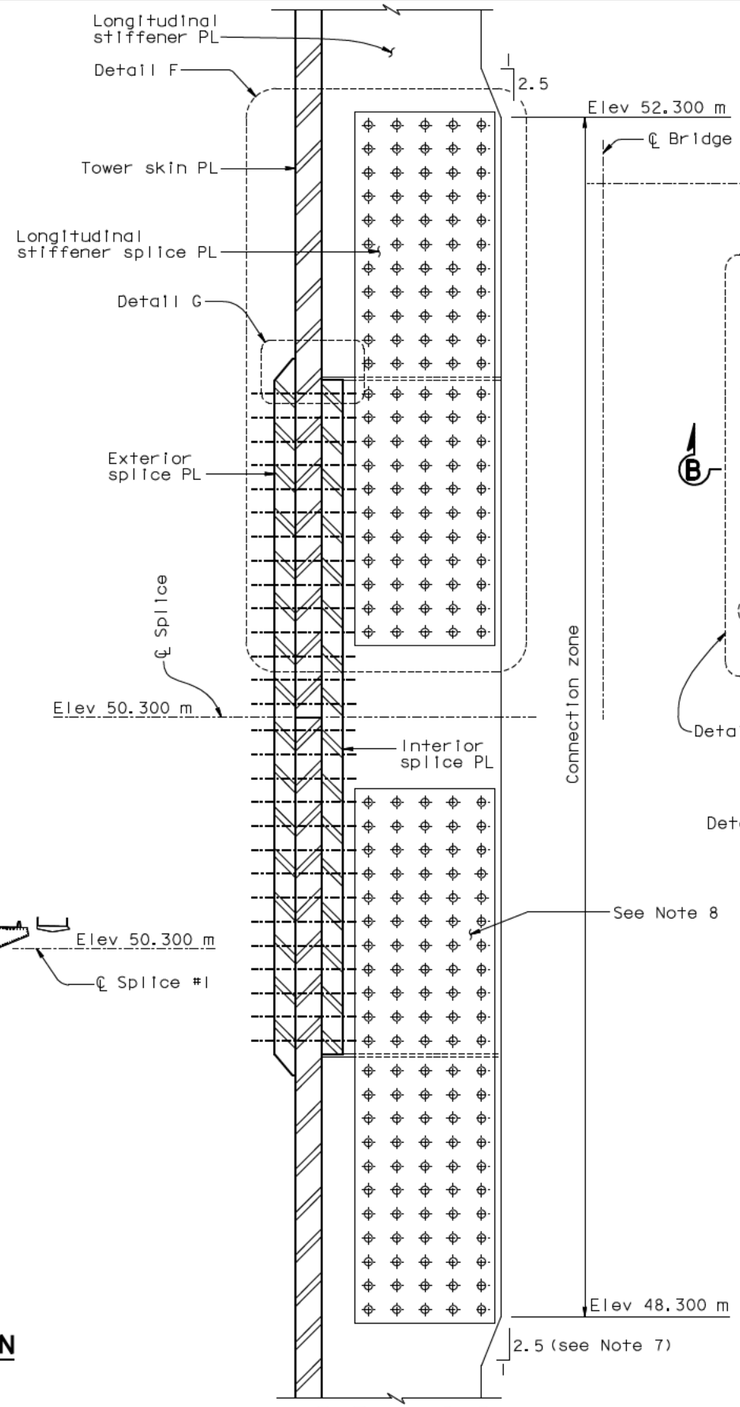

SECTION B-B
1:10

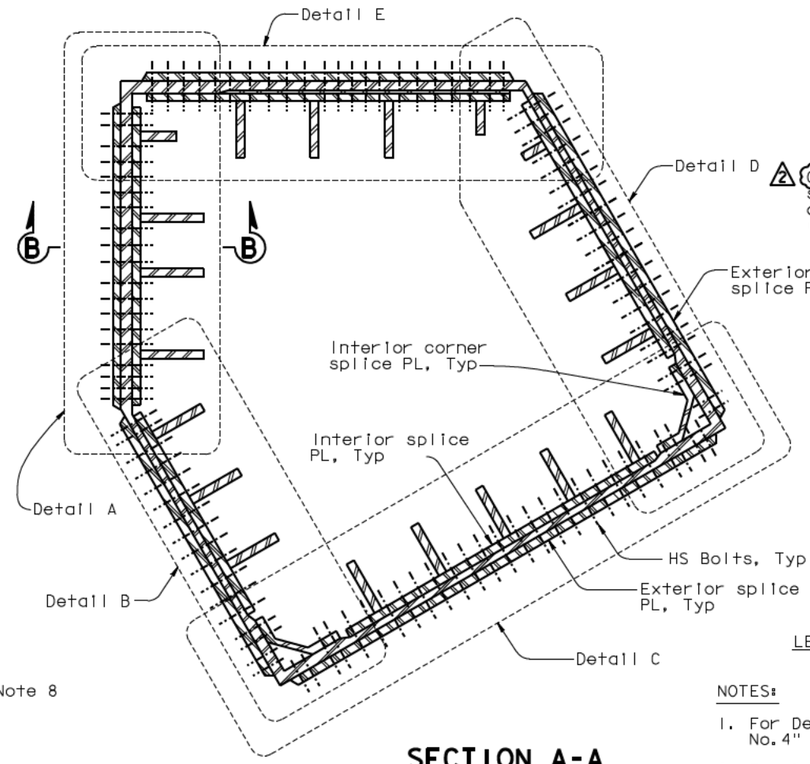

SECTION A-A
1:25

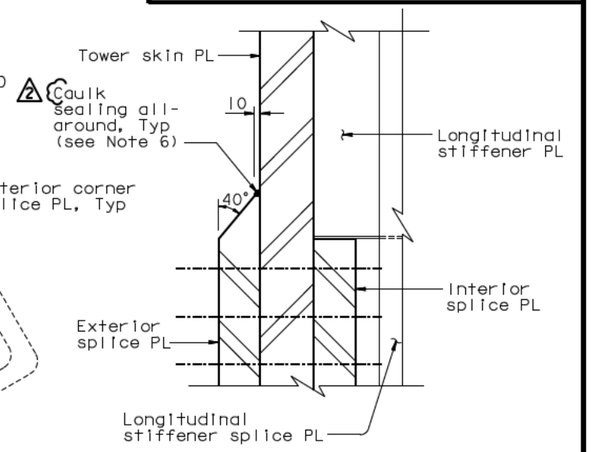

DETAIL G
1:5

LEGEND:

⊕ M27 A490-X HS Bolt

NOTES:

1. For Details A and B, see "Tower Splice Details No.4" sheet.
2. For Detail C, see "Tower Splice Details No.5" sheet.
3. For Details D and E, see "Tower Splice Details No. 6" sheet.
4. For Detail F, see "Tower Splice Details No.7" sheet.
5. The tower splice connections are designed as slip critical connections with class B contact surface (slip coefficient 0.5). The Contractor shall ensure that the flatness requirements are met at the faying surfaces.
2. 6. Caulk sealing shall be applied around the perimeter (horizontal and vertical edges) of all exterior splice plates.
7. Stiffeners A1, E7, and D4 shall not be tapered.
8. For stiffeners A1, B4, E4, E7, and D4, see "Tower Splice Details No.7" sheet.

TYPICAL TOWER SHAFT SPLICE #1

REQUESTS FOR INFORMATION NOT ADDRESSED IN THIS CCO REMAIN IN FORCE

MARK	DATE	DESCRIPTIONS	BY	CH'D	CCO#
		REVISIONS			
2	07/07/08	CAULKING	MN	NV	66
1	06/23/06	SPLICE PLATES PER ISM	MN	NV	21

CONTRACT CHANGE ORDER NO. ____
SHEET ___ OF ___

ALL DIMENSIONS ARE IN MILLIMETERS UNLESS OTHERWISE SHOWN

R. Valizadeh/V. Toan/Y.L./W.L./F.C.
DESIGN OVERSIGHT
SIGN OFF DATE 07/07/08

	BY		CHECKED	
DESIGN	M. Nader		M. Gulyas	
DETAILS	J. Lopez		N. Vo	
QUANTITIES	L. Rus		Y. Zhang	

PREPARED FOR THE STATE OF CALIFORNIA
DEPARTMENT OF TRANSPORTATION

R. Manzanarez
PROJECT ENGINEER

BRIDGE NO. 34-0006L/R
KILOMETER POST 13.2/13.9

SAN FRANCISCO OAKLAND BAY BRIDGE
EAST SPAN SEISMIC SAFETY PROJECT
SELF-ANCHORED SUSPENSION BRIDGE
(SUPERSTRUCTURE & TOWER)

TOWER SPLICE DETAILS NO. 3

Rev. Date: 5-18-98

ORIGINAL SCALE IN MILLIMETERS FOR REDUCED PLANS 0 10 20 30 40 50 60 70 80 90 100

CU 04
EA 0120F1

DISREGARD PRINTS BEARING EARLIER REVISION DATES →

REVISION DATES (PRELIMINARY STAGE ONLY): 05/28/01 | 04/26/02 | 07/29/02 | 12/19/02 | 10/13/05 | 11/23/05 | 12/07/05

SHEET 125R2 OF

FILE -> L:\BB\04-012001\SAS\Contract Plans and CCO\CCO\In Progress\CCO#66\DGN\aetsp03.dgn

USERNAME => vignatovs DATE PLOTTED => 03 JUL 2008 TIME PLOTTED => 13:40:01

100% PS&E

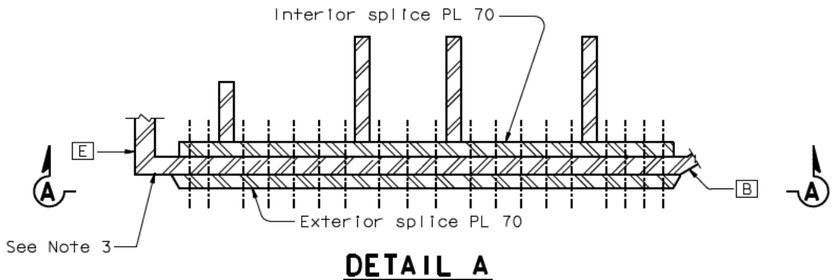

DETAIL A
1:15

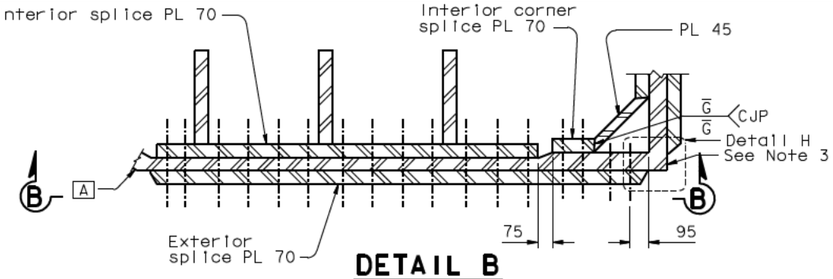

DETAIL B
1:15

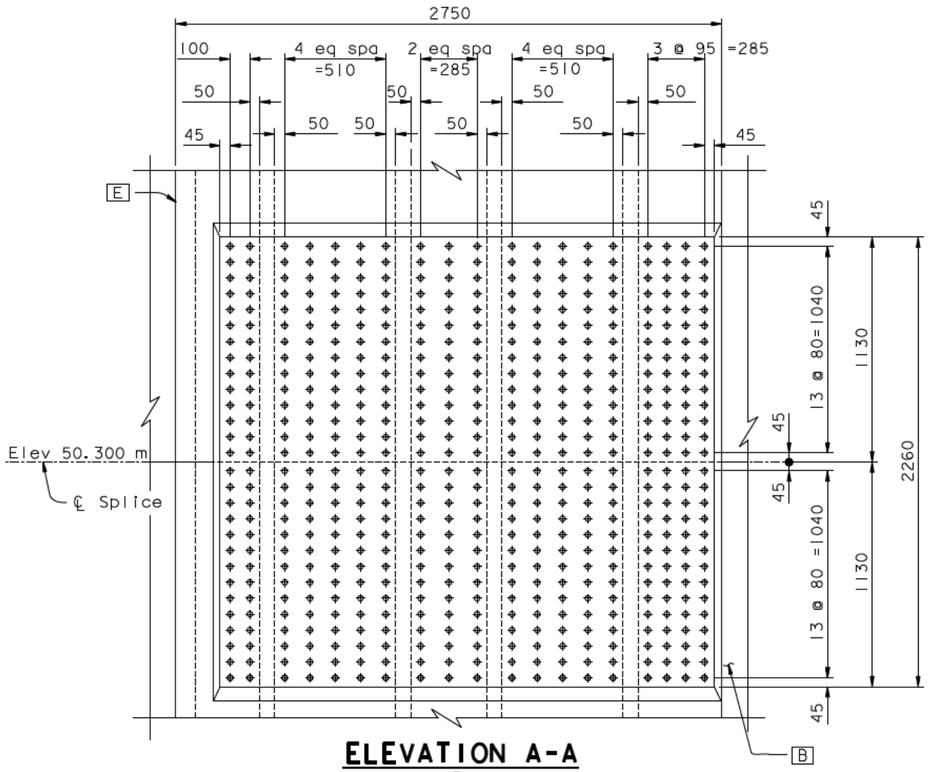

ELEVATION A-A
1:15

TOWER SKIN PLATE A

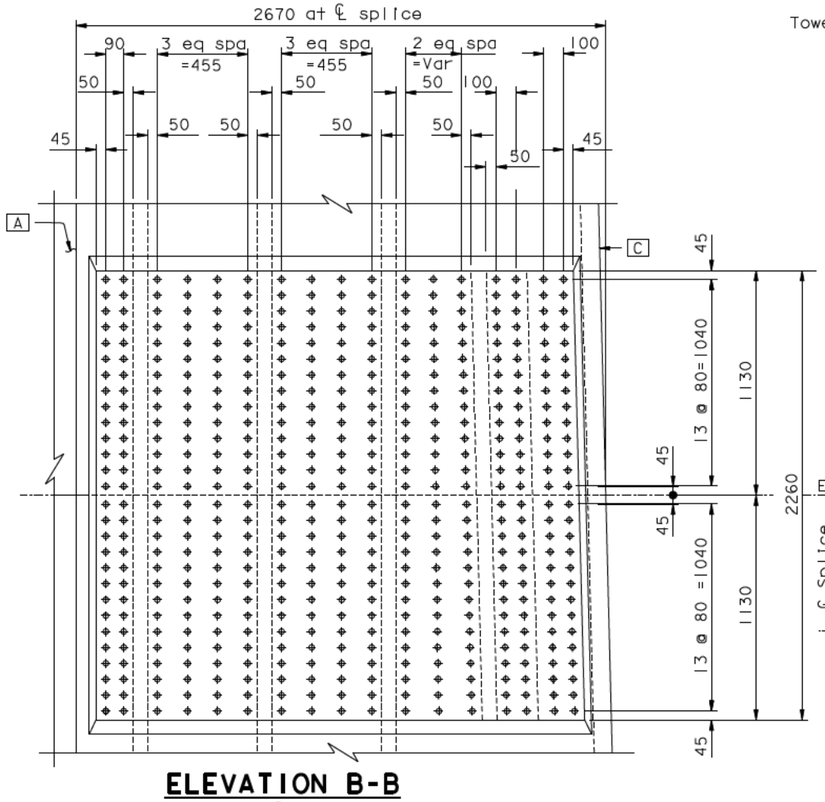

ELEVATION B-B
1:15

TOWER SKIN PLATE B

LEGEND:

⊕ M27 A490-X HS Bolts

\+ 12 Dia cap screw drilled in tapped hole

5. Whenever it is not practicable to have two screw rows, stagger the screw pattern using 3 bolts may be used subject to the approval of the Engineer.

6. Wherever it is not practicable to have cap screws, the cover plate shall be fillet seal welded to the splice plate.

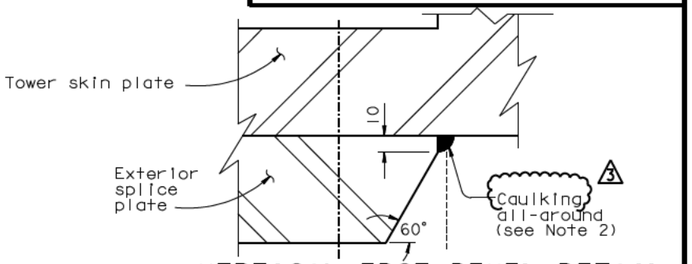

VERTICAL EDGE BEVEL DETAIL
(Typical all exterior splice plates)

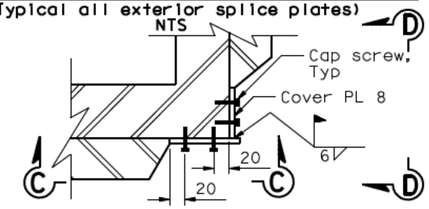

DETAIL H
NTS

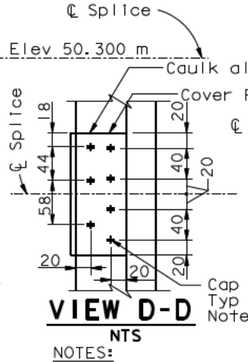

VIEW D-D
NTS

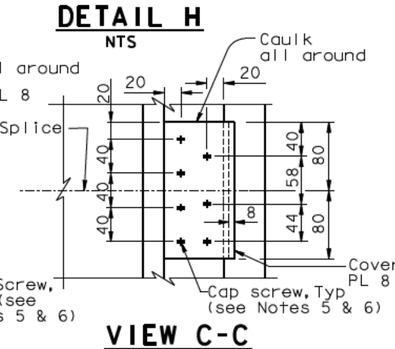

VIEW C-C
NTS

NOTES:

1. The tower splice connections are designed as slip critical connections with class B contact surface (slip coefficient 0.5). The Contractor shall ⚠3 ensure that the flatness requirements are met at the faying surfaces.
2. Caulk sealing shall be applied around the perimeter (horizontal and vertical edges) of all exterior splice plates.
3. Skin plate splice seam not covered by exterior splice plate shall be covered by cover plate and secured by cap screws with 8 mm all-around silicone caulk sealing (see Detail H). Corner CD is shown in Detail H. Corners AB, BC, DE and EA similar.
4. Elevation view of adjacent skin plate not shown for clarity.

DIST.	COUNTY	ROUTE	KILOMETER POST TOTAL PROJECT	SHEET NO.	TOTAL SHEETS
04	SF	80	13.2/13.9	543R3	1204

Caltrans Metric

REGISTERED ENGINEER - CIVIL

12-6-04
PLANS APPROVAL DATE

REGISTERED PROFESSIONAL ENGINEER — Marwan N. Nader — No. C 054426 — Exp. 12/31/09 — CIVIL — STATE OF CALIFORNIA

The State of California or its officers or agents shall not be responsible for the accuracy or completeness of electronic copies of this plan sheet.

T.Y. LIN / MOFFATT & NICHOL
825 BATTERY STREET
SAN FRANCISCO, CA 94111

Caltrans now has a web site! To get to the web site, go to: http://www.dot.ca.gov

REQUESTS FOR INFORMATION NOT ADDRESSED IN THIS CCO REMAIN IN FORCE					
⚠3	08/22/08	Caulking	MN	NV	66
⚠2	08/15/08	TOWER DOUBLER PLATE & SPLICE CORNER DETAILS	MN	NV	62
⚠1	06/23/06	SPLICE PLATES PER ISM	MN	NV	21
MARK	DATE	DESCRIPTIONS	BY	CH'D	CCO#
		REVISIONS			

CONTRACT CHANGE ORDER NO. ____
SHEET ____ OF ____

ALL DIMENSIONS ARE IN MILLIMETERS UNLESS OTHERWISE SHOWN

R. Valizadeh/V. Toan/Y.L./W.L./F.C.
DESIGN OVERSIGHT
SIGN OFF DATE 08/22/08

	BY		CHECKED	
DESIGN	M. Nader		M. Gulyas	
DETAILS	J. Lopez		N. Vo	
QUANTITIES	J. Lopez		Y. Zhang	

PREPARED FOR THE STATE OF CALIFORNIA DEPARTMENT OF TRANSPORTATION

R. Manzanarez
PROJECT ENGINEER

BRIDGE NO. 34-0006L/R
KILOMETER POST 13.2/13.9

SAN FRANCISCO OAKLAND BAY BRIDGE
EAST SPAN SEISMIC SAFETY PROJECT
SELF-ANCHORED SUSPENSION BRIDGE
(SUPERSTRUCTURE & TOWER)

TOWER SPLICE DETAILS NO. 4

Rev. Date: 5-18-98

ORIGINAL SCALE IN MILLIMETERS FOR REDUCED PLANS 0 10 20 30 40 50 60 70 80 90 100

CU 04
EA 0120F1

DISREGARD PRINTS BEARING EARLIER REVISION DATES

REVISION DATES (PRELIMINARY STAGE ONLY): 08/22/08 | 05/31/01 | 04/30/02 | 07/31/02 | 12/31/02 | 10/31/05 | 11/13/05

SHEET 126R3 OF

FILE -> L:\BB\04-012001\SAS\Contract Plans and CCO\CCO\In Progress\CCO#66\Revision 08-22-08\DGN\aetsp04.dgn

USERNAME => dwinrow DATE PLOTTED => 21 AUG 2008 TIME PLOTTED => 11:58:04

100% PS&E

REQUESTS FOR INFORMATION NOT ADDRESSED IN THIS CCO REMAIN IN FORCE					
2	07/07/08	CAULKING	MN	NV	66
1	06/23/08	SPLICE PLATES PER ISM	MN	NV	21
MARK	DATE	DESCRIPTIONS	BY	CH'D	CCO#
REVISIONS					

CONTRACT CHANGE ORDER NO.___
SHEET ___ OF ___

Caltrans Metric

DIST.	COUNTY	ROUTE	KILOMETER POST TOTAL PROJECT	SHEET NO.	TOTAL SHEETS
04	SF	80	13.2/13.9	547R2	1204

REGISTERED ENGINEER - CIVIL

12-6-04
PLANS APPROVAL DATE

REGISTERED PROFESSIONAL ENGINEER — Marwan N. Nader — No. C 054426 — Exp. 12/31/09 — CIVIL — STATE OF CALIFORNIA

The State of California or its officers or agents shall not be responsible for the accuracy or completeness of electronic copies of this plan sheet.

T.Y. LIN / MOFFATT & NICHOL
825 BATTERY STREET
SAN FRANCISCO, CA 94111

Caltrans now has a web site! To get to the web site, go to: http://www.dot.ca.gov

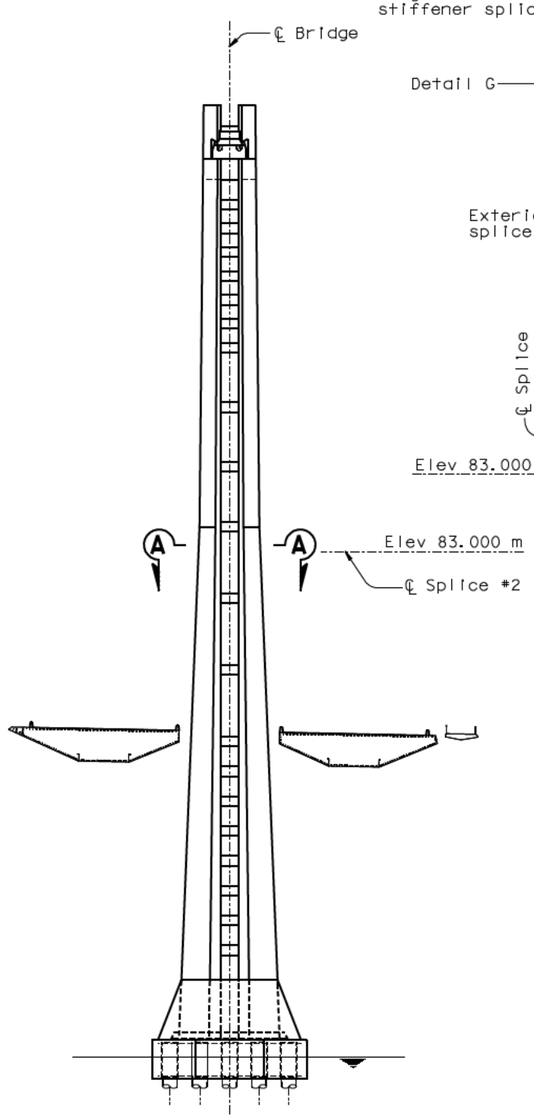

TOWER SPLICE LOCATION
1:500

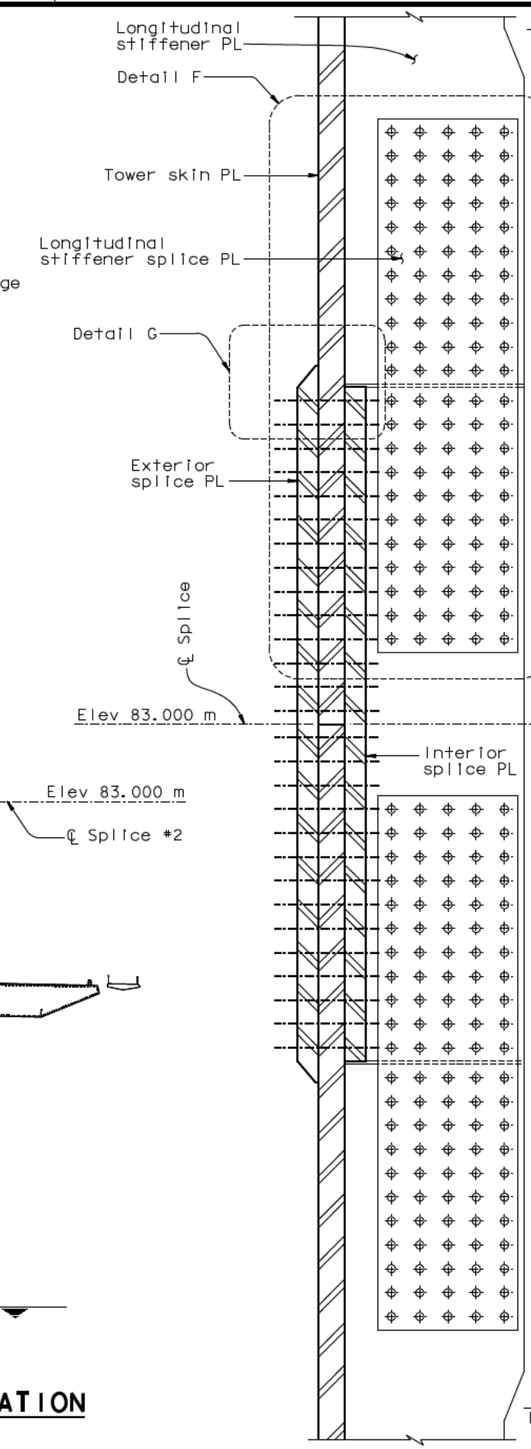

SECTION B-B (see Notes 6 and 7)
1:10

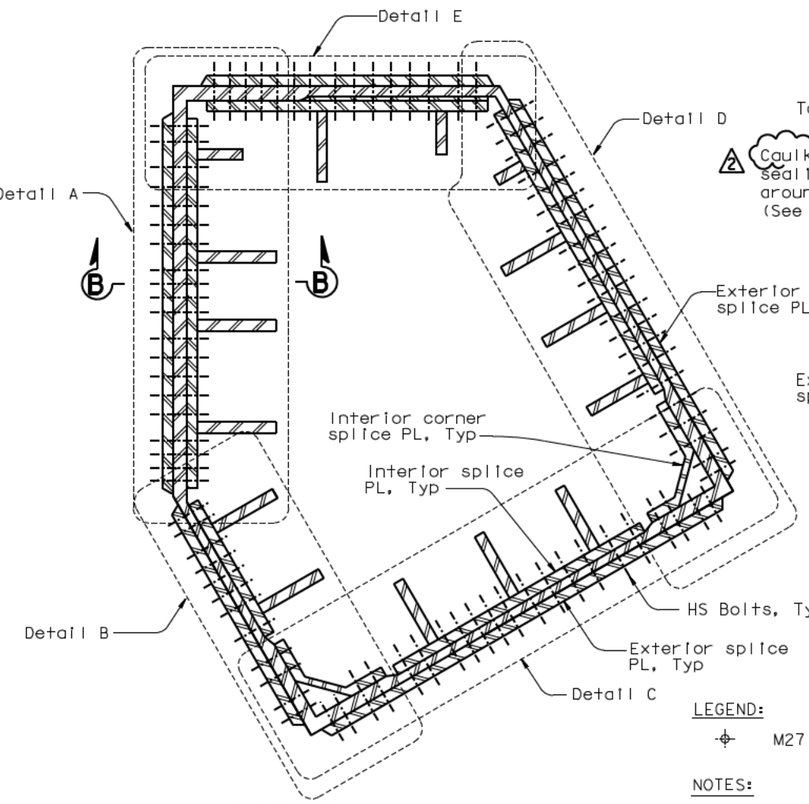

SECTION A-A
1:20

TYPICAL TOWER SHAFT SPLICE #2

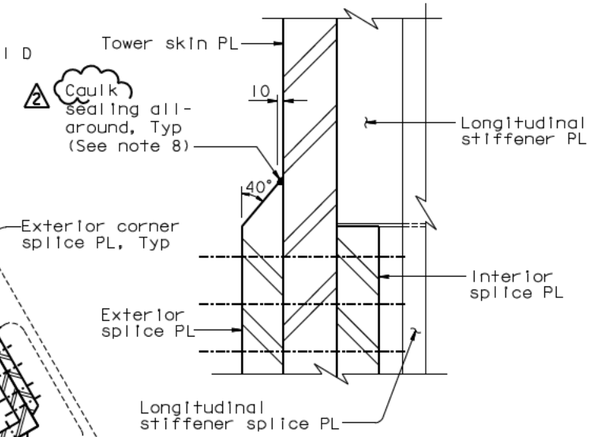

DETAIL G
1:5

LEGEND:

⊕ M27 A490-X HS Bolt

NOTES:

1. For Details A and B, see "Tower Splice Details No. 9" sheet.
2. For Detail C, see "Tower Splice Details No. 10" sheet.
3. For Details D and E, see "Tower Splice Details No. 11" sheet.
4. For Detail F, see "Tower Splice Details No. 12" sheet.
5. The tower splice connections are designed as slip critical connections with class B contact surface (slip coefficient 0.5). The Contractor shall ensure that the flatness requirements are met at the faying surfaces.
6. Stiffeners A1, E7, and D4 shall not be tapered.
7. For stiffeners A1, E2, E7, and D4, see"Tower Splice Details No. 12" sheet.
8. 2 Caulk sealing shall be applied around the perimeter (horizontal and vertical edges) of all exterior splice plates.

ALL DIMENSIONS ARE IN MILLIMETERS UNLESS OTHERWISE SHOWN

100% PS&E

USERNAME => v:\gnatovs\ DATE PLOTTED => 03 JUL 2008 TIME PLOTTED => 13:41:40

R. Vallzadeh/V. Toan/Y.L./W.L./F.C.	DESIGN	BY M. Nader	CHECKED N. Vo
DESIGN OVERSIGHT	DETAILS	BY J. Lopez	CHECKED N. Vo
SIGN OFF DATE 07/07/08	QUANTITIES	BY J. Lopez	CHECKED N. Vo

PREPARED FOR THE STATE OF CALIFORNIA
DEPARTMENT OF TRANSPORTATION

R. Manzanarez
PROJECT ENGINEER

BRIDGE NO. 34-0006L/R
KILOMETER POST 13.2/13.9

SAN FRANCISCO OAKLAND BAY BRIDGE
EAST SPAN SEISMIC SAFETY PROJECT
SELF-ANCHORED SUSPENSION BRIDGE (SUPERSTRUCTURE & TOWER)

TOWER SPLICE DETAILS NO. 8

Rev. Date: 5-18-98

ORIGINAL SCALE IN MILLIMETERS FOR REDUCED PLANS 0 10 20 30 40 50 60 70 80 90 100

CU 04
EA 0120F1

DISREGARD PRINTS BEARING EARLIER REVISION DATES

REVISION DATES (PRELIMINARY STAGE ONLY): 05/27/01 | 04/08/02 | 07/01/02 | 12/19/02 | 11/13/05

SHEET 130R2 OF

FILE -> I:\bb\04-012001\sas\contract plans and cco\cco\In progress\cco#66\dgn\aetsp08.dgn

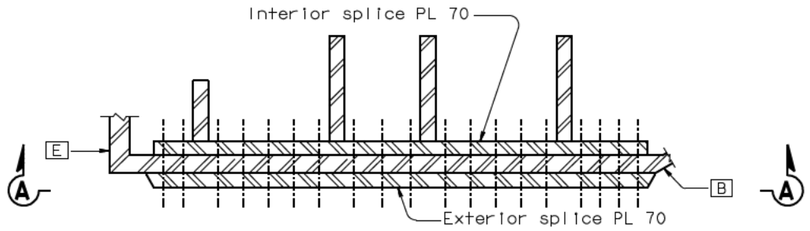

DETAIL A
1:15

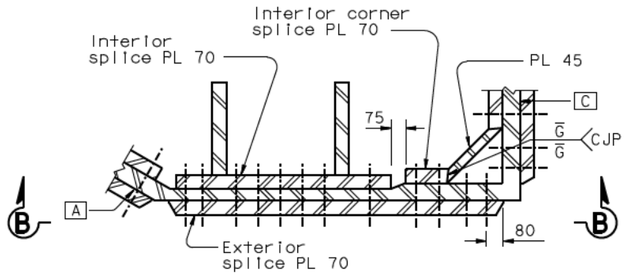

DETAIL B
1:15

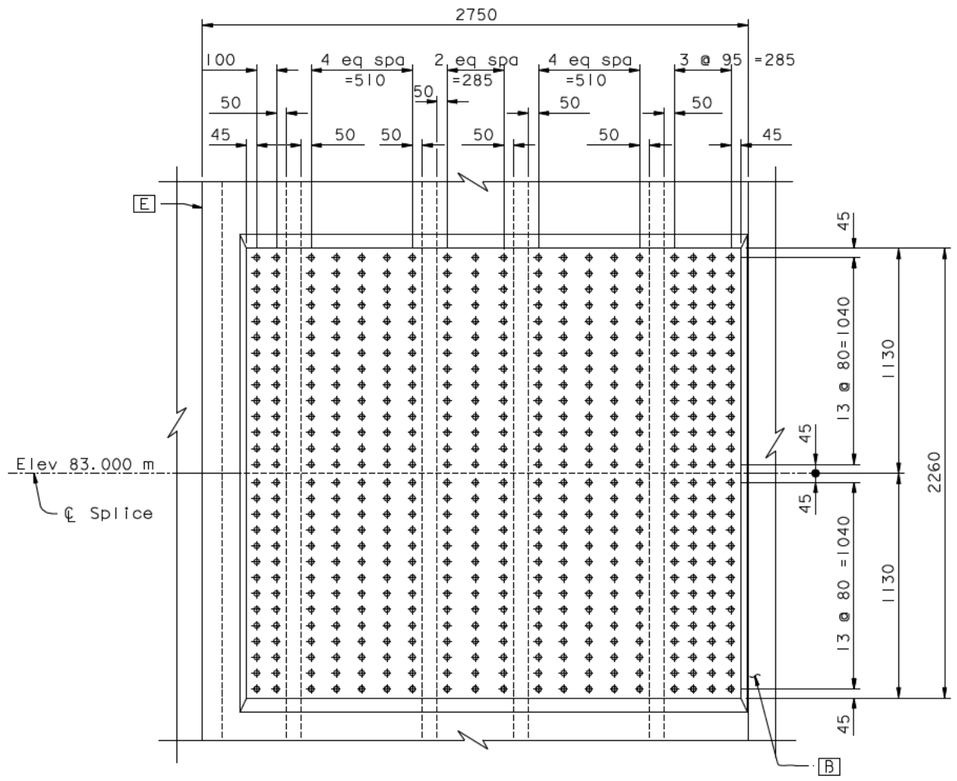

ELEVATION A-A
1:15

TOWER SKIN PLATE A

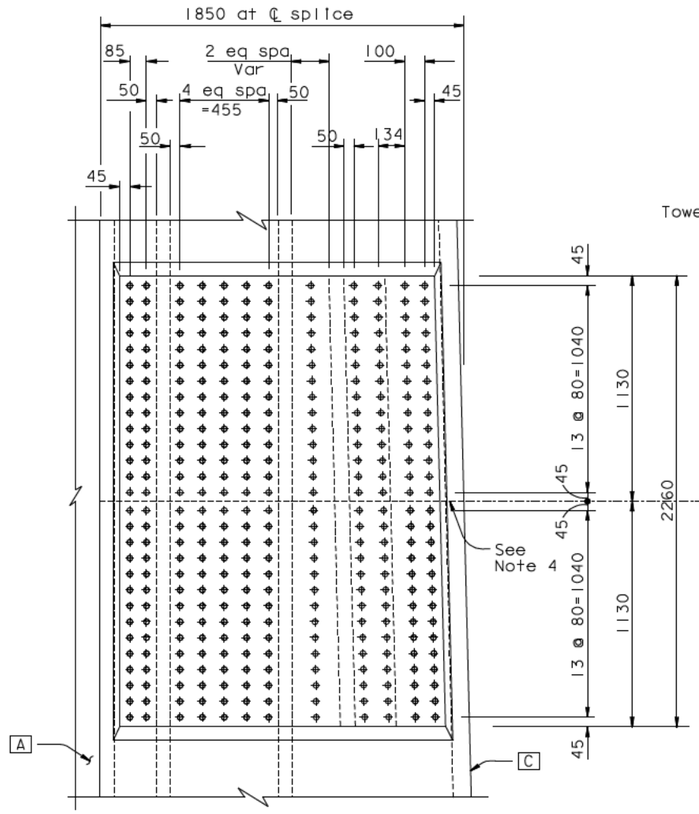

ELEVATION B-B
1:15

TOWER SKIN PLATE B

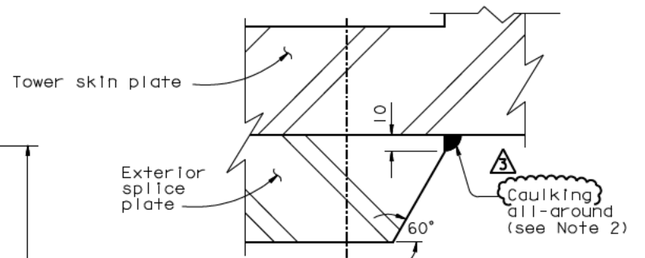

VERTICAL EDGE BEVEL DETAIL
(Typical all exterior splice plates)
NTS

LEGEND:

⊕ M27 A490-X HS Bolts

NOTES:

1. The tower splice connections are designed as slip critical connections with class B contact surface (slip coefficient 0.5). The Contractor shall ensure that the flatness requirements at the faying surfaces and the geometry control are met.
3. Caulk sealing shall be applied around the perimeter (horizontal and vertical edges) of all exterior splice plates.
3. Elevation view of adjacent skin plate not shown for clarity.
4. For skin plate splice seam not covered by exterior splice plates, see details on "Tower Splice Details No. 4" sheet.

DIST.	COUNTY	ROUTE	KILOMETER POST TOTAL PROJECT	SHEET NO.	TOTAL SHEETS
04	SF	80	13.2/13.9	548R3	1204

REGISTERED ENGINEER - CIVIL

12-6-04
PLANS APPROVAL DATE

REGISTERED PROFESSIONAL ENGINEER — Marwan N. Nader — No. C 054426 — Exp. 12/31/09 — CIVIL — STATE OF CALIFORNIA

The State of California or its officers or agents shall not be responsible for the accuracy or completeness of electronic copies of this plan sheet.

T.Y. LIN / MOFFATT & NICHOL
825 BATTERY STREET
SAN FRANCISCO, CA 94111

Caltrans now has a web site! To get to the web site, go to: http://www.dot.ca.gov

REQUESTS FOR INFORMATION NOT ADDRESSED IN THIS CCO REMAIN IN FORCE

MARK	DATE	REVISIONS	BY	CH'D	CCO#
3	10/31/08	CAULKING	MN	NV	66
2	07/25/08	TOWER DOUBLER PLATE & SPLICE CORNER DETAILS	MN	NV	62
1	06/23/06	SPLICE PLATES PER ISM	MN	NV	21

CONTRACT CHANGE ORDER NO. ___
SHEET ___ OF ___

ALL DIMENSIONS ARE IN MILLIMETERS UNLESS OTHERWISE SHOWN

R. Valizadeh/V. Toan/Y.L./W.L./F.C.
DESIGN OVERSIGHT
SIGN OFF DATE 10/31/08

	BY	CHECKED
DESIGN	M. Nader	N. Vo
DETAILS	C. Chol	N. Vo
QUANTITIES	C. Chol	N. Vo

PREPARED FOR THE STATE OF CALIFORNIA DEPARTMENT OF TRANSPORTATION

R. Manzanarez
PROJECT ENGINEER

CU 04
EA 0120F1

BRIDGE NO. 34-0006L/R
KILOMETER POST 13.2/13.9

SAN FRANCISCO OAKLAND BAY BRIDGE
EAST SPAN SEISMIC SAFETY PROJECT
SELF-ANCHORED SUSPENSION BRIDGE (SUPERSTRUCTURE & TOWER)

TOWER SPLICE DETAILS NO. 9

Rev. Date: 5-18-98

ORIGINAL SCALE IN MILLIMETERS FOR REDUCED PLANS 0 10 20 30 40 50 60 70 80 90 100

DISREGARD PRINTS BEARING EARLIER REVISION DATES → 08/30/99 05/31/01 04/30/02 07/31/02 12/31/02 11/13/05

SHEET 131R3 OF

FILE -> L:\BB\04-012001\SAS\Contract Plans and CCO\CCO\In Progress\CCO#66\Update 10-31-08\aetsp09.dgn

USERNAME => vignatovs DATE PLOTTED => 27 OCT 2008 TIME PLOTTED => 14:38:02

100 % PS&E

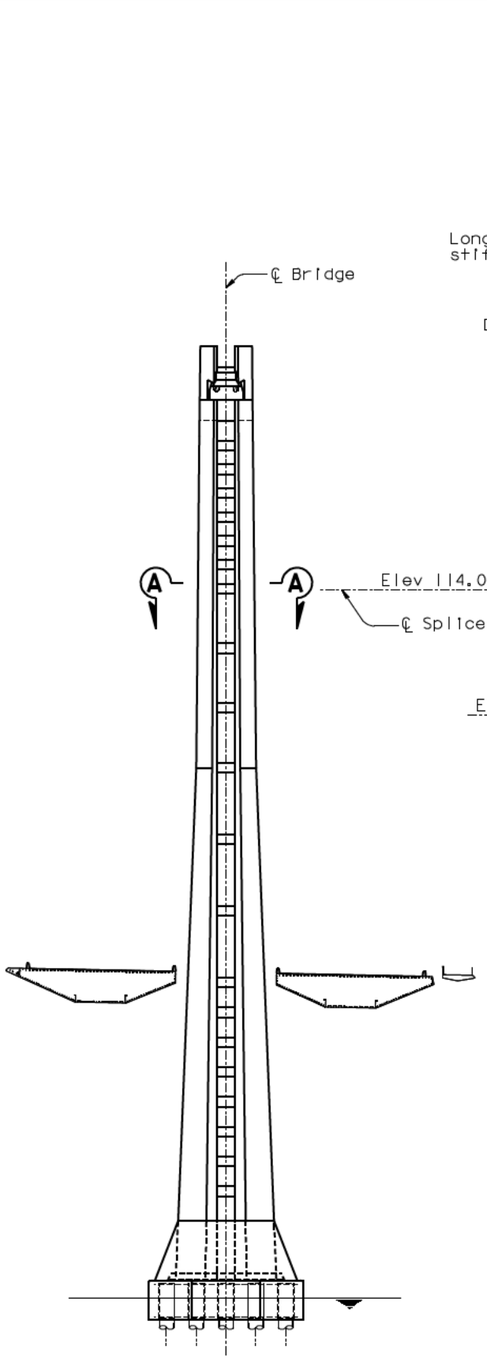

TOWER SPLICE LOCATION
1:500

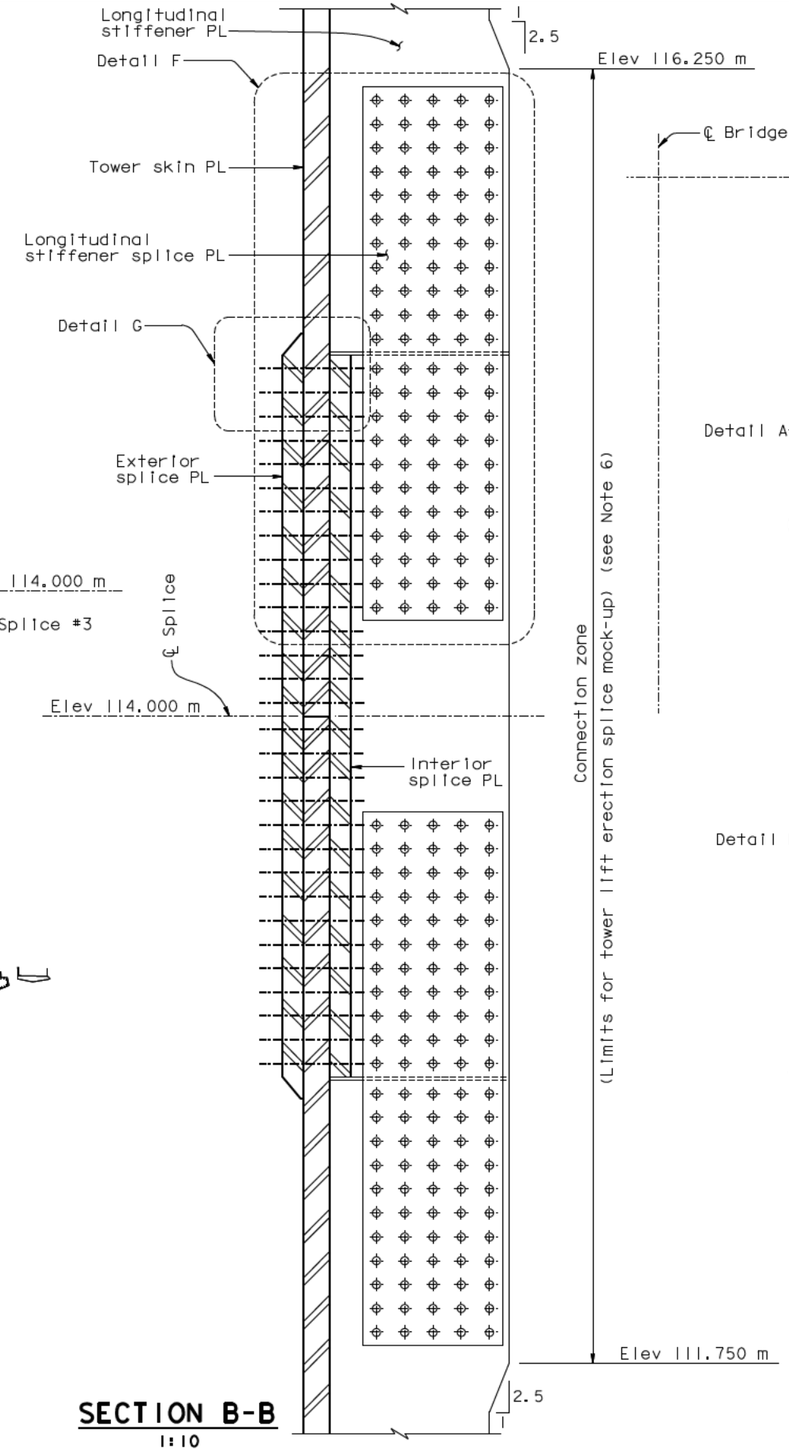

SECTION B-B
1:10

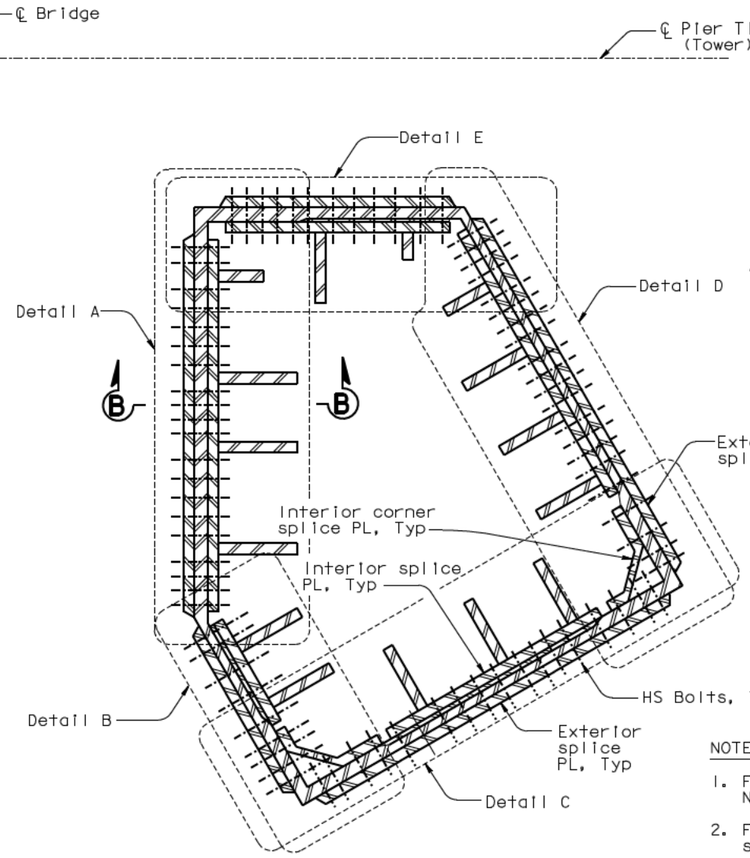

SECTION A-A
1:20

TYPICAL TOWER SHAFT SPLICE #3
(Limits for mock-up)
(see Note 6)

REQUESTS FOR INFORMATION NOT ADDRESSED IN THIS CCO REMAIN IN FORCE					
2	07/07/08	CAULKING	MN	NV	66
1	06/23/06	SPLICE PLATES PER ISM	MN	NV	21
MARK	DATE	DESCRIPTIONS	BY	CH'D	CCO#
REVISIONS					

CONTRACT CHANGE ORDER NO. ____
SHEET ____ OF ____

LEGEND:

⌖ M27 A490-X HS Bolt

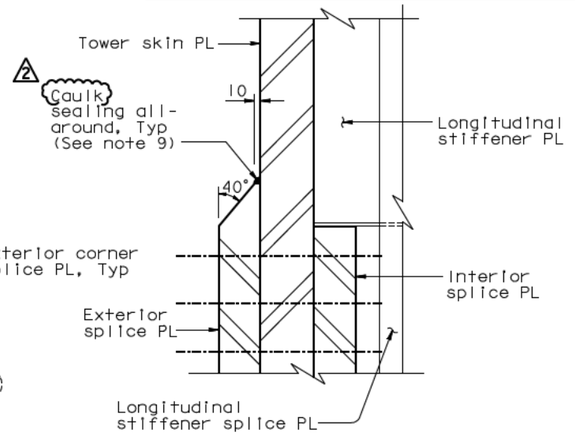

DETAIL G
1:5

NOTES:

1. For Details A and B, see "Tower Splice Details No.14" sheet.
2. For Detail C, see "Tower Splice Details No.15" sheet.
3. For Details D and E, see "Tower Splice Details No.16" sheet.
4. For Detail F, see "Tower Splice Details No.17" sheet.
5. The tower splice connections are designed as slip critical connections with class B contact surface (slip coefficient 0.5). The Contractor shall ensure that the flatness requirements are met at the faying surfaces.
6. Mock-up for tower lift erection splice shall be made for one shaft only. Limits shown apply to either all bolted, combined bolted and welded, or all welded splice.
7. Stiffeners A1, E7, and D4 shall not be tapered.
8. For stiffeners A1, E7, and D4 see "Tower Splice Details No.17" sheet.
9. Caulk sealing shall be applied around the perimeter (horizontal and vertical edges) of all exterior splice plates.

ALL DIMENSIONS ARE IN MILLIMETERS UNLESS OTHERWISE SHOWN

DIST.	COUNTY	ROUTE	KILOMETER POST TOTAL PROJECT	SHEET NO.	TOTAL SHEETS
04	SF	80	13.2/13.9	552R2	1204

Caltrans Metric

REGISTERED ENGINEER - CIVIL

12-6-04
PLANS APPROVAL DATE

REGISTERED PROFESSIONAL ENGINEER — Marwan N. Nader — No. C 054426 — Exp. 12/31/09 — CIVIL — STATE OF CALIFORNIA

The State of California or its officers or agents shall not be responsible for the accuracy or completeness of electronic copies of this plan sheet.

T.Y. LIN / MOFFATT & NICHOL
825 BATTERY STREET
SAN FRANCISCO, CA 94111

Caltrans now has a web site! To get to the web site, go to: http://www.dot.ca.gov

R. Vallzadeh/V. Toan/Y.L./W.L./F.C.
DESIGN OVERSIGHT
Ryo Vallzadeh / Vong Toan / Y. Liu
SIGN OFF DATE 07/07/08

DESIGN	BY M. Nader	CHECKED	N. Vo
DETAILS	BY J. Lopez	CHECKED	N. Vo
QUANTITIES	BY J. Lopez	CHECKED	N. Vo

PREPARED FOR THE STATE OF CALIFORNIA DEPARTMENT OF TRANSPORTATION

R. Manzanarez
PROJECT ENGINEER

BRIDGE NO. 34-0006L/R
KILOMETER POST 13.2/13.9

SAN FRANCISCO OAKLAND BAY BRIDGE
EAST SPAN SEISMIC SAFETY PROJECT
SELF-ANCHORED SUSPENSION BRIDGE
(SUPERSTRUCTURE & TOWER)

TOWER SPLICE DETAILS NO. 13

Rev. Date: 5-18-98

ORIGINAL SCALE IN MILLIMETERS FOR REDUCED PLANS 0 10 20 30 40 50 60 70 80 90 100

CU 04
EA 0120F1

DISREGARD PRINTS BEARING EARLIER REVISION DATES

REVISION DATES (PRELIMINARY STAGE ONLY): 05/31/01 | 04/08/02 | 07/09/02 | 12/19/02 | 11/13/05

SHEET 135R2 OF

FILE -> I:\bb\04-012001\sas\contract plans and cco\cco\In progress\cco#66\dgn\aetspl3.dgn

USERNAME => vignatovs DATE PLOTTED => 03 JUL 2008 TIME PLOTTED => 13:43:48

100 % PS&E

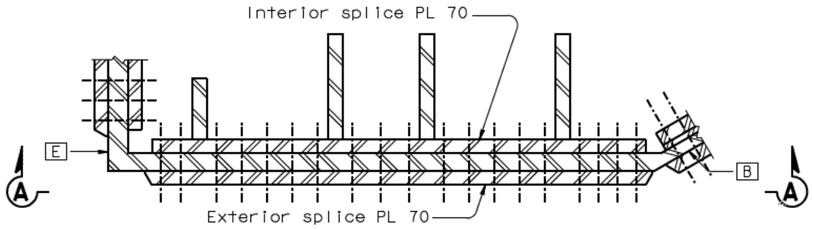

DETAIL A
1:15

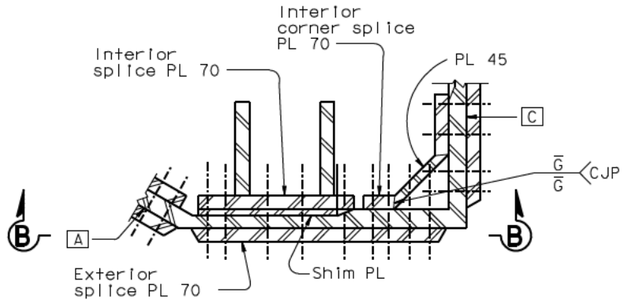

DETAIL B
1:15

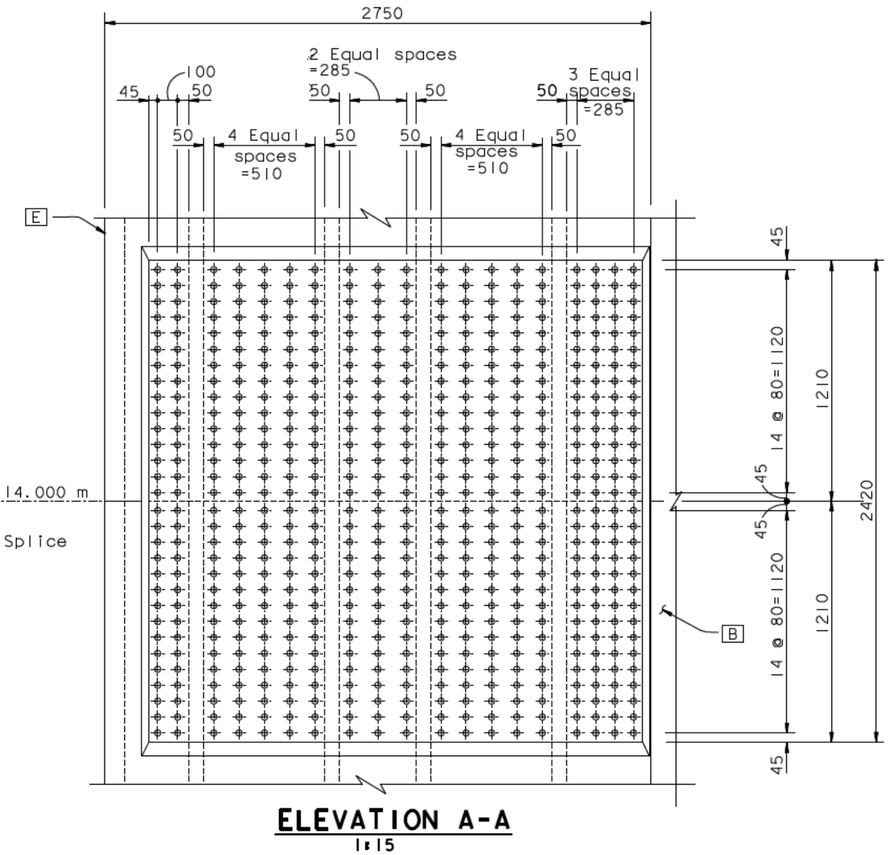

ELEVATION A-A
1:15

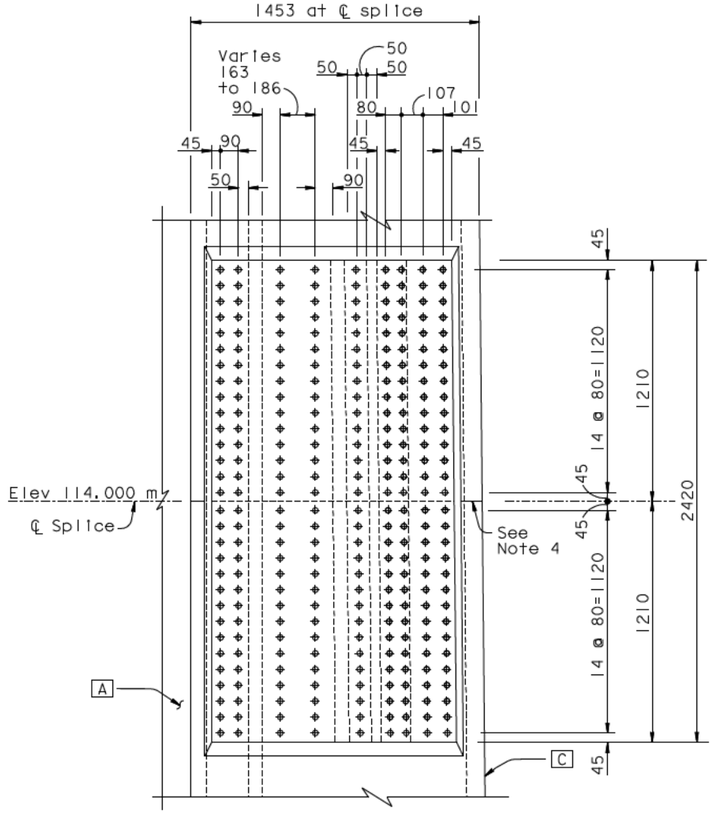

ELEVATION B-B
1:15

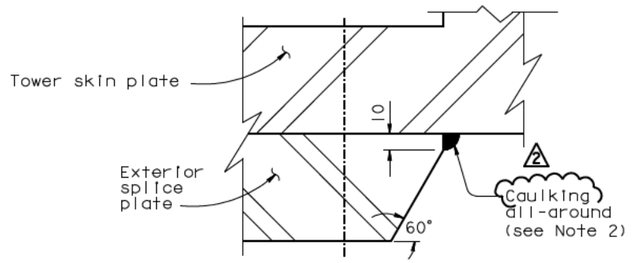

VERTICAL EDGE BEVEL DETAIL
(Typical all exterior splice plates)
NTS

TOWER SKIN PLATE A

TOWER SKIN PLATE B

REQUESTS FOR INFORMATION NOT ADDRESSED IN THIS CCO REMAIN IN FORCE					
2	07/07/08	CAULKING	MN	NV	66
1	06/23/06	SPLICE PLATES PER ISM	MN	NV	21
MARK	DATE	DESCRIPTIONS	BY	CH'D	CCO#
REVISIONS					

CONTRACT CHANGE ORDER NO. ____
SHEET ____ OF ____

LEGEND:

⊕ M27 A490-X HS Bolts

NOTES:

1. The tower splice connections are designed as slip critical connections with class B contact surface (slip coefficient 0.5). The Contractor shall ensure that the flatness requirements at the faying surfaces and the geometry control are met.
2. Caulk sealing shall be applied around the perimeter (horizontal and vertical edges) of all exterior splice plates.
3. Elevation view of adjacent skin plate not shown for clarity.
4. For skin plate splice seam not covered by exterior splice plates, see details on "Tower Splice Details No. 4" sheet.

ALL DIMENSIONS ARE IN MILLIMETERS UNLESS OTHERWISE SHOWN

DIST.	COUNTY	ROUTE	KILOMETER POST TOTAL PROJECT	SHEET NO.	TOTAL SHEETS
04	SF	80	13.2/13.9	553R2	1204

Caltrans Metric

REGISTERED ENGINEER - CIVIL

12-6-04
PLANS APPROVAL DATE

REGISTERED PROFESSIONAL ENGINEER — Marwan N. Nader — No. C 054426 — Exp. 12/31/09 — CIVIL — STATE OF CALIFORNIA

The State of California or its officers or agents shall not be responsible for the accuracy or completeness of electronic copies of this plan sheet.

T.Y. LIN / MOFFATT & NICHOL
825 BATTERY STREET
SAN FRANCISCO, CA 94111

Caltrans now has a web site! To get to the web site, go to: http://www.dot.ca.gov

R. Valizadeh/V. Toan/Y.L./W.L./F.C.	DESIGN	BY M. Nader	CHECKED N. Vo	PREPARED FOR THE STATE OF CALIFORNIA DEPARTMENT OF TRANSPORTATION	R. Manzanarez	BRIDGE NO. 34-0006L/R
DESIGN OVERSIGHT	DETAILS	BY J. Lopez	CHECKED N. Vo		PROJECT ENGINEER	KILOMETER POST 13.2/13.9
SIGN OFF DATE 07/07/08	QUANTITIES	BY J. Lopez	CHECKED N. Vo			

SAN FRANCISCO OAKLAND BAY BRIDGE
EAST SPAN SEISMIC SAFETY PROJECT
SELF-ANCHORED SUSPENSION BRIDGE (SUPERSTRUCTURE & TOWER)

TOWER SPLICE DETAILS NO. 14

Rev. Date: 5-18-98

ORIGINAL SCALE IN MILLIMETERS FOR REDUCED PLANS 0 10 20 30 40 50 60 70 80 90 100

CU 04
EA 0120F1

DISREGARD PRINTS BEARING EARLIER REVISION DATES → 05/22/99 | 05/31/01 | 04/30/02 | 07/01/02 | 12/19/02

SHEET 136R2 OF

FILE -> I:\bb\04-012001\sas\contract plans and cco\cco\In progress\cco#66\dgn\detspl4.dgn

USERNAME => ptom
DATE PLOTTED => 23 JUL 2008
TIME PLOTTED => 16:08:39
100% PS&E

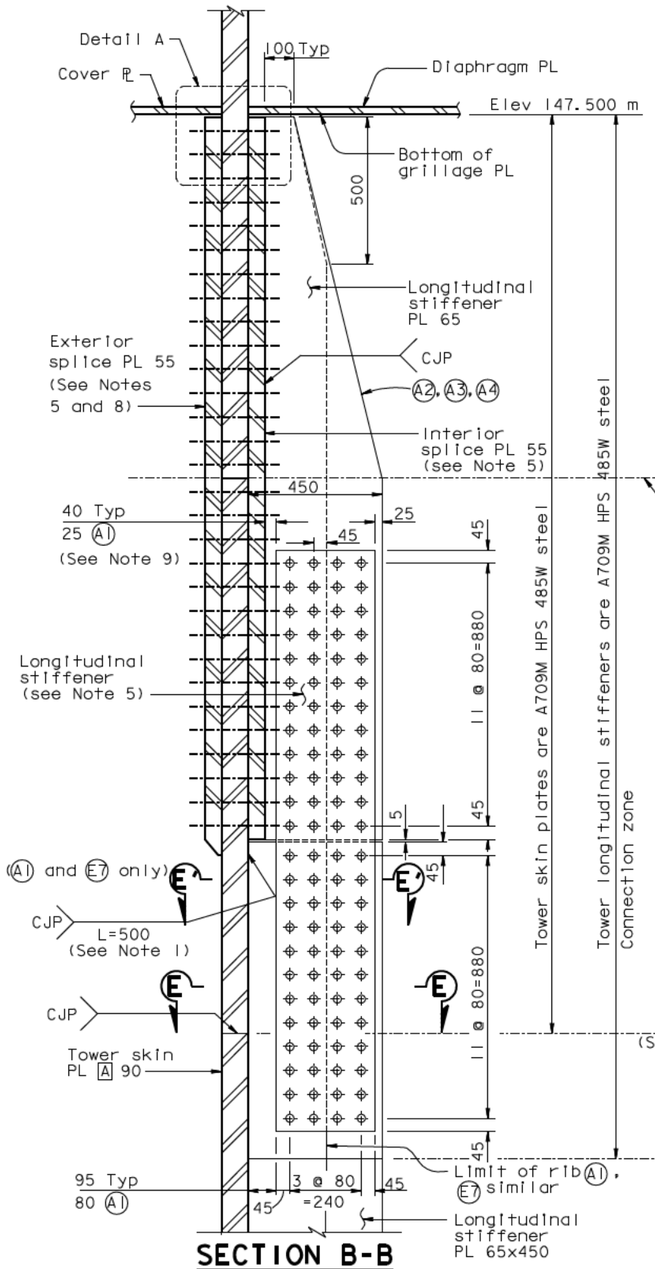

SECTION B-B

1:10

TOWER SKIN PLATE A

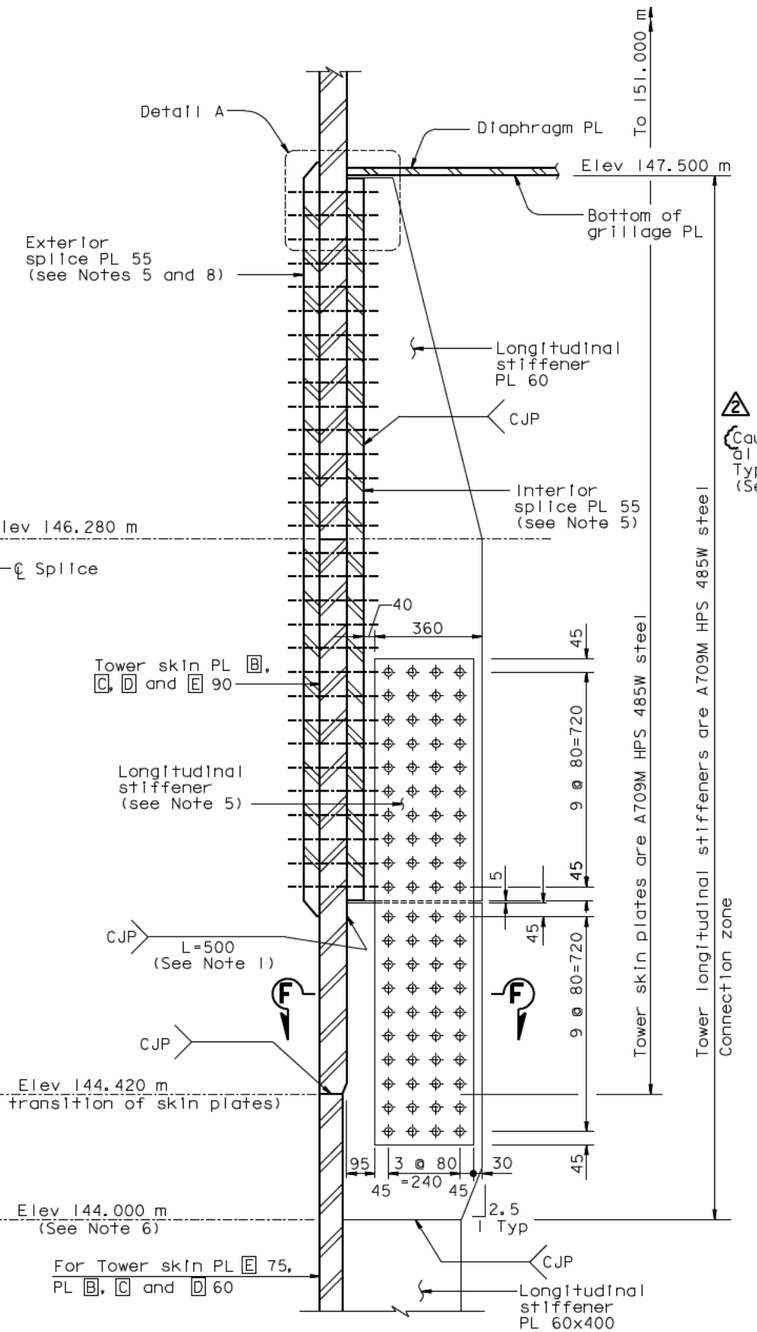

SECTION C-C

(Section D-D similar)

1:10

TOWER SKIN PLATE B TO E

(Except E7)

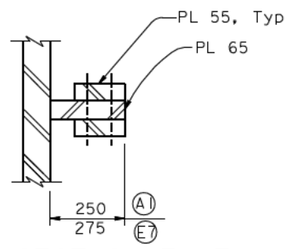

SECTION E'-E'

A1 and E7 only)

1:10

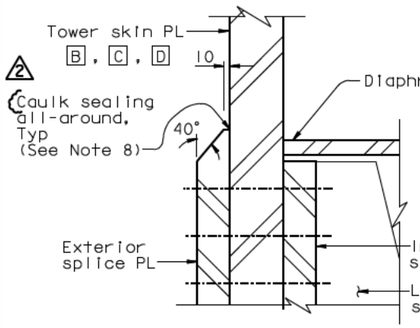

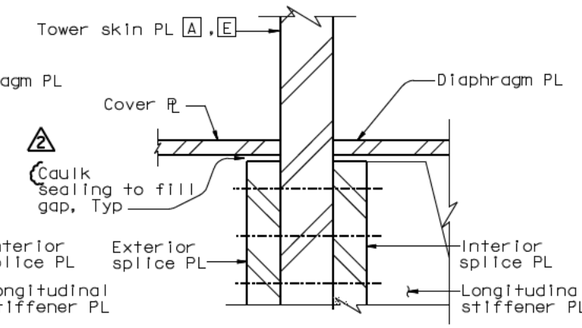

DETAIL A

(see Note 7)

1:5

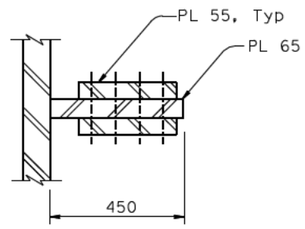

SECTION E-E

(A2, A3, A4)

1:10

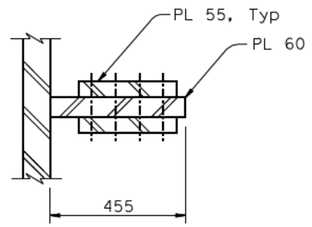

SECTION F-F

1:10

LEGEND:

⌖ M27 A490-X HS Bolt

NOTES:

1. Weld of longitudinal stiffener to the tower shaft skin plates beyond the length indicated shall be in accordance with Table 1 in "Tower Splice Details No.2" sheet.
2. Longitudinal stiffeners for skin plate "A" are 450 deep UNO. Longitudinal stiffeners for skin plates "B" through "E" are 455 deep UNO.
3. For tower grillage details, see "Tower Saddle Grillage Details" sheets.
4. For tower plate and stiffener sizes above elevation 144.000 m, see "Tower Saddle Grillage Details" sheets.
5. For splice #4, splice plates shall be A709M HPS 485W steel.
6. Elevation 144 corresponds to the change of stiffener size, see "Tower Shaft Details" sheets.
7. Longitudinal stiffeners B1 and D4 shall be coped at the top as shown on "Tower Saddle Grillage Details No.7" sheet.
2 8. Caulk sealing shall be applied around the perimeter (horizontal and vertical edges) of all exterior splice plates.
9. To facilitate installation of the bolted splice for longitudinal stiffener A1, the Contractor may use counterbore for the bolt head in the interior splice plate for the first bolt row on each side of the longitudinal stiffener. Each counterbore shall be 60 mm Dia and 10 mm deep. See Detail A on "Tower Splice Details No.16" sheet.

ALL DIMENSIONS ARE IN MILLIMETERS UNLESS OTHERWISE SHOWN

DIST.	COUNTY	ROUTE	KILOMETER POST TOTAL PROJECT	SHEET NO.	TOTAL SHEETS
04	SF	80	13.2/13.9	558R2	1204

REGISTERED ENGINEER - CIVIL

1-27-03

PLANS APPROVAL DATE

Marwan N. Nader No. C 054426 Exp. 12/31/09 CIVIL

The State of California or its officers or agents shall not be responsible for the accuracy or completeness of electronic copies of this plan sheet.

T.Y. LIN / MOFFATT & NICHOL
825 BATTERY STREET
SAN FRANCISCO, CA 94111

Caltrans now has a web site! To get to the web site, go to: http://www.dot.ca.gov

REQUESTS FOR INFORMATION NOT ADDRESSED IN THIS CCO REMAIN IN FORCE

MARK	DATE	DESCRIPTIONS	BY	CH'D	CCO#
		REVISIONS			
2	07/07/08	CAULKING	MN	NV	66
1	05/23/08	LONG. STIFFENER GAP & MISC.	MN	NV	21

CONTRACT CHANGE ORDER NO. ____
SHEET ___ OF ___

	BY	CHECKED
DESIGN	M. Nader	M. Gulyas
DETAILS	R. Kanitkar	M. Gulyas
QUANTITIES	R. Kanitkar	Y. Zhang

PREPARED FOR THE STATE OF CALIFORNIA DEPARTMENT OF TRANSPORTATION

R. Manzanarez
PROJECT ENGINEER

BRIDGE NO. 34-0006L/R
KILOMETER POST 13.2/13.9

CU 04
EA 0120F1

DISREGARD PRINTS BEARING EARLIER REVISION DATES

SAN FRANCISCO OAKLAND BAY BRIDGE
EAST SPAN SEISMIC SAFETY PROJECT
SELF-ANCHORED SUSPENSION BRIDGE
(SUPERSTRUCTURE & TOWER)

TOWER SPLICE DETAILS NO. 19

REVISION DATES (PRELIMINARY STAGE ONLY): 05/24/01 | 04/08/02 | 07/01/02 | 12/19/02 | 11/13/05

SHEET 141R2 OF

R. Valizadeh/V. Toan/Y.L./W.L./F.C.
DESIGN OVERSIGHT
SIGN OFF DATE 07/07/08

Rev. Date: 5-18-98

ORIGINAL SCALE IN MILLIMETERS FOR REDUCED PLANS 0 10 20 30 40 50 60 70 80 90 100

FILE -> I:\bb\04-012001\sas\contract plans and cco\cco\In progress\cco#66\dgn\aetspl9.dgn

USERNAME => vignotovs DATE PLOTTED => 03 JUL 2008 TIME PLOTTED => 13:45:04

100 % PS&E

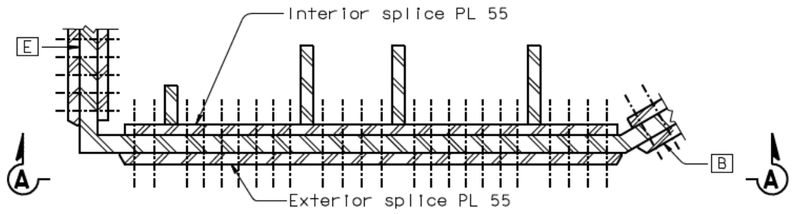

DETAIL A
1:15

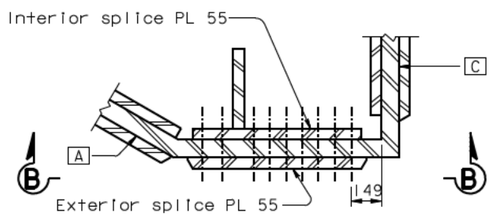

DETAIL B
1:15

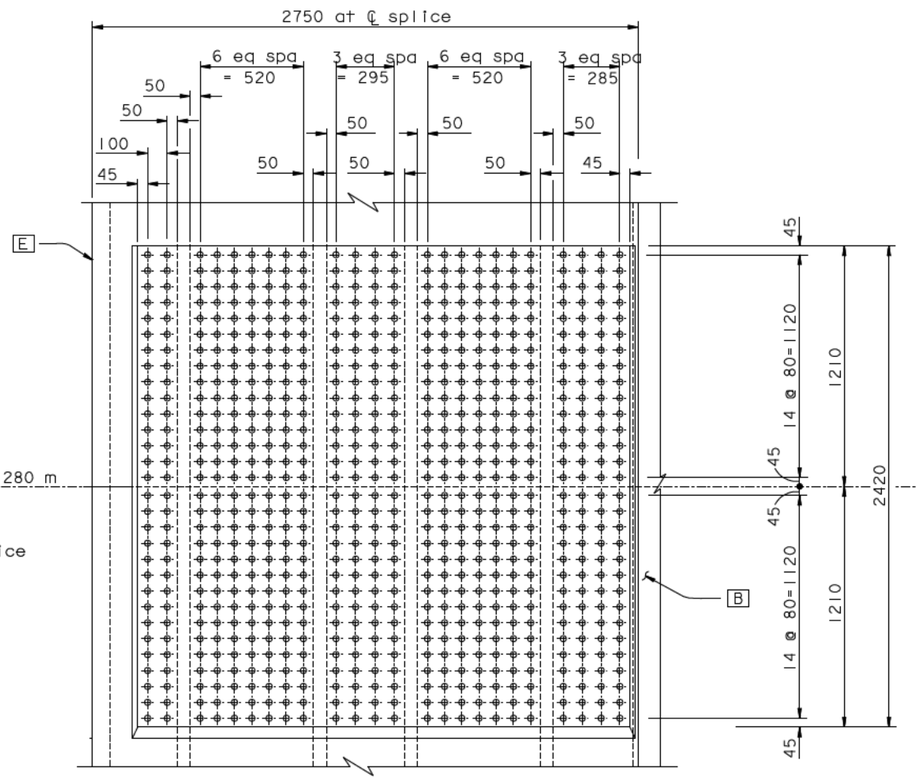

ELEVATION A-A
1:15

TOWER SKIN PLATE [A]

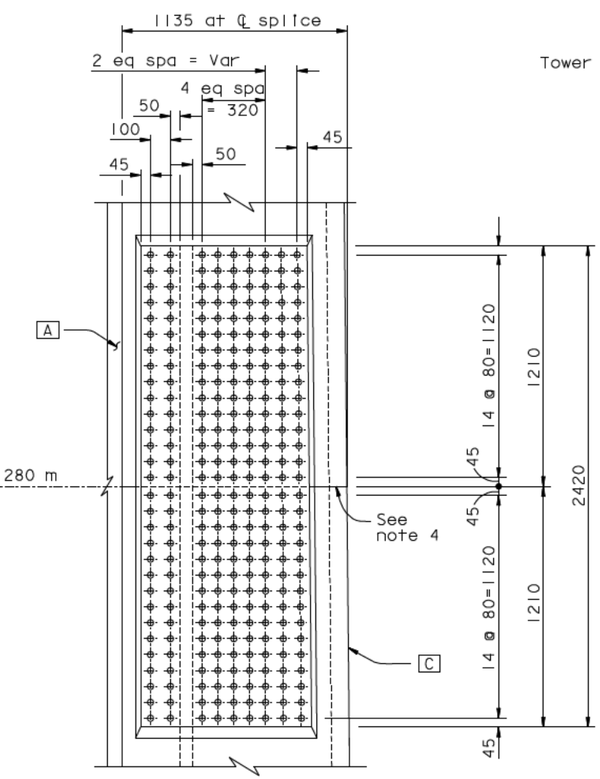

ELEVATION B-B
1:15

TOWER SKIN PLATE [B]

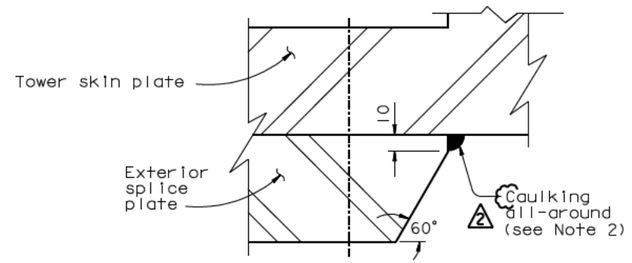

VERTICAL EDGE BEVEL DETAIL
(Typical all exterior splice plates)
NTS

LEGEND:

⌖ M27 A490-X HS Bolts

REQUESTS FOR INFORMATION NOT ADDRESSED IN THIS CCO REMAIN IN FORCE					
2	07/07/08	CAULKING	MN	NV	66
1	06/23/06	SPLICE PLATES PER ISM	MN	NV	21
MARK	DATE	DESCRIPTIONS	BY	CH'D	CCO#
		REVISIONS			

CONTRACT CHANGE ORDER NO. ___
SHEET ___ OF ___

NOTES:

1. The tower splice connections are designed as slip critical connections with class B contact surface (slip coefficient 0.5). The Contractor shall ensure that the flatness requirements at the faying surfaces and the geometry control are met.
2. Caulk sealing shall be applied around the perimeter (horizontal and vertical edges) of all exterior splice plates.
3. Elevation view of adjacent skin plate not shown for clarity.
4. For skin plate splice seam not covered by exterior splice plates, see details on "Tower Splice Details No. 4" sheet.

ALL DIMENSIONS ARE IN MILLIMETERS UNLESS OTHERWISE SHOWN

DIST.	COUNTY	ROUTE	KILOMETER POST TOTAL PROJECT	SHEET NO.	TOTAL SHEETS
04	SF	80	13.2/13.9	559R2	1204

REGISTERED ENGINEER - CIVIL
12-6-04
PLANS APPROVAL DATE
REGISTERED PROFESSIONAL ENGINEER — Marwan N. Nader — No. C 054426 — Exp. 12/31/09 — CIVIL — STATE OF CALIFORNIA

The State of California or its officers or agents shall not be responsible for the accuracy or completeness of electronic copies of this plan sheet.

T.Y. LIN / MOFFATT & NICHOL
825 BATTERY STREET
SAN FRANCISCO, CA 94111

Caltrans now has a web site! To get to the web site, go to: http://www.dot.ca.gov

R. Valizadeh/V. Toan/Y.L./W.L./F.C.	DESIGN	BY M. Nader	CHECKED M. Gulyas	PREPARED FOR THE STATE OF CALIFORNIA DEPARTMENT OF TRANSPORTATION
DESIGN OVERSIGHT	DETAILS	BY C. Chol	CHECKED N. Vo	R. Manzanarez PROJECT ENGINEER
SIGN OFF DATE 07/07/08	QUANTITIES	BY R. Kanitkar	CHECKED Y. Zhang	BRIDGE NO. 34-0006L/R; KILOMETER POST 13.2/13.9

SAN FRANCISCO OAKLAND BAY BRIDGE
EAST SPAN SEISMIC SAFETY PROJECT
SELF-ANCHORED SUSPENSION BRIDGE
(SUPERSTRUCTURE & TOWER)

TOWER SPLICE DETAILS NO. 20

Rev. Date: 5-18-98

ORIGINAL SCALE IN MILLIMETERS FOR REDUCED PLANS 0 10 20 30 40 50 60 70 80 90 100

CU 04
EA 0120F1

DISREGARD PRINTS BEARING EARLIER REVISION DATES

REVISION DATES (PRELIMINARY STAGE ONLY): 05/31/01 | 04/08/02 | 07/01/02 | 12/19/02 | 11/13/05

SHEET 142R2 OF

FILE => I:\bb\04-012001\sas\contract plans and cco\cco\In progress\cco#66\dgn\aetsp20.dgn

USERNAME => vignotovs DATE PLOTTED => 03 JUL 2008 TIME PLOTTED => 13:46:09

100 % PS&E

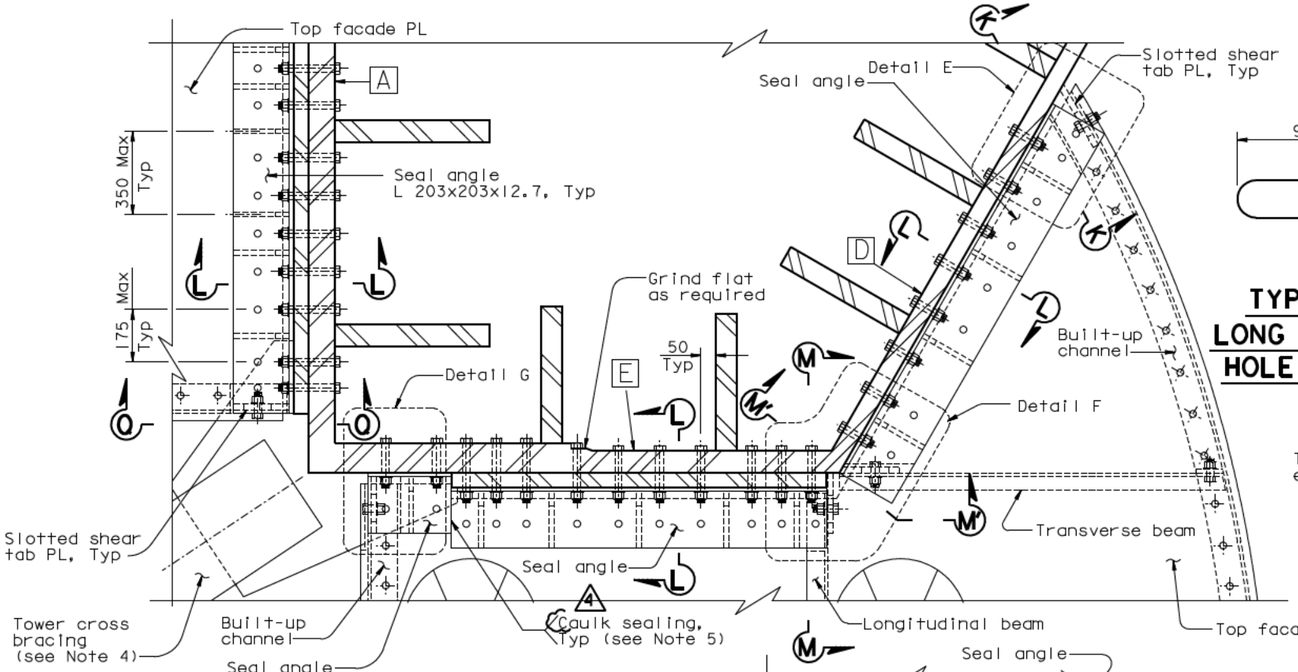

TYPICAL LONG SLOTTED HOLE DETAIL
1:2

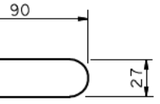

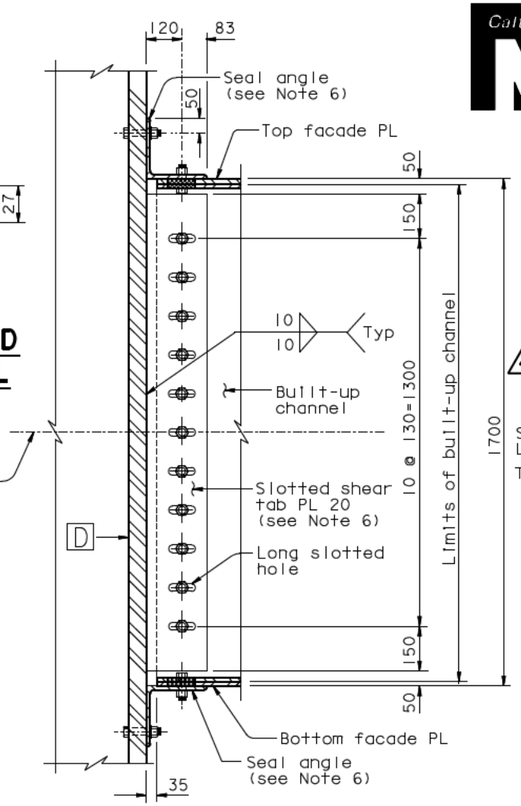

Tower strut elevation

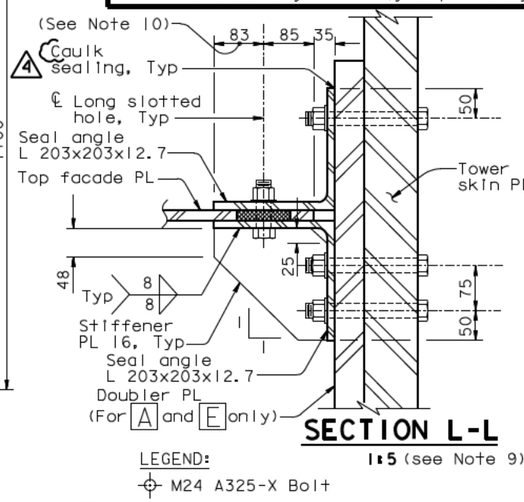

SECTION L-L
1:5 (see Note 9)

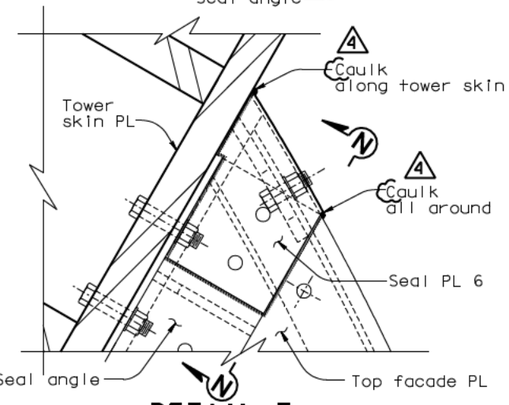

DETAIL E (Detail G similar)
1:5
(Typical edge seal Plate)

DETAIL D
1:10
(see Note 9)

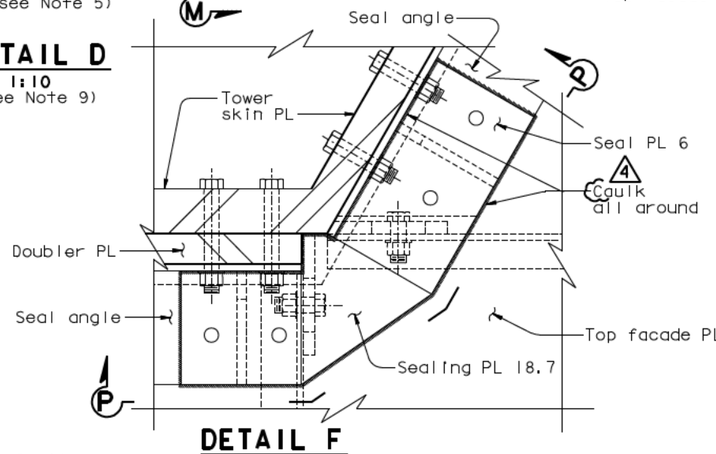

DETAIL F
1:5
(Typical corner seal Plate)

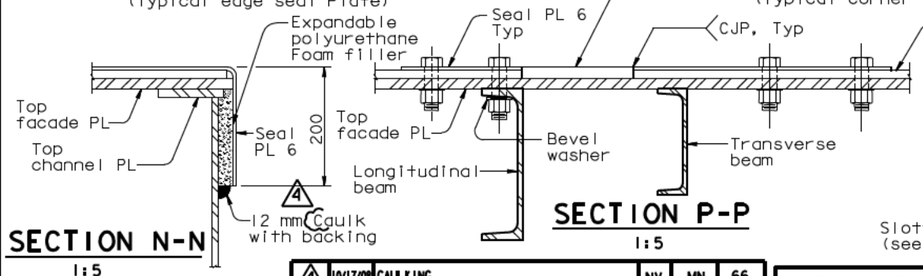

SECTION N-N
1:5

SECTION P-P
1:5

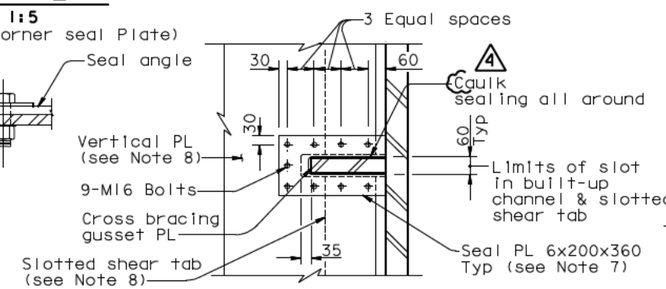

SECTION Q-Q (Typical gusset seal Plate)
1:10

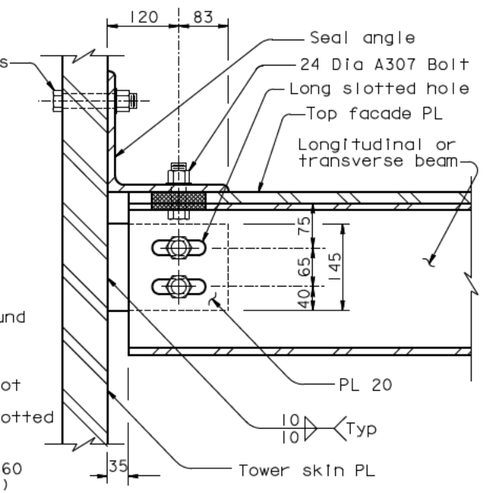

SECTION K-K (Typical connection of built-up channel to tower shaft UNO)
1:10 (see Note 9)

SECTION M-M (Section M'-M' similar)
1:5 (see Note 9)

ALL DIMENSIONS ARE IN MILLIMETERS UNLESS OTHERWISE SHOWN

LEGEND:
- ⊕ M24 A325-X Bolt
- ○ 24 Dia A307 Bolt

NOTES:
1. All bolts are A325 M24 unless noted otherwise.
2. For details of built-up channel, see "Tower Strut Facade Details No.3" sheet.
3. All details of tower strut facade shall account for the 1% slope of the tower top and bottom facade plates.
4. For tower cross bracing location, see "Tower Strut Details No.9" sheet.
5. Seal plates and sealant material shall be placed such that the interior of the tower strut facade is properly sealed from the exterior.
6. PTFE film (0.5 thick) shall be applied on the faying surfaces between the slotted shear tab and the built-up channel plate, between the seal angle and the top facade PL, and between the seal angle and the bottom facade PL.
7. Seal plate shall be tight fit to the cross bracing gusset plate.
8. Cope vertical channel plate and slotted shear tab as necessary to accomodate cross bracing gusset plate. Slot location shall match slot in doubler plate . For doubler plate slot details, see "Tower Shaft Details No.11" sheet.
9. For sealing plate details, see Details E,F and Sections N-N,P-P,Q-Q.
10. At the Contractor's option, exterior sealing angle may be coped as required for clearance with access door cover plate to accommodate design movement, subject to review and approval of the Engineer.

MARK	DATE	DESCRIPTIONS	BY	CH'D	CCO#
		REVISIONS			
4	10/17/08	CAULKING	NV	MN	66
3	10/01/08	TOWER ACCESS	NV	MN	65
2	07/11/08	TOWER STRUT FACADES AND CROSS BRACING	NV	MN	64
1	08/01/07	TOWER STRUT FACADE PTFE	NV	MN	48

REQUESTS FOR INFORMATION NOT ADDRESSED IN THIS CCO REMAIN IN FORCE

CONTRACT CHANGE ORDER NO. ____
SHEET ____ OF ____

	BY	CHECKED
DESIGN	M. Nader	M. Gulyas
DETAILS	L. Rus	M. Gulyas
QUANTITIES	L. Rus	Y. Zhang

PREPARED FOR THE STATE OF CALIFORNIA
DEPARTMENT OF TRANSPORTATION

R. Manzanarez
PROJECT ENGINEER

CU 04
EA 0120F1

BRIDGE NO. 34-0006L/R
KILOMETER POST 13.2/13.9

DISREGARD PRINTS BEARING EARLIER REVISION DATES

REVISION DATES (PRELIMINARY STAGE ONLY)							SHEET	OF
08/02/99	05/31/01	04/08/02	04/26/02	12/19/02			158R4	

R. Vallzadeh/V. Toan/Y.L./W.L./F.C.
DESIGN OVERSIGHT
SIGN OFF DATE 10/17/08

Rev. Date: 5-18-98

ORIGINAL SCALE IN MILLIMETERS FOR REDUCED PLANS 0 10 20 30 40 50 60 70 80 90 100

FILE -> L:\BB\04-012001\SAS\Contract Plans and CCO\CCO\In Progress\CCO#66\Revision 10-17-08\DGN\aetws13.dgn

SAN FRANCISCO OAKLAND BAY BRIDGE
EAST SPAN SEISMIC SAFETY PROJECT
SELF-ANCHORED SUSPENSION BRIDGE
(SUPERSTRUCTURE & TOWER)

TOWER STRUT FACADE DETAILS NO. 4

DIST.	COUNTY	ROUTE	KILOMETER POST TOTAL PROJECT	SHEET NO.	TOTAL SHEETS
04	SF	80	13.2/13.9	575R4	1204

REGISTERED ENGINEER - CIVIL
12-6-04
PLANS APPROVAL DATE

The State of California or its officers or agents shall not be responsible for the accuracy or completeness of electronic copies of this plan sheet.

REGISTERED PROFESSIONAL ENGINEER — Marwan N. Nader — No. C 054426 — Exp. 12/31/09 — CIVIL — STATE OF CALIFORNIA

T.Y. LIN / MOFFATT & NICHOL
825 BATTERY STREET
SAN FRANCISCO, CA 94111

Caltrans now has a web site! To get to the web site, go to: http://www.dot.ca.gov

100 % PS&E
DATE PLOTTED => 16 OCT 2008
TIME PLOTTED => 08:41:16
USERNAME => dwinrow

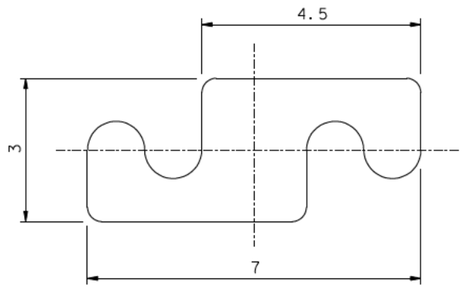

S-SHAPED WRAPPING WIRE
10:1

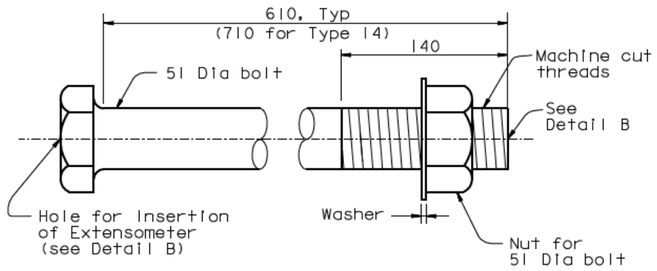

CABLE BAND BOLT
1:2.5

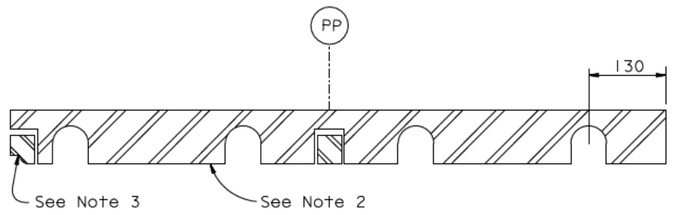

SECTION C-C
1:5

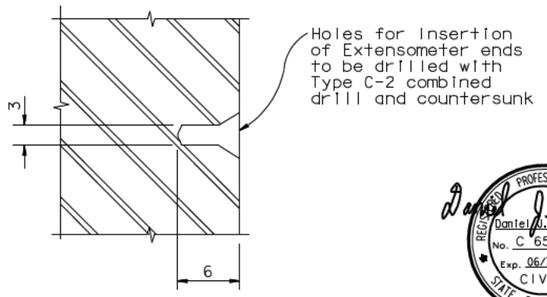

DETAIL B
NTS

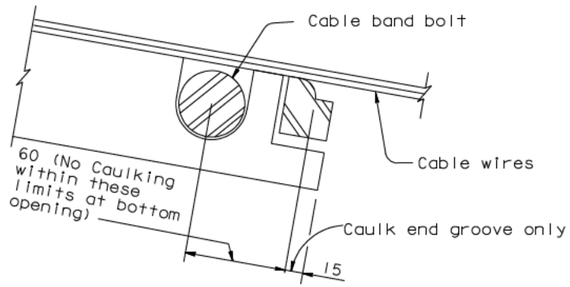

LOWER END CAULKING DETAIL
NTS

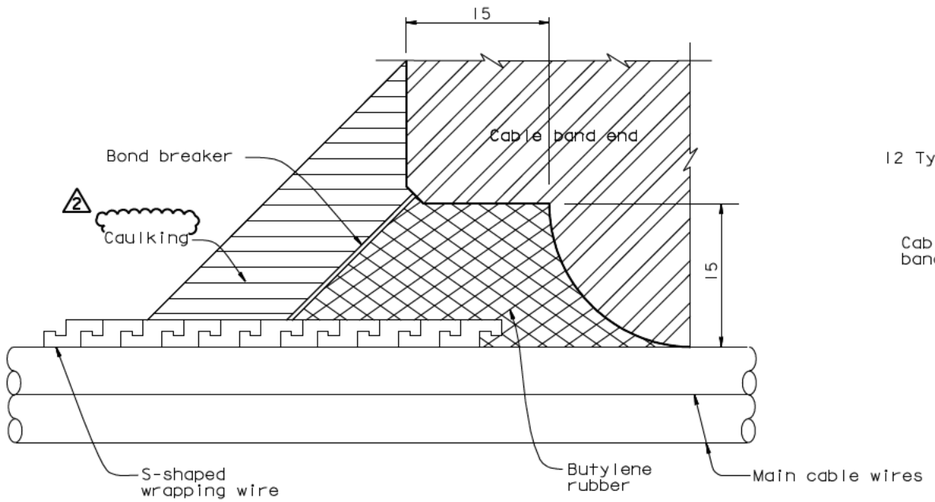

CAULKING GROOVE DETAIL
NTS

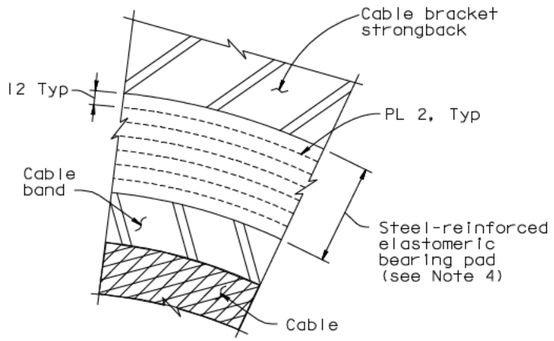

DETAIL A
1:2.5

REQUESTS FOR INFORMATION NOT ADDRESSED IN THIS CCO REMAIN IN FORCE					
2	07/07/08	CAULKING	AS	DT	66
1	04/16/07	CABLE SYSTEM	GB	DT	37
MARK	DATE	DESCRIPTIONS	BY	CH'D	CCO#
REVISIONS					

CONTRACT CHANGE ORDER NO. ___
SHEET ___ OF ___

NOTES:

1. For cable band bolts installation tension shall be 1.0 MN per bolt.
2. For typical details not shown, see "Cable Band Details No.3" sheet.
3. For other caulking groove details, see "Cable Band Details No.3" sheet.
4. Elastomeric bearing pad shall be vulcanized to both the strongback and the cable band.
5. For cable band bolt material, see "General Notes" sheets.

ALL DIMENSIONS ARE IN MILLIMETERS UNLESS OTHERWISE SHOWN

FOR REVISIONS ONLY

DIST.	COUNTY	ROUTE	KILOMETER POST TOTAL PROJECT	SHEET NO.	TOTAL SHEETS
04	SF	80	13.2/13.9	762R2	1204

Caltrans Metric

George Baker
REGISTERED ENGINEER - CIVIL
12-6-04
PLANS APPROVAL DATE

REGISTERED PROFESSIONAL ENGINEER — George S. Baker — No. C 57112 — Exp. 12/31/05 — CIVIL — STATE OF CALIFORNIA

The State of California or its officers or agents shall not be responsible for the accuracy or completeness of electronic copies of this plan sheet.

T.Y. LIN / MOFFATT & NICHOL
825 BATTERY STREET
SAN FRANCISCO, CA 94111

To get to the web site, go to: http://www.dot.ca.gov

Daniel J. Turner — REGISTERED PROFESSIONAL ENGINEER — Daniel J. Turner — No. C 65033 — Exp. 06/30/09 — CIVIL — STATE OF CALIFORNIA

R. Valizadeh/V. Toan/Y.L. /W.L. /F.C.
DESIGN OVERSIGHT
SIGN OFF DATE 07/07/08

	BY		CHECKED
DESIGN	G. Baker		T. McMeans
DETAILS	S. Camo		P. Ritchie
QUANTITIES	C. Mauch		C. Mibelli

PREPARED FOR THE STATE OF CALIFORNIA
DEPARTMENT OF TRANSPORTATION

R. Manzanarez
PROJECT ENGINEER

BRIDGE NO. 34-0006L/R
KILOMETER POST 13.2/13.9

SAN FRANCISCO OAKLAND BAY BRIDGE
EAST SPAN SEISMIC SAFETY PROJECT
SELF-ANCHORED SUSPENSION BRIDGE (SUPERSTRUCTURE & TOWER)
CABLE BAND DETAILS NO.5

Rev. Date: 5-18-98

ORIGINAL SCALE IN MILLIMETERS FOR REDUCED PLANS 0 10 20 30 40 50 60 70 80 90 100

CU 04
EA 0120F1

DISREGARD PRINTS BEARING EARLIER REVISION DATES →

REVISION DATES (PRELIMINARY STAGE ONLY): 05/15/99 | 08/02/99 | 05/24/01 | 04/08/02 | 07/01/02 | 12/19/02

SHEET 345R2 OF

FILE -> I:\bb\04-012001\sas\contract plans and cco\cco\In progress\cco#66\dgn\agcbd05.dgn

USERNAME => vigmatovs DATE PLOTTED => 03 JUL 2008 TIME PLOTTED => 13:47:36

100% PS&E

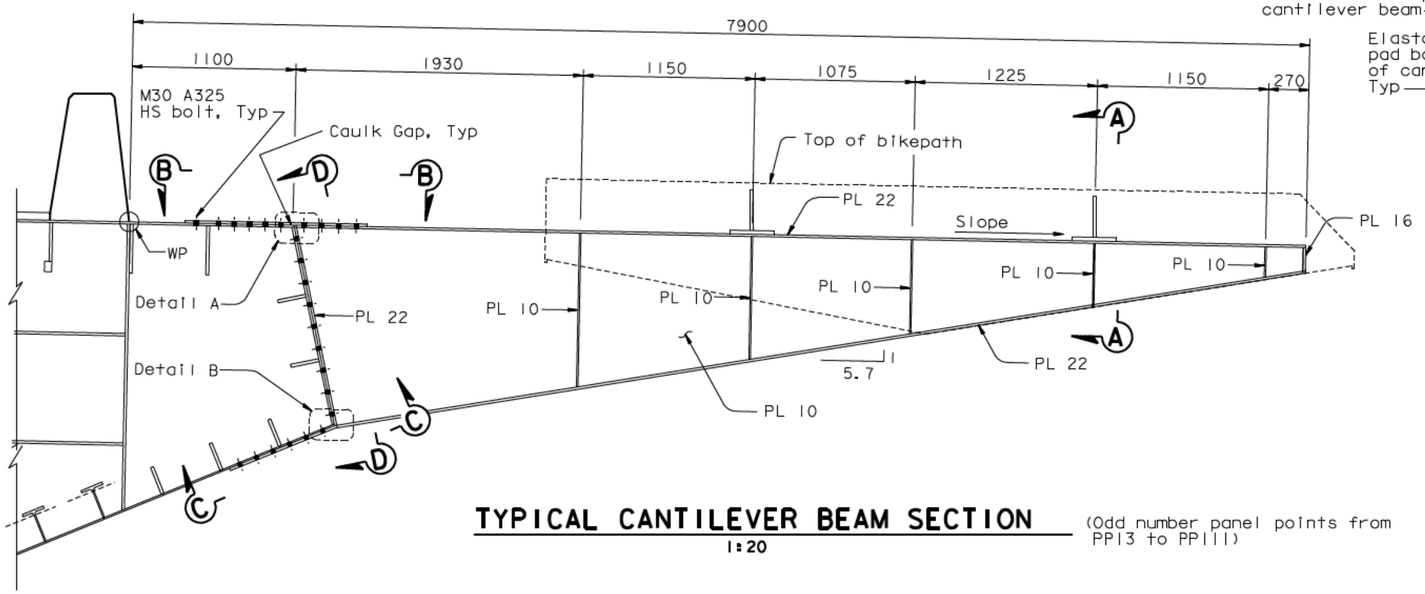

TYPICAL CANTILEVER BEAM SECTION

1:20

(Odd number panel points from PP13 to PP111)

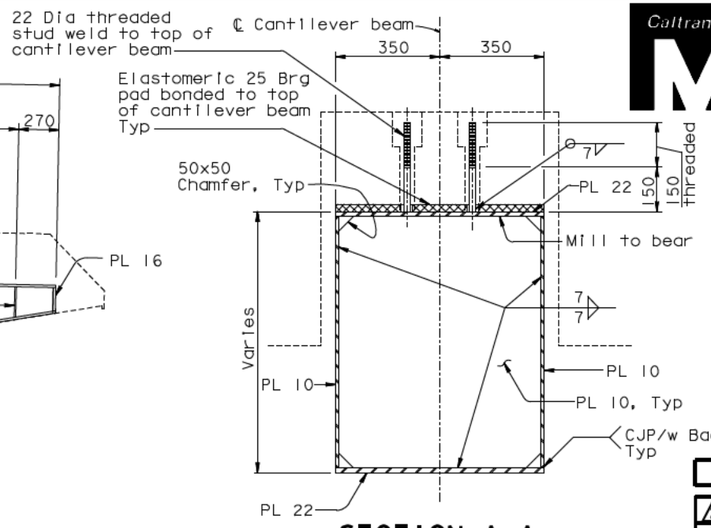

SECTION A-A

1:10

DIST.	COUNTY	ROUTE	KILOMETER POST TOTAL PROJECT	SHEET NO.	TOTAL SHEETS
04	SF	80	13.2/13.9	825R2	1204

REGISTERED ENGINEER - CIVIL

12-6-04

PLANS APPROVAL DATE

Tien Hung Ho, No. C 43990, Exp. 6/30/09, CIVIL, REGISTERED PROFESSIONAL ENGINEER, STATE OF CALIFORNIA

The State of California or its officers or agents shall not be responsible for the accuracy or completeness of electronic copies of this plan sheet.

T.Y. LIN / MOFFATT & NICHOL
825 BATTERY STREET
SAN FRANCISCO, CA 94111

Caltrans now has a web site! To get to the web site, go to: http://www.dot.ca.gov

REQUESTS FOR INFORMATION NOT ADDRESSED IN THIS CCO REMAIN IN FORCE

MARK	DATE	DESCRIPTIONS	BY	CH'D	CCO#
2	07/07/08	CAULKING	AS	TH	66
1	07/20/07	BIKEPATH BRACKETS	GB	TH	33
		REVISIONS			

CONTRACT CHANGE ORDER NO. ____
SHEET ___ OF ___

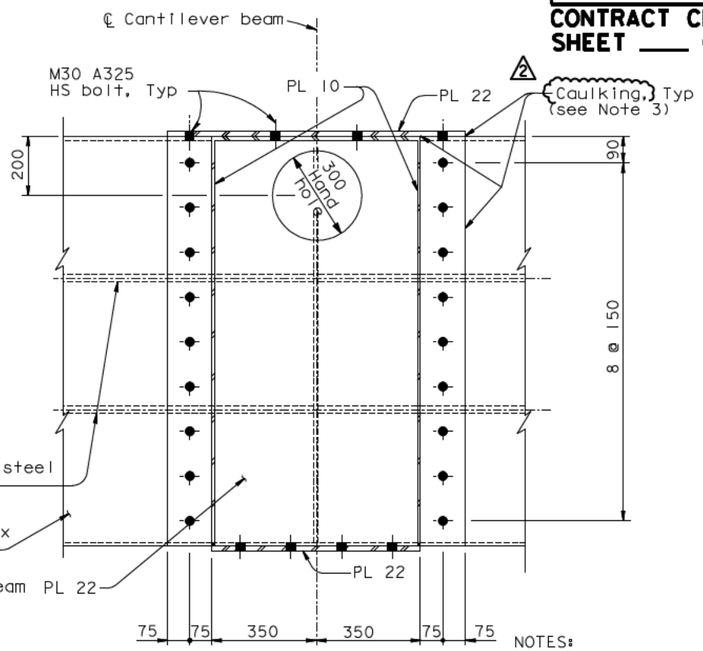

SECTION D-D

1:10

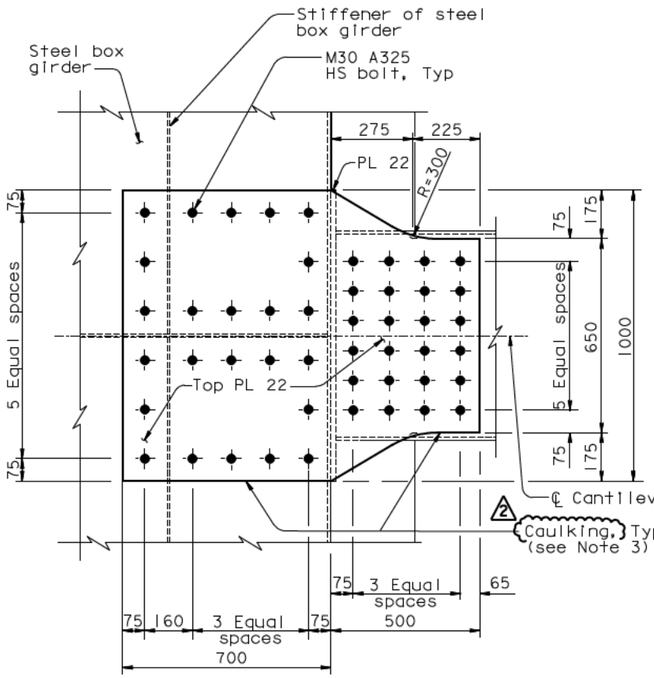

SECTION B-B

1:10

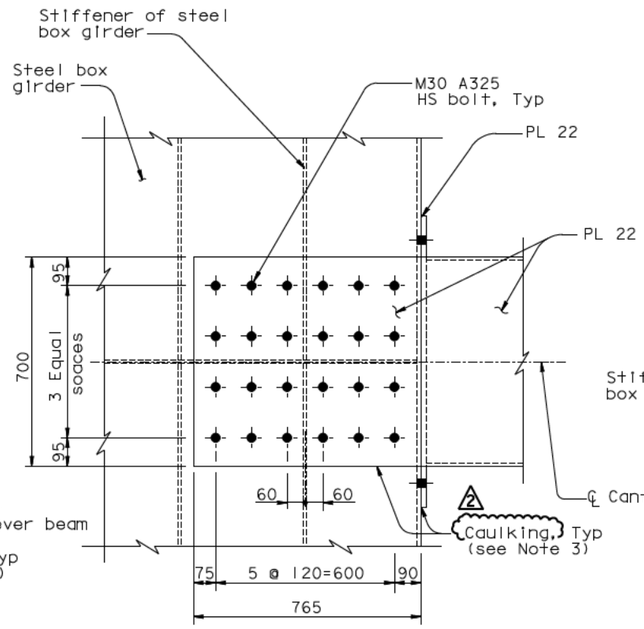

SECTION C-C

1:10

NOTES:

1. For location of typical cantilever beam, see "Bikepath Layout" sheets.
2. For Details A and B, see "Suspender Bracket Details No.2" sheet.
2. (2) Caulking shall be provided along all edges of bolted connection between bikepath cantilever beam and box girder.

ALL DIMENSIONS ARE IN MILLIMETERS UNLESS OTHERWISE SHOWN

R. Vallzadeh/V. Toan/Y.L./W.L./F.C.
DESIGN OVERSIGHT
SIGN OFF DATE 07/07/08

DESIGN	BY T. Ho	CHECKED T. McMeans	
DETAILS	BY R. Xu	CHECKED P. Ritchie	
QUANTITIES	BY C. Bernardo	CHECKED S. Shi	

PREPARED FOR THE STATE OF CALIFORNIA DEPARTMENT OF TRANSPORTATION

R. Manzanarez
PROJECT ENGINEER

BRIDGE NO. 34-0006L/R
KILOMETER POST 13.2/13.9

SAN FRANCISCO OAKLAND BAY BRIDGE EAST SPAN SEISMIC SAFETY PROJECT
SELF-ANCHORED SUSPENSION BRIDGE (SUPERSTRUCTURE & TOWER)
BIKEPATH DETAILS NO. 1

Rev. Date: 5-18-98

ORIGINAL SCALE IN MILLIMETERS FOR REDUCED PLANS 0 10 20 30 40 50 60 70 80 90 100

CU 04
EA 0120F1

DISREGARD PRINTS BEARING EARLIER REVISION DATES

REVISION DATES (PRELIMINARY STAGE ONLY)									SHEET	OF
05/15/98	08/02/99	05/31/01	04/08/02	07/01/02	12/15/02	11/13/05			408R2	

FILE -> I:\bb\04-012001\sas\contract plans and cco\cco\In progress\cco#66\dgn\agbwd01.dgn

USERNAME => vignatovs DATE PLOTTED => 03 JUL 2008 TIME PLOTTED => 13:48:22

100 % PS&E

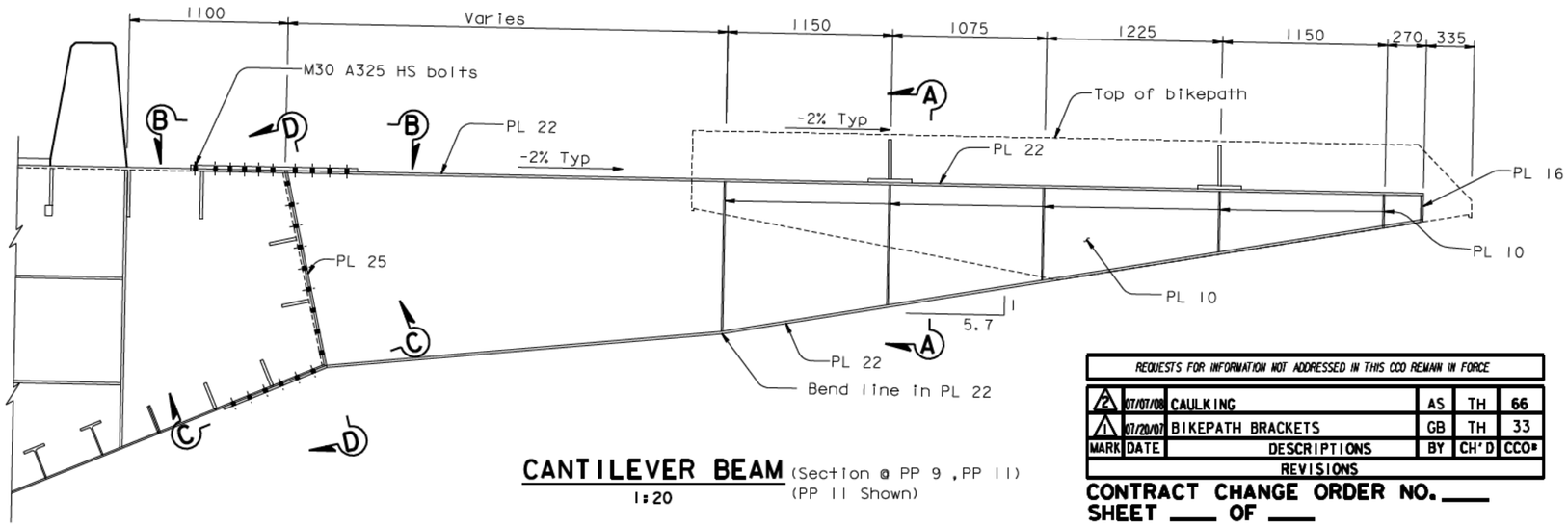

CANTILEVER BEAM
(Section @ PP 9 , PP 11)
(PP 11 Shown)
1:20

REQUESTS FOR INFORMATION NOT ADDRESSED IN THIS CCO REMAIN IN FORCE					
2	07/07/08	CAULKING	AS	TH	66
1	07/20/07	BIKEPATH BRACKETS	GB	TH	33
MARK	DATE	DESCRIPTIONS	BY	CH'D	CCO#
REVISIONS					

CONTRACT CHANGE ORDER NO. ___
SHEET ___ OF ___

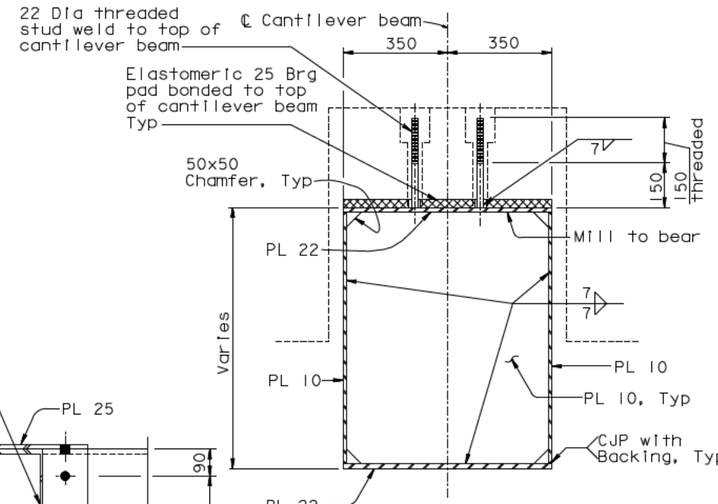

SECTION A-A
1:10

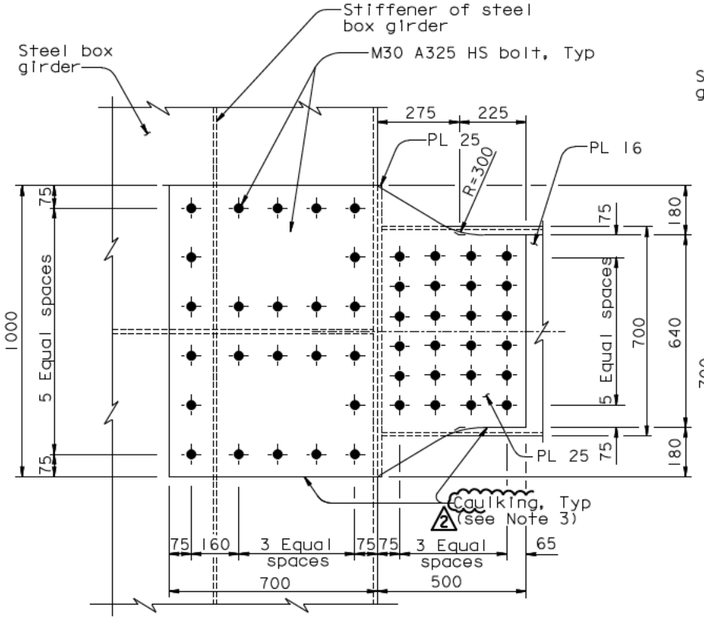

SECTION B-B
1:10

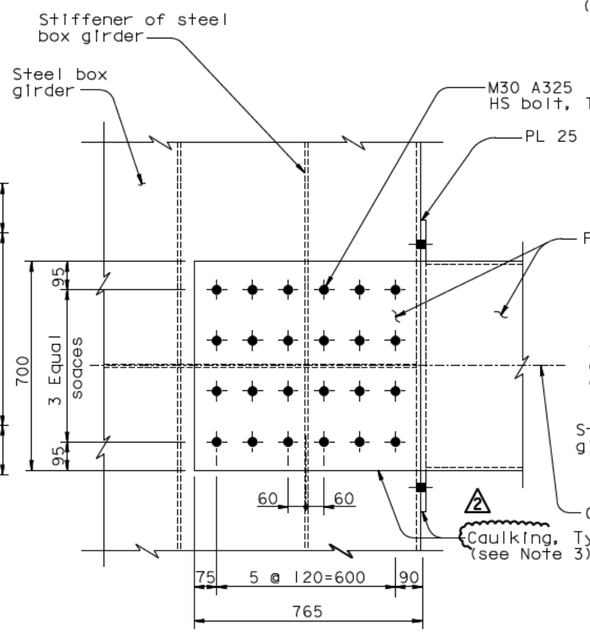

SECTION C-C
1:10

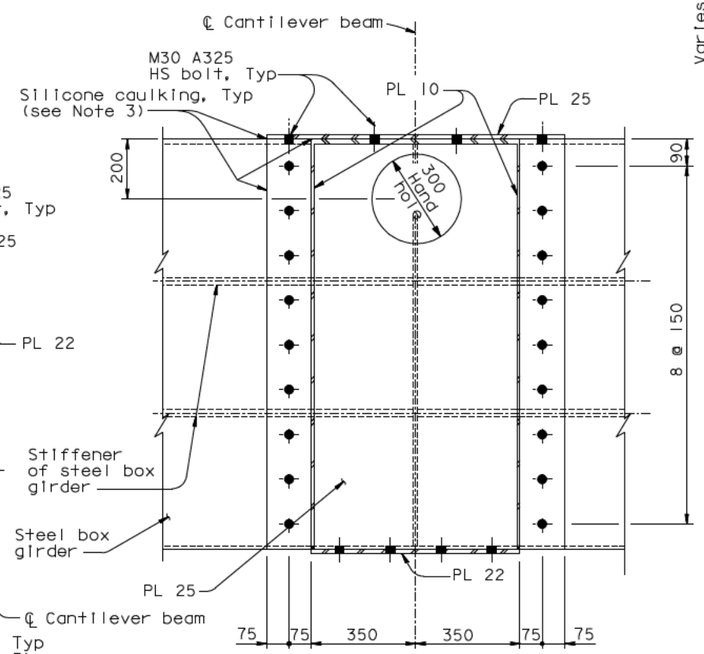

SECTION D-D
1:10

NOTES:

1. Bikepath deck similar to typical bikepath deck. For details, see "Bikepath Details No.3" sheet.
2. For details not shown, see "Bikepath Details No.1" sheet.
3. Caulking shall be provided along edges of bolted connection between bikepath cantilever beam and box girder.

ALL DIMENSIONS ARE IN MILLIMETERS UNLESS OTHERWISE SHOWN

DIST.	COUNTY	ROUTE	KILOMETER POST TOTAL PROJECT	SHEET NO.	TOTAL SHEETS
04	SF	80	13.2/13.9	833R2	1204

Caltrans Metric

REGISTERED ENGINEER - CIVIL
Tien Hung Ho No. C 43990 Exp. 6/30/09 CIVIL
REGISTERED PROFESSIONAL ENGINEER STATE OF CALIFORNIA
12-6-04
PLANS APPROVAL DATE

The State of California or its officers or agents shall not be responsible for the accuracy or completeness of electronic copies of this plan sheet.

T.Y. LIN / MOFFATT & NICHOL
825 BATTERY STREET
SAN FRANCISCO, CA 94111

To get to the web site, go to: http://www.dot.ca.gov

R. Valizadeh/V. Toan/Y.L./W.L./F.C.
DESIGN OVERSIGHT
SIGN OFF DATE 07/07/08

	BY	CHECKED
DESIGN	T. Ho	T. McMeans
DETAILS	R. Xu	P. Ritchie
QUANTITIES	C. Bernardo	S. Shi

PREPARED FOR THE STATE OF CALIFORNIA DEPARTMENT OF TRANSPORTATION

R. Manzanarez
PROJECT ENGINEER

BRIDGE NO. 34-0006L/R
KILOMETER POST 13.2/13.9

SAN FRANCISCO OAKLAND BAY BRIDGE
EAST SPAN SEISMIC SAFETY PROJECT
SELF-ANCHORED SUSPENSION BRIDGE (SUPERSTRUCTURE & TOWER)

BIKEPATH DETAILS NO. 9

Rev. Date: 5-18-98

ORIGINAL SCALE IN MILLIMETERS FOR REDUCED PLANS 0 10 20 30 40 50 60 70 80 90 100

CU 04
EA 0120F1

DISREGARD PRINTS BEARING EARLIER REVISION DATES

REVISION DATES (PRELIMINARY STAGE ONLY): 05/31/01 | 03/26/02 | 07/31/02 | 12/19/02 | 11/13/05

SHEET 416R2 OF

FILE -> I:\bb\04-012001\sas\contract plans and cco\cco\In progress\cco#66\dgn\agbwd09.dgn

USERNAME => vignatovsky DATE PLOTTED => 03 JUL 2008 TIME PLOTTED => 13:49:03

100% PS&E

REQUESTS FOR INFORMATION NOT ADDRESSED IN THIS CCO REMAIN IN FORCE

MARK	DATE	DESCRIPTIONS	BY	CH'D	CCO#
		REVISIONS			
1	07/20/07	BIKEPATH BRACKETS	GB	TH	33
2	07/07/08	CAULKING	AS	TH	66

CONTRACT CHANGE ORDER NO. ____
SHEET ___ OF ___

Caltrans Metric

DIST.	COUNTY	ROUTE	KILOMETER POST TOTAL PROJECT	SHEET NO.	TOTAL SHEETS
04	SF	80	13.2/13.9	834R2	1204

REGISTERED ENGINEER - CIVIL
12-6-04
PLANS APPROVAL DATE
The State of California or its officers or agents shall not be responsible for the accuracy or completeness of electronic copies of this plan sheet.

REGISTERED PROFESSIONAL ENGINEER — Tien Hung Ho, No. C 43990, Exp. 6/30/09, CIVIL, STATE OF CALIFORNIA

T.Y. LIN / MOFFATT & NICHOL
825 BATTERY STREET
SAN FRANCISCO, CA 94111

To get to the web site, go to: http://www.dot.ca.gov

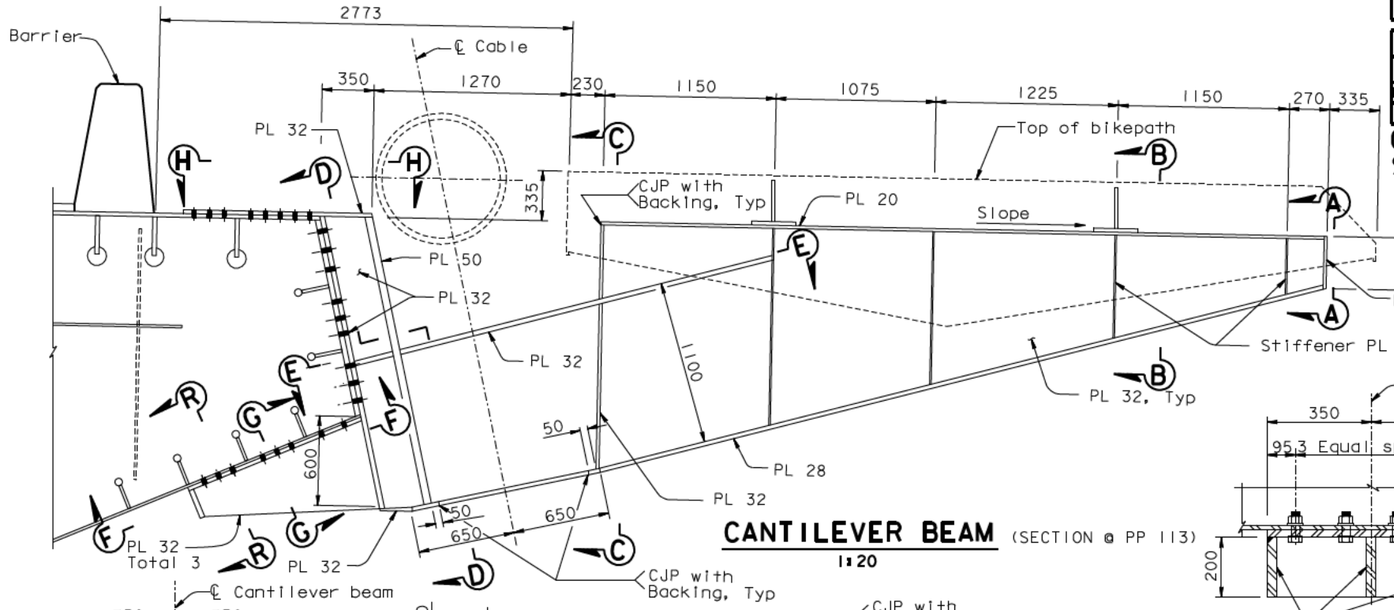

CANTILEVER BEAM (SECTION @ PP 113)
1:20

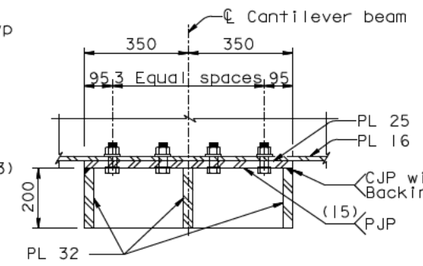

SECTION R-R
1:10

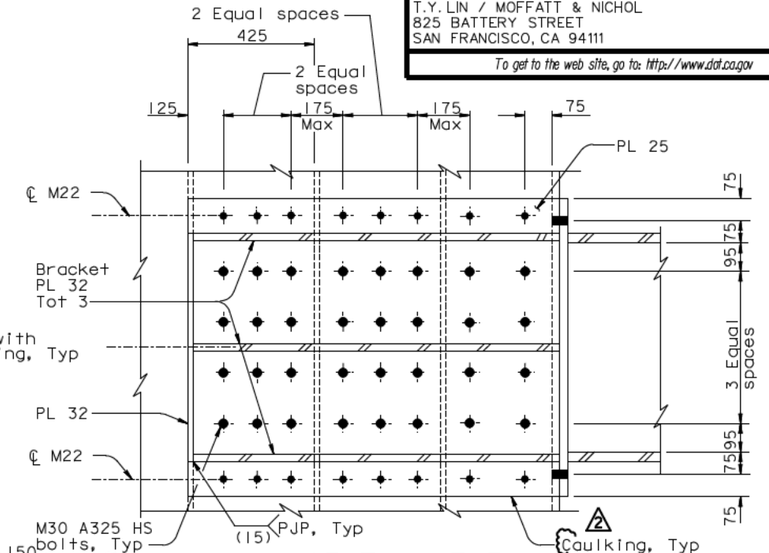

SECTION F-F
1:10

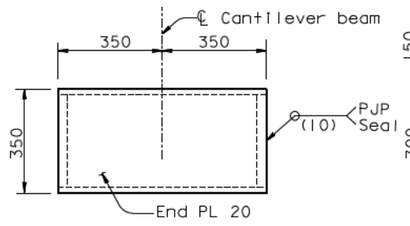

SECTION A-A
1:10

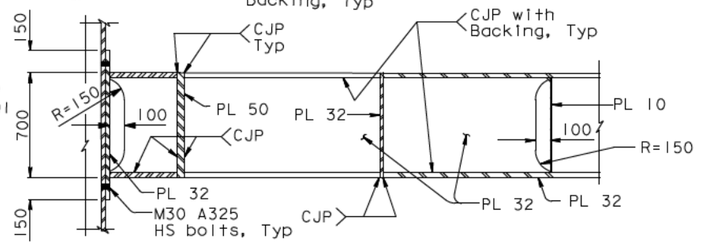

SECTION E-E
1:20

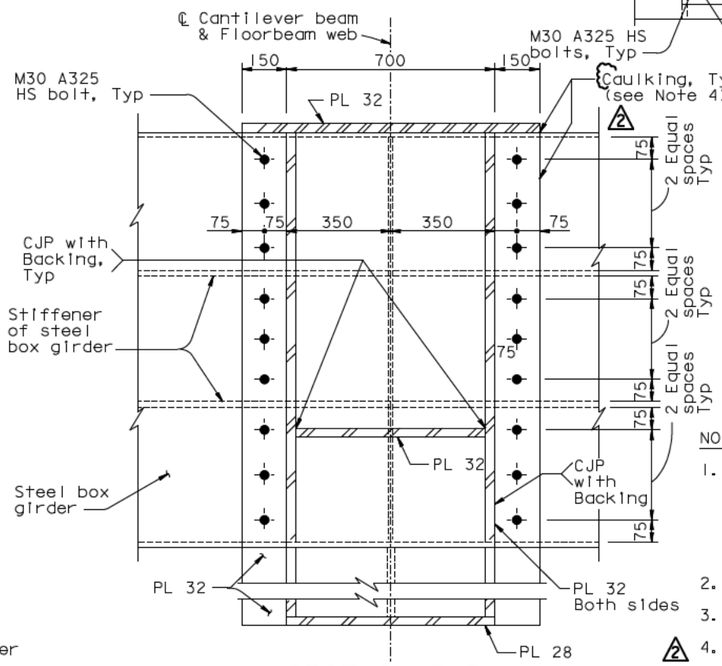

SECTION D-D
1:10

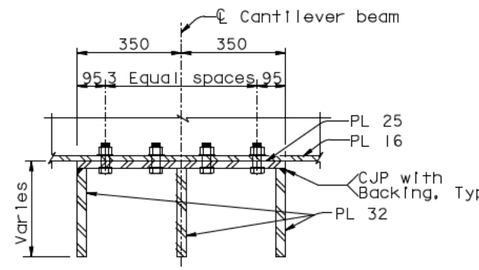

SECTION G-G
1:10

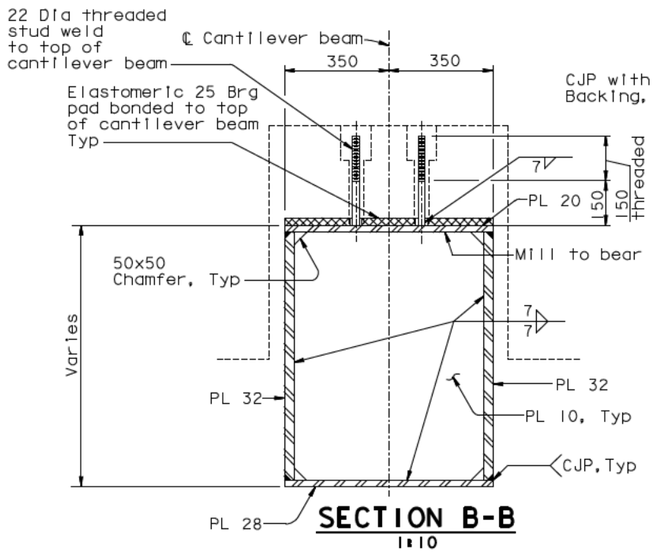

SECTION B-B
1:10

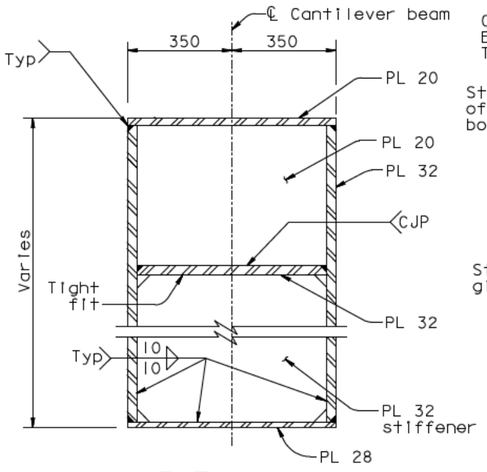

SECTION C-C
1:10

NOTES:

1. The cable location shown is based on the information provided in "Suspension Cable Layout" sheets. The Contractor shall verify these locations based on the "as built" cable profile described in "Construction Sequence" sheets. In the event of a conflict, bikepath bracket details may be revised and submitted to the Engineer for review and approval.
2. Bikepth deck similar to typical bikepath deck, for details, see "Bikepath Details No.3" sheets.
3. For Section H-H, see Section F-F of "Bikepath Details No.11" sheet.
4. Caulking shall be provided along all edges of bolted connection between bikepath cantilever beam and box girder.

ALL DIMENSIONS ARE IN MILLIMETERS UNLESS OTHERWISE SHOWN

100 % PS&E
TIME PLOTTED => 13:49:42
DATE PLOTTED => 03 JUL 2008
USERNAME => vlignatovsky

R. Vallzadeh/V. Toan/Y.L./W.L./F.C.
DESIGN OVERSIGHT
Roya Valizadeh / Vong Toan / Y. Liu
SIGN OFF DATE 07/07/08

	BY	CHECKED
DESIGN	T. Ho	T. McMeans
DETAILS	R. Xu	P. Ritchie
QUANTITIES	C. Bernardo	S. Shi

PREPARED FOR THE STATE OF CALIFORNIA DEPARTMENT OF TRANSPORTATION

R. Manzanarez
PROJECT ENGINEER

BRIDGE NO. 34-0006L/R
KILOMETER POST 13.2/13.9

CU 04
EA 0120F1

SAN FRANCISCO OAKLAND BAY BRIDGE
EAST SPAN SEISMIC SAFETY PROJECT
SELF-ANCHORED SUSPENSION BRIDGE (SUPERSTRUCTURE & TOWER)

BIKEPATH DETAILS NO. 10

Rev. Date: 5-18-98

ORIGINAL SCALE IN MILLIMETERS FOR REDUCED PLANS 0 10 20 30 40 50 60 70 80 90 100

DISREGARD PRINTS BEARING EARLIER REVISION DATES →

REVISION DATES (PRELIMINARY STAGE ONLY)									SHEET	OF
05/27/01	09/07/02	07/29/02	12/19/02	11/13/03					417R2	

FILE => I:\bb\04-012001\sas\contract plans and cco\cco\In progress\cco#66\dgn\agbwd10.dgn

DIST.	COUNTY	ROUTE	KILOMETER POST TOTAL PROJECT	SHEET NO.	TOTAL SHEETS
04	SF	80	13.2/13.9	835R2	1204

Caltrans Metric

REGISTERED ENGINEER - CIVIL

12-6-04
PLANS APPROVAL DATE

REGISTERED PROFESSIONAL ENGINEER — Tien Hung Ho — No. C 43990 — Exp. 6/30/09 — CIVIL — STATE OF CALIFORNIA

The State of California or its officers or agents shall not be responsible for the accuracy or completeness of electronic copies of this plan sheet.

T.Y. LIN / MOFFATT & NICHOL
825 BATTERY STREET
SAN FRANCISCO, CA 94111

To get to the web site, go to: http://www.dot.ca.gov

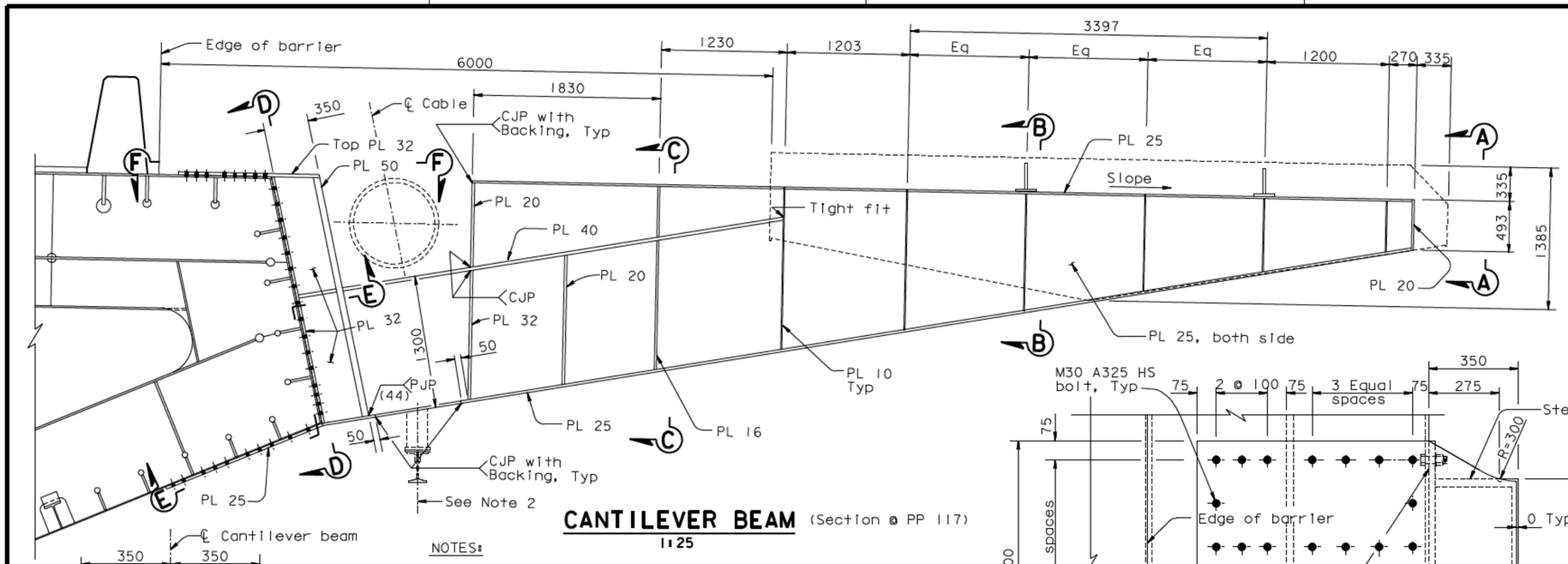

CANTILEVER BEAM (Section @ PP 117)
1:25

VIEW A-A
1:10

NOTES:

1. The cable location shown is based on the information provided in "Suspension Cable Layout" sheets. The Contractor shall verify these locations based on the "as built" cable profile described in "Construction Sequence" sheets. In the event of a conflict, bikepath bracket details may be revised and submitted to the Engineer for review and approval.
2. For location and details of traveler rail support, see "Traveler Rail Details No.13" sheet.
3. (2) Caulking shall be provided along all edges of bolted connection between bikepath cantilever beam and box girder.

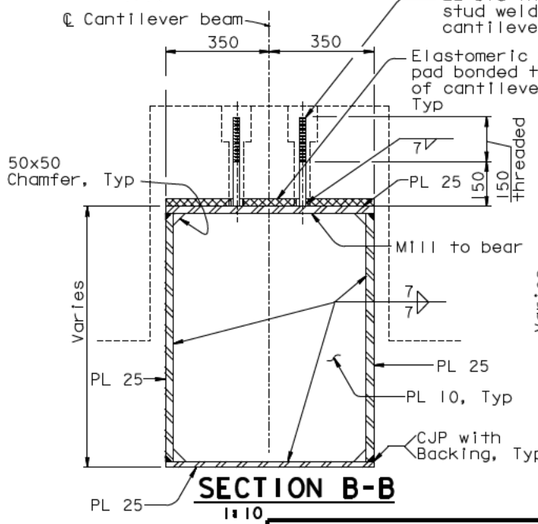

SECTION B-B
1:10

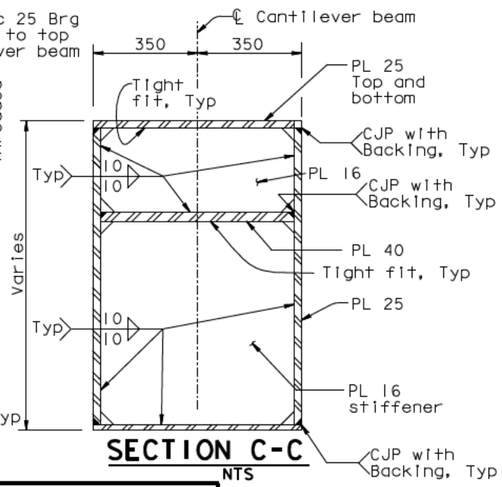

SECTION C-C
NTS

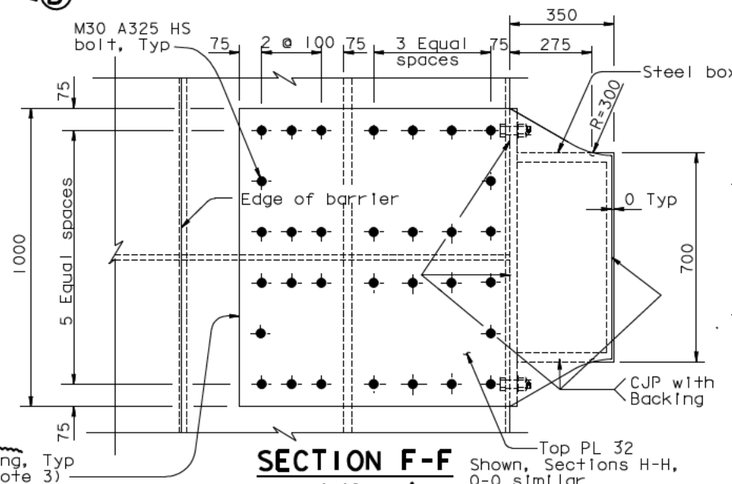

SECTION F-F
1:10

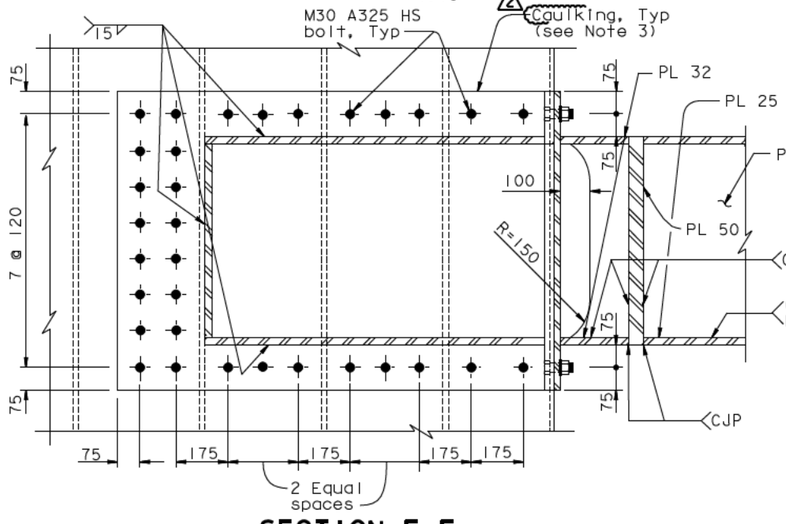

SECTION E-E
1:10

ALL DIMENSIONS ARE IN MILLIMETERS UNLESS OTHERWISE SHOWN

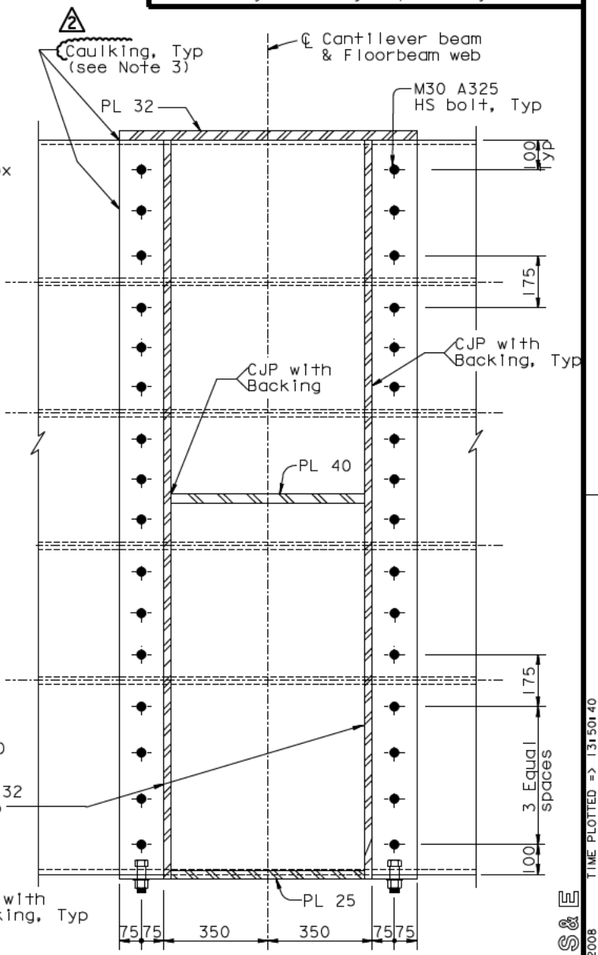

SECTION D-D
1:10

MARK	DATE	DESCRIPTIONS	BY	CH'D	CCO#
2	07/07/08	CAULKING	AS	TH	66
1	07/20/07	BIKEPATH BRACKETS	GB	TH	33

REVISIONS

REQUESTS FOR INFORMATION NOT ADDRESSED IN THIS CCO REMAIN IN FORCE

CONTRACT CHANGE ORDER NO. ____
SHEET ___ OF ___

	BY	CHECKED
DESIGN	T. Ho	T. McMeans
DETAILS	R. Xu	P. Ritchie
QUANTITIES	C. Bernardo	S. Shi

R. Vallzadeh/V. Toan/Y.L./W.L./F.C.
DESIGN OVERSIGHT
SIGN OFF DATE 07/07/08

Rev. Date: 5-18-98

PREPARED FOR THE STATE OF CALIFORNIA DEPARTMENT OF TRANSPORTATION

R. Manzanarez
PROJECT ENGINEER

CU 04
EA 0120F1

BRIDGE NO. 34-0006L/R
KILOMETER POST 13.2/13.9

DISREGARD PRINTS BEARING EARLIER REVISION DATES

SAN FRANCISCO OAKLAND BAY BRIDGE
EAST SPAN SEISMIC SAFETY PROJECT
SELF-ANCHORED SUSPENSION BRIDGE
(SUPERSTRUCTURE & TOWER)

BIKEPATH DETAILS NO. 11

REVISION DATES (PRELIMINARY STAGE ONLY)										SHEET	OF
05/24/01	04/08/02	07/01/02	12/19/02	11/13/05						418R2	

ORIGINAL SCALE IN MILLIMETERS FOR REDUCED PLANS 0 10 20 30 40 50 60 70 80 90 100

FILE -> I:\bb\04-012001\sas\contract plans and cco\cco\In progress\cco#66\dgn\agbwd11.dgn

USERNAME => v:\gnotovs\DATE PLOTTED => 03 JUL 2008 TIME PLOTTED => 13:50:40

100 % PS&E

DIST.	COUNTY	ROUTE	KILOMETER POST TOTAL PROJECT	SHEET NO.	TOTAL SHEETS
04	SF	80	13.2/13.9	836R2	1204

Tien Hung Ho
REGISTERED ENGINEER - CIVIL

12-6-04
PLANS APPROVAL DATE

The State of California or its officers or agents shall not be responsible for the accuracy or completeness of electronic copies of this plan sheet.

REGISTERED PROFESSIONAL ENGINEER — Tien Hung Ho — No. C 43990 — Exp. 06/30/09 — CIVIL — STATE OF CALIFORNIA

T.Y. LIN / MOFFATT & NICHOL
825 BATTERY STREET
SAN FRANCISCO, CA 94111

To get to the web site, go to: http://www.dot.ca.gov

CANTILEVER BEAM (PP 121)
1:20

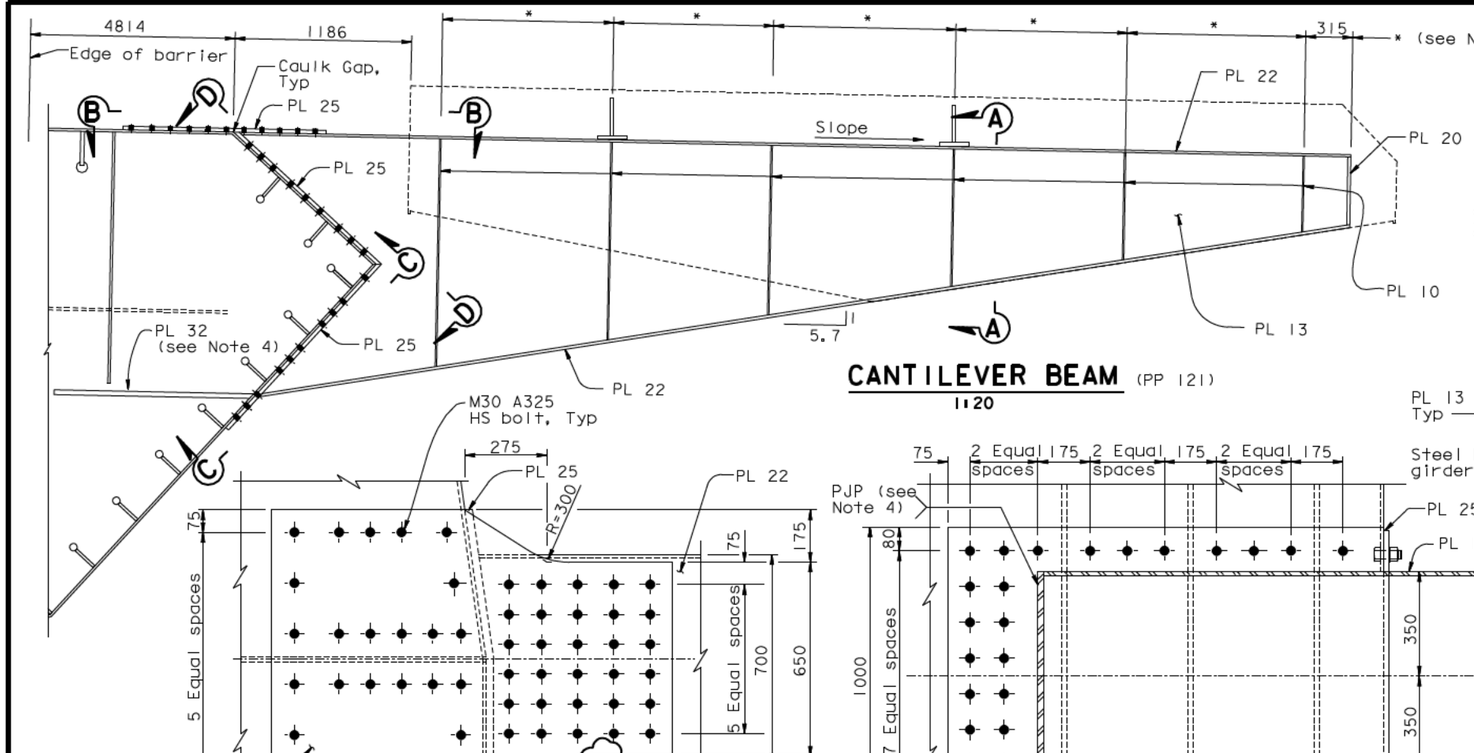

SECTION D-D
1:10

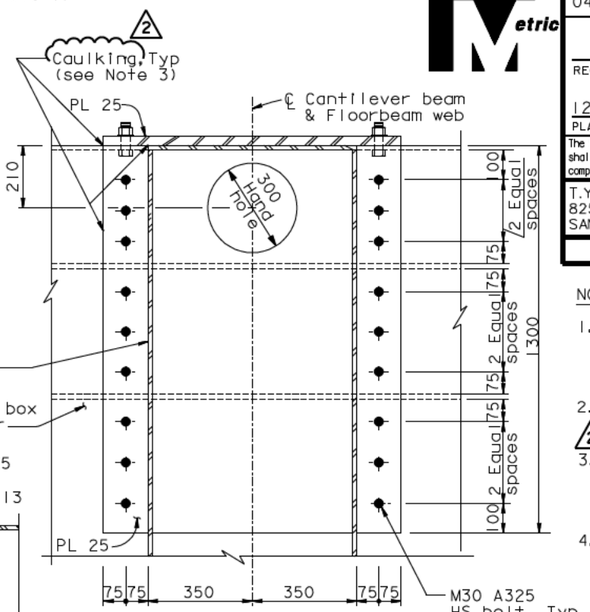

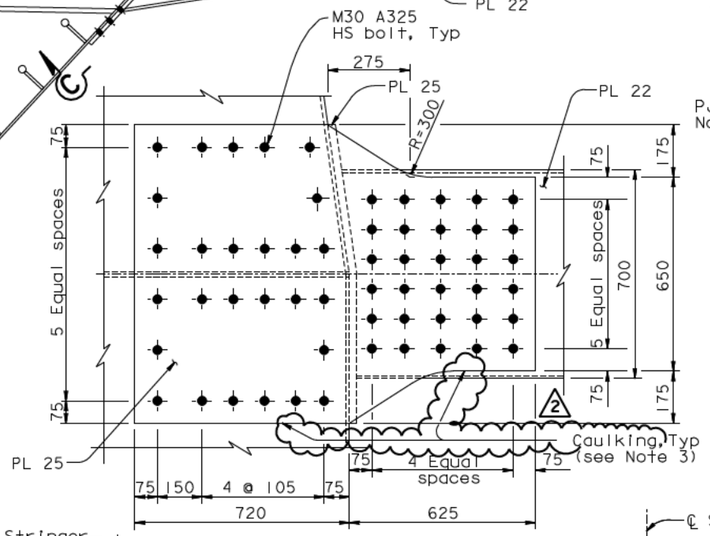

VIEW B-B
1:10

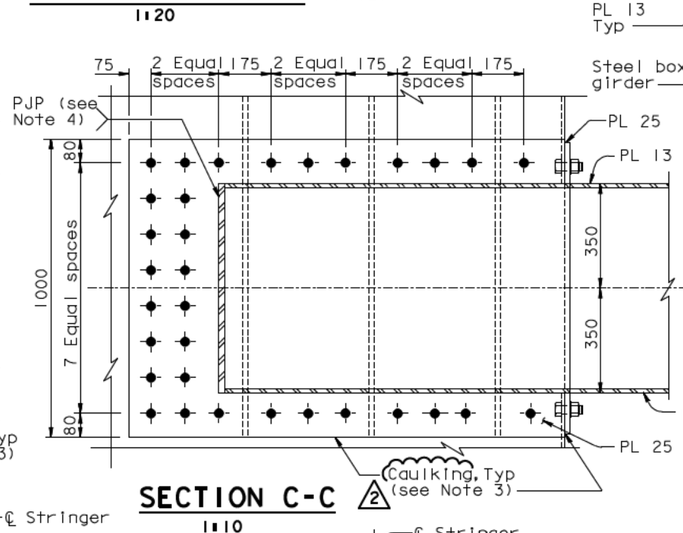

SECTION C-C
1:10

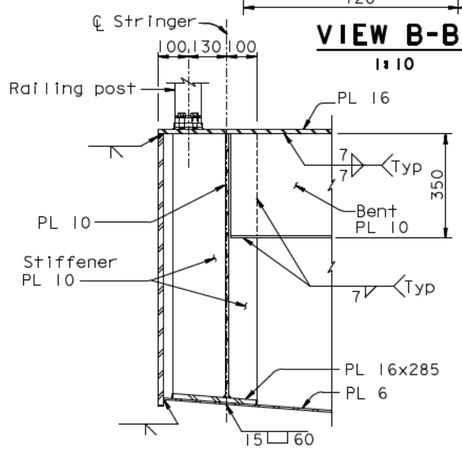

DETAIL E
1:10

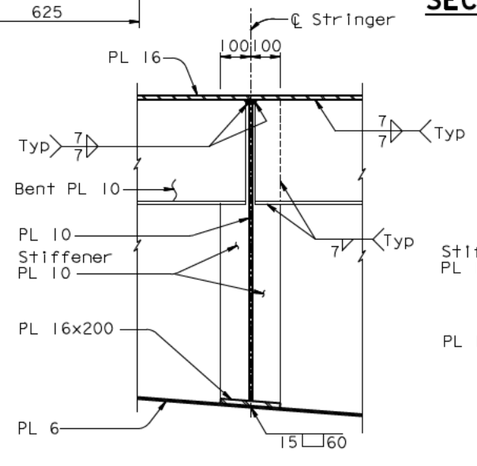

DETAIL F
1:10

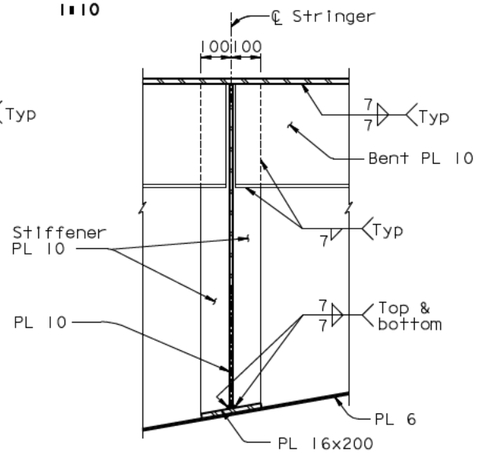

DETAIL G
1:10

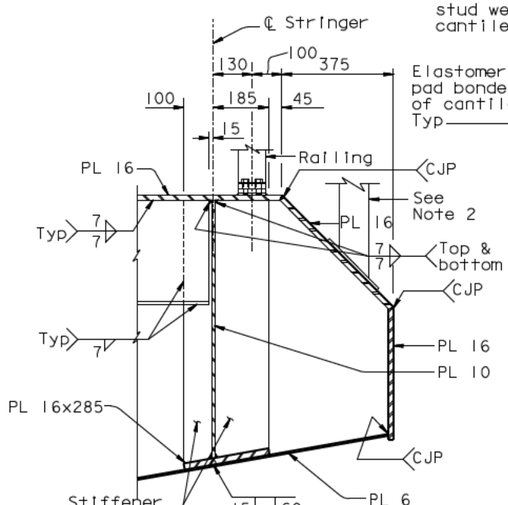

DETAIL H
1:10

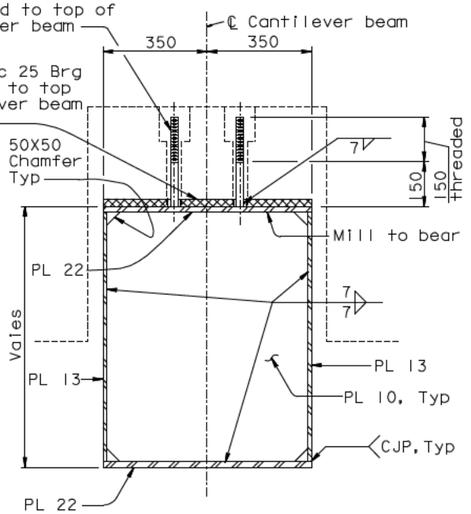

SECTION A-A
1:10

NOTES:

1. Stiffener plate spacing to match bikepath stringer spacing, see "Bikepath Framing Details No.5" sheet.
2. For call box support locations and details, see "Road Plans".
3. (2) Caulking shall be provided along all edges of bolted connection between bikepath cantilever beam and box girder.
4. For bikepath bracket stiffener, see Note 6 on "Floorbeam At East Transition No.4" sheet.

ALL DIMENSIONS ARE IN MILLIMETERS UNLESS OTHERWISE SHOWN

REQUESTS FOR INFORMATION NOT ADDRESSED IN THIS CCO REMAIN IN FORCE

MARK	DATE	DESCRIPTIONS	BY	CH'D	CCO#
2	07/07/08	CAULKING	AS	TH	66
1	07/20/07	BIKEPATH BRACKETS	GB	TH	33

REVISIONS

CONTRACT CHANGE ORDER NO.____
SHEET ___ OF ___

	BY	CHECKED
DESIGN	T. Ho	T. McMeans
DETAILS	R. Xu	P. Ritchie
QUANTITIES	C. Bernardo	S. Shi

PREPARED FOR THE STATE OF CALIFORNIA DEPARTMENT OF TRANSPORTATION

R. Manzanarez
PROJECT ENGINEER

BRIDGE NO. 34-0006L/R
KILOMETER POST 13.2/13.9

R. Vallzadeh/V. Toan/Y.L./W.L./F.C.
DESIGN OVERSIGHT
SIGN OFF DATE 07/07/08

Rev. Date: 5-18-98

ORIGINAL SCALE IN MILLIMETERS FOR REDUCED PLANS 0 10 20 30 40 50 60 70 80 90 100

CU 04
EA 0120F1

DISREGARD PRINTS BEARING EARLIER REVISION DATES

REVISION DATES (PRELIMINARY STAGE ONLY): 05/31/01 | 04/08/02 | 07/01/02 | 12/19/02 | 11/13/05

SHEET 419R2 OF

SAN FRANCISCO OAKLAND BAY BRIDGE
EAST SPAN SEISMIC SAFETY PROJECT
SELF-ANCHORED SUSPENSION BRIDGE (SUPERSTRUCTURE & TOWER)

BIKEPATH DETAILS NO. 12

FILE -> I:\bb\04-012001\sas\contract plans and cco\cco\In progress\cco#66\dgn\agbwd12.dgn

USERNAME => vignatovsky DATE PLOTTED => 03 JUL 2008 TIME PLOTTED => 13:51:25

100 % PS&E

DIST.	COUNTY	ROUTE	KILOMETER POST TOTAL PROJECT	SHEET NO.	TOTAL SHEETS
04	SF	80	13.2/13.9	838R2	1204

Caltrans Metric

REGISTERED ENGINEER - CIVIL

12-6-04
PLANS APPROVAL DATE

Tien Hung Ho, No. C 43990, Exp. 6/30/09, CIVIL, REGISTERED PROFESSIONAL ENGINEER, STATE OF CALIFORNIA

The State of California or its officers or agents shall not be responsible for the accuracy or completeness of electronic copies of this plan sheet.

T.Y. LIN / MOFFATT & NICHOL
825 BATTERY STREET
SAN FRANCISCO, CA 94111

To get to the web site, go to: http://www.dot.ca.gov

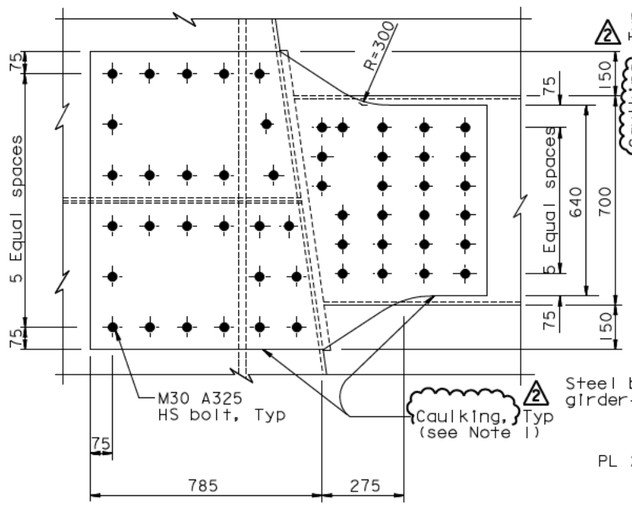

VIEW J-J
1:10

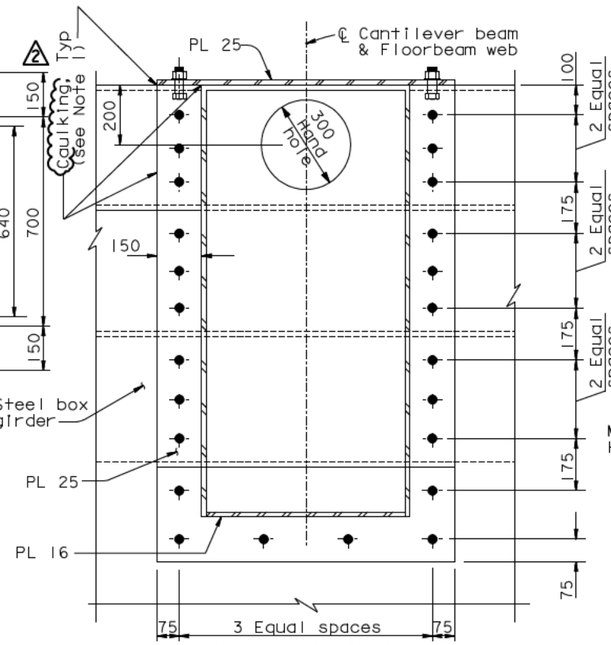

SECTION K-K
1:10

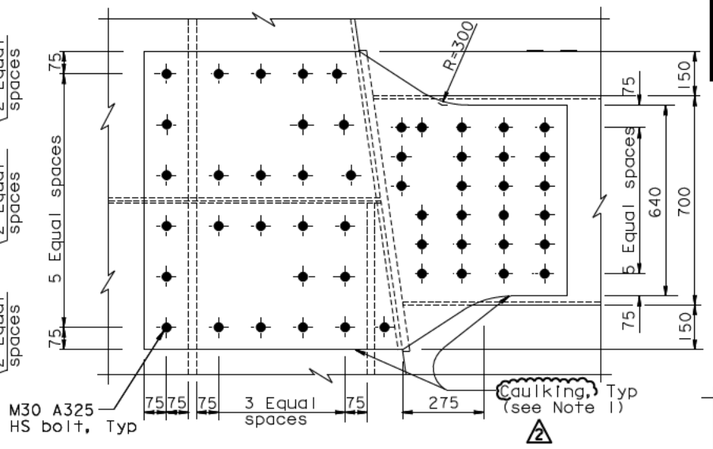

VIEW L-L
1:10

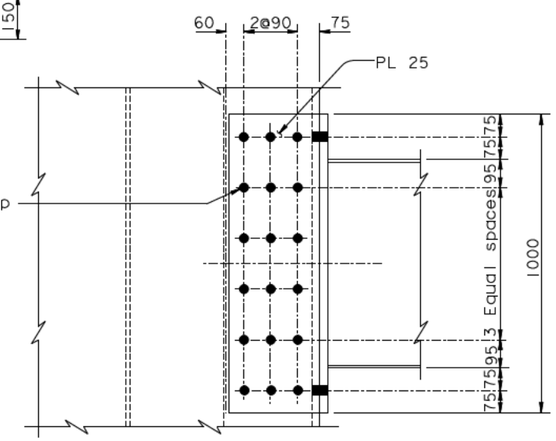

SECTION P-P
1:10

REQUESTS FOR INFORMATION NOT ADDRESSED IN THIS CCO REMAIN IN FORCE					
2	07/07/08	CAULKING	AS	TH	66
1	07/20/07	BIKEPATH BRACKETS	GB	TH	33
MARK	DATE	DESCRIPTIONS	BY	CH'D	CCO#
		REVISIONS			

CONTRACT CHANGE ORDER NO. ___
SHEET ___ OF ___

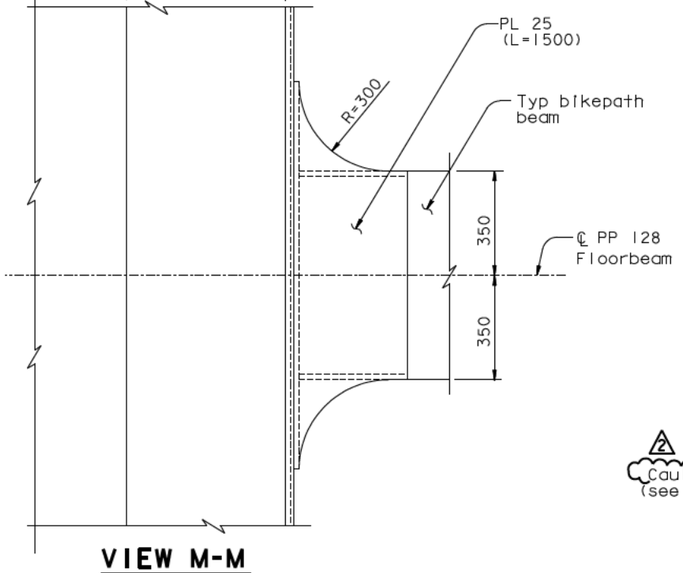

VIEW M-M
1:10

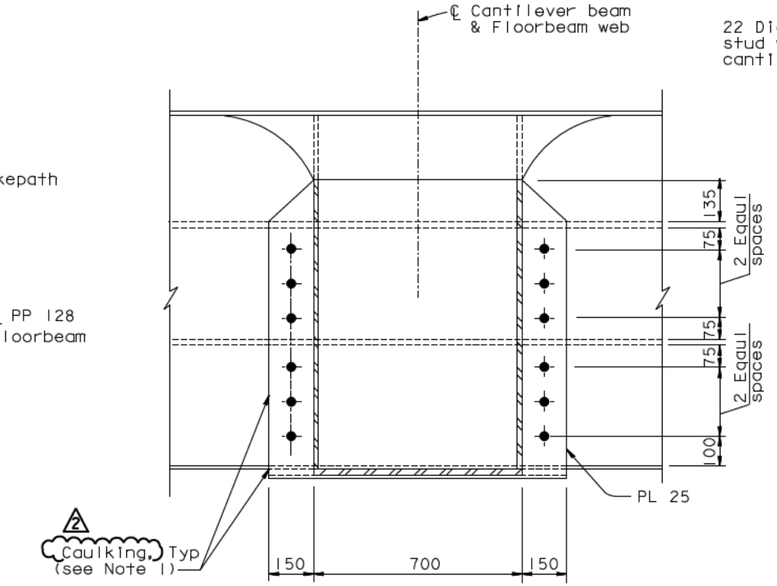

SECTION N-N
1:10

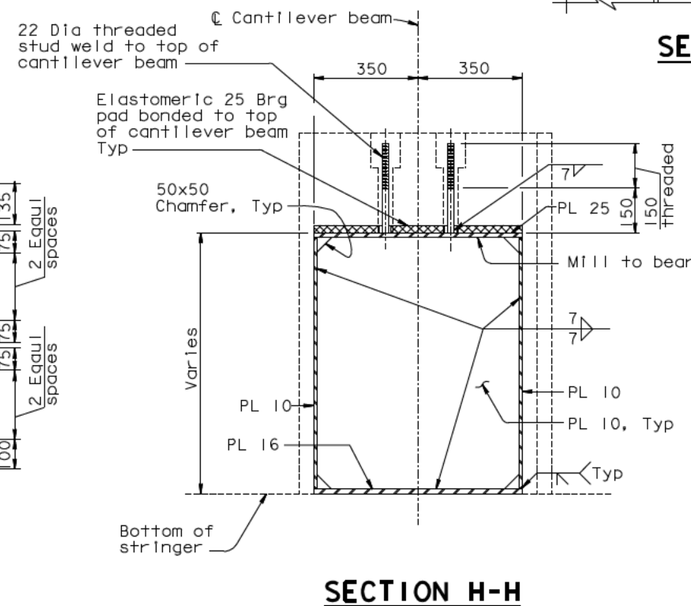

SECTION H-H
1:10

NOTES:

1. Caulking shall be provided along all edges of bolted connection between bikepath cantilever beam and box girder.

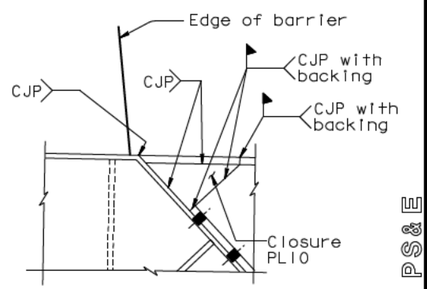

DETAIL A
1:5

ALL DIMENSIONS ARE IN MILLIMETERS UNLESS OTHERWISE SHOWN

SAN FRANCISCO OAKLAND BAY BRIDGE
EAST SPAN SEISMIC SAFETY PROJECT
SELF-ANCHORED SUSPENSION BRIDGE
(SUPERSTRUCTURE & TOWER)

BIKEPATH DETAILS NO. 14

R. Valizadeh/V. Toan/Y.L./W.L./F.C.
DESIGN OVERSIGHT
SIGN OFF DATE 07/07/08

DESIGN	BY T. Ho	CHECKED T. McMeans	
DETAILS	BY R. Xu	CHECKED P. Ritchie	
QUANTITIES	BY C. Bernardo	CHECKED S. Shi	

PREPARED FOR THE
STATE OF CALIFORNIA
DEPARTMENT OF TRANSPORTATION

R. Manzanarez
PROJECT ENGINEER

BRIDGE NO. 34-0006L/R
KILOMETER POST 13.2/13.9

CU 04
EA 0120F1

Rev. Date: 5-18-98

ORIGINAL SCALE IN MILLIMETERS FOR REDUCED PLANS 0 10 20 30 40 50 60 70 80 90 100

DISREGARD PRINTS BEARING EARLIER REVISION DATES

REVISION DATES (PRELIMINARY STAGE ONLY): 05/31/01 | 04/09/02 | 07/09/02 | 12/19/02 | 11/13/05

SHEET 42|R2 OF

100 % PS&E

USERNAME => vignatovsky DATE PLOTTED => 03 JUL 2008 TIME PLOTTED => 13:52:13

FILE -> I:\bb\04-012001\sas\contract plans and cco\cco\In progress\cco#66\dgn\agbwd14.dgn

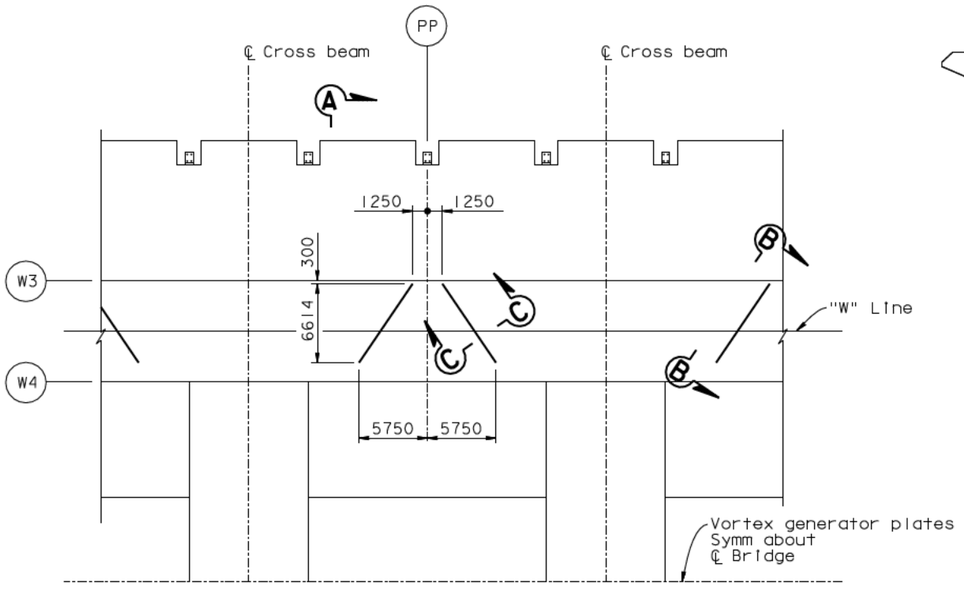

A DETAIL A
TYPICAL LAYOUT OF VORTEX GENERATOR PLATES
1:250
("W" Line shown, "E" Line similar)

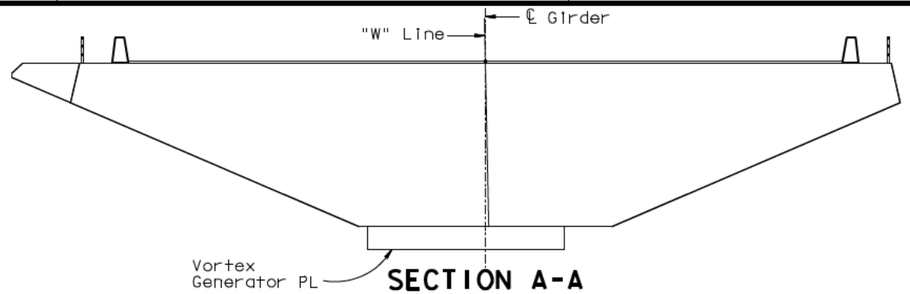

SECTION A-A
1:100

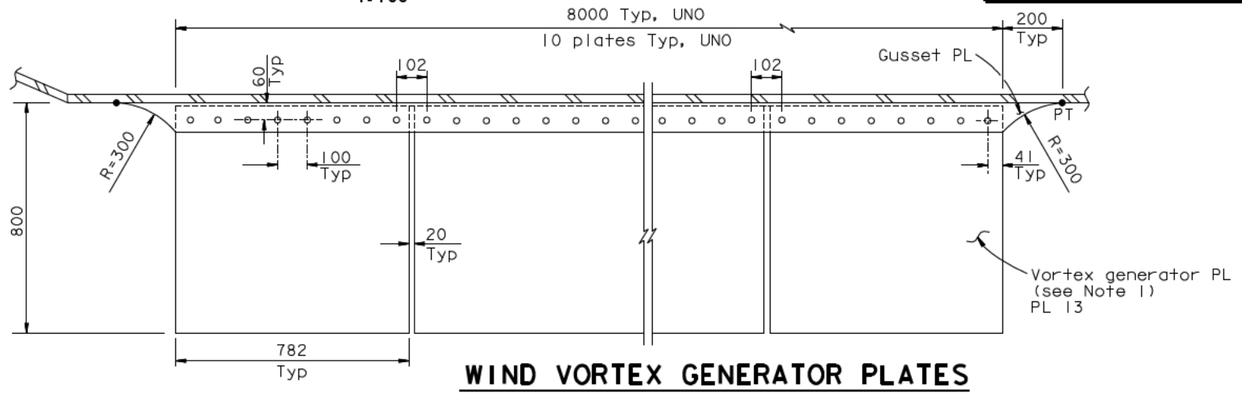

WIND VORTEX GENERATOR PLATES
VIEW B-B
1:10

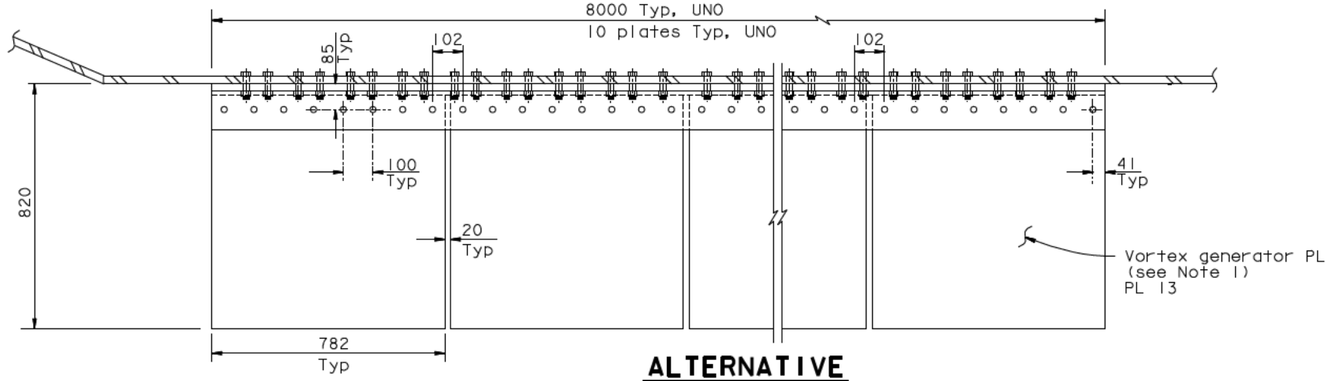

ALTERNATIVE
WIND VORTEX GENERATOR PLATES
VIEW B-B
1:10

NOTES:

1. A total of 704 vortex generator steel plates shall be fabricated and erected.
2. M20 HS bolts connecting L203x152x22.2 and box girder plate shall clear box girder stiffeners.
3. Installation of vortex generator steel plates shall not interfere with required clearances during construction of the bridge.

REQUESTS FOR INFORMATION NOT ADDRESSED IN THIS CCO REMAIN IN FORCE					
3	07/07/08	CAULKING	AS	MN	66
2	08/31/07	WIND VORTEX GENERATOR PLATES	JD	MN	26
1	07/26/07	WIND VORTEX GENERATOR PLATES	CC	MN	26
MARK	DATE	DESCRIPTIONS	BY	CH'D	CCO#
REVISIONS					

CONTRACT CHANGE ORDER NO. ____
SHEET ____ OF ____

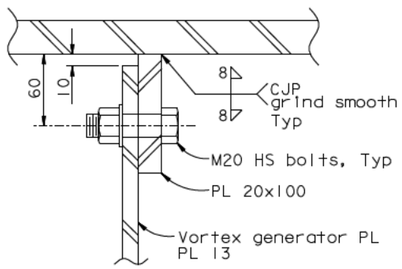

SECTION C-C
1:2.5

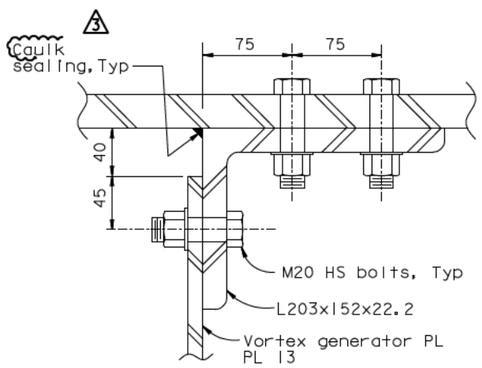

ALTERNATIVE
SECTION C-C
1:2.5

DIST.	COUNTY	ROUTE	KILOMETER POST TOTAL PROJECT	SHEET NO.	TOTAL SHEETS
04	SF	80	13.2/13.9	875R3	1204

REGISTERED ENGINEER - CIVIL
12-6-04
PLANS APPROVAL DATE
Marwan N. Nader, No. C 054426, Exp. 12/31/09, CIVIL, REGISTERED PROFESSIONAL ENGINEER, STATE OF CALIFORNIA

The State of California or its officers or agents shall not be responsible for the accuracy or completeness of electronic copies of this plan sheet.

T.Y. LIN / MOFFATT & NICHOL
825 BATTERY STREET
SAN FRANCISCO, CA 94111

Caltrans now has a web site! To get to the web site, go to: http://www.dot.ca.gov

ALL DIMENSIONS ARE IN MILLIMETERS UNLESS OTHERWISE SHOWN

SAN FRANCISCO OAKLAND BAY BRIDGE
EAST SPAN SEISMIC SAFETY PROJECT
SELF-ANCHORED SUSPENSION BRIDGE
(SUPERSTRUCTURE & TOWER)
WIND VORTEX GENERATOR PLATES DETAILS

R. Vallizadeh/V. Toan/Y.L./W.L./F.C.
DESIGN OVERSIGHT
SIGN OFF DATE 07/07/08

	BY	CHECKED
DESIGN	M. Nader	C. Selm
DETAILS	G. Baker	J. Lopez-Jara
QUANTITIES	C. Mibelli	J. Lopez-Jara

PREPARED FOR THE STATE OF CALIFORNIA DEPARTMENT OF TRANSPORTATION

R. Manzanarez
PROJECT ENGINEER

BRIDGE NO. 34-0006L/R
KILOMETER POST 13.2/13.9

CU 04
EA 0120F1

DISREGARD PRINTS BEARING EARLIER REVISION DATES

REVISION DATES (PRELIMINARY STAGE ONLY): 04/30/02 | 07/09/02 | 12/19/02

SHEET 458R3 OF

Rev. Date: 5-18-98

ORIGINAL SCALE IN MILLIMETERS FOR REDUCED PLANS 0 10 20 30 40 50 60 70 80 90 100

FILE -> I:\bb\04-0120F1\sas\contract plans and cco\cco\In progress\cco#66\dgn\akwvg03.dgn

100 % PS&E
TIME PLOTTED => 13:54:21
DATE PLOTTED => 03 JUL 2008
USERNAME => vignatovsky

CONTRACT CHANGE ORDER

Change Requested by: Engineer

CCO: 67 **Suppl. No. 0** **Contract No. 04 – 0120F4** **Road** SF-80-13.2/13.9 **FED. AID LOC.:**

To: **AMERICAN BRIDGE/FLUOR ENTERPRISES INC A JOINT VENTURE**

You are directed to make the following changes from the plans and specifications or do the following described work not included in the plans and specifications for this contract. ***NOTE: This change order is not effective until approved by the Engineer.***

Description of work to be done, estimate of quantities and prices to be paid. (Segregate between additional work at contract price, agreed price and force account.) Unless otherwise stated, rates for rental of equipment cover only such time as equipment is actually used and no allowance will be made for idle time. This last percentage shown is the net accumulated increase or decrease from the original quantity in the Engineer's Estimate.

Fabricate, ship and verify dimensions of a second tower base template and ship (4) field template parts, furnished by the Department to ABF on January 23, 2008, to China fabricated for Contract 04-0120E4 as described in this change order.

Extra Work at Lump Sum:

1. Ship Contract No. 04-0120E4 base plate field template parts to ZPMC in China to complete the State Furnished Steel Template previously furnished by the Department and described in Special Provisions Section 10-1.59, "Steel Structures," subsection "Template".

2. Fabricate a Second Tower Base Template using steel meeting the strength requirements of ASTM A709M Gr. 345 as shown on sheets three (3) through five (5) of this change order.

3. The Contractor shall verify the location of the holes by physically matching the Second Tower Base Template to the State Furnished Steel Template. This shall be witnessed by the Engineer.

The following revised sheets detail all changes:

Supplemental Contract Plan Sheet Nos. 600S1R1, 600S2R1 and 600S3R1 (of 1204).

For this work, the Contractor shall receive a sum of $473,652.00. This sum constitutes full compensation, including markups, for this change.

Cost of Extra Work at Lump Sum $473,652.00

Adjustment of Compensation at Lump Sum

In lieu of performing the work of shipping, assembling and comparing the State Furnished Steel Template on the Tower footing as described in Special Provisions Section 10-1.59, "Steel Structures," the Contractor shall perform the following work to the second tower base template as directed by the Engineer:

1. Ship and assemble the second template for use in comparing to the existing T1 foundation.

2. The Second Tower Base Template shall be compared to the existing T1 foundation as required in Special Provisions Section 10-1.59, "Steel Structures" prior to the shipment of Lift 1 of the Tower or as agreed by the Engineer.

For this work, the Contractor shall receive a sum of $39,175.00. This sum constitutes full compensation, including markups, for this change.

Cost of Adjustment of Compensation at Lump Sum $39,175.00

CONTRACT CHANGE ORDER

Change Requested by: Engineer

CCO: 67 Suppl. No. 0 Contract No. 04 – 0120F4 Road SF-80-13.2/13.9 FED. AID LOC.:

Estimated Cost: Increase ☒ Decrease ☐ $512,827.00

By reason of this order the time of completion will be adjusted as follows: 0 days

Submitted by

Signature Mark P. Woods, Sr. Br. Engr for Resident Engineer Gary Pursell, Sup.T.E. Date 24 Feb 2009

Approval Recommended by

Signature Supervising Bridge Engineer Richard Morrow, Sup.T.E. Date 3/25/09

Engineer Approval by

Signature Supervising Transportation Engineer Peter Siegenthaler, Prin.T.E. Date 3/10/09

We the undersigned contractor, have given careful consideration to the change proposed and agree, if this proposal is approved, that we will provide all equipment, furnish the materials, except as otherwise be noted above, and perform all services necessary for the work above specified, and will accept as full payment therefor the prices shown above.

NOTE: If you, the contractor, do not sign acceptance of this order, your attention is directed to the requirements of the specifications as to proceeding with the ordered work and filing a written protest within the time therein specified.

Contractor Acceptance by

Signature (Print name and title) Michael D. Flowers Project Director Date 3-5-09

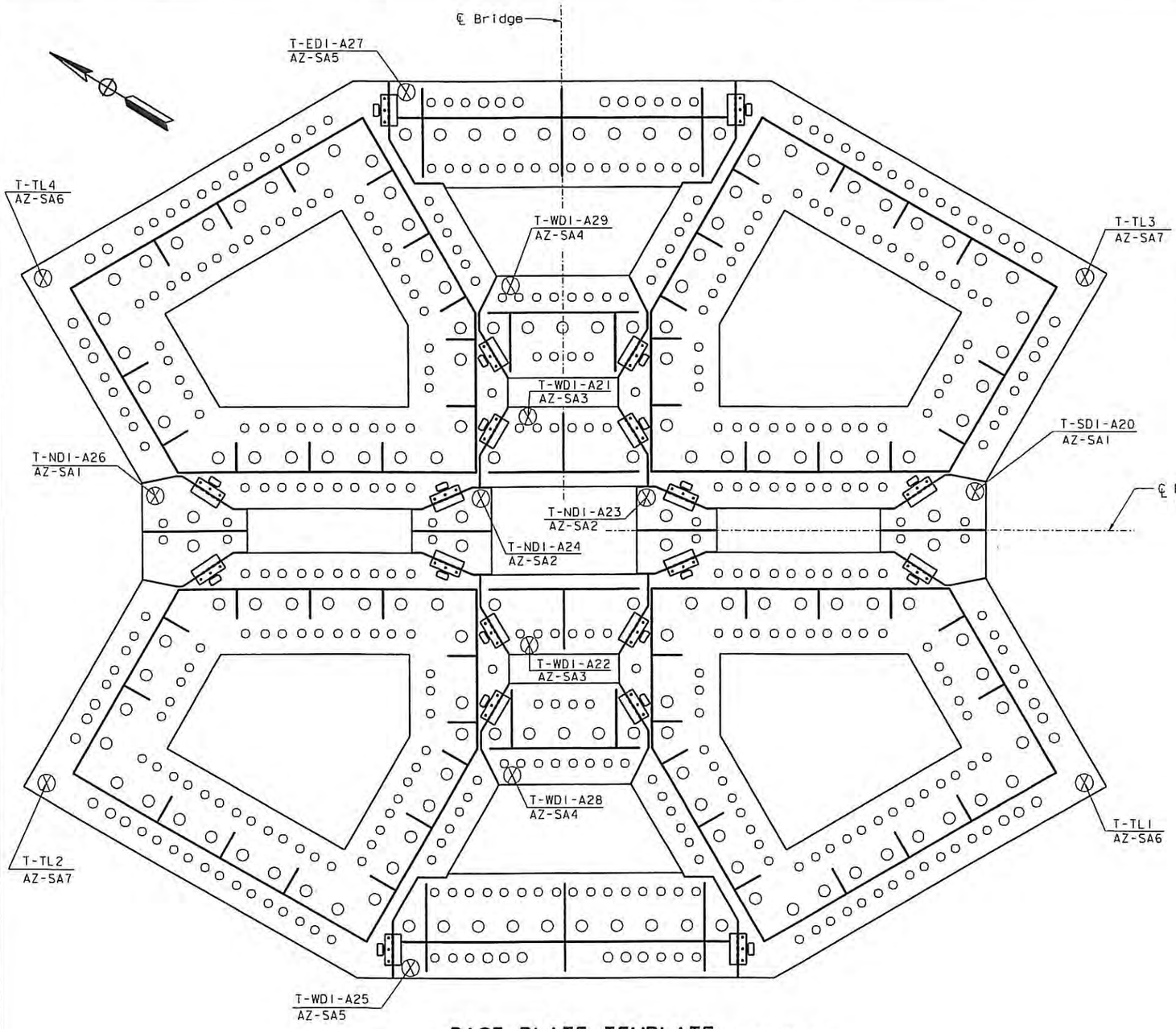

BASE PLATE TEMPLATE (See Note 1)

NTS

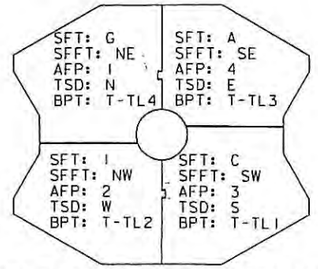

COORDINATION PLAN VIEW

SFT = State Furnished Template
SFFT = State Furnished Field Template
AFP = Anchorage Fabrication Procedure
TSD = Tower Shop Drawings
BPT = Base Plate Template

DIST.	COUNTY	ROUTE	KILOMETER POST TOTAL PROJECT	SHEET NO.	TOTAL SHEETS
04	SF	80	13.2/13.9	600SIRI	1204

REGISTERED ENGINEER - CIVIL

06-20-08
PLANS APPROVAL DATE

REGISTERED PROFESSIONAL ENGINEER James P. Duxbury No. C 64677 Exp. 06/30/09 CIVIL STATE OF CALIFORNIA

The State of California or its officers or agents shall not be responsible for the accuracy or completeness of electronic copies of this plan sheet.

T.Y. LIN / MOFFATT & NICHOL
825 BATTERY STREET
SAN FRANCISCO, CA 94111

Caltrans now has a web site! To get to the web site, go to: http://www.dot.ca.gov

CONTRACT CHANGE ORDER NO. 67
SHEET 3 OF 5

REQUESTS FOR INFORMATION NOT ADDRESSED IN THIS CCO REMAIN IN FORCE

MARK	DATE	DESCRIPTIONS	BY	CH'D	CCO#
1	11/07/08	TOWER BASE PLATE TEMPLATE	JD	MN	67
0	06/20/08	TOWER BASE PLATE TEMPLATE	JD	MN	67

REVISIONS

LEGEND:

- Base Plate Template Piece Mark
- Permanent Base Plate Piece Mark
- Location of Splice PL

NOTES:

1. The flatness of the base plate template shall be within ±5 mm of the overall X and Y dimensions of the permanent tower base plate.
2. The base plate template shall be made of same number of pieces and configuration as the permanent tower base plates being erected as part of the permanent structure.
3. The base plate template pieces shall be the same external size and shape as the permanent tower base plates.
4. Holes in the base plate template shall be the same diameter as the holes in the permanent tower base plates.
5. The holes in the base plate template shall be located to match the holes in the State Furnished Template and State Furnished Field Templates to within ±3.0 mm.
6. The reference lines on the State Furnished Template shall be marked on the base plate template within ±1.0 mm.
7. The tower Working Points (WP) at Elevation 3.125 m shall be marked on the punch plate for all tower shafts.

ALL DIMENSIONS ARE IN MILLIMETERS UNLESS OTHERWISE SHOWN

R. Vaziadeh/V. Toan/Y.L./W.L./F.C.
DESIGN OVERSIGHT
SIGN OFF DATE 11/07/08

	BY	CHECKED
DESIGN	J. Duxbury	M. Nader
DETAILS	J. Duxbury	M. Nader
QUANTITIES	J. Duxbury	M. Nader

PREPARED FOR THE STATE OF CALIFORNIA DEPARTMENT OF TRANSPORTATION

R. Manzanarez
PROJECT ENGINEER

CU 04
EA 0120F1

BRIDGE NO.	34-0006L/R
KILOMETER POST	13.2/13.9

SAN FRANCISCO OAKLAND BAY BRIDGE
EAST SPAN SEISMIC SAFETY PROJECT
SELF-ANCHORED SUSPENSION BRIDGE
(SUPERSTRUCTURE & TOWER)

TOWER ANCHORAGE DETAILS NO. 9

Rev. Date: 5-18-98

ORIGINAL SCALE IN MILLIMETERS FOR REDUCED PLANS 0 10 20 30 40 50 60 70 80 90 100

DISREGARD PRINTS BEARING EARLIER REVISION DATES → 05/21/08

REVISION DATES (PRELIMINARY STAGE ONLY)

SHEET 1835IRI OF

FILE => I:\bb\04-0120f1\sas\contract plans and cco\cco\cco#67\revision 11-07-08\dgn\towanc01.dgn

USERNAME => cwinrow DATE PLOTTED => 07 NOV 2008 TIME PLOTTED => 14:51:25

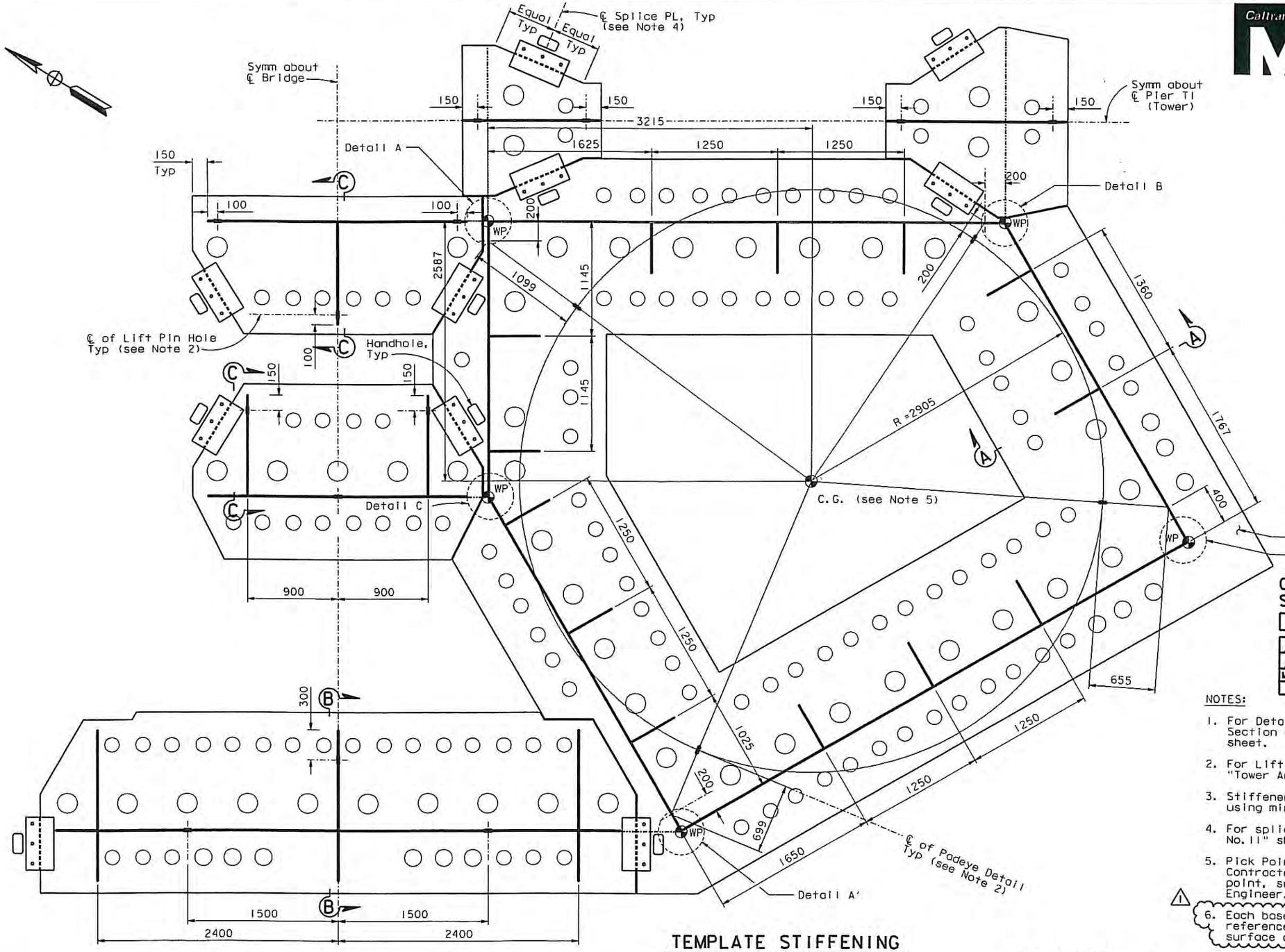

TEMPLATE STIFFENING

1:20

ALL DIMENSIONS ARE IN MILLIMETERS UNLESS OTHERWISE SHOWN

DIST.	COUNTY	ROUTE	KILOMETER POST TOTAL PROJECT	SHEET NO.	TOTAL SHEETS
04	SF	80	13.2/13.9	600521	1204

REGISTERED ENGINEER - CIVIL

06-20-08
PLANS APPROVAL DATE

James P. Duxbury No. C 64677 Exp. 06/30/09 CIVIL — REGISTERED PROFESSIONAL ENGINEER — STATE OF CALIFORNIA

The State of California or its officers or agents shall not be responsible for the accuracy or completeness of electronic copies of this plan sheet.

T.Y. LIN / MOFFATT & NICHOL
825 BATTERY STREET
SAN FRANCISCO, CA 94111

Caltrans now has a web site! To get to the web site, go to: http://www.dot.ca.gov

CONTRACT CHANGE ORDER NO. 67
SHEET 4 OF 5

REQUESTS FOR INFORMATION NOT ADDRESSED IN THIS CCO REMAIN IN FORCE

MARK	DATE	DESCRIPTIONS	BY	CH'D	CCO#
		REVISIONS			
1	11/07/08	TOWER BASE PLATE TEMPLATE	JD	MN	67
0	06/20/08	TOWER BASE PLATE TEMPLATE	JD	MN	67

NOTES:

1. For Details A thru C and Section A-A thru Section C-C, see "Tower Anchorage Details No. 11" sheet.
2. For Lift Pin Hole Details and Padeye Details, see "Tower Anchorage Details No. 11" sheet.
3. Stiffener plates are welded on to tower base plate using minimum size fillet welds on both sides, UNO.
4. For splice plate detail, see "Tower Anchorage Details No. 11" sheet.
5. Pick Point Center of gravity shall be verified by the Contractor. Contractor may select alternate pick point, subject to review and approval of the Engineer.
6. Each base plate template piece shall have three reference points stamped and labeled on the top surface of the plate.

R. Vallzadeh/V. Toan/Y.L./W.L./F.C.
DESIGN OVERSIGHT
SIGN OFF DATE 11/07/08

DESIGN	BY J. Duxbury	CHECKED M. Nader	PREPARED FOR THE STATE OF CALIFORNIA DEPARTMENT OF TRANSPORTATION	R. Manzanarez PROJECT ENGINEER
DETAILS	BY J. Duxbury	CHECKED M. Nader		
QUANTITIES	BY J. Duxbury	CHECKED M. Nader		

BRIDGE NO. 34-0006L/R
KILOMETER POST 13.2/13.9

SAN FRANCISCO OAKLAND BAY BRIDGE
EAST SPAN SEISMIC SAFETY PROJECT
SELF-ANCHORED SUSPENSION BRIDGE (SUPERSTRUCTURE & TOWER)

TOWER ANCHORAGE DETAILS NO. 10

Rev. Date: 5-15-98

ORIGINAL SCALE IN MILLIMETERS FOR REDUCED PLANS 0 10 20 30 40 50 60 70 80 90 100

CU 04
EA 0120F1

DISREGARD PRINTS BEARING EARLIER REVISION DATES →

REVISION DATES (PRELIMINARY STAGE ONLY): 05/21/08

SHEET 183S2R1 OF

FILE => I:\bb\04-012001\sas\contract plans and cco\cco\cco*67\revision 11-07-08\dgn\towanc02.dgn

USERNAME => owinrow DATE PLOTTED => 07 NOV 2008 TIME PLOTTED => 14:50:06

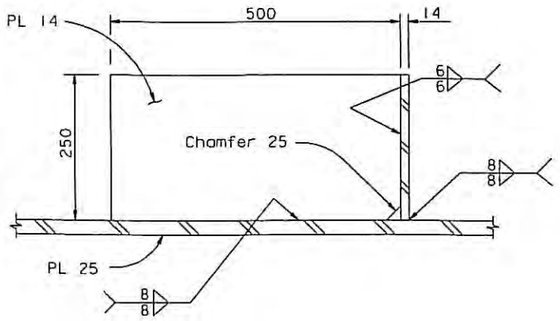

SECTION A-A
1:5

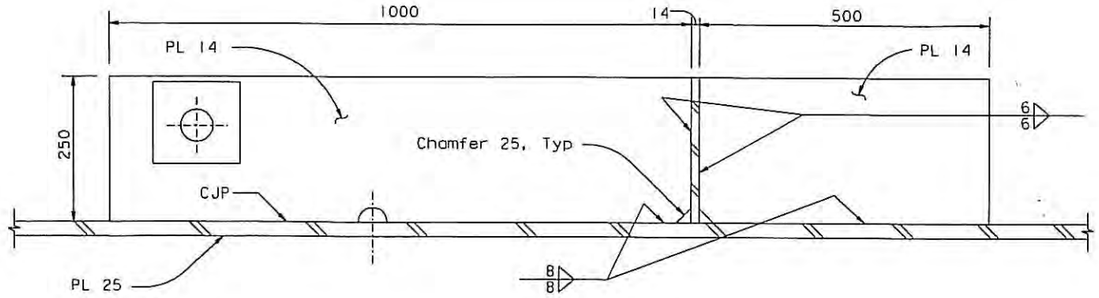

SECTION B-B
1:5

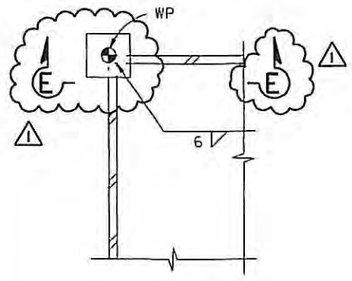

DETAIL A (Detail A' similar)
1:5
(Hole for lift pin not shown for clarity)

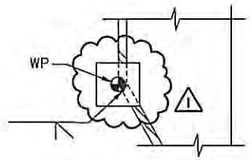

DETAIL C
1:5

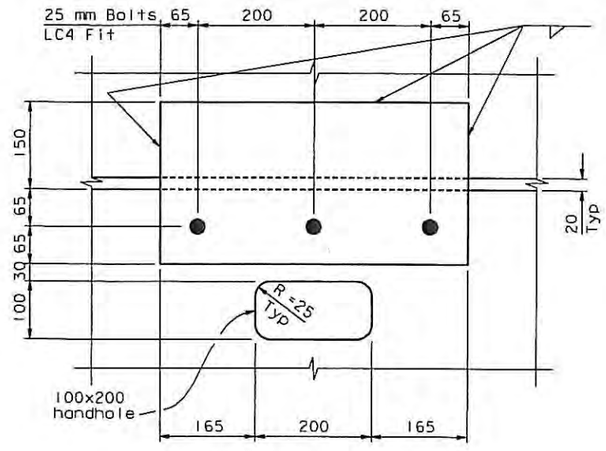

SPLICE PLATE DETAIL
1:5

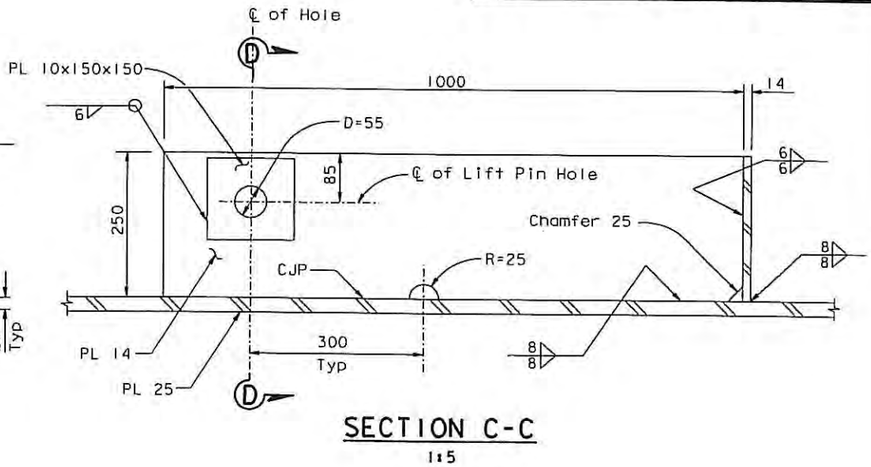

SECTION C-C
1:5

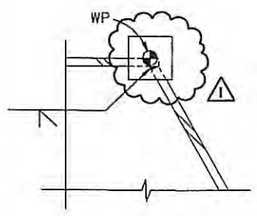

DETAIL B
1:5

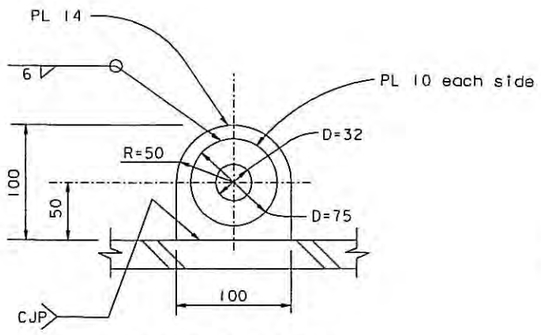

PADEYE DETAIL
1:2.5

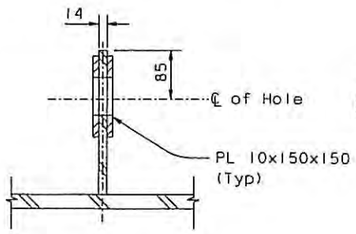

SECTION D-D
1:5

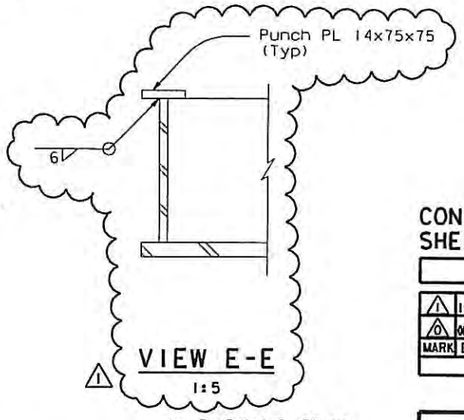

VIEW E-E
1:5

ALL DIMENSIONS ARE IN MILLIMETERS UNLESS OTHERWISE SHOWN

DIST.	COUNTY	ROUTE	KILOMETER POST TOTAL PROJECT	SHEET NO.	TOTAL SHEETS
04	SF	80	13.2/13.9	600S3R1	1204

REGISTERED ENGINEER - CIVIL
06-20-08
PLANS APPROVAL DATE
PROFESSIONAL ENGINEER — James P. Duxbury — No. C 64677 — Exp. 06/30/09 — CIVIL — STATE OF CALIFORNIA

The State of California or its officers or agents shall not be responsible for the accuracy or completeness of electronic copies of this plan sheet.

T.Y. LIN / MOFFATT & NICHOL
825 BATTERY STREET
SAN FRANCISCO, CA 94111

Caltrans now has a web site! To get to the web site, go to: http://www.dot.ca.gov

CONTRACT CHANGE ORDER NO. 67
SHEET 5 OF 5

REQUESTS FOR INFORMATION NOT ADDRESSED IN THIS CCO REMAIN IN FORCE

MARK	DATE	DESCRIPTIONS	BY	CH'D	CCO#
		REVISIONS			
1	11/07/08	TOWER BASE PLATE TEMPLATE	JD	MN	67
0	06/20/08	TOWER BASE PLATE TEMPLATE	JD	MN	67

R. Valtzadeh/V. Toan/Y. L./W. L./F. C.
DESIGN OVERSIGHT
SIGN OFF DATE 11/07/08
Rev. Date: 5-18-98

	BY	CHECKED
DESIGN	J. Duxbury	M. Nader
DETAILS	J. Duxbury	M. Nader
QUANTITIES	J. Duxbury	M. Nader

PREPARED FOR THE STATE OF CALIFORNIA
DEPARTMENT OF TRANSPORTATION

R. Manzanarez
PROJECT ENGINEER

BRIDGE NO. 34-0006L/R
KILOMETER POST 13.2/13.9

CU 04
EA 0120F1

ORIGINAL SCALE IN MILLIMETERS FOR REDUCED PLANS 0 10 20 30 40 50 60 70 80 90 100

DISREGARD PRINTS BEARING EARLIER REVISION DATES →

REVISION DATES (PRELIMINARY STAGE ONLY) 05/21/08

SHEET 18353R1 OF

SAN FRANCISCO OAKLAND BAY BRIDGE
EAST SPAN SEISMIC SAFETY PROJECT
SELF-ANCHORED SUSPENSION BRIDGE
(SUPERSTRUCTURE & TOWER)

TOWER ANCHORAGE DETAILS NO. 11

FILE => I:\bb\04-012001\sas\contract plans and cco\cco\cco*67\revision 11-07-08\dgn\towanc03.dgn

USERNAME => gwinrow DATE PLOTTED => 07 NOV 2008 TIME PLOTTED => 14:48:22

STATE OF CALIFORNIA - DEPARTMENT OF TRANSPORTATION

CONTRACT CHANGE ORDER MEMORANDUM

DATE: 3/10/2009

TO: Pete Siegenthaler, Prin. TE / Gary Pursell, P.E., Sup T.E.	FILE: **E.A.** 04 - 0120F4
FROM: Gary Pursell, P.E., Sup.T.E.	**CO-RTE-PM** SF-80-13.2/13.9
	FED. NO.
CCO#: **67** SUPPLEMENT#: **0** Category Code: **CHTX**	CONTINGENCY BALANCE (incl. this change) **$116,003,393.40**
COST: **$512,827.00** INCREASE ☑ DECREASE ☐	HEADQUARTERS APPROVAL REQUIRED? ☐ YES ☑ NO
SUPPLEMENTAL FUNDS PROVIDED: **$512,827.00**	IS THIS REQUEST IN ACCORDANCE WITH ENVIRONMENTAL DOCUMENTS? ☑ YES ☐ NO
CCO DESCRIPTION: Tower Base Template	**PROJECT DESCRIPTION:** CONSTRUCT SELF-ANCHORED SUSPENSION BRIDGE

Original Contract Time:	Time Adj. This Change:	Previously Approved CCO Time Adjustments:	Percentage Time Adjusted: (including this change)	Total # of Unreconciled Deferred Time CCO(s): (including this change)
2490 Day(s)	**0** Day(s)	**30** Day(s)	**1** %	**6**

THIS CHANGE ORDER PROVIDES FOR:

Transporting four, T1 tower anchor rod and dowel, templates from Oakland, California to ABF tower fabricator ZPMC in Shanghai, China and fabricate, ship and verify dimensions of a second tower base template as directed by the Engineer.

The E2/T1 Contractor was unable to provide complete "as-fabricated" templates due to the interference of temporary lifting lugs with permanent anchor rods and dowels. T1 footing box dowels that interfered were installed after lifting lugs were removed. Four additional field templates were then fabricated on site to accurately describe the location of dowels and adjacent anchor rods.

Providing the four additional field templates, along with the original templates already provided, shall complete the "as-fabricated" templates called for in the contract documentation. This change order shall reimburse the Contractor for shipping the four additional field templates from Oakland, California to ABF tower fabricator ZPMC in Shanghai, China.

In addition to the field template, it was determined by the Department's Risk Management Team that a second tower base template using a higher grade steel and a field dimensional accuracy would be fabricated and compared to the tower base in China. This would act as a second verification on the base dimensions of the tower so when the tower base arrives on the jobsite, the base will fit the anchor rods at Pier T1.

Payment for the work the shipping of the first and second template to China, fabricating the second template and verification of holes on the second template will be at Extra Work at Lump Sum for a cost of $473,652.00. Payment for shipping the second template to the jobsite, assembling the second template at the jobsite and comparing this template to the T1 foundation will be paid for as an Adjustment of Compensation at Lump Sum for the cost of $39,175.00. The total cost of this change order is estimated at $512,827.00 which can be financed from the contingency fund. A total of $1,130,000.00 is available within the supplemental funds for this change order. A detailed cost analysis is on file.

No time adjustment is warranted, as this change order does not affect the controlling operation.

This change order received concurrence from Gary Pursell (Sup. TE), Richard Morrow (Sup. BE), Michael Forner (Principal TE), Patrick Treacy (HQ Oversight), Marwan Nader (Design of Record) and Ken Terpstra (Project Manager). Design Oversight and Maintenance is not required for this change.

The Resident Engineer requests that this change order be approved.

ADA Notice: For individuals with sensory disabilities, this document is available in alternate formats. For information call: (916) 654-6410 or TDD (916) 654-3880 or write Records and Forms Management, 1120 N Street, MS-89, Sacramento, CA 95814.

CONCURRED BY:			
Construction Engineer:	Res. Eng., Gary Pursell, Sup. TE	Date	3/6/08
Bridge Engineer:	Struct Rep, Rick Morrow, Sup TE	Date	3/6/08
Project Engineer:	Design of Record, Marwan Nader,	Date	7/10/08
Project Manager:	Proj Manager, Ken Terpstra	Date	2/9/09
FHWA Rep.:		Date	
Environmental:		Date	
Other (specify):	PCE, Mike Forner, Prin TE	Date	3/7/08
Other (specify):	HQ, Patrick Treacy	Date	7/31/08
District Prior Approval By:		Date	
HQ (Issue Approve) By:		Date	
Resident Engineer's Signature:	Gary Pursell	Date	3/10/09

ESTIMATE OF COST		
	THIS REQUEST	TOTAL TO DATE
ITEMS	$0.00	$0.00
FORCE ACCOUNT	$0.00	$0.00
AGREED PRICE	$473,652.00	$473,652.00
ADJUSTMENT	$39,175.00	$39,175.00
TOTAL	$512,827.00	$512,827.00

FEDERAL PARTICIPATION

☐ PARTICIPATING ☐ PARTICIPATING IN PART ☑ NONE
☐ NON-PARTICIPATING (MAINTENANCE) ☐ NON-PARTICIPATING

FEDERAL SEGREGATION (if more than one Funding Source or P.I.P. type)
☐ CCO FUNDED PER CONTRACT ☐ CCO FUNDED AS FOLLOWS

FEDERAL FUNDING SOURCE	PERCENT

ADA Notice: For individuals with sensory disabilities, this document is available in alternate formats. For information call: (916) 654-6410 or TDD (916) 654-3880 or write Records and Forms Management, 1120 N Street, MS-69, Sacramento, CA 95814.

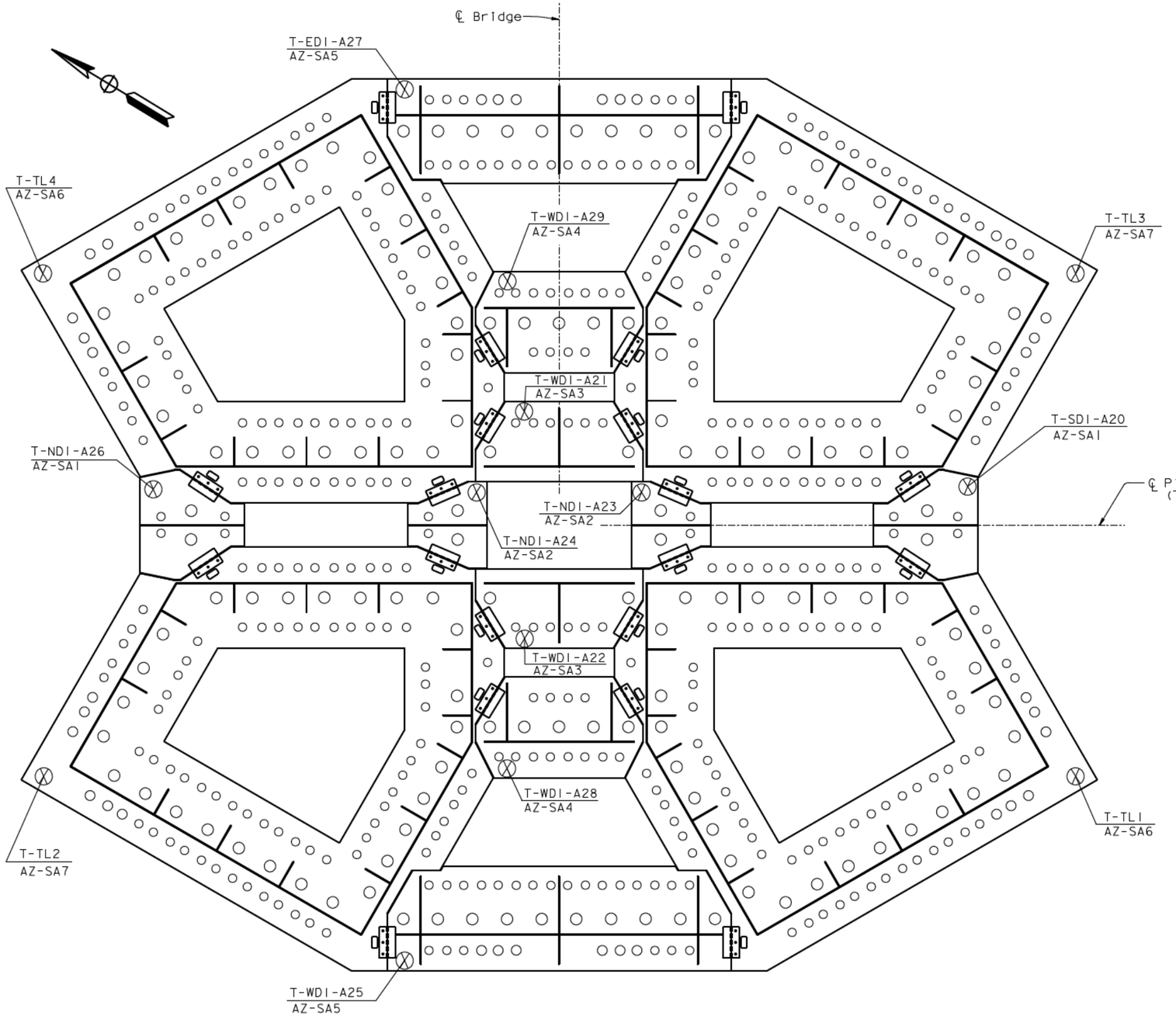

BASE PLATE TEMPLATE (See Note 1)

NTS

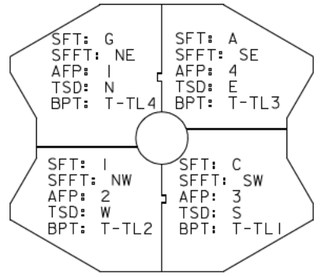

COORDINATION PLAN VIEW

SFT = State Furnished Template
SFFT = State Furnished Field Template
AFP = Anchorage Fabrication Procedure
TSD = Tower Shop Drawings
BPT = Base Plate Template

Caltrans Metric

DIST.	COUNTY	ROUTE	KILOMETER POST TOTAL PROJECT	SHEET NO.	TOTAL SHEETS
04	SF	80	13.2/13.9	600SIR1	1204

REGISTERED ENGINEER - CIVIL

06-20-08
PLANS APPROVAL DATE

REGISTERED PROFESSIONAL ENGINEER James P.Duxbury No. C 64677 Exp. 06/30/09 CIVIL STATE OF CALIFORNIA

The State of California or its officers or agents shall not be responsible for the accuracy or completeness of electronic copies of this plan sheet.

T.Y. LIN / MOFFATT & NICHOL
825 BATTERY STREET
SAN FRANCISCO, CA 94111

Caltrans now has a web site! To get to the web site, go to: http://www.dot.ca.gov

CONTRACT CHANGE ORDER NO. ____
SHEET ___ OF ___

REQUESTS FOR INFORMATION NOT ADDRESSED IN THIS CCO REMAIN IN FORCE

MARK	DATE	DESCRIPTIONS	BY	CH'D	CCO#
		REVISIONS			
1	11/07/08	TOWER BASE PLATE TEMPLATE	JD	MN	67
0	06/20/08	TOWER BASE PLATE TEMPLATE	JD	MN	67

LEGEND:

Base Plate Template Piece Mark
Permanent Base Plate Piece Mark

Location of Splice PL

NOTES:

1. The flatness of the base plate template shall be within ±5 mm of the overall X and Y dimensions of the permanent tower base plate.
2. The base plate template shall be made of same number of pieces and configuration as the permanent tower base plates being erected as part of the permanent structure.
3. The base plate template pieces shall be the same external size and shape as the permanent tower base plates.
4. Holes in the base plate template shall be the same diameter as the holes in the permanent tower base plates.
5. The holes in the base plate template shall be located to match the holes in the State Furnished Template and State Furnished Field Templates to within ±3.0 mm.
6. The reference lines on the State Furnished Template shall be marked on the base plate template within ±1.0 mm.
7. The tower Working Points (WP) at Elevation 3.125 m shall be marked on the punch plate for all tower shafts.

ALL DIMENSIONS ARE IN MILLIMETERS UNLESS OTHERWISE SHOWN

R. Vallzadeh/V. Toan/Y.L./W.L./F.C.
DESIGN OVERSIGHT
SIGN OFF DATE 11/07/08

	BY	CHECKED
DESIGN	J. Duxbury	M. Nader
DETAILS	J. Duxbury	M. Nader
QUANTITIES	J. Duxbury	M. Nader

PREPARED FOR THE STATE OF CALIFORNIA DEPARTMENT OF TRANSPORTATION

R. Manzanarez
PROJECT ENGINEER

BRIDGE NO. 34-0006L/R
KILOMETER POST 13.2/13.9

CU 04
EA 0120F1

DISREGARD PRINTS BEARING EARLIER REVISION DATES

SAN FRANCISCO OAKLAND BAY BRIDGE
EAST SPAN SEISMIC SAFETY PROJECT
SELF-ANCHORED SUSPENSION BRIDGE
(SUPERSTRUCTURE & TOWER)

TOWER ANCHORAGE DETAILS NO. 9

REVISION DATES (PRELIMINARY STAGE ONLY): 05/23/08

SHEET 183SIR1 OF

Rev. Date: 5-18-98

ORIGINAL SCALE IN MILLIMETERS FOR REDUCED PLANS 0 10 20 30 40 50 60 70 80 90 100

FILE -> I:\bb\04-012001\sas\contract plans and cco\cco\cco#67\revision 11-07-08\dgn\towanc01.dgn

USERNAME => dwinrow DATE PLOTTED => 07 NOV 2008 TIME PLOTTED => 14:51:25

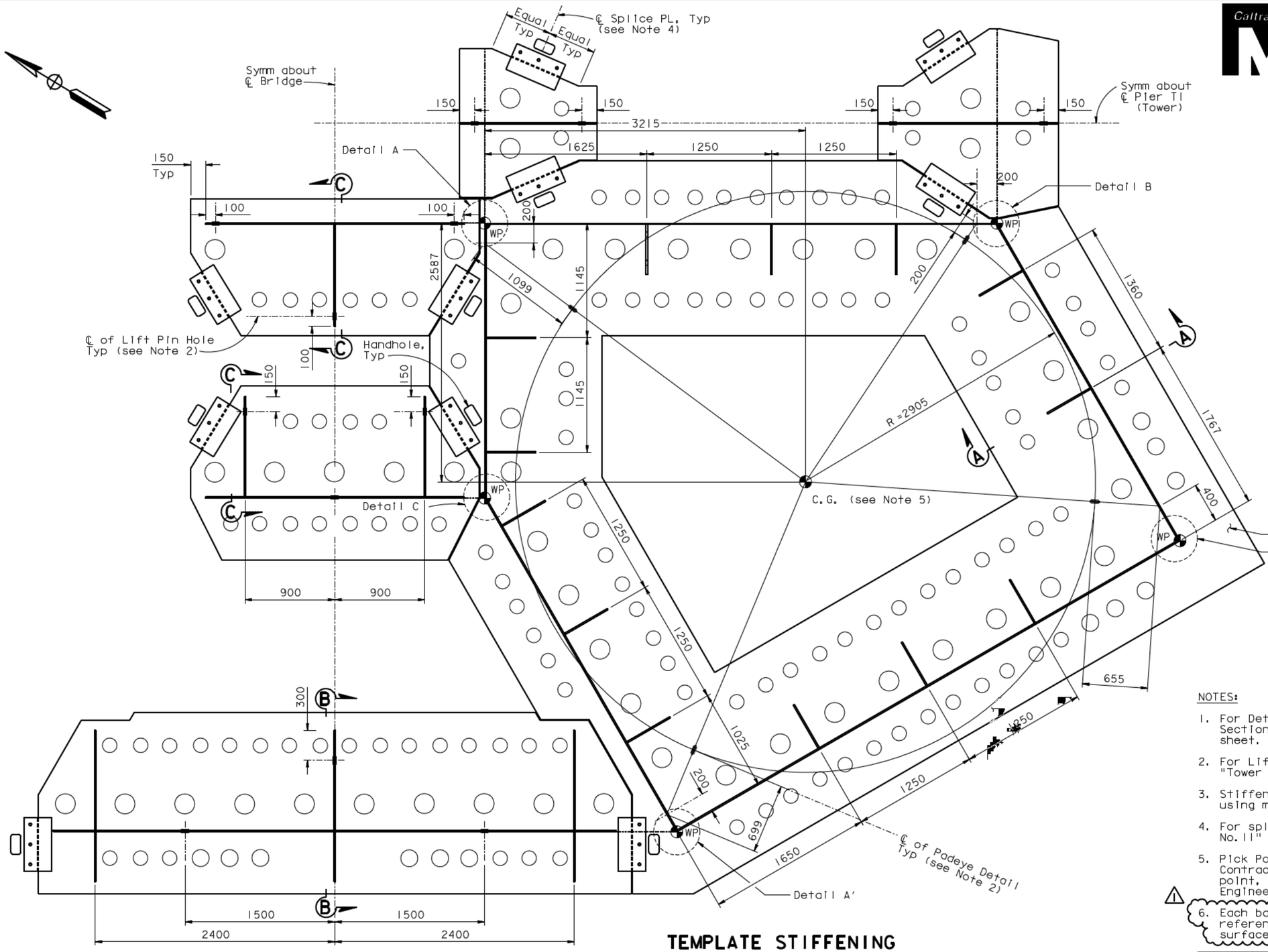

TEMPLATE STIFFENING

1:20

ALL DIMENSIONS ARE IN MILLIMETERS UNLESS OTHERWISE SHOWN

DIST.	COUNTY	ROUTE	KILOMETER POST TOTAL PROJECT	SHEET NO.	TOTAL SHEETS
04	SF	80	13.2/13.9	600S2R1	1204

REGISTERED ENGINEER - CIVIL

06-20-08
PLANS APPROVAL DATE

James P. Duxbury No. C 64677 Exp. 06/30/09 CIVIL — REGISTERED PROFESSIONAL ENGINEER — STATE OF CALIFORNIA

The State of California or its officers or agents shall not be responsible for the accuracy or completeness of electronic copies of this plan sheet.

T.Y. LIN / MOFFATT & NICHOL
825 BATTERY STREET
SAN FRANCISCO, CA 94111

Caltrans now has a web site! To get to the web site, go to: http://www.dot.ca.gov

CONTRACT CHANGE ORDER NO. ____
SHEET ___ OF ___

REQUESTS FOR INFORMATION NOT ADDRESSED IN THIS CCO REMAIN IN FORCE

MARK	DATE	REVISIONS	BY	CH'D	CCO#
1	11/07/08	TOWER BASE PLATE TEMPLATE	JD	MN	67
0	06/20/08	TOWER BASE PLATE TEMPLATE	JD	MN	67

NOTES:

1. For Details A thru C and Section A-A thru Section C-C, see "Tower Anchorage Details No.11" sheet.
2. For Lift Pin Hole Details and Padeye Details, see "Tower Anchorage Details No.11" sheet.
3. Stiffener plates are welded on to tower base plate using minimum size fillet welds on both sides, UNO.
4. For splice plate detail, see "Tower Anchorage Details No.11" sheet.
5. Pick Point Center of gravity shall be verified by the Contractor. Contractor may select alternate pick point, subject to review and approval of the Engineer.
6. Each base plate template piece shall have three reference points stamped and labeled on the top surface of the plate.

R. Valizadeh/V. Toan/Y.L./W.L./F.C.
DESIGN OVERSIGHT
SIGN OFF DATE 11/07/08

	BY	CHECKED
DESIGN	J. Duxbury	M. Nader
DETAILS	J. Duxbury	M. Nader
QUANTITIES	J. Duxbury	M. Nader

PREPARED FOR THE STATE OF CALIFORNIA DEPARTMENT OF TRANSPORTATION

R. Manzanarez
PROJECT ENGINEER

BRIDGE NO. 34-0006L/R
KILOMETER POST 13.2/13.9

CU 04
EA 0120F1

SAN FRANCISCO OAKLAND BAY BRIDGE
EAST SPAN SEISMIC SAFETY PROJECT
SELF-ANCHORED SUSPENSION BRIDGE (SUPERSTRUCTURE & TOWER)

TOWER ANCHORAGE DETAILS NO. 10

Rev. Date: 5-18-98

ORIGINAL SCALE IN MILLIMETERS FOR REDUCED PLANS 0 10 20 30 40 50 60 70 80 90 100

DISREGARD PRINTS BEARING EARLIER REVISION DATES

REVISION DATES (PRELIMINARY STAGE ONLY): 05/23/08

SHEET 183S2R1 OF

FILE -> I:\bb\04-012001\sas\contract plans and cco\cco\cco#67\revision 11-07-08\dgn\towanc02.dgn

USERNAME => dwinrow DATE PLOTTED => 07 NOV 2008 TIME PLOTTED => 14:50:06

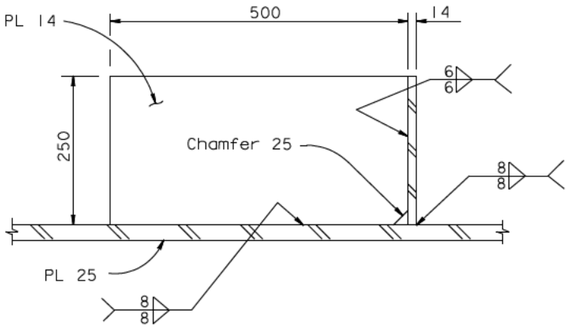

SECTION A-A
1:5

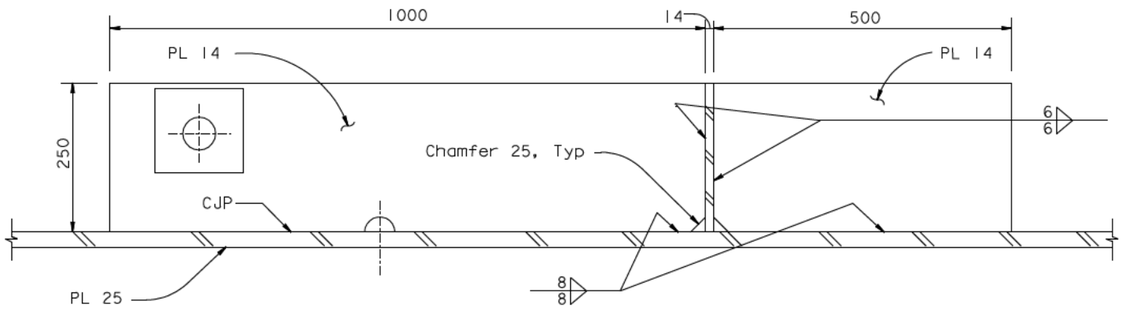

SECTION B-B
1:5

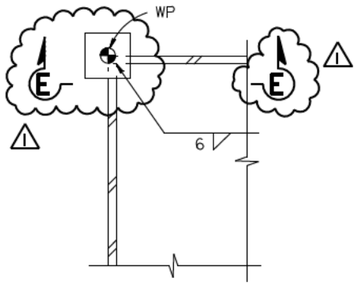

DETAIL A (Detail A' similar)
1:5

(Hole for lift pin not shown for clarity)

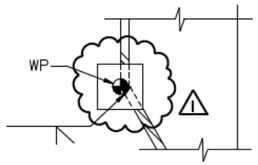

DETAIL C
1:5

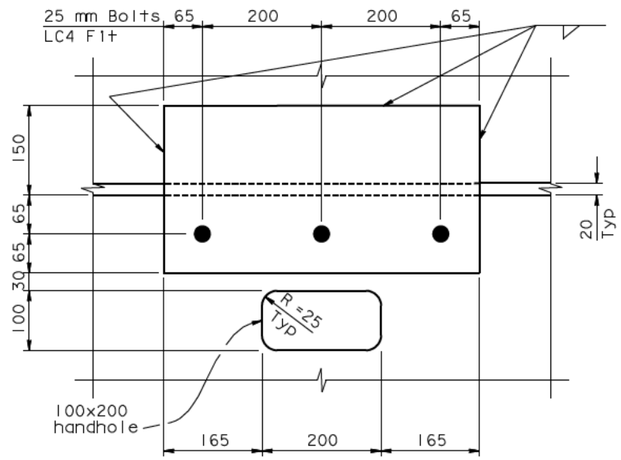

SPLICE PLATE DETAIL
1:5

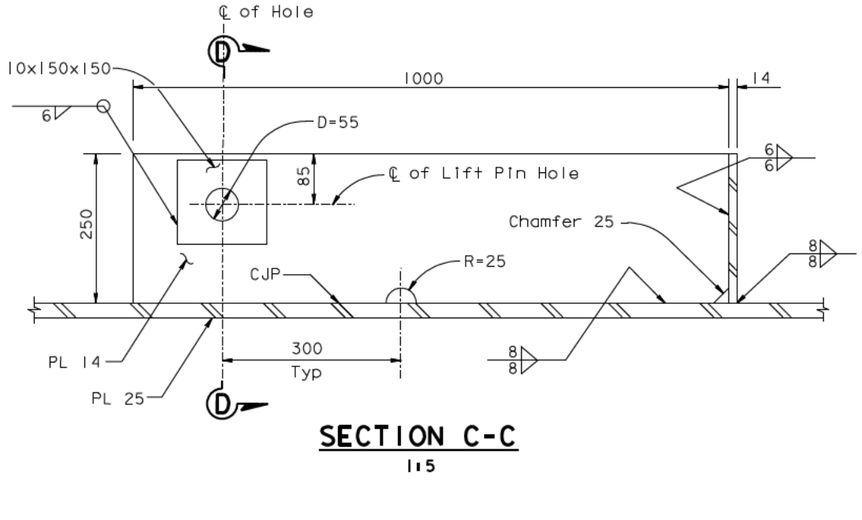

SECTION C-C
1:5

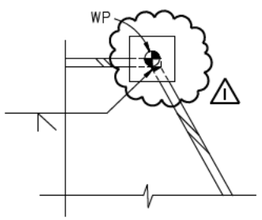

DETAIL B
1:5

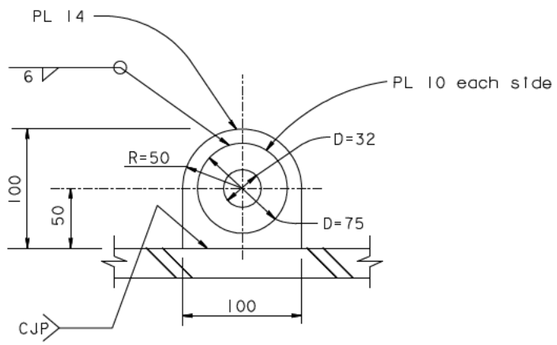

PADEYE DETAIL
1:2.5

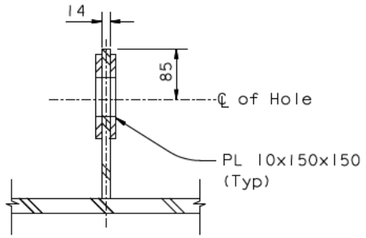

SECTION D-D
1:5

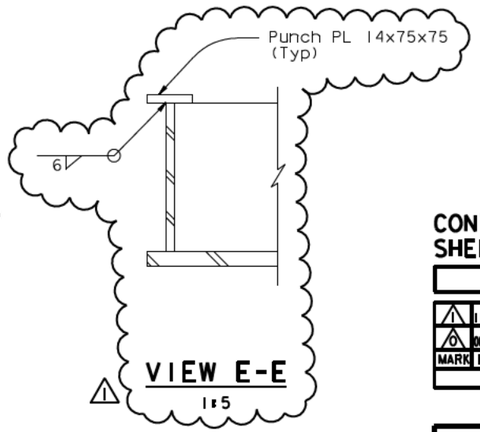

VIEW E-E
1:5

ALL DIMENSIONS ARE IN MILLIMETERS UNLESS OTHERWISE SHOWN

DIST.	COUNTY	ROUTE	KILOMETER POST TOTAL PROJECT	SHEET NO.	TOTAL SHEETS
04	SF	80	13.2/13.9	600S3R1	1204

REGISTERED ENGINEER - CIVIL

06-20-08
PLANS APPROVAL DATE

James P.Duxbury No. C 64677 Exp. 06/30/09 CIVIL — REGISTERED PROFESSIONAL ENGINEER — STATE OF CALIFORNIA

The State of California or its officers or agents shall not be responsible for the accuracy or completeness of electronic copies of this plan sheet.

T.Y. LIN / MOFFATT & NICHOL
825 BATTERY STREET
SAN FRANCISCO, CA 94111

Caltrans now has a web site! To get to the web site, go to: http://www.dot.ca.gov

CONTRACT CHANGE ORDER NO. ____
SHEET ___ OF ___

REQUESTS FOR INFORMATION NOT ADDRESSED IN THIS CCO REMAIN IN FORCE

MARK	DATE	REVISIONS / DESCRIPTIONS	BY	CH'D	CCO#
1	11/07/08	TOWER BASE PLATE TEMPLATE	JD	MN	67
0	06/20/08	TOWER BASE PLATE TEMPLATE	JD	MN	67

R. Vallizadeh/V. Toan/Y.L./W.L./F.C.
DESIGN OVERSIGHT
SIGN OFF DATE 11/07/08

	BY	CHECKED
DESIGN	J. Duxbury	M. Nader
DETAILS	J. Duxbury	M. Nader
QUANTITIES	J. Duxbury	M. Nader

PREPARED FOR THE STATE OF CALIFORNIA DEPARTMENT OF TRANSPORTATION

R. Manzanarez
PROJECT ENGINEER

BRIDGE NO. 34-0006L/R
KILOMETER POST 13.2/13.9

SAN FRANCISCO OAKLAND BAY BRIDGE
EAST SPAN SEISMIC SAFETY PROJECT
SELF-ANCHORED SUSPENSION BRIDGE (SUPERSTRUCTURE & TOWER)

TOWER ANCHORAGE DETAILS NO. 11

Rev. Date: 5-18-98

ORIGINAL SCALE IN MILLIMETERS FOR REDUCED PLANS 0 10 20 30 40 50 60 70 80 90 100

CU 04
EA 0120F1

DISREGARD PRINTS BEARING EARLIER REVISION DATES

REVISION DATES (PRELIMINARY STAGE ONLY): 05/23/08

SHEET 183S3R1 OF

FILE -> I:\bb\04-012001\sas\contract plans and cco\cco\cco#67\revision 11-07-08\dgn\towanc03.dgn

USERNAME => GWinrow DATE PLOTTED => 07 NOV 2008 TIME PLOTTED => 14:48:22

CONTRACT CHANGE ORDER

Change Requested by: Engineer

CCO: 68 **Suppl. No. 0** **Contract No. 04 – 0120F4** **Road** SF-80-13.2/13.9 **FED. AID LOC.:**

To: **AMERICAN BRIDGE/FLUOR ENTERPRISES INC A JOINT VENTURE**

You are directed to make the following changes from the plans and specifications or do the following described work not included in the plans and specifications for this contract. ***NOTE: This change order is not effective until approved by the Engineer.***

Description of work to be done, estimate of quantities and prices to be paid. (Segregate between additional work at contract price, agreed price and force account.) Unless otherwise stated, rates for rental of equipment cover only such time as equipment is actually used and no allowance will be made for idle time. This last percentage shown is the net accumulated increase or decrease from the original quantity in the Engineer's Estimate.

Adjustment of Compensation at Lump Sum Price:

ITEM 1.

Provide additional conduit penetrations and cover, doubler, and mounting plates in and around the SAS Tower as identified by Caltrans letter 05.03.01-004475, dated June 26, 2009, and on Orthotropic Box Girder and Tower Shop Drawings approved prior to November 17, 2010.

This change order resolves the costs associated with Contractor Request For Information (RFI) numbers 1029R0, 1029R2, 1029R3 and 1326 with respect to changes listed above.

Adjustment of Compensation at Lump Sum Price..... $158,000.00

ITEM 2.

The items identified above in this change order have been paid as part of CCO 108S1 resolution. Therefore, the amount due under this change order will be adjusted by the amount paid under CCO 108S1 to prevent a double payment. Total amount paid under CCO 108S1, and to be credited to this change, is $158,000.00.

Adjustment of Compensation at Lump Sum Price..... <$158,000.00>

ITEM 3.

Provide an additional 5 conduit penetrations and 9 mounting plates in and around the SAS Tower as identified by Caltrans letter 05.03.01-007349, dated April 27, 2010, and added after November 17, 2010.

Adjustment of Compensation at Lump Sum Price..... $2,419.00

CONTRACT CHANGE ORDER

Change Requested by: Engineer

CCO: 68 **Suppl. No.** 0 **Contract No.** 04 – 0120F4 **Road** SF-80-13.2/13.9 **FED. AID LOC.:**

CHANGE ORDER COST AND TIME SUMMARY

(ITEM 1) Adjustment of Compensation at Lump Sum Price	$158,000.00
(ITEM 2) Amount paid under CCO 108S1 for this change order	<$158,000.00>
(ITEM 3) Adjustment of Compensation at Lump Sum Price	$2,419.00>
Total net pay for this change order	$2,419.00

This sum constitutes full and complete compensation for furnishing all labor, material, tools and incidentals including all markups by reason of this change.

Contract time is addressed in CCO 108S1 for Item 1 in this change order. Therefore, contract time will not be adjusted in this change order.

Estimated Cost: **Increase** ☒ **Decrease** ☐ **$2,419.00**

By reason of this order the time of completion will be adjusted as follows: **0 days**

Submitted by

Signature Kannu Balan **Resident Engineer** Kannu Balan, Senior T.E. **Date** 7-23-10

Approval Recommended by

Signature **Supervising Bridge Engineer** Richard Morrow, Sup. B.E. **Date** 7/26/10

Engineer Approval by

Signature **Supervising Transportation Engineer** Gary Pursell, Sup. T.E. **Date** 8/9/10

We the undersigned contractor, have given careful consideration to the change proposed and agree, if this proposal is approved, that we will provide all equipment, furnish the materials, except as otherwise be noted above, and perform all services necessary for the work above specified, and will accept as full payment therefor the prices shown above.

NOTE: If you, the contractor, do not sign acceptance of this order, your attention is directed to the requirements of the specifications as to proceeding with the ordered work and filing a written protest within the time therein specified.

Contractor Acceptance by

Signature Michael D. Flowers (Print name and title) Michael D. Flowers Project Director **Date** 8-5-10

STATE OF CALIFORNIA - DEPARTMENT OF TRANSPORTATION

CONTRACT CHANGE ORDER MEMORANDUM

TO: Pete Siegenthaler, Prin TE /	FILE: **E.A.** 04 - 0120F4
FROM: Gary Pursell, Sup. TE	**CO-RTE-PM** SF-80-13.2/13.9
	FED. NO.

CCO#: **68**	SUPPLEMENT#: **0**	Category Code: **CHPT**	CONTINGENCY BALANCE (incl. this change) **$79,639,680.40**
COST: **$2,419.00**	INCREASE ☑ DECREASE ☐		HEADQUARTERS APPROVAL REQUIRED? ☐ YES ☑ NO
SUPPLEMENTAL FUNDS PROVIDED: **$0.00**			IS THIS REQUEST IN ACCORDANCE WITH ENVIRONMENTAL DOCUMENTS? ☑ YES ☐ NO

CCO DESCRIPTION:
Additional Tower Penetrations

PROJECT DESCRIPTION:
CONSTRUCT SELF-ANCHORED SUSPENSION BRIDGE

Original Contract Time:	Time Adj. This Change:	Previously Approved CCO Time Adjustments:	Percentage Time Adjusted: (including this change)	Total # of Unreconciled Deferred Time CCO(s): (including this change)
2490 Day(s)	**0** Day(s)	**227** Day(s)	**9** %	**6**

THIS CHANGE ORDER PROVIDES FOR:

Providing additional conduit penetrations and cover, doubler, and mounting plates in and around the SAS Tower.

This change order resolves the costs associated with Contractor Request For Information (RFI) numbers 1029R0, 1029R2, 1029R3 and 1326 with respect to changes listed above.

Additional penetrations and doubler plates are needed for FAA and US Coast Guard warning systems and also for Homeland Security Agency systems. Additional penetrations are needed for mechanical, electrical, and plumbing purposes due to conflicts with strut openings. To balance the loss of strength at penetration locations additional doubler plates are required. Additional mounting plates are needed for camera and MVDS conduit support. This change order will incorporate these changes into the SAS Tower fabrication.

Since the cost, of $158,000.00 for the changes prior to November 17, 2010, is included in Contract Change Order 108 Supplement 1 (CCO 108S1) Claim Settlement Report No. 1 resolution costs the net payment in this change order is $2,419.00 for the changes that occurred after November 17, 2010. The cost of this change order can be financed from the contingency fund. A detailed cost estimate is on file.

A determination of the delay in completion of the contract due to work specified by Contract Change Order 68, has been made in CCO 108S1 and is part of the Claims Settlement Report (CSR) No. 1 for this project. Therefore, no adjustment of time is warranted by reason of this change order.

This change order received concurrence from Gary Pursell (Resident Engineer), Rick Morrow (Sup. Structure Rep), Mike Forner (Principal TE), Robert Kobal (HQ Oversight), Ken Terpstra (Project Manager), Wenyi Long (Design Oversight), and Lina Ellis (Structure Maintenance).

Claims Settlement Report (CSR) No. 1, for this project, revises the authority to "Issue and Approve" the changes listed in CCO 108S1 Appendices A & B. The authority to "Issue and Approve" the changes listed in Appendices A & B for the values of time and money contemplated therein has been delegated to the District for approval and approval of each of these change orders by the Headquarters CCO Desk will not be required. Since this change order is included in CCO 108S1 no Headquarters CCO Desk "Issue and Approve" is required, a copy of CCO 108S1 is attached for reference.

ADA Notice: For individuals with sensory disabilities, this document is available in alternate formats. For information call: (916) 654-6410 or TDD (916) 654-3880 or write Records and Forms Management, 1120 N Street, MS-89, Sacramento, CA 95814.

CONCURRED BY:			
Construction Engineer:	Res. Eng., Gary Pursell, Sup. TE	Date	2/4/08
Bridge Engineer:	Struct Rep, Rick Morrow, Sup TE	Date	2/5/08
Project Engineer:	CT Oversight, Wenyi Long, P.E.	Date	2/24/10
Project Manager:	Proj Manager, Ken Terpstra	Date	2/8/08
FHWA Rep.:		Date	
Environmental:		Date	
Other (specify):	PCE, Mike Forner, Prin TE	Date	2/5/08
Other (specify):	Struct. Maint, Lina Ellis	Date	2/24/10
District Prior Approval By:		Date	
HQ (Issue Approve) By:		Date	
Resident Engineer's Signature	for G Pursell	Date	7/26/10

ESTIMATE OF COST		
	THIS REQUEST	TOTAL TO DATE
ITEMS	$0.00	$0.00
FORCE ACCOUNT	$0.00	$0.00
AGREED PRICE	$0.00	$0.00
ADJUSTMENT	$2,419.00	$2,419.00
TOTAL	$2,419.00	$2,419.00

FEDERAL PARTICIPATION

☐ PARTICIPATING ☐ PARTICIPATING IN PART ☑ NONE
☐ NON-PARTICIPATING (MAINTENANCE) ☐ NON-PARTICIPATING

FEDERAL SEGREGATION (if more than one Funding Source or P.I.P. type)
☐ CCO FUNDED PER CONTRACT ☐ CCO FUNDED AS FOLLOWS

FEDERAL FUNDING SOURCE	PERCENT

ADA Notice: For individuals with sensory disabilities, this document is available in alternate formats. For information call: (916) 654-6410 or TDD (916) 654-3880 or write Records and Forms Management, 1120 N Street, MS-89, Sacramento, CA 95814.

STATE OF CALIFORNIA - DEPARTMENT OF TRANSPORTATION

CONTRACT CHANGE ORDER

Change Requested by: Engineer

CCO: 68 **Suppl. No. 1** **Contract No. 04 – 0120F4** **Road** SF-80-13.2/13.9 **FED. AID LOC.:**

To: **AMERICAN BRIDGE/FLUOR ENTERPRISES INC A JOINT VENTURE**

You are directed to make the following changes from the plans and specifications or do the following described work not included in the plans and specifications for this contract. ***NOTE: This change order is not effective until approved by the Engineer.***

Description of work to be done, estimate of quantities and prices to be paid. (Segregate between additional work at contract price, agreed price and force account.) Unless otherwise stated, rates for rental of equipment cover only such time as equipment is actually used and no allowance will be made for idle time. This last percentage shown is the net accumulated increase or decrease from the original quantity in the Engineer's Estimate.

Adjustment of Compensation at Lump Sum Price:

Item 1.

As identified by Submittals #1239 Rev. 6 and Rev. 9 and revised after April 27, 2010, modify the following in Tower Head Lift 5:

- Provide an additional eight (8) 150x150x13 mm mounting plates in the Diaphragm and West Shaft
- Enlarge the hole size of five (5) penetrations
- Increase the size of three (3) dehumidification openings

For this work, the Contractor will receive a lump sum price of $5,234.00. This sum constitutes full and complete compensation for furnishing all labor, material, tools and incidentals including all markups by reason of this change.

Adjustment of Compensation at Lump Sum.....$5,234.00

Estimate of Increase in Contract Item at Contract Price:

Item 2.

- Additional conduit mounting plates.
- Increased size of dehumidifier doubler plate in/outlets and dehumidifier doubler plate makeup.

Item No. 52: FURNISH STRUCTURAL STEEL (BRIDGE) (TOWER)
44 KG (+0.00%) @ $10.00 /KG =+$ 440.00 (+0.00%)

Item No. 53: ERECT STRUCTURAL STEEL (BRIDGE) (TOWER)
44 KG (+0.00%) @ $1.00 /KG =+$ 44.00 (+0.00%)

The quantity increases shown herein for Items #52 and 53, when combined with the quantity shown in the Engineer's Estimate, and as modified by any previous change orders or revisions to dimensions made by the Engineer, shall be the final quantity for which payment will be made.

Total Cost for Increase in Contract Item..... $484.00

Estimated Cost: Increase ☒ Decrease ☐ $5,718.00

By reason of this order the time of completion will be adjusted as follows: 0 Days

Submitted by

Signature Kannu Balan **Resident Engineer** Kannu Balan, Senior T.E. **Date** 6-13-11

Approval Recommended by

Signature W. Shadd **Supervising Bridge Engineer** W. Shadd for Rick Morrow, Sup. B.E. **Date** 6-13-11

Engineer Approval by

Signature Pete Siegenthaler **Principal Transportation Engineer** Peter Siegenthaler, Prin. T.E. **Date** 6-16-11

We the undersigned contractor, have given careful consideration to the change proposed and agree, if this proposal is approved, that we will provide all equipment, furnish the materials, except as otherwise be noted above, and perform all services necessary for the work above specified, and will accept as full payment therefor the prices shown above.

NOTE: If you, the contractor, do not sign acceptance of this order, your attention is directed to the requirements of the specifications as to proceeding with the ordered work and filing a written protest within the time therein specified.

Contractor Acceptance by

Signature (Print name and title) BRIAN A. PETERSEN - PROJECT DIRECTOR **Date** 15JUN11

STATE OF CALIFORNIA - DEPARTMENT OF TRANSPORTATION

CONTRACT CHANGE ORDER MEMORANDUM

DATE: 6/13/2011 Page 1 of 1

TO: Pete Siegenthaler, Prin TE /	FILE: **E.A.** 04 - 0120F4
FROM: Kannu Balan, Senior TE	**CO-RTE-PM** SF-80-13.2/13.9
	FED. NO.
CCO#: **68** SUPPLEMENT#: **1** Category Code: **CHPT**	CONTINGENCY BALANCE (incl. this change) **$168,839,328.11**
COST: **$5,718.00** INCREASE ☑ DECREASE ☐	HEADQUARTERS APPROVAL REQUIRED? ☐ YES ☑ NO
SUPPLEMENTAL FUNDS PROVIDED: **$0.00**	IS THIS REQUEST IN ACCORDANCE WITH ENVIRONMENTAL DOCUMENTS? ☑ YES ☐ NO
CCO DESCRIPTION: Tower Head Attachments	**PROJECT DESCRIPTION:** CONSTRUCT SELF-ANCHORED SUSPENSION BRIDGE

Original Contract Time:	Time Adj. This Change:	Previously Approved CCO Time Adjustments:	Percentage Time Adjusted: (including this change)	Total # of Unreconciled Deferred Time CCO(s): (including this change)
2490 Day(s)	**0** Day(s)	**501** Day(s)	**20** %	**1**

THIS CHANGE ORDER PROVIDES FOR:

Modifying Tower Head Lift 5 by providing additional mounting plates, enlarging the hole size of penetrations, and increasing the size of dehumidification openings.

Submittals #1239 Rev. 6 and Rev. 9 "Tower Head" added plates and revised plate and penetration locations for conduit support and to avoid interference with the handrails. The changes are highlighted in red font in the attached Tower Head Penetration and Mounting Plate Attachment chart, developed in accordance to Submittals #1239 Rev. 6 and Rev. 9. Note that these locations are taken using the cambered elevation 159.869 m as a reference point. This change order will compensate the Contractor for changes that were not identified prior to April 27, 2010, in CCO 68S0.

The cost of this supplemental change is $5,718.00, which can be financed from the contingency fund. This will result in a cumulative amount of $8,137.00 for CCO 68S0 and 68S1. A detailed cost estimate is on file.

No time adjustment is warranted, as this change order does not affect the controlling operation.

This change order has concurrence from Peter Siegenthaler (Principal TE), Rick Morrow (Sup. BE), Jing Chen (District Design), and Wenyi Long (Design Oversight). Maintenance concurrence is not required.

CONCURRED BY:		
Construction Engineer:	PCE, Pete Siegenthaler, Prin TE	Date 11/11/10
Bridge Engineer:	Rick Morrow, Sup BE	Date 11/3/10
Project Engineer:	CT Oversight, Wenyi Long, P.E.	Date 11/3/10
Project Manager:		Date
FHWA Rep.:		Date
Environmental:		Date
Other (specify):	District Design, Jing Chen	Date 3/10/11
Other (specify):		Date
District Prior Approval By:		Date
HQ (Issue Approve) By:		Date
Resident Engineer's Signature:	Kannu Balan	Date 6-13-11

ESTIMATE OF COST

	THIS REQUEST	TOTAL TO DATE
ITEMS	$484.00	$484.00
FORCE ACCOUNT	$0.00	$0.00
AGREED PRICE	$0.00	$0.00
ADJUSTMENT	$5,234.00	$7,653.00
TOTAL	$5,718.00	$8,137.00

FEDERAL PARTICIPATION

☐ PARTICIPATING ☐ PARTICIPATING IN PART ☑ NONE
☐ NON-PARTICIPATING (MAINTENANCE) ☐ NON-PARTICIPATING

FEDERAL SEGREGATION (if more than one Funding Source or P.I.P. type)
☐ CCO FUNDED PER CONTRACT ☐ CCO FUNDED AS FOLLOWS

FEDERAL FUNDING SOURCE	PERCENT

ADA Notice: For individuals with sensory disabilities, this document is available in alternate formats. For information call: (916) 654-6410 or TDD (916) 654-3880 or write Records and Forms Management, 1120 N Street, MS-89, Sacramento, CA 95814.

STATE OF CALIFORNIA - DEPARTMENT OF TRANSPORTATION

CONTRACT CHANGE ORDER

Change Requested by: Engineer

CCO: 69 **Suppl. No. 0** **Contract No. 04 – 0120F4** **Road** SF-80-13.2/13.9 **FED. AID LOC.:**

To: **AMERICAN BRIDGE/FLUOR ENTERPRISES INC A JOINT VENTURE**

You are directed to make the following changes from the plans and specifications or do the following described work not included in the plans and specifications for this contract. ***NOTE: This change order is not effective until approved by the Engineer.***

Description of work to be done, estimate of quantities and prices to be paid. (Segregate between additional work at contract price, agreed price and force account.) Unless otherwise stated, rates for rental of equipment cover only such time as equipment is actually used and no allowance will be made for idle time. This last percentage shown is the net accumulated increase or decrease from the original quantity in the Engineer's Estimate.

Eliminate the requirement to pressure test the closed U-ribs stiffeners underneath the steel orthotropic bridge deck. Add capping plates to the diagonal stiffener plates at the BC and CD corners of the tower legs as shown in this change order.

Adjustment of Compensation at Lump Sum Price:

Revise Section 10-1.59, "STEEL STRUCTURES," subsection "INSPECTION AND TESTING," subsection "Pressure Test," of the Special Provisions as follows:

Where a pressure test is specified on the plans other than for the OBG U-ribs, ~~such as to verify the integrity of closed rib sections,~~ the air tightness of the enclosed area shall be pressure tested. The air pressure used for the test shall be ~~0.2~~ 3.0 bar. The enclosed area shall be pressurized, and then isolated by closing the fill valve. Valves shall be placed in the ends of the capping plates ~~diaphragm of the rib~~. A calibrated pressure gage with suitable precision shall be monitored over a period of 2 hours. The pressure shall not drop by more than 10%. Compensation for pressure variations due to temperature changes shall be permitted within a range of 5 degrees Centigrade.

~~Five percent of ribs between bolted splices shall be leak tested. If leaks are detected, all of the rib spaces within the panel shall be subjected to leak testing.~~ If leaks are detected, t~~T~~he Contractor shall repair the defects at the Contractor's expense.

The following revised contract plan sheets detail all changes:

Sheets 544R3, 549R3, 554R3, 607R1 and 628R1 (of 1204).

This change order resolves the costs associated with Contractor Request For Information (RFI) Nos. 1058 and 1058R1 with respect to changes listed above.

For this work, the Contractor agrees to perform this work at no additional cost to the Department. This sum constitutes full and complete compensation for furnishing all labor, material, tools and incidentals including all markups by reason of this change.

Adjustment of Compensation at Lump Sum Price.....$0.00

Estimated Cost: **Increase** ☐ **Decrease** ☐ **$0.00**

By reason of this order the time of completion will be adjusted as follows: **0 days**

Submitted by

Signature B Boal **Resident Engineer** Brian Boal for Gary Pursell, Sup.T.E. **Date** 1/14/09

Approval Recommended by

Signature [signature] **Supervising Bridge Engineer** Richard Morrow, Sup.T.E. **Date** 1/14/09

Engineer Approval by

Signature Gary Pursell **Supervising Transportation Engineer** Gary Pursell, Sup.T.E. **Date** 3/10/09

We the undersigned contractor, have given careful consideration to the change proposed and agree, if this proposal is approved, that we will provide all equipment, furnish the materials, except as otherwise be noted above, and perform all services necessary for the work above specified, and will accept as full payment therefor the prices shown above.

NOTE: If you, the contractor, do not sign acceptance of this order, your attention is directed to the requirements of the specifications as to proceeding with the ordered work and filing a written protest within the time therein specified.

Contractor Acceptance by

Signature [signature] (Print name and title) Michael D. Flowers Project Director **Date** 3-5-09

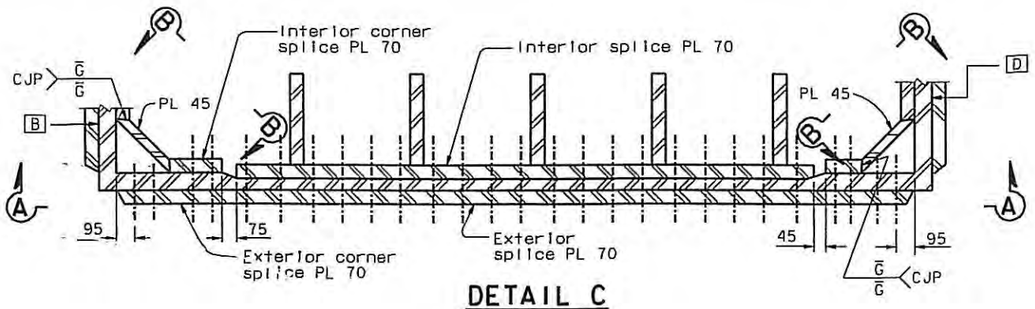

DETAIL C
1:15

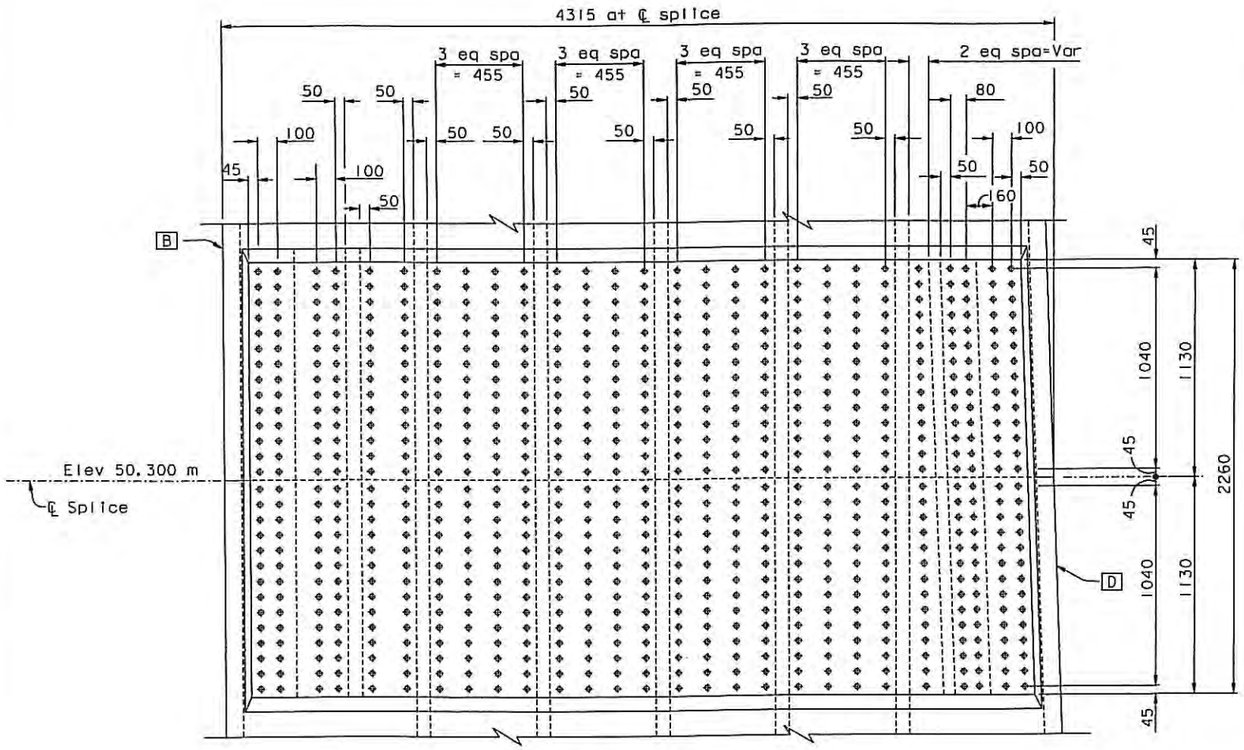

ELEVATION A-A
1:15

TOWER SKIN PLATE C

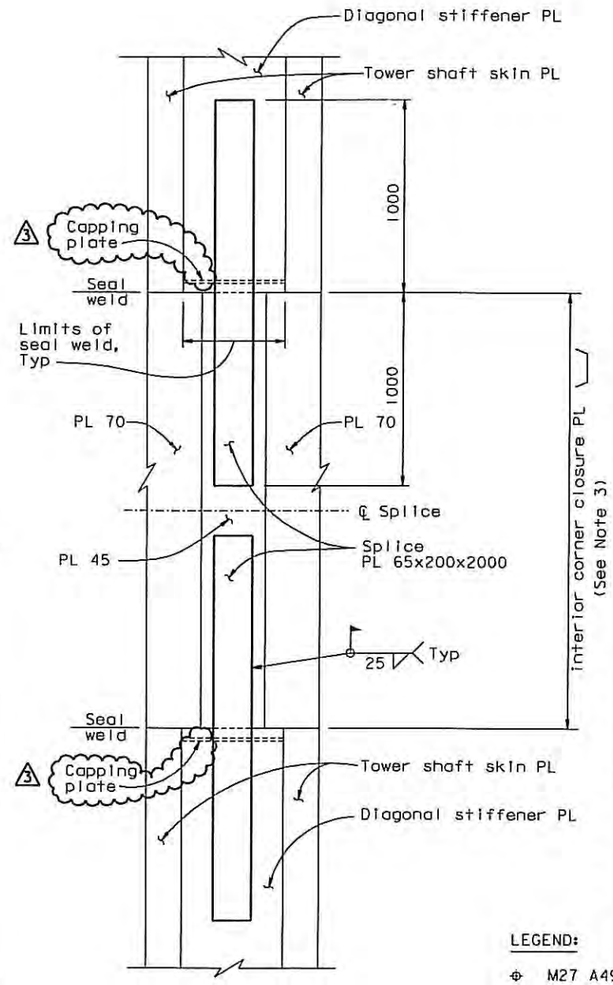

ELEVATION B-B
1:15

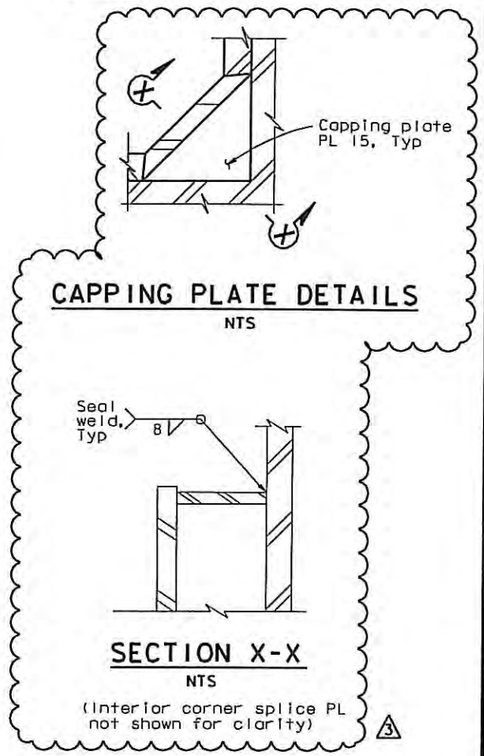

LEGEND:

⊕ M27 A490-X HS Bolts

NOTES:

1. The tower splice connections are designed as slip critical connections with class B contact surface (slip coefficient 0.5). The Contractor shall ensure that the flatness requirements are met at the faying surfaces.
2. Elevation view of adjacent skin plate not shown
3. The length of the interior corner splice plate shall be adjusted to ensure the 45 mm minimum bolt edge distance (in the vertical direction).

REQUESTS FOR INFORMATION NOT ADDRESSED IN THIS CCO REMAIN IN FORCE					
3	10/08/08	U-RIB & TOWER CORNER SEALING	MN	NV	69
2	07/25/08	TOWER DOUBLER PLATE & SPLICE CORNER DETAILS	MN	NV	62
1	05/21/08	SPLICE PLATES PER ISM	MN	NV	21
MARK	DATE	DESCRIPTIONS	BY	CH'D	CCO#
REVISIONS					

CONTRACT CHANGE ORDER NO. 69
SHEET 2 OF 6

ALL DIMENSIONS ARE IN MILLIMETERS UNLESS OTHERWISE SHOWN

DIST.	COUNTY	ROUTE	KILOMETER POST TOTAL PROJECT	SHEET NO.	TOTAL SHEETS
04	SF	80	13.2/13.9	544R3	1204

REGISTERED ENGINEER - CIVIL
12-6-04
PLANS APPROVAL DATE
REGISTERED PROFESSIONAL ENGINEER Marwan N. Nader No. C 054426 Exp. 12/31/09 CIVIL STATE OF CALIFORNIA
The State of California or its officers or agents shall not be responsible for the accuracy or completeness of electronic copies of this plan sheet.

T.Y. LIN / MOFFATT & NICHOL
825 BATTERY STREET
SAN FRANCISCO, CA 94111

Caltrans now has a web site! To get to the web site, go to: http://www.dot.ca.gov

R. Vallzadeh/V. Toon/Y.L./W.L./F.C.	DESIGN	BY M. Nader	CHECKED M. Gulyas	PREPARED FOR THE STATE OF CALIFORNIA DEPARTMENT OF TRANSPORTATION
DESIGN OVERSIGHT	DETAILS	BY J. Lopez	CHECKED N. Vo	
SIGN OFF DATE 10/08/08	QUANTITIES	BY L. Rus	CHECKED Y. Zhang	

R. Manzanarez
PROJECT ENGINEER

BRIDGE NO. 34-0006L/R
KILOMETER POST 13.2/13.9

CU 04
EA 0120F1

SAN FRANCISCO OAKLAND BAY BRIDGE
EAST SPAN SEISMIC SAFETY PROJECT
SELF-ANCHORED SUSPENSION BRIDGE
(SUPERSTRUCTURE & TOWER)

TOWER SPLICE DETAILS NO. 5

Rev. Date: 5-18-98

ORIGINAL SCALE IN MILLIMETERS FOR REDUCED PLANS 0 10 20 30 40 50 60 70 80 90 100

DISREGARD PRINTS BEARING EARLIER REVISION DATES →

REVISION DATES (PRELIMINARY STAGE ONLY): 08/20/99 | 05/21/01 | 01/08/02 | 07/09/02 | 12/15/02

SHEET 127R3 OF

FILE => I:\bb\04-0120F1\sas\contract plans and cco\cco\in progress\cco#69\update 10-08-08\dgn\aatsp05.dgn

100% PS&E

TIME PLOTTED => 11:27:00
DATE PLOTTED => 08 OCT 2008
USERNAME => dwinrow

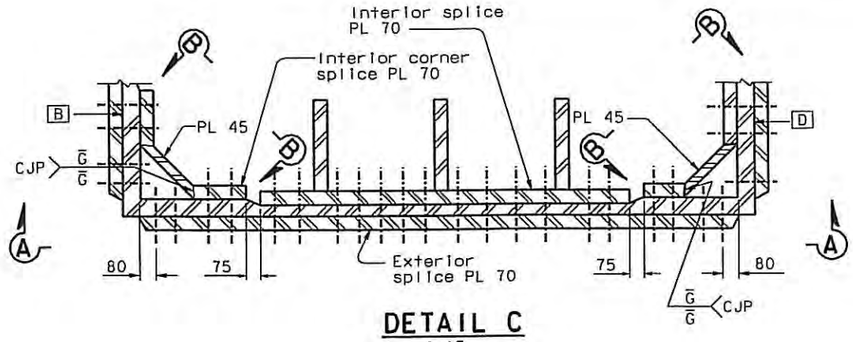

DETAIL C
1:15

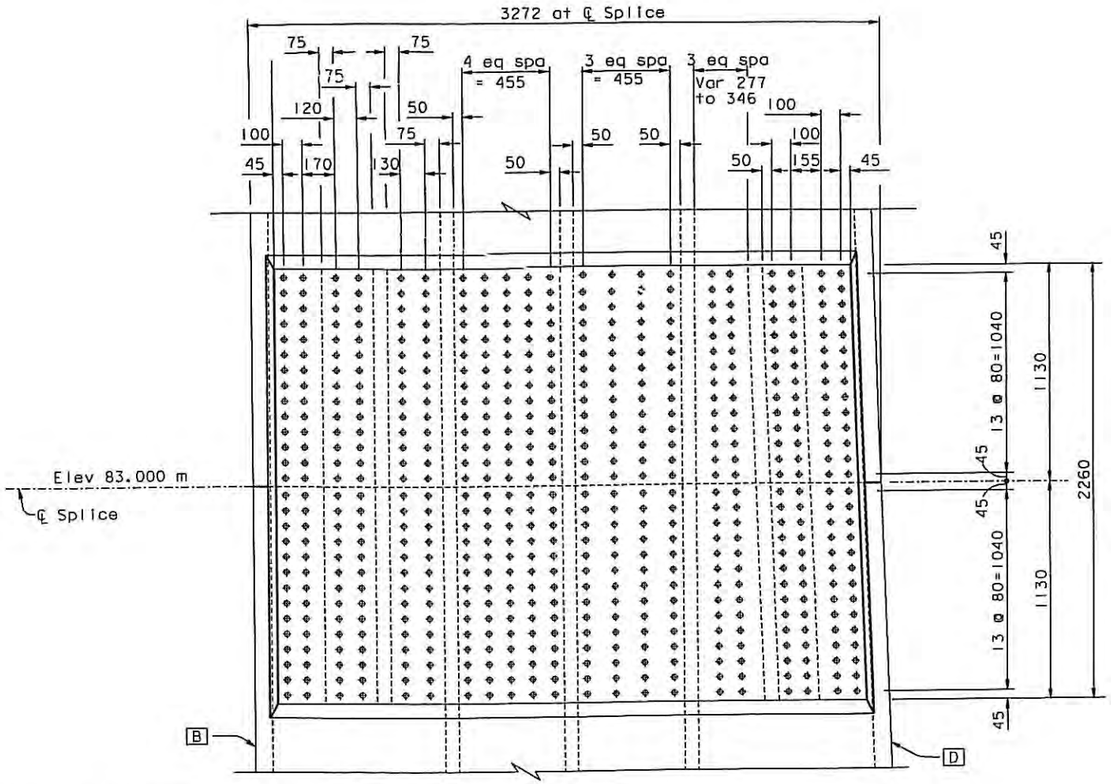

ELEVATION A-A
1:15

TOWER SKIN PLATE C

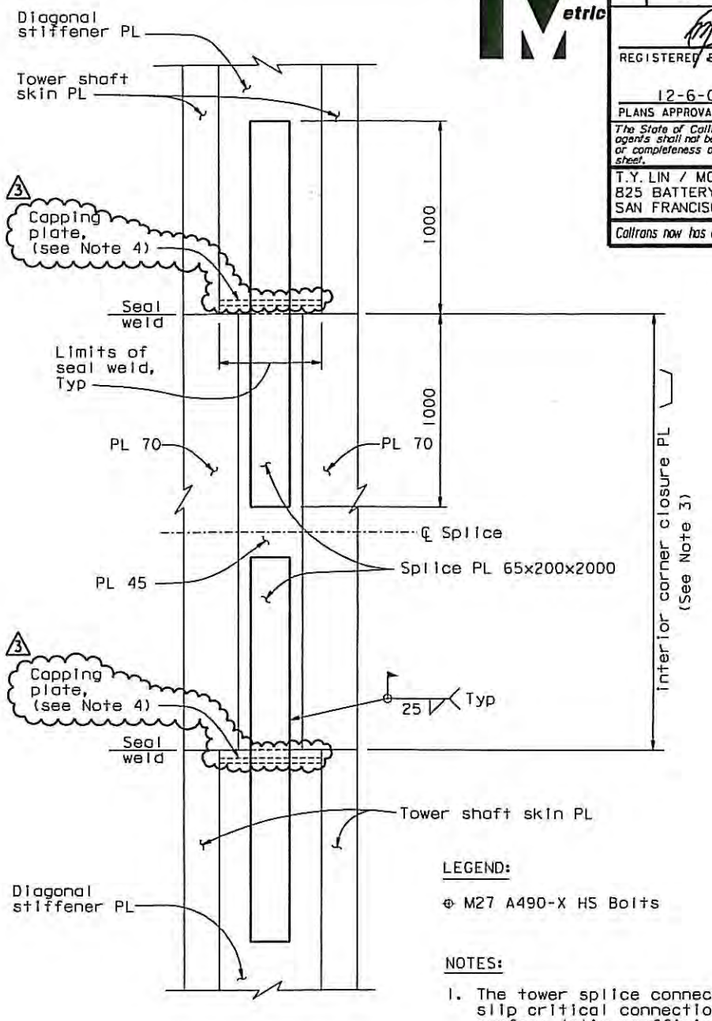

ELEVATION B-B
1:15

LEGEND:

⊕ M27 A490-X HS Bolts

NOTES:

1. The tower splice connections are designed as slip critical connections with class B contact surface (slip coefficient 0.5). The Contractor shall ensure that the flatness requirements at the faying surfaces and the geometry control are met.
2. Elevation view of adjacent skin plate not shown for clarity.
3. The length of the interior corner splice plate shall be adjusted to ensure the 45 mm minimum bolt edge distance (in the vertical direction).
4. (3) For Capping Plate Details, see "Tower Splice Details No.5" sheet.

DIST.	COUNTY	ROUTE	KILOMETER POST TOTAL PROJECT	SHEET NO.	TOTAL SHEETS
04	SF	80	13.2/13.9	549R3	1204

Caltrans Metric

REGISTERED ENGINEER - CIVIL

12-6-04
PLANS APPROVAL DATE

REGISTERED PROFESSIONAL ENGINEER — Marwan N. Nader — No. C 054426 — Exp. 12/31/09 — CIVIL — STATE OF CALIFORNIA

The State of California or its officers or agents shall not be responsible for the accuracy or completeness of electronic copies of this plan sheet.

T.Y. LIN / MOFFATT & NICHOL
825 BATTERY STREET
SAN FRANCISCO, CA 94111

Caltrans now has a web site! To get to the web site, go to: http://www.dot.ca.gov

REQUESTS FOR INFORMATION NOT ADDRESSED IN THIS CCO REMAIN IN FORCE					
MARK	DATE	REVISIONS DESCRIPTIONS	BY	CH'D	CCO#
3	10/03/08	U-RIB & TOWER CORNER SEALING	MN	NV	69
2	07/25/08	TOWER DOUBLER PLATE & SPLICE CORNER DETAILS	MN	NV	62
1	06/23/06	SPLICE PLATES PER ISM	MN	NV	21

CONTRACT CHANGE ORDER NO. 69
SHEET 3 OF 6

ALL DIMENSIONS ARE IN MILLIMETERS UNLESS OTHERWISE SHOWN

SAN FRANCISCO OAKLAND BAY BRIDGE
EAST SPAN SEISMIC SAFETY PROJECT
SELF-ANCHORED SUSPENSION BRIDGE
(SUPERSTRUCTURE & TOWER)

TOWER SPLICE DETAILS NO. 10

	BY	CHECKED
DESIGN	M. Nader	N. Vo
DETAILS	C. Chol	N. Vo
QUANTITIES	C. Chol	N. Vo

PREPARED FOR THE STATE OF CALIFORNIA
DEPARTMENT OF TRANSPORTATION

R. Manzanarez
PROJECT ENGINEER

BRIDGE NO. 34-0006L/R
KILOMETER POST 13.2/13.9

R. Vallizadeh/V. Toan/Y.L./W.L./F.C.
DESIGN OVERSIGHT
SIGN OFF DATE 10/03/08

Rev. Date: 5-18-98

ORIGINAL SCALE IN MILLIMETERS FOR REDUCED PLANS 0 10 20 30 40 50 60 70 80 90 100

CU 04
EA 0120F1

DISREGARD PRINTS BEARING EARLIER REVISION DATES

REVISION DATES (PRELIMINARY STAGE ONLY): 08/29/08 | 05/27/03 | 04/09/03 | 01/24/03 | 12/19/02

SHEET 132R3 OF

FILE => I:\bb\04-0120F1\sas\contract plans and cco\cco\In progress\cco#69\original 10-03-08\dgn\oatspl0.dgn

100 % PS&E

TIME PLOTTED => 11:25:37
DATE PLOTTED => 03 OCT 2008
USERNAME => vignatovs

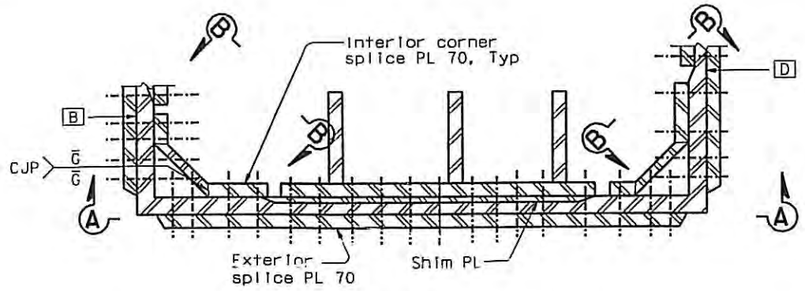

DETAIL C
1:15

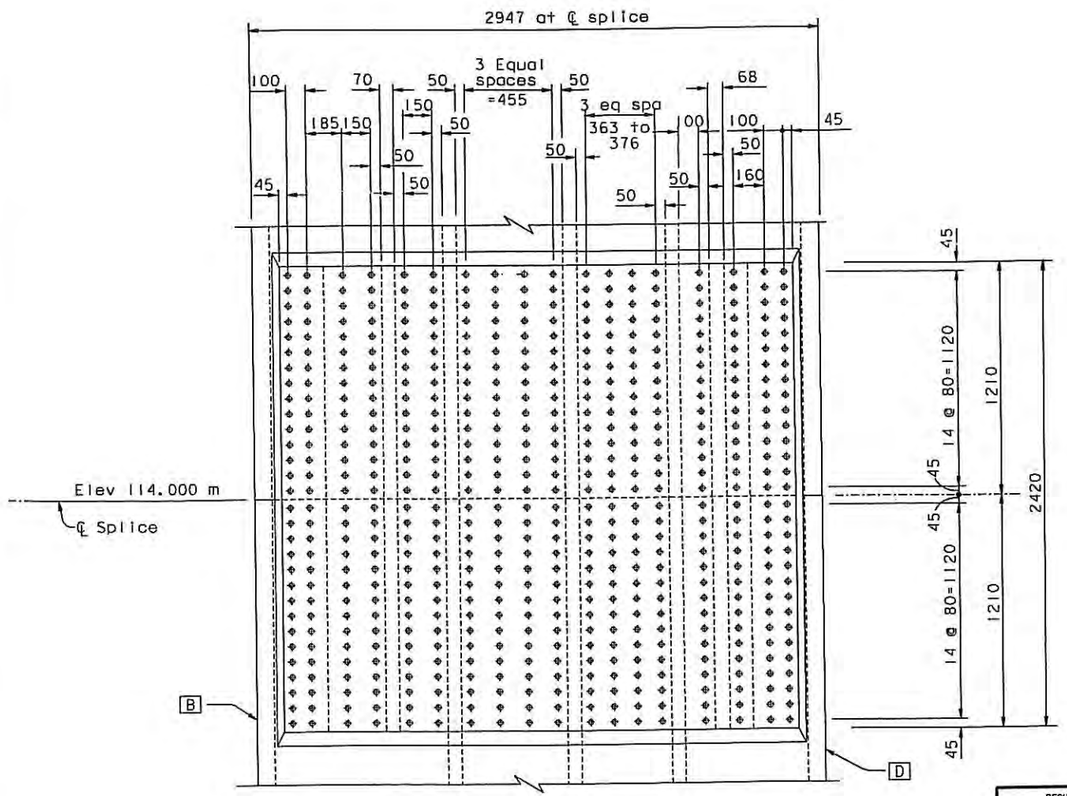

ELEVATION A-A
1:15

TOWER SKIN PLATE C

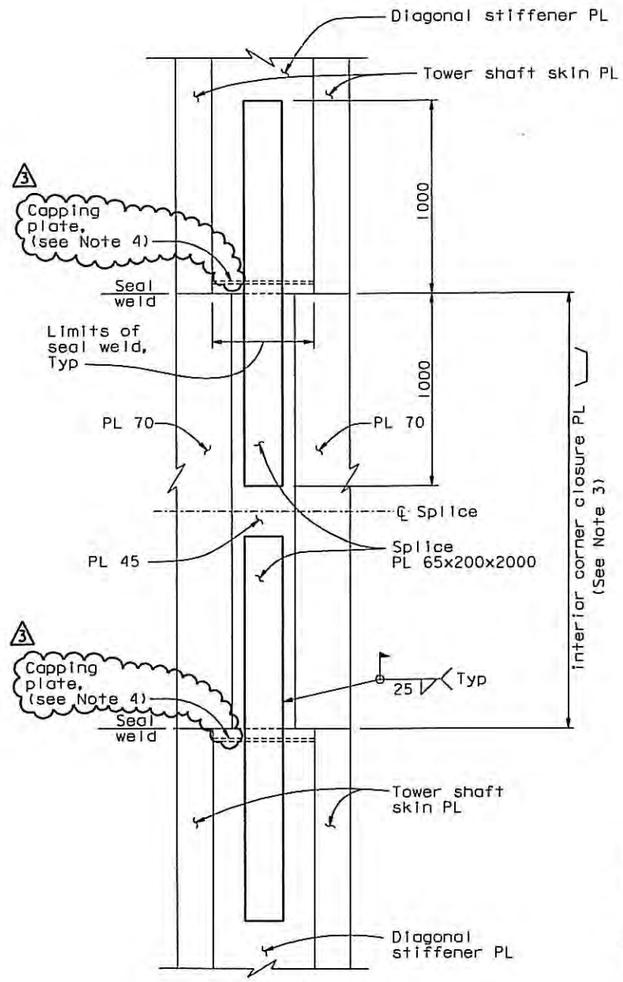

ELEVATION B-B
1:15

LEGEND:

⊕ M27 A490-X HS Bolts

NOTES:

1. The tower splice connections are designed as slip critical connections with class B contact surface (slip coefficient 0.5). The Contractor shall ensure that the flatness requirements at the faying surfaces and the geometry control are met.
2. Elevation view of adjacent skin plate not shown for clarity.
3. The length of the interior corner splice plate shall be adjusted to ensure the 45 mm minimum bolt edge distance (in the vertical direction).
4. (3) For Capping Plate Details, see "Tower Splice Details No.5" sheet.

MARK	DATE	DESCRIPTIONS (REVISIONS)	BY	CH'D	CCO#
3	10/03/08	U-RIB & TOWER CORNER SEALING	MN	NV	69
2	07/25/08	TOWER DOUBLER PLATE & SPLICE CORNER DETAILS	MN	NV	62
1	06/21/06	SPLICE PLATES PER 15M	MN	NV	21

REQUESTS FOR INFORMATION NOT ADDRESSED IN THIS CCO REMAIN IN FORCE

CONTRACT CHANGE ORDER NO. 69
SHEET 4 OF 6

ALL DIMENSIONS ARE IN MILLIMETERS UNLESS OTHERWISE SHOWN

DIST.	COUNTY	ROUTE	KILOMETER POST TOTAL PROJECT	SHEET NO.	TOTAL SHEETS
04	SF	80	13.2/13.9	554R3	1204

REGISTERED ENGINEER - CIVIL
12-6-04
PLANS APPROVAL DATE
Marwan N. Nader No. C 054426 Exp. 12/31/09 CIVIL STATE OF CALIFORNIA
The State of California or its officers or agents shall not be responsible for the accuracy or completeness of electronic copies of this plan sheet.

T.Y. LIN / MOFFATT & NICHOL
825 BATTERY STREET
SAN FRANCISCO, CA 94111

Caltrans now has a web site! To get to the web site, go to: http://www.dot.ca.gov

R. Valtzadeh/V. Toan/Y.L./W.L./F.C.
DESIGN OVERSIGHT
SIGN OFF DATE 10/03/08

	BY	CHECKED
DESIGN	M. Nader	N. Vo
DETAILS	J. Lopez	N. Vo
QUANTITIES	J. Lopez	N. Vo

PREPARED FOR THE STATE OF CALIFORNIA DEPARTMENT OF TRANSPORTATION

R. Manzanarez
PROJECT ENGINEER

BRIDGE NO. 34-0006L/R
KILOMETER POST 13.2/13.9

CU 04
EA 0120F1

SAN FRANCISCO OAKLAND BAY BRIDGE
EAST SPAN SEISMIC SAFETY PROJECT
SELF-ANCHORED SUSPENSION BRIDGE (SUPERSTRUCTURE & TOWER)

TOWER SPLICE DETAILS NO. 15

DISREGARD PRINTS BEARING EARLIER REVISION DATES →
REVISION DATES (PRELIMINARY STAGE ONLY)
SHEET 137R3 OF

Rev. Date: 5-18-98
ORIGINAL SCALE IN MILLIMETERS FOR REDUCED PLANS 0 10 20 30 40 50 60 70 80 90 100

FILE => I:\bb\04-0120f1\sas\contract plans and cco\cco\in progress\cco#69\original 10-03-08\dgn\detsp15.dgn

100 % PS&E
TIME PLOTTED => 11:26:28
USERNAME => vignotavs
DATE PLOTTED => 03 OCT 2008

DIST.	COUNTY	ROUTE	KILOMETER POST TOTAL PROJECT	SHEET NO.	TOTAL SHEETS
04	SF	80	13.2/13.9	607R1	1204

REGISTERED ENGINEER - CIVIL

12-6-04

PLANS APPROVAL DATE

The State of California or its officers or agents shall not be responsible for the accuracy or completeness of electronic copies of this plan sheet.

PROFESSIONAL ENGINEER — Marwan N. Nader — No. C 054426 — Exp. 12/31/09 — CIVIL — STATE OF CALIFORNIA

T.Y. LIN / MOFFATT & NICHOL
825 BATTERY STREET
SAN FRANCISCO, CA 94111

Caltrans now has a web site! To get to the web site, go to: http://www.dot.ca.gov

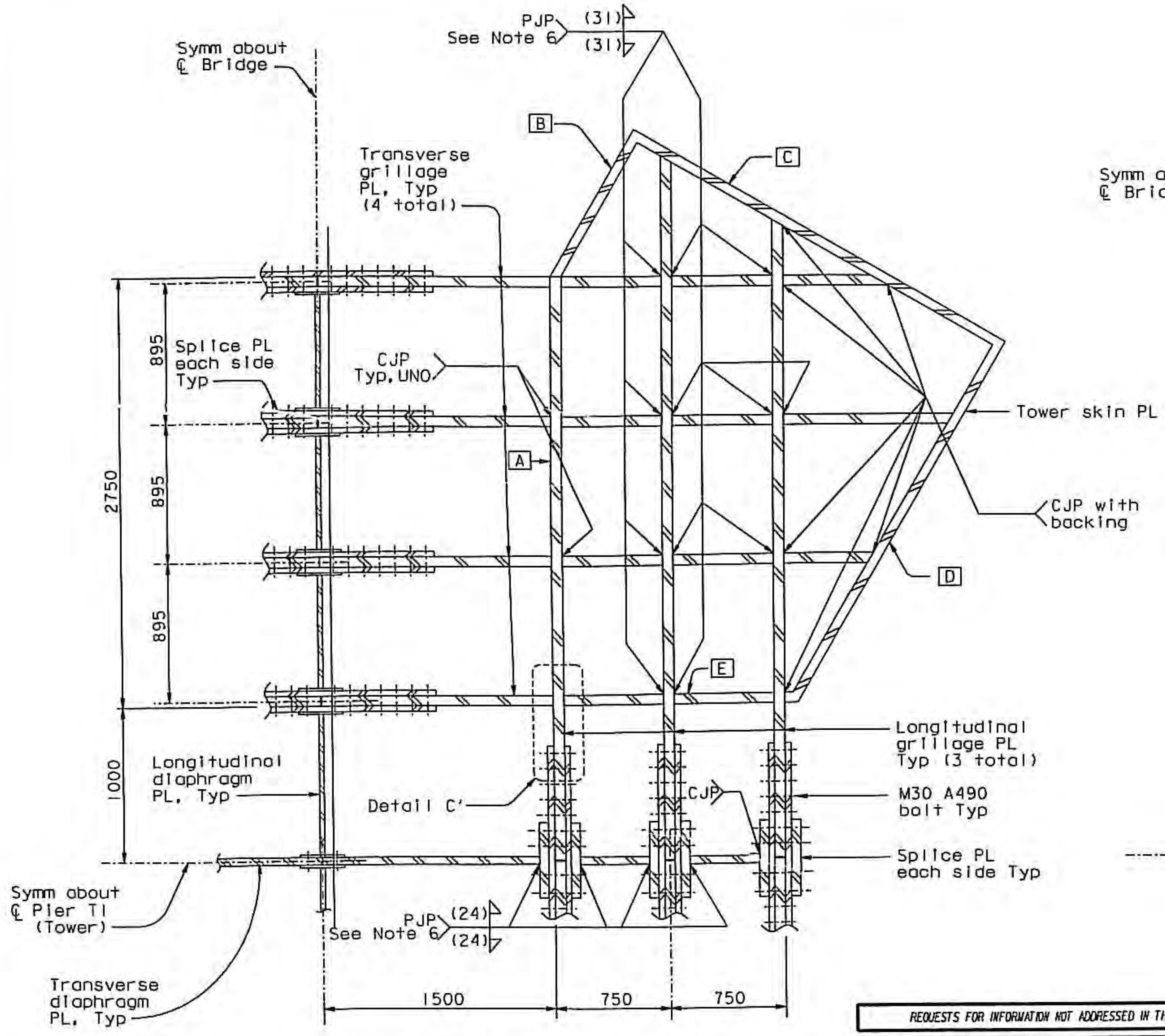

DETAIL C (Between Elevation 149.850 m & 147.500 m, see Note 3)

1:20

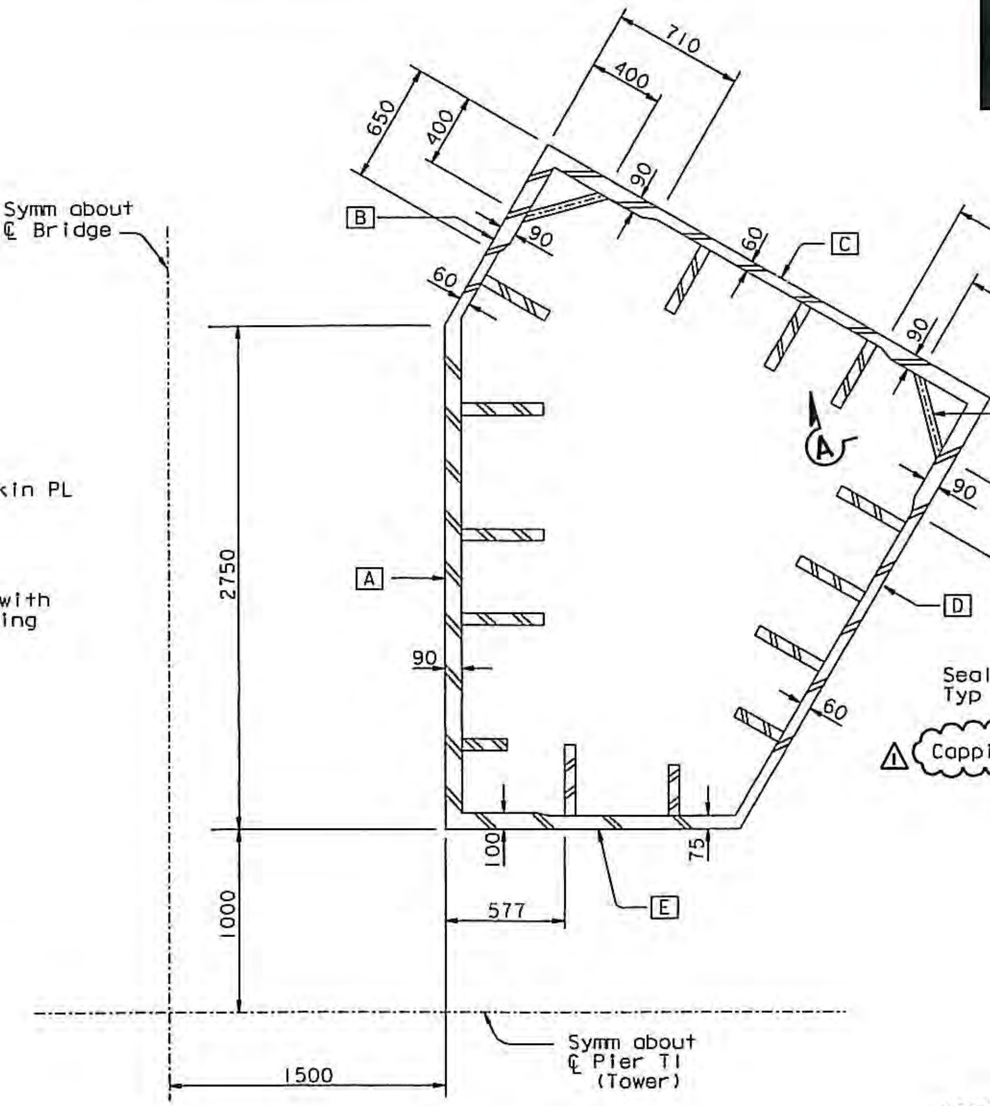

DETAIL D (Tower Shaft Between Elev 144.420 m & 144.000 m)

1:20

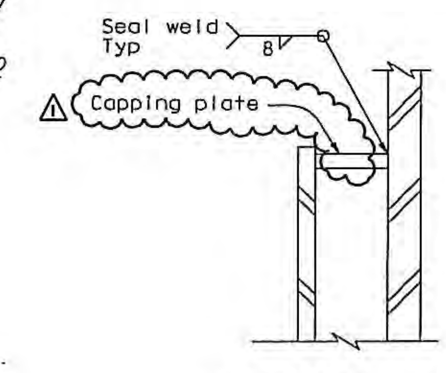

SECTION A-A

1:10

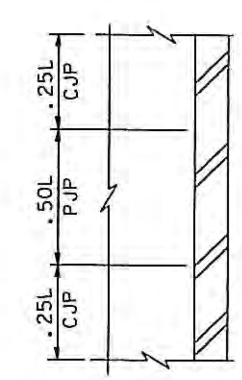

DETAIL A

NTS

REQUESTS FOR INFORMATION NOT ADDRESSED IN THIS CCO REMAIN IN FORCE

MARK	DATE	DESCRIPTIONS	BY	CH'D	CCO#
1	10/08/08	U-RIB & TOWER CORNER SEALING	MN	NV	69

REVISIONS

CONTRACT CHANGE ORDER NO. 69
SHEET 5 OF 6

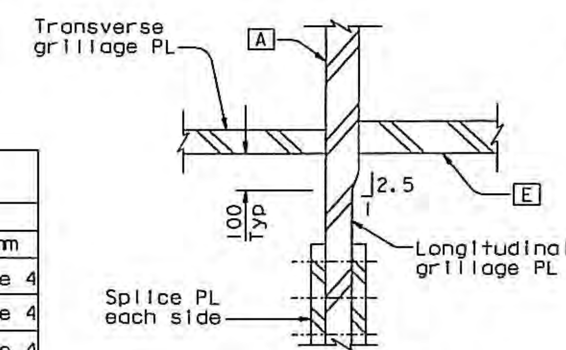

DETAIL C'

1:10

NOTES:

1. See schedule A in conjunction with Detail D for tower PL and stiffener size between elevations 144.000 m and 150.900 m.
2. End of diagonal stiffener shall be sealed with a capping plate with no copes. This detail also applies at the ends of every lift where bolted splices occur at elevations 50.30 m, 83.00 m and 114.00 m. See "Tower Splice Details No.5, No.10 and No.15" sheets.
3. Details at elevation 147.500 m are not shown for clarity. For details at elevation 147.500 m, see Section L-L and Section M-M on "Tower Saddle Grillage Details No.6" sheet.
4. For stiffener size, see "Tower Splice Details No.19" sheet.
5. For location of stiffeners between elevations 144.000 m and 147.500 m, the stiffeners shall be extended straight using the layout shown on "Tower Shaft Details No.3" through "Tower Shaft Details No.7" sheets.
6. The top and bottom 25% of the weld length shall be CJP (see Detail A).

SCHEDULE A

TOWER PL & STIFFENER SIZES BETWEEN ELEVATION 144.000 & 150.900 m (see Note 1)

ELEVATION (m)	A		B		C		D		E	
	Thick mm	Stiff mm	Thick mm	Stiff mm	Thick mm	Stiff mm	Thick mm	Stiff mm	Thick mm	Stiff mm
144.000 to 144.420	Detail D	see Note 4	Detail D	see Note 4	Detail D	see Note 4	Detail D	see Note 4	Detail D	see Note 4
144.420 to 145.070	90	see Note 4	90	see Note 4	90	see Note 4	90	see Note 4	90	see Note 4
145.070 to 147.500	90	see Note 4	90	see Note 4	90	see Note 4	90	see Note 4	90	see Note 4
147.500 to 148.500**	90	-	90	-	90	-	90	-	90	-
148.500 to 150.900	70	-	60	-	60	-	60	-	65	-

** See detail C' for transition in thickness between tower shaft skin PL A and longitudinal grillage PL.

ALL DIMENSIONS ARE IN MILLIMETERS UNLESS OTHERWISE SHOWN

R. Valizadeh/V. Toan/Y.L./W.L./F.C.
DESIGN OVERSIGHT
SIGN OFF DATE 10/08/08

DESIGN	BY M. Nader	CHECKED R. Mayrbaurl
DETAILS	BY R. Kanitkar	CHECKED R. Mayrbaurl
QUANTITIES	BY R. Kanitkar	CHECKED Y. Zhang

PREPARED FOR THE STATE OF CALIFORNIA DEPARTMENT OF TRANSPORTATION

R. Manzanarez
PROJECT ENGINEER

BRIDGE NO. 34-0006L/R
KILOMETER POST 13.2/13.9

SAN FRANCISCO OAKLAND BAY BRIDGE
EAST SPAN SEISMIC SAFETY PROJECT
SELF-ANCHORED SUSPENSION BRIDGE
(SUPERSTRUCTURE & TOWER)

TOWER SADDLE GRILLAGE DETAILS NO.3

Rev. Date: 5-18-98

ORIGINAL SCALE IN MILLIMETERS FOR REDUCED PLANS 0 10 20 30 40 50 60 70 80 90 100

CU 04
EA 0120F1

DISREGARD PRINTS BEARING EARLIER REVISION DATES

REVISION DATES (PRELIMINARY STAGE ONLY)

SHEET 190R1

FILE => L:\BB\04-0120I\SAS\Contract Plans and CCO\CCO\In Progress\CCO#69\Update 10-08-08\DGN\aecsg03.dgn

100 % PS&E

USERNAME => dwinrow DATE PLOTTED => 08 OCT 2008 TIME PLOTTED => 11:00:20

DIST.	COUNTY	ROUTE	KILOMETER POST TOTAL PROJECT	SHEET NO.	TOTAL SHEETS
04	SF	80	13.2/13.9	628R1	1204

George Baker
REGISTERED ENGINEER - CIVIL

12-6-04
PLANS APPROVAL DATE

The State of California or its officers or agents shall not be responsible for the accuracy or completeness of electronic copies of this plan sheet.

REGISTERED PROFESSIONAL ENGINEER — George S. Baker — No. C57112 — Exp. 12/31/05 — CIVIL — STATE OF CALIFORNIA

T.Y. LIN / MOFFATT & NICHOL
825 BATTERY STREET
SAN FRANCISCO, CA 94111

Caltrans now has a web site! To get to the web site, go to: http://www.dot.ca.gov

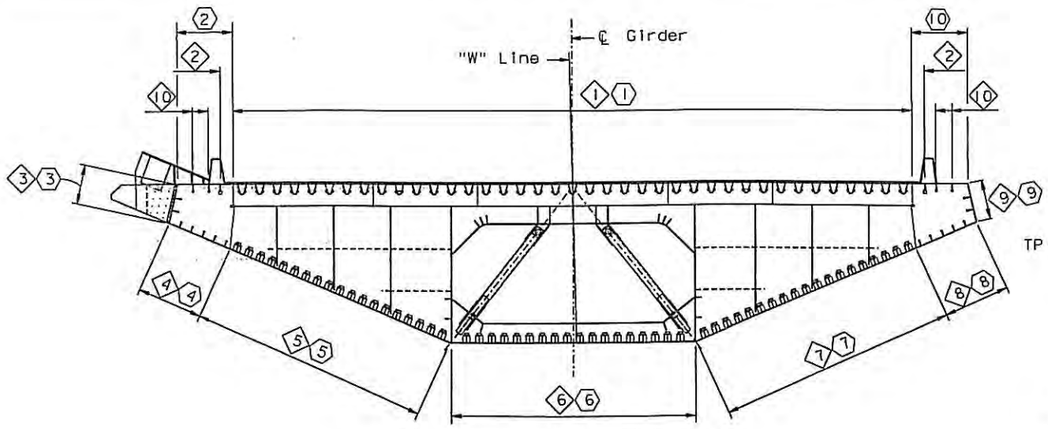

("W" LINE SECTION TYPE 1A SHOWN)

SECTION AT FLOORBEAM

1:100

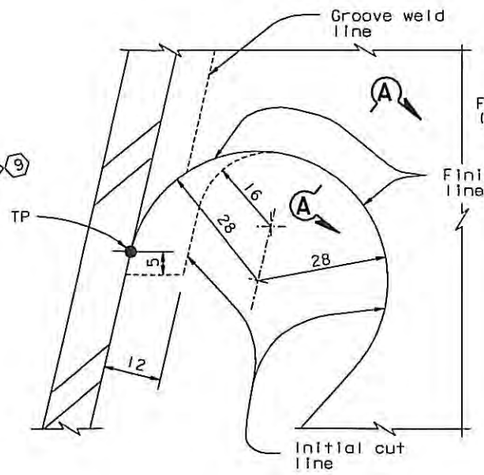

DETAIL A

NTS

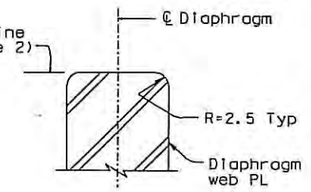

GRINDING DETAIL SECTION A-A

NTS

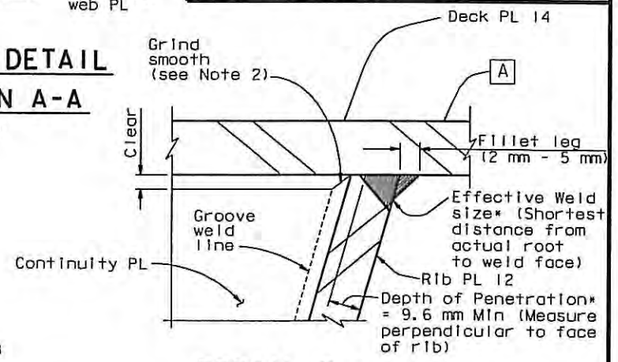

DETAIL B (Typical)

NTS

*NOTE: Depth of Penetration & Effective Weld size shall be measured on macroetch specimens without the 3 mm deduction per D1.5, Sections 2.3.1.3 and 2.3.4.

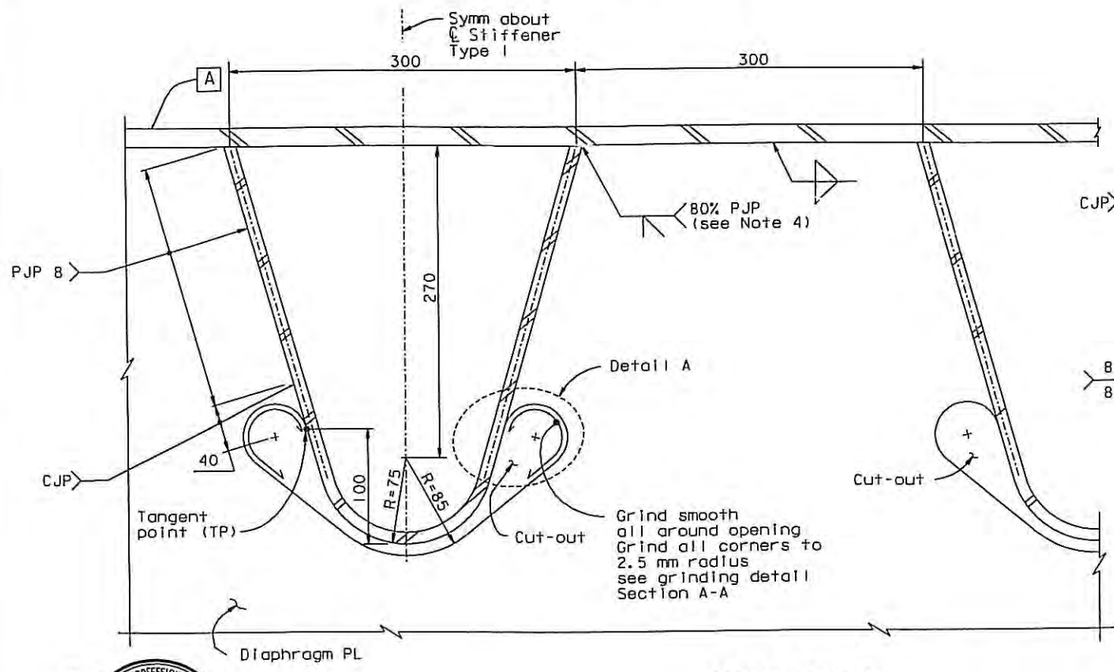

DETAIL TYPE 1

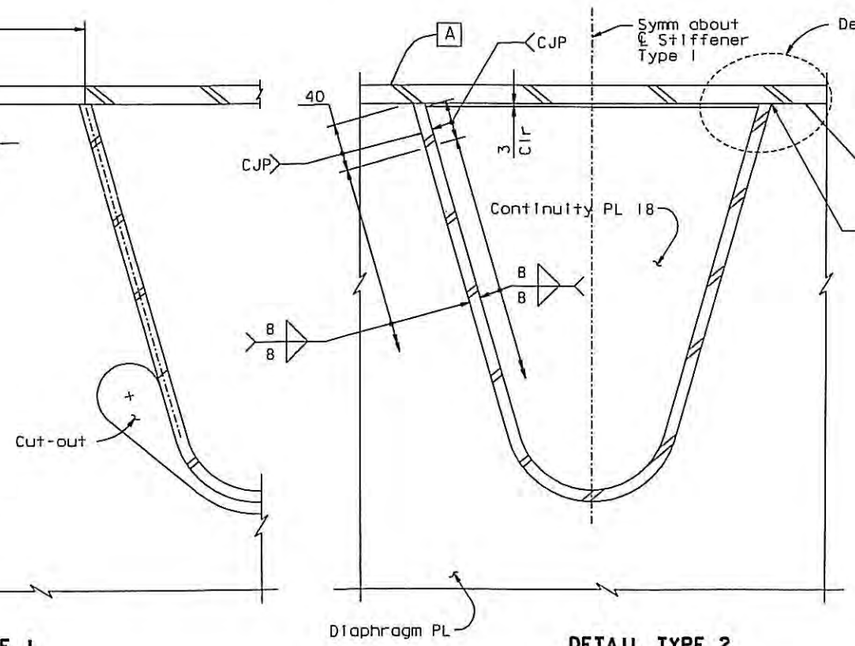

DETAIL TYPE 2

⚠1 STIFFENER DETAIL AT FLOORBEAM (See Table)

1:2.5

DETAIL TYPE LOCATION TABLE		
PANEL POINT	DETAIL TYPE	WELD
8 Thru 14.5	2	As Shown
15 Thru 111	1	As Shown
111.5 Thru 120.5	2	As Shown
121 Thru 126.5	2	See Note 3
127 to Hinge A	2	As Shown

NOTES:

1. Unless otherwise indicated, stiffener type 1 is continuous through floorbeam diaphragm plate.
2. For stiffener type 1, finish surface of cut-out shall be in accordance with ANSI 500 roughness.
3. At floorbeam cable opening, weld of diaphragm plate to girder Plate A shall be CJP. For CJP weld limits, see "Floorbeam At East Transition" sheets.
4. Closed ribs shall be sealed with diaphragm. See Diaphragm Detail on "Typical Girder Details No.11" sheet.

⚠1 100% PS&E

Daniel J. Turner — REGISTERED PROFESSIONAL ENGINEER — Daniel J. Turner — No. C 65033 — Exp. 06/30/09 — CIVIL — STATE OF CALIFORNIA

FOR REVISIONS ONLY

CONTRACT CHANGE ORDER NO. 69
SHEET 6 OF 6

REQUESTS FOR INFORMATION NOT ADDRESSED IN THIS CCO REMAIN IN FORCE

ALL DIMENSIONS ARE IN MILLIMETERS UNLESS OTHERWISE SHOWN

MARK	DATE	DESCRIPTIONS	BY	CH'D	CCO#
		REVISIONS			
⚠1	10/03/08	U-RIB & TOWER CORNER SEALING	DT	NV	69

R. Vallizadeh/V. Toan/Y.L./W.L./F.C.
DESIGN OVERSIGHT
SIGN OFF DATE 10/03/08

	BY	CHECKED
DESIGN	G. Baker	P. Ritchie
DETAILS	S. Camo	T. McMeans
QUANTITIES	G. Baker	M. Roberts

PREPARED FOR THE STATE OF CALIFORNIA
DEPARTMENT OF TRANSPORTATION

R. Manzanarez
PROJECT ENGINEER

BRIDGE NO. 34-0006L/R
KILOMETER POST 13.2/13.9

CU 04
EA 0120F1

SAN FRANCISCO OAKLAND BAY BRIDGE
EAST SPAN SEISMIC SAFETY PROJECT
SELF-ANCHORED SUSPENSION BRIDGE
(SUPERSTRUCTURE & TOWER)

TYPICAL GIRDER DETAILS NO. 4

DISREGARD PRINTS BEARING EARLIER REVISION DATES →

REVISION DATES (PRELIMINARY STAGE ONLY)									SHEET	OF
01/25/05	05/25/05	09/26/05	05/25/07	09/26/07	01/25/08	12/15/08			211R1	

ORIGINAL SCALE IN MILLIMETERS FOR REDUCED PLANS 0 10 20 30 40 50 60 70 80 90 100

Rev. Date: 5-18-98

FILE => I:\bb\04-012001\sas\contract plans and cco\cco\cco*69\update 10-08-08\dgn\aggdkd03.dgn

USERNAME => vlgnatovs
PLOTDATE => 07 NOV 2008
TIME PLOTTED => 10:17:28

STATE OF CALIFORNIA - DEPARTMENT OF TRANSPORTATION

CONTRACT CHANGE ORDER MEMORANDUM

DATE: 3/10/2009 Page 1 of 1

TO: Pete Siegenthaler, Prin. TE / Gary Pursell, P.E., Sup T.E.	FILE: E.A. 04 - 0120F4
FROM: Gary Pursell, P.E., Sup.T.E.	CO-RTE-PM SF-80-13.2/13.9
	FED. NO.
CCO#: 69 SUPPLEMENT#: 0 Category Code: CHPA	CONTINGENCY BALANCE (incl. this change) $115,510,407.40
COST: $0.00 INCREASE ☐ DECREASE ☐	HEADQUARTERS APPROVAL REQUIRED? ☑ YES ☐ NO
SUPPLEMENTAL FUNDS PROVIDED: $0.00	IS THIS REQUEST IN ACCORDANCE WITH ENVIRONMENTAL DOCUMENTS? ☑ YES ☐ NO
CCO DESCRIPTION: U-rib and Tower Corner Sealing	**PROJECT DESCRIPTION:** CONSTRUCT SELF-ANCHORED SUSPENSION BRIDGE

Original Contract Time:	Time Adj. This Change:	Previously Approved CCO Time Adjustments:	Percentage Time Adjusted: (including this change)	Total # of Unreconciled Deferred Time CCO(s): (including this change)
2490 Day(s)	0 Day(s)	30 Day(s)	1 %	5

THIS CHANGE ORDER PROVIDES FOR:

Eliminating pressure testing of closed U-ribs stiffeners located under the steel orthotropic bridge deck and installing cap plates to the diagonal stiffener plates at BC and CD tower leg corners.

The contract plans require the interior of the closed ribs be sealed and tested for leaks. A leak test cannot be performed due to a partial joint penetration weld connecting the rib to the deck plate, which is not a sealed connection.

Painting inside the diagonal stiffener plates at tower leg corners BC and CD cannot be performed due to the limited space, therefore cap plates will be installed to seal the space.

These changes have offsetting cost, therefore this will be a no cost change order. A detailed cost analysis is on file.

No time adjustment is warranted, as this work does not impact the critical path.

This change order has concurrence from Gary Pursell (Resident Engineer), Rick Morrow (Sup. Structure Rep), Ken Terpstra (Project Manager), Pete Siegenthaler (Principal TE), Richard Foley (HQ), Wenyi Long (CT-OSCM), Lina Ellis (CT-OSM&I) and Marwan Nader (Project Engineer).

The Resident Engineer received an Issue and Approve (I&A) from the Division of Construction for this change on January 15, 2009.

CONCURRED BY:		
Construction Engineer:	Res. Eng., Gary Pursell, Sup. TE	Date 11/14/08
Bridge Engineer:	Struct Rep, Rick Morrow, Sup TE	Date 11/4/08
Project Engineer:	Design of Record, Marwan Nader,	Date 10/8/08
Project Manager:	Proj Manager, Ken Terpstra	Date 12/8/08
FHWA Rep.:		Date
Environmental:	PCE, Pete Siegenthaler, Prin TE	Date 11/24/08
Other (specify):	CT Oversight, Wenyi Long, P.E.	Date 12/15/08
Other (specify):	Struct. Maint, Lina Ellis	Date 12/11/08
District Prior Approval By:		Date
HQ (Issue Approve) By:	HQ Bob Molera	Date 1/15/09
Resident Engineer's Signature:	Gary Pursell	Date 3/10/09

ESTIMATE OF COST

	THIS REQUEST	TOTAL TO DATE
ITEMS	$0.00	$0.00
FORCE ACCOUNT	$0.00	$0.00
AGREED PRICE	$0.00	$0.00
ADJUSTMENT	$0.00	$0.00
TOTAL	$0.00	$0.00

FEDERAL PARTICIPATION

☐ PARTICIPATING ☐ PARTICIPATING IN PART ☑ NONE
☐ NON-PARTICIPATING (MAINTENANCE) ☐ NON-PARTICIPATING

FEDERAL SEGREGATION (if more than one Funding Source or P.I.P. type)
☐ CCO FUNDED PER CONTRACT ☐ CCO FUNDED AS FOLLOWS

FEDERAL FUNDING SOURCE	PERCENT

ADA Notice: For individuals with sensory disabilities, this document is available in alternate formats. For information call: (916) 654-6410 or TDD (916) 654-3880 or write Records and Forms Management, 1120 N Street, MS-89, Sacramento, CA 95814.

CONTRACT CHANGE ORDER

Change Requested by: Engineer

CCO: 70 **Suppl. No. 0** **Contract No. 04 – 0120F4** **Road** SF-80-13.2/13.9 **FED. AID LOC.:**

To: **AMERICAN BRIDGE/FLUOR ENTERPRISES INC A JOINT VENTURE**

You are directed to make the following changes from the plans and specifications or do the following described work not included in the plans and specifications for this contract. ***NOTE: This change order is not effective until approved by the Engineer.***

Description of work to be done, estimate of quantities and prices to be paid. (Segregate between additional work at contract price, agreed price and force account.) Unless otherwise stated, rates for rental of equipment cover only such time as equipment is actually used and no allowance will be made for idle time. This last percentage shown is the net accumulated increase or decrease from the original quantity in the Engineer's Estimate.

Adjustment of Compensation at Lump Sum Price:

This change order includes but is not limited to:

- Revise enclosures in the Tower.
- Add pull boxes in the Tower at elevator landings, dehumidifier No. 5, and for Tower shaft lighting.
- Revise mounting details for switches and receptacles in the Tower.
- Revise cable tray locations in the Tower.
- Revise utility panel locations and details in the Tower.
- Revise Tower ladder platform lighting.
- Revise power and lighting plans at Tower elevation 89.85 m, 139.85 m, and 154.60 m to 156.75 m.
- Add power and lighting plans for Tower elevation 92.50 m and 127.00 m.

The following revised plan sheets detail the changes addressed in this change order: 91R2, 93R5, 113R2, 142R5, 263R1, 264R1, 270R2, 271R4, 271S1, 271S2, 271S3, 271S4, 271S6, 271S7, 275R1, 275S2R1, 279R1, 280R1, 280S1, 281R2, 282R1, 283R1, 284R2, 285R1, 286R1, 287R1, 287S1, 288R2, 288S1, 288S2, 288S3, 288S4, 289R2, 290R2, 319R1, 334R3, 381R3, 382R2, 383R2, 384R2, 385R2, 386R4, and 400R3 (of 1204) as shown on sheets 3 through 45 of this change order.

Revise Special Provisions Section 10-3.15 "FIXTURES," subsection "TYPE H3," as shown on page 2 of this change order.

Add Special Provisions Section 10-3.155 "LIGHT SWITCHES," as shown on page 2 of this change order.

This change order resolves the costs associated with Contractor Request for Information (RFI) numbers 706, 707R0, 707R1, 707R2, 707R3, 707R4, 726R0, 726R1, 729, 1134, and 1932 with respect to changes listed above.

For this work, the Contractor will receive a lump sum price of $494,931.00. This sum constitutes full and complete compensation for furnishing all labor, material, tools and incidentals including all markups by reason of this change.

Adjustment of Compensation at Lump Sum.....$494,931.00

Electrical modifications to Tower Platform 53.85 m (except for Panelboard UP-210, disconnect, transformer, and pull boxes) and Dehumidifier No. 5 will be addressed in a separate change order.

Estimated Cost: **Increase** ☒ **Decrease** ☐ **$494,931.00**

By reason of this order the time of completion will be adjusted as follows: **0 Days**

Submitted by

Signature **Resident Engineer** Darryl Schram, Senior T.E. **Date** 5/9/12

Approval Recommended by

Signature **Supervising Transportation Engineer** William Casey, Supervising T.E. **Date** 5/10/12

Engineer Approval by

Signature **Supervising Transportation Engineer** William Casey, Supervising T.E. **Date** 5/18/12

We the undersigned contractor, have given careful consideration to the change proposed and agree, if this proposal is approved, that we will provide all equipment, furnish the materials, except as otherwise be noted above, and perform all services necessary for the work above specified, and will accept as full payment therefore the prices shown above.

NOTE: If you, the contractor, do not sign acceptance of this order, your attention is directed to the requirements of the specifications as to proceeding with the ordered work and filing a written protest within the time therein specified.

Contractor Acceptance by

Signature (Print name and title) BRIAN A. PETERSEN - PROJECT DIRECTOR **Date** 14 MAY 12

STATE OF CALIFORNIA - DEPARTMENT OF TRANSPORTATION

CONTRACT CHANGE ORDER MEMORANDUM

TO: Tony Anziano, Program Manager /	FILE: **E.A.** 04 - 0120F4
FROM: Darryl Schram, Senior TE	**CO-RTE-PM** SF-80-13.2/13.9
	FED. NO.
CCO#: **70** SUPPLEMENT#: **0** Category Code: **CBPC**	CONTINGENCY BALANCE (incl. this change) **$114,300,488.58**
COST: **$494,931.00** INCREASE ☑ DECREASE ☐	HEADQUARTERS APPROVAL REQUIRED? ☑ YES ☐ NO
SUPPLEMENTAL FUNDS PROVIDED: **$0.00**	IS THIS REQUEST IN ACCORDANCE WITH ENVIRONMENTAL DOCUMENTS? ☑ YES ☐ NO
CCO DESCRIPTION: Tower Utility Panels	**PROJECT DESCRIPTION:** CONSTRUCT SELF-ANCHORED SUSPENSION BRIDGE

Original Contract Time:	Time Adj. This Change:	Previously Approved CCO Time Adjustments:	Percentage Time Adjusted: (including this change)	Total # of Unreconciled Deferred Time CCO(s): (including this change)
2490 Day(s)	**0** Day(s)	**501** Day(s)	**20** %	**3**

THIS CHANGE ORDER PROVIDES FOR:

This change order includes but is not limited to:

- Revising enclosures for YBI substation utility panels.
- Adding pull boxes in the Tower at elevator landings, dehumidifier #5, and for Tower shaft lighting.
- Revising mounting details for switches and receptacles in the Tower.
- Revising cable tray locations in the Tower.
- Revising utility panel locations and details in the Tower.
- Revising Tower ladder platform lighting.
- Revising power and lighting plans at Tower elevation 89.85 m, 139.85 m, and 154.60 m to 156.75 m.
- Adding power and lighting plans for Tower elevation 92.50 m and 127.00 m.

Revising Special Provisions Section 10-3.15 "FIXTURES," subsection "TYPE H3".

Adding Special Provisions Section 10-3.155 "LIGHT SWITCHES."

Relocating electrical equipment and conduits to inside the Tower shafts will protect the equipment and provide easier access for maintenance workers. On the Tower platforms, electrical equipment and conduits are modified and relocated due to limited space and the need to provide minimum clearance. Lighting at the ladder platforms is revised to provide sufficient light at these locations. Power and lighting are added for the new elevator stop at elevation 127.00 m.

This change order resolves the costs associated with Contractor Request for Information (RFI) numbers 706, 707R0, 707R1, 707R2, 707R3, 707R4, 726R0, 726R1, 729, 1134, and 1932 with respect to changes listed above.

The total cost of this change order is $494,931.00, which can be financed from the contingency fund. A detailed cost analysis is on file.

No time adjustment is warranted as this change order does not affect the controlling operation.

This change order has concurrence from William Casey (Supervising TE), Rich Foley (HQ Oversight), Ken Terpstra (Project Manager), Wenyi Long (Bridge Design), Lina Ellis (Maintenance), and Jing Chen (District Design).

ADA Notice: For individuals with sensory disabilities, this document is available in alternate formats. For information call: (916) 654-6410 or TDD (916) 654-3880 or write Records and Forms Management, 1120 N Street, MS-89, Sacramento, CA 95814.

CONCURRED BY:			
Construction Engineer:	William Casey, Sup TE	Date	1/24/12
Bridge Engineer:	CT Oversight, Wenyi Long, P.E.	Date	2/2/10
Project Engineer:	District Design, Jing Chen	Date	3/3/10
Project Manager:	Proj Manager, Ken Terpstra	Date	3/14/12
FHWA Rep.:		Date	
Environmental:		Date	
Other (specify):	HQ, Rich Foley	Date	1/24/12
Other (specify):	Struct. Maint, Lina Ellis	Date	8/3/10
District Prior Approval By:	HQ, Larry Salhaney	Date	5/5/10
HQ (Issue Approve) By:		Date	
Resident Engineer's Signature:		Date	5/1/12

ESTIMATE OF COST

	THIS REQUEST	TOTAL TO DATE
ITEMS	$0.00	$0.00
FORCE ACCOUNT	$0.00	$0.00
AGREED PRICE	$0.00	$0.00
ADJUSTMENT	$494,931.00	$494,931.00
TOTAL	$494,931.00	$494,931.00

FEDERAL PARTICIPATION

☐ PARTICIPATING ☐ PARTICIPATING IN PART ☑ NONE
☐ NON-PARTICIPATING (MAINTENANCE) ☐ NON-PARTICIPATING

FEDERAL SEGREGATION (if more than one Funding Source or P.I.P. type)
☐ CCO FUNDED PER CONTRACT ☐ CCO FUNDED AS FOLLOWS

FEDERAL FUNDING SOURCE	PERCENT

ADA Notice: For individuals with sensory disabilities, this document is available in alternate formats. For information call: (916) 654-6410 or TDD (916) 654-3880 or write Records and Forms Management, 1120 N Street, MS-89, Sacramento, CA 95814.

DIST	COUNTY	ROUTE	KILOMETER POST TOTAL PROJECT	SHEET No	TOTAL SHEETS
04	SF	80	13.2/13.9	91R2	1204

REGISTERED ELECTRICAL ENGINEER — 12/19/02 DATE

12-6-04
PLANS APPROVAL DATE

REGISTERED PROFESSIONAL ENGINEER — JENS ERLINGSSON No. 8249 Exp. 9/30/06 ELECTRICAL — STATE OF CALIFORNIA

PB POWER, Inc.
A Parsons Brinckerhoff Company
303 Second St., Suite 700N
San Francisco, CA 94107-1317

The State of California or its officers or agents shall not be responsible for the accuracy or completeness of electronic copies of this plan sheet.

Caltrans now has a web site! To get to the web site, go to http://www.dot.ca.gov

Caltrans Metric

MARK	DATE	REVISIONS DESCRIPTIONS	BY	CH'D	CCO#
		REQUEST FOR INFORMATION NOT ADDRESSED IN THIS CCO REMAIN IN FORCE			
2	09/18/09	TOWER UTILITY PANELS	JS	FW	70
1	02/19/08	ELECTRICAL MODIFICATIONS	MP EL	RR	42

CONTRACT CHANGE ORDER NO._____
SHEET_____ OF_____

SYMBOLS

(See ES-1A and ES-1B for Additional Standard Symbols)

LAYOUT PLAN

- Barrier Pull Box, for type and size, see Pull Box Schedule
- PB-2A — Pull Box, PB-2A for type and size, see Pull Box Schedule
- Conduit Coupling
- (A) — Equipment or Material Designation, A=Sequential description
- 1 — Sheet Notes, applicable only to the Drawing, 1=Sequential number
- [1] — Project Notes, Applicable for all Drawings, 1=sequential number
- Junction Box, Conduit Fitting
- Electrical Equipment or Indicated on Plan Drawings
- Pole Mounted Lighting Fixture- See Lighting Pole Schedule for Type and Quantity
- Fluorescent Lighting Fixture
- Compact Fluorescent Lighting Fixture, Ceiling Mounted or main cable and suspender base metal halide lighting fixture
- Compact Fluorescent Lighting Fixture Wall Mounted
- Soffit Lighting Fixture or tower marker light
- (G) — Navigation Channel Marker Light - Green Color
- (R) — Navigation Pier Marker Light - Red Color
- (A1) (A2) — Aviation Lighting
- [F] — Fog Detector
- [F] — Fog Horn
- Pole Flood Light
- Single Receptacle, 20 A, 125 V, Straight blade, with deep single gang weatherproof and threaded cap
- GFCI WP — Duplex Receptacle, 125 V, 20 A, MH=450 mm above floor unless noted, GFCI=Ground Fault Circuit Interrupter, WP=Weatherproof
- $_a WP — Single Pole Switch, 120/277 V, 20 A, a - indicates Fixtures controlled, WP - Weatherproof Cover, MH - 1400 mm unless noted
- $_3a WP — Three-way switch, 120/277 V, 20 A (or 30 A) [2], a - indicates Fixtures controlled, WP - indicates Weatherproof Cover, MH - 1400 mm unless noted
- $_4a WP — Four-way switch, 120/277 V, 20 A, a - indicates Fixtures controlled, WP - indicates Weatherproof Cover, MH - 1400 mm unless noted
- 30 A — Disconnect Switch, 30 A-Frame size
- Conduit turned up
- Conduit turned down
- Conduit or Cable run, exposed
- Conduit run concealed in wall, concrete barrier, slab or routed underground duct bank
- Combination Expansion - Deflection fittings
- Flexible Conduit
- —CT— Cable Tray
- Cable Tray
- Cables or Conduit down to Equipment (see plan for conduit number)
- Call Box, State furnished
- Ground Bare Copper Wire, Stranded
- Cable To Cable Exothermic Type Ground Connections
- Cable Ground Connection to Equipment, Compression Type
- Cable with Pigtail Ground Connections (see plan for length)

TRAFFIC OPERATIONS SYSTEMS (TOS)

- CCTV Camera (Mounted at Lighting Pole)
- Changeable Message Sign
- Preformed Loops
- Microwave Vehicle Detection Sensor (Mounted at Lighting Pole)
- Ramp Meter Signal

SINGLE LINE DIAGRAM

- 200/5 MRCT 3 — MM — SSPP — 67 / 67N — Microprocessor protective relay, MM = Metering Module, SSPP = Solid State Protective Package, 67,67N = Directional Overcurrent Relay, MRCT = Multi Ratio Current Transformer, 200/5 = Current Amp/Ratio, 3 = Quantity
- 1200 A / 500 MVA — N.C.(or N.O.) — 52 — 52-11N — Vacuum Circuit Breaker, (Drawout Type), 1200 A = Rating, 500 MVA = Nominal Interrupting Class, 52 11N = Assigned Breaker Number, N.C. = Normally Closed, N.O. = Normally Open
- 600-800 A / 42000 — 52S-1 E.O. — 800/5 3 — L,S,G — Air Circuit Breaker (Drawout Type), 600-800 A = Rating, 42000 = Interrupting Current, E.O. = Electrically Operated, 52S-1 = Assigned breaker Number, 800/5 = Current Transformer Setting, 3 = Quantity; Solid state Trip Device, L = Long Time Delay, S = Short Time Pick up/Delay, G = Ground Fault pick up/Delay
- 750 kVA, 12.47 kV, 480 V — Transformer, Distribution, Dry Type, 12.47 kV = Delta Primary, 480 V = Wye Secondary, 750 kVA = Size
- MCP, 2 or 30 A, 30 A, (3) — Combination Motor Starter, Drawout Type, MCP = Motor Circuit Protector, 2 = Starter NEMA Size, 30 A = Contactor Rating; Safety Switch, 30 A = Frame Size; Rotating Motor, 3 = kW Rating
- 50 AT / 150 AF — Molded Case Circuit Breaker, Drawout Type, 50 AT = Trip Rating, 150 AF = Frame Size
- Package Equipment or Panelboard
- 12 kV-120 V — Potential Transformer, Connected Open Delta
- 800/5 3 — Current Transformer, 800/5 = Current AMP/Ratio, 3 = Quantity
- Stress Relief Cable Connection
- or — Fuse

ELEMENTARY/CONNECTION DIAGRAMS

- Bk / W — Signal Cable with Shield
- Contact, Normally open
- Contact, Normally Closed
- (M) or — Relay, Mechanical, M = Motor, C = Contactor, 42 = Running Circuit Breaker, X or Y = Auxiliary, R = Industrial, TD = Time Delay, PEC = Photo Electric Control
- OL — Motor Starter Overload Relay Thermal Bimetallic Element (OL-Overload)
- ON/OFF Switch
- DC Batteries
- AC/DC Inverter (Battery Charger/Rectifier)
- End Resistor and Capacitor
- Photoelectric Sensor
- 6 / 7 — Communication Cable, Noise Suppressor, Terminal Block
- Duplex Receptacle
- Cabinet Fluorescent Light

REGISTERED PROFESSIONAL ENGINEER — MAXWELL FUMIO TAKATA No. E 8651 Exp. 9/30/2010 ELECTRICAL — STATE OF CALIFORNIA

FOR REVISION ONLY [1]

REGISTERED PROFESSIONAL ENGINEER — FADI WALIEDDINE No. 11465 Exp. 12/31/2009 ELECTRICAL — STATE OF CALIFORNIA

FOR REVISION ONLY [2]

DEVICE NUMBER DEFINITIONS

27B	12.47 kV Bus Undervoltage Relay
27D	DC Undervoltage Relay
27F	Feeder Undervoltage Relay
27UV	480 V Bus Undervoltage Relay
42	Running Circuit Breaker
43/R	Manual Transfer / Remote
43/L	Manual Transfer / Local
49	Thermal Relay
50	Instantaneous Overcurrent Relay
51	AC Time Overcurrent Relay
51/51N	Phase and Ground Fault Time Overcurrent Relay
52	AC Circuit Breaker
67	AC Directional Overcurrent Relay
67N	AC Directional Ground Overcurrent Relay
86	Lock-Out Relay
88	Auxiliary Motor

ELECTRICAL SYMBOLS

NO SCALE

E-6

DATE	BY	DATE REVISED	BY
08/02	AB	09/02	JW

CALCULATED/DESIGNED BY
CHECKED BY

DESIGN OVERSIGHT — BEHZAD GOLEMOHAMMADI

STATE OF CALIFORNIA - DEPARTMENT OF TRANSPORTATION — Caltrans

LAST REVISION 00-00-00 — DATE PLOTTED => 12/10/2009 — TIME PLOTTED => 3:16:23 PM

FOR REDUCED PLANS ORIGINAL SCALE IS IN MILLIMETERS 0 20 40 60 80

DGN FILE =>t:\13103\ms\pse\SAS Struc\CCO\SAS CC070\2009-12-02 issued for Submittal\04-0120f1_0091R02.dgn
USERNAME =>llorico

CU 04251 — EA 0120F1

DIST	COUNTY	ROUTE	KILOMETER POST TOTAL PROJECT	SHEET No	TOTAL SHEETS
04	SF	80	13.2/13.9	93R5	1204

REGISTERED ELECTRICAL ENGINEER — 12/19/02 DATE

REGISTERED PROFESSIONAL ENGINEER — JENS ERLINGSSON No. 8249 Exp. 9/30/06 ELECTRICAL — STATE OF CALIFORNIA

12-6-04
PLANS APPROVAL DATE

PB POWER, Inc.
A Parsons Brinckerhoff Company
303 Second St., Suite 700N
San Francisco, CA 94107-1317

The State of California or its officers or agents shall not be responsible for the accuracy or completeness of electronic copies of this plan sheet.

Caltrans now has a web site! To get to the web site, go to http://www.dot.ca.gov

Caltrans Metric

REGISTERED PROFESSIONAL ENGINEER — FADI WALIEDDINE No. 11465 Exp. 12/31/2009 ELECTRICAL — STATE OF CALIFORNIA

FOR REVISION ONLY
4 5

REGISTERED PROFESSIONAL ENGINEER — S. A. ESTOQUE, JR. No. E-10151 Exp. 12/31/2008 ELECTRICAL — STATE OF CALIFORNIA

FOR REVISION ONLY
2 3

REGISTERED PROFESSIONAL ENGINEER — MANUEL FUMIO TAKATA No. E 8651 Exp. 9/30/2008 ELECTRICAL — STATE OF CALIFORNIA

FOR REVISION ONLY
1

REQUEST FOR INFORMATION NOT ADDRESSED IN THIS CCO REMAIN IN FORCE

MARK	DATE	DESCRIPTIONS	BY	CH'D	CCO#
		REVISIONS			
5	12/11/09	TOWER UTILITY PANELS	JS TW	RG FW	70
4	10/10/08	LIGHTING REVISIONS	RY AG	RG FW	43
3	09/24/08	CABLE ELECTRICAL	RR AG	RG SE	72
2	02/25/08	CABLE TRAY CHANGES	RG	SE	42S1
1	02/19/08	ELECTRICAL MODIFICATIONS	MP EL	RR	42

CONTRACT CHANGE ORDER NO._____
SHEET_____ OF _____

TRAFFIC OPERATIONS SYSTEMS (TOS)

AVO	Analog Video Output
CCR	Camera Control Receiver
CCU	Camera Control Unit
CIA	Controller Interface Assembly
COMM	Communication
FDU	Fiber Distribution Unit
F/O	Fiber Optic
FODM	Fiber Optic Data Modem
FDC	Fiber Optic Drop Cable
FPC	Fiber Optic Pigtail Cable
FSC	Fiber Splice Closure
FTC	Fiber Optic Trunkline Cable
IF	Input File
MVDS	Microwave Vehicle Detection Sensor
PDA	Power Distribution Assembly
PL	Preformed Loop Detection Station
SCA	Serial Cable Assembly
SMFO	Single Mode Fiber Optic
TB	Terminal Box
TSC	Trunkline Splice Closure
TVCP	CCTV Camera Control Power Cable
TVC	CCTV Camera Control Cable
TVL	CCTV Camera Video Cable
TVP	CCTV Camera Power Cable
VTDD	Video Transmitter Duplex Data

PROJECT NOTES (Continuation)

25. 27C, 7#10 + #10 G.
26. 41C, 3#6 + #8 G.
27. 41C, 3#8 + #10 G.
28. 21C, PVC coated - 2#10 + #10 G.
29. 21C, PVC coated, 3#12 (for Call Box Power).
30. 500 kcmil Bare Copper Wire.
31. 250 kcmil Bare Copper Wire.
32. #4/0 Bare Copper Wire.
33. #2 Bare Copper Wire.
34. 41C, 3#6 + #8 G, 3#8 + #10 G.
35. 41C, 6#8 + #10 G.
36. 21C, PVC coated, 1-2 pairs #18 (For Call Box signal).
37. Metal clad type cable with PVC overall jacket 3/C #10 (for Bike Path lighting).
38.
39. Metal clad type cable with PVC overall jacket 3/C #12 (for Call Box signal).
40. 78C, Cable Type A Fiber Optic.
41. 21C, (Liquidtight flexible metal conduit) 2#10 + 10 G.
42. 27C, 2#12 + #12G, 2#10 + #10G.
43. 21C, (Liquidtight flexible metal conduit) 2#12 + 12 G.
44. 41C, 2#12 + #12 G, 6#10 + #10 G.
45. 27C, 2#12 + #12 G, 4#10 + #10 G.
46. 27C, Liquidtight flexible metal conduit, 4#10 + #10G.
47. 41C, Liquidtight flexible metal conduit, (MVDS DLC).
48. 27C, 3#6 + #8G. Liquidtight flexible metal conduit.
49. 21C, PVC coated, 2#10 + #10G & 2/C #14
50. 21C Liquidtight flexible metal conduit 2#10 + #10G, 2/C #14
51. 41C Liquidtight flexible metal conduit 3#6 + #8G, 2/C #14
52. 41C, Liquidtight flexible metal conduit 4#10 + 2#10 G
53. 41C, PVC coated 4#10 + 2#10 G
54. 27C, 4#10 + 2#10 G.
55. 41C, 6#10 + 2#10 G 2#12 + #12 G
56. 21C, 2#10 + #10 G
57. 41C, 6#10 + 2#10 G
58. 21C, 2#12 + #12 G
59. 21C, 3#10 + #10 G
60. 41C, 8#10 + 3#10 G 2#12 + #12 G
61. 27C, 3#10 + 2#10 G 2#12 + #12 G
62. 41C, 6#10 + 3#10 G
63. 41C, 8#10 + 3#10 G

PROJECT NOTES

1. 27C, 2#12 + #12 G.
2. 27C, 2#10 + #10 G.
3. 27C, 4#10 + #10 G.
4. 27C, 3#10 + #10 G.
5. 27C (Type 4), 2#12 + #12 G.
6. 27C (Type 4), 2#10 + #10 G.
7. 41C, 2-6 pairs #18, IS/OA.
8. 78C, 50 Pairs #18, IS/OA.
9. 27C, 3/C #6 + #8G.
10. 21C, 2-1 pair #18 (for Call Box signal) shielded pairs and overall shield.
11. 21C, 3#12 (for Call Box power).
12. 21C, (4) 1 pair #18 (for Call Box signal). Part of (2) 1-2 pairs #18, shielded pairs and overall shield.
13. 78C, 2#2 + #6 G and 2#10 + #10 G (for CMS Power).
14. 78C, Harness #4 and Harness #5 (for CMS Signal).
15. 41C, Cable type TVP and TVCP (for CCTV Power).
16. 41C, Cable type TVC and TVL (for CCTV Control Signal).
18. 41C, Cable type MVDS DLC (for MVDS Signal).
20. 78C, Cable type 10 DLC (for Preformed Loop Signal).
21. 27C (Liquidtight flexible metal conduit) 6#10 + #10 G.
22. 27C (Liquidtight flexible metal conduit) 3#10 + #10 G.
23. 27C, 7#10 + #10 G.
24. 27C, 6#10 + #10 G.

GENERAL NOTES

1. Conduit routing is diagrammatic. Pull box locations shall be located as shown on plan drawings. The Contractor shall provide additional pull boxes as required. Exact locations of equipment and devices may be adjusted depending on field conditions or by the Engineer.
2. Minimum size of conduits shall be 21 mm. Exposed conduits shall be PVC coated rigid galvanized steel, and conduits located inside girder shall be rigid galvanized steel.
3. Conduit fittings for 78 mm conduits and larger shall have a 610 mm minimum bending radius.
4. All conduits, including spares, shall be provided with pull wires prior to cable installations.
5. All equipment and devices shall be provided with nameplate tags per drawings.
6. All feeders and branch circuits shall be provided with ground wire.
7. 15 kV splice boxes shall be installed as shown and permanently marked "DANGER-HIGH VOLTAGE-KEEP OUT". The letters shall be block type and at least 50 mm in height.
8. The Contractor shall label all conductors and cables per wiring diagrams.
9. Padlocks shall be installed on all cabinets located on the platforms to prevent unauthorized access.
10. Call boxes will be State-furnished. (The Contractor shall install and terminate conductors per wiring diagram.
11. Ladder type cable trays shall be installed for each 15 kV and 600 V systems.
12. Solid bottom cable trays shall be installed for each low level signals, CALTRANS communications, fiber optic systems, and for Non-Caltrans utilities.
13. For Strong Motion Detection System general notes, see sheet E-361.
14. All E sheets are accurate for electrical work only.
15. All dimensions are in millimeters unless otherwise shown.
16. All unused conductors inside pull boxes shall be taped and coiled.
17. "Similar" when shown on the plans means this detail is applicable to different structure and conduit sizes.
18. Electrical fixtures shall not be field welded to the box girders or crossbeams. All welding to the box girders and crossbeams shall be shown on the box girder and crossbeam shop drawings for review and approval by the Engineer.
19. All welding of electrical fixtures to the tower shall be shown on the tower shop drawings for review and approval by the Engineer.
20. All connections to steel elements of the self-anchored suspension bridge superstructure of electrical equipment and fixtures, including conduits, pull boxes, lighting fixtures, messenger cables and others, shall be shop welded or bolted. All connection details shall appear on the working drawings for review and approval by the Engineer.
21. Prior to ordering any cable tray support structures, the Contractor shall:
    - Refer to Structural sheets to determine the locations of cable tray support structures.
    - Determine, based upon field conditions, when and where to use cable tray vertical or horizontal bends, horizontal tees or reducers.
    - Refer to AS-sheets to determine the type of cable tray support to use based on field conditions.
    - Cable tray support structures shown on the AS-sheets are generic and may have to be adapted to suit field conditions.
    - All modifications to the cable tray support structures as shown on the AS-sheets shall be approved by the Resident Engineer.
22. All installation of electrical conduit, equipment or pull boxes shall be either shop welded or bolted.
23. All cable trays shall be securely anchored to support. Appropriate type of anchors (hold down brackets, hold down clamps or guides) shall be used to suit the cable tray type, location and supports. For similar attachment details, see TYPE I & II on E-122A and E-205A.

5 24. Contractor shall seal all wall penetrations with conduit within the dehumidified area using a rubber pipeseal that will expand to fill the gap between the penetration sleeve and conduit to create a seal. Caulking (silicone caulk) shall not be used at these locations.

ELECTRICAL NOTES AND ABBREVIATIONS

E-8

	CALCULATED/ DESIGNED BY	CHECKED BY	DATE	REVISED BY	DATE REVISED
	AB	JW	08/02	IAH	3/04
			09/02		

STATE OF CALIFORNIA - DEPARTMENT OF TRANSPORTATION — DESIGN OVERSIGHT — BEHZAD GOLEMOHAMMADI

LAST REVISION 00-00-00 — DATE PLOTTED => 12/18/2009 — TIME PLOTTED => 9:11:00 AM

FOR REDUCED PLANS ORIGINAL SCALE IS IN MILLIMETERS 0 20 40 60 80

DGN FILE =>T:\13103\MS\pse\SAS Struc\CCO\SAS CC070\2009-12-02 Issued for Submittal\04-0120f1_0093R05.dgn
USERNAME =>llorico

CU 04251 — EA 0120F1

DIST	COUNTY	ROUTE	KILOMETER POST TOTAL PROJECT	SHEET No	TOTAL SHEETS
04	SF	80	13.2/13.9	113 R2	1204

12/19/02
REGISTERED ELECTRICAL ENGINEER DATE

REGISTERED PROFESSIONAL ENGINEER — JENS ERLINGSSON No. 8249 Exp. 9/30/06 ELECTRICAL — STATE OF CALIFORNIA

12-6-04
PLANS APPROVAL DATE

PB POWER, Inc.
A Parsons Brinckerhoff Company
303 Second St., Suite 700N
San Francisco, CA 94107-1317

The State of California or its officers or agents shall not be responsible for the accuracy or completeness of electronic copies of this plan sheet.

Caltrans now has a web site! To get to the web site, go to http://www.dot.ca.gov

Caltrans Metric

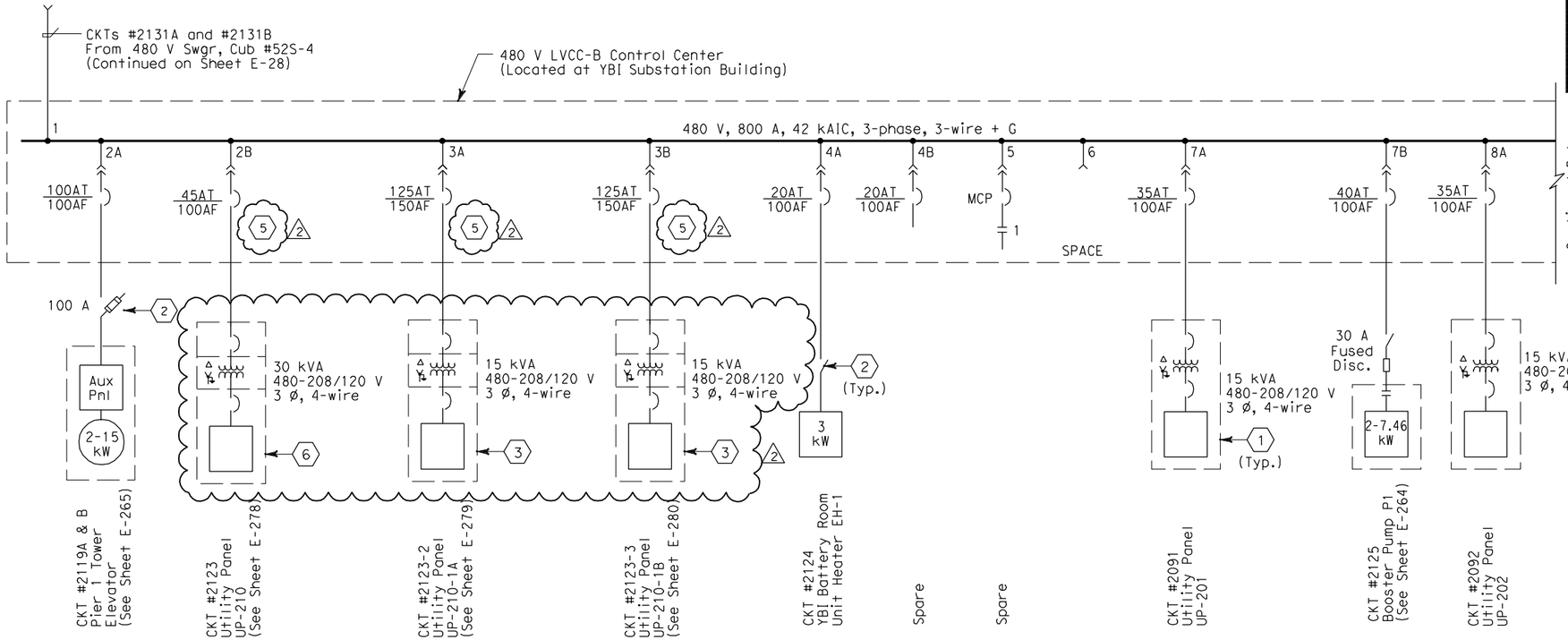

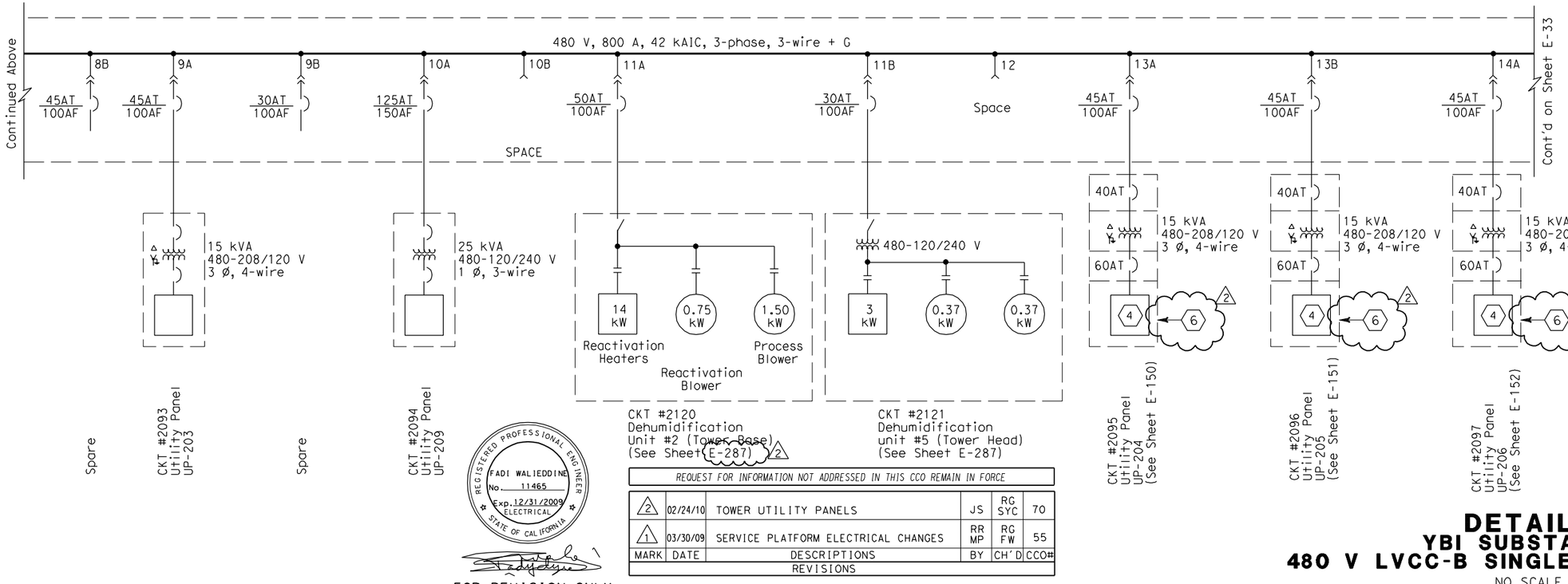

SHEET NOTES:

1. Enclosed in a fiberglass enclosure located on the service platform.
2. Safety disconnect switch shall be horsepower rated.
3. Enclosed in separate Nema type 12 enclosures located on the SAS main tower (elev 89.85).
4. Electrical Panel with Main Lugs only.
5. Revision to feeder circuit breaker rating and feeder conductor size accomplished by YBI-1 contract.
6. Enclosed in separate stainless steel Nema 4X enclosures located on the SAS main tower (elev. 53.85) and/or service platforms.

NOTES:

1. Single line diagram as shown does not represent physical separation of different contracts. Refer to other drawings for physical separation of different contracts.
2. The combination starter unit and thermal magnetic circuit breakers shall be suitable for and coordinated for 42,000 RMS system fault current.

REGISTERED PROFESSIONAL ENGINEER — FADI WALIEDDINE No. 11465 Exp. 12/31/2009 ELECTRICAL — STATE OF CALIFORNIA

FOR REVISION ONLY 1

REGISTERED PROFESSIONAL ENGINEER — SYN YEE CHIN No. 18186 Exp. 09/30/2011 ELECTRICAL — STATE OF CALIFORNIA

FOR REVISION ONLY 2

REQUEST FOR INFORMATION NOT ADDRESSED IN THIS CCO REMAIN IN FORCE

MARK	DATE	DESCRIPTIONS	BY	CH'D	CCO#
		REVISIONS			
2	02/24/10	TOWER UTILITY PANELS	JS	RG SYC	70
1	03/30/09	SERVICE PLATFORM ELECTRICAL CHANGES	RR MP	RG FW	55

CONTRACT CHANGE ORDER NO._____
SHEET_____ OF _____

DETAILS
YBI SUBSTATION
480 V LVCC-B SINGLE LINE DIAGRAM
NO SCALE

E-32

CALCULATED/ DESIGNED BY	DATE	REVISED BY
EJL	9-01	DATE REVISED
CHECKED BY	JE	12/01

DESIGN OVERSIGHT
BEHZAD GOLEMOHAMMADI

STATE OF CALIFORNIA - DEPARTMENT OF TRANSPORTATION
Caltrans

FOR REDUCED PLANS ORIGINAL SCALE IS IN MILLIMETERS 0 20 40 60 80

DGN FILE =>t:\13103\ms\pse\SAS Struc\CCO\SAS CC070\2009-12-02 Issued for Submittal\04-0120f1_0113R02.dgn
USERNAME =>llorico
CU 04251
EA 0120F1

LAST REVISION 00-00-00
DATE PLOTTED => 2/25/2010
TIME PLOTTED => 5:03:49 PM

DIST	COUNTY	ROUTE	KILOMETER POST TOTAL PROJECT	SHEET No	TOTAL SHEETS
04	SF	80	13.2/13.9	142 R5	1204

Jens Erlingsson 12/19/02
REGISTERED ELECTRICAL ENGINEER DATE

12-6-04
PLANS APPROVAL DATE

REGISTERED PROFESSIONAL ENGINEER — JENS ERLINGSSON No. 8249 Exp. 9/30/06 ELECTRICAL — STATE OF CALIFORNIA

PB POWER, Inc.
A Parsons Brinckerhoff Company
303 Second St., Suite 700N
San Francisco, CA 94107-1317

The State of California or its officers or agents shall not be responsible for the accuracy or completeness of electronic copies of this plan sheet.

Caltrans now has a web site! To get to the web site, go to http://www.dot.ca.gov

PULL BOXES

Location	Type	Pull Box Size	Enclosure Type	Nameplate Pull Box Cover	Remarks
Roadway Barrier	PB-Com			Low Voltage - Call Box	Caltrans standard ES-9C (PB-9A)
Roadway Barrier	PB-Ltg			600 V - Electrical	Caltrans standard ES-9C (PB-9)
Roadway and miscellaneous	PB-1B	304 L x 254 W x 127 D	NEMA 4X	600 V - Electrical	Located at main suspender cable
Roadway and miscellaneous	PB-1C	152 L x 152 W x 102 D	NEMA 4X	600 V - Electrical	Located at suspender brackets
Roadway	PB-1F	304 L x 304 W x 152 D	NEMA 4X	600 V - Electrical	Located at main suspender cable
Inside Girder Box	PB-2A	406 L x 254 W x 152 D	NEMA 12	600 V - Electrical	
Service Platform	PB-2B	762 L x 508 W x 203 D	NEMA 4X	600 V - Electrical	
Inside Girder Box	PB-2C	915 L x 610 W x 610 D	NEMA 12	600 V - Electrical	Electrical vault-embedded in conc. deck
Inside Girder Box	PB-2P	1067 L x 915 W x 305 D	NEMA 12	600 V - Electrical	Electrical vault-surface/pendant mounted
Inside Girder Box	PB-2L	152 L x 152 W x 102 D	NEMA 12	600 V - Electrical	For future light pipe and inside Piers E6W, E7W, and E8W.

PULL BOXES

Location	Type	Pull Box Size	Enclosure Type	Nameplate Pull Box Cover	Remarks
"E" Line Girder access Platform	PB-2D	457 L x 457 W x 203 D	NEMA 4X	600 V - Electrical	For Base Tower power and lighting
Inside Dehumidification #2 Area	PB-2E	203 L x 203 W x 102 D	NEMA 12	600 V - Electrical	For Base Tower Dehumidification #2 power
Tower Base-Elevator Enclosure	PB-2F	203 L x 203 W x 102 D	NEMA 12	600 V - Electrical	For Elevator pit motor power (5)
Tower Walkway Platform, EL. 93.35 m	PB-2H	457 L x 457 W x 203 D	NEMA 4X	600 V - Electrical	For Power and Lighting
Elevator Enclosure-EL. 93.35 m	PB-2J	203 L x 203 W x 102 D	NEMA 4X	600 V - Electrical	For Power and Lighting
"E" Line Girder access Platform	PB-2K	305 L x 305 W x 152 D	NEMA 4X	600 V - Electrical	For Base Tower power and lighting
Tower Walkway Platform, EL. 53.0 m EL. 89.85 m, EL.127 m, EL. 139.85 m, EL. 156.75 m	PB-2R	203 L x 203 W x 102 D	NEMA 4X	600 V - Electrical	For Power - Booster Pump P1 at EL. 53.00 m & For Lighting at EL. 89.85 m, EL. 127.00 m, EL. 139.85 m, EL. 156.75 m (5)
Tower Head Elev 158.00 m	PB-2S	762 L x 610 W x 305 D	NEMA 4X	600 V - Electrical	For Dehumidifier Unit #5 Power and Communications
Tower Elevation 53.85 m	PB-4E	914 L x 762 W x 406 D	NEMA 4X	600 V - Electrical	For Tower Power
Tower Shaft Lighting	PB-4H	305 L x 305 W x 152 D	NEMA 12	600 V - Electrical	For Tower shaft Ladder Lighting
Tower Shaft Lighting	PB-4J	406 L x 305 W x 152 D	NEMA 12	600 V - Electrical	For Tower shaft Ladder Lighting
Tower Shaft Lighting	PB-4K	508 L x 406 W x 152 D	NEMA 12	600 V - Electrical	For Tower shaft Ladder Lighting

(2)

SPLICE BOXES

Location	Type	Splice Box Size	Enclosure Type	Nameplate Splice Box Cover	Remarks
Inside Girder Box and Tower EL 63.0	PB-3A	1830 L x 915 W x 305 D	NEMA 12	Danger - High Voltage - Keep Out	
Inside Girder Box	PB-3B	813 L x 203 diameter	Cylindrical Housing	Fiber Optic	72 fibers to 12 fibers
Inside Girder Box	PB-3C	813 L x 203 diameter	Cylindrical Housing	Fiber Optic	72 fibers to 72 fibers

PANEL ENCLOSURES (1)

Location	Type	Cabinet/Terminal Box Size	Enclosure Type	Nameplate Cabinet/Terminal Cover	Remarks
Service Platform	PB-6C	See Panel Layout	NEMA 4X	See Panel Layout on E-305	For Navigation Relay Cabinet
Service Platform	PB-7B	See Panel Layout	NEMA 4X	See Panel Layout on E-321	For Scada Communication Terminal Box
Service Platform	PB-7C	762 H x 508 W x 203 D	NEMA 4X	Caltrans Telephone	Enclosure only - For Telephone Terminal Box
Inside Girder Box	PB-7D	508 H x 406 W x 203 D	NEMA 4X	Caltrans Telephone	Enclosure only - For Telephone Terminal Box

SAS SUPERSTRUCTURE WB

Location	Type	Pull Box Size	Enclosure Type	Nameplate Pull Box Cover	Remarks
Inside Light Pole	PB-2N	152 L x 152 W x 102 D	NEMA 12	TOS-MVDS	Cable Termination
Tower Platform	PB-2M	305 L x 305 W x 152 D	NEMA 12	TOS-MVDS	Cable Termination
Inside Dehumidification #1 Area	PB-TOS	203 L x 203 W x 102 D	NEMA 4X	TOS-COM	Dehumidification Unit #1

SHEET NOTES:

(1) Panel enclosures shall be provided with padlock provisions.

(5) (2) See sheets E-284 and E-284A for locations of pull boxes.

REGISTERED PROFESSIONAL ENGINEER — SYN YEE CHIN No. 18186 Exp. 09/30/201 ELECTRICAL — STATE OF CALIFORNIA

Syn Yee Chin
FOR REVISION ONLY (5)

REGISTERED PROFESSIONAL ENGINEER — MAXWELL FUMIO TAKATA No. E 8651 Exp. 9/30/2008 ELECTRICAL — STATE OF CALIFORNIA

FOR REVISION ONLY (1)

REGISTERED PROFESSIONAL ENGINEER — FADI WALIEDDINE No. 11465 Exp. 12/31/2009 ELECTRICAL — STATE OF CALIFORNIA

FOR REVISION ONLY (2)(3)(4)

REQUEST FOR INFORMATION NOT ADDRESSED IN THIS CCO REMAIN IN FORCE

MARK	DATE	DESCRIPTIONS	BY	CH'D	CCO#
		REVISIONS			
(5)	02/24/10	TOWER UTILITY PANELS	RB	RG SYC	70
(4)	08/03/09	ELECTRICAL WARNING SYSTEMS	RG	FW	61
(3)	03/30/09	SERVICE PLATFORM ELECTRICAL CHANGES	RR	RG FW	55
(2)	09/24/08	CABLE ELECTRICAL	RY AG	RG FW	72
(1)	02/19/08	ELECTRICAL MODIFICATIONS	MP EL	RR	42

CONTRACT CHANGE ORDER NO._____
SHEET _____ OF _____

DETAILS
SAS SUPERSTRUCTURE ROADWAY WESTBOUND PULLBOX SCHEDULES

E-83

CALCULATED/DESIGNED BY FK
CHECKED BY BL
DATE 10/01 11/01
REVISED BY DATE REVISED

DESIGN OVERSIGHT BEHZAD GOLEMOHAMMADI

STATE OF CALIFORNIA - DEPARTMENT OF TRANSPORTATION Caltrans

FOR REDUCED PLANS ORIGINAL SCALE IS IN MILLIMETERS 0 20 40 60 80

DGN FILE =>T:\13103\MS\pse\SAS Struc\CCO\SAS CC070\2009-12-02 Issued for Submittal\04-0120f1_0142R05.dgn
USERNAME =>llorico

CU 04251 EA 0120F1

DATE PLOTTED => 2/26/2010
TIME PLOTTED => 10:18:37 AM

LAST REVISION 00-00-00

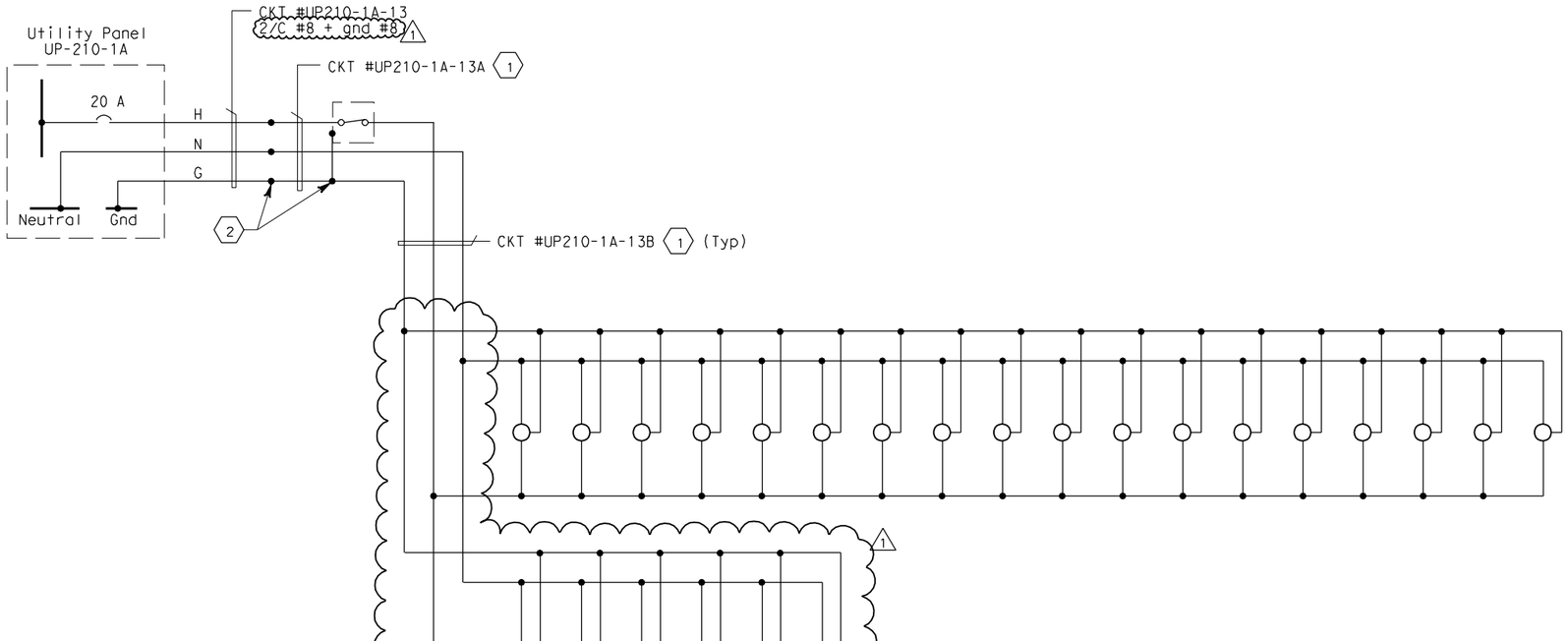

120 V TOWER PLATFORM LIGHTING AT EL 154.6 m TO 156.75 m

Caltrans Metric

DIST	COUNTY	ROUTE	KILOMETER POST TOTAL PROJECT	SHEET No	TOTAL SHEETS
04	SF	80	13.2/13.9	263 R1	1204

Jens Erlingsson 12/19/02
REGISTERED ELECTRICAL ENGINEER DATE

REGISTERED PROFESSIONAL ENGINEER
JENS ERLINGSSON
No. 8249
Exp. 9/30/06
ELECTRICAL
STATE OF CALIFORNIA

12-6-04
PLANS APPROVAL DATE

PB POWER, Inc.
A Parsons Brinckerhoff Company
303 Second St., Suite 700N
San Francisco, CA 94107-1317

The State of California or its officers or agents shall not be responsible for the accuracy or completeness of electronic copies of this plan sheet.

Caltrans now has a web site! To get to the web site, go to http://www.dot.ca.gov

SHEET NOTES:

1. #10 AWG single conductors.
2. Conductors spliced inside pull box PB-2R located at El. 156.75 m.

NOTES:

1. References:
   - For utility panel schedule, see sheet E-279.
   - For conduit and cable tray schedules, see sheets starting at E-401.
2. Refer to Tower Power and Lighting Plan E-286 for light switch locations.

REGISTERED PROFESSIONAL ENGINEER
FADI WALIEDDINE
No. 11465
Exp. 12/31/2009
ELECTRICAL
STATE OF CALIFORNIA

FOR REVISION ONLY
1

REQUEST FOR INFORMATION NOT ADDRESSED IN THIS CCO REMAIN IN FORCE

MARK	DATE	DESCRIPTIONS	BY	CH'D	CCO#
		REVISIONS			
1	12/02/09	TOWER UTILITY PANELS	SYC RB	RG FW	70

CONTRACT CHANGE ORDER NO._____
SHEET_____ OF_____

DETAILS
TOWER AND SUSPENSION CABLE
120 V LIGHTING WIRING DIAGRAM

NO SCALE

E-253

STATE OF CALIFORNIA - DEPARTMENT OF TRANSPORTATION
Caltrans

DESIGN OVERSIGHT: BEHZAD GOLEMOHAMMADI

DATE REVISED	REVISED BY
11/01	EDC
10/01	FK

CALCULATED/DESIGNED BY
CHECKED BY

FOR REDUCED PLANS ORIGINAL SCALE IS IN MILLIMETERS 0 20 40 60 80

DGN FILE =>t:\13103\ms\pse\SAS Struc\CCO\SAS CC070\2009-12-02 issued for Submittal\04-0120f1_0263R01.dgn
USERNAME =>llorico

CU 04251 EA 0120F1

LAST REVISION 00-00-00
DATE PLOTTED => 12/10/2009
TIME PLOTTED => 3:22:24 PM

DIST	COUNTY	ROUTE	KILOMETER POST TOTAL PROJECT	SHEET No	TOTAL SHEETS
04	SF	80	13.2/13.9	264 R1	1204

REGISTERED ELECTRICAL ENGINEER — 12/19/02 DATE

12-6-04
PLANS APPROVAL DATE

REGISTERED PROFESSIONAL ENGINEER — JENS ERLINGSSON No. 8249 Exp. 9/30/06 ELECTRICAL — STATE OF CALIFORNIA

PB AMERICAS, Inc.
A Parsons Brinckerhoff Company
303 Second St., Suite 700N
San Francisco, CA 94107-1317

The State of California or its officers or agents shall not be responsible for the accuracy or completeness of electronic copies of this plan sheet.

Caltrans now has a web site! To get to the web site, go to http://www.dot.ca.gov

Caltrans Metric

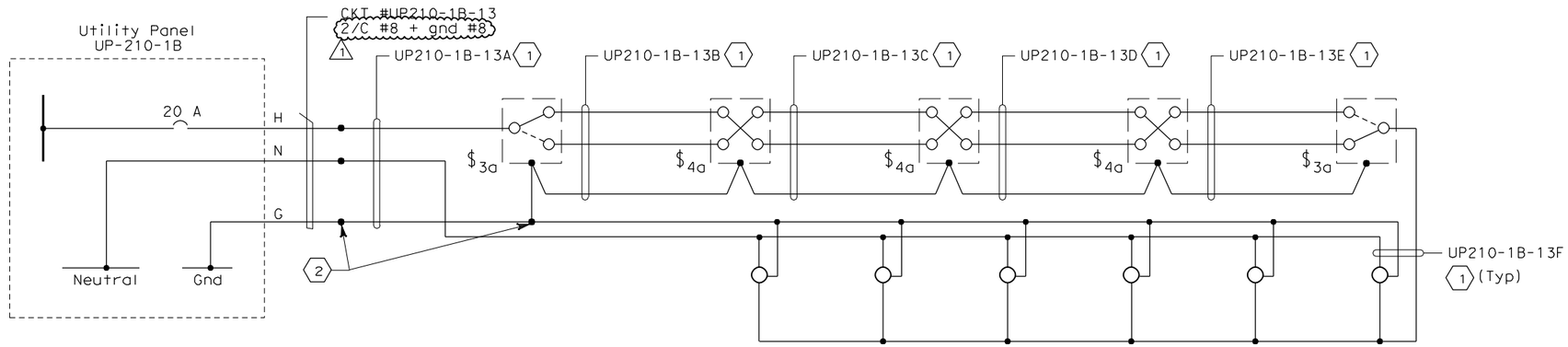

120V TOWER PLATFORM LIGHTING AT EL 89.85 m

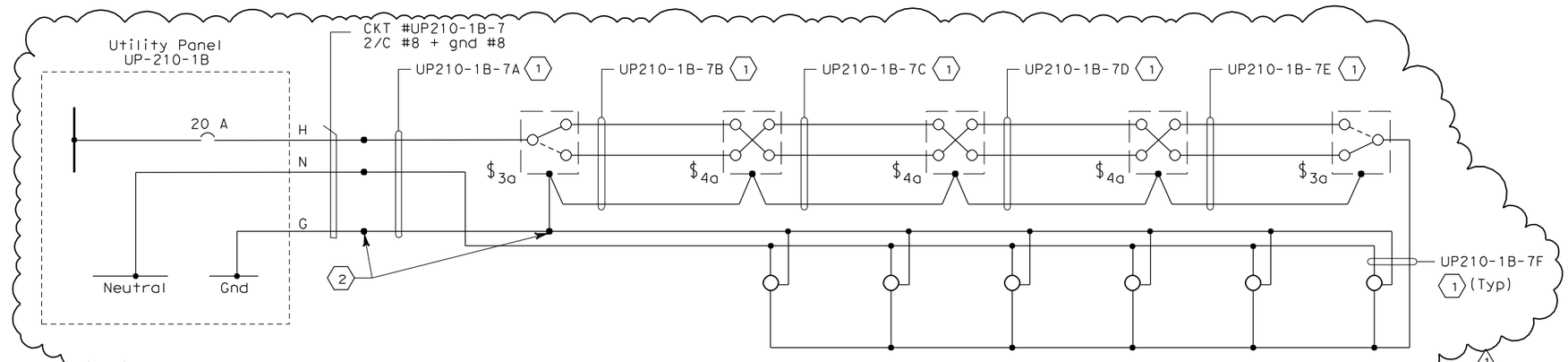

120V TOWER PLATFORM LIGHTING AT EL 127.00 m

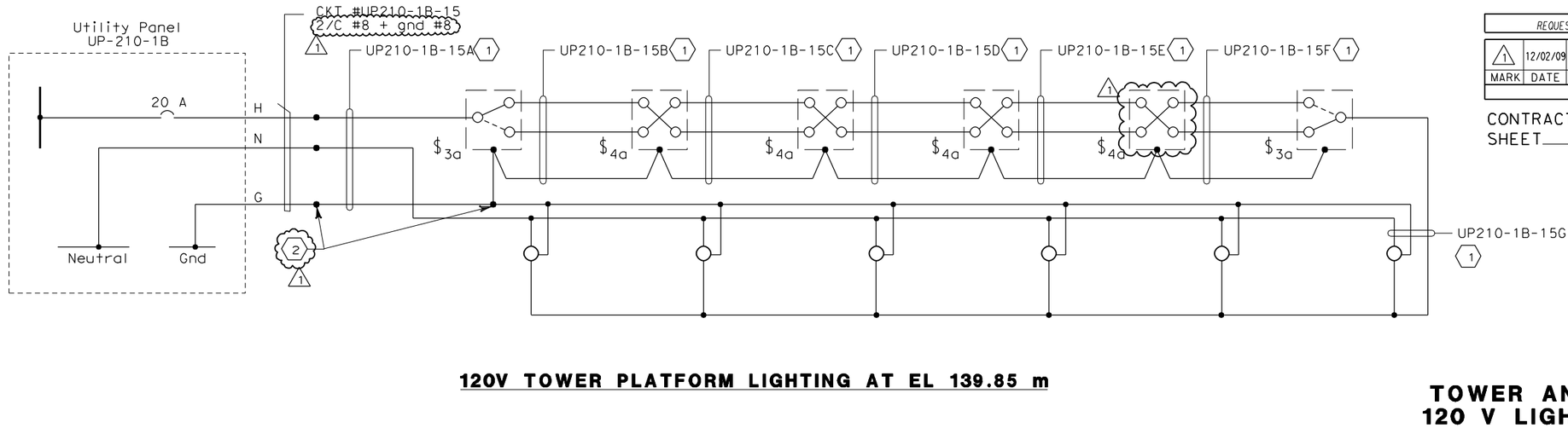

120V TOWER PLATFORM LIGHTING AT EL 139.85 m

SHEET NOTES:

1. #10 AWG single conductors.
2. Conductors spliced inside pull box PB-2R located on this elevation. 1
3. Deleted.

NOTES:

1. References:
   - For utility panel schedule, see sheet E-280.
   - For conduit and cable tray schedules, see sheets starting at E-401.
2. Refer to Tower Power and Lighting Plans E-285, E-285D and E-286 for light switch locations. 1

REQUEST FOR INFORMATION NOT ADDRESSED IN THIS CCO REMAIN IN FORCE					
1	12/02/09	TOWER UTILITY PANELS	SYC	RG FW	70
MARK	DATE	DESCRIPTIONS	BY	CH'D	CCO#
REVISIONS					

CONTRACT CHANGE ORDER NO._____
SHEET_____ OF _____

REGISTERED PROFESSIONAL ENGINEER — FADI WALIEDDINE No. 11465 Exp. 12/31/2009 ELECTRICAL — STATE OF CALIFORNIA

FOR REVISION ONLY
1

DETAILS
TOWER AND SUSPENSION CABLE 120 V LIGHTING WIRING DIAGRAM

NO SCALE

E-254

DESIGN OVERSIGHT	CALCULATED/ DESIGNED BY	DATE	REVISED BY
BEHZAD GOLEMOHAMMADI	CHECKED BY	BL	11/10
STATE OF CALIFORNIA - DEPARTMENT OF TRANSPORTATION		JP	09/01
Caltrans			DATE REVISED

LAST REVISION 00-00-00 — DATE PLOTTED => 12/10/2009 — TIME PLOTTED => 3:22:39 PM

FOR REDUCED PLANS ORIGINAL SCALE IS IN MILLIMETERS 0 20 40 60 80

DGN FILE =>t:\13103\ms\pse\SAS Struc\CCO\SAS CCO70\2009-12-02 issued for Submittal\04-0120f1_0264R01.dgn
USERNAME =>llorico

CU 04251 EA 0120F1

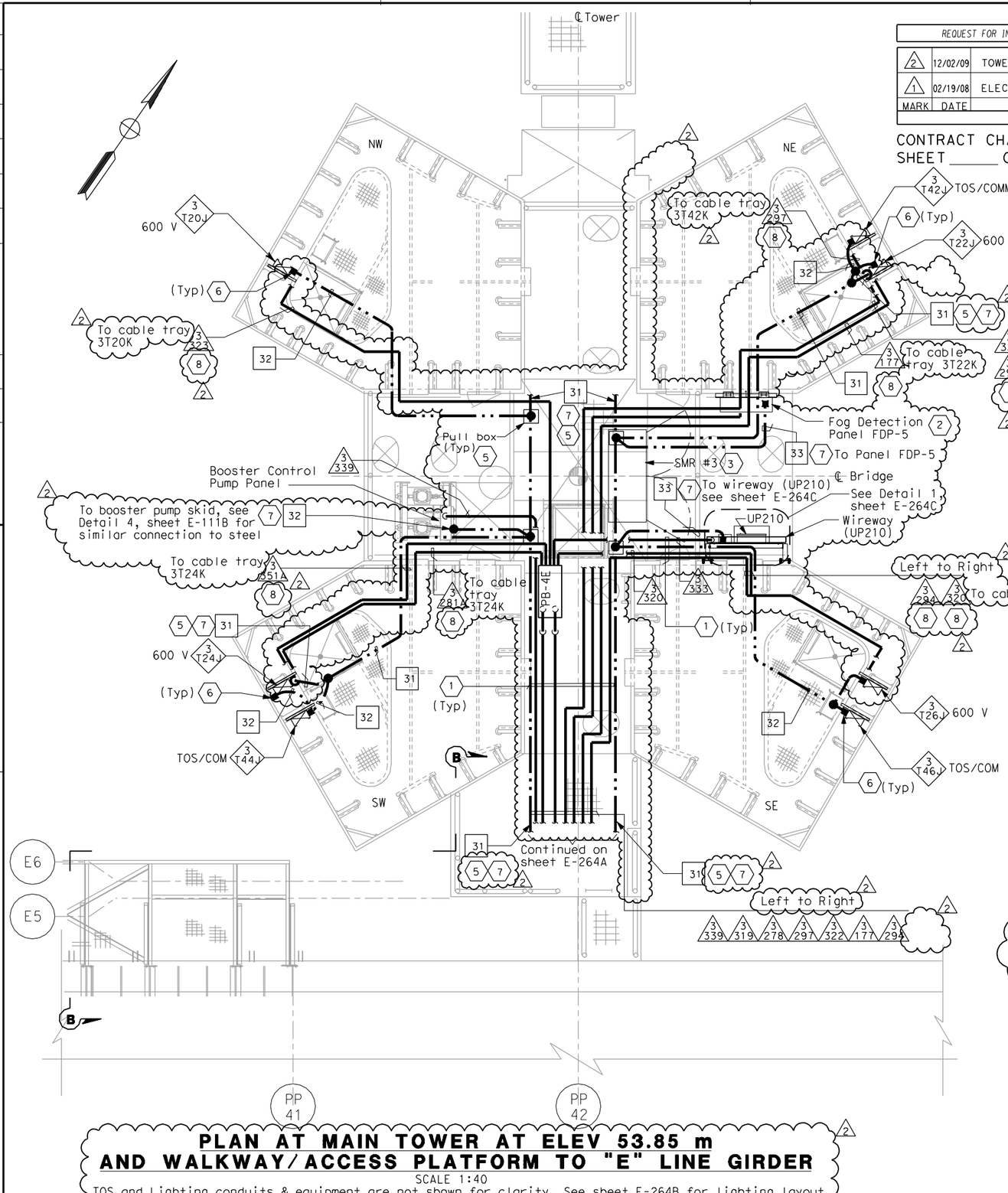

PLAN AT MAIN TOWER AT ELEV 53.85 m AND WALKWAY/ACCESS PLATFORM TO "E" LINE GIRDER

SCALE 1:40

TOS and Lighting conduits & equipment are not shown for clarity. See sheet E-264B for lighting layout. For TOS conduits, see E-281.

THIS PLAN ACCURATE FOR ELECTRICAL WORK ONLY.

ALL DIMENSIONS ARE IN MILLIMETERS UNLESS OTHERWISE SHOWN.

REQUEST FOR INFORMATION NOT ADDRESSED IN THIS CCO REMAIN IN FORCE

MARK	DATE	DESCRIPTIONS	BY	CH'D	CCO#
		REVISIONS			
2	12/02/09	TOWER UTILITY PANELS	TW	RG FW	70
1	02/19/08	ELECTRICAL MODIFICATIONS	MP EL	RR	42

CONTRACT CHANGE ORDER NO. _____

SHEET _____ OF _____

REGISTERED PROFESSIONAL ENGINEER — FADI WALIEDDINE — No. 11465 — Exp. 12/31/2009 — ELECTRICAL — STATE OF CALIFORNIA

FOR REVISION ONLY 2

REGISTERED PROFESSIONAL ENGINEER — MAXWELL FUMIO TAKATA — No. E 8651 — Exp. 9/30/2008 — ELECTRICAL — STATE OF CALIFORNIA

FOR REVISION ONLY 1

Caltrans Metric

DIST	COUNTY	ROUTE	KILOMETER POST TOTAL PROJECT	SHEET No	TOTAL SHEETS
04	SF	80	13.2/13.9	270 R2	1204

REGISTERED ELECTRICAL ENGINEER — 12/19/02 DATE

REGISTERED PROFESSIONAL ENGINEER — JENS ERLINGSSON — No. 8249 — Exp. 9/30/06 — ELECTRICAL — STATE OF CALIFORNIA

PLANS APPROVAL DATE — 12-6-04

PB POWER, Inc.
A Parsons Brinckerhoff Company
303 Second St., Suite 700N
San Francisco, CA 94107-1317

The State of California or its officers or agents shall not be responsible for the accuracy or completeness of electronic copies of this plan sheet.

Caltrans now has a web site! To get to the web site, go to http://www.dot.ca.gov

SHEET NOTES:

1. All conduits which thereafter cross the access walkways shall be raised to a level of at least 2438 above the grating to pass overhead, allowing free walkways on the remaining three quadrants of the platform. Door on north face of SE tower shaft shall remain accessible.
2. For FDP-5 location, conduit route and mounting details, see sheets E-293 and AS-13E.
3. For SMR #3 location, conduit route and mounting details, see sheets E-366 and E-264E.
4. Deleted.
5. For Pull Box and grounding installation and additional details, see Detail 8, sheet E-111A.
6. For cable tray bonding, see Details 4 & 5, sheet E-111B. 2
7. Ground conductor shall be protected from damage when exposed outside the structures. Route ground cable in liquidtight flexible metal conduit (LFMC) for protection.
8. Conduits are at El. 56.422 and connected to 600 V cable tray at this elevation inside respective tower shaft.

NOTES:

1. References:
   - For typical conduit installation details, see sheet E-268.
   - For utility panel UP-210 schedule, see sheet E-278.
   - For types of pull boxes, splice boxes and enclosures, see sheets E-83 and E-169.
   - For conduit and cable tray schedules, see sheets starting at E-401.
2. Electrical conduits shall enter the tower shafts between stiffeners A3 and A4 only for conduits going up or down inside the tower shafts between C1 and C2 only. For conduit entry details, see Structural Utility drawings.
3. All conduits and fittings routed exposed at grating shall be rigid galvanized steel, PVC coated. 2
4. For lighting installation and details, see sheet E-264B and E-264C
5. For other related work not shown on this sheet, see Electrical Special Provisions.
6. For Section B-B, see sheet E-264A
7. Typical conduit installation. See Detail 8, sheet E-268.

DETAILS
TOWER AND SUSPENSION CABLE TOWER POWER AND LIGHTING

SCALE AS NOTED

E-264

CALCULATED/ DESIGNED BY	CHECKED BY	FK	EDC	DATE 10/01	11/01	REVISED BY	DATE REVISED

DESIGN OVERSIGHT — BEHZAD GOLEMOHAMMADI

STATE OF CALIFORNIA - DEPARTMENT OF TRANSPORTATION — Caltrans

LAST REVISION 00-00-00 — DATE PLOTTED => 12/10/2009 — TIME PLOTTED => 3:25:08 PM

FOR REDUCED PLANS ORIGINAL SCALE IS IN MILLIMETERS 0 20 40 60 80

DGN FILE =>t:\13103\ms\pse\SAS Struc\CCO\SAS CC070\2009-12-02 issued for Submittal\04-0120f1_0270R02.dgn
USERNAME =>llorico

CU 04251 EA 0120F1

DIST	COUNTY	ROUTE	KILOMETER POST TOTAL PROJECT	SHEET No	TOTAL SHEETS
04	SF	80	13.2/13.9	271 R4	1204

Jens Ericsson 12/19/02
REGISTERED ELECTRICAL ENGINEER DATE

12-6-04
PLANS APPROVAL DATE

REGISTERED PROFESSIONAL ENGINEER — JENS ERLINGSSON — No. 8249 — Exp. 9/30/06 ELECTRICAL — STATE OF CALIFORNIA

PB POWER, Inc.
A Parsons Brinckerhoff Company
303 Second St., Suite 700N
San Francisco, CA 94107-1317

The State of California or its officers or agents shall not be responsible for the accuracy or completeness of electronic copies of this plan sheet.

Caltrans now has a web site! To get to the web site, go to http://www.dot.ca.gov

Caltrans Metric

SHEET NOTES

1. Coil 3 meters long of cable for each circuits inside the pull boxes.
2. Deleted.
4.
3. For additional fabrication details of pull boxes, see sheets E-264G and E-264H.
4. Electrical conduit design between Eastbound Structure and Main Tower is based on the maximum expansion of 1000 mm all directions. For conduit support, see E-78H.

NOTES

1. For location of sleeves Eastbound Structure PP-40 and PP-41, see Structural Plans.
2. Each liquidtight flexible metallic conduit shall be provided with #6 green insulated ground conductor (inside) the conduit.
3. Contractor shall verify all the conduit opening prior to start of work.

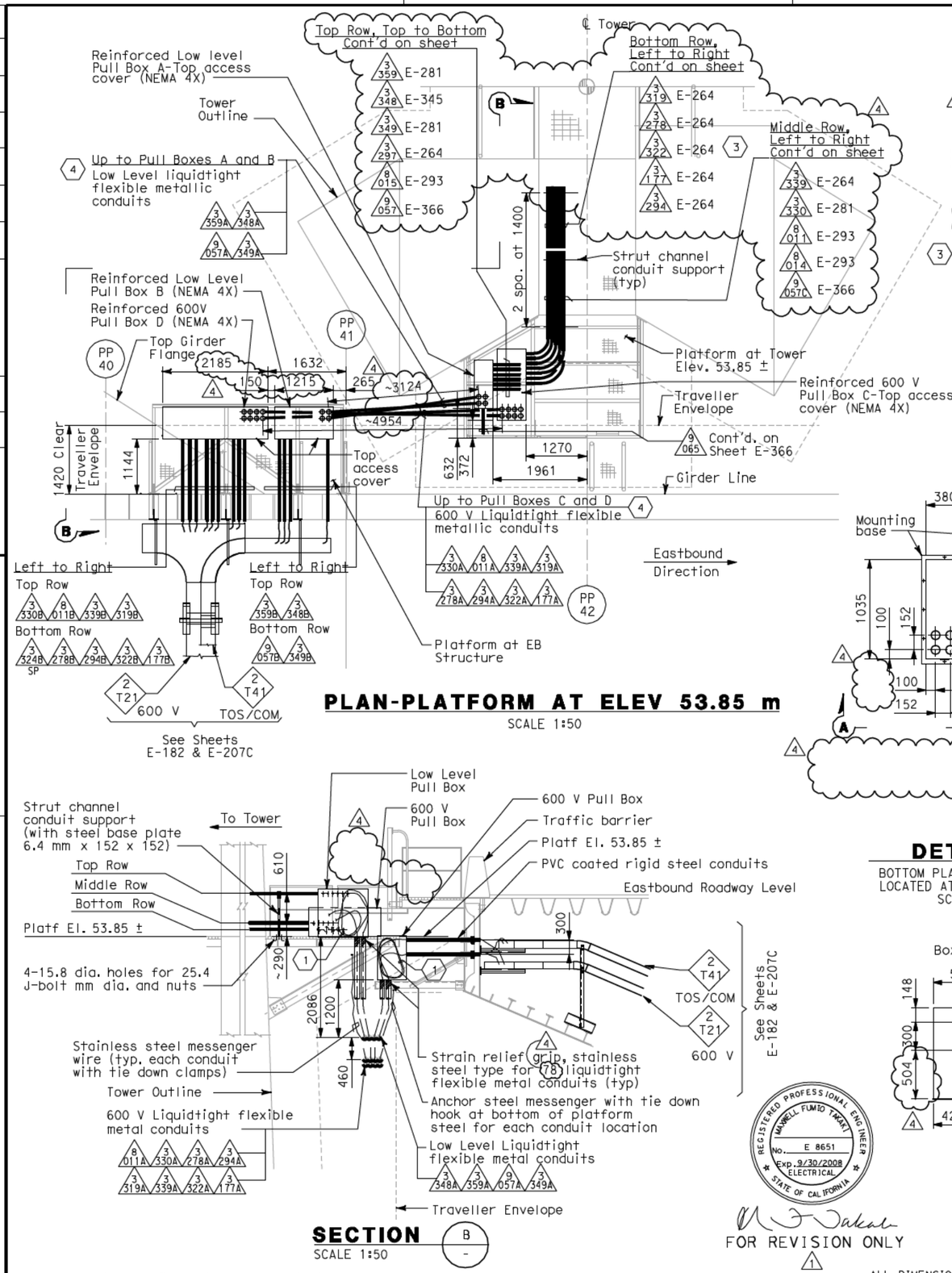

PLAN-PLATFORM AT ELEV 53.85 m

SCALE 1:50

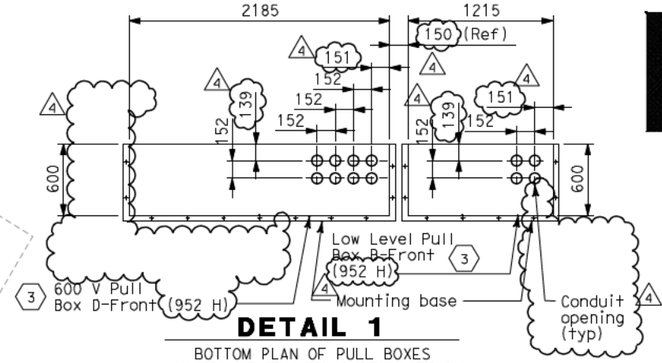

DETAIL 1

BOTTOM PLAN OF PULL BOXES LOCATED AT EB STRUCTURE PLATFORM
SCALE 1:25

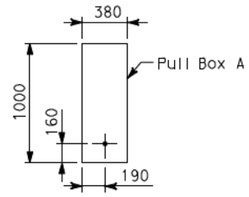

SECTION A-A

SCALE 1:25

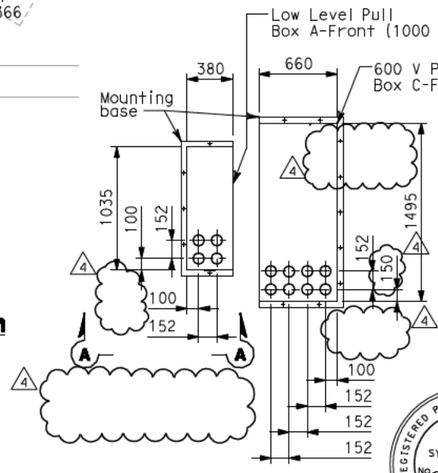

DETAIL 2

BOTTOM PLAN OF PULL BOXES LOCATED AT TOWER PLATFORM
SCALE 1:25

SYN YEE CHIN — No. 18186 — Exp. 09/30/2011 ELECTRICAL — STATE OF CALIFORNIA

Syn Yee Chin
FOR REVISION ONLY
4

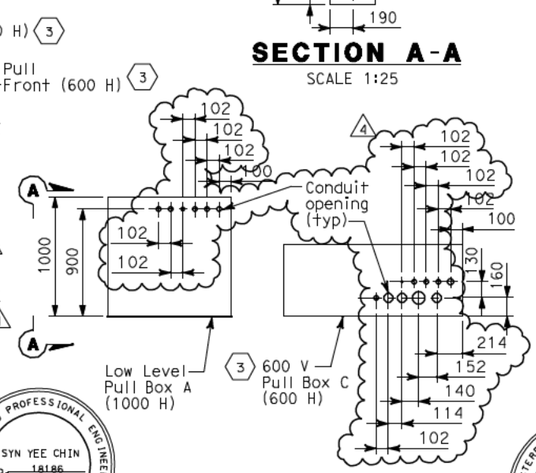

DETAIL 3

FRONT ELEVATION OF PULL BOXES LOCATED AT TOWER PLATFORM
SCALE 1:25

S. A. ESTOQUE, JR. — REGISTERED PROFESSIONAL ENGINEER — No. E-10151 — Exp. 12/31/2008 ELECTRICAL — STATE OF CALIFORNIA

FOR REVISION ONLY
2

FADI WALIEDDINE — REGISTERED PROFESSIONAL ENGINEER — No. 11465 — Exp. 12/31/2009 ELECTRICAL — STATE OF CALIFORNIA

FOR REVISION ONLY
3

SECTION

SCALE 1:50

MAXWELL FUMIO TAKATA — REGISTERED PROFESSIONAL ENGINEER — No. E 8651 — Exp. 9/30/2008 ELECTRICAL — STATE OF CALIFORNIA

FOR REVISION ONLY
1

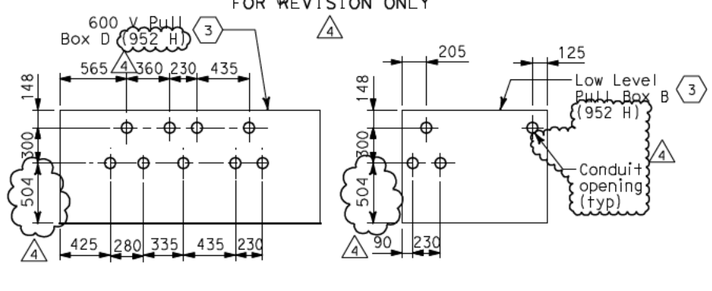

DETAIL 4

FRONT ELEVATION OF PULL BOXES LOCATED AT EB STRUCTURE PLATFORM
SCALE 1:25

MARK	DATE	DESCRIPTIONS	BY	CH'D	CCO#
		REVISIONS			
4	02/24/10	TOWER UTILITY PANELS	TW RB	RG SYC	70
3	10/03/08	STRONG MOTION SYSTEM	TW	RG FW	74
2	02/25/08	CABLE TRAY CHANGES	MP	RG SE	42S1
1	02/19/08	ELECTRICAL MODIFICATIONS	MP EL	RR	42

REQUEST FOR INFORMATION NOT ADDRESSED IN THIS CCO REMAIN IN FORCE

CONTRACT CHANGE ORDER NO._____
SHEET _____ OF _____

DETAILS
TOWER AND SUSPENSION CABLE

SCALE: AS NOTED

E-264A

THIS PLAN ACCURATE FOR ELECTRICAL WORK ONLY.

ALL DIMENSIONS ARE IN MILLIMETERS UNLESS OTHERWISE SHOWN.

STATE OF CALIFORNIA - DEPARTMENT OF TRANSPORTATION
Caltrans
DESIGN OVERSIGHT — BEHZAD GOLEMOHAMMADI
CALCULATED/DESIGNED BY — CHECKED BY — EJL — JE — DATE 3/04 — 3/04 — REVISED BY — DATE REVISED

FOR REDUCED PLANS ORIGINAL SCALE IS IN MILLIMETERS 0 20 40 60 80

DGN FILE =>t:\13103\ms\pse\SAS Struc\CCO\SAS CC070\2009-12-02 Issued for Submittal\04-0120f1_0271R04.dgn
USERNAME =>llorico
CU 04251 EA 0120F1

LAST REVISION 00-00-00 DATE PLOTTED => 2/26/2010 TIME PLOTTED => 9:45:11 AM

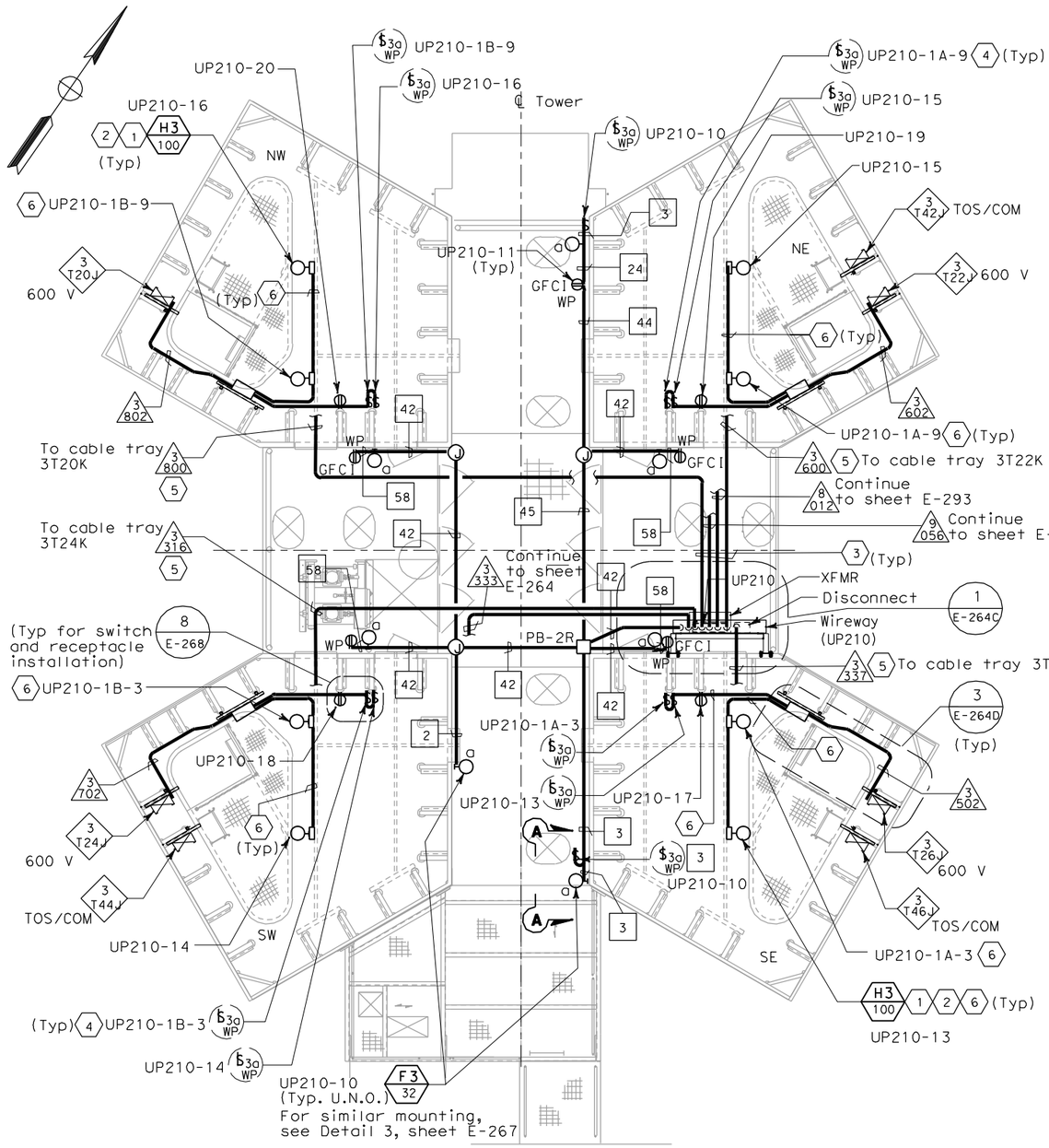

PLAN AT MAIN TOWER AT ELEV 53.85 m

SCALE 1:40

Some conduit & equipment are not shown for clarity. See sheet E-264 for layout of equipment. Circuits shown are for SE tower shaft. Circuit for other shafts shown on E-274, E-275 and E-275A.

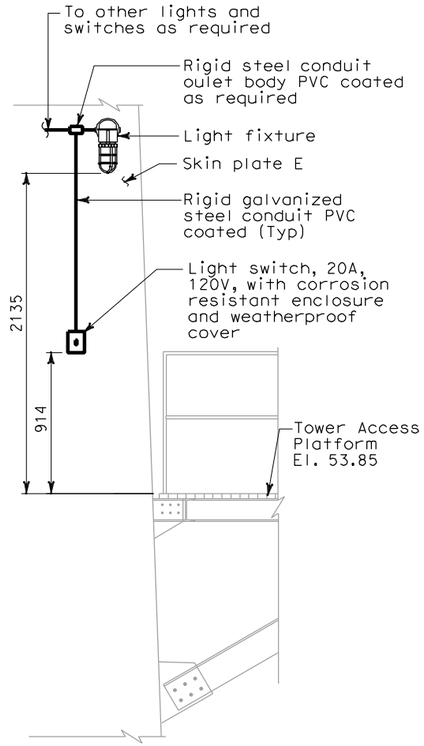

SECTION A-A

NO SCALE

SHEET NOTES:

1. Light shown mounted under ceiling diaphragm.
2. Typical light mounting details shown on sheet E-283.
3. All conduits which thereafter cross the access walkways shall be raised to a level of at least 2438 above the grating to pass overhead, allowing free walkways on the remaining three quadrants of the platform. Door on north face of SE tower shaft shall remain accessible.
4. Multiple switches at certain elevations. See sheets E-284, E-284A and E-284B for details.
5. Conduits are at El. 56.422 and connected to 600 V cable tray at this elevation inside respective tower shaft.
6. Number and sizes of conduit are field route to lights, receptacles and switches. See E-284 and E-284A for conduit sizes and pull box type per location.

NOTES:

1. References:
   - For typical conduit installation details, see sheet E-268.
   - For utility panel UP-210 schedule, see sheet E-278.
   - For types of pull boxes, splice boxes and enclosures, see sheets E-83 and E-169.
   - For conduit and cable tray schedules, see sheets starting at E-401.
   - For lighting fixture schedule, see sheet E-273.
   - For lighting installation details, see sheet E-267.
2. Electrical conduits shall enter the tower shafts between stiffeners A3 and A4 only for conduits going up or down inside the tower shafts between C1 and C2 only For conduit entry details, see Structural Utility drawings.
3. All conduits and fittings routed exposed at grating shall be rigid galvanized steel, PVC coated.
4. Fixture mounting height elevation shall be 2.125 m above floor/platform elevation UNO.
5. For other related work not shown on this sheet, see Electrical Special Provisions.
6. For Section A-A, see sheet E-285.
7. Typical conduit installation. See Detail 8, sheet E-268.

DIST	COUNTY	ROUTE	KILOMETER POST TOTAL PROJECT	SHEET No	TOTAL SHEETS
04	SF	80	13.2/13.9	271 S1	1204

9/11/08
REGISTERED ELECTRICAL ENGINEER DATE

FADI WALIEDDINE No. 11465 Exp. 12/31/2009 ELECTRICAL — REGISTERED PROFESSIONAL ENGINEER — STATE OF CALIFORNIA

PLANS APPROVAL DATE

PB AMERICAS, Inc.
A Parsons Brinckerhoff Company
303 Second St., Suite 700N
San Francisco, CA 94107-1317

The State of California or its officers or agents shall not be responsible for the accuracy or completeness of electronic copies of this plan sheet.

Caltrans now has a web site! To get to the web site, go to http://www.dot.ca.gov

DESIGN OVERSIGHT	CALCULATED/ DESIGNED BY	CHECKED BY	DATE	REVISED BY	DATE REVISED
BEHZAD GOLEMOHAMMADI	FK	EDC	10/01		11/01

STATE OF CALIFORNIA - DEPARTMENT OF TRANSPORTATION
Caltrans

REQUEST FOR INFORMATION NOT ADDRESSED IN THIS CCO REMAIN IN FORCE					
MARK	DATE	REVISIONS	BY	CH'D	CCO#
0	12/11/09	TOWER UTILITY PANELS	JS TW	RG FW	70

CONTRACT CHANGE ORDER NO._____
SHEET_____ OF_____

DETAILS
TOWER AND SUSPENSION CABLE TOWER POWER AND LIGHTING

SCALE AS NOTED

E-264B

THIS PLAN ACCURATE FOR ELECTRICAL WORK ONLY.

ALL DIMENSIONS ARE IN MILLIMETERS UNLESS OTHERWISE SHOWN.

FOR REDUCED PLANS ORIGINAL SCALE IS IN MILLIMETERS 0 20 40 60 80

DGN FILE =>t:\13103\ms\pse\SAS Struc\CCO\SAS CC070\2009-12-02 issued for Submittal\04-0120f1_0271S01.dgn
USERNAME =>llorico

CU 04251 EA 0120F1

LAST REVISION 00-00-00 DATE PLOTTED => 12/10/2009 TIME PLOTTED => 3:25:41 PM

DIST	COUNTY	ROUTE	KILOMETER POST TOTAL PROJECT	SHEET No	TOTAL SHEETS
04	SF	80	13.2/13.9	271 S2	1204

Syn Yee Chin 2/24/10
REGISTERED ELECTRICAL ENGINEER DATE

SYN YEE CHIN No. 18186 Exp. 09/30/2011 ELECTRICAL — REGISTERED PROFESSIONAL ENGINEER — STATE OF CALIFORNIA

PLANS APPROVAL DATE

PB AMERICAS, Inc.
A Parsons Brinckerhoff Company
303 Second St., Suite 700N
San Francisco, CA 94107-1317

The State of California or its officers or agents shall not be responsible for the accuracy or completeness of electronic copies of this plan sheet.

Caltrans now has a web site! To get to the web site, go to http://www.dot.ca.gov

Caltrans Metric

NOTES:

1. References:
   - For utility panel UP-210 schedule, see sheet E-278.
   - For conduit and cable tray schedules, see sheets starting at E-401.
   - For lighting fixture schedule, see sheet E-273.
   - For vertical conduit runs support system, see sheet E-287.
   - For lighting installation details, see sheet E-267.
2. All conduits and fittings routed exposed at grating shall be rigid galvanized steel, PVC coated, UNO.
3. Fixture mounting height elevation shall be 2.125 m above floor/platform elevation UNO.

SHEET NOTES:

(1) Bolt lengths to be long enough to fully engage all materials through which they pass, including all washers and nuts, and where attaching to structural steel be anchored in threads to a depth at least 1.2 times the bolt diameter. Holes in structural members shall be drilled and bottom tapped to 5 mm minimum deeper than the depth to which the bolt will engage the steel.

(2) 203 x 203 x 1220, 304SS, Nema 4X wireway. with bracket hanger for mounting.

(3) For continuation, see sheets E-293, and E-366.

(4) Install #2 bare copper wire (bonding jumper) inside conduit and connect to conduit insulated grounding bushing and to enclosure grounding terminal. Use servit post Burndy Type KC or equal inside bottom of the enclosure when no factory grounding terminal is provided. See Detail 8, sheet E-111B for similar installation.

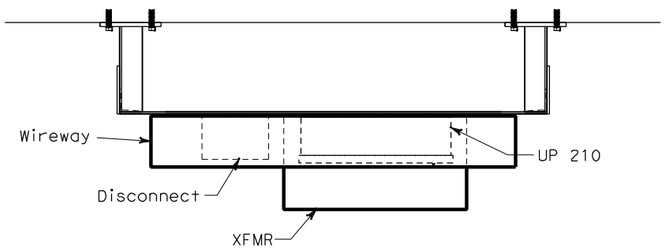

PLAN

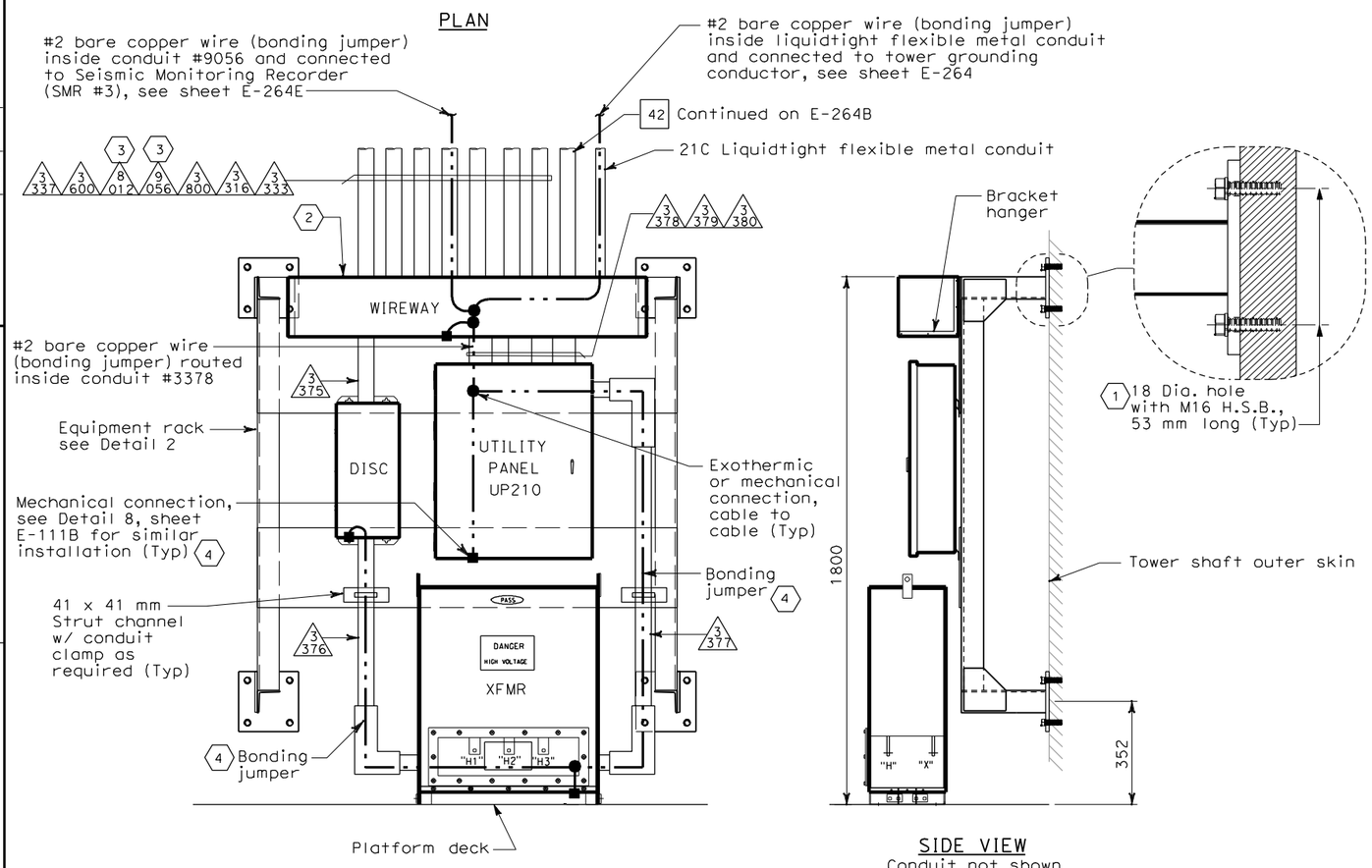

ELEVATION

SIDE VIEW
Conduit not shown for clarity

DETAIL 1
SCALE 1:10

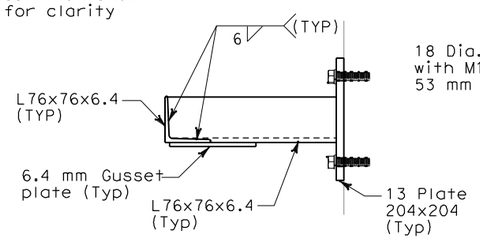

SECTION A-A
SCALE 1:5

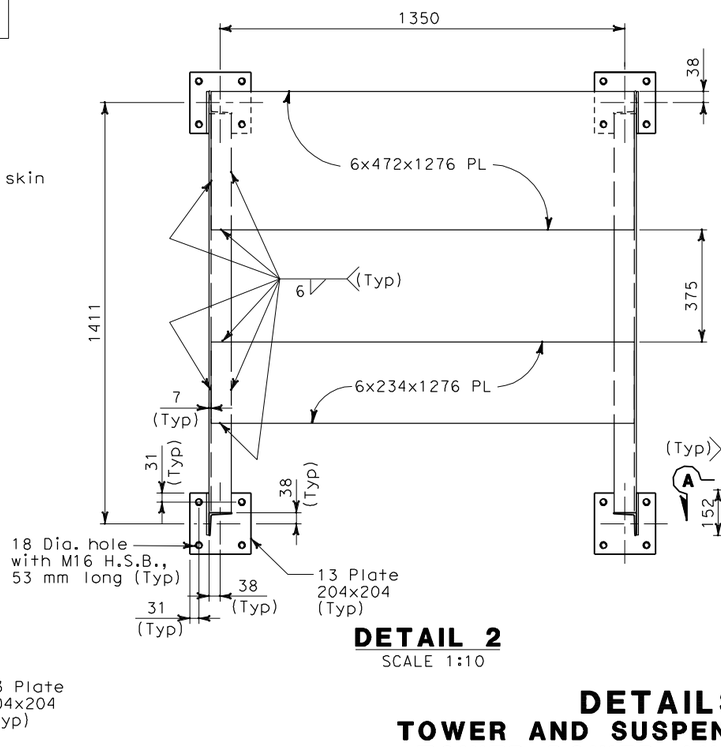

DETAIL 2
SCALE 1:10

DETAILS
TOWER AND SUSPENSION CABLE TOWER POWER AND LIGHTING
SCALE: AS NOTED

E-264C

REQUEST FOR INFORMATION NOT ADDRESSED IN THIS CCO REMAIN IN FORCE					
MARK	DATE	DESCRIPTIONS	BY	CH'D	CCO#
		REVISIONS			
0	02/24/10	TOWER UTILITY PANELS	JS TW	RG SYC	70

CONTRACT CHANGE ORDER NO._____
SHEET_____ OF_____

THIS PLAN ACCURATE FOR ELECTRICAL WORK ONLY.

ALL DIMENSIONS ARE IN MILLIMETERS UNLESS OTHERWISE SHOWN.

FOR REDUCED PLANS ORIGINAL SCALE IS IN MILLIMETERS 0 20 40 60 80

DGN FILE =>t:\13103\ms\pse\SAS Struc\CCO\SAS CC070\2009-12-02 Issued for Submittal\04-0120f1_0271S02.dgn
USERNAME =>llorico

CU 04251 EA 0120F1

STATE OF CALIFORNIA - DEPARTMENT OF TRANSPORTATION
DESIGN OVERSIGHT BEHZAD GOLEMOHAMMADI
CALCULATED/DESIGNED BY FK
CHECKED BY EDC
DATE 10/01 11/01
REVISED BY DATE REVISED

LAST REVISION 00-00-00
DATE PLOTTED => 2/26/2010
TIME PLOTTED => 9:50:12 AM

DIST	COUNTY	ROUTE	KILOMETER POST TOTAL PROJECT	SHEET No	TOTAL SHEETS
04	SF	80	13.2/13.9	271 S3	1204

REGISTERED ELECTRICAL ENGINEER DATE

PLANS APPROVAL DATE

REGISTERED PROFESSIONAL ENGINEER — FADI WALIEDDINE No. 11465 Exp.12/31/2009 ELECTRICAL — STATE OF CALIFORNIA

PB AMERICAS, Inc.
A Parsons Brinckerhoff Company
303 Second St., Suite 700N
San Francisco, CA 94107-1317

The State of California or its officers or agents shall not be responsible for the accuracy or completeness of electronic copies of this plan sheet.

Caltrans now has a web site! To get to the web site, go to http://www.dot.ca.gov

Caltrans Metric

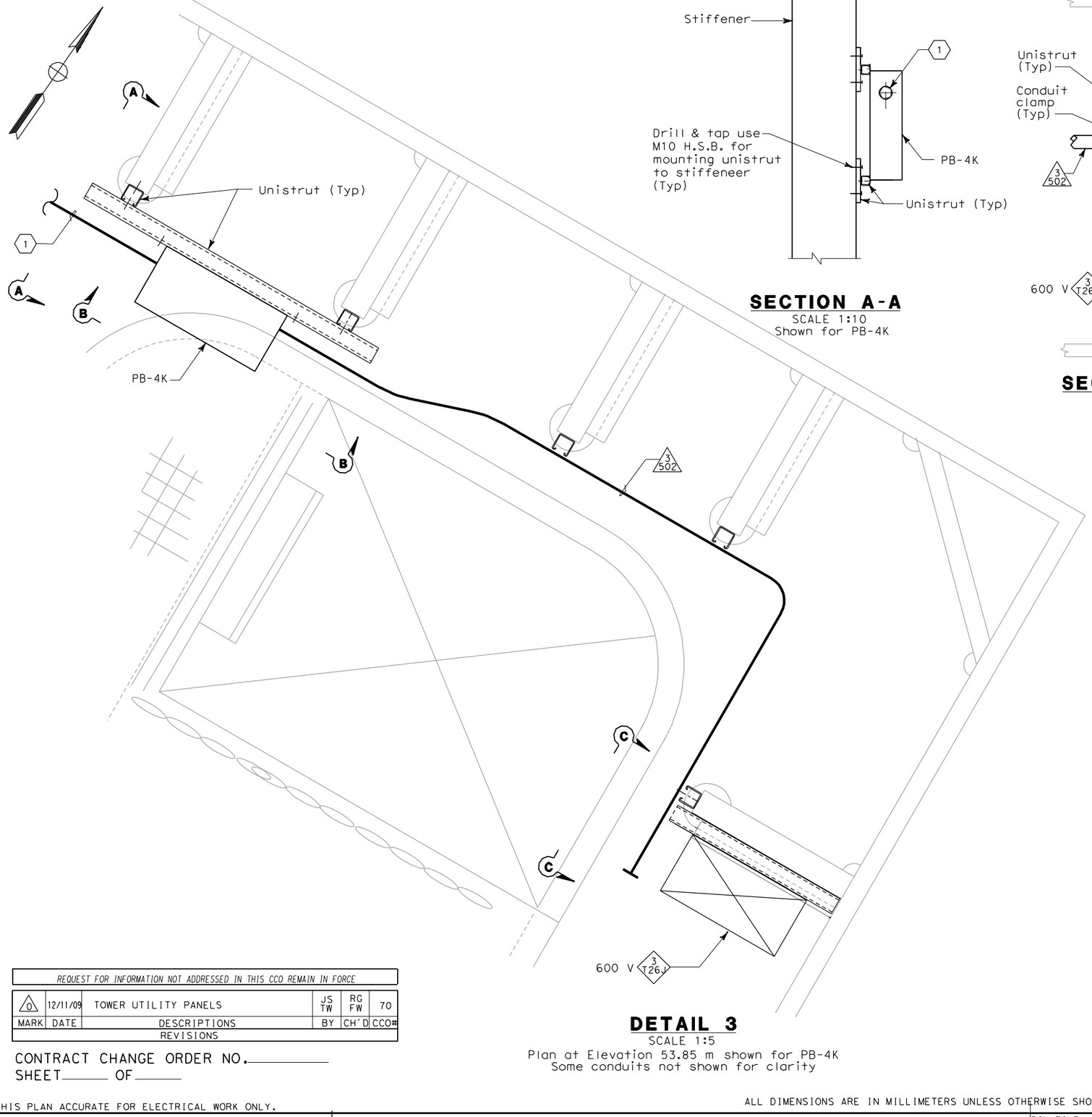

DETAIL 3
SCALE 1:5
Plan at Elevation 53.85 m shown for PB-4K
Some conduits not shown for clarity

SECTION A-A
SCALE 1:10
Shown for PB-4K

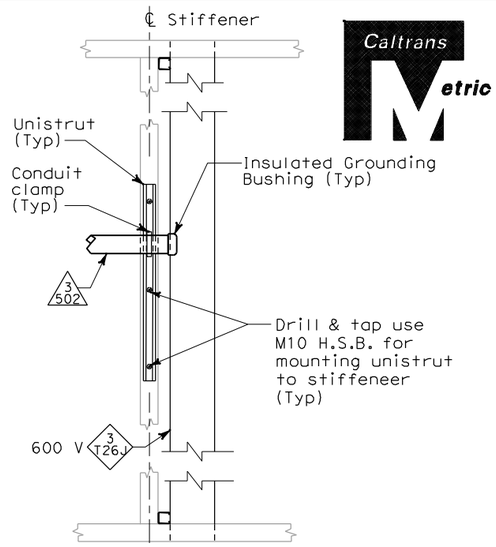

SECTION C-C
SCALE 1:10

SHEET NOTES:

1. Numbers and sizes of conduits are field route to lights, receptacles and switches. See sheets E-284 and E-284A for conduit information.

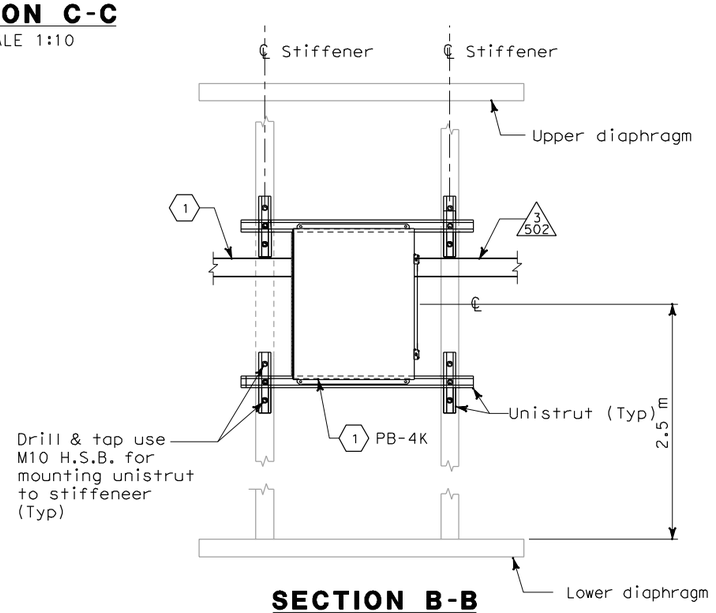

SECTION B-B
SCALE 1:10
Shown for PB-4K
Light and receptacle distribution box detail typical stiffener location shown for SE. NW similar and SW and NE are opposite hand.

REQUEST FOR INFORMATION NOT ADDRESSED IN THIS CCO REMAIN IN FORCE						
0	12/11/09	TOWER UTILITY PANELS	JS TW	RG FW	70	
MARK	DATE	DESCRIPTIONS	BY	CH'D	CCO#	
REVISIONS						

CONTRACT CHANGE ORDER NO._____
SHEET_____ OF_____

THIS PLAN ACCURATE FOR ELECTRICAL WORK ONLY.

ALL DIMENSIONS ARE IN MILLIMETERS UNLESS OTHERWISE SHOWN.

FOR REDUCED PLANS ORIGINAL SCALE IS IN MILLIMETERS 0 20 40 60 80

DGN FILE =>t:\13103\ms\pse\SAS Struc\CCO\SAS CC070\2009-12-02 issued for Submittal\04-0120f1_0271S03.dgn
USERNAME =>llorico

CU 04251 EA 0120F1

STATE OF CALIFORNIA - DEPARTMENT OF TRANSPORTATION
Caltrans
DESIGN OVERSIGHT
BEHZAD GOLEMOHAMMADI
CALCULATED/ DESIGNED BY
CHECKED BY
FK EDC
DATE 10/01 11/01
REVISED BY DATE REVISED

LAST REVISION 00-00-00
DATE PLOTTED => 12/10/2009
TIME PLOTTED => 3:26:36 PM

DETAILS
TOWER AND SUSPENSION CABLE TOWER POWER AND LIGHTING
SCALE AS NOTED

E-264D

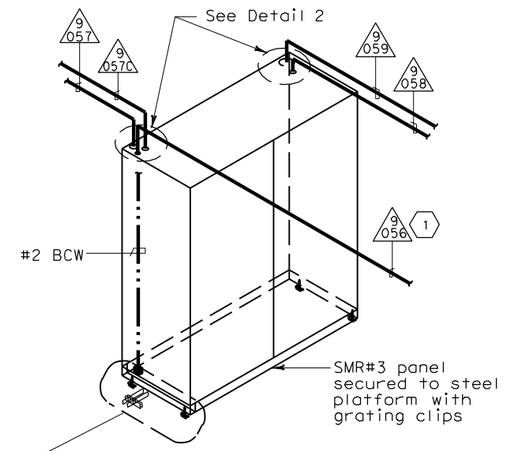

ELEVATION - DETAIL 1
STRONG MOTION RECORDER #3

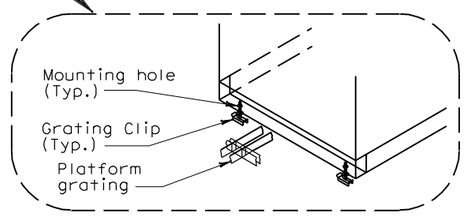

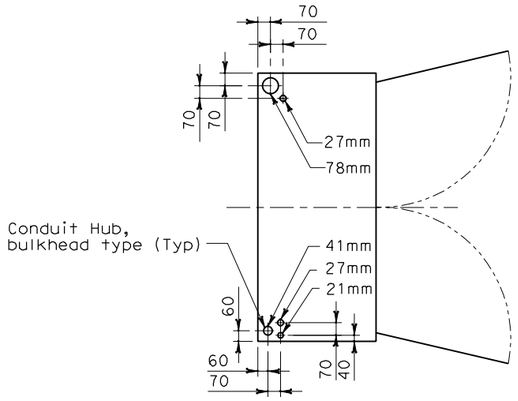

PLAN - DETAIL 2
STRONG MOTION RECORDER #3

DIST	COUNTY	ROUTE	KILOMETER POST TOTAL PROJECT	SHEET No	TOTAL SHEETS
04	SF	80	13.2/13.9	271 S4	1204

REGISTERED ELECTRICAL ENGINEER DATE

PLANS APPROVAL DATE

FADI WALIEDDINE No. 11465 Exp.12/31/2009 ELECTRICAL — REGISTERED PROFESSIONAL ENGINEER — STATE OF CALIFORNIA

PB AMERICAS, Inc.
A Parsons Brinckerhoff Company
303 Second St., Suite 700N
San Francisco, CA 94107-1317

The State of California or its officers or agents shall not be responsible for the accuracy or completeness of electronic copies of this plan sheet.

Caltrans now has a web site! To get to the web site, go to http://www.dot.ca.gov

SHEET NOTES:

(1) Install #2 Bare copper wire (bonding jumper) in conduit (9 056) from UP210 to SMR #3. For additional grounding detail, see sheet E-264C.

NOTES:

1. References:
   - For detail plan drawing, see sheet E-366.
2. All conduits and fittings routed at grating shall be PVC coated, rigid galvanized steel.

REQUEST FOR INFORMATION NOT ADDRESSED IN THIS CCO REMAIN IN FORCE

MARK	DATE	DESCRIPTIONS	BY	CH'D	CCO#
		REVISIONS			
0	12/02/09	TOWER UTILITY PANELS	TW	RG FW	70

CONTRACT CHANGE ORDER NO._____
SHEET_____ OF _____

DETAILS
TOWER AND SUSPENSION CABLE
TOWER POWER AND LIGHTING
NO SCALE

E-264E

DESIGN OVERSIGHT
BEHZAD GOLEMOHAMMADI
CALCULATED/ DESIGNED BY
CHECKED BY
DATE REVISED BY
DATE REVISED

STATE OF CALIFORNIA - DEPARTMENT OF TRANSPORTATION
Caltrans

THIS PLAN ACCURATE FOR ELECTRICAL WORK ONLY.

ALL DIMENSIONS ARE IN MILLIMETERS UNLESS OTHERWISE SHOWN.

FOR REDUCED PLANS ORIGINAL SCALE IS IN MILLIMETERS 0 20 40 60 80

DGN FILE =>t:\13103\ms\pse\SAS Struc\CCO\SAS CCO70\2009-12-02 issued for Submittal\04-0120f1_0271S04.dgn
USERNAME =>llorico

CU 04251 EA 0120F1

LAST REVISION 00-00-00
DATE PLOTTED => 12/10/2009
TIME PLOTTED => 3:27:52 PM

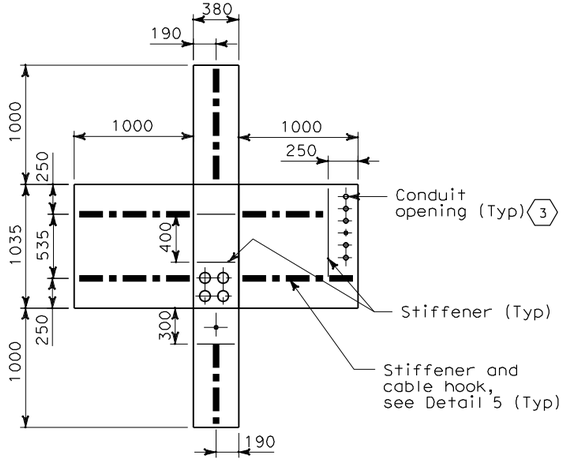

DETAIL 1

PULL BOX A - EXPLODED PLAN VIEW FROM THE INSIDE (1)

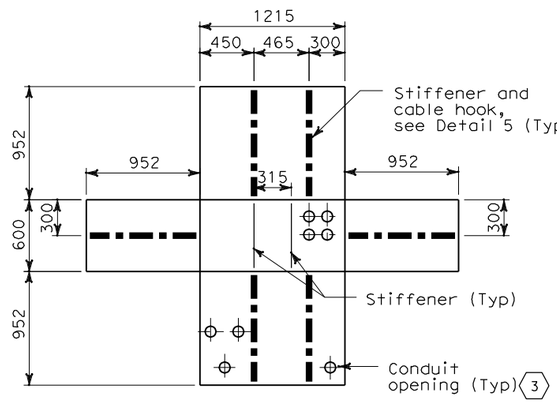

DETAIL 2

PULL BOX B - EXPLODED PLAN VIEW FROM THE INSIDE (1)

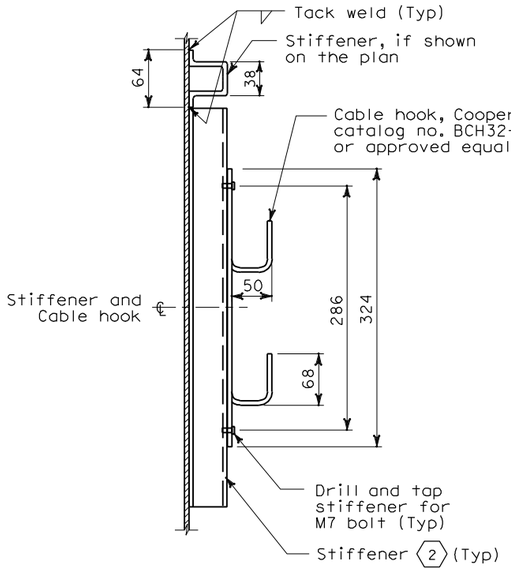

DETAIL 5

STIFFENER AND CABLE HOOK ELEVATION VIEW

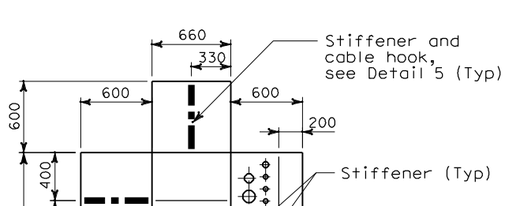

DETAIL 3

PULL BOX C - EXPLODED PLAN VIEW FROM THE INSIDE (1)

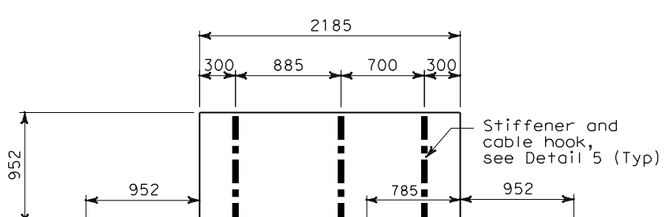

DETAIL 4

PULL BOX D - EXPLODED PLAN VIEW FROM THE INSIDE (1)

SHEET NOTES

1. Furnish and install stiffeners and cable hooks around the inside walls of pull box. Provide minimal distance between pull box edge and stiffener.
2. The specified location and quantity of stiffeners represents only the recommended location for attaching the cable hooks. Stiffeners with cable hooks shall be able to withstand a minimum total weight of 60 kg. Additional stiffeners may be installed per the fabricator's discretion to maintain the integrity of the box based on the form and shape.
3. For actual location of conduit openings, see sheet E-264A.

NOTES:

1. References:
   - For plan and additional notes, see sheet E-264A.
   - For pull box plan and elevation view, see sheet E-264H.

DIST	COUNTY	ROUTE	KILOMETER POST TOTAL PROJECT	SHEET No	TOTAL SHEETS
04	SF	80	13.2/13.9	271 S6	1204

REGISTERED ELECTRICAL ENGINEER DATE

REGISTERED PROFESSIONAL ENGINEER — FADI WALIEDDINE No. 11465 Exp. 12/31/2009 ELECTRICAL — STATE OF CALIFORNIA

PLANS APPROVAL DATE

PB AMERICAS, Inc.
A Parsons Brinckerhoff Company
303 Second St., Suite 700N
San Francisco, CA 94107-1317

The State of California or its officers or agents shall not be responsible for the accuracy or completeness of electronic copies of this plan sheet.

Caltrans now has a web site! To get to the web site, go to http://www.dot.ca.gov

REQUEST FOR INFORMATION NOT ADDRESSED IN THIS CCO REMAIN IN FORCE

MARK	DATE	DESCRIPTIONS	BY	CH'D	CCO#
		REVISIONS			
0	09/18/09	TOWER UTILITY PANELS	RSB	RG FW	70

CONTRACT CHANGE ORDER NO._____
SHEET_____ OF _____

DETAILS
TOWER AND SUSPENSION CABLE
TOWER POWER AND LIGHTING

NO SCALE

E-264G

DESIGN OVERSIGHT: BEHZAD GOLEMOHAMMADI
CALCULATED/DESIGNED BY
CHECKED BY
DATE REVISED BY
DATE REVISED

STATE OF CALIFORNIA - DEPARTMENT OF TRANSPORTATION
Caltrans

THIS PLAN ACCURATE FOR ELECTRICAL WORK ONLY.

ALL DIMENSIONS ARE IN MILLIMETERS UNLESS OTHERWISE SHOWN.

FOR REDUCED PLANS ORIGINAL SCALE IS IN MILLIMETERS 0 20 40 60 80

DGN FILE =>t:\13103\ms\pse\SAS Struc\CCO\SAS CC070\2009-12-02 issued for Submittal\04-0120f1_0271S06.dgn
USERNAME =>llorico

CU 04251 EA 0120F1

DATE PLOTTED => 12/10/2009
TIME PLOTTED => 3:28:33 PM

LAST REVISION 00-00-00

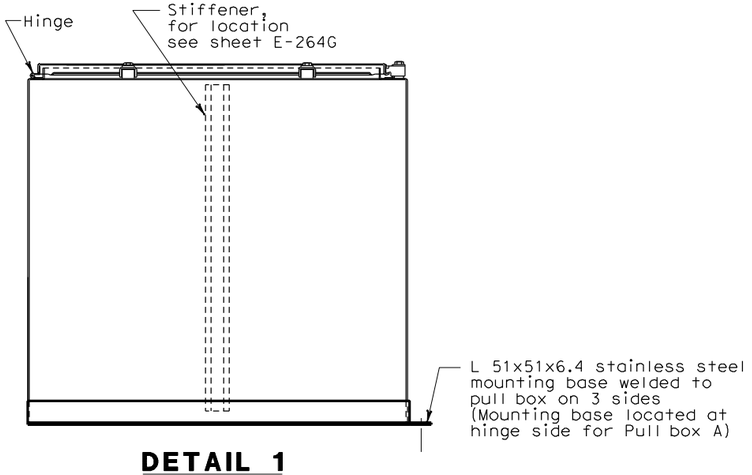

DETAIL 1

TYPICAL PULL BOX - SIDE ELEVATION VIEW (1)(2)
TYPICAL FOR PULL BOX A , B AND D

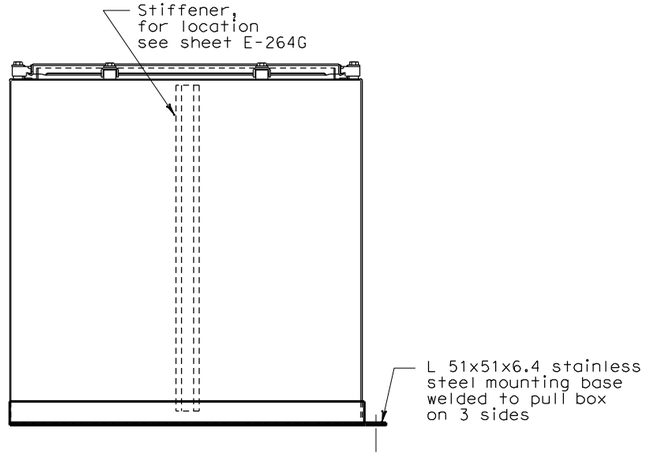

DETAIL 2

PULL BOX C - SIDE ELEVATION VIEW (2)

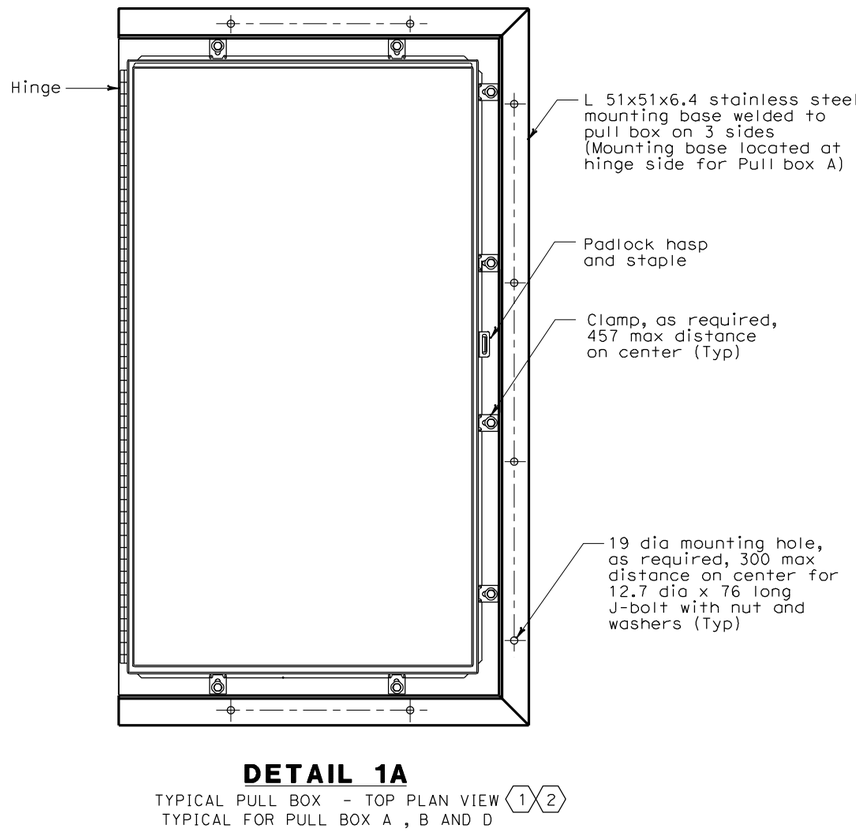

DETAIL 1A

TYPICAL PULL BOX - TOP PLAN VIEW (1)(2)
TYPICAL FOR PULL BOX A , B AND D

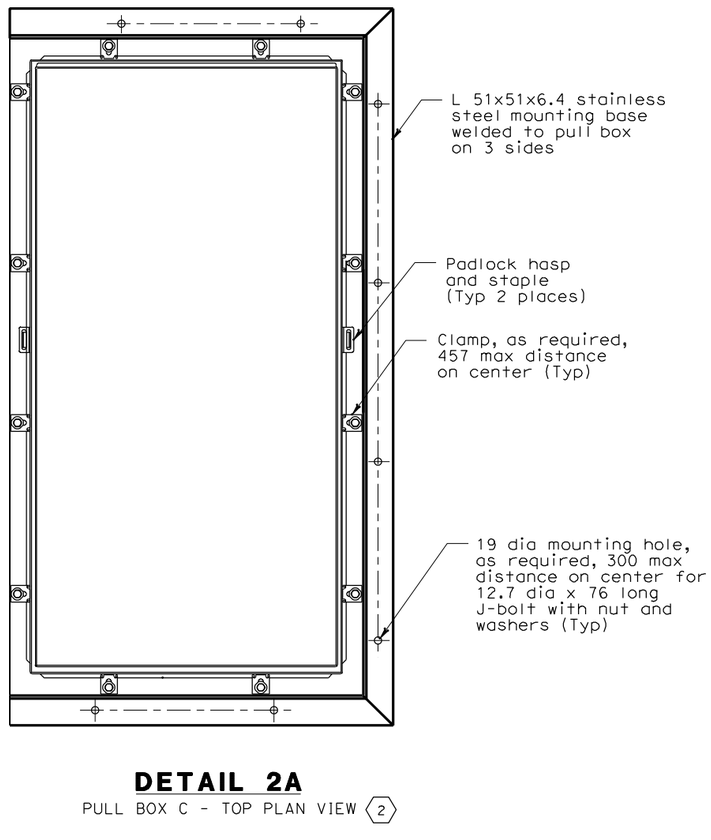

DETAIL 2A

PULL BOX C - TOP PLAN VIEW (2)

SHEET NOTES

(1) Furnish and install two gas charged lift supports to pull box door, gas lift support shall be sized for the individual door weight.

(2) Pull Box shall be fabricated of 304 stainless steel, 14 gage (except the bottom plate which shall be 10 gage), Nema type 4X in accordance with the applicable industry standard.

NOTES:

1. References:
   - For plan and additional notes, see sheet E-264A.
   - For pull box exploded view, see sheet E-264G.

REQUEST FOR INFORMATION NOT ADDRESSED IN THIS CCO REMAIN IN FORCE					
MARK	DATE	REVISIONS	BY	CH'D	CCO#
0	09/18/09	TOWER UTILITY PANELS	RB	RG FW	70

CONTRACT CHANGE ORDER NO._____
SHEET_____ OF _____

DETAILS
TOWER AND SUSPENSION CABLE TOWER POWER AND LIGHTING

NO SCALE

E-264H

DIST	COUNTY	ROUTE	KILOMETER POST TOTAL PROJECT	SHEET No	TOTAL SHEETS
04	SF	80	13.2/13.9	271 S7	1204

9-18-09
REGISTERED ELECTRICAL ENGINEER DATE

PLANS APPROVAL DATE

REGISTERED PROFESSIONAL ENGINEER — FADI WALIEDDINE No. 11465 Exp.12/31/2009 ELECTRICAL — STATE OF CALIFORNIA

PB AMERICAS, Inc.
A Parsons Brinckerhoff Company
303 Second St., Suite 700N
San Francisco, CA 94107-1317

The State of California or its officers or agents shall not be responsible for the accuracy or completeness of electronic copies of this plan sheet.

Caltrans now has a web site! To get to the web site, go to http://www.dot.ca.gov

DESIGN OVERSIGHT
BEHZAD GOLEMOHAMMADI

CALCULATED/ DESIGNED BY
CHECKED BY

DATE REVISED BY
DATE REVISED

STATE OF CALIFORNIA - DEPARTMENT OF TRANSPORTATION
Caltrans

THIS PLAN ACCURATE FOR ELECTRICAL WORK ONLY.

ALL DIMENSIONS ARE IN MILLIMETERS UNLESS OTHERWISE SHOWN.

FOR REDUCED PLANS ORIGINAL SCALE IS IN MILLIMETERS 0 20 40 60 80

DGN FILE =>t:\13103\ms\pse\SAS Struc\CCO\SAS CCO70\2009-12-02 issued for Submittal\04-0120f1_0271S07.dgn
USERNAME =>llorico

CU 04251 | EA 0120F1

LAST REVISION 00-00-00
DATE PLOTTED => 12/10/2009
TIME PLOTTED => 3:28:57 PM

DIST	COUNTY	ROUTE	KILOMETER POST TOTAL PROJECT	SHEET No	TOTAL SHEETS
04	SF	80	13.2/13.9	275 R1	1204

12/19/02
REGISTERED ELECTRICAL ENGINEER DATE

12-6-04
PLANS APPROVAL DATE

REGISTERED PROFESSIONAL ENGINEER — JENS ERLINGSSON No. 8249 Exp. 9/30/06 ELECTRICAL — STATE OF CALIFORNIA

PB POWER, Inc.
A Parsons Brinckerhoff Company
303 Second St., Suite 700N
San Francisco, CA 94107-1317

The State of California or its officers or agents shall not be responsible for the accuracy or completeness of electronic copies of this plan sheet.

Caltrans now has a web site! To get to the web site, go to http://www.dot.ca.gov

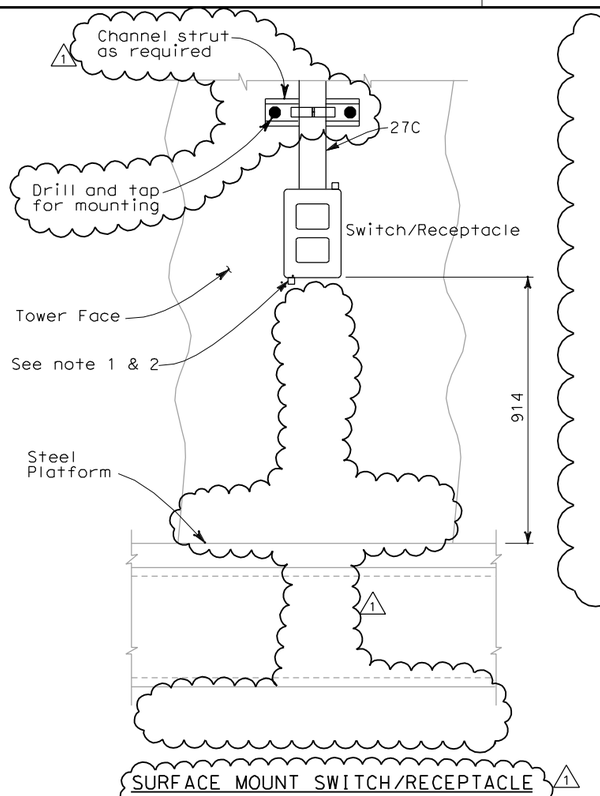

SURFACE MOUNT SWITCH/RECEPTACLE MAIN TOWER PLATFORM

DETAIL 7

(See Note 3)

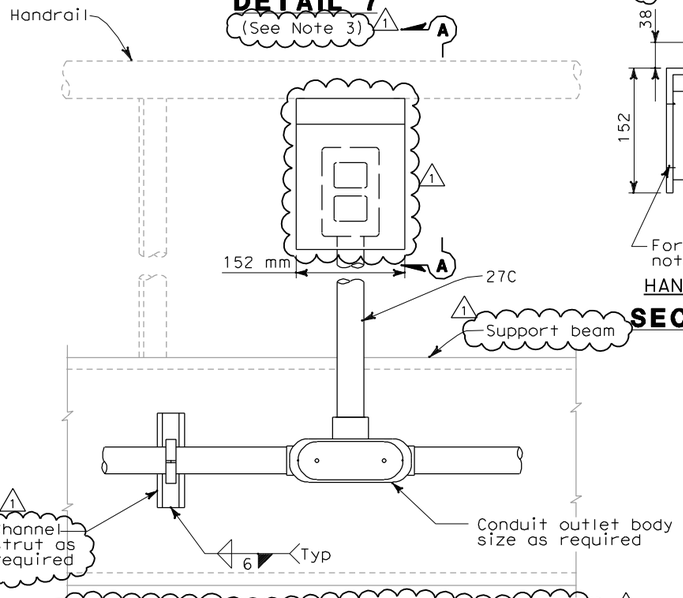

TYPICAL FOR SWITCH/RECEPTACLE ALONG WALKWAYS INSIDE GIRDER AND CROSSBEAM

DETAIL 9

(See Note 3)

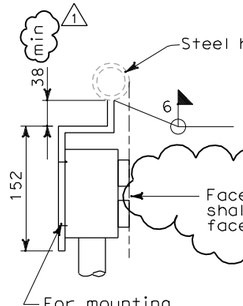

HANDRAIL MOUNT

SECTION A-A

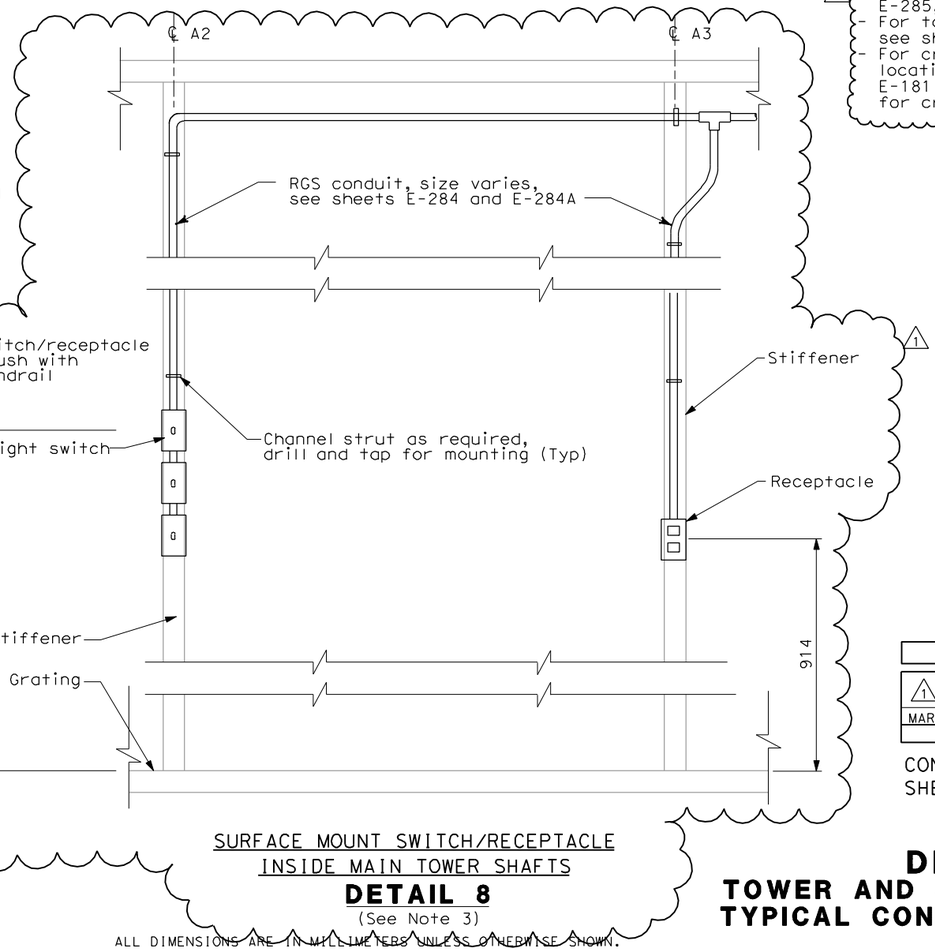

SURFACE MOUNT SWITCH/RECEPTACLE INSIDE MAIN TOWER SHAFTS

DETAIL 8

(See Note 3)

THIS PLAN ACCURATE FOR ELECTRICAL WORK ONLY.

ALL DIMENSIONS ARE IN MILLIMETERS UNLESS OTHERWISE SHOWN.

NOTES:

1. Switches and receptacles are indicated in details to show mountings only.
2. Attach fixture, receptacle and conduit. For mounting to steel surfaces drill and tap structural member and attach equipment with hex head machine bolts as required. Verify mounting holes with each piece of equipment.
3. References:
   - For typical tower ladder platform lighting, switch and receptacle layout, see E-284 and E-284A.
   - For circuit and conduit/cable tray schedules, see sheets starting at E-401.
   - For tower shaft diaphragm lighting and receptacle locations, see sheets E-264B, E-274, E-275, E-275A. E-285, E-285A and E-286.
   - For tower platform lighting and receptacle locations, see sheets E-264B, E-285, E-285A, E-285D and E-286.
   - For crossbeam and girder lighting and receptacle locations, see E-96 thru E-101 for Westbound, E-181 thru E-186A for Eastbound and E-114 thru E-118 for crossbeam area.

REGISTERED PROFESSIONAL ENGINEER — FADI WALIEDDINE No. 11465 Exp. 12/31/2009 ELECTRICAL — STATE OF CALIFORNIA

FOR REVISION ONLY

REQUEST FOR INFORMATION NOT ADDRESSED IN THIS CCO REMAIN IN FORCE

MARK	DATE	REVISIONS	BY	CH'D	CCO#
1	12/02/09	TOWER UTILITY PANELS	JS	RG FW	70

CONTRACT CHANGE ORDER NO._____
SHEET_____ OF _____

DETAILS
TOWER AND SUSPENSION CABLE TYPICAL CONDUIT INSTALLATION

SCALE 1:5

E-268

CALCULATED/ DESIGNED BY	CHECKED BY
FK	EDC

DATE	REVISED BY
10/01	11/01

DESIGN OVERSIGHT — BEHZAD GOLEMOHAMMADI

STATE OF CALIFORNIA - DEPARTMENT OF TRANSPORTATION — Caltrans

LAST REVISION 00-00-00 — DATE PLOTTED => 12/10/2009 TIME PLOTTED => 3:29:17 PM

FOR REDUCED PLANS ORIGINAL SCALE IS IN MILLIMETERS 0 20 40 60 80

DGN FILE =>I:\13103\ms\pse\SAS Struc\CCO\SAS CC070\2009-12-02 issued for Submittal\04-0120F1_0275R01.dgn
USERNAME =>llorico

CU 04251 EA 0120F1

TOWER 600 V CABLE TRAY LOCATION

CL DIAPHRAGM (ELEVATION)	BOTTOM END OF TRAY SECTION	TOP END OF TRAY SECTION	TOWER CABLE TRAY ID			
			NW	NE	SW	SE
139.000 m	139.533 m	142.595 m	3T21S	3T23S	3T25S	3T27S
135.000 m	135.531 m	138.593 m	3T21R	3T23R	3T25R	3T27R
131.000 m	131.529 m	134.591 m	3T21Q	3T23Q	3T25Q	3T27Q
127.000 m	127.527 m	130.589 m	3T21P	3T23P	3T25P	3T27P
123.000 m	123.525 m	126.587 m	3T21N	3T23N	3T25N	3T27N
119.000 m	119.585 m	122.585 m	3T21M	3T23M	3T25M	3T27M
116.330 m	116.400 m	118.548 m	3T21L	3T23L	3T25L	3T27L
111.670 m	111.739 m	116.362 m	3T21K	3T23K	3T25K	3T27K
109.000 m	109.553 m	111.701 m	3T21J	3T23J	3T25J	3T27J
105.500 m	105.565 m	108.543 m	3T21H	3T23H	3T25H	3T27H
102.500 m	102.563 m	105.527 m	3T21G	3T23G	3T25G	3T27G
99.000 m	99.548 m	102.525 m	3T21F	3T23F	3T25F	3T27F
95.500 m	95.560 m	98.538 m	3T21E	3T23E	3T25E	3T27E
92.500 m	92.559 m	95.522 m	3T21D	3T23D	3T25D	3T27D
89.000 m	89.543 m	92.521 m	3T21C	3T23C	3T25C	3T27C
85.250 m	85.305 m	88.533 m	3T21B	3T23B	3T25B	3T27B
80.750 m	80.803 m	85.267 m	3T21A	3T23A	3T25A	3T27A
77.000 m	77.537 m	80.765 m	3T20S	3T22S	3T24S	3T26S
74.000 m	74.050 m	76.527 m	3T20R	3T22R	3T24R	3T26R
71.000 m	71.048 m	74.012 m	3T20Q	3T22Q	3T24Q	3T26Q
68.000 m	68.046 m	71.010 m	3T20P	3T22P	3T24P	3T26P
65.000 m	65.531 m	68.008 m	3T20N	3T22N	3T24N	3T26N
62.000 m	62.044 m	64.521 m	3T20M	3T22M	3T24M	3T26M
59.000 m	59.042 m	62.006 m	3T20L	3T22L	3T24L	3T26L
56.000 m	56.041 m	59.004 m	3T20K	3T22K	3T24K	3T26K
53.000 m	53.525 m	56.003 m	3T20J	3T22J	3T24J	3T26J
47.600 m	48.087 m	52.515 m	3T20H	3T22H	3T24H	3T26H
43.000 m	43.485 m	47.147 m	3T20G	3T22G	3T24G	3T26G
38.000 m	38.483 m	42.545 m	3T20F	3T22F	3T24F	3T26F
33.000 m	33.480 m	37.543 m	3T20E	3T22E	3T24E	3T26E
28.000 m	28.478 m	32.540 m	3T20D	3T22D	3T24D	3T26D
23.000 m	23.475 m	27.538 m	3T20C	3T22C	3T24C	3T26C
18.000 m	18.473 m	22.535 m	3T20B	3T22B	3T24B	3T26B
15.000 m	15.021 m	17.533 m	3T20AA	3T22AA	3T24AA	3T26AA
13.000 m	13.024 m	14.983 m	3T20A	3T22A	3T24A	3T26A

TOWER TOS/COM CABLE TRAY LOCATION

CL DIAPHRAGM (ELEVATION)	BOTTOM END OF TRAY SECTION	TOP END OF TRAY SECTION	TOWER CABLE TRAY ID			
			NW	NE	SW	SE
139.000 m	139.533 m	142.595 m		3T43S	3T45S	3T47S
135.000 m	135.531 m	138.593 m		3T43R	3T45R	3T47R
131.000 m	131.529 m	134.591 m		3T43Q	3T45Q	3T47Q
127.000 m	127.527 m	130.589 m		3T43P	3T45P	3T47P
123.000 m	123.525 m	126.587 m		3T43N	3T45N	3T47N
119.000 m	119.585 m	122.585 m		3T43M	3T45M	3T47M
116.330 m	116.400 m	118.548 m		3T43L	3T45L	3T47L
111.670 m	111.739 m	116.362 m		3T43K	3T45K	3T47K
109.000 m	109.553 m	111.701 m		3T43J	3T45J	3T47J
105.500 m	105.565 m	108.543 m		3T43H	3T45H	3T47H
102.500 m	102.563 m	105.527 m		3T43G	3T45G	3T47G
99.000 m	99.548 m	102.525 m		3T43F	3T45F	3T47F
95.500 m	95.560 m	98.538 m		3T43E	3T45E	3T47E
92.500 m	92.559 m	95.522 m		3T43D	3T45D	3T47D
89.000 m	89.543 m	92.521 m		3T43C	3T45C	3T47C
85.250 m	85.305 m	88.533 m		3T43B	3T45B	3T47B
80.750 m	80.803 m	85.267 m		3T43A	3T45A	3T47A
77.000 m	77.537 m	80.765 m		3T42S	3T44S	3T46S
74.000 m	74.050 m	76.527 m		3T42R	3T44R	3T46R
71.000 m	71.048 m	74.012 m		3T42Q	3T44Q	3T46Q
68.000 m	68.046 m	71.010 m		3T42P	3T44P	3T46P
65.000 m	65.531 m	68.008 m		3T42N	3T44N	3T46N
62.000 m	62.044 m	64.521 m		3T42M	3T44M	3T46M
59.000 m	59.042 m	62.006 m		3T42L	3T44L	3T46L
56.000 m	56.041 m	59.004 m		3T42K	3T44K	3T46K
53.000 m	53.525 m	56.003 m		3T42J	3T44J	3T46J
47.600 m	48.087 m	52.515 m		3T42H	3T44H	3T46H
43.000 m	43.485 m	47.147 m		3T42G	3T44G	
38.000 m	38.483 m	42.545 m		3T42F	3T44F	
33.000 m	33.480 m	37.543 m		3T42E	3T44E	
28.000 m	28.478 m	32.540 m		3T42D	3T44D	
23.000 m	23.475 m	27.538 m		3T42C	3T44C	
18.000 m	18.473 m	22.535 m		3T42B	3T44B	
15.000 m	15.021 m	17.533 m		3T42AA	3T44AA	
13.000 m	13.024 m	14.983 m		3T42A	3T44A	

NOTES:

1. See Sheets E-270A and E-270C for tower cable trays location and typical installation details.
2. Deleted. 1
3. Kellems cable riser support grip shall be installed at top end of cable entering the cable tray. Maximum vertical spacing between cable grips is 30 m.

DIST	COUNTY	ROUTE	KILOMETER POST TOTAL PROJECT	SHEET No	TOTAL SHEETS
04	SF	80	13.2/13.9	275 S2R1	1204

REGISTERED ELECTRICAL ENGINEER — 8/24/07 DATE

REGISTERED PROFESSIONAL ENGINEER — MAXWELL FUMIO TAKANI — No. E 8651 — Exp. 9/30/2008 ELECTRICAL — STATE OF CALIFORNIA

PLANS APPROVAL DATE

PB AMERICAS, Inc.
A Parsons Brinckerhoff Company
303 Second St., Suite 700N
San Francisco, CA 94107-1317

The State of California or its officers or agents shall not be responsible for the accuracy or completeness of electronic copies of this plan sheet.

Caltrans now has a web site! To get to the web site, go to http://www.dot.ca.gov

REGISTERED PROFESSIONAL ENGINEER — FADI WALIEDDINE — No. 11465 — Exp. 12/31/2009 ELECTRICAL — STATE OF CALIFORNIA

FOR REVISION ONLY 1

REQUEST FOR INFORMATION NOT ADDRESSED IN THIS CCO REMAIN IN FORCE					
1	09/18/09	TOWER UTILITY PANELS	JS TW	RG FW	70
0	02/19/08	ELECTRICAL MODIFICATIONS	MP EL	RR	42
MARK	DATE	DESCRIPTIONS	BY	CH'D	CCO#
REVISIONS					

CONTRACT CHANGE ORDER NO._____
SHEET_____ OF _____

DETAILS
TOWER AND AND SUSPENSION CABLE CABLE TRAY LOCATION

SCALE AS NOTED

E-270B

DESIGN OVERSIGHT	CALCULATED/ DESIGNED BY	DATE	REVISED BY
BEHZAD GOLEMOHAMMADI	CHECKED BY	RR 7/07	DATE REVISED

STATE OF CALIFORNIA - DEPARTMENT OF TRANSPORTATION — Caltrans

FOR REDUCED PLANS ORIGINAL SCALE IS IN MILLIMETERS 0 20 40 60 80

DGN FILE =>t:\13103\ms\pse\SAS Struc\CCO\SAS CCO70\2009-12-02 issued for Submittal\04-0120f1_0275S02R01.dgn
USERNAME =>llorico

CU 04251 | EA 0120F1

LAST REVISION 00-00-00 | DATE PLOTTED => 12/10/2009 TIME PLOTTED => 3:29:35 PM

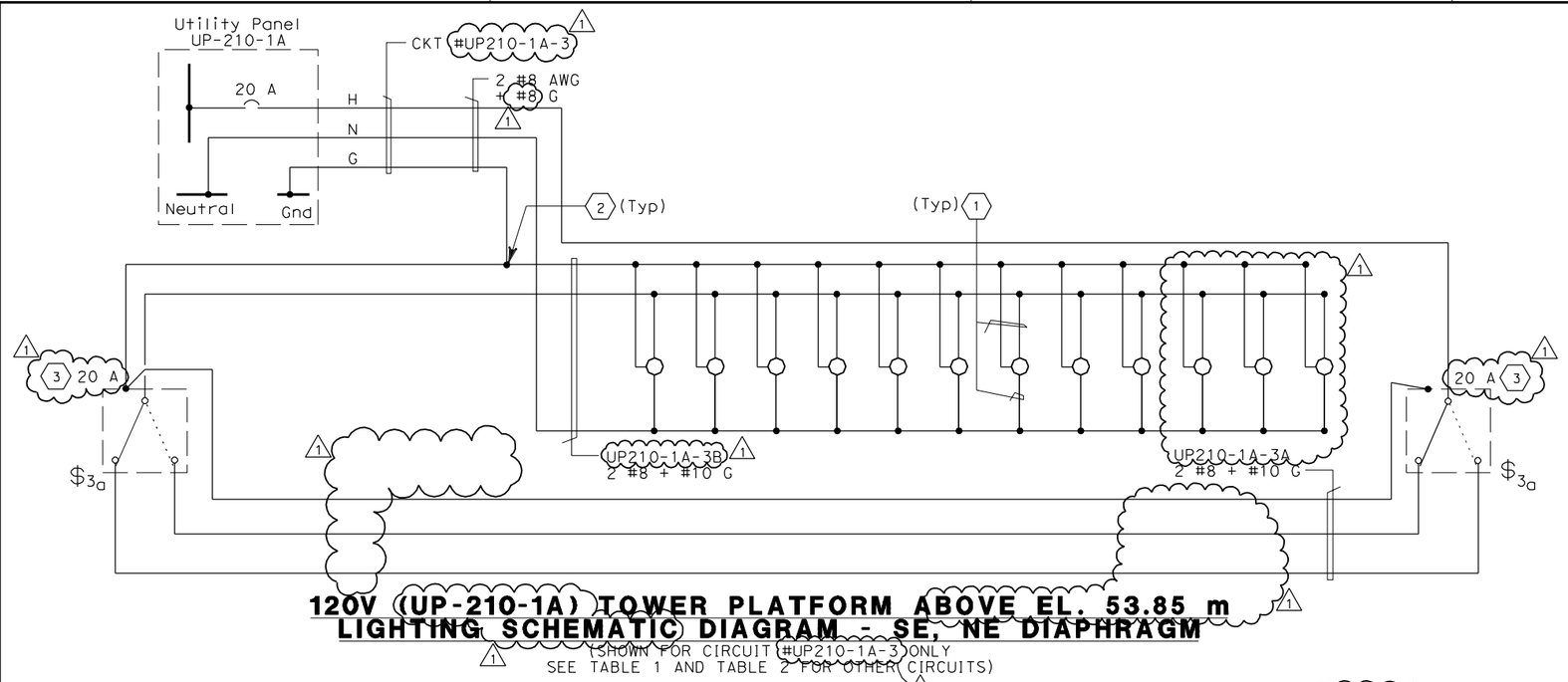

120V (UP-210-1A) TOWER PLATFORM ABOVE EL. 53.85 m LIGHTING SCHEMATIC DIAGRAM - SE, NE DIAPHRAGM

(SHOWN FOR CIRCUIT #UP210-1A-3 ONLY
SEE TABLE 1 AND TABLE 2 FOR OTHER CIRCUITS)

TABLE 1 (SE DIAPHRAGM)

Location At Tower Grating Elevation	Lighting At SE Tower Diaphragm CKT. Number	3-Way Switches CKT. Number	Receptacle CKT. Number
Elev 53.0	UP210-1A-3	UP210-1A-3	
Elev 56.0	UP210-1A-3		UP210-1A-4
Elev 59.0	UP210-1A-3		
Elev 62.0	UP210-1A-3		
Elev 65.0	UP210-1A-3		UP210-1A-4
Elev 68.0	UP210-1A-3		
Elev 71.0	UP210-1A-3		UP210-1A-4
Elev 74.0	UP210-1A-3		
Elev 77.0	UP210-1A-3		UP210-1A-4
Elev 80.75	UP210-1A-3		UP210-1A-4
Elev 85.25	UP210-1A-3		
Elev 89.0	UP210-1A-3	UP210-1A-3	
	UP210-1A-5 (SW)	UP210-1A-5 (SW)	UP210-1A-6
	UP210-1A-1	UP210-1A-1	
Elev 92.5	UP210-1A-1		
Elev 95.5	UP210-1A-1		
Elev 99.0	UP210-1A-1		UP210-1A-6
Elev 102.5	UP210-1A-1		
Elev 105.5	UP210-1A-1		UP210-1A-6
Elev 109.0	UP210-1A-1		
Elev 111.67	UP210-1A-1		
Elev 116.33	UP210-1A-1		UP210-1A-6
Elev 119.0	UP210-1A-1		
Elev 123.0	UP210-1A-1		
Elev 127.0	UP210-1A-1		
Elev131.0	UP210-1A-1		
Elev135.0	UP210-1A-1		
Elev139.0	UP210-1A-1	UP210-1A-1	UP210-1A-6

TABLE 2 (NE DIAPHRAGM)

Location At Tower Grating Elevation	Lighting At NE Tower Diaphragm CKT. Number	3-Way Switches CKT. Number	Receptacle CKT. Number
Elev 53.0	UP210-1A-9	UP210-1A-9	
Elev 56.0	UP210-1A-9		UP210-1A-10
Elev 59.0	UP210-1A-9		
Elev 62.0	UP210-1A-9		
Elev 65.0	UP210-1A-9		UP210-1A-10
Elev 68.0	UP210-1A-9		
Elev 71.0	UP210-1A-9		UP210-1A-10
Elev 74.0	UP210-1A-9		
Elev 77.0	UP210-1A-9		UP210-1A-10
Elev 80.75	UP210-1A-9		UP210-1A-10
Elev 85.25	UP210-1A-9		
Elev 89.0	UP210-1A-9	UP210-1A-9	
	UP210-1A-11	UP210-1A-11	UP210-1A-12
Elev 92.5	UP210-1A-11		
Elev 95.5	UP210-1A-11		
Elev 99.0	UP210-1A-11		UP210-1A-12
Elev 102.5	UP210-1A-11		
Elev 105.5	UP210-1A-11		UP210-1A-12
Elev 109.0	UP210-1A-11		
Elev 111.67	UP210-1A-11		
Elev 116.33	UP210-1A-11		UP210-1A-12
Elev 119.0	UP210-1A-11		
Elev 123.0	UP210-1A-11		
Elev127.0	UP210-1A-11		
Elev131.0	UP210-1A-11		
Elev135.0	UP210-1A-11		
Elev139.0	UP210-1A-11	UP210-1A-11	UP210-1A-12

DIST	COUNTY	ROUTE	KILOMETER POST TOTAL PROJECT	SHEET No	TOTAL SHEETS
04	SF	80	13.2/13.9	279 R1	1204

12/19/02
REGISTERED ELECTRICAL ENGINEER DATE

REGISTERED PROFESSIONAL ENGINEER
JENS ERLINGSSON
No. 8249
Exp. 9/30/06
ELECTRICAL
STATE OF CALIFORNIA

12-6-04
PLANS APPROVAL DATE

PB POWER, Inc.
A Parsons Brinckerhoff Company
303 Second St., Suite 700N
San Francisco, CA 94107-1317

The State of California or its officers or agents shall not be responsible for the accuracy or completeness of electronic copies of this plan sheet.

Caltrans now has a web site! To get to the web site, go to http://www.dot.ca.gov

SHEET NOTES:

1. 2 #10, 1#10 G AWG single conductors.
2. Conductors to be spliced.
3. Light switch shall be rated 30 A for CKT #UP210-1A-1 and CKT #UP210-1A-11.

NOTES:

1. References:
   - For utility panel schedule, see sheet E-279.
   - For circuit, conduit and cable tray schedules, see sheets starting at E-401.
   - For typical tower ladder platform lighting and power plans, see sheets E-284 & E-284A.

REGISTERED PROFESSIONAL ENGINEER
FADI WALIEDDINE
No. 11465
Exp. 12/31/2009
ELECTRICAL
STATE OF CALIFORNIA

FOR REVISION ONLY

REQUEST FOR INFORMATION NOT ADDRESSED IN THIS CCO REMAIN IN FORCE

MARK	DATE	DESCRIPTIONS	BY	CH'D	CCO#
		REVISIONS			
1	09/18/09	TOWER UTILITY PANELS	JS TW	RG FW	70

CONTRACT CHANGE ORDER NO._____
SHEET_____ OF _____

DESIGN OVERSIGHT: BEHZAD GOLEMOHAMMADI
CALCULATED/DESIGNED BY: FK | DATE 10/01
CHECKED BY: EDC | DATE REVISED: 11/01
REVISED BY

STATE OF CALIFORNIA - DEPARTMENT OF TRANSPORTATION
Caltrans

DETAILS
TOWER AND SUSPENSION CABLE 120 V PIER LIGHTING WIRING DIAGRAM
NO SCALE

E-274

LAST REVISION 00-00-00
DATE PLOTTED => 12/10/2009
TIME PLOTTED => 3:29:53 PM

FOR REDUCED PLANS ORIGINAL SCALE IS IN MILLIMETERS 0 20 40 60 80

DGN FILE =>t:\13103\ms\pse\SAS Struc\CCO\SAS CCO70\2009-12-02 issued for Submittal\04-0120f1_0279R01.dgn
USERNAME =>llorico

CU 04251 | EA 0120F1

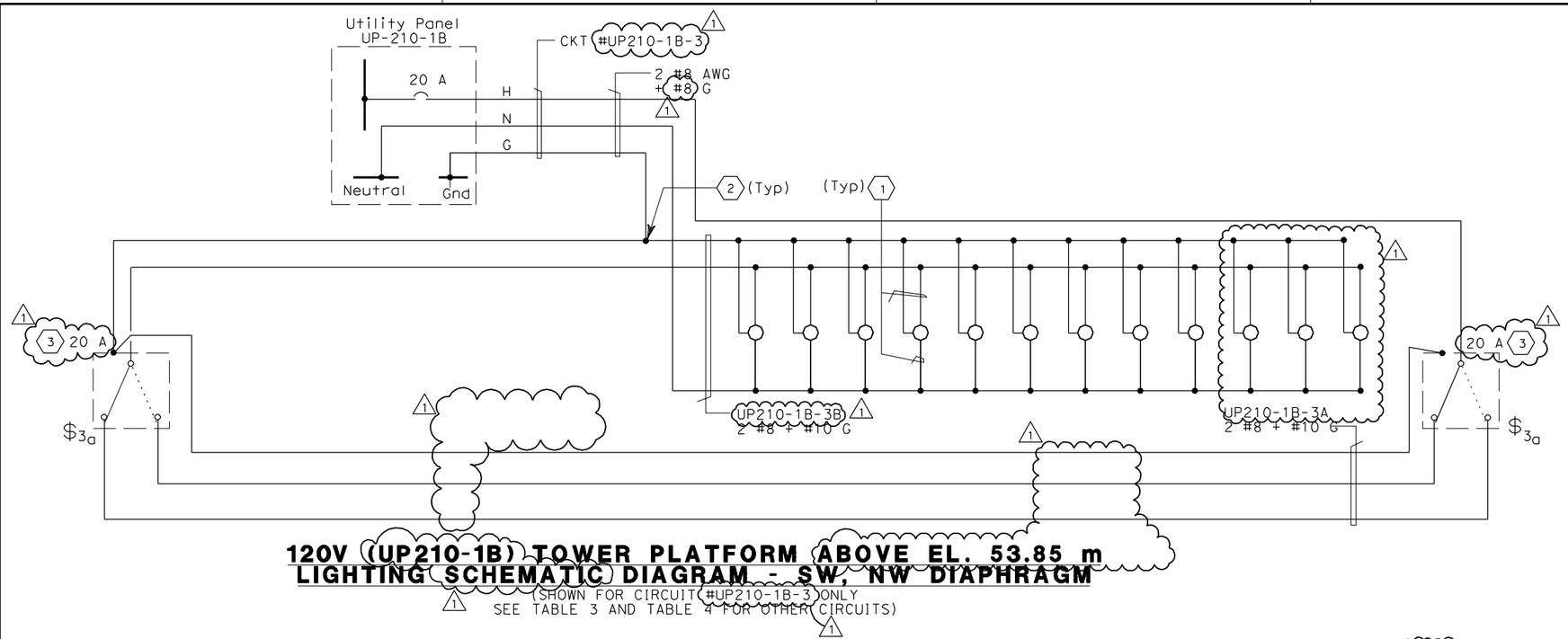

120V (UP210-1B) TOWER PLATFORM ABOVE EL. 53.85 m
LIGHTING SCHEMATIC DIAGRAM - SW, NW DIAPHRAGM

(SHOWN FOR CIRCUIT #UP210-1B-3 ONLY
SEE TABLE 3 AND TABLE 4 FOR OTHER CIRCUITS)

TABLE 3 (SW DIAPHRAGM)

Location At Tower Grating Elevation	Lighting At SW Tower Diaphragm CKT. Number	3-Way Switches CKT. Number	Receptacle CKT. Number
Elev 53.0	UP210-1B-3	UP210-1B-3	
Elev 56.0	UP210-1B-3		UP210-1B-4
Elev 59.0	UP210-1B-3		
Elev 62.0	UP210-1B-3		
Elev 65.0	UP210-1B-3		UP210-1B-4
Elev 68.0	UP210-1B-3		
Elev 71.0	UP210-1B-3		UP210-1B-4
Elev 74.0	UP210-1B-3		
Elev 77.0	UP210-1B-3		UP210-1B-4
Elev 80.75	UP210-1B-3		UP210-1B-4
Elev 85.25	UP210-1B-3		
	UP210-1B-3	UP210-1B-3	
Elev 89.0	UP210-1B-5 (SE)	UP210-1B-5 (SE)	UP210-1B-6
	UP210-1B-1	UP210-1B-1	
Elev 92.5	UP210-1B-1		
Elev 95.5	UP210-1B-1		
Elev 99.0	UP210-1B-1		UP210-1B-6
Elev 102.5	UP210-1B-1		
Elev 105.5	UP210-1B-1		UP210-1B-6
Elev 109.0	UP210-1B-1		
Elev 111.67	UP210-1B-1		
Elev 116.33	UP210-1B-1		UP210-1B-6
Elev 119.0	UP210-1B-1		
Elev 123.0	UP210-1B-1		
Elev 127.0	UP210-1B-1		
Elev 131.0	UP210-1B-1		
Elev 135.0	UP210-1B-1		
Elev 139.0	UP210-1B-1	UP210-1B-1	UP210-1B-6

TABLE 4 (NW DIAPHRAGM)

Location At Tower Grating Elevation	Lighting At NW Tower Diaphragm CKT. Number	3-Way Switches CKT. Number	Receptacle CKT. Number
Elev 53.0	UP210-1B-9	UP210-1B-9	
Elev 56.0	UP210-1B-9		UP210-1B-10
Elev 59.0	UP210-1B-9		
Elev 62.0	UP210-1B-9		
Elev 65.0	UP210-1B-9		UP210-1B-10
Elev 68.0	UP210-1B-9		
Elev 71.0	UP210-1B-9		UP210-1B-10
Elev 74.0	UP210-1B-9		
Elev 77.0	UP210-1B-9		UP210-1B-10
Elev 80.75	UP210-1B-9		UP210-1B-10
Elev 85.25	UP210-1B-9		
	UP210-1B-9	UP210-1B-9	
Elev 89.0	UP210-1B-11	UP210-1B-11	UP210-1B-12
Elev 92.5	UP210-1B-11		
Elev 95.5	UP210-1B-11		
Elev 99.0	UP210-1B-11		UP210-1B-12
Elev 102.5	UP210-1B-11		
Elev 105.5	UP210-1B-11		UP210-1B-12
Elev 109.0	UP210-1B-11		
Elev 111.67	UP210-1B-11		
Elev 116.33	UP210-1B-11		UP210-1B-12
Elev 119.0	UP210-1B-11		
Elev 123.0	UP210-1B-11		
Elev 127.0	UP210-1B-11		
Elev 131.0	UP210-1B-11		
Elev 135.0	UP210-1B-11		
Elev 139.0	UP210-1B-11	UP210-1B-11	UP210-1B-12

Caltrans Metric

DIST	COUNTY	ROUTE	KILOMETER POST TOTAL PROJECT	SHEET No	TOTAL SHEETS
04	SF	80	13.2/13.9	280 R1	1204

12/19/02
REGISTERED ELECTRICAL ENGINEER DATE

REGISTERED PROFESSIONAL ENGINEER
JENS ERLINGSSON
No. 8249
Exp. 9/30/06
ELECTRICAL
STATE OF CALIFORNIA

12-6-04
PLANS APPROVAL DATE

PB POWER, Inc.
A Parsons Brinckerhoff Company
303 Second St., Suite 700N
San Francisco, CA 94107-1317

The State of California or its officers or agents shall not be responsible for the accuracy or completeness of electronic copies of this plan sheet.

Caltrans now has a web site! To get to the web site, go to http://www.dot.ca.gov

SHEET NOTES:

1. 2#10, 1#10 G AWG single conductors.
2. Conductors spliced.
3. Light switch shall be rated 30 A for CKT #UP210-1B-1 and CKT #UP210-1B-11.

NOTES:

1. References:
   - For utility panel schedule, see sheet E-280.
   - For circuit, conduit and cable tray schedules, see sheets starting at E-401.
   - For typical tower ladder platform lighting and power plans, see sheets E-284 & E-284A.

REGISTERED PROFESSIONAL ENGINEER
FADI WALIEDDINE
No. 11465
Exp. 12/31/2009
ELECTRICAL
STATE OF CALIFORNIA

FOR REVISION ONLY

REQUEST FOR INFORMATION NOT ADDRESSED IN THIS CCO REMAIN IN FORCE

MARK	DATE	DESCRIPTIONS	BY	CH'D	CCO#
		REVISIONS			
1	09/18/09	TOWER UTILITY PANELS	JS TW	RG FW	70

CONTRACT CHANGE ORDER NO._____
SHEET_____ OF _____

CALCULATED/ DESIGNED BY	CHECKED BY
FK	EDC

DATE 10/01	REVISED BY	DATE REVISED
11/01		

OVERSIGHT
DESIGN OVERSIGHT
BEHZAD GOLEMOHAMMADI

STATE OF CALIFORNIA - DEPARTMENT OF TRANSPORTATION
Caltrans

DETAILS
TOWER AND SUSPENSION CABLE
120 V PIER LIGHTING WIRING DIAGRAM
NO SCALE

E-275

LAST REVISION 00-00-00
DATE PLOTTED => 12/10/2009
TIME PLOTTED => 13:32:57 PM

FOR REDUCED PLANS ORIGINAL SCALE IS IN MILLIMETERS 0 20 40 60 80

DGN FILE =>t:\13103\ms\pse\SAS Struc\CCO\SAS CCO70\2009-12-02 issued for Submittal\04-0120f1_0280R01.dgn
USERNAME =>llorico

CU 04251 EA 0120F1

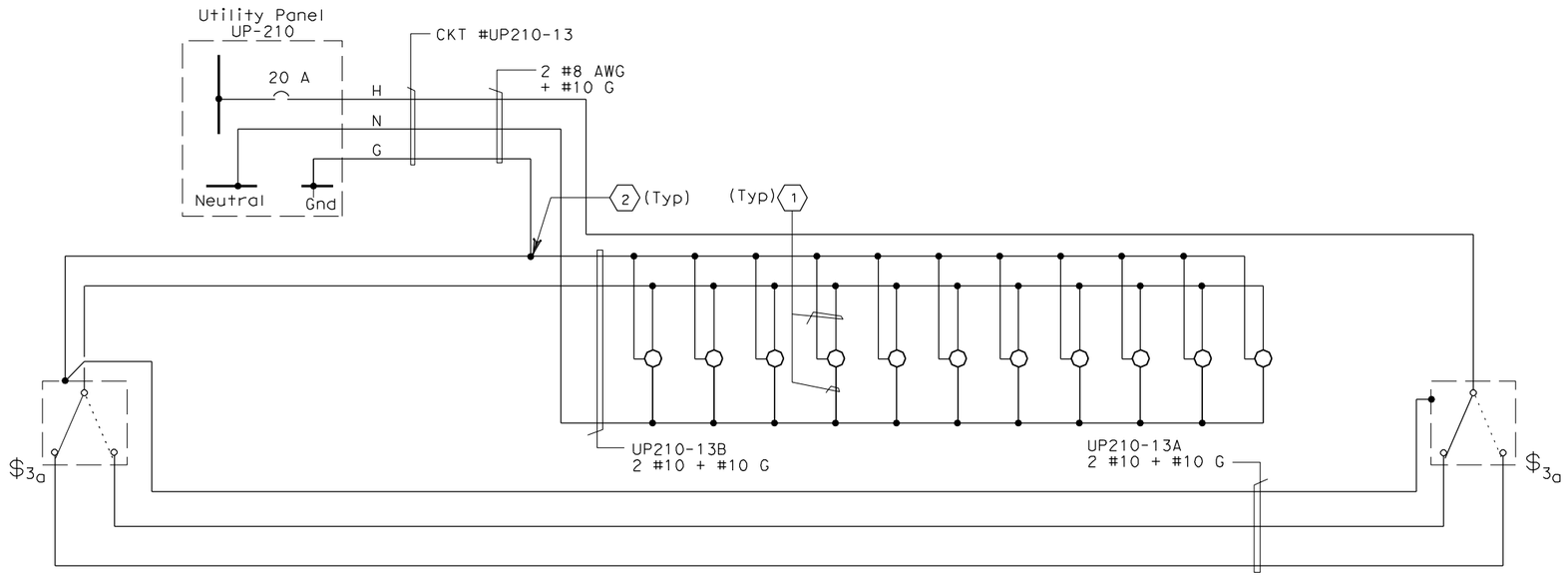

120V (UP210) TOWER PLATFORM EL. 53.85 m AND BELOW LIGHTING SCHEMATIC DIAGRAM - ALL DIAPHRAGMS

(SHOWN FOR CIRCUIT #UP210-13 ONLY
SEE TABLE 5, 6, 7 AND 8 FOR OTHER CIRCUITS)

TABLE 5 (SE DIAPHRAGM)

Location At Tower Grating Elevation	Lighting At SE Tower Diaphragm CKT. Number	3-Way Switches CKT. Number	Receptacle CKT. Number
Elev 9.0	UP210-13	UP210-13	
Elev 13.0	UP210-13		UP210-17
Elev 15.0	UP210-13		
Elev 18.0	UP210-13		UP210-17
Elev 23.0	UP210-13		
Elev 28.0	UP210-13		UP210-17
Elev 33.0	UP210-13		UP210-17
Elev 38.0	UP210-13		
Elev 43.0	UP210-13		
Elev 47.6	UP210-13		UP210-17
Elev 53.0	UP210-13	UP210-13	UP210-17

TABLE 6 (NE DIAPHRAGM)

Location At Tower Grating Elevation	Lighting At NE Tower Diaphragm CKT. Number	3-Way Switches CKT. Number	Receptacle CKT. Number
Elev 9.0	UP210-15	UP210-15	
Elev 13.0	UP210-15		UP210-19
Elev 15.0	UP210-15		
Elev 18.0	UP210-15		UP210-19
Elev 23.0	UP210-15		
Elev 28.0	UP210-15		UP210-19
Elev 33.0	UP210-15		UP210-19
Elev 38.0	UP210-15		
Elev 43.0	UP210-15		
Elev 47.6	UP210-15		UP210-19
Elev 53.0	UP210-15	UP210-15	UP210-19

TABLE 7 (SW DIAPHRAGM)

Location At Tower Grating Elevation	Lighting At SW Tower Diaphragm CKT. Number	3-Way Switches CKT. Number	Receptacle CKT. Number
Elev 9.0	UP210-14	UP210-14	
Elev 13.0	UP210-14		UP210-18
Elev 15.0	UP210-14		
Elev 18.0	UP210-14		UP210-18
Elev 23.0	UP210-14		
Elev 28.0	UP210-14		UP210-18
Elev 33.0	UP210-14		UP210-18
Elev 38.0	UP210-14		
Elev 43.0	UP210-14		
Elev 47.6	UP210-14		UP210-18
Elev 53.0	UP210-14	UP210-14	UP210-18

TABLE 8 (NW DIAPHRAGM)

Location At Tower Grating Elevation	Lighting At NW Tower Diaphragm CKT. Number	3-Way Switches CKT. Number	Receptacle CKT. Number
Elev 9.0	UP210-16	UP210-16	
Elev 13.0	UP210-16		UP210-20
Elev 15.0	UP210-16		
Elev 18.0	UP210-16		UP210-20
Elev 23.0	UP210-16		
Elev 28.0	UP210-16		UP210-20
Elev 33.0	UP210-16		UP210-20
Elev 38.0	UP210-16		
Elev 43.0	UP210-16		
Elev 47.6	UP210-16		UP210-20
Elev 53.0	UP210-16	UP210-16	UP210-20

Caltrans Metric

DIST	COUNTY	ROUTE	KILOMETER POST TOTAL PROJECT	SHEET No	TOTAL SHEETS
04	SF	80	13.2/13.9	280 S1	1204

REGISTERED ELECTRICAL ENGINEER DATE

PLANS APPROVAL DATE

REGISTERED PROFESSIONAL ENGINEER — FADI WALIEDDINE No. 11465 Exp. 12/31/2009 ELECTRICAL — STATE OF CALIFORNIA

PB AMERICAS, Inc.
A Parsons Brinckerhoff Company
303 Second St., Suite 700N
San Francisco, CA 94107-1317

The State of California or its officers or agents shall not be responsible for the accuracy or completeness of electronic copies of this plan sheet.

Caltrans now has a web site! To get to the web site, go to http://www.dot.ca.gov

SHEET NOTES:

1. 2#10, 1#10 G AWG single conductors.
2. Conductors spliced.

NOTES:

1. References:
   - For utility panel schedule, see sheet E-278.
   - For circuit, conduit and cable tray schedules, see sheets starting at E-401.
   - For typical tower ladder platform lighting, and power plan, see sheet E-284.

REQUEST FOR INFORMATION NOT ADDRESSED IN THIS CCO REMAIN IN FORCE

MARK	DATE	DESCRIPTIONS	BY	CH'D	CCO#
		REVISIONS			
0	09/18/09	TOWER UTILITY PANELS	JS TW	RG FW	70

CONTRACT CHANGE ORDER NO._____
SHEET_____ OF_____

DETAILS
TOWER AND SUSPENSION CABLE
120 V PIER LIGHTING WIRING DIAGRAM

NO SCALE

E-275A

DESIGN OVERSIGHT — BEHZAD GOLEMOHAMMADI
CALCULATED/DESIGNED BY — CHECKED BY
DATE — REVISED BY — DATE REVISED
STATE OF CALIFORNIA - DEPARTMENT OF TRANSPORTATION — Caltrans

LAST REVISION 00-00-00 — DATE PLOTTED => 12/10/2009 — TIME PLOTTED => 3:33:19 PM

FOR REDUCED PLANS ORIGINAL SCALE IS IN MILLIMETERS 0 20 40 60 80

DGN FILE =>t:\13103\ms\pse\SAS Struc\CCO\SAS CC070\2009-12-02 issued for Submittal\04-0120f1_0280S01.dgn
USERNAME =>llorico
CU 04251 EA 0120F1

UTILITY PANEL UP-210 (CKT #2123)

Location: PIER 1 TOWER AT PLATFORM ELEV 53.85 m

LOAD DESCRIPTION	LTG	REC	OTH.	CB			CB	LTG	REC	OTH.	LOAD DESCRIPTION
Spare				20/1	1	A 2	30/1	2002			Tower Base LTG (14) @ EL. 9.0 m
Fog Detection Panel FDP-5			2880	30/1	3	B 4	20/1		900		Recept Tower Base (5) @ EL. 9.0 m
Sump Pump @ Elev 3.000 m Sump P-A			12	20/1	5	C 6	30/1	2145			Tower Base LTG (15) @ EL. 9.0 m
Sump Pump @ Elev 3.000 m Sump P-B			12	20/1	7	A 8	20/1		900		Recept Tower Base (5) @ EL. 9.0 m
Elevator Light & Fan			220	20/1	9	B 10	20/1	287			Platform LTG (7) @ EL. 53.85 m
Recept Platform (5) @ EL. 53.85 m		900		20/1	11	C 12	20/1			900	Strong Motion Recorder #3
SE Ltg.Tower Diaphragm (11) @ Elev 13.00 - 53.85 m	1573			20/1	13	A 14	20/1	1573			SW Ltg.Tower Diaphragm (11) @ Elev 13.00 - 53.85 m
NE Ltg.Tower Diaphragm (11) @ Elev 13.00 - 53.85 m	1573			20/1	15	B 16	20/1	1573			NW Ltg.Tower Diaphragm (11) @ Elev 13.00 - 53.85 m
Recept, (6) SE Tower Diaphragm @ Elev 13.00 - 53.85 m		1080		20/1	17	C 18	20/1		1080		Recept, (6) SW Tower Diaphragm @ Elev 13.00 - 53.85 m
Recept, (6) NE Tower Diaphragm @ Elev 13.00 - 53.85 m		1080		20/1	19	A 20	20/1		1080		Recept, (6) NW Tower Diaphragm @ Elev 13.00 - 53.85 m
Spare				20/1	21	B 22	20/1				Spare
				20/1	23	C 24	20/1				
				20/1	25	A 26	20/1				
				20/1	27	B 28	20/1				
Spare				20/1	29	C 30	20/1				Spare
TOTAL VA	3146	3060	3124					7580	3960	900	TOTAL VA

LOAD SUMMARY (INCLUDES .90PF) (VA)

Lighting (At 100%): 10726
Gen Use (1st 10 kVA AT 100% Plus 50% of remainder): 522

BALANCE (kVA)

Phase A - 8.220
Phase B - 7.433
Phase C - 6.117

VOLTAGE: 208/120 V
PHASE/WIRES: 3-Phase, 4-Wire
BUS RATING: 100 A
MAIN: 100 A Frame
MOUNTING: Surface
K.A.I.C.: 10

TOTAL kVA: 21.770 FEEDER ENTRY: TOP RIGHT

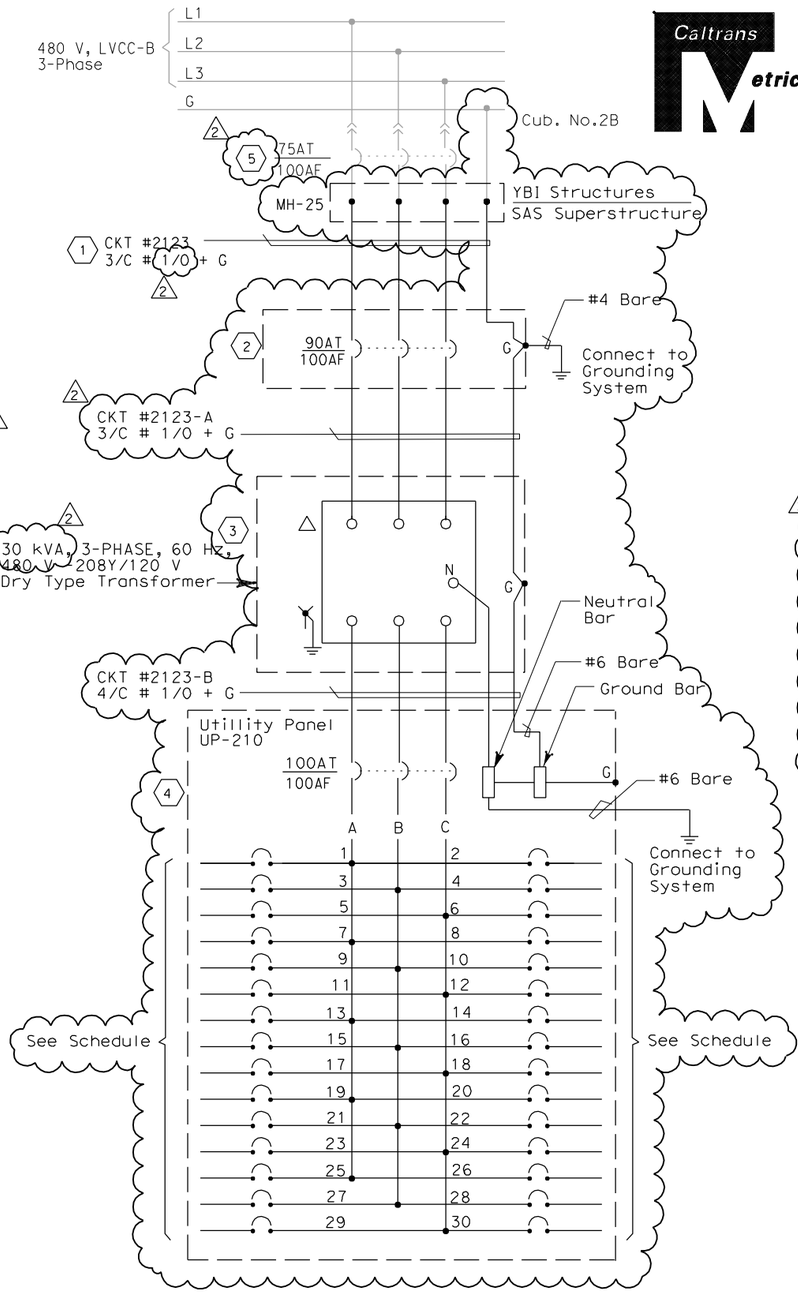

SHEET NOTES:

1. The Contractor shall extend and coil 5 meters of cable in Manhole-25. All cables shall be ~~tagged with circuit~~ number as shown (YBI-1 contract).
2. Enclosed type circuit breaker in NEMA type 4x stainless steel enclosure.
3. Dry type step down transformer with copper winding in NEMA type 4x stainless steel enclosure.
4. Panelboard w/ 100A copper bus in NEMA type 4x stainless steel enclosure.
5. As-built feeder circuit breaker rating per YBI Substation contract. Feeder conductor size accomplished by YBI-1 contract.

NOTES:

1. The Contractor shall provide nameplates and circuit schedules as shown.
2. Deleted.
3. References:
   - For conduit and cable tray schedules, see sheets starting at E-401.
   - For pull box schedules, see sheets E-83 and E-169.
   - For elevator pit circuits, see sheet E-265.
   - For LVCC-B single line diagram, ~~see sheets E-32 through E-34~~
   - For equipment location and arrangement, see sheets E-264B E-264C.

REGISTERED PROFESSIONAL ENGINEER
FADI WALIEDDINE
No. 11465
Exp. 12/31/2009
ELECTRICAL
STATE OF CALIFORNIA

FOR REVISION ONLY
1 2

REQUEST FOR INFORMATION NOT ADDRESSED IN THIS CCO REMAIN IN FORCE					
2	09/18/09	TOWER UTILITY PANELS	JS TW	RG FW	70
1	04/10/09	ELECTRICAL WARNING SYSTEMS	JS TW	RG FW	61
MARK	DATE	DESCRIPTIONS	BY	CH'D	CCO#
		REVISIONS			

CONTRACT CHANGE ORDER NO._____
SHEET_____ OF _____

DETAILS
TOWER AND SUSPENSION CABLE
PANEL UP-210 SCHEDULE
NO SCALE

E-278

DIST	COUNTY	ROUTE	KILOMETER POST TOTAL PROJECT	SHEET No	TOTAL SHEETS
04	SF	80	13.2/13.9	281 R2	1204

REGISTERED ELECTRICAL ENGINEER — 12/19/02 DATE

12-6-04
PLANS APPROVAL DATE

REGISTERED PROFESSIONAL ENGINEER
JENS ERLINGSSON
No. 8249
Exp. 9/30/06
ELECTRICAL
STATE OF CALIFORNIA

PB POWER, Inc.
A Parsons Brinckerhoff Company
303 Second St., Suite 700N
San Francisco, CA 94107-1317

The State of California or its officers or agents shall not be responsible for the accuracy or completeness of electronic copies of this plan sheet.

Caltrans now has a web site! To get to the web site, go to http://www.dot.ca.gov

DESIGNED BY	CALCULATED/ DESIGNED BY	CHECKED BY
BEHZAD GOLEMOHAMMADI	FK	EDC

DESIGN OVERSIGHT

MARK	DATE	REVISED BY	DATE REVISED
	10/01	AB	2/04

STATE OF CALIFORNIA - DEPARTMENT OF TRANSPORTATION
Caltrans

DATE PLOTTED => 12/10/2009
TIME PLOTTED => 3:33:38 PM
LAST REVISION 00-00-00

FOR REDUCED PLANS ORIGINAL SCALE IS IN MILLIMETERS 0 20 40 60 80

DGN FILE =>t:\13103\ms\pse\SAS Struc\CCO\SAS CCO70\2009-12-02 issued for Submittal\04-0120f1_0281R02.dgn
USERNAME =>llorico

CU 04251 EA 0120F1

DIST	COUNTY	ROUTE	KILOMETER POST TOTAL PROJECT	SHEET No	TOTAL SHEETS
04	SF	80	13.2/13.9	282 R1	1204

12/19/02
REGISTERED ELECTRICAL ENGINEER DATE

REGISTERED PROFESSIONAL ENGINEER — JENS ERLINGSSON No. 8249 Exp. 9/30/06 ELECTRICAL — STATE OF CALIFORNIA

12-6-04
PLANS APPROVAL DATE

PB POWER, Inc.
A Parsons Brinckerhoff Company
303 Second St., Suite 700N
San Francisco, CA 94107-1317

The State of California or its officers or agents shall not be responsible for the accuracy or completeness of electronic copies of this plan sheet.

Caltrans now has a web site! To get to the web site, go to http://www.dot.ca.gov

UTILITY PANEL UP-210-1A (CKT #2123-2) Location: PIER 1 TOWER AT SE SHAFT PLATFORM ELEV 89.00 m 1

LOAD DESCRIPTION	LTG	REC	OTH.	CB		CB	LTG	REC	OTH.	LOAD DESCRIPTION
SE Ltg.Tower Diaphragm (15) @ Elev 89.00 - 143.00 m	2070			30/1	1 A 2	20/1				Spare 1
SE Ltg.Tower Diaphragm (12) @ Elev 53.00 - 89.00 m	1430	1		20/1	3 B 4	20/1		900		Recept. (5) SE Tower Diaphragm @ Elev 53.00 - 89.00 m
SW Ltg.Elect. Dist Equip. @ Elev 89.00 m	143			20/1	5 C 6	20/1		900		Recept. (5) SE Tower Diaphragm @ Elev 89.00 - 143.00 m
Spare 1		1		20/1	7 A 8	20/1				Spare 1
NE Ltg.Tower Diaphragm (12) @ Elev 53.00 - 89.00 m	1430			20/1	9 B 10	20/1		900		Recept. (5) NE Tower Diaphragm @ Elev 53.00 - 89.00 m
NE Ltg.Tower Diaphragm (15) @ Elev 89.00 - 143.00 m	2070	1		30/1	11 C 12	20/1		900		Recept. (5) NE Tower Diaphragm @ Elev 89.00 - 143.00 m
Platform Ltg. (24 @ Elev 154.6 m to 156.75 m	984	1		20/1	13 A 14	20/1		900		Recept. (5) Platform @ Elev 154.6 m to 156.75 m
Spare				20/1	15 B 16	20/1				Spare
				20/1	17 C 18	20/1				
				20/1	19 A 20	20/1				
				20/1	21 B 22	20/1				
				20/1	23 C 24	20/1				
TOTAL VA	8127							4500		TOTAL VA

LOAD SUMMARY (INCLUDES .90 PF)	(VA)
Lighting (At 100%):	8127
Gen Use (1st 10 kVA at 100% Plus 50% of remainder):	4500

BALANCE (kVA)	
Phase A -	3.954
Phase B -	4.660
Phase C -	4.013

VOLTAGE: 208/120 V
PHASE/WIRES: 3-Phase, 4-Wire
BUS RATING: 100 A
MAIN: 100 AF
MOUNTING: Surface
K.A.I.C.: 10

TOTAL kVA: 12.627 FEEDER ENTRY: BOTTOM LEFT

1

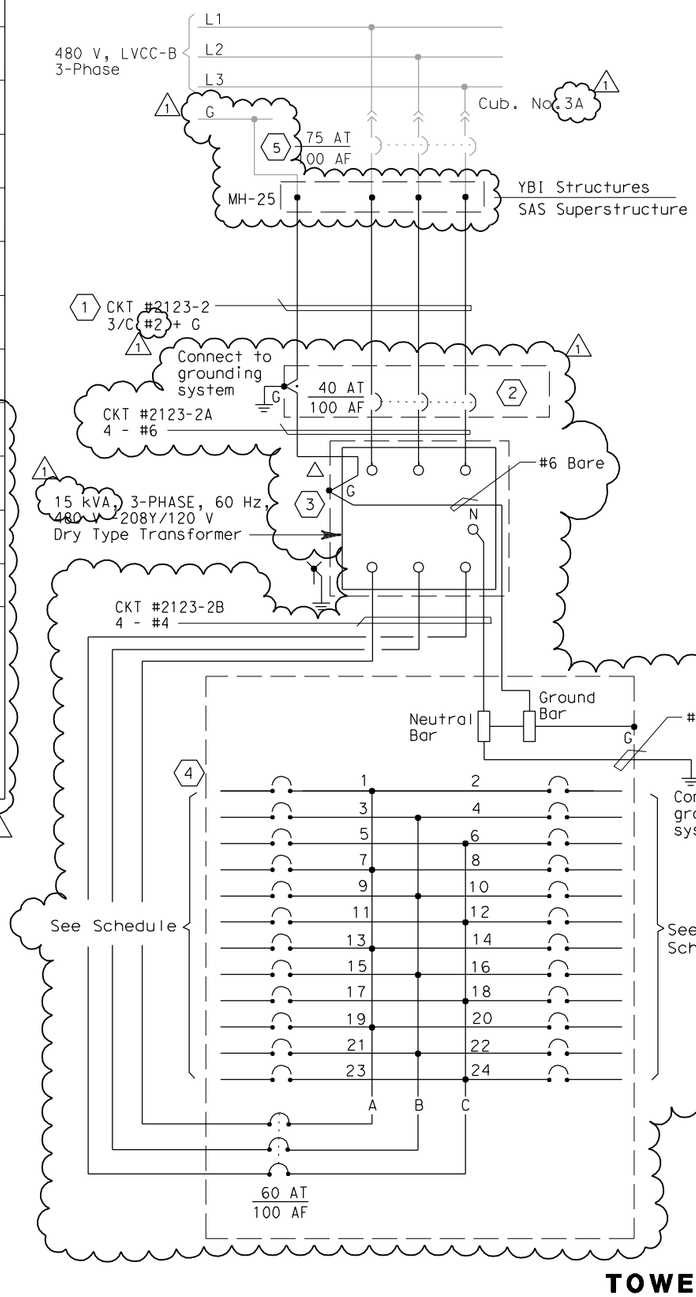

SHEET NOTES:

1. Contractor shall extend and coil 5 meters of cable in Manhole-25. All cables shall be tagged with circuit number as shown (YBI-1 contract).
2. Enclosed type circuit breaker in NEMA type 12 enclosure.
3. Dry type step down transformer with copper winding in NEMA type 12 enclosure.
4. Panelboard w/ 100A copper bus in NEMA type 12 enclosure.
5. As-built feeder circuit breaker rating per YBI Substation contract. Feeder conductor size accomplished by YBI-1 contract.

NOTES:

1. Contractor shall provide nameplates and circuit schedules as shown.
2. Deleted. 1
3. References:
   - For conduit and cable tray schedules, see sheets starting at E-401.
   - For pull box schedule, see sheets E-83 and E-169.
   - For tower diaphragm lighting and receptacle locations, see sheet E-274.
   - For LVCC-B single line diagram, see sheets E-32 through E-35. 1
   - For equipment location and arrangement, see sheets E-285 and E-285A.

REGISTERED PROFESSIONAL ENGINEER — FADI WALIEDDINE No. 11465 Exp.12/31/2009 ELECTRICAL — STATE OF CALIFORNIA

FOR REVISION ONLY 1

REQUEST FOR INFORMATION NOT ADDRESSED IN THIS CCO REMAIN IN FORCE

MARK	DATE	REVISIONS	BY	CH'D	CCO#
1	09/18/09	TOWER UTILITY PANELS	JS TW	RG FW	70

CONTRACT CHANGE ORDER NO._____
SHEET_____ OF_____

DETAILS
TOWER AND SUSPENSION CABLE PANEL UP-210-1A SCHEDULE
NO SCALE

E-279

DESIGN OVERSIGHT	CALCULATED/ DESIGNED BY	DATE	REVISED BY	DATE REVISED
BEHZAD GOLEMOHAMMADI	CHECKED BY	FK 10/01		
	EDC	II/01		

STATE OF CALIFORNIA - DEPARTMENT OF TRANSPORTATION
Caltrans

LAST REVISION 00-00-00 | DATE PLOTTED => 12/10/2009 | TIME PLOTTED => 3:33:56 PM

FOR REDUCED PLANS ORIGINAL SCALE IS IN MILLIMETERS 0 20 40 60 80

DGN FILE =>t:\13103\ms\pse\SAS Struc\CCO\SAS CC070\2009-12-02 issued for Submittal\04-0120f1_0282R01.dgn
USERNAME =>llorico

CU 04251 | EA 0120F1

DIST	COUNTY	ROUTE	KILOMETER POST TOTAL PROJECT	SHEET No	TOTAL SHEETS
04	SF	80	13.2/13.9	283R1	1204

REGISTERED ELECTRICAL ENGINEER — 12/19/02 DATE

12-6-04
PLANS APPROVAL DATE

REGISTERED PROFESSIONAL ENGINEER — JENS ERLINGSSON — No. 8249 — Exp. 9/30/06 ELECTRICAL — STATE OF CALIFORNIA

PB POWER, Inc.
A Parsons Brinckerhoff Company
303 Second St., Suite 700N
San Francisco, CA 94107-1317

The State of California or its officers or agents shall not be responsible for the accuracy or completeness of electronic copies of this plan sheet.

Caltrans now has a web site! To get to the web site, go to http://www.dot.ca.gov

REQUEST FOR INFORMATION NOT ADDRESSED IN THIS CCO REMAIN IN FORCE					
1	09/18/09	TOWER UTILITY PANELS	JS TW	RG FW	70
MARK	DATE	DESCRIPTIONS	BY	CH'D	CCO#
REVISIONS					

CONTRACT CHANGE ORDER NO._____
SHEET_____ OF_____

REGISTERED PROFESSIONAL ENGINEER — FADI WALIEDDINE — No. 11465 — Exp. 12/31/2009 ELECTRICAL — STATE OF CALIFORNIA

FOR REVISION ONLY
1

UTILITY PANEL UP-210-1B (CKT #2123-3) Location: PIER 1 TOWER AT SW SHAFT PLATFORM ELEV 89.85 m 1

LOAD DESCRIPTION	LTG	REC	OTH.	CB		CB	LTG	REC	OTH.	LOAD DESCRIPTION
SW Ltg. Tower Diaphragm (15) @ Elev 89.00 - 143.00 m	2070			30/1	1 A 2	20/1		720		Recept. Platform (4) @ Elev 127.00 m 1
SW Ltg. Tower Diaphragm (12) @ Elev 53.00 - 89.00 m	1430		1	20/1	3 B 4	20/1		900		Recept. (5) SW Tower Diaphragm @ Elev 53.00 - 89.00 m
SE Ltg. Elect. Dist. Equip. @ Elev 89.00 m	143			20/1	5 C 6	20/1		900		Recept. (5) SW Tower Diaphragm @ Elev 89.00 - 143.00 m
Platform Ltg. (6) @ Elev 127.00 m	246		1	20/1	7 A 8	20/1				Spare 1
NW Ltg. Tower Diaphragm (12) @ Elev 53.00 - 89.00 m	1430			20/1	9 B 10	20/1		900		Recept. (5) NW Tower Diaphragm @ Elev 53.00 - 89.00 m 1
NW Ltg. Tower Diaphragm (15) @ Elev 89.00 - 143.00 m	2070 1		1	30/1	11 C 12	20/1		900		Recept. (5) NW Tower Diaphragm @ Elev 89.00 - 143.00 m
Platform Ltg. (6) @ Elev 89.85 m	246			20/1	13 A 14	20/1		720		Recept. Platform (4) @ Elev 89.85 m 1
Platform Ltg. (6) @ Elev 139.85 m	246			20/1	15 B 16	20/1		360		Recept. Platform (2) @ Elev 139.85 m
Spare				20/1	17 C 18	20/1				Spare
				20/1	19 A 20	20/1				
				20/1	21 B 22	20/1				
				20/1	23 C 24	20/1				
TOTAL VA	7881							5400		TOTAL VA

LOAD SUMMARY (INCLUDES .90 PF) (VA)

Lighting (At 100%): 7881
Gen Use (1st 10 kVA at 100% Plus 50% of remainder): 5400

BALANCE (kVA)

Phase A - 4.002
Phase B - 5.266
Phase C - 4.013

VOLTAGE: 208/120 V
PHASE/WIRES: 3-Phase, 4-Wire
BUS RATING: 100 A
MAIN: 100 A Frame
MOUNTING: Surface
K.A.I.C.: 10

TOTAL kVA: 13.281 FEEDER ENTRY: BOTTOM RIGHT

1

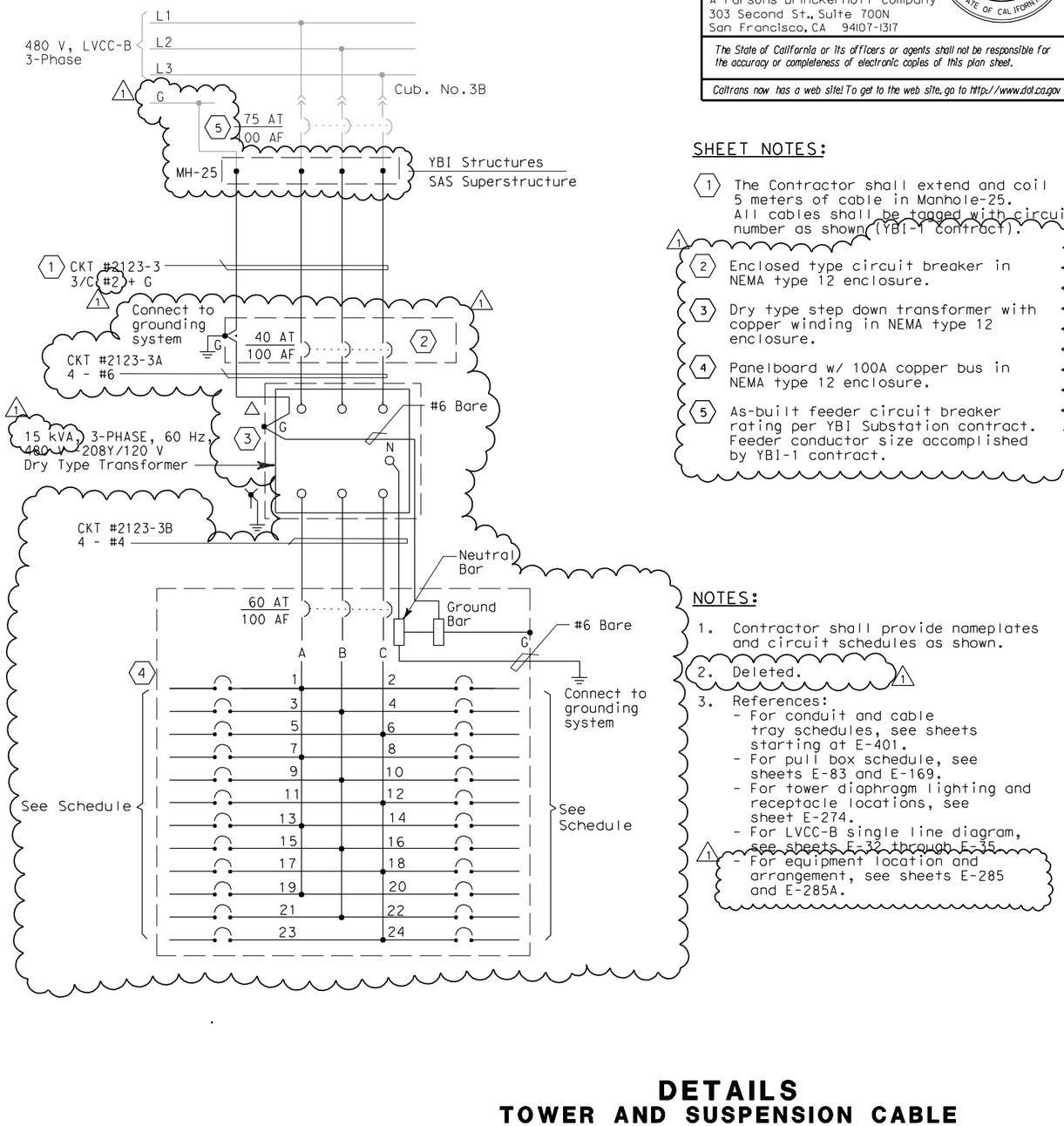

SHEET NOTES:

1. The Contractor shall extend and coil 5 meters of cable in Manhole-25. All cables shall be tagged with circuit number as shown (YBI-1 contract).
2. Enclosed type circuit breaker in NEMA type 12 enclosure.
3. Dry type step down transformer with copper winding in NEMA type 12 enclosure.
4. Panelboard w/ 100A copper bus in NEMA type 12 enclosure.
5. As-built feeder circuit breaker rating per YBI Substation contract. Feeder conductor size accomplished by YBI-1 contract.

NOTES:

1. Contractor shall provide nameplates and circuit schedules as shown.
2. Deleted. 1
3. References:
   - For conduit and cable tray schedules, see sheets starting at E-401.
   - For pull box schedule, see sheets E-83 and E-169.
   - For tower diaphragm lighting and receptacle locations, see sheet E-274.
   - For LVCC-B single line diagram, see sheets E-32 through E-35. 1
   - For equipment location and arrangement, see sheets E-285 and E-285A.

DETAILS
TOWER AND SUSPENSION CABLE PANEL UP-210-1B SCHEDULE
NO SCALE

E-280

DESIGN OVERSIGHT — BEHZAD GOLEMOHAMMADI
STATE OF CALIFORNIA - DEPARTMENT OF TRANSPORTATION — Caltrans

CALCULATED/ DESIGNED BY	DATE	FK	REVISED BY	DATE REVISED
CHECKED BY	10/01	EDC	EDC	5/31/02

LAST REVISION 00-00-00 — DATE PLOTTED => 12/10/2009 — TIME PLOTTED => 3:34:13 PM

FOR REDUCED PLANS ORIGINAL SCALE IS IN MILLIMETERS 0 20 40 60 80

DGN FILE =>t:\13103\ms\pse\SAS Struc\CCO\SAS CC070\2009-12-02 issued for Submittal\04-0120f1_0283R01.dgn
USERNAME =>llorico

CU 04251 | EA 0120F1

REQUEST FOR INFORMATION NOT ADDRESSED IN THIS CCO REMAIN IN FORCE					
2	12/11/09	TOWER UTILITY PANELS	TW	RG FW	70
1	02/19/08	ELECTRICAL MODIFICATIONS	MP EL	RR	42
MARK	DATE	REVISIONS DESCRIPTIONS	BY	CH'D	CCO#

CONTRACT CHANGE ORDER NO. _____
SHEET _____ OF _____

REGISTERED PROFESSIONAL ENGINEER — SEAN COUGHLIN — No. 12227 — Exp. 9/30/08 ELECTRICAL — STATE OF CALIFORNIA

REGISTERED ELECTRICAL ENGINEER

1

REGISTERED PROFESSIONAL ENGINEER — FADI WALIEDDINE — No. 11465 — Exp. 12/31/2009 ELECTRICAL — STATE OF CALIFORNIA

FOR REVISION ONLY

2

DIST	COUNTY	ROUTE	KILOMETER POST TOTAL PROJECT	SHEET No	TOTAL SHEETS
04	SF	80	13.2/13.9	284 R2	1204

REGISTERED CIVIL ENGINEER — 12/19/02 DATE

REGISTERED PROFESSIONAL ENGINEER — Michael Dahlin — No. 47186 — Exp. 12/31/05 CIVIL — STATE OF CALIFORNIA

12-6-04
PLANS APPROVAL DATE

PB POWER, Inc.
A Parsons Brinckerhoff Company
303 Second St., Suite 700N
San Francisco, CA 94107-1317

The State of California or its officers or agents shall not be responsible for the accuracy or completeness of electronic copies of this plan sheet.

Caltrans now has a web site! To get to the web site, go to http://www.dot.ca.gov

SHEET NOTES:

1. For conduit routing to MVDS units. See elevation on this sheet and sheet E-345.
2. All conduits which thereafter cross the access walkways shall be raised to a level of at least 2438 above the grating to pass overhead, allowing free walkways on the remaining three quadrants of the platform. Door on north face of SE tower shaft shall remain accessible.
3. Conduits are at El 56.422 and connected to 600 V cable tray at this elevation inside respective tower shaft.

NOTES:

1. References:
   - For conduit and cable tray schedules, see sheets starting at E-401.
2. For Section B-B, see sheet E-264A.

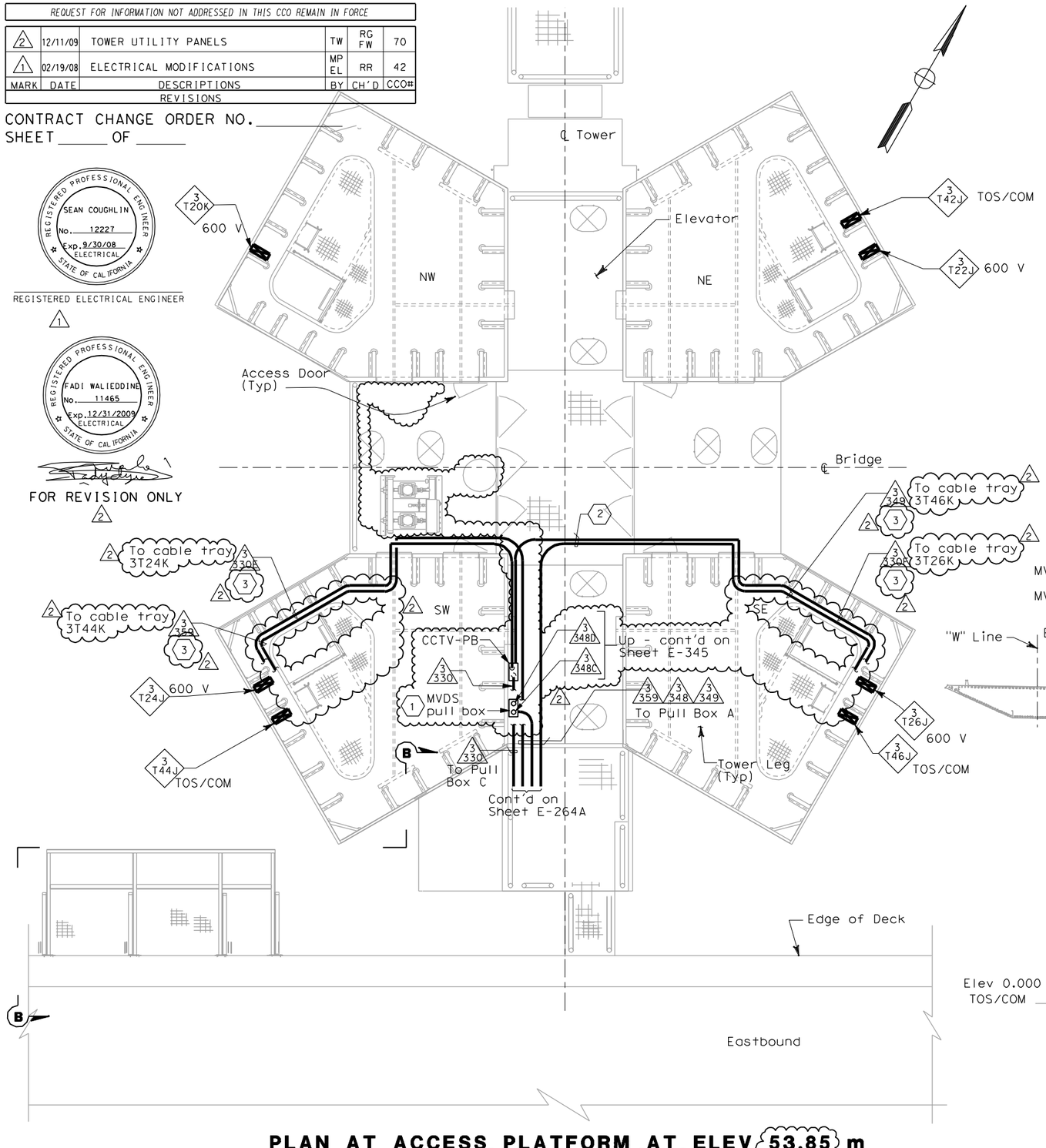

PLAN AT ACCESS PLATFORM AT ELEV 53.85 m

Some conduits and equipment are not shown for clarity. See sheets E-264, E-264B, E-345, and E-366 for more conduit and equipment information.

2

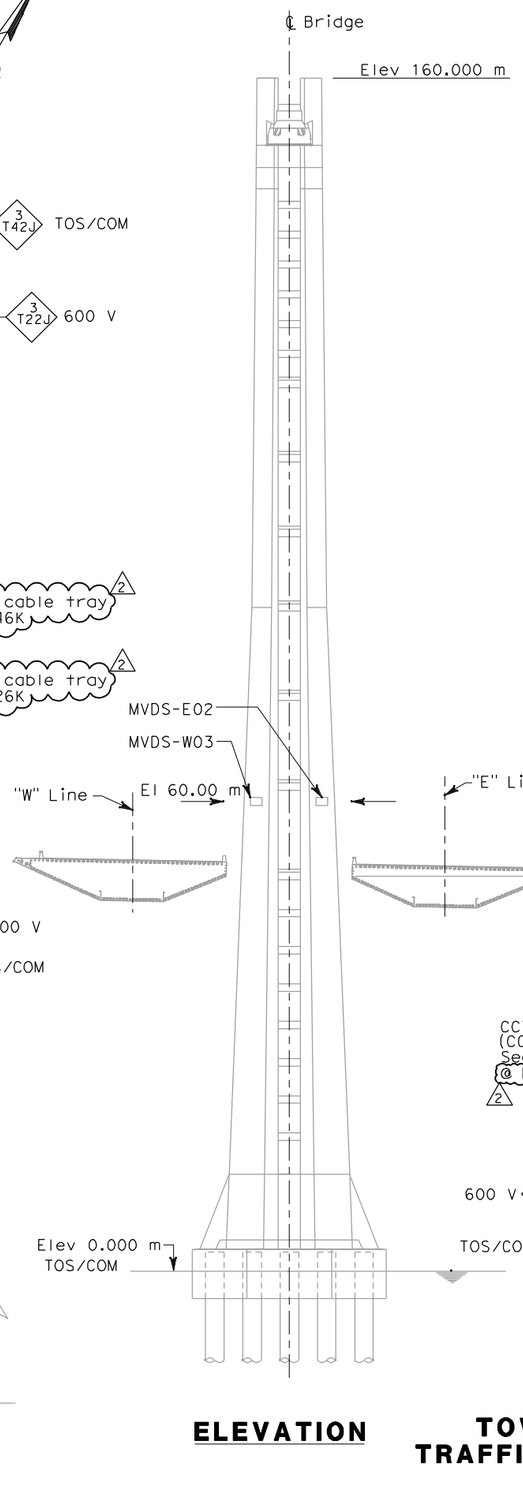

ELEVATION

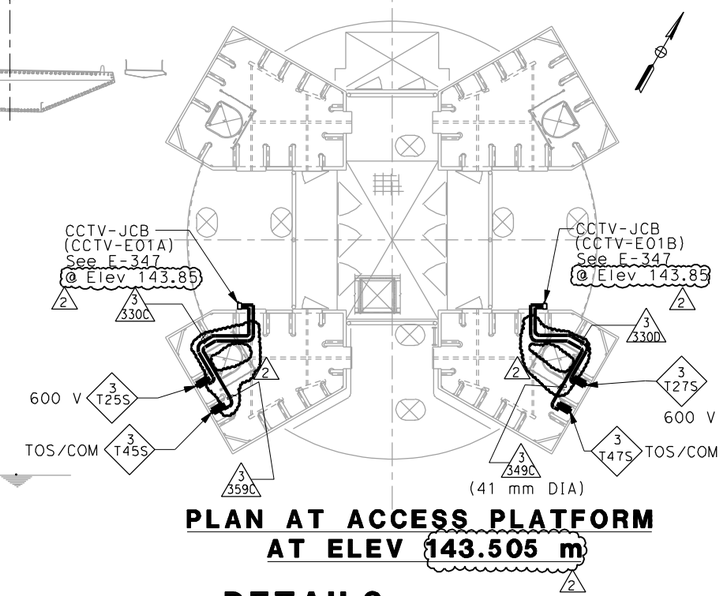

PLAN AT ACCESS PLATFORM AT ELEV 143.505 m

2

DETAILS
TOWER AND SUSPENSION CABLE TRAFFIC OPERATIONS SYSTEM CONDUIT

NO SCALE

E-281

THIS PLAN ACCURATE FOR ELECTRICAL WORK ONLY.

ALL DIMENSIONS IN MILLIMETERS UNLESS OTHERWISE SHOWN

FOR REDUCED PLANS ORIGINAL SCALE IS IN MILLIMETERS 0 20 40 60 80

DGN FILE =>t:\13103\ms\pse\SAS Struc\CCO\SAS CC070\2009-12-02 issued for Submittal\04-0120f1_0284R02.dgn
USERNAME =>llorico

CU 04251 EA 0120F1

DESIGN OVERSIGHT — BEHZAD GOLEMOHAMMADI
CALCULATED/DESIGNED BY — MD
CHECKED BY — PBF
DATE 11/01 — REVISED BY — DATE REVISED 12/01
STATE OF CALIFORNIA - DEPARTMENT OF TRANSPORTATION — Caltrans

LAST REVISION 00-00-00
DATE PLOTTED => 12/10/2009
TIME PLOTTED => 3:34:45 PM

DIST	COUNTY	ROUTE	KILOMETER POST TOTAL PROJECT	SHEET No	TOTAL SHEETS
04	SF	80	13.2/13.9	285 R1	1204

12/19/02
REGISTERED ELECTRICAL ENGINEER DATE

12-6-04
PLANS APPROVAL DATE

JENS ERLINGSSON No. 8249 Exp. 9/30/06 ELECTRICAL — REGISTERED PROFESSIONAL ENGINEER — STATE OF CALIFORNIA

PB POWER, Inc.
A Parsons Brinckerhoff Company
303 Second St., Suite 700N
San Francisco, CA 94107-1317

The State of California or its officers or agents shall not be responsible for the accuracy or completeness of electronic copies of this plan sheet.

Caltrans now has a web site! To get to the web site, go to http://www.dot.ca.gov

Caltrans Metric

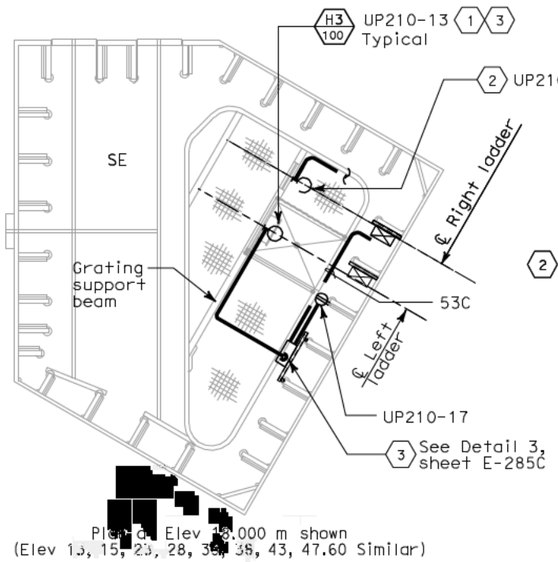

Plan at Elev 13.000 m shown
(Elev 15, 19, 23, 28, 33, 38, 43, 47.60 Similar)

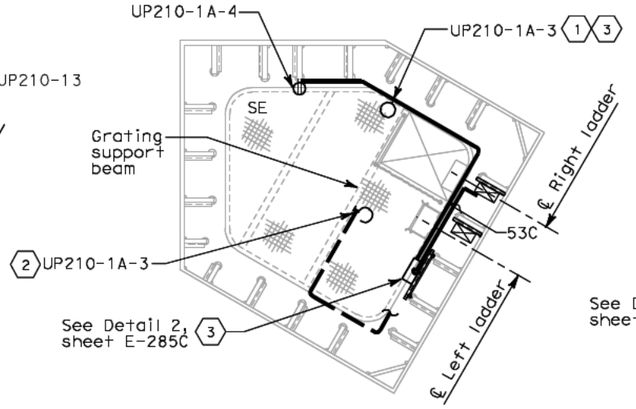

(Plan at Elev 59.000 m shown
Elev 56.000, 62.000, 68.000, 71.000,
74.000, 80.750 & 85.250 similar)

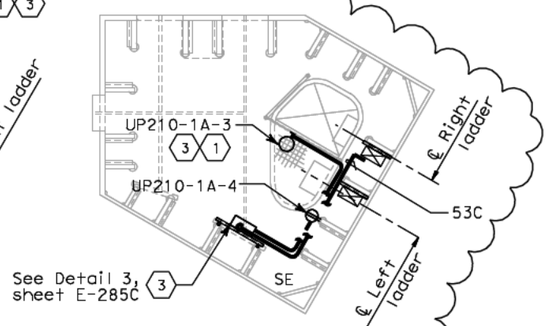

(Plan at Elev 77.000 m shown
Elev 65.000 similar)

NOTES:

1. References:
   - For elevation of this tower leg, see sheet E-284 (E-284A). 1
   - For mounting details refer to sheet E-268.
   - For typical ladder platform lighting details, see sheet E-283. 1
   - All luminaires are type H3/100 unless noted otherwise. See sheets E-267, E-273, & E-283.
   - For lights, receptacles, switches wiring and ckt, see E-274, E-275 and E-275A.

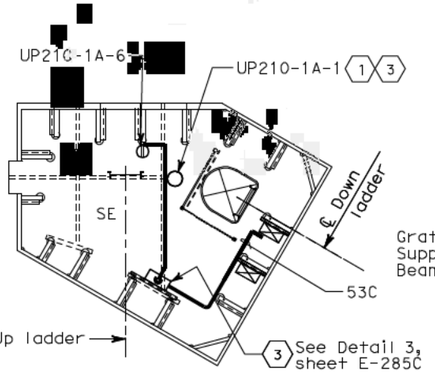

(Plan at Elev 99.000 m shown
Elev 109.000 similar)

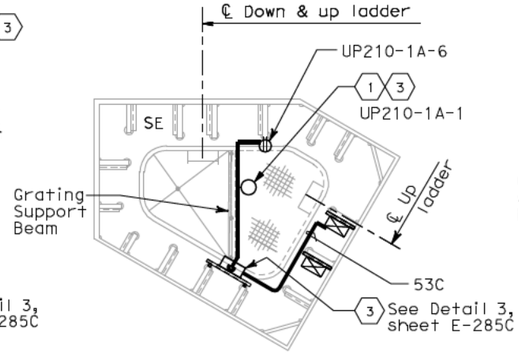

Plan at Elev 105.500 m shown
(Elev 95.500, 102.500,
111.670 similar)

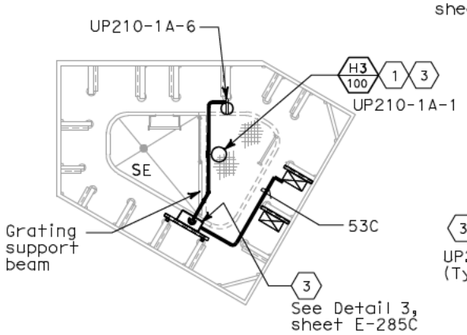

(Plan at Elev
116.330 m shown)

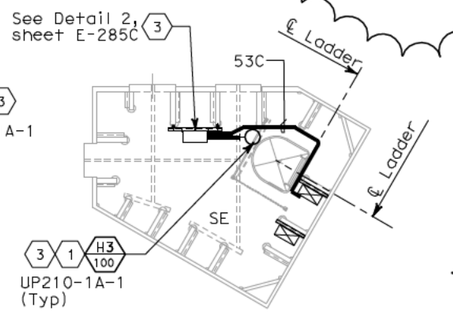

(Plan at Elev 119 m shown
(Elev. 123, 127, 131, 135 & 143 similar)

SHEET NOTES:

1. Mounted under ceiling diaphragm. 1
2. Mounted under floor diaphragm.
3. Number and sizes of conduit are field route to lights, receptacles and switches. See E-284 and E-284A for conduit sizes and pull box type per location.

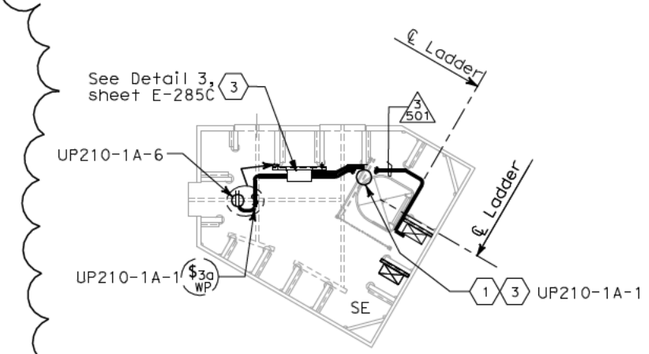

(Plan at Elev 139.00 m shown

TYPICAL TOWER LADDER PLATFORM LIGHTING FIXTURE LOCATIONS

SCALE: 1:40

Circuits shown are for SE tower shaft.
Circuits for other shafts shown on E-274, E-275, & E-275A.
Conduits shown on E-284, E-284A & E-284B.

REGISTERED PROFESSIONAL ENGINEER — FADI WALEEDDINE No. 11465 Exp. 12/31/2009 ELECTRICAL — STATE OF CALIFORNIA

FOR REVISION ONLY 1

REQUEST FOR INFORMATION NOT ADDRESSED IN THIS CCO REMAIN IN FORCE					
1	12/02/09	TOWER UTILITY PANELS	JS TW	RG FW	70
MARK	DATE	DESCRIPTIONS	BY	CH'D	CCO#
REVISIONS					

CONTRACT CHANGE ORDER NO._____
SHEET_____ OF_____

DETAILS
TOWER AND SUSPENSION CABLE TOWER LADDER PLATFORM LIGHTING

SCALE AS NOTED

E-282

THIS PLAN ACCURATE FOR ELECTRICAL WORK ONLY.

ALL DIMENSIONS ARE IN MILLIMETERS UNLESS OTHERWISE SHOWN

FOR REDUCED PLANS ORIGINAL SCALE IS IN MILLIMETERS 0 20 40 60 80

DESIGN OVERSIGHT: BEHZAD GOLEMOHAMMADI

CALCULATED/ DESIGNED BY	CHECKED BY	DATE 10/01	REVISED BY	DATE REVISED
		FK		EDC

STATE OF CALIFORNIA - DEPARTMENT OF TRANSPORTATION — Caltrans

LAST REVISION 00-00-00 | DATE PLOTTED => 12/10/2009 | TIME PLOTTED => 3:35:13 PM

DGN FILE =>I:\13103\ms\pse\SAS Struc\CCO\SAS CC070\2009-12-02 issued for Submittal\04-0120f1_0285R01.dgn
USERNAME =>llorico
CU 04251
EA 0120F1

DIST	COUNTY	ROUTE	KILOMETER POST TOTAL PROJECT	SHEET No	TOTAL SHEETS
04	SF	80	13.2/13.9	286 R1	1204

REGISTERED ELECTRICAL ENGINEER — 12/19/02 DATE

JENS ERLINGSSON No. 8249 Exp. 9/30/06 ELECTRICAL — REGISTERED PROFESSIONAL ENGINEER — STATE OF CALIFORNIA

12-6-04
PLANS APPROVAL DATE

PB POWER, Inc.
A Parsons Brinckerhoff Company
303 Second St., Suite 700N
San Francisco, CA 94107-1317

The State of California or its officers or agents shall not be responsible for the accuracy or completeness of electronic copies of this plan sheet.

Caltrans now has a web site! To get to the web site, go to http://www.dot.ca.gov

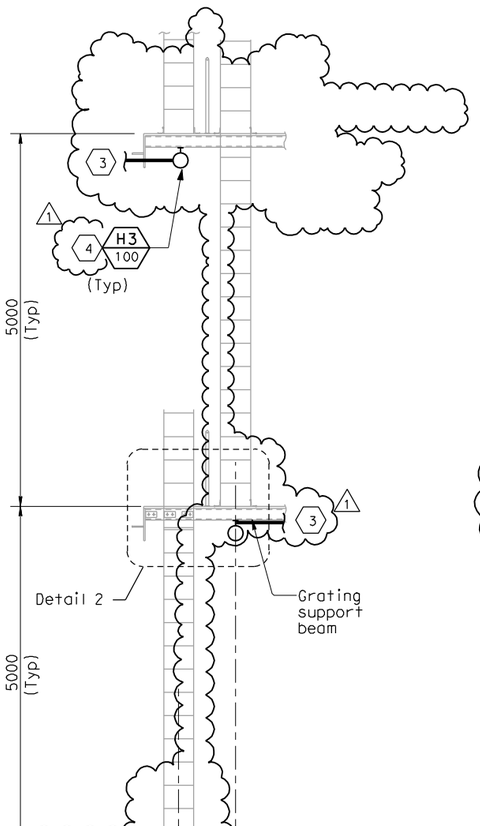

FRONT VIEW

TYPICAL LADDER PLATFORM LIGHTING LAYOUT

SCALE: 1:40

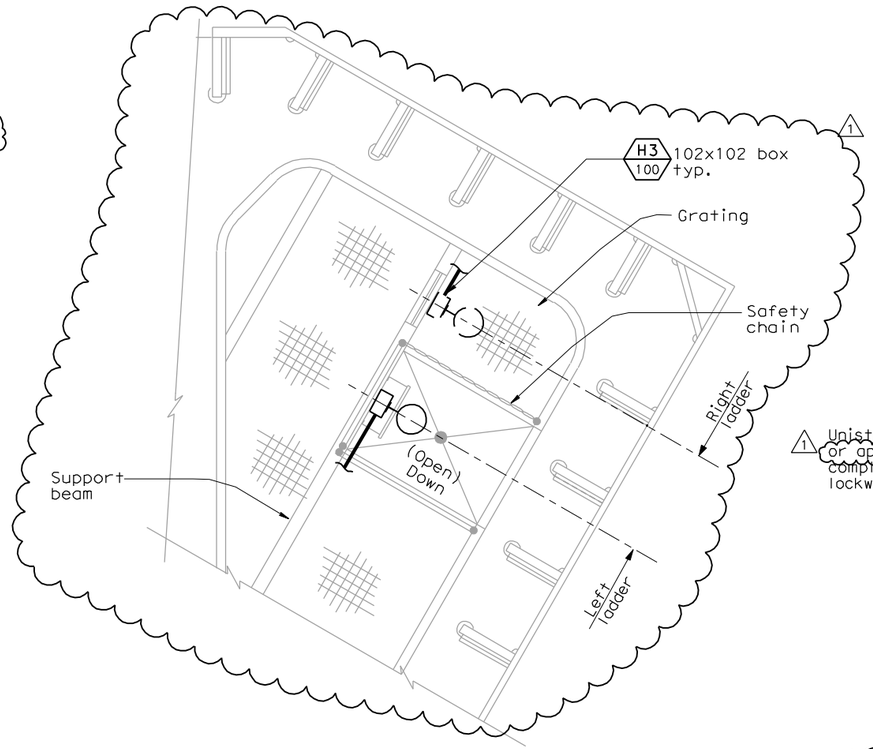

TYPICAL LIGHTING FIXTURE SUPPORT FROM SUPPORT BEAM

Other conduits removed for clarity

SECTION A-A

SCALE: 1:10

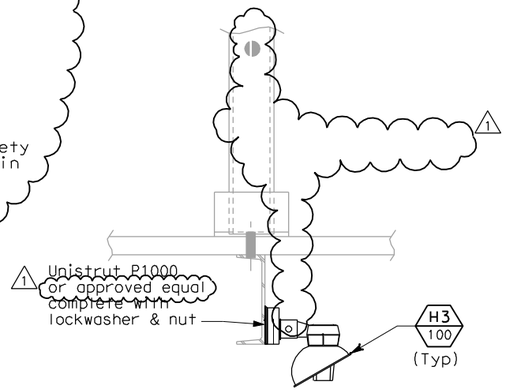

SECTION B-B

SCALE: 1:5

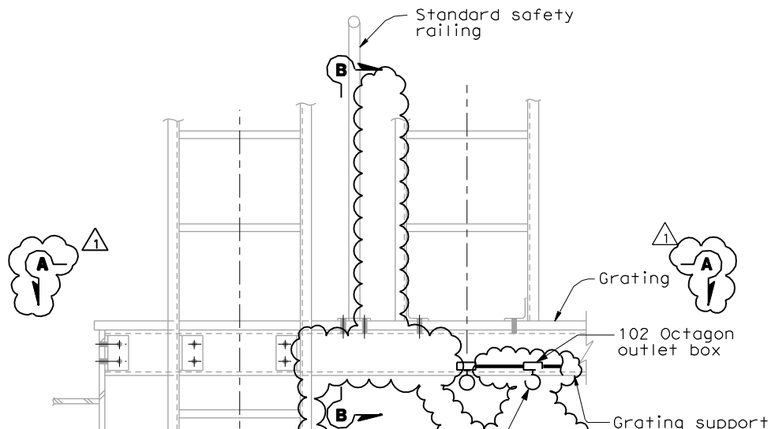

DETAIL 2

SCALE: 1:10

(Typ for El. 53.85 & El. 89.85)

SHEET NOTES:

1. Not used
2. At Elev 53 and 89 provide lights and switches from circuits above and below level. See sheets E-284 & E-284A, for details.
3. To lighting and receptacle junction boxes or switches.
4. For lighting fixture locations and conduit routing see Dwg E282, E264B, E285 and E285B.

NOTES:

1. References:
   - For lighting fixture schedules, see sheet E-273.
   - For light and switch wiring, see sheets E-274, E-275, and E275A.
   - For typical tower ladder platform lighting, see E-284 and E-284A.
   - For typical lighting installation, see sheet E-267.
   - For switches/receptacles mounting see Detail 11, Sheet E-268

REQUEST FOR INFORMATION NOT ADDRESSED IN THIS CCO REMAIN IN FORCE

MARK	DATE	DESCRIPTIONS	BY	CH'D	CCO#
		REVISIONS			
1	12/02/09	TOWER UTILITY PANELS	JS	RG FW	70

CONTRACT CHANGE ORDER NO._____
SHEET_____ OF_____

REGISTERED PROFESSIONAL ENGINEER — FADI WALIEDDINE No. 11465 Exp. 12/31/2009 ELECTRICAL — STATE OF CALIFORNIA

FOR REVISION ONLY

1

DETAILS
TOWER AND SUSPENSION CABLE TOWER LADDER PLATFORM LIGHTING

SCALE AS NOTED

E-283

CALCULATED/ DESIGNED BY	CHECKED BY	DRAWN BY	CHECKED BY	DATE REVISED
FK	EDC	10/01	11/01	

DESIGN OVERSIGHT — BEHZAD GOLEMOHAMADI

STATE OF CALIFORNIA - DEPARTMENT OF TRANSPORTATION — Caltrans

THIS PLAN ACCURATE FOR ELECTRICAL WORK ONLY.

ALL DIMENSIONS ARE IN MILLIMETERS UNLESS OTHERWISE SHOWN

FOR REDUCED PLANS ORIGINAL SCALE IS IN MILLIMETERS 0 20 40 60 80

DGN FILE =>t:\13103\ms\pse\SAS Struc\CCO\SAS CCO70\2009-12-02 issued for Submittal\04-0120f1_0286R01.dgn
USERNAME =>llorico

CU 04251 | EA 0120F1

LAST REVISION 00-00-00 | DATE PLOTTED => 12/10/2009 | TIME PLOTTED => 4:00:40 PM

DIST	COUNTY	ROUTE	KILOMETER POST TOTAL PROJECT	SHEET No	TOTAL SHEETS
04	SF	80	13.2/13.9	287 R1	1204

REGISTERED ELECTRICAL ENGINEER — 12/19/02 DATE

12-6-04
PLANS APPROVAL DATE

REGISTERED PROFESSIONAL ENGINEER — JENS ERLINGSSON No. 8249 Exp. 9/30/06 ELECTRICAL — STATE OF CALIFORNIA

PB POWER, Inc.
A Parsons Brinckerhoff Company
303 Second St., Suite 700N
San Francisco, CA 94107-1317

The State of California or its officers or agents shall not be responsible for the accuracy or completeness of electronic copies of this plan sheet.

Caltrans now has a web site! To get to the web site, go to http://www.dot.ca.gov

Caltrans Metric

REGISTERED PROFESSIONAL ENGINEER — FADI WALIEDDINE No. 11465 Exp. 12/31/2009 ELECTRICAL — STATE OF CALIFORNIA

FOR REVISION ONLY 1

NOTES:

1. References:
   - For lighting schedules, see sheet E-273.
   - For circuit and conduit/cable tray schedules, see sheets starting at E-401.
   - For light and switch wiring, see sheets E-274, E-275 and E-275A. 1
   - For tower ladder platform lighting, Refer to sheets E-282 & E-264B 1
   - For typical ladder platform lighting mounting detail, see sheet E-283.
   - for pull box schedule, see sheet E-83.

SHEET NOTES:

1. Cable tray ID shown is for SE tower shaft. See sheet E-270B for NE, NW & SW cable tray ID's.
2. For typical switch and receptacle mounting details, see sheet E-268, Detail 11.
3. For lighting, pull box, switches and receptacles plan, see sheets E-264B, E-282, E-285, E-285B and E-286
4. Circuit ID shown is for SE tower shaft, See sheets E-274, E-275 and E-275A for NE, NW and SW circuit ID's.
5. For conduit sizes, see sheets E-264B, E-282.

1

PLAN
NO SCALE

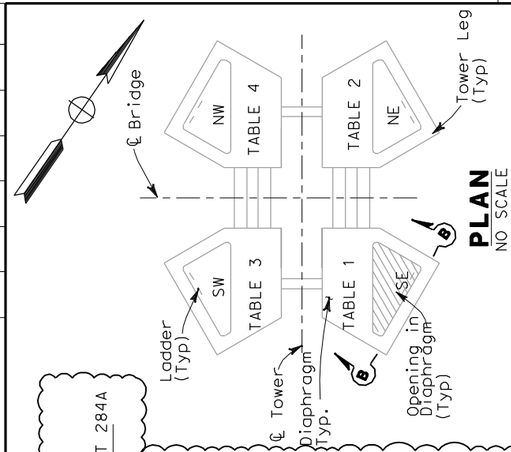

REQUEST FOR INFORMATION NOT ADDRESSED IN THIS CCO REMAIN IN FORCE

MARK	DATE	REVISIONS DESCRIPTIONS	BY	CH'D	CCO#
1	09/18/09	TOWER UTILITY PANELS	JS TW	RG FW	70

CONTRACT CHANGE ORDER NO._____
SHEET____ OF ____

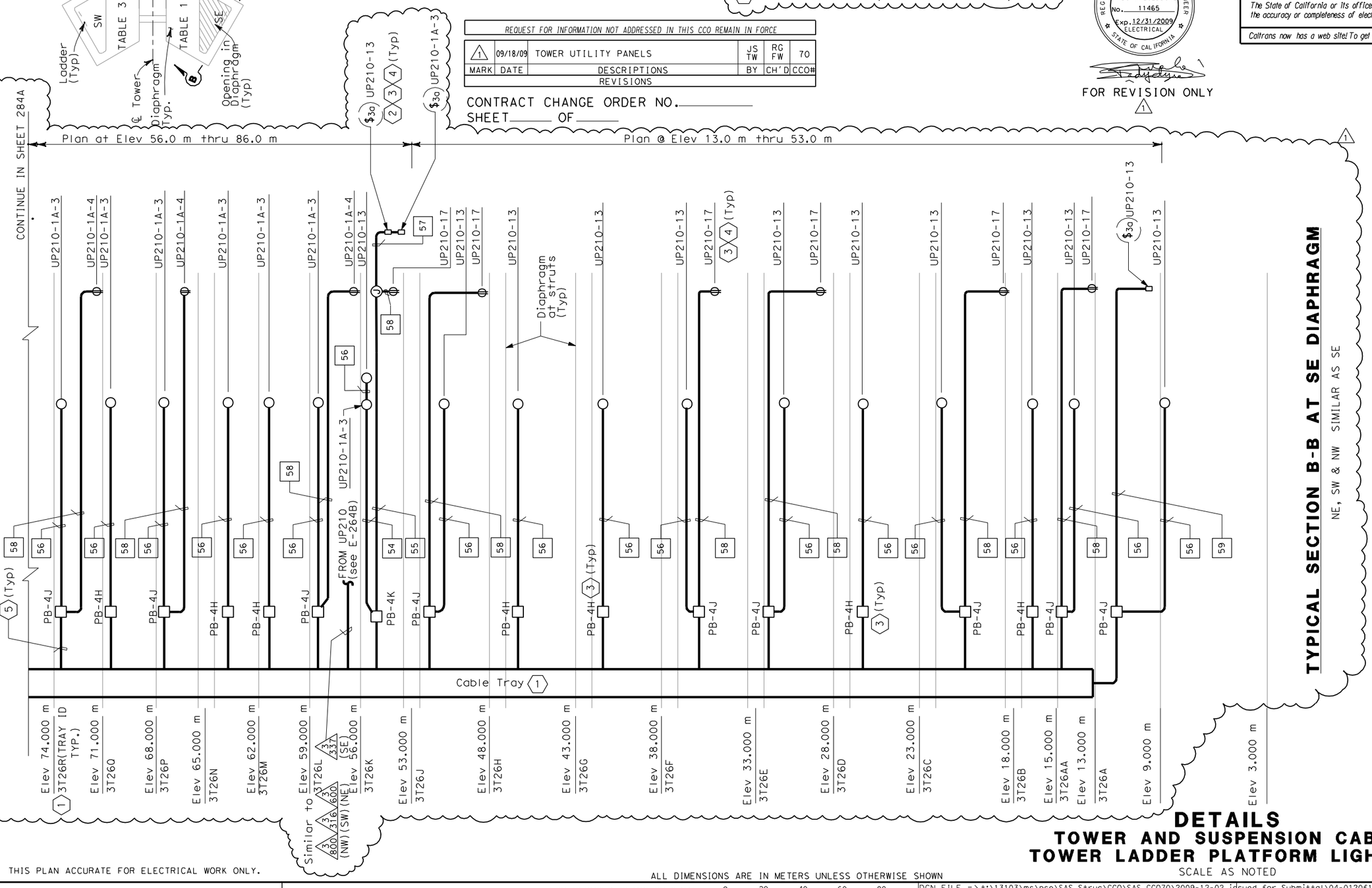

TYPICAL SECTION B-B AT SE DIAPHRAGM

NE, SW & NW SIMILAR AS SE

THIS PLAN ACCURATE FOR ELECTRICAL WORK ONLY.

ALL DIMENSIONS ARE IN METERS UNLESS OTHERWISE SHOWN

DETAILS
TOWER AND SUSPENSION CABLE TOWER LADDER PLATFORM LIGHTING

SCALE AS NOTED

E-284

STATE OF CALIFORNIA - DEPARTMENT OF TRANSPORTATION
Caltrans

DESIGN OVERSIGHT
BEHZAD GOLEMOHAMMADI

	CALCULATED/ DESIGNED BY	CHECKED BY
	FK	EDC

DATE	REVISED BY
10/01	DATE REVISED
11/01	

FOR REDUCED PLANS ORIGINAL SCALE IS IN MILLIMETERS 0 20 40 60 80

DGN FILE =>t:\13103\ms\pse\SAS Struc\CCO\SAS CCO70\2009-12-02 issued for Submittal\04-0120f1_0287R01.dgn
USERNAME =>llorico

CU 04251 EA 0120F1

LAST REVISION 00-00-00
DATE PLOTTED => 12/10/2009
TIME PLOTTED => 4:00:58 PM

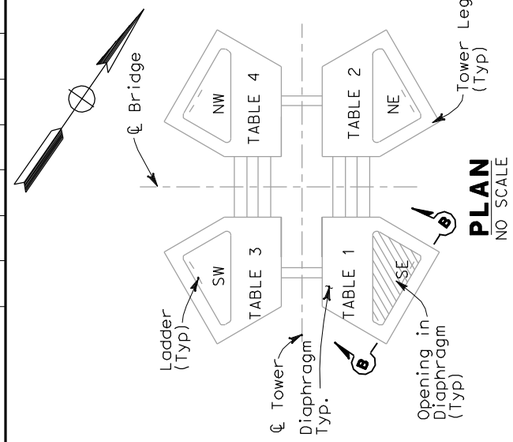

PLAN
NO SCALE

NOTES:

1. References:
   - For lighting schedules, see sheet E-273.
   - For circuit and conduit/cable tray schedules, see sheets starting at E-401.
   - For light and switch wiring, see sheets E-274, E-275 and E-275A.
   - For tower ladder platform lighting, Refer to sheets E-282, E-285 & E-285B.
   - For typical ladder platform lighting mounting detail, see sheet E-283.
   - For pull box schedule, see Sheet E-83

REQUEST FOR INFORMATION NOT ADDRESSED IN THIS CCO REMAIN IN FORCE

MARK	DATE	REVISIONS	BY	CH'D	CCO#
0	09/18/09	TOWER UTILITY PANELS	JS TW	RG FW	70

CONTRACT CHANGE ORDER NO._____
SHEET_____ OF _____

SHEET NOTES:

1. For conduit size and ID's, see sheet E-285B.
2. Cable tray ID shown is for SE tower shaft. See sheet E-270B for NE,NW, & SW shaft cable tray ID's.
3. Only in SE and SW shafts.
4. Through penetration @ El 144.54 to platform lighting and receptacles @ El. 139.85 SW shaft only, see E-286.
5. For typical switch and receptacle mounting details, see sheet E-268, Detail 11.
6. For lighting, pull box, switches and receptacles plan, see sheets E-264B, E-282, E-285, E-285B and E-286.
7. Circuit ID shown is for SE tower shaft. See sheets E-274, E-275 and E-275A for NE, NW and SW circuit ID's.
8. For conduit sizes, see sheets E-282, E-285B & E-286.

Caltrans Metric

DIST	COUNTY	ROUTE	KILOMETER POST TOTAL PROJECT	SHEET No	TOTAL SHEETS
04	SF	80	13.2/13.9	287 ST	1204

REGISTERED ELECTRICAL ENGINEER DATE

PLANS APPROVAL DATE

REGISTERED PROFESSIONAL ENGINEER — FADI WALIEDDINE — No. 11465 — Exp. 12/31/2009 — ELECTRICAL — STATE OF CALIFORNIA

PB AMERICAS, Inc.
A Parsons Brinckerhoff Company
303 Second St., Suite 700N
San Francisco, CA 94107-1317

The State of California or its officers or agents shall not be responsible for the accuracy or completeness of electronic copies of this plan sheet.

Caltrans now has a web site! To get to the web site, go to http://www.dot.ca.gov

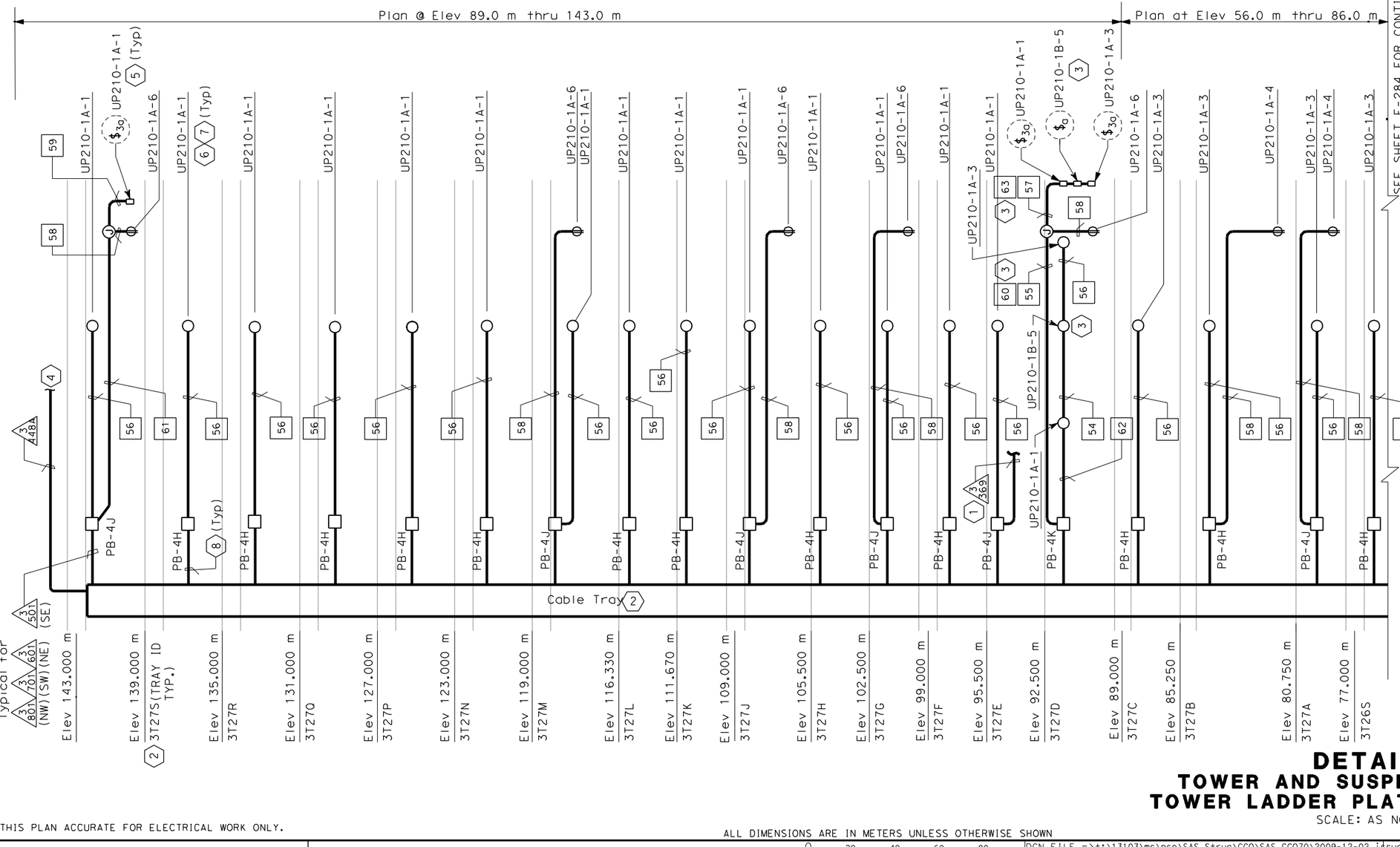

TYPICAL SECTION B-B AT SE DIAPHRAGM
NE, SW, NW, SIMILAR AS SE

DETAILS
TOWER AND SUSPENSION CABLE
TOWER LADDER PLATFORM LIGHTING

SCALE: AS NOTED

E-284A

LAST REVISION	DATE PLOTTED => 12/10/2009
00-00-00	TIME PLOTTED => 4:01:13 PM

	CALCULATED/ DESIGNED BY	CHECKED BY	FK	EDC
DATE	10/01	11/01		
REVISED BY				
DATE REVISED				

STATE OF CALIFORNIA - DEPARTMENT OF TRANSPORTATION
Caltrans
DESIGN OVERSIGHT
BEHZAD GOLEMOHAMMADI

THIS PLAN ACCURATE FOR ELECTRICAL WORK ONLY.

ALL DIMENSIONS ARE IN METERS UNLESS OTHERWISE SHOWN

FOR REDUCED PLANS ORIGINAL SCALE IS IN MILLIMETERS 0 20 40 60 80

DGN FILE =>t:\13103\ms\pse\SAS Struc\CCO\SAS CCO70\2009-12-02 issued for Submittal\04-0120f1_0287S01.dgn
USERNAME =>llorico

CU 04251 EA 0120F1

REQUEST FOR INFORMATION NOT ADDRESSED IN THIS CCO REMAIN IN FORCE					
2	12/11/09	TOWER UTILITY PANELS	JS TW	RG FW	70
1	02/19/08	ELECTRICAL MODIFICATIONS	MP EL	RR	42
MARK	DATE	DESCRIPTIONS	BY	CH'D	CCO#
REVISIONS					

CONTRACT CHANGE ORDER NO._____
SHEET _____ OF _____

REGISTERED PROFESSIONAL ENGINEER — MARRELL FUMIO TAKATA — No. E 8651 — Exp. 9/30/2008 ELECTRICAL — STATE OF CALIFORNIA

FOR REVISION ONLY 1

REGISTERED PROFESSIONAL ENGINEER — FADI WALIEDDINE — No. 11465 — Exp. 12/31/2009 ELECTRICAL — STATE OF CALIFORNIA

FOR REVISION ONLY 2

Caltrans Metric

DIST	COUNTY	ROUTE	KILOMETER POST TOTAL PROJECT	SHEET No	TOTAL SHEETS
04	SF	80	13.2/13.9	288 R2	1204

12/19/02
REGISTERED ELECTRICAL ENGINEER DATE

12-6-04
PLANS APPROVAL DATE

REGISTERED PROFESSIONAL ENGINEER — JENS ERLINGSSON — No. 8249 — Exp. 9/30/06 ELECTRICAL — STATE OF CALIFORNIA

PB POWER, Inc.
A Parsons Brinckerhoff Company
303 Second St., Suite 700N
San Francisco, CA 94107-1317

The State of California or its officers or agents shall not be responsible for the accuracy or completeness of electronic copies of this plan sheet.

Caltrans now has a web site! To get to the web site, go to http://www.dot.ca.gov

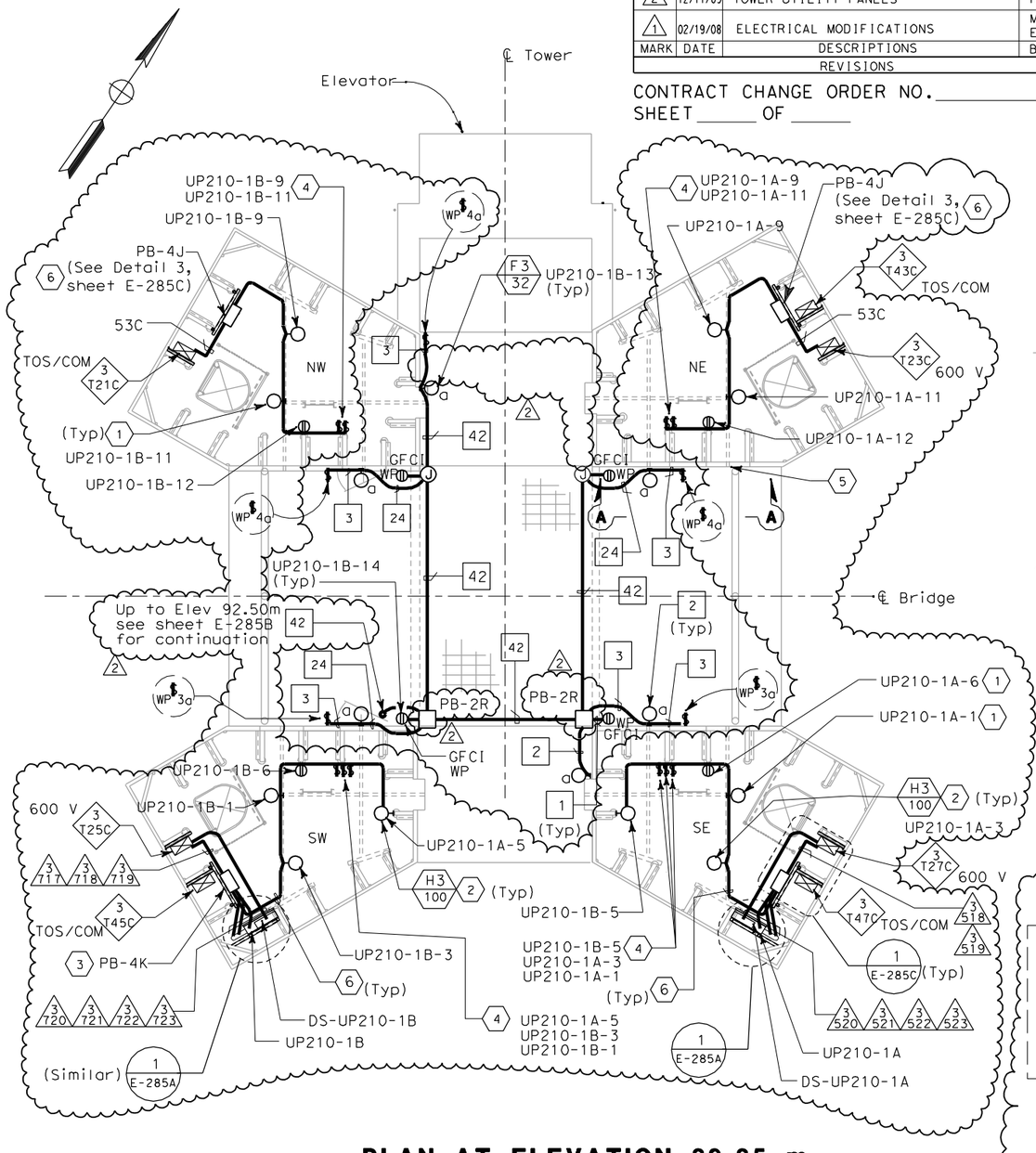

PLAN AT ELEVATION 89.85 m

SCALE: 1:40

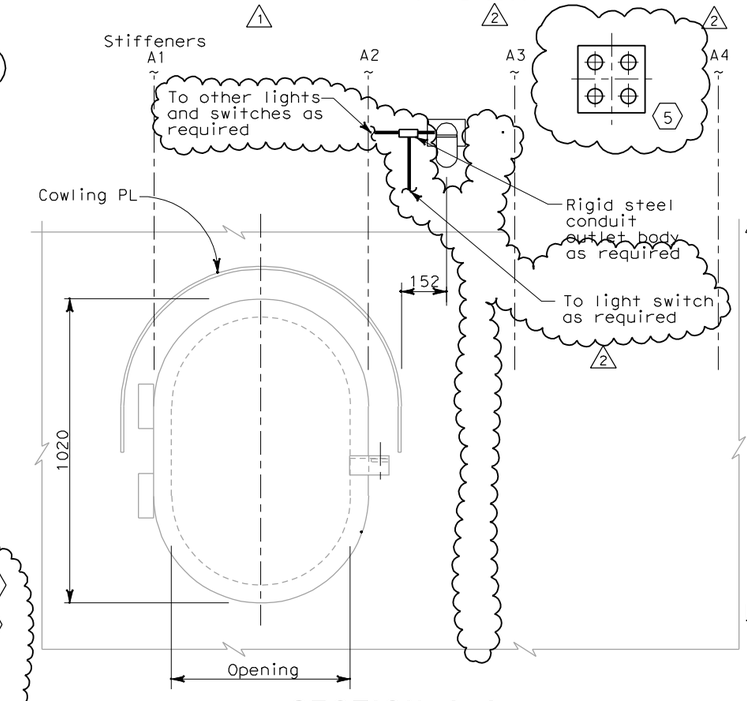

SECTION A-A ACCESS OPENING DOOR

NO SCALE

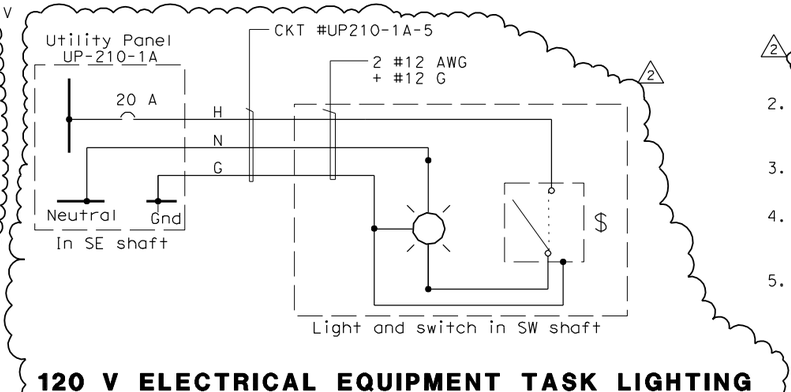

120 V ELECTRICAL EQUIPMENT TASK LIGHTING WIRING DIAGRAM

(Shown for circuit #UP210-1A-5 only, light in SE shaft is similar, but fed from UP-210-1B-5 in the SW shaft)

SHEET NOTES:

1. For tower shaft ladder and platform lighting and power layout, see section B-B on sheet E-284 & E-284A.
2. Light shown mounted under ceiling.
3. For shaft lighting and receptacle distribution box details, see Detail 1, Sheet E-285C.
4. Multiple switches at certain elevations. See sheets E-284 and E-284A and Detail 8 sheet E-268
5. See sheet E-285B for penetration doubler plate schedule and details.
6. Numbers and sizes of conduits are field route to lights, receptacles and switches. See sheets E-284 and E-284A for conduit information.

NOTES:

1. References:
   - For typical conduit installation details, see sheet E-268.
   - For utility panel UP-210-1A and UP-210-1B panel schedules, see sheets E-279 and E-280.
   - For types of pull boxes, splice boxes and enclosures, see sheets E-83 and E-169.
   - For conduit and cable tray schedules, see sheets starting at E-401.
   - For lighting installation details, see sheet E-267.
   - For lighting fixture schedule, see sheet E-273.
2. All conduits and fittings routed exposed at grating shall be rigid galvanized steel, PVC coated.
3. Fixture mounting height elevation shall be 2.125 m above floor/platform elevation UNO.
4. Electrical conduits shall enter the tower shafts between stiffeners A3 and A4 only. For conduit entry details, see Structural Utility drawings.
5. For other related work not shown on this sheet, see Electrical Special Provisions.

DETAILS
TOWER AND SUSPENSION CABLE TOWER POWER AND LIGHTING

SCALE: AS NOTED

E-285

REVISED BY	DATE REVISED
FK	10/01
EDC	11/01

CALCULATED/DESIGNED BY
CHECKED BY

DESIGN OVERSIGHT
BEHZAD GOLEMOHAMMADI

STATE OF CALIFORNIA - DEPARTMENT OF TRANSPORTATION
Caltrans

THIS PLAN ACCURATE FOR ELECTRICAL WORK ONLY.

ALL DIMENSIONS ARE IN MILLIMETERS UNLESS OTHERWISE SHOWN

LAST REVISION 00-00-00
DATE PLOTTED => 12/10/2009
TIME PLOTTED => 4:01:28 PM

FOR REDUCED PLANS ORIGINAL SCALE IS IN MILLIMETERS 0 20 40 60 80

DGN FILE =>t:\13103\ms\pse\SAS Struc\CCO\SAS CC070\2009-12-02 issued for Submittal\04-0120f1_0288R02.dgn
USERNAME =>llorico

CU 04251 EA 0120F1

DIST	COUNTY	ROUTE	KILOMETER POST TOTAL PROJECT	SHEET No	TOTAL SHEETS
04	SF	80	13.2/13.9	288 ST	1204

REGISTERED ELECTRICAL ENGINEER DATE

REGISTERED PROFESSIONAL ENGINEER
FADI WALIEDDINE
No. 11465
Exp.12/31/2009
ELECTRICAL
STATE OF CALIFORNIA

PLANS APPROVAL DATE

PB AMERICAS, Inc.
A Parsons Brinckerhoff Company
303 Second St., Suite 700N
San Francisco, CA 94107-1317

The State of California or its officers or agents shall not be responsible for the accuracy or completeness of electronic copies of this plan sheet.

Caltrans now has a web site! To get to the web site, go to http://www.dot.ca.gov

Caltrans Metric

DESIGN OVERSIGHT	CALCULATED/ DESIGNED BY	DATE	REVISED BY
BEHZAD GOLEMOHAMMADI	CHECKED BY	EDC 11/01	DATE REVISED

STATE OF CALIFORNIA - DEPARTMENT OF TRANSPORTATION
Caltrans

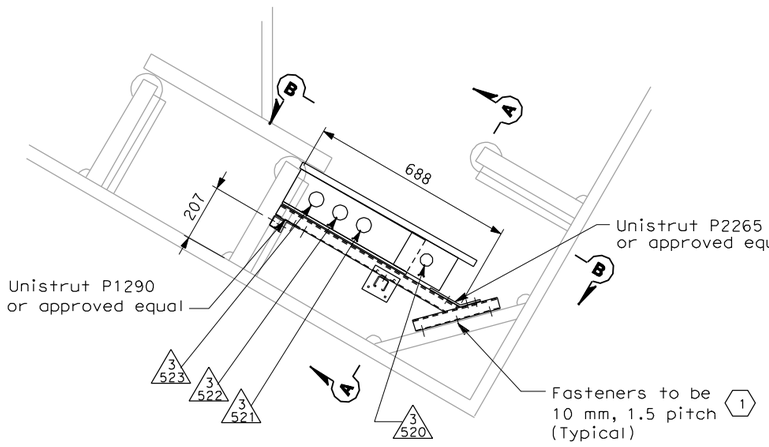

DETAIL 1 AT EL. 89.85 m

SCALE: 1:10
SE shown, SW typical but opposite hand.

1 / E-285

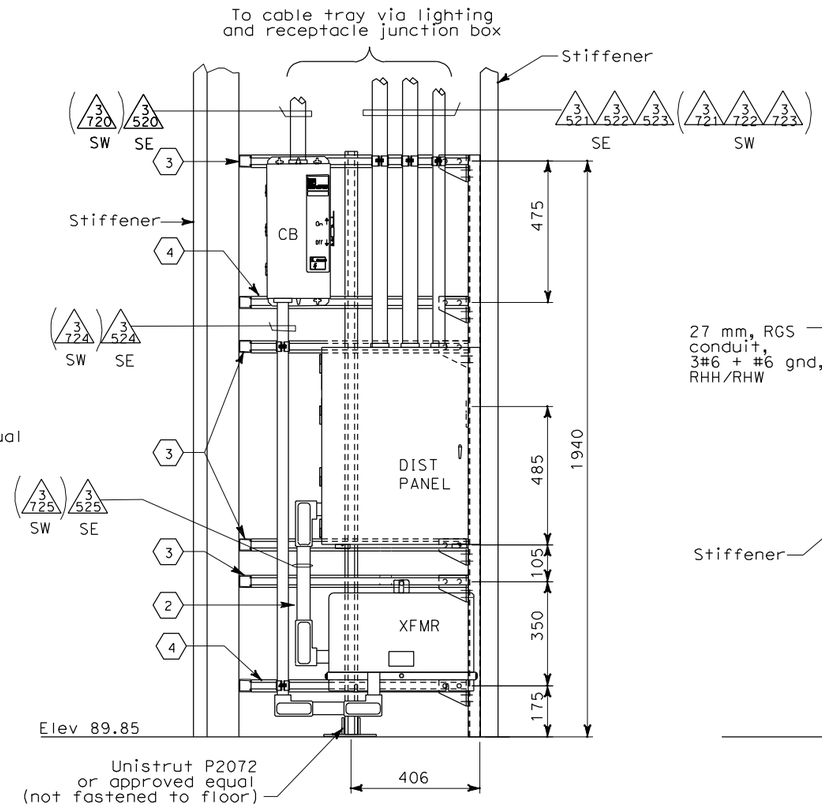

SECTION B-B ELEVATION

NO SCALE

Equipment inside southeast quadrant (UP-210-1A) as shown.
Equipment inside southwest quadrant (UP-210-1B) opposite hand

Dimensions shown are approximate only.
Contractor to adjust to facilitate installation

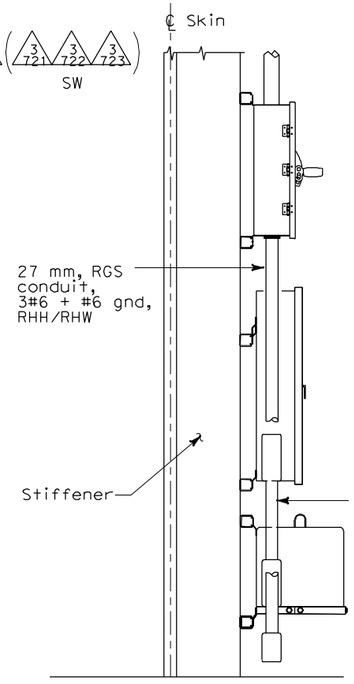

SECTION A-A SIDE VIEW

NO SCALE

Supports and some conduits
are not shown for clarity

SHEET NOTES:

1. Bolt lengths to be long enough to fully engage all materials through which they pass, including all washers and nuts, and where attaching to structural steel be anchored in threads to a depth at least 1.2 times the bolt diameter. Holes in structural members shall be drilled and bottom tapped to 5 mm minimum deeper than the depth to which the bolt will engage the steel.
2. At SW shaft, output from transformer connects from lower right side of transformer to top right side of distribution panel, facing front as in section B-B.
3. Unistrut P1000 or approved equal.
4. Unistrut P1000 H3 or approved equal.

REQUEST FOR INFORMATION NOT ADDRESSED IN THIS CCO REMAIN IN FORCE

MARK	DATE	DESCRIPTIONS	BY	CH'D	CCO#
		REVISIONS			
0	12/02/09	TOWER UTILITY PANELS	JS	RG FW	70

CONTRACT CHANGE ORDER NO._____
SHEET_____ OF_____

DETAILS
TOWER AND SUSPENSION CABLE
TOWER POWER AND LIGHTING

SCALE: AS NOTED

E-285A

LAST REVISION 00-00-00
DATE PLOTTED => 12/10/2009
TIME PLOTTED => 4:03:24 PM

THIS PLAN ACCURATE FOR ELECTRICAL WORK ONLY.

ALL DIMENSIONS ARE IN MILLIMETERS UNLESS OTHERWISE SHOWN

FOR REDUCED PLANS ORIGINAL SCALE IS IN MILLIMETERS 0 20 40 60 80

DGN FILE =>t:\13103\ms\pse\SAS Struc\CCO\SAS CCO70\2009-12-02 issued for Submittal\04-0120f1_0288S01.dgn
USERNAME =>llorico

CU 04251 EA 0120F1

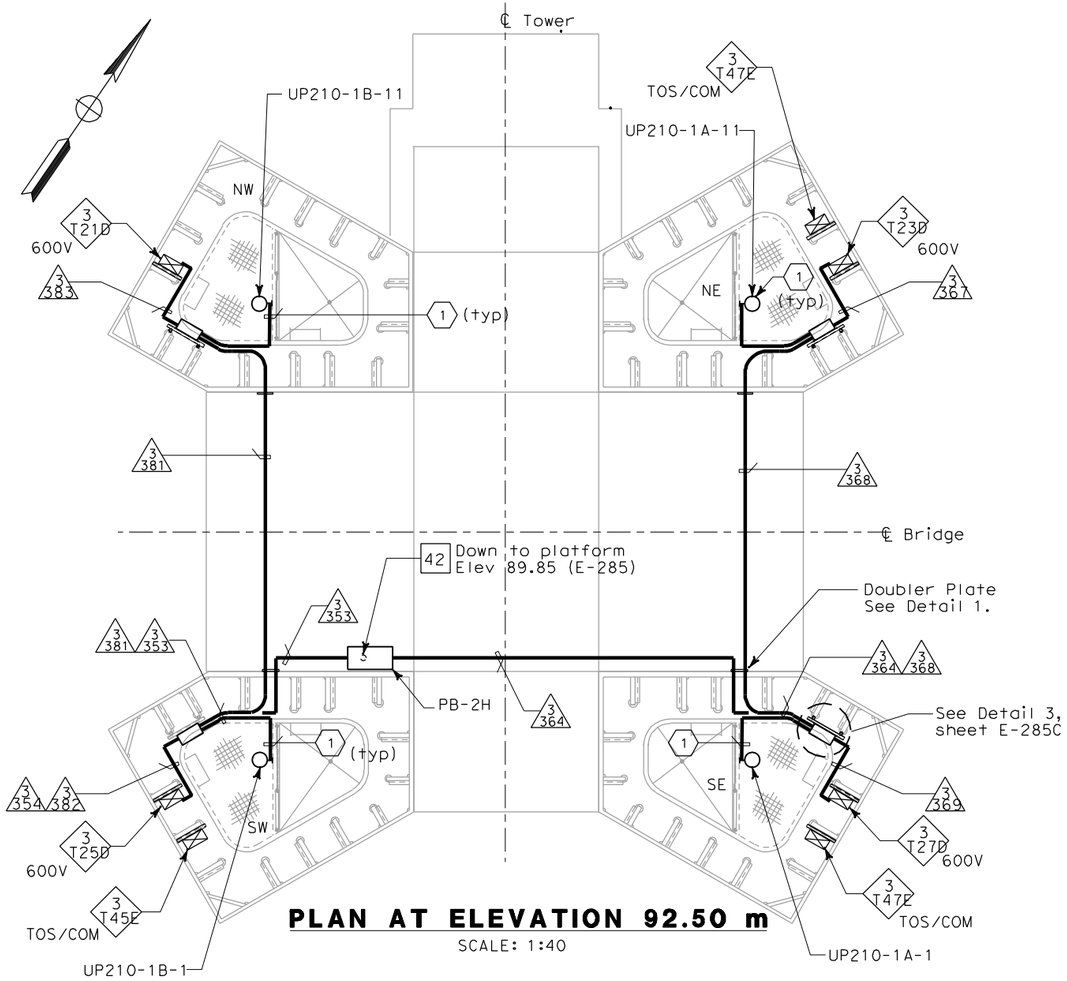

PLAN AT ELEVATION 92.50 m

SCALE: 1:40

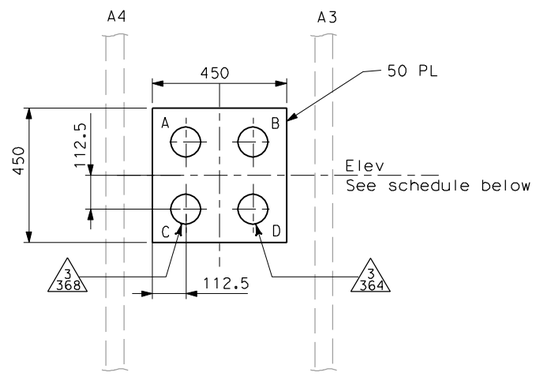

DETAIL 1

TYPICAL DOUBLER PLATE DETAIL

NO SCALE

SE Elev shown, stiffener location shown as viewed from outside shaft, similar for NW shaft & opposite hand for SW & NE shafts

SHEET NOTE:

(1) Numbers and sizes of conduits are field route to lights, receptacles and switches. See sheets E-284 and E-284A for conduit information.

DIST	COUNTY	ROUTE	KILOMETER POST TOTAL PROJECT	SHEET No	TOTAL SHEETS
04	SF	80	13.2/13.9	288 S2	1204

REGISTERED ELECTRICAL ENGINEER DATE

PLANS APPROVAL DATE

REGISTERED PROFESSIONAL ENGINEER — FADI WALIEDDINE No. 11465 Exp.12/31/2009 ELECTRICAL — STATE OF CALIFORNIA

PB AMERICAS, Inc.
A Parsons Brinckerhoff Company
303 Second St., Suite 700N
San Francisco, CA 94107-1317

The State of California or its officers or agents shall not be responsible for the accuracy or completeness of electronic copies of this plan sheet.

Caltrans now has a web site! To get to the web site, go to http://www.dot.ca.gov

TOWER SHAFT SKIN PENETRATION DOUBLER PLATE SCHEDULE

Shaft	Elev (m)	Hole Size (mm)			
		A	B	C	D
NW (W)	11.975	100_S	100_S	51	100_S
NW (W)	16.625	100_S	100_S	100_S	100_S
NW (W)	56.632	100_S	76	100_S	100
NW (W)	92.860	100_S	100_S	100_S	100
NW (W)	129.500	100_S	100_S	100_S	100_S
NW (W)	144.540	100_S	100_S	100_S	100
NE (N)	7.000	100_S	100	100_S	51
NE (N)	11.975	100_S	64	100_S	100_S
NE (N)	13.500	64	100_S	64	78
NE (N)	16.065	100_S	100_S	100_S	100_S
NE (N)	16.625	51	51	100	100
NE (N)	56.422	100_S	76	100_S	100_S
NE (N)	56.977	64	100	76	51
NE (N)	57.622	100	100	51	64
NE (N)	92.860	100_S	100_S	100_S	100
NE (N)	129.500	100_S	100_S	100_S	100_S
NE (N)	144.540	100_S	100_S	100	100_S
SE (E)	11.975	100_S	64	64	100
SE (E)	16.625	100_S	100_S	100_S	100_S
SE (E)	56.422	76	76	64	100
SE (E)	56.972	100_S	100_S	100	64
SE (E)	57.622	64	100_S	64	100_S
SE (E)	92.860	100_S	100_S	100	100
SE (E)	93.400	100_S	64	100_S	64
SE (E)	129.500	100_S	100_S	100_S	100_S
SE (E) *	144.540	64	100_S	64	100_S
SE (E)	144.540	100	100_S	64	76
SW (S)	7.000	100_S	78_S	100_S	100_S
SW (S)	11.975	100_S	100_S	100_S	64
SW (S)	13.500	100_S	78	100_S	100_S
SW (S)	16.625	100_S	51	100_S	100_S
SW (S)	56.542	100	76	100	100
SW (S)	57.082	100	76	51	100_S
SW (S)	57.622	100_S	100_S	100_S	100_S
SW (S)	92.860	100	100_S	100	100_S
SW (S)	93.400	100_S	100_S	100_S	100_S
SW (S)	129.500	100_S	100_S	100_S	100_S
SW (S) *	144.540	100_S	100_S	100_S	100_S
SW (S)	144.540	100_S	100	76	76

Note: 100_S represents a spare penetration.

* Doubler plates are all between stiffeners A3 & A4, except one plate in each of SE & SW shafts at elevation 144.540, which is between A1 & A2, shown with asterisk in table.

REQUEST FOR INFORMATION NOT ADDRESSED IN THIS CCO REMAIN IN FORCE

MARK	DATE	DESCRIPTIONS	BY	CH'D	CCO#
		REVISIONS			
0	12/11/09	TOWER UTILITY PANELS	JS TW	RG FW	70

CONTRACT CHANGE ORDER NO._____

SHEET_____ OF_____

DETAILS
TOWER AND SUSPENSION CABLE TOWER POWER AND LIGHTING

SCALE: AS NOTED

E-285B

ALL DIMENSIONS ARE IN MILLIMETERS UNLESS OTHERWISE SHOWN.

THIS PLAN ACCURATE FOR ELECTRICAL WORK ONLY.

DESIGN OVERSIGHT	BEHZAD GOLEMOHAMMADI
CALCULATED/ DESIGNED BY	
CHECKED BY	
FK	EDC
DATE 10/01	11/01
REVISED BY	DATE REVISED

STATE OF CALIFORNIA - DEPARTMENT OF TRANSPORTATION — Caltrans

LAST REVISION 00-00-00 | DATE PLOTTED => 12/15/2009 | TIME PLOTTED => 1:01:10 PM

FOR REDUCED PLANS ORIGINAL SCALE IS IN MILLIMETERS 0 20 40 60 80

DGN FILE =>T:\13103\MS\pse\SAS Struc\CCO\SAS CC070\2009-12-02 issued for Submittal\04-0120f1_0288S02.dgn
USERNAME =>llorico | CU 04251 | EA 0120F1

DIST	COUNTY	ROUTE	KILOMETER POST TOTAL PROJECT	SHEET No	TOTAL SHEETS
04	SF	80	13.2/13.9	288 S3	1204

REGISTERED ELECTRICAL ENGINEER DATE

PLANS APPROVAL DATE

FADI WALIEDDINE No. 11465 Exp.12/31/2009 ELECTRICAL — REGISTERED PROFESSIONAL ENGINEER — STATE OF CALIFORNIA

PB AMERICAS, Inc.
A Parsons Brinckerhoff Company
303 Second St., Suite 700N
San Francisco, CA 94107-1317

The State of California or its officers or agents shall not be responsible for the accuracy or completeness of electronic copies of this plan sheet.

Caltrans now has a web site! To get to the web site, go to http://www.dot.ca.gov

Caltrans Metric

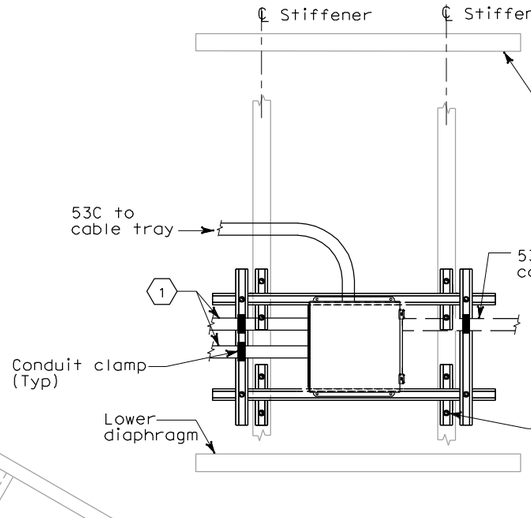

DETAIL 2
Shown for PB-4H

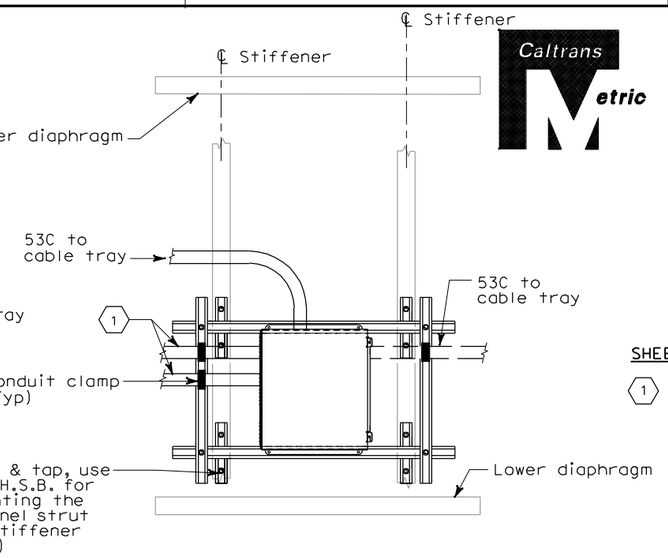

DETAIL 3
Shown for PB-4J

SHEET NOTES:

(1) Number and sizes of conduit are field route to lights, receptacles and switches. See E-282, E-284 and E-284A for conduit sizes and pull box type per location.

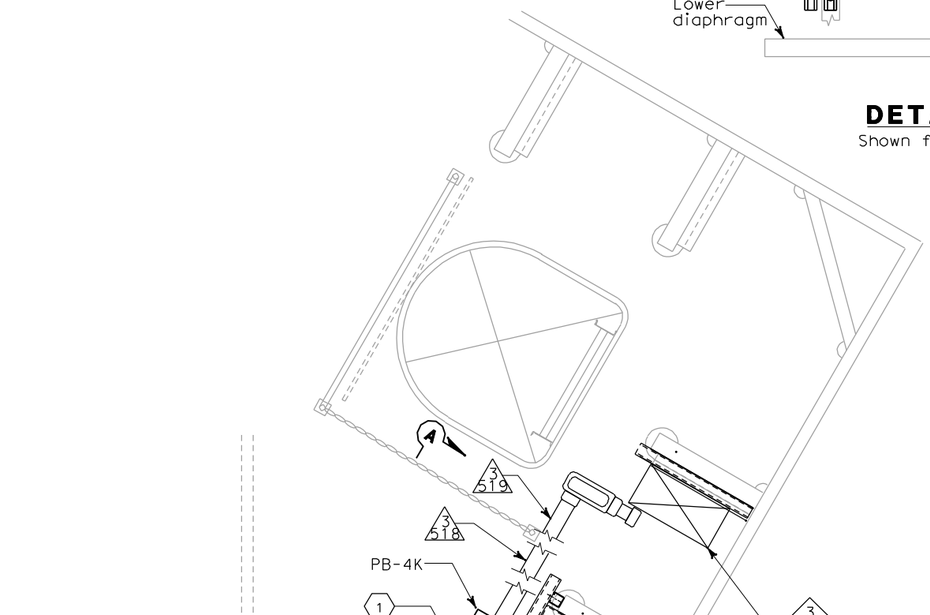

DETAIL 1
Plan at elevation 89.85. Shown for PB-4K
(Some conduits are not shown for clarity)

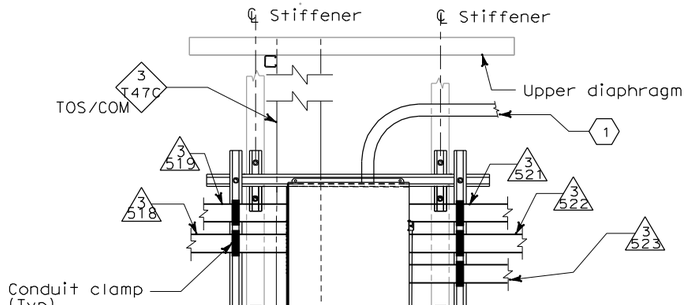

SECTION A-A
Shown for PB-4K

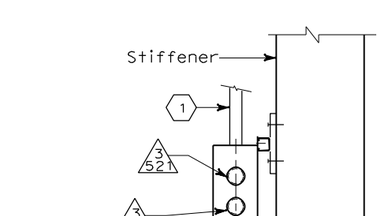

SECTION B-B
Shown for PB-4K

REQUEST FOR INFORMATION NOT ADDRESSED IN THIS CCO REMAIN IN FORCE					
0	12/11/09	TOWER UTILITY PANELS	JS TW	RG FW	70
MARK	DATE	DESCRIPTIONS	BY	CH'D	CCO#
REVISIONS					

CONTRACT CHANGE ORDER NO._____
SHEET_____ OF _____

DETAILS
TOWER AND SUSPENSION CABLE TOWER POWER AND LIGHTING

SCALE: 1:10

E-285C

CALCULATED/ DESIGNED BY	CHECKED BY	FK	EDC
DATE	REVISED BY	DATE REVISED	
10/01		11/01	

DESIGN OVERSIGHT: BEHZAD GOLEMOHAMMADI

STATE OF CALIFORNIA - DEPARTMENT OF TRANSPORTATION
Caltrans

THIS PLAN ACCURATE FOR ELECTRICAL WORK ONLY.

ALL DIMENSIONS ARE IN MILLIMETERS UNLESS OTHERWISE SHOWN.

FOR REDUCED PLANS ORIGINAL SCALE IS IN MILLIMETERS 0 20 40 60 80

DGN FILE =>t:\13103\ms\pse\SAS Struc\CCO\SAS CCO70\2009-12-02 issued for Submittal\04-0120f1_0288S03.dgn
USERNAME =>llorico

CU 04251 EA 0120F1

LAST REVISION 00-00-00
DATE PLOTTED => 12/10/2009
TIME PLOTTED => 4:03:53 PM

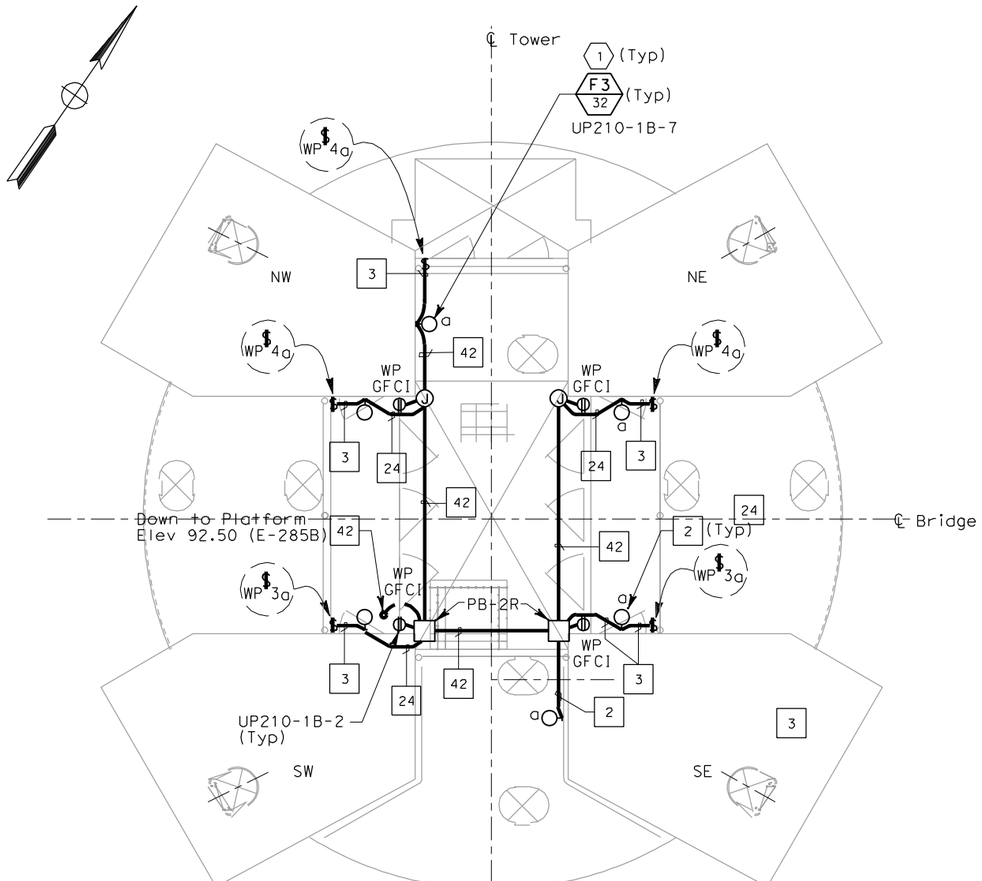

PLAN AT ELEVATION 127.00 m

Caltrans Metric

DIST	COUNTY	ROUTE	KILOMETER POST TOTAL PROJECT	SHEET No	TOTAL SHEETS
04	SF	80	13.2/13.9	288 S4	1204

REGISTERED ELECTRICAL ENGINEER DATE

PLANS APPROVAL DATE

REGISTERED PROFESSIONAL ENGINEER — FADI WALIEDDINE No. 11465 Exp.12/31/2009 ELECTRICAL — STATE OF CALIFORNIA

PB AMERICAS, Inc.
A Parsons Brinckerhoff Company
303 Second St., Suite 700N
San Francisco, CA 94107-1317

The State of California or its officers or agents shall not be responsible for the accuracy or completeness of electronic copies of this plan sheet.

Caltrans now has a web site! To get to the web site, go to http://www.dot.ca.gov

NOTES:

1. References:
   - For typical conduit installation details, see sheet E-268.
   - For utility panel UP-210-1A and UP-210-1B panel schedules, see sheets E-279 and E-280.
   - For types of pull boxes, splice boxes and enclosures, see sheets E-83 and E-169.
   - For conduit and cable tray schedules, see sheets starting at E-401.
   - For lighting installation details, see sheet E-267.
   - For lighting fixture schedule, see sheet E-273.
2. All conduits and fittings routed exposed at grating shall be rigid galvanized steel, PVC coated.
3. Fixture mounting height elevation shall be 2.125 m above floor/platform elevation UNO.
4. Electrical conduits shall enter the tower shafts between stiffeners A3 and A4 only. For conduit entry details, see Structural Utility drawings.
5. For other related work not shown on this sheet, see Electrical Special Provisions.

REQUEST FOR INFORMATION NOT ADDRESSED IN THIS CCO REMAIN IN FORCE

MARK	DATE	DESCRIPTIONS	BY	CH'D	CCO#
		REVISIONS			
0	12/11/09	TOWER UTILITY PANELS	SYC	RG FW	70

CONTRACT CHANGE ORDER NO._____
SHEET_____ OF _____

DETAILS
TOWER AND SUSPENSION CABLE
TOWER POWER AND LIGHTING

NO SCALE

E-285D

STATE OF CALIFORNIA - DEPARTMENT OF TRANSPORTATION — Caltrans

DESIGN OVERSIGHT — BEHZAD GOLEMOHAMMADI

CALCULATED/ DESIGNED BY	DATE	REVISED BY
CHECKED BY	EDC	DATE REVISED
FK	10/01	11/01

LAST REVISION 00-00-00 — DATE PLOTTED => 12/10/2009 TIME PLOTTED => 4:04:08 PM

THIS PLAN ACCURATE FOR ELECTRICAL WORK ONLY.

ALL DIMENSIONS ARE IN MILLIMETERS UNLESS OTHERWISE SHOWN.

FOR REDUCED PLANS ORIGINAL SCALE IS IN MILLIMETERS 0 20 40 60 80

DGN FILE =>t:\13103\ms\pse\SAS Struc\CCO\SAS CCO70\2009-12-02 issued for Submittal\04-0120f1_0288S04.dgn
USERNAME =>llorico

CU 04251 EA 0120F1

DIST	COUNTY	ROUTE	KILOMETER POST TOTAL PROJECT	SHEET No	TOTAL SHEETS
04	SF	80	13.2/13.9	289 R2	1204

REGISTERED ELECTRICAL ENGINEER — 12/19/02 DATE

12-6-04
PLANS APPROVAL DATE

REGISTERED PROFESSIONAL ENGINEER — JENS ERLINGSSON No. 8249 Exp. 9/30/06 ELECTRICAL — STATE OF CALIFORNIA

PB POWER, Inc.
A Parsons Brinckerhoff Company
303 Second St., Suite 700N
San Francisco, CA 94107-1317

The State of California or its officers or agents shall not be responsible for the accuracy or completeness of electronic copies of this plan sheet.

Caltrans now has a web site! To get to the web site, go to http://www.dot.ca.gov

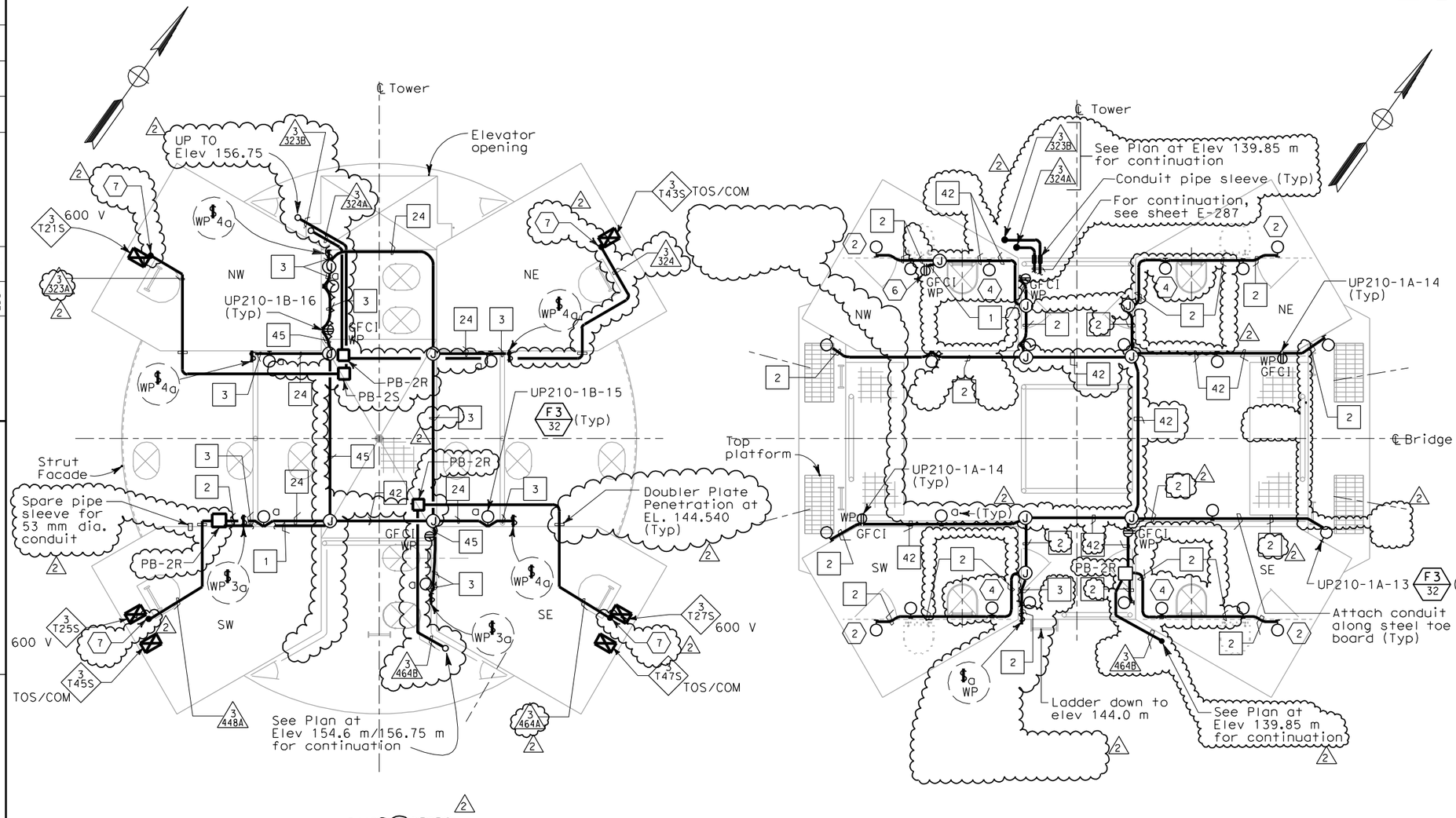

PLAN AT ELEVATION 139.85 m
SCALE: 1:40

PLAN AT ELEVATIONS 154.6 m TO 156.75 m
SCALE: 1:40

SHEET NOTES:

1. Deleted.
2. Fixture mounting height elevation shall be 158.5 m.
3. Deleted.
4. Fixture mounting height elevation shall be 159.25 m.
5. Conduit from elevation 89.85 up to elevation 156.75.
6. Receptacle mounting height elevation shall be 158.450 m.
7. Conduit down to cable tray located below EL. 143.00 diaphragm.

NOTES:

1. References:
   - For utility panels UP210-1A and UP210-1B, panel schedules see sheets E-279 and E-280.
   - For types of pull boxes, splice boxes and enclosures, see sheets E-83 and E-169.
   - For conduit and cable tray schedules, see sheets starting at E-401.
   - For lighting installation details, see sheet E-267.
   - For lighting fixture schedule, see sheet E-263.
   - Deleted.
   - For typical conduit installation details, see sheet E-268.
2. All conduits and fittings routed exposed at grating shall be rigid galvanized steel, PVC coated.
3. Fixture mounting height shall be 2.125 m above floor/platform elevation UNO.
4. Electrical conduits shall enter the tower shafts between stiffeners A3 and A4 only. For conduit entry details, see Structural Utility drawings.
5. For other related work not shown on this sheet, see Electrical Special Provisions.

REGISTERED PROFESSIONAL ENGINEER — MAXWELL FUMIO TAKATA No. E 8651 Exp. 9/30/2008 ELECTRICAL — STATE OF CALIFORNIA

FOR REVISION ONLY 1

REQUEST FOR INFORMATION NOT ADDRESSED IN THIS CCO REMAIN IN FORCE

MARK	DATE	DESCRIPTIONS	BY	CH'D	CCO#
		REVISIONS			
2	12/11/09	TOWER UTILITY PANELS	SYC RG	FW	70
1	02/19/08	ELECTRICAL MODIFICATIONS	MP EL	RR	42

CONTRACT CHANGE ORDER NO. _____
SHEET _____ OF _____

REGISTERED PROFESSIONAL ENGINEER — FADI WALIEDDINE No. 11465 Exp. 12/31/2009 ELECTRICAL — STATE OF CALIFORNIA

FOR REVISION ONLY 2

DETAILS
TOWER AND SUSPENSION CABLE TOWER POWER AND LIGHTING
SCALE 1:50

E-286

THIS PLAN ACCURATE FOR ELECTRICAL WORK ONLY.

ALL DIMENSIONS ARE IN MILLIMETERS UNLESS OTHERWISE SHOWN

FOR REDUCED PLANS ORIGINAL SCALE IS IN MILLIMETERS 0 20 40 60 80

DGN FILE =>t:\13103\ms\pse\SAS Struc\CCO\SAS CC070\2009-12-02 issued for Submittal\04-0120f1_0289R02.dgn
USERNAME =>llorico
CU 04251 | EA 0120F1

DESIGN OVERSIGHT — BEHZAD GOLEMOHAMMADI
CALCULATED/DESIGNED BY — FK
CHECKED BY — EDC
DATE — 10/01
REVISED BY — DATE REVISED
STATE OF CALIFORNIA - DEPARTMENT OF TRANSPORTATION — Caltrans

LAST REVISION 00-00-00
DATE PLOTTED => 12/10/2009
TIME PLOTTED => 4:04:22 PM

DIST	COUNTY	ROUTE	KILOMETER POST TOTAL PROJECT	SHEET No	TOTAL SHEETS
04	SF	80	13.2/13.9	290R2	1204

Jens Erlingsson 12/19/02
REGISTERED ELECTRICAL ENGINEER DATE

12-6-04
PLANS APPROVAL DATE

REGISTERED PROFESSIONAL ENGINEER — JENS ERLINGSSON No. 8249 Exp. 9/30/06 ELECTRICAL — STATE OF CALIFORNIA

PB POWER, Inc.
A Parsons Brinckerhoff Company
303 Second St., Suite 700N
San Francisco, CA 94107-1317

The State of California or its officers or agents shall not be responsible for the accuracy or completeness of electronic copies of this plan sheet.

Caltrans now has a web site! To get to the web site, go to http://www.dot.ca.gov

Caltrans Metric

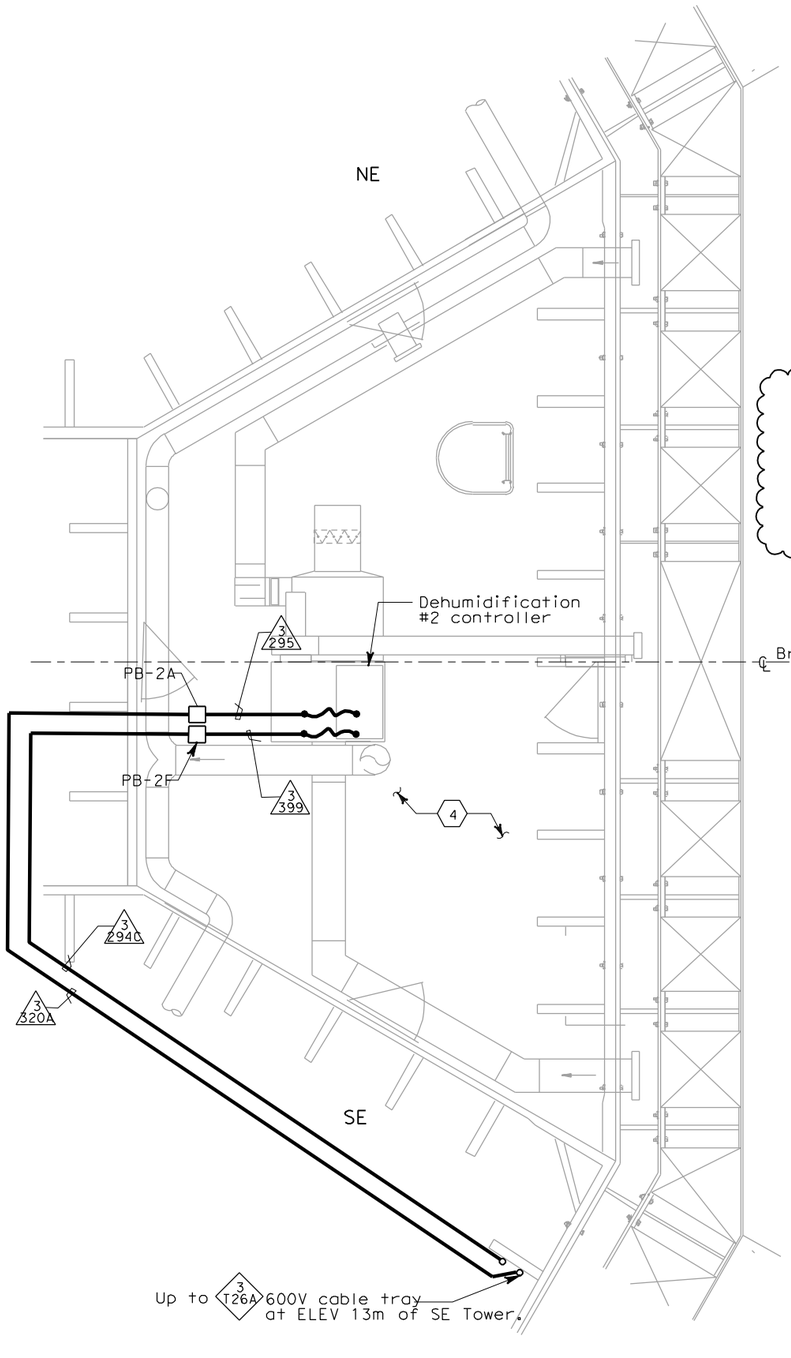

DEHUMIDIFICATION UNIT #2 PLAN- AT ELEV. 9.0 m

NO SCALE

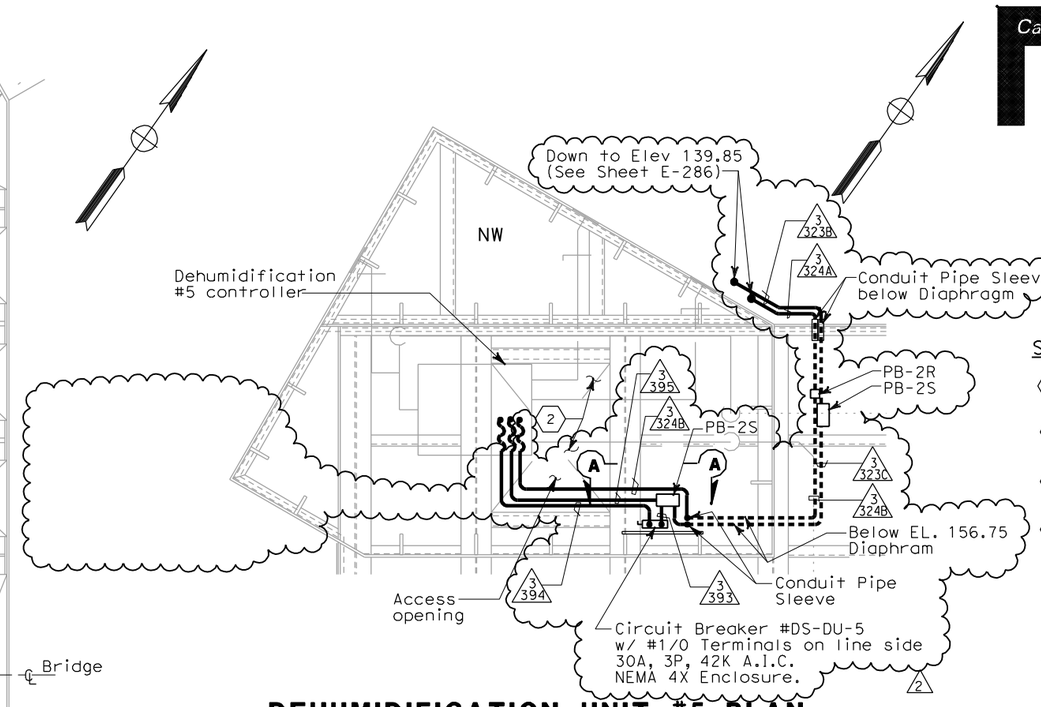

DEHUMIDIFICATION UNIT #5 PLAN AT ELEV. 158.0 m

SCALE: 1:20

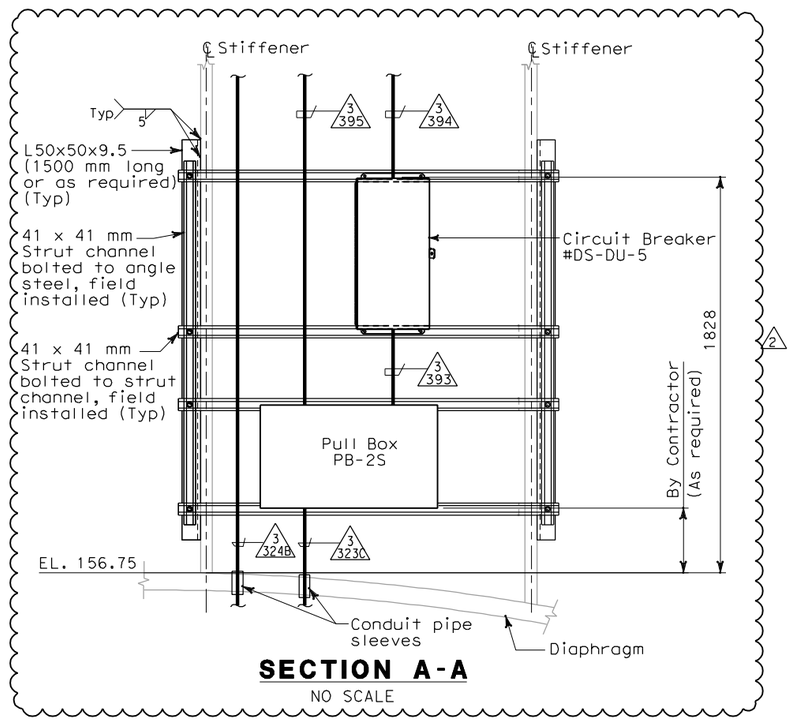

SECTION A-A

NO SCALE

SHEET NOTES:

1. Deleted.
2. For lighting and receptacles in this area, see plan at elevations 154.6 m to 156.75 m on sheet E-268.
3. Deleted.
4. For lighting and receptacles in this area, see sheet E-266.

NOTES:

1. References:
   - For types of pull boxes, splice boxes and enclosures, see sheets E-83 and E-169.
   - For conduit and cable tray schedules, see sheets starting at E-401.
   - For typical conduit installation details, see sheet E-268.
2. For other related work not shown on this sheet, see Electrical Special Provisions.

REGISTERED PROFESSIONAL ENGINEER — FADI WALIEDDINE No. 11465 Exp. 12/31/2009 ELECTRICAL — STATE OF CALIFORNIA

FOR REVISION ONLY
2

REGISTERED PROFESSIONAL ENGINEER — MARWELL FUMIO TAKATA No. E 8651 Exp. 9/30/2008 ELECTRICAL — STATE OF CALIFORNIA

FOR REVISION ONLY
1

REQUEST FOR INFORMATION NOT ADDRESSED IN THIS CCO REMAIN IN FORCE

MARK	DATE	DESCRIPTIONS	BY	CH'D	CCO#
		REVISIONS			
2	09/18/09	TOWER UTILITY PANELS	SYC RG	FW	70
1	02/19/08	ELECTRICAL MODIFICATIONS	MP EL	RR	42

CONTRACT CHANGE ORDER NO. _____
SHEET _____ OF _____

DETAILS
TOWER AND SUSPENSION CABLE TOWER POWER AND LIGHTING

SCALE: AS NOTED

E-287

CALCULATED/ DESIGNED BY	FK	DATE 10/01	REVISED BY
CHECKED BY	EDC	11/01	DATE REVISED

DESIGN OVERSIGHT
BEHZAD GOLEMOHAMMADI

STATE OF CALIFORNIA - DEPARTMENT OF TRANSPORTATION
Caltrans

THIS PLAN ACCURATE FOR ELECTRICAL WORK ONLY.

ALL DIMENSIONS ARE IN MILLIMETERS UNLESS OTHERWISE SHOWN

FOR REDUCED PLANS ORIGINAL SCALE IS IN MILLIMETERS 0 20 40 60 80

DGN FILE =>t:\13103\ms\pse\SAS Struc\CCO\SAS CC070\2009-12-02 issued for Submittal\04-0120f1_0290R02.dgn
USERNAME =>llorico

CU 04251 EA 0120F1

LAST REVISION 00-00-00
DATE PLOTTED => 12/10/2009
TIME PLOTTED => 4:04:38 PM

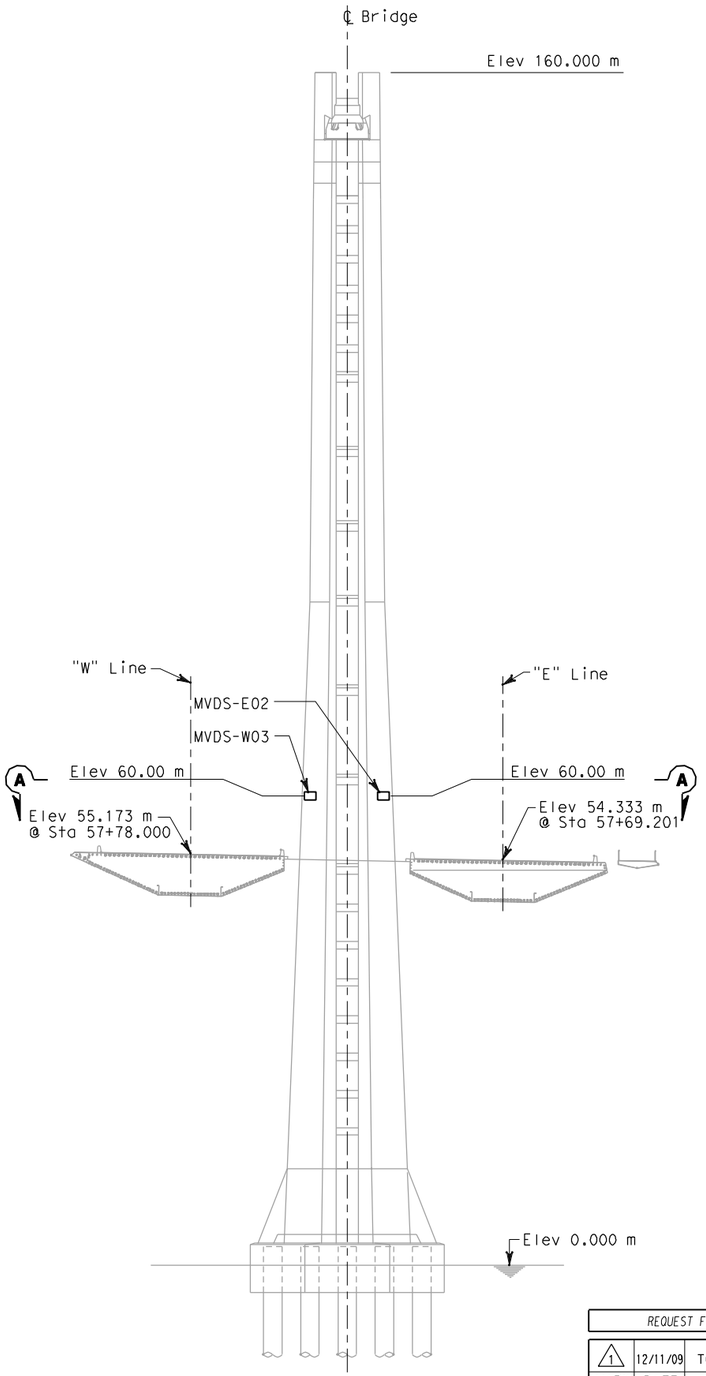

ELEVATION

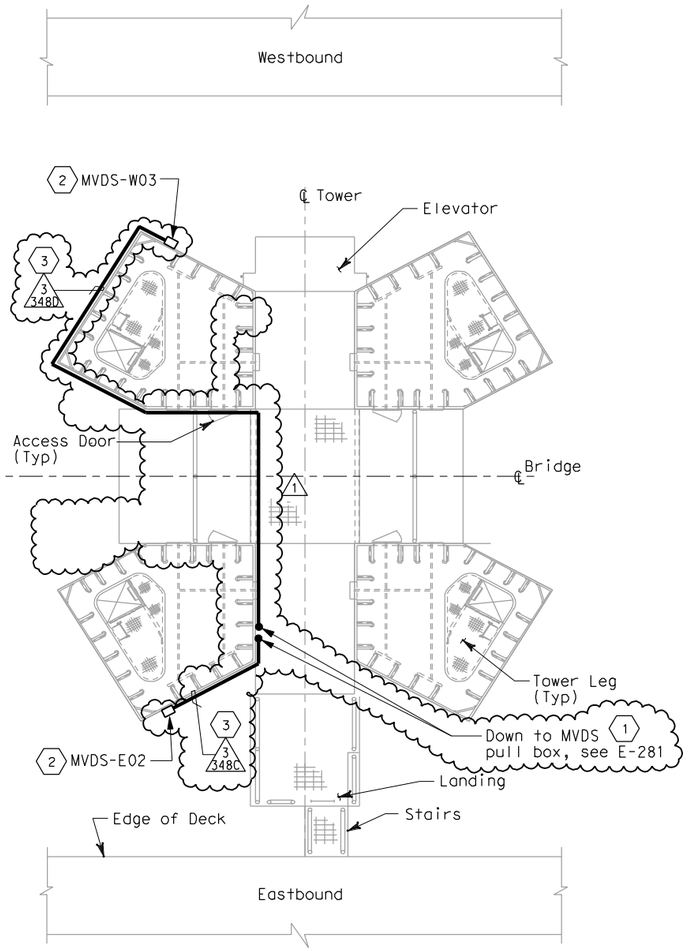

SECTION A-A
PLAN AT ACCESS PLATFORM

DIST	COUNTY	ROUTE	KILOMETER POST TOTAL PROJECT	SHEET No	TOTAL SHEETS
04	SF	80	13.2/13.9	319 R1	1204

12/19/02
REGISTERED ELECTRICAL ENGINEER DATE

12-6-04
PLANS APPROVAL DATE

REGISTERED PROFESSIONAL ENGINEER
JENS ERLINGSSON
No. 8249
Exp. 9/30/06
ELECTRICAL
STATE OF CALIFORNIA

PB POWER, Inc.
A Parsons Brinckerhoff Company
303 Second St., Suite 700N
San Francisco, CA 94107-1317

The State of California or its officers or agents shall not be responsible for the accuracy or completeness of electronic copies of this plan sheet.

Caltrans now has a web site! To get to the web site, go to http://www.dot.ca.gov

SHEET NOTES:

1. MVDS pull box. For conduit routing from the tower to the cabinet on Platform #6, see sheet E-264A. MVDS cable in JCB shall be clearly labeled with the designation of the device ID#.
2. For MVDS bracket mounting details, see Detail 1 and Detail 2 on sheet E-344.
3. Install conduit from MVDS at elevation 60.00 m to MVDS JCB on access platform. Exact conduit routing to be determined by the Contractor.

MVDS SCHEDULE

ID #	ELEMENT STATION	LIGHTPOLE ID	OFFSET m	CABINET ID #	SERVICE PLATFORM REFERENCE SHEET
MVDS-E02	E 57+70	Tower	L 15.5	TOS-06EA	E-73
MVDS-W03	W 57+78	Tower	R 15.5	TOS-06WA	E-73

REQUEST FOR INFORMATION NOT ADDRESSED IN THIS CCO REMAIN IN FORCE

MARK	DATE	DESCRIPTIONS	BY	RG FW CH'D	70 CCO#
		REVISIONS			
1	12/11/09	TOWER UTILITY PANELS	TW		

CONTRACT CHANGE ORDER NO._____
SHEET _____ OF _____

REGISTERED PROFESSIONAL ENGINEER
FADI WALIEDDINE
No. 11465
Exp. _____
ELECTRICAL
STATE OF CALIFORNIA

FOR REVISION ONLY
1

DETAILS
TRAFFIC OPERATIONS SYSTEM
MICROWAVE VEHICLE DETECTION SENSOR SYSTEM
TOWER INSTALLATION

NO SCALE

E-345

CALCULATED/ DESIGNED BY	CHECKED BY	MD	PBF	DATE 11/01	12/01	REVISED BY	DATE REVISED

STATE OF CALIFORNIA - DEPARTMENT OF TRANSPORTATION
Caltrans
DESIGN OVERSIGHT
BEHZAD GOLEMOHAMMADI

THIS PLAN IS ACCURATE FOR ELECTRICAL WORK ONLY

ALL DIMENSIONS IN MILLIMETERS UNLESS OTHERWISE SHOWN.

FOR REDUCED PLANS ORIGINAL SCALE IS IN MILLIMETERS 0 20 40 60 80

DGN FILE =>t:\13103\ms\pse\SAS Struc\CCO\SAS CC070\2009-12-02 issued for Submittal\04-0120f1_0319R01.dgn
USERNAME =>llorico
CU 04251
EA 0120F1

LAST REVISION 00-00-00
DATE PLOTTED => 12/10/2009
TIME PLOTTED => 4:04:52 PM

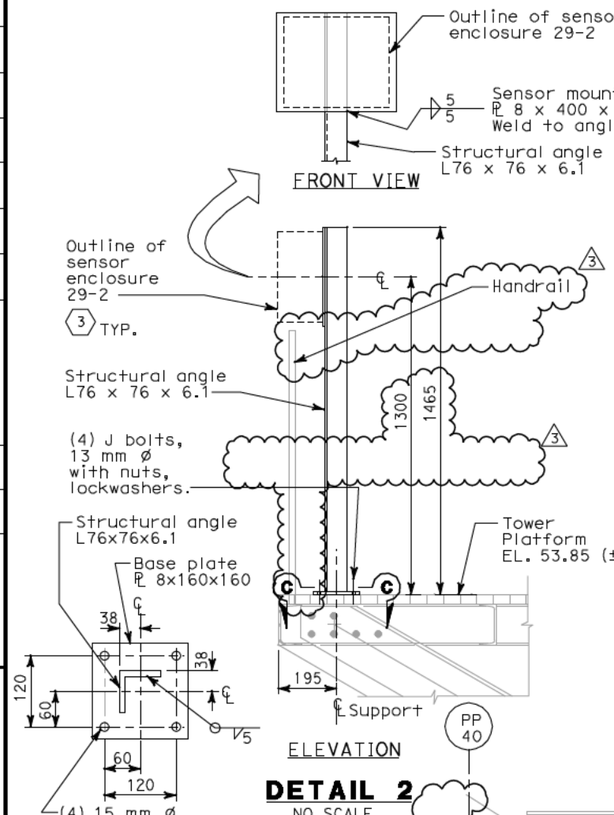

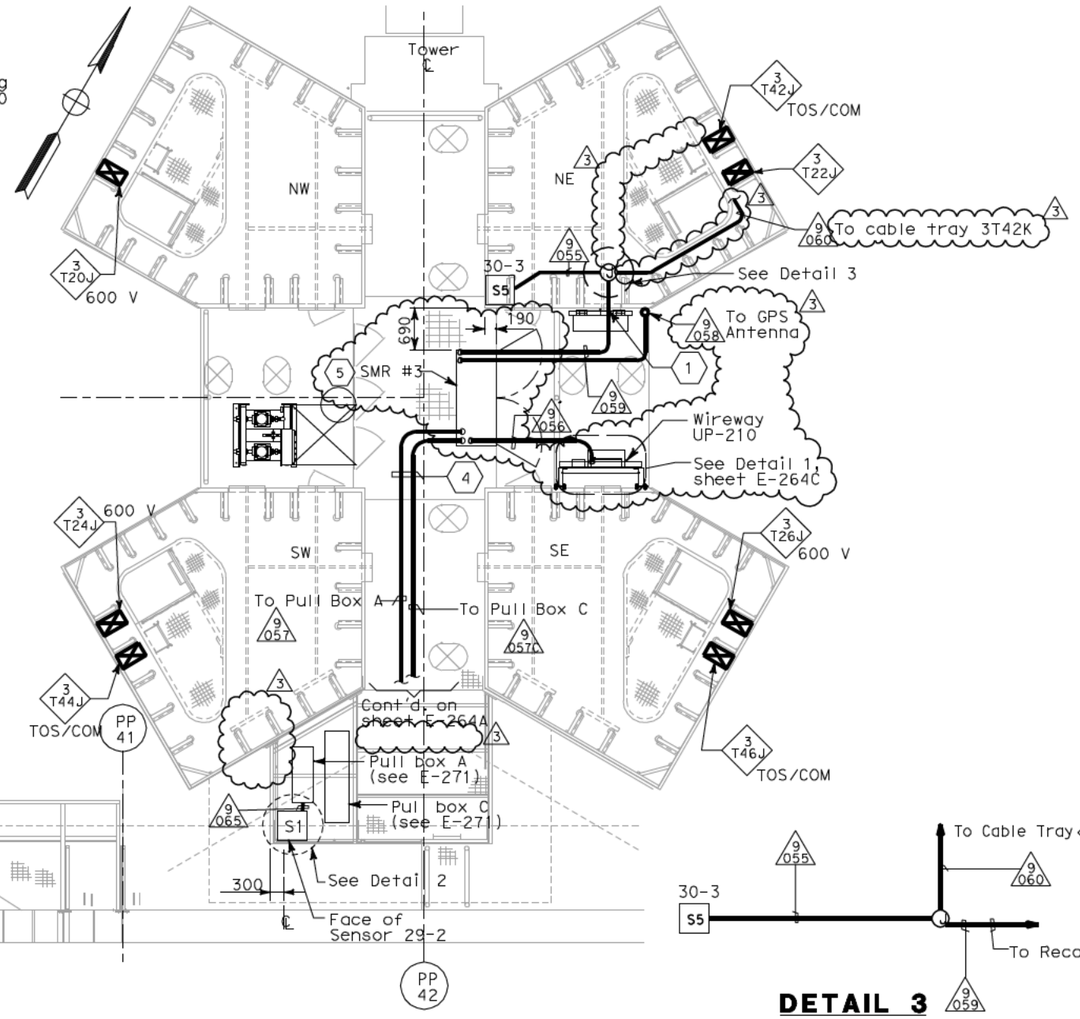

PLAN AT MAIN TOWER, ELEV 53.85 m
SCALE 1:50

Some conduits and equipment are not shown for clarity. See sheets E-264, E-264B, E-281 and E-345 for more conduit and equipment information

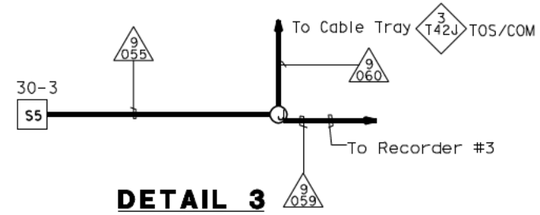

DETAIL 3
NO SCALE

NOTES:

1. For other related work not shown on this drawing, see Electrical Special Provisions.
2. References:
   - For nameplates, sensor enclosures and recorder schedules, see sheets E-379, E-380 and E-381.
   - For cable block diagram, see sheets E-382, E-383 and E-384.
   - For general notes on the strong motion detection system, see sheet E-361.
   - For circuit and conduit/cable tray schedules, see sheets starting at E-401.
3. All conduits and fittings located outside or inside pier shall be rigid galvanized steel, PVC coated.
4. Deleted.
5. For Section B-B, see sheet E-264A.

SHEET NOTES:

(1) Pipe sleeves shall be provided with watertight seals after conduits are installed. Spare sleeves shall be capped and plugged. Conduit is at El. 56.422. 3

(2) Deleted

(3) For nameplate engraving, see nameplate Schedule on sheet E-379.

(4) All conduits which thereafter cross the access walkways shall be raised to a level of at least 2438 above the grating to pass overhead, allowing free walkways on the remaining three quadrants of the platform. Door on north face of SE tower shaft shall remain accessible.

(5) For SMR #3 details, see sheet E-264E. 3

DIST	COUNTY	ROUTE	KILOMETER POST TOTAL PROJECT	SHEET No	TOTAL SHEETS
04	SF	80	13.2/13.9	334 R3	1204

Jens Erlingsson 12/19/02
REGISTERED ELECTRICAL ENGINEER DATE

12-6-04
PLANS APPROVAL DATE

REGISTERED PROFESSIONAL ENGINEER — JENS ERLINGSSON No. 8249 Exp. 9/30/06 ELECTRICAL — STATE OF CALIFORNIA

PB POWER, Inc.
A Parsons Brinckerhoff Company
303 Second St., Suite 700N
San Francisco, CA 94107-1317

The State of California or its officers or agents shall not be responsible for the accuracy or completeness of electronic copies of this plan sheet.

Caltrans now has a web site! To get to the web site, go to: http://www.dot.ca.gov

REQUEST FOR INFORMATION NOT ADDRESSED IN THIS CCO REMAIN IN FORCE					
3	09/18/09	TOWER UTILITY PANELS	TW	RG FW	70
2	10/03/08	STRONG MOTION SYSTEM	RG	FW	74
1	02/19/08	ELECTRICAL MODIFICATIONS	MP EL	RR	42
MARK	DATE	DESCRIPTIONS	BY	CH'D	CCO#
REVISIONS					

CONTRACT CHANGE ORDER NO._____
SHEET_____ OF _____

REGISTERED PROFESSIONAL ENGINEER — MAXWELL FUMIO TAKATA No. E 8651 Exp. 9/30/2008 ELECTRICAL — STATE OF CALIFORNIA

FOR REVISION ONLY 1

REGISTERED PROFESSIONAL ENGINEER — FADI WALIEDDINE No. 11465 Exp. 12/31/2009 ELECTRICAL — STATE OF CALIFORNIA

FOR REVISION ONLY 2 3

STRONG MOTION DETECTION SYSTEM
SAS SUPERSTRUCTURE
TOWER PLATFORM CONDUIT AND SENSOR LOCATION

SCALE AS NOTED

E-366

THIS PLAN IS ACCURATE FOR ELECTRICAL WORK ONLY.

ALL DIMENSIONS ARE IN MILLIMETERS UNLESS OTHERWISE SHOWN.

FOR REDUCED PLANS ORIGINAL SCALE IS IN MILLIMETERS 0 20 40 60 80

DGN FILE =>t:\13103\ms\pse\SAS Struc\CCO\SAS CC070\2009-12-02 issued for Submittal\04-0120f1_0334R03.dgn
USERNAME =>llorico

CU 04251 EA 0120F1

DESIGN OVERSIGHT BEHZAD GOLEMOHAMMADI

STATE OF CALIFORNIA - DEPARTMENT OF TRANSPORTATION Caltrans

CALCULATED/ DESIGNED BY	CHECKED BY	DATE	REVISED BY	DATE REVISED
EDC	KG	10/01	AB	2/04
		11/01		

LAST REVISION 00-00-00

DATE PLOTTED => 12/10/2009
TIME PLOTTED => 4:06:41 PM

CONDUIT DATA

Conduit No.	Reference	Size	Type	Total Fill (mm²)	Allowable Fill (mm²)	Included Cable No.	Conductor Type
3256	E-229	41	Liquidtight flexible metal	425.70	511.11	A-3042-2	3 + 1 gnd #6,#8, 600 V, RHH/RHW insulation
			conduit			A-3043-2	3 + 1 gnd #6,#8, 600 V, RHH/RHW insulation
						Pull rope	Soft-Fiber Polyester
3257	E-229	41	Liquidtight flexible metal	425.70	511.11	A-3043-2	3 + 1 gnd #6,#8, 600 V, RHH/RHW insulation
			conduit			Pull rope	Soft-Fiber Polyester
						A-3042-2	3 + 1 gnd #6,#8, 600 V, RHH/RHW insulation
3258	E-229	41	Liquidtight flexible metal	425.70	511.11	A-3042-2	3 + 1 gnd #6,#8, 600 V, RHH/RHW insulation
			conduit			A-3043-2	3 + 1 gnd #6,#8, 600 V, RHH/RHW insulation
						Pull rope	Soft-Fiber Polyester
3259	E-229	41	Liquidtight flexible metal	425.70	511.11	A-3042-2	3 + 1 gnd #6,#8, 600 V, RHH/RHW insulation
			conduit			A-3043-2	3 + 1 gnd #6,#8, 600 V, RHH/RHW insulation
						Pull rope	Soft-Fiber Polyester
3260	E-229	41	Liquidtight flexible metal	425.70	511.11	A-3042-2	3 + 1 gnd #6,#8, 600 V, RHH/RHW insulation
			conduit			A-3043-2	3 + 1 gnd #6,#8, 600 V, RHH/RHW insulation
						Pull rope	Soft-Fiber Polyester
3261	E-229	41	Liquidtight flexible metal	425.70	511.11	A-3042-2	3 + 1 gnd #6,#8, 600 V, RHH/RHW insulation
			conduit			A-3043-2	3 + 1 gnd #6,#8, 600 V, RHH/RHW insulation
						Pull rope	Soft-Fiber Polyester
3262	E-229	41	Liquidtight flexible metal	425.70	511.11	A-3043-2	3 + 1 gnd #6,#8, 600 V, RHH/RHW insulation
			conduit			A-3042-2	3 + 1 gnd #6,#8, 600 V, RHH/RHW insulation
						Pull rope	Soft-Fiber Polyester
3263	E-229	41	Liquidtight flexible metal	425.70	511.11	A-3042-2	3 + 1 gnd #6,#8, 600 V, RHH/RHW insulation
			conduit			Pull rope	Soft-Fiber Polyester
						A-3043-2	3 + 1 gnd #6,#8, 600 V, RHH/RHW insulation
3264	E-228, E-229	41	Liquidtight flexible metal	425.70	511.11	A-3042-2	3 + 1 gnd #6,#8, 600 V, RHH/RHW insulation
			conduit			A-3043-2	3 + 1 gnd #6,#8, 600 V, RHH/RHW insulation
						Pull rope	Soft-Fiber Polyester
3265	E-228	41	Liquidtight flexible metal	425.70	511.11	A-3043-2	3 + 1 gnd #6,#8, 600 V, RHH/RHW insulation
			conduit			Pull rope	Soft-Fiber Polyester
						A-3042-2	3 + 1 gnd #6,#8, 600 V, RHH/RHW insulation
3266	E-228	41	Liquidtight flexible metal	425.70	511.11	A-3043-2	3 + 1 gnd #6,#8, 600 V, RHH/RHW insulation
			conduit			Pull rope	Soft-Fiber Polyester
						A-3042-2	3 + 1gnd #6,#8, 600 V, RHH/RHW insulation
3267	E-228	41	Liquidtight flexible metal	425.70	511.11	A-3042-2	3 + 1gnd #6,#8, 600 V, RHH/RHW insulation
			conduit			A-3043-2	3 + 1 gnd #6,#8, 600 V, RHH/RHW insulation
						Pull rope	Soft-Fiber Polyester
3268	E-228	41	Liquidtight flexible metal	212.85	511.11	Pull rope	Soft-Fiber Polyester
			conduit			A-3042-2	3 + 1 gnd #6,#8, 600 V, RHH/RHW insulation
3269	E-228	41	Liquidtight flexible metal	212.85	511.11	A-3042-2	3 + 1 gnd #6,#8, 600 V, RHH/RHW insulation
			conduit			Pull rope	Soft-Fiber Polyester
3270	E-228	41	Liquidtight flexible metal	212.85	511.11	A-3042-2	3 + 1 gnd #6,#8, 600 V, RHH/RHW insulation
			conduit			Pull rope	Soft-Fiber Polyester
3271	E-228	41	Liquidtight flexible metal	212.85	511.11	A-3042-2	3 + 1 gnd #6,#8, 600 V, RHH/RHW insulation
			conduit			Pull rope	Soft-Fiber Polyester
3272	E-228	41	Liquidtight flexible metal	212.85	511.11	Pull rope	Soft-Fiber Polyester
			conduit			A-3042-2	3 + 1 gnd #6,#8, 600 V, RHH/RHW insulation
3273	E-228	41	Liquidtight flexible metal	212.85	511.11	A-3042-2	3 + 1 gnd #6,#8, 600 V, RHH/RHW insulation
			conduit			Pull rope	Soft-Fiber Polyester
3274	E-228	41	Liquidtight flexible metal	212.85	511.11	A-3042-2	3 + 1 gnd #6,#8, 600 V, RHH/RHW insulation
			conduit			Pull rope	Soft-Fiber Polyester
3275	E-227, E-228	41	Liquidtight flexible metal	212.85	511.11	A-3042-2	3 + 1gnd #6,#8, 600 V, RHH/RHW insulation
			conduit			Pull rope	Soft-Fiber Polyester
3276	E-227	41	Liquidtight flexible metal	212.85	511.11	A-3042-2	3 + 1 gnd #6,#8, 600 V, RHH/RHW insulation
			conduit			Pull rope	Soft-Fiber Polyester
~~3277~~							
3277A	E-265	27	RGS-PVC coated conduit	121.74	229.03	2119-2	4 pair #22, shielded pairs, 300 V, PE insulation

REVISED BY	DATE REVISED
DATE 8/02	8/02
PBP	AB
CALCULATED/ DESIGNED BY	CHECKED BY

DESIGN OVERSIGHT — BEHZAD GOLEMOHAMMADI

STATE OF CALIFORNIA - DEPARTMENT OF TRANSPORTATION — Caltrans

REQUEST FOR INFORMATION NOT ADDRESSED IN THIS CCO REMAIN IN FORCE

MARK	DATE	DESCRIPTIONS	BY	CH'D	CCO#
		REVISIONS			
3	09/18/09	TOWER UTILITY PANELS	TW	RG FW	70
2	09/24/08	CABLE ELECTRICAL	RR AG	RG SE	72
1	02/19/08	ELECTRICAL MODIFICATIONS	MP EL	RR	42

CONTRACT CHANGE ORDER NO._____
SHEET_____ OF _____

1 — REGISTERED PROFESSIONAL ENGINEER — MARNELL FUMIO TAMARI — No. E 8651 — Exp. 9/30/2010 ELECTRICAL — STATE OF CALIFORNIA
FOR REVISION ONLY

2 — REGISTERED PROFESSIONAL ENGINEER — S. A. ESTOQUE, JR. — No. E-10151 — Exp. 12/31/2008 ELECTRICAL — STATE OF CALIFORNIA
FOR REVISION ONLY

3 — REGISTERED PROFESSIONAL ENGINEER — FADI WALIEDDINE — No. 11465 — Exp. 12/31/2009 ELECTRICAL — STATE OF CALIFORNIA
FOR REVISION ONLY

CONDUIT DATA

Conduit No.	Reference	Size	Type	Total Fill (mm2)	Allowable Fill (mm2)	Included Cable No.	Conductor Type
3278	E-264, E-264A	103	RGS-PVC coated conduit	2108.72	3324.51	2123-2	1-3/C + gnd (3) #2, 600V, EPR insulation
				(3)		A-3057-1	1-3/C + gnd #2, 600V, EPR insulation
						2123	1-3/C + gnd #2, 600V, EPR insulation
						2123-3	1-3/C + gnd (3) #2, 600V, EPR insulation
3281	E-231	53	RGS-PVC coated conduit	625.60	879.42	A-3057-1	1-3/C + gnd #2,600V, RHH/RHW insulation
						UP210-5	2 + 1 gnd #12, 600V, RHH/RHW insulation
						UP210-7	2 + 1 gnd #12, 600V, RHH/RHW insulation
3281A	E-264	53	RGS-PVC coated conduit	527.18	879.42	A-3057-1	1-3/C + gnd #2, 600V, RHH/RHW insulation
				(3)	(3)		
3282	E-231	41	RGS-PVC coated conduit	425.70	534.55	A-3057-4	3 + 1 gnd #6,#8, 600 V, RHH/RHW insulation
						A-3057-3	3 + 1 gnd #6,#8, 600 V, RHH/RHW insulation
						Pull rope	Soft-Fiber Polyester
3283	E-231	41	RGS-PVC coated conduit	212.85	534.55	Pull rope	Soft-Fiber Polyester
						A-3057-4	3 + 1 gnd #6,#8, 600 V, RHH/RHW insulation
3285	E-231	41	RGS-PVC coated conduit	212.85	534.55	A-3057-3	3 + 1 gnd #6,#8, 600 V, RHH/RHW insulation
						Pull rope	Soft-Fiber Polyester
3286	E-231	41	RGS-PVC coated conduit	212.85	534.55	A-3057-3	3 + 1 gnd #6,#8, 600 V, RHH/RHW insulation
						Pull rope	Soft-Fiber Polyester
3287	E-231	41	RGS-PVC coated conduit	212.85	534.55	A-3057-3	3 + 1 gnd #6,#8, 600 V, RHH/RHW insulation
						Pull rope	Soft-Fiber Polyester
3288	E-231	41	RGS-PVC coated conduit	212.85	534.55	Pull rope	Soft-Fiber Polyester
						A-3057-3	3 + 1 gnd #6,#8, 600 V, RHH/RHW insulation
3290	E-231	41	RGS-PVC coated conduit	212.85	534.55	Pull rope	Soft-Fiber Polyester
						A-3057-4	3 + 1 gnd #6,#8, 600 V, RHH/RHW insulation
3291	E-231	41	RGS-PVC coated conduit	212.85	534.55	Pull rope	Soft-Fiber Polyester
						A-3057-4	3 + 1 gnd #6,#8, 600 V, RHH/RHW insulation
3292	E-231	41	RGS-PVC coated conduit	212.85	534.55	Pull rope	Soft-Fiber Polyester
						A-3057-4	3 + 1 gnd #6,#8, 600 V, RHH/RHW insulation
3293	E-231	41	RGS-PVC coated conduit	212.85	534.55	A-3057-4	3 + 1 gnd #6,#8, 600 V, RHH/RHW insulation
						Pull rope	Soft-Fiber Polyester
3294	E-264, E-264A	41	RGS-PVC coated conduit	147.25	414.28	2120-1	1-3/C #14, 600 V, EPR insulation
					(3)	2120-2	1-3/C (3) #16, 600 V, EPR insulation
3295	E-287	53	RGS-PVC coated conduit	754.18	1255.65	Pull rope	Soft-Fiber Polyester
						2120	1-3/C + gnd #1/0,600 V, EPR insulation
3297	E-264, E-264A	27	RGS-PVC coated conduit	121.74	229.03	2119-2	4 pair #22, shielded pairs, 300 V, PE insulation

For continuation, see next sheet.

CONDUIT AND TRAY SCHEDULE

E-426

DIST	COUNTY	ROUTE	KILOMETER POST TOTAL PROJECT	SHEET No	TOTAL SHEETS
04	SF	80	13.2/13.9	381 R3	1204

Jens Erlingsson 12/19/02
REGISTERED ELECTRICAL ENGINEER DATE

12-6-04
PLANS APPROVAL DATE

REGISTERED PROFESSIONAL ENGINEER — JENS ERLINGSSON — No. 8249 — Exp. 9/30/06 ELECTRICAL — STATE OF CALIFORNIA

PB POWER, Inc.
A Parsons Brinckerhoff Company
303 Second St., Suite 700N
San Francisco, CA 94107-1317

The State of California or its officers or agents shall not be responsible for the accuracy or completeness of electronic copies of this plan sheet.

Caltrans now has a web site! To get to the web site, go to http://www.dot.ca.gov

LAST REVISION 00-00-00
DATE PLOTTED => 12/10/2009
TIME PLOTTED => 4:06:57 PM

CONDUIT DATA

Conduit No.	Reference	Size	Type	Total Fill (mm²)	Allowable Fill (mm²)	Included Cable No.	Conductor Type
3298	E-265	53	RGS-PVC coated conduit	102.61	879.42	Pull rope	Soft-Fiber Polyester
						UP210-9	1-3/C #12,600 V, EPR insulation
3311	E-265	53	RGS conduit	0.00	879.42	Pull rope	Soft-Fiber Polyester
3316	E-264B, E-264C	78	RGS-PVC coated conduit	1300.80	1935.24	Pull rope	Soft-Fiber Polyester
	E-278, E-284					UP210-2 & 4	1-4/C + gnd #6, 600 V, EPR insulation
						UP210-14 & 18	1-4/C + gnd #8, 600 V, EPR insulation
						UP210-21	1-2/C + gnd #8, 600V EPR insulation
						UP210-23	1-2/C + gnd #8, 600V EPR insulation
						UP210-26	1-2/C + gnd #8, 600V EPR insulation
3316A	E-266	53	RGS-PVC coated conduit	581.18	879.42	Pull rope	Soft-Fiber Polyester
						UP210-2	1-2/C + gnd #8, 600V EPR insulation
						UP210-4	1-2/C + gnd #8, 600V EPR insulation
						UP210-26	1-2/C + gnd #10, 600V EPR insulation
3319	E-264, E-264A	78	RGS-PVC coated conduit	1655.61	1935.24	2121	1-3/C + gnd #1/0, 600 V, EPR insulation
						2120	1-3/C + gnd #1/0, 600 V, EPR insulation
						2121-1	1-3/C #14,600 V, EPR insulation
						2121-2	1-3/C #16, 600 V, EPR insulation
3320	E-264	78	RGS-PVC coated conduit	1281.36	1935.24	2120	1-3/C + gnd #1/0, 600 V, EPR insulation
						Pull rope	Soft-Fiber Polyester
						2123-2	1-3/C + gnd #2, 600 V, EPR insulation
3320A	E-287	53	RGS-PVC coated conduit	754.18	879.42	2120	1-3/C + gnd #1/0, 600 V, EPR insulation
						Pull rope	Soft-Fiber Polyester
3322	E-264, E-264A	78	RGS-PVC coated conduit	754.18	1935.24	2119-A	1-3/C + gnd #1/0, 600 V, EPR insulation
						Pull rope	Soft-Fiber Polyester
3322C	E-265	78	RGS-PVC coated conduit	754.18	1935.24	2119-A	1-3/C + gnd #1/0, 600 V, EPR insulation
						Pull rope	Soft-Fiber Polyester
3323	E-264	78	RGS-PVC coated conduit	901.43	1935.24	2121-2	1-3/C #16, 600 V, EPR insulation
						2121-1	1-3/C #14, 600 V, EPR insulation
						Pull rope	Soft-Fiber Polyester
						2121	1-3/C + gnd #1/0,600 V, EPR insulation
3323A	E-286	78	RGS-PVC coated conduit	901.43	1935.24	2121-2	1-3/C #16, 600 V, EPR insulation
						2121-1	1-3/C #14, 600 V, EPR insulation
						Pull rope	Soft-Fiber Polyester
						2121	1-3/C + gnd #1/0,600 V, EPR insulation
3323B	E-286, E-287	78	RGS-PVC coated conduit	901.43	1935.24	2121-2	1-3/C #16, 600 V, EPR insulation
						2121-1	1-3/C #14, 600 V, EPR insulation
						Pull rope	Soft-Fiber Polyester
						2121	1-3/C + gnd #1/0,600 V, EPR insulation
3323C	E-287	78	RGS-PVC coated conduit	901.43	1935.24	2121-2	1-3/C #16, 600 V, EPR insulation
						2121-1	1-3/C #14, 600 V, EPR insulation
						Pull rope	Soft-Fiber Polyester
						2121	1-3/C + gnd #1/0,600 V, EPR insulation

REQUEST FOR INFORMATION NOT ADDRESSED IN THIS CCO REMAIN IN FORCE

MARK	DATE	DESCRIPTIONS (REVISIONS)	BY	CH'D	CCO#
2	09/18/09	TOWER UTILITY PANELS	JS TW	RG	70
1	02/19/08	ELECTRICAL MODIFICATIONS	MP EL	RR	42

CONTRACT CHANGE ORDER NO. _____
SHEET _____ OF _____

REGISTERED PROFESSIONAL ENGINEER — MAXWELL FUMIO TAKAKI — No. E 8651 — Exp. 9/30/2008 ELECTRICAL — STATE OF CALIFORNIA

FOR REVISION ONLY 1

REGISTERED PROFESSIONAL ENGINEER — FADI WALIEDDINE — No. 11465 — Exp. 12/31/2009 ELECTRICAL — STATE OF CALIFORNIA

FOR REVISION ONLY 2

DIST	COUNTY	ROUTE	KILOMETER POST TOTAL PROJECT	SHEET No	TOTAL SHEETS
04	SF	80	13.2/13.9	382 R2	1204

Jens Erlingsson 12/19/02
REGISTERED ELECTRICAL ENGINEER DATE

REGISTERED PROFESSIONAL ENGINEER — JENS ERLINGSSON — No. 8249 — Exp. 9/30/06 ELECTRICAL — STATE OF CALIFORNIA

12-6-04
PLANS APPROVAL DATE

PB POWER, Inc.
A Parsons Brinckerhoff Company
303 Second St., Suite 700N
San Francisco, CA 94107-1317

The State of California or its officers or agents shall not be responsible for the accuracy or completeness of electronic copies of this plan sheet.

Caltrans now has a web site! To get to the web site, go to http://www.dot.ca.gov

CONDUIT DATA

Conduit No.	Reference	Size	Type	Total Fill (mm²)	Allowable Fill (mm²)	Included Cable No.	Conductor Type
3324	E-286	53	RGS-PVC coated conduit	0.00	879.42	Pull rope	Soft-Fiber Polyester
3324A	E-286, E-287	53	RGS-PVC coated conduit	0.00	879.42	Pull rope	Soft-Fiber Polyester
3324B	E-287	53	RGS-PVC coated conduit	0.00	879.42	Pull rope	Soft-Fiber Polyester
3329	E-265	53	RGS-PVC coated conduit	0.00	879.42	Pull rope	Soft-Fiber Polyester
3330	E-264A, E-281	41	RGS-PVC coated conduit	384.80	534.55	CCTVE01BA	TVP
						CCTVE01BB	TVCP
						CCTVE01AA	TVP
						CCTVE01AB	TVCP
3330C	E-281	41	RGS-PVC coated conduit	192.4	534.55	CCTVE01AA	TVP
						CCTVE01AB	TVCP
3330D	E-281	41	RGS-PVC coated conduit	192.4	534.55	CCTVE01BA	TVP
						CCTVE01BB	TVCP
3330E	E-281	41	RGS-PVC coated conduit	192.4	534.55	CCTVE01AA	TVP
						CCTVE01AB	TVCP
3330F	E-281	41	RGS-PVC coated conduit	192.4	534.55	CCTVE01BA	TVP
						CCTVE01BB	TVCP
3333	E-264, E-264B	78	RGS-PVC coated conduit	754.18	1935.24	Pull rope	Soft-Fiber Polyester
						2121	1-3/C + gnd #1/0, 600 V, EPR insulation
3337	E-264B	78	RGS-PVC coated conduit	618.45	1935.24	Pull rope	Soft-Fiber Polyester
						UP210-6 & 8	1-4/C + gnd #6, 600 V, EPR insulation
						UP210-13 & 17	1-4/C + gnd #8, 600 V, EPR insulation
3337A	E-266	53	RGS-PVC coated conduit	332.45	879.42	Pull rope	Soft-Fiber Polyester
						UP210-6 & 8	1-4/C + gnd #6, 600 V, EPR insulation

For continuation, see next sheet.

CONDUIT AND TRAY SCHEDULE

E-427

DATE	REVISED BY
8/02	AB

CALCULATED/DESIGNED BY
CHECKED BY

DESIGN OVERSIGHT
BEHZAD GOLEMOHAMMADI

STATE OF CALIFORNIA - DEPARTMENT OF TRANSPORTATION
Caltrans

LAST REVISION 00-00-00
DATE PLOTTED => 12/10/2009
TIME PLOTTED => 4:07:13 PM

FOR REDUCED PLANS ORIGINAL SCALE IS IN MILLIMETERS 0 20 40 60 80

DGN FILE =>t:\13103\ms\pse\SAS Struc\CCO\SAS CCO70\2009-12-02 issued for Submittal\04-0120f1_0382R02.dgn
USERNAME =>llorico

CU 04251 EA 0120F1

CONDUIT DATA

Conduit No.	Reference	Size	Type	Total Fill (mm²)	Allowable Fill (mm²)	Included Cable No.	Conductor Type
3339	E-264, E-264A	53	RGS-PVC coated conduit	754.18	879.42	2125	1-3/C +gnd #1/0, 600 V,EPR insulation
3348	E-264A, E-345	41	RGS-PVC coated conduit	300.88	534.55	MVDSE02A	MVDS DLC
						MVDSW03A	MVDS DLC
3348C	E-345	27	RGS-PVC coated conduit	150.44	229.03	MVDSE02A	MVDS DLC
3348D	E-345	27	RGS-PVC coated conduit	150.44	229.03	MVDSW03A	MVDS DLC
3349	E-264A, E-281	41	RGS-PVC coated conduit	173.82	534.55	CCTVE01BC	TVC
						CCTVE01BD	TVL
3349C	E-281	41	RGS-PVC coated conduit	173.82	534.55	CCTVE01BC	TVC
						CCTVE01BD	TVL
3351A	E-264	53	RGS-PVC coated conduit	527.18	879.42	Pull rope 2123-3	Soft-Fiber Polyester 1-3C#2 + gnd, 600 V, EPR insulation
3353	E285B	53	RGS-PVC coated conduit	306.56	879.42	Pull Rope	Soft-Fiber Polyester
						UP210-1B-13 & 14	4-#10+gnd, 600V, RHH/RHW insulation
						UP210-1B-5	1-2C#12 + gnd, 600V, EPR insulation
						UP210-1A-5	1-2C#12 + gnd, 600V, EPR insulation
3354	E285B	53	RGS conduit	491.22	879.42	Pull Rope	Soft-Fiber Polyester
						UP210-1B-5	1-2C#12 + gnd, 600V, EPR insulation
						UP210-1A-5	1-2C#12 + gnd, 600V, EPR insulation
						UP210-1B-1 & 6	1-4C#8 + gnd, 600V, EPR insulation

REVISED BY	DATE REVISED
PBP	8/02

CALCULATED/DESIGNED BY: AB
CHECKED BY: DATE 8/02

DESIGN OVERSIGHT
BEHZAD GOLEMOHAMMADI

STATE OF CALIFORNIA - DEPARTMENT OF TRANSPORTATION
Caltrans

REQUEST FOR INFORMATION NOT ADDRESSED IN THIS CCO REMAIN IN FORCE

MARK	DATE	DESCRIPTIONS	BY	CH'D	CCO#
		REVISIONS			
2	09/18/09	TOWER UTILITY PANELS	JS TW	RG FW	70
1	02/19/08	ELECTRICAL MODIFICATIONS	MP EL	RR	42

CONTRACT CHANGE ORDER NO._____
SHEET_____ OF_____

REGISTERED PROFESSIONAL ENGINEER — MAXWELL FUMIO TAKATA — No. E 8651 — Exp. 9/30/2008 ELECTRICAL — STATE OF CALIFORNIA

FOR REVISION ONLY 1

REGISTERED PROFESSIONAL ENGINEER — FADI WALIEDDINE — No. 11465 — Exp. 12/31/2009 ELECTRICAL — STATE OF CALIFORNIA

FOR REVISION ONLY 2

Caltrans Metric

DIST	COUNTY	ROUTE	KILOMETER POST TOTAL PROJECT	SHEET No	TOTAL SHEETS
04	SF	80	13.2/13.9	383 R2	1204

REGISTERED ELECTRICAL ENGINEER — 12/19/02 DATE

REGISTERED PROFESSIONAL ENGINEER — JENS ERLINGSSON — No. 8249 — Exp. 9/30/06 ELECTRICAL — STATE OF CALIFORNIA

12-6-04
PLANS APPROVAL DATE

PB POWER, Inc.
A Parsons Brinckerhoff Company
303 Second St., Suite 700N
San Francisco, CA 94107-1317

The State of California or its officers or agents shall not be responsible for the accuracy or completeness of electronic copies of this plan sheet.

Caltrans now has a web site! To get to the web site, go to http://www.dot.ca.gov

CONDUIT DATA

Conduit No.	Reference	Size	Type	Total Fill (mm²)	Allowable Fill (mm²)	Included Cable No.	Conductor Type
3359	E-264A,E-281	41	RGS-PVC coated conduit	173.82	534.55	CCTVE01AC	TVC
						CCTVE01AD	TVL
3359C	E-281	41	RGS-PVC coated conduit	173.82	534.55	CCTVE01AC	TVC
						CCTVE01AD	TVL
3364	E-285B	53	RGS-PVC coated conduit	205.22	879.42	Pull Rope	Soft-Fiber Polyester
						UP210-1A-5	1-2C#12 + gnd, 600V, EPR insulation
						UP210-1B-5	1-2C#12 + gnd, 600V, EPR insulation

For continuation, see next sheet.

CONDUIT AND TRAY SCHEDULE

E-428

LAST REVISION 00-00-00
DATE PLOTTED => 12/10/2009
TIME PLOTTED => 4:07:28 PM

FOR REDUCED PLANS ORIGINAL SCALE IS IN MILLIMETERS 0 20 40 60 80

DGN FILE =>t:\13103\ms\pse\SAS Struc\CCO\SAS CC070\2009-12-02 issued for Submittal\04-0120f1_0383R02.dgn
USERNAME =>llorico

CU 04251 EA 0120F1

CONDUIT DATA

Conduit No.	Reference	Size	Type	Total Fill (mm²)	Allowable Fill (mm²)	Included Cable No.	Conductor Type
3367	E-285B	53	RGS conduit	572	879.42	Pull Rope	Soft-Fiber Polyester
						UP210-1A-9 & 10	1-4C#8 + gnd, 600V, EPR insulation
						UP210-1A-11 & 12	1-4C#8 + gnd, 600V, EPR insulation
3368	E-285B	53	RGS-PVC coated conduit	572	879.42	Pull Rope	Soft-Fiber Polyester
						UP210-1A-9 & 10	1-4C#8 + gnd, 600V, EPR insulation
						UP210-1A-11 & 12	1-4C#8 + gnd, 600V, EPR insulation
3369	E-285B	78	RGS conduit	1063.22	1935.24	Pull Rope	Soft-Fiber Polyester
						UP210-1A-9 & 10	1-4C#8 + gnd, 600V, EPR insulation
						UP210-1A-11 & 12	1-4C#8 + gnd, 600V, EPR insulation
						UP210-1A-5	1-2C#12 + gnd, 600V, EPR insulation
						UP210-1B-5	1-2C#12 + gnd, 600V, EPR insulation
						UP210-1A-1 & 6	1-4C#8 + gnd, 600V, EPR insulation
3375	E-32, E-278, E-264C	53	RGS-PVC coated conduit	754.18	879.42	2123	1-3C#1/0 + gnd, 600V,EPR insulation
3376	E-32, E-278, E-264C	53	Liquidtight flex metal conduit	754.18	837.71	Pull Rope	Soft-Fiber Polyester
						2123-A	1-3C#1/0 + gnd, 600v, EPR Insulation
3377	E-32, E-278, E-264C	53	Liquidtight flex metal conduit	758.77	837.71	Pull Rope	Soft-Fiber Polyester
						2123-B	1-4C#1/0 + gnd, 600V, EPR Insulation
3378	E-264C, E-278	78	RGS-PVC coated conduit	1137.35	1935.24	UP210-21	1-2C#8 + gnd, 600V, EPR insulation
						UP210-22	1-2C#8 + gnd, 600V, EPR insulation
						UP210-23	1-2C#8 + gnd, 600V, EPR insulation
						UP210-24	1-2C#8 + gnd, 600V, EPR insulation
						UP210-26	1-2C#8 + gnd, 600V, EPR insulation
3379	E-264C, E-278	78	RGS-PVC coated conduit	1784.34	1935.24	UP210-9	1-2C#8 + gnd, 600V, EPR insulation
						UP210-5 & 7	1-4C#8 + gnd, 600V, EPR insulation
						UP210-15 & 19	1-4C#8 + gnd, 600V, EPR insulation
						UP210-16 & 20	1-4C#8 + gnd, 600V, EPR insulation
						UP210-13 & 17	1-4C#8 + gnd, 600V, EPR insulation
						UP210-14 & 18	1-4C#8 + gnd, 600V, EPR insulation
3380	E-264C, E-278	78	RGS-PVC coated conduit	1200.19	1935.24	UP210-2 & 4	1-4C#6 + gnd, 600V, EPR insulation
						UP210-6 & 8	1-4C#6 + gnd, 600V, EPR insulation
						UP210-10	1-2C#12 + gnd, 600V, EPR insulation
						UP210-11	1-2C#12 + gnd, 600V, EPR insulation
						UP210-3	1-2C#8 + gnd, 600V, EPR insulation
						UP210-12	1-2C#12 + gnd, 600V, EPR insulation
3381	E-285B	53	RGS-PVC coated conduit	572	879.42	Pull Rope	Soft-Fiber Polyester
						UP210-1B-9 &10	1-4C#8 + gnd 600V, EPR insulation
						UP210-1B-11&12	1-4C#8 + gnd 600V, EPR insulation
3382	E-285B	53	RGS conduit	858	879.42	Pull Rope	Soft-Fiber Polyester
						UP210-1B-9 &10	1-4C#8 + gnd 600V, EPR insulation
						UP210-1B-11&12	1-4C#8 + gnd 600V, EPR insulation
						UP210-1B-13&14	1-4C#8 + gnd 600V, EPR insulation
3383	E-285B	53	RGS conduit	572	879.42	Pull Rope	Soft-Fiber Polyester
						UP210-1B-9 &10	1-4C#8 + gnd 600V, EPR insulation
						UP210-1B-11&12	1-4C#8 + gnd 600V, EPR insulation

MARK	DATE	REVISIONS	BY	CH'D	CCO#
2	12/02/09	TOWER UTILITY PANELS	JS TW	RG FW	70
1	02/19/08	ELECTRICAL MODIFICATIONS	MP EL	RR	42

REQUEST FOR INFORMATION NOT ADDRESSED IN THIS CCO REMAIN IN FORCE

CONTRACT CHANGE ORDER NO._____
SHEET_____ OF _____

REGISTERED PROFESSIONAL ENGINEER — MAXWELL FUMIO TAKATA — No. E 8651 — Exp. 9/30/2008 — ELECTRICAL — STATE OF CALIFORNIA

FOR REVISION ONLY 1

REGISTERED PROFESSIONAL ENGINEER — FADI WALIEDDINE — No. 11465 — Exp. 12/31/2009 — ELECTRICAL — STATE OF CALIFORNIA

FOR REVISION ONLY 2

Caltrans Metric

DIST	COUNTY	ROUTE	KILOMETER POST TOTAL PROJECT	SHEET No	TOTAL SHEETS
04	SF	80	13.2/13.9	384 R2	1204

12/19/02
REGISTERED ELECTRICAL ENGINEER DATE

REGISTERED PROFESSIONAL ENGINEER — JENS ERLINGSSON — No. 8249 — Exp. 9/30/06 — ELECTRICAL — STATE OF CALIFORNIA

12-6-04
PLANS APPROVAL DATE

PB POWER, Inc.
A Parsons Brinckerhoff Company
303 Second St., Suite 700N
San Francisco, CA 94107-1317

The State of California or its officers or agents shall not be responsible for the accuracy or completeness of electronic copies of this plan sheet.

Caltrans now has a web site! To get to the web site, go to http://www.dot.ca.gov

CONDUIT DATA

Conduit No.	Reference	Size	Type	Total Fill (mm²)	Allowable Fill (mm²)	Included Cable No.	Conductor Type
3393	E-287	53	RGS-PVC coated conduit	754.18	1165.23	2121	1-3/C + gnd #1/0, 600 V, EPR insulation
3394	E-287	27	RGS-PVC coated conduit	126.88	229.03	2121-A	1-3/C + gnd #10, 600 V, EPR insulation
3395	E-287	41	RGS-PVC coated conduit	147.25	534.55	2121-1	1-3/C #14, 600 V, EPR insulation
						2121-2	1-3/C #16, 600 V, EPR insulation
3398	E-265	53	RGS-PVC coated conduit	0.00	879.42	Pull rope	Soft-Fiber Polyester
3399	E-287	41	RGS-PVC coated conduit	147.25	534.55	2120-1	1-3/C #14, 600 V, EPR insulation
						Pull rope	Soft-Fiber Polyester
						2120-2	1-3/C #16, 600 V, EPR insulation
3448A	E-286	53	RGS-PVC coated conduit	286	879.42	Pull rope	Soft-Fiber Polyester
						UP210-1B-15&16	1-4C#8 + gnd, 600V, EPR insulation

For continuation, see next sheet.

CONDUIT AND TRAY SCHEDULE

E-429

DESIGNED BY	CALCULATED/ DESIGNED BY	CHECKED BY	DATE	REVISED BY	DATE REVISED
PBP		AB	8/02		

DESIGN OVERSIGHT
BEHZAD GOLEMOHAMMADI

STATE OF CALIFORNIA - DEPARTMENT OF TRANSPORTATION
Caltrans

FOR REDUCED PLANS ORIGINAL SCALE IS IN MILLIMETERS 0 20 40 60 80

DGN FILE =>t:\13103\ms\pse\SAS Struc\CCO\SAS CC070\2009-12-02 issued for Submittal\04-0120f1_0384R02.dgn
USERNAME =>llorico

CU 04251 EA 0120F1

LAST REVISION 00-00-00
DATE PLOTTED => 12/10/2009
TIME PLOTTED => 4:07:44 PM

CONDUIT DATA

Conduit No.	Reference	Size	Type	Total Fill (mm2)	Allowable Fill (mm2)	Included Cable No.	Conductor Type
3459A	E-265	41					
3464A	E-286	53	RGS-PVC coated conduit	286	879.42	UP210-1A-13&14	1-4C#8 + gnd, 600V, EPR insulation
3464B	E-286	53	RGS-PVC coated conduit	286	879.42	UP210-1A-13&14	1-4C#8 + gnd, 600V, EPR insulation
3501	E-279	53	RGS-PVC coated conduit	286	879.42	Pull Rope	Soft-Fiber Polyester
	E-284A					UP210-1A-1 & 6	1-4C #8 + gnd, 600V, EPR insulation
3502	E-264B, E-264D	78	RGS conduit	513.46	1935.24	Pull Rope	Soft-Fiber Polyester
						UP210-13 &17	1-4C #8 + gnd, 600V, EPR insulation
						UP210-1A-3	1-2C #8 + gnd, 600V, EPR insulation
3518	E-285C, E-285	53	RGS conduit	777.22	879.42	Pull Rope	Soft-Fiber Polyester
						UP210-1A-5	1-2C#12 + gnd, 600V, EPR insulation
						UP210-1A-3 & 4	1-4C #8 + gnd, 600V, EPR insulation
						UP210-1A-1 & 6	1-4C #8 + gnd, 600V, EPR insulation
						UP210-1B-5	1-2C#12 + gnd, 600V, EPR insulation
3519	E-285C, E-285	53	RGS conduit	858	879.42	Pull Rope	Soft-Fiber Polyester
						UP210-1A-9&10	1-4C#8 + gnd, 600V, EPR insulation
						UP210-1A-11&12	1-4C#8 + gnd, 600V, EPR insulation
						UP210-1A-13&14	1-4C#8 + gnd, 600V, EPR insulation
3520	E-285 E-279	53	RGS conduit	527.18	879.42	Pull Rope	Soft-Fiber Polyester
	E-285A					2123-2	1-3C + gnd, #2, 600V, EPR insulation
3524	E-285A E-279	27	RGS Conduit	133.19	229.03	Pull Rope	Soft-Fiber Polyester
						2123-2A	3 + 1 gnd, #6, 600V, RHH/RHW insulation
3525	E-285A E-279	41	RGS Conduit	271.48	534.55	Pull Rope	Soft-Fiber Polyester
						2123-2B	4 + 1 gnd, #4, 600V, RHH/RHW insulation
3521	E-285 E-279	53	RGS conduit	472.21	879.42	Pull Rope	Soft-Fiber Polyester
	E-285A, E-285C					UP210-1A-5	1-2C#12 + gnd, 600V, EPR insulation
						UP210-1A-3 & 4	4 + 1 gnd, #8, 600V, RHH/RHW insulation
						UP210-1A-1 & 6	4 + 1 gnd, #8, 600V, RHH/RHW insulation
3522	E-285 E-279	53	RGS conduit	858	879.42	Pull Rope	Soft-Fiber Polyester
	E-285A, E-285C					UP210-1A-9&10	1-4C#8 + gnd, 600V, EPR insulation
						UP210-1A-11&12	1-4C#8 + gnd, 600V, EPR insulation
						UP210-1A-13&14	1-4C#8 + gnd, 600V, EPR insulation
3523	E-285 E-279	41	RGS conduit	0.00	534.55	Pull Rope	Soft-Fiber Polyester
	E-285A						
3600	E-264B, E-278	78	RGS-PVC coated conduit	1254.38	1935.24	Pull Rope	Soft-Fiber Polyester
	E-284, E-264C					UP210-9	1-2C#8 + gnd, 600V, EPR insulation
						UP 210-15 & 19	1-4C#8 + gnd, 600V, EPR insulation
						UP210-5 & 7	1-4C#8 + gnd, 600V, EPR insulation
						UP210-22	1-2C#8 + gnd, 600V, EPR insulation
						UP210-24	1-2C#8 + gnd, 600V, EPR insulation
3601	E-279	41	RGS-PVC coated conduit	286	534.55	Pull Rope	Soft-Fiber Polyester
	E-284A					UP210-1A-11&12	1-4C #8 + gnd, 600V, EPR insulation

REQUEST FOR INFORMATION NOT ADDRESSED IN THIS CCO REMAIN IN FORCE

MARK	DATE	REVISIONS DESCRIPTIONS	BY	CH'D	CCO#
2	12/02/09	TOWER UTILITY PANELS	JS TW	RG FW	70
1	02/19/08	ELECTRICAL MODIFICATIONS	MP EL	RR	42

CONTRACT CHANGE ORDER NO._____
SHEET_____ OF_____

REGISTERED PROFESSIONAL ENGINEER — MAXWELL FUMIO TAKANT — No. E 8651 — Exp. 9/30/2008 ELECTRICAL — STATE OF CALIFORNIA

FOR REVISION ONLY 1

REGISTERED PROFESSIONAL ENGINEER — FADI WALIEDDINE — No. 11465 — Exp. 12/31/2009 ELECTRICAL — STATE OF CALIFORNIA

FOR REVISION ONLY 2

CONDUIT DATA

Conduit No.	Reference	Size	Type	Total Fill (mm2)	Allowable Fill (mm2)	Included Cable No.	Conductor Type
3602	E-264B	78	RGS conduit	513.46	1935.24	Pull Rope	Soft-Fiber Polyester
						UP 210-15 & 19	1-4C#8 + gnd, 600V, EPR insulation
						UP210-1A-9	1-2C#8 + gnd, 600V, EPR insulation
3701	E-280	53	RGS-PVC coated conduit	572	879.42	Pull Rope	Soft-Fiber Polyester
	E-284A					UP 210-1B-1&6	1 - 4C#8 + gnd, 600V, EPR insulation
						UP210-1B-15&16	1 - 4C#8 + gnd, 600V, EPR insulation

For continuation, see next sheet.

CONDUIT AND TRAY SCHEDULE

E-430

DIST	COUNTY	ROUTE	KILOMETER POST TOTAL PROJECT	SHEET No	TOTAL SHEETS
04	SF	80	13.2/13.9	385 R2	1204

REGISTERED ELECTRICAL ENGINEER — 12/19/02 DATE

REGISTERED PROFESSIONAL ENGINEER — JENS ERLINGSSON — No. 8249 — Exp. 9/30/06 ELECTRICAL — STATE OF CALIFORNIA

12-6-04
PLANS APPROVAL DATE

PB POWER, Inc.
A Parsons Brinckerhoff Company
303 Second St., Suite 700N
San Francisco, CA 94107-1317

The State of California or its officers or agents shall not be responsible for the accuracy or completeness of electronic copies of this plan sheet.

Caltrans now has a web site! To get to the web site, go to http://www.dot.ca.gov

STATE OF CALIFORNIA - DEPARTMENT OF TRANSPORTATION
Caltrans

DESIGN OVERSIGHT
BEHZAD GOLEMOHAMMADI

CALCULATED/ DESIGNED BY	PBP	DATE	REVISED BY	DATE REVISED
CHECKED BY	AB	8/02		

LAST REVISION 00-00-00
DATE PLOTTED => 12/10/2009
TIME PLOTTED => 4:07:59 PM

CONDUIT DATA

Conduit No	Reference	Size	Type	Total Fill (mm²)	Allowable Fill (mm²)	Included Cable No.	Conductor Type △4
3702	E-264B	78	RGS conduit	513.46	1935.24	Pull Rope	Soft-Fiber Polyester
						UP 210-14 & 18	1-4C#8 + gnd, 600V, EPR insulation
						UP210-1B-3	1-2C#8 + gnd, 600V, EPR insulation
3717	E-285	53	RGS conduit	205.22	879.42	Pull Rope	Soft-Fiber Polyester
						UP210-1B-5	1-2C#12 + gnd, 600 V, EPR insulation
						UP210-1A-5	1-2C#12 + gnd, 600 V, EPR insulation
3718	E-285	53	RGS conduit	858	879.42	Pull Rope	Soft-Fiber Polyester
						UP210-1B-3 & 4	1-4C#8 + gnd, 600 V, EPR insulation
						UP210-1B-1 & 6	1-4C#8 + gnd, 600 V, EPR insulation
						UP210-1B-9&10	1-4C#8 + gnd, 600 V, EPR insulation
3719	E-285	53	RGS conduit	858	879.42	Pull Rope	Soft-Fiber Polyester
						UP210-1B-11&12	1-4C#8 + gnd, 600 V, EPR insulation
						UP210-1B-13&14	1-4C#8 + gnd, 600 V, EPR insulation
						UP210-1B-15&16	1-4C#8 + gnd, 600 V, EPR insulation
3720	E-285, E-285A	53	RGS conduit	527.18	879.42	Pull Rope	Soft-Fiber Polyester
						2123-3	1-3C+gnd, #2, 600V, EPR insulation
3721	E-285, E-285A	53	RGS conduit	704.81	879.42	Pull Rope	Soft-Fiber Polyester
						UP210-1B-5	2 + 1 gnd, #12, 600V, RHH/RHW insulation
						UP210-1B-3 & 4	4 + 1 gnd, #8, 600V, RHH/RHW insulation
						UP210-1B-1 & 6	4 + 1 gnd, #8, 600V, RHH/RHW insulation
						UP210-1B-9&10	1-4C#8 + gnd, 600 V, EPR insulation
3722	E-285, E-285A	53	RGS conduit	858	879.42	Pull Rope	Soft-Fiber Polyester
						UP210-1B-11&12	1-4C#8 + gnd, 600 V, EPR insulation
						UP210-1B-13&14	1-4C#8 + gnd, 600 V, EPR insulation
						UP210-1B-15&16	1-4C#8 + gnd, 600 V, EPR insulation
3723	E-285, E-285A	53	RGS conduit	0.00	879.42	Pull Rope	Soft-Fiber Polyester
3724	E-285A	27	RGS Conduit	113.19	229.03	Pull Rope	Soft-Fiber Polyester
						2123-3A	3 + 1 gnd, #6, 600V, RHH/RHW insulation
3725	E-285A	41	RGS Conduit	271.48	534.55	Pull Rope	Soft-Fiber Polyester
						2123-3B	4 + 1 gnd, #4, 600V, RHH/RHW insulation
3800	E-284A, E-264B, E-264C, E-278	53	RGS-PVC coated conduit	286	879.42	UP210-16 & 20	1-4C#8 + gnd, 600 V, EPR insulation
						Pull rope	Soft-Fiber Polyester
3801	E-280, E-284A	53	RGS-PVC coated conduit	286	879.42	UP210-1B-11&12	1-4C#8 + gnd, 600 V, EPR insulation
						Pull rope	Soft-Fiber Polyester
3802	E-264B	53	RGS conduit	513.46	879.42	Pull rope	Soft-Fiber Polyester
						UP210-16 & 20	1-4C#8 + gnd, 600 V, EPR insulation
						UP210-1B-9	1-2C#8 + gnd, 600 V, EPR insulation

MARK	DATE	REVISIONS DESCRIPTIONS	BY	CH'D	CCO#
△4	09/18/09	TOWER UTILITY PANELS	SYC TW	RG FW	70
△3	08/03/09	ELECTRICAL WARNING SYSTEMS	RY RR	RG FW	61
△2	03/30/09	SERVICE PLATFORM ELECTRICAL CHANGES	RR RY	RG MP	55
△1	03/04/08	BARRIER MODIFICATIONS	JS BM	RG SE	44

REQUEST FOR INFORMATION NOT ADDRESSED IN THIS CCO REMAIN IN FORCE

CONTRACT CHANGE ORDER NO._____
SHEET_____ OF _____

REGISTERED PROFESSIONAL ENGINEER — S. A. ESTOQUE, JR — No. E-10151 — Exp. 12/31/2008 ELECTRICAL — STATE OF CALIFORNIA

FOR REVISION ONLY △1

REGISTERED PROFESSIONAL ENGINEER — FADI WALIEDDINE — No. 11465 — Exp. 12/31/2009 ELECTRICAL — STATE OF CALIFORNIA

FOR REVISION ONLY △2 △3 △4

Caltrans Metric

DIST	COUNTY	ROUTE	KILOMETER POST TOTAL PROJECT	SHEET No	TOTAL SHEETS
04	SF	80	13.2/13.9	386 R4	1204

Jens Erlingsson 12/19/02
REGISTERED ELECTRICAL ENGINEER DATE

REGISTERED PROFESSIONAL ENGINEER — JENS ERLINGSSON — No. 8249 — Exp. 9/30/06 ELECTRICAL — STATE OF CALIFORNIA

12-6-04
PLANS APPROVAL DATE

PB POWER, Inc.
A Parsons Brinckerhoff Company
303 Second St., Suite 700N
San Francisco, CA 94107-1317

The State of California or its officers or agents shall not be responsible for the accuracy or completeness of electronic copies of this plan sheet.

Caltrans now has a web site! To get to the web site, go to http://www.dot.ca.gov

CONDUIT DATA

Conduit No	Reference	Size	Type	Total Fill (mm2)	Allowable Fill (mm2)	Included Cable No.	Conductor Type △4
4007A	E-71A	78	Liquidtight Flex. Metal Cond.		1935.24	Pull rope	Soft-Fiber Polyester
4009	E-71A	53	Liquidtight Flex. Metal Cond.	60.80	879.42	Pull rope	Soft-Fiber Polyester
						UP104-5	2 + 1 gnd #10,#10, 600 V, RHH/RHW insulation
4010	E-71A	53	Liquidtight Flex. Metal Cond.	98.42	879.42	UP104-12	2 + 1 gnd #12,#12, 600 V, RHH/RHW insulation
						Pull rope	Soft-Fiber Polyester
						UP104-10	2 + 1 gnd #12,#12, 600 V, RHH/RHW insulation
4029	E-72A	78	Liquidtight Flex. Metal Cond.	1132.03	1935.24		
						UP105-15	1-2/C + gnd #8,600 V, EPR insulation
						Pull rope	Soft-Fiber Polyester
						1201-4	1-9/C #16,600 V, EPR insulation
						1201-3	1-3/C #14,600 V, EPR insulation
						1201-1	1-2/C + gnd #8,600 V, EPR insulation
						1201-6	1-2/C + gnd #8,600 V, EPR insulation
						1201-2	1-2/C + gnd #8,600 V, EPR insulation
4033	E-72A	53	Liquidtight Flex. Metal Cond.	481.89	879.42	Pull rope	Soft-Fiber Polyester
						UP105-5	2 + 1 gnd #12,#12, 600 V, RHH/RHW insulation
						UP105-13	1-2/C + gnd #12,600 V, EPR insulation
						UP105-11	1-2/C + gnd #12,600 V, EPR insulation
						UP105-15	1-2/C + gnd #8,600 V, EPR insulation
4034	E-72A	53	Liquidtight Flex. Metal Cond.	0.00	879.42	Pull rope	Soft-Fiber Polyester
4036	E-73A	53	Liquidtight Flex. Metal Cond.	276.67	879.42	UP106-5	2 + 1 gnd #12,#12, 600 V, RHH/RHW insulation
							1-2/C + gnd #8,600 V, EPR insulation
						Pull rope	Soft-Fiber Polyester

For continuation, see next sheet.

CONDUIT AND TRAY SCHEDULE

E-431

DATE	REVISED BY
8/02	AB

CALCULATED/DESIGNED BY PBP
CHECKED BY DATE 8/02

DESIGN OVERSIGHT
BEHZAD GOLEMOHAMMADI

STATE OF CALIFORNIA - DEPARTMENT OF TRANSPORTATION
Caltrans

FOR REDUCED PLANS ORIGINAL SCALE IS IN MILLIMETERS 0 20 40 60 80

DGN FILE =>t:\13103\ms\pse\SAS Struc\CCO\SAS CC070\2009-12-02 issued for Submittal\04-0120f1_0386R04.dgn
USERNAME =>llorico

CU 04251 EA 0120F1

LAST REVISION 00-00-00
DATE PLOTTED => 12/10/2009
TIME PLOTTED => 4:08:23 PM

CONDUIT DATA

Conduit No.	Reference	Size	Type	Total Fill (mm²)	Allowable Fill (mm²)	Included Cable No.	Conductor Type
5529	E-185	53	RGS conduit	0.00	879.42	Pull rope	Soft-Fiber Polyester
5530	E-185	41	RGS conduit	0.00	534.55	Pull rope	Soft-Fiber Polyester
5531	E-185	41	RGS conduit	0.00	534.55	Pull rope	Soft-Fiber Polyester
5532	E-185	41	RGS conduit	0.00	534.55	Pull rope	Soft-Fiber Polyester
5533	E-185	53	RGS conduit	0.00	879.42	Pull rope	Soft-Fiber Polyester
5534	E-185	53	RGS conduit	0.00	879.42	Pull rope	Soft-Fiber Polyester
5535	E-185	53	RGS conduit	0.00	879.42	Pull rope	Soft-Fiber Polyester
5536	E-185	53	RGS conduit	0.00	879.42	Pull rope	Soft-Fiber Polyester
5537	E-185	53	RGS conduit	0.00	879.42	Pull rope	Soft-Fiber Polyester
5543	E-185	41	RGS conduit	212.85	534.55	Pull rope	Soft-Fiber Polyester
						LP223-2,4A	3 + 1 gnd #6, #8, 600 V, RHH/RHW insulation
5544	E-185	41	RGS conduit	212.85	534.55	Pull rope	Soft-Fiber Polyester
						LP223-6,8A	3 + 1 gnd #6, #8, 600 V, RHH/RHW insulation
5545	E-185	53	RGS conduit	324.29	879.42	Pull rope	Soft-Fiber Polyester
						UP208-4A	1-2/C+gnd #8 ,600V, EPR insulation
						LP223-2,4	1-3/C +gnd #6, 660 V, EPR insulation
5546	E-212	103	RGS conduit	2780.99	3324.51	2391	3-1/C #4/0 + 1/C #1/0 gnd, 15 kV, EPR insulation
						Pull rope	Soft-Fiber Polyester
5547	E-185	53	RGS conduit	0.00	879.42	Pull rope	Soft-Fiber Polyester
5548	E-185	53	RGS conduit	0.00	879.42	Pull rope	Soft-Fiber Polyester
5549	E-185	41	RGS conduit	0.00	534.55	Pull rope	Soft-Fiber Polyester
5550	E-185	41	RGS conduit	0.00	534.55	Pull rope	Soft-Fiber Polyester
5551	E-185	53	RGS conduit	0.00	879.42	Pull rope	Soft-Fiber Polyester
5552	E-185	53	RGS conduit	227.46	879.42	UP208-2A	1-2/C + gnd #8, 600 V, EPR insulation
						Pull rope	Soft-Fiber Polyester
5553	E-185	53	RGS conduit	98.10	879.42	Pull rope	Soft-Fiber Polyester
						2148	1 - 2 pair, shielded #18 with IS/OA, 300 V, PVC jacket
5554	E-185	53	RGS conduit	0.00	879.42	Pull rope	Soft-Fiber Polyester
5555	E-185	41	RGS conduit	527.18	534.55	A-2014-1	1-3/C + gnd #2, 600 V, EPR insulation
						Pull rope	Soft-Fiber Polyester
5556	E-185	53	RGS conduit	324.29	879.42	LP223-6,8	1-3/C + gnd #6, 600 V, EPR insulation
						Pull rope	Soft-Fiber Polyester
5557	E-186	53	RGS conduit	0.00	879.42	Pull rope	Soft-Fiber Polyester
5558	E-186	53	RGS conduit	0.00	879.42	Pull rope	Soft-Fiber Polyester
5597	E-185	53	RGS conduit	0.00	879.42	Pull rope	Soft-Fiber Polyester
7403	E-139	41	RGS conduit	0.00	534.55	Pull rope	Soft-Fiber Polyester
8001	E-293	41	RGS-PVC coated conduit	227.46	534.55	1201-6	1-2/C + gnd #8, 600 V, EPR insulation
						Pull rope	Soft-Fiber Polyester
8002	E-293	41	RGS-PVC coated conduit	454.92	534.55	1201-6	1-2/C +gnd #8, 600 V, EPR insulation
						1201-2	1-2/C + gnd #8, 600 V, EPR insulation
						Pull rope	Soft-Fiber Polyester
8003	E-293	21	RGS-PVC coated conduit	102.61	185.01	2204-4	1-2/C + gnd #12, 600 V, EPR insulation
						Pull rope	Soft-Fiber Polyester
8004	E-293	41	RGS-PVC coated conduit	227.46	534.55	1201-1	1-2/C + gnd #8, 600 V, EPR insulation
						Pull rope	Soft-Fiber Polyester

REQUEST FOR INFORMATION NOT ADDRESSED IN THIS CCO REMAIN IN FORCE

MARK	DATE	DESCRIPTIONS	BY	CH'D	CCO#
		REVISIONS			
3	12/11/09	TOWER UTILITY PANELS	SYC	RG FW	70
2	08/03/09	ELECTRICAL WARNING SYSTEMS	JS TW	RG FW	61
1	03/04/08	BARRIER MODIFICATIONS	JS BM	RG SE	44

CONTRACT CHANGE ORDER NO._____
SHEET_____ OF _____

REGISTERED PROFESSIONAL ENGINEER
S. A. ESTOQUE, JR
No. E-10151
Exp. 12/31/2009
ELECTRICAL
STATE OF CALIFORNIA

FOR REVISION ONLY 1

REGISTERED PROFESSIONAL ENGINEER
FADI WALIEDDINE
No. 11465
Exp. 12/31/2009
ELECTRICAL
STATE OF CALIFORNIA

FOR REVISION ONLY 2 3

Caltrans Metric

DIST	COUNTY	ROUTE	KILOMETER POST TOTAL PROJECT	SHEET No	TOTAL SHEETS
04	SF	80	13.2/13.9	400 R3	1204

12/19/02
REGISTERED ELECTRICAL ENGINEER DATE

REGISTERED PROFESSIONAL ENGINEER
JENS ERLINGSSON
No. 8249
Exp. 9/30/06
ELECTRICAL
STATE OF CALIFORNIA

12-6-04
PLANS APPROVAL DATE

PB POWER, Inc.
A Parsons Brinckerhoff Company
303 Second St., Suite 700N
San Francisco, CA 94107-1317

The State of California or its officers or agents shall not be responsible for the accuracy or completeness of electronic copies of this plan sheet.

Caltrans now has a web site! To get to the web site, go to http://www.dot.ca.gov

CONDUIT DATA

Conduit No.	Reference	Size	Type	Total Fill (mm²)	Allowable Fill (mm²)	Included Cable No.	Conductor Type
8005	E-293	41	RGS-PVC coated conduit	126.88	534.55	2204-3	1-2/C + gnd #10, 600 V, EPR insulation
						Pull rope	Soft-Fiber Polyester 3
8006	E-293, E-300	53	RGS-PVC coated conduit	354.34	879.42		
						2204-3	1-2/C + gnd #10, 600 V, EPR insulation
						1201-1	1-2/C + gnd #8, 600 V, EPR insulation 3
						Pull rope	Soft-Fiber Polyester
8007	E-293, E-300	53	RGS-PVC coated conduit	3 126.88	879.42		
						Pull rope	Soft-Fiber Polyester
						2204-3	1-2/C + gnd #10, 600 V, EPR insulation
8008	E-293	53	RGS-PVC coated conduit	645.25	879.42	2204-9	1-3/C #14, 600 V, EPR insulation
						2204-2	1-3/C #14, 600 V, EPR insulation
						2204-1	1-3/C #14, 600 V, EPR insulation
						2204-10	1-3/C #14, 600 V, EPR insulation
						Pull rope	Soft-Fiber Polyester
						2204-11	1-3/C #14, 600 V, EPR insulation
						UP210-3	1-2/C + gnd #8, 600 V, EPR insulation
8010	3 E-293, E-264C	41	RGS-PVC coated conduit	227.46	534.55	1201-2	1-2/C + gnd #8, 600 V, EPR insulation
						Pull rope	Soft-Fiber Polyester
8011	E-264A, E-293	41	RGS-PVC coated conduit	3 425.90	534.55		3
						2204-1	1-3/C #14, 600 V, EPR insulation
						2204-2	1-3/C #14, 600 V, EPR insulation
						2204-9	1-3/C #14, 600 V, EPR insulation
						2204-10	1-3/C #14, 600 V, EPR insulation
						2204-11	1-3/C #14, 600 V, EPR insulation
						Pull rope	Soft-Fiber Polyester
8012	E-293, E-300, E-264C 3	41	RGS-PVC coated conduit	227.46	534.55	Pull rope	Soft-Fiber Polyester
						UP210-3	1-2/C + gnd #8, 600 V, EPR insulation
8013	E-294	21	RGS-PVC coated conduit	227.46	187.69	2201-6	1-2/C + gnd #8, 600 V, EPR insulation
						Pull rope	Soft-Fiber Polyester
8014	E-264A, E-293	53	RGS-PVC coated conduit	682.38	879.42	1201-6	1-2/C + gnd #8, 600 V, EPR insulation
						1201-2	1-2/C + gnd #8, 600 V, EPR insulation
						1201-1	1-2/C + gnd #8, 600 V, EPR insulation
						Pull rope	Soft-Fiber Polyester
8015	E-293, E-300	41	RGS-PVC coated conduit	130.00	534.55	2204-8	3-Pr #16 with overall shield 600 V, PVC insulation
						Pull rope	Soft-Fiber Polyester
8140	E-294	41	RGS-PVC coated conduit	227.46	534.55	Pull rope	Soft-Fiber Polyester
						2201-1	1-2/C + gnd #8, 600 V, EPR insulation

For continuation, see next sheet.

CONDUIT AND TRAY SCHEDULE

E-445

DATE REVISED | REVISED BY | DATE | CALCULATED/ DESIGNED BY | CHECKED BY | DESIGN OVERSIGHT

STATE OF CALIFORNIA - DEPARTMENT OF TRANSPORTATION
Caltrans

DATE PLOTTED => 12/15/2009
TIME PLOTTED => 11:01:32 PM

LAST REVISION 00-00-00

FOR REDUCED PLANS ORIGINAL SCALE IS IN MILLIMETERS 0 20 40 60 80

DGN FILE =>T:\13103\MS\pse\SAS Struc\CCO\SAS CC070\2009-12-02 issued for Submittal\04-0120f1_0400R03.dgn
USERNAME =>llorico

CU 04251 | EA 0120F1

CONTRACT CHANGE ORDER

Change Requested by: Engineer

CCO: 71 **Suppl. No.** 0 **Contract No.** 04 – 0120F4 **Road** SF-80-13.2/13.9 **FED. AID LOC.:**

To: **AMERICAN BRIDGE/FLUOR ENTERPRISES INC A JOINT VENTURE**

You are directed to make the following changes from the plans and specifications or do the following described work not included in the plans and specifications for this contract. ***NOTE: This change order is not effective until approved by the Engineer.***

Description of work to be done, estimate of quantities and prices to be paid. (Segregate between additional work at contract price, agreed price and force account.) Unless otherwise stated, rates for rental of equipment cover only such time as equipment is actually used and no allowance will be made for idle time. This last percentage shown is the net accumulated increase or decrease from the original quantity in the Engineer's Estimate.

Adjustment of Compensation at Lump Sum Price

ITEM 1.

Modify E2 bearings, shear keys, and cross beam including, but not limited to the following:

1) Revise bolting details
2) Increase the radius at the two lower corners of the bearing top housing
3) Use oversized holes in bearing top housing and shear key housing
4) Decrease bearing bottom housing base plate thickness
5) Roughen bottom surface of base plate
6) Assemble shear key housing at cross beam 35 mm lower
7) Additional machining for catcher brackets on the shear keys
8) In lieu of galvanizing, paint spherical washers
9) Change grout used on bearing and shear key anchor rods to high strength nonshrink
10) In lieu of the neoprene seal, wrap Denso debonding tape on the bearing and shear key anchor rods
11) Eliminate the formwork for planned concrete blockout in E2 cross beam

Replace the sixth paragraph of Special Provisions Section 10-1.47 "SPHERICAL BUSHING BEARING (PIER E2)," subsection "MATERIALS," and insert subsequent paragraphs as shown on sheet 3 of this change order.

The following revised and supplemental plan sheets detail the changes addressed in this change order: 514R3, 882R1, 882AR1, 883R2, 884R1, 884S1, 885R1, 887R2, 888R1, 888AR1, and 888BR2 (of 1204) as shown on sheets 4 through 14 of this change order.

ITEM 1 of this change order resolves the costs associated with Contractor Request For Information (RFI) numbers 17, 515, 553, 560, 566R0, 567, 582, 633, 646, 698R0, 698R1, 701R0, 722, 723, 724, 760, 824R1, 824R2, 858, 1191, 1233R2, 1233R5, 1357, 1418, 1419, 1435, 1622, 1644R2, 2063R0, 2063R1, and 2137R0 with respect to changes listed above.

Adjustment of Compensation at Lump Sum $425,287.00

Estimate of Increase in Contract Item at Contract Price:

ITEM 2.

Increase concrete item quantity to fill-in E2 cross beam blockout.

Item No. 38: STRUCTURAL CONCRETE BRIDGE
50.2 M3 (+0.61%) @ $4,700.00 /M3 = +$235,940.00 (+0.61%)

The quantity increase shown herein for Item No. 38 (STRUCTURAL CONCRETE BRIDGE), when combined with the quantity specified in the Engineer's Estimate, and as modified by any previous change orders, shall be the final quantity for which payment will be made.

Total cost for Increase in Contract Item..... $235,940.00

CONTRACT CHANGE ORDER

Change Requested by: Engineer

CCO: 71 **Suppl. No.** 0 **Contract No.** 04 – 0120F4 **Road** SF-80-13.2/13.9 **FED. AID LOC.:**

Extra Work at Lump Sum

ITEM 3.

Perform additional testing for proof of concept for E2 bearing and shear key anchor rods, as directed by the Engineer.

Perform additional testing to determine the minimum coefficient of friction between the spherical bushing assembly and the bottom housing of the Pier E2 bearing as directed by the Engineer.

ITEM 3 of this change order resolves the costs associated with Contractor Request For Information (RFI) numbers 1233R3, 1233R4, and 1458 with respect to changes listed above.

Extra Work at Lump Sum.....$52,753.00

CHANGE ORDER COST AND TIME SUMMARY

(ITEM 1) Adjustment of Compensation at Lump Sum	$425,287.00
(ITEM 2) Increase in Contract Items at Contract Price	$235,940.00
(ITEM 3) Extra Work at Lump Sum	$52,753.00
Total net pay for this change order	$713,980.00

This sum constitutes full and complete compensation for furnishing all labor, material, tools and incidentals including all markups by reason of this change.

Additional material costs and field work to install the catcher brackets on the shear keys, as described in RFI's 2137R0, 2137R1, and 2137R2, will be addressed in a future change order.

Estimated Cost: **Increase** ☒ **Decrease** ☐ **$713,980.00**

By reason of this order the time of completion will be adjusted as follows: 0 Days

Submitted by

Signature Kannu Balan **Resident Engineer** Kannu Balan, Sup. T.E. **Date** 12-17-10

Approval Recommended by

Signature Brian Boal **Supervising Bridge Engineer** Brian Boal, Sup. B.E. **Date** 12-17-10

Engineer Approval by

Signature Peter Siegenthaler **Principal Transportation Engineer** Peter Siegenthaler, Prin. T.E. **Date** 1-6-11

We the undersigned contractor, have given careful consideration to the change proposed and agree, if this proposal is approved, that we will provide all equipment, furnish the materials, except as otherwise be noted above, and perform all services necessary for the work above specified, and will accept as full payment therefor the prices shown above.

NOTE: If you, the contractor, do not sign acceptance of this order, your attention is directed to the requirements of the specifications as to proceeding with the ordered work and filing a written protest within the time therein specified.

Contractor Acceptance by

Signature (Print name and title) BRIAN A. PETERSEN - PROJECT DIRECTOR **Date** 05JAN11

Replace the sixth paragraph of Section 10-1.47, "SPHERICAL BUSHING BEARING (PIER E2)," subsection, "MATERIALS," of the Special Provisions and insert subsequent paragraphs as follows:

Steel components including plates and anchor bolts shall conform to the details shown on the plans, the provisions in "Steel Structures," of the Standard Specifications, and these special provisions except that the spherical washers for E2 anchor rods will not be galvanized. ~~Clean and paint spherical bushing bearing shall conform to the requirements in "Clean and Paint Structural Steel (Seismic Joint, Spherical Bushing Bearing, and Shear Key)," of these special provisions.~~ Paint spherical washers for E2 anchor rods in accordance with Standard Specifications Section 59-2.13, "Application of Zinc Rich Primer", Section 91, "Paint", Special Provisions Section 10-1.70, "Clean and Paint Structural Steel (modular joint seal assembly, spherical bushing bearing, and shear key)" and the following:

- Outer diameter, top and bottom flat surfaces – single coat inorganic zinc primer dry film thickness between 90µm (microns) and 150µm (microns).
- Inner diameter and spherical surface – one application of zinc rich primer (organic vehicle type).
- Complete painting the surfaces requiring inorganic zinc before applying zinc rich primer (organic vehicle type) to the spherical surface and inside diameter.

In lieu of the requirements for the Paint Quality Work Plan (PQWP) in Special Provisions Section 10-1.70, for the spherical washers, the requirements for the PQWP are as follows:

Prior to painting the spherical washers, submit to the Engineer three (3) copies of a separate Painting Quality Work Plan (PQWP) in conformance with the provisions in Section "Working Drawings," in these special provisions. The PQWP shall include the following:

A. The name of each Contractor or subcontractor used.
B. Proposed methods and equipment to be used for any paint application.
C. Proof of AISC Certification, Paint Endorsement.
D. Proposed methods to control environmental conditions in accordance with the manufacturer's recommendations and these special provisions.
E. Proposed method to protect the product during curing, shipping, handling and storage.

The Engineer shall have 10 days to approve the PQWP submittal after a complete plan has been received.

STATE OF CALIFORNIA - DEPARTMENT OF TRANSPORTATION

CONTRACT CHANGE ORDER MEMORANDUM

TO: Pete Siegenthaler, Prin TE /	FILE: **E.A.** 04 - 0120F4
	CO-RTE-PM SF-80-13.2/13.9
FROM: Kannu Balan, Senior TE	**FED. NO.**
CCO#: **71** SUPPLEMENT#: **0** Category Code: **CHPA**	CONTINGENCY BALANCE (incl. this change) **$172,473,404.81**
COST: **$713,980.00** INCREASE ☑ DECREASE ☐	HEADQUARTERS APPROVAL REQUIRED? ☑ YES ☐ NO
SUPPLEMENTAL FUNDS PROVIDED: **$0.00**	IS THIS REQUEST IN ACCORDANCE WITH ENVIRONMENTAL DOCUMENTS? ☑ YES ☐ NO
CCO DESCRIPTION: E2 Cross Beam	**PROJECT DESCRIPTION:** CONSTRUCT SELF-ANCHORED SUSPENSION BRIDGE

Original Contract Time:	Time Adj. This Change:	Previously Approved CCO Time Adjustments:	Percentage Time Adjusted: (including this change)	Total # of Unreconciled Deferred Time CCO(s): (including this change)
2490 Day(s)	**0** Day(s)	**501** Day(s)	**20** %	**3**

THIS CHANGE ORDER PROVIDES FOR:

Modifying E2 bearings, shear keys, and cross beam including, but not limited to the following:

1) Revising bolting details
2) Increasing the radius at the two lower corners of the bearing top housing
3) Using oversized holes in bearing top housing and shear key housing
4) Decreasing bearing bottom housing base plate thickness
5) Roughening bottom surface of base plate
6) Assembling shear key housing at cross beam 35 mm lower
7) Additional machining for catcher brackets on the shear keys
8) In lieu of galvanizing, painting spherical washers
9) Changing grout used on bearing and shear key anchor rods to high strength nonshrink
10) In lieu of the neoprene seal, wrapping Denso debonding tape on the bearing and shear key anchor rods
11) Eliminating the formwork for planned concrete blockout in E2 cross beam
12) Performing additional testing for proof of concept for E2 bearing and shear key anchor rods
13) Filling the cross beam block-out by increasing bid item 38, Structural Concrete Bridge.

Special Provisions Section 10-1.47 requires the Contractor to provide substantiating calculations for the spherical bushing bearing and its components to be used to determine details not shown in the plans for the bearings. Revisions are made to plan sheets to incorporate working drawing and submittal details. Bolt layouts are changed to provide adequate clearance for jacking and avoid conflicts. Tapered anchor bolt dimensions are revised to increase tolerance for erection. An alternate nut recess is provided for the bearing hold down assembly since there is not enough clearance to install nuts. The cross beam shear key is modified to correct alignment since the cross beam key plate is lower than the OBG key plate. The bearing gap clearance is increased to avoid interference during rotation around the shaft. Oversized holes in the bearing top housing will allow for adjustment after load transfer. To maintain the required gap with the hold down assembly, the bearing bottom housing base plate thickness is decreased. The radius of the shear key stub is reduced to support the hydraulic tensioner for the anchor rods. To meet the increased hardness requirement, the spherical washers will be painted. High strength grout around the anchor bolts will be used to accommodate higher stresses. The debonding tape system provides superior corrosion protection. Additional required testing shall be performed on the anchor rods and bearings due to the increased strength requirements. Additional testing is required for long ASTM A345 rods and nuts, to determine adequacy of threads at ultimate load, and also to confirm static coefficient of friction requirements are met between the spherical bushing assembly and the bottom housing.

The cross beam concrete block-out was eliminated in Contract Addendum 5, however the addendum inadvertently omitted the increase of bid item 38 (Structural Concrete Bridge) in the revised estimate.

Catcher brackets are added to the shear keys to prevent excessive rotation of the spherical housing. Additional material costs and field work to install the catcher brackets on the shear keys will be addressed in a supplemental change order.

This change order resolves the costs associated with Contractor Request For Information (RFI) numbers 17, 515, 553, 560, 566R0, 567, 582, 633, 646, 698R0, 698R1, 701R0, 722, 723, 724, 760, 824R1, 824R2, 858, 1191, 1233R2, 1233R3, 1233R4, 1233R5, 1357, 1418, 1419, 1435, 1458, 1622, 1644R2, 2063R0, 2063R1, and 2137R0 with respect to changes listed above.

ADA Notice: For individuals with sensory disabilities, this document is available in alternate formats. For information call: (916) 654-6410 or TDD (916) 654-3880 or write Records and Forms Management, 1120 N Street, MS-89, Sacramento, CA 95814.

The total cost of this change order is $713,980.00, which can be financed from the contingency fund. A detailed cost analysis is on file.

No time adjustment is warranted as this change order does not affect the controlling operation.

This change order has concurrence from Rick Morrow (Sup. Structure Rep), Peter Siegenthaler (Principal TE), Rich Foley (HQ Oversight), Wenyi Long (Design Oversight), Lina Ellis (Maintenance), and Ken Terpstra (Project Manager).

The Resident Engineer requests Head Quarters CCO Desk "Issue and Approve". 12-20-10 I&A received JCA

CONCURRED BY:			
Construction Engineer:		Date	
Bridge Engineer:	Struct Rep, Rick Morrow, Sup TE	Date	1/7/09
Project Engineer:	Design of Record, Marwan Nader,	Date	9/26/08
Project Manager:	Proj Manager, Ken Terpstra	Date	1/8/09
FHWA Rep.:	Struct. Maint, Lina Ellis	Date	1/9/09
Environmental:	CT Oversight, Wenyi Long, P.E.	Date	1/9/09
Other (specify):	PCE, Pete Siegenthaler, Prin TE	Date	1/7/09
Other (specify):	HQ, Rich Foley	Date	1/7/09
District Prior Approval By:		Date	
HQ (Issue Approve) By:	Larry Salhaney	Date	12-20-10
Resident Engineer's Signature:		Date	12-17-10

ESTIMATE OF COST		
	THIS REQUEST	TOTAL TO DATE
ITEMS	$235,940.00	$235,940.00
FORCE ACCOUNT	$0.00	$0.00
AGREED PRICE	$52,753.00	$52,753.00
ADJUSTMENT	$425,287.00	$425,287.00
TOTAL	$713,980.00	$713,980.00

FEDERAL PARTICIPATION

☐ PARTICIPATING ☐ PARTICIPATING IN PART ☑ NONE
☐ NON-PARTICIPATING (MAINTENANCE) ☐ NON-PARTICIPATING

FEDERAL SEGREGATION (if more than one Funding Source or P.I.P. type)
☐ CCO FUNDED PER CONTRACT ☐ CCO FUNDED AS FOLLOWS

FEDERAL FUNDING SOURCE PERCENT

ADA Notice: For individuals with sensory disabilities, this document is available in alternate formats. For information call: (916) 654-6410 or TDD (916) 654-3880 or write Records and Forms Management, 1120 N Street, MS-89, Sacramento, CA 95814.

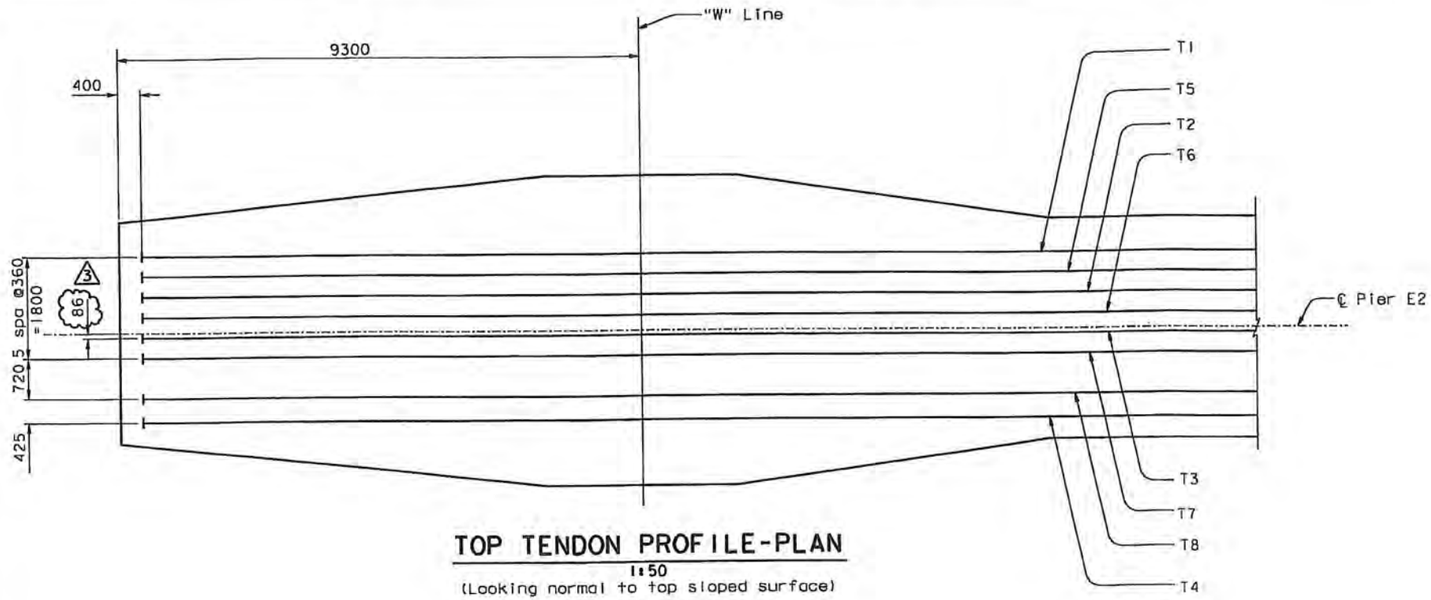

TOP TENDON PROFILE-PLAN

1:50
(Looking normal to top sloped surface)

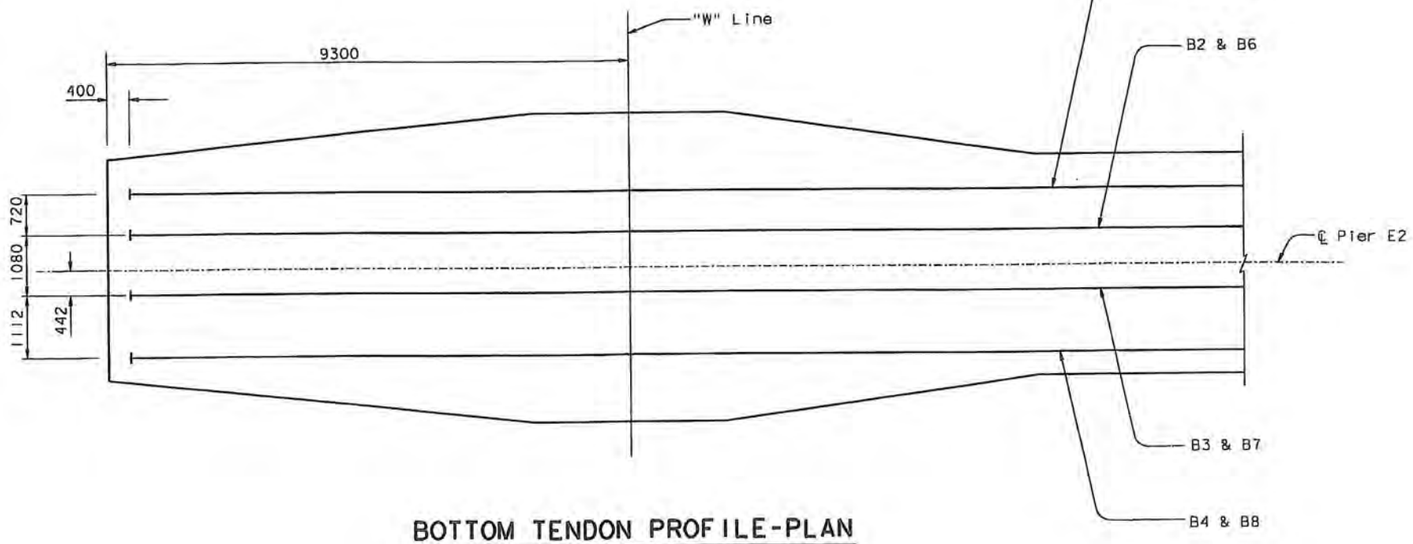

BOTTOM TENDON PROFILE-PLAN

1:50
(Looking normal to top sloped surface)

DIST.	COUNTY	ROUTE	KILOMETER POST TOTAL PROJECT	SHEET NO.	TOTAL SHEETS
04	SF	80	13.2/13.9	514R3	1204

REGISTERED ENGINEER - CIVIL

12-6-04
PLANS APPROVAL DATE

REGISTERED PROFESSIONAL ENGINEER — Alex E. Sanjines — No. C 051153 — Exp. 9/30/09 — CIVIL — STATE OF CALIFORNIA

The State of California or its officers or agents shall not be responsible for the accuracy or completeness of electronic copies of this plan sheet.

T.Y. LIN / MOFFATT & NICHOL
825 BATTERY STREET
SAN FRANCISCO, CA 94111

Caltrans now has a web site! To get to the web site, go to: http://www.dot.ca.gov

REQUESTS FOR INFORMATION NOT ADDRESSED IN THIS CCO REMAIN IN FORCE

MARK	DATE	DESCRIPTIONS	BY	CH'D	CCO#
		REVISIONS			
3	09/26/08	E2 CROSS BEAM	AS	JD	71
2	07/18/07	E2 CAP BEAM ISD RESOLUTION	AS	JD	3452
1	07/21/06	E2 CAP BEAM ISD	AS	NV	23

CONTRACT CHANGE ORDER NO. 71
SHEET 4 OF 14

NOTES:

1. "W" Line shown, "E" Line similar.
2. For tendon anchorage block-out details, see "Pier E2 Details No. 8" sheet.
3. For concrete crossbeam reinforcement, see "Pier E2 Details No. 3", "Pier E2 Details No. 4", and "Pier E2 Details No. 7" sheets.
4. For stressing force, use two end stressing and initial jacking stress $= 0.75\ f_{pu} = 0.75 \times 1860 = 1390$ MPa.
5. For additional prestressing notes, see Prestressing Notes" sheet.
6. The post-tensioning and grouting sequence shall prevent ducts from crushing.
7. The outer diameter of the PT duct shall not be greater than 180 mm.
8. At the Contractor's option, alternative post-tensioning anchorage sizes may be used provided the center of gravity of the prestressing force and the total prestressing force remains unchanged, subject to review and approval of the Engineer.

100 % PS&E

DATE PLOTTED => 08 OCT 2008 TIME PLOTTED => 15:31:01
USERNAME => ptom

ALL DIMENSIONS ARE IN MILLIMETERS UNLESS OTHERWISE SHOWN

SAN FRANCISCO OAKLAND BAY BRIDGE
EAST SPAN SEISMIC SAFETY PROJECT
SELF-ANCHORED SUSPENSION BRIDGE
(SUPERSTRUCTURE & TOWER)

PIER E2 DETAILS NO. 5

R. Valizadeh/V. Toan/Y.L./W.L./F.C.
DESIGN OVERSIGHT
SIGN OFF DATE 09/26/08

	BY	CHECKED
DESIGN	A. Sanjines	J. Chan
DETAILS	R. Xu	J. Chan
QUANTITIES	C. Bernardo	B. Mason

PREPARED FOR THE STATE OF CALIFORNIA
DEPARTMENT OF TRANSPORTATION

R. Manzanarez
PROJECT ENGINEER

BRIDGE NO. 34-0006L/R
KILOMETER POST 13.2/13.9

CU 04
EA 0120F1

DISREGARD PRINTS BEARING EARLIER REVISION DATES →

REVISION DATES (PRELIMINARY STAGE ONLY)										SHEET	OF
05/07/99	05/07/01	04/09/02	01/07/02	12/13/02						97R3	

ORIGINAL SCALE IN MILLIMETERS FOR REDUCED PLANS 0 10 20 30 40 50 60 70 80 90 100

Rev. Date: 5-18-98

FILE => I:\bb\04-0120I\sas\contract plans and cco\cco\in progress\cco#71\original 09-26-08\dgn\aspIr05e.dgn

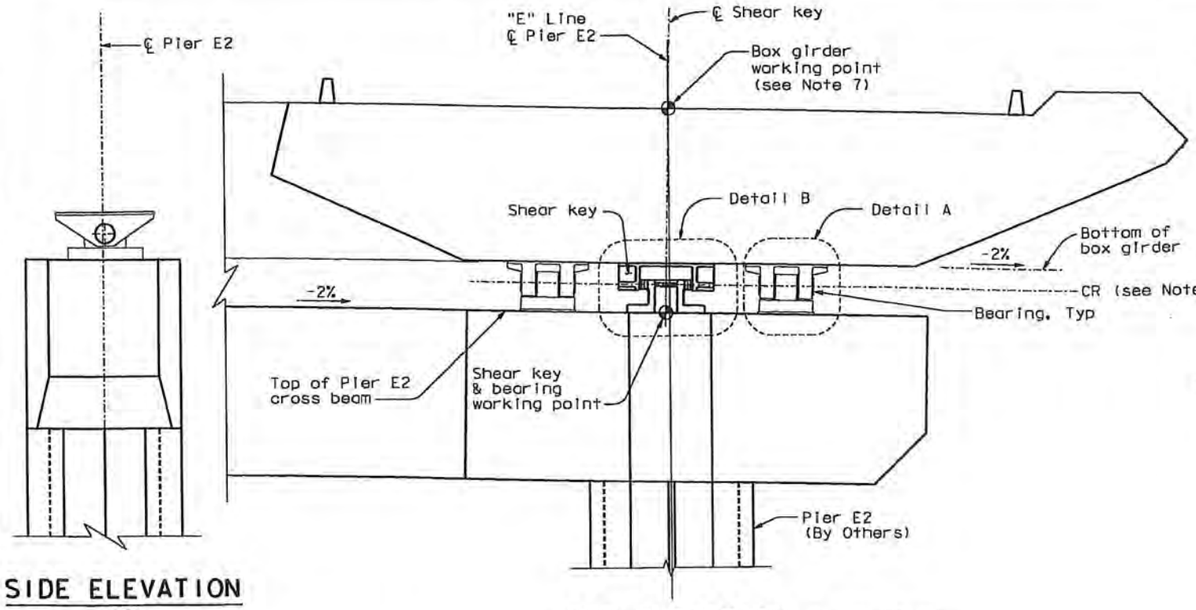

SIDE ELEVATION

1:200
(Looking South)

KEY ELEVATION (Looking East)

1:100

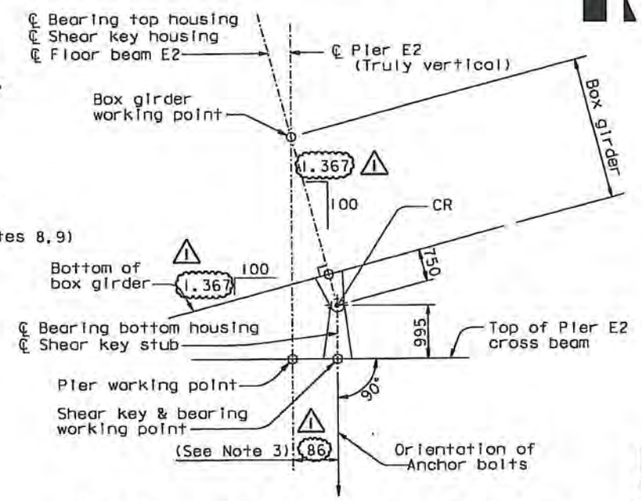

SHEAR KEY AND BEARING LOCATION

NTS
(Looking South)

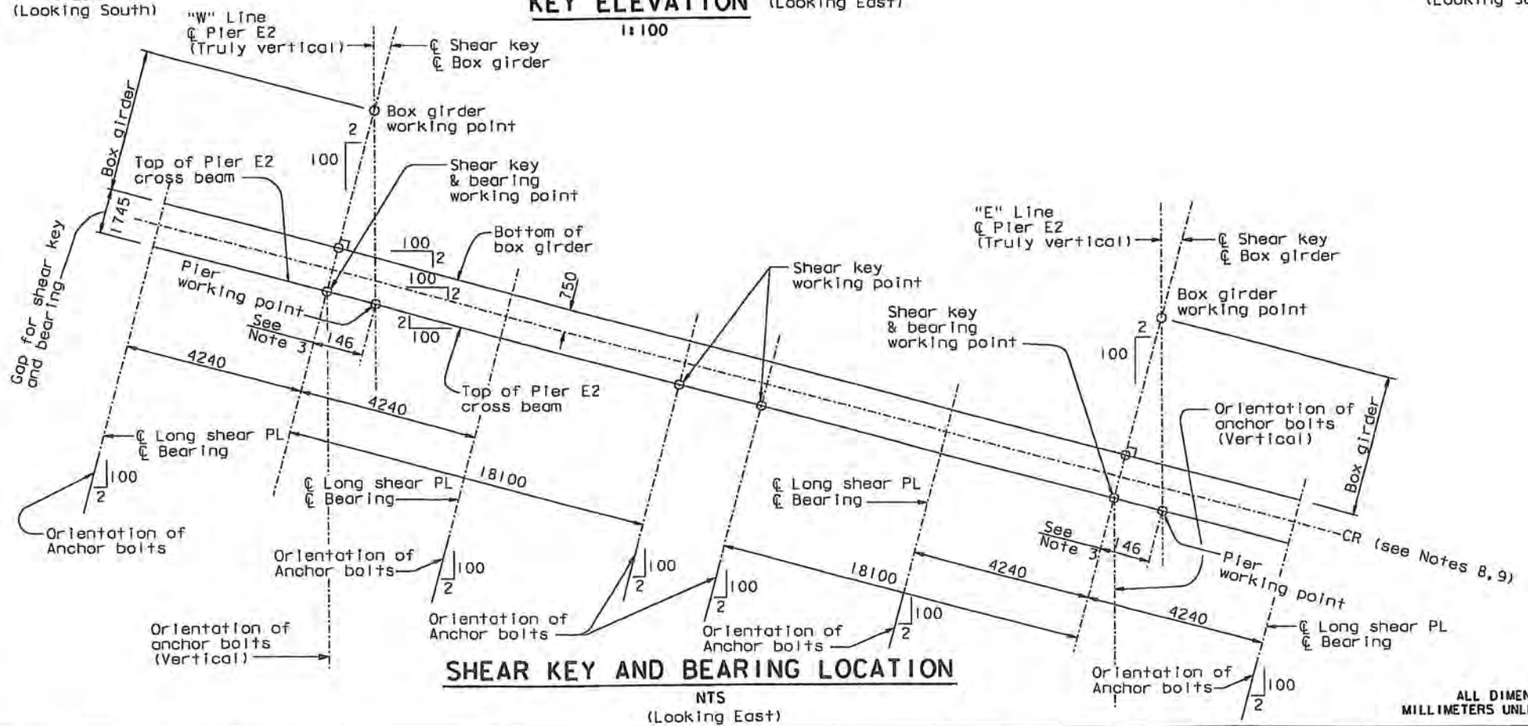

SHEAR KEY AND BEARING LOCATION

NTS
(Looking East)

NOTES:

1. For Detail A, see "Pier E2 Bearing Details No. 1" sheet.
2. Detail B is a section view at center line of shear key. For Detail B, see "Pier E2 Shear Key Details No. 1" sheet.
3. Offset value is shown for information only. The Contractor shall calculate the offset and verify it in the field before placing the bearings and shear key.
4. The Contractor shall submit the construction sequence of the shear key and bearings based on his ways and means for the Engineer's approval.
5. For floor beam E2, see "Girder at Pier E2" sheets.
6. For longitudinal shear plate, see "Girder at East Transition No. 1" sheet.
7. Box girder work point is on the finished profile grade which is the top of 50 mm overlay.
8. At the Contractor's option, small holes may be drilled through the bearings and shear keys for use with a laser alignment method. All holes shall be plugged with tapped screws after bearing and shear key installation.
9. The center of rotation CR shall be a straight line through the pin center of all four bearings, and perpendicular to the bridge axis direction.

ALL DIMENSIONS ARE IN MILLIMETERS UNLESS OTHERWISE SHOWN

DIST.	COUNTY	ROUTE	KILOMETER POST TOTAL PROJECT	SHEET NO.	TOTAL SHEETS
04	SF	80	13.2/13.9	882R1	1204

REGISTERED ENGINEER - CIVIL
12-6-04
PLANS APPROVAL DATE
Marwan N. Nader, No. C 054426, Exp. 12/31/09, CIVIL, STATE OF CALIFORNIA
The State of California or its officers or agents shall not be responsible for the accuracy or completeness of electronic copies of this plan sheet.

T.Y. LIN / MOFFATT & NICHOL
825 BATTERY STREET
SAN FRANCISCO, CA 94111

Caltrans now has a web site! To get to the web site, go to: http://www.dot.ca.gov

REQUESTS FOR INFORMATION NOT ADDRESSED IN THIS CCO REMAIN IN FORCE

MARK	DATE	REVISIONS DESCRIPTIONS	BY	CH'D	CCO#
1	09/26/08	E2 CROSS BEAM	MN	NV	71

CONTRACT CHANGE ORDER NO. 71
SHEET 5 OF 14

100 % PS&E

DATE PLOTTED => 08 OCT 2008 TIME PLOTTED => 15:33:19
USERNAME => ptom

R. Valizadeh/V. Toan/Y.L./W.L./F.C.
DESIGN OVERSIGHT
Ryan Valizadeh / Vong Toan / Y. Lin
SIGN OFF DATE 09/26/08

	BY	CHECKED
DESIGN	M. Nader	L. Rus
DETAILS	N. Vo	J. Leventini
QUANTITIES	N. Vo	J. Leventini

PREPARED FOR THE STATE OF CALIFORNIA
DEPARTMENT OF TRANSPORTATION

R. Manzanarez
PROJECT ENGINEER

BRIDGE NO. 34-0006L/R
KILOMETER POST 13.2/13.9

CU 04
EA 0120F1

SAN FRANCISCO OAKLAND BAY BRIDGE
EAST SPAN SEISMIC SAFETY PROJECT
SELF-ANCHORED SUSPENSION BRIDGE
(SUPERSTRUCTURE & TOWER)

PIER E2 BEARING AND SHEAR KEY LAYOUT

DISREGARD PRINTS BEARING EARLIER REVISION DATES →
REVISION DATES (PRELIMINARY STAGE ONLY)
SHEET 465R1 OF

ORIGINAL SCALE IN MILLIMETERS FOR REDUCED PLANS 0 10 20 30 40 50 60 70 80 90 100

Rev. Date: 5-18-98

FILE => I:\bb\04-0120F1\sas\contract plans and cco\cco\in progress\cco#71\original 09-26-08\dgn\aksrd01.dgn

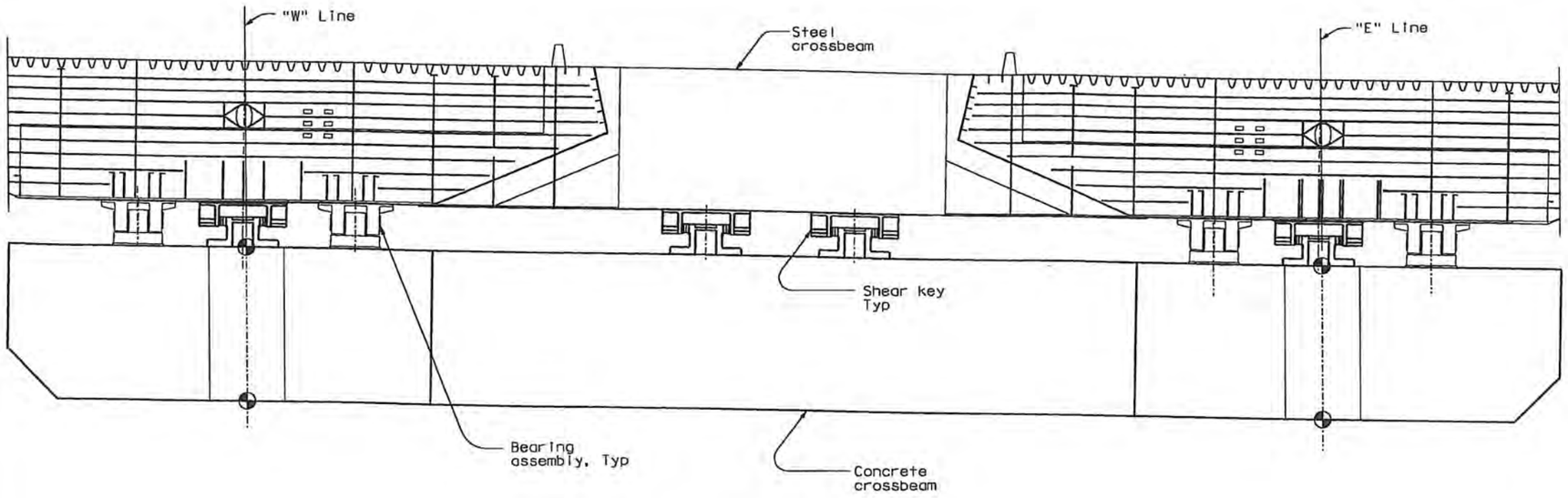

ELEVATION (Looking East)

DIST.	COUNTY	ROUTE	KILOMETER POST TOTAL PROJECT	SHEET NO.	TOTAL SHEETS
04	SF	80	13.2/13.9	882AR1	1204

REGISTERED ENGINEER - CIVIL

12-6-04
PLANS APPROVAL DATE

REGISTERED PROFESSIONAL ENGINEER — Marwan N. Nader — No. C 054426 — Exp. 12/31/09 — CIVIL — STATE OF CALIFORNIA

The State of California or its officers or agents shall not be responsible for the accuracy or completeness of electronic copies of this plan sheet.

T.Y. LIN / MOFFATT & NICHOL
825 BATTERY STREET
SAN FRANCISCO, CA 94111

Caltrans now has a web site! To get to the web site, go to: http://www.dot.ca.gov

REQUESTS FOR INFORMATION NOT ADDRESSED IN THIS CCO REMAIN IN FORCE

MARK	DATE	REVISIONS DESCRIPTIONS	BY	CH'D	CCO#
1	09/26/08	E2 CROSS BEAM	MN	NV	71

CONTRACT CHANGE ORDER NO. 71
SHEET 6 OF 14

BEARING ASSEMBLY TABLE

Location	Bearing Typ	Number of bearing units per location	Design Load (kN per bearing)							Design rotation (radians)						Design Displacement (mm)					
			Service			Ultimate				Service			Ultimate			Service			Ultimate		
			Compression	Uplift	Long or Trans	Load Condition	Compression	Uplift	Long or Trans	Trans Axis	Long Axis	Vert Axis	Trans Axis	Long Axis	Vert Axis	Trans Axis	Long Axis	Vert Axis	Trans Axis	Long Axis	Vert Axis
"W" Line	Spherical Bushing	2	35000	0	0	Shear Key Engaged	86000	32000	0	0.009	0	0	0.130	0.032	0.032	5	5	0	20	20	2**
						Shear Key Failed*	68000	17000	30500												
"E" Line	Spherical Bushing	2	35000	0	0	Shear Key Engaged	86000	32000	0	0.009	0	0	0.130	0.032	0.032	5	5	0	20	20	2**
						Shear Key Failed*	68000	17000	30500												

Installation Misalignment Tolerances (Per bearing/ Shear Key)	Trans./Long./Vertical	Rotational
	± 2 mm	± 0.5°

* Seismic load factor γ = 1.0 (For shear key engaged load condition, γ = 1.4).
** For uplifting only.

SHEAR KEY ASSEMBLY TABLE

Location	Number of Shear Key Units Per Location	Design Load (kN per shear key)						Design rotation (radians)						Design Displacement (mm)					
		Service			Ultimate			Service			Ultimate			Service			Ultimate		
		Trans	Long	Vert	Trans	Long	Vert	Trans Axis	Long Axis	Vert Axis	Trans Axis	Long Axis	Vert Axis	Trans Axis	Long Axis	Vert Axis	Trans Axis	Long Axis	Vert Axis
"W" Line	1	9000	4500	0	42500	35000	0	0.009	0	0	0.130	0.130	0.130	0	0	10	0	0	20
"E" Line	1	9000	4500	0	42500	35000	0	0.009	0	0	0.130	0.130	0.130	0	0	10	0	0	20
Crossbeam	2	9000	1	0	42500	0	0	0.009	0	0	0.130	0.130	0.130	0	5	10	0	20	20

ALL DIMENSIONS ARE IN MILLIMETERS UNLESS OTHERWISE SHOWN

R. Vaziadeh/V. Toan/Y.L./W.L./F.C.
DESIGN OVERSIGHT
SIGN OFF DATE 09/26/08

	BY	CHECKED
DESIGN	M. Nader	L. Rus
DETAILS	N. Vo	J. Leventini
QUANTITIES	N. Vo	J. Leventini

PREPARED FOR THE STATE OF CALIFORNIA
DEPARTMENT OF TRANSPORTATION

R. Manzanarez
PROJECT ENGINEER

CU 04
EA 0120F1

SAN FRANCISCO OAKLAND BAY BRIDGE
EAST SPAN SEISMIC SAFETY PROJECT
SELF-ANCHORED SUSPENSION BRIDGE
(SUPERSTRUCTURE & TOWER)

BRIDGE NO. 34-0006L/R
KILOMETER POST 13.2/13.9

PIER E2 BEARING AND SHEAR KEY DESIGN FORCES

DISREGARD PRINTS BEARING EARLIER REVISION DATES → 12/07/05
REVISION DATES (PRELIMINARY STAGE ONLY)
SHEET 465AR1

Rev. Date: 5-18-98

ORIGINAL SCALE IN MILLIMETERS FOR REDUCED PLANS 0 10 20 30 40 50 60 70 80 90 100

FILE => I:\bb\04-012001\sas\contract plans and cco\cco\In progress\cco#71\original 09-26-08\dgn\aksrd02.dgn

100 % PS&E
DATE PLOTTED => 08 OCT 2008 TIME PLOTTED => 15:34:35
USERNAME => ptam

DIST.	COUNTY	ROUTE	KILOMETER POST TOTAL PROJECT	SHEET NO.	TOTAL SHEETS
04	SF	80	13.2/13.9	883R2	1204

REGISTERED ENGINEER - CIVIL

12-6-04

PLANS APPROVAL DATE

REGISTERED PROFESSIONAL ENGINEER — Marwan N. Nader — No. C 054426 — Exp. 12/31/09 — CIVIL — STATE OF CALIFORNIA

The State of California or its officers or agents shall not be responsible for the accuracy or completeness of electronic copies of this plan sheet.

T.Y. LIN / MOFFATT & NICHOL
825 BATTERY STREET
SAN FRANCISCO, CA 94111

Caltrans now has a web site! To get to the web site, go to: http://www.dot.ca.gov

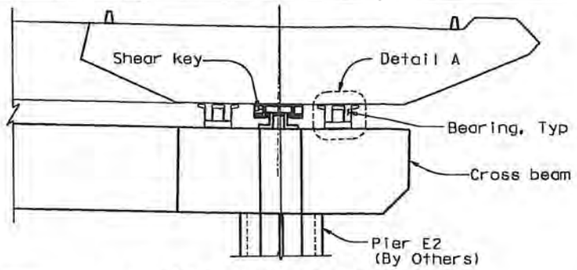

KEY ELEVATION
1:200

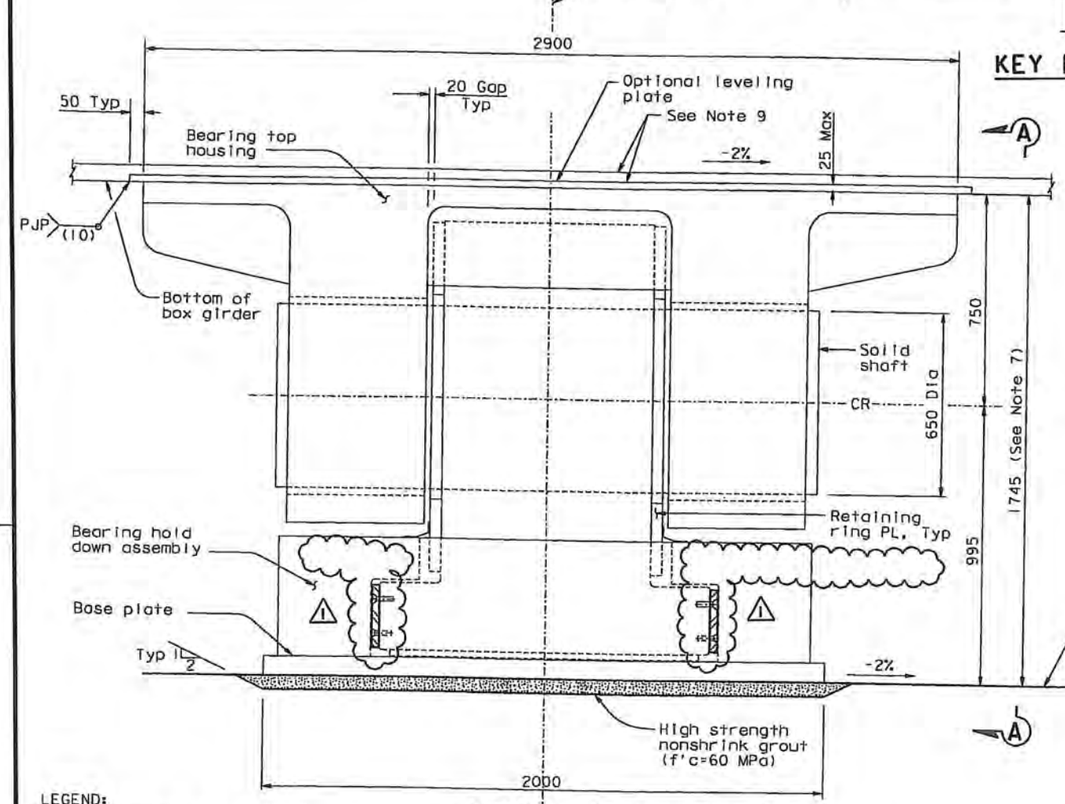

DETAIL A (Bearing Assembly)
1:10

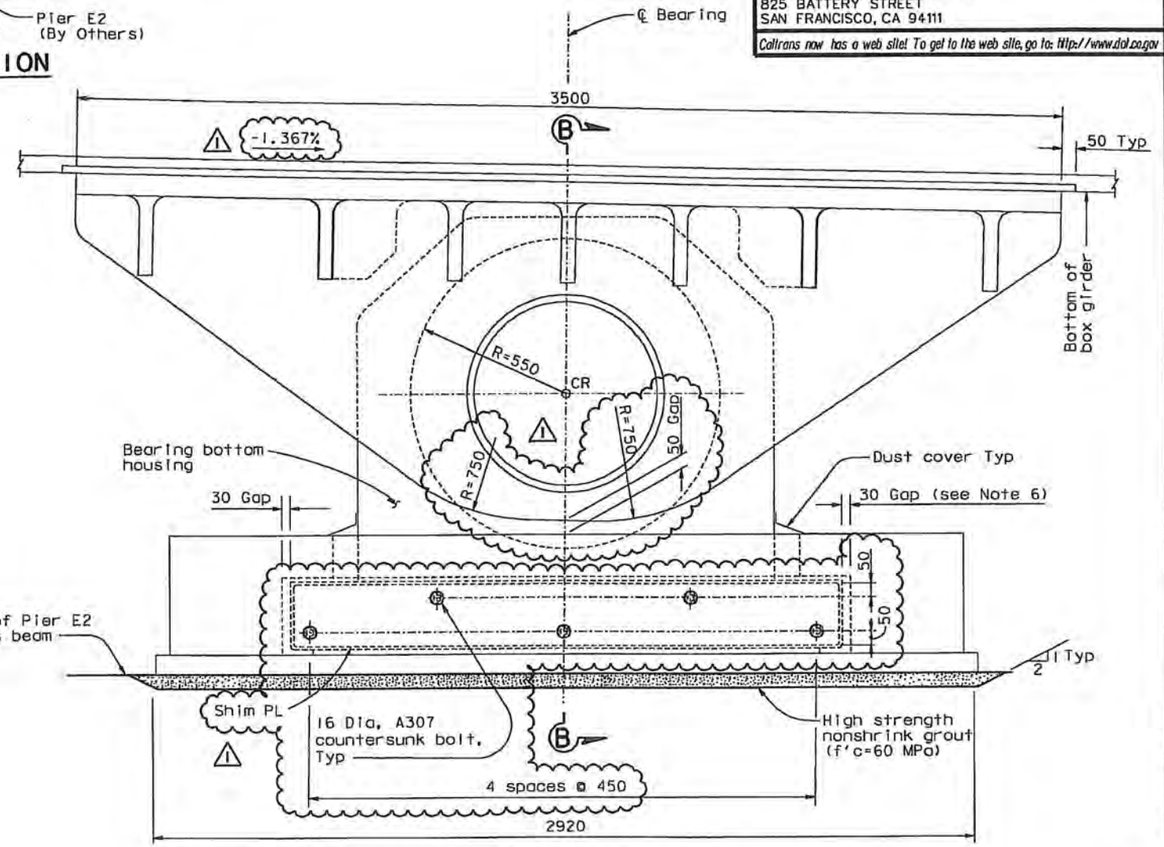

VIEW A-A
1:10

LEGEND:

CR Center of Rotation

NOTES:

1. For Section B-B, see "Pier E2 Bearing Details No. 2" sheet.
2. Connections to box girder and Pier E2 are not shown for clarity.
3. The bearing top housing and bearing hold down assembly shall be Structural Casting Grade 345.
4. The bearing bottom housing and the solid shaft shall be Structural Casting Grade 550.
5. The grout pad thickness is shown for information only. Before grout pour, Contractor shall verify in the field the grout pad thickness required to align the center of rotation of the shear key and bearings at 0.750 m from the bottom surface of the box girder and ensure center of rotation of all bearings and shear keys are aligned in the same axis.
6. Gaps shall be maintained during installation by using shims placed below the dust cover locations. Remove shims after grouting. 1 Alternatively, 3/4" diameter spacing bolts may be installed. These shall remain undamaged during installation and shall be replaced with plug bolts.
7. The Contractor may provide optional leveling plates to achieve fit-up and level contact surfaces for the bearings and shear keys. The Contractor shall erect the E2 cap beam and E2 girders to the elevations and tolerances specified in the plans and special provisions.
8. Leveling plate shall be attached with 2 plug welds at 0.5 m Max spacing, and a perimeter PJP weld.
9. All faying surfaces of the girder key plate, the bearing top housing, and the optional leveling plate shall be machined after all welding for flatness and smoothness as specified for the top of the bearing top housing. See "Pier E2 Bearing Details No. 3" sheet.

CONTRACT CHANGE ORDER NO. 71
SHEET 7 OF 14

REQUESTS FOR INFORMATION NOT ADDRESSED IN THIS CCO REMAIN IN FORCE

ALL DIMENSIONS ARE IN MILLIMETERS UNLESS OTHERWISE SHOWN

MARK	DATE	DESCRIPTIONS	BY	CH'D	CCO#
2	01/17/09	E2 CROSS BEAM	MN	NV	71
1	09/26/08	E2 CROSS BEAM	MN	NV	71

REVISIONS

	BY	CHECKED
DESIGN	M. Nader	L. Rus
DETAILS	N. Vo	J. Leventini
QUANTITIES	N. Vo	J. Leventini

PREPARED FOR THE STATE OF CALIFORNIA
DEPARTMENT OF TRANSPORTATION

R. Manzanarez
PROJECT ENGINEER

BRIDGE NO. 34-0006L/R
KILOMETER POST 13.2/13.9

CU 04
EA 0120F1

DISREGARD PRINTS BEARING EARLIER REVISION DATES

REVISION DATES (PRELIMINARY STAGE ONLY)

SAN FRANCISCO OAKLAND BAY BRIDGE
EAST SPAN SEISMIC SAFETY PROJECT
SELF-ANCHORED SUSPENSION BRIDGE
(SUPERSTRUCTURE & TOWER)

PIER E2 BEARING DETAILS NO. 1

SHEET 466R2 OF

R. Valizadeh/V. Toan/Y.L./W.L./F.C.
DESIGN OVERSIGHT
SIGN OFF DATE 07/17/09

Rev. Date: 5-18-98

ORIGINAL SCALE IN MILLIMETERS FOR REDUCED PLANS 0 10 20 30 40 50 60 70 80 90 100

FILE => I:\bb\04-0120I\sos\contract plans and cco\cco\cco#71\4-revision 07-17-09\dgn\akbrg01.dgn

100 % PS&E

USERNAME => altshonsk DATE PLOTTED => 17 JUL 2009 TIME PLOTTED => 15:08:43

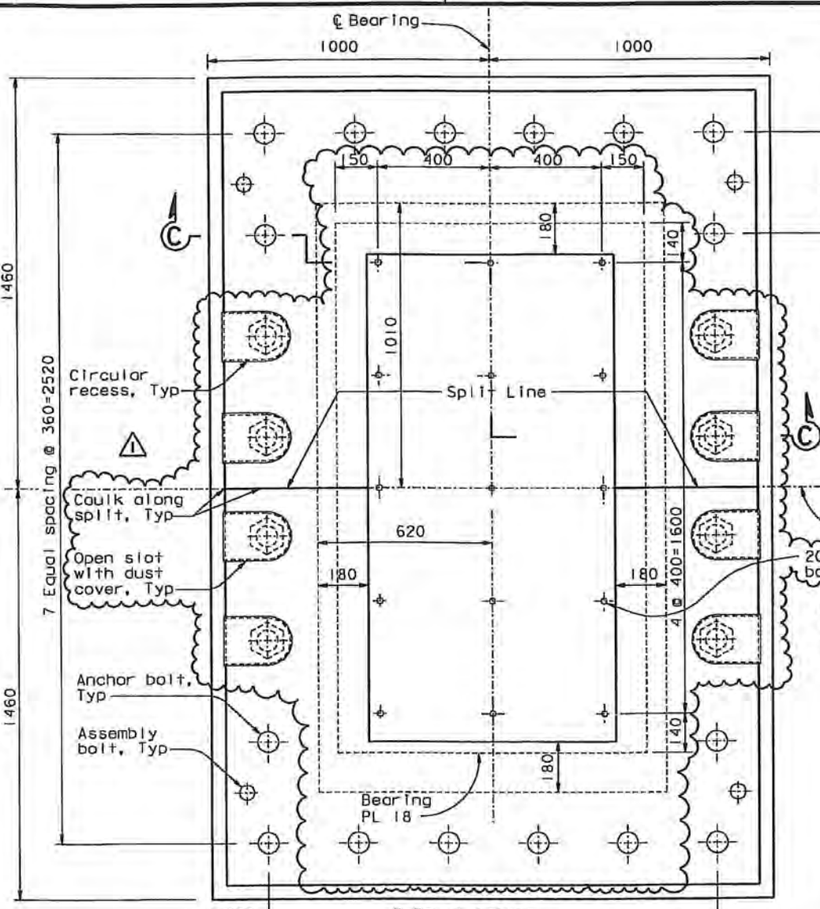

BEARING HOLD DOWN ASSEMBLY PLAN (Looking down)

1:10

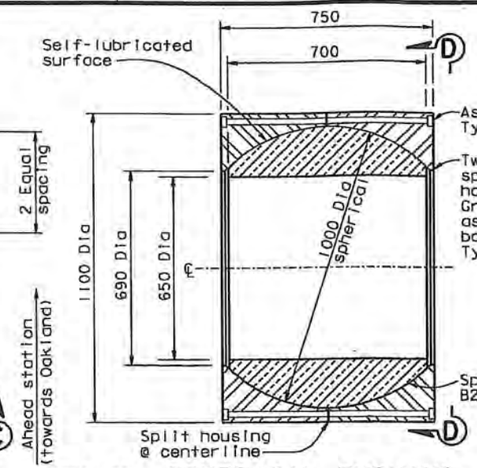

SPHERICAL BUSHING ASSEMBLY DETAIL

1:10

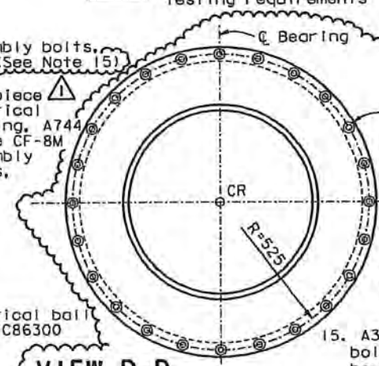

VIEW D-D

1:10

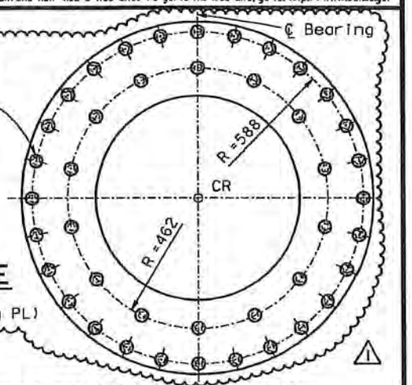

VIEW E-E

1:10
(Retaining Ring PL)

15. A354 BD assembly bolts for the spherical housing shall be stressed to 0.7 Fy.

16. For Detail A and A', see "Pier E2 Bearing Details No. 2A" sheet.

17. A354 BD assembly bolts for the retaining ring plate shall be installed snug-tight plus ¼ turn.

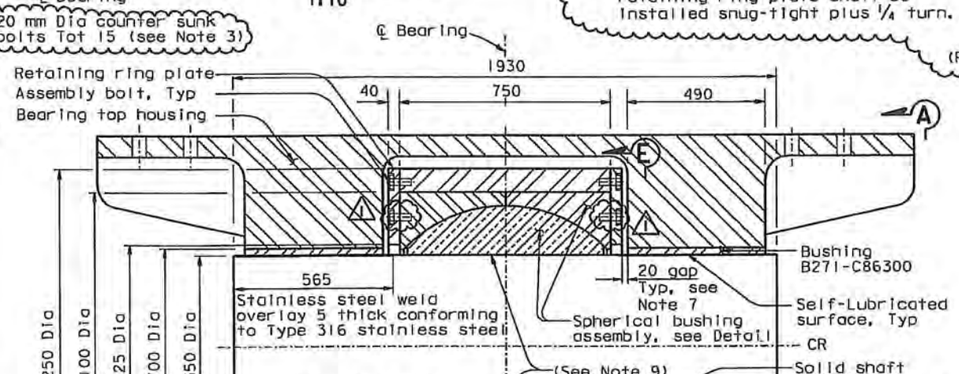

SECTION B-B

1:10

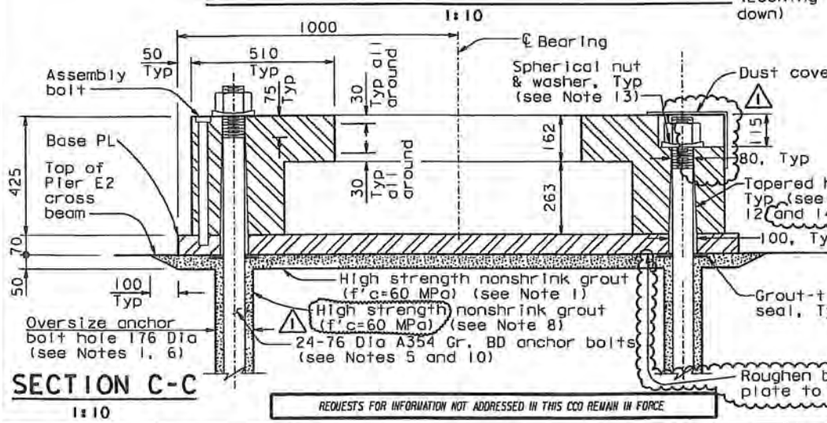

SECTION C-C

1:10

13. The spherical nut and washer shall be able to accomodate a maximum rotation of 3 degrees in any direction.

14. At the Contractor's option, the tapered anchor hole may increase to 200 in lieu of the 100 shown on the plans.

NOTES:

1. The grout pad thickness is shown for information only. The Contractor shall verify in the field the grout pad thickness required to align the center of rotation of the shear key and bearings at 0.750 m from the bottom surface of the box girder.
2. The lubricant shall be Self-lubricated.
3. Bearing plate shall be fastened to bottom of bottom housing using (A240 Type 316) counter sunk bolts.
4. All assembly bolts shall be A240 Type 316 unless noted otherwise.
5. The anchor bolt shall be pretensioned to 70% of ultimate tensile strength. Wherever there is no access from the top, anchor bolt shall be prestressed from the bottom.
6. The oversize anchor bolt holes are provided to accommodate construction tolerances.
7. 20 mm gap ±2 mm shall be maintained on both sides during installation.
8. For additional prestressing details, see "Prestressing Notes" sheet.
9. Solid shaft in bushing is press fit.
10. The prestressed anchor bolts shall be wrapped in a PT supplier recommended debonding tape, subject to the review and approval of the Engineer.
11. Grout-tight neoprene seal shown is schematic and is for information only. The seal shall prevent any high strength nonshrink grout from seeping inside the anchor bolt tapered holes during grouting of the base plate. This is necessary for proper stressing of the anchor bolts. The Contractor may propose an alternate detail to suit his erection means and methods, subject to review and approval of the Engineer.
12. For tapered hole details, see "Pier E2 Shear Key Details No. 1" sheet.

REQUESTS FOR INFORMATION NOT ADDRESSED IN THIS CCO REMAIN IN FORCE

ALL DIMENSIONS ARE IN MILLIMETERS UNLESS OTHERWISE SHOWN

DIST.	COUNTY	ROUTE	KILOMETER POST TOTAL PROJECT	SHEET NO.	TOTAL SHEETS
04	SF	80	13.2/13.9	884RI	1204

REGISTERED ENGINEER - CIVIL

12-6-04

PLANS APPROVAL DATE

Marwan N. Nader, No. C 054426, Exp. 12/31/09, CIVIL, REGISTERED PROFESSIONAL ENGINEER, STATE OF CALIFORNIA

The State of California or its officers or agents shall not be responsible for the accuracy or completeness of electronic copies of this plan sheet.

T.Y. LIN / MOFFATT & NICHOL
825 BATTERY STREET
SAN FRANCISCO, CA 94111

Caltrans now has a web site! To get to the web site, go to: http://www.dot.ca.gov

MARK	DATE	DESCRIPTIONS	BY	CH'D	CCO#
1	09/26/08	E2 CROSS BEAM	MN	NV	71

REVISIONS

CONTRACT CHANGE ORDER NO. 71
SHEET 8 OF 14

DESIGN	M. Nader	CHECKED	L. Rus
DETAILS	N. Vo	CHECKED	J. Leventini
QUANTITIES	N. Vo	CHECKED	J. Leventini

PREPARED FOR THE STATE OF CALIFORNIA
DEPARTMENT OF TRANSPORTATION

R. Manzanarez
PROJECT ENGINEER

BRIDGE NO. 34-0006L/R
KILOMETER POST 13.2/13.9

SAN FRANCISCO OAKLAND BAY BRIDGE
EAST SPAN SEISMIC SAFETY PROJECT
SELF-ANCHORED SUSPENSION BRIDGE
(SUPERSTRUCTURE & TOWER)

PIER E2 BEARING DETAILS NO. 2

R. Vallzadeh/V. Toan/Y.L./W.L./F.C.
DESIGN OVERSIGHT
SIGN OFF DATE 09/26/08

Rev. Date: 5-18-98

ORIGINAL SCALE IN MILLIMETERS FOR REDUCED PLANS 0 10 20 30 40 50 60 70 80 90 100

CU 04
EA 0120F1

DISREGARD PRINTS BEARING EARLIER REVISION DATES →

REVISION DATES (PRELIMINARY STAGE ONLY)

SHEET 467RI OF

FILE ⇒ I:\bb\04-0120F1\sos\contract plans and cco\cco\In progress\cco#71\original 09-26-08\dgn\okbrg02.dgn

USERNAME ⇒ ptom DATE PLOTTED ⇒ 08 OCT 2008 TIME PLOTTED ⇒ 15:36:24

100% PS&E

DIST.	COUNTY	ROUTE	KILOMETER POST TOTAL PROJECT	SHEET NO.	TOTAL SHEETS
04	SF	80	13.2/13.9	88451	1204

REGISTERED ENGINEER - CIVIL

09-26-08

PLANS APPROVAL DATE

Marwan N. Nader, No. C 054426, Exp. 12/31/09, CIVIL, REGISTERED PROFESSIONAL ENGINEER, STATE OF CALIFORNIA

The State of California or its officers or agents shall not be responsible for the accuracy or completeness of electronic copies of this plan sheet.

T.Y. LIN / MOFFATT & NICHOL
825 BATTERY STREET
SAN FRANCISCO, CA 94111

Caltrans now has a web site! To get to the web site, go to: http://www.dot.ca.gov

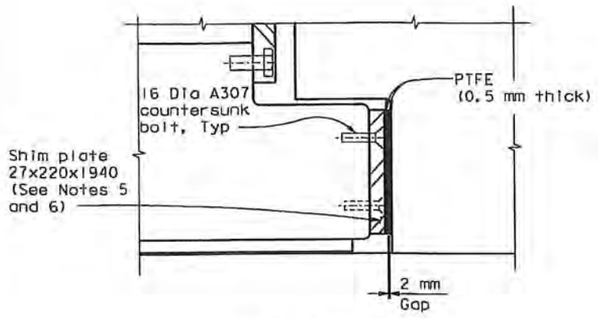

DETAIL A
(Detail A' similar)
1:5

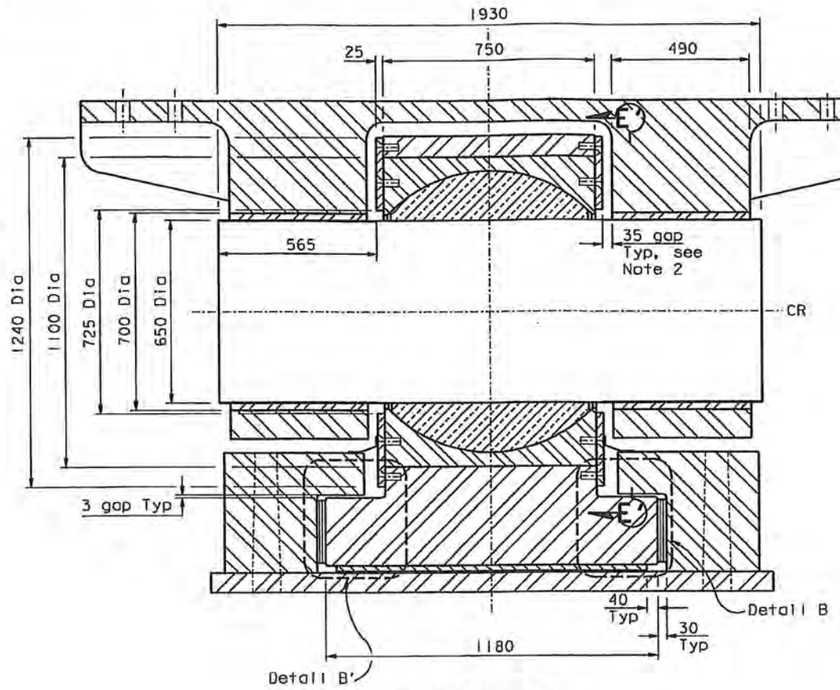

SECTION B-B
1:10

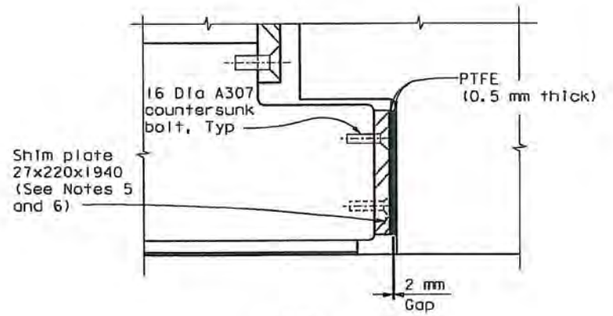

DETAIL B
(Detail B' similar)
1:5

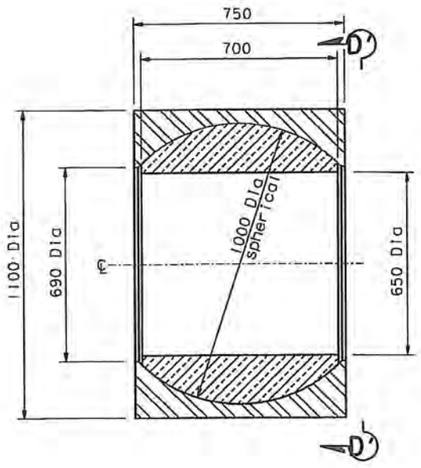

SPHERICAL BUSHING
ASSEMBLY DETAIL
1:10

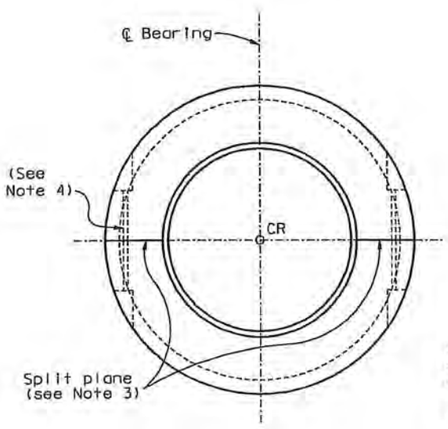

VIEW D'-D'
1:10

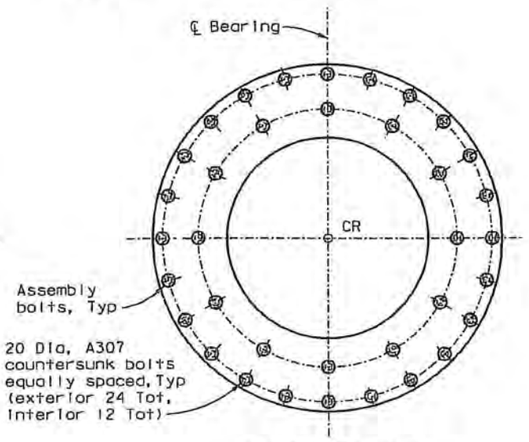

VIEW E'-E'
1:10
(Retaining Ring PL)

ALTERNATE BEARING DETAILS (See Note 1)
1:10

ALL DIMENSIONS ARE IN MILLIMETERS UNLESS OTHERWISE SHOWN

REQUESTS FOR INFORMATION NOT ADDRESSED IN THIS CCO REMAIN IN FORCE

MARK	DATE	REVISIONS DESCRIPTIONS	BY	CH'D	CCO#
1	09/26/08	E2 CROSS BEAM	MN	NV	71

CONTRACT CHANGE ORDER NO. 71
SHEET 9 OF 14

NOTES:

1. For details not shown, see "Pier E2 Bearing Details No. 2" sheet.
2. 35 mm gap ±2 mm shall be maintained on both sides during installation.
3. The split plane shall be parallel to the base plate in the final erected position.
4. Assembly bolts and recesses are shown schematically. Design and details of assembly bolts for spherical housing shall be per bearing manufacturer.
5. Shim plate and PTFE film shall be provided along the 2 sides of the bearing housing in the longitudinal direction of the bridge.
6. Shim plate details may vary with field conditions subject to review and approval of the Engineer.

100 % PS&E
DATE PLOTTED => 08 OCT 2008 TIME PLOTTED => 15:37:13
USERNAME => ptan

DESIGN	BY M. Nader	CHECKED N. Vo	PREPARED FOR THE STATE OF CALIFORNIA DEPARTMENT OF TRANSPORTATION
DETAILS	BY M. Nader	CHECKED N. Vo	
QUANTITIES	BY M. Nader	CHECKED N. Vo	

R. Vallzadeh/V. Toan/Y.L./W.L./F.C.
DESIGN OVERSIGHT
SIGN OFF DATE 09/26/08

Rev. Date: 5-18-98

R. Manzanarez
PROJECT ENGINEER

BRIDGE NO. 34-0006L/R
KILOMETER POST 13.2/13.9

SAN FRANCISCO OAKLAND BAY BRIDGE
EAST SPAN SEISMIC SAFETY PROJECT
SELF-ANCHORED SUSPENSION BRIDGE
(SUPERSTRUCTURE & TOWER)

PIER E2 BEARING DETAILS NO. 2A

ORIGINAL SCALE IN MILLIMETERS FOR REDUCED PLANS 0 10 20 30 40 50 60 70 80 90 100

CU 04
EA 0120F1

DISREGARD PRINTS BEARING EARLIER REVISION DATES

REVISION DATES (PRELIMINARY STAGE ONLY): 09/21/07

SHEET 467S1 OF

FILE => I:\bb\04-0120F1\sos\contract plans and cco\cco\In progress\cco=71\original 09-26-08\dgn\akbrg02a.dgn

Caltrans now has a web site! To get to the web site, go to: http://www.dot.ca.gov

Caltrans Metric

DIST.	COUNTY	ROUTE	KILOMETER POST TOTAL PROJECT	SHEET NO.	TOTAL SHEETS
04	SF	80	13.2/13.9	885R1	1204

REGISTERED ENGINEER - CIVIL

12-6-04

PLANS APPROVAL DATE

REGISTERED PROFESSIONAL ENGINEER — Marwan N. Nader — No. C 054426 — Exp. 12/31/09 — CIVIL — STATE OF CALIFORNIA

The State of California or its officers or agents shall not be responsible for the accuracy or completeness of electronic copies of this plan sheet.

T.Y. LIN / MOFFATT & NICHOL
825 BATTERY STREET
SAN FRANCISCO, CA 94111

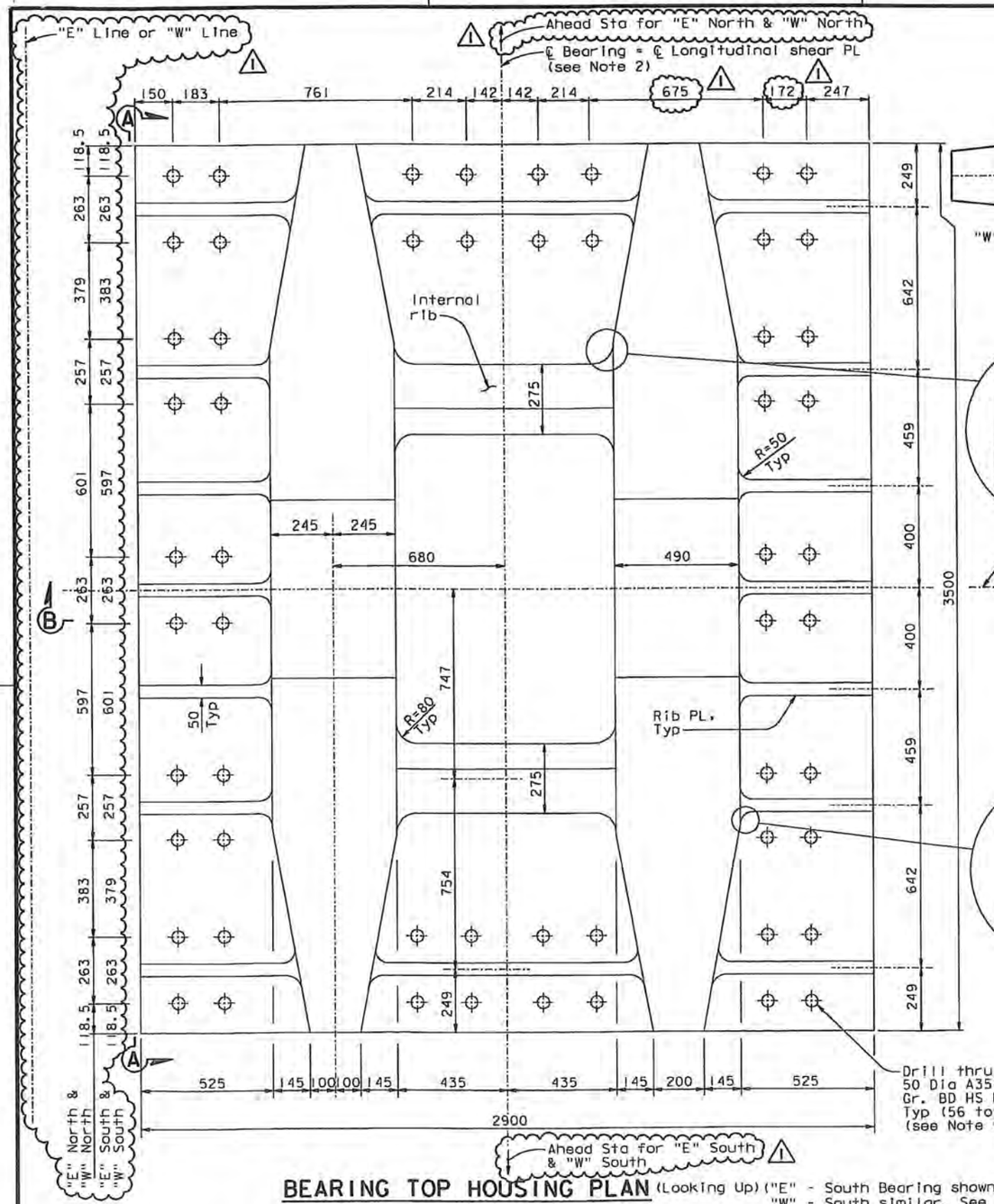

BEARING TOP HOUSING PLAN (Looking Up) ("E" - South Bearing shown. "W" - South similar. See Note 3 and 4)

1:10

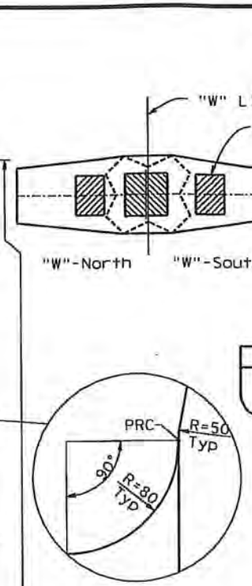

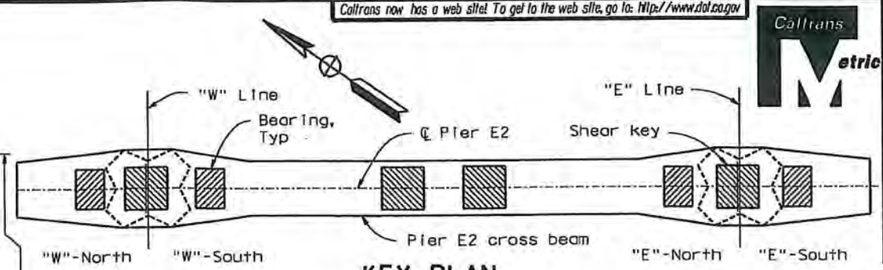

KEY PLAN

1:200

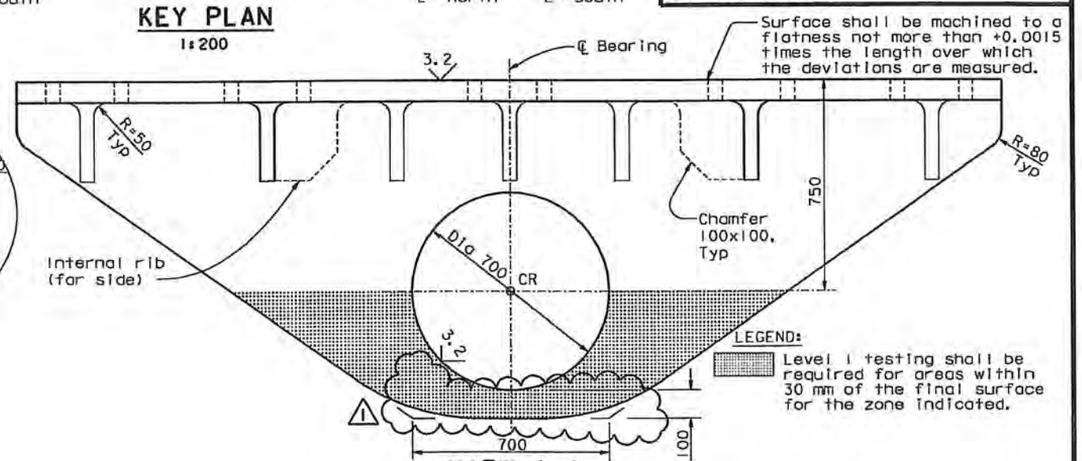

VIEW A-A

1:10

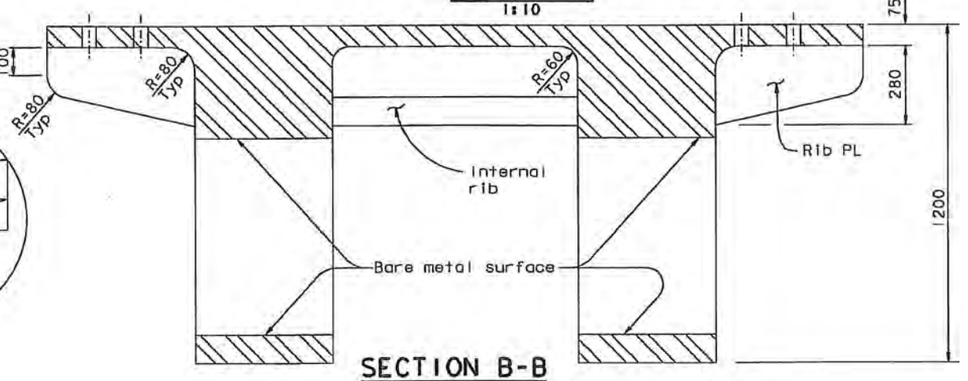

SECTION B-B

1:10

LEGEND:

Level I testing shall be required for areas within 30 mm of the final surface for the zone indicated.

NOTES:

1. Solid shaft in bushings is press fit.
2. For longitudinal shear plate location on box girder, see "Girder At East Transition No. 1" sheet.
3. "E"-South bearing and "W"-South bearing are similar. "E"-North bearing and "W"-North bearing are similar.
4. Bolt hole location shall be cross checked with the box girder stiffener layout before drilling holes. Bolt edge distance and clearance for tightening shall be verified and submitted for review and approval by the Engineer. A template shall be used to drill bolt holes in bearing top housing and girder key plate to ensure hole matching.
5. The anchor bolt shall be pretensioned to 70% of ultimate tensile strength.
6. At the Contractor's option, oversized holes and appropriate washer plates may be used in the bearing top housing.

ALL DIMENSIONS ARE IN MILLIMETERS UNLESS OTHERWISE SHOWN

REQUESTS FOR INFORMATION NOT ADDRESSED IN THIS CCO REMAIN IN FORCE

MARK	DATE	DESCRIPTIONS	BY	CH'D	CCO#
1	09/26/08	E2 CROSS BEAM	MN	NV	71

REVISIONS

CONTRACT CHANGE ORDER NO. 71

SHEET 10 OF 14

DESIGN	BY M. Nader	CHECKED	L. Rus
DETAILS	BY N. Vo	CHECKED	J. Leventini
QUANTITIES	BY N. Vo	CHECKED	J. Leventini

PREPARED FOR THE STATE OF CALIFORNIA DEPARTMENT OF TRANSPORTATION

R. Manzanarez
PROJECT ENGINEER

R. Vallzadeh/V. Toan/Y.L./W.L./F.C.
DESIGN OVERSIGHT
SIGN OFF DATE 09/26/08

Rev. Date: 5-18-98

ORIGINAL SCALE IN MILLIMETERS FOR REDUCED PLANS 0 10 20 30 40 50 60 70 80 90 100

CU 04
EA 0120F1

BRIDGE NO.	34-0006L/R
KILOMETER POST	13.2/13.9

DISREGARD PRINTS BEARING EARLIER REVISION DATES →

REVISION DATES (PRELIMINARY STAGE ONLY)

SAN FRANCISCO OAKLAND BAY BRIDGE
EAST SPAN SEISMIC SAFETY PROJECT

SELF-ANCHORED SUSPENSION BRIDGE (SUPERSTRUCTURE & TOWER)

PIER E2 BEARING DETAILS NO. 3

SHEET 468R1 OF

FILE => I:\bb\04-012001\sas\contract plans and cco\cco\in progress\cco=71\original 09-26-08\dgn\okbrg03.dgn

USERNAME => ption DATE PLOTTED => 08 OCT 2008 TIME PLOTTED => 15:38:09

100 % PS&E

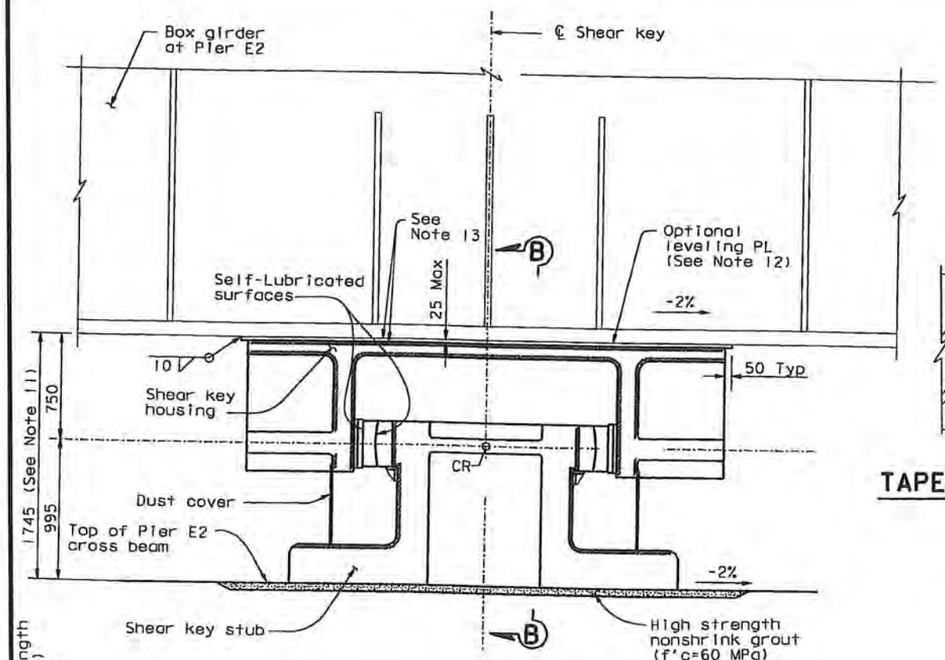

DETAIL B - SHEAR KEY ASSEMBLY

1:20
(Bolts not shown for clarity)
(Looking East)

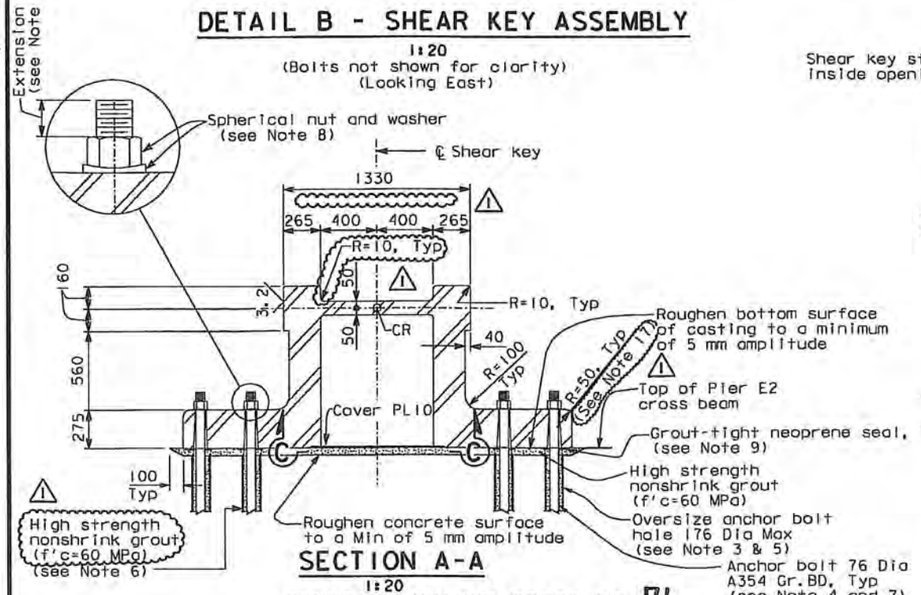

SECTION A-A

1:20

CONTRACT CHANGE ORDER NO. 71
SHEET 11 OF 14

REQUESTS FOR INFORMATION NOT ADDRESSED IN THIS CCO REMAIN IN FORCE

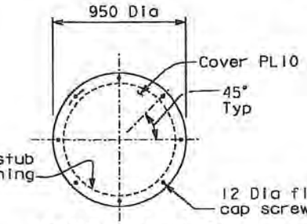

SECTION C-C

1:20

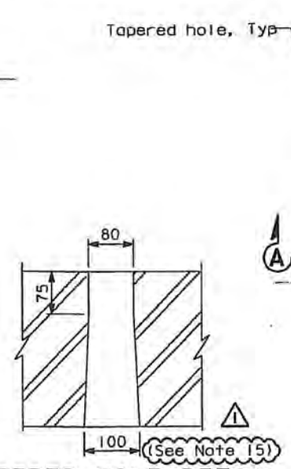

TAPERED HOLE DETAIL

1:5

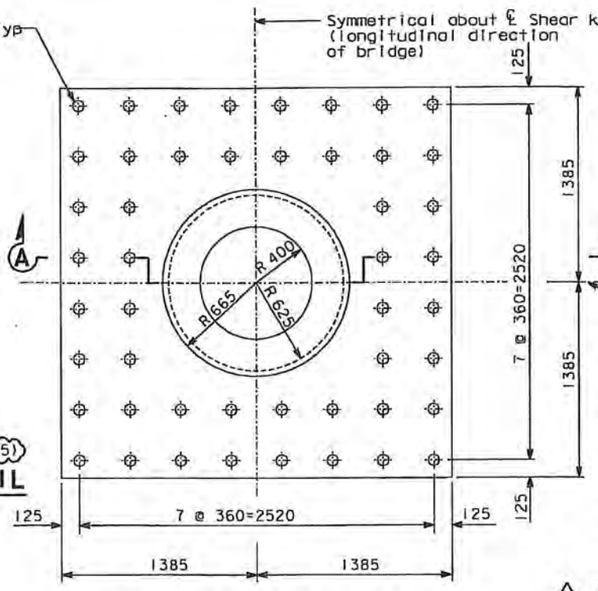

PLAN - SHEAR KEY STUB

1:20
(Anchor bolts not shown for clarity)

LEGEND:

CR	Center of Rotation
	Indicates zone with Level I testing requirements

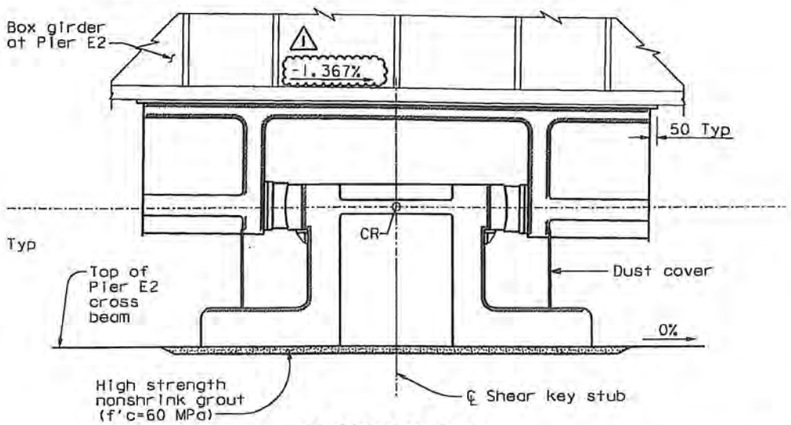

SECTION B-B

1:20
(Bolts not shown for clarity)

ALL DIMENSIONS ARE IN MILLIMETERS UNLESS OTHERWISE SHOWN

NOTES:

1. The shear key stub shall be Structural Casting Grade 345.
2. The lubricant shall be self-lubricated.
3. The grout pad thickness is shown for information only. The Contractor shall verify in the field the grout pad thickness required to align the center of rotation of the shear key and bearings at 0.750 m from the bottom surface of the box girder.
4. The anchor bolts shall be pretensioned by jacking to 70% ultimate tensile strength.
5. The oversize anchor bolt holes are provided to accommodate construction tolerances.
6. For additional prestressing details, see "Prestressing Notes" sheet.
7. The prestressed anchor bolts shall be wrapped in a PT supplier recommended debonding tape, subject to the review and approval of the Engineer.
8. The spherical nut and washer shall be able to accomodate a maximum rotation of 3 degrees in any direction.
9. Grout-tight neoprene seal shown is schematic and is for information only. The seal shall prevent any high strength nonshrink grout from seeping inside the anchor bolt tapered holes during grouting of the shear key stub. This is necessary for proper stressing of the anchor bolts. The Contractor may propose an alternate detail to suit their erection means and methods, subject to review and approval of the Engineer.
10. Bolted connection between shear key housing and box girder is slip-critical connection with class B contact surface.
11. The Contractor may provide optional leveling plates to achieve fit-up and level contact surfaces for the bearings and shear keys. The Contractor shall erect the E2 cap beam and E2 girders to the elevations and tolerances specified in the plans and special provisions.
12. Leveling plate shall be attached with plug welds at 0.5 m Max spacing, and a perimeter fillet weld.
13. All faying surfaces of the girder key plate, the shear key housing, and the optional leveling plate shall be machined after all welding for flatness and smoothness as specified for the top of the shear key housing. See "Pier E2 Shear Key Detail No. 2" sheet.
14. Extension length for anchor bolts at "E" Line and "W" Line shear keys shall be long enough to engage hydraulic lock.
15. At the Contractor's option, the tapered anchor hole may increase to 200 in lieu of the 100 shown on the plans.
16. The top shear key stub shaft section shall be "snug-fit" inside the spherical ring with a diameter gap between ring and stub of 1 mm Max.
17. At the Contractor's option, 10 mm radius may be used to facilitate stressing of anchor bolts.

DIST.	COUNTY	ROUTE	KILOMETER POST TOTAL PROJECT	SHEET NO.	TOTAL SHEETS
04	SF	80	13.2/13.9	887R2	1204

Caltrans Metric

REGISTERED ENGINEER - CIVIL

12-6-04
PLANS APPROVAL DATE

Marwan N. Nader, No. C 054426, Exp. 12/31/09, CIVIL, REGISTERED PROFESSIONAL ENGINEER, STATE OF CALIFORNIA

The State of California or its officers or agents shall not be responsible for the accuracy or completeness of electronic copies of this plan sheet.

T.Y. LIN / MOFFATT & NICHOL
825 BATTERY STREET
SAN FRANCISCO, CA 94111

Caltrans now has a web site! To get to the web site, go to: http://www.dot.ca.gov

MARK	DATE	DESCRIPTIONS	BY	CH'D	CCO#
2	07/17/09	E2 CROSS BEAM	MN	NV	71
1	09/26/08	E2 CROSS BEAM	MN	NV	71

REVISIONS

R. Valizadeh/V. Toan/Y. L./W. L./F. C.
DESIGN OVERSIGHT
SIGN OFF DATE 07/17/09

	BY	CHECKED
DESIGN	M. Nader	J. Denis
DETAILS	N. Vo	J. Denis
QUANTITIES	N. Vo	J. Denis

PREPARED FOR THE STATE OF CALIFORNIA
DEPARTMENT OF TRANSPORTATION

R. Manzanarez
PROJECT ENGINEER

BRIDGE NO. 34-0006L/R
KILOMETER POST 13.2/13.9

SAN FRANCISCO OAKLAND BAY BRIDGE
EAST SPAN SEISMIC SAFETY PROJECT
SELF-ANCHORED SUSPENSION BRIDGE
(SUPERSTRUCTURE & TOWER)

PIER E2 SHEAR KEY DETAILS NO. 1

CU 04
EA 0120F1

DISREGARD PRINTS BEARING EARLIER REVISION DATES

REVISION DATES (PRELIMINARY STAGE ONLY)

SHEET 470R2 OF

ORIGINAL SCALE IN MILLIMETERS FOR REDUCED PLANS 0 10 20 30 40 50 60 70 80 90 100

Rev. Date: 5-18-98

FILE => I:\bb\04-0120I\sas\contract plans and cco\cco\cco#71\4-revision 07-17-09\dgn\aksrd01a.dgn

USERNAME => c:\isharsk\ DATE PLOTTED => 17 JUL 2009 TIME PLOTTED => 15:10:30

100 % PS&E

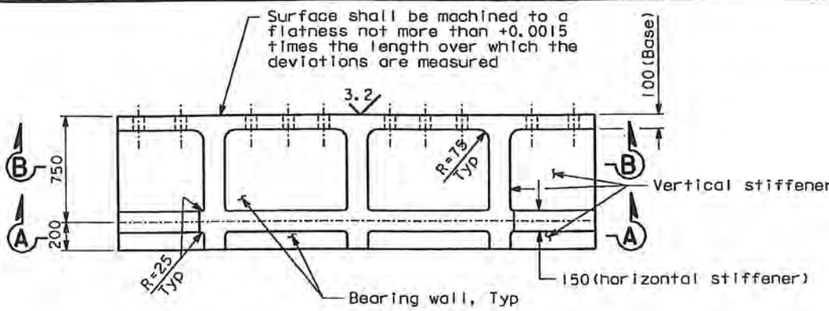

ELEVATION - SHEAR KEY HOUSING
1:20

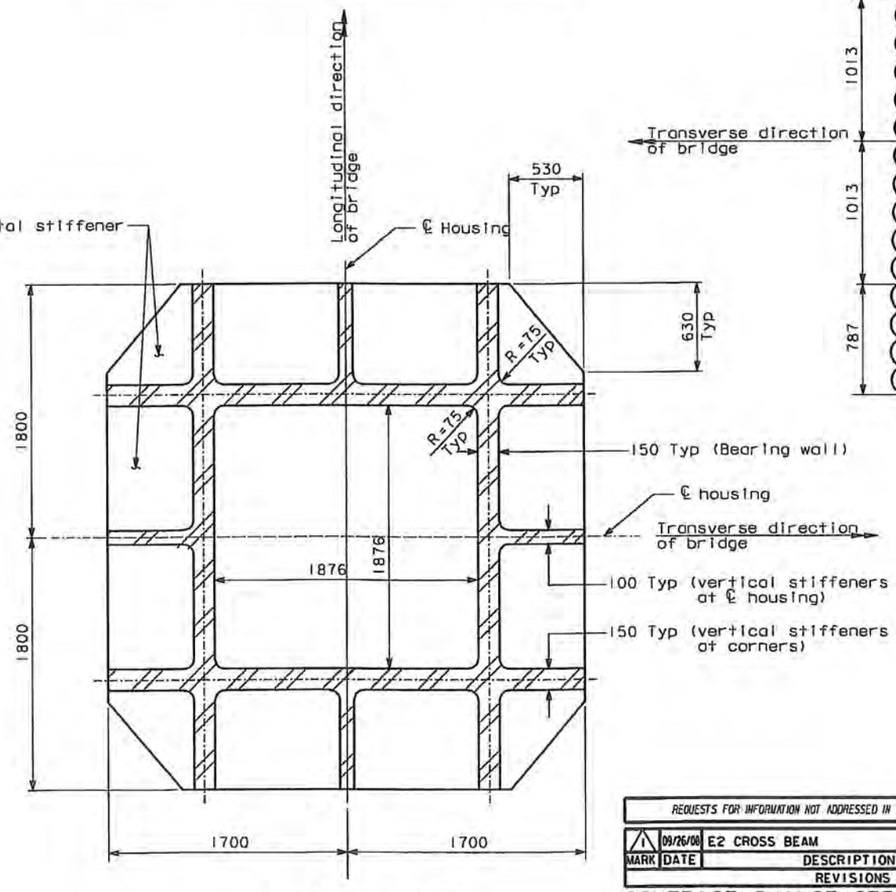

SECTION A-A
1:20

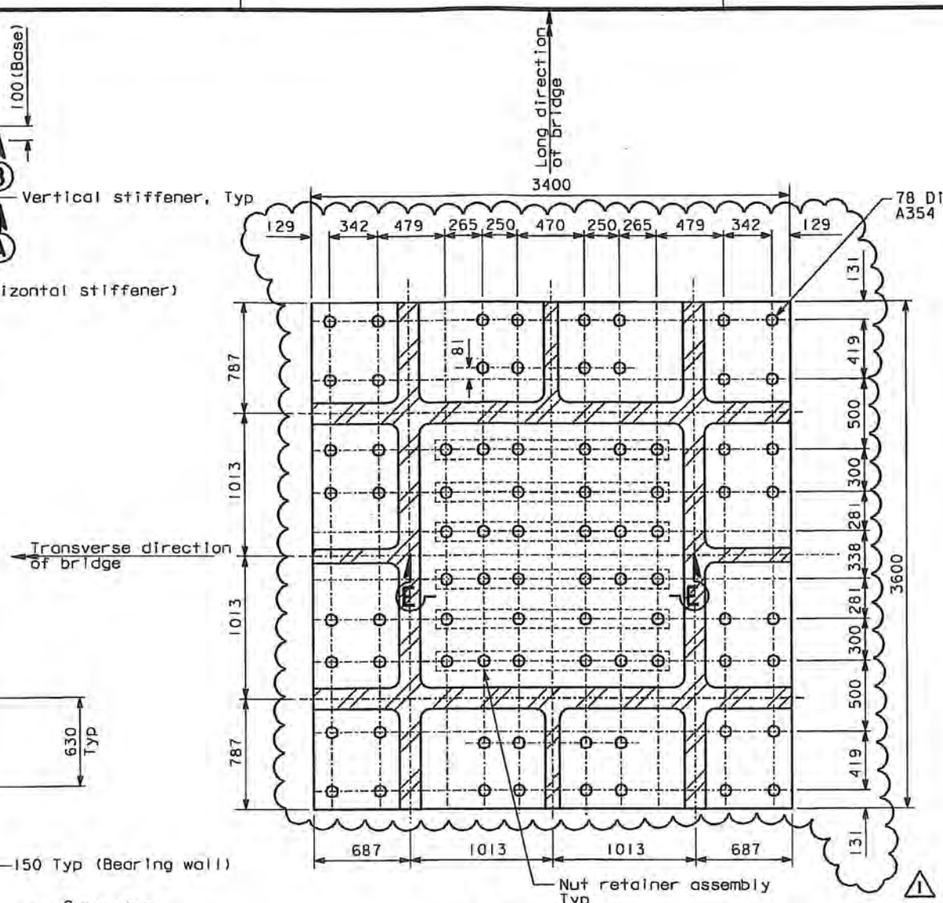

SECTION B-B (For details not shown see Section A-A)
1:20

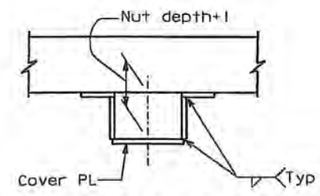

SECTION D-D
1:5

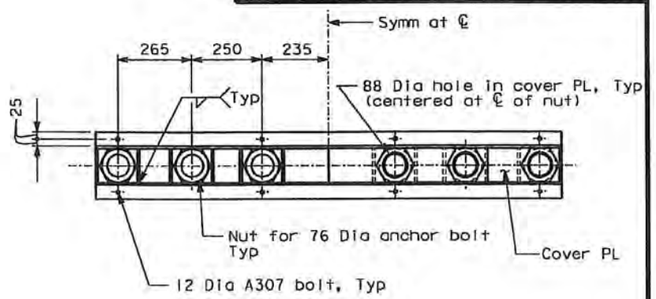

SECTION C-C
1:10

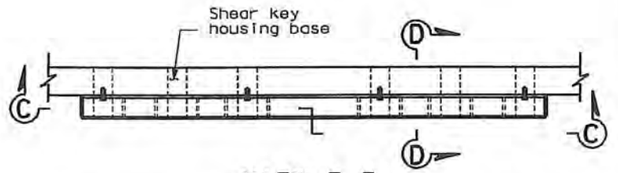

VIEW E-E
NUT RETAINER ASSEMBLY-ELEVATION
1:10
(All plates 8 mm thick)

NOTES:

1. The shear key housing shall be Structural Casting Grade 345.
2. The shear key housing bolt layout shall accommodate the girder and crossbeam plate stiffener location. For girder details at Pier E2, see "Girder At Pier E2 details" sheet. For crossbeam details at pier E2, see "Crossbeam at Pier E2" sheets.
3. Bolt hole location shall be cross checked with the box girder and crossbeam stiffener layout before drilling holes. Bolt edge distance and clearance for tightening shall be verified and submitted for review and approval by the Engineer. A template shall be used to drill bolt holes in shear key housing and girder key plate to ensure hole matching.
4. The anchor bolts shall be pretensioned to 70% of ultimate tensile strength.
5. Nut retainer assemblies including nuts shall be installed to shear key housing prior to assembling housing to bushing and stub.
6. Machined washers at bolt heads shall be used if necessary at stiffener fillets.

REQUESTS FOR INFORMATION NOT ADDRESSED IN THIS CCO REMAIN IN FORCE.

MARK	DATE	REVISIONS: DESCRIPTIONS	BY	CH'D	CCO#
1	09/26/08	E2 CROSS BEAM	MN	NV	71

CONTRACT CHANGE ORDER NO. 71
SHEET 12 OF 14

ALL DIMENSIONS ARE IN MILLIMETERS UNLESS OTHERWISE SHOWN

DIST.	COUNTY	ROUTE	KILOMETER POST TOTAL PROJECT	SHEET NO.	TOTAL SHEETS
04	SF	80	13.2/13.9	888RI	1204

REGISTERED ENGINEER - CIVIL
12-6-04
PLANS APPROVAL DATE
The State of California or its officers or agents shall not be responsible for the accuracy or completeness of electronic copies of this plan sheet.

REGISTERED PROFESSIONAL ENGINEER — Marwan N. Nader — No. C 054426 — Exp. 12/31/09 — CIVIL — STATE OF CALIFORNIA

T.Y. LIN / MOFFATT & NICHOL
825 BATTERY STREET
SAN FRANCISCO, CA 94111

Caltrans now has a web site! To get to the web site, go to: http://www.dot.ca.gov

DESIGN	BY	CHECKED
DETAILS	M. Nader	J. Denis
QUANTITIES	N. Vo	J. Denis
	N. Vo	J. Denis

R. Valizadeh/V. Toan/Y.L./W.L./F.C.
DESIGN OVERSIGHT
SIGN OFF DATE 09/20/08

PREPARED FOR THE STATE OF CALIFORNIA DEPARTMENT OF TRANSPORTATION

R. Manzanarez
PROJECT ENGINEER

BRIDGE NO. 34-0006L/R
KILOMETER POST 13.2/13.9

SAN FRANCISCO OAKLAND BAY BRIDGE
EAST SPAN SEISMIC SAFETY PROJECT
SELF-ANCHORED SUSPENSION BRIDGE
(SUPERSTRUCTURE & TOWER)

PIER E2 SHEAR KEY DETAILS NO. 2

Rev. Date: 5-18-98

ORIGINAL SCALE IN MILLIMETERS FOR REDUCED PLANS 0 10 20 30 40 50 60 70 80 90 100

CU 04
EA 0120F1

DISREGARD PRINTS BEARING EARLIER REVISION DATES →

REVISION DATES (PRELIMINARY STAGE ONLY)
05/09/02 07/07/02 12/13/02 05/09/03 12/07/05

SHEET 471RI OF

FILE => I:\bb\04-01200\sos\contract plans and cco\cco=71\original 09-26-08\dgn\oksrd01b.dgn

100 % PS&E

USERNAME => dtom
DATE PLOTTED => 08 OCT 2008
TIME PLOTTED => 15:40:47

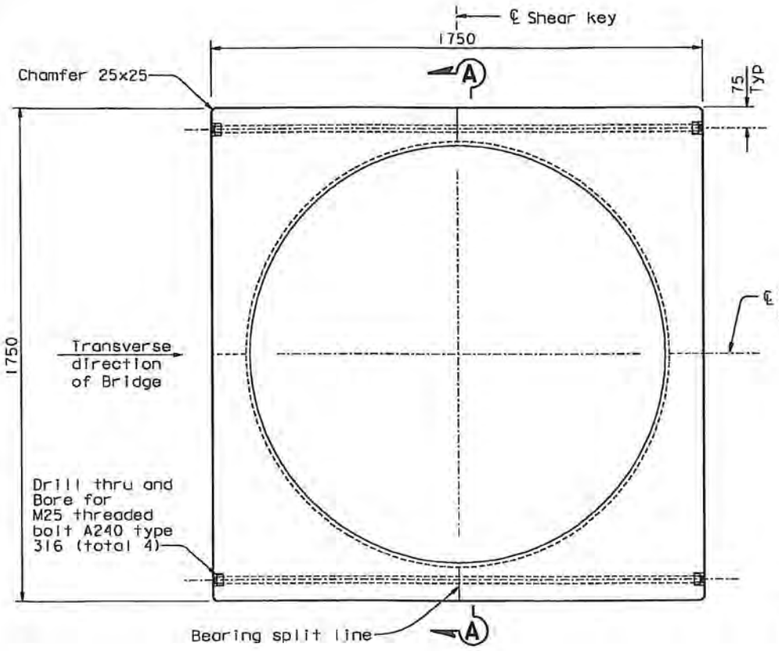

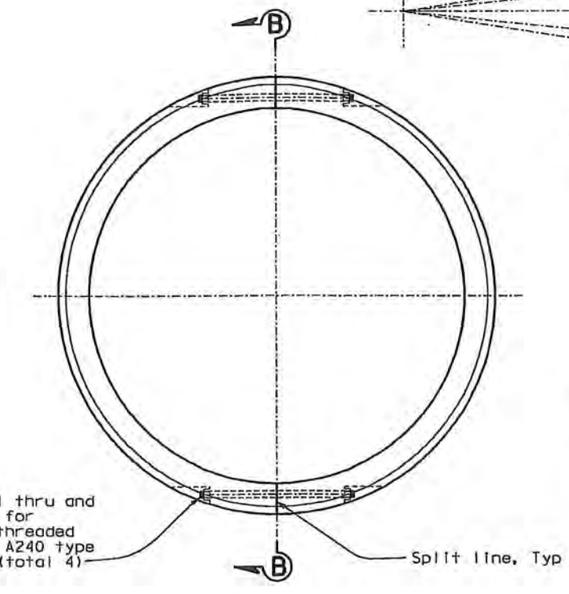

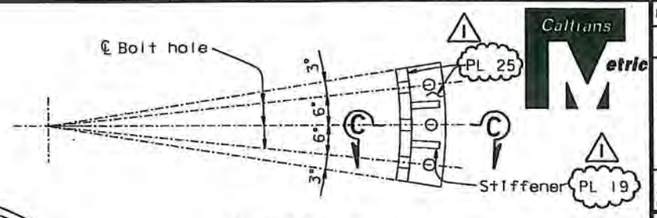

DETAIL A
1:5

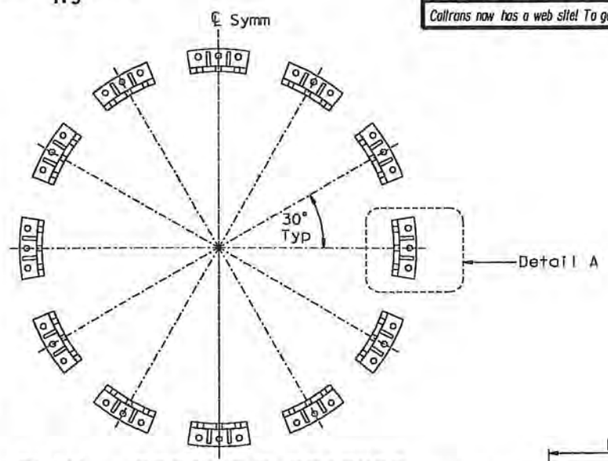

PLAN - RETAINER BRACKET (Looking up)
1:10

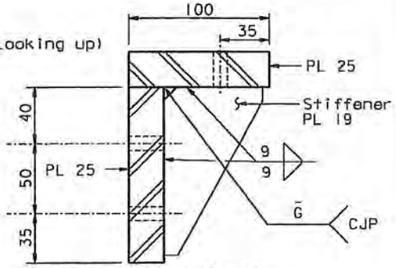

SECTION C-C
1:2

PLAN - SPHERICAL HOUSING
1:10

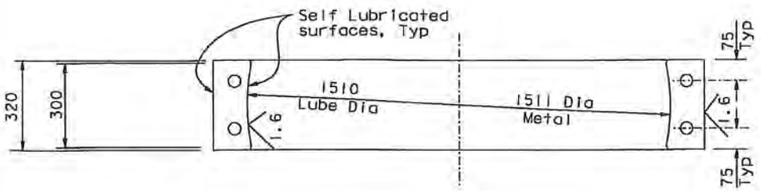

SECTION A-A
1:10

PLAN - SPHERICAL RING
1:10

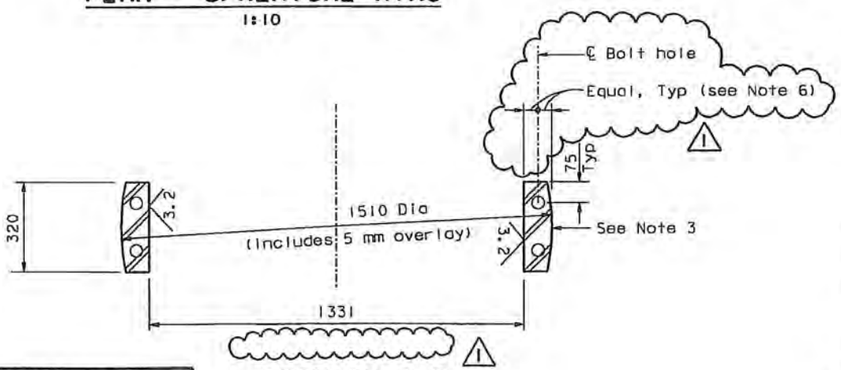

SECTION B-B
1:10

NOTES:

1. The spherical ring shall be Structural Casting Grade 345.
2. The spherical housing shall be high strength manganese bronze centrifugally cast to the requirements of B271-C86300. All assembly bolts shall be stainless steel A240 Type 316. 1
3. The mating surfaces of the spherical ring shall be 5 mm thick stainless steel weld overlay conforming to the requirements of A240 Type 316. 1
4. The lubricant shall be self-lubricated.
5. The spherical ring shall be "snug fit" over the shaft section of the shear key stub with a diameter gap of 1 mm Max.
6. At the Contractor's option, bolt hole location may be adjusted to accomodate seating of bolt nut and washer, subject to review and approval of the Engineer. 1

REQUESTS FOR INFORMATION NOT ADDRESSED IN THIS CCO REMAIN IN FORCE					
MARK	DATE	DESCRIPTIONS	BY	CH'D	CCO#
		REVISIONS			
1	09/26/08	E2 CROSS BEAM	MN	NV	71

CONTRACT CHANGE ORDER NO. 71
SHEET 13 OF 14

DIST.	COUNTY	ROUTE	KILOMETER POST TOTAL PROJECT	SHEET NO.	TOTAL SHEETS
04	SF	80	13.2/13.9	88BARI	1204

REGISTERED ENGINEER - CIVIL
12-7-05
PLANS APPROVAL DATE
The State of California or its officers or agents shall not be responsible for the accuracy or completeness of electronic copies of this plan sheet.

REGISTERED PROFESSIONAL ENGINEER — Marwan N. Nader — No. C 054426 — Exp. 12/31/09 — CIVIL — STATE OF CALIFORNIA

T.Y. LIN / MOFFATT & NICHOL
825 BATTERY STREET
SAN FRANCISCO, CA 94111

Caltrans now has a web site! To get to the web site, go to: http://www.dot.ca.gov

ALL DIMENSIONS ARE IN MILLIMETERS UNLESS OTHERWISE SHOWN

SAN FRANCISCO OAKLAND BAY BRIDGE
EAST SPAN SEISMIC SAFETY PROJECT
SELF-ANCHORED SUSPENSION BRIDGE
(SUPERSTRUCTURE & TOWER)

PIER E2 SHEAR KEY DETAILS NO. 3

DESIGN	BY M. Nader	CHECKED J. Denis	
DETAILS	BY N. Vo	CHECKED J. Denis	
QUANTITIES	BY N. Vo	CHECKED J. Denis	

R. Valizadeh/V. Toan/Y.L./W.L./F.C.
DESIGN OVERSIGHT
SIGN OFF DATE 09/28/08

PREPARED FOR THE STATE OF CALIFORNIA
DEPARTMENT OF TRANSPORTATION

R. Manzanarez
PROJECT ENGINEER

BRIDGE NO. 34-0006L/R
KILOMETER POST 13.2/13.9

CU 04
EA 0120F1

DISREGARD PRINTS BEARING EARLIER REVISION DATES →
REVISION DATES (PRELIMINARY STAGE ONLY): 12/01/05
SHEET 471ARI OF

Rev. Date: 5-18-98

ORIGINAL SCALE IN MILLIMETERS FOR REDUCED PLANS 0 10 20 30 40 50 60 70 80 90 100

FILE => I:\bb\04-0120I\sas\contract plans and cco\cco\In progress\cco#71\original 09-26-08\dgn\aksrd01c.dgn

100 % PS&E
DATE PLOTTED => 08 OCT 2008 TIME PLOTTED => 15:41:35
USERNAME => ptom

DIST.	COUNTY	ROUTE	KILOMETER POST TOTAL PROJECT	SHEET NO.	TOTAL SHEETS
04	SF	80	13.2/13.9	B88BR2	1204

REGISTERED ENGINEER - CIVIL

12-9-05

PLANS APPROVAL DATE

The State of California or its officers or agents shall not be responsible for the accuracy or completeness of electronic copies of this plan sheet.

REGISTERED PROFESSIONAL ENGINEER — Marwan N. Nader — No. C 054426 — Exp. 12/31/09 — CIVIL — STATE OF CALIFORNIA

T.Y. LIN / MOFFATT & NICHOL
825 BATTERY STREET
SAN FRANCISCO, CA 94111

Caltrans now has a web site! To get to the web site, go to: http://www.dot.ca.gov

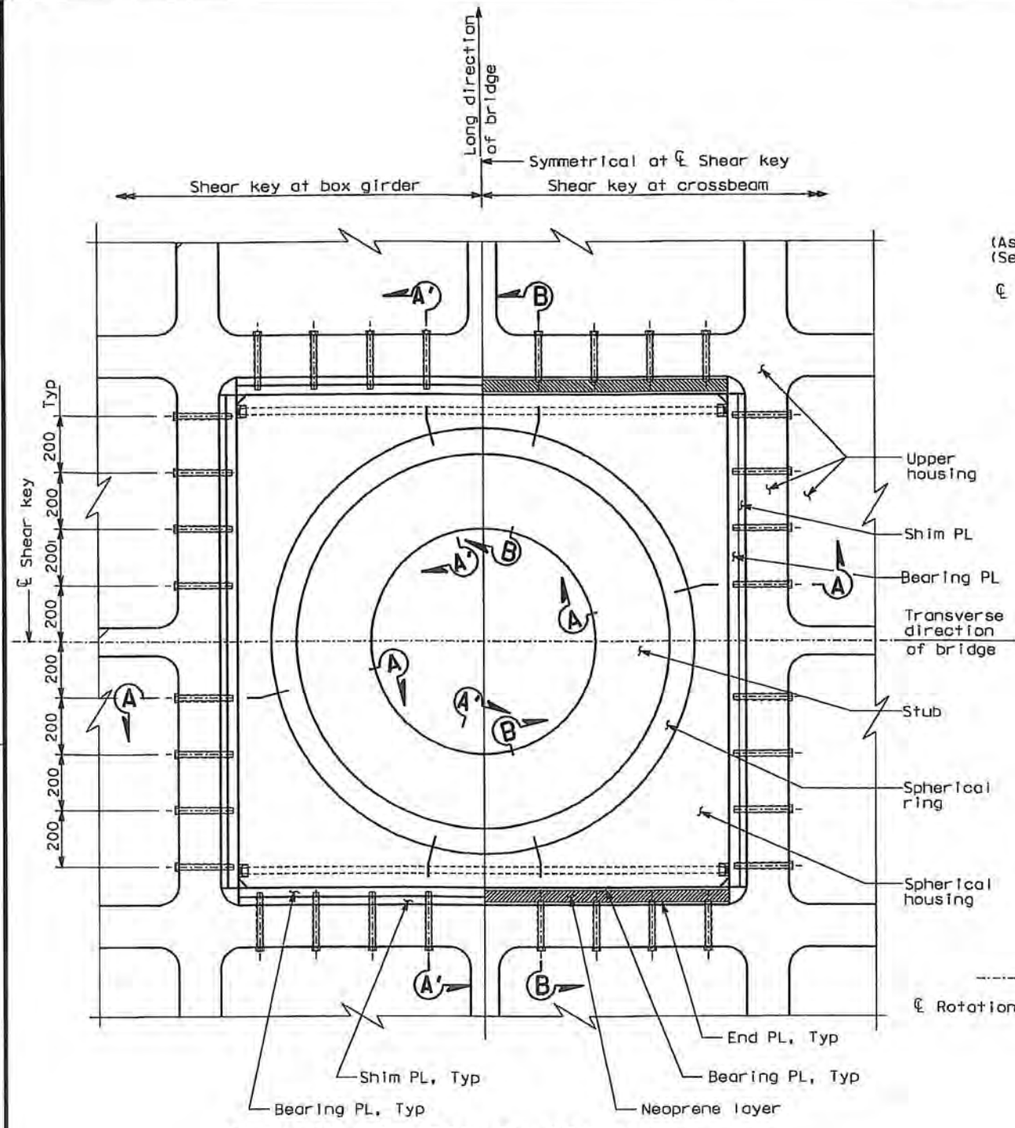

BUSHING CONNECTION DETAIL
1:10 (Looking up) (Retainer bracket not shown for clarity)

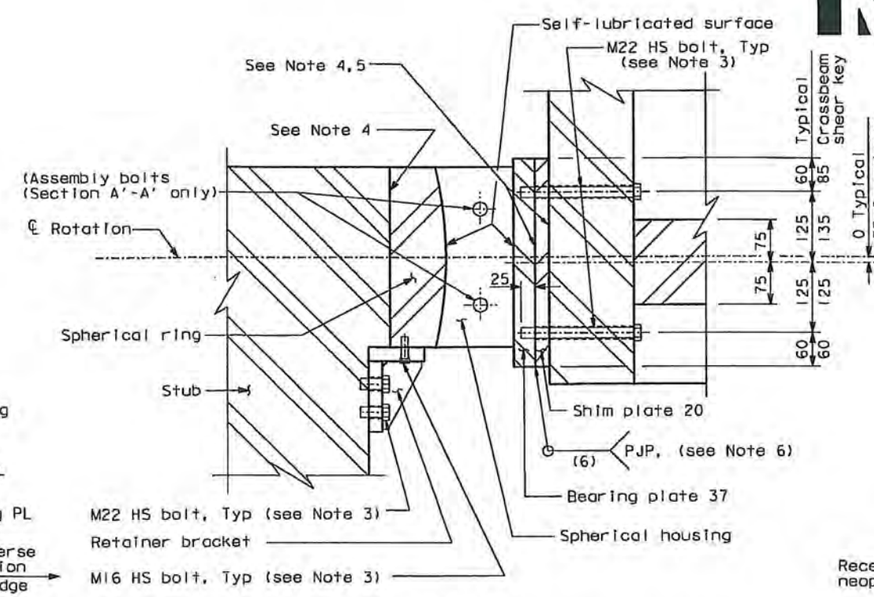

SECTION A-A
1:5 (Section A'-A' similar)

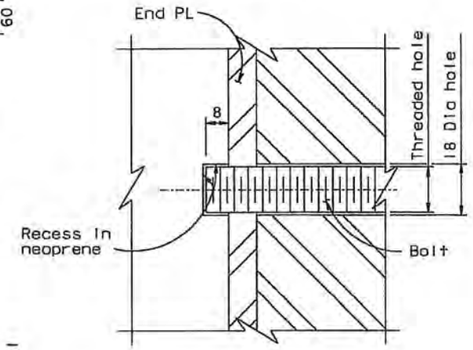

DETAIL A
1:1

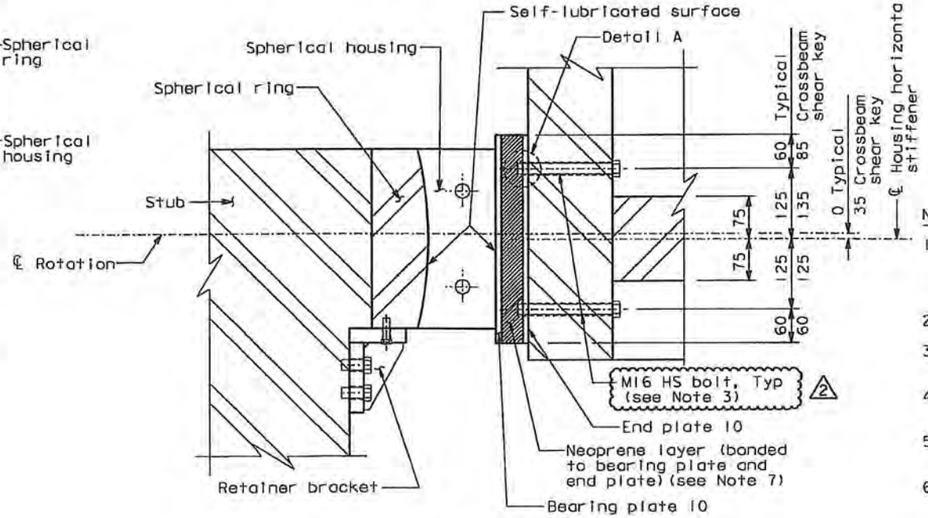

SECTION B-B
1:5

NOTES:

1. The mating surfaces of the spherical ring and bearing plate shall be 5 mm thick stainless steel weld overlay conforming to the requirements of A240, Type 316.
2. The lubricant shall be self-lubricated.
3. High strength bolts shall be installed snug-tight only.
4. Contact steel surfaces shall comply with Class A surface (slip coefficient 0.33).
5. The Contractor shall ensure the flatness requirements are met at the faying surfaces.
6. Welding shall be made after field measurement and actual shim plate thickness has been determined.
7. Field measurement shall be made to determine actual thickness of neoprene layer.

100% PS&E

CONTRACT CHANGE ORDER NO. 71
SHEET 14 OF 14

REQUESTS FOR INFORMATION NOT ADDRESSED IN THIS CCO REMAIN IN FORCE

MARK	DATE	DESCRIPTIONS	BY	CH'D	CCO#
2	02/13/09	E2 CROSS BEAM	MN	NV	71
1	09/26/08	E2 CROSS BEAM	MN	NV	71

REVISIONS

R. Valizadeh/V. Toan/Y.L./W.L./F.C.
DESIGN OVERSIGHT
SIGN OFF DATE 02/13/09

	BY	CHECKED
DESIGN	M. Nader	L. Rus
DETAILS	A. Sanjines	J. Leventini
QUANTITIES	A. Sanjines	J. Leventini

PREPARED FOR THE STATE OF CALIFORNIA DEPARTMENT OF TRANSPORTATION

R. Manzonarez
PROJECT ENGINEER

ALL DIMENSIONS ARE IN MILLIMETERS UNLESS OTHERWISE SHOWN

BRIDGE NO. 34-0006L/R
KILOMETER POST 13.2/13.9

CU 04
EA 0120F1

DISREGARD PRINTS BEARING EARLIER REVISION DATES → 12/01/05

SAN FRANCISCO OAKLAND BAY BRIDGE
EAST SPAN SEISMIC SAFETY PROJECT
SELF-ANCHORED SUSPENSION BRIDGE
(SUPERSTRUCTURE & TOWER)

PIER E2 SHEAR KEY DETAILS NO. 4

SHEET 471BR2 OF

Rev. Date: 5-18-98

ORIGINAL SCALE IN MILLIMETERS FOR REDUCED PLANS 0 10 20 30 40 50 60 70 80 90 100

FILE => I:\bb\04-012001\sas\contract plans and cco\cco=71\revision 02-13-09\dgn\aksrd01d.dgn

USERNAME => dwinrow DATE PLOTTED => 19 FEB 2009 TIME PLOTTED => 11:22:39

STATE OF CALIFORNIA - DEPARTMENT OF TRANSPORTATION

CONTRACT CHANGE ORDER

Change Requested by: Engineer

CCO: 71 **Suppl. No. 1** **Contract No. 04 – 0120F4** **Road** SF-80-13.2/13.9 **FED. AID LOC.:**

To: **AMERICAN BRIDGE/FLUOR ENTERPRISES INC A JOINT VENTURE**

You are directed to make the following changes from the plans and specifications or do the following described work not included in the plans and specifications for this contract. ***NOTE: This change order is not effective until approved by the Engineer.***

Description of work to be done, estimate of quantities and prices to be paid. (Segregate between additional work at contract price, agreed price and force account.) Unless otherwise stated, rates for rental of equipment cover only such time as equipment is actually used and no allowance will be made for idle time. This last percentage shown is the net accumulated increase or decrease from the original quantity in the Engineer's Estimate.

Extra Work at Lump Sum:

Fabricate and install catcher brackets to the shear keys.

Brackets shall conform to Standard Specifications Section 55 "Steel Structures" and shall be Grade 250 steel or better.

The following revised plan sheet details the changes addressed in this change order: 888BR3 (of 1204) as shown on sheet 2 of this change order.

This change order resolves the costs associated with Contractor Request for Information (RFI) numbers 2137R1 and 2137R2 with respect to changes listed above.

For this work, the Contractor will receive a lump sum price of $23,510.00. This sum constitutes full and complete compensation for furnishing all labor, material, tools and incidentals including all markups by reason of this change.

Extra Work at Lump Sum..... $23,510.00

Estimated Cost: **Increase** ☒ **Decrease** ☐ **$23,510.00**

By reason of this order the time of completion will be adjusted as follows: **0 Days**

Submitted by

Signature _____ **Resident Engineer** Kannu Balan, Senior T.E. **Date** 2-29-12

Approval Recommended by

Signature _____ **Supervising Transportation Engineer** William Casey, Supervising T.E. **Date** 3-5-12

Engineer Approval by

Signature _____ for Casey **Supervising Transportation Engineer** William Casey, Supervising T.E. **Date** 3-12-12

We the undersigned contractor, have given careful consideration to the change proposed and agree, if this proposal is approved, that we will provide all equipment, furnish the materials, except as otherwise be noted above, and perform all services necessary for the work above specified, and will accept as full payment therefor the prices shown above.

NOTE: If you, the contractor, do not sign acceptance of this order, your attention is directed to the requirements of the specifications as to proceeding with the ordered work and filing a written protest within the time therein specified.

Contractor Acceptance by

Signature _____ (Print name and title) BRIAN A. PETERSEN - PROJECT DIRECTOR **Date** 08MAR12

STATE OF CALIFORNIA - DEPARTMENT OF TRANSPORTATION

CONTRACT CHANGE ORDER MEMORANDUM

DATE: 2/28/2012 Page 1 of 1

TO: Tony Anziano, Program Manager /	FILE: **E.A.** 04 - 0120F4
FROM: Kannu Balan, Senior TE	**CO-RTE-PM** SF-80-13.2/13.9
	FED. NO.
CCO#: **71** SUPPLEMENT#: **1** Category Code: **CHPA**	CONTINGENCY BALANCE (incl. this change) **$113,139,261.58**
COST: **$23,510.00** INCREASE ☑ DECREASE ☐	HEADQUARTERS APPROVAL REQUIRED? ☑ YES ☐ NO
SUPPLEMENTAL FUNDS PROVIDED: **$0.00**	IS THIS REQUEST IN ACCORDANCE WITH ENVIRONMENTAL DOCUMENTS? ☑ YES ☐ NO
CCO DESCRIPTION: E2 Shear Key Catcher Brackets	**PROJECT DESCRIPTION:** CONSTRUCT SELF-ANCHORED SUSPENSION BRIDGE

Original Contract Time:	Time Adj. This Change:	Previously Approved CCO Time Adjustments:	Percentage Time Adjusted: (including this change)	Total # of Unreconciled Deferred Time CCO(s): (including this change)
2490 Day(s)	**0** Day(s)	**501** Day(s)	**20** %	**3**

THIS CHANGE ORDER PROVIDES FOR:

Fabricating and installing catcher brackets to the shear keys.

Catcher brackets are being added to the shear keys to prevent excessive rotation of the spherical housing. CCO 71S0 compensated for the additional machining at the fabrication facility in Korea. This supplement will include the material and field installation costs of the catcher brackets.

This change order resolves the costs associated with Contractor Request for Information (RFI) numbers 2137R1 and 2137R2 with respect to changes listed above.

The cost of this supplemental change is $23,510.00, which can be financed from the contingency fund. This will result in a cumulative amount of $737,490.00 for CCO 71S0 and 71S1. A detailed cost estimate is on file.

No time adjustment is warranted as this change order does not affect the controlling operation.

This change order has concurrence from Peter Siegenthaler (Principal TE), Brian Boal (Supervising BE), Ken Terpstra (Proj. Manager), Rich Foley (HQ Oversight), Wenyi Long (Bridge Design), Jing Chen (District Design), and Lina Ellis (Maintenance) February 28, 2012.

CONCURRED BY:			
Construction Engineer:	PCE, Pete Siegenthaler, Prin TE	Date	1/3/11
Bridge Engineer:	Brian Boal, Sup BE	Date	1/3/11
Project Engineer:	CT Oversight, Wenyi Long, P.E.	Date	1/12/11
Project Manager:	Proj Manager, Ken Terpstra	Date	1/3/11
FHWA Rep.:		Date	
Environmental:		Date	
Other (specify):	HQ, Rich Foley	Date	1/3/11
Other (specify):	District Design, Jing Chen	Date	3/10/11
District Prior Approval By:	HQ, Larry Salhaney	Date	1/6/11
HQ (Issue Approve) By:		Date	
Resident Engineer's Signature:		Date	2/29/12

ESTIMATE OF COST

	THIS REQUEST	TOTAL TO DATE
ITEMS	$0.00	$235,940.00
FORCE ACCOUNT	$0.00	$0.00
AGREED PRICE	$23,510.00	$76,263.00
ADJUSTMENT	$0.00	$425,287.00
TOTAL	$23,510.00	$737,490.00

FEDERAL PARTICIPATION

☐ PARTICIPATING ☐ PARTICIPATING IN PART ☑ NONE
☐ NON-PARTICIPATING (MAINTENANCE) ☐ NON-PARTICIPATING

FEDERAL SEGREGATION (if more than one Funding Source or P.I.P. type)
☐ CCO FUNDED PER CONTRACT ☐ CCO FUNDED AS FOLLOWS

FEDERAL FUNDING SOURCE	PERCENT

ADA Notice: For individuals with sensory disabilities, this document is available in alternate formats. For information call: (916) 654-6410 or TDD (916) 654-3880 or write Records and Forms Management, 1120 N Street, MS-89, Sacramento, CA 95814.

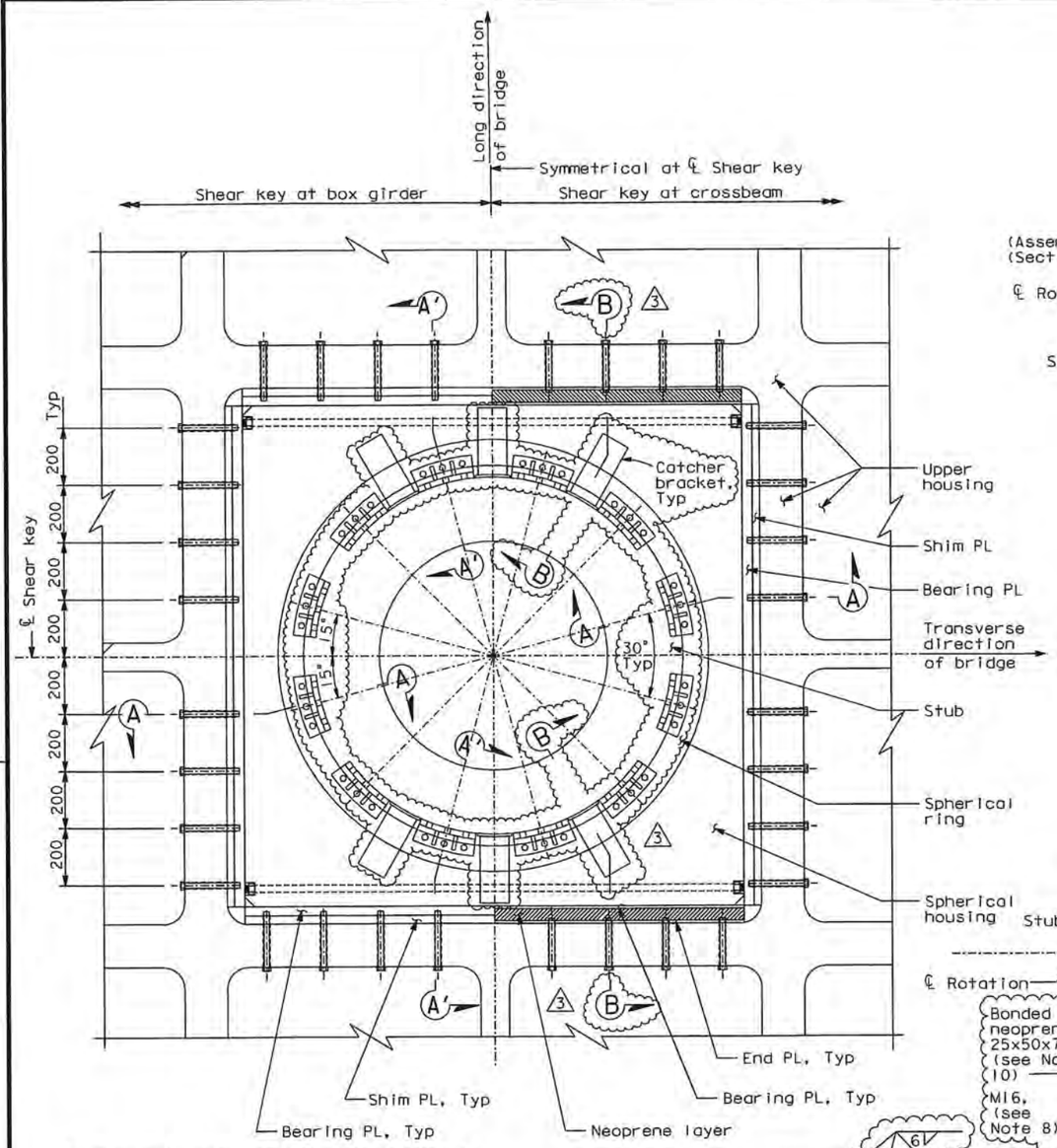

BUSHING CONNECTION DETAIL (Looking up)

1:10

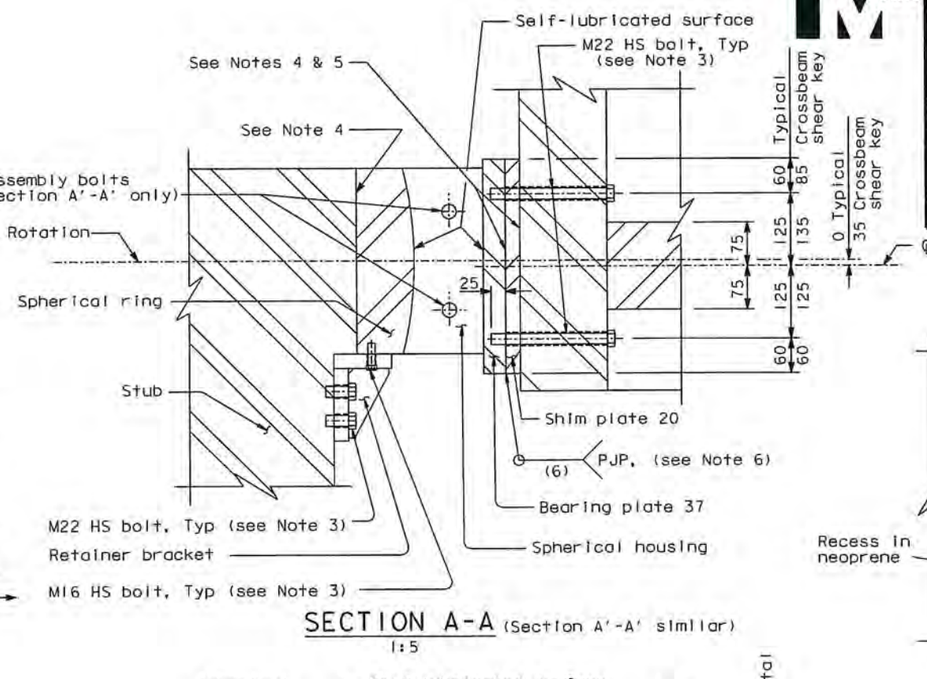

SECTION A-A (Section A'-A' similar)

1:5

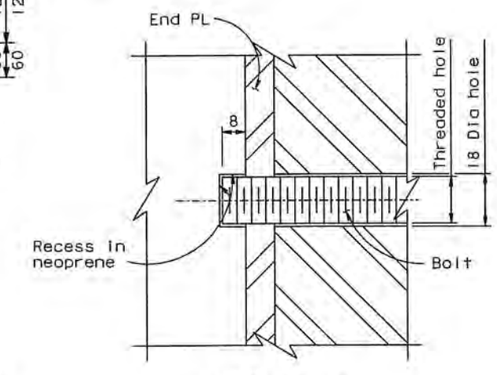

DETAIL A

1:1

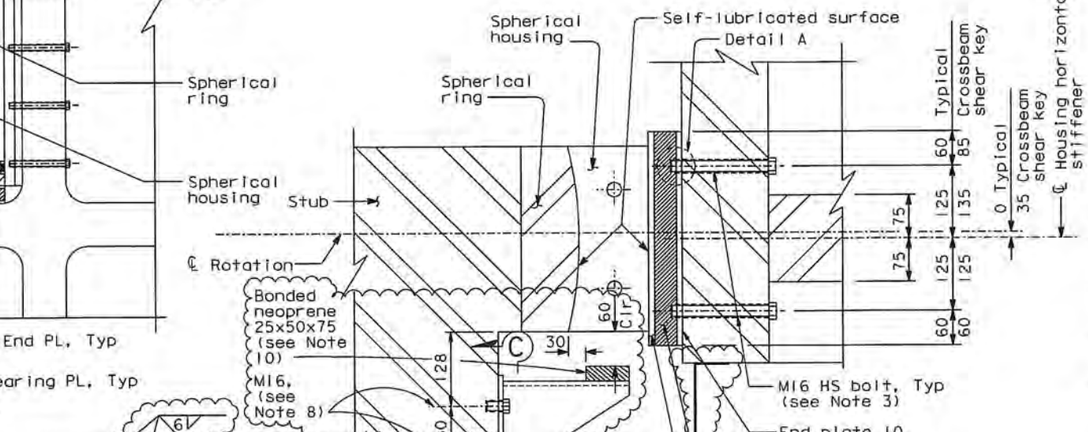

SECTION B-B

1:5

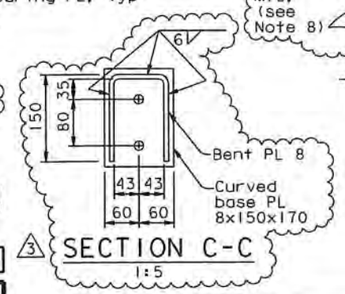

SECTION C-C

1:5

NOTES:

1. The mating surfaces of the spherical ring and bearing plate shall be 5 mm thick stainless steel weld overlay conforming to the requirements of A240, Type 316.
2. The lubricant shall be self-lubricated.
3. High strength bolts shall be installed snug-tight only.
4. Contact steel surfaces shall comply with Class A surface (slip coefficient 0.33).
5. The Contractor shall ensure the flatness requirements are met at the faying surfaces.
6. Welding shall be made after field measurement and actual shim plate thickness has been determined.
7. Field measurement shall be made to determine actual thickness of neoprene layer.
3. 8. Bolts shall be installed snug-tight plus 1/4 turn.
9. Catcher brackets shall be installed for shear keys at crossbeam only.
10. Neoprene pad shall satisfy the requirements of Caltrans Standard Specifications Section 51-1.14.

ALL DIMENSIONS ARE IN MILLIMETERS UNLESS OTHERWISE SHOWN

CONTRACT CHANGE ORDER NO. 71S1
SHEET 2 OF 2

REQUESTS FOR INFORMATION NOT ADDRESSED IN THIS CCO REMAIN IN FORCE

MARK	DATE	DESCRIPTIONS	BY	CH'D	CCO#
3	01/04/11	E2 SHEAR KEY CATCHER BRACKETS	MN	NV	71S1
2	02/13/09	E2 CROSS BEAM	MN	NV	71
1	09/26/08	E2 CROSS BEAM	MN	NV	71

REVISIONS

	BY	CHECKED
DESIGN	M. Nader	L. Rus
DETAILS	A. Sanjines	J. Leventini
QUANTITIES	A. Sanjines	J. Leventini

PREPARED FOR THE STATE OF CALIFORNIA
DEPARTMENT OF TRANSPORTATION

R. Manzanarez
PROJECT ENGINEER

BRIDGE NO. 34-0006L/R
KILOMETER POST 13.2/13.9

CU 04
EA 0120F1

R. Vallzadeh/V. Toan/Y. L./W. L./F. C.
DESIGN OVERSIGHT
SIGN OFF DATE 01/04/11

Rev. Date: 5-18-98

ORIGINAL SCALE IN MILLIMETERS FOR REDUCED PLANS 0 10 20 30 40 50 60 70 80 90 100

DISREGARD PRINTS BEARING EARLIER REVISION DATES

REVISION DATES (PRELIMINARY STAGE ONLY) 12/07/05

SHEET 471BR3 OF

FILE => I:\bb\04-012001\sas\contract plans and cco\cco\cco-71s1\3-update 01-04-11\dgn\oksrd01d.dgn

DIST.	COUNTY	ROUTE	KILOMETER POST TOTAL PROJECT	SHEET NO.	TOTAL SHEETS
04	SF	80	13.2/13.9	888BR3	1204

REGISTERED/ENGINEER - CIVIL

12-9-05
PLANS APPROVAL DATE

REGISTERED PROFESSIONAL ENGINEER Marwan N. Nader No. C 054426 Exp. 12/31/11 CIVIL STATE OF CALIFORNIA

The State of California or its officers or agents shall not be responsible for the accuracy or completeness of electronic copies of this plan sheet.

T.Y. LIN / MOFFATT & NICHOL
825 BATTERY STREET
SAN FRANCISCO, CA 94111

Caltrans now has a web site! To get to the web site, go to: http://www.dot.ca.gov

SAN FRANCISCO OAKLAND BAY BRIDGE
EAST SPAN SEISMIC SAFETY PROJECT
SELF-ANCHORED SUSPENSION BRIDGE
(SUPERSTRUCTURE & TOWER)

PIER E2 SHEAR KEY DETAILS NO. 4

100 % PS&E

USERNAME => orivera DATE PLOTTED => 04 JAN 2011 TIME PLOTTED => 11:56:14

STATE OF CALIFORNIA - DEPARTMENT OF TRANSPORTATION

CONTRACT CHANGE ORDER

Change Requested by: Engineer

CCO: 72 **Suppl. No.** 0 **Contract No.** 04 – 0120F4 **Road** SF-80-13.2/13.9 **FED. AID LOC.:**

To: **AMERICAN BRIDGE/FLUOR ENTERPRISES INC A JOINT VENTURE**

You are directed to make the following changes from the plans and specifications or do the following described work not included in the plans and specifications for this contract. ***NOTE: This change order is not effective until approved by the Engineer.***

Description of work to be done, estimate of quantities and prices to be paid. (Segregate between additional work at contract price, agreed price and force account.) Unless otherwise stated, rates for rental of equipment cover only such time as equipment is actually used and no allowance will be made for idle time. This last percentage shown is the net accumulated increase or decrease from the original quantity in the Engineer's Estimate.

Adjustment of Compensation at Lump Sum:

Modify cable band stanchions, messenger cable, and messenger cable attachments.

The following revised plan sheets detail the changes addressed in this change order: 261R1, 261S1, 261S2, 261S3, 261S6, 261S7, 266R1, 752R2, 809R1, 812R1, 813R4, 813S1, 813S2R3, 813S3R2, 813S4, 813S5, 814R4, 814S1R1, and 815R2 (of 1204) as shown on sheets 2 through 20 of this change order.

This change order resolves the costs associated with Contractor Request for Information (RFI) numbers 270, 1237, 1433, 1456R0, 1456R1, 1568R0, 1568R1, 1907R2, 2404R0, and 2404R1 with respect to changes listed above.

For this work, the Contractor will receive a lump sum price of $688,678.00. This sum constitutes full and complete compensation for furnishing all labor, material, tools and incidentals including all markups by reason of this change.

Adjustment of Compensation at Lump Sum..... $688,678.00

Any electrical and painting shown on these plan sheets will be addressed in a separate change order.

Estimated Cost: **Increase** ☒ **Decrease** ☐ **$688,678.00**

By reason of this order the time of completion will be adjusted as follows: **0 Days**

Submitted by

Signature **Resident Engineer** Darryl Schram, Senior T.E. **Date** 7/18/12

Approval Recommended by

Signature **Supervising Transportation Engineer** William Casey, Supervising T.E. **Date** 7/19/12

Engineer Approval by

Signature **Supervising Transportation Engineer** William Casey, Supervising T.E. **Date** 7-27-12

We the undersigned contractor, have given careful consideration to the change proposed and agree, if this proposal is approved, that we will provide all equipment, furnish the materials, except as otherwise be noted above, and perform all services necessary for the work above specified, and will accept as full payment therefor the prices shown above.

NOTE: If you, the contractor, do not sign acceptance of this order, your attention is directed to the requirements of the specifications as to proceeding with the ordered work and filing a written protest within the time therein specified.

Contractor Acceptance by

Signature (Print name and title) BRIAN A. PETERSEN - PROJECT DIRECTOR **Date** 25JUL12

STATE OF CALIFORNIA - DEPARTMENT OF TRANSPORTATION

CONTRACT CHANGE ORDER MEMORANDUM

DATE: 7/18/2012 Page 1 of 1

TO: Tony Anziano, Program Manager /

FROM: Darryl Schram, Senior TE

FILE: **E.A.** 04 - 0120F4
CO-RTE-PM SF-80-13.2/13.9
FED. NO.

CCO#: **72** SUPPLEMENT#: **0** Category Code: **CBPT**

CONTINGENCY BALANCE (incl. this change) **$106,258,039.58**

COST: **$688,678.00** INCREASE ☑ DECREASE ☐

HEADQUARTERS APPROVAL REQUIRED? ☑ YES ☐ NO

SUPPLEMENTAL FUNDS PROVIDED: **$0.00**

IS THIS REQUEST IN ACCORDANCE WITH ENVIRONMENTAL DOCUMENTS? ☑ YES ☐ NO

CCO DESCRIPTION:
Cable Electrical

PROJECT DESCRIPTION:
CONSTRUCT SELF-ANCHORED SUSPENSION BRIDGE

Original Contract Time:	Time Adj. This Change:	Previously Approved CCO Time Adjustments:	Percentage Time Adjusted: (including this change)	Total # of Unreconciled Deferred Time CCO(s): (including this change)
2490 Day(s)	**0** Day(s)	**501** Day(s)	**20** %	**3**

THIS CHANGE ORDER PROVIDES FOR:

Modifying cable band stanchions, messenger cable, and messenger cable attachments.

This change order clarifies and provides details missing from the Contract plans. The messenger cable is relocated to minimize its visual impact and to improve access to the cable mounted lights for maintenance. Stanchion details are modified to accommodate the anchor stanchion channels, safety gates, and additional pull boxes.

This change order resolves the costs associated with Contractor Request for Information (RFI) numbers 270, 1237, 1433, 1456R0, 1456R1, 1568R0, 1568R1, 1907R2, 2404R0, and 2404R1 with respect to changes listed above.

The total cost of this change order is $688,678.00, which can be financed from the contingency fund. A detailed cost analysis is on file.

No time adjustment is warranted as this change order does not affect the controlling operation.

This change order has concurrence from William Casey (Supervising TE), Rich Foley (HQ Oversight), Ken Terpstra (Project Manager), Wenyi Long (Bridge Design), Lina Ellis (Maintenance), and Jing Chen (District Design).

CONCURRED BY:

Construction Engineer:	William Casey, Sup TE	Date	6/1/12
Bridge Engineer:	CT Oversight, Wenyi Long, P.E.	Date	6/1/12
Project Engineer:	District Design, Jing Chen	Date	6/5/12
Project Manager:	Proj Manager, Ken Terpstra	Date	6/28/12
FHWA Rep.:		Date	
Environmental:		Date	
Other (specify):	HQ, Rich Foley	Date	6/4/12
Other (specify):	Struct. Maint, Lina Ellis	Date	6/6/12
District Prior Approval By:	HQ, Ken Darby	Date	4/16/08
HQ (Issue Approve) By:		Date	
Resident Engineer's Signature:		Date	7/18/12

ESTIMATE OF COST

	THIS REQUEST	TOTAL TO DATE
ITEMS	$0.00	$0.00
FORCE ACCOUNT	$0.00	$0.00
AGREED PRICE	$0.00	$0.00
ADJUSTMENT	$688,678.00	$688,678.00
TOTAL	$688,678.00	$688,678.00

FEDERAL PARTICIPATION

☐ PARTICIPATING ☐ PARTICIPATING IN PART ☑ NONE
☐ NON-PARTICIPATING (MAINTENANCE) ☐ NON-PARTICIPATING

FEDERAL SEGREGATION (if more than one Funding Source or P.I.P. type)
☐ CCO FUNDED PER CONTRACT ☐ CCO FUNDED AS FOLLOWS

FEDERAL FUNDING SOURCE	PERCENT

ADA Notice: For individuals with sensory disabilities, this document is available in alternate formats. For information call: (916) 654-6410 or TDD (916) 654-3880 or write Records and Forms Management, 1120 N Street, MS-89, Sacramento, CA 95814.

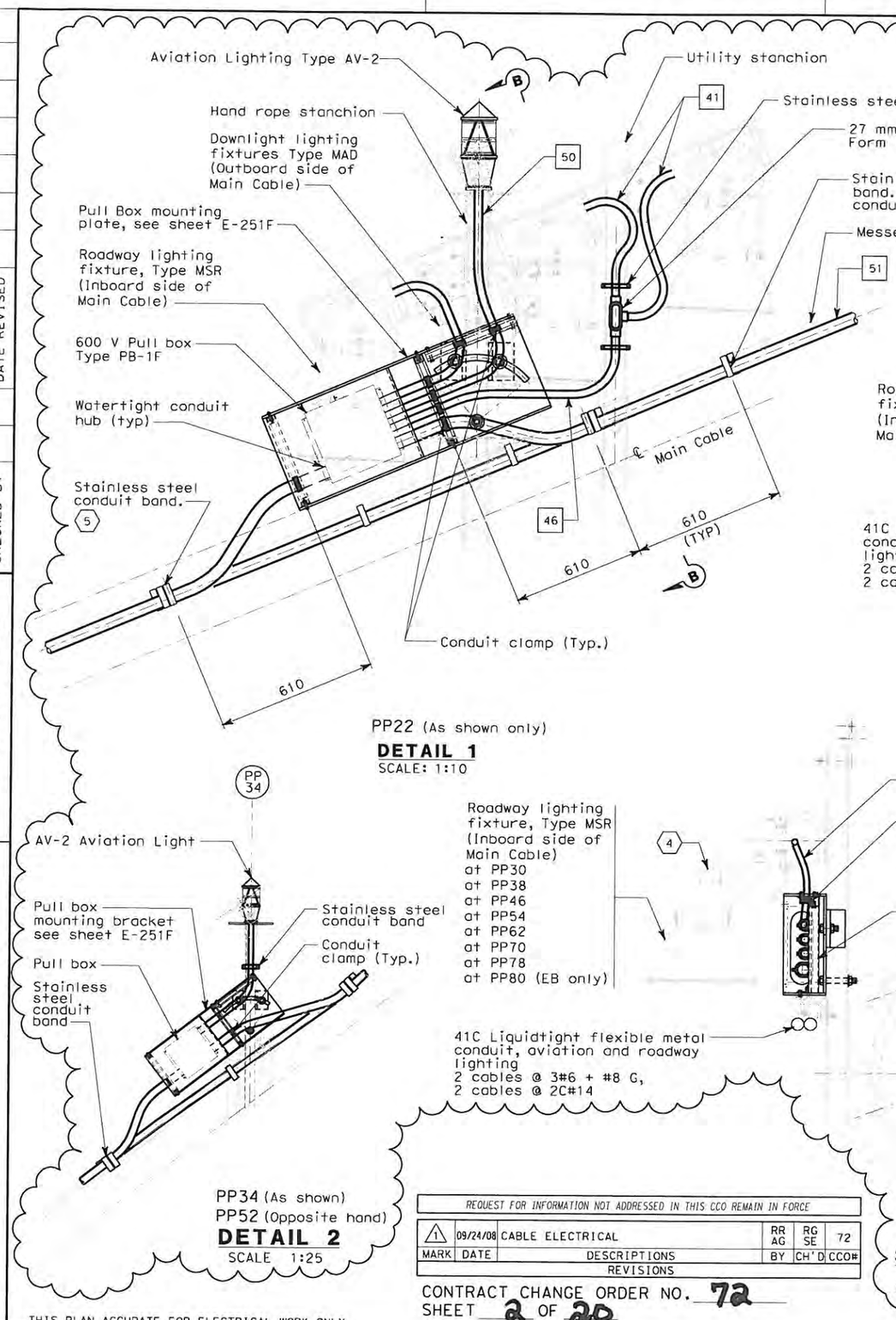

PP22 (As shown only)

DETAIL 1
SCALE: 1:10

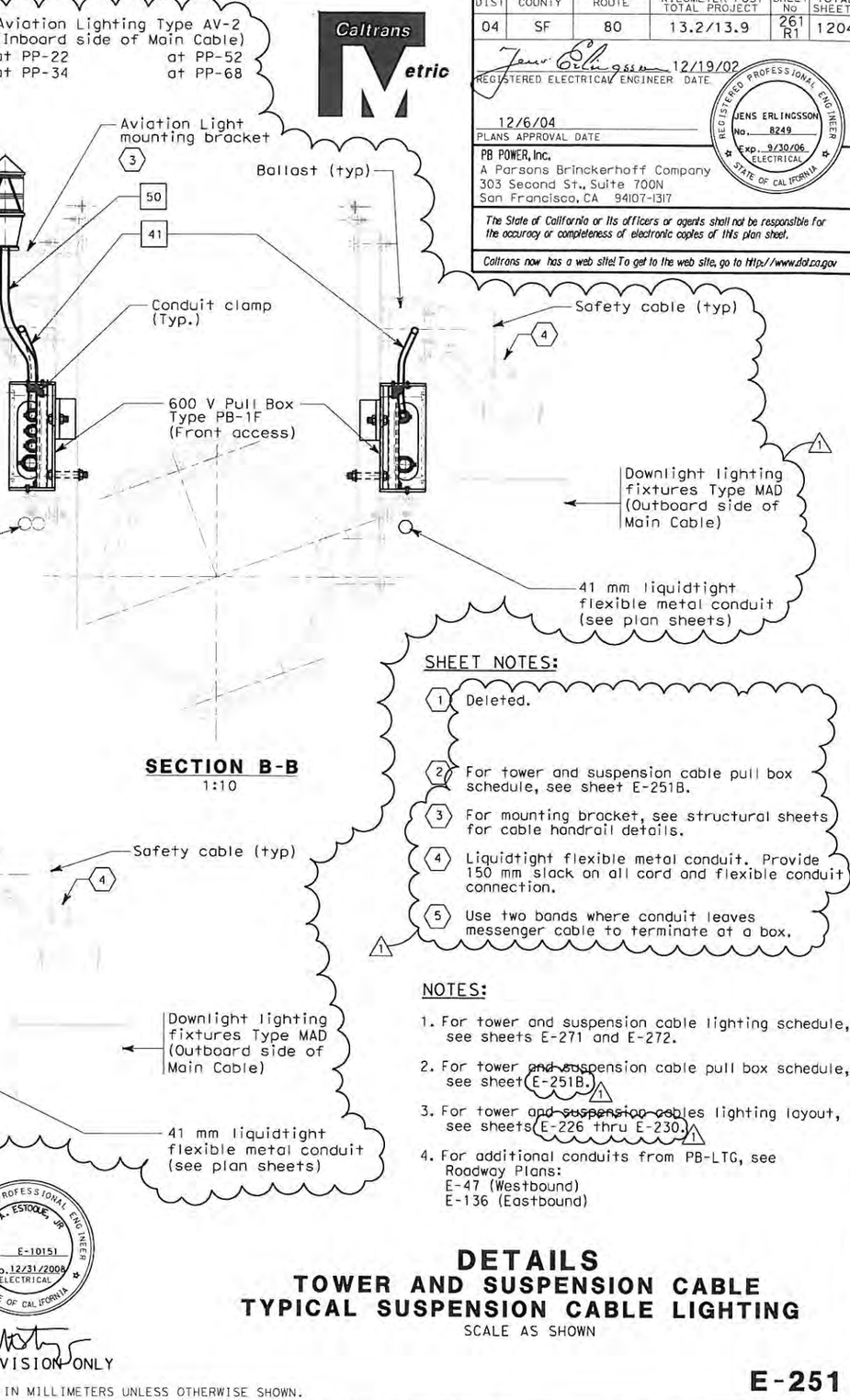

SECTION B-B
1:10

PP34 (As shown)
PP52 (Opposite hand)

DETAIL 2
SCALE 1:25

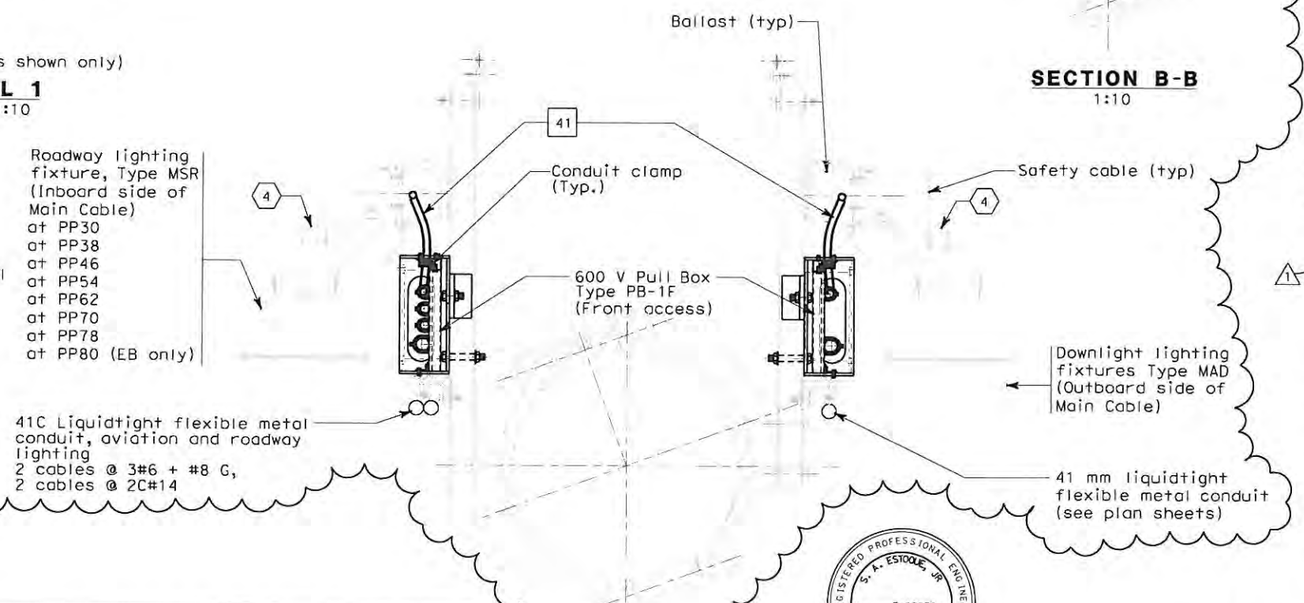

SECTION C-C
1:10
(See sheet E-251C)

SHEET NOTES:

1. Deleted.
2. For tower and suspension cable pull box schedule, see sheet E-251B.
3. For mounting bracket, see structural sheets for cable handrail details.
4. Liquidtight flexible metal conduit. Provide 150 mm slack on all cord and flexible conduit connection.
5. Use two bands where conduit leaves messenger cable to terminate at a box.

NOTES:

1. For tower and suspension cable lighting schedule, see sheets E-271 and E-272.
2. For tower and suspension cable pull box schedule, see sheet E-251B. 1
3. For tower and suspension cables lighting layout, see sheets E-226 thru E-230. 1
4. For additional conduits from PB-LTG, see Roadway Plans:
   E-47 (Westbound)
   E-136 (Eastbound)

DETAILS
TOWER AND SUSPENSION CABLE
TYPICAL SUSPENSION CABLE LIGHTING
SCALE AS SHOWN

E-251

DIST	COUNTY	ROUTE	KILOMETER POST TOTAL PROJECT	SHEET NO	TOTAL SHEETS
04	SF	80	13.2/13.9	261 R1	1204

Jens Erlingsson 12/19/02
REGISTERED ELECTRICAL ENGINEER DATE

JENS ERLINGSSON No. 8249 Exp. 9/30/06 ELECTRICAL — REGISTERED PROFESSIONAL ENGINEER — STATE OF CALIFORNIA

12/6/04
PLANS APPROVAL DATE

PB POWER, Inc.
A Parsons Brinckerhoff Company
303 Second St., Suite 700N
San Francisco, CA 94107-1317

The State of California or its officers or agents shall not be responsible for the accuracy or completeness of electronic copies of this plan sheet.

Caltrans now has a web site! To get to the web site, go to http://www.dot.ca.gov

S. A. ESTOQUE, JR. No. E-10151 Exp. 12/31/2008 ELECTRICAL — REGISTERED PROFESSIONAL ENGINEER — STATE OF CALIFORNIA

FOR REVISION ONLY

MARK	DATE	REVISIONS	BY	CH'D	CCO#
1	09/24/08	CABLE ELECTRICAL	RR AG	RG SE	72

REQUEST FOR INFORMATION NOT ADDRESSED IN THIS CCO REMAIN IN FORCE

CONTRACT CHANGE ORDER NO. 72
SHEET 2 OF 20

THIS PLAN ACCURATE FOR ELECTRICAL WORK ONLY.

ALL DIMENSIONS ARE IN MILLIMETERS UNLESS OTHERWISE SHOWN.

FOR REDUCED PLANS ORIGINAL SCALE IS IN MILLIMETERS 0 20 40 60 80

DGN FILE =>T:\13103\MS\pse\SAS Struc\CCO\SAS CC072\04-0120f1_0261R01.dgn
USERNAME =>garciar

CU 04251 EA 0120F1

LAST REVISION 00-00-00 DATE PLOTTED => 9/24/2008 TIME PLOTTED => 12:51:45 PM

STATE OF CALIFORNIA - DEPARTMENT OF TRANSPORTATION
Caltrans
DESIGN OVERSIGHT BEHZAD GOLEMOHAMMADI
CALCULATED/DESIGNED BY
CHECKED BY
DATE REVISED BY DATE REVISED

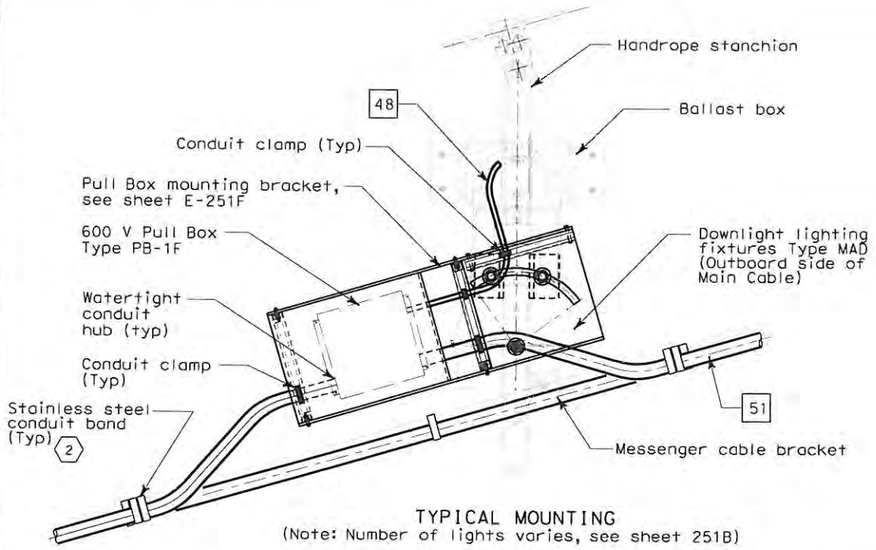

TYPICAL MOUNTING
(Note: Number of lights varies, see sheet 251B)

PP12 TO PP38 (As shown)
PP46 TO PP94 (Opposite hand)

DETAIL 3
SCALE: 1:10

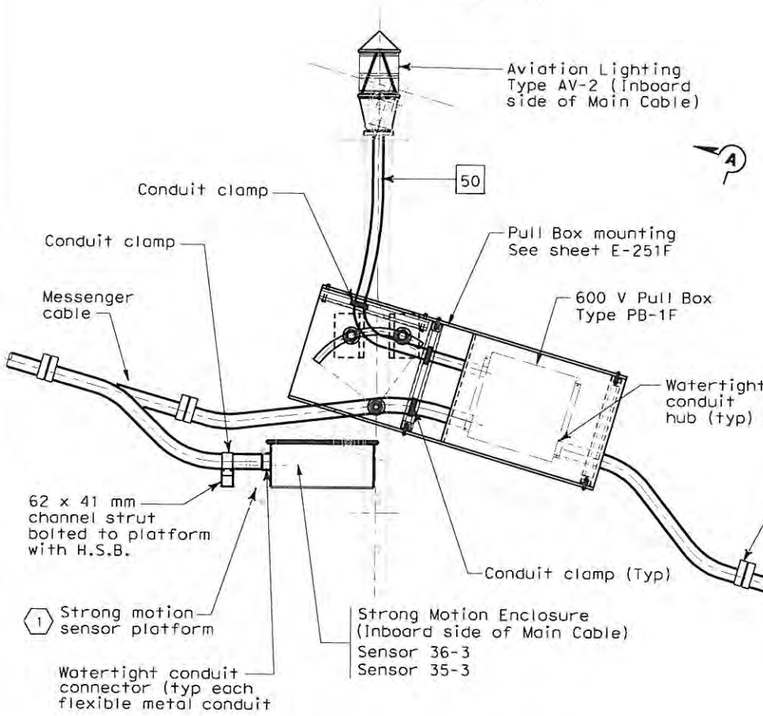

PP68 (As shown only)

DETAIL 4
SCALE: 1:10

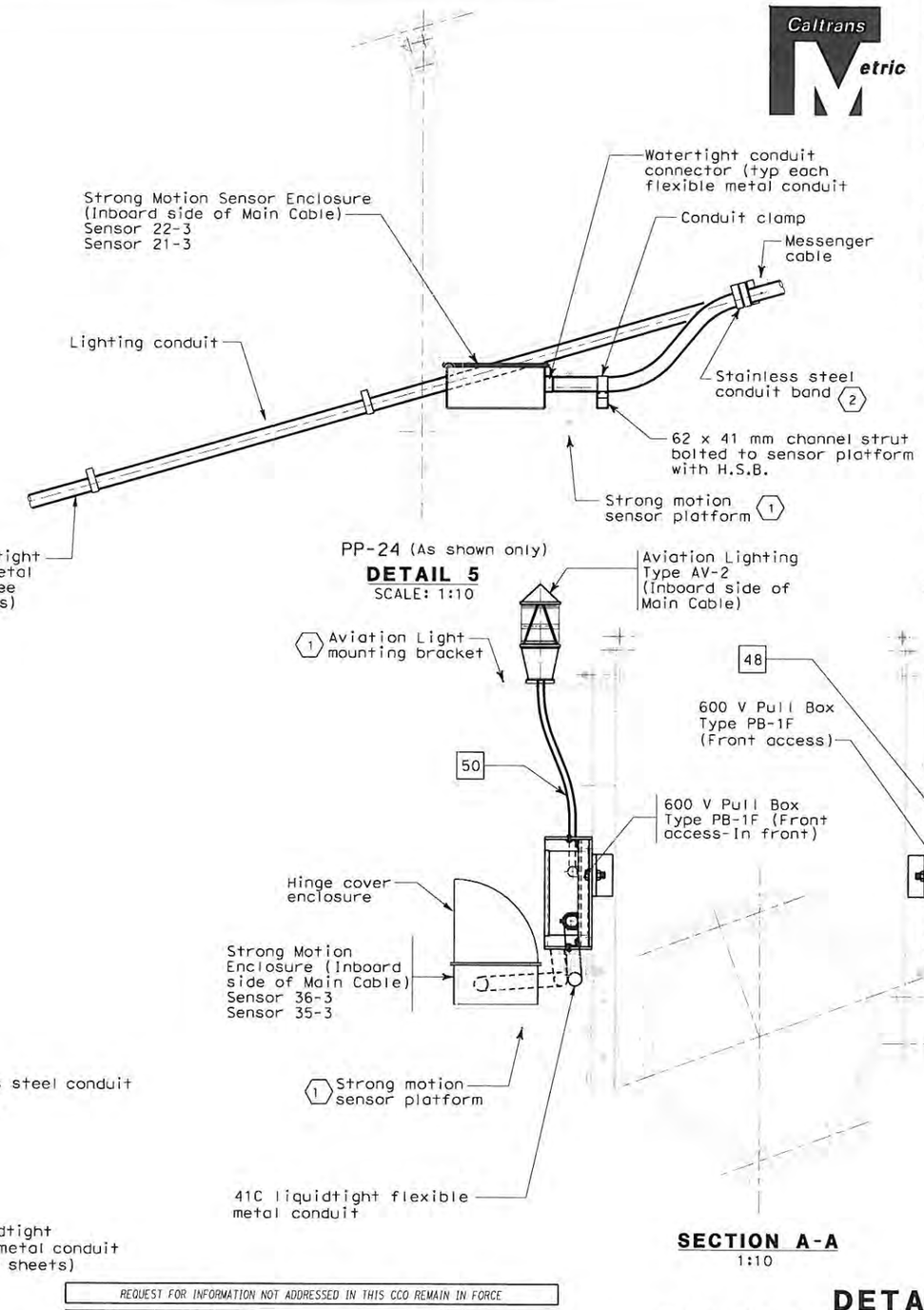

PP-24 (As shown only)

DETAIL 5
SCALE: 1:10

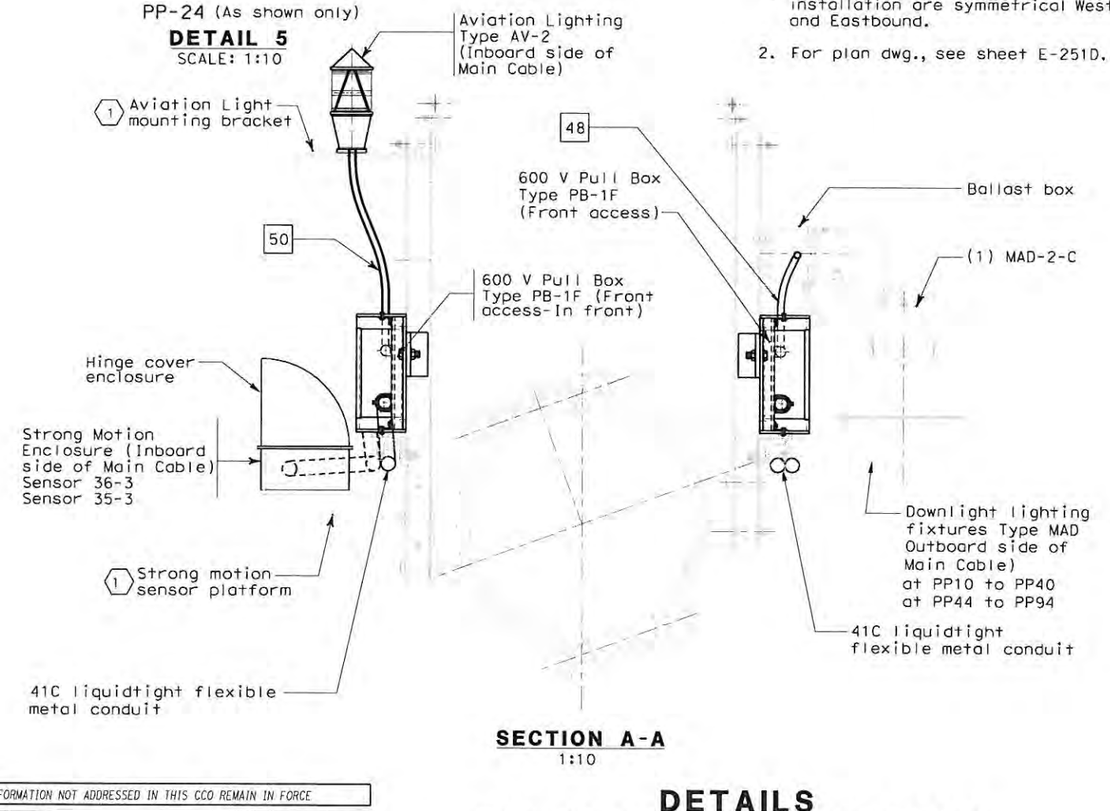

SECTION A-A
1:10

DIST	COUNTY	ROUTE	KILOMETER POST TOTAL PROJECT	SHEET No	TOTAL SHEETS
04	SF	80	13.2/13.9	261 S1	1204

REGISTERED ELECTRICAL ENGINEER — 03/05/08 DATE

REGISTERED PROFESSIONAL ENGINEER — S. A. ESTOQUE, JR. — No. E-10151 — Exp. 12/31/2008 ELECTRICAL — STATE OF CALIFORNIA

PLANS APPROVAL DATE

PB AMERICAS, Inc.
A Parsons Brinckerhoff Company
303 Second St., Suite 700N
San Francisco, CA 94107-1317

The State of California or its officers or agents shall not be responsible for the accuracy or completeness of electronic copies of this plan sheet.

Caltrans now has a web site! To get to the web site, go to http://www.dot.ca.gov

SHEET NOTES:

1. For strong motion sensor platform, see structural sheets for cable handrope details.
2. Use two bands where conduit leaves messenger cable to terminate at a box.

NOTES:

1. Lighting and Motion Detection device installation are symmetrical Westbound and Eastbound.
2. For plan dwg., see sheet E-251D.

REQUEST FOR INFORMATION NOT ADDRESSED IN THIS CCO REMAIN IN FORCE						
0	09/24/08	CABLE ELECTRICAL	RR AG	RG SE	72	
MARK	DATE	DESCRIPTIONS	BY	CH'D	CCO#	
REVISIONS						

CONTRACT CHANGE ORDER NO. 72
SHEET 3 OF 20

DETAILS
TOWER AND SUSPENSION CABLE
TYPICAL SUSPENSION CABLE LIGHTING
SCALE AS NOTED

E-251A

DATE	REVISED BY	DATE REVISED
CALCULATED/ DESIGNED BY		CHECKED BY
DESIGN OVERSIGHT	BEHZAD GOLEMOHAMMADI	

STATE OF CALIFORNIA - DEPARTMENT OF TRANSPORTATION — Caltrans

THIS PLAN ACCURATE FOR ELECTRICAL WORK ONLY.

ALL DIMENSIONS ARE IN MILLIMETERS UNLESS OTHERWISE SHOWN

FOR REDUCED PLANS ORIGINAL SCALE IS IN MILLIMETERS 0 20 40 60 80

DGN FILE =>T:\13103\MS\pse\SAS Struc\CCO\SAS CC072\04-0120f1_0261S01.dgn
USERNAME =>garciar

CU 04251 EA 0120F1

LAST REVISION 00-00-00 DATE PLOTTED => 9/24/2008 TIME PLOTTED => 1:18:05 PM

MAIN CABLE PULL BOX LOCATION SCHEDULE (6)

Panel Point	Location		Pull Box Type	Bracket Type	Remarks
	Inboard	Outboard			
PP-10	X		PB-1F	Type B	Roadway ltg
		X	PB-1F	Type A	Downlights (2)
PP-12	-		-	-	
		X	PB-1F	Type A	Downlights
PP-14	-		-	-	
		X	PB-1F	Type A	Downlights
PP-16	X		PB-1F	Type B	Roadway ltg (4)
		X	PB-1F	Type A	Downlights
PP-18	-		-	-	
		X	PB-1F	Type A	Downlights
PP-20	-		-	-	
		X	PB-1F	Type A	Downlights
PP-22	X		PB-1F	Type B	Roadway/Aviation ltg
		X	PB-1F	Type A	Downlights
PP-24	-		-	-	Strong Motion Det. (5) sensor
		X	PB-1F	Type A	Downlights
PP-26	-		-	-	
		X	PB-1F	Type A	Downlights
PP-28	X		PB-1F	Type B	Strong Motion Det. PB
		X	PB-1F	Type A	Downlights
PP-30	X		PB-1F	Type B	Roadway ltg
		X	PB-1F	Type A	Downlights
PP-32	X		PB-1F	Type B	Strong Motion Det. PB
		X	PB-1F	Type A	Downlights
PP-34	X		PB-1F	Type B	Aviation ltg
		X	PB-1F	Type A	Downlights
PP-36	X		PB-1F	Type B	Strong Motion Det. PB
		X	PB-1F	Type A	Downlights
PP-38	X		PB-1F	Type B	Roadway ltg
		X	PB-1F	Type A	Downlights
PP-40	X		PB-1F	Type B	Strong Motion Det. PB
		X	PB-1F	Type A	Downlights
PP-42					See E-251D
PP-44	X		PB-1F	Type A	Strong Motion Det. PB
		X	PB-1F	Type B	Downlights (3)
PP-46	X		PB-1F	Type A	Roadway ltg
		X	PB-1F	Type B	Downlights
PP-48	-		-	-	
		X	PB-1F	Type B	Downlights
PP-50	X		PB-1F	Type A	Strong Motion Det. PB
		X	PB-1F	Type B	Downlights
PP-52	X		PB-1F	Type A	Aviation ltg
		X	PB-1F	Type B	Downlights
PP-54	X		PB-1F	Type A	Roadway ltg
		X	PB-1F	Type B	Downlights
PP-56	X		PB-1F	Type A	Strong Motion Det. PB
		X	PB-1F	Type B	Downlights
PP-58	-		-	Type A	
		X	PB-1F	Type B	Downlights
PP-60	-		-	-	
		X	PB-1F	Type B	Downlights
PP-62	X		PB-1F	Type A	Roadway ltg
		X	PB-1F	Type B	Downlights
PP-64	X		PB-1F	Type A	Strong Motion Det. PB
		X	PB-1F	Type B	Downlights
PP-66	-		-	-	
		X	PB-1F	Type B	Downlights
PP-68	X		PB-1F	Type A	Aviation ltg/Str Mot Det sensor
		X	PB-1F	Type B	Downlights
PP-70	X		PB-1F	Type A	Roadway ltg
		X	PB-1F	Type B	Downlights
PP-72	-		-	-	
		X	PB-1F	Type B	Downlights

PULL BOX LOCATION SCHEDULE AT MAIN CABLE (6)

Panel Point (North Side)	Location		Pull Box Type	Bracket Type	Remarks
	Inboard	Outboard			
PP-74	-		-	-	
		X	PB-1F	Type B	Downlights
PP-76	-		-	-	
		X	PB-1F	Type B	Downlights
PP-78	X		PB-1F	Type A	Roadway ltg
		X	PB-1F	Type B	Downlights
PP-80	-		-	-	Roadway ltg (1)
		X	PB-1F	Type B	Downlights
PP-82	-		-	-	
		X	PB-1F	Type B	Downlights
PP-84	-		-	-	
		X	PB-1F	Type B	Downlights
PP-86	-		-	-	
		X	PB-1F	Type B	Downlights
PP-88	X		PB-1F	Type A	Roadway ltg (4)
		X	PB-1F	Type B	Downlights
PP-90	-		-	-	
		X	PB-1F	Type B	Downlights
PP-92	-		-	-	
		X	PB-1F	Type B	Downlights
PP-94	-		-	-	
		X	PB-1F	Type B	Downlights
PP-96	X		PB-1F	Type A	Roadway ltg (4)
		-	-	-	
PP-102	X		PB-1F	Type A	Roadway ltg (4)
		X	PB-1F	Type B	Downlights (3) (4)

Caltrans Metric

DIST	COUNTY	ROUTE	KILOMETER POST TOTAL PROJECT	SHEET No	TOTAL SHEETS
04	SF	80	13.2/13.9	261 S2	1204

REGISTERED ELECTRICAL ENGINEER — 03/05/08 DATE

REGISTERED PROFESSIONAL ENGINEER — S. A. ESTOQUE, JR. — No. E-10151 — Exp. 12/31/2008 ELECTRICAL — STATE OF CALIFORNIA

PLANS APPROVAL DATE

PB AMERICAS, Inc.
A Parsons Brinckerhoff Company
303 Second St., Suite 700N
San Francisco, CA 94107-1317

The State of California or its officers or agents shall not be responsible for the accuracy or completeness of electronic copies of this plan sheet.

Caltrans now has a web site! To get to the web site, go to http://www.dot.ca.gov

SHEET NOTES:

(1) The Roadway lighting at PP 80 occurs on Eastbound line only.

(2) See Downlight Pull Box Detail 3 on drawing E-251A.

(3) Similar to Downlight Pull Box Detail 3 except opposite hand

(4) Pull box only.

(5) Similar to Aviation Pull Box Detail 4 except opposite hand and no aviation light.

(6) Pull box locations are for both eastbound and westbound. For exception, see sheet notes 1 and 5.

REQUEST FOR INFORMATION NOT ADDRESSED IN THIS CCO REMAIN IN FORCE

MARK	DATE	DESCRIPTIONS	BY	CH'D	CCO#
		REVISIONS			
0	09/24/08	CABLE ELECTRICAL	RR AG	RG SE	72

CONTRACT CHANGE ORDER NO. 72
SHEET 4 OF 20

DETAILS
TOWER AND SUSPENSION CABLE
SUSPENSION CABLE PULL BOX LOCATION

E-251B

DATE	REVISED BY	DATE REVISED

CALCULATED/DESIGNED BY
CHECKED BY

DESIGN OVERSIGHT
BEHZAD GOLEMOHAMMADI

STATE OF CALIFORNIA - DEPARTMENT OF TRANSPORTATION
Caltrans

LAST REVISION 00-00-00
DATE PLOTTED => 9/24/2008
TIME PLOTTED => 1:38:13 PM

FOR REDUCED PLANS ORIGINAL SCALE IS IN MILLIMETERS 0 20 40 60 80

DGN FILE =>T:\13103\W5\pse\SAS Struc\CCO\SAS CC072\04-0120F1_0261S02.dgn
USERNAME =>garciar

CU 04251 EA 0120F1

REQUEST FOR INFORMATION NOT ADDRESSED IN THIS CCO REMAIN IN FORCE					
0	09/24/08	CABLE ELECTRICAL	RR AG	RG SE	72
MARK	DATE	DESCRIPTIONS	BY	CH'D	CCO#
REVISIONS					

CONTRACT CHANGE ORDER NO. 72
SHEET 5 OF 20

Caltrans Metric

DIST	COUNTY	ROUTE	KILOMETER POST TOTAL PROJECT	SHEET No	TOTAL SHEETS
04	SF	80	13.2/13.9	261 S3	1204

REGISTERED ELECTRICAL ENGINEER — 03/05/08 DATE

REGISTERED PROFESSIONAL ENGINEER — S. A. ESTOCKE, JR. — No. E-10151 — Exp. 12/31/2008 ELECTRICAL — STATE OF CALIFORNIA

PLANS APPROVAL DATE

PB AMERICAS, Inc.
A Parsons Brinckerhoff Company
303 Second St., Suite 700N
San Francisco, CA 94107-1317

The State of California or its officers or agents shall not be responsible for the accuracy or completeness of electronic copies of this plan sheet.

Caltrans now has a web site! To get to the web site, go to http://www.dot.ca.gov

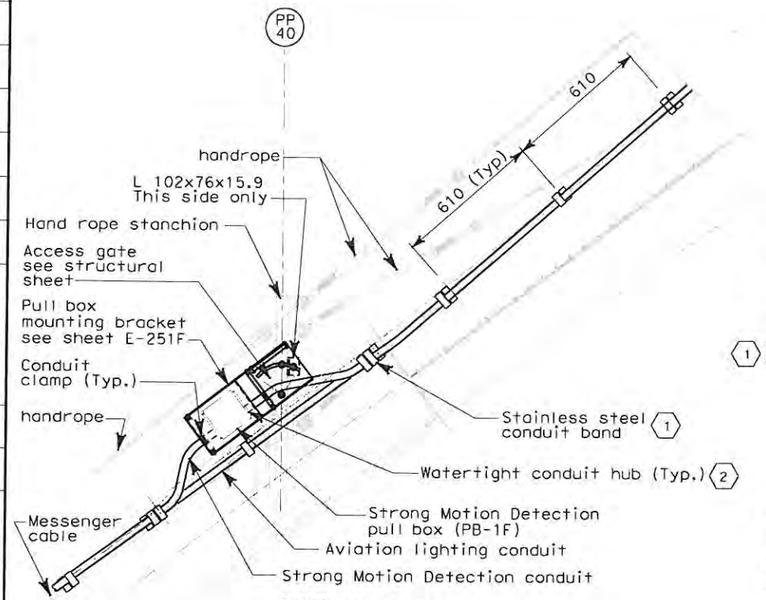

PP40 (As shown)
PP44 (Opposite Hand)

DETAIL 6
SCALE 1:25

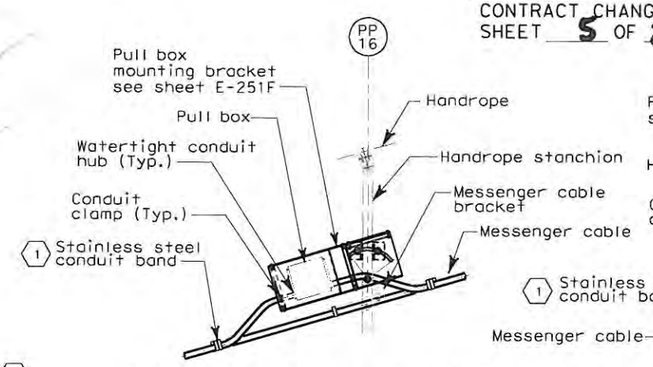

TYPICAL PULL BOX MOUNTING ONLY

PP16 (As shown - Lighting)
PP88 and PP96 (Opposite hand - Lighting)
PP28, PP32 and PP36 (Similar as shown - Strong motion)
PP50, PP56 and PP64 (Opposite hand - Strong motion)

DETAIL 7
SCALE 1:25

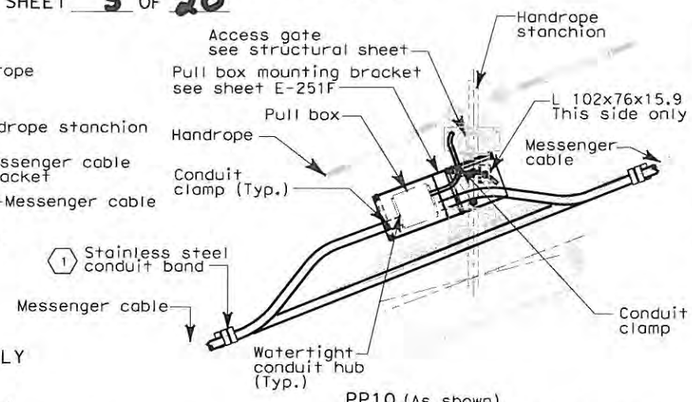

PP10 (As shown)
PP102 (Opposite hand and pull box only)

DETAIL 11
SCALE 1:25

SHEET NOTE:

1. Use two bands where conduit leaves messenger cable to terminate at a box.
2. For strong motion sensor platform, see structural sheets for cable handrope details.

NOTE:

1. Refer to sheet E-251D.

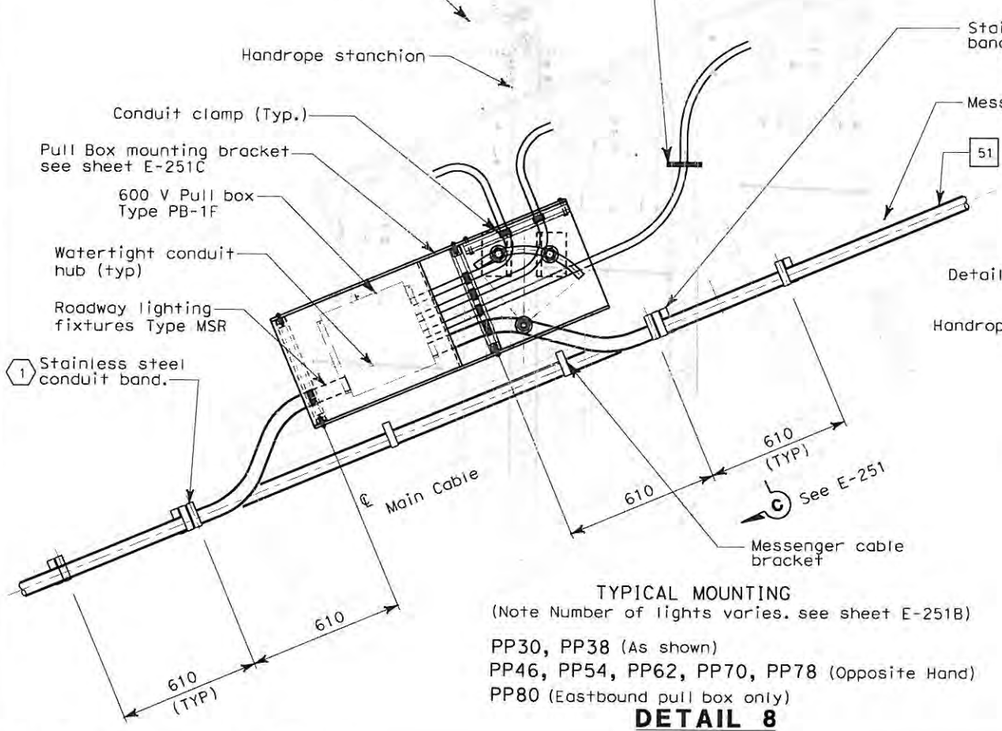

TYPICAL MOUNTING
(Note Number of lights varies. see sheet E-251B)

PP30, PP38 (As shown)
PP46, PP54, PP62, PP70, PP78 (Opposite Hand)
PP80 (Eastbound pull box only)

DETAIL 8
SCALE: 1:10

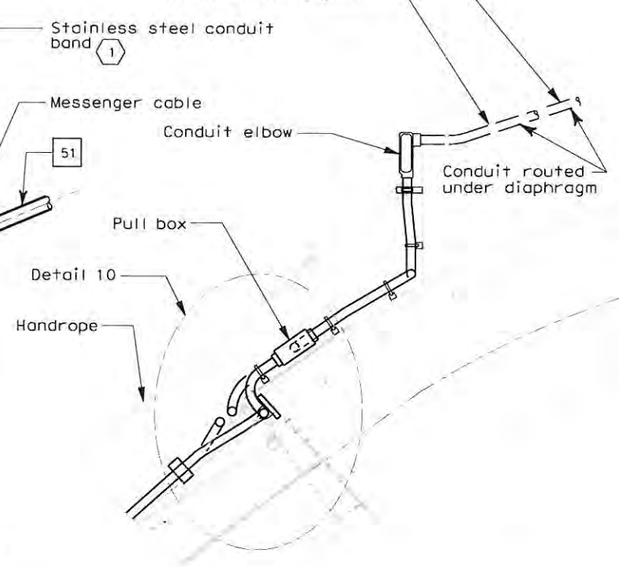

DETAIL 9
SCALE 1:25

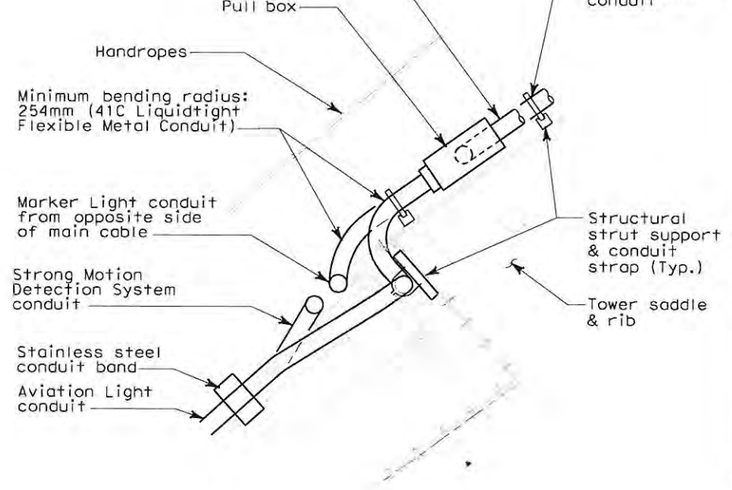

DETAIL 10
NO SCALE

DETAILS
TOWER AND SUSPENSION CABLE
TYPICAL SUSPENSION CABLE LIGHTING

SCALE AS NOTED

E-251C

STATE OF CALIFORNIA - DEPARTMENT OF TRANSPORTATION
Gt Gtrans
DESIGN OVERSIGHT
BEHZAD GOLEMOHAMMADI
CALCULATED/ DESIGNED BY
CHECKED BY
DATE REVISED BY
DATE REVISED

THIS PLAN ACCURATE FOR ELECTRICAL WORK ONLY.

ALL DIMENSIONS ARE IN MILLIMETERS UNLESS OTHERWISE SHOWN

FOR REDUCED PLANS ORIGINAL SCALE IS IN MILLIMETERS 0 20 40 60 80

DGN FILE =>T:\13103\MS\pse\SAS Struc\CCO\SAS CC072\2008-09-24_Issued for Submittal\04-0120F1_0261S03.dgn
USERNAME =>garciar
CU 04251
EA 0120F1

LAST REVISION 00-00-00
DATE PLOTTED => 9/24/2008
TIME PLOTTED => 2:34:48 PM

DIST	COUNTY	ROUTE	KILOMETER POST TOTAL PROJECT	SHEET No	TOTAL SHEETS
04	SF	80	13.2/13.9	261 S6	1204

REGISTERED ELECTRICAL ENGINEER — 03/05/08 DATE

PLANS APPROVAL DATE

REGISTERED PROFESSIONAL ENGINEER — S. A. ESTOCKE, JR. — No. E-10151 — Exp. 12/31/2008 — ELECTRICAL — STATE OF CALIFORNIA

PB AMERICAS, Inc.
A Parsons Brinckerhoff Company
303 Second St., Suite 700N
San Francisco, CA 94107-1317

The State of California or its officers or agents shall not be responsible for the accuracy or completeness of electronic copies of this plan sheet.

Caltrans now has a web site! To get to the web site, go to http://www.dot.ca.gov

REQUEST FOR INFORMATION NOT ADDRESSED IN THIS CCO REMAIN IN FORCE					
MARK	DATE	DESCRIPTIONS	BY	CH'D	CCO#
0	09/24/08	CABLE ELECTRICAL	RR AG	RG SE	72
		REVISIONS			

CONTRACT CHANGE ORDER NO. 72
SHEET 6 OF 20

Caltrans Metric

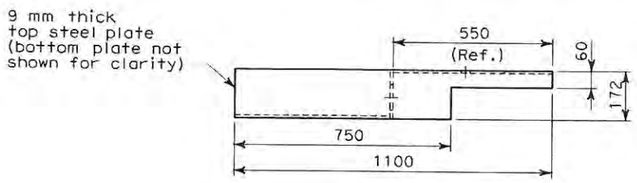

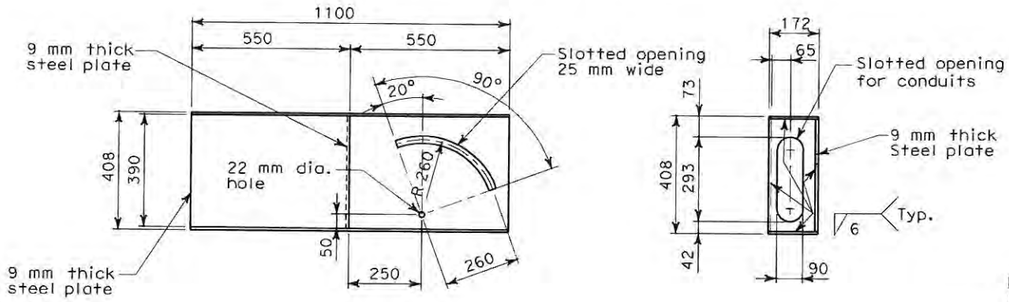

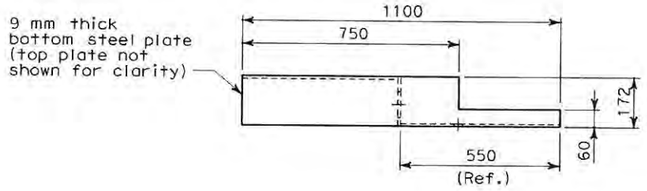

TYPE A (As shown)
TYPE B (Opposite side)
PULL BOX BRACKET DETAIL
SCALE: 1:10

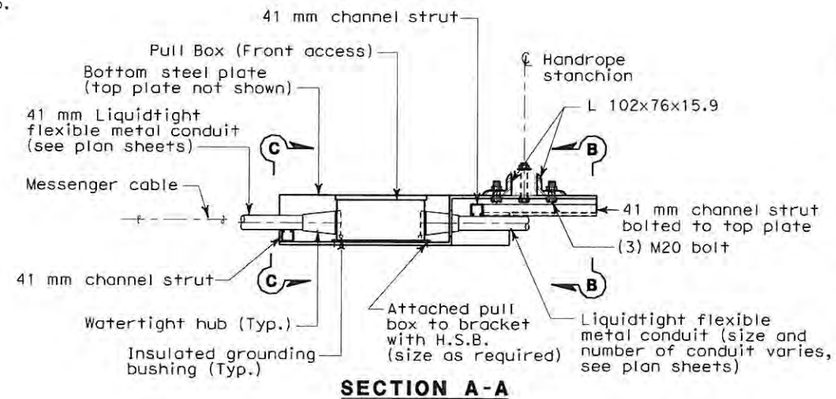

SECTION A-A
SCALE: 1:10

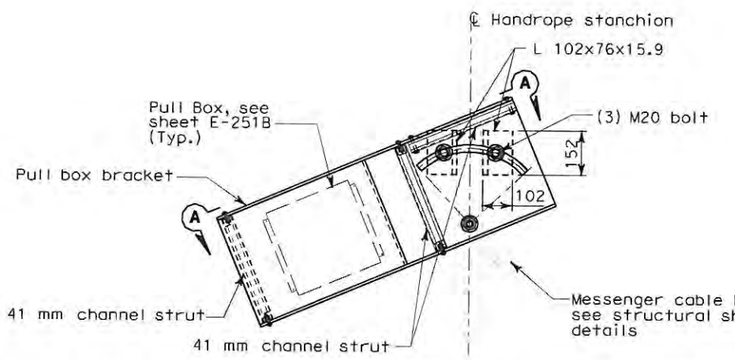

TYPICAL PULL BOX BRACKET MOUNTING
SCALE: 1:10
(Actual bracket orientation varies
and conduits not shown for clarity)

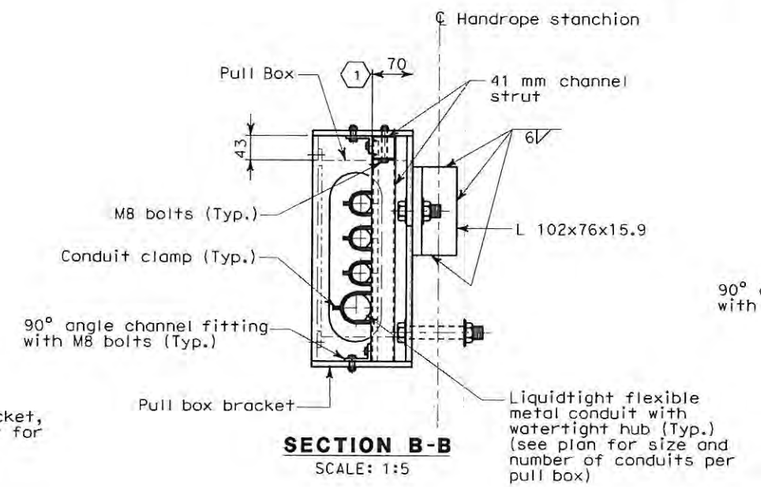

SECTION B-B
SCALE: 1:5

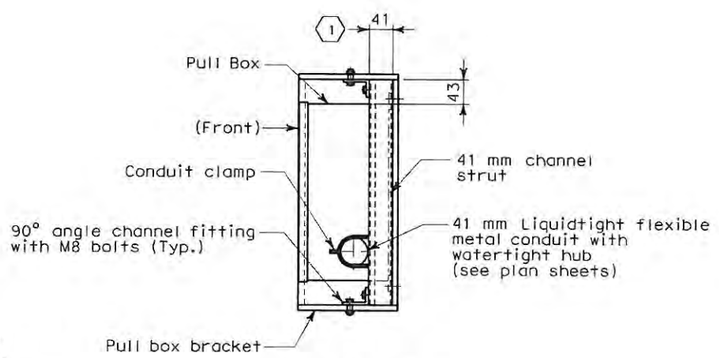

SECTION C-C
SCALE: 1:5

SHEET NOTE:

(1) Adjust dimension as required to suit conduit(s) field condition.

NOTES:

1. For tower and suspension cable lighting schedule, see sheets E-271 and E-272.
2. For tower and suspension cable pull box schedule, see sheet E-251B.
3. For tower and suspension cables lighting layout, see sheets E-227 thru E-280.
4. For additional conduits from PB-LTG, see Roadway Level Plans:
   E-47 (Westbound).
   E-136 (Eastbound).

DETAILS
TOWER AND SUSPENSION CABLE
TYPICAL SUSPENSION CABLE LIGHTING
SCALE: 1:10

E-251F

STATE OF CALIFORNIA - DEPARTMENT OF TRANSPORTATION
Caltrans
DESIGN OVERSIGHT: BEHZAD GOLEMOHAMMADI
CALCULATED/ DESIGNED BY
CHECKED BY
DATE REVISED BY
DATE REVISED

LAST REVISION 00-00-00
DATE PLOTTED => 9/24/2008
TIME PLOTTED => 12:19:04 PM

THIS PLAN ACCURATE FOR ELECTRICAL WORK ONLY.

ALL DIMENSIONS ARE IN MILLIMETERS UNLESS OTHERWISE SHOWN

FOR REDUCED PLANS ORIGINAL SCALE IS IN MILLIMETERS 0 20 40 60 80

DGN FILE =>t:\13103\MS\pse\SAS Struc\CCO\SAS CC072\2008-09-24_Issued for Submittal\04-0120F1_0261S06.dgn
USERNAME =>florico

CU 04251 | EA 0120F1

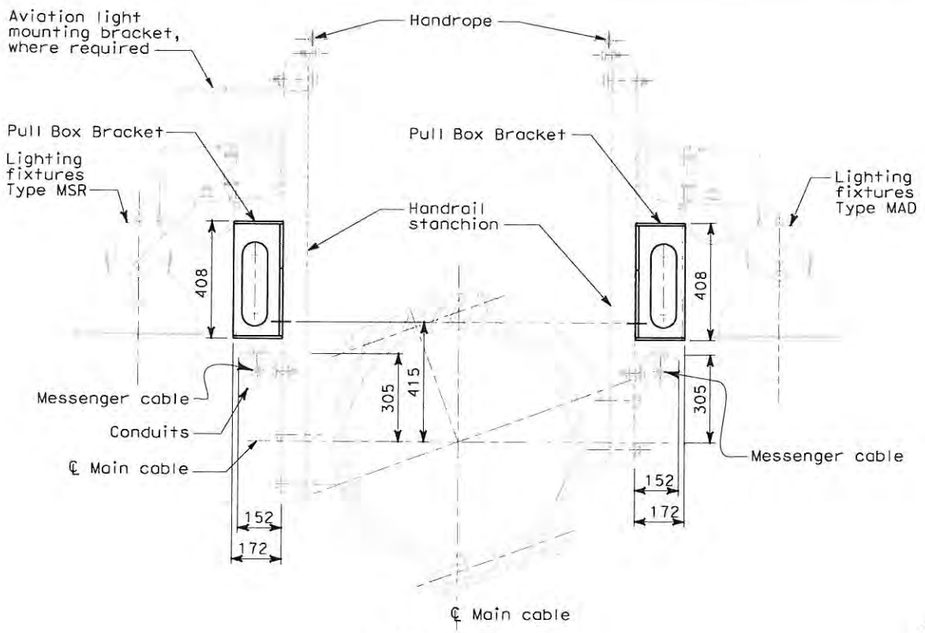

SECTION A-A

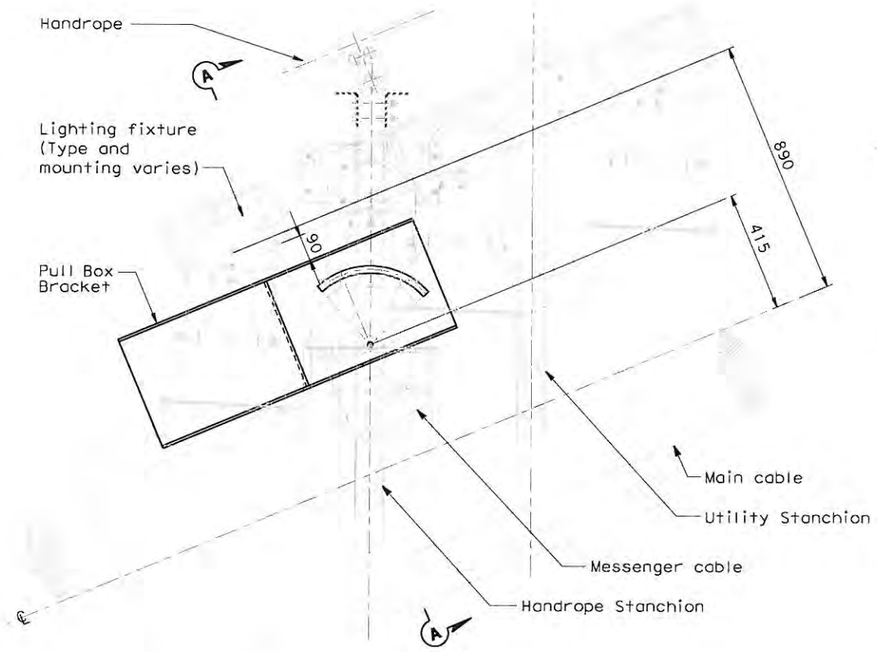

(Except PP10, PP40, PP44 and PP102)

TYPICAL PULL BOX BRACKET INSTALLATION AT STANCHION

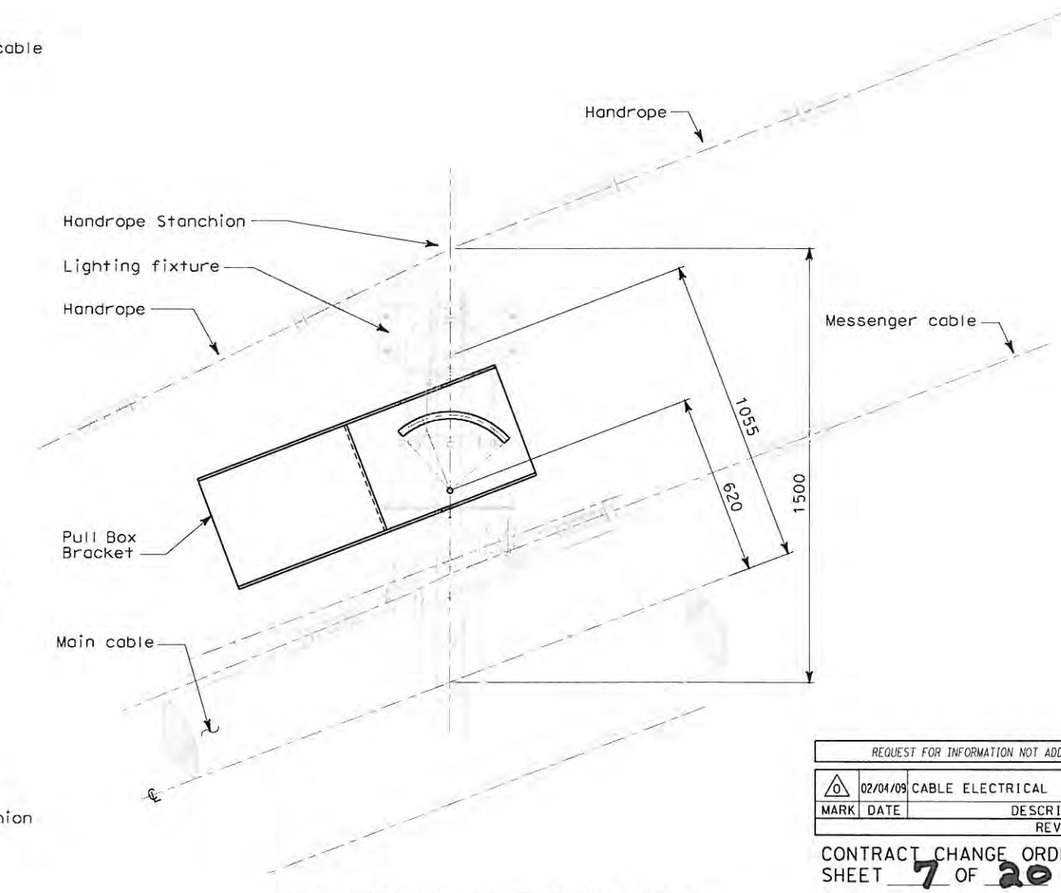

PP40, PP44 and PP102 (Similar as shown)

ANCHOR STANCHION AT PP10

NOTES:

1. Contractor to verify location of pull box bracket to ensure that no interference exist with light fixture, messenger cable and support. Contractor shall make necessary adjustment to clear any interference.
2. For pull box bracket detail, see sheet E-251F.
3. For pull box location schedule, see sheet E-251B.
4. For conduit installation to pull box, see sheet E-251, E-251A, E-251C thru E-251E.

Caltrans Metric

DIST	COUNTY	ROUTE	KILOMETER POST TOTAL PROJECT	SHEET No	TOTAL SHEETS
04	SF	80	13.2/13.9	261 S7	1204

REGISTERED ELECTRICAL ENGINEER DATE

REGISTERED PROFESSIONAL ENGINEER — FADI WALIEDDINE No. 11465 Exp.12/31/2009 ELECTRICAL — STATE OF CALIFORNIA

PLANS APPROVAL DATE

PB AMERICAS, Inc.
A Parsons Brinckerhoff Company
303 Second St., Suite 700N
San Francisco, CA 94107-1317

The State of California or its officers or agents shall not be responsible for the accuracy or completeness of electronic copies of this plan sheet.

Caltrans now has a web site! To get to the web site, go to http://www.dot.ca.gov

REQUEST FOR INFORMATION NOT ADDRESSED IN THIS CCO REMAIN IN FORCE

MARK	DATE	REVISIONS / DESCRIPTIONS	BY	CH'D	CCO#
0	02/04/09	CABLE ELECTRICAL	RG	FW	72

CONTRACT CHANGE ORDER NO. 72
SHEET 7 OF 20

DETAILS
TOWER AND SUSPENSION CABLE
TYPICAL SUSPENSION CABLE LIGHTING

SCALE: 1:10

E-251G

DESIGN OVERSIGHT	CALCULATED/ DESIGNED BY	DRAWN BY	CHECKED BY
BEHZAD GOLEMOHAMMADI			

STATE OF CALIFORNIA - DEPARTMENT OF TRANSPORTATION — Caltrans

DATE	REVISED BY	DATE REVISED

LAST REVISION 00-00-00 — DATE PLOTTED => 2/4/2009 TIME PLOTTED => 8:12:11 AM

FOR REDUCED PLANS ORIGINAL SCALE IS IN MILLIMETERS 0 20 40 60 80

DGN FILE =>T:\13103\MS\pse\SAS Struc\CCO\SAS CC072\04-0120f1_0261S07.dgn
USERNAME =>garciar

CU 04251 EA 0120F1

Note:
Refer to structure drawings for cable band and hand rope stanchion details

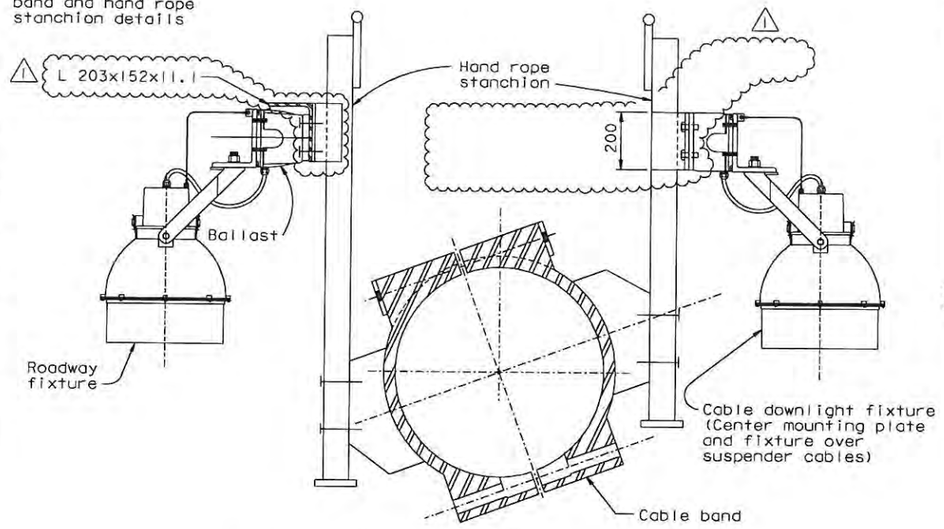

FIXTURE MOUNTING DETAIL
1:10

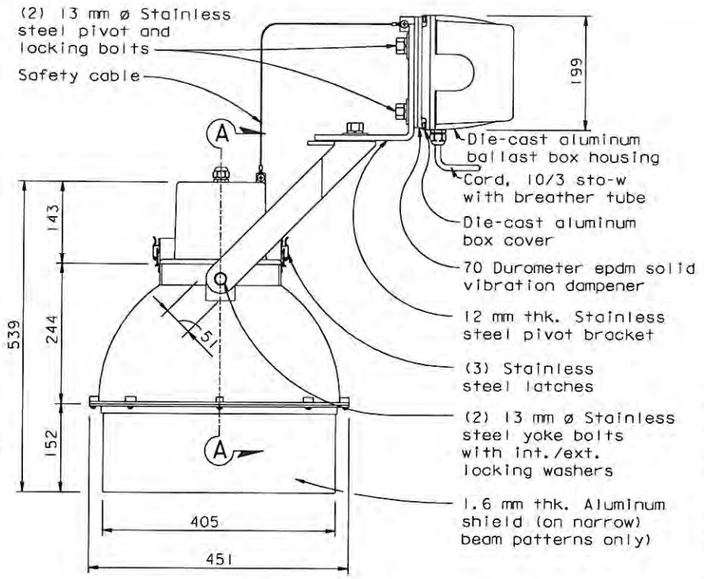

LIGHTING FIXTURE DETAIL
1:5

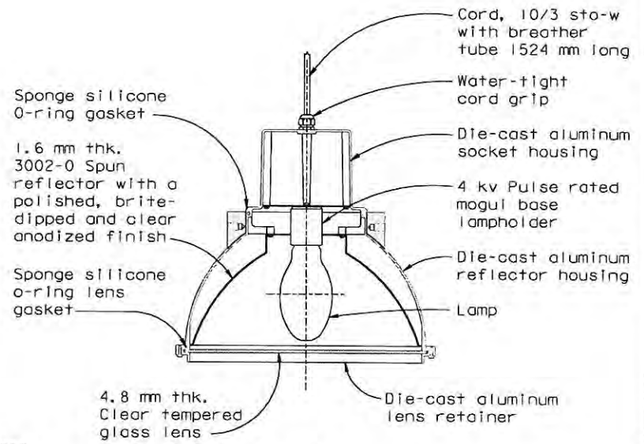

SECTION A-A
1:5

PARTIAL FIXTURE ELEVATION
1:10

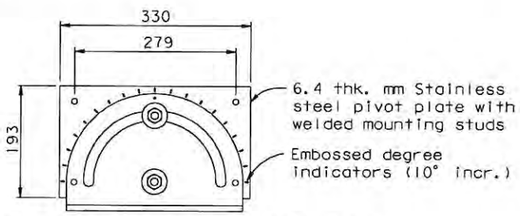

PIVOT BRACKET ELEVATION
1:5

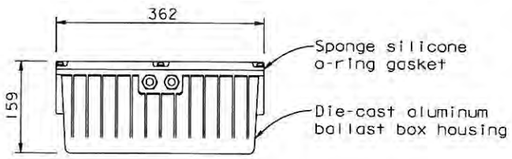

BALLAST ELEVATION
1:5

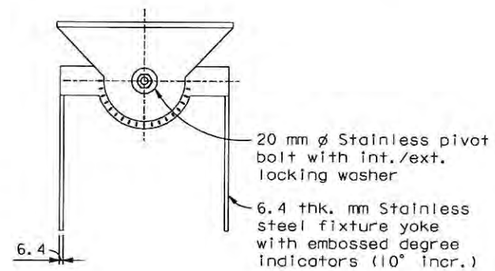

PIVOT BRACKET PLAN
1:5

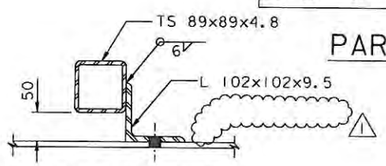

SECTION B-B
1:5

NOTES:

1. Lamps shall be ED-28 metal halide pulse start, 175, 250 and 400 wattage as indicated on electrical plans.
2. Fixture and components shall be U.L. listed for wet location.
3. For cable band and support stanchion details, see "Structural Plans".

CONTRACT CHANGE ORDER NO. 72
SHEET 8 OF 20

REQUESTS FOR INFORMATION NOT ADDRESSED IN THIS CCO REMAIN IN FORCE

MARK	DATE	REVISIONS	BY	CH'D	CCO#
1	06/22/11	CABLE ELECTRICAL	TS	JB	72

ALL DIMENSIONS ARE IN MILLIMETERS UNLESS OTHERWISE SHOWN.

DETAILS
TOWER AND SUSPENSION CABLE
MAIN SUSPENDER CABLE MOUNTED LIGHTS

SCALE AS NOTED

E-258

DIST	COUNTY	ROUTE	KILOMETER POST TOTAL PROJECT	SHEET NO.	TOTAL SHEETS
04	SF	80	13.2/13.9	266R1	1204

Caltrans Metric

Tyler Sparks
REGISTERED ENGINEER-CIVIL
12-6-04
PLANS APPROVAL DATE

REGISTERED PROFESSIONAL ENGINEER — T. W. SPARKS — No. E16039 — Exp. 9-30-11 — ELECTRICAL — STATE OF CALIFORNIA

The State of California or its officers or agents shall not be responsible for the accuracy or completeness of electronic copies of this plan sheet.

T.Y. LIN / MOFFATT & NICHOL
825 BATTERY STREET
SAN FRANCISCO, CA 94111

Caltrans now has a web site! To get to the web site, go to: http://www.dot.ca.gov

	DATE	REVISED BY	DATE REVISED
CALCULATED/DESIGNED BY	GAM	10/00	TYL 10/00
CHECKED BY			
DRAWN BY			
QUANTITY BY			
DESIGN OVERSIGHT	BOB ZANDIPOUR		

STATE OF CALIFORNIA - DEPARTMENT OF TRANSPORTATION
SAS STRUCTURE
Caltrans

FOR REDUCED PLANS ORIGINAL SCALE IN MILLIMETERS 0 20 40 60 80

FILE => I:\bb\04-012001\sas\contract plans and cco\cco\cco*72\9-revision 06-22-11\dgn\40120fuc258.dgn
USERNAME => PTom

LAST REVISION 04-19-00
DATE PLOTTED => 22 JUN 2011
TIME PLOTTED => 10:15:03

CU 04251 EA 0120F1

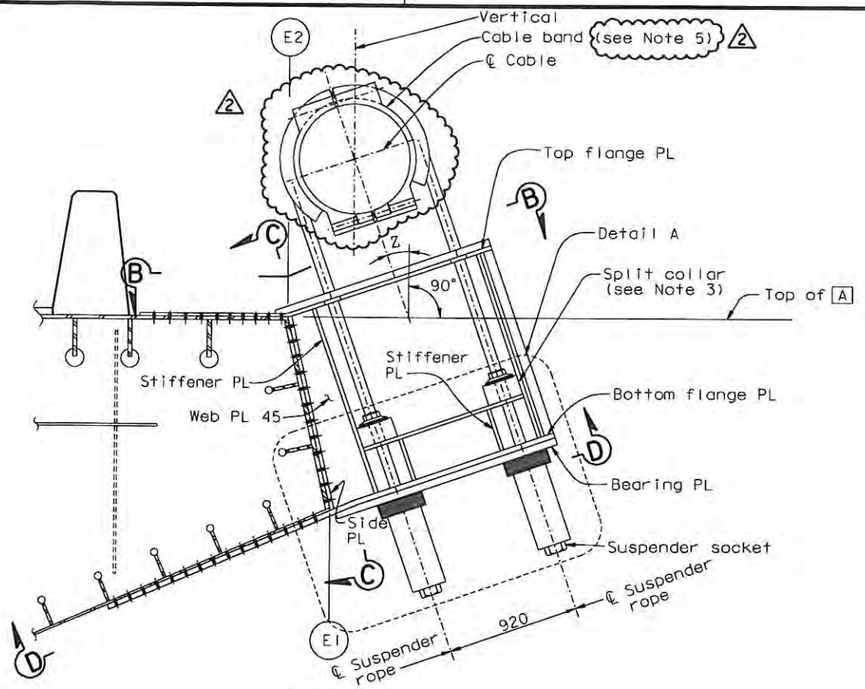

ELEVATION

SUSPENDER BRACKET AT PP 104, 106, 108, 110

1:20

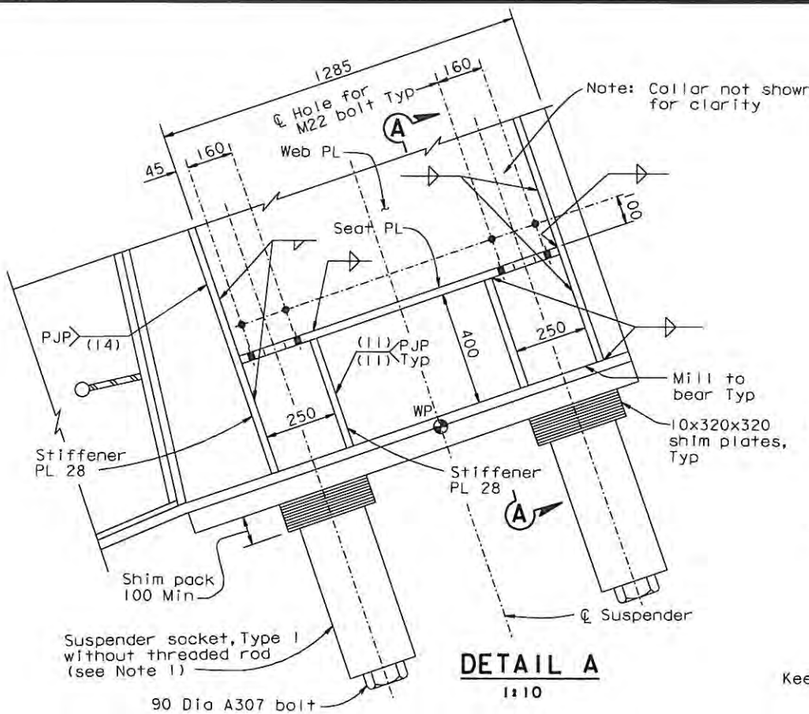

DETAIL A

1:10

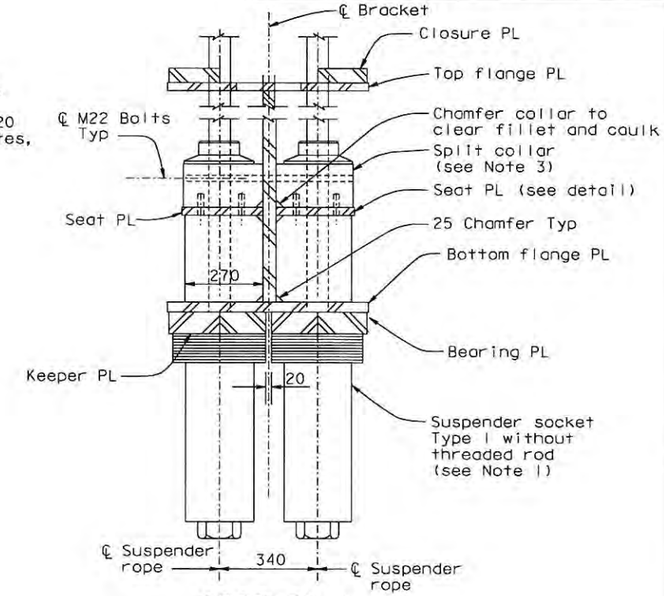

SECTION A-A

1:10

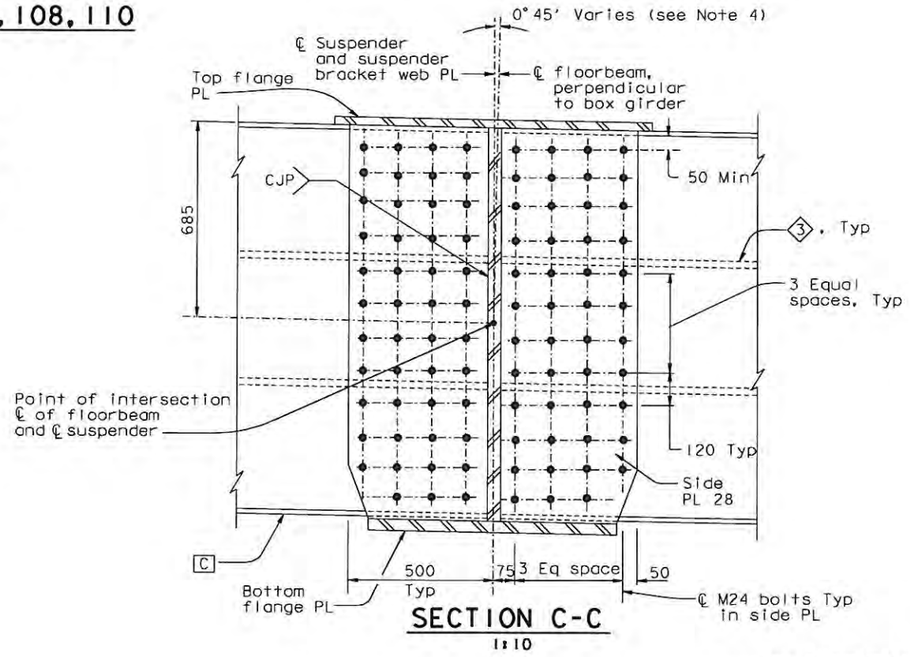

SECTION C-C

1:10

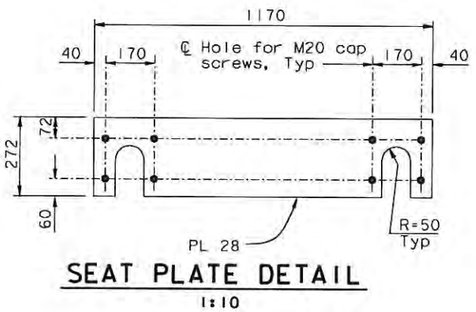

SEAT PLATE DETAIL

1:10

LEGEND:

3 Girder stiffener Type 3

C Girder face C

NOTES:

1. Threaded rod may be used for erection. After installation of suspender socket, ends shall be sealed with 90 Dia A307 bolts.
2. For details not shown, see "Suspender Bracket Details No.1" through "Suspender Bracket Details No.3" sheets.
3. For split collar details, see "Suspender Bracket Details No.5" sheet.
4. The Contractor shall consider variation in roadway grade in his details.
2 5. For cable band details see "Cable Band Details" and "Cable Handrope Details" sheets.

DIST.	COUNTY	ROUTE	KILOMETER POST TOTAL PROJECT	SHEET NO.	TOTAL SHEETS
04	SF	80	13.2/13.9	752R2	1204

George Baker
REGISTERED ENGINEER - CIVIL

12-6-04
PLANS APPROVAL DATE

REGISTERED PROFESSIONAL ENGINEER — George S. Baker, No. C 57112, Exp. 12/31/05, CIVIL, STATE OF CALIFORNIA

The State of California or its officers or agents shall not be responsible for the accuracy or completeness of electronic copies of this plan sheet.

T.Y. LIN / MOFFATT & NICHOL
825 BATTERY STREET
SAN FRANCISCO, CA 94111

Caltrans now has a web site! To get to the web site, go to: http://www.dot.ca.gov

Daniel J. Turner
REGISTERED PROFESSIONAL ENGINEER — Daniel J. Turner, No. C 65033, Exp. 06/30/09, CIVIL, STATE OF CALIFORNIA

FOR REVISIONS ONLY

REQUESTS FOR INFORMATION NOT ADDRESSED IN THIS CCO REMAIN IN FORCE.

MARK	DATE	DESCRIPTIONS	BY	CH'D	CCO#
		REVISIONS			
2	08/15/08	CABLE ELECTRICAL	GB	DT	72
1	04/16/07	CABLE SYSTEM	GB	DT	37

CONTRACT CHANGE ORDER NO. 72
SHEET 9 OF 20

ALL DIMENSIONS ARE IN MILLIMETERS UNLESS OTHERWISE SHOWN

SAN FRANCISCO OAKLAND BAY BRIDGE
EAST SPAN SEISMIC SAFETY PROJECT
SELF-ANCHORED SUSPENSION BRIDGE
(SUPERSTRUCTURE & TOWER)

SUSPENDER BRACKET DETAILS NO. 6

R. Valizadeh/V. Toan/Y.L./W.L./F.C.
DESIGN OVERSIGHT
SIGN OFF DATE 08/19/08

	BY	CHECKED
DESIGN	G. Baker	T. McMeans
DETAILS	S. Cama	P. Ritchie
QUANTITIES	C. Mauch	C. Mibelli

PREPARED FOR THE STATE OF CALIFORNIA
DEPARTMENT OF TRANSPORTATION

R. Manzanarez
PROJECT ENGINEER

BRIDGE NO. 34-0006L/R
KILOMETER POST 13.2/13.9

Rev. Date: 5-18-98

ORIGINAL SCALE IN MILLIMETERS FOR REDUCED PLANS 0 10 20 30 40 50 60 70 80 90 100

CU 04
EA 0120F1

DISREGARD PRINTS BEARING EARLIER REVISION DATES →

REVISION DATES (PRELIMINARY STAGE ONLY): 01/15/99 05/31/01 04/08/02 01/30/02 12/19/02 11/13/05

SHEET 335R2 OF

FILE => I:\bb\04-012001\sos\contract plans and cco\cco\in progress\cco#72\revision 08-15-08\dgn\agsad13.dgn

USERNAME => vigpatov SHOATE PLOTTED => 15 AUG 2008 TIME PLOTTED => 14:38:38

100% PS&E

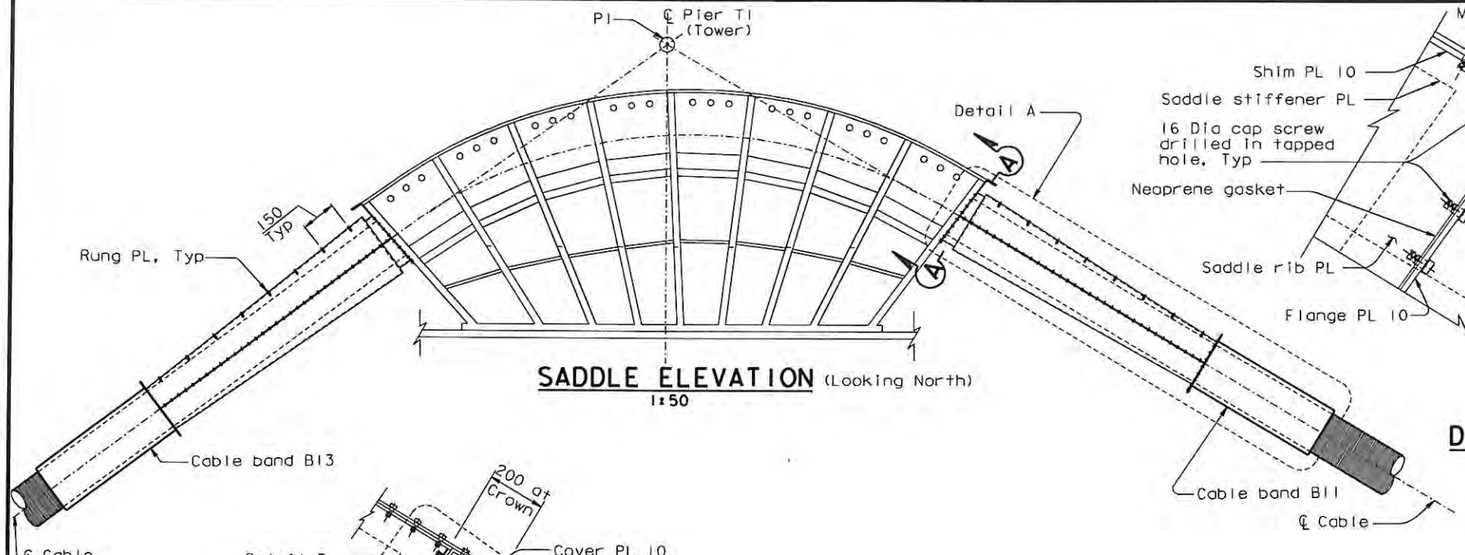

SADDLE ELEVATION (Looking North)

1:50

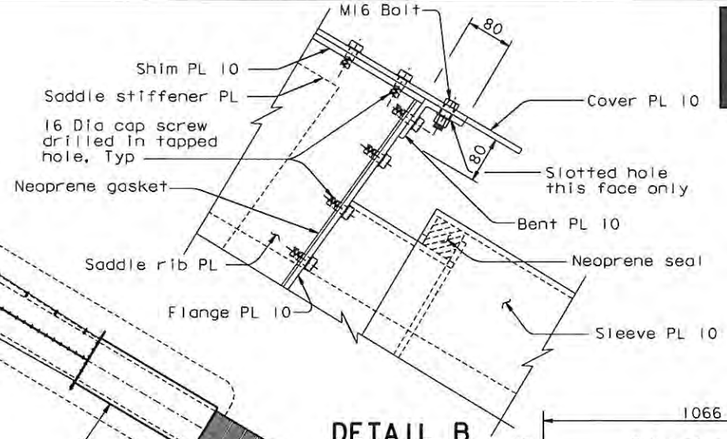

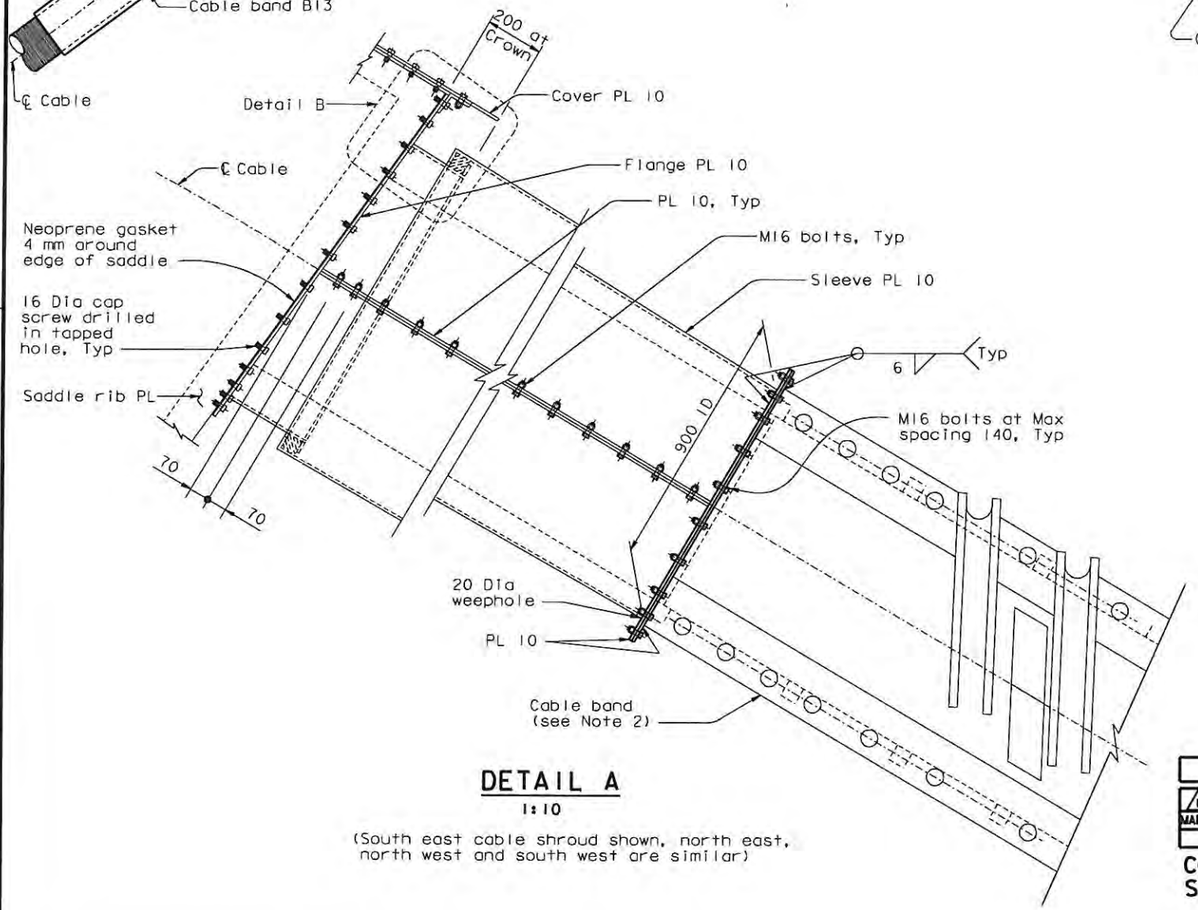

DETAIL A

1:10

(South east cable shroud shown, north east, north west and south west are similar)

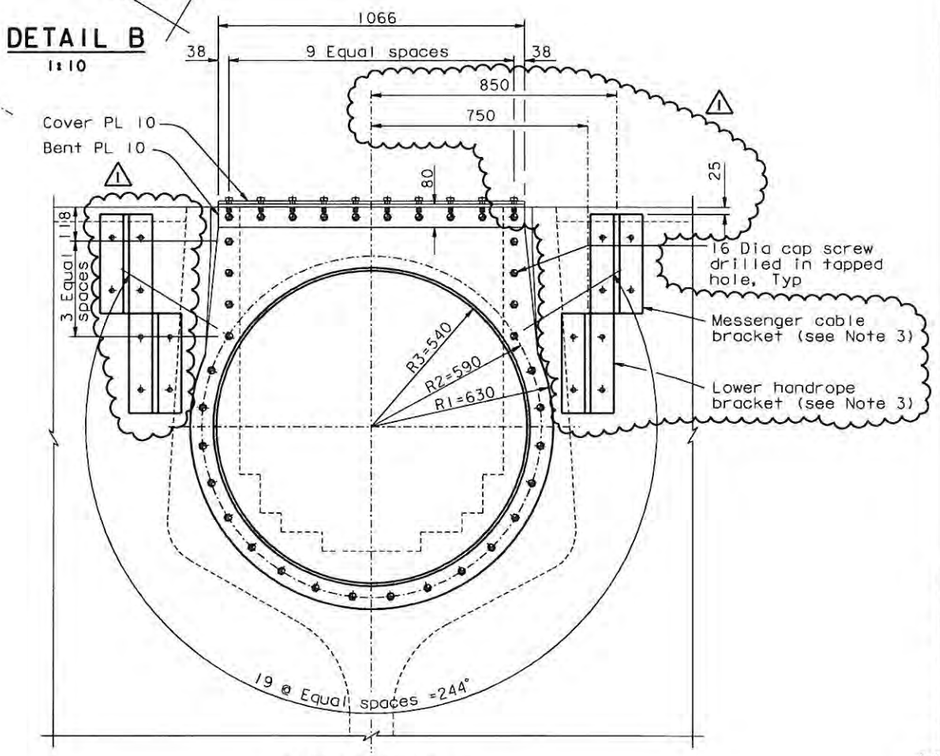

DETAIL B

1:10

SECTION A-A

1:10

(Cable not shown, for clarity)

NOTES:

1. For cable shroud details not shown, see "East Cable Shroud Details" sheets.
2. For details of cable bands B11 and B13, see "Cable Band Details" sheets.
3. For messenger cable and handrope bracket details, see "Cable Handrope Details No.3" sheet.

MARK	DATE	DESCRIPTIONS	BY	CH'D	CCO#
		REVISIONS			
1	08/15/08	CABLE ELECTRICAL	TH	MN	72

REQUESTS FOR INFORMATION NOT ADDRESSED IN THIS CCO REMAIN IN FORCE

CONTRACT CHANGE ORDER NO. 72
SHEET 10 OF 20

ALL DIMENSIONS ARE IN MILLIMETERS UNLESS OTHERWISE SHOWN

DIST.	COUNTY	ROUTE	KILOMETER POST TOTAL PROJECT	SHEET NO.	TOTAL SHEETS
04	SF	80	13.2/13.9	809R1	1204

Caltrans Metric

REGISTERED ENGINEER - CIVIL

12-6-04
PLANS APPROVAL DATE

PROFESSIONAL ENGINEER — Marwan N. Nader — No. C 054426 — Exp. 12/31/09 — CIVIL — STATE OF CALIFORNIA

The State of California or its officers or agents shall not be responsible for the accuracy or completeness of electronic copies of this plan sheet.

T.Y. LIN / MOFFATT & NICHOL
825 BATTERY STREET
SAN FRANCISCO, CA 94111

Caltrans now has a web site! To get to the web site, go to: http://www.dot.ca.gov

100 % PS&E

USERNAME => vlgratovs DATE PLOTTED => 15 AUG 2008 TIME PLOTTED => 14:39:52

R. Vallzadeh/V. Toan/Y.L./W.L./F.C.
DESIGN OVERSIGHT
Ryan Vallzadeh / Vinh Toan / Y. Liu
SIGN OFF DATE 08/15/08

Rev. Date: 5-18-98

	BY	CHECKED
DESIGN	M. Nader	T. McMeans
DETAILS	L. Rus	T. McMeans
QUANTITIES	D. Harrison	Y. Zhang

PREPARED FOR THE STATE OF CALIFORNIA DEPARTMENT OF TRANSPORTATION

R. Manzanarez
PROJECT ENGINEER

CU 04
EA 0120F1

BRIDGE NO. 34-0006L/R
KILOMETER POST 13.2/13.9

DISREGARD PRINTS BEARING EARLIER REVISION DATES →

REVISION DATES (PRELIMINARY STAGE ONLY): 05/15/98 | 08/28/98 | 05/31/01 | 04/26/02 | 01/29/02 | 12/19/02 | 09/06/04

SHEET 392R1 OF

ORIGINAL SCALE IN MILLIMETERS FOR REDUCED PLANS 0 10 20 30 40 50 60 70 80 90 100

FILE => I:\bb\04-01200\sas\contract plans and cco\cco\in progress\cco#72\revision 08-15-08\dgn\agshr03.dgn

SAN FRANCISCO OAKLAND BAY BRIDGE
EAST SPAN SEISMIC SAFETY PROJECT
SELF-ANCHORED SUSPENSION BRIDGE
(SUPERSTRUCTURE & TOWER)

TOWER CABLE SHROUD DETAILS

REQUESTS FOR INFORMATION NOT ADDRESSED IN THIS CCO REMAIN IN FORCE				
MARK	DATE	REVISIONS DESCRIPTIONS	BY	CH'D	CCO#
1	08/15/08	CABLE ELECTRICAL	TH	MN	72

CONTRACT CHANGE ORDER NO. 72
SHEET 11 OF 20

Caltrans Metric

DIST.	COUNTY	ROUTE	KILOMETER POST TOTAL PROJECT	SHEET NO.	TOTAL SHEETS
04	SF	80	13.2/13.9	812R1	1204

REGISTERED ENGINEER - CIVIL
12-6-04
PLANS APPROVAL DATE
The State of California or its officers or agents shall not be responsible for the accuracy or completeness of electronic copies of this plan sheet.

REGISTERED PROFESSIONAL ENGINEER — Morwan N. Nader, No. C 054426, Exp. 12/31/09, CIVIL, STATE OF CALIFORNIA

T.Y. LIN / MOFFATT & NICHOL
825 BATTERY STREET
SAN FRANCISCO, CA 94111

Caltrans now has a web site! To get to the web site, go to: http://www.dot.ca.gov

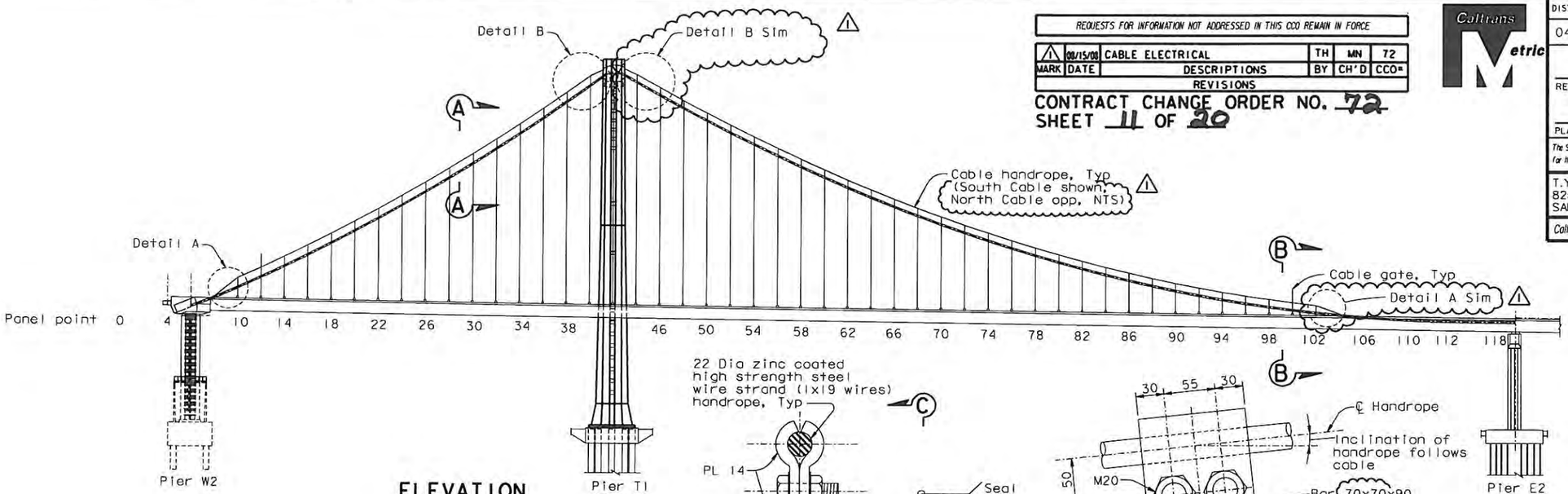

ELEVATION

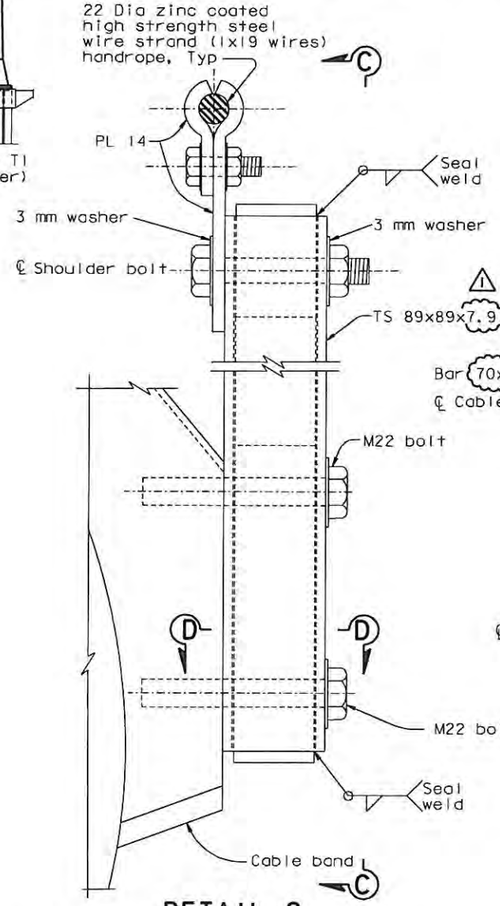

DETAIL C
1:2.5

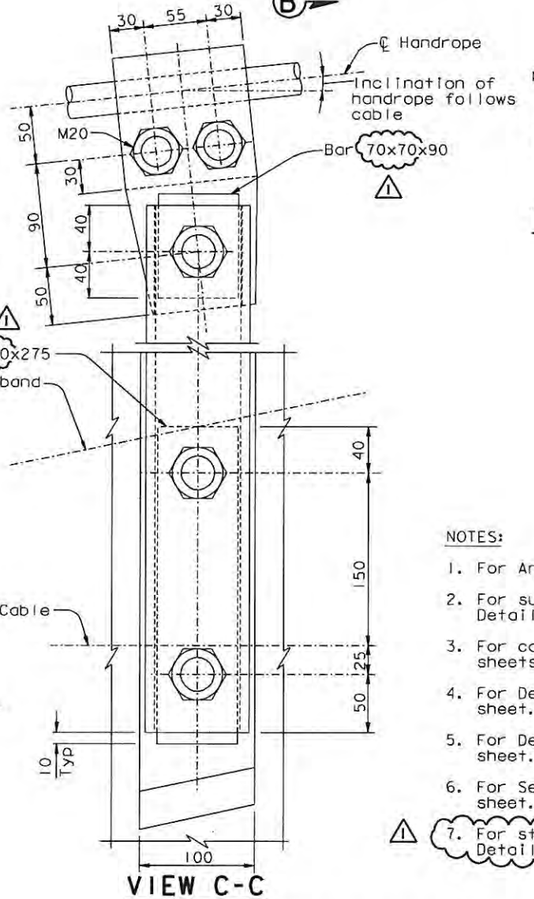

VIEW C-C
1:2.5

ALL DIMENSIONS ARE IN MILLIMETERS UNLESS OTHERWISE SHOWN

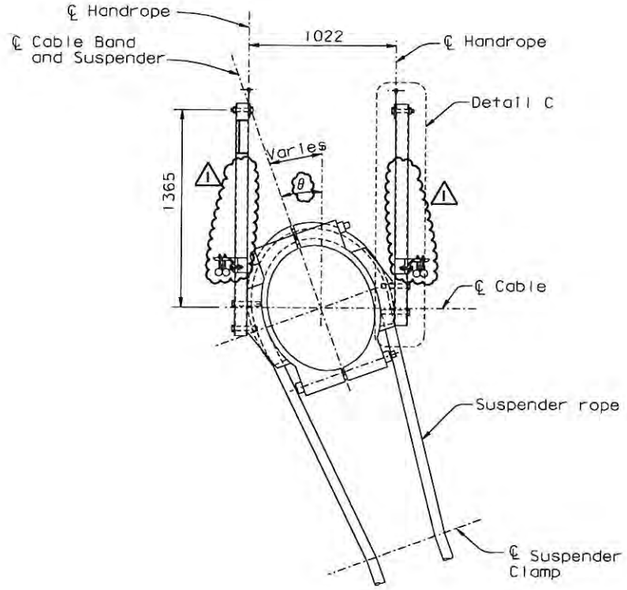

SECTION A-A
1:20

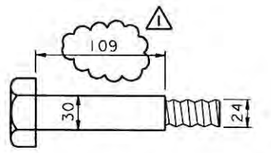

TYPICAL SHOULDER BOLT DETAIL
1:2.5

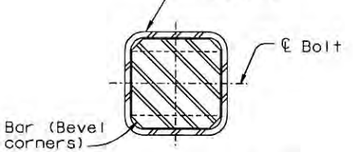

SECTION D-D
1:2.5

NOTES:

1. For Angle (θ) see "Suspender Layout No.2" sheet.
2. For suspender clamp, see "Suspender Assembly Details" sheet.
3. For cable band details, see "Cable Band Details" sheets.
4. For Detail A, see "Cable Handrope Details No.2" sheet.
5. For Detail B, see "Cable Handrope Details No.3" sheet.
6. For Section B-B, see "Cable Handrope Details No.4" sheet.
7. For stanchion utility details, see "Cable Handrope Details 2B, 2C & 2D" sheets.

TYPICAL STANCHION DETAIL

100 % PS&E

USERNAME => vignotovsky DATE PLOTTED => 15 AUG 2008 TIME PLOTTED => 14:40:57

R. Valfzadeh/V. Toan/Y.L./W.L./F.C.	DESIGN	M. Nader	CHECKED	T. McMeans	PREPARED FOR THE STATE OF CALIFORNIA DEPARTMENT OF TRANSPORTATION
DESIGN OVERSIGHT	DETAILS	G. Baker	CHECKED	T. McMeans	
SIGN OFF DATE 08/15/08	QUANTITIES	G. Baker	CHECKED	C. Mibelli	

R. Manzanarez — PROJECT ENGINEER

BRIDGE NO. 34-0006L/R
KILOMETER POST 13.2/13.9

SAN FRANCISCO OAKLAND BAY BRIDGE
EAST SPAN SEISMIC SAFETY PROJECT
SELF-ANCHORED SUSPENSION BRIDGE (SUPERSTRUCTURE & TOWER)
CABLE HANDROPE DETAILS NO. 1

Rev. Date: 5-18-98

ORIGINAL SCALE IN MILLIMETERS FOR REDUCED PLANS 0 10 20 30 40 50 60 70 80 90 100

CU 04
EA 0120F1

DISREGARD PRINTS BEARING EARLIER REVISION DATES

REVISION DATES (PRELIMINARY STAGE ONLY)								SHEET	OF
01/15/99	05/15/99	08/20/99	05/19/00	04/06/01	01/24/02	12/19/02		395R1	

FILE => I:\bb\04-012001\sas\contract plans and cco\cco\In progress\cco*72\revision 08-15-08\dgn\agshr07.dgn

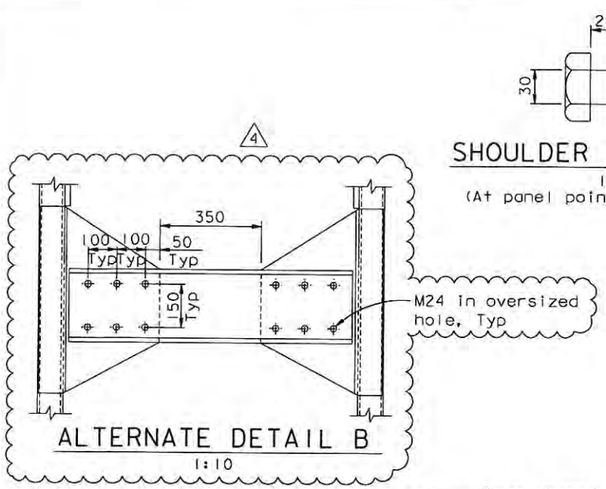

ALTERNATE DETAIL B
1:10

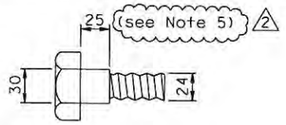

SHOULDER BOLT DETAIL
1:2.5
(At panel point 8 and 104 only)

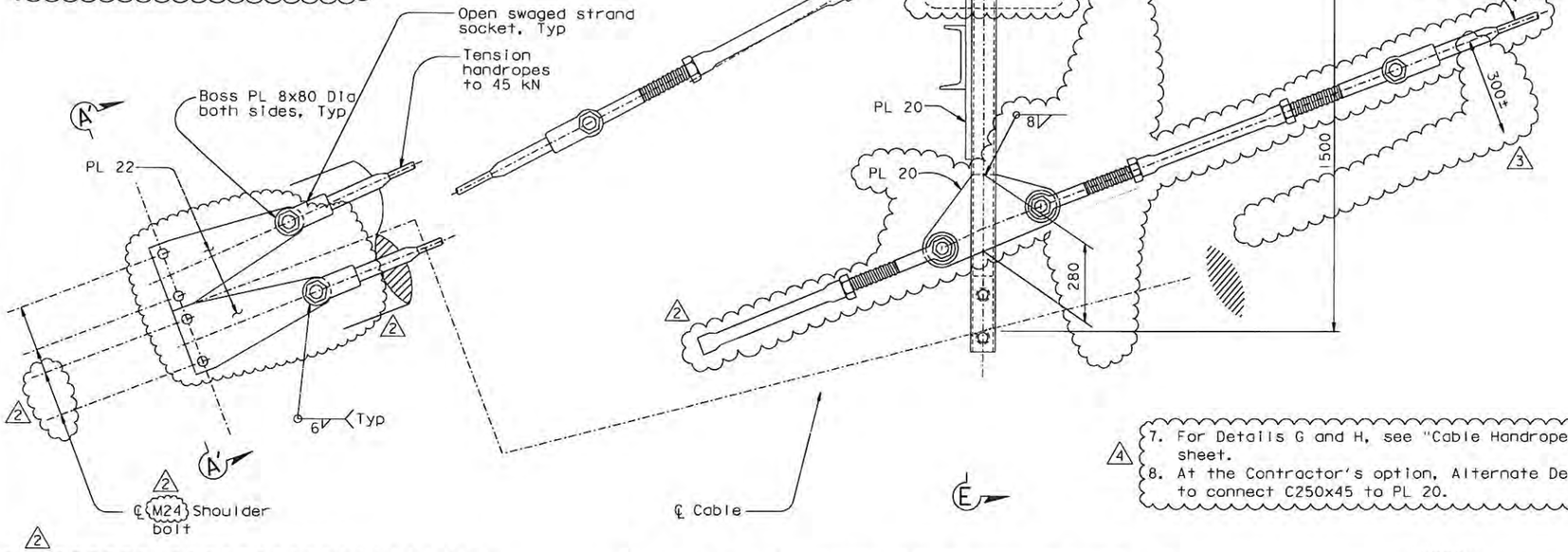

HANDROPE/MESSENGER ANCHORAGES AT PANEL POINT 8

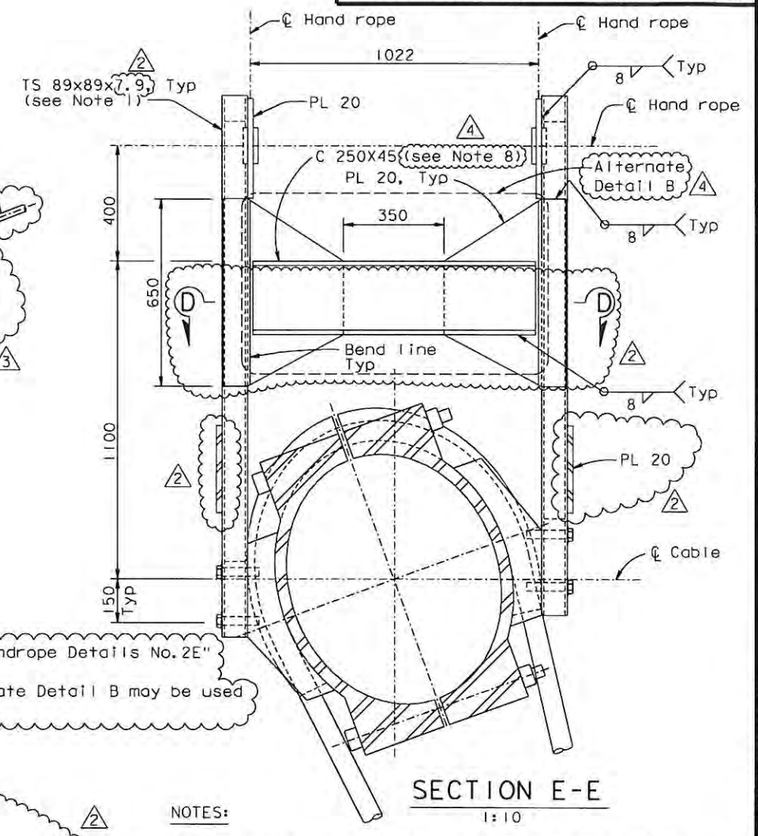

SECTION E-E
1:10

ANCHOR STANCHION AT PANEL POINT 10
(Details at panel points 40, 44 & 102 are similar)

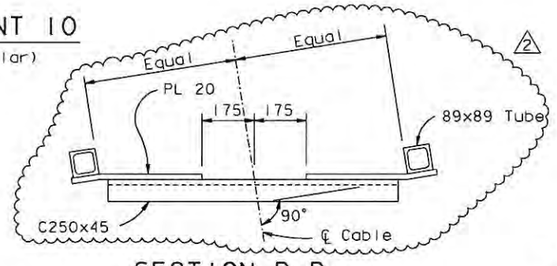

SECTION D-D
1:10

DETAIL A
1:10

4 7. For Details G and H, see "Cable Handrope Details No. 2E" sheet.
8. At the Contractor's option, Alternate Detail B may be used to connect C250x45 to PL 20.

NOTES:

1. For details not shown, see "Cable Band Details" and "Cable Handrope Details No. 1" sheets.
2. For handrope bracket angles, see "Cable Handrope Details No. 3" sheet.
3. For details not shown, see "Cable Handrope Details No. 1" sheet. For utility support stanchion locations, see "Road Plans" sheets.
4. The Contractor may revise the pin details as approved by the Engineer. The pin shall develop the breaking load of the handrope.
5. Dimension includes allowance for 3 mm washer.
6. For Section A'-A', see "Cable Handrope Details No. 2A" sheet.

2

CONTRACT CHANGE ORDER NO. 72
SHEET 12 OF 20

REQUESTS FOR INFORMATION NOT ADDRESSED IN THIS CCO REMAIN IN FORCE

MARK	DATE	REVISIONS	BY	CH'D	CCO#
4	06/22/11	CABLE ELECTRICAL	TH	MN	72
3	01/30/09	CABLE ELECTRICAL	TH	MN	72
2	08/15/08	CABLE ELECTRICAL	TH	MN	72
1	04/16/07	CABLE SYSTEM	GB	MN	37

R. Valizadeh/V. Toan/Y.L./W.L./F.C.
DESIGN OVERSIGHT
SIGN OFF DATE 06/22/11

Rev. Date: 5-18-98

	BY	CHECKED
DESIGN	M. Nader	T. McMeans
DETAILS	G. Baker	T. McMeans
QUANTITIES	G. Baker	C. Mibelli

PREPARED FOR THE STATE OF CALIFORNIA
DEPARTMENT OF TRANSPORTATION

R. Manzanarez
PROJECT ENGINEER

ALL DIMENSIONS ARE IN MILLIMETERS UNLESS OTHERWISE SHOWN

ORIGINAL SCALE IN MILLIMETERS FOR REDUCED PLANS 0 10 20 30 40 50 60 70 80 90 100

CU 04
EA 0120F1

BRIDGE NO. 34-0006L/R
KILOMETER POST 13.2/13.9

DISREGARD PRINTS BEARING EARLIER REVISION DATES →
REVISION DATES (PRELIMINARY STAGE ONLY): 05/15/00 | 09/27/00 | 05/31/01 | 04/09/02 | 07/01/02 | 12/19/02

SHEET 396R4 OF

FILE •> I:\bb\04-012001\sas\contract plans and cco\cco\cco#72\9-revision 06-22-11\dgn\agshr08.dgn

Caltrans Metric

DIST.	COUNTY	ROUTE	KILOMETER POST TOTAL PROJECT	SHEET NO.	TOTAL SHEETS
04	SF	80	13.2/13.9	813R4	1204

REGISTERED ENGINEER - CIVIL
12-6-04
PLANS APPROVAL DATE

REGISTERED PROFESSIONAL ENGINEER
Marwan N. Nader
No. C 054426
Exp. 12/31/11
CIVIL
STATE OF CALIFORNIA

The State of California or its officers or agents shall not be responsible for the accuracy or completeness of electronic copies of this plan sheet.

T.Y. LIN / MOFFATT & NICHOL
825 BATTERY STREET
SAN FRANCISCO, CA 94111

Caltrans now has a web site! To get to the web site, go to: http://www.dot.ca.gov

SAN FRANCISCO OAKLAND BAY BRIDGE
EAST SPAN SEISMIC SAFETY PROJECT
SELF-ANCHORED SUSPENSION BRIDGE
(SUPERSTRUCTURE & TOWER)

CABLE HANDROPE DETAILS NO. 2

100 % PS&E

DATE PLOTTED •> 22 JUN 2011 TIME PLOTTED •> 10:16:15
USERNAME •> PTom

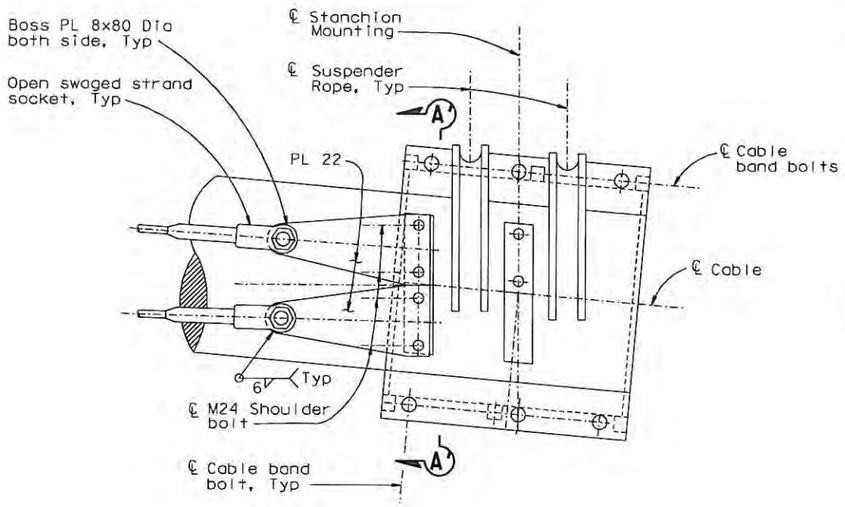

HANDROPE/MESSENGER ANCHORAGES AT PANEL POINT 104

1:10

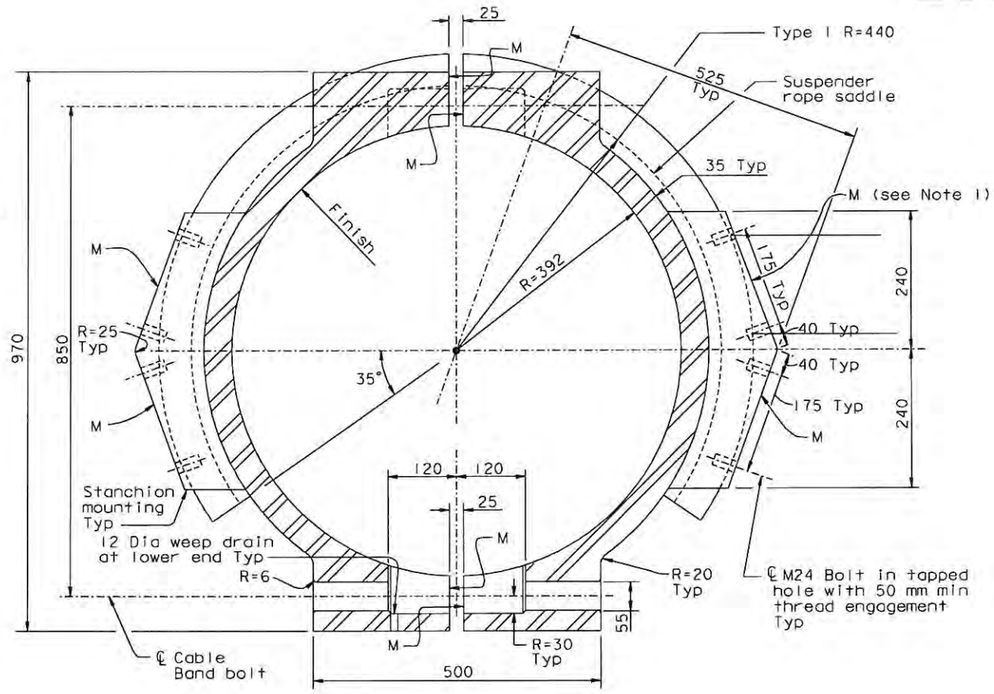

SECTION A'-A'

CABLE BAND DETAIL AT HANDROPE AND MESSENGER ANCHORAGE ONLY (PP8 & PP104)

1:5

NOTES:

1. All surfaces identified with letter "M" shall be spacially placed in the plane identified, within 2 mm. These surfaces shall not deviate in flatness from the specified plane more than 0.015 times the length over which the flatness is measured. Surface roughness of exterior surfaces with no machining shall be finished to ANSI 1000.
2. For details not shown, see "Cable Band Details" sheets.

ALL DIMENSIONS ARE IN MILLIMETERS UNLESS OTHERWISE SHOWN

DIST.	COUNTY	ROUTE	KILOMETER POST TOTAL PROJECT	SHEET NO.	TOTAL SHEETS
04	SF	80	13.2/13.9	8131	1204

REGISTERED ENGINEER - CIVIL

8-15-08
PLANS APPROVAL DATE

REGISTERED PROFESSIONAL ENGINEER — Tien Hung Ha — No. C 43990 — Exp. 06/30/09 — CIVIL — STATE OF CALIFORNIA

The State of California or its officers or agents shall not be responsible for the accuracy or completeness of electronic copies of this plan sheet.

T.Y. LIN / MOFFATT & NICHOL
825 BATTERY STREET
SAN FRANCISCO, CA 94111

Caltrans now has a web site! To get to the web site, go to: http://www.dot.ca.gov

REQUESTS FOR INFORMATION NOT ADDRESSED IN THIS CCO REMAIN IN FORCE

MARK	DATE	REVISIONS	BY	CH'D	CCO#
0	08/15/08	CABLE ELECTRICAL	TH	AS	72

CONTRACT CHANGE ORDER NO. 72
SHEET 13 OF 20

SAN FRANCISCO OAKLAND BAY BRIDGE
EAST SPAN SEISMIC SAFETY PROJECT
SELF-ANCHORED SUSPENSION BRIDGE (SUPERSTRUCTURE & TOWER)

CABLE HANDROPE DETAILS NO. 2A

	BY	CHECKED
DESIGN	T. Ho	A. Sanjines
DETAILS	T. Ho	A. Sanjines
QUANTITIES	T. Ho	A. Sanjines

R. Valizadeh/V. Toan/Y.L./W.L./F.C.
DESIGN OVERSIGHT
SIGN OFF DATE 08/15/08

PREPARED FOR THE STATE OF CALIFORNIA DEPARTMENT OF TRANSPORTATION

R. Manzanarez
PROJECT ENGINEER

BRIDGE NO. 34-0006L/R
KILOMETER POST 13.2/13.9

CU 04
EA 0120F1

DISREGARD PRINTS BEARING EARLIER REVISION DATES →

REVISION DATES (PRELIMINARY STAGE ONLY): 08/15/08

SHEET 396SI OF

Rev. Date: 5-18-98

ORIGINAL SCALE IN MILLIMETERS FOR REDUCED PLANS 0 10 20 30 40 50 60 70 80 90 100

FILE => I:\bb\04-012001\sas\contract plans and cco\cco\in progress\cco#72\revision 08-15-08\dgn\agshr08d.dgn

USERNAME => vlgnatovs DATE PLOTTED => 15 AUG 2008 TIME PLOTTED: 13:48:19

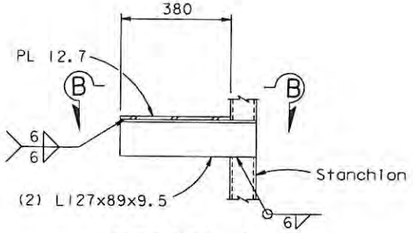

DETAIL A
1:10

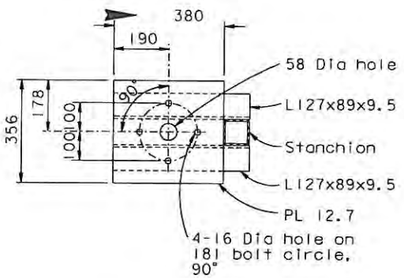

SECTION B-B
1:10

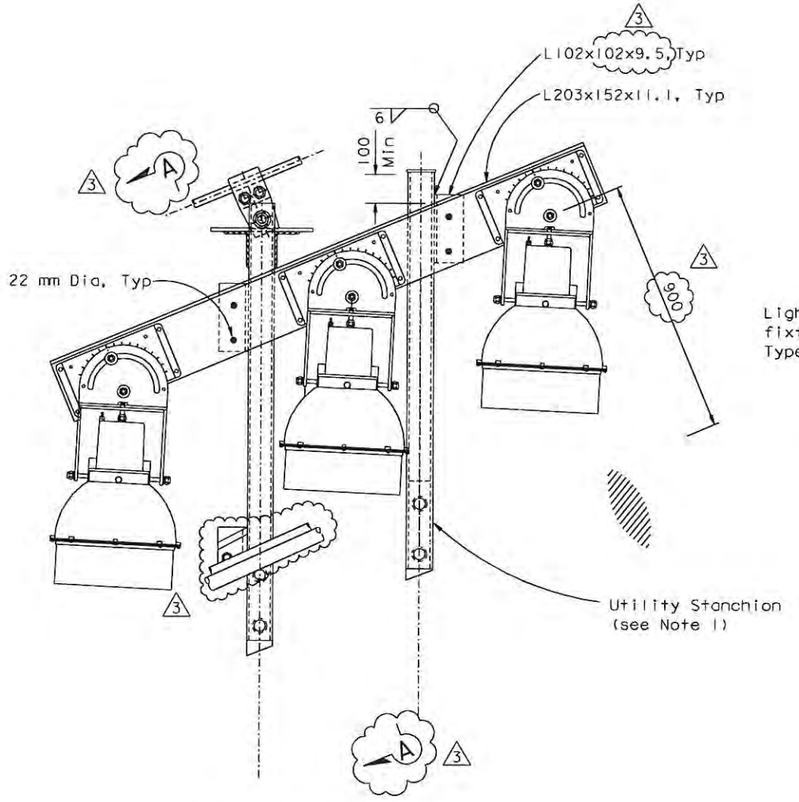

CABLE BAND B8
1:10

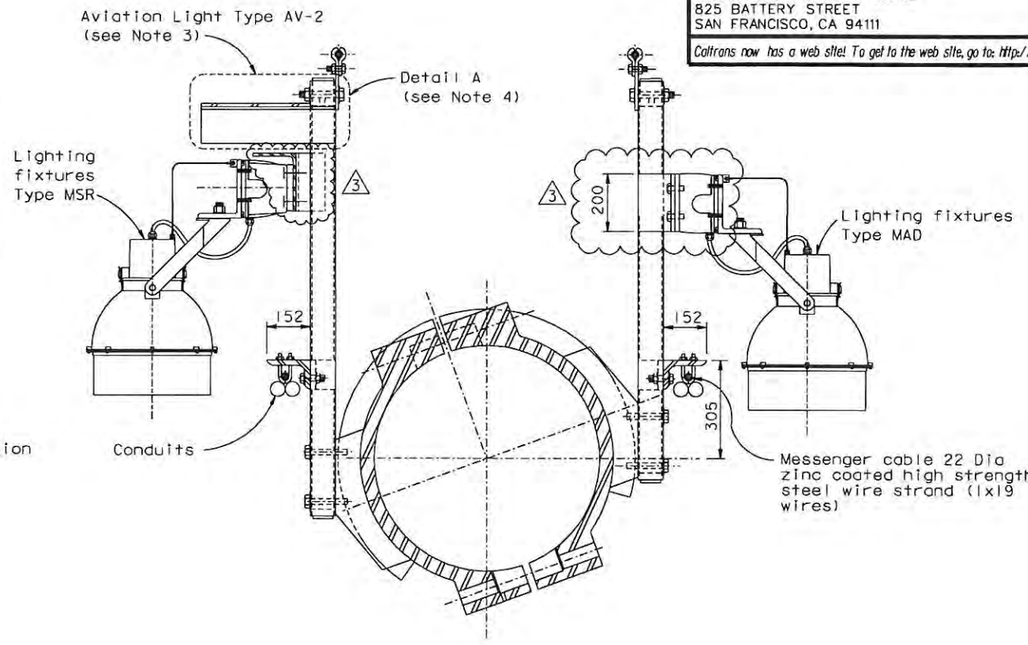

SECTION A-A
1:10

STANCHION DETAIL AT PANEL POINT 22
(PP 46 similar)

NOTES:

1. For Stanchion dimensions, see "Cable Handrope Details No.1" sheet.
2. Provide messenger cable support at every handrope stanchion, UNO. For messenger cable details, see "Cable Handrope Details No.2C" sheet.
3. For aviation light locations, details, conduit and lamp mounting holes, see "Road Plans".
4. Mounting plate detail may vary to accommodate the Contractor's supplier, subject to review and approval of the Engineer.
5. Pullbox (3) mounting plates not shown for clarity. For details, see "Tower And Suspension Cable" sheets of the "Road Plans".

DIST.	COUNTY	ROUTE	KILOMETER POST TOTAL PROJECT	SHEET NO.	TOTAL SHEETS
04	SF	80	13.2/13.9	813S2R3	1204

REGISTERED ENGINEER - CIVIL
Tien Hung Ho No. C 43990 Exp. 06/30/13 CIVIL
8-15-08
PLANS APPROVAL DATE
The State of California or its officers or agents shall not be responsible for the accuracy or completeness of electronic copies of this plan sheet.

T.Y.LIN / MOFFATT & NICHOL
825 BATTERY STREET
SAN FRANCISCO, CA 94111

Caltrans now has a web site! To get to the web site, go to: http://www.dot.ca.gov

CONTRACT CHANGE ORDER NO. 72
SHEET 14 OF 20

REQUESTS FOR INFORMATION NOT ADDRESSED IN THIS CCO REMAIN IN FORCE

MARK	DATE	DESCRIPTIONS	BY	CH'D	CCO#
3	06/22/11	CABLE ELECTRICAL	TH	AS	72
2	02/16/11	CABLE ELECTRICAL-LED AV LIGHTS	TH	AS	72S1
1	01/30/09	CABLE ELECTRICAL	TH	AS	72
0	10/31/08	CABLE ELECTRICAL	TH	AS	72

REVISIONS

R. Vallzadeh/V. Toan/Y.L./W.L./F.C.
DESIGN OVERSIGHT
SIGN OFF DATE 06/22/11

DESIGN	BY T. Ho	CHECKED A. Sanjines
DETAILS	BY T. Ho	CHECKED A. Sanjines
QUANTITIES	BY T. Ho	CHECKED A. Sanjines

PREPARED FOR THE STATE OF CALIFORNIA
DEPARTMENT OF TRANSPORTATION

R. Manzanarez
PROJECT ENGINEER

ALL DIMENSIONS ARE IN MILLIMETERS UNLESS OTHERWISE SHOWN

BRIDGE NO. 34-0006L/R
KILOMETER POST 13.2/13.9

SAN FRANCISCO OAKLAND BAY BRIDGE
EAST SPAN SEISMIC SAFETY PROJECT
SELF-ANCHORED SUSPENSION BRIDGE
(SUPERSTRUCTURE & TOWER)

CABLE HANDROPE DETAILS NO. 2B

Rev. Date: 5-18-98

ORIGINAL SCALE IN MILLIMETERS FOR REDUCED PLANS 0 10 20 30 40 50 60 70 80 90 100

CU 04
EA 0120F1

DISREGARD PRINTS BEARING EARLIER REVISION DATES →

REVISION DATES (PRELIMINARY STAGE ONLY): 08/15/08

SHEET 39652R3 OF

FILE => I:\bb\04-01200I\sas\contract plans and cco\cco\cco#72\9-revision 06-22-11\dgn\agshr08b.dgn

DATE PLOTTED => 22 JUN 2011 TIME PLOTTED => 10:16:51
USERNAME => PTom

Utility Support Stanchion Location
PP 22
PP 30
PP 38
PP 46
PP 54
PP 62
PP 70
PP 78
PP 80

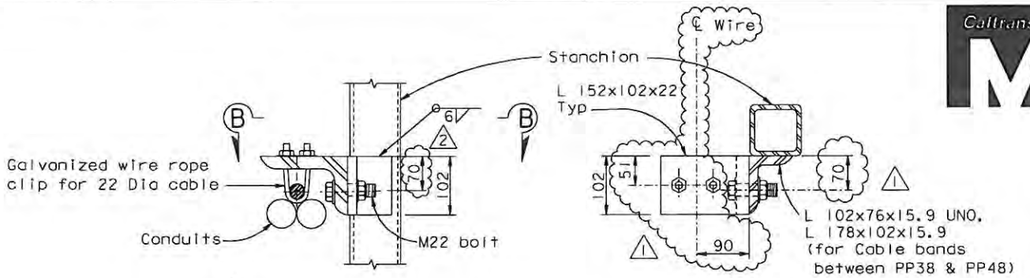

DETAIL A
1:5

SECTION B-B
1:5

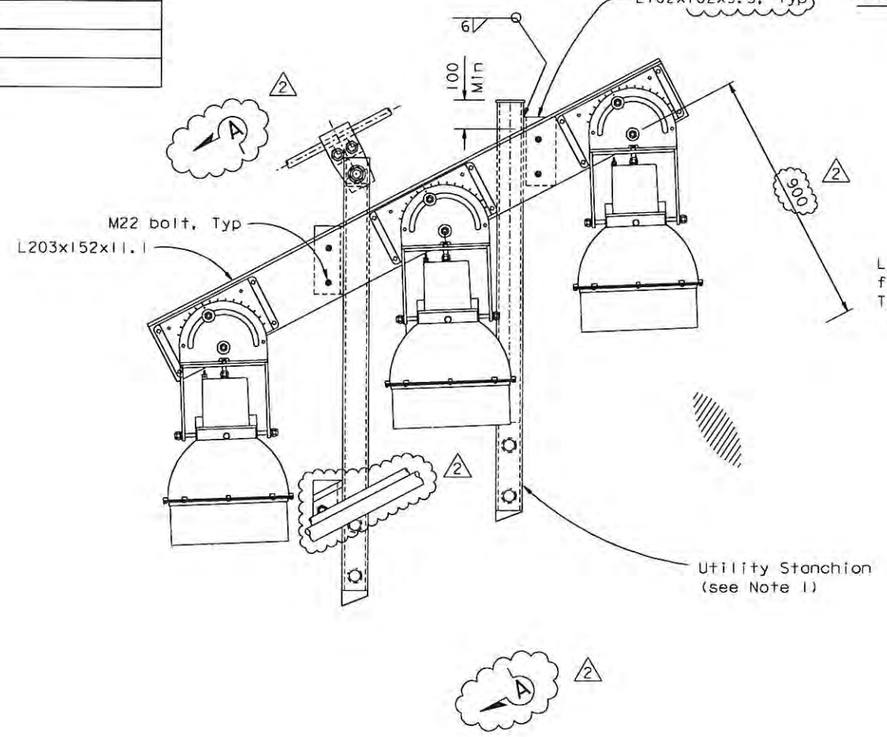

CABLE BAND B10
1:10

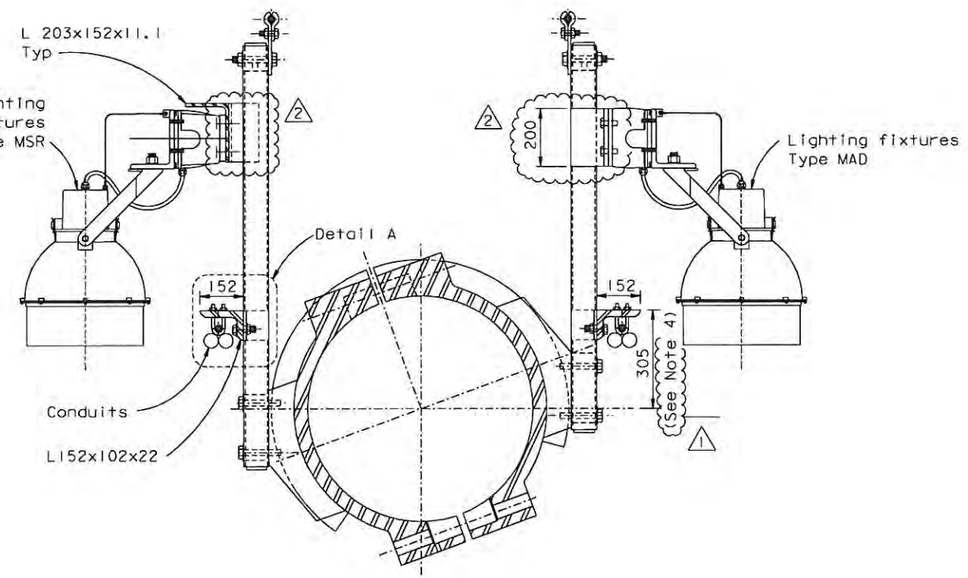

SECTION A-A
1:10

NOTES:

1. For Stanchion dimensions, see "Cable Handrope Details No.1" sheet.
2. Provide messenger cable support at every handrope stanchion, UNO. Detail A is typical for all handrope stanchion, UNO. (2)
3. Pullbox (mounting plates) not shown for clarity. For details, see "Tower And Suspension Cable" sheets of the "Road Plans".
4. (1) The dimension shown is perpendicular to the main cable.

STANCHION DETAIL AT PANEL POINT 38

CONTRACT CHANGE ORDER NO. 72
SHEET 15 OF 20

REQUESTS FOR INFORMATION NOT ADDRESSED IN THIS CCO REMAIN IN FORCE

MARK	DATE	DESCRIPTIONS	BY	CH'D	CCO#
2	06/22/11	CABLE ELECTRICAL	TH	AS	72
1	01/30/09	CABLE ELECTRICAL	TH	AS	72
0	10/31/08	CABLE ELECTRICAL	TH	AS	72

REVISIONS

R. Valizadeh/V. Toan/Y.L./W.L./F.C.
DESIGN OVERSIGHT
SIGN OFF DATE 06/22/11

Rev. Date: 5-18-98

	BY	CHECKED
DESIGN	T. Ho	A. Sanjines
DETAILS	T. Ho	A. Sanjines
QUANTITIES	T. Ho	A. Sanjines

PREPARED FOR THE STATE OF CALIFORNIA DEPARTMENT OF TRANSPORTATION

R. Manzanarez
PROJECT ENGINEER

ALL DIMENSIONS ARE IN MILLIMETERS UNLESS OTHERWISE SHOWN

ORIGINAL SCALE IN MILLIMETERS FOR REDUCED PLANS 0 10 20 30 40 50 60 70 80 90 100

CU 04
EA 0120F1

BRIDGE NO. 34-0006L/R
KILOMETER POST 13.2/13.9

DISREGARD PRINTS BEARING EARLIER REVISION DATES →

SAN FRANCISCO OAKLAND BAY BRIDGE
EAST SPAN SEISMIC SAFETY PROJECT
SELF-ANCHORED SUSPENSION BRIDGE
(SUPERSTRUCTURE & TOWER)

CABLE HANDROPE DETAILS NO. 2C

REVISION DATES (PRELIMINARY STAGE ONLY): 08/15/08

SHEET 396S3R2 OF

FILE => I:\bb\04-012001\sas\contract plans and cco\cco\cco#72\9-revision 06-22-11\dgn\agshr08c.dgn

USERNAME => PTom
DATE PLOTTED => 22 JUN 2011
TIME PLOTTED => 10:17:56

DIST.	COUNTY	ROUTE	KILOMETER POST TOTAL PROJECT	SHEET NO.	TOTAL SHEETS
04	SF	80	13.2/13.9	813S3R2	1204

REGISTERED ENGINEER - CIVIL
Tien Hung Ho
No. C 43990
Exp. 06/30/13
CIVIL
8-15-08
PLANS APPROVAL DATE

The State of California or its officers or agents shall not be responsible for the accuracy or completeness of electronic copies of this plan sheet.

T.Y. LIN / MOFFATT & NICHOL
825 BATTERY STREET
SAN FRANCISCO, CA 94111

Caltrans now has a web site! To get to the web site, go to: http://www.dot.ca.gov

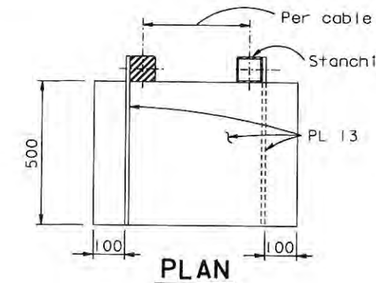

PLAN

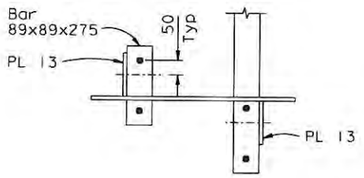

ELEVATION

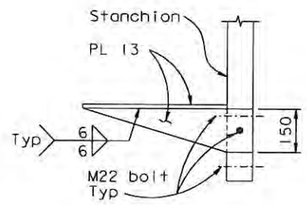

SECTION C-C

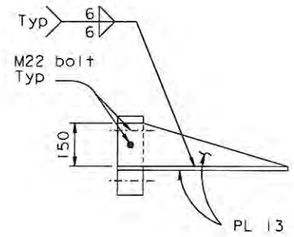

SECTION D-D

STRONG MOTION SENSOR ENCLOSURE PLATFORM

1:10 (UNO)

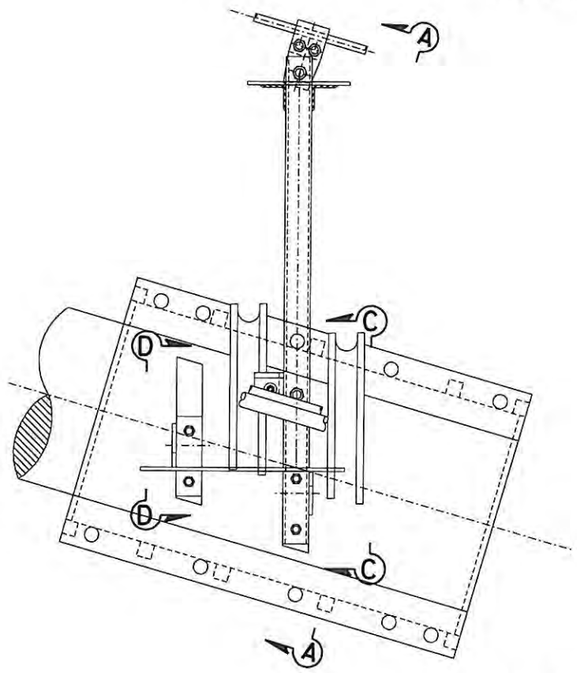

CABLE BAND B5

1:10

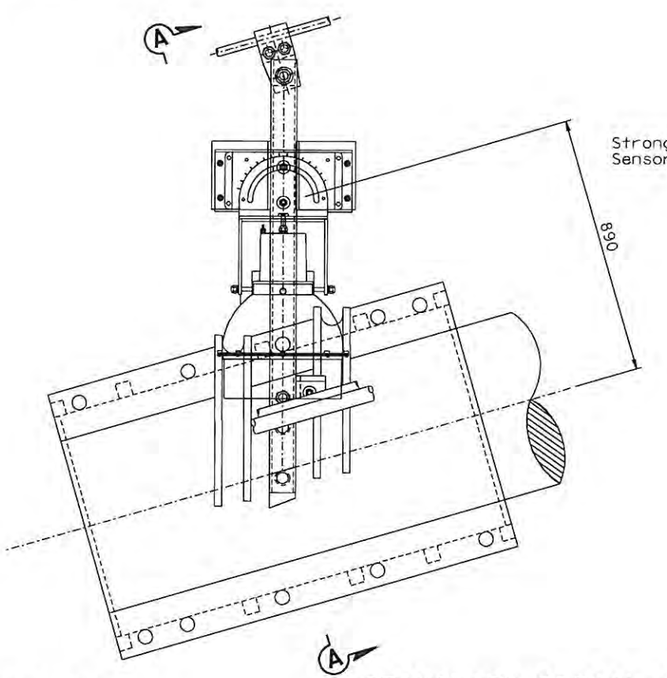

STANCHION DETAIL AT PANEL POINT 68

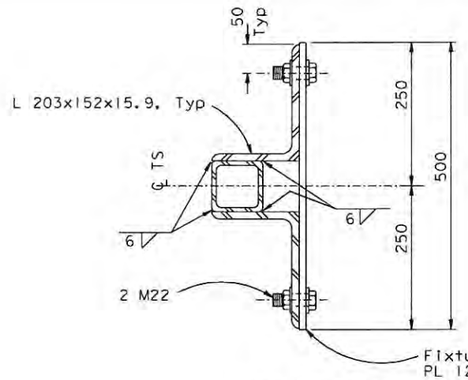

VIEW B-B

1:5

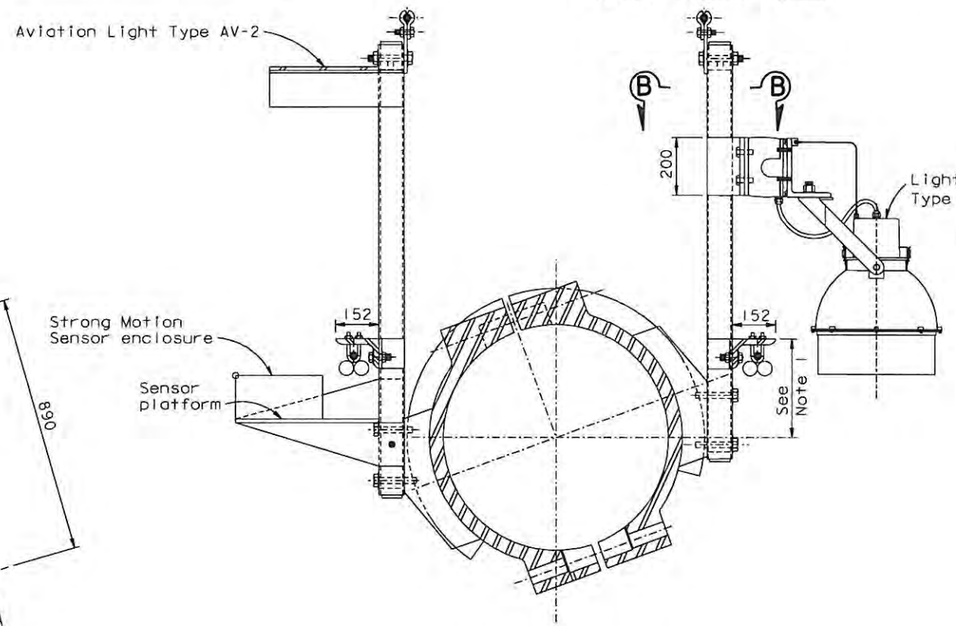

SECTION A-A

1:10

NOTES:

1. For additional notes, see "Cable Handrope Details No. 2B" sheet.
2. Strong Motion Sensor enclosure will be drilled and tapped in field. For mounting details, see "Road Plans".

ALL DIMENSIONS ARE IN MILLIMETERS UNLESS OTHERWISE SHOWN

DIST.	COUNTY	ROUTE	KILOMETER POST TOTAL PROJECT	SHEET NO.	TOTAL SHEETS
04	SF	80	13.2/13.9	813S4	1204

Caltrans Metric

REGISTERED ENGINEER - CIVIL

Tien Hung Ho No. C 43990 Exp. 06/30/09 CIVIL — REGISTERED PROFESSIONAL ENGINEER — STATE OF CALIFORNIA

8-15-08
PLANS APPROVAL DATE

The State of California or its officers or agents shall not be responsible for the accuracy or completeness of electronic copies of this plan sheet.

T.Y. LIN / MOFFATT & NICHOL
825 BATTERY STREET
SAN FRANCISCO, CA 94111

Caltrans now has a web site! To get to the web site, go to: http://www.dot.ca.gov

REQUESTS FOR INFORMATION NOT ADDRESSED IN THIS CCO REMAIN IN FORCE

MARK	DATE	REVISIONS DESCRIPTIONS	BY	CH'D	CCO#
0	09/12/08	CABLE ELECTRICAL	TH	AS	72

CONTRACT CHANGE ORDER NO. 72
SHEET 16 OF 20

R. Valizadeh/V. Toan/Y.L./W.L./F.C. DESIGN OVERSIGHT Ryan Valizadeh / Vong P. Toan / Y. Liu SIGN OFF DATE 09/12/08				
	DESIGN	BY T. Ho	CHECKED A. Sanjines	PREPARED FOR THE STATE OF CALIFORNIA DEPARTMENT OF TRANSPORTATION
	DETAILS	BY T. Ho	CHECKED A. Sanjines	
	QUANTITIES	BY T. Ho	CHECKED A. Sanjines	
R. Manzanarez PROJECT ENGINEER				BRIDGE NO. 34-0006L/R; KILOMETER POST 13.2/13.9

SAN FRANCISCO OAKLAND BAY BRIDGE
EAST SPAN SEISMIC SAFETY PROJECT
SELF-ANCHORED SUSPENSION BRIDGE (SUPERSTRUCTURE & TOWER)

CABLE HANDROPE DETAILS NO. 2D

Rev. Date: 5-18-98

ORIGINAL SCALE IN MILLIMETERS FOR REDUCED PLANS 0 10 20 30 40 50 60 70 80 90 100

CU 04
EA 0120F1

DISREGARD PRINTS BEARING EARLIER REVISION DATES →

REVISION DATES (PRELIMINARY STAGE ONLY): 08/15/08

SHEET 396S4 OF

FILE => L:\BB\04-012001\SAS\Contract Plans and CCO\CCO\In Progress\CCO#72\Revision 09-12-08\DGN\agshr08c.dgn

USERNAME => vignotavs DATE PLOTTED => 12 SEP 2008 TIME PLOTTED: 25:07

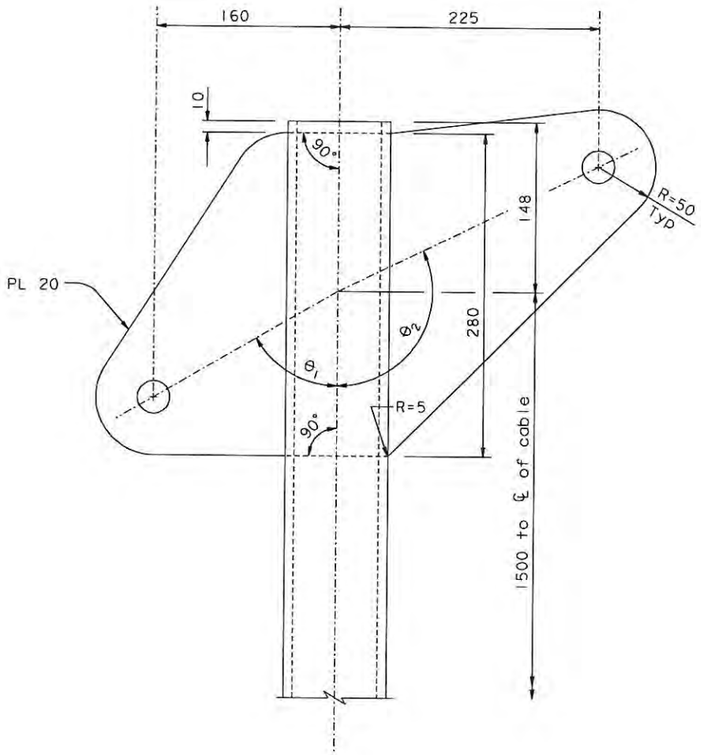

DETAIL G (PP 10 - 2 Cables)
1:2.5

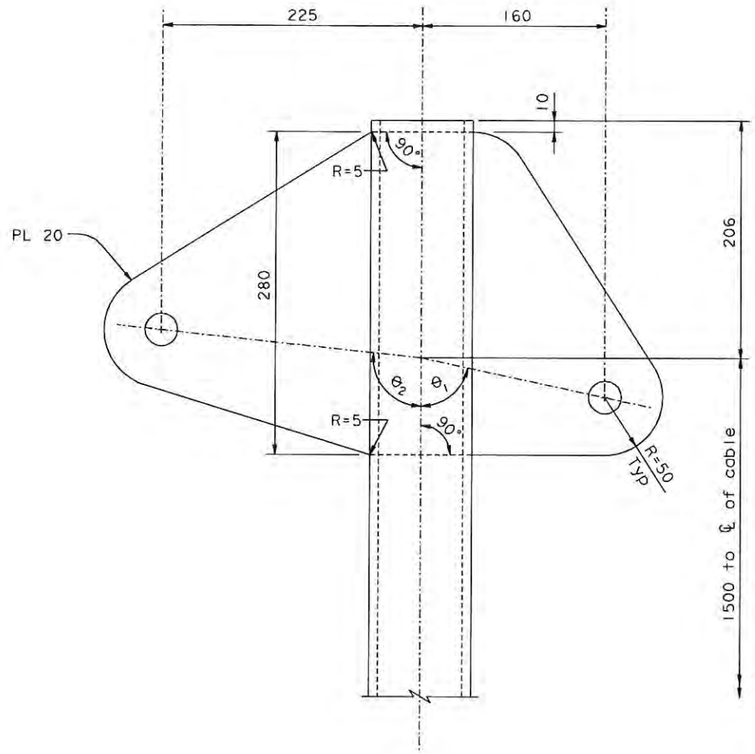

DETAIL H (PP 102 - 2 Cables)
1:2.5

NOTES:

1. For hand rope bracket angles, see "Cable Handrope Details No.3" sheet.

CONTRACT CHANGE ORDER NO. 72
SHEET 17 OF 20

REQUESTS FOR INFORMATION NOT ADDRESSED IN THIS CCO REMAIN IN FORCE

ALL DIMENSIONS ARE IN MILLIMETERS UNLESS OTHERWISE SHOWN

DIST.	COUNTY	ROUTE	KILOMETER POST TOTAL PROJECT	SHEET NO.	TOTAL SHEETS
04	SF	80	13.2/13.9	81355	1204

Caltrans Metric

REGISTERED ENGINEER - CIVIL
Tien Hung Ho
No. C 43990
Exp. 06/30/13
CIVIL
STATE OF CALIFORNIA
06-22-11
PLANS APPROVAL DATE

The State of California or its officers or agents shall not be responsible for the accuracy or completeness of electronic copies of this plan sheet.

T.Y. LIN / MOFFATT & NICHOL
825 BATTERY STREET
SAN FRANCISCO, CA 94111

Caltrans now has a web site! To get to the web site, go to: http://www.dot.ca.gov

100 % PS&E

MARK	DATE	REVISIONS	BY	CH'D	CCO#
0	06/22/11	CABLE ELECTRICAL	TH	MN	72

	BY	CHECKED
DESIGN	T. Ho	M. Nader
DETAILS	T. Ho	M. Nader
QUANTITIES	T. Ho	M. Nader

PREPARED FOR THE
STATE OF CALIFORNIA
DEPARTMENT OF TRANSPORTATION

R. Manzanarez
PROJECT ENGINEER

BRIDGE NO. 34-0006L/R
KILOMETER POST 13.2/13.9

SAN FRANCISCO OAKLAND BAY BRIDGE
EAST SPAN SEISMIC SAFETY PROJECT
SELF-ANCHORED SUSPENSION BRIDGE
(SUPERSTRUCTURE & TOWER)

CABLE HANDROPE DETAILS NO. 2E

R. Vallzadeh/V. Toan/Y.L./W.L./F.C.
DESIGN OVERSIGHT
SIGN OFF DATE 06/22/11

Rev. Date: 5-18-98

ORIGINAL SCALE IN MILLIMETERS FOR REDUCED PLANS 0 10 20 30 40 50 60 70 80 90 100

CU 04
EA 0120F1

DISREGARD PRINTS BEARING EARLIER REVISION DATES →

REVISION DATES (PRELIMINARY STAGE ONLY) 06/22/11

SHEET 396S5 OF

FILE => I:\bb\04-01200I\sas\contract plans and cco\cco\cco#72\9-revision 06-22-11\dgn\agshr08e.dgn

USERNAME => PTom DATE PLOTTED => 22 JUN 2011 TIME PLOTTED => 8:38

DETAIL D (See Note 2)
1:10

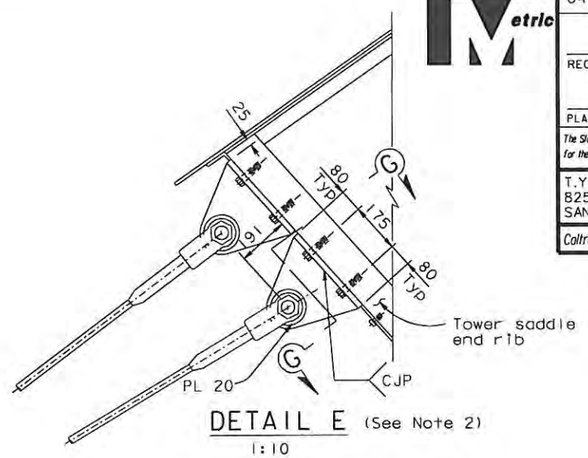

DETAIL E (See Note 2)
1:10

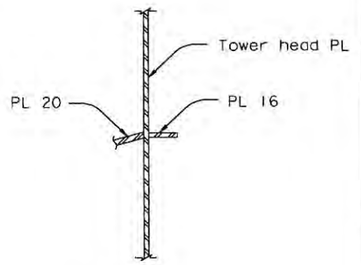

SECTION F-F
1:10

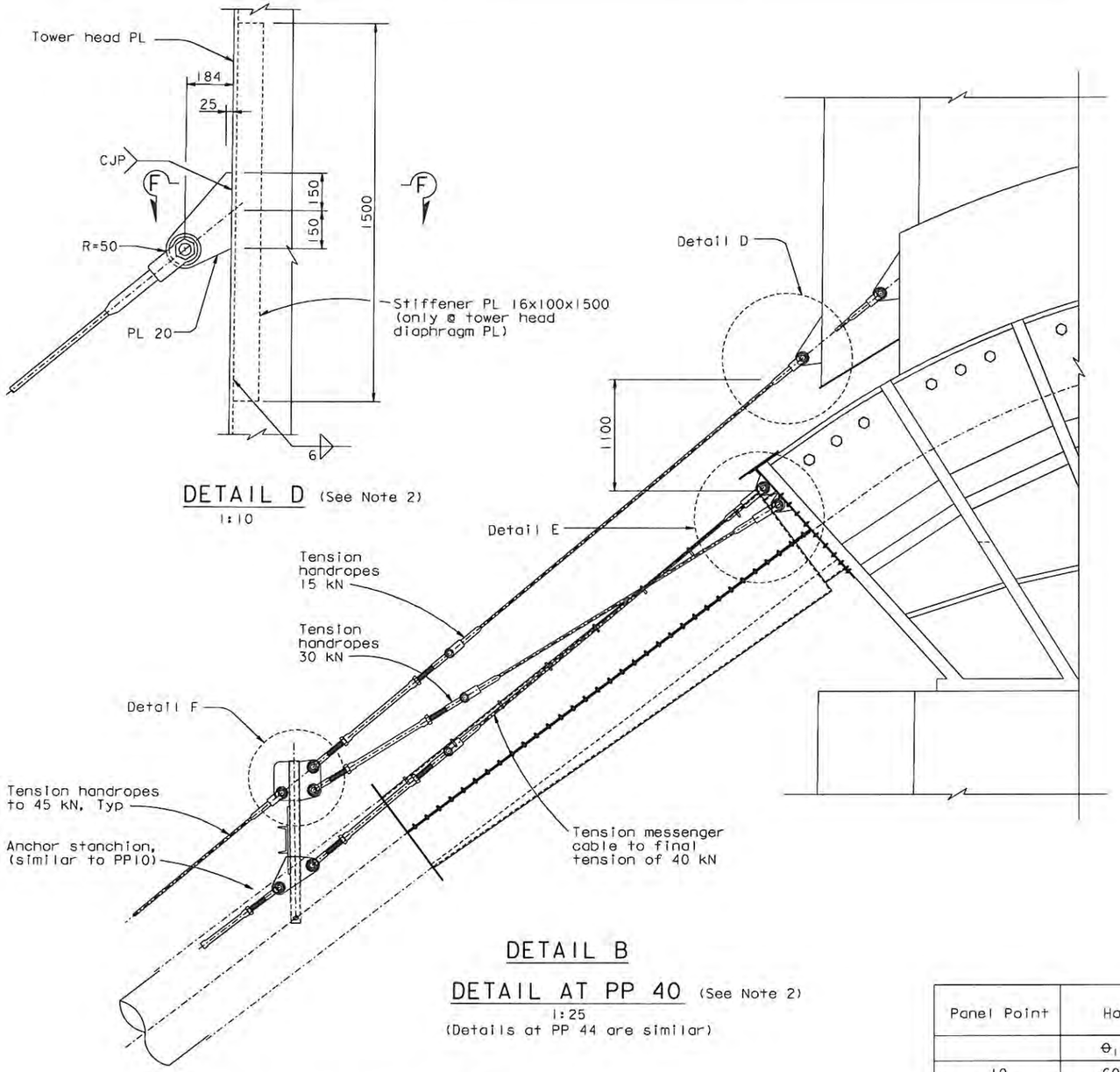

DETAIL B

DETAIL AT PP 40 (See Note 2)
1:25
(Details at PP 44 are similar)

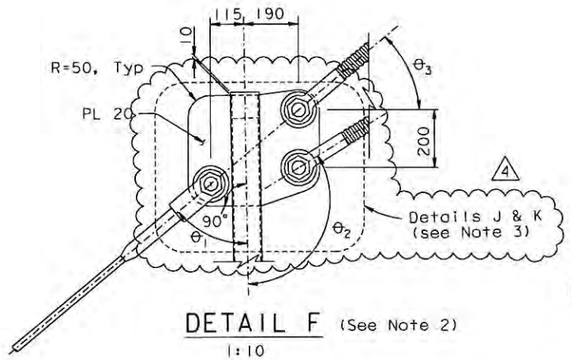

DETAIL F (See Note 2)
1:10

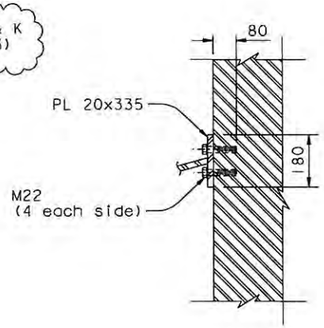

SECTION G-G
1:10

Panel Point	Handrope Bracket Angles		
	θ_1	θ_2	θ_3
10	60°	116°	NA
40	54°	116°	35°
44	60°	112°	30°
102	78°	96°	NA

NOTES:

1. For anchor stanchion, see "Cable Handrope Details No.2" sheet.
2. For details not shown see "Cable Handrope Details No.2" sheet. Connect the handrope bracket to the 1st stiffener from the ℄ bridge of tower head shim PL D.
4. 3. For Details J & K, see "Cable Handrope Details No.3A" sheet.

CONTRACT CHANGE ORDER NO. 72
SHEET 18 OF 20

REQUESTS FOR INFORMATION NOT ADDRESSED IN THIS CCO REMAIN IN FORCE

MARK	DATE	DESCRIPTIONS	BY	CH'D	CCO#
4	06/22/11	CABLE ELECTRICAL	TH	MN	72
3	10/22/10	TOWER HEAD DETAILS	NV	MN	93
2	08/15/08	CABLE ELECTRICAL	TH	MN	72
1	04/16/07	CABLE SYSTEM	GB	MN	37

REVISIONS

R. Valizadeh/V. Toan/Y.L./W.L./F.C.
DESIGN OVERSIGHT
SIGN OFF DATE 06/22/11

	BY	CHECKED
DESIGN	M. Nader	T. McMeans
DETAILS	G. Baker	T. McMeans
QUANTITIES	G. Baker	C. Mibelli

PREPARED FOR THE
STATE OF CALIFORNIA
DEPARTMENT OF TRANSPORTATION

R. Manzanarez
PROJECT ENGINEER

ALL DIMENSIONS ARE IN MILLIMETERS UNLESS OTHERWISE SHOWN

ORIGINAL SCALE IN MILLIMETERS FOR REDUCED PLANS 0 10 20 30 40 50 60 70 80 90 100

Rev. Date: 5-18-98

CU 04
EA 0120F1

BRIDGE NO. 34-0006L/R
KILOMETER POST 13.2/13.9

SAN FRANCISCO OAKLAND BAY BRIDGE
EAST SPAN SEISMIC SAFETY PROJECT
SELF-ANCHORED SUSPENSION BRIDGE
(SUPERSTRUCTURE & TOWER)

CABLE HANDROPE DETAILS NO. 3

DISREGARD PRINTS BEARING EARLIER REVISION DATES →
REVISION DATES (PRELIMINARY STAGE ONLY): 08/20/99 | 05/17/01 | 04/08/02 | 07/31/02 | 12/19/02 | 09/08/04

SHEET 397R4 OF

FILE -> I:\bb\04-012001\sas\contract plans and cco\cco\cco*72\9-revision 06-22-11\dgn\agshr09.dgn

USERNAME -> PTom DATE PLOTTED -> 22 JUN 2011 TIME PLOTTED -> 10:19:15

100 % PS&E

Caltrans Metric

DIST.	COUNTY	ROUTE	KILOMETER POST TOTAL PROJECT	SHEET NO.	TOTAL SHEETS
04	SF	80	13.2/13.9	814R4	1204

REGISTERED ENGINEER - CIVIL
12-6-04
PLANS APPROVAL DATE
REGISTERED PROFESSIONAL ENGINEER Marwan N. Nader No. C 054426 Exp. 12/31/11 CIVIL STATE OF CALIFORNIA

The State of California or its officers or agents shall not be responsible for the accuracy or completeness of electronic copies of this plan sheet.

T.Y. LIN / MOFFATT & NICHOL
825 BATTERY STREET
SAN FRANCISCO, CA 94111

Caltrans now has a web site! To get to the web site, go to: http://www.dot.ca.gov

DIST.	COUNTY	ROUTE	KILOMETER POST TOTAL PROJECT	SHEET NO.	TOTAL SHEETS
04	SF	80	13.2/13.9	814SIRI	1204

REGISTERED ENGINEER - CIVIL

06-22-11
PLANS APPROVAL DATE

Tien Hung Ho
No. C 43990
Exp. 06/30/13
CIVIL
REGISTERED PROFESSIONAL ENGINEER
STATE OF CALIFORNIA

The State of California or its officers or agents shall not be responsible for the accuracy or completeness of electronic copies of this plan sheet.

T.Y. LIN / MOFFATT & NICHOL
825 BATTERY STREET
SAN FRANCISCO, CA 94111

Caltrans now has a web site! To get to the web site, go to: http://www.dot.ca.gov

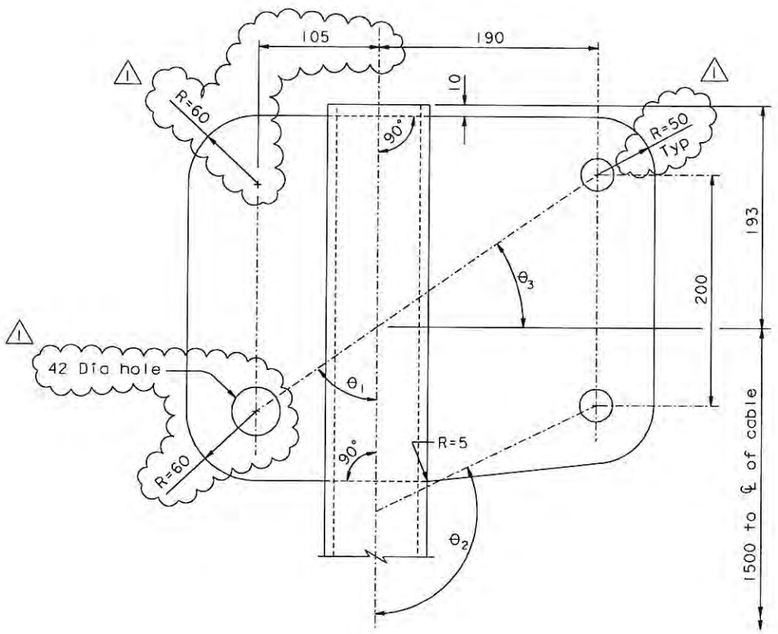

DETAIL J (PP 40 - 3 Cables)
1:2.5

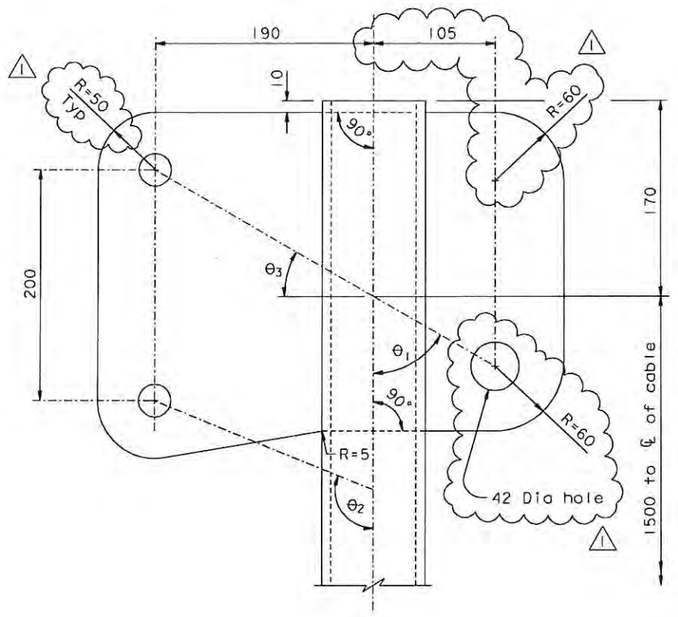

DETAIL K (PP 44 - 3 Cables)
1:2.5

NOTES:

1. For hand rope bracket angles, see "Cable Handrope Details No.3" sheet.

CONTRACT CHANGE ORDER NO. 72
SHEET 19 OF 20

REQUESTS FOR INFORMATION NOT ADDRESSED IN THIS CCO REMAIN IN FORCE

ALL DIMENSIONS ARE IN MILLIMETERS UNLESS OTHERWISE SHOWN

MARK	DATE	DESCRIPTIONS	BY	CH'D	CCO#
1	11/22/11	CABLE ELECTRICAL	TH	MN	72
0	06/22/11	CABLE ELECTRICAL	TH	MN	72

REVISIONS

R. Vallzadeh/V. Toan/Y.L./W.L./F.C.
DESIGN OVERSIGHT
Roya Valizadeh / Vinh Toan / Y. Liu
SIGN OFF DATE 11/22/11

	BY	CHECKED
DESIGN	T. Ho	M. Nader
DETAILS	T. Ho	M. Nader
QUANTITIES	T. Ho	M. Nader

PREPARED FOR THE
STATE OF CALIFORNIA
DEPARTMENT OF TRANSPORTATION

R. Manzanarez
PROJECT ENGINEER

BRIDGE NO. 34-0006L/R
KILOMETER POST 13.2/13.9

SAN FRANCISCO OAKLAND BAY BRIDGE
EAST SPAN SEISMIC SAFETY PROJECT
SELF-ANCHORED SUSPENSION BRIDGE
(SUPERSTRUCTURE & TOWER)

CABLE HANDROPE DETAILS NO. 3A

Rev. Date: 5-18-98

ORIGINAL SCALE IN MILLIMETERS FOR REDUCED PLANS 0 10 20 30 40 50 60 70 80 90 100

CU 04
EA 0120F1

DISREGARD PRINTS BEARING EARLIER REVISION DATES →

REVISION DATES (PRELIMINARY STAGE ONLY): 06/22/11

SHEET 397SIRI OF

FILE => I:\bb\04-012001\sas\contract plans and cco\cco\cco#72\10-revision 11-22-11\dgn\agshr09a.dgn

100% PS&E

USERNAME => DWinrow DATE PLOTTED => 22 NOV 2011 TIME PLOTTED: 10:57

DIST.	COUNTY	ROUTE	KILOMETER POST TOTAL PROJECT	SHEET NO.	TOTAL SHEETS
04	SF	80	13.2/13.9	815R2	1204

REGISTERED ENGINEER - CIVIL

12-6-04
PLANS APPROVAL DATE

REGISTERED PROFESSIONAL ENGINEER — Marwan N. Nader — No. C 054426 — Exp. 12/31/11 — CIVIL — STATE OF CALIFORNIA

The State of California or its officers or agents shall not be responsible for the accuracy or completeness of electronic copies of this plan sheet.

T.Y. LIN / MOFFATT & NICHOL
825 BATTERY STREET
SAN FRANCISCO, CA 94111

Caltrans now has a web site! To get to the web site, go to: http://www.dot.ca.gov

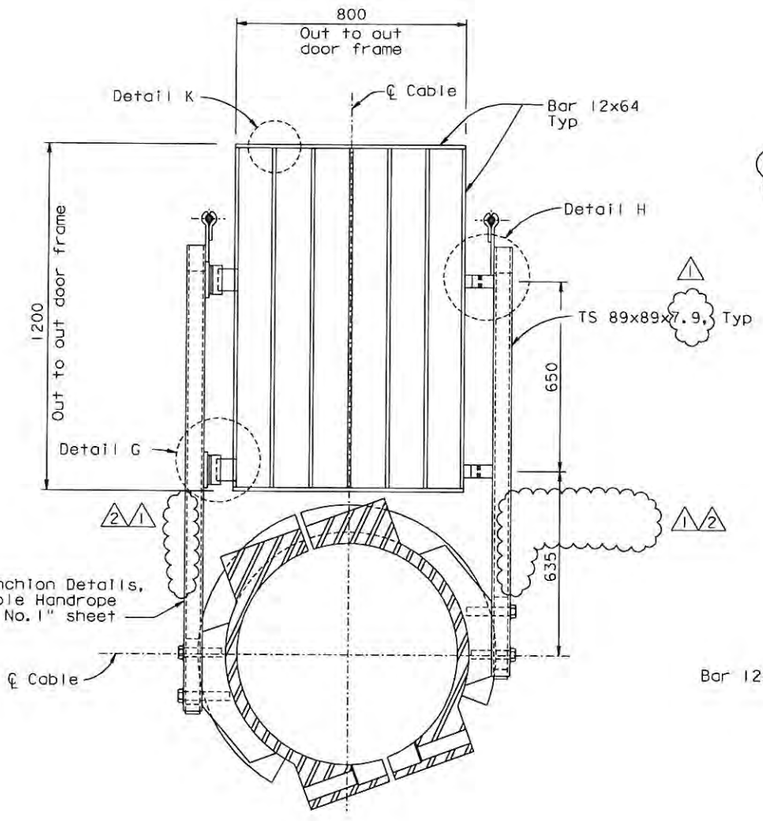

SECTION B-B

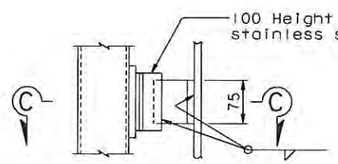

DETAIL G
1:5
(Handrope bracket not shown for clarity)

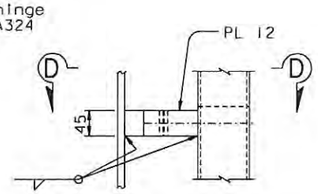

DETAIL H
1:5

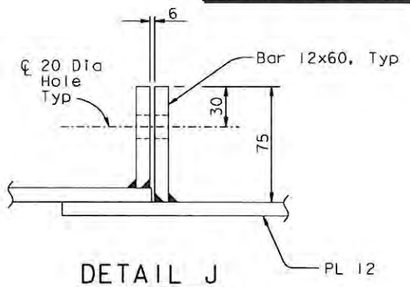

DETAIL J
NTS

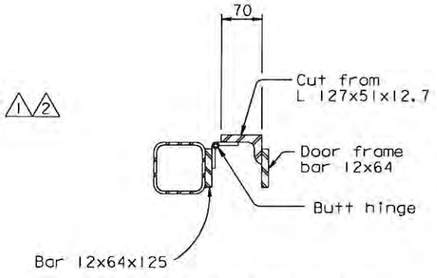

SECTION C-C
1:5

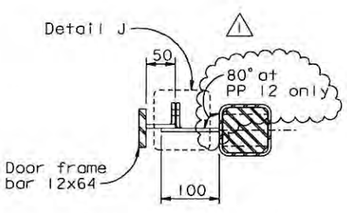

SECTION D-D
1:5

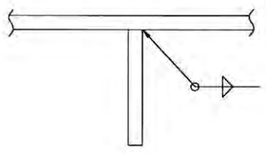

DETAIL K
NTS

SAFETY GATE AT PANEL POINT 100 (SOUTH CABLE SHOWN) (NORTH CABLE OPP HAND) △1
1:10
(Details at panel point 12 are similar)

CONTRACT CHANGE ORDER NO. 72
SHEET 20 OF 20

REQUESTS FOR INFORMATION NOT ADDRESSED IN THIS CCO REMAIN IN FORCE

MARK	DATE	DESCRIPTIONS	BY	CH'D	CCO#
2	06/22/11	CABLE ELECTRICAL	TH	MN	72
1	08/15/08	CABLE ELECTRICAL	MN	AS	72

REVISIONS

R. Vallzadeh/V. Toan/Y.L./W.L./F.C.
DESIGN OVERSIGHT
Ryan Vallzadeh / Vong Toan / Y. Liu
SIGN OFF DATE 06/22/11

Rev. Date: 5-18-98

	BY	CHECKED
DESIGN	M. Nader	T. McMeans
DETAILS	G. Baker	T. McMeans
QUANTITIES	G. Baker	C. Mibelli

PREPARED FOR THE STATE OF CALIFORNIA DEPARTMENT OF TRANSPORTATION

R. Manzanarez
PROJECT ENGINEER

ALL DIMENSIONS ARE IN MILLIMETERS UNLESS OTHERWISE SHOWN

ORIGINAL SCALE IN MILLIMETERS FOR REDUCED PLANS 0 10 20 30 40 50 60 70 80 90 100

CU 04
EA 0120F1

BRIDGE NO. 34-0006L/R
KILOMETER POST 13.2/13.9

DISREGARD PRINTS BEARING EARLIER REVISION DATES →

REVISION DATES (PRELIMINARY STAGE ONLY): 08/07/99 | 05/31/01 | 04/09/02 | 07/29/02 | 12/19/02

SHEET 398R2 OF

SAN FRANCISCO OAKLAND BAY BRIDGE
EAST SPAN SEISMIC SAFETY PROJECT
SELF-ANCHORED SUSPENSION BRIDGE (SUPERSTRUCTURE & TOWER)

CABLE HANDROPE DETAILS NO. 4

100 % PS&E

DATE PLOTTED => 22 JUN 2011 TIME PLOTTED => 10:20:26
USERNAME => PTam

FILE => I:\bb\04-0120F1\sas\contract plans and cco\cco\cco#72\9-revision 06-22-11\dgn\agshr10.dgn

CONTRACT CHANGE ORDER

Change Requested by: Engineer

CCO: 73 **Suppl. No. 0** **Contract No. 04 – 0120F4** **Road** SF-80-13.2/13.9 **FED. AID LOC.:**

To: **AMERICAN BRIDGE/FLUOR ENTERPRISES INC A JOINT VENTURE**

You are directed to make the following changes from the plans and specifications or do the following described work not included in the plans and specifications for this contract. ***NOTE: This change order is not effective until approved by the Engineer.***

Description of work to be done, estimate of quantities and prices to be paid. (Segregate between additional work at contract price, agreed price and force account.) Unless otherwise stated, rates for rental of equipment cover only such time as equipment is actually used and no allowance will be made for idle time. This last percentage shown is the net accumulated increase or decrease from the original quantity in the Engineer's Estimate.

Adjustment of Compensation at Lump Sum:

Modify the routing of the bikepath railing lighting, belvedere lighting, and bikepath emergency call box conduits. On the South side of the bikepath install pipe sleeves through the bikepath deck panels at each bikepath railing light location. Use Type 4 Liquidtight flexible metal conduit and fittings in lieu of metal clad cable.

Conduit penetrations and welded area of the mounting studs shall be cleaned, primed, and finish painted in accordance with Special Provisions Section 10-1.69 "CLEAN AND PAINT STRUCTURAL STEEL."

The following revised plan sheets detail the changes addressed in this change order: 72R6, 93R10, 188R5, 189R6, 190R4, 191R4, 192R6, 193R4, 197R5, 198R4, 204R3, 205R3, 206R3, 207S2R1, 207S3R1, 207S4R1, 210R5, 210S1R3, 210S2R2, 210S3R1, 210S4R1, 210S5R2, 210S6, 213R2, 355R3, 366R3, 367R4, 367S1R2, 368R4, 369R5, 370R5, 371R5, 372R2, 373R7, 373S1R1, 374R7, 394R4, 395R6, 396R5, 397R4, 398R3, 399R4, 400R6, 407S9R5, 407S10R2, 407S12R4, 819R3, 819S1, 900R5, 900S1R5, and 901R4 (of 1204) as shown on sheets 2 through 52 of this change order.

This change order resolves the costs associated with Contractor Request for Information (RFI) numbers 969R0, 969R1, 969R2, 2496R0, and 2534R0 with respect to changes listed above.

For this work, the Contractor will receive a lump sum price of $943,653.00. This sum constitutes full and complete compensation for furnishing all labor, material, tools and incidentals including all markups by reason of this change.

Adjustment of Compensation at Lump Sum..... $943,653.00

Estimated Cost: **Increase** ☒ **Decrease** ☐ **$943,653.00**

By reason of this order the time of completion will be adjusted as follows: **0 Days**

Submitted by

Signature **Resident Engineer** Kannu Balan, Senior T.E. **Date** 12-9-11

Approval Recommended by

Signature **Supervising Transportation Engineer** William Casey, Sup. T.E. **Date** 12-20-11

Engineer Approval by

Signature **Supervising Transportation Engineer** William Casey, Sup. T.E. **Date** 1-10-12

We the undersigned contractor, have given careful consideration to the change proposed and agree, if this proposal is approved, that we will provide all equipment, furnish the materials, except as otherwise be noted above, and perform all services necessary for the work above specified, and will accept as full payment therefor the prices shown above.

NOTE: If you, the contractor, do not sign acceptance of this order, your attention is directed to the requirements of the specifications as to proceeding with the ordered work and filing a written protest within the time therein specified.

Contractor Acceptance by

Signature (Print name and title) BRIAN A. PETERSEN - PROJECT DIRECTOR **Date** 09JAN12

STATE OF CALIFORNIA - DEPARTMENT OF TRANSPORTATION

CONTRACT CHANGE ORDER MEMORANDUM

TO: Tony Anziano, Program Manager /	FILE: **E.A.** 04 - 0120F4
FROM: Kannu Balan, Senior TE	**CO-RTE-PM** SF-80-13.2/13.9
	FED. NO.
CCO#: **73** SUPPLEMENT#: **0** Category Code: **CHPC**	CONTINGENCY BALANCE (incl. this change) **$147,357,373.58**
COST: **$943,653.00** INCREASE ☑ DECREASE ☐	HEADQUARTERS APPROVAL REQUIRED? ☑ YES ☐ NO
SUPPLEMENTAL FUNDS PROVIDED: **$0.00**	IS THIS REQUEST IN ACCORDANCE WITH ENVIRONMENTAL DOCUMENTS? ☑ YES ☐ NO
CCO DESCRIPTION: Bikepath Conduit	**PROJECT DESCRIPTION:** CONSTRUCT SELF-ANCHORED SUSPENSION BRIDGE

Original Contract Time:	Time Adj. This Change:	Previously Approved CCO Time Adjustments:	Percentage Time Adjusted: (including this change)	Total # of Unreconciled Deferred Time CCO(s): (including this change)
2490 Day(s)	**0** Day(s)	**501** Day(s)	**20** %	**3**

THIS CHANGE ORDER PROVIDES FOR:

Modifying the routing of the bikepath railing lighting, belvedere lighting, and bikepath emergency call box conduits. On the South side of the bikepath installing pipe sleeves through the bikepath deck panels at each bikepath railing light location. Using Type 4 Liquidtight flexible metal conduit and fittings in lieu of metal clad cable. Cleaning, priming, and finish painting conduit penetrations and welded mounting studs.

This change order will bring the conduit for the bikepath railing light fixture from the bottom of the bikepath and into the divider rail on the West post of the South side railing. Reducing and revising the conduit routing along the bikepath will give the conduit a uniform look as well as enhance maintenance along the length of the bikepath. In addition, the metal clad cable requirement is changed to prevent corrosion from the marine environment.

This change order resolves the costs associated with Contractor Request for Information (RFI) numbers 969R0, 969R1, 969R2, 2496, and 2534 with respect to changes listed above.

The total cost of this change order is $943,653.00, which can be financed from the contingency fund. A detailed cost analysis is on file.

No time adjustment is warranted as this change order does not affect the controlling operation.

This change order has concurrence from Peter Siegenthaler (Principal TE), William Casey (Sup. TE), Rich Foley (HQ Oversight), Ken Terpstra (Project Manager), Wenyi Long (Bridge Design), Lina Ellis (Maintenance), and Jing Chen (District Design) August 30, 2011.

Toll Bridge Program Oversight Committee (TBPOC) approved this change order on September 8, 2011, for a value not to exceed amount of $1.6M.

CONCURRED BY:			
Construction Engineer:	PCE, Pete Siegenthaler, Prin TE	Date	8/23/11
Bridge Engineer:	William Casey, Sup TE	Date	8/12/11
Project Engineer:	CT Oversight, Wenyi Long, P.E.	Date	8/15/11
Project Manager:	Proj Manager, Ken Terpstra	Date	9/9/11
FHWA Rep.:		Date	
Environmental:		Date	
Other (specify):	HQ, Rich Foley	Date	8/16/11
Other (specify):	Struct. Maint, Lina Ellis	Date	8/15/11
District Prior Approval By:	HQ, Larry Salhaney	Date	8/29/11
HQ (Issue Approve) By:		Date	
Resident Engineer's Signature:		Date	11-18-11

ESTIMATE OF COST

	THIS REQUEST	TOTAL TO DATE
ITEMS	$0.00	$0.00
FORCE ACCOUNT	$0.00	$0.00
AGREED PRICE	$0.00	$0.00
ADJUSTMENT	$943,653.00	$943,653.00
TOTAL	$943,653.00	$943,653.00

FEDERAL PARTICIPATION

☐ PARTICIPATING ☐ PARTICIPATING IN PART ☑ NONE
☐ NON-PARTICIPATING (MAINTENANCE) ☐ NON-PARTICIPATING

FEDERAL SEGREGATION (if more than one Funding Source or P.I.P. type)
☐ CCO FUNDED PER CONTRACT ☐ CCO FUNDED AS FOLLOWS

FEDERAL FUNDING SOURCE	PERCENT

ADA Notice: For individuals with sensory disabilities, this document is available in alternate formats. For information call: (916) 654-6410 or TDD (916) 654-3880 or write Records and Forms Management, 1120 N Street, MS-89, Sacramento, CA 95814.

DIST	COUNTY	ROUTE	KILOMETER POST TOTAL PROJECT	SHEET NO	TOTAL SHEETS
04	SF	80	13.2/13.9	72R6	1204

REGISTERED STRUCTURAL ENGINEER — DATE 12/19/02

12-6-04
PLANS APPROVAL DATE

REGISTERED PROFESSIONAL ENGINEER — Mee Shing Owyang — No. 24960 — Exp. 12/31/07 — CIVIL — STATE OF CALIFORNIA

PARSONS BRINCKERHOFF QUADE & DOUGLAS, INC.
303 SECOND STREET, SUITE 700 N
SAN FRANCISCO, CA 94107

The State of California or its officers or agents shall not be responsible for the accuracy or completeness of electronic copies of this plan sheet.

Caltrans now has a web site! To get to the web site, go to http://www.dot.ca.gov

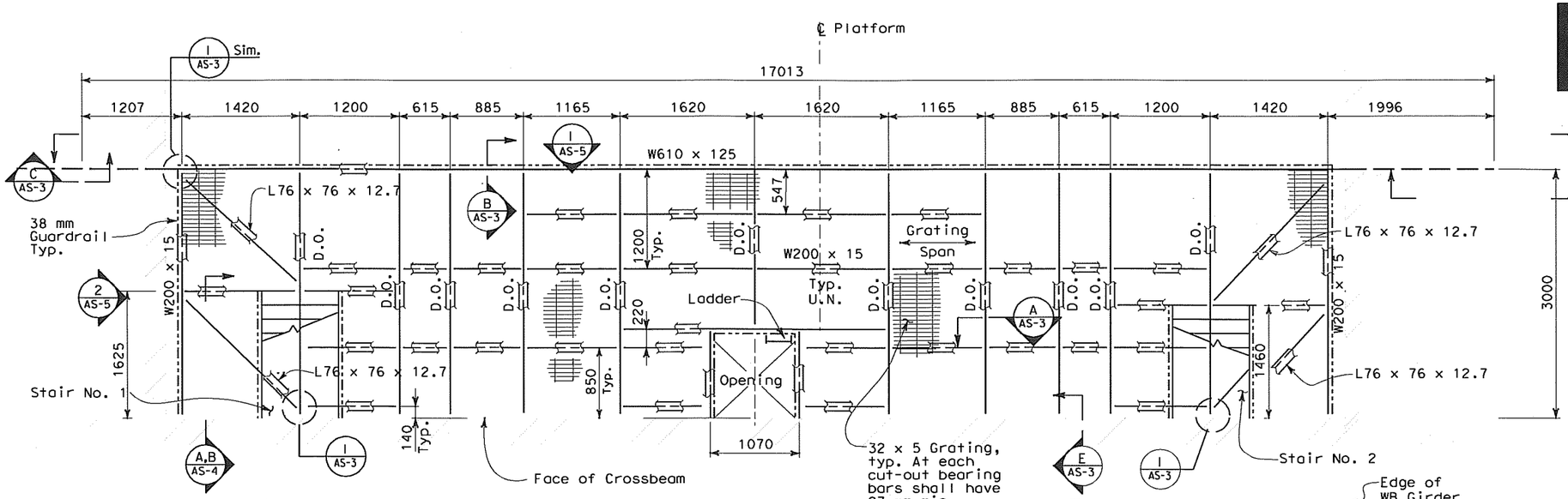

FRAMING PLAN
SCALE: 1:30

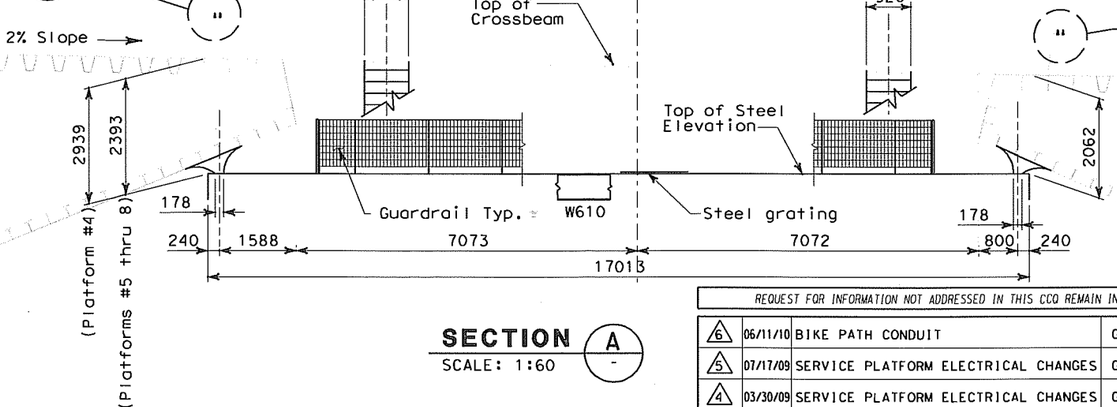

SECTION A
SCALE: 1:60

REQUEST FOR INFORMATION NOT ADDRESSED IN THIS CCO REMAIN IN FORCE					
6	06/11/10	BIKE PATH CONDUIT	GB	MSO	73
5	07/17/09	SERVICE PLATFORM ELECTRICAL CHANGES	GB	MSO	55
4	03/30/09	SERVICE PLATFORM ELECTRICAL CHANGES	GB	MSO	55
3	01/07/09	SERVICE PLATFORM ELECTRICAL CHANGES	GB	MSO	55
2	06/12/08	SERVICE PLATFORM ELECTRICAL CHANGES	GB	MSO	55
1	03/04/08	BARRIER MODIFICATIONS.	EL	MI	44
MARK	DATE	DESCRIPTIONS	BY	CH'D	CCO#
		REVISIONS			

CONTRACT CHANGE ORDER NO. 73
SHEET 2 OF 52

REGISTERED PROFESSIONAL ENGINEER — Gregory Benkovich — No. 40518 — Exp. 3/31/11 — CIVIL — STATE OF CALIFORNIA
Gregory Benkovich
FOR REVISION ONLY 2 3 4 5 6

REGISTERED PROFESSIONAL ENGINEER — Mee Shing Owyang — No. 24960 — Exp. 12/31/09 — CIVIL — STATE OF CALIFORNIA
FOR REVISION ONLY 1

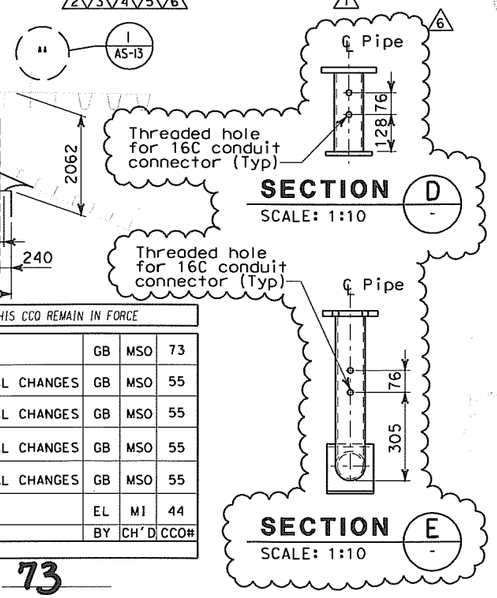

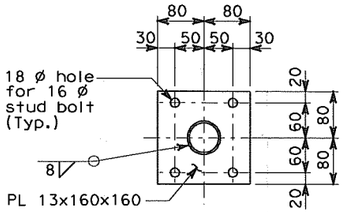

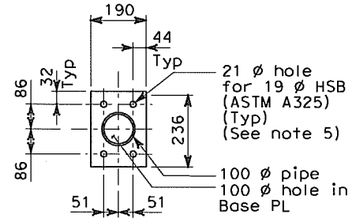

SECTION C
SCALE: 1:5

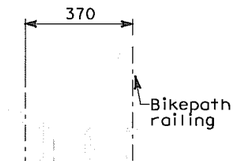

SECTION B
SCALE: 1:10

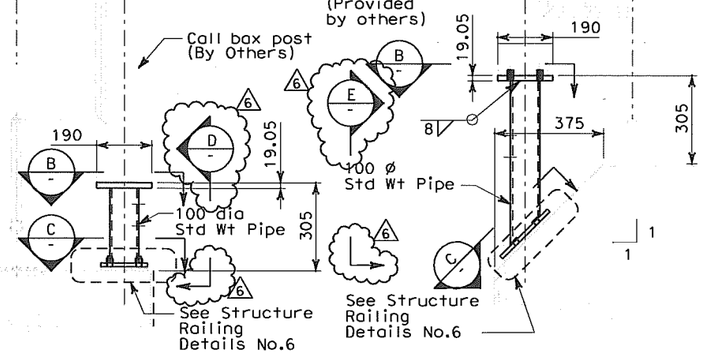

AT BELVEDERE

DETAIL 2
SCALE: 1:10
NOTE 5

AT BIKE PATH

DETAIL 1
SCALE: 1:10
NOTE 5

ALL DIMENSIONS ARE IN MILLIMETERS UNLESS OTHERWISE SHOWN

NOTES:

1. Totol weight of platform 5987 kg
2. The Contractor shall verify all controlling field dimensions before ordering or fabricating any materials.
3. For platform locations, see electrical plans.
4. For anchor bolt locations, spacing and other requirements, see electrical plan.
5. For Call Box locations, see electrical plan sheet E-397. Bolt hole size and spacings shown are for information only contractor to verify the actual bolt hole size and spacings.

Bob Zandipour — DESIGN OVERSIGHT		DESIGN	BY A. Van Felten	CHECKED M. S. Owyang
4-4-04 — SIGN OFF DATE		DETAILS	BY A. Van Felten	CHECKED M. S. Owyang
		QUANTITIES	BY M.S. Owyang	CHECKED R. Parrino

PREPARED FOR THE STATE OF CALIFORNIA
DEPARTMENT OF TRANSPORTATION

Gene Lusherovich — PROJECT ENGINEER

CU 04251
EA 0120F1

BRIDGE NO. 34-0006
KILOMETER POST 13.2/13.9

SAS SUPERSTRUCTURE
SERVICE PLATFORM FRAMING PLAN
AS-2

DESIGN DETAIL SHEET (METRIC) (REV. 3/1/98)

ORIGINAL SCALE IN MILLIMETERS FOR REDUCED PLANS 0 10 20 30 40 50 60 70 80 90 100

DISREGARD PRINTS BEARING EARLIER REVISION DATES →

REVISION DATES (PRELIMINARY STAGE ONLY) — SHEET — OF

FILE => T:\13103\MS\pse\SAS Struc\CCO\SAS CCO73\04-0120f1_0072R06.dgn

USERNAME => reyes | DATE PLOTTED => 6/8/2010 | TIME PLOTTED => 4:06:04 PM

$REQUEST

TRAFFIC OPERATIONS SYSTEMS (TOS)

AVO	Analog Video Output
CCR	Camera Control Receiver
CCU	Camera Control Unit
CIA	Controller Interface Assembly
COMM	Communication
FDU	Fiber Distribution Unit
F/O	Fiber Optic
FODM	Fiber Optic Data Modem
FDC	Fiber Optic Drop Cable
FPC	Fiber Optic Pigtail Cable
FSC	Fiber Splice Closure
FTC	Fiber Optic Trunkline Cable
IF	Input File
MVDS	Microwave Vehicle Detection Sensor
PDA	Power Distribution Assembly
PL	Preformed Loop Detection Station
SCA	Serial Cable Assembly
SMFO	Single Mode Fiber Optic
TB	Terminal Box
TSC	Trunkline Splice Closure
TVCP	CCTV Camera Control Power Cable
TVC	CCTV Camera Control Cable
TVL	CCTV Camera Video Cable
TVP	CCTV Camera Power Cable
VTDD	Video Transmitter Duplex Data

PROJECT NOTES

1. 27C, 2#12 + #12 G.
2. 27C, 2#10 + #10 G.
3. 27C, 4#10 + #10 G.
4. 27C, 3#10 + #10 G.
5. 27C (Type 4), 2#12 + #12 G.
6. 27C (Type 4), 2#10 + #10 G.
7. 41C, 2-6 pairs #18, IS/OA.
8. 78C, 50 Pairs #18, IS/OA.
9. 27C, 3/C #6 + #8G.
10. 21C, 2-1 pair #18 (for Call Box signal) shielded pairs and overall shield.
11. 21C, 3#12 (for Call Box power).
12. 21C, (4) 1 pair #18 (for Call Box signal). Part of (2) 1-2 pairs #18, shielded pairs and overall shield.
13. 78C, 2#2 + #6 G and 2#10 + #10 G (for CMS Power).
14. 78C, Harness #4 and Harness #5 (for CMS Signal).
15. 41C, Cable type TVP and TVCP (for CCTV Power).
16. 41C, Cable type TVC and TVL (for CCTV Control Signal).
18. 41C, Cable type MVDS DLC (for MVDS Signal).
20. 78C, Cable type 10 DLC (for Preformed Loop Signal).
21. 27C (Liquidtight flexible metal conduit) 6#10 + #10 G.
22. 27C (Liquidtight flexible metal conduit) 3#10 + #10 G.
23. 27C, 7#10 + #10 G.
24. 27C, 6#10 + #10 G.

FADI WALIEDDINE, No. 11465, Exp. 12/31/2009 ELECTRICAL, REGISTERED PROFESSIONAL ENGINEER, STATE OF CALIFORNIA

FOR REVISION ONLY 4 5 6

SYN YEE CHIN, No. 18186, Exp. 09/30/2011 ELECTRICAL, REGISTERED PROFESSIONAL ENGINEER, STATE OF CALIFORNIA

Syn Yee Chin
FOR REVISION ONLY 7 8 9 10

PROJECT NOTES (Continuation)

25. 27C, 7#10 + #10 G.
26. 41C, 3#6 + #8 G.
27. 41C, 3#8 + #10 G.
28. 21C, PVC coated - 2#10 + #10 G.
29. 21C, PVC coated, 3#12 (for Call Box Power).
30. 500 kcmil Bare Copper Wire.
31. 250 kcmil Bare Copper Wire.
32. #4/0 Bare Copper Wire.
33. #2 Bare Copper Wire.
34. 41C, 3#6 + #8 G, 3#8 + #10 G.
35. 41C, 6#8 + #10 G.
36. ~~21C, PVC coated, 1-2 pairs #18,~~ shielded pairs and overall shield (for Call Box signal). 9
37. 16C, (Liquidtight flexible metal conduit) 2#12 + #12G, (for Bike Path lighting) 9 10
38. ~~16C, Liquidtight flexible metal conduit with PVC overall jacket 1-2 pairs #18,~~ shielded pairs and overall shield (for Call Box signal). 9
39. 16C, Liquidtight flexible metal conduit with PVC overall jacket 3#12, (for Call Box power) 10
40. 78C, Cable Type A Fiber Optic.
41. 21C, (Liquidtight flexible metal conduit) 2#10 + 10 G.
42. 27C, 2#12 + #12G, 2#10 + #10G.
43. 21C, (Liquidtight flexible metal conduit) 2#12 + 12 G.
44. 41C, 2#12 + #12 G, 6#10 + #10 G.
45. 27C, 2#12 + #12 G, 4#10 + #10 G.
46. 27C, Liquidtight flexible metal conduit, 4#10 + #10G.
47. 41C, Liquidtight flexible metal conduit, (MVDS DLC).
48. 27C, 3#6 + #8G. Liquidtight flexible metal conduit.
49. 21C, PVC coated, 2#10 + #10G & 2/C #14
50. 21C Liquidtight flexible metal conduit 2#14 + #14G, 2/C #14
51. 41C Liquidtight flexible metal conduit 3#6 + #8G, 2/C #14
52. 41C, Liquidtight flexible metal conduit 4#10 + 2#10 G
53. 41C, PVC cooted 4#10 + 2#10 G
54. 27C, 4#10 + 2#10 G.
55. 41C, 6#10 + 2#10 G, 2#12 + #12 G
56. 21C, 2#10 + #10 G
57. 41C, 6#10 + 2#10 G
58. 21C, 2#12 + #12 G
59. 21C, 3#10 + #10 G
60. 41C, 8#10 + 3#10 G, 2#12 + #12 G
61. 27C, 3#10 + 2#10 G, 2#12 + #12 G
62. 41C, 6#10 + 3#10 G
63. 41C, 8#10 + 3#10 G
64. 41C, 6#10 + 2#10 G, 2#12 + #12 G
65. 21C, 4#10 + #10 G
66. 41C, 9#10 + 3#10 G
67. 21C, (Liquidtight flexible metal conduit) 2#10 + #10G, EPR insulation. 9 10
68. 16C, RGS (conduit by others) 2#12 + #12G

7 REVISIONS SUPERCEDED 9

MAXWELL FUMIO TAKATA, No. E 8651, Exp. 9/30/2008 ELECTRICAL, REGISTERED PROFESSIONAL ENGINEER, STATE OF CAL IFORNIA

FOR REVISION ONLY 1

S. A. ESTOQUE, JR., No. E-10151, Exp. 12/31/2008 ELECTRICAL, REGISTERED PROFESSIONAL ENGINEER, STATE OF CALIFORNIA

FOR REVISION ONLY 2 3

GENERAL NOTES

1. Conduit routing is diagrammatic. Pull box locations shall be located as shown on plan drawings. The Contractor shall provide additional pull boxes as required. Exact locations of equipment and devices may be adjusted depending on field conditions or by the Engineer.
2. Minimum size of conduits shall be 21 mm. Exposed conduits shall be PVC coated rigid galvanized steel, and conduits located inside girder shall be rigid galvanized steel. (unless noted otherwise) 9
3. Conduit fittings for 78 mm conduits and larger shall have a 610 mm minimum bending radius.
4. All conduits, including spares, shall be provided with pull wires prior to cable installations.
5. All equipment and devices shall be provided with nameplate tags per drawings.
6. All feeders and branch circuits shall be provided with ground wire.
7. 15 kV splice boxes shall be installed as shown and permanently marked "DANGER-HIGH VOLTAGE-KEEP OUT". The letters shall be block type and at least 50 mm in height.
8. The Contractor shall label all conductors and cables per wiring diagrams.
9. Padlocks shall be installed on all cabinets located on the plotforms to prevent unauthorized access.
10. Coil boxes will be State-furnished. (The Contractor shall install and terminote conductors per wiring diagram.
11. Ladder type cable trays shall be installed for each 15 kV and 600 V systems.
12. Solid bottom cable trays shall be installed for each low level signals, CALTRANS communications, fiber optic systems, and for Non-Caltrans utilities.
13. For Strong Motion Detection System general notes, see sheet E-361.
14. All E sheets are accurate for electrical work only.
15. All dimensions are in millimeters unless otherwise shown.
16. All unused conductors inside pull boxes shall be taped and coiled.
17. "Similar" when shown on the plans means this detail is applicable to different structure and conduit sizes.
18. Electrical fixtures shall not be field welded to the box girders or crossbeams. All welding to the box girders and crossbeams shall be shown on the box girder and crossbeam shop drawings for review and approval by the Engineer.
19. All welding of electrical fixtures to the tower shall be shown on the tower shop drawings for review and approval by the Engineer.
20. All connections to steel elements of the self-anchored suspension bridge superstructure of electrical equipment and fixtures, including conduits, pull boxes, lighting fixtures, messenger cables and others, shall be shop welded or bolted. All connection details shall appear on the working drawings for review and approval by the Engineer.
21. Prior to ordering any cable tray support structures, the Contractor shall:
    - Refer to Structural sheets to determine the locations of cable tray support structures.
    - Determine, based upon field conditions, when and where to use cable tray vertical or horizontal bends, horizontal tees or reducers.
    - Refer to AS-sheets to determine the type of cable tray support to use based on field conditions.
    - Cable tray support structures shown on the AS-sheets are generic and may have to be adapted to suit field conditions.
    - All modifications to the cable troy support structures as shown on the AS-sheets shall be approved by the Resident Engineer.
22. All installation of electrical conduit, equipment or pull boxes shall be either shop welded or bolted.
23. All cable trays shall be securely anchored to support. Appropriate type of anchors (hold down brackets, hold down clamps or guides) shall be used to suit the cable tray type, location and supports. For similar attachment details, see TYPE I & II on E-122A and E-205A.
24. Contractor shall seal all wall penetrations with conduit within the dehumidified area using a rubber pipeseal that will expand to fill the gap between the penetration sleeve and conduit to create a seal. Caulking (silicone caulk) shall not be used at these locations.

DIST	COUNTY	ROUTE	KILOMETER POST TOTAL PROJECT	SHEET No	TOTAL SHEETS
04	SF	80	13.2/13.9	93R10	1204

JENS ERLINGSSON, REGISTERED ELECTRICAL ENGINEER — 12/19/02

12-6-04 PLANS APPROVAL DATE

REGISTERED PROFESSIONAL ENGINEER, JENS ERLINGSSON, No. 8249, Exp. 9/30/06 ELECTRICAL, STATE OF CALIFORNIA

PB POWER, Inc.
A Parsons Brinckerhoff Company
303 Second St., Suite 700N
San Francisco, CA 94107-1317

The State of California or its officers or agents shall not be responsible for the accuracy or completeness of electronic copies of this plan sheet.

Caltrans now has a web site! To get to the web site, go to http://www.dot.ca.gov

Caltrans Metric

REQUEST FOR INFORMATION NOT ADDRESSED IN THIS CCO REMAIN IN FORCE

MARK	DATE	DESCRIPTIONS REVISIONS	BY	CH'D	CCO#
10	11/09/11	BIKE PATH CONDUIT	TW	NK	73
9	04/20/11	BIKE PATH CONDUIT	TW	RG	73
8	04/20/11	CABLE ELECTRICAL-LED AVIATION LIGHTS	RR	RG	72S1
7	07/16/10	BIKE PATH CONDUIT	TW	RG	73
6	12/23/09	TOWER BASE MEP	RR TW	RG FW	79
5	12/11/09	TOWER UTILITY PANELS	JS TW	RG FW	70
4	10/10/08	LIGHTING REVISIONS	RY AG	RG FW	43
3	09/24/08	CABLE ELECTRICAL	RR AG	RG SE	72
2	02/25/08	CABLE TRAY CHANGES	RG	SE	42S1
1	02/19/08	ELECTRICAL MODIFICATIONS	MP EL	RR	42

CONTRACT CHANGE ORDER NO. 73
SHEET 3 OF 52

ELECTRICAL NOTES AND ABBREVIATIONS

E-8

	CALCULATED/ DESIGNED BY	CHECKED BY
IAH	3/04	
REVISED BY	DATE REVISED	
AB	08/02	JW 09/02

STATE OF CALIFORNIA - DEPARTMENT OF TRANSPORTATION — Caltrans
DESIGN OVERSIGHT — BEHZAD GOLEMOHAMMADI

DATE PLOTTED => 11/9/2011
TIME PLOTTED => 5:34:51 PM
00-00-00

FOR REDUCED PLANS ORIGINAL — SCALE IS IN MILLIMETERS 0 20 40 60 80

DGN FILE =>04-0120F1_0093R10.dgn
USERNAME =>llorico

CU 04251 | EA 0120F1

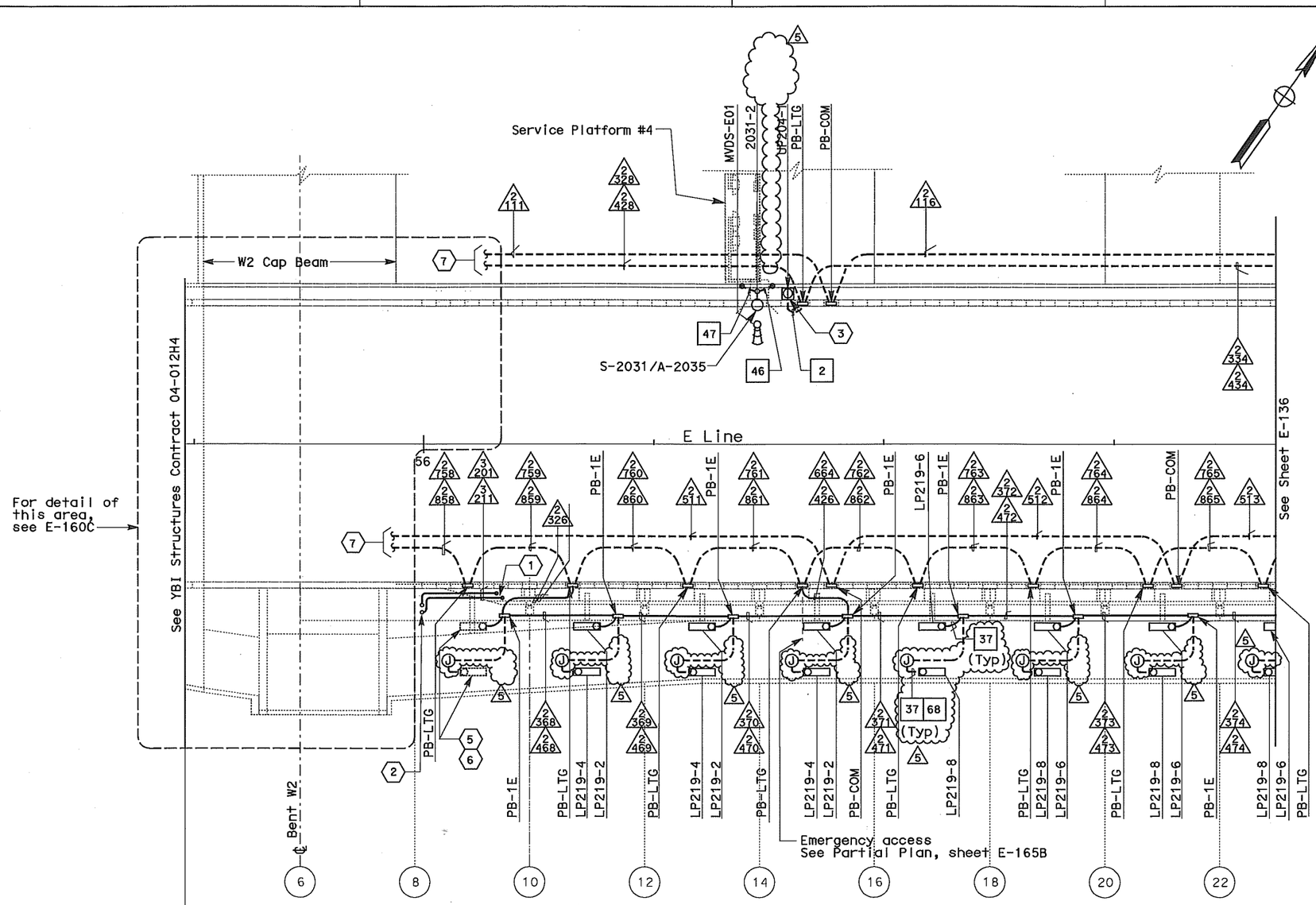

SAS SUPERSTRUCTURE - CONDUIT PLAN

DIST	COUNTY	ROUTE	KILOMETER POST TOTAL PROJECT	SHEET No	TOTAL SHEETS
04	SF	80	13.2/13.9	188 R5	1204

12/19/02
REGISTERED ELECTRICAL ENGINEER DATE

12-6-04
PLANS APPROVAL DATE

REGISTERED PROFESSIONAL ENGINEER — JENS ERLINGSSON No. 8249 Exp. 9/30/06 ELECTRICAL — STATE OF CALIFORNIA

PB POWER, Inc.
A Parsons Brinckerhoff Company
303 Second St., Suite 700N
San Francisco, CA 94107-1317

The State of California or its officers or agents shall not be responsible for the accuracy or completeness of electronic copies of this plan sheet.

Caltrans now has a web site! To get to the web site, go to: http://www.dot.ca.gov

SHEET NOTES:

1. Conduit from barrier pull box or other equipment down into Girder Box, see sheet E-181.
2. For conduit to suspension cable lighting, see sheet E-226.
3. Roadway Barrier Receptacle, see Detail 1, sheet E-162.
4. Deleted.
5. Railing lights are contractor furnished and installed by others.
6. Bike path electrical components west of PP-9 are furnished by contractor and installed by others.
7. See drawing E-160C for continuation of conduits.

NOTES:

1. References:
   - For typical details and locations of conduit connections to light poles, barrier outlet boxes, call boxes, overhead sign lighting, CMS, CCTV and MVDS, see sheets E-160 thru E-162 and E-169.
   - TOS equipment is shown for conduit routing only. For typical details of TOS controller and devices, see sheets E-344 through E-357.
   - For types of pull boxes, splice boxes and enclosures, see sheet E-169.
   - For circuit and conduit/cable tray schedules, see sheets starting at E-401.
2. For Roadway level, Bike Path and Belvedere Lighting Fixture Schedules and wiring diagrams see sheets E-146, E-147 and E-165.
3. For Roadway level and Bike Path Call Box Schedule, see sheet E-397.
4. For number of lighting fixtures (main tower lights) see lighting schedule sheets E-271 and E-272.
5. All conduits and fittings routed exposed between the Bike Path and the roadway shall be galvanized rigid steel, PVC coated.
6. See sheets E-160 thru E-165 for conduit locations.
7. For Belvedere Lighting Fixture installation, see sheet E-173.

REQUEST FOR INFORMATION NOT ADDRESSED IN THIS CCO REMAIN IN FORCE

MARK	DATE	DESCRIPTIONS	BY	CH'D	CCO#
		REVISIONS			
5	04/15/11	BIKE PATH CONDUIT	TW	RG	73
4	06/11/10	BIKE PATH CONDUIT	TW	RG	73
3	06/25/09	WEST END BARRIER CONDUIT	RG	FW	44S1
2	12/15/08	BIKE PATH DETAILS	TW	RG FW	99
1	02/19/08	ELECTRICAL MODIFICATIONS	MP EL	RR	42

CONTRACT CHANGE ORDER NO. 73
SHEET 4 OF 52

REGISTERED PROFESSIONAL ENGINEER — MAXWELL FUMIO TAKATA No. E 8651 Exp. 9/30/2008 ELECTRICAL — STATE OF CALIFORNIA
FOR REVISION ONLY 1

REGISTERED PROFESSIONAL ENGINEER — FADI WALIEDDINE No. 11465 Exp. 12/31/2009 ELECTRICAL — STATE OF CALIFORNIA
FOR REVISION ONLY 2 3

REGISTERED PROFESSIONAL ENGINEER — SYN YEE CHIN No. 18186 Exp. 09/30/2011 ELECTRICAL — STATE OF CALIFORNIA
Syn Yee Chin
FOR REVISION ONLY 4 5

4 REVISIONS SUPERCEDED 5

SAS SUPERSTRUCTURE ROADWAY EASTBOUND LIGHTING AND ELECTRICAL SYSTEMS

SCALE 1:200

E-135

THIS PLAN ACCURATE FOR ELECTRICAL WORK ONLY.

ALL DIMENSIONS ARE IN METERS UNLESS OTHERWISE SHOWN.

FOR REDUCED PLANS ORIGINAL SCALE IS IN MILLIMETERS 0 20 40 60 80

DGN FILE =>04-0120f1_0188R05.dgn
USERNAME =>llorico

CU 04251 | EA 0120F1

LAST REVISION 00-00-00
DATE PLOTTED => 15-APR-2011
TIME PLOTTED => 13:20

STATE OF CALIFORNIA - DEPARTMENT OF TRANSPORTATION
Caltrans

DESIGN OVERSIGHT
BEHZAD GOLEMOHAMMADI

CALCULATED/DESIGNED BY
CHECKED BY

DATE	REVISED BY	DATE REVISED
EDC 08/02	CYF	08/02

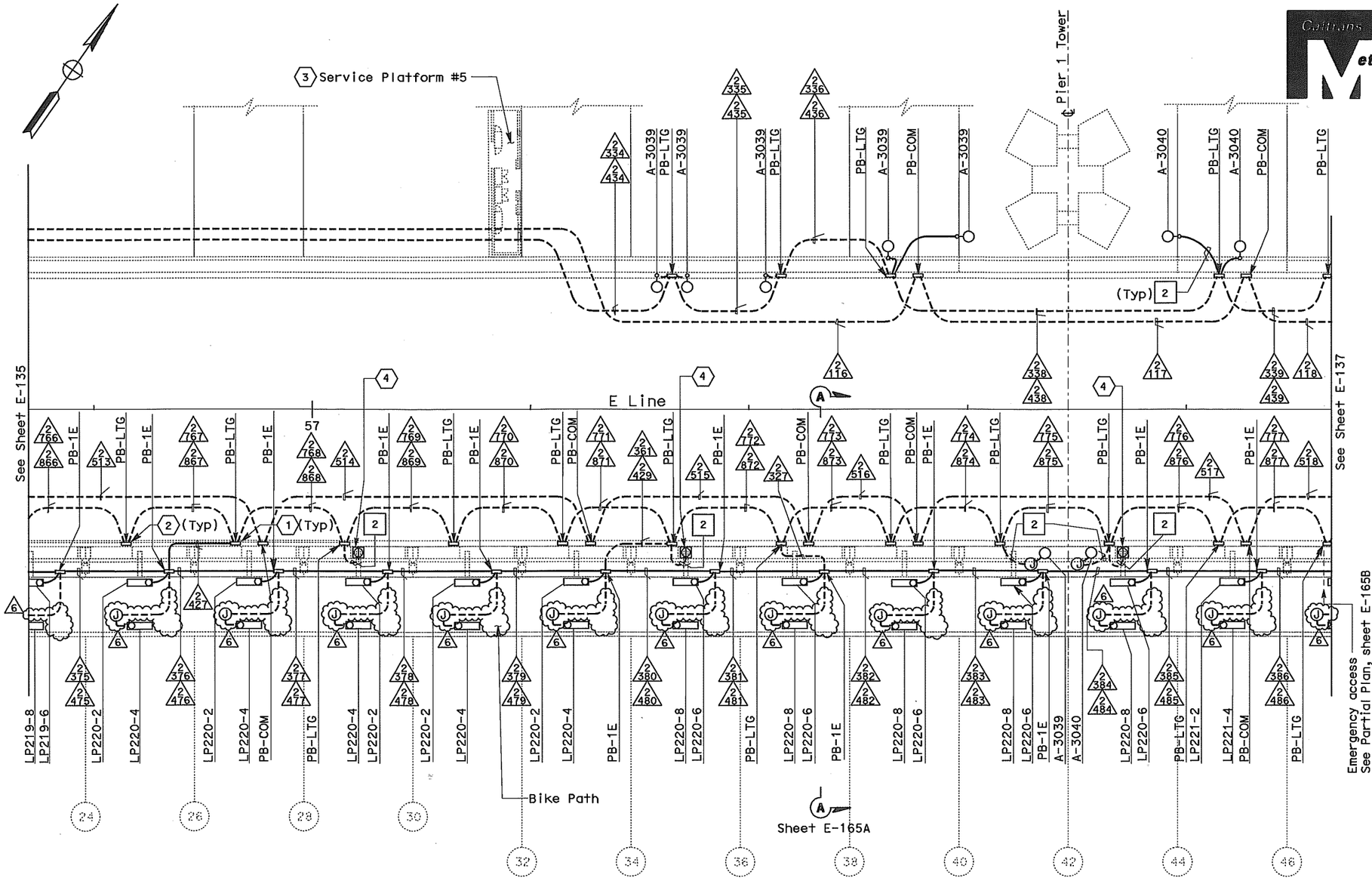

DIST	COUNTY	ROUTE	KILOMETER POST TOTAL PROJECT	SHEET No	TOTAL SHEETS
04	SF	80	13.2/13.9	189 R6	1204

12/19/02
REGISTERED ELECTRICAL ENGINEER DATE

12-6-04
PLANS APPROVAL DATE

REGISTERED PROFESSIONAL ENGINEER — JENS ERLINGSSON No. 8249 Exp. 9/30/06 ELECTRICAL — STATE OF CALIFORNIA

PB POWER, Inc.
A Parsons Brinckerhoff Company
303 Second St., Suite 700N
San Francisco, CA 94107-1317

The State of California or its officers or agents shall not be responsible for the accuracy or completeness of electronic copies of this plan sheet.

Caltrans now has a web site! To get to the web site, go to: http://www.dot.ca.gov

SHEET NOTES:

1. Conduit from barrier pullbox or other equipment down into Girder Box, see sheet E-182.
2. For conduit to tower and suspension cable lighting see sheet E-227.
3. Contractor shall furnish and install UP-205 and LP-220 per sheet E-72. For complete scope of work on platform and other related work not shown on this sheet, see Electrical Special Provisions.
4. Roadway Barrier Receptacle, see Detail 1, sheet E-162.

NOTES:

1. References:
   - For typical details and locations of conduit connections to light poles, barrier outlet boxes, call boxes, overhead sign lighting, CMS, CCTV and MVDS, see sheets E-160 thru E-162 and E-169.
   - TOS equipment is shown for conduit routing only. For typical details of TOS controller and devices, see sheets E-344 through E-357.
   - For types of pull boxes, splice boxes and enclosures, see sheet E-169.
   - For circuit and conduit/cable tray schedules, see sheets starting at E-401.
2. For Roadway Level Call Boxes, refer to sheet E-396.
3. For Roadway level, Bike Path and Belvedere Lighting Fixture Schedules, see sheets E-146, E-147 and E-165.
4. For Roadway level and Bike Path Call Box Schedule, see sheet E-397.
5. For number of lighting fixtures (main tower lights) see lighting schedule sheets E-271 and E-272.
6. All conduits and fittings routed exposed between the Bike Path and the roadway shall be galvanized rigid steel, PVC coated.
7. See sheets E-160 thru E-165 for conduit locations.

REQUEST FOR INFORMATION NOT ADDRESSED IN THIS CCO REMAIN IN FORCE

MARK	DATE	DESCRIPTIONS	BY	CH'D	CCO#
		REVISIONS			
6	04/15/11	BIKE PATH CONDUIT	TW	RG	73
5	06/11/10	BIKE PATH CONDUIT	TW	RG	73
4	10/01/08	LIGHTING REVISIONS	RY AG	RG FW	43
3	12/15/08	BIKE PATH PLATFORM EMERGENCY ACCESS	TW	RG FW	99
2	03/04/08	BARRIER MODIFICATIONS	JS BM	RG SE	44
1	02/19/08	ELECTRICAL MODIFICATIONS	MP EL	RR	42

CONTRACT CHANGE ORDER NO. 73
SHEET 5 OF 52

THIS PLAN ACCURATE FOR ELECTRICAL WORK ONLY

REGISTERED PROFESSIONAL ENGINEER — MARWELL FUNTO TAKORE No. E 8651 Exp. 9/30/2008 ELECTRICAL — STATE OF CALIFORNIA
FOR REVISION ONLY 1

REGISTERED PROFESSIONAL ENGINEER — S. A. ESTOQUE, JR. No. E-10151 Exp. 12/31/2008 ELECTRICAL — STATE OF CALIFORNIA
FOR REVISION ONLY 2

REGISTERED PROFESSIONAL ENGINEER — FADI WALIEDDINE No. 11465 Exp. 12/31/2009 ELECTRICAL — STATE OF CALIFORNIA
FOR REVISION ONLY 3 4

REGISTERED PROFESSIONAL ENGINEER — SYN YEE CHIN No. 18186 Exp. 09/30/2011 ELECTRICAL — STATE OF CALIFORNIA
FOR REVISION ONLY 5 6

5 REVISIONS SUPERCEDED 6

SAS SUPERSTRUCTURE CONDUIT - PLAN

SAS SUPERSTRUCTURE ROADWAY EASTBOUND
LIGHTING AND ELECTRICAL SYSTEMS

SCALE 1:200

ALL DIMENSIONS ARE IN METERS UNLESS OTHERWISE SHOWN

FOR REDUCED PLANS ORIGINAL SCALE IS IN MILLIMETERS 0 20 40 60 80

DGN FILE =>04-0120F1_0189R06.dgn
USERNAME =>llorico

CU 04251 | EA 0120F1

E-136

LAST REVISION 00-00-00
DATE PLOTTED => 18-APR-2011
TIME PLOTTED => 08:43

STATE OF CALIFORNIA - DEPARTMENT OF TRANSPORTATION
Caltrans

DESIGN OVERSIGHT
BEHZAD GOLEMOHAMMADI

CALCULATED/ DESIGNED BY
CHECKED BY
EDC 08/02 REVISED BY
CYF 08/02 DATE REVISED

DIST	COUNTY	ROUTE	KILOMETER POST TOTAL PROJECT	SHEET No	TOTAL SHEETS
04	SF	80	13.2/13.9	190R4	1204

REGISTERED ELECTRICAL ENGINEER — 12/19/02

12-6-04
PLANS APPROVAL DATE

REGISTERED PROFESSIONAL ENGINEER — JENS ERLINGSSON No. 8249 Exp. 9/30/06 ELECTRICAL — STATE OF CALIFORNIA

PB POWER, Inc.
A Parsons Brinckerhoff Company
303 Second St., Suite 700N
San Francisco, CA 94107-1317

The State of California or its officers or agents shall not be responsible for the accuracy or completeness of electronic copies of this plan sheet.

Caltrans now has a web site! To get to the web site, go to: http://www.dot.ca.gov

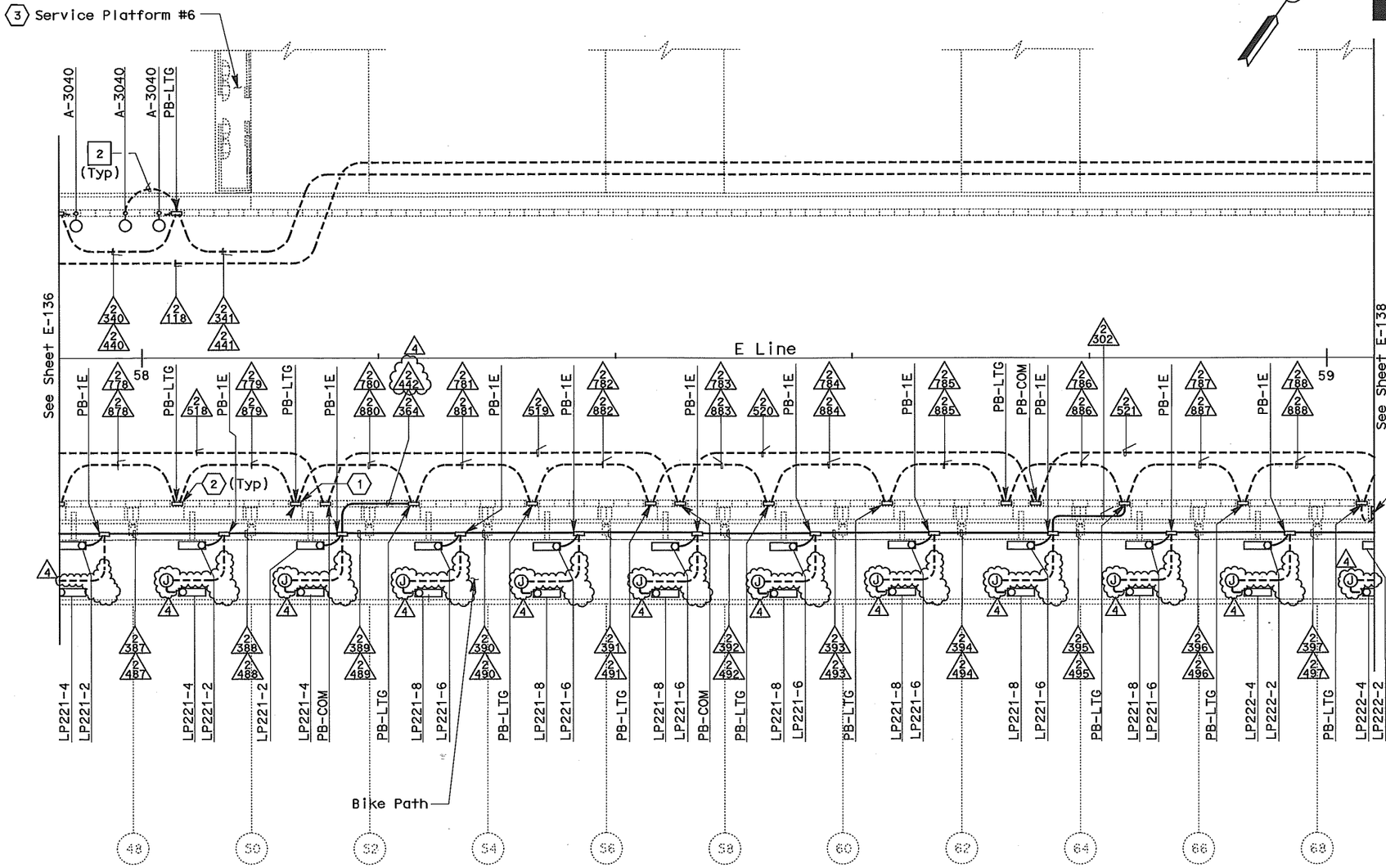

SHEET NOTES:

1. Conduit from barrier pullbox or other equipment down into Girder Box, see sheet E-183.
2. For conduit to tower and suspension cable lighting see sheet E-228.
3. Contractor shall furnish and install UP-206 and LP-221 per sheet E-73. For complete scope of work on platform and other related work not shown on this sheet, see Electrical Special Provisions.
4. Roadway Barrier Receptacle, see Detail 1, sheet E-162.

NOTES:

1. References:
   - For typical details and locations of conduit connections to light poles, barrier outlet boxes, call boxes, overhead sign lighting, CMS, CCTV and MVDS, see sheets E-160 thru E-162 and E-169.
   - TOS equipment is shown for conduit routing only. For typical details of TOS controller and devices, see sheets E-344 through E-357.
   - For types of pull boxes, splice boxes and enclosures, see sheet E-169.
   - For circuit and conduit/cable tray schedules, see sheets starting at E-401.
2. For Roadway Level Call Boxes, refer to sheet E-396.
3. For Roadway level, Bike Path and Belvedere Lighting Fixture Schedules, see sheets E-146, E-147 and E-165.
4. For Roadway level and Bike Path Call Box Schedule, see sheet E-397.
5. For number of lighting fixtures (main tower lights) see lighting schedule sheets E-271 and E-272.
6. All conduits and fittings routed exposed between the Bike Path and the roadway shall be galvanized rigid steel, PVC coated.
7. See sheets E-160 thru E-165 for conduit locations.

3 REVISIONS SUPERCEDED 4

SAS SUPERSTRUCTURE - CONDUIT PLAN

REQUEST FOR INFORMATION NOT ADDRESSED IN THIS CCO REMAIN IN FORCE						
4	04/15/11	BIKE PATH CONDUIT	TW	RG	73
3	06/11/10	BIKE PATH CONDUIT	TW	RG	73
2	03/04/08	BARRIER MODIFICATIONS	TW	RG	44
1	02/19/08	ELECTRICAL MODIFICATIONS	MP EL	RR	42
MARK	DATE	DESCRIPTIONS	BY	CH'D	CCO#
		REVISIONS			

CONTRACT CHANGE ORDER NO. 73
SHEET 6 OF 52

REGISTERED PROFESSIONAL ENGINEER — MANUELL FUMIO TAKATA No. E 8651 Exp. 9/30/2008 ELECTRICAL — STATE OF CALIFORNIA
FOR REVISION ONLY 1

REGISTERED PROFESSIONAL ENGINEER — FADI WALIEDDINE No. 11465 Exp. 12/31/2009 ELECTRICAL — STATE OF CALIFORNIA
FOR REVISION ONLY 2

REGISTERED PROFESSIONAL ENGINEER — SYN YEE CHIN No. 18186 Exp. 09/30/2011 ELECTRICAL — STATE OF CALIFORNIA
FOR REVISION ONLY 3 4

SAS SUPERSTRUCTURE ROADWAY EASTBOUND
LIGHTING AND ELECTRICAL SYSTEMS

SCALE 1:200

E-137

THIS PLAN ACCURATE FOR ELECTRICAL WORK ONLY.

ALL DIMENSIONS ARE IN METERS UNLESS OTHERWISE SHOWN

FOR REDUCED PLANS ORIGINAL SCALE IS IN MILLIMETERS 0 20 40 60 80

DGN FILE =>04-0120f1_0190R04.dgn
USERNAME =>llorico

CU 04251

EA 0120F1

LAST REVISION 00-00-00
DATE PLOTTED => 15-APR-2011
TIME PLOTTED => 13:20

STATE OF CALIFORNIA - DEPARTMENT OF TRANSPORTATION
Caltrans

DESIGN OVERSIGHT: BEHZAD GOLEMOHAMMADI
CALCULATED/DESIGNED BY
CHECKED BY

DATE	REVISED BY	DATE REVISED
08/02	EDC	08/02 CYF

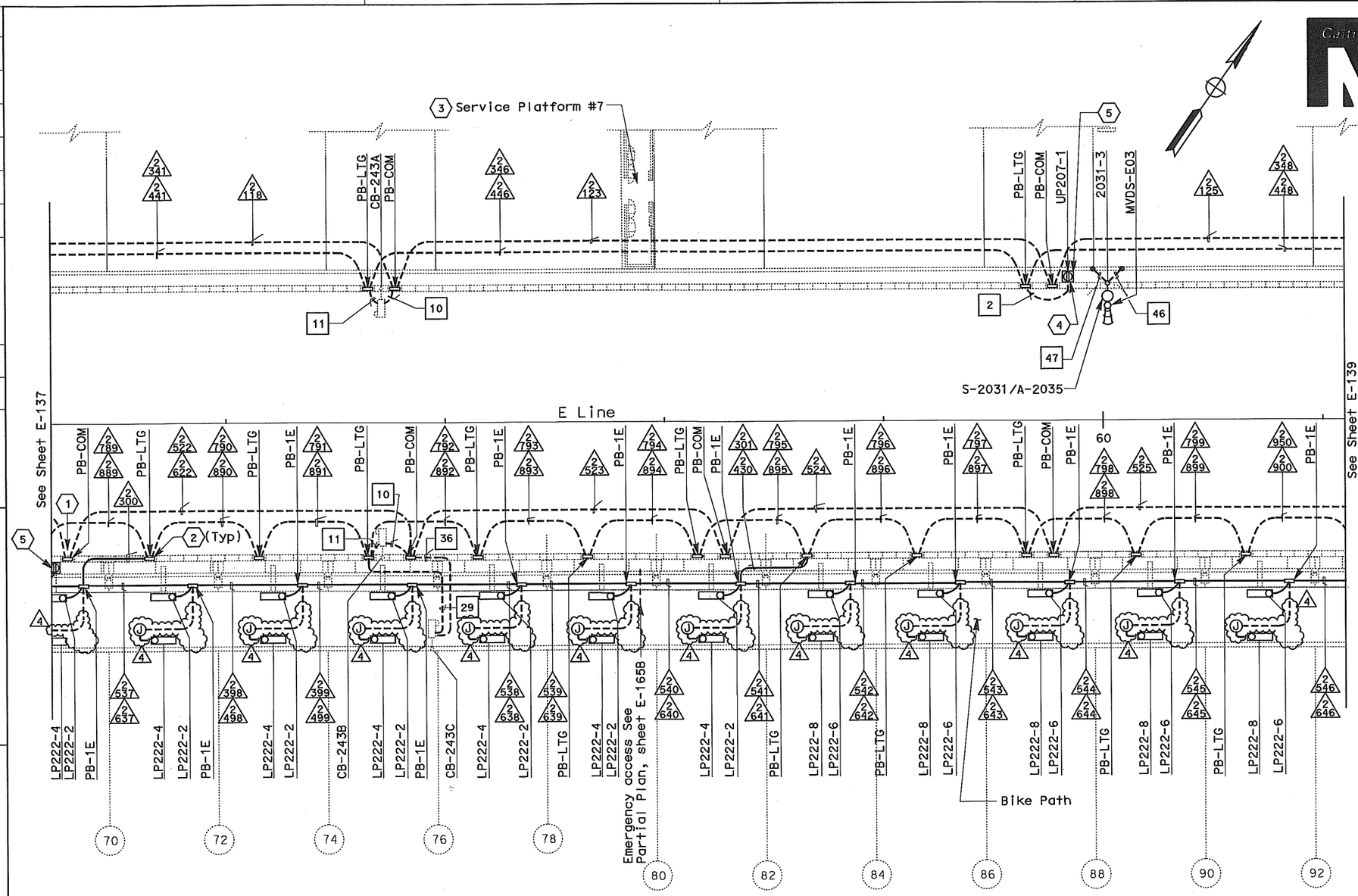

DIST	COUNTY	ROUTE	KILOMETER POST TOTAL PROJECT	SHEET No	TOTAL SHEETS
04	SF	80	13.2/13.9	191R4	1204

12/19/02
REGISTERED ELECTRICAL ENGINEER DATE

REGISTERED PROFESSIONAL ENGINEER — JENS ERLINGSSON No. 6249 Exp. 9/30/06 ELECTRICAL — STATE OF CALIFORNIA

12-6-04
PLANS APPROVAL DATE

PB POWER, Inc.
A Parsons Brinckerhoff Company
303 Second St., Suite 700N
San Francisco, CA 94107-1317

The State of California or its officers or agents shall not be responsible for the accuracy or completeness of electronic copies of this plan sheet.

Caltrans now has a web site! To get to the web site, go to: http://www.dot.ca.gov

SHEET NOTES:

1. Conduit from barrier pullbox or other equipment down into Girder Box, see sheet E-184.
2. For conduit to tower and suspension cable lighting, see sheet E-229.
3. Contractor shall furnish and install UP-207 and LP-222 per sheet E-74. For complete scope of work on platform and other related work not shown on this sheet, see Electrical Special Provisions.
4. Conduit down to girder for MVDS, see sheet E-184.
5. Roadway Barrier Receptacle, see Detail 1, sheet E-162.

NOTES:

1. References:
   - For typical details and locations of conduit connections to light poles, barrier outlet boxes, call boxes, overhead sign lighting, CMS, CCTV and MVDS, see sheets E-160 thru E-162 and E-169.
   - TOS equipment is shown for conduit routing only. For typical details of TOS controller and devices, see sheets E-344 through E-357.
   - For types of pull boxes, splice boxes and enclosures, see sheet E-169.
   - For circuit and conduit/cable tray schedules, see sheets starting at E-401.
2. For Roadway Level Call Boxes, refer to sheet E-396.
3. For Roadway level, Bike Path and Belvedere Lighting Fixture Schedules, see sheets E-146, E-147 and E-165.
4. For Roadway level and Bike Path Call Box Schedule, see sheet E-397.
5. For number of lighting fixtures (main tower lights) see lighting schedule sheets E-271 and E-272.
6. All conduits and fittings routed exposed between the Bike Path and the roadway shall be galvanized rigid steel, PVC coated.
7. See sheets E-160 thru E-165 for conduit locations.

SAS SUPERSTRUCTURE ROADWAY EASTBOUND LIGHTING AND ELECTRICAL SYSTEMS

SCALE 1:200

SAS SUPERSTRUCTURE - CONDUIT PLAN

E-138

3 REVISIONS SUPERCEDED 4

REQUEST FOR INFORMATION NOT ADDRESSED IN THIS CCO REMAIN IN FORCE

MARK	DATE	DESCRIPTIONS	BY	CH'D	CCO#
		REVISIONS			
4	04/15/11	BIKE PATH CONDUIT	TW	RG	73
3	06/11/10	BIKE PATH CONDUIT	TW	RG	73
2	12/15/08	BIKE PATH DETAILS	TW	RG FW	99
1	02/19/08	ELECTRICAL MODIFICATIONS	MP EL	RR	42

CONTRACT CHANGE ORDER NO. 73
SHEET 7 OF 52

THIS PLAN ACCURATE FOR ELECTRICAL WORK ONLY.

REGISTERED PROFESSIONAL ENGINEER — MAXWELL FUMIO TAKAKI No. E 8651 Exp. 9/30/2008 ELECTRICAL — STATE OF CALIFORNIA
FOR REVISION ONLY 1

REGISTERED PROFESSIONAL ENGINEER — FADI WALIEDDINE No. 11465 Exp. 12/31/2009 ELECTRICAL — STATE OF CALIFORNIA
FOR REVISION ONLY 2

REGISTERED PROFESSIONAL ENGINEER — SYN YEE CHIN No. 18186 Exp. 09/30/2011 ELECTRICAL — STATE OF CALIFORNIA
FOR REVISION ONLY 3 4

ALL DIMENSIONS ARE IN METERS UNLESS OTHERWISE SHOWN

FOR REDUCED PLANS ORIGINAL SCALE IS IN MILLIMETERS 0 20 40 60 80

DGN FILE =>04-0120f1_0191R04.dgn
USERNAME =>llorico

CU 04251 | EA 0120F1

LAST REVISION 00-00-00
DATE PLOTTED => 18-APR-2011
TIME PLOTTED => 08:40

STATE OF CALIFORNIA - DEPARTMENT OF TRANSPORTATION
Caltrans

DESIGN OVERSIGHT
BEHZAD GOLEMOHAMMADI

CALCULATED/ DESIGNED BY
CHECKED BY
EDC CYF
DATE 08/02 08/02
REVISED BY
DATE REVISED

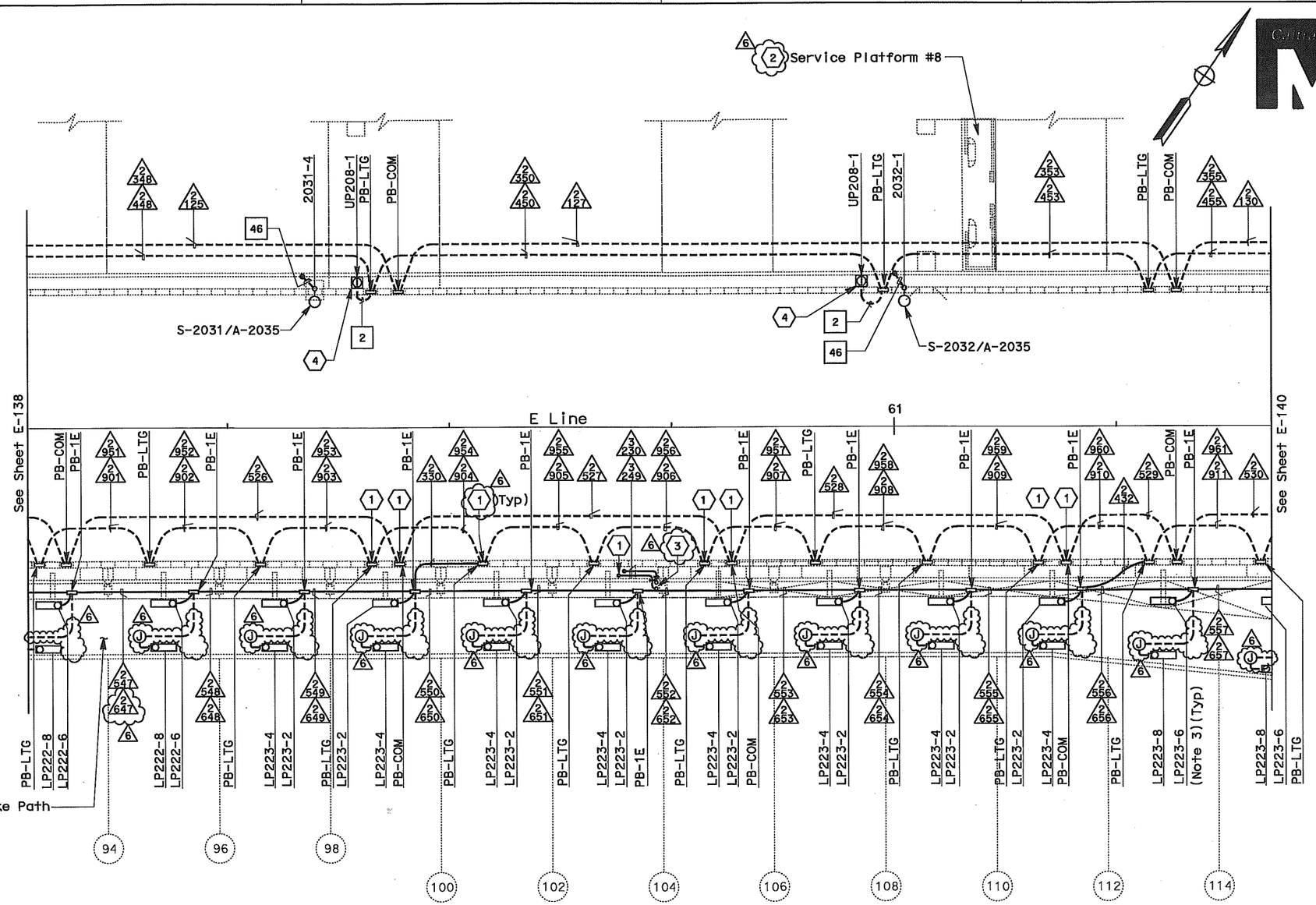

DIST	COUNTY	ROUTE	KILOMETER POST TOTAL PROJECT	SHEET No	TOTAL SHEETS
04	SF	80	13.2/13.9	192 R6	1204

James Erlingsson 12/19/02
REGISTERED ELECTRICAL ENGINEER DATE

12-6-04
PLANS APPROVAL DATE

REGISTERED PROFESSIONAL ENGINEER — JENS ERLINGSSON No. 6249 Exp. 9/30/06 ELECTRICAL — STATE OF CALIFORNIA

PB POWER, Inc.
A Parsons Brinckerhoff Company
303 Second St., Suite 700N
San Francisco, CA 94107-1317

The State of California or its officers or agents shall not be responsible for the accuracy or completeness of electronic copies of this plan sheet.

Caltrans now has a web site! To get to the web site, go to http://www.dot.ca.gov

SHEET NOTES:

1. Conduit from barrier pullbox or other equipment down into Girder Box, see sheet E-185.
2. Contractor shall furnish and install UP-208 and LP-223 per sheet E-75. For complete scope of work on platform and other related work not shown on this sheet, see Electrical Special Provisions.
3. For conduit to tower and suspension cable lighting, see sheet E-230.
4. Roadway Barrier Receptacle, see Detail 1, sheet E-162.

NOTES:

1. References:
   - For typical details and locations of conduit connections to light poles, barrier outlet boxes, call boxes, overhead sign lighting, CMS, CCTV and MVDS, see sheets E-160 thru E-162 and E-169.
   - TOS equipment is shown for conduit routing only. For typical details of TOS controller and devices, see sheets E-344 through E-357.
   - For types of pull boxes, splice boxes and enclosures, see sheet E-169.
   - For circuit and conduit/cable tray schedules, see sheets starting at E-401.
2. For Roadway Level Call Boxes, refer to sheet E-396.
3. For Roadway level, Bike Path and Belvedere Lighting Fixture Schedules, see sheets E-146, E-147 and E-165.
4. For Roadway level and Bike Path Call Box Schedule, see sheet E-397.
5. For number of lighting fixtures (main tower lights) see lighting schedule sheets E-271 and E-272.
6. All conduits and fittings routed exposed between the Bike Path and the roadway shall be rigid galvanized steel, PVC coated.
7. See sheets E-160 thru E-165 for conduit locations.

REQUEST FOR INFORMATION NOT ADDRESSED IN THIS CCO REMAIN IN FORCE

MARK	DATE	DESCRIPTIONS	BY	CH'D	CCO#
		REVISIONS			
6	04/15/11	BIKE PATH CONDUIT	TW	RG	73
5	06/11/10	BIKE PATH CONDUIT	TW	RG	73
4	01/08/09	BIKE PATH DETAILS	TW	RG FW	99
3	12/15/08	BIKE PATH DETAILS	TW	RG FW	99
2	03/04/08	BARRIER MODIFICATIONS	JS BM	RG SE	44
1	02/19/08	ELECTRICAL MODIFICATIONS	MP EL	RR	42

CONTRACT CHANGE ORDER NO. 73
SHEET 8 OF 52

THIS PLAN ACCURATE FOR ELECTRICAL WORK ONLY.

SAS SUPERSTRUCTURE - CONDUIT PLAN

REGISTERED PROFESSIONAL ENGINEER — RANDELL FUMIO TAKATA No. E 8651 Exp. 9/30/2008 ELECTRICAL — STATE OF CALIFORNIA
FOR REVISION ONLY 1

REGISTERED PROFESSIONAL ENGINEER — S. A. ESTOQUE, JR. No. E-10151 Exp. 12/31/2008 ELECTRICAL — STATE OF CALIFORNIA
FOR REVISION ONLY 2

REGISTERED PROFESSIONAL ENGINEER — FADI WALIEDDINE No. 11465 Exp. 12/31/2009 ELECTRICAL — STATE OF CALIFORNIA
FOR REVISION ONLY 3 4

REGISTERED PROFESSIONAL ENGINEER — SYN YEE CHIN No. 18186 Exp. 09/30/2011 ELECTRICAL — STATE OF CALIFORNIA
FOR REVISION ONLY 5 6

5 REVISIONS SUPERCEDED 6

SAS SUPERSTRUCTURE ROADWAY EASTBOUND LIGHTING AND ELECTRICAL SYSTEMS

SCALE 1:200

E-139

STATE OF CALIFORNIA - DEPARTMENT OF TRANSPORTATION
DESIGN OVERSIGHT: BEHZAD GOLEMOHAMMADI
CALCULATED/DESIGNED BY
CHECKED BY
EDC | DATE 08/02 | REVISED BY
CYF | 08/02 | DATE REVISED

LAST REVISION 00-00-00
DATE PLOTTED => 21-APR-2011
TIME PLOTTED => 09:16

FOR REDUCED PLANS ORIGINAL SCALE IS IN MILLIMETERS 0 20 40 60 80
DGN FILE =>04-0120f1_0192R06.dgn
USERNAME =>florico
CU 04251
EA 0120F1

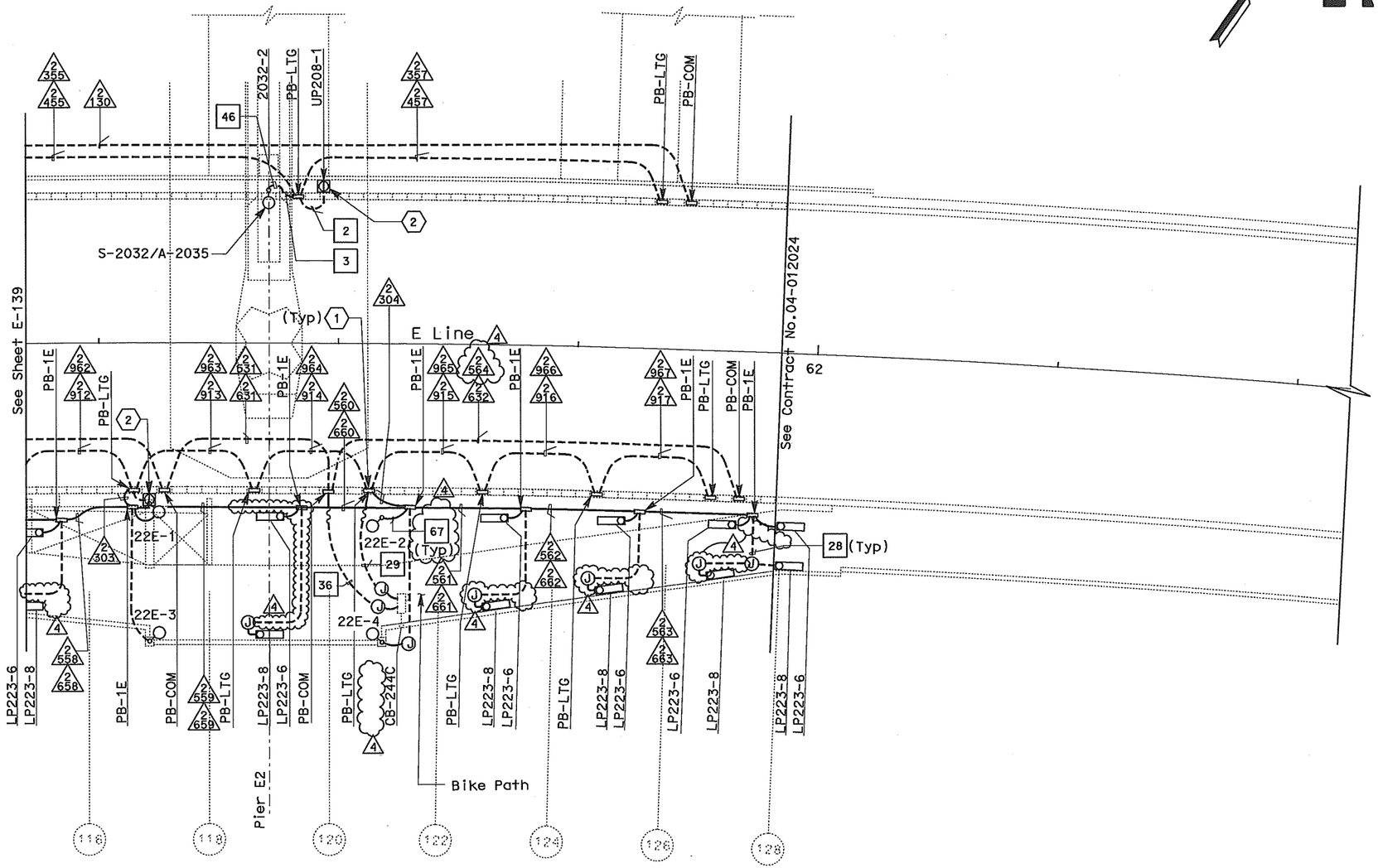

SAS SUPERSTRUCTURE - CONDUIT PLAN

REQUEST FOR INFORMATION NOT ADDRESSED IN THIS CCO REMAIN IN FORCE					
4	04/15/11	BIKE PATH CONDUIT	TW	RG	73
3	06/11/10	BIKE PATH CONDUIT	TW	RG	73
2	03/04/08	BARRIER MODIFICATIONS	TW	RG	44
1	02/19/08	ELECTRICAL MODIFICATIONS	MP EL	RR	42
MARK	DATE	DESCRIPTIONS	BY	CH'D	CCO#
		REVISIONS			

CONTRACT CHANGE ORDER NO. 73
SHEET 9 OF 52

THIS PLAN ACCURATE FOR ELECTRICAL WORK ONLY.

MARRELL FUMIO TAKAKI — REGISTERED PROFESSIONAL ENGINEER — No. E 8651 — Exp. 9/30/2008 ELECTRICAL — STATE OF CALIFORNIA
FOR REVISION ONLY 1

FADI WALIEDDINE — REGISTERED PROFESSIONAL ENGINEER — No. 11465 — Exp. 12/31/2009 ELECTRICAL — STATE OF CALIFORNIA
FOR REVISION ONLY 2

SYN YEE CHIN — REGISTERED PROFESSIONAL ENGINEER — No. 18186 — Exp. 09/30/2011 ELECTRICAL — STATE OF CALIFORNIA
FOR REVISION ONLY 3 4

3 REVISIONS SUPERCEDED 4

SHEET NOTES:

1. For conduit to tower and suspension cable lighting, see sheet E-230.
2. Roadway Barrier Receptacle, see Detail 1, sheet E-162.

NOTES:

1. References:
   - For typical details and locations of conduit connections to light poles, barrier outlet boxes, call boxes, overhead sign lighting, CMS, CCTV and MVDS, see sheets E-160 thru E-162 and E-169.
   - TOS equipment is shown for conduit routing only. For typical details of TOS controller and devices, see sheets E-344 through E-357.
   - For types of pull boxes, splice boxes and enclosures, see sheet E-169.
   - For circuit and conduit/cable tray schedules, see sheets starting at E-401.
2. For Roadway Level Call Boxes, refer to sheet E-396.
3. For Roadway level, Bike Path and Belvedere Lighting Fixture Schedules, see sheets E-146, E-147 and E-165.
4. For Roadway level and Bike Path Call Box Schedule, see sheet E-397.
5. For number of lighting fixtures (main tower lights) see lighting schedule sheets E-271 and E-272.
6. All conduits and fittings routed exposed between the Bike Path and the roadway shall be galvanized rigid steel, PVC coated.
7. See sheets E-160 thru E-165 for conduit locations.
8. For Belvedere lighting fixture installation, see sheet E-173.

SAS SUPERSTRUCTURE ROADWAY EASTBOUND LIGHTING AND ELECTRICAL SYSTEMS

SCALE 1:200

E-140

ALL DIMENSIONS ARE IN METERS UNLESS OTHERWISE SHOWN

FOR REDUCED PLANS ORIGINAL SCALE IS IN MILLIMETERS 0 20 40 60 80

DGN FILE =>04-0120f1_0193R04.dgn
USERNAME =>llorico

CU 04251 | EA 0120F1

DIST	COUNTY	ROUTE	KILOMETER POST TOTAL PROJECT	SHEET No	TOTAL SHEETS
04	SF	80	13.2/13.9	193R4	1204

James Erlingsson 12/19/02
REGISTERED ELECTRICAL ENGINEER DATE

12-6-04
PLANS APPROVAL DATE

REGISTERED PROFESSIONAL ENGINEER — JENS ERLINGSSON — No. 8249 — Exp. 9/30/06 ELECTRICAL — STATE OF CALIFORNIA

PB POWER, Inc.
A Parsons Brinckerhoff Company
303 Second St., Suite 700N
San Francisco, CA 94107-1317

The State of California or its officers or agents shall not be responsible for the accuracy or completeness of electronic copies of this plan sheet.

Caltrans now has a web site! To get to the web site, go to http://www.dot.ca.gov

Caltrans Metric

STATE OF CALIFORNIA - DEPARTMENT OF TRANSPORTATION
DESIGN OVERSIGHT: BEHZAD GOLEMOHAMMADI
CALCULATED/DESIGNED BY | CHECKED BY
EDC | CYF
DATE 08/02 | 08/02
REVISED BY | DATE REVISED

LAST REVISION 00-00-00
DATE PLOTTED => 15-APR-2011
TIME PLOTTED => 13:21

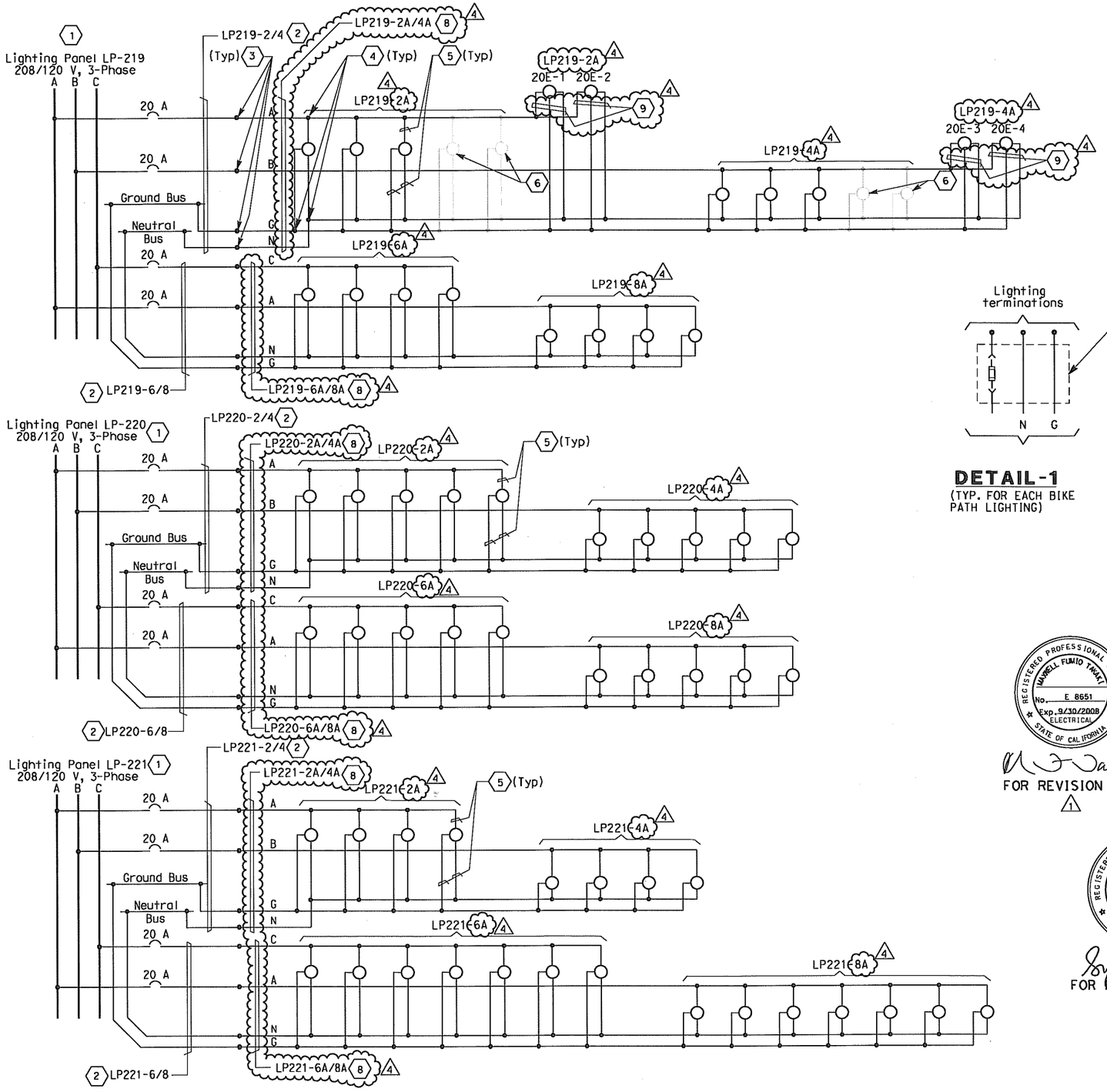

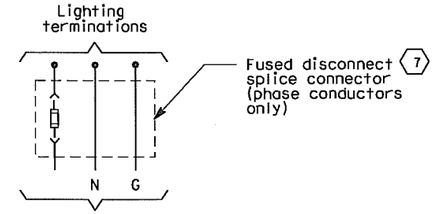

DETAIL-1
(TYP. FOR EACH BIKE PATH LIGHTING)

DIST	COUNTY	ROUTE	KILOMETER POST TOTAL PROJECT	SHEET No	TOTAL SHEETS
04	SF	80	13.2/13.9	197 R5	1204

REGISTERED ELECTRICAL ENGINEER — DATE 12/19/02

12-6-04
PLANS APPROVAL DATE

REGISTERED PROFESSIONAL ENGINEER — JENS ERLINGSSON No. 8249 Exp. 9/30/06 ELECTRICAL — STATE OF CALIFORNIA

PB POWER, Inc.
A Parsons Brinckerhoff Company
303 Second St., Suite 700N
San Francisco, CA 94107-1317

The State of California or its officers or agents shall not be responsible for the accuracy or completeness of electronic copies of this plan sheet.

Caltrans now has a web site! To get to the web site, go to http://www.dot.ca.gov

SHEET NOTES:

1. For lighting panel schedule LP-219, LP-220, LP-221, see sheets E-155 and E-156.
2. Lighting feeder cable is 3/C #6 + G.
3. Conductors spliced inside PB-2A located in Girder 3 4
4. Conductors spliced inside PB-1E located at north side of the bike path. 4
5. 2#12 + #12 G. [illegible] single conductors. See Detail 1. 4 5
6. Railing lights are contractor furnished and installed by others.
7. Install 5A in-line fuse per light fixture, inside the belvedere light pole for 20E-1 through 20E-4. For bike path lights (north/south hand railing) install 5A in-line fuses with heat shrinkable tubing at both leads inside PB-1E located at north side of bike path. 4 5
8. Lighting feeder cable is 3#6 + #8 G.
9. 2#10 + #10 G. single conductors. See Detail 1.

NOTE:

1. For circuit and conduit/cable tray schedules, see sheets starting at E-401.

REGISTERED PROFESSIONAL ENGINEER — MARRELL FUMIO TAKAKI No. E 8651 Exp. 9/30/2008 ELECTRICAL — STATE OF CALIFORNIA

FOR REVISION ONLY 1

REGISTERED PROFESSIONAL ENGINEER — FADI WALIEDDINE No. 11465 Exp 12/31/2009 ELECTRICAL — STATE OF CALIFORNIA

FOR REVISION ONLY 2

REGISTERED PROFESSIONAL ENGINEER — SYN YEE CHIN No. 18186 Exp. 09/30/2011 ELECTRICAL — STATE OF CALIFORNIA

FOR REVISION ONLY 3 4 5

4 3 REVISIONS SUPERCEDED

REQUEST FOR INFORMATION NOT ADDRESSED IN THIS CCO REMAIN IN FORCE

MARK	DATE	DESCRIPTIONS	BY	CH'D	CCO#
		REVISIONS			
5	11/09/11	BIKE PATH CONDUIT	TW	NK	73
4	04/15/11	BIKE PATH CONDUIT	TW	RG	73
3	06/11/10	BIKE PATH CONDUIT	TW	RG	73
2	10/10/08	LIGHTING REVISIONS	RY AG	RG FW	43
1	02/19/08	ELECTRICAL MODIFICATIONS	MP EL	RR	42

CONTRACT CHANGE ORDER NO. 73
SHEET 10 OF 58

DETAILS
SAS SUPERSTRUCTURE ROADWAY EASTBOUND
120 V BIKE PATH LIGHTING WIRING DIAGRAMS
NO SCALE

E-146

CALCULATED/ DESIGNED BY	DATE	REVISED BY
CHECKED BY	11/01	BL
	9/01	JP

DESIGN OVERSIGHT — BEHZAD GOLEMOHAMMADI

STATE OF CALIFORNIA - DEPARTMENT OF TRANSPORTATION — Caltrans

THIS PLAN ACCURATE FOR ELECTRICAL WORK ONLY.

LAST REVISION 00-00-00 — DATE PLOTTED => 11/9/2011 — TIME PLOTTED => 5:10:50 PM

FOR REDUCED PLANS ORIGINAL SCALE IS IN MILLIMETERS 0 20 40 60 80

DGN FILE =>04-0120f1_0197R05.dgn
USERNAME =>llorico

CU 04251

EA 0120F1

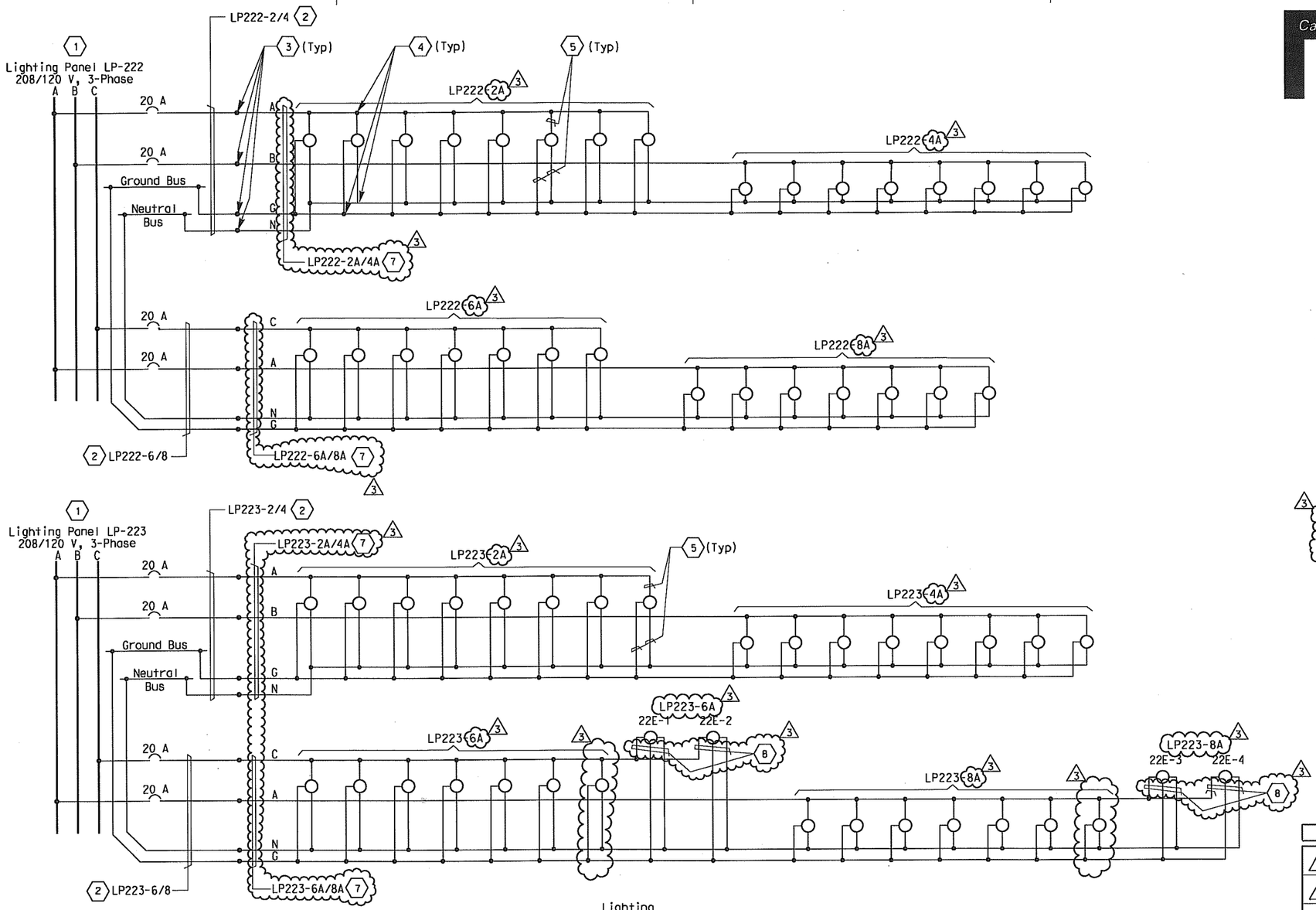

SYN YEE CHIN
No. 18186
Exp. 09/30/2011
ELECTRICAL
REGISTERED PROFESSIONAL ENGINEER
STATE OF CALIFORNIA

Syn Yee Chin
FOR REVISION ONLY
2 3 4

FADI WALIEDDINE
No. 11465
Exp. 12/31/2009
ELECTRICAL
REGISTERED PROFESSIONAL ENGINEER
STATE OF CALIFORNIA

FOR REVISION ONLY
1

DETAIL-1
(TYP. FOR EACH BIKE PATH LIGHTING)

2 REVISIONS SUPERCEDED 3

DIST	COUNTY	ROUTE	KILOMETER POST TOTAL PROJECT	SHEET No	TOTAL SHEETS
04	SF	80	13.2/13.9	198 R4	1204

Caltrans Metric

12/19/02
REGISTERED ELECTRICAL ENGINEER DATE

12-6-04
PLANS APPROVAL DATE

REGISTERED PROFESSIONAL ENGINEER
JENS ERLINGSSON
No. 8249
Exp. 9/30/06
ELECTRICAL
STATE OF CALIFORNIA

PB POWER, Inc.
A Parsons Brinckerhoff Company
303 Second St., Suite 700N
San Francisco, CA 94107-1317

The State of California or its officers or agents shall not be responsible for the accuracy or completeness of electronic copies of this plan sheet.

Caltrans now has a web site! To get to the web site, go to http://www.dot.ca.gov

SHEET NOTES:

1. For lighting panel schedule LP-222, LP-223, see sheet E-157.
2. Lighting feeder cable is 3/C #6 + G.
3. Conductors spliced inside PB-2A located in Girder.
4. Conductors spliced inside PB-1E located at north side of the bike path.
5. 2 #12 + #12 G. single conductors. See Detail 1.
6. Install 5A in-line fuse per light fixture, inside the belvedere light pole junction box for 22E-1 through 22E-4. For bike path lights (north/south hand railing) install 5A in-line fuses with heat shrinkable tubing at both leads inside PB-1E located at north side of bike path.
7. Lighting feeder cable is 3#6 + #8 G.
8. 2#10 + #10 G. single conductors. See Detail 1.

NOTE:

1. For circuit and conduit/cable tray schedules, see sheets starting at E-401.

REQUEST FOR INFORMATION NOT ADDRESSED IN THIS CCO REMAIN IN FORCE					
4	11/09/11	BIKE PATH CONDUIT	TW	NK	73
3	04/15/11	BIKE PATH CONDUIT	TW	RG	73
2	06/11/10	BIKE PATH CONDUIT	TW	RG	73
1	10/10/08	LIGHTING REVISIONS	RY AG	RG FW	43
MARK	DATE	DESCRIPTIONS REVISIONS	BY	CH'D	CCO#

CONTRACT CHANGE ORDER NO. 73
SHEET 11 OF 52

DETAILS
SAS SUPERSTRUCTURE ROADWAY EASTBOUND
120 V BIKE PATH LIGHTING WIRING DIAGRAMS
NO SCALE

E-147

DESIGNED BY	CALCULATED/	CHECKED BY
KG	AB	

MARK	DATE	REVISED BY	DATE REVISED
1	11/01	KG	12/01

DESIGN OVERSIGHT
BEHZAD GOLEMOHAMMADI

STATE OF CALIFORNIA - DEPARTMENT OF TRANSPORTATION
Caltrans

LAST REVISION 00-00-00
DATE PLOTTED => 11/9/2011
TIME PLOTTED => 5:02:28 PM

FOR REDUCED PLANS ORIGINAL SCALE IS IN MILLIMETERS 0 20 40 60 80

DGN FILE =>04-0120f1_0198R04.dgn
USERNAME =>llorico

CU 04251

EA 0120F1

LIGHTING PANEL LP-219 (CKT #2103)

LOCATION: SAS SUPERSTRUCTURE SERVICE PLATFORM #4

LOAD DESCRIPTION	LTG	CB		CB	LTG	LOAD DESCRIPTION
Spare		20/1	1 A 2	20/1	434	Bike Path LTG (5) 3, Belvedere (4)
		20/1	3 B 4	20/1	434 △3	Bike Path LTG (5) 3, Belvedere (4)
		20/1	5 C 6	20/1	216	Bike Path LTG (4)
		20/1	7 A 8	20/1	216	Bike Path LTG (4)
		20/1	9 B 10	20/1		Spare
		20/1	11 C 12	20/1		
TOTAL VA				△3	1,300	TOTAL VA

LOAD SUMMARY (INCLUDES .90 PF) (VA)

LIGHTING (AT 100%): 1,300 3

TOTAL kVA: 1.300 3

BALANCE (kVA)

Phase A - 0.650
Phase B - 0.434 3
Phase C - 0.216

VOLTAGE: 208/120 V
PHASE/WIRES: 3-phase, 4-wire
BUS RATING: 100 A
MAIN: MAIN LUGS ONLY
MOUNTING: Surface
K.A.I.C.: 10

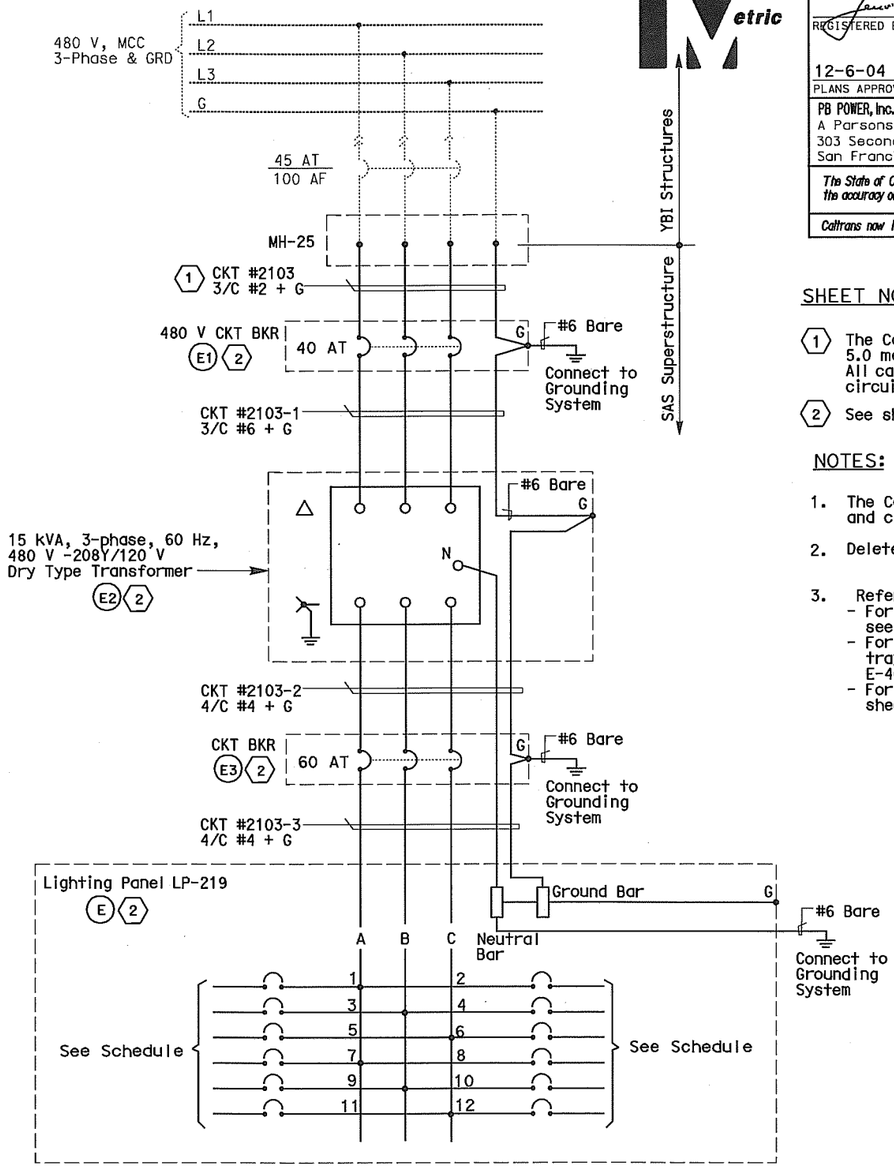

DIST	COUNTY	ROUTE	KILOMETER POST TOTAL PROJECT	SHEET No.	TOTAL SHEETS
04	SF	80	13.2/13.9	204 R3	1204

James Erlingsson 12/19/02
REGISTERED ELECTRICAL ENGINEER DATE

REGISTERED PROFESSIONAL ENGINEER — JENS ERLINGSSON No. 8249 Exp. 9/30/06 ELECTRICAL — STATE OF CALIFORNIA

12-6-04
PLANS APPROVAL DATE

PB POWER, Inc.
A Parsons Brinckerhoff Company
303 Second St., Suite 700N
San Francisco, CA 94107-1317

The State of California or its officers or agents shall not be responsible for the accuracy or completeness of electronic copies of this plan sheet.

Caltrans now has a web site! To get to the web site, go to http://www.dot.ca.gov

SHEET NOTES:

1. The Contractor shall extend and coil 5.0 meters of cable in M.H.#25 All cables shall be tagged with circuit numbers as shown.
2. See sheet E-71 for Equipment Schedule.

NOTES:

1. The Contractor shall provide nameplates and circuit schedules as shown.
2. Deleted
3. References:
   - For LVCC-A single line diagram, see sheets E-29 thru E-31.
   - For circuit and conduit/cable tray schedules, see sheets starting at E-401.
   - For pull box schedule, see sheet E-169.

FADI WALIEDDINE — REGISTERED PROFESSIONAL ENGINEER — No. 11465 Exp. 12/31/2009 ELECTRICAL — STATE OF CALIFORNIA

FOR REVISION ONLY △1

SYN YEE CHIN — REGISTERED PROFESSIONAL ENGINEER — No. 18186 Exp. 09/30/2011 ELECTRICAL — STATE OF CALIFORNIA

FOR REVISION ONLY △2 △3

△2 REVISIONS SUPERCEDED △3

REQUEST FOR INFORMATION NOT ADDRESSED IN THIS CCO REMAIN IN FORCE

MARK	DATE	DESCRIPTIONS	BY	CH'D	CCO#
		REVISIONS			
△3	03/24/11	BIKE PATH CONDUIT	TW	RG	73
△2	06/11/10	BIKE PATH CONDUIT	TW	RG	73
△1	03/30/09	SERVICE PLATFORM ELECTRICAL CHANGES	RR MP	RG FW	55

CONTRACT CHANGE ORDER NO. 73
SHEET 12 OF 52

DETAILS
SAS SUPERSTRUCTURE ROADWAY EASTBOUND
PANEL LP-219 SCHEDULE
NO SCALE

E-155

DESIGN OVERSIGHT — BEHZAD GOLEMOHAMMADI
CALCULATED/DESIGNED BY — JP
CHECKED BY — BL
DATE 09/01 — REVISED BY — DATE REVISED
11/01

STATE OF CALIFORNIA - DEPARTMENT OF TRANSPORTATION — Caltrans

THIS PLAN ACCURATE FOR ELECTRICAL WORK ONLY.

LAST REVISION 00-00-00 — DATE PLOTTED => 15-APR-2011 — TIME PLOTTED => 13:21

FOR REDUCED PLANS ORIGINAL SCALE IS IN MILLIMETERS 0 20 40 60 80

DGN FILE =>04-0120f1_0204R03.dgn
USERNAME =>llorico

CU 04251

EA 0120F1

LIGHTING PANEL LP-220 (CKT #2104)

LOCATION: SAS SUPERSTRUCTURE SERVICE PLATFORM #5

LOAD DESCRIPTION	LTG	CB		CB	LTG	LOAD DESCRIPTION
Spare		20/1	1 A 2	20/1	270	Bike Path LTG (5)
		20/1	3 B 4	20/1	270	Bike Path LTG (5)
		20/1	5 C 6	20/1	270	Bike Path LTG (5)
		20/1	7 A 8	20/1	270	Bike Path LTG (5)
		20/1	9 B 10	20/1		Spare
		20/1	11 C 12	20/1		
TOTAL VA					1,080	TOTAL VA

LOAD SUMMARY (INCLUDES .90 PF) (VA)
LIGHTING (AT 100%): 1,080

BALANCE (kVA)
Phase A - 0.540
Phase B - 0.270
Phase C - 0.270

VOLTAGE: 208/120 V
PHASE/WIRES: 3-phase, 4-wire
BUS RATING: 100 A
MAIN: MAIN LUGS ONLY
MOUNTING: Surface
K.A.I.C.: 10

TOTAL kVA: 1.080

LIGHTING PANEL LP-221 (CKT #2105)

LOCATION: SAS SUPERSTRUCTURE SERVICE PLATFORM #6

LOAD DESCRIPTION	LTG	CB		CB	LTG	LOAD DESCRIPTION
Spare		20/1	1 A 2	20/1	216	Bike Path LTG (4)
		20/1	3 B 4	20/1	216	Bike Path LTG (4)
		20/1	5 C 6	20/1	378	Bike Path LTG (7)
		20/1	7 A 8	20/1	378	Bike Path LTG (7)
		20/1	9 B 10	20/1		Spare
		20/1	11 C 12	20/1		
TOTAL VA					1188	TOTAL VA

LOAD SUMMARY (INCLUDES .90 PF) (VA)
LIGHTING (AT 100%): 1188

BALANCE (kVA)
Phase A - 0.594
Phase B - 0.216
Phase C - 0.378

VOLTAGE: 208/120 V
PHASE/WIRES: 3-phase, 4-wire
BUS RATING: 100 A
MAIN: Main Lugs Only
MOUNTING: Surface
K.A.I.C.: 10

TOTAL kVA: 1.188

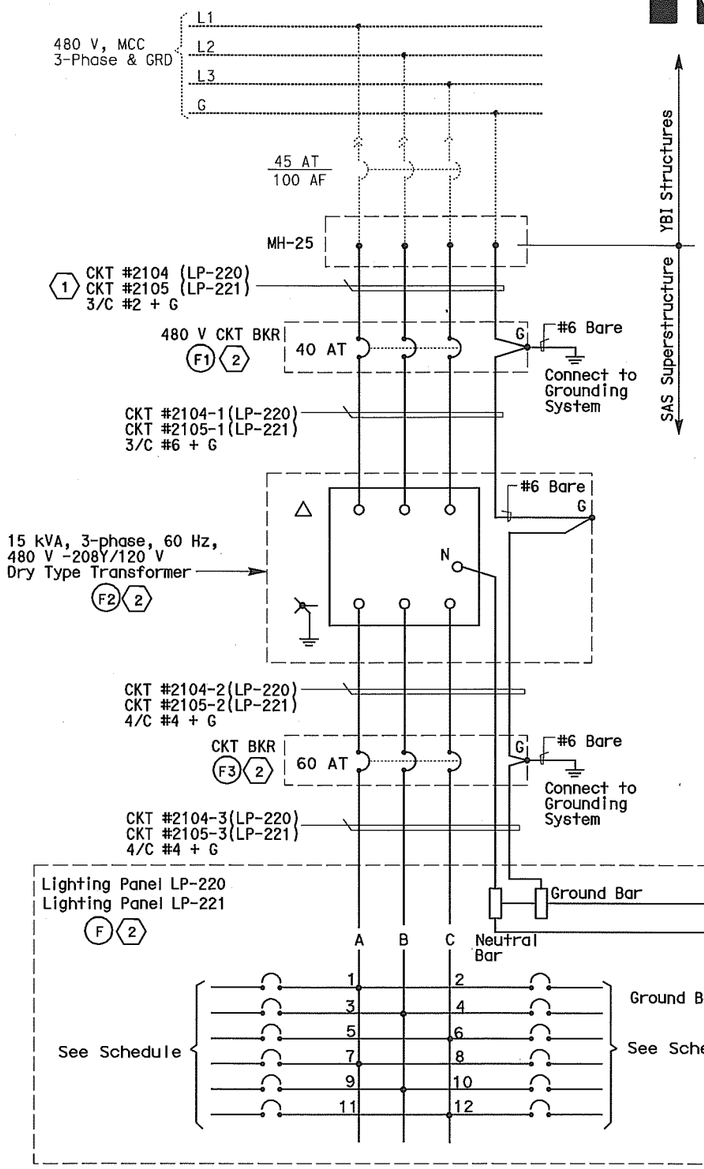

DIST	COUNTY	ROUTE	KILOMETER POST TOTAL PROJECT	SHEET No.	TOTAL SHEETS
04	SF	80	13.2/13.9	205 R3	1204

12/19/02
REGISTERED ELECTRICAL ENGINEER DATE

12-6-04
PLANS APPROVAL DATE

REGISTERED PROFESSIONAL ENGINEER — JENS ERLINGSSON No. 8249 Exp. 9/30/06 ELECTRICAL — STATE OF CALIFORNIA

PB POWER, Inc.
A Parsons Brinckerhoff Company
303 Second St., Suite 700N
San Francisco, CA 94107-1317

The State of California or its officers or agents shall not be responsible for the accuracy or completeness of electronic copies of this plan sheet.

Caltrans now has a web site! To get to the web site, go to http://www.dot.ca.gov

SHEET NOTES:

1. The Contractor shall extend and coil 5.0 meters of cable in M.H.#25 All cables shall be tagged with circuit numbers as shown.
2. See Sheets E-72 for Equipment Schedule.

NOTES:

1. The Contractor shall provide nameplates and circuit schedules as shown.
2. Deleted
3. References:
   - For LVCC-B single line diagram, see sheets E-32 thru E-34.
   - For circuit and conduit/cable tray schedules, see sheets starting at E-401.
   - For pull box schedule, see sheet E-169.

REQUEST FOR INFORMATION NOT ADDRESSED IN THIS CCO REMAIN IN FORCE

MARK	DATE	DESCRIPTIONS	BY	CH'D	CCO#
		REVISIONS			
3	03/24/11	BIKE PATH CONDUIT	TW	RG	73
2	06/11/10	BIKE PATH CONDUIT	TW	RG	73
1	03/30/09	SERVICE PLATFORM ELECTRICAL CHANGES	RR	RG FW	55

CONTRACT CHANGE ORDER NO. 73
SHEET 13 OF 52

2 REVISIONS SUPERCEDED 3

REGISTERED PROFESSIONAL ENGINEER — FADI WALIEDDINE No. 11465 Exp. 12/31/2009 ELECTRICAL — STATE OF CALIFORNIA
FOR REVISION ONLY 1

REGISTERED PROFESSIONAL ENGINEER — SYN YEE CHIN No. 18186 Exp. 09/30/2011 ELECTRICAL — STATE OF CALIFORNIA
FOR REVISION ONLY 2 3

DETAILS
SAS SUPERSTRUCTURE ROADWAY EASTBOUND
PANEL LP-220 AND LP-221 SCHEDULES
NO SCALE

E-156

DATE	REVISED BY	DATE REVISED
09/01	JP	11/01

CALCULATED/DESIGNED BY BL
CHECKED BY

DESIGN OVERSIGHT — BEHZAD GOLEMOHAMMADI

STATE OF CALIFORNIA - DEPARTMENT OF TRANSPORTATION — Caltrans

LAST REVISION 00-00-00
DATE PLOTTED => 18-APR-2011
TIME PLOTTED => 08:46

FOR REDUCED PLANS ORIGINAL SCALE IS IN MILLIMETERS 0 20 40 60 80

DGN FILE =>04-0120f1_0205R03.dgn
USERNAME =>llorico

CU 04251

EA 0120F1

LIGHTING PANEL LP-222 (CKT #2106)

LOCATION: SAS SUPERSTRUCTURE SERVICE PLATFORM #7

LOAD DESCRIPTION	LTG	CB		CB	LTG	LOAD DESCRIPTION
Spare		20/1	1 A 2	20/1	432	Bike Path LTG (8)
		20/1	3 B 4	20/1	432	Bike Path LTG (8)
		20/1	5 C 6	20/1	378	Bike Path LTG (7)
		20/1	7 A 8	20/1	378	Bike Path LTG (7)
		20/1	9 B 10	20/1		Spare
		20/1	11 C 12	20/1		
TOTAL VA					1,620	TOTAL VA

LOAD SUMMARY (INCLUDES .90 PF) (VA)
LIGHTING (AT 100%): 1,620

BALANCE (kVA)
Phase A - 0.810
Phase B - 0.432
Phase C - 0378

VOLTAGE: 208/120 V
PHASE/WIRES: 3-phase, 4-wire
BUS RATING: 100 A
MAIN: MAIN LUGS ONLY
MOUNTING: Surface
K.A.I.C.: 10

TOTAL kVA: 1.620

LIGHTING PANEL LP-223 (CKT #2107)

LOCATION: SAS SUPERSTRUCTURE SERVICE PLATFORM #8

LOAD DESCRIPTION	LTG	CB		CB	LTG	LOAD DESCRIPTION
Spare		20/1	1 A 2	20/1	432	Bike Path LTG (8)
		20/1	3 B 4	20/1	432	Bike Path LTG (8)
		20/1	5 C 6	20/1	542	Bike Path LTG (7) Belvedere (4) 3
		20/1	7 A 8	20/1	542	Bike Path LTG (7) Belvedere (4) 3
		20/1	9 B 10	20/1	3	Spare
		20/1	11 C 12	20/1		
TOTAL VA				3	1,948	TOTAL VA

LOAD SUMMARY (INCLUDES .90 PF) (VA)
LIGHTING (AT 100%): 1,948 3

BALANCE (kVA)
Phase A - 0.974 3
Phase B - 0.432
Phase C - 0.542 3

VOLTAGE: 208/120 V
PHASE/WIRES: 3-phase, 4-wire
BUS RATING: 100 A
MAIN: Main Lugs Only
MOUNTING: Surface
K.A.I.C.: 10

TOTAL kVA: 1.948 3

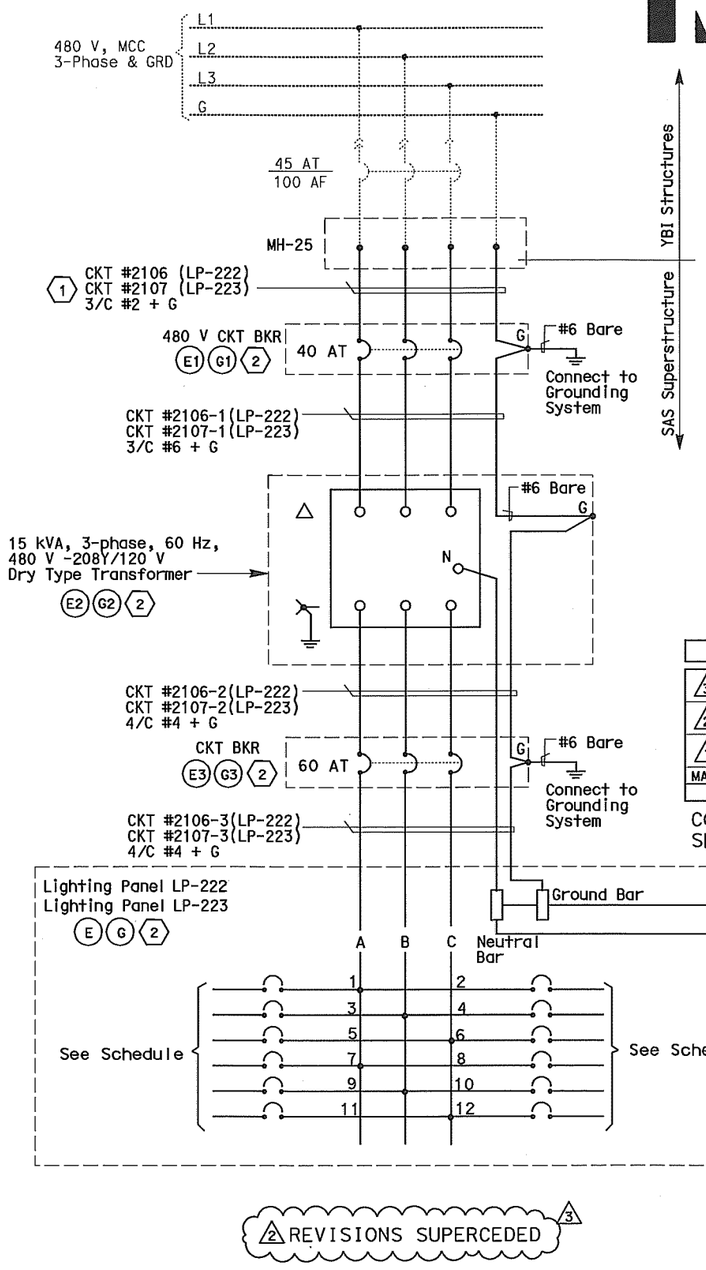

2 REVISIONS SUPERCEDED 3

DIST	COUNTY	ROUTE	KILOMETER POST TOTAL PROJECT	SHEET No	TOTAL SHEETS
04	SF	80	13.2/13.9	206 R3	1204

Jens Erlingsson 9650 12/19/02
REGISTERED ELECTRICAL ENGINEER DATE

12-6-04
PLANS APPROVAL DATE

REGISTERED PROFESSIONAL ENGINEER — JENS ERLINGSSON No. 8249 Exp. 9/30/06 ELECTRICAL — STATE OF CALIFORNIA

PB POWER, Inc.
A Parsons Brinckerhoff Company
303 Second St., Suite 700N
San Francisco, CA 94107-1317

The State of California or its officers or agents shall not be responsible for the accuracy or completeness of electronic copies of this plan sheet.

Caltrans now has a web site! To get to the web site, go to http://www.dot.ca.gov

SHEET NOTES:

1. The Contractor shall extend and coil 5.0 meters of cable in manhole 25 All cables shall be tagged with circuit numbers as shown.
2. See Sheets E-74 & E-75 for Equipment Schedule.

NOTES:

1. The Contractor shall provide nameplates and circuit schedules as shown.
2. Deleted
3. References:
   - For LVCC-B single line diagram, see sheets E-32 thru E-34.
   - For circuit and conduit/cable tray schedules, see sheets starting at E-401.
   - For pull box schedule, see sheet E-169.

REQUEST FOR INFORMATION NOT ADDRESSED IN THIS CCO REMAIN IN FORCE

MARK	DATE	DESCRIPTIONS REVISIONS	BY	CH'D	CCO#
3	03/24/11	BIKE PATH CONDUIT	TW	RG	73
2	06/11/10	BIKE PATH CONDUIT	TW	RG	73
1	03/30/09	SERVICE PLATFORM ELECTRICAL CHANGES	RR	RG FW	55

CONTRACT CHANGE ORDER NO. 73
SHEET 14 OF 52

REGISTERED PROFESSIONAL ENGINEER — FADI WALIEDDINE No. 11465 Exp. 12/31/2009 ELECTRICAL — STATE OF CALIFORNIA
FOR REVISION ONLY 1

REGISTERED PROFESSIONAL ENGINEER — SYN YEE CHIN No. 18186 Exp. 09/30/2011 ELECTRICAL — STATE OF CALIFORNIA
FOR REVISION ONLY 2 3

DETAILS
SAS SUPERSTRUCTURE ROADWAY EASTBOUND PANEL LP-222 AND LP-223 SCHEDULES
NO SCALE

E-157

DATE	REVISED BY	DATE REVISED
09/01	JP	11/01 BL

CALCULATED/DESIGNED BY
CHECKED BY

DESIGN OVERSIGHT
BEHZAD GOLEMOHAMMADI

STATE OF CALIFORNIA - DEPARTMENT OF TRANSPORTATION
Caltrans

DATE PLOTTED => 15-APR-2011
TIME PLOTTED => 13:21
LAST REVISION 00-00-00

FOR REDUCED PLANS ORIGINAL SCALE IS IN MILLIMETERS 0 20 40 60 80
DGN FILE =>04-0120f1_0206R03.dgn
USERNAME =>llorico
CU 04251
EA 0120F1

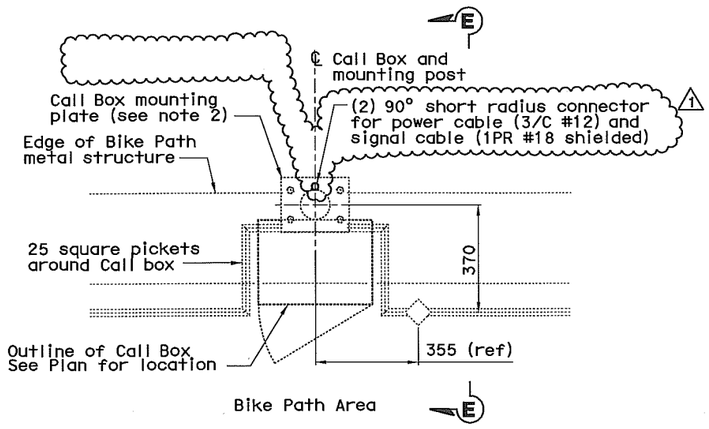

PLAN

CALL BOX MOUNTING AT BIKE PATH
SCALE 1:10

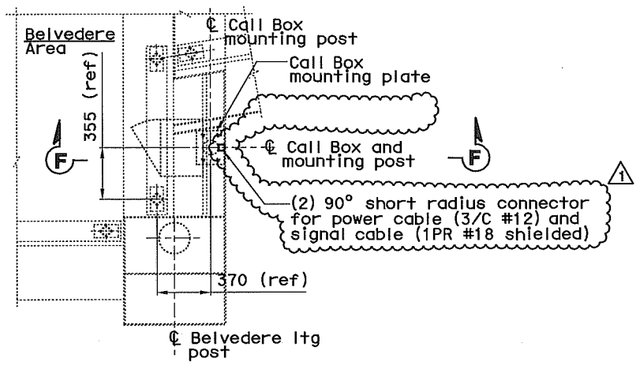

PLAN

CALL BOX MOUNTING AT BELVEDERE
SCALE 1:20

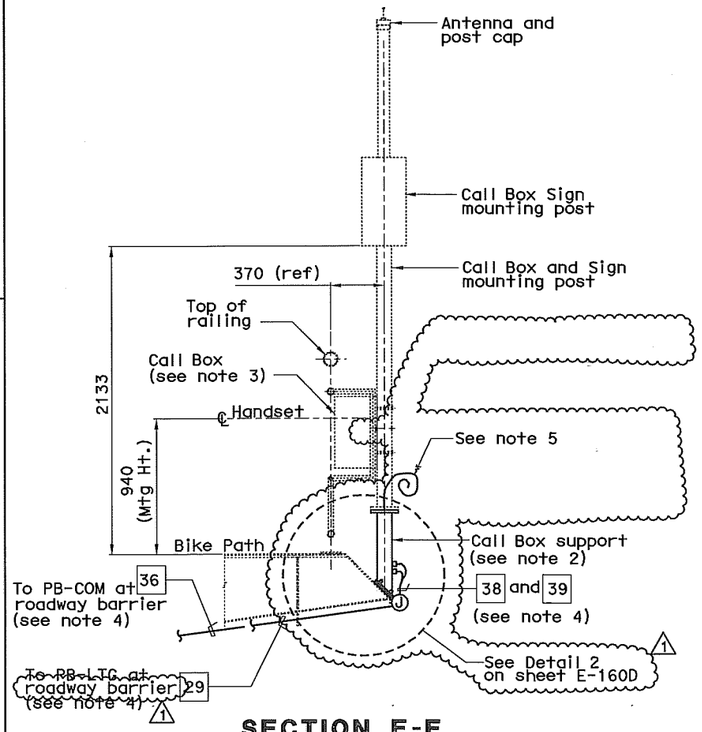

SECTION E-E

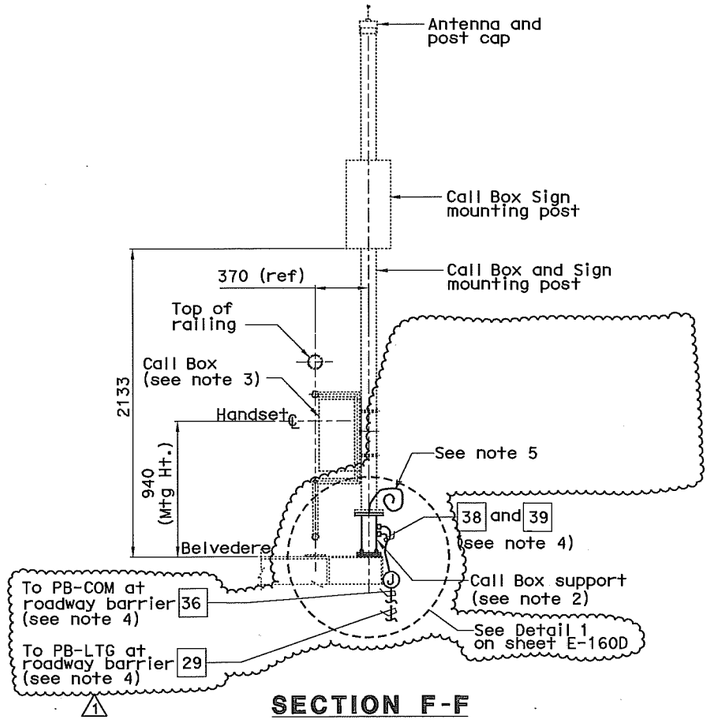

SECTION F-F

SCALE 1:20

DIST	COUNTY	ROUTE	KILOMETER POST TOTAL PROJECT	SHEET No	TOTAL SHEETS
04	SF	80	13.2/13.9	207 S2R1	1204

REGISTERED ELECTRICAL ENGINEER — 9/18/2007 DATE

PLANS APPROVAL DATE

REGISTERED PROFESSIONAL ENGINEER — MARWELL FUNTO TARAKJI — No. E 8651 — Exp. 9/30/2008 ELECTRICAL — STATE OF CALIFORNIA

PB AMERICAS, Inc.
A Parsons Brinckerhoff Company
303 Second St., Suite 700N
San Francisco, CA 94107-1317

The State of California or its officers or agents shall not be responsible for the accuracy or completeness of electronic copies of this plan sheet.

Caltrans now has a web site! To get to the web site, go to http://www.dot.ca.gov

NOTES:

1. References:
   - For call box schedule, see Sheet E-397.
2. For call box support, see drawing AS-2.
3. Call box dimensions are 495.8 mm high x 393.7 mm wide x 292.1 mm depth.
4. ~~Field to locate support for~~ liquidtight flexible metal conduit and the PVC Coated RGS ~~conduit below Bike Path structure.~~ 1
1 5. Provide approximately 5 m of pigtails for power and TOS conductors for future termination to the call box. Pigtails must be coiled and protected from damage. Seal each conductor end to prevent water from entering the insulation.

REGISTERED PROFESSIONAL ENGINEER — SYN YEE CHIN — No. 18186 — Exp. 09/30/2011 ELECTRICAL — STATE OF CALIFORNIA

Syn Yee Chin
FOR REVISION ONLY
1

REQUEST FOR INFORMATION NOT ADDRESSED IN THIS CCO REMAIN IN FORCE					
1	06/11/10	BIKE PATH CONDUIT	TW	RG	73
0	03/04/08	BARRIER MODIFICATIONS	EL	RG SE	44
MARK	DATE	DESCRIPTIONS	BY	CH'D	CCO#
REVISIONS					

CONTRACT CHANGE ORDER NO. 73
SHEET 15 OF 52

DETAILS
SAS SUPERSTRUCTURE ROADWAY EASTBOUND CONDUIT AND PULL BOX LOCATIONS

SCALE AS NOTED

E-160B

DESIGN OVERSIGHT	CALCULATED/ DESIGNED BY	DATE	REVISED BY	DATE REVISED
BEHZAD GOLEMOHAMMADI	CHECKED BY	JS 09/07	RG	09/07

STATE OF CALIFORNIA - DEPARTMENT OF TRANSPORTATION
Caltrans

LAST REVISION 00-00-00 — DATE PLOTTED => 15-APR-2011 — TIME PLOTTED => 13:21

THIS PLAN IS ACCURATE FOR ELECTRICAL WORK ONLY. ALL DIMENSIONS ARE IN MILLIMETERS UNLESS OTHERWISE SHOWN.

FOR REDUCED PLANS ORIGINAL SCALE IS IN MILLIMETERS 0 20 40 60 80

DGN FILE =>04-0120f1_0207S02R01.dgn
USERNAME =>llorico

CU 04251 | EA 0120F1

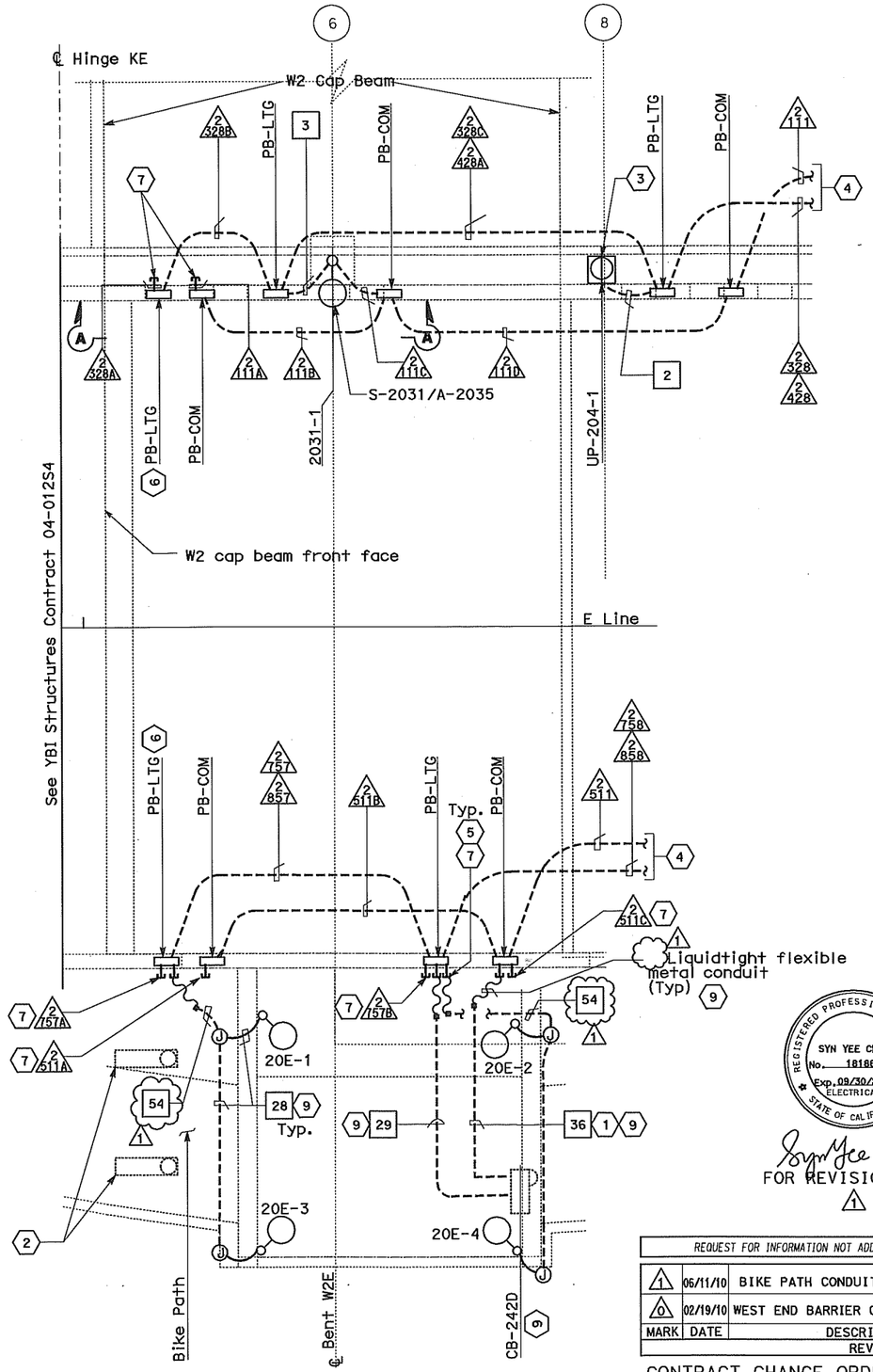

CONDUIT PLAN
SCALE: 1:100

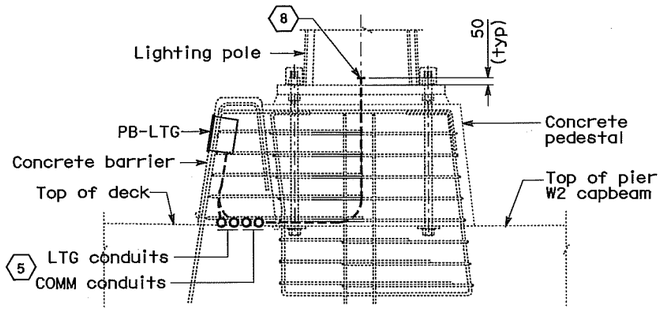

SECTION D-D
NO SCALE

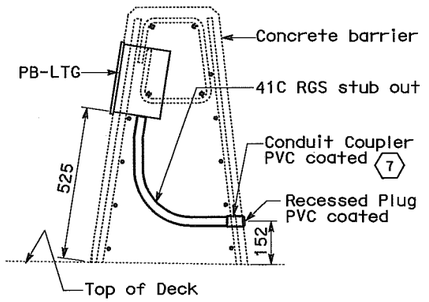

SECTION B-B
NO SCALE
Typical for PB-LTG in concrete barrier.

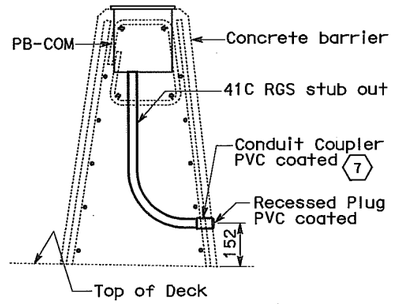

SECTION C-C
NO SCALE
Typical for PB-COM in concrete barrier.

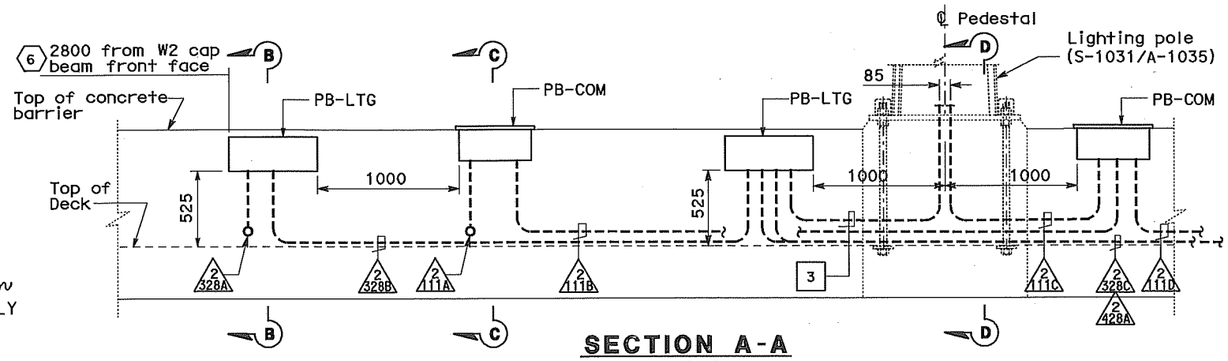

SECTION A-A
NO SCALE
Similar for installation of PB-LTG and PB-COM on south side concrete barrier.
Conduit routing varies, see conduit plan.

SYN YEE CHIN
REGISTERED PROFESSIONAL ENGINEER
No. 18186
Exp. 09/30/2011 ELECTRICAL
STATE OF CALIFORNIA

Synyee Chin
FOR REVISION ONLY
1

REQUEST FOR INFORMATION NOT ADDRESSED IN THIS CCO REMAIN IN FORCE					
1	06/11/10	BIKE PATH CONDUIT	TW	RG	73
0	02/19/10	WEST END BARRIER CONDUIT	TW	RG DO	44S1
MARK	DATE	DESCRIPTIONS REVISIONS	BY	CH'D	CCO#

CONTRACT CHANGE ORDER NO. 73
SHEET 16 OF 52

DIST	COUNTY	ROUTE	KILOMETER POST TOTAL PROJECT	SHEET No	TOTAL SHEETS
04	SF	80	13.2/13.9	207 S3R1	1204

02/11/10
REGISTERED ELECTRICAL ENGINEER DATE

REGISTERED PROFESSIONAL ENGINEER
DAVID H. OTO
No. 10699
Exp. 06/30/2011 ELECTRICAL
STATE OF CALIFORNIA

PLANS APPROVAL DATE

PB AMERICAS, Inc.
A Parsons Brinckerhoff Company
303 Second St., Suite 700N
San Francisco, CA 94107-1317

The State of California or its officers or agents shall not be responsible for the accuracy or completeness of electronic copies of this plan sheet.

Caltrans now has a web site! To get to the web site, go to http://www.dot.ca.gov

SHEET NOTES:

1. Contractor shall coil 70 meters inside cable tray at PP15 for feed into PB-COM by others.
2. Railing lights are conrtractor furnished and installed by others.
3. Roadway Barrier Receptacle, see Detail 1, sheet E-68.
4. See drawing E-135 for continuation of conduits.
5. Conduit arrangement may be adjusted to suit field condition.
6. Contractor shall verify dimension and locate PB-LTG with sufficient distance to accommodate required clearance for the expansion joint.
7. Stub-out conduits are furnished and installed by Contractor. Conduit shall stub-out at the non-roadway side of the barrier with the coupler flushed to the barrier face wall and provided with plug.
8. Capped end of conduit stub-ups.
9. Bike path electrical components west of PP-9 are furnished by Contractor and installed by others.

NOTES:

1. For additional general notes, see E135.

DETAILS
SAS SUPERSTRUCTURE ROADWAY EASTBOUND CONDUIT AND PULL BOX LOCATIONS
SCALE AS NOTED

E-160C

DESIGN OVERSIGHT	CALCULATED/ DESIGNED BY	RG	DATE 6-09	REVISED BY
BEHZAD GOLEMOHAMMADI	CHECKED BY	FW	6-09	DATE REVISED

STATE OF CALIFORNIA - DEPARTMENT OF TRANSPORTATION
Caltrans

THIS PLAN ACCURATE FOR ELECTRICAL WORK ONLY — ALL DIMENSIONS ARE IN MILLIMETERS UNLESS OTHERWISE SHOWN

FOR REDUCED PLANS ORIGINAL SCALE IS IN MILLIMETERS 0 20 40 60 80

DGN FILE =>04-0120f1_0207S03R01.dgn
USERNAME =>llorico

CU 04251 | EA 0120F1

LAST REVISION 00-00-00
DATE PLOTTED => 15-APR-2011
TIME PLOTTED => 13:21

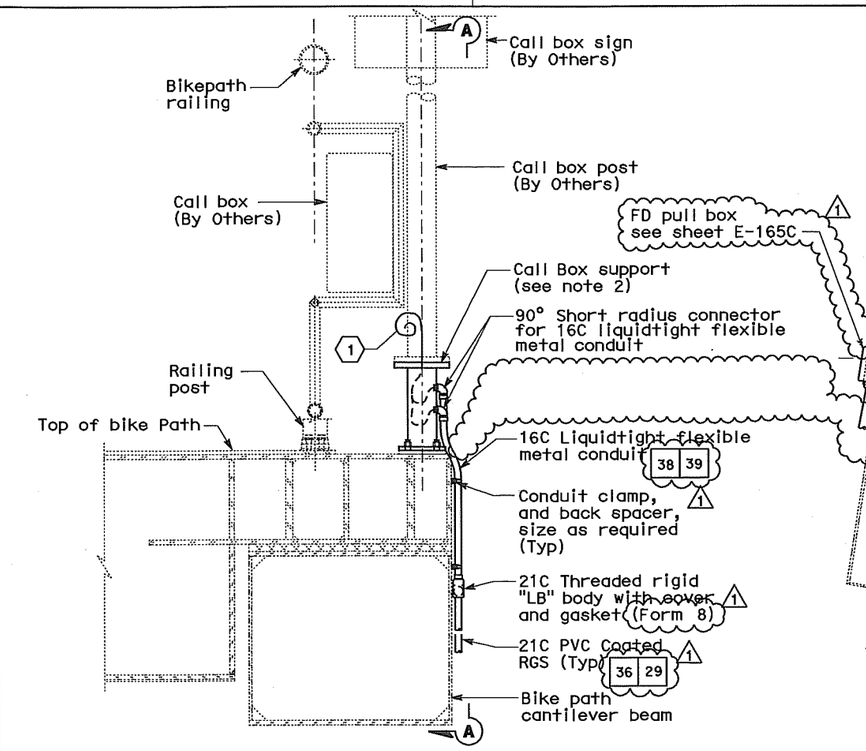

DETAIL 1 - ELEVATION

CALL BOX AT BELVEDERE (See Sheet E-160B. similar for Sheet 160C)
SCALE 1:10

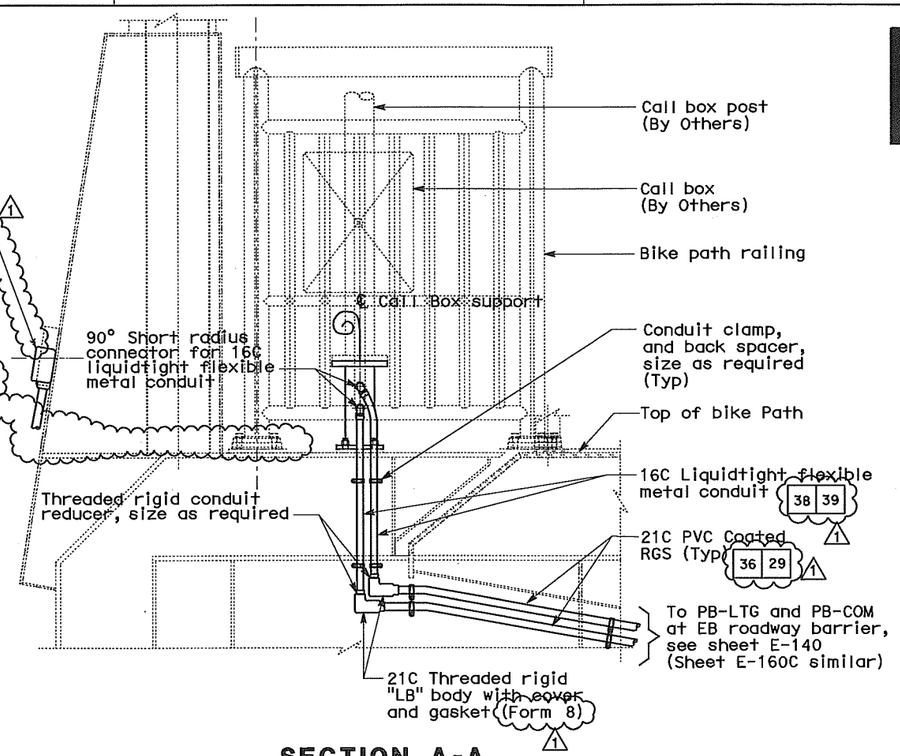

SECTION A-A

SCALE 1:10

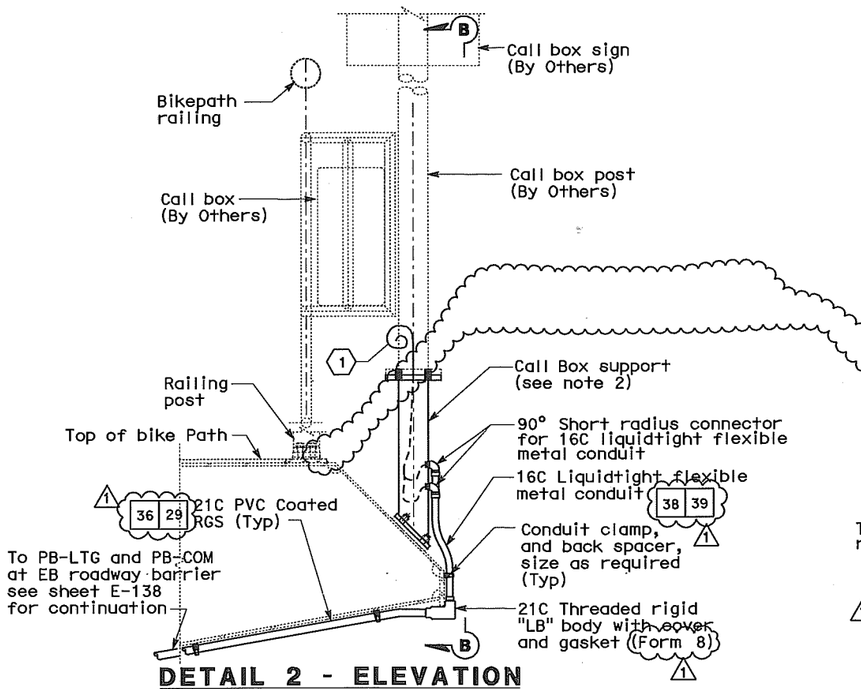

DETAIL 2 - ELEVATION

CALL BOX AT BIKE PATH (See E-160B)
SCALE 1:10

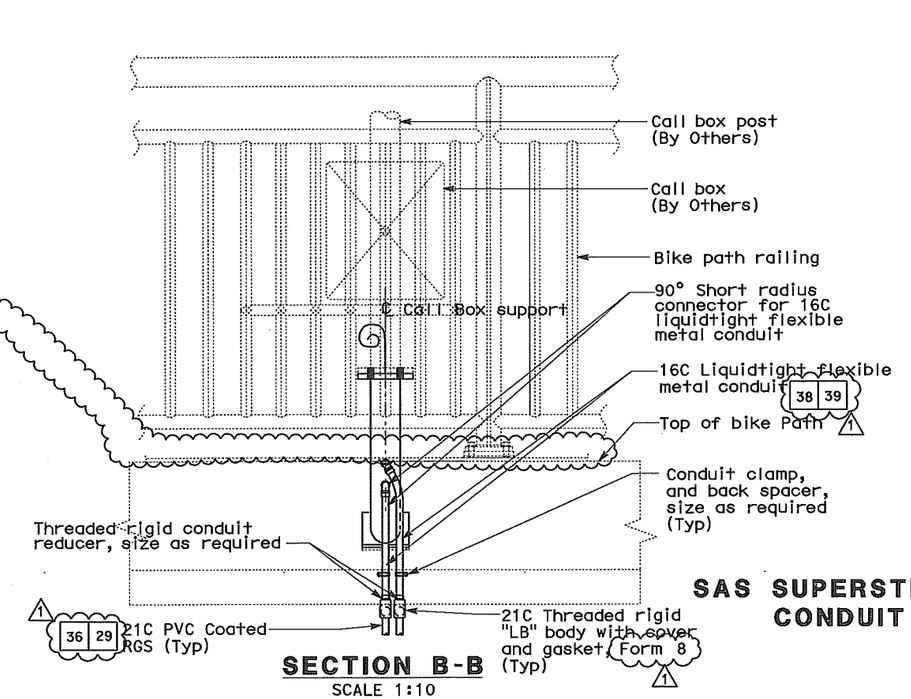

SECTION B-B

SCALE 1:10

SHEET NOTES:

(1) Provide approximately 5 m of pigtails for power and TOS conductors for future termination to the call box. Seal each conductor end to prevent water from entering the insulation. Pigtails shall be coiled and protected from damage. Provide weatherproof covers for the pigtails and call box supports.

NOTES:

1. References:
   - For call box schedule, see Sheet E-397.
2. For call box support, see drawing AS-2.
3. Call box dimensions are 495.8 mm high x 393.7 mm wide x 292.1 mm depth.
4. For additional notes, see sheet E-160B.
5. For call box location at Belvedere, see sheets E-140 and E-160C.
6. For call Box location at bike path, see sheet E-138.
7. All conduit connections shall be watertight.

DIST	COUNTY	ROUTE	KILOMETER POST TOTAL PROJECT	SHEET No	TOTAL SHEETS
04	SF	80	13.2/13.9	207 S4R1	1204

Syn Yee Chin 04/23/10
REGISTERED ELECTRICAL ENGINEER DATE

REGISTERED PROFESSIONAL ENGINEER — SYN YEE CHIN No. 18186 Exp. 09/30/2011 ELECTRICAL — STATE OF CALIFORNIA

PLANS APPROVAL DATE

PB AMERICAS, Inc.
A Parsons Brinckerhoff Company
303 Second St., Suite 700N
San Francisco, CA 94107-1317

The State of California or its officers or agents shall not be responsible for the accuracy or completeness of electronic copies of this plan sheet.

Caltrans now has a web site! To get to the web site, go to http://www.dot.ca.gov

REQUEST FOR INFORMATION NOT ADDRESSED IN THIS CCO REMAIN IN FORCE					
1	04/15/11	BIKE PATH CONDUIT	TW	RG	73
0	06/11/10	BIKE PATH CONDUIT	TW	RG	73
MARK	DATE	DESCRIPTIONS REVISIONS	BY	CH'D	CCO#

CONTRACT CHANGE ORDER NO. 73
SHEET 17 OF 52

DETAILS
SAS SUPERSTRUCTURE ROADWAY EASTBOUND CONDUIT AND PULL BOX LOCATIONS

SCALE AS NOTED

E-160D

DESIGN OVERSIGHT	CALCULATED/ DESIGNED BY	CHECKED BY	DRAWN BY	DATE	REVISED BY	DATE REVISED
BEHZAD GOLEMOHAMMADI	XX	XX	XX	XX/10	XX	XX/10

STATE OF CALIFORNIA - DEPARTMENT OF TRANSPORTATION — Caltrans

THIS PLAN ACCURATE FOR ELECTRICAL WORK ONLY

ALL DIMENSIONS ARE IN MILLIMETERS UNLESS OTHERWISE SHOWN

FOR REDUCED PLANS ORIGINAL SCALE IS IN MILLIMETERS 0 20 40 60 80

DGN FILE =>04-0120f1_0207S04R01.dgn
USERNAME =>llorico

CU 04251 | EA 0120F1

LAST REVISION 00-00-00 — DATE PLOTTED => 18-APR-2011 TIME PLOTTED => 09:14

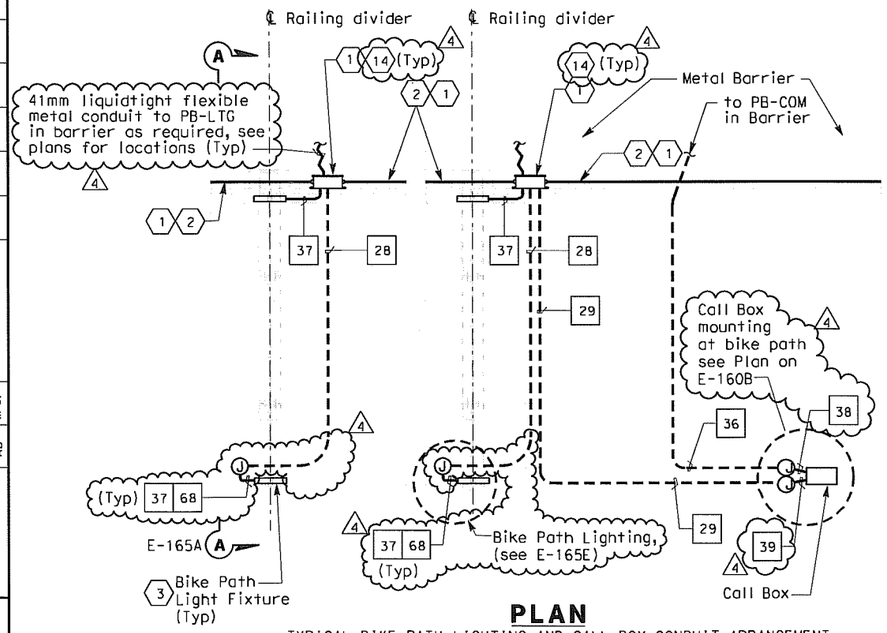

PLAN

TYPICAL BIKE PATH LIGHTING AND CALL BOX CONDUIT ARRANGEMENT
SCALE 1:50

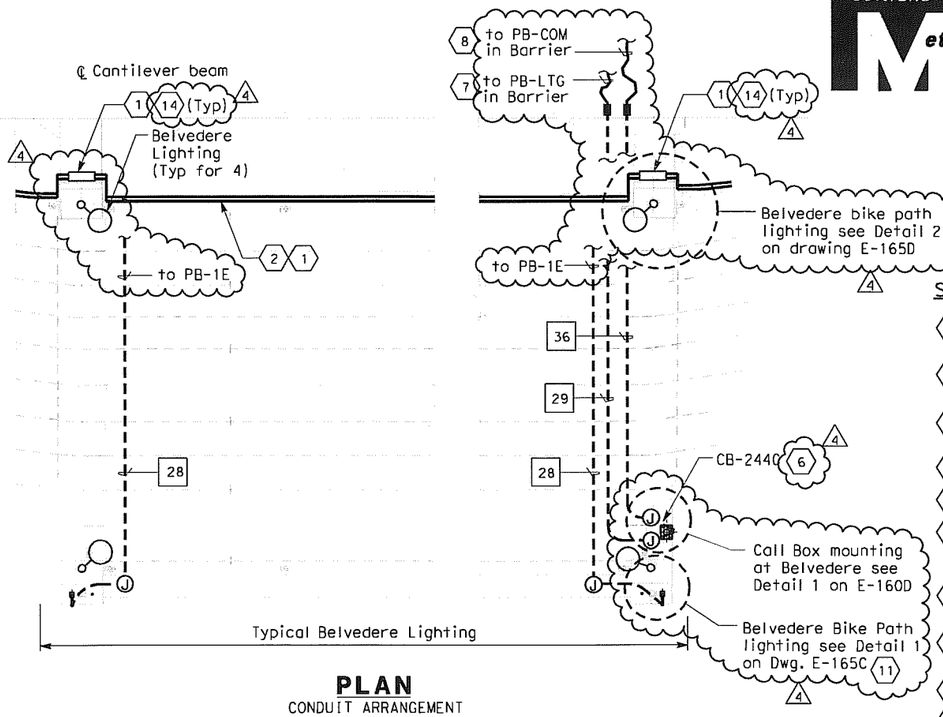

PLAN

CONDUIT ARRANGEMENT
SCALE 1:50

Caltrans Metric

DIST	COUNTY	ROUTE	KILOMETER POST TOTAL PROJECT	SHEET No	TOTAL SHEETS
04	SF	80	13.2/13.9	210 R5	1204

12/19/02
REGISTERED ELECTRICAL ENGINEER DATE

JENS ERLINGSSON No. 8249 Exp. 9/30/06 ELECTRICAL — REGISTERED PROFESSIONAL ENGINEER — STATE OF CALIFORNIA

12-6-04
PLANS APPROVAL DATE

PB POWER, Inc.
A Parsons Brinckerhoff Company
303 Second St., Suite 700N
San Francisco, CA 94107-1317

The State of California or its officers or agents shall not be responsible for the accuracy or completeness of electronic copies of this plan sheet.

Caltrans now has a web site! To get to the web site, go to http://www.dot.ca.gov

SHEET NOTES:

1. PB-1E and conduit support, mounting details see sheet E-165A.
2. 41C, continued to the next PB-1E mounted along side at Bike Path deck.
3. For bike path light detail, see sheet E-172 and E-165E.
4. Deleted.
5. Deleted.
6. For connection and mounting details of call box on railings, refer to structural railing details.
7. 21 mm liquidtight flexible metal conduit to PB-LTG inside the roadway steel barrier.
8. 21 mm liquidtight flexible metal conduit to PB-COM inside the roadway steel barrier.
9. Deleted.
10. Deleted.
11. For details of Belvedere, see sheet E-173.
12. Deleted.
13. Deleted.
14. Install 5A in-line fuse per light fixture, inside the belvedere light pole. For bike path lights (north/south hand railing) install 5A in-line fuses ~~inside PB-1s located or not in side of bike path.~~

NOTES:

1. All exposed conduits and fittings installed between the roadway and the bike path shall be PVC coated galvanized steel unless noted otherwise.
2. See sheets E-135 through E-140 for SAS Superstructure Roadway Plans.

3 REVISIONS SUPERCEDED

MAXWELL FUMIO TAKATA — No. E 8651 — Exp. 9/30/2008 ELECTRICAL — REGISTERED PROFESSIONAL ENGINEER — STATE OF CALIFORNIA
FOR REVISION ONLY 1

S. A. ESTOQUE, JR. — No. E-10151 — Exp. 12/31/2008 ELECTRICAL — REGISTERED PROFESSIONAL ENGINEER — STATE OF CALIFORNIA
FOR REVISION ONLY 2

SYN YEE CHIN — No. 18186 — Exp. 09/30/2011 ELECTRICAL — REGISTERED PROFESSIONAL ENGINEER — STATE OF CALIFORNIA
FOR REVISION ONLY 3 4 5

REQUEST FOR INFORMATION NOT ADDRESSED IN THIS CCO REMAIN IN FORCE					
5	11/11/11	BIKE PATH CONDUIT	TW	NK	73
4	04/15/11	BIKE PATH CONDUIT	TW	RG	73
3	06/11/10	BIKE PATH CONDUIT	TW	RG	73
2	03/04/08	BARRIER MODIFICATIONS	JS BM	RG SE	44
1	02/19/08	ELECTRICAL MODIFICATIONS	MP EL	RR	42
MARK	DATE	DESCRIPTIONS REVISIONS	BY	CH'D	CCO#

CONTRACT CHANGE ORDER NO. 73
SHEET 18 OF 52

DETAILS
SAS SUPERSTRUCTURE ROADWAY EASTBOUND TYPICAL BIKE PATH PLANS AND SECTIONS

SCALE AS NOTED

E-165

REVISED BY	DATE REVISED
KG	10/01
AB	11/01
CALCULATED/ DESIGNED BY	CHECKED BY
BEHZAD GOLEMOHAMMADI	DESIGN OVERSIGHT

STATE OF CALIFORNIA - DEPARTMENT OF TRANSPORTATION
Caltrans

THIS PLAN IS ACCURATE FOR ELECTRICAL WORK ONLY.

ALL DIMENSIONS ARE IN MILLIMETERS UNLESS OTHERWISE SHOWN.

FOR REDUCED PLANS ORIGINAL SCALE IS IN MILLIMETERS 0 20 40 60 80

DGN FILE =>04-0120f1_0210R05.dgn
USERNAME =>llorico

CU 04251

EA 0120F1

LAST REVISION 00-00-00
DATE PLOTTED => 11/9/2011
TIME PLOTTED => 5:31:21 PM

DIST	COUNTY	ROUTE	KILOMETER POST TOTAL PROJECT	SHEET No	TOTAL SHEETS
04	SF	80	13.2/13.9	210 S1R3	1204

REGISTERED ELECTRICAL ENGINEER — 8-24-07 DATE

REGISTERED PROFESSIONAL ENGINEER — MAXWELL FUMIO TAKATA — No. E 8651 — Exp. 9/30/2008 ELECTRICAL — STATE OF CALIFORNIA

PLANS APPROVAL DATE

PB AMERICAS, Inc.
A Parsons Brinckerhoff Company
303 Second St., Suite 700N
San Francisco, CA 94107-1317

The State of California or its officers or agents shall not be responsible for the accuracy or completeness of electronic copies of this plan sheet.

To get to the web site, go to: http://www.dot.ca.gov

Caltrans Metric

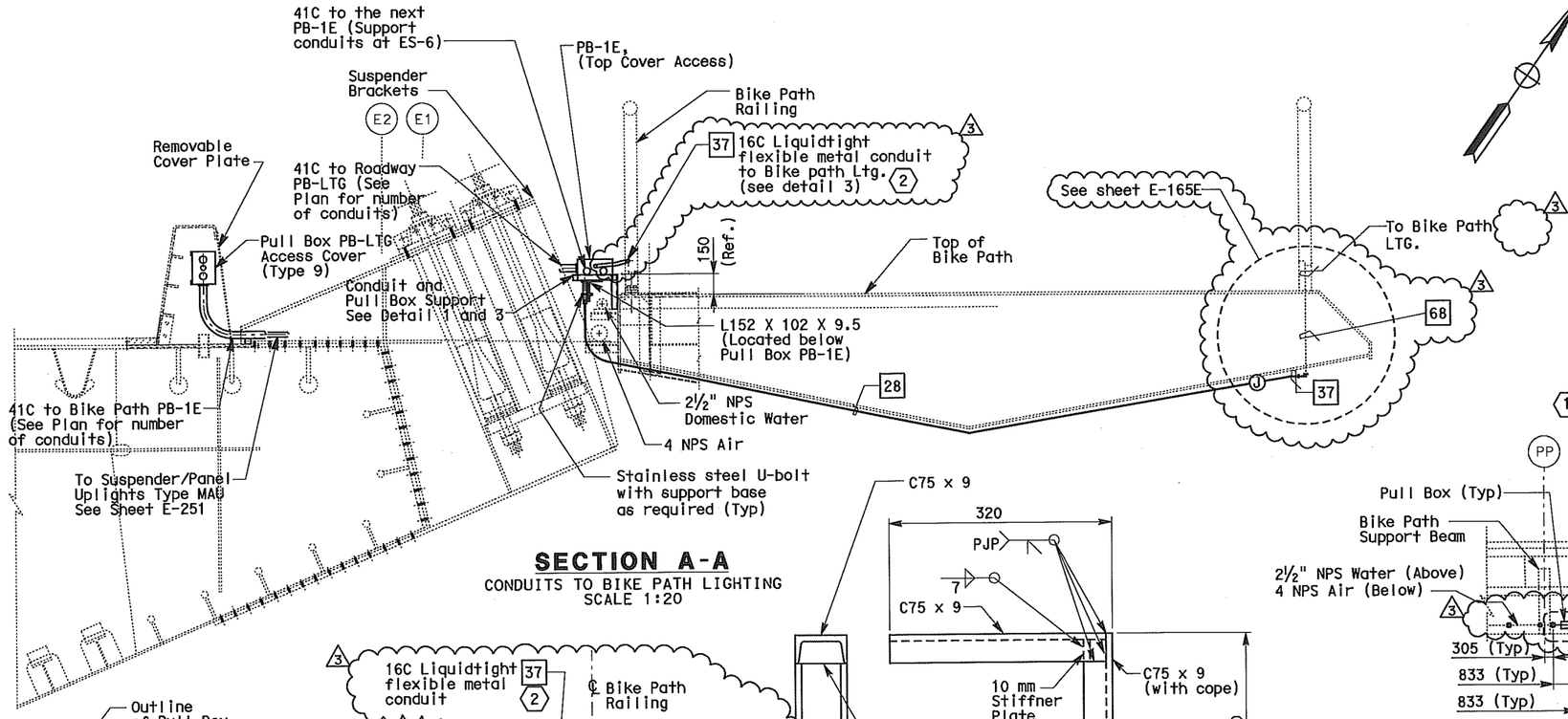

SECTION A-A
CONDUITS TO BIKE PATH LIGHTING
SCALE 1:20

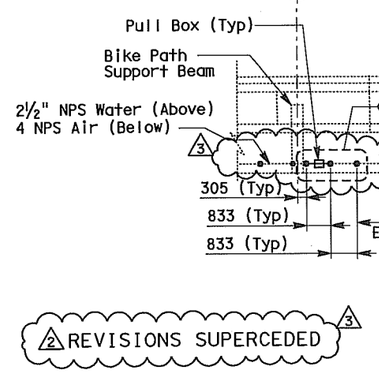

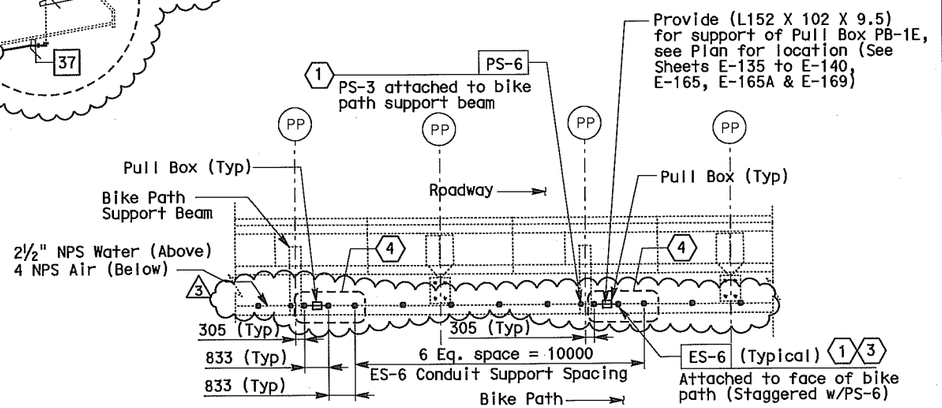

PLAN - DETAIL 1
TYPICAL CONDUIT SUPPORT
SCALE 1:100

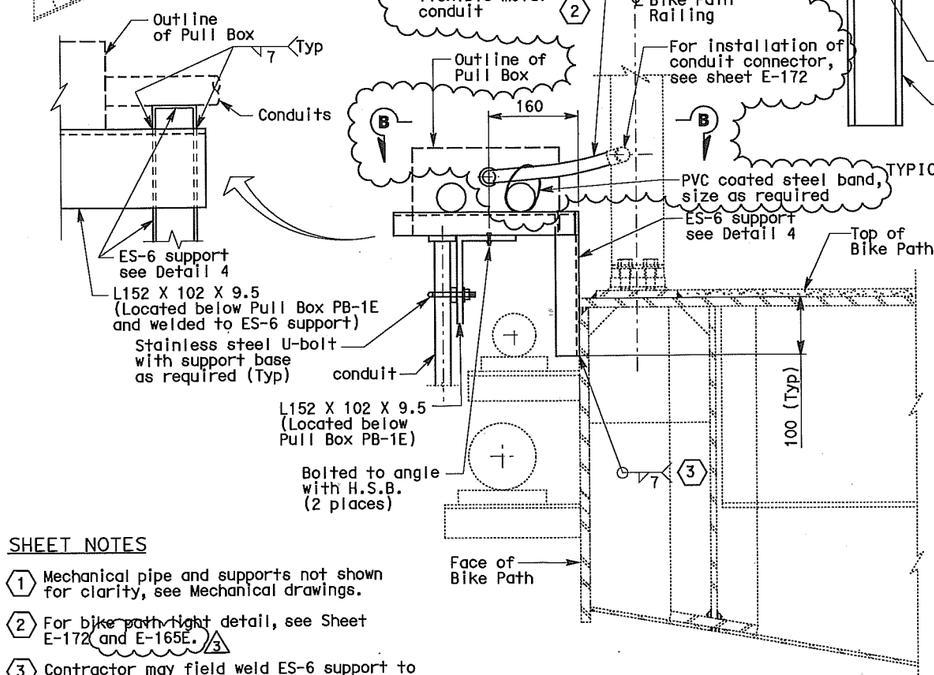

DETAIL 4
TYPICAL TYPE ES-6 SUPPORT
SCALE: None

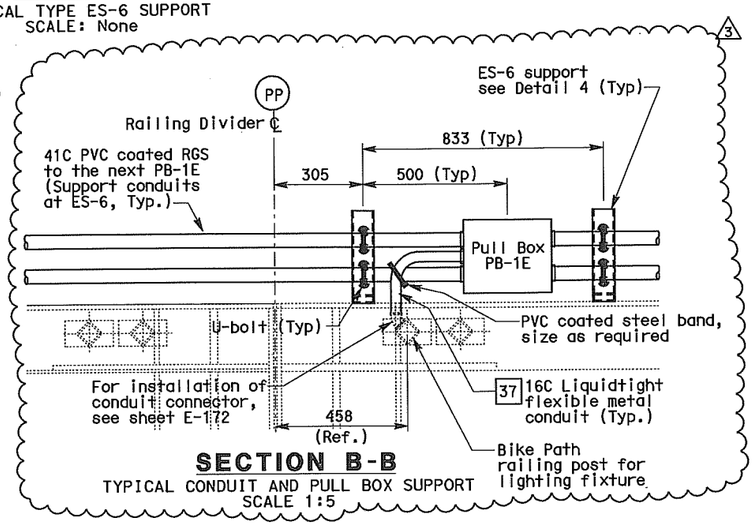

SECTION B-B
TYPICAL CONDUIT AND PULL BOX SUPPORT
SCALE 1:5

SECTION - DETAIL 3
CONDUIT AND PULL BOX SUPPORT
SCALE 1:5

2 REVISIONS SUPERCEDED 3

SHEET NOTES

1. Mechanical pipe and supports not shown for clarity, see Mechanical drawings.
2. For bike path right detail, see Sheet E-172 and E-165E. 3
3. Contractor may field weld ES-6 support to face of bike path.
4. Typical ES-6 support spacing where pull box PB-1E is installed.

FADI WALIEDDINE — REGISTERED PROFESSIONAL ENGINEER — No. 11465 — Exp. 12/31/2009 ELECTRICAL — STATE OF CALIFORNIA

FOR REVISION ONLY 1

SYN YEE CHIN — REGISTERED PROFESSIONAL ENGINEER — No. 18186 — Exp. 09/30/2011 ELECTRICAL — STATE OF CALIFORNIA

FOR REVISION ONLY 2 3

REQUEST FOR INFORMATION NOT ADDRESSED IN THIS CCO REMAIN IN FORCE

MARK	DATE	DESCRIPTIONS (REVISIONS)	BY	CH'D	CCO#
3	04/15/11	BIKE PATH CONDUIT	TW	RG	73
2	06/11/10	BIKE PATH CONDUIT	TW	RG	73
1	12/15/08	BIKE PATH DETAILS	TW	RG FW	99
0	02/19/08	ELECTRICAL MODIFICATIONS	MP EL	RR	42

CONTRACT CHANGE ORDER NO. 73
SHEET 19 OF 52

DETAILS
SAS SUPERSTRUCTURE ROADWAY EASTBOUND
TYPICAL BIKE PATH PLANS AND SECTIONS
SCALE AS NOTED

E-165A

DESIGN OVERSIGHT	CALCULATED/ DESIGNED BY	DATE	REVISED BY	DATE REVISED
BEHZAD GOLEMOHAMMADI	CHECKED BY	2/07	EL	7/07 RR

STATE OF CALIFORNIA - DEPARTMENT OF TRANSPORTATION — Caltrans

LAST REVISION 00-00-00 — DATE PLOTTED => 18-APR-2011 — TIME PLOTTED => 14:31

THIS PLAN ACCURATE FOR ELECTRICAL WORK ONLY.

ALL DIMENSIONS ARE IN MILLIMETERS UNLESS OTHERWISE SHOWN

FOR REDUCED PLANS ORIGINAL SCALE IS IN MILLIMETERS 0 20 40 60 80

DGN FILE =>04-0120f1_0210S01R03.dgn
USERNAME =>llorico

CU 04251

EA 0120F1

DIST	COUNTY	ROUTE	KILOMETER POST TOTAL PROJECT	SHEET No	TOTAL SHEETS
04	SF	80	13.2/13.9	210 S2R2	1204

10/01/08
REGISTERED ELECTRICAL ENGINEER DATE

PLANS APPROVAL DATE

REGISTERED PROFESSIONAL ENGINEER — FADI WALIEDDINE No. 11465 Exp.12/31/2009 ELECTRICAL — STATE OF CALIFORNIA

PB POWER, Inc.
A Parsons Brinckerhoff Company
303 Second St., Suite 700N
San Francisco, CA 94107-1317

The State of California or its officers or agents shall not be responsible for the accuracy or completeness of electronic copies of this plan sheet.

Caltrans now has a web site! To get to the web site, go to http://www.dot.ca.gov

REGISTERED PROFESSIONAL ENGINEER — SYN YEE CHIN No. 18186 Exp.09/30/2011 ELECTRICAL — STATE OF CALIFORNIA

Syn Yee Chin
FOR REVISION ONLY
2

REGISTERED PROFESSIONAL ENGINEER — FADI WALIEDDINE No. 11465 Exp.12/31/2009 ELECTRICAL — STATE OF CALIFORNIA

FOR REVISION ONLY
1

SHEET NOTES:

1. Install ES-6 support to provide support to pull box at the location shown.

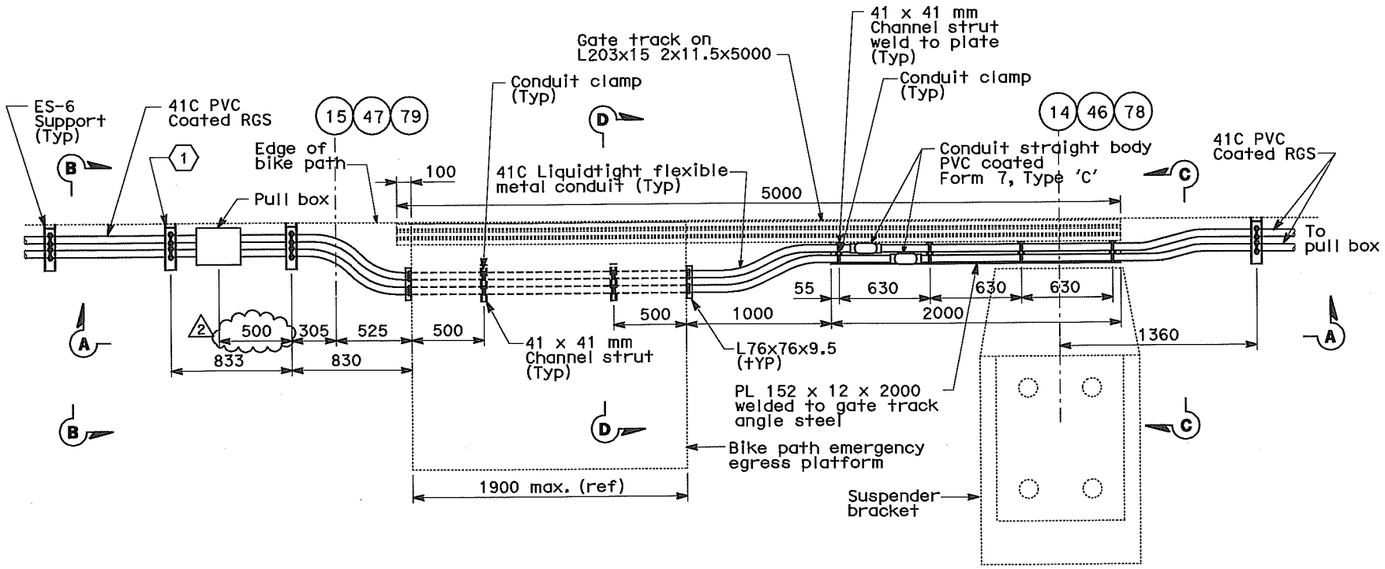

PARTIAL PLAN
SCALE 1:20
(Typical conduit installation)

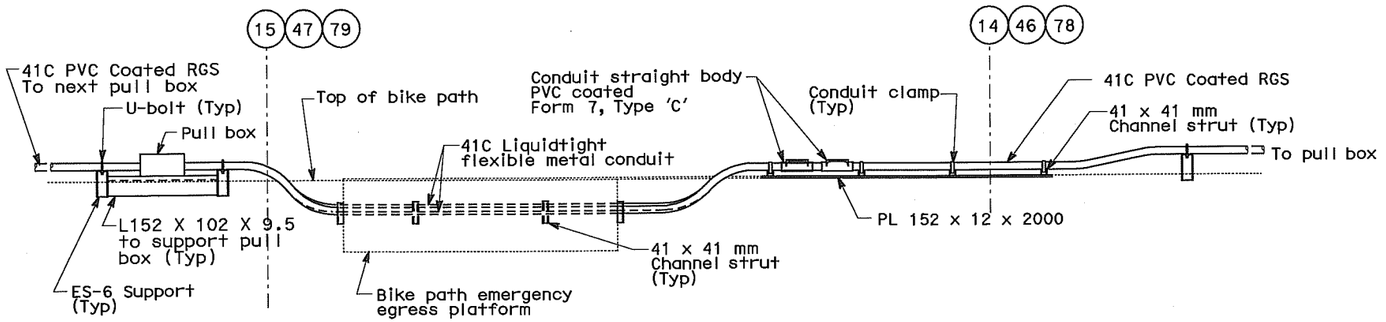

SECTION A-A
SCALE 1:20

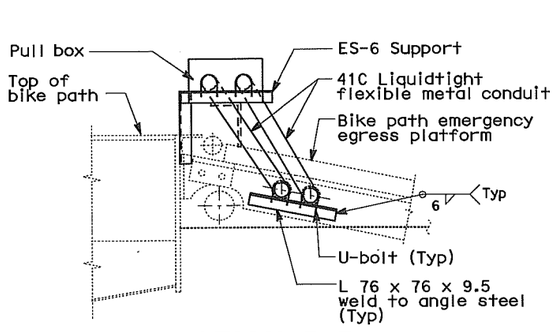

SECTION B-B
SCALE 1:10

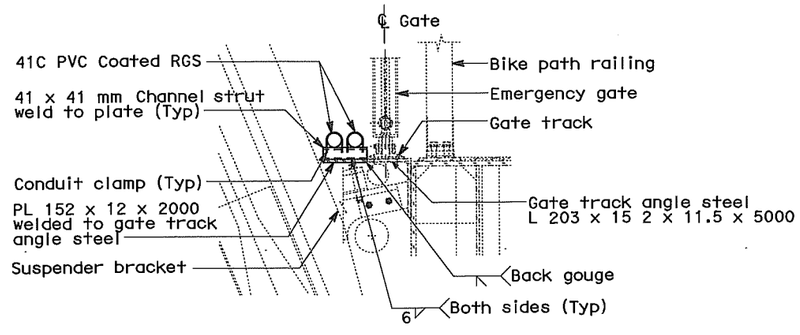

SECTION C-C
SCALE 1:10

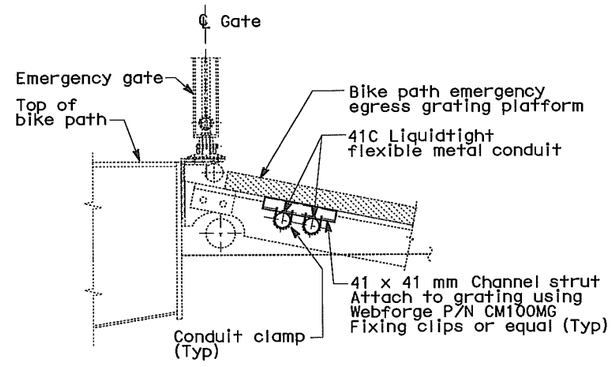

SECTION D-D
SCALE 1:10

REQUEST FOR INFORMATION NOT ADDRESSED IN THIS CCO REMAIN IN FORCE

MARK	DATE	DESCRIPTIONS REVISIONS	BY	CH'D	CCO#
2	06/11/10	BIKE PATH CONDUIT	TW	RG	73
1	01/08/09	BIKE PATH DETAILS	RG	FW	99
0	12/15/08	BIKE PATH DETAILS	RG	FW	99

CONTRACT CHANGE ORDER NO. 73
SHEET 20 OF 52

DETAILS
SAS SUPERSTRUCTURE ROADWAY EASTBOUND
BIKE PATH EMERGENCY EGRESS PLATFORM
SCALE AS NOTED

E-165B

DATE	REVISED BY	DATE REVISED
CALCULATED/ DESIGNED BY	CHECKED BY	

DESIGN OVERSIGHT
BEHZAD GOLEMOHAMMADI

STATE OF CALIFORNIA - DEPARTMENT OF TRANSPORTATION
Caltrans

THIS PLAN ACCURATE FOR ELECTRICAL WORK ONLY.

ALL DIMENSIONS ARE IN MILLIMETERS UNLESS OTHERWISE SHOWN

FOR REDUCED PLANS ORIGINAL SCALE IS IN MILLIMETERS 0 20 40 60 80

DGN FILE =>04-0120f1_0210S02R02.dgn
USERNAME =>llorico

CU 04251

EA 0120F1

LAST REVISION 00-00-00
DATE PLOTTED => 15-APR-2011
TIME PLOTTED => 13:21

DIST	COUNTY	ROUTE	KILOMETER POST TOTAL PROJECT	SHEET No	TOTAL SHEETS
04	SF	80	13.2/13.9	210 S3R1	1204

Syn Yee Chin 04/23/10
REGISTERED ELECTRICAL ENGINEER DATE

REGISTERED PROFESSIONAL ENGINEER
SYN YEE CHIN
No. 18186
Exp. 09/30/2011
ELECTRICAL
STATE OF CALIFORNIA

PLANS APPROVAL DATE

PB AMERICAS, Inc.
A Parsons Brinckerhoff Company
303 Second St., Suite 700N
San Francisco, CA 94107-1317

The State of California or its officers or agents shall not be responsible for the accuracy or completeness of electronic copies of this plan sheet.

Caltrans now has a web site! To get to the web site, go to http://www.dot.ca.gov

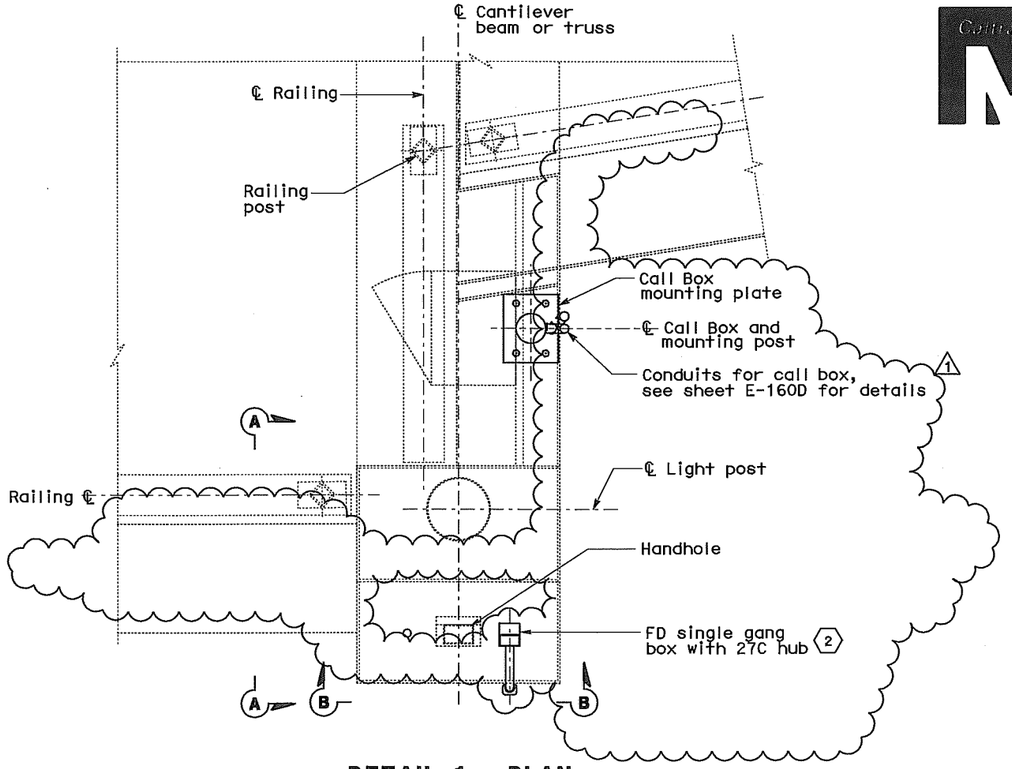

DETAIL 1 - PLAN
BELVEDERE LIGHT POST AT SOUTH SIDE OF BIKE PATH

SHEET NOTES:

1. Use threaded plug to cover spare hole for future use.
2. Contractor to ensure box installation is watertight.
3. Provide approximately 7 m of pigtails for power conductors for future termination to the belvedere light. Seal each conductor end to prevent water from entering the insulation. Pigtails shall be coiled and protected from damage and placed inside belvedere light post housing.

NOTES:

1. For location of bike path light fixtures and belvedere lights, see sheets E-135 through E-140.
2. All conduit connections shall be watertight.

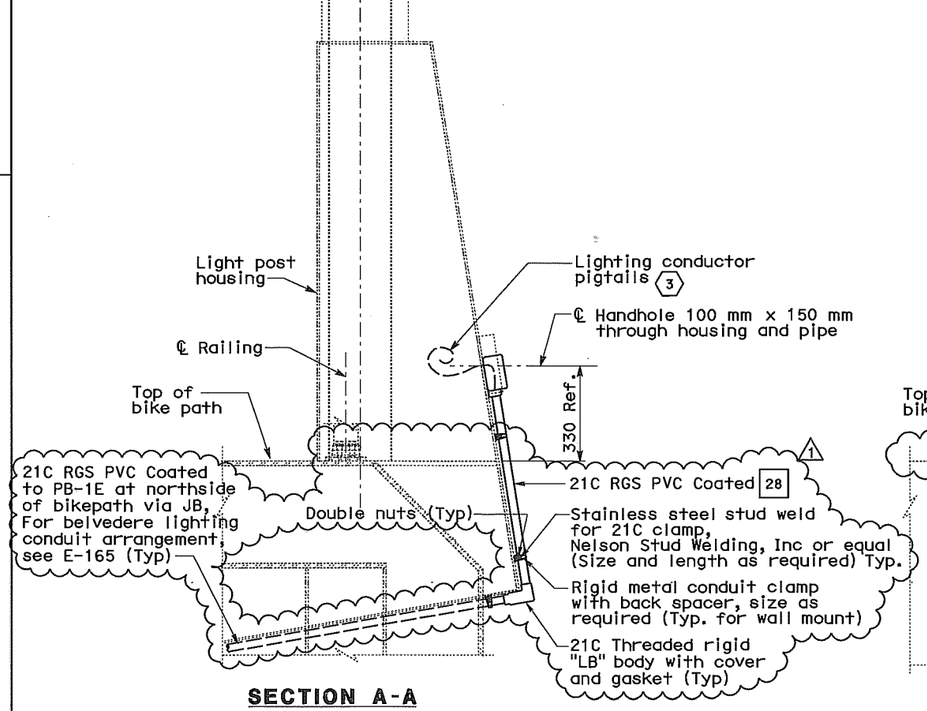

SECTION A-A

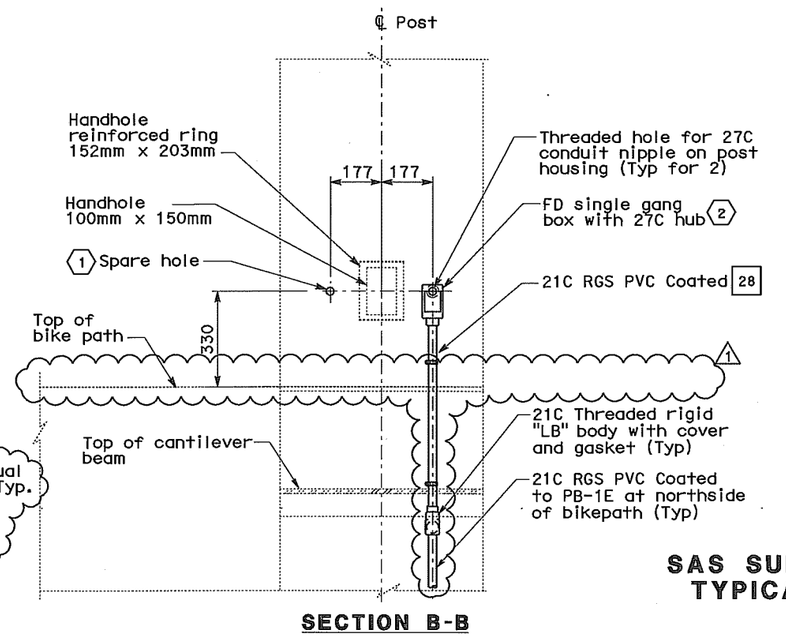

SECTION B-B

THIS PLAN ACCURATE FOR ELECTRICAL WORK ONLY.

ALL DIMENSIONS ARE IN MILLIMETERS UNLESS OTHERWISE SHOWN

MARK	DATE	DESCRIPTIONS	BY	CH'D	CCO#
		REVISIONS			
1	03/24/11	BIKE PATH CONDUIT	TW	RG	73
0	06/11/10	BIKE PATH CONDUIT	TW	RG	73

REQUEST FOR INFORMATION NOT ADDRESSED IN THIS CCO REMAIN IN FORCE

CONTRACT CHANGE ORDER NO. 73
SHEET 21 OF 52

DETAILS
SAS SUPERSTRUCTURE ROADWAY EASTBOUND
TYPICAL BIKE PATH PLANS AND SECTIONS

SCALE: 1:10

E-165C

DESIGN OVERSIGHT — BEHZAD GOLEMOHAMMADI
CALCULATED/DESIGNED BY
CHECKED BY
DATE REVISED BY
DATE REVISED
STATE OF CALIFORNIA - DEPARTMENT OF TRANSPORTATION — Caltrans

FOR REDUCED PLANS ORIGINAL SCALE IS IN MILLIMETERS 0 20 40 60 80

DGN FILE =>04-0120f1_0210S03R01.dgn
USERNAME =>llorico

CU 04251 | EA 0120F1

DATE PLOTTED => 15-APR-2011
TIME PLOTTED => 13:22
LAST REVISION 00-00-00

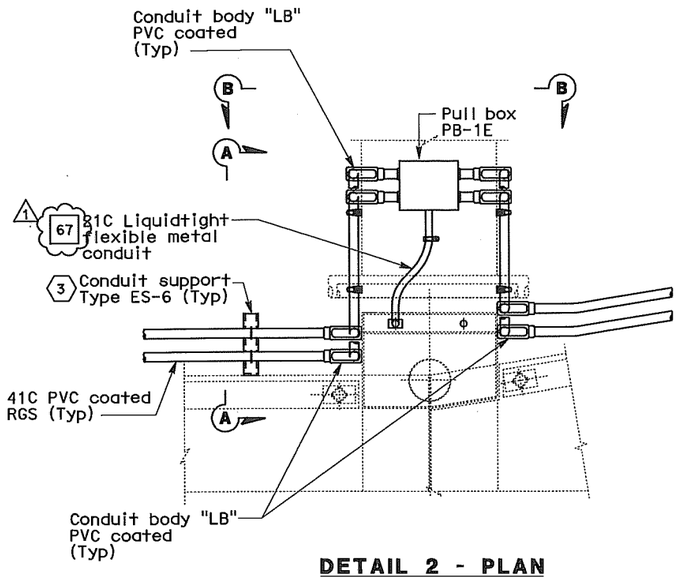

DETAIL 2 - PLAN

BELVEDERE LIGHT POST AT NORTH SIDE OF BIKE PATH

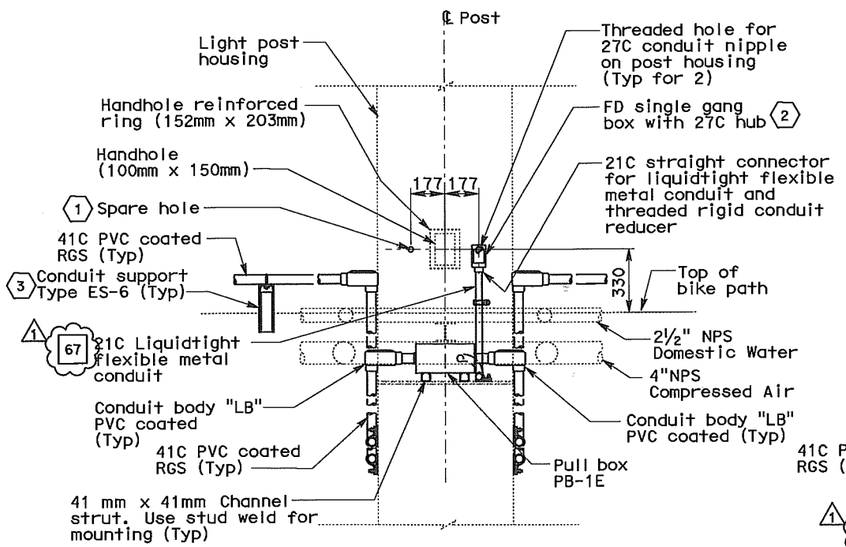

SECTION B-B

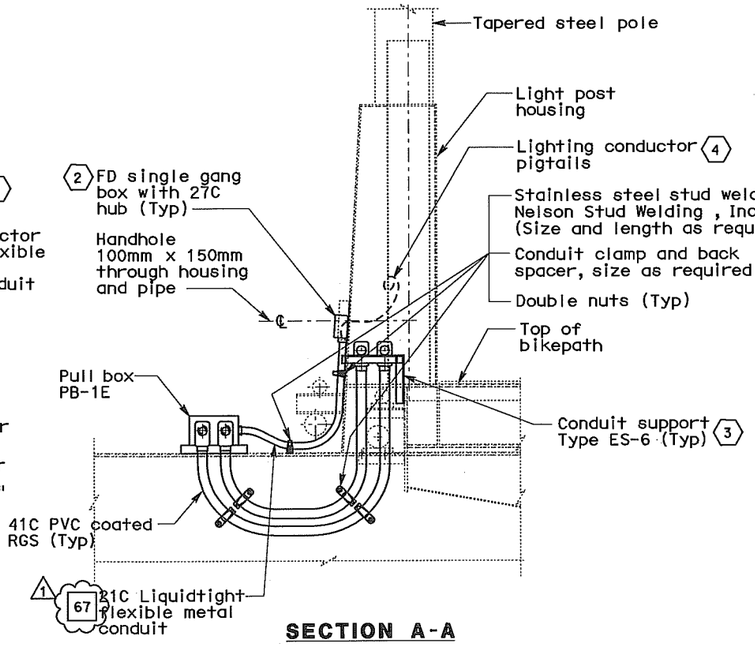

SECTION A-A

SHEET NOTES:

1. Use threaded plug to cover spare hole for future use.
2. Contractor to ensure box installation is watertight.
3. For conduit support detail and location, see sheet E-165A.
4. Provide approximately 7 m of pigtails for power conductors for future termination to the belvedere light. Seal each conductor end to prevent water from entering the insulation. Pigtails shall be coiled and protected from damage and placed inside belvedere light post housing.

NOTES:

1. For location of bike path light fixtures and belvedere lights, see sheets E-135 through E-140.
2. All conduit connections shall be watertight.

DIST	COUNTY	ROUTE	KILOMETER POST TOTAL PROJECT	SHEET No	TOTAL SHEETS
04	SF	80	13.2/13.9	210 S4R1	1204

Syn Yee Chin 04/23/10
REGISTERED ELECTRICAL ENGINEER DATE

REGISTERED PROFESSIONAL ENGINEER — SYN YEE CHIN No. 18186 Exp. 09/30/2011 ELECTRICAL — STATE OF CALIFORNIA

PLANS APPROVAL DATE

PB AMERICAS, Inc.
A Parsons Brinckerhoff Company
303 Second St., Suite 700N
San Francisco, CA 94107-1317

The State of California or its officers or agents shall not be responsible for the accuracy or completeness of electronic copies of this plan sheet.

Caltrans now has a web site! To get to the web site, go to http://www.dot.ca.gov

REQUEST FOR INFORMATION NOT ADDRESSED IN THIS CCO REMAIN IN FORCE

MARK	DATE	DESCRIPTIONS	BY	CH'D	CCO#
		REVISIONS			
1	04/15/11	BIKE PATH CONDUIT	TW	RG	73
0	06/11/10	BIKE PATH CONDUIT	TW	RG	73

CONTRACT CHANGE ORDER NO. 73
SHEET 22 OF 52

DETAILS
SAS SUPERSTRUCTURE ROADWAY EASTBOUND
TYPICAL BIKE PATH PLANS AND SECTIONS

SCALE: 1:15

E-165D

DESIGN OVERSIGHT: BEHZAD GOLEMOHAMMADI
CALCULATED/DESIGNED BY:
CHECKED BY:
DRAWN BY:
DATE REVISED BY:
DATE REVISED:

STATE OF CALIFORNIA - DEPARTMENT OF TRANSPORTATION
Caltrans

LAST REVISION 00-00-00
DATE PLOTTED => 18-APR-2011
TIME PLOTTED => 09:14

THIS PLAN ACCURATE FOR ELECTRICAL WORK ONLY.

ALL DIMENSIONS ARE IN MILLIMETERS UNLESS OTHERWISE SHOWN

FOR REDUCED PLANS ORIGINAL SCALE IS IN MILLIMETERS 0 20 40 60 80

DGN FILE =>04-0120f1_0210S04R01.dgn
USERNAME =>llorico

CU 04251

EA 0120F1

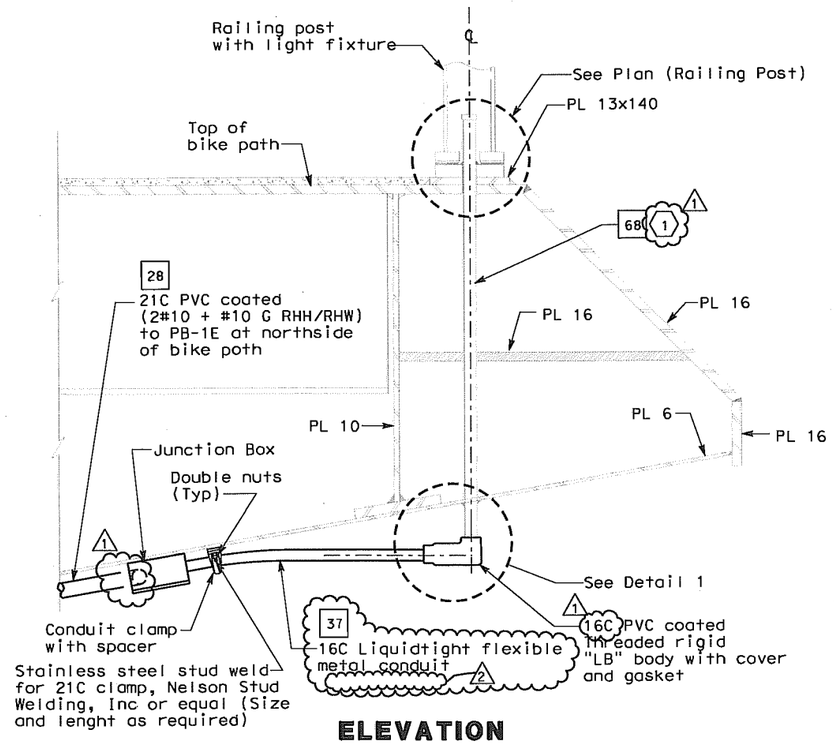

ELEVATION

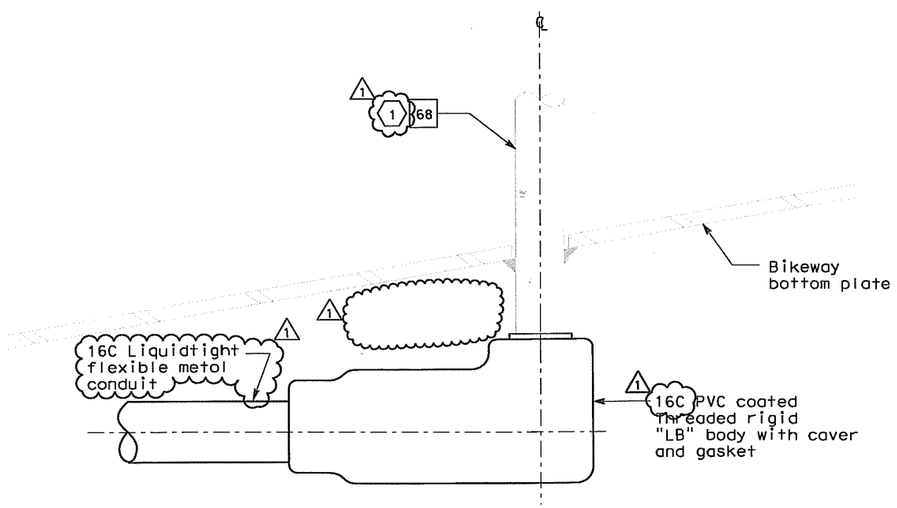

DETAIL 1
CONDUIT PENETRATION DETAIL

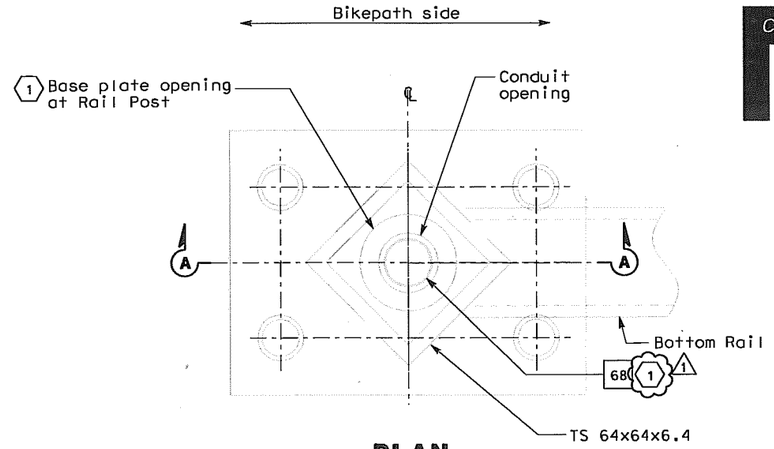

PLAN
RAILING POST

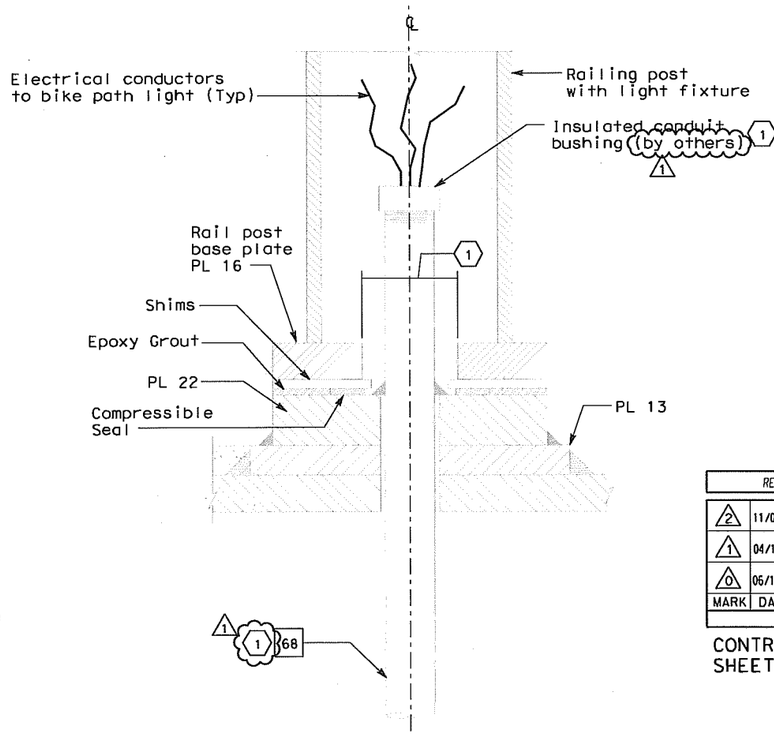

SECTION A-A

SHEET NOTES:

1. For conduit installation and openings, see Structural Plans.

DIST	COUNTY	ROUTE	KILOMETER POST TOTAL PROJECT	SHEET No	TOTAL SHEETS
04	SF	80	13.2/13.9	210 S05R2	1204

Synyee Chin 04/23/10
REGISTERED ELECTRICAL ENGINEER DATE

PLANS APPROVAL DATE

REGISTERED PROFESSIONAL ENGINEER — SYN YEE CHIN No. 18186 Exp. 09/30/2011 ELECTRICAL — STATE OF CALIFORNIA

PB AMERICAS, Inc.
A Parsons Brinckerhoff Company
303 Second St., Suite 700N
San Francisco, CA 94107-1317

The State of California or its officers or agents shall not be responsible for the accuracy or completeness of electronic copies of this plan sheet.

Caltrans now has a web site! To get to the web site, go to http://www.dot.ca.gov

REGISTERED PROFESSIONAL ENGINEER — SYN YEE CHIN No. 18186 Exp. 09/30/2011 ELECTRICAL — STATE OF CALIFORNIA

Synyee Chin
FOR REVISION ONLY
1 2

REQUEST FOR INFORMATION NOT ADDRESSED IN THIS CCO REMAIN IN FORCE					
2	11/09/11	BIKE PATH CONDUIT	TW	NK	73
1	04/15/11	BIKE PATH CONDUIT	TW	RG	73
0	06/11/10	BIKE PATH CONDUIT	TW	RG	73
MARK	DATE	DESCRIPTIONS	BY	CH'D	CCO#
REVISIONS					

CONTRACT CHANGE ORDER NO. 73
SHEET 23 OF 52

DETAILS
SAS SUPERSTRUCTURE ROADWAY EASTBOUND
TYPICAL BIKE PATH PLANS AND SECTIONS
SCALE: 1:25

E-165E

DESIGN OVERSIGHT	CALCULATED/ DESIGNED BY	CHECKED BY	DATE XX/10	REVISED BY	DATE REVISED
BEHZAD GOLEMOHAMMADI	XX	XX	XX/10		

STATE OF CALIFORNIA - DEPARTMENT OF TRANSPORTATION
Caltrans

THIS PLAN ACCURATE FOR ELECTRICAL WORK ONLY.

ALL DIMENSIONS ARE IN MILLIMETERS UNLESS OTHERWISE SHOWN

FOR REDUCED PLANS ORIGINAL SCALE IS IN MILLIMETERS 0 20 40 60 80

DGN FILE =>04-0120f1_0210S05R02.dgn
USERNAME =>llorico

CU 04251

EA 0120F1

LAST REVISION 00-00-00
DATE PLOTTED => 11/9/2011
TIME PLOTTED => 5:01:37 PM

DIST	COUNTY	ROUTE	KILOMETER POST TOTAL PROJECT	SHEET No	TOTAL SHEETS
04	SF	80	13.2/13.9	210 S6	1204

Syn Yee Chin 04/23/10
REGISTERED ELECTRICAL ENGINEER DATE

PLANS APPROVAL DATE

REGISTERED PROFESSIONAL ENGINEER
SYN YEE CHIN
No. 18186
Exp. 09/30/2011
ELECTRICAL
STATE OF CALIFORNIA

PB AMERICAS, Inc.
A Parsons Brinckerhoff Company
303 Second St., Suite 700N
San Francisco, CA 94107-1317

The State of California or its officers or agents shall not be responsible for the accuracy or completeness of electronic copies of this plan sheet.

Caltrans now has a web site! To get to the web site, go to http://www.dot.ca.gov

Caltrans Metric

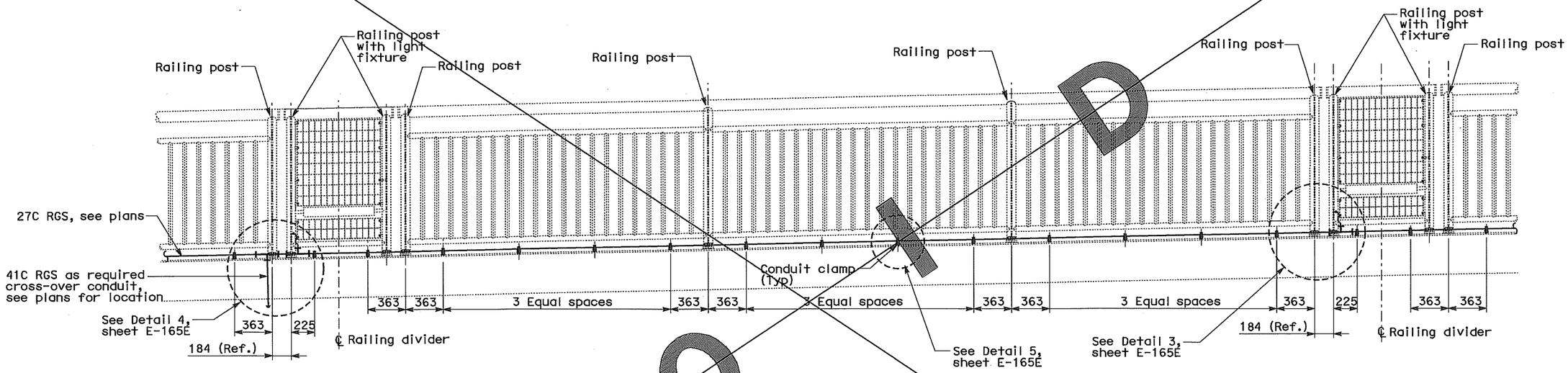

DETAIL 1 - ELEVATION

TYPICAL LIGHTING CONDUIT SUPPORT AT SOUTH SIDE OF THE BIKE PATH
SCALE 1:20

NOTES:

1. For location of bike path light fixtures and belvedere lights, see sheets E-135 through E-140.
2. All conduit connections shall be watertight.
3. For bike path railing layout and details, see Structural Plans.

REQUEST FOR INFORMATION NOT ADDRESSED IN THIS CCO REMAIN IN FORCE

MARK	DATE	DESCRIPTIONS	BY	CH'D	CCO#
		REVISIONS			
0	03/24/11	BIKE PATH CONDUIT	TW	RG	73

CONTRACT CHANGE ORDER NO. 73
SHEET 24 OF 52

DETAILS
SAS SUPERSTRUCTURE ROADWAY EASTBOUND
TYPICAL BIKE PATH PLANS AND SECTIONS

SCALE AS NOTED

E-165F

DATE	REVISED BY	DATE REVISED
CALCULATED/ DESIGNED BY		
CHECKED BY		

DESIGN OVERSIGHT
BEHZAD GOLEMOHAMMADI

STATE OF CALIFORNIA - DEPARTMENT OF TRANSPORTATION
Caltrans

LAST REVISION 00-00-00
DATE PLOTTED => 15-APR-2011
TIME PLOTTED => 13:22

THIS PLAN ACCURATE FOR ELECTRICAL WORK ONLY.

ALL DIMENSIONS ARE IN MILLIMETERS UNLESS OTHERWISE SHOWN

FOR REDUCED PLANS ORIGINAL SCALE IS IN MILLIMETERS 0 20 40 60 80

DGN FILE =>04-0120f1_0210S06.dgn
USERNAME =>llorico

CU 04251

EA 0120F1

DIST	COUNTY	ROUTE	KILOMETER POST TOTAL PROJECT	SHEET NO.	TOTAL SHEETS
04	SF	80	13.2/13.9	213R2	1204

Caltrans Metric

REGISTERED ENGINEER-CIVIL

12-6-04
PLANS APPROVAL DATE

REGISTERED PROFESSIONAL ENGINEER — T. W. SPARKS — No. E16039 — Exp. 9-30-11 — ELECTRICAL — STATE OF CALIFORNIA

The State of California or its officers or agents shall not be responsible for the accuracy or completeness of electronic copies of this plan sheet.

T.Y. LIN / MOFFATT & NICHOL
825 BATTERY STREET
SAN FRANCISCO, CA 94111

Caltrans now has a web site! To get to the web site, go to: http://www.dot.ca.gov

DATE	REVISED BY	DATE	REVISED
10/00	GAM	10/00	TYL

CALCULATED/DESIGNED BY
CHECKED BY

DESIGN OVERSIGHT
BOB ZANDIPOUR

STATE OF CALIFORNIA - DEPARTMENT OF TRANSPORTATION
Caltrans
SAS STRUCTURE

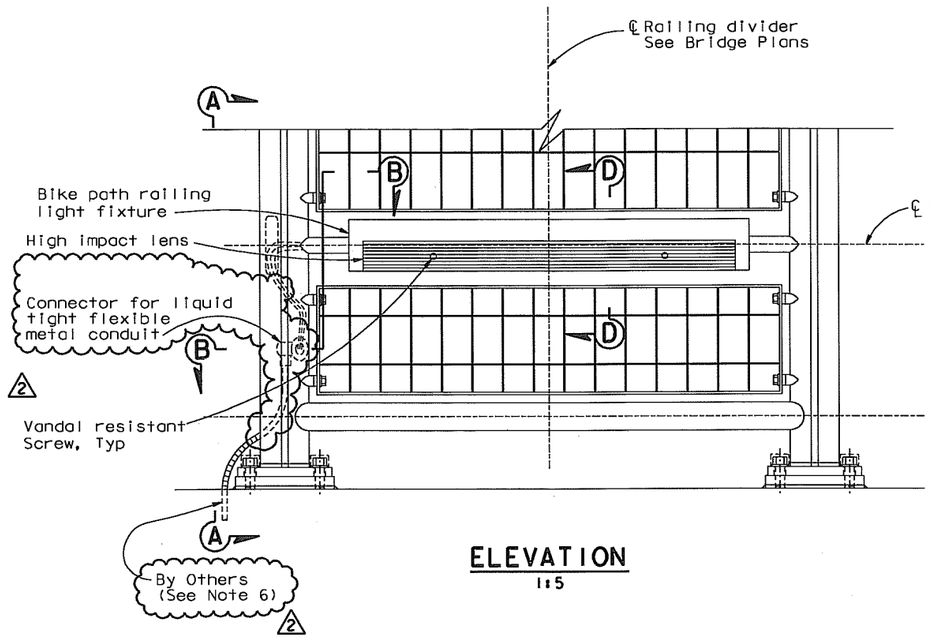

ELEVATION
1:5

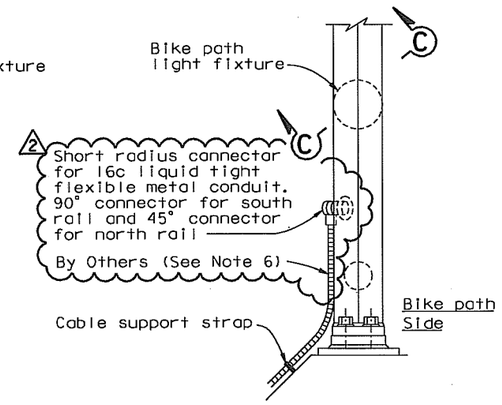

SECTION A-A
1:5

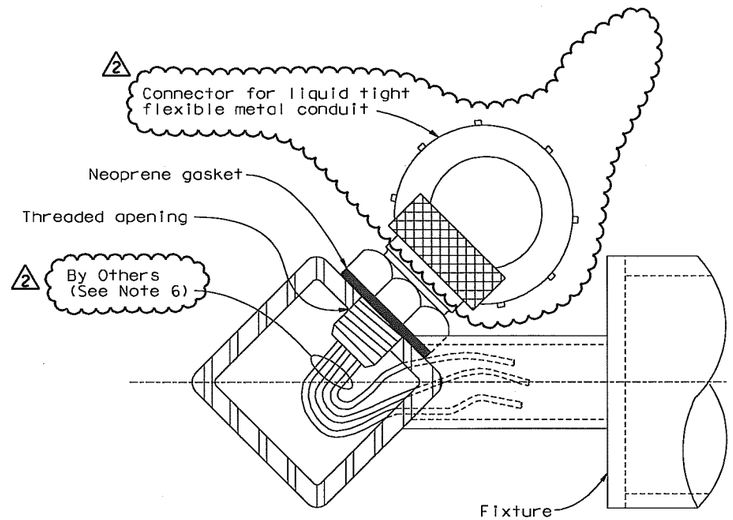

SECTION B-B
1:1

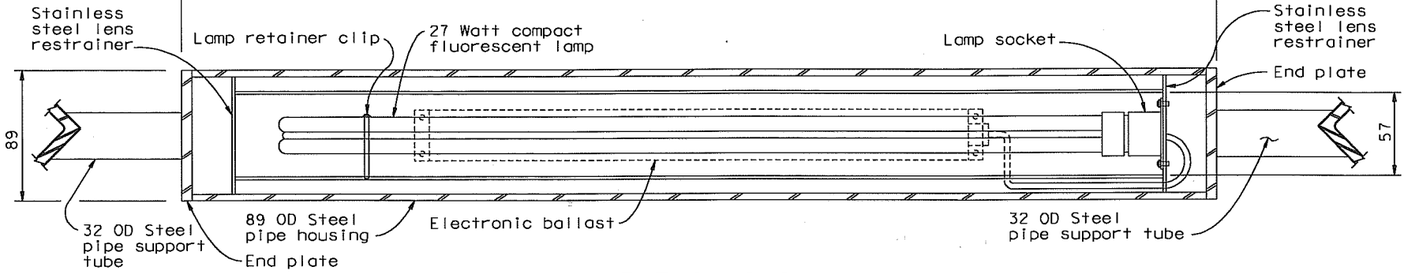

SECTION C-C
1:2

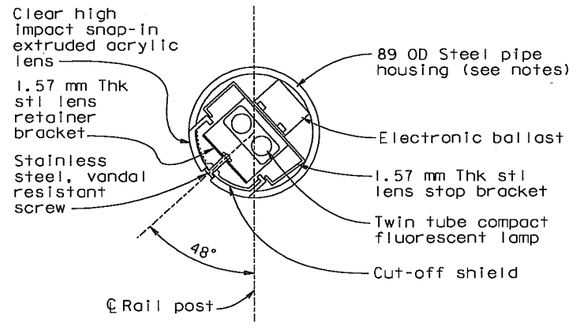

SECTION D-D
1:2

NOTES:

1. All metal (Except stainless steel) parts of railing light assembly shall be coated, see special provisions.
2. Refer to structural plans for railing details.
3. Light fixtures shall be parallel to top of bike path.
4. Light fixture support tube shall be welded to vertical posts.
5. All exposed welds shall be ground smooth.
2. 6. For Details not shown, see "Typical Bikepath Plans and Sections" sheets in the Roadway Plans.

CONTRACT CHANGE ORDER NO. 73
SHEET 25 OF 52

REQUESTS FOR INFORMATION NOT ADDRESSED IN THIS CCO REMAIN IN FORCE

MARK	DATE	DESCRIPTIONS	BY	CH'D	CCO#
		REVISIONS			
2	05/07/10	BIKEPATH CONDUIT	TS	JB	73
1	08/28/09	BIKEPATH DETAILS	TS	JB	99

DETAILS
SAS SUPERSTRUCTURE ROADWAY EASTBOUND
TYPICAL BIKE PATH LIGHTING

SCALE AS NOTED

ALL DIMENSIONS ARE IN MILLIMETERS UNLESS OTHERWISE SHOWN.

E-172

LAST REVISION 04-19-00 | DATE PLOTTED => 06 MAY 2010 | TIME PLOTTED => 09:08:00

FOR REDUCED PLANS ORIGINAL SCALE IN MILLIMETERS 0 20 40 60 80

FILE => I:\bb\04-012001\sas\contract plans and cco\cco\cco#73\2-revision 05-07-10\dgn\40120f02-72.dgn
USERNAME => arivera

CU 04251 | EA 01 20F1

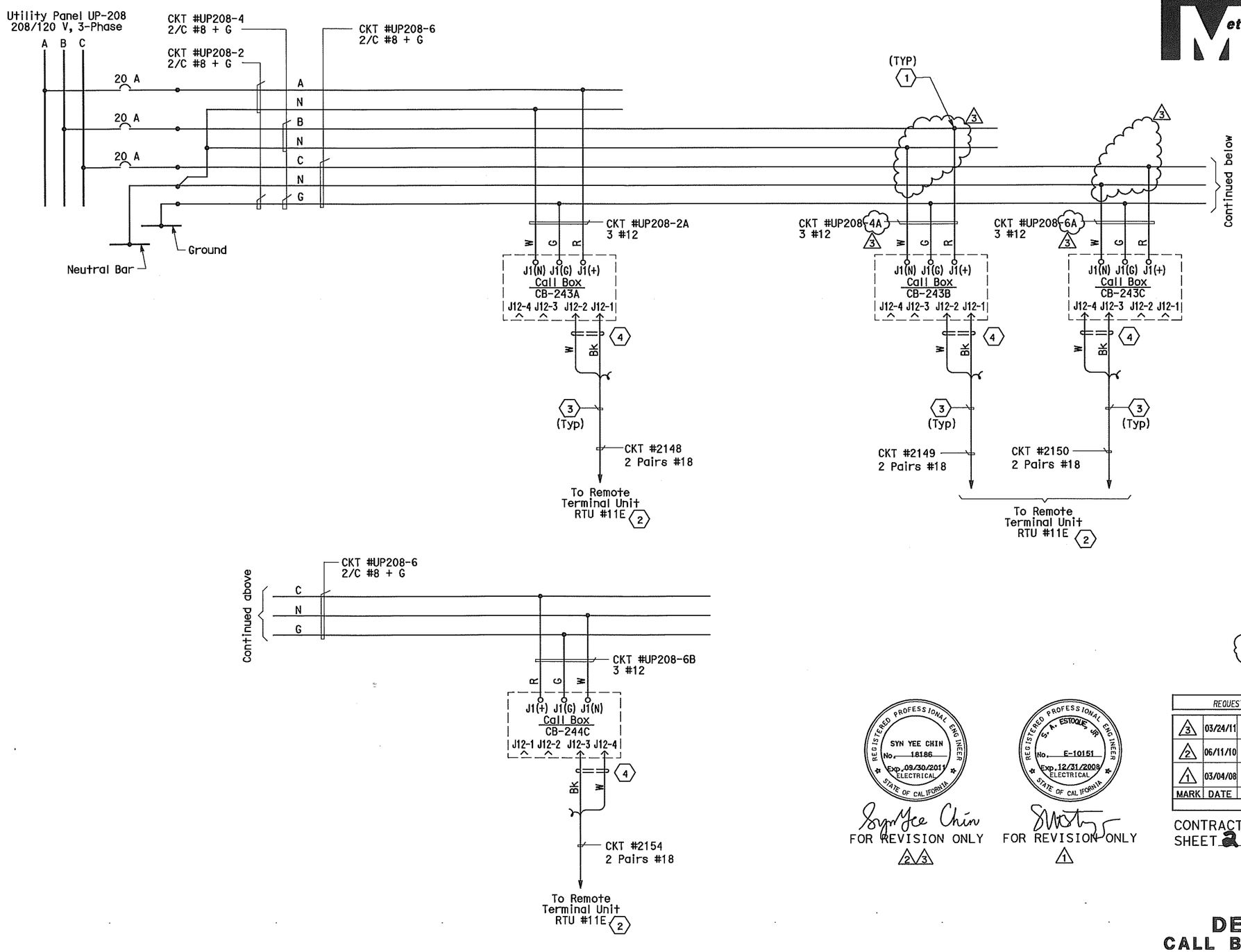

EASTBOUND SAS SUPERSTRUCTURE

DIST	COUNTY	ROUTE	KILOMETER POST TOTAL PROJECT	SHEET No	TOTAL SHEETS
04	SF	80	13.2/13.9	355 R3	1204

12/19/02
REGISTERED ELECTRICAL ENGINEER DATE

12-6-04
PLANS APPROVAL DATE

REGISTERED PROFESSIONAL ENGINEER — JENS ERLINGSSON No. 8249 Exp. 9/30/06 ELECTRICAL — STATE OF CALIFORNIA

PB POWER, Inc.
A Parsons Brinckerhoff Company
303 Second St., Suite 700N
San Francisco, CA 94107-1317

The State of California or its officers or agents shall not be responsible for the accuracy or completeness of electronic copies of this plan sheet.

Caltrans now has a web site! To get to the web site, go to http://www.dot.ca.gov

SHEET NOTES:

1. Conductors spliced inside PB-Ltg.
2. For continuation, see RTU #11E connection diagrams sheet E-333.
3. Data cable 1-2 pairs #18 shielded with overall shield. Coil and tape end of pair #2 inside Call Box.
4. The Contractor shall install resistors, approximately equal to the impedance (Zo) of the twised pairs, at the extreme ends of the multidrop network.

NOTE:

1. References:
   - For panel schedules, see sheets E-154.
   - For circuit and conduit/cable tray schedules, see sheets starting at E-401.
   - For call boxes schedule, see sheet E-397.

2 REVISIONS SUPERCEDED 3

REGISTERED PROFESSIONAL ENGINEER — SYN YEE CHIN No. 18186 Exp. 09/30/2011 ELECTRICAL — STATE OF CALIFORNIA

Syn Yee Chin
FOR REVISION ONLY
2 3

REGISTERED PROFESSIONAL ENGINEER — S. A. ESTOQUE, JR. No. E-10151 Exp. 12/31/2008 ELECTRICAL — STATE OF CALIFORNIA

FOR REVISION ONLY
1

REQUEST FOR INFORMATION NOT ADDRESSED IN THIS CCO REMAIN IN FORCE

MARK	DATE	DESCRIPTIONS REVISIONS	BY	CH'D	CCO#
3	03/24/11	BIKE PATH CONDUIT	TW	RG	73
2	06/11/10	BIKE PATH CONDUIT	TW	RG	73
1	03/04/08	BARRIER MODIFICATIONS	JS BM	RG SE	44

CONTRACT CHANGE ORDER NO. 73
SHEET 26 OF 52

DETAILS
CALL BOX SYSTEM
CALL BOX WIRING DIAGRAM
NO SCALE

E-400

DATE	REVISED BY
09/01	DATE REVISED
EJL	EDC
	CHECKED BY

CALCULATED/DESIGNED BY

DESIGN OVERSIGHT
BEHZAD GOLEMOHAMMADI

STATE OF CALIFORNIA - DEPARTMENT OF TRANSPORTATION
Caltrans

THIS PLAN ACCURATE FOR ELECTRICAL WORK ONLY.

FOR REDUCED PLANS ORIGINAL SCALE IS IN MILLIMETERS 0 20 40 60 80

DGN FILE =>04-0120f1_0355R03.dgn
USERNAME =>llorico

CU 04251

EA 0120F1

LAST REVISION 00-00-00

DATE PLOTTED => 15-APR-2011
TIME PLOTTED => 13:22

DIST	COUNTY	ROUTE	KILOMETER POST TOTAL PROJECT	SHEET No	TOTAL SHEETS
04	SF	80	13.2/13.9	366 R3	1204

Jens Erlingsson 12/19/02
REGISTERED ELECTRICAL ENGINEER DATE

12-6-04
PLANS APPROVAL DATE

REGISTERED PROFESSIONAL ENGINEER — JENS ERLINGSSON No. 8249 Exp. 9/30/06 ELECTRICAL — STATE OF CALIFORNIA

PB POWER, Inc.
A Parsons Brinckerhoff Company
303 Second St., Suite 700N
San Francisco, CA 94107-1317

The State of California or its officers or agents shall not be responsible for the accuracy or completeness of electronic copies of this plan sheet.

Caltrans now has a web site! To get to the web site, go to http://www.dot.ca.gov

Caltrans Metric

MARK	DATE	DESCRIPTIONS	BY	CH'D	CCO#
		REVISIONS			
3	03/24/11	BIKE PATH CONDUIT	TW	RG	73
2	06/11/10	BIKE PATH CONDUIT	TW	RG	73
1	03/18/10	WEST END BARRIER CONDUIT	RG	DO	44S1

REQUEST FOR INFORMATION NOT ADDRESSED IN THIS CCO REMAIN IN FORCE

CONTRACT CHANGE ORDER NO. 73
SHEET 27 OF 52

REGISTERED PROFESSIONAL ENGINEER — DAVID H. OTO No. 10699 Exp. 06/30/2011 ELECTRICAL — STATE OF CALIFORNIA (1)

FOR REVISION ONLY

REGISTERED PROFESSIONAL ENGINEER — SYN YEE CHIN No. 18186 Exp. 09/30/2011 ELECTRICAL — STATE OF CALIFORNIA (2) (3)

Syn Yee Chin
FOR REVISION ONLY

(2) REVISIONS SUPERCEDED (3)

CONDUIT DATA

Conduit No	Reference	Size	Type	Total Fill (mm^2)	Allowable Fill (mm^2)	Included Cable No.	Conductor Type
2052	E-114	41	RGS conduit	325.65	534.55	UP104-6a-3	2 + 1 gnd #8,#10, 600 V, RHH/RHW Insulation
						UP104-6a-2	3 + 1 gnd #8,#10, 600 V, RHH/RHW Insulation
						UP104-9-2	2 + 1 gnd #8,#10, 600 V, RHH/RHW Insulation
2053	E-119	41	RGS conduit	325.65	534.55	UP104-6b-2	2 + 1 gnd #8,#10, 600 V, RHH/RHW Insulation
						UP104-9-1	2 + 1 gnd #8,#10, 600 V, RHH/RHW Insulation
						UP104-6b-1	3 + 1 gnd #8,#10, 600 V, RHH/RHW Insulation
2054	E-119	41	RGS conduit	356.30	534.55	UP104-9	1-2/C + gnd #10, 600 V, EPR Insulation
						UP104-6-1	3 + 1 gnd #8,#10, 600 V, RHH/RHW Insulation
						UP104-6-2	2 + 1 gnd #8,#10, 600 V, RHH/RHW Insulation
2055	E-115	41	RGS conduit	325.65	534.55	UP105-10a-1	3 + 1 gnd #8,#10, 600 V, RHH/RHW Insulation
						UP105-10a-3	2 + 1 gnd #8,#10, 600 V, RHH/RHW Insulation
						UP105-9-2	2 + 1 gnd #8,#10, 600 V, RHH/RHW Insulation
2056	E-115	41	RGS conduit	266.38	534.55	UP105-10a-1	3 + 1 gnd #8,#10, 600 V, RHH/RHW Insulation
						UP105-10a-2	3 + 1 gnd #8,#10, 600 V, RHH/RHW Insulation
2057	E-115	41	RGS conduit	325.65	534.55	UP105-10a-2	3 + 1 gnd #8,#10, 600 V, RHH/RHW Insulation
						UP105-10a-3	2 + 1 gnd #8,#10, 600 V, RHH/RHW Insulation
						UP105-9-2	2 + 1 gnd #8,#10, 600 V, RHH/RHW Insulation
2058	E-119	41	RGS conduit	325.65	534.55	UP105-10b-1	3 + 1 gnd #8,#10, 600 V, RHH/RHW Insulation
						UP105-10b-2	2 + 1 gnd #8,#10, 600 V, RHH/RHW Insulation
						UP105-9-1	2 + 1 gnd #8,#10, 600 V, RHH/RHW Insulation
2059	E-119	41	RGS conduit	456.88	534.55	UP105-10-1	3 + 1 gnd #8,#10, 600 V, RHH/RHW Insulation
						UP105-10-2	2 + 1 gnd #8,#10, 600 V, RHH/RHW Insulation
						UP105-9	1-2/C + gnd #8, 600 V, EPR Insulation
2060	E-116	41	RGS conduit	325.65	534.55	UP106-9-2	2 + 1 gnd #8,#10, 600 V, RHH/RHW Insulation
						UP106-6a-1	3 + 1 gnd #8,#10, 600 V, RHH/RHW Insulation
						UP106-6a-3	2 + 1 gnd #8,#10, 600 V, RHH/RHW Insulation
2061	E-116	41	RGS conduit	266.38	534.55	UP106-6a-1	3 + 1 gnd #8,#10, 600 V, RHH/RHW Insulation
						UP106-6a-2	3 + 1 gnd #8,#10, 600 V, RHH/RHW Insulation
2062	E-116	41	RGS conduit	325.65	534.55	UP106-6a-3	2 + 1 gnd #8,#10, 600 V, RHH/RHW Insulation
						UP106-6a-2	3 + 1 gnd #8,#10, 600 V, RHH/RHW Insulation
						UP106-9-2	2 + 1 gnd #8,#10, 600 V, RHH/RHW Insulation
2063	E-119	41	RGS conduit	325.65	534.55	UP106-6b-2	2 + 1 gnd #8,#10, 600 V, RHH/RHW Insulation
						UP106-6b-1	3 + 1 gnd #8,#10, 600 V, RHH/RHW Insulation
						UP106-9-1	2 + 1 gnd #8,#10, 600 V, RHH/RHW Insulation
2064	E-119	41	RGS conduit	456.88	534.55	UP106-9	1-2/C + gnd #8, 600 V, EPR Insulation
						UP106-6-2	2 + 1 gnd #8,#10, 600 V, RHH/RHW Insulation
						UP106-6-1	3 + 1 gnd #8,#10, 600 V, RHH/RHW Insulation
2065	E-119	41	RGS conduit	456.88	534.55	UP107-6-2	2 + 1 gnd #8,#10, 600 V, RHH/RHW Insulation
						UP107-6-1	3 + 1 gnd #8,#10, 600 V, RHH/RHW Insulation
						UP107-9	1-2/C + gnd #8, 600 V, EPR Insulation
2066	E-119	41	RGS conduit	325.65	534.55	UP107-6b-2	2 + 1 gnd #8,#10, 600 V, RHH/RHW Insulation
						UP107-6b-1	3 + 1 gnd #8,#10, 600 V, RHH/RHW Insulation
						UP107-9-1	2 + 1 gnd #8,#10, 600 V, RHH/RHW Insulation
2067	E-117	41	RGS conduit	325.65	534.55	UP107-9-2	2 + 1 gnd #8,#10, 600 V, RHH/RHW Insulation
						UP107-6a-3	2 + 1 gnd #8,#10, 600 V, RHH/RHW Insulation
						UP107-6a-1	3 + 1 gnd #8,#10, 600 V, RHH/RHW Insulation
2068	E-117	41	RGS conduit	266.38	534.55	UP107-6a-2	3 + 1 gnd #8,#10, 600 V, RHH/RHW Insulation
						UP107-6a-1	3 + 1 gnd #8,#10, 600 V, RHH/RHW Insulation
2069	E-117	41	RGS conduit	325.65	534.55	UP107-6a-3	2 + 1 gnd #8,#10, 600 V, RHH/RHW Insulation
						UP107-6a-2	3 + 1 gnd #8,#10, 600 V, RHH/RHW Insulation
						UP107-9-2	2 + 1 gnd #8,#10, 600 V, RHH/RHW Insulation
2070	E-119	41	RGS conduit	325.65	534.55	UP107-6c-2	2 + 1 gnd #8,#10, 600 V, RHH/RHW Insulation
						UP107-6c-1	3 + 1 gnd #8,#10, 600 V, RHH/RHW Insulation
						UP107-9-3	2 + 1 gnd #8,#10, 600 V, RHH/RHW Insulation
2071	E-119	41	RGS conduit	325.65	534.55	UP108-10a-2	2 + 1 gnd #8,#10, 600 V, RHH/RHW Insulation
						UP108-10a-1	3 + 1 gnd #8,#10, 600 V, RHH/RHW Insulation
						UP108-9-5	2 + 1 gnd #8,#10, 600 V, RHH/RHW Insulation
2072	E-119	41	RGS conduit	325.65	534.55	UP108-9-4	2 + 1 gnd #8,#10, 600 V, RHH/RHW Insulation
						UP108-10b-2	2 + 1 gnd #8,#10, 600 V, RHH/RHW Insulation
						UP108-10b-1	3 + 1 gnd #8,#10, 600 V, RHH/RHW Insulation

CONDUIT DATA

Conduit No	Reference	Size	Type	Total Fill (mm^2)	Allowable Fill (mm^2)	Included Cable No.	Conductor Type
2073	E-119	41	RGS conduit	325.65	534.55	UP108-9-3	2 + 1 gnd #8,#10, 600 V, RHH/RHW Insulation
						UP108-10-2	2 + 1 gnd #8,#10, 600 V, RHH/RHW Insulation
	E-118					UP108-10-1	3 + 1 gnd #8,#10, 600 V, RHH/RHW Insulation
2074		41	RGS conduit	325.65	534.55	UP108-12a-3	2 + 1 gnd #8,#10, 600 V, RHH/RHW Insulation
						UP108-12a-1	3 + 1 gnd #8,#10, 600 V, RHH/RHW Insulation
	E-118					UP108-9-2	2 + 1 gnd #8,#10, 600 V, RHH/RHW Insulation
2075		41	RGS conduit	266.38	534.55	UP108-12a-2	3 + 1 gnd #8,#10, 600 V, RHH/RHW Insulation
						UP108-12a-1	3 + 1 gnd #8,#10, 600 V, RHH/RHW Insulation
				325.65	534.55	UP108-9-2	2 + 1 gnd #8,#10, 600 V, RHH/RHW Insulation
						UP108-12a-2	3 + 1 gnd #8,#10, 600 V, RHH/RHW Insulation
2076	E-118	41	RGS conduit			UP108-12a-3	2 + 1 gnd #8,#10, 600 V, RHH/RHW Insulation
				325.65	534.55	UP108-12b-2	2 + 1 gnd #8,#10, 600 V, RHH/RHW Insulation
						UP108-12b-1	3 + 1 gnd #8,#10, 600 V, RHH/RHW Insulation
2077	E-119	41	RGS conduit			UP108-9-1	2 + 1 gnd #8,#10, 600 V, RHH/RHW Insulation
				456.88	534.55	UP108-12-2	2 + 1 gnd #8,#10, 600 V, RHH/RHW Insulation
						UP108-12-1	3 + 1 gnd #8,#10, 600 V, RHH/RHW Insulation
2078	E-119	41	RGS conduit			UP108-9	1-2/C + gnd #8, 600 V, EPR Insulation
				0.00	534.55	Pull rope	Soft-Fiber Polyester
2111	E-135, E-160C	41	RGS conduit	0.00	534.55	Pull rope	Soft-Fiber Polyester
							(3)
2116	E-136, E-135	41	RGS conduit	0.00	534.55	Pull rope	Soft-Fiber Polyester
2117	E-136	41	RGS conduit	0.00	534.55	Pull rope	Soft-Fiber Polyester
2118	E-137, E-136 (3)	41	RGS conduit	0.00	534.55	Pull rope	Soft-Fiber Polyester
2123	E-138	41	RGS conduit	0.00	534.55	Pull rope	Soft-Fiber Polyester
2125	E-138	41	RGS conduit	0.00	534.55	Pull rope	Soft-Fiber Polyester
2127	E-139	41	RGS conduit	0.00	534.55	Pull rope	Soft-Fiber Polyester
2130	E-140	41	RGS conduit	0.00	534.55	Pull rope	Soft-Fiber Polyester (3)

For continuation, see next sheet.

CONDUIT AND TRAY SCHEDULE

E-411

DATE	REVISED BY	DATE REVISED
8/02	PBP	8/02 AB

CALCULATED/DESIGNED BY
CHECKED BY

DESIGN OVERSIGHT
BEHZAD GOLEMOHAMMADI

STATE OF CALIFORNIA - DEPARTMENT OF TRANSPORTATION
Caltrans

LAST REVISION 00-00-00
DATE PLOTTED => 15-APR-2011
TIME PLOTTED => 13:22

FOR REDUCED PLANS ORIGINAL SCALE IS IN MILLIMETERS 0 20 40 60 80

DGN FILE =>04-0120f1_0366R03.dgn
USERNAME =>llorico

CU 04251

EA 0120F1

DIST	COUNTY	ROUTE	KILOMETER POST TOTAL PROJECT	SHEET No	TOTAL SHEETS
04	SF	80	13.2/13.9	367 R4	1204

James Erlingsson 12/19/02
REGISTERED ELECTRICAL ENGINEER DATE

12-6-04
PLANS APPROVAL DATE

REGISTERED PROFESSIONAL ENGINEER — JENS ERLINGSSON No. 8249 Exp. 9/30/06 ELECTRICAL — STATE OF CALIFORNIA

PB POWER, Inc.
A Parsons Brinckerhoff Company
303 Second St., Suite 700N
San Francisco, CA 94107-1317

The State of California or its officers or agents shall not be responsible for the accuracy or completeness of electronic copies of this plan sheet.

Caltrans now has a web site! To get to the web site, go to http://www.dot.ca.gov

Caltrans Metric

MARK	DATE	DESCRIPTIONS	BY	CH'D	CCO#
		REVISIONS			
4	03/24/11	BIKE PATH CONDUIT	TW	RG	73
3	06/11/10	BIKE PATH CONDUIT	TW	RG	73
2	07/17/09	WEST END BARRIER CONDUIT	RG	FW	44S1
1	03/04/08	BARRIER MODIFICATIONS	TW	RG	44

REQUEST FOR INFORMATION NOT ADDRESSED IN THIS CCO REMAIN IN FORCE

CONTRACT CHANGE ORDER NO. 73
SHEET 28 OF 52

REGISTERED PROFESSIONAL ENGINEER — FADI WALIEDDINE No. 11465 Exp. 12/31/2009 ELECTRICAL — STATE OF CALIFORNIA

1 2 FOR REVISION ONLY

REGISTERED PROFESSIONAL ENGINEER — SYN YEE CHIN No. 18186 Exp. 09/30/2011 ELECTRICAL — STATE OF CALIFORNIA

3 4 Syn Yee Chin FOR REVISION ONLY

3 REVISIONS SUPERCEDED 4

CONDUIT DATA

Conduit No	Reference	Size	Type	Total Fill (mm²)	Allowable Fill (mm²)	Included Cable No.	Conductor Type
2300	E-138	41	PVC coated RGS conduit	212.85	534.55	A-2013-2	3 + 1 gnd #6,#8, 600 V RHH/RHW insulation
2301	E-138	41	PVC coated RGS conduit	0.00	534.55	Pull rope	Soft-Fiber Polyester
2302	E-137	41	PVC coated RGS conduit	0.00	534.55	Pull rope	Soft-Fiber Polyester
2326	E-135	41	PVC coated RGS conduit 4	425.70 4	534.55	Pull rope	Soft-Fiber Polyester
						~~A-2011-2~~	~~3 + 1 gnd #6,#8, 600 V RHH/RHW insulation~~
						LP219-2A,4A 4	3 + 1 gnd #6,#8, 600 V RHH/RHW insulation
2327	E-136 4	41	PVC coated RGS conduit 4	339.73	534.55	UP204-1	1-2/C + gnd #10, 600 V, EPR Insulation
						A-2012-2	3 + 1 gnd #6,#8, 600 V RHH/RHW insulation
						Pull rope	Soft-Fiber Polyester
2328	E-135, E-160C	41	RGS conduit	339.73	534.55	UP204-1	1-2/C + gnd #10, 600 V, EPR Insulation
						Pull rope	Soft-Fiber Polyester
						S-2031-2	3 + 1 gnd #6,#8, 600 V RHH/RHW insulation
2330	E-139 4	41	PVC coated RGS conduit	212.85	534.55	A-2014-2	3 + 1 gnd #6,#8, 600 V RHH/RHW insulation
						Pull rope 4	Soft-Fiber Polyester
2334	E-135	41	RGS conduit	126.86	534.55	Pull rope	Soft-Fiber Polyester
						UP205-1	1-2/C + gnd #10, 600 V, EPR Insulation
2335	E-136	41	RGS conduit	339.73	534.55	A-3039-2	3 + 1 gnd #6,#8, 600 V RHH/RHW insulation
						Pull rope	Soft-Fiber Polyester
						UP205-1	1-2/C + gnd #10, 600 V, EPR Insulation
2336	E-136	41	RGS conduit	339.73	534.55	Pull rope	Soft-Fiber Polyester
						UP205-1	1-2/C + gnd #10, 600 V, EPR Insulation
						A-3039-2	3 + 1 gnd #6,#8, 600 V RHH/RHW insulation
2338	E-136	41	RGS conduit	0.00	534.55	Pull rope	Soft-Fiber Polyester
2339	E-136	41	RGS conduit	339.73	534.55	A-3040-2	3 + 1 gnd #6,#8, 600 V RHH/RHW insulation
						Pull rope	Soft-Fiber Polyester
						UP206-1	1-2/C + gnd #10, 600 V, EPR Insulation
2340	E-137	41	RGS conduit	339.73	534.55	Pull rope	Soft-Fiber Polyester
						UP206-1	1-2/C + gnd #10, 600 V, EPR Insulation
						A-3040-2	3 + 1 gnd #6,#8, 600 V RHH/RHW insulation
2341	E-137	41	RGS conduit	0.00	534.55	Pull rope	Soft-Fiber Polyester
2346	E-138	41	RGS conduit	0.00	534.55	Pull rope	Soft-Fiber Polyester
2348	E-138, E-139	41	RGS conduit	481.21	534.55	S-2031-4	3+1gnd #4,#8, 600V, RHH/RHW insulation
						Pull rope	Soft-Fiber Polyester
						A-2035-4	3 + 1 gnd #6,#8, 600 V RHH/RHW insulation
2350	E-139	41	RGS conduit	425.70	534.55	Pull rope	Soft-Fiber Polyester
						A-2035-4	3 + 1 gnd #6,#8, 600 V RHH/RHW insulation
						S-2032-2	3 + 1 gnd #6,#8, 600 V RHH/RHW insulation
2353	E-139	41	RGS conduit	425.70	534.55	S-2032-2	3 + 1 gnd #6,#8, 600 V RHH/RHW insulation
						Pull rope	Soft-Fiber Polyester
						A-2035-4	3 + 1 gnd #6,#8, 600 V RHH/RHW insulation
2355	E-140	41	RGS conduit	425.70	534.55	A-2035-4	3 + 1 gnd #6,#8, 600 V RHH/RHW insulation
						Pull rope	Soft-Fiber Polyester
						S-2032-2	3 + 1 gnd #6,#8, 600 V RHH/RHW insulation
2357	E-140	41	RGS conduit	0.00	534.55	Pull rope 4	Soft-Fiber Polyester
2361	E-136	41	PVC coated RGS conduit	0.00	534.55	Pull rope	Soft-Fiber Polyester
2364	E-137	41	PVC coated RGS conduit	212.85	534.55	LP221-2A,4A	3 + 1 gnd #6,#8, 600 V RHH/RHW insulation
2368	E-135	41	PVC coated RGS conduit	212.85	534.55	LP219-2A,4A	3 + 1 gnd #6,#8, 600 V RHH/RHW insulation
2369	E-135	41	PVC coated RGS conduit	212.85	534.55	LP219-2A,4A	3 + 1 gnd #6,#8, 600 V RHH/RHW insulation
2370	E-135	41	PVC coated RGS conduit	212.85	534.55	LP219-2A,4A	3 + 1 gnd #6,#8, 600 V RHH/RHW insulation
2371	E-135	41	PVC coated RGS conduit	212.85	534.55	LP219-6A,8A	3 + 1 gnd #6,#8, 600 V RHH/RHW insulation
2372	E-135	41	PVC coated RGS conduit	212.85	534.55	LP219-6A,8A	3 + 1 gnd #6,#8, 600 V RHH/RHW insulation
2373	E-135	41	PVC coated RGS conduit	212.85	534.55	LP219-6A,8A	3 + 1 gnd #6,#8, 600 V RHH/RHW insulation
2374	E-135	41	PVC coated RGS conduit	212.85	534.55	LP219-6A,8A 4	3 + 1 gnd #6,#8, 600 V RHH/RHW insulation
2375	E-136	41	PVC coated RGS conduit	0.00	534.55	Pull rope 4	Soft-Fiber Polyester
2376	E-136	41	PVC coated RGS conduit	212.85	534.55	LP220-2A,4A	3 + 1 gnd #6,#8, 600 V RHH/RHW insulation

For continuation, see next sheet.

CONDUIT AND TRAY SCHEDULE

E-412

STATE OF CALIFORNIA - DEPARTMENT OF TRANSPORTATION
Caltrans
DESIGN OVERSIGHT
BEHZAD GOLEMOHAMMADI

	CALCULATED/ DESIGNED BY	CHECKED BY	DATE REVISED	REVISED BY
DATE			8/02	
PBP		AB	8/02	

LAST REVISION 00-00-00
DATE PLOTTED => 15-APR-2011
TIME PLOTTED => 13:22

FOR REDUCED PLANS ORIGINAL SCALE IS IN MILLIMETERS 0 20 40 60 80

DGN FILE =>04-0120f1_0367R04.dgn
USERNAME =>llorico

CU 04251

EA 0120F1

CONDUIT DATA

Conduit No	Reference	Size	Type	Total Fill (mm²)	Allowable Fill (mm²)	Included Cable No.	Conductor Type
2303	E-140	41	RGS conduit	0.00	534.55	Pull rope	Soft-Fiber Polyester
2304	E-140	41	RGS conduit	0.00	534.55	Pull rope	Soft-Fiber Polyester

REQUEST FOR INFORMATION NOT ADDRESSED IN THIS CCO REMAIN IN FORCE

MARK	DATE	DESCRIPTIONS	BY	CH'D	CCO#
		REVISIONS			
2	03/24/11	BIKE PATH CONDUIT	TW	RG	73
1	06/11/10	BIKE PATH CONDUIT	TW	RG	73
0	03/04/08	BARRIER MODIFICATIONS	TW	RG	44

CONTRACT CHANGE ORDER NO. 73
SHEET 29 OF 52

1 REVISIONS SUPERCEDED 2

Caltrans Metric

REGISTERED PROFESSIONAL ENGINEER
SYN YEE CHIN
No. 18185
Exp. 09/30/2011
ELECTRICAL
STATE OF CALIFORNIA

Synyee Chin
FOR REVISION ONLY
1 2

DIST	COUNTY	ROUTE	KILOMETER POST TOTAL PROJECT	SHEET No	TOTAL SHEETS
04	SF	80	13.2/13.9	367 S1R2	1204

REGISTERED ELECTRICAL ENGINEER DATE

PLANS APPROVAL DATE

REGISTERED PROFESSIONAL ENGINEER
FADI WALIEDDINE
No. 11465
Exp. 12/31/2009
ELECTRICAL
STATE OF CALIFORNIA

PB AMERICAS, Inc.
A Parsons Brinckerhoff Company
303 Second St., Suite 700N
San Francisco, CA 94107-1317

The State of California or its officers or agents shall not be responsible for the accuracy or completeness of electronic copies of this plan sheet.

Caltrans now has a web site! To get to the web site, go to http://www.dot.ca.gov

CONDUIT DATA

Conduit No	Reference	Size	Type	Total Fill (mm²)	Allowable Fill (mm²)	Included Cable No.	Conductor Type

For continuation, see next sheet.

CONDUIT AND TRAY SCHEDULE

E-412A

DESIGN OVERSIGHT	CALCULATED/ DESIGNED BY	DATE	REVISED BY
BEHZAD GOLEMOHAMMADI	CHECKED BY	8/02	DATE REVISED
	AB	PBP	

STATE OF CALIFORNIA - DEPARTMENT OF TRANSPORTATION
Caltrans

LAST REVISION 00-00-00
DATE PLOTTED => 18-APR-2011
TIME PLOTTED => 09:03

FOR REDUCED PLANS ORIGINAL SCALE IS IN MILLIMETERS 0 20 40 60 80

DGN FILE =>04-0120f1_0367S01R02.dgn
USERNAME =>llorico

CU 04251

EA 0120F1

DIST	COUNTY	ROUTE	KILOMETER POST TOTAL PROJECT	SHEET No	TOTAL SHEETS
04	SF	80	13.2/13.9	368 R4	1204

REGISTERED ELECTRICAL ENGINEER — 12/19/02 DATE

12-6-04
PLANS APPROVAL DATE

JENS ERLINGSSON No. 8249 Exp. 9/30/06 ELECTRICAL — REGISTERED PROFESSIONAL ENGINEER — STATE OF CALIFORNIA

PB POWER, Inc.
A Parsons Brinckerhoff Company
303 Second St., Suite 700N
San Francisco, CA 94107-1317

The State of California or its officers or agents shall not be responsible for the accuracy or completeness of electronic copies of this plan sheet.

Caltrans now has a web site! To get to the web site, go to: http://www.dot.ca.gov

REQUEST FOR INFORMATION NOT ADDRESSED IN THIS CCO REMAIN IN FORCE

MARK	DATE	REVISIONS DESCRIPTIONS	BY	CH'D	CCO#
4	03/24/11	BIKE PATH CONDUIT	TW	RG	73
3	06/11/10	BIKE PATH CONDUIT	TW	RG	73
2	07/17/09	WEST END BARRIER CONDUIT	RG	FW	4451
1	03/04/08	BARRIER MODIFICATIONS	JS BM	RG SE	44

CONTRACT CHANGE ORDER NO. 73
SHEET 30 OF 52

REGISTERED PROFESSIONAL ENGINEER — S. A. ESTOQUE, JR. No. E-10151 Exp. 12/31/2008 ELECTRICAL — STATE OF CALIFORNIA

FOR REVISION ONLY (1)

REGISTERED PROFESSIONAL ENGINEER — FADI WALIEDDINE No. 11465 Exp. 12/31/2009 ELECTRICAL — STATE OF CALIFORNIA (2)

REGISTERED PROFESSIONAL ENGINEER — SYN YEE CHIN No. 18186 Exp. 09/30/2011 ELECTRICAL — STATE OF CALIFORNIA (3) (4)

FOR REVISION ONLY — Syn Yee Chin — FOR REVISION ONLY

(4) (3) REVISIONS SUPERCEDED (4)

CONDUIT DATA

Conduit No	Reference	Size	Type	Total Fill (mm²)	Allowable Fill (mm²)	Included Cable No.	Conductor Type
2377	E-136	41	(4) PVC coated RGS conduit	212.85	534.55	LP220-2A,4A	3 + 1 gnd #6,#8, 600 V, RHH/RHW Insulation
2378	E-136	41	PVC coated RGS conduit	212.85	534.55	LP220-2A,4A	3 + 1 gnd #6,#8, 600 V, RHH/RHW Insulation
2379	E-136	41	PVC coated RGS conduit	212.85	534.55	LP220-2A,4A	3 + 1 gnd #6,#8, 600 V, RHH/RHW Insulation
2380	E-136	41	PVC coated RGS conduit	212.85	534.55	LP220-6A,8A	3 + 1 gnd #6,#8, 600 V, RHH/RHW Insulation
2381	E-136	41	PVC coated RGS conduit	212.85	534.55	LP220-6A,8A	3 + 1 gnd #6,#8, 600 V, RHH/RHW Insulation
2382	E-136	41	PVC coated RGS conduit	212.85	534.55	LP220-6A,8A	3 + 1 gnd #6,#8, 600 V, RHH/RHW Insulation
2383	E-136	41	PVC coated RGS conduit	212.85	534.55	LP220-6A,8A	3 + 1 gnd #6,#8, 600 V, RHH/RHW Insulation
2384	E-136	41	PVC coated RGS conduit	212.85	534.55	LP220-6A,8A	3 + 1 gnd #6,#8, 600 V, RHH/RHW Insulation
2385	E-136	41	PVC coated RGS conduit	0.00	534.55	Pull rope (4)	Soft-Fiber Polyester
2386	E-136	41	PVC coated RGS conduit	212.85	534.55	LP221-2A,4A	3 + 1 gnd #6,#8, 600 V, RHH/RHW Insulation
2387	E-137	41	PVC coated RGS conduit	212.85	534.55	LP221-2A,4A	3 + 1 gnd #6,#8, 600 V, RHH/RHW Insulation
2388	E-137	41	PVC coated RGS conduit	212.85	534.55	LP221-2A,4A	3 + 1 gnd #6,#8, 600 V, RHH/RHW Insulation
2389	E-137	41	PVC coated RGS conduit	212.85	534.55	LP221-6A,8A	3 + 1 gnd #6,#8, 600 V, RHH/RHW Insulation
2390	E-137	41	PVC coated RGS conduit	212.85	534.55	LP221-6A,8A	3 + 1 gnd #6,#8, 600 V, RHH/RHW Insulation
2391	E-137	41	PVC coated RGS conduit	212.85	534.55	LP221-6A,8A	3 + 1 gnd #6,#8, 600 V, RHH/RHW Insulation
2392	E-137	41	PVC coated RGS conduit	212.85	534.55	LP221-6A,8A	3 + 1 gnd #6,#8, 600 V, RHH/RHW Insulation
2393	E-137	41	PVC coated RGS conduit	212.85	534.55	LP221-6A,8A	3 + 1 gnd #6,#8, 600 V, RHH/RHW Insulation
2394	E-137	41	PVC coated RGS conduit	212.85	534.55	LP221-6A,8A	3 + 1 gnd #6,#8, 600 V, RHH/RHW Insulation
2395	E-137	41	PVC coated RGS conduit	212.85	534.55	LP221-6A,8A	3 + 1 gnd #6,#8, 600 V, RHH/RHW Insulation
2396	E-137	41	PVC coated RGS conduit	0.00	534.55	Pull rope	Soft-Fiber Polyester
2397	E-138	41	PVC coated RGS conduit	212.85	534.55	LP222-2A,4A	3 + 1 gnd #6,#8, 600 V, RHH/RHW Insulation
2398	E-138	41	PVC coated RGS conduit	212.85	534.55	LP222-2A,4A	3 + 1 gnd #6,#8, 600 V, RHH/RHW Insulation
2399	E-138	41	PVC coated RGS conduit	212.85	534.55	LP222-2A,4A	3 + 1 gnd #6,#8, 600 V, RHH/RHW Insulation
2426	E-135	41	PVC coated RGS conduit	212.85	534.55	LP219-2A,4A	3 + 1 gnd #6,#8, 600 V, RHH/RHW Insulation
						Pull rope (4)	Soft-Fiber Polyester
2427	E-135	41	PVC coated RGS conduit	212.85	534.55	Pull rope	Soft-Fiber Polyester
						LP220-2A,4A	3 + 1 gnd #6,#8, 600 V, RHH/RHW Insulation
2428	E-135, E-160C	41	RGS conduit	212.85	534.55	Pull rope	Soft-Fiber Polyester
						A-2035-2	3 + 1 gnd #6,#8, 600 V, RHH/RHW Insulation
2429	E-136	41	PVC coated RGS conduit	212.85	534.55	LP220-6A,8A	3 + 1 gnd #6,#8, 600 V, RHH/RHW Insulation
2430	E-138	41	PVC coated RGS conduit	425.70	534.55	LP222-2A,4A	3 + 1 gnd #6,#8, 600 V, RHH/RHW Insulation
						LP222-6A,8A	3 + 1 gnd #6,#8, 600 V, RHH/RHW Insulation
2432	E-139	41	PVC coated RGS conduit	425.70	534.55	LP223-2A,4A	3 + 1 gnd #6,#8, 600 V, RHH/RHW Insulation
						LP223-6A,8A	3 + 1 gnd #6,#8, 600 V, RHH/RHW Insulation
2434	E-135	41	RGS conduit	0.00	534.55	Pull rope	Soft-Fiber Polyester
2435	E-136	41	RGS conduit	0.00	534.55	Pull rope	Soft-Fiber Polyester
2436	E-136	41	RGS conduit	0.00	534.55	Pull rope	Soft-Fiber Polyester
2438	E-136	41	RGS conduit	0.00	534.55	Pull rope	Soft-Fiber Polyester
2439	E-136	41	RGS conduit	0.00	534.55	Pull rope	Soft-Fiber Polyester
2440	E-139	41	RGS conduit	0.00	534.55	Pull rope	Soft-Fiber Polyester

CONDUIT DATA

Conduit No	Reference	Size	Type	Total Fill (mm²)	Allowable Fill (mm²)	Included Cable No.	Conductor Type
2441	E-137	41	RGS conduit	0.00	534.55	Pull rope	Soft-Fiber Polyester
2442	E-137	41	PVC coated RGS conduit	212.85	534.55	Pull rope (4)	Soft-Fiber Polyester
						LP221-6A,8A	3 + 1 gnd #6,#8, 600 V, RHH/RHW Insulation
2446	E-138	41	RGS conduit	0.00	534.55	Pull rope	Soft-Fiber Polyester (4)
2448	E-138	41	RGS conduit	0.00	534.55	Pull rope	Soft-Fiber Polyester (4)
2450	E-139	41	RGS conduit	0.00	534.55	Pull rope	Soft-Fiber Polyester (4)
2453	E-139	41	RGS conduit	0.00	534.55	Pull rope	Soft-Fiber Polyester (4)
2455	E-140	41	RGS conduit	0.00	534.55	Pull rope	Soft-Fiber Polyester
2457	E-140	41	RGS conduit	0.00	534.55	Pull rope	Soft-Fiber Polyester (4)
2468	E-135	41	PVC coated RGS conduit	212.85	534.55	A-2011-2	3 + 1 gnd #6,#8, 600 V, RHH/RHW Insulation
2469	E-135	41	PVC coated RGS conduit	212.85	534.55	A-2011-2	3 + 1 gnd #6,#8, 600 V, RHH/RHW Insulation
2470	E-135	41	PVC coated RGS conduit	212.85	534.55	A-2011-2	3 + 1 gnd #6,#8, 600 V, RHH/RHW Insulation
2471	E-135	41	PVC coated RGS conduit	212.85	534.55	A-2011-2	3 + 1 gnd #6,#8, 600 V, RHH/RHW Insulation
2472	E-135	41	PVC coated RGS conduit	212.85	534.55	A-2011-2	3 + 1 gnd #6,#8, 600 V, RHH/RHW Insulation
2473	E-135	41	PVC coated RGS conduit	212.85	534.55	A-2011-2	3 + 1 gnd #6,#8, 600 V, RHH/RHW Insulation
2474	E-135	41	PVC coated RGS conduit	212.85	534.55	A-2011-2	3 + 1 gnd #6,#8, 600 V, RHH/RHW Insulation
2475	E-136	41	PVC coated RGS conduit	212.85	534.55	A-2011-2	3 + 1 gnd #6,#8, 600 V, RHH/RHW Insulation
2476	E-136	41	PVC coated RGS conduit	212.85	534.55	A-2011-2	3 + 1 gnd #6,#8, 600 V, RHH/RHW Insulation
2477	E-136	41 (4)	PVC coated RGS conduit	212.85	534.55	A-2011-2	3 + 1 gnd #6,#8, 600 V, RHH/RHW Insulation

For continuation, see next sheet.

CONDUIT AND TRAY SCHEDULE

E-413

REVISED BY | DATE REVISED
PBP | 8/02 | AB | 8/02
CALCULATED/DESIGNED BY | CHECKED BY
DESIGN OVERSIGHT: BEHZAD GOLEMOHAMMADI

STATE OF CALIFORNIA - DEPARTMENT OF TRANSPORTATION — Caltrans

LAST REVISION 00-00-00 | DATE PLOTTED => 15-APR-2011 | TIME PLOTTED => 13:22

FOR REDUCED PLANS ORIGINAL SCALE IS IN MILLIMETERS 0 20 40 60 80

DGN FILE =>04-0120f1_0368R04.dgn
USERNAME =>llorico

CU 04251 | EA 0120F1

CONDUIT DATA

Conduit No	Reference	Size	Type	Total Fill (mm²)	Allowable Fill (mm²)	Included Cable No.	Conductor Type
2478	E-136	41	PVC coated RGS conduit	212.85	534.55	A-2011-2	3 + 1 gnd #6,#8, 600 V, RHH/RHW Insulation
2479	E-136	41	PVC coated RGS conduit	212.85	534.55	A-2011-2	3 + 1 gnd #6,#8, 600 V, RHH/RHW Insulation
2480	E-136	41	PVC coated RGS conduit	212.85	534.55	A-2011-2	3 + 1 gnd #6,#8, 600 V, RHH/RHW Insulation
2481	E-136	41	PVC coated RGS conduit	274.92	534.55	1256-7	1-3/C #16 ,600 V, EPR Insulation
						A-2011-2	3 + 1 gnd #6,#8, 600 V, RHH/RHW Insulation
2482	E-136	41	PVC coated RGS conduit	212.85	534.55	A-2012-2	3 + 1 gnd #6,#8, 600 V, RHH/RHW Insulation
2483	E-136	41	PVC coated RGS conduit	212.85	534.55	A-2012-2	3 + 1 gnd #6,#8, 600 V, RHH/RHW Insulation
2484	E-136	41	PVC coated RGS conduit	212.85	534.55	A-2012-2	3 + 1 gnd #6,#8, 600 V, RHH/RHW Insulation
2485	E-136	41	PVC coated RGS conduit	212.85	534.55	A-2012-2	3 + 1 gnd #6,#8, 600 V, RHH/RHW Insulation
2486	E-136	41	PVC coated RGS conduit	212.85	534.55	A-2012-2	3 + 1 gnd #6,#8, 600 V, RHH/RHW Insulation
2487	E-137	41	PVC coated RGS conduit	212.85	534.55	A-2012-2	3 + 1 gnd #6,#8, 600 V, RHH/RHW Insulation
2488	E-137	41	PVC coated RGS conduit	212.85	534.55	A-2012-2	3 + 1 gnd #6,#8, 600 V, RHH/RHW Insulation
2489	E-137	41	PVC coated RGS conduit	212.85	534.55	A-2012-2	3 + 1 gnd #6,#8, 600 V, RHH/RHW Insulation
2490	E-137	41	PVC coated RGS conduit	212.85	534.55	A-2012-2	3 + 1 gnd #6,#8, 600 V, RHH/RHW Insulation
2491	E-137	41	PVC coated RGS conduit	212.85	534.55	A-2012-2	3 + 1 gnd #6,#8, 600 V, RHH/RHW Insulation
2492	E-137	41	PVC coated RGS conduit	212.85	534.55	A-2012-2	3 + 1 gnd #6,#8, 600 V, RHH/RHW Insulation
2493	E-137	41	PVC coated RGS conduit	212.85	534.55	A-2012-2	3 + 1 gnd #6,#8, 600 V, RHH/RHW Insulation
2494	E-137	41	PVC coated RGS conduit	212.85	534.55	A-2012-2	3 + 1 gnd #6,#8, 600 V, RHH/RHW Insulation
2495	E-137	41	PVC coated RGS conduit	212.85	534.55	A-2012-2	3 + 1 gnd #6,#8, 600 V, RHH/RHW Insulation
2496	E-137	41	PVC coated RGS conduit	212.85	534.55	A-2012-2	3 + 1 gnd #6,#8, 600 V, RHH/RHW Insulation
2497	E-138	41	PVC coated RGS conduit	0.00	534.55	Pull rope	Soft-Fiber Polyester
2498	E-138	41	PVC coated RGS conduit	212.85	534.55	A-2013-2	3 + 1 gnd #6,#8, 600 V, RHH/RHW Insulation
2499	E-138	41	PVC coated RGS conduit	212.85	534.55	A-2013-2	3 + 1 gnd #6,#8, 600 V, RHH/RHW Insulation
2511	E-135, E-160C	41	PVC coated RGS conduit	98.10	702.80	2155	1 - 2 pair, shielded #18 with IS/OA, 300 V, PVC Jacket
					5	Pull rope	Soft-Fiber Polyester
2512	E-135	41	RGS conduit	0.00	534.55	Pull rope	Soft-Fiber Polyester
2513	E-136	41	RGS conduit	0.00	534.55	Pull rope	Soft-Fiber Polyester
2514	E-136	41	RGS conduit	0.00	534.55	Pull rope	Soft-Fiber Polyester
2515	E-136	41	RGS conduit	0.00	534.55	Pull rope	Soft-Fiber Polyester
2516	E-136	41	RGS conduit	0.00	534.55	Pull rope	Soft-Fiber Polyester
2517	E-136	41	RGS conduit	0.00	534.55	Pull rope	Soft-Fiber Polyester
2518	E-136	41	RGS conduit	0.00	534.55	Pull rope	Soft-Fiber Polyester
2519	E-137	41	RGS conduit	0.00	534.55	Pull rope	Soft-Fiber Polyester
2520	E-137	41	RGS conduit	0.00	534.55	Pull rope	Soft-Fiber Polyester
2521	E-137	41	RGS conduit	0.00	534.55	Pull rope	Soft-Fiber Polyester
2522	E-138	41	RGS conduit	0.00	534.55	Pull rope	Soft-Fiber Polyester
2523	E-138	41	RGS conduit	0.00	534.55	Pull rope	Soft-Fiber Polyester
2524	E-138	41	RGS conduit	0.00	534.55	Pull rope	Soft-Fiber Polyester
2525	E-138	41	RGS conduit	0.00	534.55	Pull rope	Soft-Fiber Polyester
2526	E-139	41	RGS conduit	0.00	534.55	Pull rope	Soft-Fiber Polyester

REQUEST FOR INFORMATION NOT ADDRESSED IN THIS CCO REMAIN IN FORCE

MARK	DATE	DESCRIPTIONS REVISIONS	BY	CH'D	CCO#
5	03/24/11	BIKE PATH CONDUIT	TW	RG	73
4	06/11/10	BIKE PATH CONDUIT	TW	RG	73
3	03/26/10	DEHUMIDIFIER SCADA INTERFACE	RR	RG FW	130
2	02/11/10	WEST END BARRIER CONDUIT	TW	RG DO	4451
1	03/04/08	BARRIER MODIFICATIONS	JS BM	RG SE	44

Caltrans Metric

DIST	COUNTY	ROUTE	KILOMETER POST TOTAL PROJECT	SHEET No	TOTAL SHEETS
04	SF	80	13.2/13.9	369 R5	1204

Jens Erlingsson 12/19/02
REGISTERED ELECTRICAL ENGINEER DATE

12-6-04
PLANS APPROVAL DATE

REGISTERED PROFESSIONAL ENGINEER — JENS ERLINGSSON No. 8249 Exp. 9/30/06 ELECTRICAL — STATE OF CALIFORNIA

PB POWER, Inc.
A Parsons Brinckerhoff Company
303 Second St., Suite 700N
San Francisco, CA 94107-1317

The State of California or its officers or agents shall not be responsible for the accuracy or completeness of electronic copies of this plan sheet.

Caltrans now has a web site! To get to the web site, go to: http://www.dot.ca.gov

CONTRACT CHANGE ORDER NO. 73
SHEET 31 OF 52

REGISTERED PROFESSIONAL ENGINEER — S. A. ESTOQUE, JR. No. E-10151 Exp. 12/31/2008 ELECTRICAL — STATE OF CALIFORNIA (1)
FOR REVISION ONLY

REGISTERED PROFESSIONAL ENGINEER — DAVID H. OTO No. 10699 Exp. 06/30/2011 ELECTRICAL — STATE OF CALIFORNIA (2)
FOR REVISION ONLY

REGISTERED PROFESSIONAL ENGINEER — SYN YEE CHIN No. 18186 Exp. 09/30/2011 ELECTRICAL — STATE OF CALIFORNIA (3)(4)(5)
FOR REVISION ONLY

(4) REVISIONS SUPERCEDED (5)

CONDUIT DATA

Conduit No	Reference	Size	Type	Total Fill (mm²)	Allowable Fill (mm²)	Included Cable No.	Conductor Type
2527	E-139	41	RGS conduit	0.00	534.55	Pull rope	Soft-Fiber Polyester
2528	E-139	41	RGS conduit	0.00	534.55	Pull rope	Soft-Fiber Polyester
2529	E-139	41	RGS conduit	0.00	534.55	Pull rope	Soft-Fiber Polyester
2530	E-139	41	RGS conduit	0.00	534.55	Pull rope	Soft-Fiber Polyester
2532	E-186	41	RGS conduit	227.46	534.55	UP208-6B (5)	1-2/C + gnd #8, 600 V, EPR Insulation
2533	E-186	41	RGS conduit	98.10	534.55	2154	
2533	E-186	41	RGS conduit	98.10	534.55	2154	1 - 2 pair, shielded #18 with IS/OA, 300 V, PVC Jacket
2534	E-186, E-199	27	RGS-PVC coated conduit	98.10	229.03	Pull rope	Soft-Fiber Polyester
						1118-1	1-2PR #18 Twisted Shielded w/overall shield
2535	E-199, E-186	78	RGS-PVC coated conduit	882.89	1935.24	1118	1-3/C + gnd #2/0,600 V, EPR Insulation
						Pull rope	Soft-Fiber Polyester
~~2536~~							
2537	E-138	41	PVC coated RGS conduit	212.85	534.55	LP222-2A,4A (5)	3 + 1 gnd #6,#8, 600 V, RHH/RHW Insulation
2538	E-138	41	PVC coated RGS conduit	212.85	534.55	LP222-2A,4A	3 + 1 gnd #6,#8, 600 V, RHH/RHW Insulation
2539	E-138	41	PVC coated RGS conduit	212.85	534.55	LP222-2A,4A	3 + 1 gnd #6,#8, 600 V, RHH/RHW Insulation
2540	E-138	41	PVC coated RGS conduit	212.85	534.55	LP222-2A,4A	3 + 1 gnd #6,#8, 600 V, RHH/RHW Insulation
2541	E-138	41	PVC coated RGS conduit	212.85	534.55	LP222-6A,8A	3 + 1 gnd #6,#8, 600 V, RHH/RHW Insulation
2542	E-138	41	PVC coated RGS conduit	212.85	534.55	LP222-6A,8A	3 + 1 gnd #6,#8, 600 V, RHH/RHW Insulation
2543	E-138	41	PVC coated RGS conduit	212.85	534.55	LP222-6A,8A	3 + 1 gnd #6,#8, 600 V, RHH/RHW Insulation
2544	E-138	41	PVC coated RGS conduit	212.85	534.55	LP222-6A,8A	3 + 1 gnd #6,#8, 600 V, RHH/RHW Insulation
2545	E-138	41	PVC coated RGS conduit	212.85	534.55	LP222-6A,8A	3 + 1 gnd #6,#8, 600 V, RHH/RHW Insulation
2546	E-138	41	PVC coated RGS conduit	212.85	534.55	LP222-6A,8A	3 + 1 gnd #6,#8, 600 V, RHH/RHW Insulation
2547	E-139	41	PVC coated RGS conduit	212.85	534.55	LP222-6A,8A	3 + 1 gnd #6,#8, 600 V, RHH/RHW Insulation
2548	E-139	41	PVC coated RGS conduit	0.00	534.55	Pull rope (5)	Soft-Fiber Polyester
2549	E-139	41	PVC coated RGS conduit	212.85	534.55	LP223-2A,4A	3 + 1 gnd #6,#8, 600 V, RHH/RHW Insulation
2550	E-139	41	PVC coated RGS conduit	212.85	534.55	LP223-2A,4A	3 + 1 gnd #6,#8, 600 V, RHH/RHW Insulation

For continuation, see next sheet.

CONDUIT AND TRAY SCHEDULE

E-414

STATE OF CALIFORNIA - DEPARTMENT OF TRANSPORTATION
Caltrans
DESIGN OVERSIGHT
BEHZAD GOLEMOHAMMADI

	CALCULATED/ DESIGNED BY	CHECKED BY	DATE REVISED	REVISED BY
	PBP	AB	8/02	DATE 8/02

LAST REVISION 00-00-00
DATE PLOTTED => 15-APR-2011
TIME PLOTTED => 13:22

FOR REDUCED PLANS ORIGINAL SCALE IS IN MILLIMETERS 0 20 40 60 80

DGN FILE =>04-0120f1_0369R05.dgn
USERNAME =>llorico

CU 04251 EA 0120F1

CONDUIT DATA

Conduit No	Reference	Size	Type	Total Fill (mm²)	Allowable Fill (mm²)	Included Cable No.	Conductor Type
2551	E-139	41	PVC coated RGS conduit	212.85	534.55	LP223-2A,4A	3 + 1 gnd #6,#8, 600 V, RHH/RHW Insulation
2552	E-139	41	PVC coated RGS conduit	212.85	534.55	LP223-2A,4A	3 + 1 gnd #6,#8, 600 V, RHH/RHW Insulation
2553	E-139	41	PVC coated RGS conduit	212.85	534.55	LP223-2A,4A	3 + 1 gnd #6,#8, 600 V, RHH/RHW Insulation
2554	E-139	41	PVC coated RGS conduit	212.85	534.55	LP223-2A,4A	3 + 1 gnd #6,#8, 600 V, RHH/RHW Insulation
2555	E-139	41	PVC coated RGS conduit	212.85	534.55	LP223-2A,4A	3 + 1 gnd #6,#8, 600 V, RHH/RHW Insulation
2556	E-139	41	PVC coated RGS conduit	212.85	534.55	LP223-6A,8A	3 + 1 gnd #6,#8, 600 V, RHH/RHW Insulation
2557	E-139	41	PVC coated RGS conduit	212.85	534.55	LP223-6A,8A	3 + 1 gnd #6,#8, 600 V, RHH/RHW Insulation
2558	E-140	41	PVC coated RGS conduit	212.85	534.55	LP223-6A,8A	3 + 1 gnd #6,#8, 600 V, RHH/RHW Insulation
2559	E-140	41	PVC coated RGS conduit	212.85	534.55	LP223-6A,8A	3 + 1 gnd #6,#8, 600 V, RHH/RHW Insulation
2560	E-140	41	PVC coated RGS conduit	212.85	534.55	LP223-6A,8A	3 + 1 gnd #6,#8, 600 V, RHH/RHW Insulation
2561	E-140	41	PVC coated RGS conduit	212.85	534.55	LP223-6A,8A	3 + 1 gnd #6,#8, 600 V, RHH/RHW Insulation
2562	E-140	41	PVC coated RGS conduit	212.85	534.55	LP223-6A,8A	3 + 1 gnd #6,#8, 600 V, RHH/RHW Insulation
2563	E-140	41	PVC coated RGS conduit	212.85	534.55	LP223-6A,8A	3 + 1 gnd #6,#8, 600 V, RHH/RHW Insulation
2564	E-140	41	RGS conduit	0.00	534.55	Pull rope	Soft-Fiber Polyester
2622	E-138	41	RGS conduit	0.00	534.55	Pull rope	Soft-Fiber Polyester
2631	E-140	41	RGS conduit	0.00	534.55	Pull rope	Soft-Fiber Polyester
2632	E-140	41	RGS conduit	0.00	534.55	Pull rope	Soft-Fiber Polyester
2637	E-138	41	PVC coated RGS conduit	212.85	534.55	Pull rope	Soft-Fiber Polyester
2638	E-138	41	PVC coated RGS conduit	212.85	534.55	A-2013-2	3 + 1 gnd #6,#8, 600 V, RHH/RHW Insulation
2639	E-138	41	PVC coated RGS conduit	212.85	534.55	A-2013-2	3 + 1 gnd #6,#8, 600 V, RHH/RHW Insulation
2640	E-138	41	PVC coated RGS conduit	212.85	534.55	A-2013-2	3 + 1 gnd #6,#8, 600 V, RHH/RHW Insulation
2641	E-138	41	PVC coated RGS conduit	212.85	534.55	A-2013-2	3 + 1 gnd #6,#8, 600 V, RHH/RHW Insulation
2642	E-138	41	PVC coated RGS conduit	212.85	534.55	A-2013-2	3 + 1 gnd #6,#8, 600 V, RHH/RHW Insulation

REQUEST FOR INFORMATION NOT ADDRESSED IN THIS CCO REMAIN IN FORCE

MARK	DATE	DESCRIPTIONS REVISIONS	BY	CH'D	CCO#
5	03/24/11	BIKE PATH CONDUIT	TW	RG	73
4	06/11/10	BIKE PATH CONDUIT	TW	RG	73
3	07/17/09	WEST END BARRIER CONDUIT	RG	FW	44S1
2	03/04/08	BARRIER MODIFICATIONS	JS BM	RG SE	44
1	02/19/08	ELECTRICAL MODIFICATIONS	MP EL	RR	42

CONTRACT CHANGE ORDER NO. 73
SHEET 32 OF 52

SYN YEE CHIN, No. 18186, Exp. 09/30/2011, ELECTRICAL, REGISTERED PROFESSIONAL ENGINEER, STATE OF CALIFORNIA
FOR REVISION ONLY 4 5

FADI WALIEDDINE, No. 11465, Exp. 12/31/2009, ELECTRICAL, REGISTERED PROFESSIONAL ENGINEER, STATE OF CALIFORNIA
FOR REVISION ONLY 3

S. A. ESTOQUE, JR., No. E-10151, Exp. 12/31/2008, ELECTRICAL, REGISTERED PROFESSIONAL ENGINEER, STATE OF CALIFORNIA
FOR REVISION ONLY 2

MAXWELL FUMIO TAKATA, No. E 8651, Exp. 9/30/2008, ELECTRICAL, REGISTERED PROFESSIONAL ENGINEER, STATE OF CALIFORNIA
FOR REVISION ONLY 1

5 4 REVISIONS SUPERCEDED

DIST	COUNTY	ROUTE	KILOMETER POST TOTAL PROJECT	SHEET No	TOTAL SHEETS
04	SF	80	13.2/13.9	370 R5	1204

REGISTERED ELECTRICAL ENGINEER — DATE 12/19/02

12-6-04
PLANS APPROVAL DATE

JENS ERLINGSSON, No. 8249, Exp. 9/30/06, ELECTRICAL, REGISTERED PROFESSIONAL ENGINEER, STATE OF CALIFORNIA

PB POWER, Inc.
A Parsons Brinckerhoff Company
303 Second St., Suite 700N
San Francisco, CA 94107-1317

The State of California or its officers or agents shall not be responsible for the accuracy or completeness of electronic copies of this plan sheet.

Caltrans now has a web site! To get to the web site, go to: http://www.dot.ca.gov

CONDUIT DATA

Conduit No	Reference	Size	Type	Total Fill (mm²)	Allowable Fill (mm²)	Included Cable No.	Conductor Type
2643	E-138	41	PVC coated RGS conduit	212.85	534.55	A-2013-2	3 + 1 gnd #6,#8, 600 V, RHH/RHW Insulation
2644	E-138	41	PVC coated RGS conduit	212.85	534.55	A-2013-2	3 + 1 gnd #6,#8, 600 V, RHH/RHW Insulation
2645	E-138	41	PVC coated RGS conduit	212.85	534.55	A-2013-2	3 + 1 gnd #6,#8, 600 V, RHH/RHW Insulation
2646	E-138	41	PVC coated RGS conduit	212.85	534.55	A-2013-2	3 + 1 gnd #6,#8, 600 V, RHH/RHW Insulation
2647	E-139	41	PVC coated RGS conduit	212.85	534.55	A-2013-2	3 + 1 gnd #6,#8, 600 V, RHH/RHW Insulation
2648	E-139	41	PVC coated RGS conduit	212.85	534.55	A-2013-2	3 + 1 gnd #6,#8, 600 V, RHH/RHW Insulation
2649	E-139	41	PVC coated RGS conduit	212.85	534.55	A-2013-2	3 + 1 gnd #6,#8, 600 V, RHH/RHW Insulation
2650	E-139	41	PVC coated RGS conduit	212.85	534.55	A-2014-2	3 + 1 gnd #6,#8, 600 V, RHH/RHW Insulation
2651	E-139	41	PVC coated RGS conduit	212.85	534.55	A-2014-2	3 + 1 gnd #6,#8, 600 V, RHH/RHW Insulation
2652	E-139	41	PVC coated RGS conduit	212.85	534.55	A-2014-2	3 + 1 gnd #6,#8, 600 V, RHH/RHW Insulation
2653	E-139	41	PVC coated RGS conduit	212.85	534.55	A-2014-2	3 + 1 gnd #6,#8, 600 V, RHH/RHW Insulation
2654	E-139	41	PVC coated RGS conduit	212.85	534.55	A-2014-2	3 + 1 gnd #6,#8, 600 V, RHH/RHW Insulation
2655	E-139	41	PVC coated RGS conduit	212.85	534.55	A-2014-2	3 + 1 gnd #6,#8, 600 V, RHH/RHW Insulation
2656	E-139	41	PVC coated RGS conduit	212.85	534.55	A-2014-2	3 + 1 gnd #6,#8, 600 V, RHH/RHW Insulation
2657	E-139	41	PVC coated RGS conduit	212.85	534.55	A-2014-2	3 + 1 gnd #6,#8, 600 V, RHH/RHW Insulation
2658	E-140	41	PVC coated RGS conduit	212.85	534.55	A-2014-2	3 + 1 gnd #6,#8, 600 V, RHH/RHW Insulation
2659	E-140	41	PVC coated RGS conduit	212.85	534.55	A-2014-2	3 + 1 gnd #6,#8, 600 V, RHH/RHW Insulation
2660	E-140	41	PVC coated RGS conduit	212.85	534.55	A-2014-2	3 + 1 gnd #6,#8, 600 V, RHH/RHW Insulation
2661	E-140	41	PVC coated RGS conduit	212.85	534.55	A-2014-2	3 + 1 gnd #6,#8, 600 V, RHH/RHW Insulation
2662	E-140	41	PVC coated RGS conduit	212.85	534.55	A-2014-2	3 + 1 gnd #6,#8, 600 V, RHH/RHW Insulation
2663	E-140	41	PVC coated RGS conduit	212.85	534.55	A-2014-2	3 + 1 gnd #6,#8, 600 V, RHH/RHW Insulation
2664	E-135	41	PVC coated RGS conduit	212.85	534.55	LP219-6A,8A	3 + 1 gnd #6,#8, 600 V, RHH/RHW Insulation
2757	E-160C	41	RGS conduit	0.00	534.55	Pull rope	Soft-Fiber Polyester
2758	E-135, E-160C	41	RGS conduit, PVC Coated	227.46	534.55	Pull rope	Soft-Fiber Polyester
						UP205-6	1-2/C + gnd #8, 600 V, EPR Insulation
2759	E-135	41	RGS conduit	440.31	534.55	A-3031-2	3 + 1 gnd #6,#8, 600 V, RHH/RHW Insulation
						UP205-6	1-2/C + gnd #8, 600 V, EPR Insulation
						Pull rope	Soft-Fiber Polyester

For continuation, see next sheet.

CONDUIT AND TRAY SCHEDULE

E-415

DESIGN OVERSIGHT — BEHZAD GOLEMOHAMMADI
CALCULATED/DESIGNED BY
CHECKED BY
REVISED BY — DATE REVISED
PBP — 8/02
AB — 8/02

STATE OF CALIFORNIA - DEPARTMENT OF TRANSPORTATION — Caltrans

LAST REVISION 00-00-00
DATE PLOTTED => 15-APR-2011
TIME PLOTTED => 13:22

FOR REDUCED PLANS ORIGINAL SCALE IS IN MILLIMETERS 0 20 40 60 80

DGN FILE =>04-0120f1_0370R05.dgn
USERNAME =>llorico

CU 04251 | EA 0120F1

DIST	COUNTY	ROUTE	KILOMETER POST TOTAL PROJECT	SHEET No	TOTAL SHEETS
04	SF	80	13.2/13.9	371 R5	1204

REGISTERED ELECTRICAL ENGINEER — 12/19/02 DATE

12-6-04
PLANS APPROVAL DATE

PB POWER, Inc.
A Parsons Brinckerhoff Company
303 Second St., Suite 700N
San Francisco, CA 94107-1317

REGISTERED PROFESSIONAL ENGINEER — JENS ERLINGSSON — No. 8249 — Exp. 9/30/06 — ELECTRICAL — STATE OF CALIFORNIA

The State of California or its officers or agents shall not be responsible for the accuracy or completeness of electronic copies of this plan sheet.

Caltrans now has a web site! To get to the web site, go to: http://www.dot.ca.gov

Caltrans Metric

MARK	DATE	REVISIONS DESCRIPTIONS	BY	CH'D	CCO#
5	03/24/11	BIKE PATH CONDUIT	TW	RG	73
4	06/11/10	BIKE PATH CONDUIT	TW	RG	73
3	07/17/09	WEST END BARRIER CONDUIT	RG	FW	44S1
2	03/04/08	BARRIER MODIFICATIONS	JS BM	RG SE	44
1	02/19/08	ELECTRICAL MODIFICATIONS	MP EL	RR	42

REQUEST FOR INFORMATION NOT ADDRESSED IN THIS CCO REMAIN IN FORCE

CONTRACT CHANGE ORDER NO. 73
SHEET 33 OF 52

REGISTERED PROFESSIONAL ENGINEER — MARWELL FUMIO TAKATA — No. E 8651 — Exp. 9/30/2008 — ELECTRICAL — STATE OF CALIFORNIA

FOR REVISION ONLY 1

REGISTERED PROFESSIONAL ENGINEER — S. A. ESTOQUE, JR. — No. E-10151 — Exp. 12/31/2008 — ELECTRICAL — STATE OF CALIFORNIA

FOR REVISION ONLY 2

REGISTERED PROFESSIONAL ENGINEER — FADI WALIEDDINE — No. 11465 — Exp. 12/31/2009 — ELECTRICAL — STATE OF CALIFORNIA

FOR REVISION ONLY 3

REGISTERED PROFESSIONAL ENGINEER — SYN YEE CHIN — No. 18186 — Exp. 09/30/2011 — ELECTRICAL — STATE OF CALIFORNIA

Syn Yee Chin
FOR REVISION ONLY 4 5

4 REVISIONS SUPERCEDED 5

CONDUIT DATA

Conduit No	Reference	Size	Type	Total Fill (mm²)	Allowable Fill (mm²)	Included Cable No.	Conductor Type
2760	E-135	41	RGS conduit	440.31	534.55	A-3031-2	3 + 1 gnd #6,#8, 600 V, RHH/RHW Insulation
						UP205-6	1-2/C + gnd #8, 600 V, EPR Insulation
						Pull rope	Soft-Fiber Polyester
2761	E-135	41	RGS conduit	425.70	534.55	LP219-2A,4A (5)	3 + 1 gnd #6,#8, 600 V, RHH/RHW Insulation
						Pull rope	Soft-Fiber Polyester
						A-3031-2	3 + 1 gnd #6,#8, 600 V, RHH/RHW Insulation
2762	E-135	41	RGS conduit	212.85	534.55	Pull rope	Soft-Fiber Polyester
						A-3031-2	3 + 1 gnd #6,#8, 600 V, RHH/RHW Insulation
2763	E-135	41	RGS conduit	212.85	534.55	Pull rope	Soft-Fiber Polyester
						A-3031-2	3 + 1 gnd #6,#8, 600 V, RHH/RHW Insulation
2764	E-135	41	RGS conduit	212.85	534.55	Pull rope	Soft-Fiber Polyester
						A-3031-2	3 + 1 gnd #6,#8, 600 V, RHH/RHW Insulation
2765	E-135	41	RGS conduit	212.85	534.55	Pull rope	Soft-Fiber Polyester
						A-3031-2	3 + 1 gnd #6,#8, 600 V, RHH/RHW Insulation
2766	E-136	41	RGS conduit	212.85	534.55	Pull rope	Soft-Fiber Polyester
						A-3031-2	3 + 1 gnd #6,#8, 600 V, RHH/RHW Insulation
2767	E-136	41	RGS conduit	0.00	534.55	Pull rope	Soft-Fiber Polyester
2768	E-136	41	RGS conduit	212.85	534.55	Pull rope	Soft-Fiber Polyester
						A-3032-2	3 + 1 gnd #6,#8, 600 V, RHH/RHW Insulation
2769	E-136	41	RGS conduit	212.85	534.55	Pull rope	Soft-Fiber Polyester
						A-3032-2	3 + 1 gnd #6,#8, 600 V, RHH/RHW Insulation
2770	E-136	41	RGS conduit	212.85	534.55	Pull rope	Soft-Fiber Polyester
						A-3032-2	3 + 1 gnd #6,#8, 600 V, RHH/RHW Insulation
2771	E-136	41	RGS conduit	212.85	534.55	A-3032-2	3 + 1 gnd #6,#8, 600 V, RHH/RHW Insulation
						Pull rope	Soft-Fiber Polyester
2772	E-136	41	RGS conduit	212.85	534.55	Pull rope	Soft-Fiber Polyester
						A-3032-2	3 + 1 gnd #6,#8, 600 V, RHH/RHW Insulation
2773	E-136	41	RGS conduit	212.85	534.55	Pull rope	Soft-Fiber Polyester
						A-3033-2	3 + 1 gnd #6,#8, 600 V, RHH/RHW Insulation
2774	E-136	53	RGS conduit	537.14	681.55	Pull rope	Soft-Fiber Polyester
						A-3040-3	1-3/C + gnd #6, 600 V, EPR Insulation
						A-3033-2	3 + 1 gnd #6,#8, 600 V, RHH/RHW Insulation
2775	E-136	53	RGS conduit	537.14	681.55	A-3033-2	3 + 1 gnd #6,#8, 600 V, RHH/RHW Insulation
						A-3040-3	1-3/C + gnd #6, 600 V, EPR Insulation
						Pull rope	Soft-Fiber Polyester
2776	E-136	41	RGS conduit	212.85	534.55	A-3033-2	3 + 1 gnd #6,#8, 600 V, RHH/RHW Insulation
						Pull rope	Soft-Fiber Polyester
2777	E-136	41	RGS conduit	212.85	534.55	Pull rope	Soft-Fiber Polyester
						A-3033-2	3 + 1 gnd #6,#8, 600 V, RHH/RHW Insulation
2778	E-137	41	RGS conduit	212.85	534.55	Pull rope	Soft-Fiber Polyester
						A-3033-2	3 + 1 gnd #6,#8, 600 V, RHH/RHW Insulation
2779	E-137	41	RGS conduit	0.00	534.55	Pull rope (5)	Soft-Fiber Polyester
2780	E-137	41	RGS conduit	425.70	534.55	LP221-2A,4A	3 + 1 gnd #6,#8, 600 V, RHH/RHW Insulation
						A-3034-2	3 + 1 gnd #6,#8, 600 V, RHH/RHW Insulation
						Pull rope	Soft-Fiber Polyester
2781	E-137	41	RGS conduit	212.85	534.55	Pull rope	Soft-Fiber Polyester
						A-3034-2	3 + 1 gnd #6,#8, 600 V, RHH/RHW Insulation
2782	E-137	41	RGS conduit	212.85	534.55	Pull rope	Soft-Fiber Polyester
						A-3034-2	3 + 1 gnd #6,#8, 600 V, RHH/RHW Insulation
2783	E-137	41	RGS conduit	212.85	534.55	Pull rope	Soft-Fiber Polyester
						A-3034-2	3 + 1 gnd #6,#8, 600 V, RHH/RHW Insulation
2784	E-137	41	RGS conduit	212.85	534.55	Pull rope	Soft-Fiber Polyester
						A-3034-2	3 + 1 gnd #6,#8, 600 V, RHH/RHW Insulation
2785	E-137	41	RGS conduit	0.00	534.55	Pull rope	Soft-Fiber Polyester

CONDUIT DATA

Conduit No	Reference	Size	Type	Total Fill (mm²)	Allowable Fill (mm²)	Included Cable No.	Conductor Type
2786	E-137	41	RGS conduit	212.85	534.55	A-3035-2	3 + 1 gnd #6,#8, 600 V, RHH/RHW Insulation
						Pull rope	Soft-Fiber Polyester
2787	E-137	41	RGS conduit	212.85	534.55	Pull rope	Soft-Fiber Polyester
						A-3035-2	3 + 1 gnd #6,#8, 600 V, RHH/RHW Insulation
2788	E-137	41	RGS conduit	212.85	534.55	Pull rope	Soft-Fiber Polyester
						A-3035-2	3 + 1 gnd #6,#8, 600 V, RHH/RHW Insulation
2789	E-138	41	RGS conduit	212.85	534.55	Pull rope	Soft-Fiber Polyester
						A-3035-2	3 + 1 gnd #6,#8, 600 V, RHH/RHW Insulation
2790	E-138	41	RGS conduit	212.85	534.55	Pull rope	Soft-Fiber Polyester
						A-3035-2	3 + 1 gnd #6,#8, 600 V, RHH/RHW Insulation
2791	E-138	41	RGS conduit	0.00	534.55	Pull rope	Soft-Fiber Polyester
2792	E-138	41	RGS conduit	212.85	534.55	A-3036-2	3 + 1 gnd #6,#8, 600 V, RHH/RHW Insulation
						Pull rope	Soft-Fiber Polyester
2793	E-138	41	RGS conduit	212.85	534.55	A-3036-2	3 + 1 gnd #6,#8, 600 V, RHH/RHW Insulation
						Pull rope	Soft-Fiber Polyester
2794	E-138	41	RGS conduit	212.85	534.55	Pull rope	Soft-Fiber Polyester
						A-3036-2	3 + 1 gnd #6,#8, 600 V, RHH/RHW Insulation
2795	E-138	41	RGS conduit	425.70	534.55	Pull rope	Soft-Fiber Polyester
						(5) A-3036-2	3 + 1 gnd #6,#8, 600 V, RHH/RHW Insulation
						LP222-2A,4A	3 + 1 gnd #6,#8, 600 V, RHH/RHW Insulation
2796	E-138	41	RGS conduit	212.85	534.55	Pull rope	Soft-Fiber Polyester
						A-3036-2	3 + 1 gnd #6,#8, 600 V, RHH/RHW Insulation
2797	E-138	41	RGS conduit	212.85	534.55	Pull rope	Soft-Fiber Polyester
						A-3036-2	3 + 1 gnd #6,#8, 600 V, RHH/RHW Insulation
2798	E-138	41	RGS conduit	212.85	534.55	A-3036-2	3 + 1 gnd #6,#8, 600 V, RHH/RHW Insulation
						Pull rope	Soft-Fiber Polyester
2799	E-138	41	RGS conduit	212.85	534.55	A-3036-2	3 + 1 gnd #6,#8, 600 V, RHH/RHW Insulation
						Pull rope	Soft-Fiber Polyester
2857	E-160C	41	RGS conduit	212.85	534.55	Pull rope	Soft-Fiber Polyester (5)
						LP219-2A,4A	3 + 1 gnd #6,#8, 600 V, RHH/RHW Insulation
2858	E-135, E-160C	41	RGS conduit, PVC Coated	212.85	534.55	Pull rope	Soft-Fiber Polyester (5)
						LP219-2A,4A	3 + 1 gnd #6,#8, 600 V, RHH/RHW Insulation
2859	E-135	41	RGS conduit	425.70 (5)	534.55	Pull rope	Soft-Fiber Polyester
						A-2011-2	3 + 1 gnd #6,#8, 600 V, RHH/RHW Insulation (5)
						LP219-2A,4A	3 + 1 gnd #6,#8, 600 V, RHH/RHW Insulation
2860	E-135	41	RGS conduit	0.00	534.55	Pull rope	Soft-Fiber Polyester
2861	E-135	41	RGS conduit	212.85	534.55	Pull rope (5)	Soft-Fiber Polyester
						LP219-6A,8A	3 + 1 gnd #6,#8, 600 V, RHH/RHW Insulation

For continuation, see next sheet.

CONDUIT AND TRAY SCHEDULE

E-416

DATE	REVISED BY	DATE REVISED
8/02	PBP	8/02 AB

CALCULATED/DESIGNED BY
CHECKED BY

DESIGN OVERSIGHT
BEHZAD GOLEMOHAMMADI

STATE OF CALIFORNIA - DEPARTMENT OF TRANSPORTATION
Caltrans

DATE PLOTTED => 15-APR-2011
TIME PLOTTED => 13:22

LAST REVISION 00-00-00

FOR REDUCED PLANS ORIGINAL SCALE IS IN MILLIMETERS 0 20 40 60 80

DGN FILE =>04-0120f1_0371R05.dgn
USERNAME =>llorico

CU 04251 | EA 0120F1

CONDUIT DATA

Conduit No	Reference	Size	Type	Total Fill (mm²)	Allowable Fill (mm²)	Included Cable No.	Conductor Type
2862	E-135	41	RGS conduit	0.00	534.55	Pull rope	Soft-Fiber Polyester
2863	E-135	41	RGS conduit	0.00	534.55	Pull rope	Soft-Fiber Polyester
2864	E-135	41	RGS conduit	0.00	534.55	Pull rope	Soft-Fiber Polyester
2865	E-135	41	RGS conduit	0.00	534.55	Pull rope	Soft-Fiber Polyester
2866	E-136	41	RGS conduit	0.00	534.55	Pull rope	Soft-Fiber Polyester
2867	E-136	41	RGS conduit	0.00	534.55	Pull rope	Soft-Fiber Polyester
2868	E-136	41	RGS conduit	0.00	534.55	Pull rope	Soft-Fiber Polyester
2869	E-136	41	RGS conduit	0.00	534.55	Pull rope	Soft-Fiber Polyester
2870	E-136	41	RGS conduit	0.00	534.55	Pull rope	Soft-Fiber Polyester
2871	E-136	41	RGS conduit	212.85	534.55	Pull rope	Soft-Fiber Polyester
						2 LP220-6A,8A	3 + 1 gnd #6,#8, 600 V, RHH/RHW Insulation
2872	E-136	41	RGS conduit	0.00	534.55	Pull rope	Soft-Fiber Polyester
2873	E-136	41	RGS conduit	212.85	534.55	A-2012-2	3 + 1 gnd #6,#8, 600 V, RHH/RHW Insulation
						Pull rope	Soft-Fiber Polyester
2874	E-136	41	RGS conduit	324.29	534.55	Pull rope	Soft-Fiber Polyester
						A-3039-3	1-3/C + gnd #6, 600 V, EPR insulation
2875	E-136	41	RGS conduit	0.00	534.55	Pull rope	Soft-Fiber Polyester
2876	E-136	41	RGS conduit	0.00	534.55	Pull rope	Soft-Fiber Polyester
2877	E-136	41	RGS conduit	0.00	534.55	Pull rope	Soft-Fiber Polyester
2878	E-137	41	RGS conduit	0.00	534.55	Pull rope	Soft-Fiber Polyester
2879	E-137	41	RGS conduit	0.00	534.55	Pull rope	Soft-Fiber Polyester
2880	E-137	41	RGS conduit	212.85	534.55	Pull rope	Soft-Fiber Polyester
						2 LP221-6A,8A	3 + 1 gnd #6,#8, 600 V, RHH/RHW Insulation
2881	E-137	41	RGS conduit	0.00	534.55	Pull rope	Soft-Fiber Polyester
2882	E-137	41	RGS conduit	0.00	534.55	Pull rope	Soft-Fiber Polyester
2883	E-137	41	RGS conduit	0.00	534.55	Pull rope	Soft-Fiber Polyester
2884	E-137	41	RGS conduit	0.00	534.55	Pull rope	Soft-Fiber Polyester
2885	E-137	41	RGS conduit	0.00	534.55	Pull rope	Soft-Fiber Polyester
2886	E-137	41	RGS conduit	0.00	534.55	Pull rope	Soft-Fiber Polyester
2887	E-137	41	RGS conduit	0.00	534.55	Pull rope	Soft-Fiber Polyester
2888	E-137	41	RGS conduit	0.00	534.55	Pull rope	Soft-Fiber Polyester
2889	E-138	41	RGS conduit	0.00	534.55	Pull rope	Soft-Fiber Polyester
2890	E-138	41	RGS conduit	0.00	534.55	Pull rope	Soft-Fiber Polyester
2891	E-138	41	RGS conduit	0.00	534.55	Pull rope	Soft-Fiber Polyester
2892	E-138	41	RGS conduit	0.00	534.55	Pull rope	Soft-Fiber Polyester
2893	E-138	41	RGS conduit	0.00	534.55	Pull rope	Soft-Fiber Polyester
2894	E-138	41	RGS conduit	0.00	534.55	Pull rope	Soft-Fiber Polyester
2895	E-138	41	RGS conduit	212.85	534.55	Pull rope	Soft-Fiber Polyester
						2 LP222-6A,8A	3 + 1 gnd #6,#8, 600 V, RHH/RHW Insulation
2896	E-138	41	RGS conduit	0.00	534.55	Pull rope	Soft-Fiber Polyester
2897	E-138	41	RGS conduit	0.00	534.55	Pull rope	Soft-Fiber Polyester
2898	E-138	41	RGS conduit	0.00	534.55	Pull rope	Soft-Fiber Polyester

REQUEST FOR INFORMATION NOT ADDRESSED IN THIS CCO REMAIN IN FORCE

MARK	DATE	DESCRIPTIONS	BY	CH'D	CCO#
		REVISIONS			
2	03/24/11	BIKE PATH CONDUIT	TW	RG	73
1	06/11/10	BIKE PATH CONDUIT	TW	RG	73

CONTRACT CHANGE ORDER NO. 73
SHEET 34 OF 52

1 REVISIONS SUPERCEDED 2

REGISTERED PROFESSIONAL ENGINEER — SYN YEE CHIN — No. 18186 — Exp. 09/30/2011 ELECTRICAL — STATE OF CALIFORNIA

Syn Yee Chin
FOR REVISION ONLY 1 2

Caltrans Metric

DIST	COUNTY	ROUTE	KILOMETER POST TOTAL PROJECT	SHEET No	TOTAL SHEETS
04	SF	80	13.2/13.9	372 R2	1204

Jens Erlingsson 12/19/02
REGISTERED ELECTRICAL ENGINEER DATE

REGISTERED PROFESSIONAL ENGINEER — JENS ERLINGSSON — No. 8249 — Exp. 9/30/06 ELECTRICAL — STATE OF CALIFORNIA

12-6-04
PLANS APPROVAL DATE

PB POWER, Inc.
A Parsons Brinckerhoff Company
303 Second St., Suite 700N
San Francisco, CA 94107-1317

The State of California or its officers or agents shall not be responsible for the accuracy or completeness of electronic copies of this plan sheet.

Caltrans now has a web site! To get to the web site, go to: http://www.dot.ca.gov

CONDUIT DATA

Conduit No	Reference	Size	Type	Total Fill (mm²)	Allowable Fill (mm²)	Included Cable No.	Conductor Type
2899	E-138	41	RGS conduit	0.00	534.55	Pull rope	Soft-Fiber Polyester
2900	E-138	41	RGS conduit	0.00	534.55	Pull rope	Soft-Fiber Polyester
2901	E-139	41	RGS conduit	0.00	534.55	Pull rope	Soft-Fiber Polyester
2902	E-139	41	RGS conduit	0.00	534.55	Pull rope	Soft-Fiber Polyester
2903	E-139	41	RGS conduit	0.00	534.55	Pull rope	Soft-Fiber Polyester
2904	E-139	41	RGS conduit	0.00	534.55	Pull rope	Soft-Fiber Polyester
2905	E-139	41	RGS conduit	0.00	534.55	Pull rope	Soft-Fiber Polyester
2906	E-139	41	RGS conduit	0.00	534.55	Pull rope	Soft-Fiber Polyester
2907	E-139	41	RGS conduit	0.00	534.55	Pull rope	Soft-Fiber Polyester
2908	E-139	41	RGS conduit	0.00	534.55	Pull rope	Soft-Fiber Polyester
2909	E-139	41	RGS conduit	0.00	534.55	Pull rope	Soft-Fiber Polyester
2910	E-139	41	RGS conduit	212.85	534.55	Pull rope	Soft-Fiber Polyester
						2 LP223-6A,8A	3 + 1 gnd #6,#8, 600 V, RHH/RHW Insulation
2911	E-139	41	RGS conduit	0.00	534.55	Pull rope	Soft-Fiber Polyester
2912	E-140	41	RGS conduit	0.00	534.55	Pull rope	Soft-Fiber Polyester
2913	E-140	41	RGS conduit	0.00	534.55	Pull rope	Soft-Fiber Polyester
2914	E-140	41	RGS conduit	0.00	534.55	Pull rope	Soft-Fiber Polyester
2915	E-140	41	RGS conduit	0.00	534.55	Pull rope	Soft-Fiber Polyester
2916	E-140	41	RGS conduit	0.00	534.55	Pull rope	Soft-Fiber Polyester
2917	E-140	41	RGS conduit	0.00	534.55	Pull rope	Soft-Fiber Polyester
2950	E-136	41	RGS conduit	0.00	534.55	Pull rope	Soft-Fiber Polyester
2951	E-139	41	RGS conduit	0.00	534.55	Pull rope	Soft-Fiber Polyester
2952	E-139	41	RGS conduit	0.00	534.55	Pull rope	Soft-Fiber Polyester
2953	E-139	41	RGS conduit	0.00	534.55	Pull rope	Soft-Fiber Polyester
2954	E-139	41	RGS conduit	0.00	534.55	Pull rope	Soft-Fiber Polyester
2955	E-139	41	RGS conduit	0.00	534.55	Pull rope	Soft-Fiber Polyester
2956	E-139	41	RGS conduit	0.00	534.55	Pull rope	Soft-Fiber Polyester
2957	E-139	41	RGS conduit	0.00	534.55	Pull rope	Soft-Fiber Polyester 2
2958	E-139	41	RGS conduit	0.00	534.55	Pull rope	Soft-Fiber Polyester

For continuation, see next sheet.

CONDUIT AND TRAY SCHEDULE

E-417

STATE OF CALIFORNIA - DEPARTMENT OF TRANSPORTATION
Caltrans
DESIGN OVERSIGHT
BEHZAD GOLEMOHAMMADI
CALCULATED/DESIGNED BY
CHECKED BY
PBP
DATE 8/02
REVISED BY
DATE REVISED
AB
8/02

LAST REVISION 00-00-00
DATE PLOTTED => 15-APR-2011
TIME PLOTTED => 13:22

FOR REDUCED PLANS ORIGINAL SCALE IS IN MILLIMETERS 0 20 40 60 80
DGN FILE =>04-0120f1_0372R02.dgn
USERNAME =>llorico
CU 04251
EA 0120F1

CONDUIT DATA

Conduit No	Reference	Size	Type	Total Fill (mm^2)	Allowable Fill (mm^2)	Included Cable No.	Conductor Type
2959	E-139	41	RGS conduit	0.00	534.55	Pull rope	Soft-Fiber Polyester
2960	E-139	41	RGS conduit	212.85 1	534.55	Pull rope	Soft-Fiber Polyester
						LP223-2A,4A	3 + 1 gnd #6,#8, 600 V, RHH/RHW Insulation 7
2961	E-139	41	RGS conduit	0.00	534.55	Pull rope	Soft-Fiber Polyester
2962	E-138	41	RGS conduit	0.00	534.55	Pull rope	Soft-Fiber Polyester
2963	E-138	41	RGS conduit	0.00	534.55	Pull rope	Soft-Fiber Polyester
2964	E-138	41	RGS conduit	0.00	534.55	Pull rope	Soft-Fiber Polyester
2965	E-138	41	RGS conduit	0.00	534.55	Pull rope	Soft-Fiber Polyester
2966	E-138	41	RGS conduit	0.00	534.55	Pull rope	Soft-Fiber Polyester
2967	E-138	41	RGS conduit	0.00	534.55	Pull rope	Soft-Fiber Polyester
2T13	E-181 Thru E-186	305	152.4 mm siderail ladder tray	2780.99	8387.08	Pull rope	Soft-Fiber Polyester
	E-212A					2391	3-1/C #4/0 + 1/C #1/0 gnd, 15kV, EPR Insulation
2T14	E-212, E-21B	305	152.4 mm siderail ladder tray	2780.99	8387.08	Pull rope	Soft-Fiber Polyester
						2391	3-1/C #4/0 + 1/C #1/0 gnd, 15kV, EPR Insulation
2T14A	E-21, E-21E	305	152.4 mm siderail ladder tray	0.00	8387.08		
2T14B	E-21, E-21E	305	152.4 mm siderail ladder tray	0.00	8387.08 1		
2T21	E182,E207C,E264	610	152.4 mm siderail ladder tray	2120.21	16774.16	2121	1-3/C + gnd #1/0,600 V, EPR Insulation
						2120	1-3/C + gnd #1/0,600 V, EPR Insulation
						1201-1	1-2/C + gnd #10, 600 V, EPR Insulation
						1201-2	1-2/C + gnd #10, 600 V, EPR Insulation
						1201-6	1-2/C + gnd #10, 600 V, EPR Insulation
						1201-4A	1-2/C #14, 600 V, EPR Insulation
						1201-4B	1-2/C #14, 600 V, EPR Insulation
						1201-4C	1-2/C #14, 600 V, EPR Insulation
2T23	E-114B	760	152.4 mm siderail ladder tray	22305.81 1	22580.60	2202-2	1-3/C #14,600 V, EPR Insulation
						A-3004-1	1-3/C + gnd #2,600 V, EPR Insulation
						A-3003-1	1-3/C + gnd #4,600 V, EPR Insulation
						A-2013-1	1-3/C + gnd #2,600 V, EPR Insulation
						A-2012-1	1-3/C + gnd #2,600 V, EPR Insulation
						2123	1-3/C + gnd #2,600 V, EPR Insulation
						2202-3	1-7/C #16,600 V, EPR Insulation
						2105	1-3/C + gnd #2,600 V, EPR Insulation
						2106	1-3/C + gnd #2,600 V, EPR Insulation
						2202-4	1-3/C #14,600 V, EPR Insulation
						2104	1-3/C + gnd #2,600 V, EPR Insulation
						2121	1-3/C + gnd #1/0,600 V, EPR Insulation
						2204-1	1-3/C #14, 600 V, EPR Insulation
						UP204-7	1-2/C + gnd #8,600 V, EPR Insulation
						2119-A	1-3/C + gnd 250 Kcmil,600 V, EPR Insulation
						CCTVE01BA	TVP
						CCTVE01BB	TVCP
						CCTVE01AA	TVP
						2201-2	1-2/C + gnd #10,600 V, EPR Insulation
						2123-2	1-3/C + gnd #2/0,600 V, EPR Insulation
						2123-3	1-3/C + gnd #2/0,600 V, EPR Insulation
						1118	1-3/C + gnd #2/0,600 V, EPR Insulation
						2095	1-3/C + gnd #2,600 V, EPR Insulation
						2096	1-3/C + gnd #2,600 V, EPR Insulation
						2097	1-3/C + gnd #2,600 V, EPR Insulation
						2098	1-3/C + gnd #2,600 V, EPR Insulation
						2099	1-3/C + gnd #2,600 V, EPR Insulation
						S-3053-1	1-3/C + gnd #2,600 V, EPR Insulation
						2107	1-3/C + gnd #2,600 V, EPR Insulation
						2120	1-3/C + gnd #1/0,600 V, EPR Insulation
						2201-6	1-2/C + gnd #10,600 V, EPR Insulation
						1201-1	1-2/C + gnd #10,600 V, EPR Insulation
						2202-1	1-2/C + gnd #10,600 V, EPR Insulation
						1201-2	1-2/C + gnd #10,600 V, EPR Insulation
						1201-6	1-2/C + gnd #10,600 V, EPR Insulation
						2204-2	1-3/C #16,600 V, EPR Insulation
						Pull rope	Soft-Fiber Polyester
						A-3041-1	1-3/C + gnd #2,600 V, EPR Insulation
						S-3052-1	1-3/C + gnd #2,600 V, EPR Insulation
						2125	1-3/C + gnd 250 Kcmil,600 V, EPR Insulation
						2103	1-3/C + gnd #2,600 V, EPR Insulation
						S-3056-9	1-4/C #14,600 V, EPR Insulation
						CCTVE01AB	TVCP
						S-3056-6	1-4/C #14,600 V, EPR Insulation
						2202-3A	1-2/C #14, 600 V, EPR Insulation
						2201-4B	1-2/C #14, 600 V, EPR Insulation
						2201-4C	1-2/C #14, 600 V, EPR Insulation
						1201-4A	1-2/C #14, 600 V, EPR Insulation
						1201-4B	1-2/C #14, 600 V, EPR Insulation
						1201-4C	1-2/C #14, 600 V, EPR Insulation

REQUEST FOR INFORMATION NOT ADDRESSED IN THIS CCO REMAIN IN FORCE

MARK	DATE	DESCRIPTIONS REVISIONS	BY	CH'D	CCO#
7	03/24/11	BIKE PATH CONDUIT	TW	RG	73
6	01/07/11	ELECTRICAL WARNING SYSTEMS	TW	RG	61
5	06/11/10	BIKE PATH CONDUIT	TW	RG	73
4	03/26/10	DEHUMIDIFIER SCADA INTERFACE	RR	RG FW	130
3	03/30/09	SERVICE PLATFORM ELECTRICAL CHANGES	RY RR	RG MP	55
2	02/25/08	CABLE TRAY CHANGES	RR TW	RG	42S1
1	03/04/08	BARRIER MODIFICATIONS	JS BM	RG	44

CONTRACT CHANGE ORDER NO. 73
SHEET 35 OF 52

5 REVISIONS SUPERCEDED 7

Caltrans Metric

DIST	COUNTY	ROUTE	KILOMETER POST TOTAL PROJECT	SHEET No	TOTAL SHEETS
04	SF	80	13.2/13.9	373 R7	1204

Jens Erlingsson 12/19/02
REGISTERED ELECTRICAL ENGINEER DATE

12-6-04
PLANS APPROVAL DATE

REGISTERED PROFESSIONAL ENGINEER — JENS ERLINGSSON No. 8249 Exp. 9/30/06 ELECTRICAL — STATE OF CALIFORNIA

PB POWER, Inc.
A Parsons Brinckerhoff Company
303 Second St., Suite 700N
San Francisco, CA 94107-1317

The State of California or its officers or agents shall not be responsible for the accuracy or completeness of electronic copies of this plan sheet.

Caltrans now has a web site! To get to the web site, go to: http://www.dot.ca.gov

REGISTERED PROFESSIONAL ENGINEER — SYN YEE CHIN No. 18186 Exp. 09/30/2011 ELECTRICAL — STATE OF CALIFORNIA
Syn Yee Chin
FOR REVISION ONLY 4 5 6 7

REGISTERED PROFESSIONAL ENGINEER — FADI WALIEDDINE No. 11465 Exp. 12/31/2009 ELECTRICAL — STATE OF CALIFORNIA
3
FOR REVISION ONLY

REGISTERED PROFESSIONAL ENGINEER — S. A. ESTOQUE, JR. No. E-10151 Exp. 12/31/2008 ELECTRICAL — STATE OF CALIFORNIA
1 2
FOR REVISION ONLY

CONDUIT DATA

Conduit No	Reference	Size	Type	Total Fill (mm^2)	Allowable Fill (mm^2)	Included Cable No.	Conductor Type
						LP219-2,4	1-3/C + gnd #6,600 V, EPR Insulation
						LP219-6,8	1-3/C + gnd #6,600 V, EPR Insulation
						LP220-2,4	1-3/C + gnd #6,600 V, EPR Insulation
						LP220-6,8	1-3/C + gnd #6,600 V, EPR Insulation
						LP221-2,4	1-3/C + gnd #6,600 V, EPR Insulation
						LP221-6,8	1-3/C + gnd #6,600 V, EPR Insulation
						LP222-2,4	1-3/C + gnd #6,600 V, EPR Insulation
						LP222-6,8	1-3/C + gnd #6,600 V, EPR Insulation
						LP223-2,4	1-3/C + gnd #6,600 V, EPR Insulation
					4	LP223-6,8	1-3/C + gnd #6,600 V, EPR Insulation
					4	LP223-6,8	1-3/C + gnd #6,600 V, EPR Insulation

For continuation, see next sheet.

CONDUIT AND TRAY SCHEDULE

E-418

STATE OF CALIFORNIA - DEPARTMENT OF TRANSPORTATION
Caltrans

DESIGN OVERSIGHT	CALCULATED/ DESIGNED BY	DRAWN BY	CHECKED BY	DATE	REVISED BY	DATE REVISED
BEHZAD GOLEMOHAMMADI	PBP	AB		8/02		

LAST REVISION 00-00-00
DATE PLOTTED => 15-APR-2011
TIME PLOTTED => 13:23

FOR REDUCED PLANS ORIGINAL SCALE IS IN MILLIMETERS 0 20 40 60 80

DGN FILE =>04-0120f1_0373R07.dgn
USERNAME =>llorico

CU 04251

EA 0120F1

CONDUIT DATA

Conduit No	Reference	Size	Type	Total Fill (mm²)	Allowable Fill (mm²)	Included Cable No.	Conductor Type
2T24	E-114, E-182	610	152.4 mm siderail ladder tray	2191.50	18064.48	LP219-2,4	1-3/C + gnd #6, 600 V, EPR insulation
						LP219-6,8	1-3/C + gnd #6, 600 V, EPR insulation
						Pull rope	Soft-Fiber Polyester
						UP204-7	1-2/C + gnd #8,600 V, EPR insulation
						UP204-1	1-2/C + gnd #10,600 V, EPR insulation
						UP204-8	1-2/C + gnd #8,600 V, EPR insulation
						2103	1-3/C + gnd #2,600 V, EPR insulation
						2095	1-3/C + gnd #2,600 V, EPR insulation
2T25	E-115, E-182	610	152,4 mm siderail ladder tray	3155.19	18064.48	UP205-7	1-2/C + gnd #8,600 V, EPR insulation
						UP205-1	1-2/C + gnd #10,600 V, EPR insulation
						LP220-2,4	1-3/C + gnd #6,600 V, EPR insulation
						LP220-6,8	1-3/C + gnd #6,600 V, EPR insulation
						Pull rope	Soft-Fiber Polyester
						S-3056-6	1-4/C #14,600 V, EPR Insulation
						2202-2	1-3/C #14,600 V, EPR insulation
						2204-2	1-3/C #16,600 V, EPR insulation
						2096	1-3/C + gnd #2,600 V, EPR insulation
						2204-1	1-3/C #14, 600 V, EPR Insulation
						2104	1-3/C + gnd #2,600 V, EPR insulation
						UP205-8	1-2/C + gnd #8,600 V, EPR insulation
						2202-3	1-7/C #16,600 V, EPR insulation
						1201-1	1-2/C + gnd #10, 600 V, EPR Insulation
						1201-2	1-2/C + gnd #10, 600 V, EPR Insulation
						1201-6	1-2/C + gnd #10, 600 V, EPR Insulation
						1201-4A	1-2/C #14, 600 V, EPR Insulation
						1201-4B	1-2/C #14, 600 V, EPR Insulation
						1201-4C	1-2/C #14, 600 V, EPR Insulation
2T26	E-117, E-183	610	152.4 mm siderail ladder tray	3094.52	18064.48	2202-1	1-2/C + gnd #10, 600 V, EPR Insulation
						CCTVE01BA	TVP
						LP221-2,4	1-3/C + gnd #6,600 V, EPR Insulation
						Pull rope	Soft-Fiber Polyester
						CCTVE01AB	TVCP
						CCTVE01AA	TVP
						CCTVE01BB	TVCP
						LP221-6,8	1-3/C + gnd #6,600 V, EPR Insulation
						UP206-7	1-2/C + gnd #8,600 V, EPR Insulation
						UP207-1	1-2/C + gnd #10,600 V, EPR Insulation
						UP206-1	1-2/C + gnd #10,600 V, EPR Insulation
						2202-2	1-3/C #14, 600 V, EPR Insulation
						2105	1-3/C + gnd #2,600 V, EPR Insulation
						2097	1-3/C + gnd #2,600 V, EPR Insulation
						UP206-8	1-2/C + gnd #8,600 V, EPR Insulation
						2202-3	1-7/C #16,600 V, EPR Insulation
						2202-3A	1-2/C #14, 600 V, EPR Insulation

THIS PLAN ACCURATE FOR ELECTRICAL WORK ONLY.

Caltrans Metric

DIST	COUNTY	ROUTE	KILOMETER POST TOTAL PROJECT	SHEET No	TOTAL SHEETS
04	SF	80	13.2/13.9	373 S1R1	1204

Synyee Chin 01/07/11
REGISTERED ELECTRICAL ENGINEER DATE

REGISTERED PROFESSIONAL ENGINEER — SYN YEE CHIN No. 18186 Exp. 09/30/2011 ELECTRICAL — STATE OF CALIFORNIA

PLANS APPROVAL DATE

PB AMERICAS, Inc.
A Parsons Brinckerhoff Company
303 Second St., Suite 700N
San Francisco, CA 94107-1317

The State of California or its officers or agents shall not be responsible for the accuracy or completeness of electronic copies of this plan sheet.

Caltrans now has a web site! To get to the web site, go to http://www.dot.ca.gov

REQUEST FOR INFORMATION NOT ADDRESSED IN THIS CCO REMAIN IN FORCE

MARK	DATE	DESCRIPTIONS	BY	CH'D	CCO#
		REVISIONS			
1	03/24/11	BIKE PATH CONDUIT	TW	RG	73
0	01/07/11	ELECTRICAL WARNING SYSTEMS	TW	RG	61

CONTRACT CHANGE ORDER NO. 73
SHEET 36 OF 52

CONDUIT DATA

Conduit No	Reference	Size	Type	Total Fill (mm²)	Allowable Fill (mm²)	Included Cable No.	Conductor Type

For continuation, see next sheet.

CONDUIT AND TRAY SCHEDULE

E-418A

DESIGN OVERSIGHT BEHZAD GOLEMOHAMMADI
CALCULATED/DESIGNED BY
CHECKED BY
XX XX DATE XX/10 XX/10 REVISED BY DATE REVISED
STATE OF CALIFORNIA - DEPARTMENT OF TRANSPORTATION Caltrans

LAST REVISION 00-00-00 DATE PLOTTED => 15-APR-2011 TIME PLOTTED => 13:23

FOR REDUCED PLANS ORIGINAL SCALE IS IN MILLIMETERS 0 20 40 60 80

DGN FILE =>04-0120f1_0373S01R01.dgn
USERNAME =>llorico

CU 04251 EA 0120F1

CONDUIT DATA

Conduit No	Reference	Size	Type	Total Fill (mm2)	Allowable Fill (mm2)	Included Cable No.	Conductor Type
2T27	E-118, E-184	610	152.4 mm siderail ladder tray	2369.55	18064.48	LP222-6,8	1-3/C + gnd #6,600 V, EPR insulation
				7		2098	1-3/C + gnd #2,600 V, EPR insulation
						2106	1-3/C + gnd #2,600 V, EPR insulation
						UP207-8	1-2/C + gnd #8,600 V, EPR insulation
						UP207-7	1-2/C + gnd #8,600 V, EPR insulation
						Pull rope	Soft-Fiber Polyester
						LP222-2,4	1-3/C + gnd #6,600 V, EPR insulation
						UP207-1	1-2/C + gnd #10,600 V, EPR insulation
						UP207-11	1-2/C + gnd #8,600 V, EPR insulation
2T28	E-119, E-185	610	152.4 mm siderail ladder tray	2833.85	18064.48		
				7		UP208-6	1-2/C + gnd #8,600 V, EPR insulation
						Pull rope	Soft-Fiber Polyester 7
						LP223-2,4	1-3/C + gnd #6,600 V, EPR insulation
						UP208-7	1-2/C + gnd #8,600 V, EPR insulation
						2107	1-3/C + gnd #2,600 V, EPR insulation
						LP223-6,8	1-3/C + gnd #6,600 V, EPR insulation
					7	2201-5	1-3/C #14,600 V, EPR insulation
						UP208-8	1-2/C + gnd #8,600 V, EPR insulation 7
						2201-6	1-2/C + gnd #10, 600 V, EPR insulation
						S-3056-9	1-4/C #14,600 V, EPR insulation
						2099	1-3/C + gnd #2,600 V, EPR insulation
						2201-2	1-2/C + gnd #10,600 V, EPR insulation
						2201-4B	1-2/C #14,600 V, EPR insulation
						2201-4C	1-2/C #14,600 V, EPR insulation
2T29	E-212, E-21B	610	152.4 mm siderail ladder tray	16623.79	18064.48	2123-3	1-3/C + gnd #2/0,600 V, EPR insulation
						Pull rope	Soft-Fiber Polyester
						2119-A	1-3/C + gnd 250 kcmil,600 V, EPR insulation
						2121	1-3/C + gnd #1/0,600 V, EPR insulation
						A-3004-1	1-3/C + gnd #2,600 V, EPR insulation
						A-3003-1	1-3/C + gnd #4,600 V, EPR insulation
						A-2012-1	1-3/C + gnd #2,600 V, EPR insulation
						2123	1-3/C + gnd #2,600 V, EPR insulation
						2105	1-3/C + gnd #2,600 V, EPR insulation
						2104	1-3/C + gnd #2,600 V, EPR insulation
						2125	1-3/C + gnd 250 kcmil,600 V, EPR insulation
						2123-2	1-3/C + gnd #2/0,600 V, EPR insulation
						2106	1-3/C + gnd #2,600 V, EPR insulation
						1118	1-3/C + gnd #2/0,600 V, EPR insulation
						2095	1-3/C + gnd #2,600 V, EPR insulation
						2096	1-3/C + gnd #2,600 V, EPR insulation
						2097	1-3/C + gnd #2,600 V, EPR insulation
						2098	1-3/C + gnd #2,600 V, EPR insulation
						2099	1-3/C + gnd #2,600 V, EPR insulation
						2103	1-3/C + gnd #2,600 V, EPR insulation
						2107	1-3/C + gnd #2,600 V, EPR insulation
						A-3041-1	1-3/C + gnd #2,600 V, EPR insulation
						S-3053-1	1-3/C + gnd #2,600 V, EPR insulation
						S-3052-1	1-3/C + gnd #2,600 V, EPR insulation
						2120	1-3/C + gnd #1/0,600 V, EPR insulation
						A-2013-1	1-3/C + gnd #2,600 V, EPR insulation
2T33	E-114B	760	152.4 mm siderail ladder tray	15691.30	22580.60	A-2011-1	1-3/C + gnd #2,600 V, EPR insulation
				7		UP208-2A	1-2/C + gnd #8,600 V, EPR insulation
						UP208-4A	1-2/C + gnd #8,600 V, EPR insulation
						UP208-6	1-2/C + gnd #8,600 V, EPR insulation
					7	Pull rope	Soft-Fiber Polyester
						A-3057-1	1-3/C + gnd #2,600 V, EPR insulation
						A-2014-1	1-3/C + gnd #2,600 V, EPR insulation
						UP204-8	1-2/C + gnd #8,600 V, EPR insulation
						UP205-8	1-2/C + gnd #8,600 V, EPR insulation
						UP207-8	1-2/C + gnd #8,600 V, EPR insulation
						UP205-1	1-2/C + gnd #10,600 V, EPR insulation
						UP207-7	1-2/C + gnd #8,600 V, EPR insulation
						A-3039-3	1-3/C + gnd #6,600 V, EPR insulation
						A-3040-3	1-3/C + gnd #6,600 V, EPR insulation
						A-3005-1	1-3/C + gnd #2,600 V, EPR insulation
						A-3006-1	1-3/C + gnd #4,600 V, EPR insulation
						A-3031-1	1-3/C + gnd #4,600 V, EPR insulation

THIS PLAN ACCURATE FOR ELECTRICAL WORK ONLY.

REQUEST FOR INFORMATION NOT ADDRESSED IN THIS CCO REMAIN IN FORCE

MARK	DATE	DESCRIPTIONS REVISIONS	BY	CH'D	CCO#
7	03/24/11	BIKE PATH CONDUIT	TW	RG	73
6	01/07/11	ELECTRICAL WARNING SYSTEMS	TW	RG	61
5	06/11/10	BIKE PATH CONDUIT	TW	RG	73
4	02/01/10	DEHUMIDIFIER SCADA INTERFACE	RR	RG FW	130
3	03/30/09	SERVICE PLATFORM ELECTRICAL CHANGES	RY RR	RG MP	55
2	02/25/08	CABLE TRAY CHANGES	TW	RG	42S1
1	03/04/08	BARRIER MODIFICATIONS	JS BM	RG SE	44

CONTRACT CHANGE ORDER NO. 73
SHEET 37 OF 52

7 5 REVISIONS SUPERCEDED

Caltrans Metric

DIST	COUNTY	ROUTE	KILOMETER POST TOTAL PROJECT	SHEET No	TOTAL SHEETS
04	SF	80	13.2/13.9	374 R7	1204

Jens Erlingsson 12/19/02
REGISTERED ELECTRICAL ENGINEER DATE

12-6-04
PLANS APPROVAL DATE

REGISTERED PROFESSIONAL ENGINEER — JENS ERLINGSSON No. 8249 Exp. 9/30/06 ELECTRICAL — STATE OF CALIFORNIA

PB POWER, Inc.
A Parsons Brinckerhoff Company
303 Second St., Suite 700N
San Francisco, CA 94107-1317

The State of California or its officers or agents shall not be responsible for the accuracy or completeness of electronic copies of this plan sheet.

Caltrans now has a web site! To get to the web site, go to: http://www.dot.ca.gov

REGISTERED PROFESSIONAL ENGINEER — SYN YEE CHIN No. 18186 Exp. 09/30/2011 ELECTRICAL — STATE OF CALIFORNIA
Syn Yee Chin
FOR REVISION ONLY 5 6 7

REGISTERED PROFESSIONAL ENGINEER — FADI WALIEDDINE No. 11465 Exp. 12/31/2011 ELECTRICAL — STATE OF CALIFORNIA
FOR REVISION ONLY 3 4

REGISTERED PROFESSIONAL ENGINEER — S. A. ESTOQUE, JR. No. E-10151 Exp. 12/31/2008 ELECTRICAL — STATE OF CALIFORNIA
FOR REVISION ONLY 1 2

CONDUIT DATA

Conduit No	Reference	Size	Type	Total Fill (mm2)	Allowable Fill (mm2)	Included Cable No.	Conductor Type
						A-3032-1	1-3/C + gnd #4,600 V, EPR insulation
						A-3039-1	1-3/C + gnd #2,600 V, EPR insulation
						A-3040-1	1-3/C + gnd #2,600 V, EPR insulation
						UP204-1	1-2/C + gnd #10,600 V, EPR insulation 7
						UP206-8	1-2/C + gnd #8,600 V, EPR insulation
						S-2032-1	1-3/C + gnd #4,600 V, EPR insulation
						A-3036-1	1-3/C + gnd #4,600 V, EPR insulation
						A-2035-1	1-3/C + gnd #6,600 V, EPR insulation
						A-2035-3	1-3/C + gnd #6,600 V, EPR insulation
						UP205-7	1-2/C + gnd #8,600 V, EPR insulation
						UP206-7	1-2/C + gnd #8,600 V, EPR insulation 7
						A-3035-1	1-3/C + gnd #4,600 V, EPR insulation
						A-3034-1	1-3/C + gnd #2,600 V, EPR insulation
						UP207-1	1-2/C + gnd #10,600 V, EPR insulation
						S-2031-1	1-3/C + gnd #2,600 V, EPR insulation
						UP206-1	1-2/C + gnd #10,600 V, EPR insulation
						1201-2	1-2/C + gnd #10,600 V, EPR insulation 7
						UP208-7	1-2/C + gnd #8,600 V, EPR insulation
						1201-6	1-2/C + gnd #10,600 V, EPR insulation 7
						A-3043-1	1-3/C + gnd #2,600 V, EPR insulation
						A-3042-1	1-3/C + gnd #2,600 V, EPR insulation
						2119-B	1-3/C + gnd 250 kcmil,600 V, EPR insulation
						A-3033-1	1-3/C + gnd #2,600 V, EPR insulation
						UP208-8	1-2/C + gnd #8,600 V, EPR insulation
2T39	E-212, E-21	610	152.4 mm siderail ladder tray	9889.17	18064.48	A-3032-1	1-3/C + gnd #4,600 V, EPR insulation
						2119-B	1-3/C + gnd 250 kcmil,600 V, EPR insulation
						A-2035-1	1-3/C + gnd #6,600 V, EPR insulation
						S-2032-1	1-3/C + gnd #4,600 V, EPR insulation
						S-2031-1	1-3/C + gnd #2,600 V, EPR insulation
						A-3036-1	1-3/C + gnd #4,600 V, EPR insulation
						A-3035-1	1-3/C + gnd #4,600 V, EPR insulation
						A-3034-1	1-3/C + gnd #2,600 V, EPR insulation
						A-3033-1	1-3/C + gnd #2,600 V, EPR insulation
						Pull rope	Soft-Fiber Polyester
						A-3039-1	1-3/C + gnd #2,600 V, EPR insulation
						A-3042-1	1-3/C + gnd #2,600 V, EPR insulation
						A-3031-1	1-3/C + gnd #4,600 V, EPR insulation
						A-3006-1	1-3/C + gnd #4,600 V, EPR insulation
						A-3005-1	1-3/C + gnd #2,600 V, EPR insulation
						A-2014-1	1-3/C + gnd #2,600 V, EPR insulation
						A-2011-1	1-3/C + gnd #2,600 V, EPR insulation
						A-3057-1	1-3/C + gnd #2,600 V, EPR insulation
						A-3043-1	1-3/C + gnd #2,600 V, EPR insulation
						A-3040-1	1-3/C + gnd #2,600 V, EPR insulation

For continuation, see next sheet.

CONDUIT AND TRAY SCHEDULE

E-419

LAST REVISION 00-00-00
DATE PLOTTED => 15-APR-2011
TIME PLOTTED => 13:23

DATE	REVISED BY	DATE	REVISED BY
8/02	PBP	AB	8/02

CALCULATED/DESIGNED BY
CHECKED BY

DESIGN OVERSIGHT
BEHZAD GOLEMOHAMMADI

STATE OF CALIFORNIA - DEPARTMENT OF TRANSPORTATION
Caltrans

FOR REDUCED PLANS ORIGINAL SCALE IS IN MILLIMETERS 0 20 40 60 80

DGN FILE =>04-0120f1_0374R07.dgn
USERNAME =>llorico

CU 04251 EA 0120F1

CONDUIT DATA

Conduit No	Reference	Size	Type	Total Fill (mm²)	Allowable Fill (mm²)	Included Cable No.	Conductor Type
5002	E-71A	53	Liquidtight Flex. Metal Cond.	0.00	879.42	Pull rope	Soft-Fiber Polyester
5004	E-71A	53	Liquidtight Flex. Metal Cond.	562.30 (4)	649.22	Pull rope	Soft-Fiber Polyester
						LP219-2,4	1-3/C + gnd #6, 600 V, EPR insulation
						LP219-6,8	1-3/C + gnd #6, 600 V, EPR insulation
5005	E-71A	53	Liquidtight Flex. Metal Cond.	0.00	879.42	Pull rope	Soft-Fiber Polyester
5006	E-71A	53	Liquidtight Flex. Metal Cond.	0.00	879.42	Pull rope	Soft-Fiber Polyester
5026	E-72A	53	Liquidtight Flex. Metal Cond.	205.22	649.22 (4)	UP205-9	1-2/C + gnd #12, 600 V, EPR insulation
						UP205-11	1-2/C + gnd #12, 600 V, EPR insulation
						Pull rope	Soft-Fiber Polyester
5027	E-72A	53	Liquidtight Flex. Metal Cond.	0.00	879.42	Pull rope	Soft-Fiber Polyester
5029	E-72A	53	Liquidtight Flex. Metal Cond.	562.30 (4)	649.22	LP220-2,4	1-3/C + gnd #6, 600 V, EPR insulation
						Pull rope	Soft-Fiber Polyester
						LP220-6,8	1-3/C + gnd #6, 600 V, EPR insulation
5030	E-72A	53	Liquidtight Flex. Metal Cond.	0.00	879.42	Pull rope	Soft-Fiber Polyester
5031	E-72A	53	Liquidtight Flex. Metal Cond.	0.00	879.42	Pull rope	Soft-Fiber Polyester
5051	E-73A	53	Liquidtight Flex. Metal Cond.	49.21	879.42	Pull rope	Soft-Fiber Polyester
						UP206-5	2+1gnd #12,#12, 600 V, RHH/RHW Insulation
5053	E-73A	53	Liquidtight Flex. Metal Cond.	227.46	879.42	UP206-9	1-2/C + gnd #8, 600 V, EPR insulation
						Pull rope	Soft-Fiber Polyester
5054	E-73A	53	Liquidtight Flex. Metal Cond.	562.30 (4)	649.22	Pull rope	Soft-Fiber Polyester
						LP221-6,8	1-3/C + gnd #6, 600 V, EPR insulation
						LP221-2,4	1-3/C + gnd #6, 600 V, EPR insulation
5055	E-73A	53	Liquidtight Flex. Metal Cond.	0.00	879.42	Pull rope	Soft-Fiber Polyester
5056	E-73A	53	Liquidtight Flex. Metal Cond.	0.00	879.42	Pull rope	Soft-Fiber Polyester
5076	E-74A	53	Liquidtight Flex. Metal Cond.	49.21	879.42	UP207-5	2 + 1 gnd #12,#12, 600 V, RHH/RHW Insulation
						Pull rope	Soft-Fiber Polyester
5077	E-74A	53	Liquidtight Flex. Metal Cond.	0.00	879.42	Pull rope	Soft-Fiber Polyester
5079	E-74A	53	Liquidtight Flex. Metal Cond.	562.30 (4)	649.22	LP222-6,8	1-3/C + gnd #6, 600 V, EPR insulation
						Pull rope	Soft-Fiber Polyester
						LP222-2,4	1-3/C + gnd #6, 600 V, EPR insulation
5080	E-74A	53	Liquidtight Flex. Metal Cond.	0.00	879.42	Pull rope	Soft-Fiber Polyester
5081	E-74A	53	Liquidtight Flex. Metal Cond.	0.00	879.42	Pull rope	Soft-Fiber Polyester
5082	E-117	78	RGS-PVC coated conduit	150.44	1935.24	Pull rope	Soft-Fiber Polyester
						MVDSE03A	MVDS DLC

REQUEST FOR INFORMATION NOT ADDRESSED IN THIS CCO REMAIN IN FORCE

MARK	DATE	DESCRIPTIONS REVISIONS	BY	CH'D	CCO#
4	03/24/11	BIKE PATH CONDUIT	TW	RG	73
3	06/11/10	BIKE PATH CONDUIT	TW	RG	73
2	03/30/09	SERVICE PLATFORM ELECTRICAL CHANGES	RR RY	RG MP	55
1	03/04/08	BARRIER MODIFICATIONS	JS BM	RG SE	44

CONTRACT CHANGE ORDER NO. 73
SHEET 38 OF 52

REGISTERED PROFESSIONAL ENGINEER — S. A. ESTOQUE, JR — No. E-10151 — Exp. 12/31/2008 ELECTRICAL — STATE OF CALIFORNIA
FOR REVISION ONLY 1

REGISTERED PROFESSIONAL ENGINEER — FADI WALIEDDINE — No. 11465 — Exp. 12/31/2009 ELECTRICAL — STATE OF CALIFORNIA
FOR REVISION ONLY 2

REGISTERED PROFESSIONAL ENGINEER — SYN YEE CHIN — No. 18186 — Exp. 09/30/2011 ELECTRICAL — STATE OF CALIFORNIA
FOR REVISION ONLY 3 4

3 REVISIONS SUPERCEDED 4

DIST	COUNTY	ROUTE	KILOMETER POST TOTAL PROJECT	SHEET No.	TOTAL SHEETS
04	SF	80	13.2/13.9	394 R4	1204

Jens Erlingsson 12/19/02
REGISTERED ELECTRICAL ENGINEER DATE

REGISTERED PROFESSIONAL ENGINEER — JENS ERLINGSSON — No. 8249 — Exp. 9/30/06 ELECTRICAL — STATE OF CALIFORNIA

12-6-04
PLANS APPROVAL DATE

PB POWER, Inc.
A Parsons Brinckerhoff Company
303 Second St., Suite 700N
San Francisco, CA 94107-1317

The State of California or its officers or agents shall not be responsible for the accuracy or completeness of electronic copies of this plan sheet.

Caltrans now has a web site! To get to the web site, go to http://www.dot.ca.gov

CONDUIT DATA

Conduit No	Reference	Size	Type	Total Fill (mm²)	Allowable Fill (mm²)	Included Cable No.	Conductor Type
5101	E-75A	53	Liquidtight Flex. Metal Cond.	481.89	879.42	UP208-5	2 + 1 gnd #12,#12, 600 V, RHH/RHW insulation
						UP208-11	1-3/C #12, 600 V, EPR insulation
						UP208-15	1-2/C + gnd #8, 600 V, EPR insulation
						UP208-9	1-2/C + gnd #12, 600 V, EPR insulation
						Pull rope	Soft-Fiber Polyester
5102	E-75A	53	Liquidtight Flex. Metal Cond.	0.00	879.42	Pull rope	Soft-Fiber Polyester
5104	E-75A	53	Liquidtight Flex. Metal Cond.	562.30 (4)	649.22	LP223-2,4	1-3/C + gnd #6, 600 V, EPR insulation
						LP223-6,8	1-3/C + gnd #6, 600 V, EPR insulation
						Pull rope	Soft-Fiber Polyester
5105	E-75A	53	Liquidtight Flex. Metal Cond.	476.76 (4)	1109.96	Pull rope	Soft-Fiber Polyester
						2107-3	1-4/C + gnd #4, 600 V, EPR insulation 4
5106	E-75A	53	Liquidtight Flex. Metal Cond.	0.00	879.42	Pull rope	Soft-Fiber Polyester
5201	E-114	78	RGS conduit	562.30 (4)	1935.24	Pull rope	Soft-Fiber Polyester
						LP219-2,4	1-3/C + gnd #6, 600 V, EPR insulation
						LP219-6,8	1-3/C + gnd #6, 600 V, EPR insulation
5202	E-114	53	RGS conduit	0.00	1935.24	Pull rope	Soft-Fiber Polyester
5203	E-71A, E-114	53	RGS conduit	527.18	879.42	2095	1-3/C + gnd #2, 600 V, EPR insulation
						Pull rope	Soft-Fiber Polyester
5204	E-114	78	RGS conduit	0.00	1935.24	Pull rope	Soft-Fiber Polyester
5205	E-114	53	RGS conduit	527.18	879.42	Pull rope	Soft-Fiber Polyester
						2103	1-3/C + gnd #2, 600 V, EPR insulation
5206	E-114	78	RGS conduit	1201.71	1935.24	1474-4	50 pair #18, shielded pairs, IS/OS shield 600 V, XLPE insul., PVC jacket
5206A	E-71A	41	Liquidtight Flex. Metal Cond.		534.55	Pull rope	Soft-Fiber Polyester
5207	E-114	78	RGS conduit	1352.15	1935.24	MVDSE01A	MVDS DLC
						1474-5	50 pair #18, shielded pairs, IS/OS shield 600 V, XLPE insul., PVC jacket
5207A	E-71A	53	Liquidtight Flex. Metal Cond.		879.42	Pull rope	Soft-Fiber Polyester
5208	E-114	78	RGS conduit	30.19	1935.24	2475-3A	12 Fiber, single mode fiberoptic cable
						Pull rope	Soft-Fiber Polyester

For continuation, see next sheet.

CONDUIT AND TRAY SCHEDULE

E-439

REVISED BY | DATE REVISED
DATE 8/02 | 8/02
PBP | AB
CALCULATED/DESIGNED BY | CHECKED BY
BEHZAD GOLEMOHAMMADI
DESIGN OVERSIGHT

STATE OF CALIFORNIA - DEPARTMENT OF TRANSPORTATION
Caltrans

LAST REVISION 00-00-00
DATE PLOTTED => 15-APR-2011
TIME PLOTTED => 13:23

FOR REDUCED PLANS ORIGINAL SCALE IS IN MILLIMETERS 0 20 40 60 80
DGN FILE =>04-0120f1_0394R04.dgn
USERNAME =>llorico
CU 04251
EA 0120F1

CONDUIT DATA

Conduit No	Reference	Size	Type	Total Fill (mm²)	Allowable Fill (mm²)	Included Cable No.	Conductor Type
5210	E-114	78	RGS conduit	1323.45	1935.24	Pull rope	Soft-Fiber Polyester
						2119-2	4 pair #22, shielded pairs, 300 V, PE insulation
						1473-5	50 pair #18, shielded pairs, IS/OS shield 600 V, XLPE insul., PVC jacket
5210A	E-71A	41	Liquidtight Flex. Metal cond.		534.55	Pull rope	Soft-Fiber Polyester
5211	E-114	78	RGS conduit	0.00	1935.24	Pull rope	Soft-Fiber Polyester
5221	E-115	78	RGS conduit	187.79	1935.24	2202-2	1-3/C #14, 600 V, EPR insulation
						Pull rope	Soft-Fiber Polyester
						2202-3	1-7/C #16, 600 V, EPR insulation
5222	E-115	78	RGS conduit	830.76 (6)	1935.24	LP220-2,4	1-3/C + gnd #6, 600 V, EPR insulation
						LP220-6,8	1-3/C + gnd #6, 600 V, EPR insulation
						Pull rope	Soft-Fiber Polyester
						S-3056-6	1-4/C #14, 600 V, EPR insulation
						2204-2	1-3/C #14, 600 V, EPR insulation
						2204-1	1-3/C #14, 600 V, EPR insulation (6)
5223	E-115	78	RGS conduit	1235.86	1935.24	UP205-1	1-2/C + gnd #10 ,600 V, EPR insulation
						Pull rope	Soft-Fiber Polyester
						UP206-1	1-2/C + gnd #10 ,600 V, EPR insulation
						UP205-8	1-2/C + gnd #8, 600 V, EPR insulation
						2096	1-3/C + gnd #2, 600 V, EPR insulation
						UP205-7	1-2/C + gnd #8, 600 V, EPR insulation
5224	E-115	78	RGS conduit	227.46	1935.24	Pull rope	Soft-Fiber Polyester
						UP205-6	1-2/C + gnd #8, 600 V, EPR insulation
5225	E-115	53	RGS conduit	527.18	879.42	Pull rope	Soft-Fiber Polyester
						2104	1-3/C + gnd #2, 600 V, EPR insulation
5226	E-115	78	RGS conduit	1558.08	1935.24	2120-1	1-2PR #18 Twisted Shielded w/overall Shield
						2121-1	1-2PR #18 Twisted Shielded w/overall Shield
						2910-11	1-3/C #16, 600 V, EPR insulation
						1474-5	50 pair #18, shielded pairs, IS/OS shield 600 V, XLPE insul., PVC jacket
						2155	1-2 pair, shielded #18 with IS/OA, 300V PVC jacket
						Pull rope	Soft-Fiber Polyester
5227	E-115	78	RGS conduit	1201.71	1935.24	Pull rope	Soft-Fiber Polyester
						1474-6	50 pair #18, shielded pairs, IS/OS shield 600 V, XLPE insul., PVC jacket
5228	E-115	78	RGS conduit	1445.19	1935.24	2910-10	4 pair #22, shielded pairs, 300 V, PE insulation
						Pull rope	Soft-Fiber Polyester
						1473-5	50 pair #18, shielded pairs, IS/OS shield 600 V, XLPE insul., PVC jacket
						2910-12	4 pair #22, shielded pairs, 300 V, PE insulation
5229	E-115	78	RGS conduit	317.80	1935.24	1474-5A	1 - 6 pair, shielded #18 with overall shield, 300 V, PVC jacket
						Pull rope	Soft-Fiber Polyester
						1474-5B	1 - 6 pair, shielded #18 with overall shield, 300 V, PVC jacket
5230	E-114	78	RGS conduit	0.00	1935.24	Pull rope	Soft-Fiber Polyester
5231	E-114	78	RGS conduit	0.00	1935.24	Pull rope	Soft-Fiber Polyester
5232	E-114	78	RGS conduit	1201.71	1935.24	1473-4	50 pair #18, shielded pairs, IS/OS shield 600 V, XLPE insul., PVC jacket
						Pull rope	Soft-Fiber Polyester
5233	E-115	78	RGS conduit	98.10	1935.24	Pull rope	Soft-Fiber Polyester
						2120-1	1-2PR #18 Twisted Shielded w/overall Shield
5234	E-115	78	RGS conduit	0.00	1935.24	Pull rope	Soft-Fiber Polyester
5235	E-115	78	RGS conduit	1201.71	1935.24	Pull rope	Soft-Fiber Polyester
						1473-6	50 pair #18, shielded pairs, IS/OS shield 600 V, XLPE insul., PVC jacket
5236	E-116	53	RGS conduit	0.00	1935.24	Pull rope	Soft-Fiber Polyester

THIS PLAN ACCURATE FOR ELECTRICAL WORK ONLY.

REQUEST FOR INFORMATION NOT ADDRESSED IN THIS CCO REMAIN IN FORCE

MARK	DATE	DESCRIPTIONS	BY	CH'D	CCO#
		REVISIONS			
6	03/24/11	BIKE PATH CONDUIT	TW	RG	73
5	06/11/10	BIKE PATH CONDUIT	TW	RG	73
4	03/26/10	DEHUMIDIFIER SCADA INTERFACE	RR	RG FW	130
3	08/03/09	ELECTRICAL WARNING SYSTEMS	RY RR	RG FW	61
2	03/30/09	SERVICE PLATFORM ELECTRICAL CHANGES	RR RY	RG MP	55
1	03/04/08	BARRIER MODIFICATIONS	JS BM	RG SE	44

CONTRACT CHANGE ORDER NO. 73
SHEET 39 OF 52

REGISTERED PROFESSIONAL ENGINEER — S. A. ESTOQUE, JR. — No. E-10151 — Exp. 12/31/2009 ELECTRICAL — STATE OF CALIFORNIA
FOR REVISION ONLY (1)

REGISTERED PROFESSIONAL ENGINEER — FADI WALIEDDINE — No. 11465 — Exp. 12/31/2011 ELECTRICAL — STATE OF CALIFORNIA
FOR REVISION ONLY (2 3)

REGISTERED PROFESSIONAL ENGINEER — SYN YEE CHIN — No. 18186 — Exp. 09/30/2011 ELECTRICAL — STATE OF CALIFORNIA
FOR REVISION ONLY (4 5 6)

(5) REVISIONS SUPERCEDED (6)

CONDUIT DATA

Conduit No	Reference	Size	Type	Total Fill (mm²)	Allowable Fill (mm²)	Included Cable No.	Conductor Type
5237	E-116	78	RGS conduit	0.00	1935.24	Pull rope	Soft-Fiber Polyester
5238	E-116	78	RGS conduit	1201.71	1935.24	1473-6	50 pair #18, shielded pairs, IS/OS shield 600 V, XLPE insul., PVC jacket
						Pull rope	Soft-Fiber Polyester
5241	E-116	78	RGS conduit	942.43	1935.24	2202-3	1-7/C #16, 600 V, EPR insulation
						2202-2	1-3/C #14, 600 V, EPR insulation
						2105	1-3/C + gnd #2, 600 V, EPR insulation
						2202-1	1-2/C + gnd #8, 600 V, EPR insulation
						Pull rope	Soft-Fiber Polyester
5242	E-116	53	RGS conduit	192.40	1935.24	Pull rope	Soft-Fiber Polyester
						CCTVE01AB	TVCP
						CCTVE01AA	TVP
5243	E-116	53	RGS conduit	527.18	879.42	Pull rope	Soft-Fiber Polyester
						2097	1-3/C + gnd #2, 600 V, EPR insulation
5244	E-116	78	RGS conduit	648.58	1935.24	Pull rope	Soft-Fiber Polyester
						LP221-2,4	1-3/C + gnd #6, 600 V, EPR insulation
						LP221-6,8	1-3/C + gnd #6, 600 V, EPR insulation
5245	E-116	78	RGS conduit	642.71	1935.24	2202-1	1-2/C + gnd #8, 600 V, EPR insulation
						2202-2	1-3/C #14, 600 V, EPR insulation
						UP206-9	1-2/C + gnd #8, 600 V, EPR insulation
						2204-3	1-7/C #16, 600 V, EPR insulation
						Pull rope	Soft-Fiber Polyester
5246	E-116	78	RGS conduit	1201.71	1935.24	1474-6	50 pair #18, shielded pairs, IS/OS shield 600 V, XLPE insul., PVC jacket
						Pull rope	Soft-Fiber Polyester
5247	E-116	78	RGS conduit	1525.97	1935.24	Pull rope	Soft-Fiber Polyester
						MVDSE02A	MVDS DLC
						CCTVE01AD	TVL
						CCTVE01AC	TVC
						1474-7	50 pair #18, shielded pairs, IS/OS shield 600 V, XLPE insul., PVC jacket
5249	E-116	78	RGS-PVC coated conduit	30.19	1935.24	2475-3B	12 Fiber, single mode fiberoptic cable
						Pull rope	Soft-Fiber Polyester
5250	E-116	78	RGS conduit	1201.71	1935.24	1473-7	50 pair #18, shielded pairs, IS/OS shield 600 V, XLPE insul., PVC jacket
						Pull rope	Soft-Fiber Polyester

For continuation, see next sheet.

CONDUIT AND TRAY SCHEDULE

E-440

DIST	COUNTY	ROUTE	KILOMETER POST TOTAL PROJECT	SHEET No	TOTAL SHEETS
04	SF	80	13.2/13.9	395 R6	1204

JENS ERLINGSSON 12/19/02
REGISTERED ELECTRICAL ENGINEER DATE

REGISTERED PROFESSIONAL ENGINEER — JENS ERLINGSSON — No. 8249 — Exp. 9/30/06 ELECTRICAL — STATE OF CALIFORNIA

12-6-04
PLANS APPROVAL DATE

PB POWER, Inc.
A Parsons Brinckerhoff Company
303 Second St., Suite 700N
San Francisco, CA 94107-1317

The State of California or its officers or agents shall not be responsible for the accuracy or completeness of electronic copies of this plan sheet.

Caltrans now has a web site! To get to the web site, go to http://www.dot.ca.gov

STATE OF CALIFORNIA - DEPARTMENT OF TRANSPORTATION — Caltrans
DESIGN OVERSIGHT — BEHZAD GOLEMOHAMMADI
CALCULATED/ DESIGNED BY — CHECKED BY — PBP — AB
DATE — 8/02 — 8/02
REVISED BY — DATE REVISED

LAST REVISION 00-00-00
DATE PLOTTED => 15-APR-2011
TIME PLOTTED => 13:23

FOR REDUCED PLANS ORIGINAL SCALE IS IN MILLIMETERS 0 20 40 60 80
DGN FILE =>04-0120F1_0395R06.dgn
USERNAME =>llorico
CU 04251
EA 0120F1

CONDUIT DATA

Conduit No	Reference	Size	Type	Total Fill (mm²)	Allowable Fill (mm²)	Included Cable No.	Conductor Type
5251	E-116	78	RGS conduit	0.00	1935.24	Pull rope	Soft-Fiber Polyester
5261	E-117	78	RGS conduit	648.58	1935.24	LP222-2,4	1-3/C + gnd #6, 600 V, EPR insulation
						Pull rope	Soft-Fiber Polyester
						LP222-6,8	1-3/C + gnd #6, 600 V, EPR insulation
5262	E-117	78	RGS conduit	0.00	1935.24	Pull rope	Soft-Fiber Polyester
5263	E-117	53	RGS conduit	527.18	879.42	2098	1-3/C + gnd #2, 600 V, EPR insulation
						Pull rope	Soft-Fiber Polyester
5264	E-117	78	RGS conduit	0.00	1935.24	Pull rope	Soft-Fiber Polyester
5265	E-117	53	RGS conduit	527.18	879.42	Pull rope	Soft-Fiber Polyester
						2106	1-3/C + gnd #2, 600 V, EPR insulation
5266	E-117	78	RGS conduit	0.00		Pull rope	Soft-Fiber Polyester
5267	E-117	78	RGS conduit	1201.71	1935.24	Pull rope	Soft-Fiber Polyester
						1474-8	50 pair #18, shielded pairs, IS/OS shield 600 V, XLPE insul., PVC jacket
5269	E-117	78	RGS-PVC coated conduit	30.19	1935.24	2475-3C	12 Fiber, single mode fiberoptic cable
						Pull rope	Soft-Fiber Polyester
5270	E-117	78	RGS conduit	1201.71	1935.24	Pull rope	Soft-Fiber Polyester
						1473-7	50 pair #18, shielded pairs, IS/OS shield 600 V, XLPE insul., PVC jacket
5271	E-117	78	RGS conduit	1201.71	1935.24	Pull rope	Soft-Fiber Polyester
						1474-7	50 pair #18, shielded pairs, IS/OS shield 600 V, XLPE insul., PVC jacket
5272	E-117	78	RGS conduit	1201.71	1935.24	1473-8	50 pair #18, shielded pairs, IS/OS shield 600 V, XLPE insul., PVC jacket
						Pull rope	Soft-Fiber Polyester
5273	E-117	53	RGS conduit	0.00	1935.24	Pull rope	Soft-Fiber Polyester
5274	E-117	78	RGS conduit	150.44	1935.24	MVDSE03A	MVDS DLC
						Pull rope	Soft-Fiber Polyester
5275	E-118	78	RGS conduit	1201.71	1935.24	2474-10	50 pair #18, shielded pairs, IS/OS shield 600 V, XLPE insul., PVC jacket
						Pull rope	Soft-Fiber Polyester
5276	E-118	78	RGS conduit	0.00	1935.24	Pull rope	Soft-Fiber Polyester
5277	E-118	78	RGS conduit	1201.71	1935.24	1473-8	50 pair #18, shielded pairs, IS/OS shield 600 V, XLPE insul., PVC jacket
						Pull rope	Soft-Fiber Polyester
5281	E-118	78	RGS conduit	307.37	1935.24	2210-5	1-3/C #14, 600 V, EPR insulation
						Pull rope	Soft-Fiber Polyester
						2201-3	1-3/C #14, 600 V, EPR insulation
						2201-4	1-9/C #16, 600 V, EPR insulation
5282	E-118	78	RGS conduit	660.40	1935.24	S-3056-9	1-4/C #14, 600 V, EPR insulation
						Pull rope	Soft-Fiber Polyester
						LP223-2,4	1-2/C + gnd #6, 600 V, EPR insulation
						LP223-6,8	1-2/C + gnd #6, 600 V, EPR insulation
5283	E-118	78	RGS conduit	1153.19	1935.24	UP208-8	1-2/C + gnd #8, 600 V, EPR insulation
						Pull rope	Soft-Fiber Polyester
						2099	1-3/C + gnd #2, 600 V, EPR insulation
						UP208-1	1-2/C + gnd #8, 600 V, EPR insulation
						UP208-7	1-2/C + gnd #8, 600 V, EPR insulation
5284	E-118	53	RGS conduit	626.01	879.42	UP208-2	1-2/C + gnd #8, 600 V, EPR insulation
						Pull rope	Soft-Fiber Polyester
						UP208-4	1-2/C + gnd #8, 600 V, EPR insulation
						UP208-6	1-2/C + gnd #8, 600 V, EPR insulation
5285	E-118	78	RGS conduit	527.18	1935.24	2107	1-3/C + gnd #2, 600 V, EPR insulation
						Pull rope	Soft-Fiber Polyester

THIS PLAN ACCURATE FOR ELECTRICAL WORK ONLY.

REQUEST FOR INFORMATION NOT ADDRESSED IN THIS CCO REMAIN IN FORCE

MARK	DATE	DESCRIPTIONS REVISIONS	BY	CH'D	CCO#
5	03/24/11	BIKE PATH CONDUIT	TW	RG	73
4	06/11/10	BIKE PATH CONDUIT	TW	RG	73
3	03/30/09	SERVICE PLATFORM ELECTRICAL CHANGES	RR RY	RG MP	55
2	03/04/08	BARRIER MODIFICATIONS	JS BM	RG SE	44
1	02/19/08	ELECTRICAL MODIFICATIONS	MP EL	RR	42

CONTRACT CHANGE ORDER NO. 73
SHEET 40 OF 52

Caltrans Metric

DIST	COUNTY	ROUTE	KILOMETER POST TOTAL PROJECT	SHEET No	TOTAL SHEETS
04	SF	80	13.2/13.9	396 R5	1204

Jens Erlingsson 12/19/02
REGISTERED ELECTRICAL ENGINEER DATE

12-6-04
PLANS APPROVAL DATE

REGISTERED PROFESSIONAL ENGINEER — JENS ERLINGSSON No. 8249 Exp. 9/30/06 ELECTRICAL — STATE OF CALIFORNIA

PB POWER, inc.
A Parsons Brinckerhoff Company
303 Second St., Suite 700N
San Francisco, CA 94107-1317

The State of California or its officers or agents shall not be responsible for the accuracy or completeness of electronic copies of this plan sheet.

Caltrans now has a web site! To get to the web site, go to http://www.dot.ca.gov

REGISTERED PROFESSIONAL ENGINEER — MARWELL FUNTO TAKAKI No. E 8651 Exp. 9/30/2008 ELECTRICAL — STATE OF CALIFORNIA
FOR REVISION ONLY 1

REGISTERED PROFESSIONAL ENGINEER — S. A. ESTOQUE, JR. No. E-10151 Exp. 12/31/2008 ELECTRICAL — STATE OF CALIFORNIA
FOR REVISION ONLY 2

REGISTERED PROFESSIONAL ENGINEER — FADI WALIEDDINE No. 11465 Exp. 12/31/2009 ELECTRICAL — STATE OF CALIFORNIA
FOR REVISION ONLY 3

REGISTERED PROFESSIONAL ENGINEER — SYN YEE CHIN No. 18186 Exp. 09/30/2011 ELECTRICAL — STATE OF CALIFORNIA
FOR REVISION ONLY 4 5

4 REVISIONS SUPERCEDED 5

CONDUIT DATA

Conduit No	Reference	Size	Type	Total Fill (mm²)	Allowable Fill (mm²)	Included Cable No.	Conductor Type
5286	E-118	78	RGS conduit	1299.81	1935.24	2154	1 - 2 pair, shielded #18 with IS/OA, 300 V, PVC jacket
						1474-10	50 pair #18, shielded pairs, IS/OS shield 600 V, XLPE insul., PVC jacket
						Pull rope	Soft-Fiber Polyester
5287	E-118	53	RGS conduit	0.00	1935.24	Pull rope	Soft-Fiber Polyester
5289	E-118	78	RGS conduit	1201.71	1935.24	Pull rope	Soft-Fiber Polyester
						1473-10	50 pair #18, shielded pairs, IS/OS shield 600 V, XLPE insul., PVC jacket
5290	E-118	78	RGS conduit	1519.51	1935.24	1474-8A	1 - 6 pair, shielded #18 with overall shield, 300 V, PVC jacket
						1474-8B	1 - 6 pair, shielded #18 with overall shield, 300 V, PVC jacket
						1474-8	50 pair #18, shielded pairs, IS/OS shield 600 V, XLPE insul., PVC jacket
						Pull rope	Soft-Fiber Polyester
5299	E-182	41	RGS conduit	425.70	534.55	A-3032-2	3 + 1 gnd #6,#8, 600 V, RHH/RHW insulation
						A-3033-2	3 + 1 gnd #6,#8, 600 V, RHH/RHW insulation
						Pull rope	Soft-Fiber Polyester
5301	E-181	41	RGS conduit	0.00	534.55	Pull rope	Soft-Fiber Polyester
5302	E-181	41	RGS conduit	0.00	534.55	Pull rope	Soft-Fiber Polyester
5303	E-181	53	RGS conduit	648.58	879.42	A-3040-3	1-3/C + gnd #6, 600 V, EPR insulation
						Pull rope	Soft-Fiber Polyester
						A-3039-3	1-3/C + gnd #6, 600 V, EPR insulation
5304	E-181	53	RGS conduit	0.00	879.42	Pull rope	Soft-Fiber Polyester
5305	E-181	41	RGS conduit	212.85	534.55	Pull rope 5	Soft-Fiber Polyester
						LP219-2A,4A 5	3 + 1 gnd #6,#8, 600 V, RHH/RHW insulation
5306	E-181	41	RGS conduit	212.85	534.55		
						Pull rope	Soft-Fiber Polyester
						LP219-6A,8A 5	3 + 1 gnd #6,#8, 600 V, RHH/RHW insulation
5307	E-181	53	RGS conduit	281.15	1165.23	LP219-2,4	1-3/C + gnd #6, 600 V, EPR insulation
						Pull rope	Soft-Fiber Polyester
5308	E-181	53	RGS conduit	281.15	1165.23		
						Pull rope	Soft-Fiber Polyester
						LP219-6,8	1-3/C + gnd #6, 600 V, EPR insulation
5309	E-181	53	RGS conduit	98.10	879.42	Pull rope	Soft-Fiber Polyester
						2155	1 - 2 pair, shielded #18 with IS/OA, 300 V, PVC jacket
5310	E-181	53	RGS conduit	0.00	879.42	Pull rope	Soft-Fiber Polyester
5311	E-181	41	RGS conduit	126.88	534.55	S-2031-2	3 + 1 gnd #6,#8, 600 V, RHH/RHW insulation
						Pull rope	Soft-Fiber Polyester
						UP204-1	1-2/C + gnd #10, 600 V, EPR insulation

For continuation, see next sheet.

CONDUIT AND TRAY SCHEDULE

E-441

DATE	REVISED BY	DATE REVISED
8/02	AB	8/02

CALCULATED/DESIGNED BY
CHECKED BY

DESIGN OVERSIGHT
BEHZAD GOLEMOHAMMADI

STATE OF CALIFORNIA - DEPARTMENT OF TRANSPORTATION
Caltrans

LAST REVISION 00-00-00
DATE PLOTTED => 15-APR-2011
TIME PLOTTED => 13:23

FOR REDUCED PLANS ORIGINAL SCALE IS IN MILLIMETERS 0 20 40 60 80

DGN FILE =>04-0120f1_0396R05.dgn
USERNAME =>llorico

CU 04251

EA 0120F1

DIST	COUNTY	ROUTE	KILOMETER POST TOTAL PROJECT	SHEET No	TOTAL SHEETS
04	SF	80	13.2/13.9	397 R4	1204

Jens Erlingsson 12/19/02
REGISTERED ELECTRICAL ENGINEER DATE

12-6-04
PLANS APPROVAL DATE

REGISTERED PROFESSIONAL ENGINEER — JENS ERLINGSSON No. 8249 Exp. 9/30/06 ELECTRICAL — STATE OF CALIFORNIA

PB POWER, Inc.
A Parsons Brinckerhoff Company
303 Second St., Suite 700N
San Francisco, CA 94107-1317

The State of California or its officers or agents shall not be responsible for the accuracy or completeness of electronic copies of this plan sheet.

Caltrans now has a web site! To get to the web site, go to http://www.dot.ca.gov

Caltrans Metric

REQUEST FOR INFORMATION NOT ADDRESSED IN THIS CCO REMAIN IN FORCE

MARK	DATE	DESCRIPTIONS	BY	CH'D	CCO#
		REVISIONS			
4	03/24/11	BIKE PATH CONDUIT	TW	RG	73
3	06/11/10	BIKE PATH CONDUIT	TW	RG	73
2	03/04/08	BARRIER MODIFICATIONS	JS BM	RG SE	44
1	02/19/08	ELECTRICAL MODIFICATIONS	MP EL	RR	42

CONTRACT CHANGE ORDER NO. 73
SHEET 41 OF 52

REGISTERED PROFESSIONAL ENGINEER — MARWELL FUMIO TAKATA No. E 8651 Exp. 9/30/2008 ELECTRICAL — STATE OF CALIFORNIA
FOR REVISION ONLY 1

REGISTERED PROFESSIONAL ENGINEER — S. A. ESTOQUE, JR. No. E-10151 Exp. 12/31/2008 ELECTRICAL — STATE OF CALIFORNIA
FOR REVISION ONLY 2

REGISTERED PROFESSIONAL ENGINEER — SYN YEE CHIN No. 18186 Exp. 09/30/2011 ELECTRICAL — STATE OF CALIFORNIA
FOR REVISION ONLY 3 4

3 REVISIONS SUPERCEDED 4

CONDUIT DATA

Conduit No	Reference	Size	Type	Total Fill (mm^2)	Allowable Fill (mm^2)	Included Cable No.	Conductor Type
5312	E-181	41	RGS conduit	0.00	534.55	A-2035-2	3 + 1 gnd #6,#8, 600 V, RHH/RHW Insulation
						Pull rope 4	Soft-Fiber Polyester
5313	E-181	78	RGS conduit	654.06	1935.24	S-2031-4	1-3/C + gnd #4, 600 V, EPR Insulation
						UP204-1	1-2/C + gnd #10, 600 V, EPR Insulation
						S-2031-1	1-3/C + gnd #2, 600 V, EPR Insulation
						Pull rope	Soft-Fiber Polyester
5314	E-181	53	RGS conduit	648.58	879.42	A-2035-1 4	1-3/C + gnd #6, 600 V, EPR Insulation
						A-2035-4	1-3/C + gnd #6, 600 V, EPR Insulation
						Pull rope	Soft-Fiber Polyester
5315	E-181	53	RGS conduit	0.00	879.42	Pull rope	Soft-Fiber Polyester
5316	E-181	53	RGS conduit	0.00	879.42	Pull rope	Soft-Fiber Polyester
5317	E-181	78	RGS conduit	527.18	1935.24	A-2011-1	1-3/C + gnd #2, 600 V, EPR Insulation
						Pull rope	Soft-Fiber Polyester
5320	E-185	78	RGS conduit	0.00	1935.24	Pull rope	Soft-Fiber Polyester
5321	E-181	41	RGS conduit	0.00	534.55	Pull rope	Soft-Fiber Polyester
5322	E-181	41	RGS conduit	0.00	534.55	Pull rope	Soft-Fiber Polyester
5323	E-181	53	RGS conduit	0.00	879.42	Pull rope	Soft-Fiber Polyester
5324	E-181	53	RGS conduit	0.00	879.42	Pull rope	Soft-Fiber Polyester
5325	E-181	53	RGS conduit	0.00	879.42	Pull rope	Soft-Fiber Polyester
5326	E-181	53	RGS conduit	0.00	879.42	Pull rope	Soft-Fiber Polyester
5333	E-182	41	RGS conduit	212.85	534.55	Pull rope	Soft-Fiber Polyester
						LP220-2A,4A 4	3 + 1 gnd #6,#8, 600 V, RHH/RHW Insulation
5334	E-182	41	RGS conduit	0.00	534.55	Pull rope	Soft-Fiber Polyester
5335	E-182	53	RGS conduit	324.29	879.42	Pull rope	Soft-Fiber Polyester
						LP220-2,4	1-3/C + gnd #6, 600 V, EPR Insulation
5336	E-182	53	RGS conduit	0.00	879.42	Pull rope	Soft-Fiber Polyester
5337	E-182	53	RGS conduit	0.00	879.42	Pull rope	Soft-Fiber Polyester
5338	E-182	53	RGS conduit	0.00	879.42	Pull rope	Soft-Fiber Polyester
5346	E-185	53	RGS conduit	366.10	879.42	Pull rope	Soft-Fiber Polyester
						A-3031-1	1-3/C + gnd #4, 600 V, EPR Insulation
5347	E-185	53	RGS conduit	0.00	879.42	Pull rope	Soft-Fiber Polyester
5348	E-181	41	RGS conduit	212.85	534.55	Pull rope	Soft-Fiber Polyester
						A-3031-2	3 + 1 gnd #6,#8, 600 V, RHH/RHW Insulation
5349	E-181	41	RGS conduit	212.85	534.55	Pull rope	Soft-Fiber Polyester
						A-2011-2	3 + 1 gnd #6,#8, 600 V, RHH/RHW Insulation
5350	E-185	53	RGS conduit	0.00	879.42	Pull rope	Soft-Fiber Polyester
5351	E-182	41	RGS conduit	0.00	534.55	Pull rope	Soft-Fiber Polyester
5352	E-182	41	RGS conduit	212.85	534.55	Pull rope 4	Soft-Fiber Polyester
						LP220-6A,8A	3 + 1 gnd #6,#8, 600 V, RHH/RHW Insulation
5353	E-182	53	RGS conduit	0.00	879.42	Pull rope	Soft-Fiber Polyester
5354	E-182	53	RGS conduit	324.29	879.42	Pull rope	Soft-Fiber Polyester
						LP220-6,8	1-3/C + gnd #6, 600 V, EPR Insulation
5355	E-182	53	RGS conduit	0.00	879.42	Pull rope	Soft-Fiber Polyester
5356	E-182	53	RGS conduit	0.00	879.42	Pull rope	Soft-Fiber Polyester
5357	E-182	41	RGS conduit	212.85	534.55	A-3039-2	3 + 1 gnd #6,#8, 600 V, RHH/RHW Insulation
						Pull rope	Soft-Fiber Polyester
5358	E-182	41	RGS conduit	0.00	534.55	Pull rope	Soft-Fiber Polyester
5359	E-182	53	RGS conduit	851.47	879.42	A-3039-3	1-3/C + gnd #6, 600 V, EPR Insulation
						A-3039-1	1-3/C + gnd #2, 600 V, EPR Insulation
						Pull rope	Soft-Fiber Polyester
5360	E-182	53	RGS conduit	648.58	879.42	Pull rope	Soft-Fiber Polyester

CONDUIT DATA

Conduit No	Reference	Size	Type	Total Fill (mm^2)	Allowable Fill (mm^2)	Included Cable No.	Conductor Type
						A-3039-3	1-3/C + gnd #6, 600 V, EPR Insulation
						A-3040-3	1-3/C + gnd #6, 600 V, EPR Insulation
5363	E-182	41	RGS conduit	212.85	534.55	A-2012-2	3 + 1 gnd #6, #8, 600 V, RHH/RHW Insulation
						Pull rope	Soft-Fiber Polyester
5364	E-182	41	RGS conduit	0.00	534.55	Pull rope	Soft-Fiber Polyester
5365	E-182	53	RGS conduit	0.00	879.42	Pull rope	Soft-Fiber Polyester
5366	E-182	53	RGS conduit	527.18	879.42	A-2012-1	1-3/C + gnd #2, 600 V, EPR Insulation
						Pull rope	Soft-Fiber Polyester
5367	E-182	53	RGS conduit	0.00	879.42	Pull rope	Soft-Fiber Polyester
5368	E-182	53	RGS conduit	0.00	879.42	Pull rope	Soft-Fiber Polyester
5369	E-182	53	RGS conduit	0.00	879.42	Pull rope	Soft-Fiber Polyester
5370	E-182	53	RGS conduit	0.00	879.42	Pull rope	Soft-Fiber Polyester
5371	E-182	53	RGS conduit	0.00	879.42	Pull rope	Soft-Fiber Polyester
5372	E-182	53	RGS conduit	0.00	879.42	Pull rope	Soft-Fiber Polyester
5373	E-182	53	RGS conduit	0.00	879.42	Pull rope	Soft-Fiber Polyester
5374	E-182	53	RGS conduit	0.00	879.42	Pull rope	Soft-Fiber Polyester
5375	E-182	53	RGS conduit	0.00	879.42	Pull rope	Soft-Fiber Polyester
5378	E-185	78	RGS conduit	0.00	1935.24	Pull rope	Soft-Fiber Polyester
5379	E-185	78	RGS conduit	0.00	1935.24	Pull rope	Soft-Fiber Polyester
5380	E-182	53	RGS conduit	0.00	879.42	Pull rope	Soft-Fiber Polyester
5381	E-182	41	RGS conduit	0.00	534.55	Pull rope	Soft-Fiber Polyester
5382	E-182	41	RGS conduit	0.00	534.55	Pull rope	Soft-Fiber Polyester
5383	E-182	78	RGS conduit	0.00	1935.24	Pull rope	Soft-Fiber Polyester
5384	E-182	53	RGS conduit	0.00	879.42	Pull rope	Soft-Fiber Polyester
5385	E-182	53	RGS conduit	0.00	879.42	Pull rope	Soft-Fiber Polyester
5386	E-182	53	RGS conduit	0.00	879.42	Pull rope	Soft-Fiber Polyester
5387	E-182	41	RGS conduit	212.85	534.55	A-3040-2	3 + 1 gnd #6,#8, 600 V, RHH/RHW Insulation
						Pull rope	Soft-Fiber Polyester

For continuation, see next sheet.

CONDUIT AND TRAY SCHEDULE

E-442

DESIGN OVERSIGHT	CALCULATED/ DESIGNED BY	CHECKED BY	DATE	REVISED BY	DATE REVISED
BEHZAD GOLEMOHAMMADI	PBP	AB	8/02		8/02

STATE OF CALIFORNIA - DEPARTMENT OF TRANSPORTATION
Caltrans

LAST REVISION 00-00-00
DATE PLOTTED => 15-APR-2011
TIME PLOTTED => 13:23

FOR REDUCED PLANS ORIGINAL SCALE IS IN MILLIMETERS 0 20 40 60 80

DGN FILE =>04-0120f1_0397R04.dgn
USERNAME =>llorico

CU 04251 EA 0120F1

CONDUIT DATA

Conduit No	Reference	Size	Type	Total Fill (mm^2)	Allowable Fill (mm^2)	Included Cable No.	Conductor Type
5388	E-182	41	RGS conduit	0.00	534.55	Pull rope	Soft-Fiber Polyester
5389	E-182	53	RGS conduit	851.47	879.42	A-3040-3	1-3/C + gnd #6, 600 V, EPR Insulation
						Pull rope	Soft-Fiber Polyester
						A-3040-1	1-3/C + gnd #2, 600 V, EPR Insulation
5390	E-182	53	RGS conduit	0.00	879.42	Pull rope	Soft-Fiber Polyester
5391	E-182	53	RGS conduit	0.00	879.42	Pull rope	Soft-Fiber Polyester
5392	E-182	53	RGS conduit	0.00	879.42	Pull rope	Soft-Fiber Polyester
5393	E-183	41	RGS conduit	440.31	534.55	A-3034-2	3 + 1 gnd #6,#8, 600 V, RHH/RHW Insulation
						Pull rope	Soft-Fiber Polyester
						UP106-1	1-2/C + gnd #8, 600 V, EPR Insulation
5394	E-183	41	RGS conduit	425.70	534.55	Pull rope 3	Soft-Fiber Polyester
						LP221-2A,4A	3 + 1 gnd #6,#8, 600 V, RHH/RHW Insulation
						LP221-6A,8A	3 + 1 gnd #6,#8, 600 V, RHH/RHW Insulation
5395	E-183	78	RGS conduit	527.18	1935.24	Pull rope	Soft-Fiber Polyester
						A-3034-1	1-3/C + gnd #2, 600 V, EPR Insulation
5396	E-183	53	RGS conduit	562.30 3	681.55	Pull rope	Soft-Fiber Polyester
						LP221-2,4	1-3/C + gnd #6 ,600 V, EPR Insulation
						LP221-6,8	1-3/C + gnd #6 ,600 V, EPR Insulation
5397	E-183	53	RGS conduit	0.00	879.42	Pull rope	Soft-Fiber Polyester
5398	E-183	53	RGS conduit	0.00	879.42	Pull rope	Soft-Fiber Polyester
5399	E-183	41	RGS conduit	0.00	534.55	Pull rope	Soft-Fiber Polyester
5400	E-183	41	RGS conduit	0.00	534.55	Pull rope	Soft-Fiber Polyester
5401	E-183	53	RGS conduit	0.00	879.42	Pull rope	Soft-Fiber Polyester
5402	E-183	53	RGS conduit	0.00	879.42	Pull rope	Soft-Fiber Polyester
5403	E-183	53	RGS conduit	0.00	879.42	Pull rope	Soft-Fiber Polyester
5404	E-183	53	RGS conduit	0.00	879.42	Pull rope	Soft-Fiber Polyester
5405	E-183	53	RGS conduit	0.00	879.42	Pull rope	Soft-Fiber Polyester
5406	E-183	53	RGS conduit	0.00	879.42	Pull rope	Soft-Fiber Polyester
5411	E-183	41	RGS conduit	0.00	534.55	Pull rope	Soft-Fiber Polyester
5412	E-183	41	RGS conduit	0.00	534.55	Pull rope	Soft-Fiber Polyester
5413	E-183	53	RGS conduit	0.00	879.42	Pull rope	Soft-Fiber Polyester
5414	E-183	53	RGS conduit	0.00	879.42	Pull rope	Soft-Fiber Polyester
5415	E-183	53	RGS conduit	0.00	879.42	Pull rope	Soft-Fiber Polyester
5416	E-183	53	RGS conduit	0.00	879.42	Pull rope	Soft-Fiber Polyester
5417	E-183	41	RGS conduit	0.00	534.55	Pull rope	Soft-Fiber Polyester
5418	E-183	41	RGS conduit	0.00	534.55	Pull rope	Soft-Fiber Polyester
5419	E-183	53	RGS conduit	0.00	879.42	Pull rope	Soft-Fiber Polyester
5420	E-183	53	RGS conduit	0.00	879.42	Pull rope	Soft-Fiber Polyester
5421	E-183	53	RGS conduit	0.00	879.42	Pull rope	Soft-Fiber Polyester
5422	E-183	53	RGS conduit	0.00	879.42	Pull rope	Soft-Fiber Polyester
5423	E-183	41	RGS conduit	212.85	534.55	Pull rope	Soft-Fiber Polyester
						A-3035-2	3 + 1 gnd #6,#8, 600 V, RHH/RHW Insulation
5424	E-183	41	RGS conduit	0.00	534.55	Pull rope	Soft-Fiber Polyester
5425	E-183	78	RGS conduit	366.10	1935.24	A-3035-1	1-3/C + gnd #4 600 V, EPR insulation
						Pull rope	Soft-Fiber Polyester

REQUEST FOR INFORMATION NOT ADDRESSED IN THIS CCO REMAIN IN FORCE

MARK	DATE	DESCRIPTIONS	BY	CH'D	CCO#
		REVISIONS			
3	03/24/11	BIKE PATH CONDUIT	TW	RG	73
2	06/11/10	BIKE PATH CONDUIT	TW	RG	73
1	03/04/08	BARRIER MODIFICATIONS	TW	RG	44

CONTRACT CHANGE ORDER NO. 73
SHEET 42 OF 52

FOR REVISION ONLY 1

REGISTERED PROFESSIONAL ENGINEER — S. A. ESTOQUE, JR — No. E-10151 — Exp. 12/31/2008 ELECTRICAL — STATE OF CALIFORNIA

REGISTERED PROFESSIONAL ENGINEER — SYN YEE CHIN — No. 18185 — Exp. 09/30/2011 ELECTRICAL — STATE OF CALIFORNIA

Syn Yee Chin
FOR REVISION ONLY 2 3

Caltrans Metric

DIST	COUNTY	ROUTE	KILOMETER POST TOTAL PROJECT	SHEET No	TOTAL SHEETS
04	SF	80	13.2/13.9	398 R3	1204

Jens Erlingsson 12/19/02
REGISTERED ELECTRICAL ENGINEER DATE

REGISTERED PROFESSIONAL ENGINEER — JENS ERLINGSSON — No. 8249 — Exp. 9/30/06 ELECTRICAL — STATE OF CALIFORNIA

12-6-04
PLANS APPROVAL DATE

PB POWER, inc.
A Parsons Brinckerhoff Company
303 Second St., Suite 700N
San Francisco, CA 94107-1317

The State of California or its officers or agents shall not be responsible for the accuracy or completeness of electronic copies of this plan sheet.

Caltrans now has a web site! To get to the web site, go to http://www.dot.ca.gov

2 REVISIONS SUPERCEDED 3

CONDUIT DATA

Conduit No	Reference	Size	Type	Total Fill (mm^2)	Allowable Fill (mm^2)	Included Cable No.	Conductor Type
5426	E-183	53	RGS conduit	0.00	879.42	Pull rope	Soft-Fiber Polyester
5427	E-183	53	RGS conduit	0.00	879.42	Pull rope	Soft-Fiber Polyester
5428	E-183	53	RGS conduit	0.00	879.42	Pull rope	Soft-Fiber Polyester
5429	E-183	41	RGS conduit	0.00	534.55	Pull rope	Soft-Fiber Polyester
5430	E-183	41	RGS conduit	0.00	534.55	Pull rope	Soft-Fiber Polyester
5431	E-183	53	RGS conduit	0.00	879.42	Pull rope	Soft-Fiber Polyester
5432	E-183	53	RGS conduit	0.00	879.42	Pull rope	Soft-Fiber Polyester
5433	E-183	53	RGS conduit	0.00	879.42	Pull rope	Soft-Fiber Polyester
5434	E-183	53	RGS conduit	0.00	879.42	Pull rope	Soft-Fiber Polyester
5436	E-183	53	RGS conduit	0.00	879.42	Pull rope	Soft-Fiber Polyester
5437	E-185	53	RGS conduit	0.00	879.42	Pull rope	Soft-Fiber Polyester
5441	E-183	41	RGS conduit	0.00	534.55	Pull rope	Soft-Fiber Polyester
5442	E-183	41	RGS conduit	0.00	534.55	Pull rope	Soft-Fiber Polyester
5443	E-183	53	RGS conduit	0.00	879.42	Pull rope	Soft-Fiber Polyester
5444	E-183	53	RGS conduit	0.00	879.42	Pull rope	Soft-Fiber Polyester
5445	E-184	53	RGS conduit	0.00	879.42	Pull rope	Soft-Fiber Polyester
5446	E-184	53	RGS conduit	0.00	879.42	Pull rope	Soft-Fiber Polyester
5447	E-183	41	RGS conduit	0.00	534.55	Pull rope	Soft-Fiber Polyester
5448	E-183	41	RGS conduit	0.00	534.55	Pull rope	Soft-Fiber Polyester
5449	E-183	53	RGS conduit	0.00	879.42	Pull rope	Soft-Fiber Polyester
5450	E-183	53	RGS conduit	0.00	879.42	Pull rope	Soft-Fiber Polyester
5451	E-184	53	RGS conduit	527.18	879.42	A-2013-1	1-3/C + gnd #2, 600 V, EPR Insulation
						Pull rope	Soft-Fiber Polyester
5452	E-184	53	RGS conduit	212.85	879.42	Pull rope	Soft-Fiber Polyester
						A-2013-2	3 + 1 gnd #6,#8, 600 V, RHH/RHW Insulation
5453	E-184	53	RGS conduit	454.92	879.42	Pull rope	Soft-Fiber Polyester
						UP208-4	1-2/C + gnd #8, 600 V, EPR Insulation
						UP208-6	1-2/C + gnd #8, 600 V, EPR Insulation
5454	E-184	53	RGS conduit	212.85	879.42	A-3036-2	3 + 1 gnd #6,#8, 600 V, RHH/RHW Insulation
						Pull rope	Soft-Fiber Polyester
5455	E-184	53	RGS conduit	454.92	879.42	UP208-4	1-2/C + gnd #8, 600 V, EPR Insulation
						Pull rope	Soft-Fiber Polyester
						UP208-6	1-2/C + gnd #8, 600 V, EPR Insulation

For continuation, see next sheet.

CONDUIT AND TRAY SCHEDULE

E-443

CALCULATED/ DESIGNED BY	CHECKED BY
PBP	AB

REVISED BY	DATE REVISED
DATE 8/02	8/02

DESIGN OVERSIGHT — BEHZAD GOLEMOHAMMADI

STATE OF CALIFORNIA - DEPARTMENT OF TRANSPORTATION
Caltrans

LAST REVISION 00-00-00
DATE PLOTTED => 15-APR-2011
TIME PLOTTED => 13:23

FOR REDUCED PLANS ORIGINAL SCALE IS IN MILLIMETERS 0 20 40 60 80

DGN FILE =>04-0120f1_0398R03.dgn
USERNAME =>llorico

CU 04251

EA 0120F1

DATE	REVISED BY	DATE REVISED
8/02	AB	8/02

CALCULATED/DESIGNED BY: PBP
CHECKED BY: BEHZAD GOLEMOHAMMADI
DESIGN OVERSIGHT: STATE OF CALIFORNIA - DEPARTMENT OF TRANSPORTATION
Caltrans

CONDUIT DATA

Conduit No	Reference	Size	Type	Total Fill (mm²)	Allowable Fill (mm²)	Included Cable No.	Conductor Type
5456	E-184	53	RGS conduit	366.10	879.42	A-3036-1	1-3/C + gnd #4 , 600 V, EPR insulation
						Pull rope	Soft-Fiber Polyester
5457	E-184	53	RGS conduit	196.2	879.42	2149	1 - 2 pair, shielded #18 with IS/OA, 300 V, PVC jacket
						Pull rope	Soft-Fiber Polyester
						2150	1 - 2 pair, shielded #18 with IS/OA, 300 V, PVC jacket
5458	E-184	53	RGS conduit	0.00	879.42	Pull rope	Soft-Fiber Polyester
5459	E-184	41	RGS conduit	0.00	534.55	Pull rope	Soft-Fiber Polyester
5460	E-184	41	RGS conduit	227.46	534.55	Pull rope	Soft-Fiber Polyester
						UP208-2	1-2/C + gnd #8, 600 V, EPR insulation
5461	E-184	53	RGS conduit	0.00	879.42	Pull rope	Soft-Fiber Polyester
5462	E-184	53	RGS conduit	227.46	879.42	Pull rope	Soft-Fiber Polyester
						UP208-2	1-2/C + gnd #8, 600 V, EPR insulation
5463	E-184	53	RGS conduit	98.10	879.42	2148	1 - 2 pair, shielded #18 with IS/OA, 300 V, PVC jacket
						Pull rope	Soft-Fiber Polyester
5464	E-184	53	RGS conduit	0.00	879.42	Pull rope	Soft-Fiber Polyester
5465	E-184	53	RGS conduit	0.00	879.42	Pull rope	Soft-Fiber Polyester
5466	E-184	53	RGS conduit	0.00	879.42	Pull rope	Soft-Fiber Polyester
5471	E-184	41	RGS conduit	212.85	534.55	Pull rope 4	Soft-Fiber Polyester
						LP222-2A,4A	3 + 1 gnd #6, #8, 600 V, RHH/RHW Insulation
5472	E-184	41	RGS conduit	212.85	534.55	Pull rope 4	Soft-Fiber Polyester
						LP222-6A,8A	3 + 1 gnd #6, #8, 600 V, RHH/RHW Insulation
5473	E-184	53	RGS conduit	281.15	1165.23	Pull rope	Soft-Fiber Polyester
						LP222-2,4	1-3/C + gnd #6, 600 V, EPR insulation
5474	E-184	53	RGS conduit	281.15	1165.23	Pull rope	Soft-Fiber Polyester
				4		LP222-6,8	1-3/C + gnd #6, 600 V, EPR insulation
5475	E-184	53	RGS conduit	0.00	879.42	Pull rope	Soft-Fiber Polyester
5476	E-184	53	RGS conduit	0.00	879.42	Pull rope	Soft-Fiber Polyester
5477	E-184	41	RGS conduit	0.00	534.55	Pull rope	Soft-Fiber Polyester
5478	E-184	41	RGS conduit	0.00	534.55	Pull rope	Soft-Fiber Polyester
5479	E-184	53	RGS conduit	0.00	879.42	Pull rope	Soft-Fiber Polyester
5480	E-184	53	RGS conduit	0.00	879.42	Pull rope	Soft-Fiber Polyester
5481	E-184	53	RGS conduit	0.00	879.42	Pull rope	Soft-Fiber Polyester
5482	E-184	53	RGS conduit	0.00	879.42	Pull rope	Soft-Fiber Polyester
5483	E-184	41	RGS conduit	0.00	534.55	Pull rope	Soft-Fiber Polyester
5484	E-184	41	RGS conduit	0.00	534.55	Pull rope	Soft-Fiber Polyester
5485	E-184	53	RGS conduit	0.00	879.42	Pull rope	Soft-Fiber Polyester
5486	E-184	53	RGS conduit	0.00	879.42	Pull rope	Soft-Fiber Polyester
5487	E-184	53	RGS conduit	0.00	879.42	Pull rope	Soft-Fiber Polyester
5488	E-184	53	RGS conduit	0.00	879.42	Pull rope	Soft-Fiber Polyester
5489	E-184	41	RGS conduit	268.36	534.55	S-2031-4	3 + 1 gnd #4,#8, 600 V, RHH/RHW Insulation
						Pull rope	Soft-Fiber Polyester
5490	E-184	41	RGS conduit	212.85	534.55	Pull rope	Soft-Fiber Polyester
						A-2035-4	3 + 1 gnd #6,#8, 600 V, RHH/RHW Insulation
5491	E-184	53	RGS conduit	0.00	879.42	S-2031-3	1-3/C + gnd #4, 600 V, EPR insulation
						Pull rope	Soft-Fiber Polyester
5492	E-184	53	RGS conduit	0.00	879.42	A-2035-3	1-3/C + gnd #6, 600 V, EPR insulation
						Pull rope	Soft-Fiber Polyester

THIS PLAN ACCURATE FOR ELECTRICAL WORK ONLY.

REQUEST FOR INFORMATION NOT ADDRESSED IN THIS CCO REMAIN IN FORCE

MARK	DATE	DESCRIPTIONS	BY	CH'D	CCO#
		REVISIONS			
4	03/24/11	BIKE PATH CONDUIT	TW	RG	73
3	06/11/10	BIKE PATH CONDUIT	TW	RG	73
2	03/04/08	BARRIER MODIFICATIONS	JS BM	RG SE	44
1	02/19/08	ELECTRICAL MODIFICATIONS	MP EL	RR	42

CONTRACT CHANGE ORDER NO. 73
SHEET 43 OF 52

MARWELL FUNTO TAKAKI — REGISTERED PROFESSIONAL ENGINEER — No. E 8651 — Exp. 9/30/2008 ELECTRICAL — STATE OF CALIFORNIA
FOR REVISION ONLY 1

S. A. ESTOQUE, JR. — REGISTERED PROFESSIONAL ENGINEER — No. E-10151 — Exp. 12/31/2008 ELECTRICAL — STATE OF CALIFORNIA
FOR REVISION ONLY 2

SYN YEE CHIN — REGISTERED PROFESSIONAL ENGINEER — No. 18186 — Exp. 09/30/2011 ELECTRICAL — STATE OF CALIFORNIA
FOR REVISION ONLY 3 4

4 3 REVISIONS SUPERCEDED

DIST	COUNTY	ROUTE	KILOMETER POST TOTAL PROJECT	SHEET No	TOTAL SHEETS
04	SF	80	13.2/13.9	399 R4	1204

Jens Erlingsson 12/19/02
REGISTERED ELECTRICAL ENGINEER DATE

REGISTERED PROFESSIONAL ENGINEER — JENS ERLINGSSON No. 8249 Exp. 9/30/06 ELECTRICAL — STATE OF CALIFORNIA

12-6-04
PLANS APPROVAL DATE

PB POWER, Inc.
A Parsons Brinckerhoff Company
303 Second St., Suite 700N
San Francisco, CA 94107-1317

The State of California or its officers or agents shall not be responsible for the accuracy or completeness of electronic copies of this plan sheet.

Caltrans now has a web site! To get to the web site, go to http://www.dot.ca.gov

CONDUIT DATA

Conduit No	Reference	Size	Type	Total Fill (mm²)	Allowable Fill (mm²)	Included Cable No.	Conductor Type
5493	E-184	53	RGS conduit	0.00	879.42	Pull rope	Soft-Fiber Polyester
5494	E-184	53	RGS conduit	0.00	879.42	Pull rope	Soft-Fiber Polyester
5495	E-184	41	RGS conduit	0.00	534.55	Pull rope	Soft-Fiber Polyester
5497	E-184	53	RGS conduit	0.00	879.42	Pull rope	Soft-Fiber Polyester
5498	E-183	53	RGS conduit	0.00	879.42	Pull rope	Soft-Fiber Polyester
5501	E-185	41	RGS conduit	0.00	534.55	Pull rope	Soft-Fiber Polyester
5502	E-185	41	RGS conduit	0.00	534.55	Pull rope	Soft-Fiber Polyester
5503	E-185	53	RGS conduit	0.00	879.42	Pull rope	Soft-Fiber Polyester
5504	E-185	53	RGS conduit	0.00	879.42	Pull rope	Soft-Fiber Polyester
5505	E-185	53	RGS conduit	0.00	879.42	Pull rope	Soft-Fiber Polyester
5506	E-185	53	RGS conduit	0.00	879.42	Pull rope	Soft-Fiber Polyester
5512	E-185	41	RGS conduit	212.85	534.55	Pull rope	Soft-Fiber Polyester
						A-2014-2	3 + 1 gnd #6,#8, 600 V, RHH/RHW Insulation
5513	E-185	53	RGS conduit	0.00	879.42	Pull rope	Soft-Fiber Polyester
5514	E-185	53	RGS conduit	0.00	879.42	Pull rope	Soft-Fiber Polyester
5515	E-185	53	RGS conduit	0.00	879.42	Pull rope	Soft-Fiber Polyester
5516	E-185	53	RGS conduit	0.00	879.42	Pull rope	Soft-Fiber Polyester
5517	E-185	53	RGS conduit	0.00	879.42	Pull rope	Soft-Fiber Polyester
5518	E-185	53	RGS conduit	0.00	879.42	Pull rope	Soft-Fiber Polyester
5519	E-185	41	RGS conduit	212.85	534.55	S-2032-2	3 + 1 gnd #6,#8, 600 V, RHH/RHW Insulation
						Pull rope	Soft-Fiber Polyester
5520	E-185	41	RGS conduit	0.00	534.55	Pull rope	Soft-Fiber Polyester
5521	E-185	53	RGS conduit	366.10	879.42	Pull rope	Soft-Fiber Polyester
						S-2032-1	1-3/C + gnd #4, 600 V, EPR insulation
5522	E-185	53	RGS conduit	0.00	879.42	Pull rope	Soft-Fiber Polyester
5523	E-185	53	RGS conduit	0.00	879.42	Pull rope	Soft-Fiber Polyester
5524	E-185	53	RGS conduit	0.00	879.42	Pull rope	Soft-Fiber Polyester
5528	E-185	41	RGS conduit	0.00	534.55	Pull rope	Soft-Fiber Polyester

For continuation, see next sheet.

CONDUIT AND TRAY SCHEDULE

E-444

LAST REVISION 00-00-00
DATE PLOTTED => 15-APR-2011
TIME PLOTTED => 13:23

FOR REDUCED PLANS ORIGINAL SCALE IS IN MILLIMETERS 0 20 40 60 80
DGN FILE =>04-0120f1_0399R04.dgn
USERNAME =>llorico
CU 04251
EA 0120F1

CONDUIT DATA

Conduit No.	Reference	Size	Type	Total Fill (mm²)	Allowable Fill (mm²)	Included Cable No.	Conductor Type
5529	E-185	53	RGS conduit	0.00	879.42	Pull rope	Soft-Fiber Polyester
5530	E-185	41	RGS conduit	0.00	534.55	Pull rope	Soft-Fiber Polyester
5531	E-185	41	RGS conduit	0.00	534.55	Pull rope	Soft-Fiber Polyester
5532	E-185	41	RGS conduit	0.00	534.55	Pull rope	Soft-Fiber Polyester
5533	E-185	53	RGS conduit	0.00	879.42	Pull rope	Soft-Fiber Polyester
5534	E-185	53	RGS conduit	0.00	879.42	Pull rope	Soft-Fiber Polyester
5535	E-185	53	RGS conduit	0.00	879.42	Pull rope	Soft-Fiber Polyester
5536	E-185	53	RGS conduit	0.00	879.42	Pull rope	Soft-Fiber Polyester
5537	E-185	53	RGS conduit	0.00	879.42	Pull rope	Soft-Fiber Polyester
5543	E-185	41	RGS conduit	212.85	534.55	Pull rope	Soft-Fiber Polyester
						LP223-2A,4A	3 +1 gnd #6, #8, 600V, RHH/RHW insulation
5544	E-185	41	RGS conduit	212.85	708.28	Pull rope	Soft-Fiber Polyester
						LP223-6A,8A	3 +1 gnd #6, #8, 600V, RHH/RHW insulation
5545	E-185	53	RGS conduit	454.92	681.55	Pull rope	Soft-Fiber Polyester
						UP208-6A	1-2/C + gnd #8, 600 V, EPR insulation
						UP208-6B	1-2/C + gnd #8, 600 V, EPR insulation
5546	E-212	103	RGS conduit	2780.99	3324.51	2391	3-1/C #4/0 + 1/C #1/0 gnd, 15 kV, EPR Insulation
						Pull rope	Soft-Fiber Polyester
5547	E-185	53	RGS conduit	0.00	879.42	Pull rope	Soft-Fiber Polyester
5548	E-185	53	RGS conduit	0.00	879.42	Pull rope	Soft-Fiber Polyester
5549	E-185	41	RGS conduit	0.00	534.55	Pull rope	Soft-Fiber Polyester
5550	E-185	41	RGS conduit	0.00	534.55	Pull rope	Soft-Fiber Polyester
5551	E-185	53	RGS conduit	0.00	879.42	Pull rope	Soft-Fiber Polyester
5552	E-185	53	RGS conduit	227.46	879.42	UP208-2A	1-2/C + gnd #8, 600 V, EPR insulation
						Pull rope	Soft-Fiber Polyester
5553	E-185	53	RGS conduit	98.10	879.42	Pull rope	Soft-Fiber Polyester
						2148	1 - 2 pair, shielded #18 with IS/OA, 300 V, PVC jacket
5554	E-185	53	RGS conduit	0.00	879.42	Pull rope	Soft-Fiber Polyester
5555	E-185	41	RGS conduit	527.18	534.55	A-2014-1	1-3/C + gnd #2, 600 V, EPR insulation
						Pull rope	Soft-Fiber Polyester
5556	E-185	53	RGS conduit	814.11	879.42	LP223-6,8	1-3/C + gnd #6, 600 V, EPR insulation
						Pull rope	Soft-Fiber Polyester
						UP208-6	1-2/C + gnd #8, 600 V, EPR insulation
						LP223-2,4	1-3/C + gnd #6, 600 V, EPR insulation
5557	E-186	53	RGS conduit	0.00	879.42	Pull rope	Soft-Fiber Polyester
5558	E-186	53	RGS conduit	0.00	879.42	Pull rope	Soft-Fiber Polyester
5597	E-185	53	RGS conduit	0.00	879.42	Pull rope	Soft-Fiber Polyester
7403	E-139	41	RGS conduit	0.00	534.55	Pull rope	Soft-Fiber Polyester
8001	E-293	41	RGS-PVC coated conduit	203.95	534.55	1201-6	1-2/C + gnd #10, 600 V, EPR insulation
						Pull rope	Soft-Fiber Polyester
						1201-4C	1-2/C #14, 600 V, EPR insulation
8002	E-293	41	RGS-PVC coated conduit	407.90	534.55	1201-6	1-2/C +gnd #10, 600 V, EPR insulation
						1201-2	1-2/C + gnd #10, 600 V, EPR insulation
						Pull rope	Soft-Fiber Polyester
						1201-4B	1-2/C #14, 600 V, EPR insulation
						1201-4C	1-2/C #14, 600 V, EPR insulation
8003	E-293	21	RGS-PVC coated conduit	102.61	185.01	2204-4	1-2/C + gnd #12, 600 V, EPR insulation
						Pull rope	Soft-Fiber Polyester
8004	E-293	41	RGS-PVC coated conduit	203.95	534.55	1201-1	1-2/C + gnd #10, 600 V, EPR insulation
						Pull rope	Soft-Fiber Polyester
						1201-4A	1-2/C #14, 600 V, EPR insulation
8005	E-293	41	RGS-PVC coated conduit	126.88	534.55	2204-3	1-2/C + gnd #10, 600 V, EPR insulation
						Pull rope	Soft-Fiber Polyester
8006	E-293, E-300	53	RGS-PVC coated conduit	330.83	879.42		
						2204-3	1-2/C + gnd #10, 600 V, EPR insulation
						1201-1	1-2/C + gnd #10, 600 V, EPR insulation
						Pull rope	Soft-Fiber Polyester
						1201-4A	1-2/C #14, 600 V, EPR insulation

REVISIONS SUPERCEDED 6

REQUEST FOR INFORMATION NOT ADDRESSED IN THIS CCO REMAIN IN FORCE

MARK	DATE	DESCRIPTIONS REVISIONS	BY	CH'D	CCO#
6	03/18/11	BIKE PATH CONDUIT	TW	RG	73
5	01/07/11	ELECTRICAL WARNING SYSTEMS	TW	RG	61
4	06/11/10	BIKE PATH CONDUIT	TW	RG	73
3	12/11/09	TOWER UTILITY PANELS	SYC	RG FW	70
2	08/03/09	ELECTRICAL WARNING SYSTEMS	JS TW	RG FW	61
1	03/04/08	BARRIER MODIFICATIONS	JS BM	RG SE	44

CONTRACT CHANGE ORDER NO. 73
SHEET 44 OF 52

Caltrans Metric

DIST	COUNTY	ROUTE	KILOMETER POST TOTAL PROJECT	SHEET No	TOTAL SHEETS
04	SF	80	13.2/13.9	400 R6	1204

Jens Erlingsson 12/19/02
REGISTERED ELECTRICAL ENGINEER DATE

12-6-04
PLANS APPROVAL DATE

REGISTERED PROFESSIONAL ENGINEER — JENS ERLINGSSON No. 8249 Exp. 9/30/06 ELECTRICAL — STATE OF CALIFORNIA

PB POWER, Inc.
A Parsons Brinckerhoff Company
303 Second St., Suite 700N
San Francisco, CA 94107-1317

The State of California or its officers or agents shall not be responsible for the accuracy or completeness of electronic copies of this plan sheet.

Caltrans now has a web site! To get to the web site, go to http://www.dot.ca.gov

REGISTERED PROFESSIONAL ENGINEER — SYN YEE CHIN No. 18186 Exp. 09/30/2011 ELECTRICAL — STATE OF CALIFORNIA
Syn Yee Chin
FOR REVISION ONLY 4 5 6

REGISTERED PROFESSIONAL ENGINEER — FADI WALIEDDINE No. 11465 Exp. 12/31/2009 ELECTRICAL — STATE OF CALIFORNIA
FOR REVISION ONLY 2 3

REGISTERED PROFESSIONAL ENGINEER — S. A. ESTOCKE, JR. No. E-10151 Exp. 12/31/2009 ELECTRICAL — STATE OF CALIFORNIA
FOR REVISION ONLY 1

CONDUIT DATA

Conduit No.	Reference	Size	Type	Total Fill (mm²)	Allowable Fill (mm²)	Included Cable No.	Conductor Type
8007	E-293, E-300	53	RGS-PVC coated conduit	126.88	879.42	Pull rope	Soft-Fiber Polyester
						2204-3	1-2/C + gnd #10, 600 V, EPR insulation
8008	E-293	53	RGS-PVC coated conduit	772.13	879.42	2204-9	1-3/C #14, 600 V, EPR insulation
						2204-2	1-3/C #14, 600 V, EPR insulation
						2204-1	1-3/C #14, 600 V, EPR insulation
						2204-10	1-3/C #14, 600 V, EPR insulation
						Pull rope	Soft-Fiber Polyester
						2204-11	1-3/C #14, 600 V, EPR insulation
						UP210-3	1-2/C + gnd #8, 600 V, EPR insulation
						2204-3	1-2/C + gnd #10, 600 V, EPR insulation
8010	E-293, E-264C	41	RGS-PVC coated conduit	203.95	534.55	1201-2	1-2/C + gnd #10, 600 V, EPR insulation
						Pull rope	Soft-Fiber Polyester
						1201-4B	1-2/C #14, 600 V, EPR insulation
8011	E-264A, E-293	41	RGS-PVC coated conduit	425.90	534.55		
						2204-1	1-3/C #14, 600 V, EPR insulation
						2204-2	1-3/C #14, 600 V, EPR insulation
						2204-9	1-3/C #14, 600 V, EPR insulation
						2204-10	1-3/C #14, 600 V, EPR insulation
						2204-11	1-3/C #14, 600 V, EPR insulation
						Pull rope	Soft-Fiber Polyester
8012	E-293, E-300	41	RGS-PVC coated conduit	227.46	534.55	Pull rope	Soft-Fiber Polyester
	E-264C					UP210-3	1-2/C + gnd #8, 600 V, EPR insulation
8013	E-294	41	RGS-PVC coated conduit	203.95	414.28	2201-6	1-2/C + gnd #10, 600 V, EPR insulation
						Pull rope	Soft-Fiber Polyester
						2201-4C	1-2/C #14, 600 V, EPR insulation
8014	E-264A, E-293	53	RGS-PVC coated conduit	611.85	879.42	1201-6	1-2/C + gnd #10, 600 V, EPR insulation
						1201-2	1-2/C + gnd #10, 600 V, EPR insulation
						1201-1	1-2/C + gnd #10, 600 V, EPR insulation
						Pull rope	Soft-Fiber Polyester
						1201-4A	1-2/C #14, 600 V, EPR insulation
						1201-4B	1-2/C #14, 600 V, EPR insulation
						1201-4C	1-2/C #14, 600 V, EPR insulation
8015	E-293, E-300	41	RGS-PVC coated conduit	130.00	534.55	2204-8	3-Pr #16 with overall shield 600 V, PVC insulation
						Pull rope	Soft-Fiber Polyester
8140	E-294	41	RGS-PVC coated conduit	203.95	534.55	Pull rope	Soft-Fiber Polyester
						2201-1	1-2/C + gnd #10, 600 V, EPR insulation
						2201-4A	1-2/C #14, 600 V, EPR insulation

For continuation, see next sheet.

CONDUIT AND TRAY SCHEDULE

E-445

REVISED BY | DATE REVISED
CALCULATED/ DESIGNED BY
CHECKED BY
DESIGN OVERSIGHT

STATE OF CALIFORNIA - DEPARTMENT OF TRANSPORTATION
Caltrans

LAST REVISION 00-00-00
DATE PLOTTED => 15-APR-2011
TIME PLOTTED => 13:23

FOR REDUCED PLANS ORIGINAL SCALE IS IN MILLIMETERS 0 20 40 60 80

DGN FILE =>04-0120f1_0400R06.dgn
USERNAME =>llorico

CU 04251 | EA 0120F1

CONDUIT DATA

Conduit No	Reference	Size	Type	Total Fill (mm2)	Allowable Fill (mm2)	Included Cable No.	Conductor Type
5212A	E-114A	78	RGS Conduit		1935.24	Pull rope	Soft-Fiber Polyester
5212B	E-114A	53	RGS Conduit		1935.24	Pull rope	Soft-Fiber Polyester
5212C	E-114A	53	RGS Conduit		1935.24	Pull rope	Soft-Fiber Polyester
5212D	E-114A	78	RGS Conduit		1935.24	Pull rope	Soft-Fiber Polyester
5212E	E-114A	78	RGS Conduit		1935.24	Pull rope	Soft-Fiber Polyester
5212F	E-114A	78	RGS Conduit	562.30 △5	1499.81	Pull rope	Soft-Fiber Polyester
						LP219-2,4	1-3/C + gnd #6, 600 V, EPR insulation
						LP219-6,8	1-3/C + gnd #6, 600 V, EPR insulation
5212G	E-114A	78	RGS Conduit		1935.24	Pull rope	Soft-Fiber Polyester
5212H	E-114A	78	RGS Conduit		1935.24	Pull rope	Soft-Fiber Polyester
5212J	E-114A	78	RGS Conduit		1935.24	Pull rope	Soft-Fiber Polyester
5212K	E-114A	78	RGS Conduit		1935.24	Pull rope	Soft-Fiber Polyester
5212L	E-114A	78	RGS Conduit		1935.24	Pull rope	Soft-Fiber Polyester
5212M	E-114A	78	RGS Conduit		1935.24	Pull rope	Soft-Fiber Polyester
5212N	E-114A	78	RGS Conduit		1935.24	Pull rope	Soft-Fiber Polyester
5212P	E-114A	78	RGS Conduit		1935.24	Pull rope	Soft-Fiber Polyester
5212Q	E-114A	78	RGS Conduit		1935.24	Pull rope	Soft-Fiber Polyester
5212R	E-114A	78	RGS Conduit		1935.24	Pull rope	Soft-Fiber Polyester
5212S	E-114A	78	RGS Conduit		1935.24	Pull rope	Soft-Fiber Polyester
5212T	E-114A	78	RGS Conduit		1935.24	Pull rope	Soft-Fiber Polyester
5212U	E-114A	78	RGS Conduit		1935.24	Pull rope	Soft-Fiber Polyester
5214A	E-115	78	RGS Conduit		1935.24	Pull rope	Soft-Fiber Polyester
5214B	E-115	78	RGS Conduit		1935.24	Pull rope	Soft-Fiber Polyester
5214C	E-115	78	RGS Conduit		1935.24	Pull rope	Soft-Fiber Polyester
5214D	E-115	78	RGS Conduit		1935.24	Pull rope	Soft-Fiber Polyester
5215A	E-114B	78	RGS Conduit	196.20	1935.24	Pull rope	Soft-Fiber Polyester
						2120-1	1-2PR #18 twisted shielded w/overall shield
						2121-1	1-2PR #18 twisted shielded w/overall shield
5215B	E-114B	78	RGS Conduit		1935.24	Pull rope	Soft-Fiber Polyester
5215C	E-114B	53	RGS Conduit		1935.24	Pull rope	Soft-Fiber Polyester
5215D	E-114B	78	RGS Conduit		1935.24	Pull rope	Soft-Fiber Polyester
5215E	E-114B	78	RGS Conduit		1935.24	Pull rope	Soft-Fiber Polyester
5215F	E-114B	78	RGS Conduit	611.85 △5	1935.24	Pull rope	Soft-Fiber Polyester
						1201-1	1-2/C + gnd #10, 600 V, EPR insulation
						1201-2	1-2/C + gnd #10, 600 V, EPR insulation
						1201-6	1-2/C + gnd #10, 600 V, EPR insulation
						1201-4A	1-2/C #14, 600 V, EPR insulation
						1201-4B	1-2/C #14, 600 V, EPR insulation
						1201-4C	1-2/C #14, 600 V, EPR insulation
5215G	E-114B	78	RGS Conduit	562.30 △5	1499.81	Pull rope	Soft-Fiber Polyester
						LP220-2,4	1-3/C + gnd #6, 600 V, EPR insulation
						LP220-6,8	1-3/C + gnd #6, 600 V, EPR insulation
5215H	E-114B	78	RGS Conduit		1935.24	Pull rope	Soft-Fiber Polyester

△2 REVISIONS SUPERCEDED △5

REQUEST FOR INFORMATION NOT ADDRESSED IN THIS CCO REMAIN IN FORCE

MARK	DATE	DESCRIPTIONS REVISIONS	BY	CH'D	CCO#
△5	04/15/11	BIKE PATH CONDUIT	TW	RG	73
△4	03/01/11	BASE INTEGRATION	RSB	WB	150
△3	01/07/11	ELECTRICAL WARNING SYSTEMS	TW	RG	61
△2	06/11/10	BIKE PATH CONDUIT	TW	RG	73
△1	03/26/10	DEHUMIDIFIER SCADA INTERFACE	TW	RG SYC	130
△0	03/30/09	SERVICE PLATFORM ELECTRICAL CHANGES	RR RY	RG FW	55

CONTRACT CHANGE ORDER NO. 73
SHEET 45 OF 52

Caltrans Metric

REGISTERED PROFESSIONAL ENGINEER SYN YEE CHIN No. 18186 Exp. 09/30/2011 ELECTRICAL STATE OF CALIFORNIA

Synyee Chin
FOR REVISION ONLY
△1 △2 △3 △4 △5

DIST	COUNTY	ROUTE	KILOMETER POST TOTAL PROJECT	SHEET No	TOTAL SHEETS
04	SF	80	13.2/13.9	407 S9R5	1204

REGISTERED ELECTRICAL ENGINEER — 6/12/08 DATE

REGISTERED PROFESSIONAL ENGINEER FADI WALIEDDINE No. 11465 Exp. 12/31/2009 ELECTRICAL STATE OF CALIFORNIA

PLANS APPROVAL DATE

PB AMERICAS, Inc.
A Parsons Brinckerhoff Company
303 Second St., Suite 700N
San Francisco, CA 94107-1317

The State of California or its officers or agents shall not be responsible for the accuracy or completeness of electronic copies of this plan sheet.

Caltrans now has a web site! To get to the web site, go to http://www.dot.ca.gov

CONDUIT DATA

Conduit No	Reference	Size	Type	Total Fill (mm2)	Allowable Fill (mm2)	Included Cable No.	Conductor Type
5215J	E-114B	78	RGS Conduit		1935.24	Pull rope	Soft-Fiber Polyester
5215K	E-114B	78	RGS Conduit		1935.24	Pull rope	Soft-Fiber Polyester
5215L	E-114B	78	RGS Conduit		1935.24	Pull rope	Soft-Fiber Polyester
5215M	E-114B	78	RGS Conduit		1935.24	Pull rope	Soft-Fiber Polyester
5216A	E-116	78	RGS Conduit		1935.24	Pull rope	Soft-Fiber Polyester
5216B	E-116	78	RGS Conduit		1935.24	Pull rope	Soft-Fiber Polyester
5216C	E-116	78	RGS Conduit		1935.24	Pull rope	Soft-Fiber Polyester
5216D	E-116	78	RGS Conduit		1935.24	Pull rope	Soft-Fiber Polyester
5216E	E-116	78	RGS Conduit		1935.24	Pull rope	Soft-Fiber Polyester
5217A	E-114B	78	RGS Conduit		1935.24	Pull rope	Soft-Fiber Polyester
5217B	E-114B	78	RGS Conduit		1935.24	Pull rope	Soft-Fiber Polyester
5217C	E-114B	78	RGS Conduit	2627.31	2564.19	2479-1	72 Fiber, single mode fiber optic riser cable inside brown innerduct
						White Innerduct	25.4 mm Smoothwall white innerduct
						Black Innerduct	25.4 mm Smoothwall black innerduct
5217D	E-114B	78	RGS Conduit		1935.24	Pull rope	Soft-Fiber Polyester
5217E	E-114B	78	RGS Conduit		1935.24	Pull rope	Soft-Fiber Polyester
5217F	E-114B	78	RGS Conduit	766.25 △5	1935.24	Pull rope	Soft-Fiber Polyester
						LP221-2,4	1-3/C + gnd #6, 600 V, EPR insulation
						LP221-6,8	1-3/C + gnd #6, 600 V, EPR insulation
						2202-3A	1-2/C #14, 600 V, EPR insulation
						2202-1	1-2/C + gnd #10, 600 V, EPR insulation
5217G	E-114B	78	RGS Conduit		1935.24	Pull rope	Soft-Fiber Polyester
5217H	E-114B	78	RGS Conduit		1935.24	Pull rope	Soft-Fiber Polyester
5217J	E-114B	78	RGS Conduit		1935.24	Pull rope	Soft-Fiber Polyester
5217K	E-114B	78	RGS Conduit		1935.24	Pull rope	Soft-Fiber Polyester
5217L	E-114B	78	RGS Conduit		1935.24	Pull rope	Soft-Fiber Polyester

CONDUIT AND TRAY SCHEDULE

E-449DE

DESIGN OVERSIGHT — STATE OF CALIFORNIA - DEPARTMENT OF TRANSPORTATION — Caltrans

DATE	REVISED BY	DATE REVISED
	CALCULATED/ DESIGNED BY	CHECKED BY

LAST REVISION 00-00-00 — DATE PLOTTED => 15-APR-2011 TIME PLOTTED => 13:23

FOR REDUCED PLANS ORIGINAL SCALE IS IN MILLIMETERS 0 20 40 60 80

DGN FILE =>04-0120f1_0407S09R05.dgn
USERNAME =>llorico

CU 04251 | EA 0120F1

CONDUIT DATA

Conduit No	Reference	Size	Type	Total Fill (mm²)	Allowable Fill (mm²)	Included Cable No.	Conductor Type
5217M	E-114B	78	RGS Conduit		1935.24	Pull rope	Soft-Fiber Polyester
5217N	E-114B	78	RGS Conduit		1935.24	Pull rope	Soft-Fiber Polyester
5217P	E-114B	78	RGS Conduit		1935.24	Pull rope	Soft-Fiber Polyester
5218A	E-117	78	RGS Conduit		1935.24	Pull rope	Soft-Fiber Polyester
5218B	E-117	78	RGS Conduit		1935.24	Pull rope	Soft-Fiber Polyester
5218C	E-117	53	RGS Conduit		1935.24	Pull rope	Soft-Fiber Polyester
5218D	E-117	78	RGS Conduit		1935.24	Pull rope	Soft-Fiber Polyester
5218E	E-117	78	RGS Conduit		1935.24	Pull rope	Soft-Fiber Polyester
5219A	E-114B	78	RGS Conduit		1935.24	Pull rope	Soft-Fiber Polyester
5219B	E-114B	78	RGS Conduit		1935.24	Pull rope	Soft-Fiber Polyester
5219C	E-114B	78	RGS Conduit		1935.24	Pull rope	Soft-Fiber Polyester
5219D	E-114B	78	RGS Conduit		1935.24	Pull rope	Soft-Fiber Polyester
5219E	E-114B	78	RGS Conduit		1935.24	Pull rope	Soft-Fiber Polyester
5219F	E-114B	78	RGS Conduit		1935.24	Pull rope	Soft-Fiber Polyester
5219G	E-114B	78	RGS Conduit		1935.24	Pull rope	Soft-Fiber Polyester
5219H	E-114B	78	RGS Conduit		1935.24	Pull rope	Soft-Fiber Polyester
5219J	E-114B	78	RGS Conduit		1935.24	Pull rope	Soft-Fiber Polyester
5219K	E-114B	78	RGS Conduit		1935.24	Pull rope	Soft-Fiber Polyester
5219L	E-114B	78	RGS Conduit		1935.24	Pull rope	Soft-Fiber Polyester
5219M	E-114B	78	RGS Conduit		1935.24	Pull rope	Soft-Fiber Polyester
5219N	E-114B	78	RGS Conduit		1935.24	Pull rope	Soft-Fiber Polyester
5219P	E-114B	78	RGS Conduit	562.30 (2)	1499.81	Pull rope	Soft-Fiber Polyester (2)
						LP222-2,4	1-3/C + gnd #6, 600 V, EPR insulation
						LP222-6,8	1-3/C + gnd #6, 600 V, EPR insulation
5220A	E-118	78	RGS Conduit		1935.24	Pull rope	Soft-Fiber Polyester
5220B	E-118	78	RGS Conduit		1935.24	Pull rope	Soft-Fiber Polyester
5220C	E-118	53	RGS Conduit		1935.24	Pull rope	Soft-Fiber Polyester
5220D	E-118	78	RGS Conduit		1935.24	Pull rope	Soft-Fiber Polyester
5220E	E-118	78	RGS Conduit		1935.24	Pull rope	Soft-Fiber Polyester

REQUEST FOR INFORMATION NOT ADDRESSED IN THIS CCO REMAIN IN FORCE

MARK	DATE	DESCRIPTIONS	BY	CH'D	CCO#
		REVISIONS			
2	03/24/11	BIKE PATH CONDUIT	TW	RG	73
1	06/11/10	BIKE PATH CONDUIT	TW	RG	73
0	03/30/09	SERVICE PLATFORM ELECTRICAL CHANGES	RR RY	RG MP	55

CONTRACT CHANGE ORDER NO. 73
SHEET 46 OF 52

(2) ⚠1 REVISIONS SUPERCEDED

Caltrans Metric

REGISTERED PROFESSIONAL ENGINEER — SYN YEE CHIN — No. 18186 — Exp. 09/30/2011 — ELECTRICAL — STATE OF CALIFORNIA

Syn Yee Chin
FOR REVISION ONLY
1 2

DIST	COUNTY	ROUTE	KILOMETER POST TOTAL PROJECT	SHEET No	TOTAL SHEETS
04	SF	80	13.2/13.9	407 S10R2	1204

REGISTERED ELECTRICAL ENGINEER — 6/12/08 DATE

REGISTERED PROFESSIONAL ENGINEER — FADI WALIEDDINE — No. 11465 — Exp. 12/31/2009 — ELECTRICAL — STATE OF CALIFORNIA

PLANS APPROVAL DATE

PB AMERICAS, Inc.
A Parsons Brinckerhoff Company
303 Second St., Suite 700N
San Francisco, CA 94107-1317

The State of California or its officers or agents shall not be responsible for the accuracy or completeness of electronic copies of this plan sheet.

Caltrans now has a web site! To get to the web site, go to http://www.dot.ca.gov

CONDUIT DATA

Conduit No	Reference	Size	Type	Total Fill (mm²)	Allowable Fill (mm²)	Included Cable No.	Conductor Type
5223A	E-72A, E-115	41	RGS-PVC coated conduit		534.55	Pull rope	Soft-Fiber Polyester
5223B	E-72A	41	RGS-PVC coated conduit		534.55	Pull rope	Soft-Fiber Polyester
5223C	E-72A, E-115	41	RGS-PVC coated conduit		534.55	Pull rope	Soft-Fiber Polyester
5223D	E-72A	53	Liquidtight Flex. Metal Cond.		879.42	Pull rope	Soft-Fiber Polyester
5223E	E-72A	41	RGS-PVC coated conduit		534.55	Pull rope	Soft-Fiber Polyester
5224A	E-72	53	Liquidtight Flex. Metal Cond.		879.42	Pull rope	Soft-Fiber Polyester
5225A	E-72A, E-115	41	RGS-PVC coated conduit		534.55	Pull rope	Soft-Fiber Polyester
5225B	E-72A	41	RGS-PVC coated conduit		534.55	Pull rope	Soft-Fiber Polyester
5225C	E-72A, E-115	41	RGS-PVC coated conduit		534.55	Pull rope	Soft-Fiber Polyester
5225D	E-72A	53	Liquidtight Flex. Metal Cond.		879.42	Pull rope	Soft-Fiber Polyester
5225E	E-72A	41	RGS-PVC coated conduit		534.55	Pull rope	Soft-Fiber Polyester
5226A	E-72A	78	Liquidtight Flex. Metal Cond.		1935.24	Pull rope	Soft-Fiber Polyester
5227A	E-72A	78	Liquidtight Flex. Metal Cond.		1935.24	Pull rope	Soft-Fiber Polyester
5230A	E-71A	78	Liquidtight Flex. Metal Cond.		1935.24	Pull rope	Soft-Fiber Polyester
5231A	E-71A	78	Liquidtight Flex. Metal Cond.		1935.24	Pull rope	Soft-Fiber Polyester
5233A	E-72A	78	Liquidtight Flex. Metal Cond.		1935.24	Pull rope	Soft-Fiber Polyester
5234A	E-72A	53 (2)	Liquidtight Flex. Metal Cond.	676.50 (2)	837.71	Pull rope	Soft-Fiber Polyester
						1474-5A	1-6 pair, shield #18 with overall shld, 600, PVC jacket
						1474-5B	1-6 pair, shield #18 with overall shld, 600, PVC jacket
						2474-5A (2)	1-6 pair, shield #18 with overall shld, 600, PVC jacket
						2474-5B	1-6 pair, shield #18 with overall shld, 600, PVC jacket
						GFR	#2, bare copper wire, stranded
5235A	E-72A	41	Liquidtight Flex. Metal Cond.		534.55	Pull rope	Soft-Fiber Polyester
5236A	E-73A	78	Liquidtight Flex. Metal Cond.		1935.24	Pull rope	Soft-Fiber Polyester
5237A	E-73A	78	Liquidtight Flex. Metal Cond.		1935.24	Pull rope	Soft-Fiber Polyester
5238A	E-73A	41	Liquidtight Flex. Metal Cond.		534.55	Pull rope	Soft-Fiber Polyester

CONDUIT AND TRAY SCHEDULE

E-449DF

DATE REVISED | REVISED BY
CALCULATED/ DESIGNED BY | CHECKED BY
DESIGN OVERSIGHT
STATE OF CALIFORNIA - DEPARTMENT OF TRANSPORTATION — Caltrans

LAST REVISION 00-00-00
DATE PLOTTED => 15-APR-2011
TIME PLOTTED => 13:23

FOR REDUCED PLANS ORIGINAL SCALE IS IN MILLIMETERS 0 20 40 60 80

DGN FILE =>04-0120f1_0407S10R02.dgn
USERNAME =>llorico

CU 04251 | EA 0120F1

CONDUIT DATA

Conduit No	Reference E-75A	Size	Type	Total Fill (mm²)	Allowable Fill (mm²)	Included Cable No.	Conductor Type
5272A	E-74A	78	Liquidtight Flex. Metal Cond.		1935.24	Pull rope	Soft-Fiber Polyester
5273A	E-74A	78	Liquidtight Flex. Metal Cond.		1935.24	Pull rope	Soft-Fiber Polyester
5283A	E-75A	41	RGS-PVC coated conduit	308.53	879.42	Pull rope	Soft-Fiber Polyester
						2098-2	4-1/C #4 + G, 600 V, RHH/RHW Insulation
5283B	E-75A	41	RGS-PVC coated conduit	262.68	879.42	Pull rope	Soft-Fiber Polyester
						2098-1	3/C #8 + G, 600 V, RHH/RHW Insulation
5283C	E-75A	41	RGS-PVC coated conduit	476.76	879.42	Pull rope	Soft-Fiber Polyester
						2098-3	4-1/C #4 + G, 600 V, RHH/RHW Insulation
5283D	E-75A	53	Liquidtight Flex. Metal Cond.		879.42	Pull rope	Soft-Fiber Polyester
5283E	E-75A	41	Liquidtight Flex. Metal Cond.		534.55	Pull rope	Soft-Fiber Polyester
5284A	E-75A	53	RGS-PVC coated conduit		879.42	Pull rope	Soft-Fiber Polyester
5285A	E-75A, E-118	41	Liquidtight Flex. Metal Cond.		534.55	Pull rope	Soft-Fiber Polyester
5285B	E-75A	41	RGS-PVC coated conduit		534.55	Pull rope	Soft-Fiber Polyester
5285C	E-75A, E-118	41	RGS-PVC coated conduit		534.55	Pull rope	Soft-Fiber Polyester
5285D	E-75A	53	Liquidtight Flex. Metal Cond.		879.42	Pull rope	Soft-Fiber Polyester
5285E	E-75A	41	RGS-PVC coated conduit		534.55	Pull rope	Soft-Fiber Polyester
5286A	E-75A	78	Liquidtight Flex. Metal Cond.		1935.42	Pull rope	Soft-Fiber Polyester
5289A	E-75A	41	Liquidtight Flex. Metal Cond.		534.55	Pull rope	Soft-Fiber Polyester
5290A	E-75A	53 (4)	Liquidtight Flex. Metal Cond.	676.50 (4)	837.71	Pull rope	Soft-Fiber Polyester
						1474-8A	1-6 pair, shield #18 with overall shld, 600, PVC jacket
						1474-8B	1-6 pair, shield #18 with overall shld, 600, PVC jacket
						2474-8A	1-6 pair, shield #18 with overall shld, 600, PVC jacket
						2474-8B	1-6 pair, shield #18 with overall shld, 600, PVC jacket
						GFR	#2, bare copper wire, stranded

(4) REVISIONS SUPERCEDED

REQUEST FOR INFORMATION NOT ADDRESSED IN THIS CCO REMAIN IN FORCE

MARK	DATE	DESCRIPTIONS REVISIONS	BY	CH'D	CCO#
4	03/24/11	BIKE PATH CONDUIT	TW	RG	73
3	01/07/11	ELECTRICAL WARNING SYSTEMS	TW	RG	61
2	06/11/10	BIKE PATH CONDUIT	TW	RG	73
1	03/26/10	DEHUMIDIFIER SCADA INTERFACE	TW	RG SYC	130
0	03/30/09	SERVICE PLATFORM ELECTRICAL CHANGES	RR RY	RG MP	55

CONTRACT CHANGE ORDER NO. 73
SHEET 47 OF 52

Caltrans Metric

REGISTERED PROFESSIONAL ENGINEER — SYN YEE CHIN — No. 18186 — Exp. 09/30/2011 ELECTRICAL — STATE OF CALIFORNIA

Syn Yee Chin
FOR REVISION ONLY
(1)(2)(3)(4)

DIST	COUNTY	ROUTE	KILOMETER POST TOTAL PROJECT	SHEET No	TOTAL SHEETS
04	SF	80	13.2/13.9	407 S12R4	1204

REGISTERED ELECTRICAL ENGINEER — 6/12/08 DATE

REGISTERED PROFESSIONAL ENGINEER — FADI WALIEDDINE — No. 11465 — Exp. 12/31/2009 ELECTRICAL — STATE OF CALIFORNIA

PLANS APPROVAL DATE

PB AMERICAS, Inc.
A Parsons Brinckerhoff Company
303 Second St., Suite 700N
San Francisco, CA 94107-1317

The State of California or its officers or agents shall not be responsible for the accuracy or completeness of electronic copies of this plan sheet.

Caltrans now has a web site! To get to the web site, go to http://www.dot.ca.gov

CONDUIT DATA

Conduit No	Reference	Size	Type	Total Fill (mm²)	Allowable Fill (mm²)	Included Cable No.	Conductor Type
5300A	E-114B	78	RGS Conduit	98.10	1935.24	Pull rope	Soft-Fiber Polyester
						1118-1	1-2PR #18 twisted shielded w/overall shield
5300B	E-114B	78	RGS Conduit		1935.24	Pull rope	Soft-Fiber Polyester
5300C	E-114B	78	RGS Conduit		1935.24	Pull rope	Soft-Fiber Polyester
5300D	E-114B	78	RGS Conduit		1935.24	Pull rope	Soft-Fiber Polyester
5300E	E-114B	78	RGS Conduit		1935.24	Pull rope	Soft-Fiber Polyester
5300F	E-114B	78	RGS Conduit	534.78	1499.81	Pull rope	Soft-Fiber Polyester
						2201-2	1-2/C + gnd #10, 600 V, EPR insulation
						2201-6	1-2/C + gnd #10, 600 V, EPR insulation
						2201-4B	1-2/C #14, 600 V, EPR insulation
						2201-4C	1-2/C #14, 600 V, EPR insulation
5300G	E-114B	78	RGS Conduit		1935.24	Pull rope	Soft-Fiber Polyester
5300H	E-114B	78	RGS Conduit		1935.24	Pull rope	Soft-Fiber Polyester
5300J	E-114B	78	RGS Conduit		1935.24	Pull rope	Soft-Fiber Polyester
5300K	E-114B	78	RGS Conduit		1935.24	Pull rope	Soft-Fiber Polyester
5300L	E-114B	78	RGS Conduit		1935.24	Pull rope	Soft-Fiber Polyester
5300M	E-114B	78	RGS Conduit		1935.24	Pull rope	Soft-Fiber Polyester
5300N	E-114B	78	RGS Conduit		1935.24	Pull rope	Soft-Fiber Polyester
5300P	E-114B	78	RGS Conduit	562.30 (4)	1499.81	Pull rope (4)	Soft-Fiber Polyester
						LP223-2,4	1-3/C + gnd #6, 600 V, EPR insulation
						LP223-6,8	1-3/C + gnd #6, 600 V, EPR insulation

CONDUIT AND TRAY SCHEDULE

E-449DH

REVISED BY | DATE REVISED
CALCULATED/DESIGNED BY | CHECKED BY
DESIGN OVERSIGHT

STATE OF CALIFORNIA - DEPARTMENT OF TRANSPORTATION
Caltrans

LAST REVISION 00-00-00
DATE PLOTTED => 15-APR-2011
TIME PLOTTED => 13:24

FOR REDUCED PLANS ORIGINAL SCALE IS IN MILLIMETERS 0 20 40 60 80

DGN FILE =>04-0120F1_0407S12R04.dgn
USERNAME =>llorico

CU 04251 | EA 0120F1

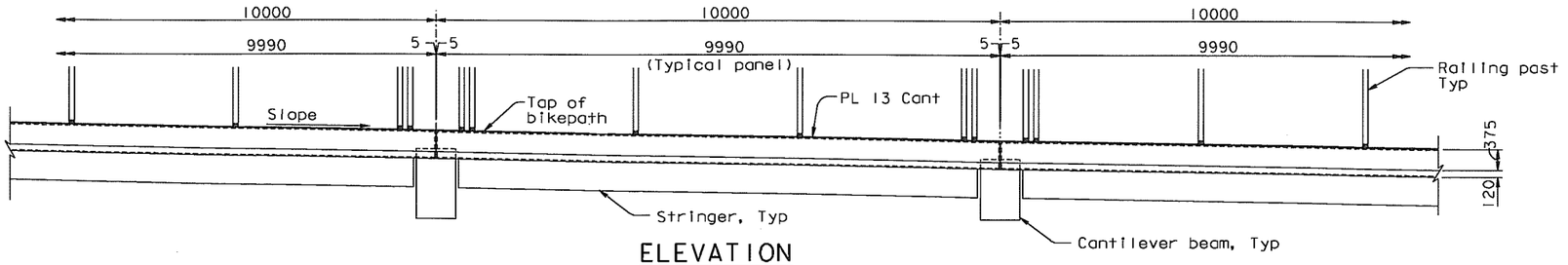

ELEVATION
1:50

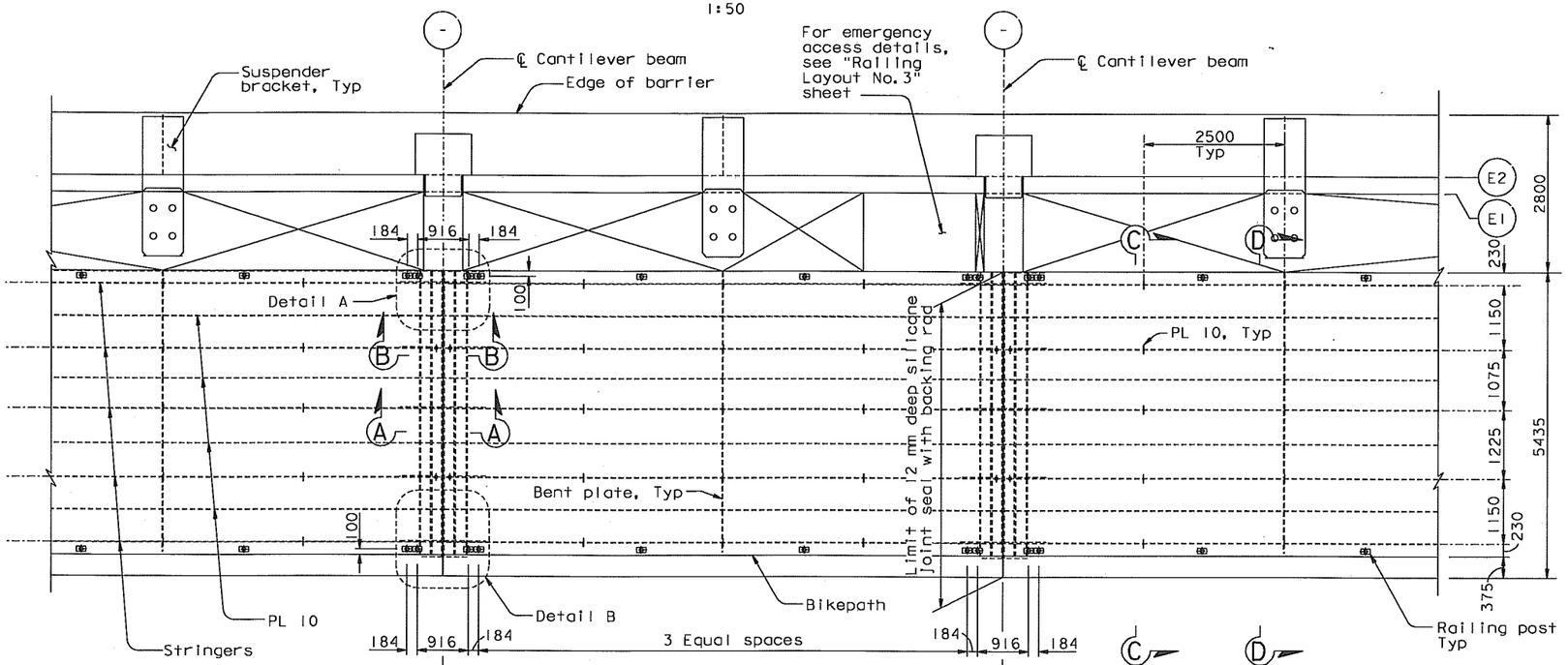

PLAN
1:50

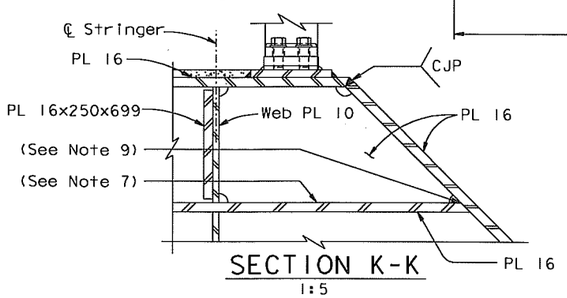

SECTION K-K
1:5
(SECTION K'-K' SIMILAR)

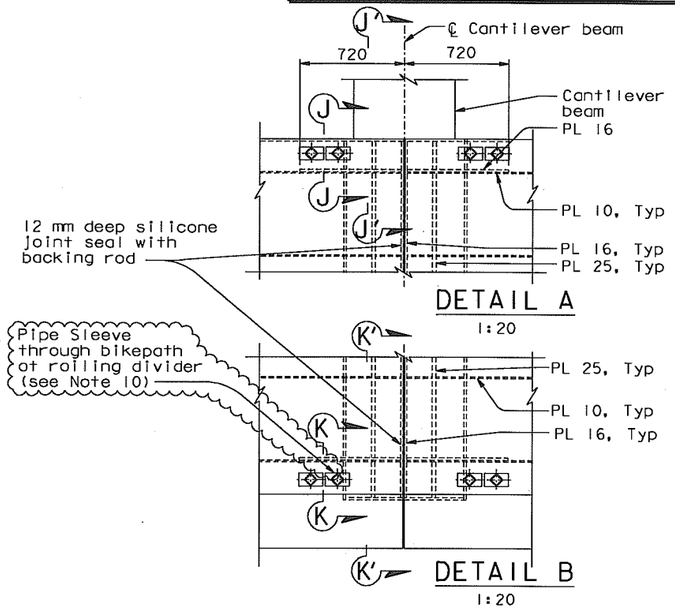

DETAIL A
1:20

DETAIL B
1:20

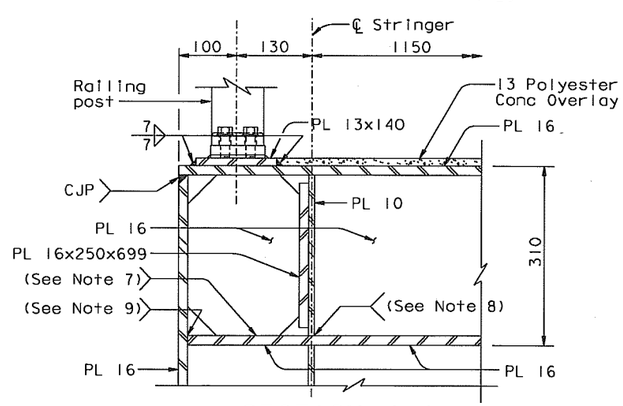

SECTION J-J
1:5
(SECTION J'-J' SIMILAR)

NOTES:

1. For cantilever beam details, see "Bikepath Details" sheets.
2. For Sections A-A and B-B, see "Bikepath Details" No. 4" sheet.
3. For Sections C-C and D-D, see "Bikepath Details No. 2" sheet.
4. For stringer details, see "Bikepath Details" sheets.
5. For railing layout, see "Railing Layout" sheets.
6. For emergency access location and details, see "Railing Layout" and "Railing Details" sheets.
7. At the Contractor's option, tight-fit is acceptable, subject to review and approval of the Engineer.
8. At the Contractor's option, 12mm single-sided fillet weld is acceptable, subject to review and approval of the Engineer.
9. At the Contractor's option, CJP with backing may be used, subject to review and approval of the Engineer.
3. 10. For pipe sleeve through bikepath detail at railing divider locations (south side only), see "Bikepath Framing Details No. 1A" sheet.

LEGEND:

(-) Indicates Panel Point

CONTRACT CHANGE ORDER NO. 73
SHEET 48 OF 52

REQUESTS FOR INFORMATION NOT ADDRESSED IN THIS CCO REMAIN IN FORCE

MARK	DATE	DESCRIPTIONS	BY	CH'D	CCO#
3	04/01/11	BIKEPATH CONDUIT	RI	TH	73
2	08/20/10	BIKEPATH DETAILS	CC	TH	99
1	07/24/09	BIKEPATH DETAILS	CC	TH	99

REVISIONS

ALL DIMENSIONS ARE IN MILLIMETERS UNLESS OTHERWISE SHOWN

DIST.	COUNTY	ROUTE	KILOMETER POST TOTAL PROJECT	SHEET NO.	TOTAL SHEETS
04	SF	80	13.2/13.9	819R3	1204

REGISTERED ENGINEER - CIVIL
Tien Hung Ho No. C 43990 Exp. 6/30/11 CIVIL
12-6-04
PLANS APPROVAL DATE

The State of California or its officers or agents shall not be responsible for the accuracy or completeness of electronic copies of this plan sheet.

T.Y. LIN / MOFFATT & NICHOL
825 BATTERY STREET
SAN FRANCISCO, CA 94111

Caltrans now has a web site! To get to the web site, go to: http://www.dot.ca.gov

DESIGN OVERSIGHT	R. Vaziadeh/V. Toan/Y.L./W.L./F.C.	SIGN OFF DATE 04/01/11
DESIGN	BY T. Ho	CHECKED T. McMeons
DETAILS	BY R. Xu	CHECKED P. Ritchie
QUANTITIES	BY C. Bernardo	CHECKED S. Shi

PREPARED FOR THE STATE OF CALIFORNIA DEPARTMENT OF TRANSPORTATION

R. Manzanarez
PROJECT ENGINEER

BRIDGE NO. 34-0006L/R
KILOMETER POST 13.2/13.9

SAN FRANCISCO OAKLAND BAY BRIDGE
EAST SPAN SEISMIC SAFETY PROJECT
SELF-ANCHORED SUSPENSION BRIDGE (SUPERSTRUCTURE & TOWER)

BIKEPATH FRAMING DETAILS NO. 1

Rev. Date: 5-18-98

ORIGINAL SCALE IN MILLIMETERS FOR REDUCED PLANS 0 10 20 30 40 50 60 70 80 90 100

CU 04
EA 0120F1

DISREGARD PRINTS BEARING EARLIER REVISION DATES

REVISION DATES (PRELIMINARY STAGE ONLY): 05/31/01 | 04/20/02 | 07/01/02 | 12/19/02

SHEET 402R3 OF

FILE => I:\bb\04-012001\sas\contract plans and cco\cco\cco#73\6-revision 04-01-11\dgn\agbwf01.dgn

100 % PS&E
DATE PLOTTED => 01 APR 2011
TIME PLOTTED => 13:51:36
USERNAME => DWinrow

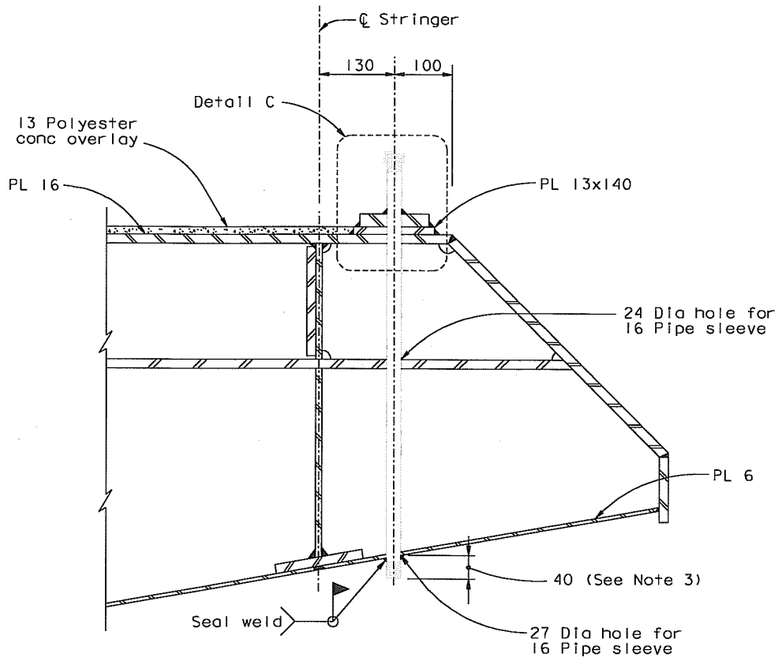

PIPE SLEEVE THROUGH BIKEPATH DETAIL

1:5

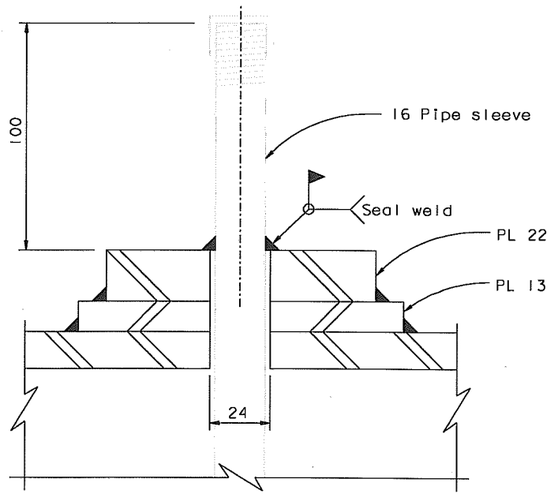

DETAIL C

1:1.25

DIST.	COUNTY	ROUTE	KILOMETER POST TOTAL PROJECT	SHEET NO.	TOTAL SHEETS
04	SF	80	13.2/13.9	819S1	1204

REGISTERED ENGINEER - CIVIL

Tien Hung Ho
No. C 43990
Exp. 06/30/11
CIVIL
REGISTERED PROFESSIONAL ENGINEER
STATE OF CALIFORNIA

04-01-11
PLANS APPROVAL DATE

The State of California or its officers or agents shall not be responsible for the accuracy or completeness of electronic copies of this plan sheet.

T.Y. LIN / MOFFATT & NICHOL
825 BATTERY STREET
SAN FRANCISCO, CA 94111

Caltrans now has a web site! To get to the web site, go to: http://www.dot.ca.gov

NOTES:

1. For details not shown, see "Bikepath Details" and "Bikepath Framing Details" sheets.
2. Railing post and bolts not shown for clarity.
3. Exposed portion of pipe shall be painted.
4. Galvanized surfaces shall be repaired after seal welding. Areas with damaged paint or with no paint shall be cleaned and painted.

100% PS&E

CONTRACT CHANGE ORDER NO. 73
SHEET 49 OF 52

REQUESTS FOR INFORMATION NOT ADDRESSED IN THIS CCO REMAIN IN FORCE

R. Vallzadeh/V. Toon/Y. L./W. L./F. C.
DESIGN OVERSIGHT
SIGN OFF DATE 04/01/11

MARK	DATE	REVISIONS	BY	CH'D	CCO#
1	04/01/11	BIKEPATH CONDUIT	RI	TH	73

	BY	CHECKED
DESIGN	R. Illya	T. Ho
DETAILS	R. Illya	T. Ho
QUANTITIES	R. Illya	T. Ho

PREPARED FOR THE
STATE OF CALIFORNIA
DEPARTMENT OF TRANSPORTATION

ALL DIMENSIONS ARE IN MILLIMETERS UNLESS OTHERWISE SHOWN

R. Manzanarez
PROJECT ENGINEER

BRIDGE NO. 34-0006L/R
KILOMETER POST 13.2/13.9

SAN FRANCISCO OAKLAND BAY BRIDGE
EAST SPAN SEISMIC SAFETY PROJECT
SELF-ANCHORED SUSPENSION BRIDGE
(SUPERSTRUCTURE & TOWER)

BIKEPATH FRAMING DETAILS NO. 1A

Rev. Date: 5-18-98

ORIGINAL SCALE IN MILLIMETERS FOR REDUCED PLANS 0 10 20 30 40 50 60 70 80 90 100

CU 04
EA 0120F1

DISREGARD PRINTS BEARING EARLIER REVISION DATES →

REVISION DATES (PRELIMINARY STAGE ONLY): 04/01/11

SHEET 402S1 OF

FILE => I:\bb\04-01200I\sas\contract plans and cco\cco\cco#73\6-revision 04-01-11\dgn\agbwf01a.dgn

USERNAME => DWinrow DATE PLOTTED => 01 APR 2011 TIME PLOTTED => 13:54:03

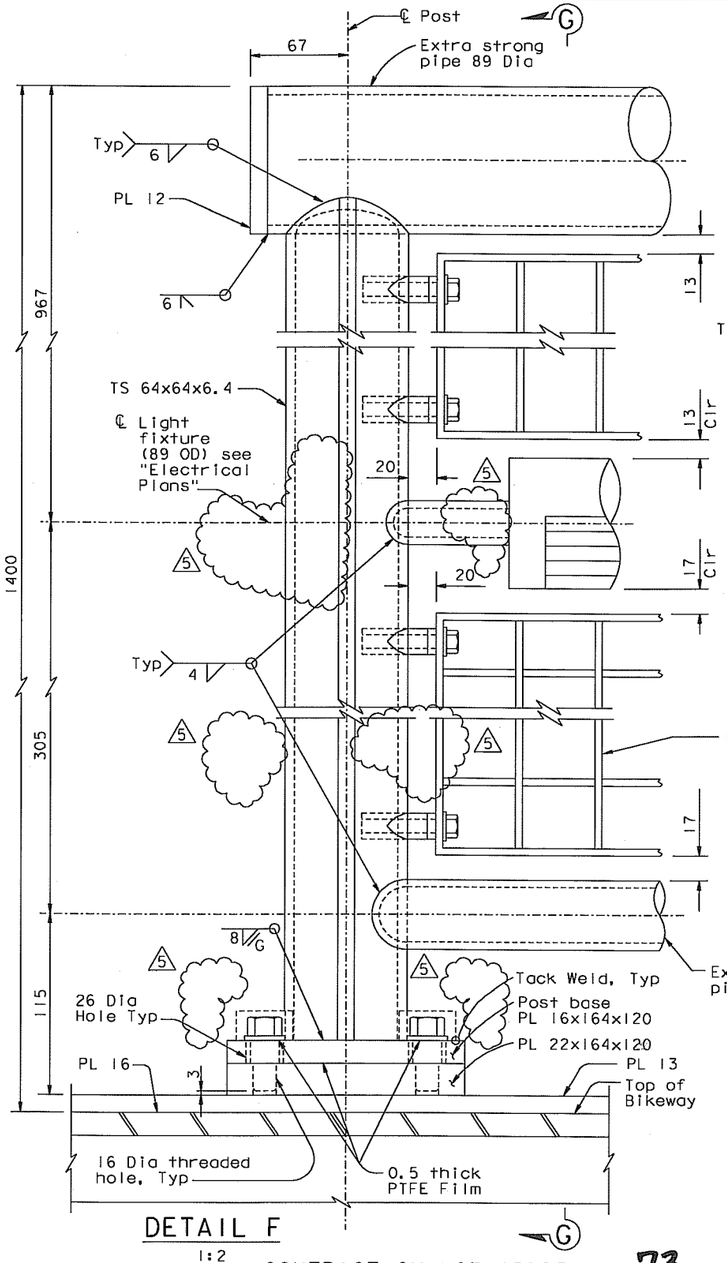

DETAIL F

1:2

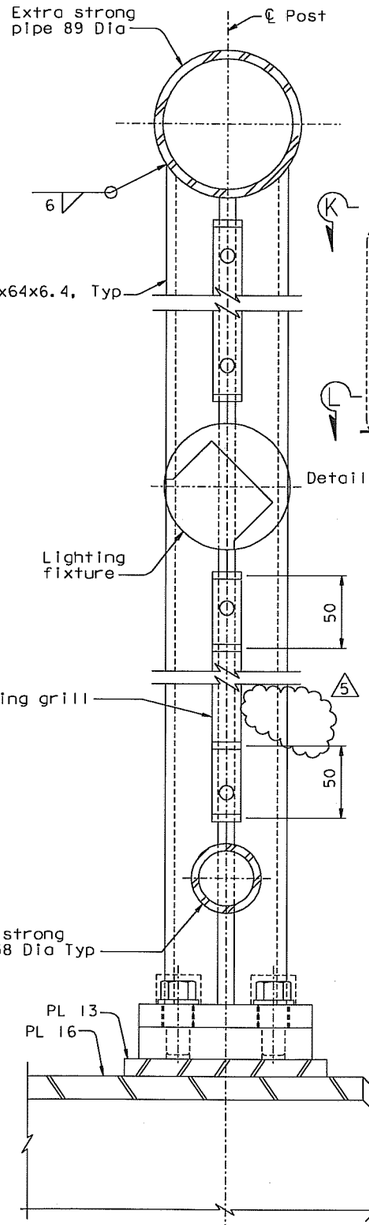

SECTION G-G

1:2

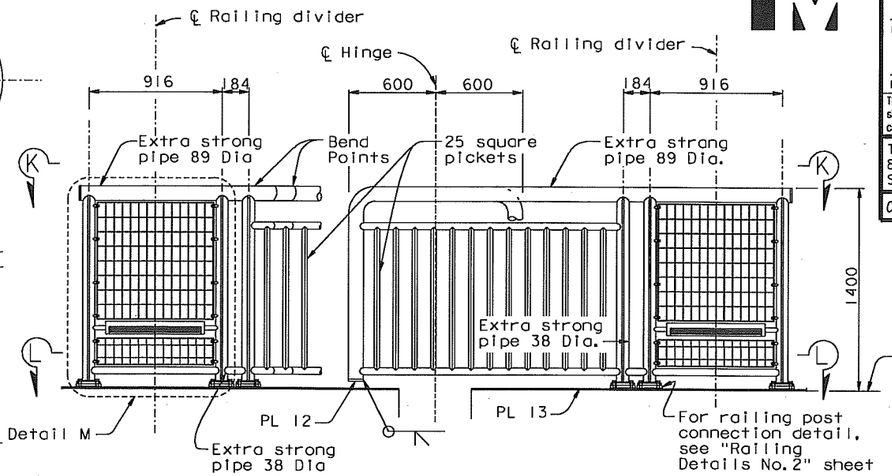

ELEVATION

1:20

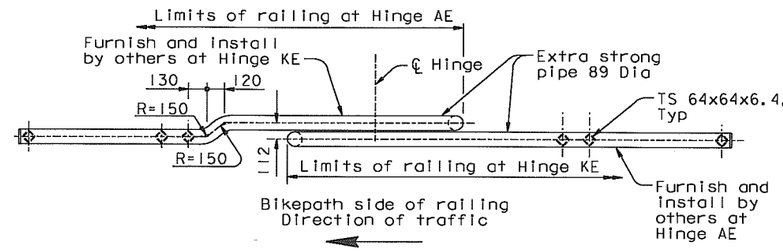

SECTION K-K

1:20

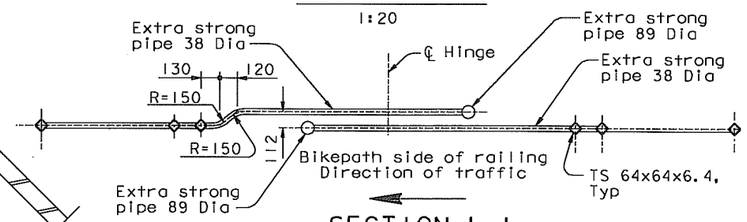

SECTION L-L

1:20

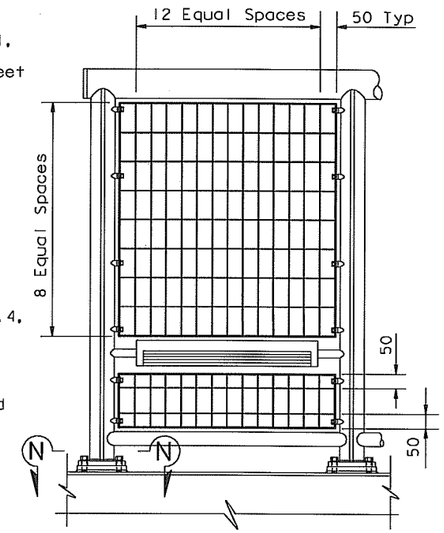

DETAIL M

1:10

RAILING EXPANSION JOINT DETAILS

NOTES:

1. For details not shown, see "Railing Details No. 1", "Railing Details No. 2" sheets and "Railing Details No. 3A".
2. For expansion joint details, see "Hinge K Expansion Joint Details" and "Hinge A Expansion Joint Details" sheets.
3. Railing to match adjoining Skyway Structure, Contract 04-012024.
4. For details of holes on both North and South divider railings, see "Typical Bikepath Lighting" in the "Roadway Plans" and "Railing Details No. 3A" sheets.
5. For Section N-N, see "Railing Details No. 3A" sheet.

CONTRACT CHANGE ORDER NO. 73
SHEET 50 OF 52

REQUESTS FOR INFORMATION NOT ADDRESSED IN THIS CCO REMAIN IN FORCE

MARK	DATE	DESCRIPTIONS	BY	CH'D	CCO#
5	04/01/11	BIKEPATH CONDUIT	TH	JD	73
4	08/20/10	BIKEPATH DETAILS	TH	CC	99
3	04/22/09	BIKEPATH DETAILS	TH	MN	99
2	01/30/09	BIKEPATH DETAILS	TH	MN	99
1	11/26/08	BIKEPATH DETAILS	TH	MN	99

REVISIONS

DIST.	COUNTY	ROUTE	KILOMETER POST TOTAL PROJECT	SHEET NO.	TOTAL SHEETS
04	SF	80	13.2/13.9	900R5	1204

REGISTERED ENGINEER - CIVIL

12-6-04
PLANS APPROVAL DATE

REGISTERED PROFESSIONAL ENGINEER — Tien Hung Ho — No. C 43990 — Exp. 6/30/11 — CIVIL — STATE OF CALIFORNIA

The State of California or its officers or agents shall not be responsible for the accuracy or completeness of electronic copies of this plan sheet.

T.Y. LIN / MOFFATT & NICHOL
825 BATTERY STREET
SAN FRANCISCO, CA 94111

Caltrans now has a web site! To get to the web site, go to: http://www.dot.ca.gov

ALL DIMENSIONS ARE IN MILLIMETERS UNLESS OTHERWISE SHOWN

R. Vallizadeh/V. Toan/Y.L./W.L./F.C.
DESIGN OVERSIGHT
SIGN OFF DATE 04/01/11

	BY	CHECKED
DESIGN	T. Ho	C. Redfield
DETAILS	R. Xu	C. Redfield
QUANTITIES	G. Baker	K. Cormier

PREPARED FOR THE STATE OF CALIFORNIA
DEPARTMENT OF TRANSPORTATION

R. Monzonorez
PROJECT ENGINEER

BRIDGE NO. 34-0006L/R
KILOMETER POST 13.2/13.9

SAN FRANCISCO OAKLAND BAY BRIDGE
EAST SPAN SEISMIC SAFETY PROJECT
SELF-ANCHORED SUSPENSION BRIDGE
(SUPERSTRUCTURE & TOWER)

RAILING DETAILS NO. 3

Rev. Date: 5-18-98

ORIGINAL SCALE IN MILLIMETERS FOR REDUCED PLANS 0 10 20 30 40 50 60 70 80 90 100

CU 04
EA 0120F1

DISREGARD PRINTS BEARING EARLIER REVISION DATES

REVISION DATES (PRELIMINARY STAGE ONLY): 05/15/99 09/08/99 05/31/01 04/08/02 07/01/02 12/19/02

SHEET 483R5 OF

FILE => I:\bb\04-012001\sas\contract plans and cco\cco\cco#73\6-revision 04-01-11\dgn\akrlg06.dgn

USERNAME => DWinrow DATE PLOTTED => 01 APR 2011 TIME PLOTTED => 13:55:37

100 % PS&E

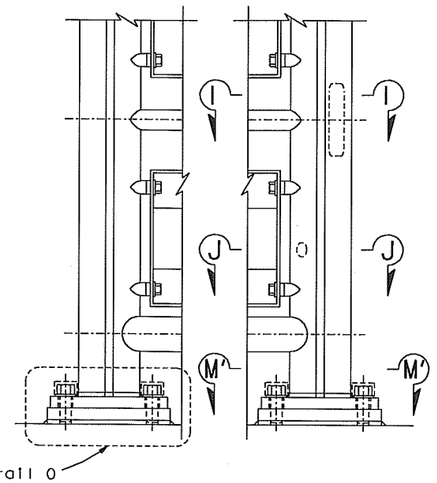

NORTH RAILING ELEVATION (Looking North)

1:5

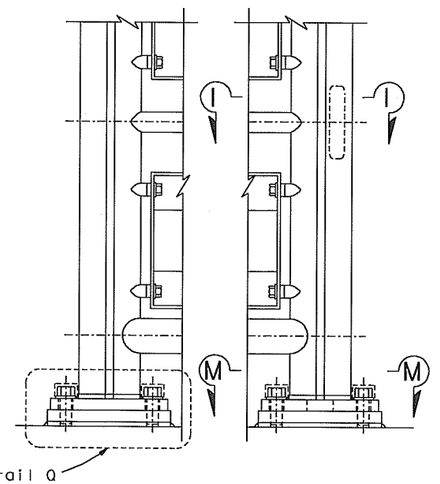

SOUTH RAILING ELEVATION (Looking South)

1:5

△5

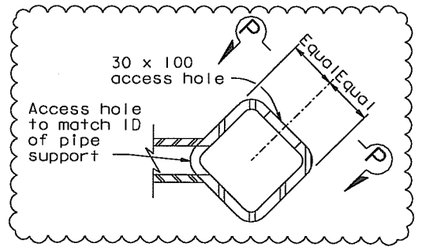

SECTION I-I

1:2

△5

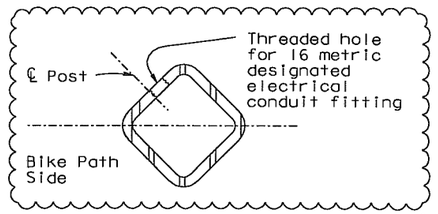

SECTION J-J

1:2

△5

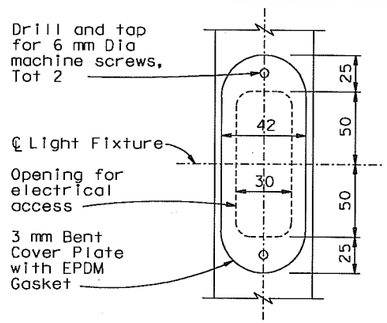

VIEW P-P

1:2

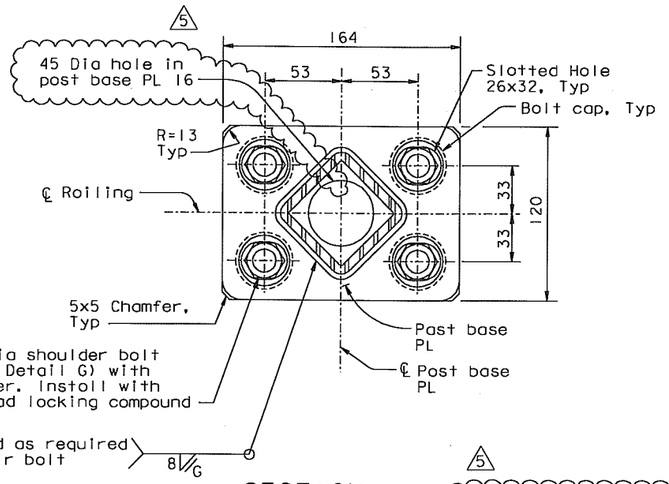

SECTION M-M

1:2

△5

(Section M'-M' similar, see Note 3)

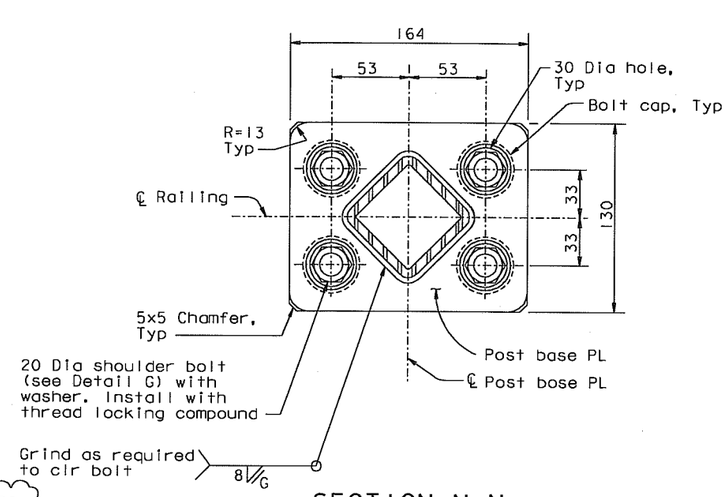

SECTION N-N (See Note 2)

1:2

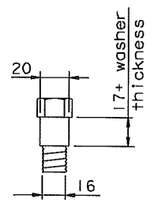

DETAIL G

SHOULDER BOLT

1:2

△5

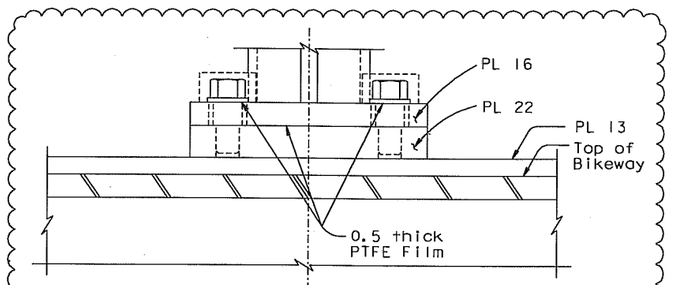

DETAIL Q

1:2

NOTES:

△5

1. DELETED.
2. Section N-N is applicable to post base PL connections in railing type E at Hinge A.
3. Section M'-M' does not have 45 Dia hole in base PL 16.
4. For details not shown, see "Railing Details No.3" sheet.

△5

ALL DIMENSIONS ARE IN MILLIMETERS UNLESS OTHERWISE SHOWN

CONTRACT CHANGE ORDER NO. 73

SHEET 51 OF 52

REQUESTS FOR INFORMATION NOT ADDRESSED IN THIS CCO REMAIN IN FORCE

MARK	DATE	REVISIONS	BY	CH'D	CCO#
△5	04/01/11	BIKEPATH CONDUIT	TH	JD	73
△4	08/20/10	BIKEPATH DETAILS	TH	CC	99
△3	09/11/09	BIKEPATH DETAILS	TH	MN	99
△2	05/08/09	BIKEPATH DETAILS	TH	MN	99
△1	01/30/09	BIKEPATH DETAILS	TH	MN	99
△0	11/26/08	BIKEPATH DETAILS	TH	MN	99

R. Valizadeh/V. Taan/Y.L./W.L./F.C.
DESIGN OVERSIGHT
SIGN OFF DATE 04/01/11

Rev. Date: 5-18-98

DESIGN BY T. Ho — CHECKED M. Nader
DETAILS BY T. Ho — CHECKED M. Nader
QUANTITIES BY T. Ho — CHECKED M. Nader

PREPARED FOR THE STATE OF CALIFORNIA DEPARTMENT OF TRANSPORTATION

R. Manzanarez
PROJECT ENGINEER

BRIDGE NO. 34-0006L/R
KILOMETER POST 13.2/13.9

SAN FRANCISCO OAKLAND BAY BRIDGE
EAST SPAN SEISMIC SAFETY PROJECT
SELF-ANCHORED SUSPENSION BRIDGE
(SUPERSTRUCTURE & TOWER)

RAILING DETAILS NO. 3A

ORIGINAL SCALE IN MILLIMETERS FOR REDUCED PLANS 0 10 20 30 40 50 60 70 80 90 100

CU 04
EA 0120F1

DISREGARD PRINTS BEARING EARLIER REVISION DATES →

REVISION DATES (PRELIMINARY STAGE ONLY): 11/26/08

SHEET 483SIR5 OF

FILE => I:\bb\04-012001\sas\contract plans and cco\cco\cco#73\6-revision 04-01-11\dgn\akrlg06s01.dgn

DIST.	COUNTY	ROUTE	KILOMETER POST TOTAL PROJECT	SHEET NO.	TOTAL SHEETS
04	SF	80	13.2/13.9	900SIR5	1204

Caltrans Metric

Tien Hung Ho
REGISTERED ENGINEER - CIVIL

11-26-08
PLANS APPROVAL DATE

REGISTERED PROFESSIONAL ENGINEER — Tien Hung Ho — No. C 43990 — Exp. 6/30/11 — CIVIL — STATE OF CALIFORNIA

The State of California or its officers or agents shall not be responsible for the accuracy or completeness of electronic copies of this plan sheet.

T.Y. LIN / MOFFATT & NICHOL
825 BATTERY STREET
SAN FRANCISCO, CA 94111

Caltrans now has a web site! To get to the web site, go to: http://www.dot.ca.gov

100% PS&E

DATE PLOTTED => 01 APR 2011 TIME PLOTTED => 13:57:52

USERNAME => DWinrow

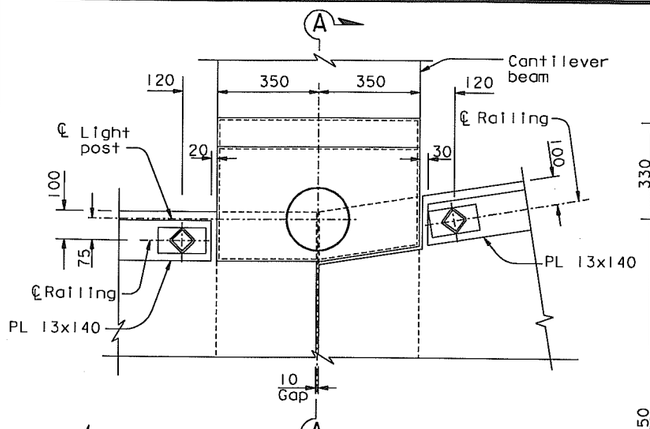

DETAIL A
1:10

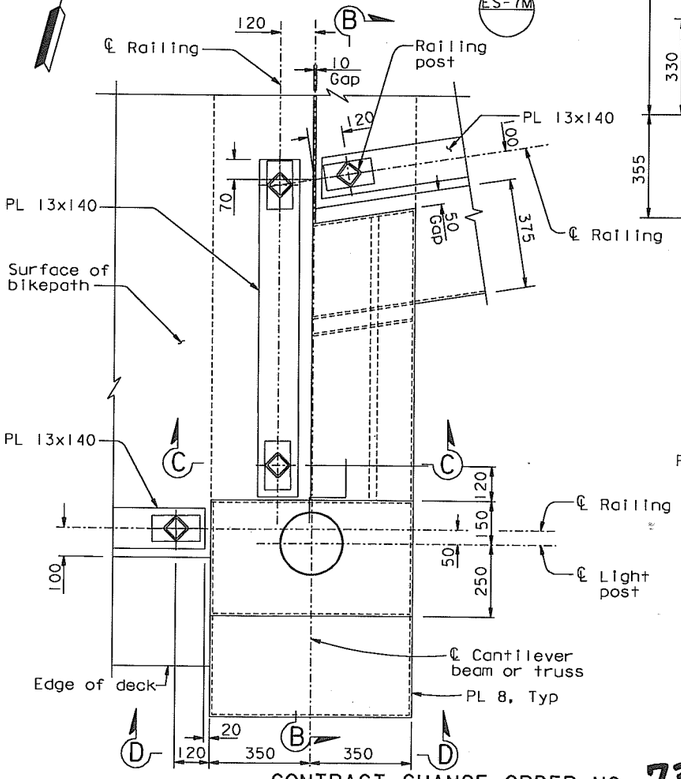

DETAIL B
1:10

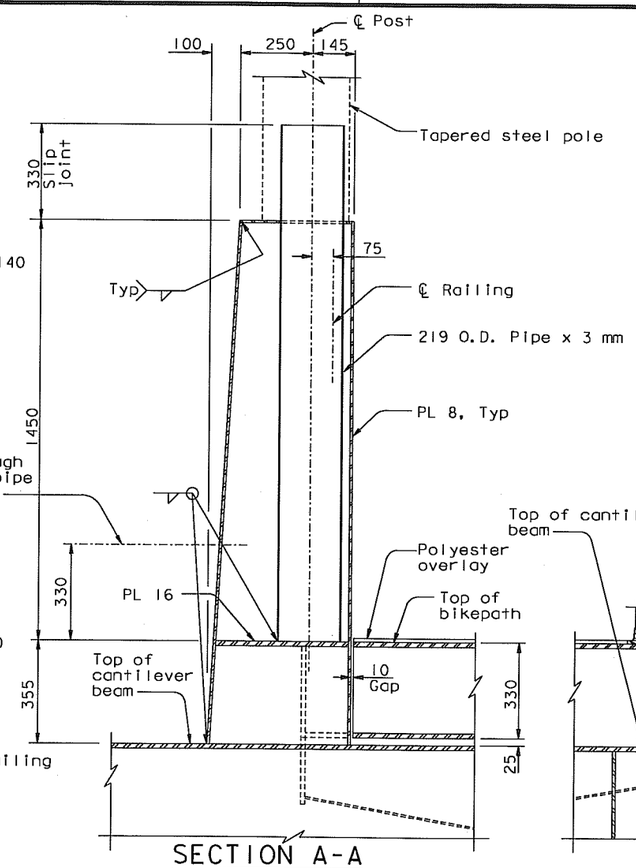

SECTION A-A
1:10

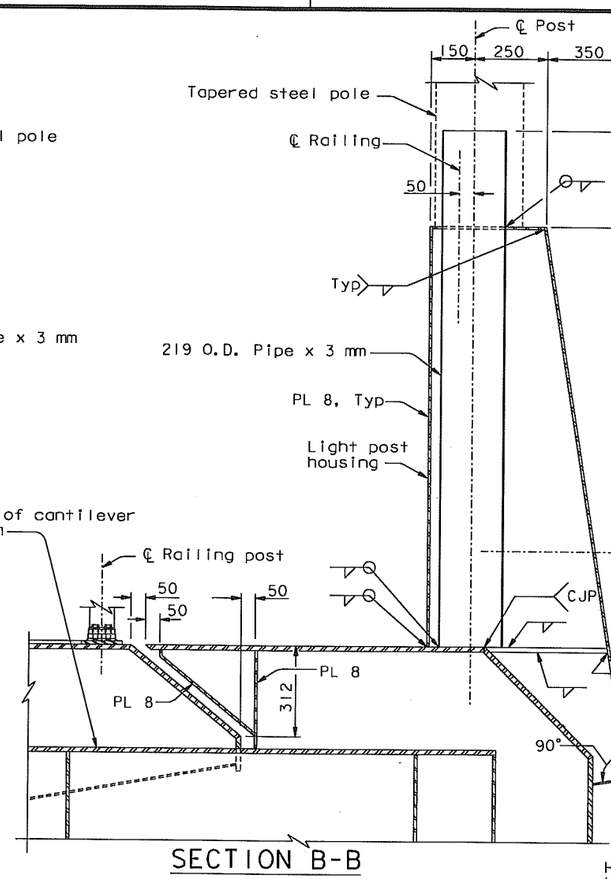

SECTION B-B
1:10

LIGHT POST HOUSING DETAILS AT BELVEDERES

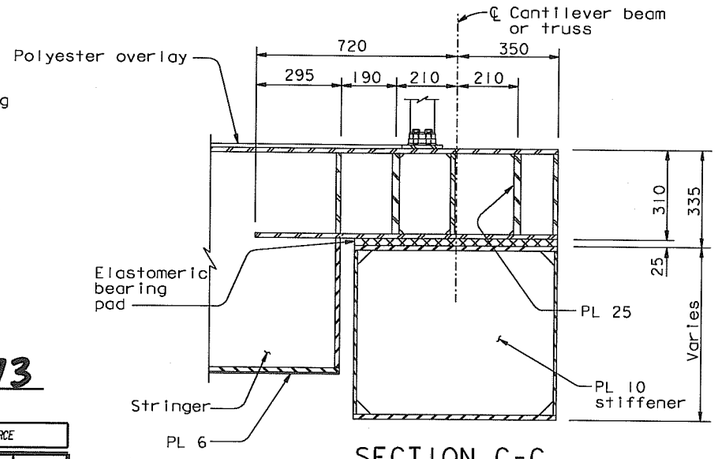

SECTION C-C
1:10

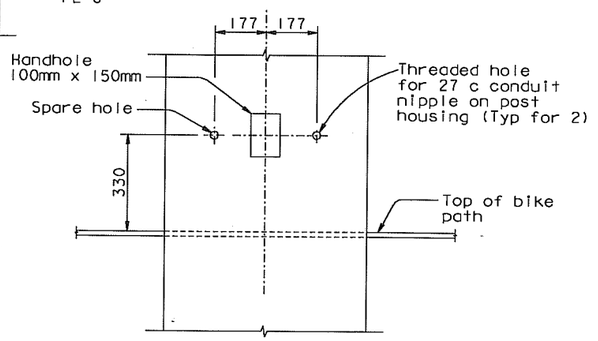

SECTION D-D
1:10

NOTES:

1. For tapered steel pole slip joint details, see "Rood Plans".
2. Hand hole cover far exterior opening only. Cover shall be a "Tamper Resistant Handhole Cover" per Caltrans Standard ES-7M.

△4

CONTRACT CHANGE ORDER NO. 73
SHEET 52 OF 52

REQUESTS FOR INFORMATION NOT ADDRESSED IN THIS CCO REMAIN IN FORCE

MARK	DATE	DESCRIPTIONS	BY	CH'D	CCO#
4	04/01/11	BIKEPATH CONDUIT	TH	JD	73
3	08/20/10	BIKEPATH DETAILS	CC	TH	99
2	05/28/10	BIKEPATH CONDUIT	AB	TH	73
1	09/25/09	BIKEPATH DETAILS	TH	HT	99

REVISIONS

DIST.	COUNTY	ROUTE	KILOMETER POST TOTAL PROJECT	SHEET NO.	TOTAL SHEETS
04	SF	80	13.2/13.9	90IR4	1204

REGISTERED ENGINEER - CIVIL
Tien Hung Ho No. C 43990 Exp. 6/30/11 CIVIL STATE OF CALIFORNIA
12-6-04
PLANS APPROVAL DATE
The State of California or its officers or agents shall not be responsible for the accuracy or completeness of electronic copies of this plan sheet.

T.Y. LIN / MOFFATT & NICHOL
825 BATTERY STREET
SAN FRANCISCO, CA 94111

Caltrans now has a web site! To get to the web site, go to: http://www.dot.ca.gov

ALL DIMENSIONS ARE IN MILLIMETERS UNLESS OTHERWISE SHOWN

DESIGN	BY T. Ho	CHECKED C. Redfield	
DETAILS	BY R. Xu	CHECKED C. Redfield	
QUANTITIES	BY G. Baker	CHECKED K. Cormier	

PREPARED FOR THE STATE OF CALIFORNIA DEPARTMENT OF TRANSPORTATION

R. Manzanarez
PROJECT ENGINEER

BRIDGE NO. 34-0006L/R
KILOMETER POST 13.2/13.9

SAN FRANCISCO OAKLAND BAY BRIDGE
EAST SPAN SEISMIC SAFETY PROJECT
SELF-ANCHORED SUSPENSION BRIDGE
(SUPERSTRUCTURE & TOWER)

RAILING DETAILS NO. 4

R. Valizadeh/V. Toan/Y.L./W.L./F.C.
DESIGN OVERSIGHT
SIGN OFF DATE 04/01/11

Rev. Date: 5-18-98

ORIGINAL SCALE IN MILLIMETERS FOR REDUCED PLANS 0 10 20 30 40 50 60 70 80 90 100

CU 04
EA 0120F1

DISREGARD PRINTS BEARING EARLIER REVISION DATES →

REVISION DATES (PRELIMINARY STAGE ONLY): 05/15/99 | 08/27/99 | 05/31/01 | 01/08/02 | 07/31/02 | 12/19/02

SHEET 484R4 OF

FILE => L:\BB\04-012001\SAS\Contract Plans and CCO\CCO\CCO#73\6-Revision 04-01-11\DGN\akrlg07.dgn

USERNAME => DWinrow DATE PLOTTED => 01 APR 2011 TIME PLOTTED => 15:14:38

100 % PS&E

CONTRACT CHANGE ORDER

Change Requested by: Engineer

CCO: 74 Suppl. No. 0 Contract No. 04 – 0120F4 Road SF-80-13.2/13.9 **FED. AID LOC.:**

To: **AMERICAN BRIDGE/FLUOR ENTERPRISES INC A JOINT VENTURE**

You are directed to make the following changes from the plans and specifications or do the following described work not included in the plans and specifications for this contract. ***NOTE: This change order is not effective until approved by the Engineer.***

Description of work to be done, estimate of quantities and prices to be paid. (Segregate between additional work at contract price, agreed price and force account.) Unless otherwise stated, rates for rental of equipment cover only such time as equipment is actually used and no allowance will be made for idle time. This last percentage shown is the net accumulated increase or decrease from the original quantity in the Engineer's Estimate.

Adjustment of Compensation at Lump Sum:

Modify strong motion detection system including, but not limited to, relocate sensor enclosures, reroute conduits and cable, and revise cable material and pull box connections.

Revise Special Provisions Section 10-3.18 "STRONG MOTION DETECTION SYSTEM," subsection "MATERIAL," subsection "Cables and Conductors," as shown on sheet 2 of this change order.

The following revised plan sheets detail the changes addressed in this change order: 271R3, 329R1, 330R1, 331R1, 332R1, 334R2, 334S1, 335R2, 336R1, 337R1, 338R1, 339R1, 340R1, 341R1, 342R1, 343R2, 344R2, 345R1, 346R1, 347R1, 348R1, 349R1, 350R1, 402R1 and 403R1 (of 1204) as shown on sheets 3 through 27 of this change order.

This change order resolves the costs associated with Contractor Request for Information (RFI) numbers 376, 402R0, 463 and 726R0 with respect to changes listed above.

For this work, the Contractor will receive a lump sum of $55,604.00. This sum constitutes full and complete compensation for furnishing all labor, material, tools and incidentals including all markups by reason of this change.

Adjustment of Compensation at Lump Sum.....$55,604.00

Estimated Cost: Increase ☒ Decrease ☐ $55,604.00

By reason of this order the time of completion will be adjusted as follows: 0 Days

Submitted by

Signature Kannu Balan **Resident Engineer** Kannu Balan, Senior T.E. **Date** 6-28-11

Approval Recommended by

Signature W. Shedd for **Supervising Bridge Engineer** Richard Morrow, Sup. B.E. **Date** 6-28-11

Engineer Approval by

Signature FOR SIEGENTHALER **Principal Transportation Engineer** Peter Siegenthaler, Prin. T.E. **Date** 11 JULY 2011

We the undersigned contractor, have given careful consideration to the change proposed and agree, if this proposal is approved, that we will provide all equipment, furnish the materials, except as otherwise be noted above, and perform all services necessary for the work above specified, and will accept as full payment therefor the prices shown above.

NOTE: If you, the contractor, do not sign acceptance of this order, your attention is directed to the requirements of the specifications as to proceeding with the ordered work and filing a written protest within the time therein specified.

Contractor Acceptance by

Signature (Print name and title) BRIAN A. PETERSEN - PROJECT DIRECTOR **Date** 30 JUN 11

Special Provisions changes:

1. In the Special Provisions, Section 10-3.18, " STRONG MOTION DETECTION SYSTEM", the subparagraph "Cables and Conductors" under "MATERIAL" paragraph is revised as follows:

Cables and Conductors

A. **Seismic Sensor Cable**: Seismic sensor cable, SSC, shall be four twisted pairs stranded tinned copper conductors, AWG No. 22 (7 x 30 strands), insulation 0.18 mm thick, individually shielded pairs with an aluminum polyester shield and AWG No. 22 stranded tinned copper drain wire for each pair, overall nominal outside diameter of 7.6 mm or less and outer jacket of 0.23 mm thick. Cable shall be instrument cable, NEC rated CLP2 plenum cable rated for 150°C. Cable shall be ~~similar to Belden plenum cable, Catalog No. 87778 except with only four pairs~~ **Consolidated Electronics Wire & Cable, product no. SX00-55226-1 or equal** and having a color code as specified below:

1st Pair	red, black
2nd Pair	white, brown
3rd Pair	blue, violet
4th Pair	yellow, orange

~~Seismic sensor cable shall be United Wire and Cable Co., Inc., Consolidated Wire and Cable, or equal.~~ Cable spools shall be of sufficient length to allow cables to be installed without splices from the sensor enclosures to the recorder cabinets as shown on the plans.

B. **Telephone Cable**: Telephone cable shall be waterproof filled-sheath, ISDN rated cable with four twisted pairs, individually shielded stranded conductor, minimum AWG No. 22 tinned copper, polyethylene insulated, with a foil aluminum-polyester shield, and chrome PVC jacket rated for 300 V. Cable spools shall be of sufficient length to allow the cables to be installed without splices from telephone service point to the seismic recorders.

C. **Interconnect Cable**: Interconnect cable, IC, shall be EIA RS-485 applications cable, Plenum type, NEC rated CL2P for temperature of 150°C. Cable shall be ~~similar to Belden cable No. 9844 but plenum rated~~ **Consolidated Electronics Wire & Cable, product no. SX00-55226-2 or equal.** The cable shall have eight tinned-copper, insulated conductors (4 twisted pairs). Overall aluminum-polyester shield and 24 AWG stranded tinned copper drain wire. Overall tinned copper braid shield (90 percent coverage). Overall nominal O.D. of 8.9 mm or less, with outer jacket of 0.23 mm thick. Color code shall be as specified below:

1st Pair	White/Blue Stripe, Blue/White Stripe
2nd Pair	White/Orange Stripe, Orange/White Stripe
3rd Pair	White/Green Stripe, Green/White Stripe
4th Pair	White/Brown Stripe, Brown/White Stripe

~~Interconnect cable shall be United Wire and Cable Co., Inc., Consolidated Wire and Cable, or equal.~~

Conductors: Conductors shall conform to "Conductors and Wiring" specified elsewhere in these special provisions.

REGISTERED PROFESSIONAL ENGINEER
FADI WALIEDDINE
No. 11465
Exp. 12/31/2009
ELECTRICAL
STATE OF CALIFORNIA

STATE OF CALIFORNIA - DEPARTMENT OF TRANSPORTATION

CONTRACT CHANGE ORDER MEMORANDUM

DATE: 6/28/2011 Page 1 of 1

TO: Pete Siegenthaler, Prin TE /

FROM: Kannu Balan, Senior TE

FILE: **E.A.** 04 - 0120F4
CO-RTE-PM SF-80-13.2/13.9
FED. NO.

CCO#: **74** SUPPLEMENT#: **0** Category Code: **CBSA**

CONTINGENCY BALANCE (incl. this change) **$167,601,239.11**

COST: **$55,604.00** INCREASE ☑ DECREASE ☐

HEADQUARTERS APPROVAL REQUIRED? ☑ YES ☐ NO

SUPPLEMENTAL FUNDS PROVIDED: **$0.00**

IS THIS REQUEST IN ACCORDANCE WITH ENVIRONMENTAL DOCUMENTS? ☑ YES ☐ NO

CCO DESCRIPTION:
Strong Motion Detection System

PROJECT DESCRIPTION:
CONSTRUCT SELF-ANCHORED SUSPENSION BRIDGE

Original Contract Time:	Time Adj. This Change:	Previously Approved CCO Time Adjustments:	Percentage Time Adjusted: (including this change)	Total # of Unreconciled Deferred Time CCO(s): (including this change)
2490 Day(s)	0 Day(s)	501 Day(s)	20 %	1

THIS CHANGE ORDER PROVIDES FOR:

Modifying strong motion detection system including relocating sensor enclosures, rerouting conduits and cable, and revising cable material and pull box connections.

Revising Special Provisions Section 10-3.18 "STRONG MOTION DETECTION SYSTEM," subsection "MATERIAL," subsection "Cables and Conductors."

This change order resolves structural conflicts and accommodates changed penetration points. Conduits are rerouted at the Tower Head to accommodate changed sensor locations and also for aesthetics. Conduits running vertically up the Tower have been rerouted to cable trays for ease of installation. The strong motion cable material specification is revised due to the unavailability of specified material and to be consistent with cables used on the Skyway area.

This change order resolves the costs associated with Contractor Request for Information (RFI) numbers 376, 402R0, 463 and 726R0 with respect to changes listed above.

The total cost of this change order is $55,604.00, which can be financed from the contingency fund. A detailed cost analysis is on file.

No time adjustment is warranted as this change order does not affect the controlling operation.

This change order has concurrence from Rick Morrow (Sup. BE), Mike Forner (Principal TE), Patrick Treacy (HQ Oversight), Ken Terpstra (Proj. Manager), Carl Petersen (CDMG), Wenyi Long (Design Oversight), Lina Ellis (Maintenance), Pat Hiplay (CT Earthquake Department) August 6, 2008, and Jing Chen (District Design) November 12, 2008.

The Resident Engineer requests Headquarters CCO Desk "Issue and Approve".

CONCURRED BY:		
Construction Engineer:	PCE, Mike Forner, Prin TE	Date 7/14/08
Bridge Engineer:	Rick Morrow, Sup BE	Date 7/8/08
Project Engineer:	CT Oversight, Wenyi Long, P.E.	Date 11/12/08
Project Manager:	Proj Manager, Ken Terpstra	Date 11/17/08
FHWA Rep.:	HQ, Patrick Treacy	Date 7/17/08
Environmental:		Date
Other (specify):	Struct. Maint, Lina Ellis	Date 11/12/08
Other (specify):	CDMG, Carl Petersen	Date 8/6/08
District Prior Approval By:	HQ Bob Molera	Date 11/24/08
HQ (Issue Approve) By:		Date
Resident Engineer's Signature:		Date 6-28-11

ESTIMATE OF COST

	THIS REQUEST	TOTAL TO DATE
ITEMS	$0.00	$0.00
FORCE ACCOUNT	$0.00	$0.00
AGREED PRICE	$0.00	$0.00
ADJUSTMENT	$55,604.00	$55,604.00
TOTAL	$55,604.00	$55,604.00

FEDERAL PARTICIPATION

☐ PARTICIPATING ☐ PARTICIPATING IN PART ☑ NONE
☐ NON-PARTICIPATING (MAINTENANCE) ☐ NON-PARTICIPATING

FEDERAL SEGREGATION (if more than one Funding Source or P.I.P. type)
☐ CCO FUNDED PER CONTRACT ☐ CCO FUNDED AS FOLLOWS

FEDERAL FUNDING SOURCE PERCENT

ADA Notice: For individuals with sensory disabilities, this document is available in alternate formats. For information call: (916) 654-6410 or TDD (916) 654-3880 or write Records and Forms Management, 1120 N Street, MS-89, Sacramento, CA 95814.

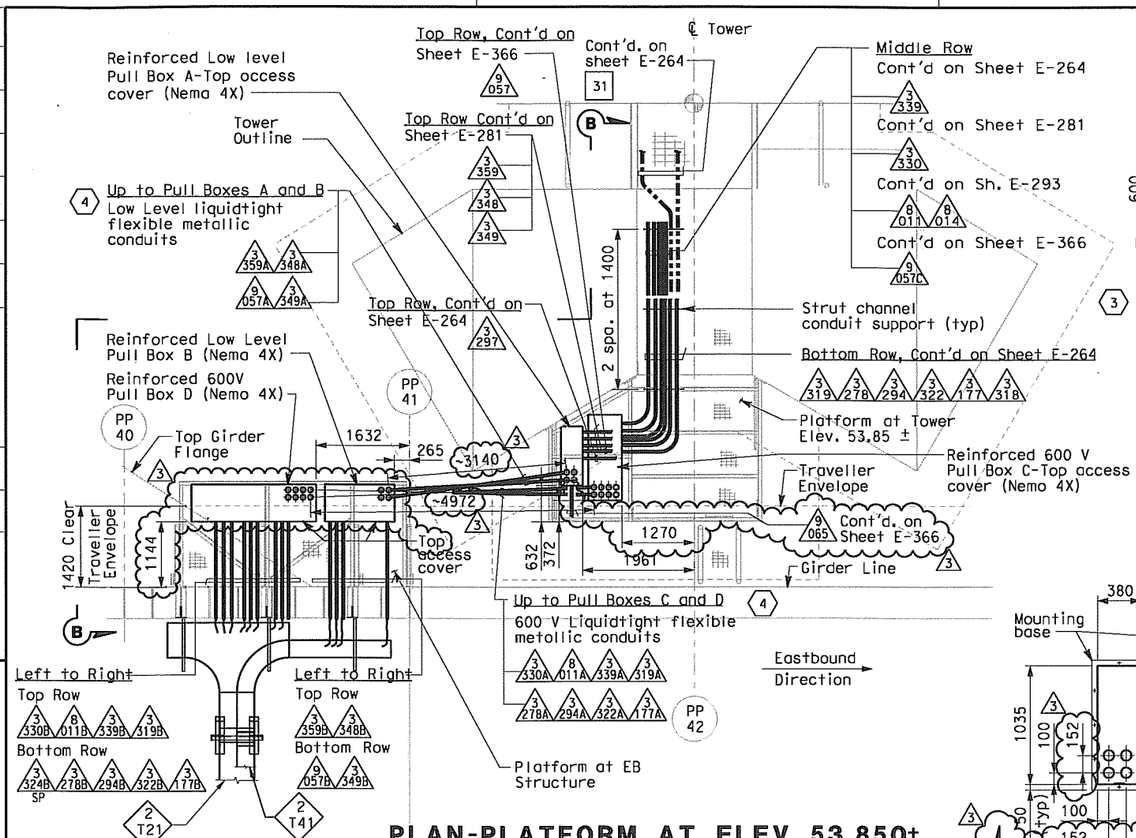

PLAN-PLATFORM AT ELEV 53.850±

SCALE 1:50

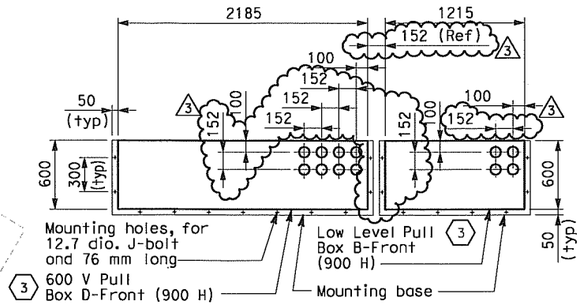

DETAIL 1

BOTTOM PLAN OF PULL BOXES LOCATED AT EB STRUCTURE PLATFORM
SCALE 1:25

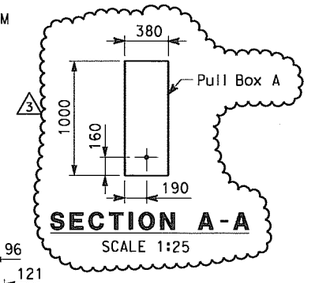

SECTION A-A

SCALE 1:25

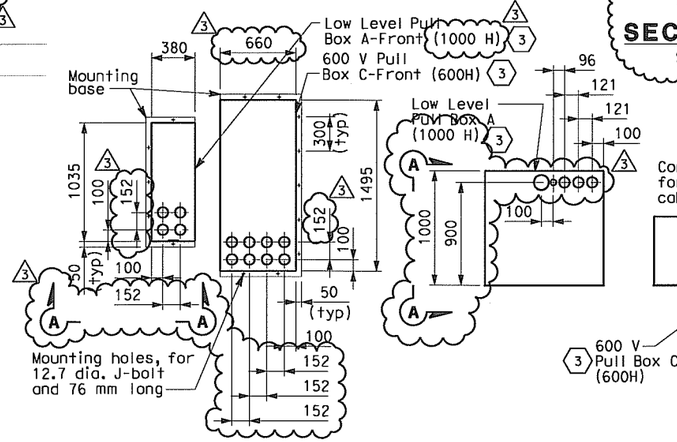

DETAIL 2

BOTTOM PLAN OF PULL BOXES LOCATED AT TOWER PLATFORM
SCALE 1:25

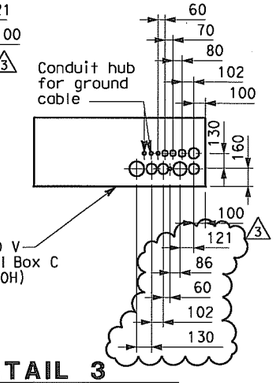

DETAIL 3

FRONT ELEVATION OF PULL BOXES LOCATED AT TOWER PLATFORM
SCALE 1:25

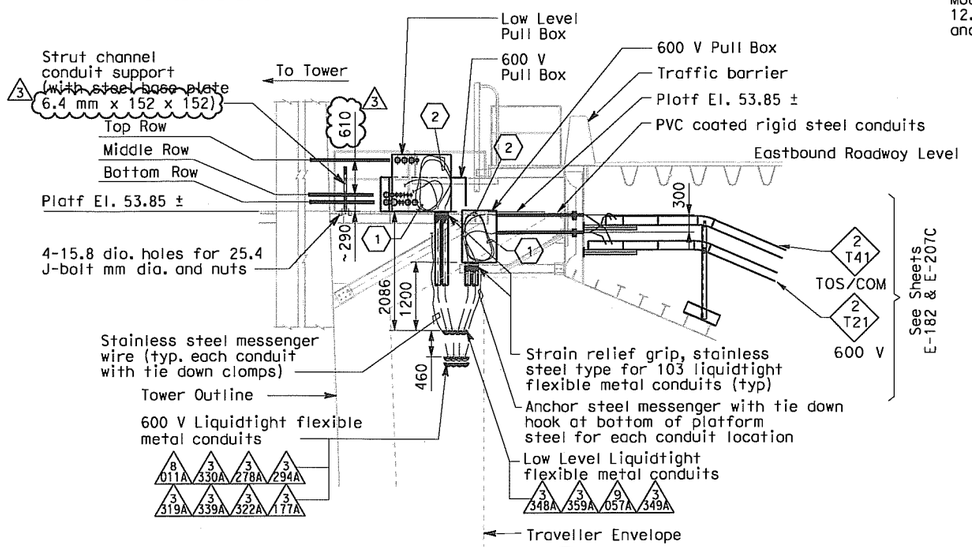

SECTION B

SCALE 1:50

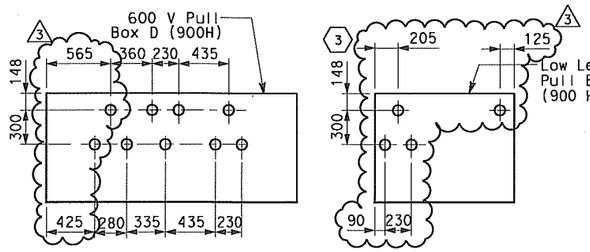

DETAIL 4

FRONT ELEVATION OF PULL BOXES LOCATED AT EB STRUCTURE PLATFORM
SCALE 1:25

SHEET NOTES

1. Coil 3 meters long of cable for each circuits inside the pull boxes.
2. Provide hooked cable support grips for cable or groups of cables at each liquidtight flexible metallic conduit inside the pull box.
3. Pull Box shall be fabricoted of Nemo 4X stainless steel, type 304. Pull Box shall be of reinforced construction to provide verticol support at bottom side of box for weighted conduit ond cables inside. The top side of the Pull Box shall be reinforced and provided with hooks for cable support grips inside the pull box.
4. Electricol conduit design between Eastbound Structure and Main Tower is based on the maximum expansion of 1000 mm oll directions.

NOTES

1. For locotion of sleeves Eastbound Structure PP-40 and PP-41, see Structural Plans.
2. Each liquidtight flexible metallic conduit shall be provided with #6 green insulated ground conductor outside the conduit.

FOR REVISION ONLY

MARK	DATE	DESCRIPTIONS	BY	CH'D	CCO#
REVISIONS					
3	10/03/08	STRONG MOTION SYSTEM	TW	RG FW	74
2	02/25/08	CABLE TRAY CHANGES	MP	RG SE	42S1
1	02/19/08	ELECTRICAL MODIFICATIONS	MP EL	RR	42

REQUEST FOR INFORMATION NOT ADDRESSED IN THIS CCO REMAIN IN FORCE

CONTRACT CHANGE ORDER NO. 74
SHEET 3 OF 27

DETAILS
TOWER AND SUSPENSION CABLE

SCALE: AS NOTED

E-264A

DIST	COUNTY	ROUTE	KILOMETER POST TOTAL PROJECT	SHEET No	TOTAL SHEETS
04	SF	80	13.2/13.9	271 R3	1204

12/19/02
REGISTERED ELECTRICAL ENGINEER DATE

REGISTERED PROFESSIONAL ENGINEER — JENS ERLINGSSON No. 8249 Exp. 9/30/06 ELECTRICAL — STATE OF CALIFORNIA

12-6-04
PLANS APPROVAL DATE

PB POWER, Inc.
A Parsons Brinckerhoff Company
303 Second St., Suite 700N
San Francisco, CA 94107-1317

The State of California or its officers or agents shall not be responsible for the accuracy or completeness of electronic copies of this plan sheet.

Caltrans now has a web site! To get to the web site, go to http://www.dot.ca.gov

REGISTERED PROFESSIONAL ENGINEER — FADI WALIEDDINE No. 11465 Exp. 12/31/2009 ELECTRICAL — STATE OF CALIFORNIA

DESIGN OVERSIGHT: BEHZAD GOLEMOHAMMADI
CALCULATED/DESIGNED BY: EJL
CHECKED BY: JE
DATE: 3/04
REVISED BY: 3/04
DATE REVISED:

STATE OF CALIFORNIA - DEPARTMENT OF TRANSPORTATION
Caltrans

THIS PLAN ACCURATE FOR ELECTRICAL WORK ONLY.

ALL DIMENSIONS ARE IN MILLIMETERS UNLESS OTHERWISE SHOWN.

FOR REDUCED PLANS ORIGINAL SCALE IS IN MILLIMETERS 0 20 40 60 80

DGN FILE =>T:\13103\MS\pse\SAS Struc\CCO\SAS CCO74\Issued for Submittal 2008-10-03\04-0120f1_0271R03.dgn
USERNAME =>garciar
CU 04251
EA 0120F1

LAST REVISION 00-00-00
DATE PLOTTED => 10/3/2008
TIME PLOTTED => 4:15:09 PM

DIST	COUNTY	ROUTE	KILOMETER POST TOTAL PROJECT	SHEET No	TOTAL SHEETS
04	SF	80	13.2/13.9	329 R1	1204

Jens Erlingsson 12/19/02
REGISTERED ELECTRICAL ENGINEER DATE

12-6-04
PLANS APPROVAL DATE

REGISTERED PROFESSIONAL ENGINEER — JENS ERLINGSSON — No. 8249 — Exp. 9/30/06 ELECTRICAL — STATE OF CALIFORNIA

PB POWER, Inc.
A Parsons Brinckerhoff Company
303 Second St., Suite 700N
San Francisco, CA 94107-1317

The State of California or its officers or agents shall not be responsible for the accuracy or completeness of electronic copies of this plan sheet.

Caltrans now has a web site! To get to the web site, go to: http://www.dot.ca.gov

Caltrans Metric

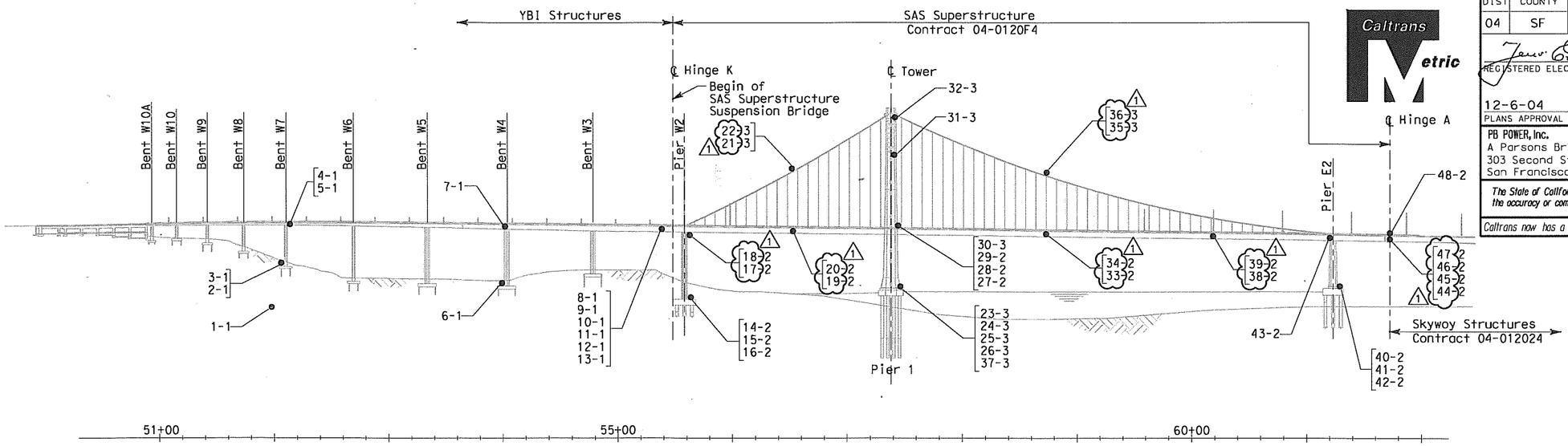

ELEVATION

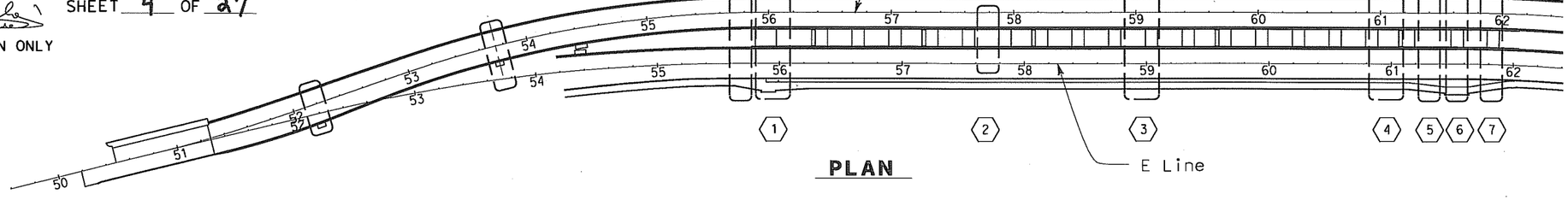

PLAN

REQUEST FOR INFORMATION NOT ADDRESSED IN THIS CCO REMAIN IN FORCE

MARK	DATE	DESCRIPTIONS (REVISIONS)	BY	CH'D	CCO#
1	10/03/08	STRONG MOTION SYSTEM	RG	FW	74

CONTRACT CHANGE ORDER NO. 74
SHEET 4 OF 27

REGISTERED PROFESSIONAL ENGINEER — FADI WALIEDDINE — No. 11465 — Exp. 12/31/2009 ELECTRICAL — STATE OF CALIFORNIA

FOR REVISION ONLY

GENERAL NOTES:

1. Install strong motion sensor cables continuous without splices from strong motion sensor enclosure to the strong motion recorder boxes. No splices or tops are permitted.
2. Provide 600 mm slack in each strong motion sensor cable inside each strong motion sensor enclosure box, junction box and pull box.
3. Provide 700 mm slack in each strong motion sensor cable inside each strong motion recorder box enclosure.
4. Unless otherwise shown or specified, all strong motion junction boxes shall be stainless steel NEMA Type 4X with hinged door and door clamps.
5. Install a stainless steel NEMA Type 4X pull box every 180 meters along horizontal conduit runs and every 45 meters along vertical runs. Each of these pull boxes shall be 304 mm x 304 mm x 152 mm (unless noted otherwise) with a hinged door and door clamps. Pull boxes are not shown on the plans for clarity.
6. Install stress relief cable support strops in all boxes along vertical runs.
7. Install Strong Motion Recorders #2 box A, #2-box B and #3 enclosures on service platform #5 (shown on sheet E-72), and tower (shown on sheet E-366), respectively.
8. For other work related not shown on this drawing, see electrical special provisions.
9. References:
   - For cable block diagrams, see sheets E-382, E-383 and E-384.
   - For strong motion sensor enclosures, see sheets E-377 and E-378.
10. 1

SHEET NOTES:

(1) For locations of sensors at Pier W2 see sheets E-362 and E-363.

(2) For locations of sensors at mid point between W2 and Tower see sheets E-364 and E-365.

(3) For locations of sensors at Tower see sheets E-366, E-367 and E-368.

(4) For locations of sensors at 1/3 distance between Tower and Pier E2 see sheets E-365 and E-369.

(5) For locations of sensors at 2/3 distance between Tower and Pier E2 see sheet E-370.

(6) For locations of sensors at Pier E2 see sheets E-371 and E-372.

(7) For locations of sensors at Hinge A see sheets E-373 and E-374.

STRONG MOTION DETECTION SYSTEM
GENERAL PLAN AND ELEVATION

SCALE: 1:2000

E-361

CALCULATED/ DESIGNED BY	CHECKED BY	DATE	REVISED BY
JW	FK	11/01	2/02 DATE REVISED

STATE OF CALIFORNIA - DEPARTMENT OF TRANSPORTATION — Caltrans
DESIGN OVERSIGHT — BEHZAD GOLEMOHAMMADI

THIS PLAN IS ACCURATE FOR ELECTRICAL WORK ONLY.

ALL DIMENSIONS ARE IN METERS UNLESS OTHERWISE SHOWN.

FOR REDUCED PLANS ORIGINAL SCALE IS IN MILLIMETERS 0 20 40 60 80

DGN FILE =>T:\13103\MS\pse\SAS Struc\CCO\SAS CCO74\Issued for Submittal 2008-10-03\04-0120f1_0329R01.dgn
USERNAME =>garciar

CU 04251 | EA 0120F1

LAST REVISION 00-00-00
DATE PLOTTED => 10/3/2008
TIME PLOTTED => 4:15:55 PM

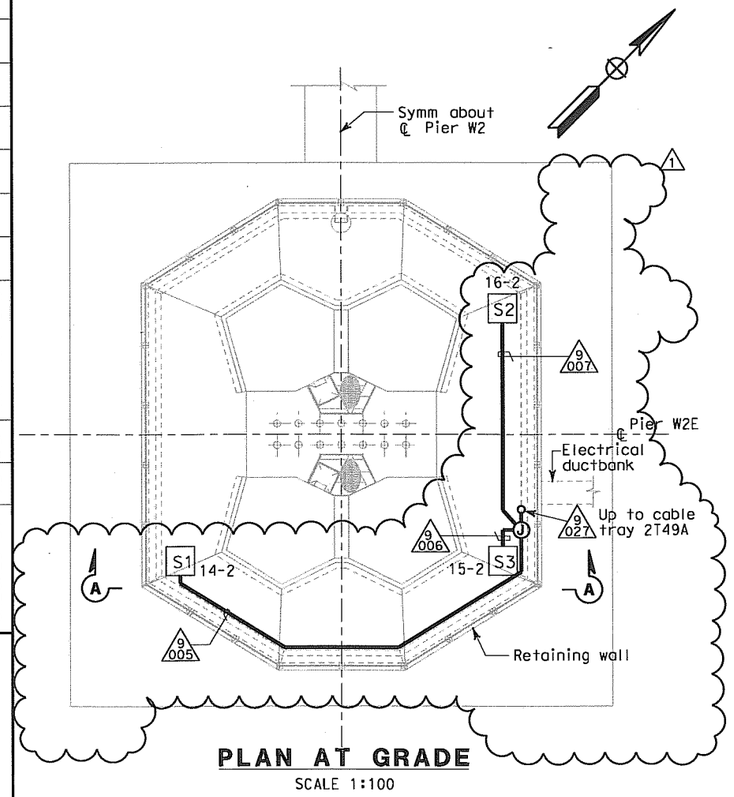

PLAN AT GRADE

SCALE 1:100

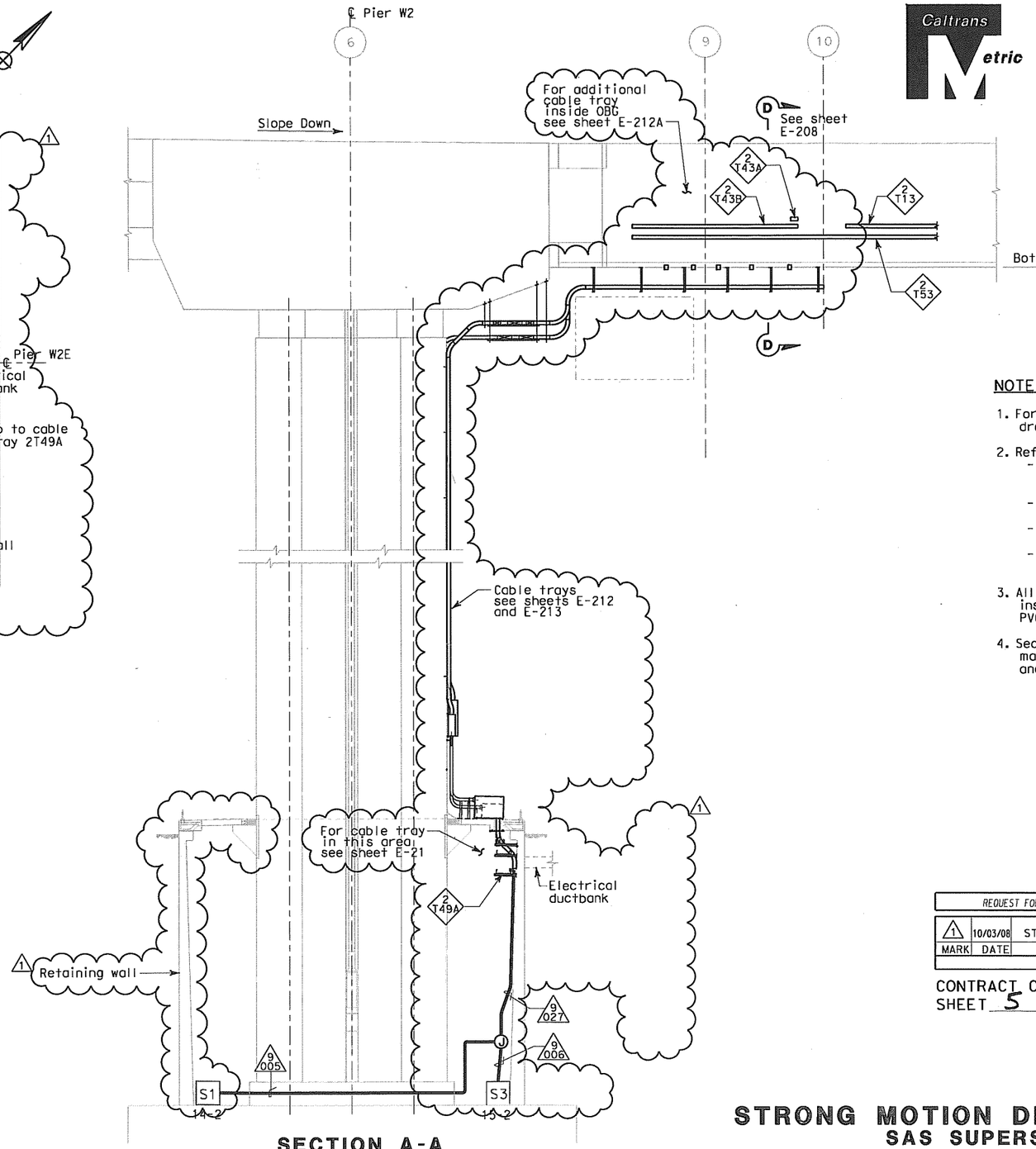

SECTION A-A

SCALE 1:100

SAS SUPERSTRUCTURE DETAILS OF CONDUIT RISER UP TO W2 EB

THIS PLAN IS ACCURATE FOR ELECTRICAL WORK ONLY.

ALL DIMENSIONS ARE IN MILLIMETERS UNLESS OTHERWISE SHOWN.

FOR REDUCED PLANS ORIGINAL SCALE IS IN MILLIMETERS 0 20 40 60 80

DGN FILE =>T:\13103\MS\pse\SAS Struc\CCO\SAS CCO74\Issued for Submittal 2008-10-03\04-0120F1_0330R01.dgn
USERNAME =>garcior

CU 04251 | EA 0120F1

Caltrans Metric

DIST	COUNTY	ROUTE	KILOMETER POST TOTAL PROJECT	SHEET No	TOTAL SHEETS
04	SF	80	13.2/13.9	330 R1	1204

Jens Erlingsson 12/19/02
REGISTERED ELECTRICAL ENGINEER DATE

12-6-04
PLANS APPROVAL DATE

REGISTERED PROFESSIONAL ENGINEER — JENS ERLINGSSON No. 8249 Exp. 9/30/06 ELECTRICAL — STATE OF CALIFORNIA

PB POWER, Inc.
A Parsons Brinckerhoff Company
303 Second St., Suite 700N
San Francisco, CA 94107-1317

The State of California or its officers or agents shall not be responsible for the accuracy or completeness of electronic copies of this plan sheet.

Caltrans now has a web site! To get to the web site, go to: http://www.dot.ca.gov

NOTES:

1. For other related work not shown on this drawing, see Electrical Special Provisions.
2. References:
   - For nameplates, sensor enclosures and recorder schedules, see sheets E-379, E-380 and E-381.
   - For cable block diagram, see sheets E-382, E-383 and E-384.
   - For general notes of the strong motion detection system, see sheet E-361.
   - For circuit and conduit/cable tray schedules, see sheets starting at E-401.
3. All conduits and fittings located outside or inside pier shall be rigid galvanized steel, PVC coated.
4. Secure enclosure to concrete wall with manufacturer's recommended mounting and approved by the Engineer.

REGISTERED PROFESSIONAL ENGINEER — FADI WALIEDDINE No. 11465 Exp. 12/31/2009 ELECTRICAL — STATE OF CALIFORNIA

FOR REVISION ONLY

REQUEST FOR INFORMATION NOT ADDRESSED IN THIS CCO REMAIN IN FORCE

MARK	DATE	REVISIONS	BY	CH'D	CCO#
1	10/03/08	STRONG MOTION SYSTEM	RG	FW	74

CONTRACT CHANGE ORDER NO. 74
SHEET 5 OF 27

STRONG MOTION DETECTION SYSTEM
SAS SUPERSTRUCTURE
PIER W2E FOOTER CONDUIT AND SENSOR LOCATION

SCALE AS NOTED

E-362

CALCULATED/ DESIGNED BY	KG	DATE 11/01	REVISED BY
CHECKED BY	AB	11/01	DATE REVISED

STATE OF CALIFORNIA - DEPARTMENT OF TRANSPORTATION
Caltrans
DESIGN OVERSIGHT
BEHZAD GOLEMOHAMMADI

LAST REVISION 00-00-00
DATE PLOTTED => 10/3/2008
TIME PLOTTED => 4:16:36 PM

DIST	COUNTY	ROUTE	KILOMETER POST TOTAL PROJECT	SHEET No	TOTAL SHEETS
04	SF	80	13.2/13.9	331 R1	1204

REGISTERED ELECTRICAL ENGINEER — 12/19/02 DATE

12-6-04
PLANS APPROVAL DATE

REGISTERED PROFESSIONAL ENGINEER — JENS ERLINGSSON No. 8249 Exp. 9/30/06 ELECTRICAL — STATE OF CALIFORNIA

PB POWER, Inc.
A Parsons Brinckerhoff Company
303 Second St., Suite 700N
San Francisco, CA 94107-1317

The State of California or its officers or agents shall not be responsible for the accuracy or completeness of electronic copies of this plan sheet.

Caltrans now has a web site! To get to the web site, go to: http://www.dot.ca.gov

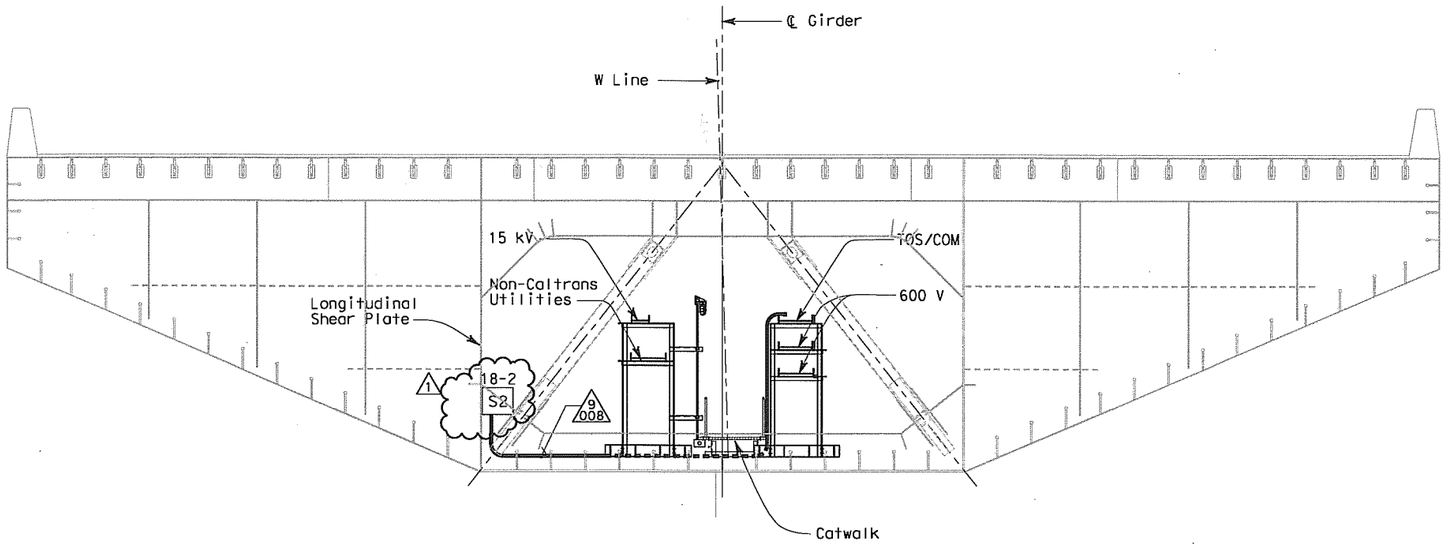

WESTBOUND SAS SUPERSTRUCTURE GIRDER SECTION @ PANEL POINT 8 (1)

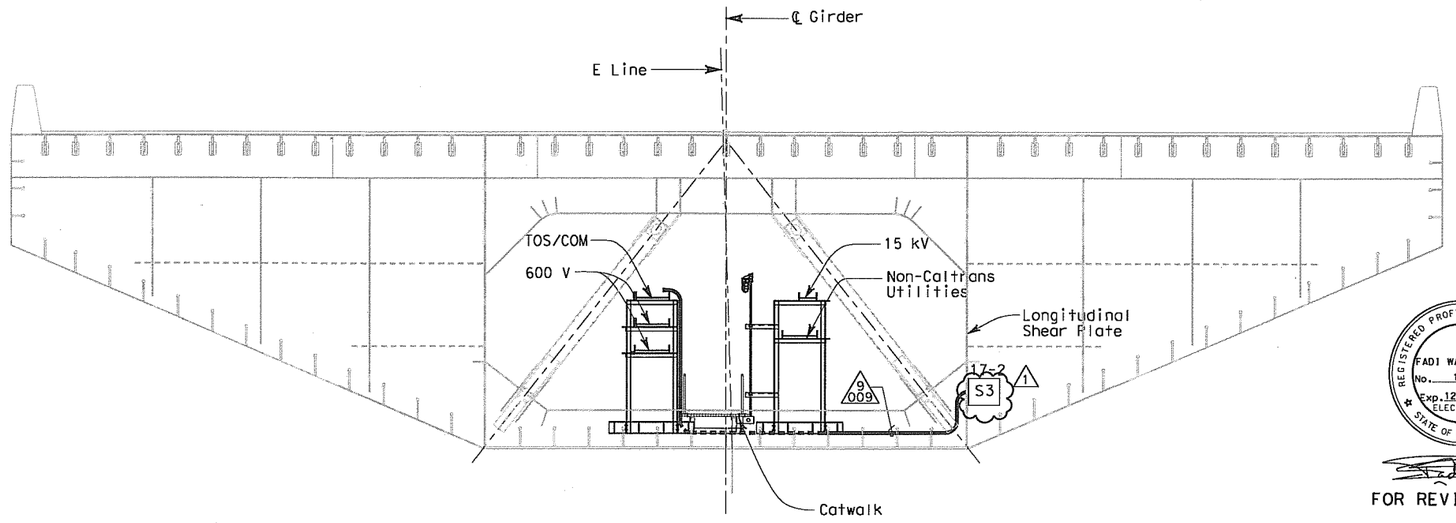

EASTBOUND SAS SUPERSTRUCTURE GIRDER SECTION @ PANEL POINT 8 (1)

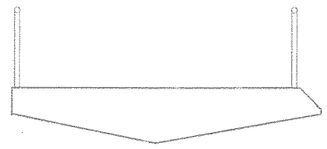

NOTES:

1. For other related work not shown on this drawing, see Electrical Special Provisions.
2. References: (1)
   - For nameplates, sensor enclosures and recorder schedules, see sheets E-379, E-380 and E-381.
   - For cable block diagram, see sheets E-382, E-383 and E-384.
   - For general notes of the strong motion detection system, see sheet E-361.
   - For circuit and conduit/cable tray schedules, see sheets starting at E-401.

REGISTERED PROFESSIONAL ENGINEER — FADI WALIEDDINE No. 11465 Exp. 12/31/2009 ELECTRICAL — STATE OF CALIFORNIA

FOR REVISION ONLY

REQUEST FOR INFORMATION NOT ADDRESSED IN THIS CCO REMAIN IN FORCE

MARK	DATE	DESCRIPTIONS	BY	CH'D	CCO#
		REVISIONS			
1	10/03/08	STRONG MOTION SYSTEM	RG	FW	74

CONTRACT CHANGE ORDER NO. 74
SHEET 6 OF 27

STRONG MOTION DETECTION SYSTEM
SAS SUPERSTRUCTURE
PIER W2 GIRDER CONDUIT AND SENSOR LOCATION

SCALE 1:50

E-363

CALCULATED/ DESIGNED BY	KG	DATE	REVISED BY	IAH
CHECKED BY	AB	12/01	DATE REVISED	3/04

DESIGN OVERSIGHT — BEHZAD GOLEMOHAMMADI

STATE OF CALIFORNIA - DEPARTMENT OF TRANSPORTATION — Caltrans

THIS PLAN IS ACCURATE FOR ELECTRICAL WORK ONLY.

FOR REDUCED PLANS ORIGINAL SCALE IS IN MILLIMETERS 0 20 40 60 80

DGN FILE =>T:\13103\MS\pse\SAS Struc\CCO\SAS CC074\Issued for Submittal 2008-10-03\04-0120f1_0331R01.dgn
USERNAME =>garciar

CU 04251 | EA 0120F1

LAST REVISION 00-00-00 — DATE PLOTTED => 10/3/2008 TIME PLOTTED => 4:17:08 PM

DIST	COUNTY	ROUTE	KILOMETER POST TOTAL PROJECT	SHEET No	TOTAL SHEETS
04	SF	80	13.2/13.9	332 R1	1204

Jens Erlingsson 12/19/02
REGISTERED ELECTRICAL ENGINEER DATE

12-6-04
PLANS APPROVAL DATE

REGISTERED PROFESSIONAL ENGINEER — JENS ERLINGSSON No. 8249 Exp. 9/30/06 ELECTRICAL — STATE OF CALIFORNIA

PB POWER, Inc.
A Parsons Brinckerhoff Company
303 Second St., Suite 700N
San Francisco, CA 94107-1317

The State of California or its officers or agents shall not be responsible for the accuracy or completeness of electronic copies of this plan sheet.

Caltrans now has a web site! To get to the web site, go to: http://www.dot.ca.gov

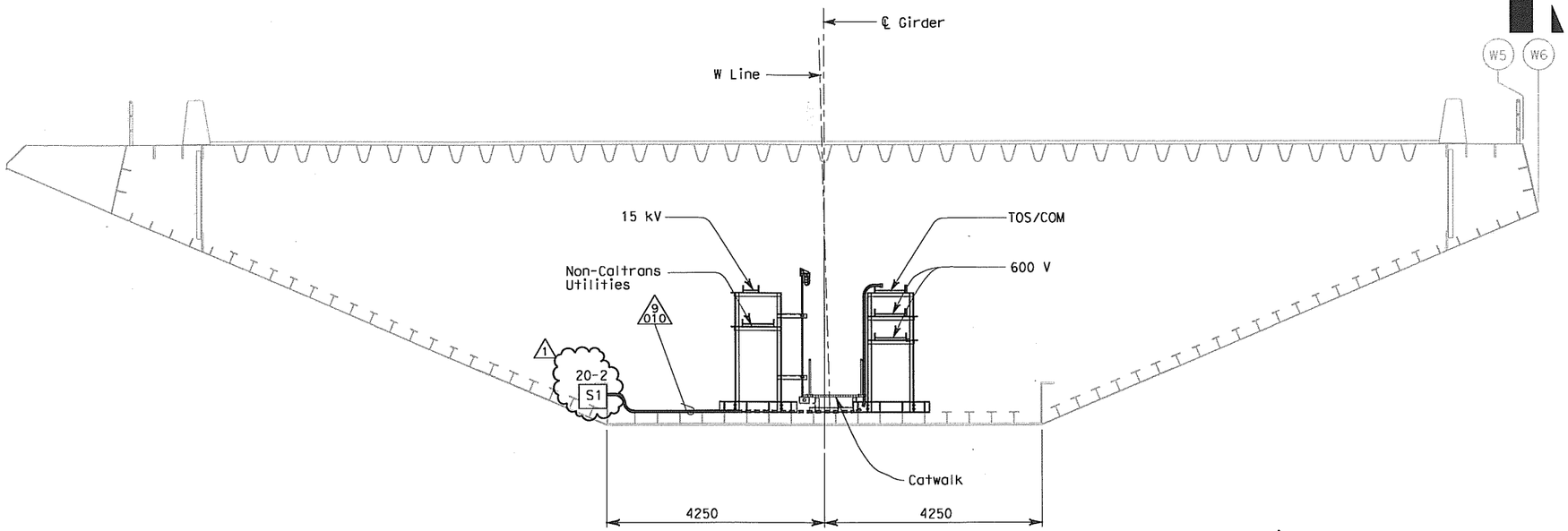

WESTBOUND SAS SUPERSTRUCTURE GIRDER SECTION AT PANEL POINT 24 1

E6 E5

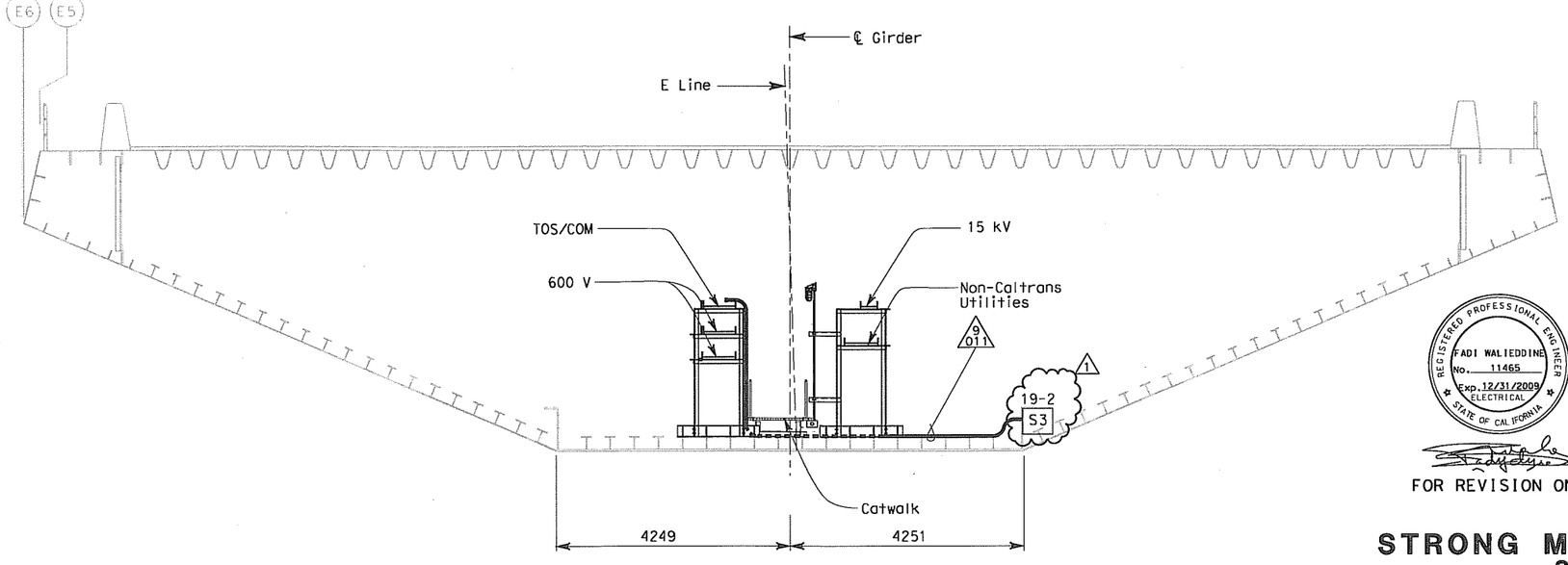

EASTBOUND SAS SUPERSTRUCTURE GIRDER SECTION AT PANEL POINT 24 1

NOTES:

1. For other related work not shown on this drawing, see Electrical Special Provisions.
2. References: 1
   - For nameplates, sensor enclosures and recorder schedules, see sheets E-379, E-380 and E-381.
   - For cable block diagram, see sheets E-382, E-383 and E-384.
   - For general notes of the strong motion detection system, see sheet E-361.
   - For circuit and conduit/cable tray schedules, see sheets starting at E-401.

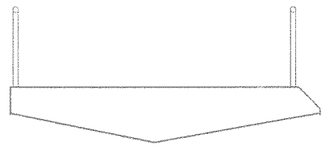

REGISTERED PROFESSIONAL ENGINEER — FADI WALIEDDINE No. 11465 Exp. 12/31/2009 ELECTRICAL — STATE OF CALIFORNIA

FOR REVISION ONLY

REQUEST FOR INFORMATION NOT ADDRESSED IN THIS CCO REMAIN IN FORCE					
MARK	DATE	REVISIONS	BY	CH'D	CCO#
1	10/03/08	STRONG MOTION SYSTEM	RG	FW	74

CONTRACT CHANGE ORDER NO. 74
SHEET 7 OF 27

STRONG MOTION DETECTION SYSTEM
SAS SUPERSTRUCTURE
MID SPAN BETWEEN PIER W2 AND TOWER CONDUIT AND SENSOR LOCATION

SCALE 1:50

E-364

DESIGN OVERSIGHT	CALCULATED/ DESIGNED BY	CHECKED BY	DATE	REVISED BY	DATE REVISED
BEHZAD GOLEMOHAMMADI	KG	AB	11/01	IAH	3/04

STATE OF CALIFORNIA - DEPARTMENT OF TRANSPORTATION
Caltrans

THIS PLAN IS ACCURATE FOR ELECTRICAL WORK ONLY.

ALL DIMENSIONS ARE IN MILLIMETERS UNLESS OTHERWISE SHOWN

FOR REDUCED PLANS ORIGINAL SCALE IS IN MILLIMETERS 0 20 40 60 80

DGN FILE =>T:\13103\WS\pse\SAS Struc\CCO\SAS CCO74\Issued for Submittal 2008-10-03\04-0120f1_0332R01.dgn
USERNAME =>garciar

CU 04251 EA 0120F1

LAST REVISION 00-00-00
DATE PLOTTED => 10/3/2008
TIME PLOTTED => 4:17:42 PM

DIST	COUNTY	ROUTE	KILOMETER POST TOTAL PROJECT	SHEET No	TOTAL SHEETS
04	SF	80	13.2/13.9	334 R2	1204

Jens Erlingsson 12/19/02
REGISTERED ELECTRICAL ENGINEER DATE

12-6-04
PLANS APPROVAL DATE

REGISTERED PROFESSIONAL ENGINEER — JENS ERLINGSSON No. 8249 Exp. 9/30/06 ELECTRICAL — STATE OF CALIFORNIA

PB POWER, Inc.
A Parsons Brinckerhoff Company
303 Second St., Suite 700N
San Francisco, CA 94107-1317

The State of California or its officers or agents shall not be responsible for the accuracy or completeness of electronic copies of this plan sheet.

Caltrans now has a web site! To get to the web site, go to: http://www.dot.ca.gov

Caltrans Metric

DATE	REVISED BY	DATE REVISED
10/01	AB	2/04
11/01	KG	

CALCULATED/DESIGNED BY: EDC
CHECKED BY:

DESIGN OVERSIGHT: BEHZAD GOLEMOHAMMADI

STATE OF CALIFORNIA - DEPARTMENT OF TRANSPORTATION
Caltrans

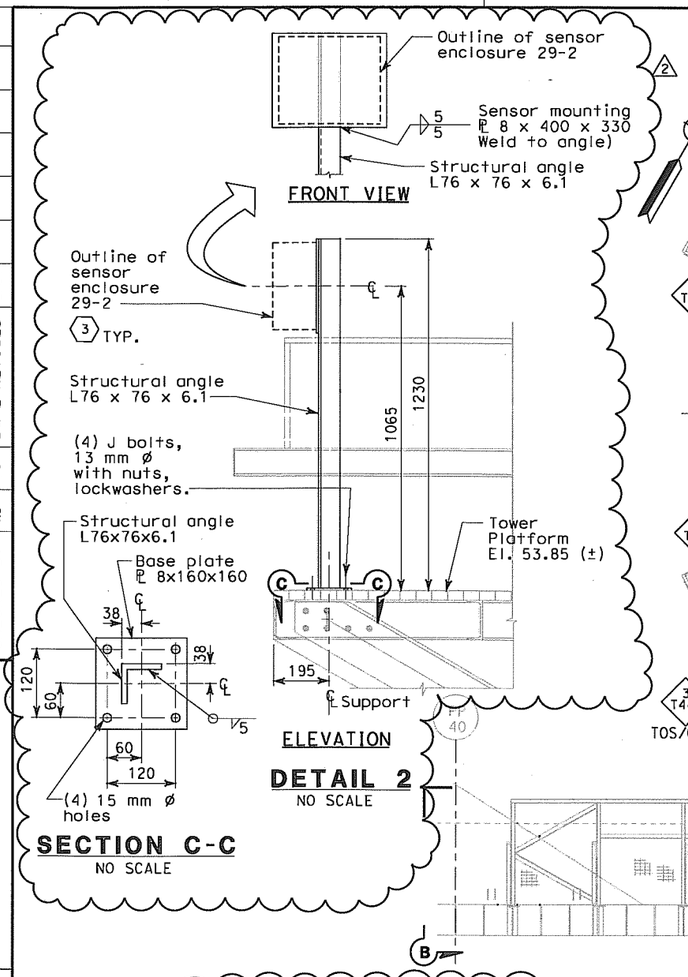

DETAIL 2
NO SCALE

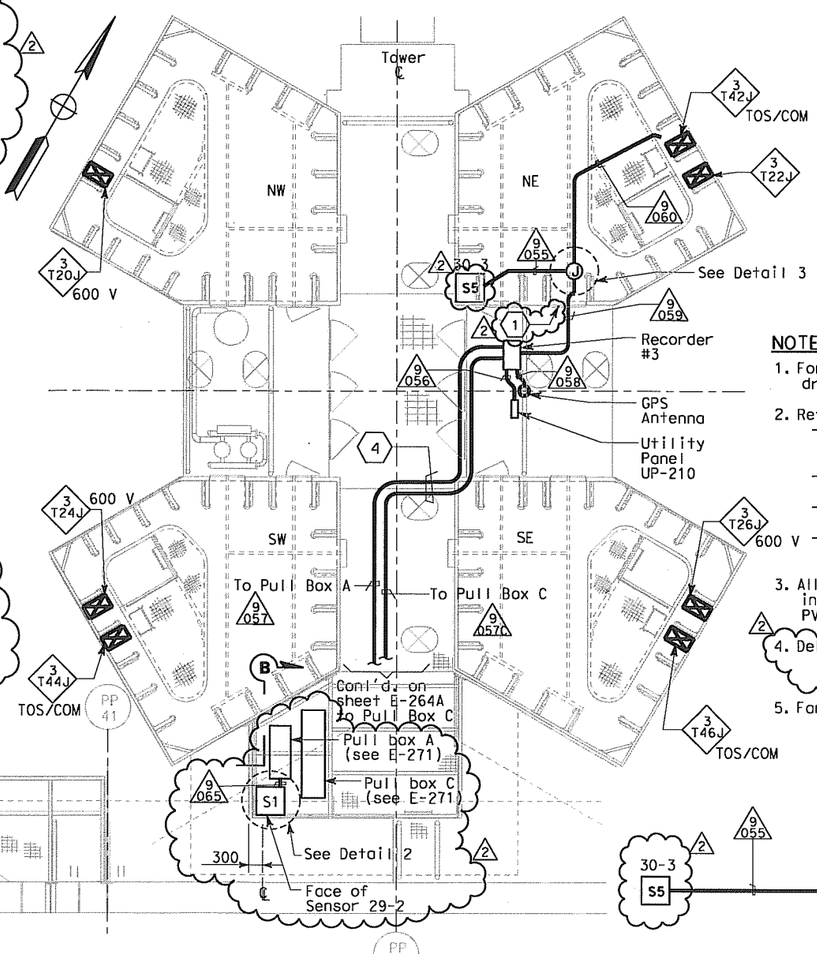

PLAN AT MAIN TOWER, ELEV 53.85 m
SCALE 1:50

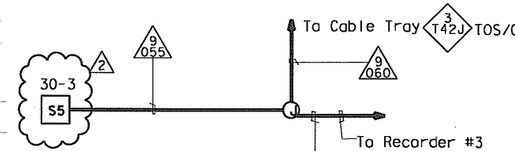

DETAIL 3
NO SCALE

REGISTERED PROFESSIONAL ENGINEER — FADI WALIEDDINE No. 11465 Exp. 12/31/2009 ELECTRICAL — STATE OF CALIFORNIA

FOR REVISION ONLY

NOTES:

1. For other related work not shown on this drawing, see Electrical Special Provisions.
2. References:
   - For nameplates, sensor enclosures and recorder schedules, see sheets E-379, E-380 and E-381.
   - For cable block diagram, see sheets E-382, E-383 and E-384.
   - For general notes on the strong motion detection system, see sheet E-361.
   - For circuit and conduit/cable tray schedules, see sheets starting at E-401.
3. All conduits and fittings located outside or inside pier shall be rigid galvanized steel, PVC coated.
4. Deleted.
5. For Section B-B, see sheet E-264A.

SHEET NOTES:

(1) Pipe sleeves shall be provided with watertight seals after conduits are installed. Spare sleeves shall be capped and plugged.
(2) Deleted
(3) For nameplate engraving, see nameplate Schedule on sheet E-379.
(4) All conduits which thereafter cross the access walkways shall be raised to a level of at least 2438 above the grating to pass overhead, allowing free walkways on the remaining three quadrants of the platform. Door on north face of SE tower shaft shall remain accessible..
(5) Deleted.

REQUEST FOR INFORMATION NOT ADDRESSED IN THIS CCO REMAIN IN FORCE					
MARK	DATE	DESCRIPTIONS	BY	CH'D	CCO#
		REVISIONS			
2	10/03/08	STRONG MOTION SYSTEM	RG	FW	74
1	02/19/08	ELECTRICAL MODIFICATIONS	MP EL	RR	42

CONTRACT CHANGE ORDER NO. 74
SHEET 8 OF 27

STRONG MOTION DETECTION SYSTEM
SAS SUPERSTRUCTURE
TOWER PLATFORM CONDUIT AND SENSOR LOCATION
SCALE AS NOTED

E-366

THIS PLAN IS ACCURATE FOR ELECTRICAL WORK ONLY.

ALL DIMENSIONS ARE IN MILLIMETERS UNLESS OTHERWISE SHOWN.

FOR REDUCED PLANS ORIGINAL SCALE IS IN MILLIMETERS 0 20 40 60 80

DGN FILE =>T:\13103\MS\pse\SAS Struc\CCO\SAS CC074\Issued for Submittal 2008-10-03\04-0120f1_0334R02.dgn
USERNAME =>garciar

CU 04251 | EA 0120F1

LAST REVISION 00-00-00
DATE PLOTTED => 10/3/2008
TIME PLOTTED => 4:18:30 PM

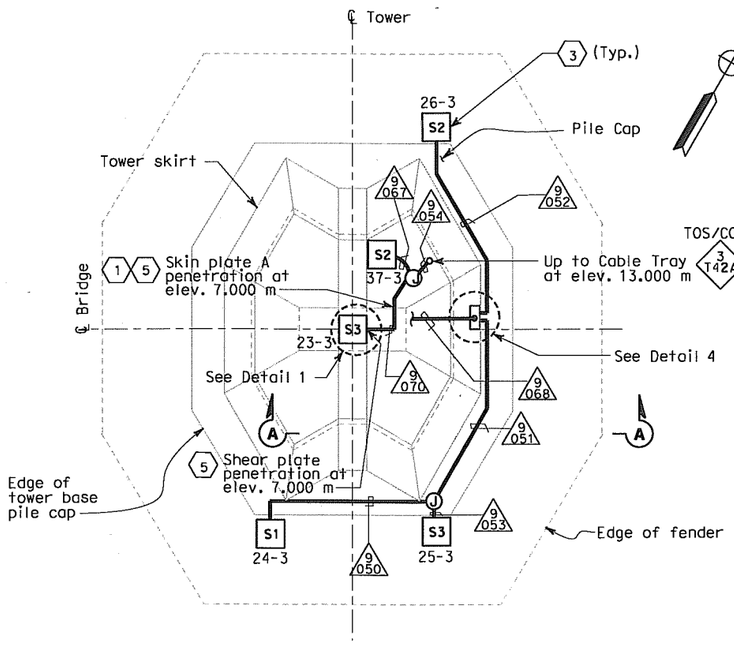

PLAN AT MAIN TOWER, ELEV 3.000 m

SCALE 1:200

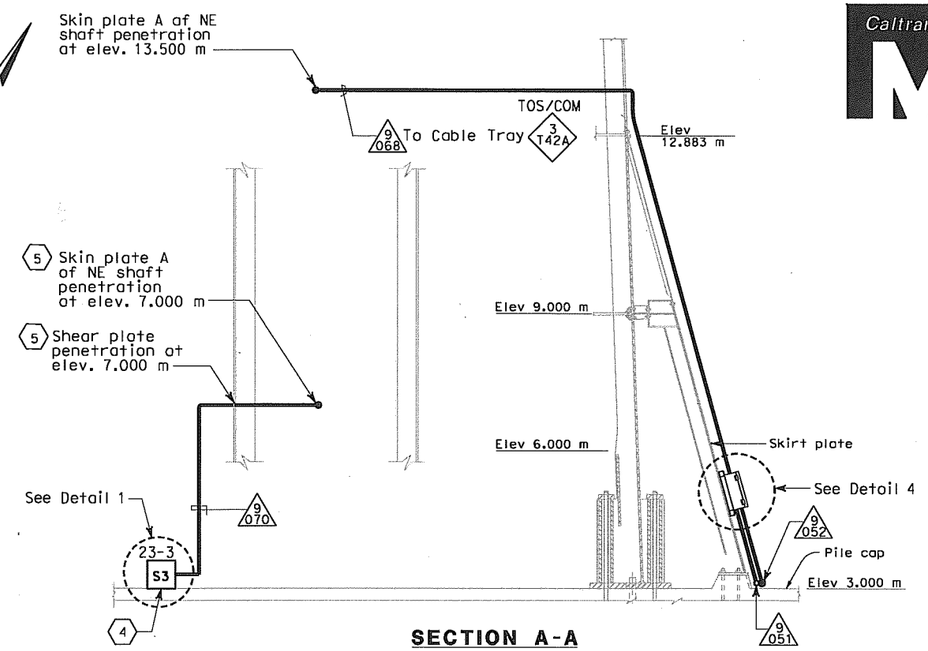

SECTION A-A

NO SCALE

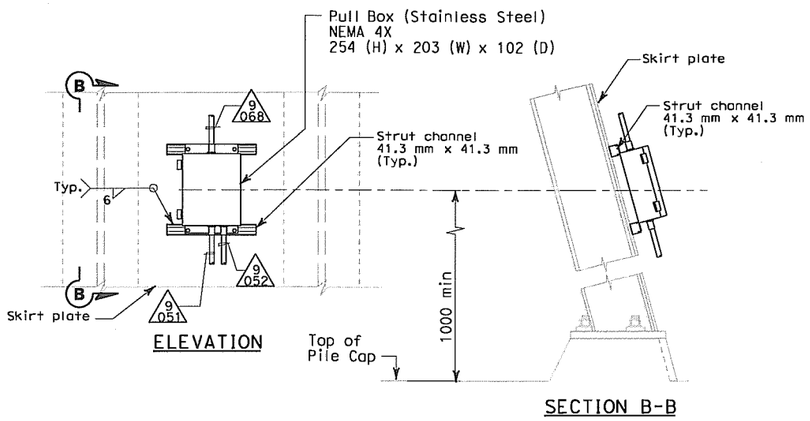

DETAIL 4

NO SCALE

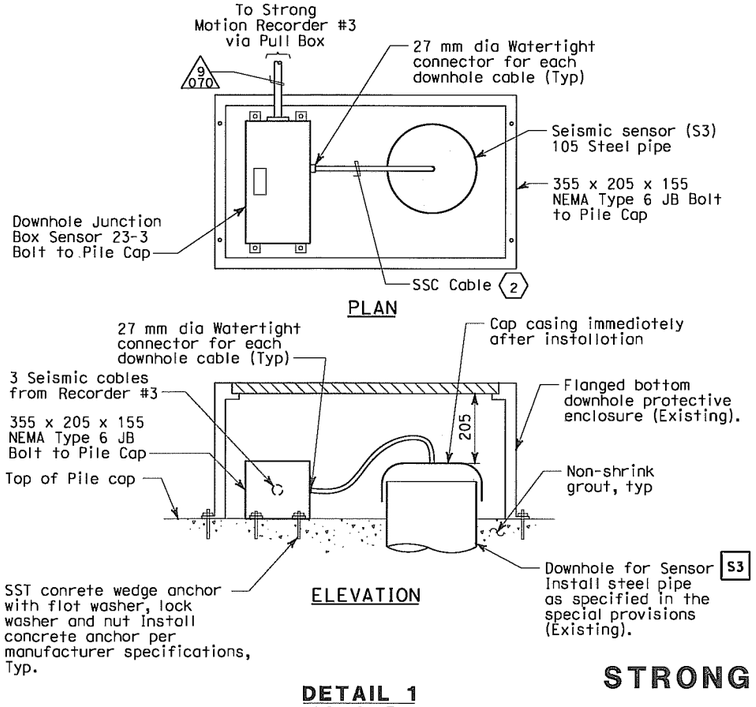

DETAIL 1

NO SCALE

SHEET NOTES:

1. Pipe sleeves shall be provided with watertight seals after conduits are installed. Spare sleeves shall be capped and plugged.
2. Downhole sensor cables will be furnished and installed by CDMG.
3. For nameplate engraving, see nameplate Schedule on sheet E-379.
4. Remove Downhole Enclosure and re-install on top of the bose plate.
5. Penetrations through skirt plate, shear plate and skin plate A of NE Tower shaft at elev. 7.000 m. For shear plate and skin plate penetrations, use "Hole Stiffening Detail for Utility Conduits" on sheet 966 of 1204.

NOTES:

1. For other related work not shown on this drawing, see Electrical Special Provisions.
2. References:
   - For nameplates, sensor enclosures and recorder schedules, see sheets E-379, E-380 and E-381.
   - For cable block diagram, see sheets E-382, E-383 and E-384.
   - For general notes on the strong motion detection system, see sheet E-361.
   - For circuit and conduit/cable tray schedules, see sheets starting at E-401.
3. All conduits and fittings located outside or inside pier shall be rigid galvanized steel, PVC coated.
4. Secure enclosure to concrete with manufacturer's recommended mounting and as approved by the Engineer.

REQUEST FOR INFORMATION NOT ADDRESSED IN THIS CCO REMAIN IN FORCE					
MARK	DATE	REVISIONS	BY	CH'D	CCO#
0	10/03/08	STRONG MOTION SYSTEM	RG	FW	74

CONTRACT CHANGE ORDER NO. 74

SHEET 9 OF 27

STRONG MOTION DETECTION SYSTEM
SAS SUPERSTRUCTURE
TOWER PLATFORM CONDUIT AND SENSOR LOCATION

SCALE AS NOTED

E-366A

DIST	COUNTY	ROUTE	KILOMETER POST TOTAL PROJECT	SHEET No	TOTAL SHEETS
04	SF	80	13.2/13.9	334 S1	1204

REGISTERED ELECTRICAL ENGINEER — 05/16/08

PLANS APPROVAL DATE

REGISTERED PROFESSIONAL ENGINEER — FADI WALIEDDINE No. 11465 Exp. 12/31/2009 ELECTRICAL — STATE OF CALIFORNIA

PB AMERICAS, Inc.
A Parsons Brinckerhoff Company
303 Second St., Suite 700N
San Francisco, CA 94107-1317

The State of California or its officers or agents shall not be responsible for the accuracy or completeness of electronic copies of this plan sheet.

Caltrans now has a web site! To get to the web site, go to: http://www.dot.ca.gov

DESIGN OVERSIGHT	CALCULATED/ DESIGNED BY	CHECKED BY	DRAWN BY	DATE	REVISED BY	DATE REVISED
BEHZAD GOLEMOHAMMADI	EDC	KG	AB	10/01	11/01	2/04

STATE OF CALIFORNIA - DEPARTMENT OF TRANSPORTATION — Caltrans

THIS PLAN IS ACCURATE FOR ELECTRICAL WORK ONLY.

ALL DIMENSIONS ARE IN MILLIMETERS UNLESS OTHERWISE SHOWN.

FOR REDUCED PLANS ORIGINAL SCALE IS IN MILLIMETERS 0 20 40 60 80

DGN FILE =>T:\13103\MS\pse\SAS Struc\CCO\SAS CCO74\Issued for Submittal 2008-10-03\04-0120f1_0334S01.dgn
USERNAME =>garciar

CU 04251 | EA 0120F1

LAST REVISION 00-00-00

DATE PLOTTED => 10/3/2008
TIME PLOTTED => 4:22:07 PM

DIST	COUNTY	ROUTE	KILOMETER POST TOTAL PROJECT	SHEET No	TOTAL SHEETS
04	SF	80	13.2/13.9	335 R2	1204

James Erlingsson 12/19/02
REGISTERED ELECTRICAL ENGINEER DATE

12-6-04
PLANS APPROVAL DATE

REGISTERED PROFESSIONAL ENGINEER — JENS ERLINGSSON No. 8249 Exp. 9/30/06 ELECTRICAL — STATE OF CALIFORNIA

PB POWER, Inc.
A Parsons Brinckerhoff Company
303 Second St., Suite 700N
San Francisco, CA 94107-1317

The State of California or its officers or agents shall not be responsible for the accuracy or completeness of electronic copies of this plan sheet.

Caltrans now has a web site! To get to the web site, go to: http://www.dot.ca.gov

Caltrans Metric

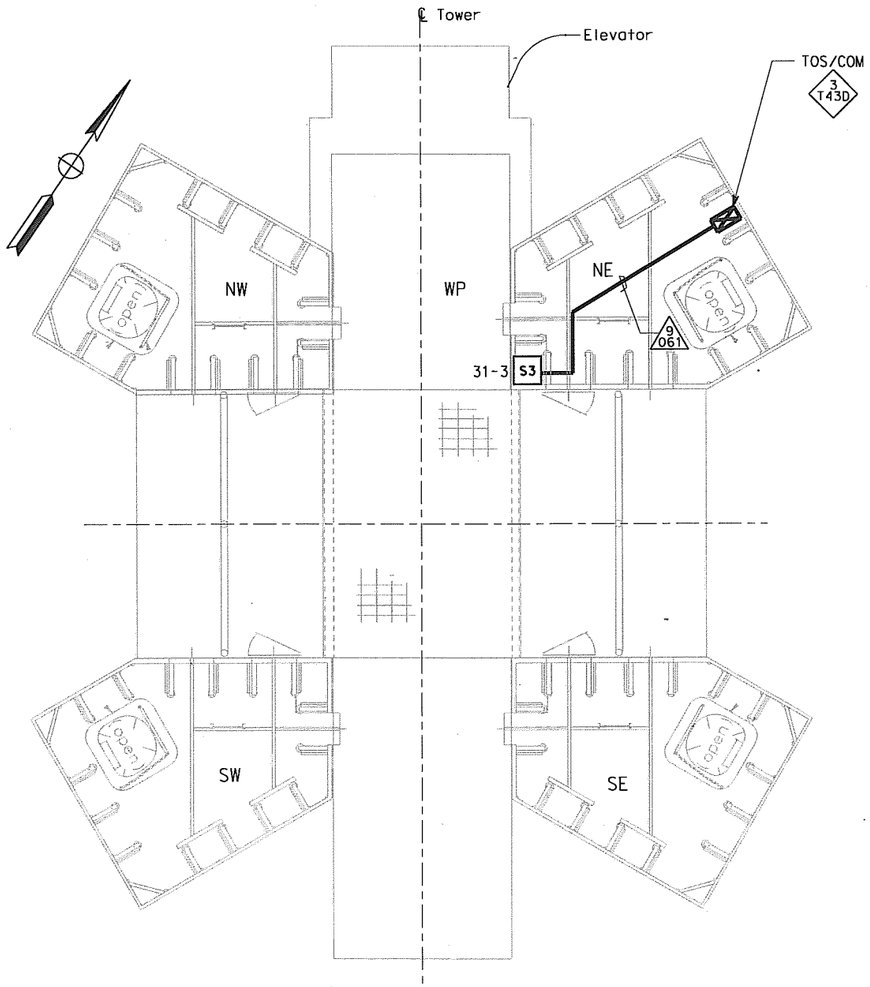

TOWER PLATFORM CONDUIT AND SENSOR LAYOUT
ELEV 93.350 m
SCALE 1:40

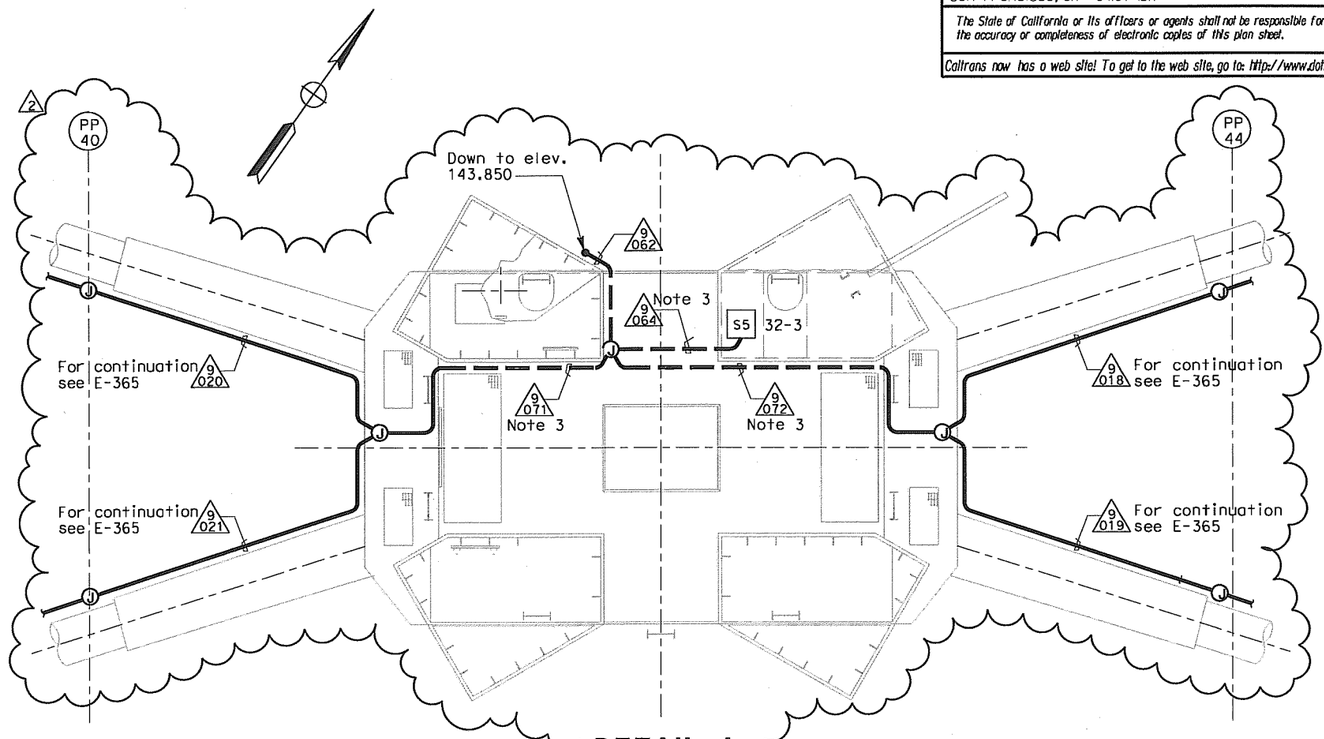

DETAIL 1
TOWER PLATFORM CONDUIT AND SENSOR LAYOUT
ELEV 156.75 M
SCALE 1:50 (2)

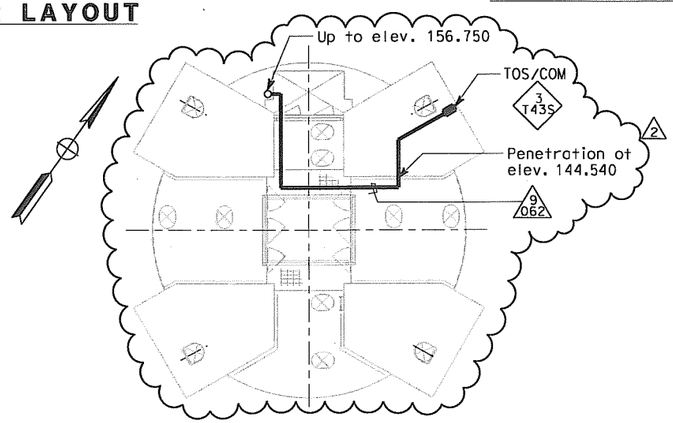

TOWER PLATFORM CONDUIT AND SENSOR LAYOUT
ELEV 143.85 M
NO SCALE (2)

NOTES:

1. For other related work not shown on this drawing, see Electrical Special Provisions.
2. References: (2)
   - For nameplates, sensor enclosures and recorder schedules, see sheets E-379, E-380 and E-381.
   - For cable block diagram, see sheets E-382, E-383 and E-384.
   - For general notes of the strong motion detection system, see sheet E-361.
   - For circuit and conduit/cable tray schedules, see sheets starting at E-401.

(2)
3. Conduits located under tower head diaphragm plate and supported from structural strut bolted to diaphragm stiffeners.
4. For additional detail at tower head see E-251D.

STRONG MOTION DETECTION SYSTEM
SAS SUPERSTRUCTURE
TOWER PLATFORM CONDUIT AND SENSOR LOCATION
SCALE AS NOTED

E-367

FADI WALIEDDINE REGISTERED PROFESSIONAL ENGINEER No. 11465 Exp. 12/31/2009 ELECTRICAL STATE OF CALIFORNIA

FOR REVISION ONLY

REQUEST FOR INFORMATION NOT ADDRESSED IN THIS CCO REMAIN IN FORCE

MARK	DATE	DESCRIPTIONS REVISIONS	BY	CH'D	CCO#
(2)	10/03/08	STRONG MOTION SYSTEM	RG	FW	74
(1)	02/19/08	ELECTRICAL MODIFICATIONS	MP EL	RR	42

CONTRACT CHANGE ORDER NO. 74
SHEET 10 OF 27

THIS PLAN ACCURATE FOR ELECTRICAL WORK ONLY.

ALL DIMENSIONS ARE IN MILLIMETERS UNLESS OTHERWISE SHOWN.

FOR REDUCED PLANS ORIGINAL SCALE IS IN MILLIMETERS 0 20 40 60 80

DGN FILE =>T:\13103\MS\pse\SAS Struc\CCO\SAS CCO74\Issued for Submittal 2008-10-03\04-0120f1_0335R02.dgn
USERNAME =>garciar

CU 04251 EA 0120F1

DESIGN OVERSIGHT — BEHZAD GOLEMOHAMMADI
CALCULATED/DESIGNED BY — FK — DATE 10/01 — REVISED BY
CHECKED BY — EDC — 11/01 — DATE REVISED
STATE OF CALIFORNIA - DEPARTMENT OF TRANSPORTATION — Caltrans

LAST REVISION 00-00-00
DATE PLOTTED => 10/3/2008
TIME PLOTTED => 4:23:10 PM

DIST	COUNTY	ROUTE	KILOMETER POST TOTAL PROJECT	SHEET No	TOTAL SHEETS
04	SF	80	13.2/13.9	336 R1	1204

REGISTERED ELECTRICAL ENGINEER — 12/19/02 DATE

12-6-04
PLANS APPROVAL DATE

REGISTERED PROFESSIONAL ENGINEER — JENS ERLINGSSON No. 8249 Exp. 9/30/06 ELECTRICAL — STATE OF CALIFORNIA

PB POWER, Inc.
A Parsons Brinckerhoff Company
303 Second St., Suite 700N
San Francisco, CA 94107-1317

The State of California or its officers or agents shall not be responsible for the accuracy or completeness of electronic copies of this plan sheet.

Caltrans now has a web site! To get to the web site, go to: http://www.dot.ca.gov

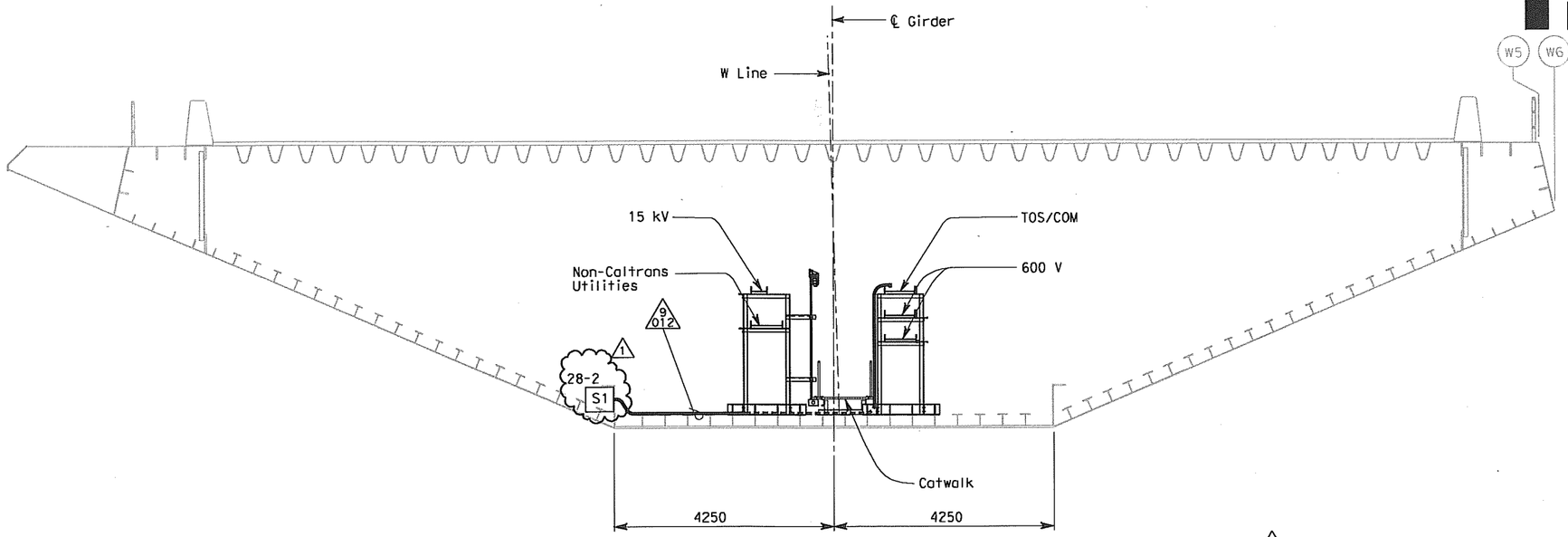

WESTBOUND SAS SUPERSTRUCTURE GIRDER SECTION @ PANEL POINT 42 (1)

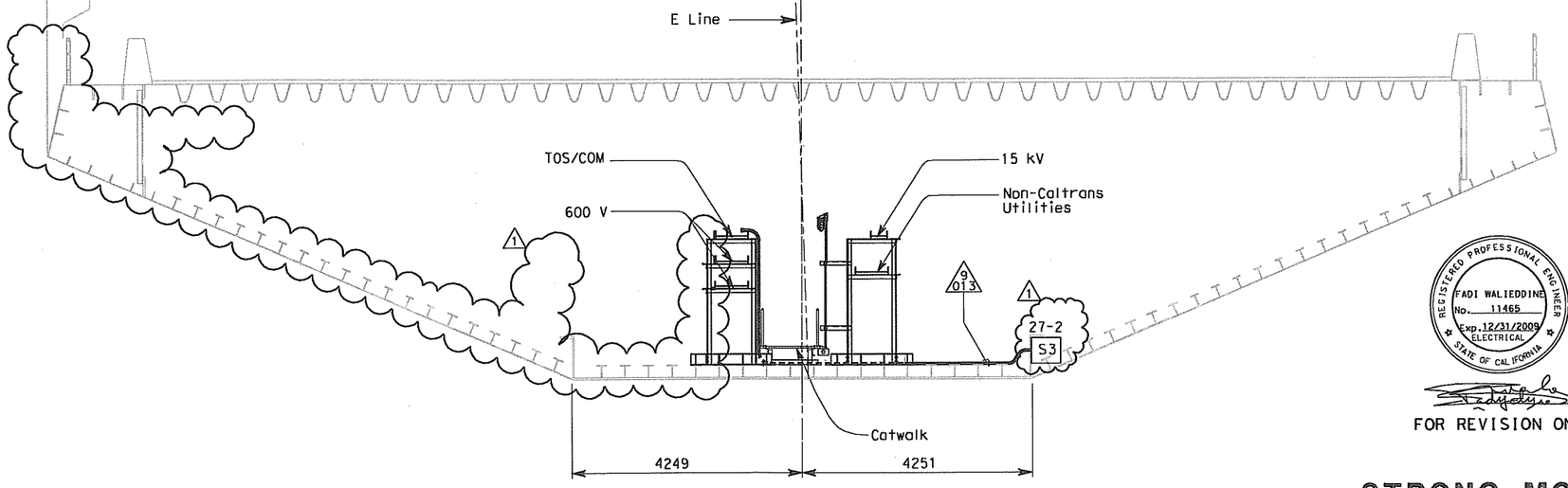

EASTBOUND SAS SUPERSTRUCTURE GIRDER SECTION @ PANEL POINT 42 (1)

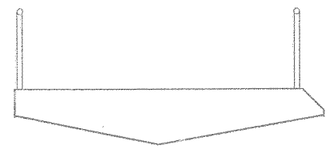

NOTES:

1. For other related work not shown on this drawing, see Electrical Special Provisions.
2. References: (1)
   - For nameplates, sensor enclosures and recorder schedules, see sheets E-379, E-380 and E-381.
   - For cable block diagram, see sheets E-382, E-383 and E-384.
   - For general notes of the strong motion detection system, see sheet E-361.
   - For circuit and conduit/cable tray schedules, see sheets starting at E-401.
3. For details of pipe sleeves, see Utility Details sheets

REGISTERED PROFESSIONAL ENGINEER — FADI WALIEDDINE No. 11465 Exp. 12/31/2009 ELECTRICAL — STATE OF CALIFORNIA

FOR REVISION ONLY

REQUEST FOR INFORMATION NOT ADDRESSED IN THIS CCO REMAIN IN FORCE					
MARK	DATE	REVISIONS DESCRIPTIONS	BY	CH'D	CCO#
1	10/03/08	STRONG MOTION SYSTEM	RG	FW	74

CONTRACT CHANGE ORDER NO. 74
SHEET 11 OF 27

STRONG MOTION DETECTION SYSTEM
SAS SUPERSTRUCTURE
WB AND EB AT TOWER CONDUIT AND SENSOR LOCATION

SCALE 1:50

E-368

THIS PLAN IS ACCURATE FOR ELECTRICAL WORK ONLY.

ALL DIMENSIONS ARE IN MILLIMETERS UNLESS OTHERWISE SHOWN.

FOR REDUCED PLANS ORIGINAL SCALE IS IN MILLIMETERS 0 20 40 60 80

DGN FILE =>T:\13103\MS\pse\SAS Struc\CCO\SAS CCO74\Issued for Submittal 2008-10-03\04-0120f1_0336R01.dgn
USERNAME =>florico

CU 04251 EA 0120F1

LAST REVISION 00-00-00 DATE PLOTTED => 10/2/2008 TIME PLOTTED => 6:01:41 PM

STATE OF CALIFORNIA - DEPARTMENT OF TRANSPORTATION
Caltrans

DESIGN OVERSIGHT
BEHZAD GOLEMOHAMMADI

CALCULATED/ DESIGNED BY	KG	DATE 11/01	REVISED BY	IAH	3/04
CHECKED BY	AB	12/01	DATE REVISED		

DIST	COUNTY	ROUTE	KILOMETER POST TOTAL PROJECT	SHEET No	TOTAL SHEETS
04	SF	80	13.2/13.9	337 R1	1204

Jens Erlingsson 12/19/02
REGISTERED ELECTRICAL ENGINEER DATE

12-6-04
PLANS APPROVAL DATE

REGISTERED PROFESSIONAL ENGINEER — JENS ERLINGSSON No. 8249 Exp. 9/30/06 ELECTRICAL — STATE OF CALIFORNIA

PB POWER, Inc.
A Parsons Brinckerhoff Company
303 Second St., Suite 700N
San Francisco, CA 94107-1317

The State of California or its officers or agents shall not be responsible for the accuracy or completeness of electronic copies of this plan sheet.

Caltrans now has a web site! To get to the web site, go to http://www.dot.ca.gov

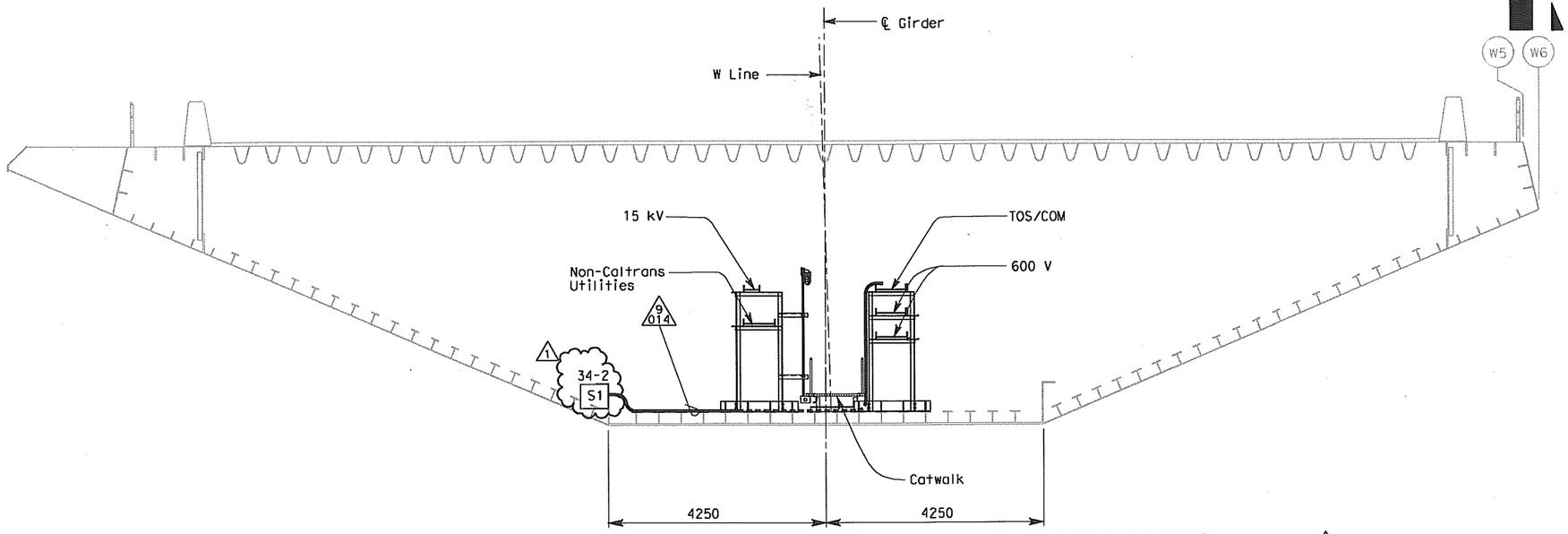

WESTBOUND SAS SUPERSTRUCTURE GIRDER SECTION AT PANEL POINT 68 (67.8) 1

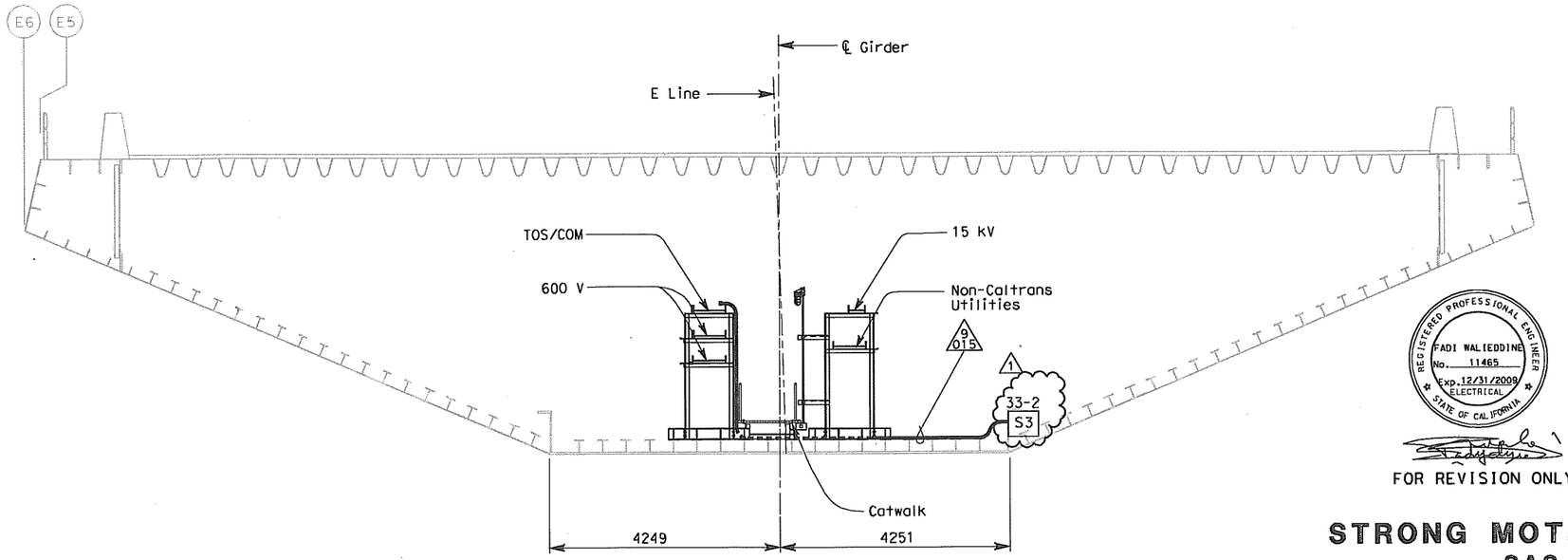

EASTBOUND SAS SUPERSTRUCTURE GIRDER SECTION AT PANEL POINT 68 (67.8) 1

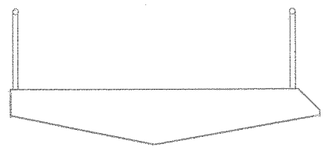

REGISTERED PROFESSIONAL ENGINEER — FADI WALIEDDINE No. 11465 Exp. 12/31/2009 ELECTRICAL — STATE OF CALIFORNIA

FOR REVISION ONLY

NOTES:

1. For other related work not shown on this drawing, see Electrical Special Provisions.
2. References: 1
   - For nameplates, sensor enclosures and recorder schedules, see sheets E-379, E-380 and E-381.
   - For cable block diagram, see sheets E-382, E-383 and E-384.
   - For general notes of the strong motion detection system, see sheet E-361.
   - For circuit and conduit/cable tray schedules, see sheets starting at E-401.

REQUEST FOR INFORMATION NOT ADDRESSED IN THIS CCO REMAIN IN FORCE					
1	10/03/08	STRONG MOTION SYSTEM	RG	FW	74
MARK	DATE	DESCRIPTIONS	BY	CH'D	CCO#
REVISIONS					

CONTRACT CHANGE ORDER NO. 74
SHEET 12 OF 27

STRONG MOTION DETECTION SYSTEM
SAS SUPERSTRUCTURE
1/3 SPAN BETWEEN TOWER AND PIER E2 CONDUIT AND SENSOR LOCATION

SCALE 1:50

E-369

DESIGN OVERSIGHT	CALCULATED/ DESIGNED BY	DATE	REVISED BY	IAH	3/04
BEHZAD GOLEMOHAMMADI	CHECKED BY	KG	DATE REVISED		
		11/01			
		12/01			
		AB			

STATE OF CALIFORNIA - DEPARTMENT OF TRANSPORTATION — Caltrans

THIS PLAN IS ACCURATE FOR ELECTRICAL WORK ONLY.

ALL DIMENSIONS ARE IN MILLIMETERS UNLESS OTHERWISE SHOWN.

FOR REDUCED PLANS ORIGINAL SCALE IS IN MILLIMETERS 0 20 40 60 80

DGN FILE =>T:\13103\WS\pse\SAS Struc\CCO\SAS CC074\Issued for Submittal 2008-10-03\04-0120f1_0337R01.dgn
USERNAME =>llorico

CU 04251 EA 0120F1

LAST REVISION 00-00-00
DATE PLOTTED => 10/2/2008
TIME PLOTTED => 6:02:03 PM

DIST	COUNTY	ROUTE	KILOMETER POST TOTAL PROJECT	SHEET No	TOTAL SHEETS
04	SF	80	13.2/13.9	338 R1	1204

Jens Erlingsson 12/19/02
REGISTERED ELECTRICAL ENGINEER DATE

12-6-04
PLANS APPROVAL DATE

REGISTERED PROFESSIONAL ENGINEER — JENS ERLINGSSON No. 8249 Exp. 9/30/06 ELECTRICAL — STATE OF CALIFORNIA

PB POWER, Inc.
A Parsons Brinckerhoff Company
303 Second St., Suite 700N
San Francisco, CA 94107-1317

The State of California or its officers or agents shall not be responsible for the accuracy or completeness of electronic copies of this plan sheet.

Caltrans now has a web site! To get to the web site, go to http://www.dot.ca.gov

Caltrans Metric

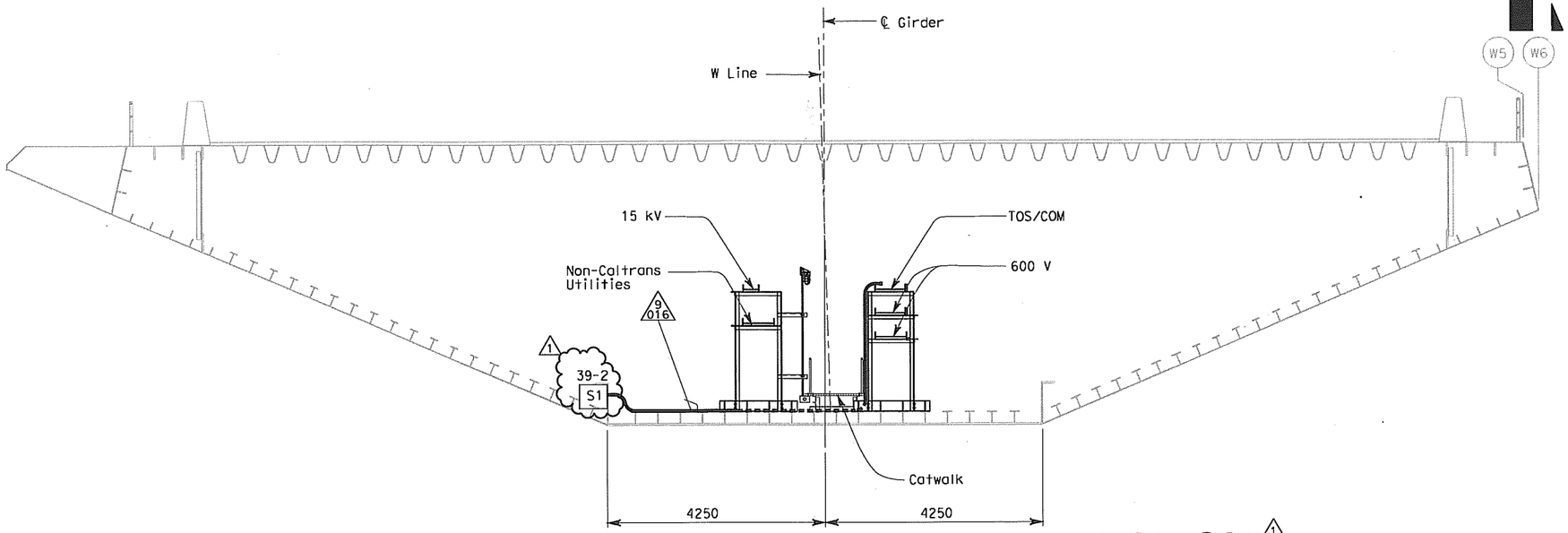

WESTBOUND SAS SUPERSTRUCTURE GIRDER SECTION AT PANEL POINT 94 1

NOTES:

1. For other related work not shown on this drawing, see Electrical Special Provisions.
2. References: 1
   - For nameplates, sensor enclosures and recorder schedules, see sheets E-379, E-380 and E-381.
   - For cable block diagram, see sheets E-382, E-383 and E-384.
   - For general notes of the strong motion detection system, see sheet E-361.
   - For circuit and conduit/cable tray schedules, see sheets starting at E-401.

E6 E5

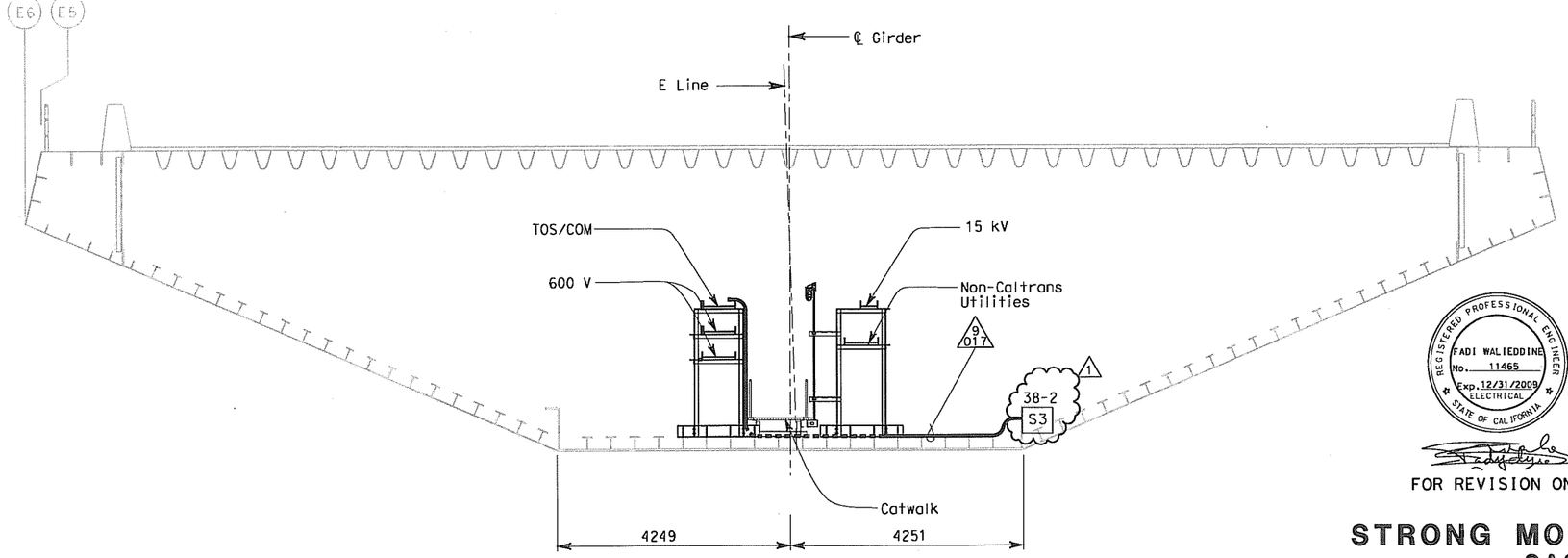

EASTBOUND SAS SUPERSTRUCTURE GIRDER SECTION AT PANEL POINT 94 1

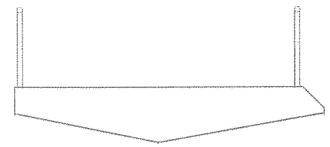

REGISTERED PROFESSIONAL ENGINEER — FADI WALIEDDINE No. 11465 Exp. 12/31/2009 ELECTRICAL — STATE OF CALIFORNIA

FOR REVISION ONLY

REQUEST FOR INFORMATION NOT ADDRESSED IN THIS CCO REMAIN IN FORCE					
MARK	DATE	REVISIONS DESCRIPTIONS	BY	CH'D	CCO#
1	10/03/08	STRONG MOTION SYSTEM	RG	FW	74

CONTRACT CHANGE ORDER NO. 74
SHEET 13 OF 27

STRONG MOTION DETECTION SYSTEM
SAS SUPERSTRUCTURE
2/3 SPAN BETWEEN TOWER AND PIER E2 CONDUIT AND SENSOR LOCATION

SCALE 1:50

E-370

DESIGN OVERSIGHT	CALCULATED/ DESIGNED BY	CHECKED BY	DATE	REVISED BY	DATE REVISED
BEHZAD GOLEMOHAMMADI	KG	AB	11/01	IAH	3/04
			12/01		

STATE OF CALIFORNIA - DEPARTMENT OF TRANSPORTATION
Caltrans

THIS PLAN IS ACCURATE FOR ELECTRICAL WORK ONLY.

ALL DIMENSIONS ARE IN MILLIMETERS UNLESS OTHERWISE SHOWN.

FOR REDUCED PLANS ORIGINAL SCALE IS IN MILLIMETERS 0 20 40 60 80

DGN FILE =>T:\13103\MS\pse\SAS Struc\CCO\SAS CCO74\Issued for Submittal 2008-10-03\04-0120f1_0338R01.dgn
USERNAME =>garciar

CU 04251 EA 0120F1

LAST REVISION 00-00-00 DATE PLOTTED => 10/3/2008 TIME PLOTTED => 4:20:20 PM

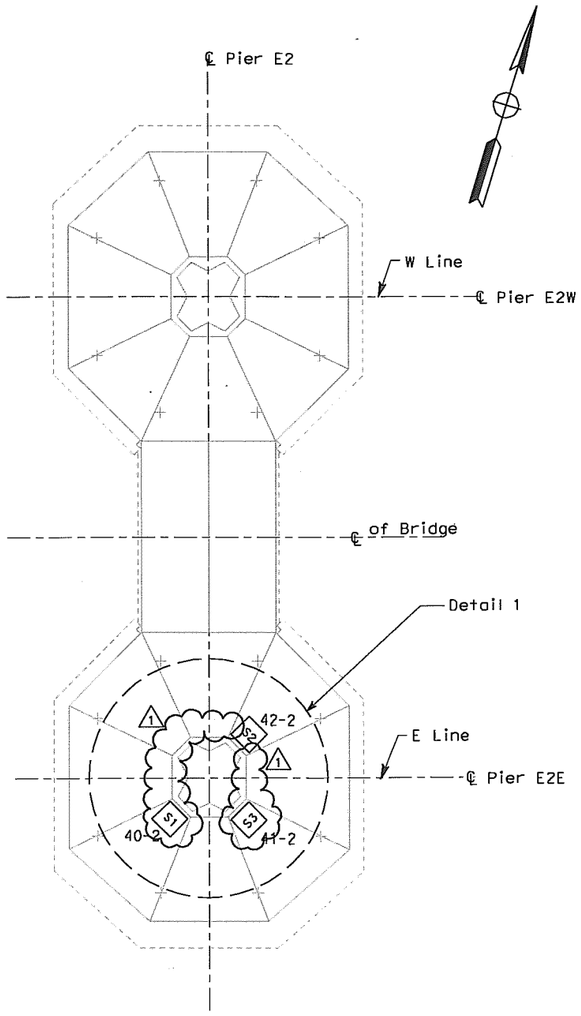

FOOTING PLAN
SCALE 1:250

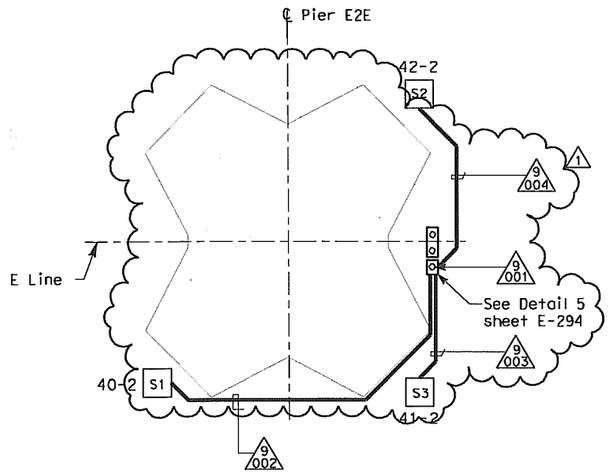

DETAIL 1
NO SCALE

PIER 2 CONDUIT PLAN

NOTES:

1. For other related work not shown on this drowing, see Electrical Special Provisions.
2. References
   - For nameplates, sensor enclosures and recorder schedules, see sheets E-379, E-380 and E-381.
   - For cable block diagram, see sheets E-382, E-383 and E-384.
   - For general notes of the strong motion detection system, see sheet E-361.
   - For circuit and conduit/cable tray schedules, see sheets starting at E-401.
3. All conduits and fittings located outside or inside pier shall be rigid galvanized steel, PVC coated.
4. Secure enclosure to concrete per note 3 on sheet E-378.

DIST	COUNTY	ROUTE	KILOMETER POST TOTAL PROJECT	SHEET No	TOTAL SHEETS
04	SF	80	13.2/13.9	339 R1	1204

Jens Erlingsson 12/19/02
REGISTERED ELECTRICAL ENGINEER DATE

12-6-04
PLANS APPROVAL DATE

REGISTERED PROFESSIONAL ENGINEER — JENS ERLINGSSON No. 8249 Exp. 9/30/06 ELECTRICAL — STATE OF CALIFORNIA

PB POWER, Inc.
A Parsons Brinckerhoff Company
303 Second St., Suite 700N
San Francisco, CA 94107-1317

The State of California or its officers or agents shall not be responsible for the accuracy or completeness of electronic copies of this plan sheet.

Caltrans now has a web site! To get to the web site, go to http://www.dot.ca.gov

REGISTERED PROFESSIONAL ENGINEER — FADI WALIEDDINE No. 11465 Exp. 12/31/2009 ELECTRICAL — STATE OF CALIFORNIA

FOR REVISION ONLY

REQUEST FOR INFORMATION NOT ADDRESSED IN THIS CCO REMAIN IN FORCE

MARK	DATE	DESCRIPTIONS	BY	CH'D	CCO#
		REVISIONS			
1	10/03/08	STRONG MOTION SYSTEM	RG	FW	74

CONTRACT CHANGE ORDER NO. 74
SHEET 14 OF 27

STRONG MOTION DETECTION SYSTEM
SAS SUPERSTRUCTURE
PIER E2 FOOTER CONDUIT AND SENSOR LOCATION
SCALE AS NOTED

E-371

CALCULATED/ DESIGNED BY	EDC	DATE 10/01	REVISED BY	DATE REVISED
CHECKED BY	KG	11/01		

DESIGN OVERSIGHT — BEHZAD GOLEMOHAMMADI

STATE OF CALIFORNIA - DEPARTMENT OF TRANSPORTATION — Caltrans

THIS PLAN IS ACCURATE FOR ELECTRICAL WORK ONLY.

ALL DIMENSIONS ARE IN MILLIMETERS UNLESS OTHERWISE SHOWN.

FOR REDUCED PLANS ORIGINAL SCALE IS IN MILLIMETERS 0 20 40 60 80

DGN FILE =>I:\13103\MS\pse\SAS Struc\CCO\SAS CCO74\Issued for Submittal 2008-10-03\04-0120F1_0339R01.dgn
USERNAME =>llorico

CU 04251 | EA 0120F1

LAST REVISION 00-00-00 — DATE PLOTTED => 11/6/2008 TIME PLOTTED => 10:28:43 AM

DIST	COUNTY	ROUTE	KILOMETER POST TOTAL PROJECT	SHEET No	TOTAL SHEETS
04	SF	80	13.2/13.9	340 R1	1204

Jens Erlingsson 12/19/02
REGISTERED ELECTRICAL ENGINEER DATE

12-6-04
PLANS APPROVAL DATE

REGISTERED PROFESSIONAL ENGINEER
JENS ERLINGSSON
No. 8249
Exp. 9/30/06
ELECTRICAL
STATE OF CALIFORNIA

PB POWER, Inc.
A Parsons Brinckerhoff Company
303 Second St., Suite 700N
San Francisco, CA 94107-1317

The State of California or its officers or agents shall not be responsible for the accuracy or completeness of electronic copies of this plan sheet.

Caltrans now has a web site! To get to the web site, go to http://www.dot.ca.gov

Caltrans Metric

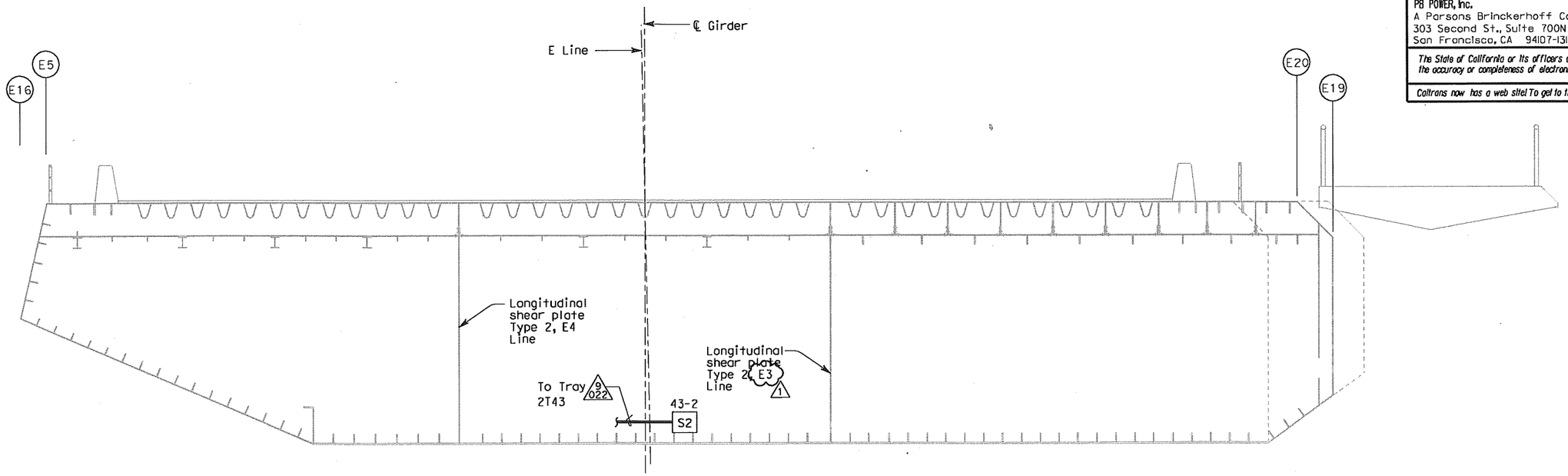

EASTBOUND SAS SUPERSTRUCTURE GIRDER SECTION AT PANEL POINT 118 PLUS 1 TRANSVERSE STIFFENER (1)

NOTES:

1. For other related work not shown on this drawing, see Electrical Special Provisions.
2. References:
   - For (1) nameplates, sensor enclosures and ~~recorder schedules, see sheets~~ E-379, E-380 and E-381.
   - For cable block diagram, see sheets E-382, E-383 and E-384.
   - For general notes of the strong motion detection system, see sheet E-361.
   - For circuit and conduit/cable tray schedules, see sheets starting at E-401.

REGISTERED PROFESSIONAL ENGINEER
FADI WALIEDDINE
No. 11465
Exp. 12/31/2009
ELECTRICAL
STATE OF CALIFORNIA

FOR REVISION ONLY

REQUEST FOR INFORMATION NOT ADDRESSED IN THIS CCO REMAIN IN FORCE

MARK	DATE	REVISIONS DESCRIPTIONS	BY	CH'D	CCO#
1	10/03/08	STRONG MOTION SYSTEM	RG	FW	74

CONTRACT CHANGE ORDER NO. 74
SHEET 15 OF 27

STRONG MOTION DETECTION SYSTEM
SAS SUPERSTRUCTURE
PIER E2 GIRDER CONDUIT AND SENSOR LOCATION

SCALE 1:50

E-372

DATE	REVISED BY
11/01	KG
12/01	AB

CALCULATED/DESIGNED BY
CHECKED BY
DESIGN OVERSIGHT
BEHZAD GOLEMOHAMMADI

STATE OF CALIFORNIA - DEPARTMENT OF TRANSPORTATION
Caltrans

THIS PLAN IS ACCURATE FOR ELECTRICAL WORK ONLY.

FOR REDUCED PLANS ORIGINAL SCALE IS IN MILLIMETERS 0 20 40 60 80

DGN FILE =>T:\13103\MS\pse\SAS Struc\CCO\SAS CC074\Issued for Submittal 2008-10-03\04-0120f1_0340R01.dgn
USERNAME =>llorico
CU 04251
EA 0120F1

LAST REVISION 00-00-00
DATE PLOTTED => 10/2/2008
TIME PLOTTED => 6:03:14 PM

DIST	COUNTY	ROUTE	KILOMETER POST TOTAL PROJECT	SHEET No	TOTAL SHEETS
04	SF	80	13.2/13.9	341 R1	1204

12/19/02
REGISTERED ELECTRICAL ENGINEER DATE

12-6-04
PLANS APPROVAL DATE

REGISTERED PROFESSIONAL ENGINEER
JENS ERLINGSSON
No. 8249
Exp. 9/30/06
ELECTRICAL
STATE OF CALIFORNIA

PB POWER, Inc.
A Parsons Brinckerhoff Company
303 Second St., Suite 700N
San Francisco, CA 94107-1317

The State of California or its officers or agents shall not be responsible for the accuracy or completeness of electronic copies of this plan sheet.

Caltrans now has a web site! To get to the web site, go to http://www.dot.ca.gov

REGISTERED PROFESSIONAL ENGINEER
FADI WALIEDDINE
No. 11465
Exp. 12/31/2009
ELECTRICAL
STATE OF CALIFORNIA

FOR REVISION ONLY

REQUEST FOR INFORMATION NOT ADDRESSED IN THIS CCO REMAIN IN FORCE					
MARK	DATE	REVISIONS DESCRIPTIONS	BY	CH'D	CCO#
1	10/03/08	STRONG MOTION SYSTEM	RG	FW	74

CONTRACT CHANGE ORDER NO. 74
SHEET 16 OF 27

Caltrans Metric

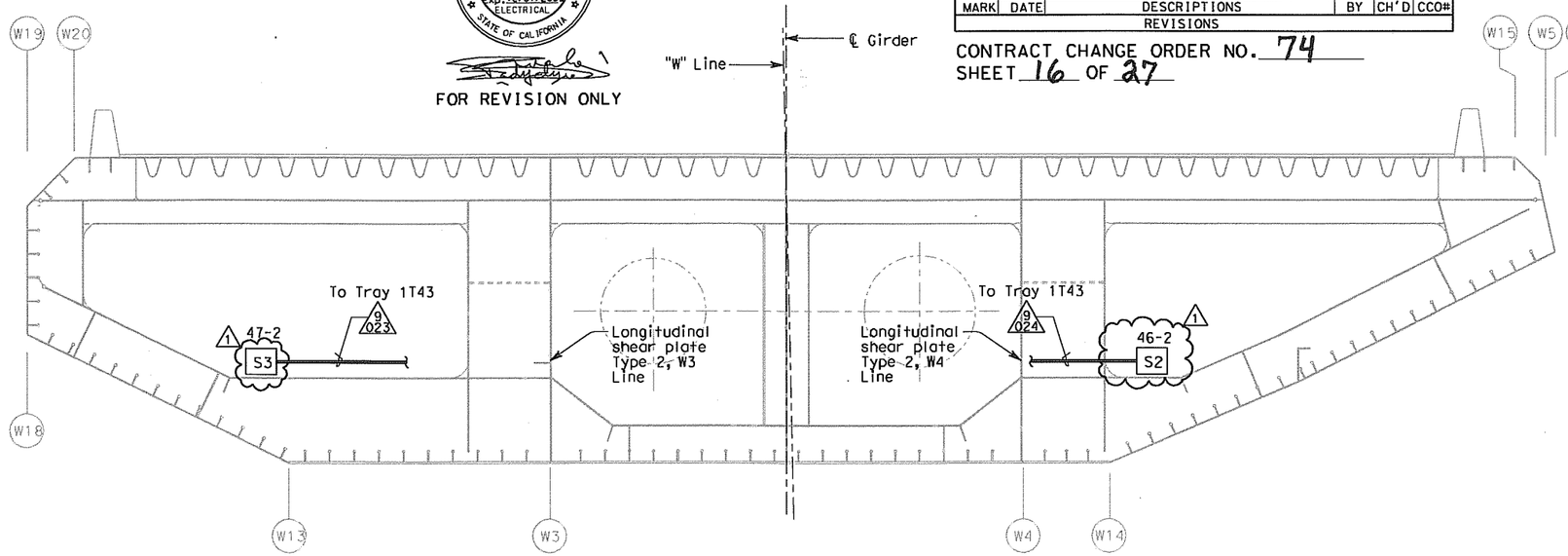

WESTBOUND SAS SUPERSTRUCTURE GIRDER SECTION AT PANEL POINT 127.5 (1)

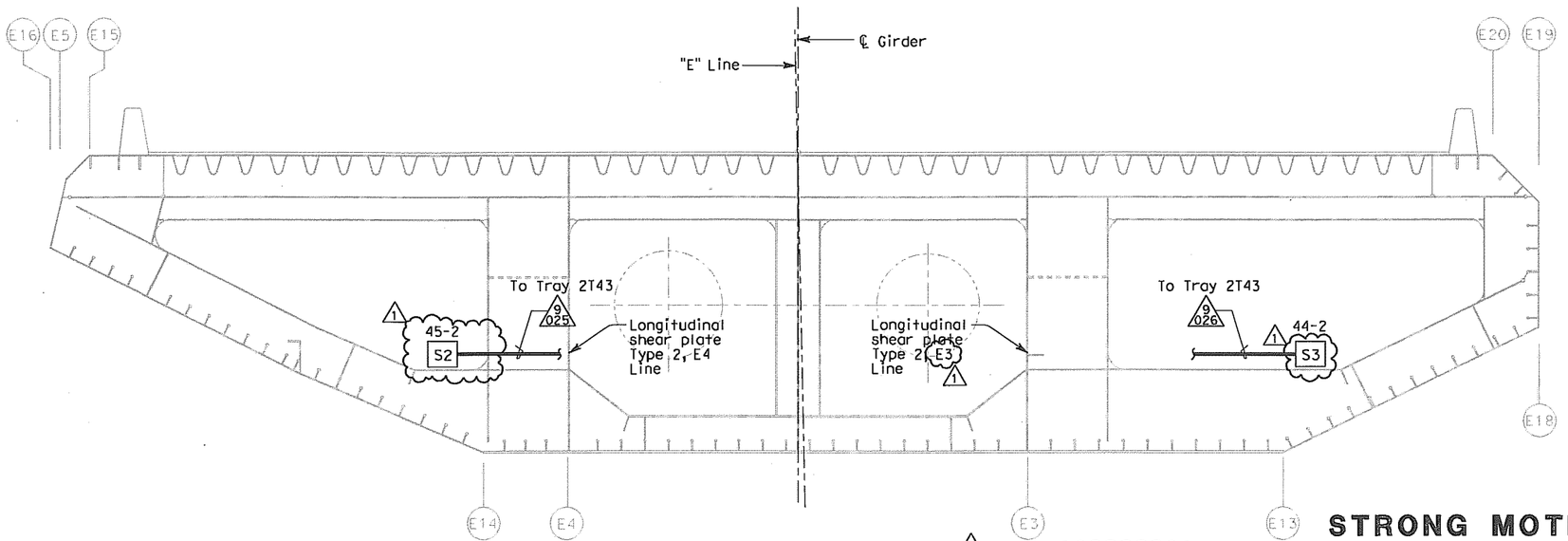

EASTBOUND SAS SUPERSTRUCTURE GIRDER SECTION AT PANEL POINT 127.5 (1)

NOTES:

1. For other related work not shown on this drawing, see Electrical Special Provisions.
2. References: (1)
   - For nameplates, sensor enclosures and recorder schedules, see sheets E-379, E-380 and E-381.
   - For cable block diagram, see sheets E-382, E-383 and E-384.
   - For general notes of the strong motion detection system, see sheet E-361.
   - For circuit and conduit/coble tray schedules, see sheets starting at E-401.

STRONG MOTION DETECTION SYSTEM
SAS SUPERSTRUCTURE
PIER E2 GIRDER CONDUIT AND SENSOR LOCATION

SCALE 1:50

E-373

THIS PLAN IS ACCURATE FOR ELECTRICAL WORK ONLY.

CALCULATED/ DESIGNED BY	KG	DATE 11/01	REVISED BY
CHECKED BY	AB	12/01	DATE REVISED

DESIGN OVERSIGHT
BEHZAD GOLEMOHAMMADI

STATE OF CALIFORNIA - DEPARTMENT OF TRANSPORTATION
Caltrans

LAST REVISION 00-00-00
DATE PLOTTED => 10/2/2008
TIME PLOTTED => 6:03:34 PM

FOR REDUCED PLANS ORIGINAL SCALE IS IN MILLIMETERS 0 20 40 60 80

DGN FILE =>T:\13103\MS\pse\SAS Struc\CCO\SAS CCO74\Issued for Submittal 2008-10-03\04-0120f1_0341R01.dgn
USERNAME =>llorico

CU 04251 EA 0120F1

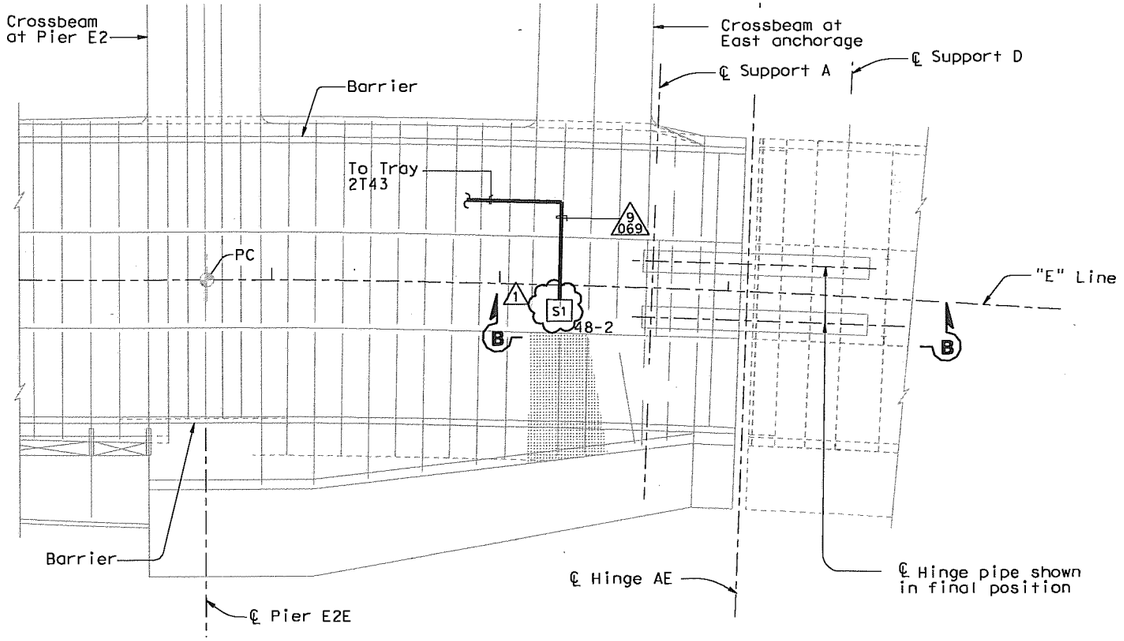

FRAMING PLAN
SCALE 1:250

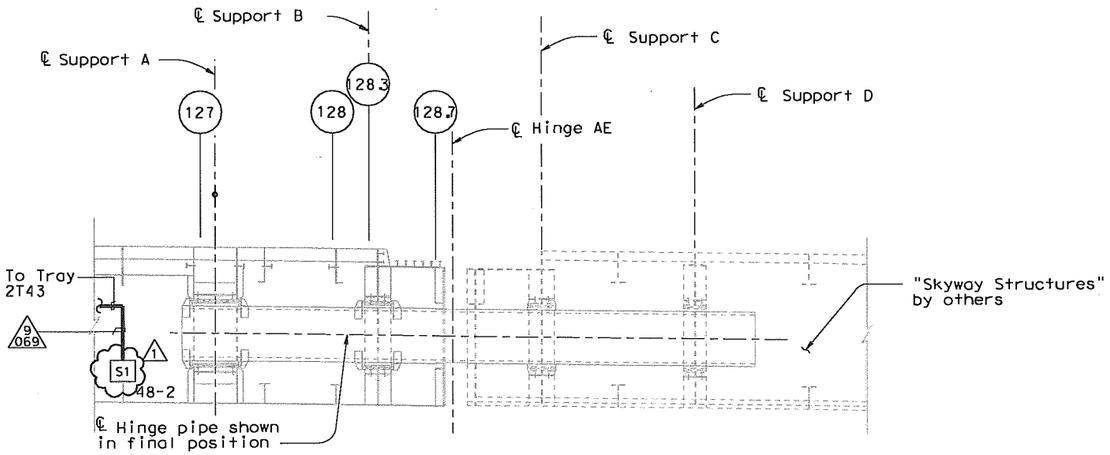

SECTION B-B
SCALE 1:1000

THIS PLAN IS ACCURATE FOR ELECTRICAL WORK ONLY.

Caltrans Metric

DIST	COUNTY	ROUTE	KILOMETER POST TOTAL PROJECT	SHEET No	TOTAL SHEETS
04	SF	80	13.2/13.9	342 R1	1204

Jens Erlingsson 12/19/02
REGISTERED ELECTRICAL ENGINEER DATE

12-6-04
PLANS APPROVAL DATE

REGISTERED PROFESSIONAL ENGINEER — JENS ERLINGSSON No. 8249 Exp. 9/30/06 ELECTRICAL — STATE OF CALIFORNIA

PB POWER, Inc.
A Parsons Brinckerhoff Company
303 Second St., Suite 700N
San Francisco, CA 94107-1317

The State of California or its officers or agents shall not be responsible for the accuracy or completeness of electronic copies of this plan sheet.

Caltrans now has a web site! To get to the web site, go to http://www.dot.ca.gov

NOTES:

1. For other related work not shown on this drawing, see Electrical Special Provisions.
2. References: (1)
   - For nameplates, sensor enclosures and recorder schedules, see sheets E-379, E-380 and E-381.
   - For cable block diagram, see sheets E-382, E-383 and E-384.
   - For general notes of the strong motion detection system, see sheet E-361.
   - For circuit and conduit/cable tray schedules, see sheets starting at E-401.

REGISTERED PROFESSIONAL ENGINEER — FADI WALIEDDINE No. 11465 Exp. 12/31/2009 ELECTRICAL — STATE OF CALIFORNIA

FOR REVISION ONLY

REQUEST FOR INFORMATION NOT ADDRESSED IN THIS CCO REMAIN IN FORCE

MARK	DATE	REVISIONS DESCRIPTIONS	BY	CH'D	CCO#
1	10/03/08	STRONG MOTION SYSTEM	RG	FW	74

CONTRACT CHANGE ORDER NO. 74
SHEET 17 OF 27

STRONG MOTION DETECTION SYSTEM
SAS SUPERSTRUCTURE
HINGE A CONDUIT AND SENSOR LOCATION

SCALE AS NOTED

E-374

DESIGN OVERSIGHT	CALCULATED/ DESIGNED BY	CHECKED BY	DRAWN BY	CHECKED BY	DATE	REVISED BY	DATE REVISED
BEHZAD GOLEMOHAMMADI	JW	FK	JW	FK	2/02	4/02	

STATE OF CALIFORNIA - DEPARTMENT OF TRANSPORTATION
Caltrans

FOR REDUCED PLANS ORIGINAL SCALE IS IN MILLIMETERS 0 20 40 60 80

DGN FILE =>T:\13103\MS\pse\SAS Struc\CCO\SAS CCO74\Issued for Submittal 2008-10-03\04-0120f1_0342R01.dgn
USERNAME =>llorico

CU 04251 EA 0120F1

LAST REVISION 00-00-00
DATE PLOTTED => 10/2/2008
TIME PLOTTED => 6:04:29 PM

DIST	COUNTY	ROUTE	KILOMETER POST TOTAL PROJECT	SHEET No	TOTAL SHEETS
04	SF	80	13.2/13.9	343 R2	1204

Jens Erlingsson 12/19/02
REGISTERED ELECTRICAL ENGINEER DATE

12-6-04
PLANS APPROVAL DATE

REGISTERED PROFESSIONAL ENGINEER — JENS ERLINGSSON No. 8249 Exp. 9/30/06 ELECTRICAL — STATE OF CALIFORNIA

PB POWER, Inc.
A Parsons Brinckerhoff Company
303 Second St., Suite 700N
San Francisco, CA 94107-1317

The State of California or its officers or agents shall not be responsible for the accuracy or completeness of electronic copies of this plan sheet.

Caltrans now has a web site! To get to the web site, go to http://www.dot.ca.gov

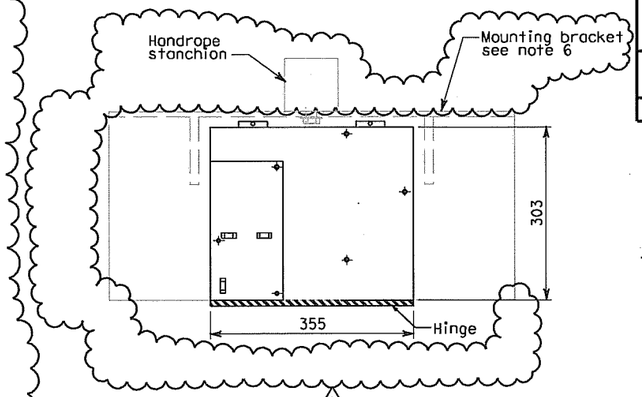

TYPE 6
SENSOR ENCLOSURE
NUMBER 22-3 & 36-3 2
STAINLESS STEEL BOX
NO SCALE

NOTES:

1. For other related work not shown on this drawing, see Electrical Special Provisions.
2. References: 2
   - For nameplates, sensor enclosures and recorder schedules, see sheets E-379, E-380 and E-381.
   - For cable block diagram, see sheets E-382, E-383 and E-384.
   - For general notes of the strong motion detection system, see sheet E-361.
   - For circuit and conduit/cable tray schedules, see sheets starting at E-401.
3. All conduits and fittings located outside or inside pier shall be rigid galvanized steel, PVC cooted.
4. For sensor enclosures bolt hole details, see AS-sheets.
5. For stanchion details, see Structural sheets.
2. 6. For mounting bracket details, see Structural Sheets.

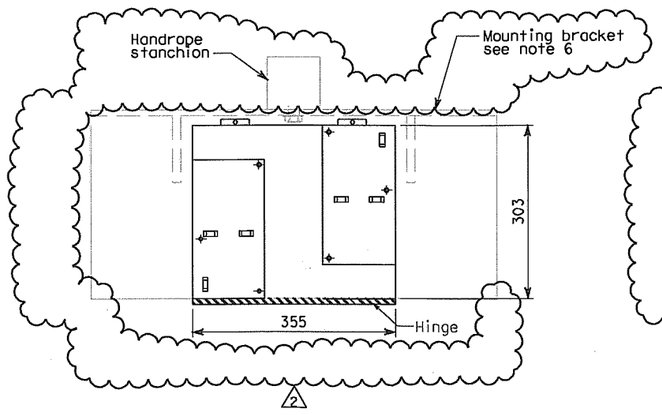

TYPE 6
SENSOR ENCLOSURE
NUMBER 35-3
STAINLESS STEEL BOX
NO SCALE

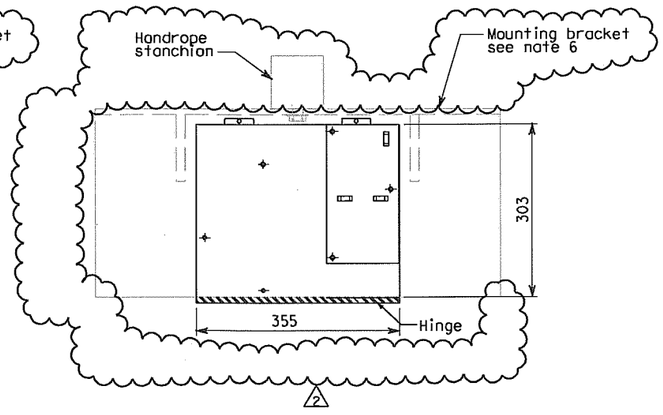

TYPE 6
SENSOR ENCLOSURE
NUMBER 21-3 2
STAINLESS STEEL BOX
NO SCALE

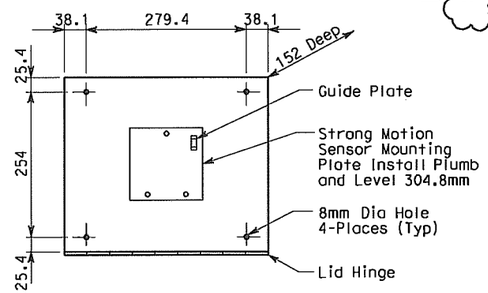

TYPE 7
SENSOR ENCLOSURE
STAINLESS STEEL BOX
NO SCALE

REQUEST FOR INFORMATION NOT ADDRESSED IN THIS CCO REMAIN IN FORCE					
2	10/03/08	STRONG MOTION SYSTEM	RG	FW	74
1	02/19/08	ELECTRICAL MODIFICATIONS	MP EL	RR	42
MARK	DATE	DESCRIPTIONS	BY	CH'D	CCO#
REVISIONS					

CONTRACT CHANGE ORDER NO. 74
SHEET 18 OF 27

REGISTERED PROFESSIONAL ENGINEER — FADI WALIEDDINE No. 11465 Exp. 12/31/2009 ELECTRICAL — STATE OF CALIFORNIA

FOR REVISION ONLY

DETAILS
STRONG MOTION DETECTION SYSTEM
SUSPENSION CABLE SENSOR ENCLOSURES AND MOUNTING
SCALE AS NOTED

E-377

THIS PLAN IS ACCURATE FOR ELECTRICAL WORK ONLY.

ALL DIMENSIONS ARE IN MILLIMETERS UNLESS OTHERWISE SHOWN.

FOR REDUCED PLANS ORIGINAL SCALE IS IN MILLIMETERS 0 20 40 60 80

DGN FILE =>T:\13103\MS\pse\SAS Struc\CCO\SAS CC074\Issued for Submittal 2008-10-03\04-0120f1_0343R02.dgn
USERNAME =>jlorico

CU 04251 EA 0120F1

LAST REVISION 00-00-00
DATE PLOTTED => 10/2/2008
TIME PLOTTED => 6:04:56 PM

	CALCULATED/ DESIGNED BY	CHECKED BY	EDC	DATE	REVISED BY	DATE REVISED
					IAH	3/04
			KG	11/01		
				10/01		

STATE OF CALIFORNIA - DEPARTMENT OF TRANSPORTATION
Caltrans
DESIGN OVERSIGHT
BEHZAD GOLEMOHAMMADI

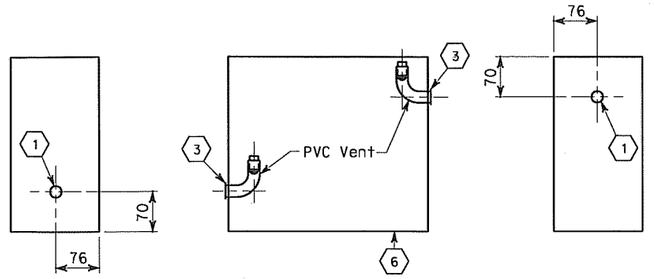

ENCLOSURE VENTING DETAIL
VERTICAL MOUNT

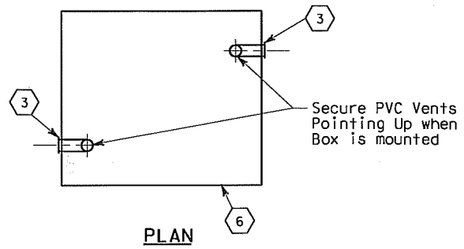

ENCLOSURE VENTING DETAIL
HORIZONTAL MOUNT

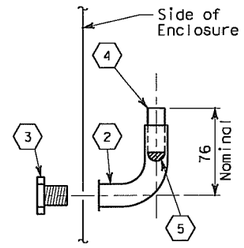

PVC VENT DETAIL

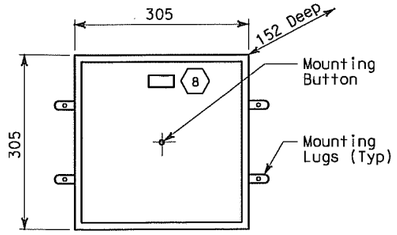

TYPE 1
CAST METAL BOX

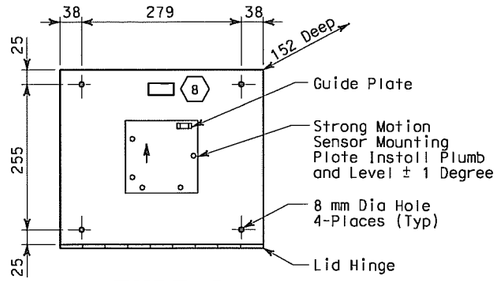

TYPE 2
STAINLESS STEEL BOX

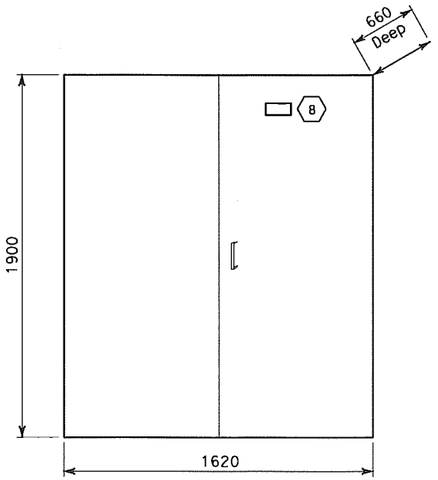

STRONG MOTION RECORDER (7)
CALTRANS TYPE S

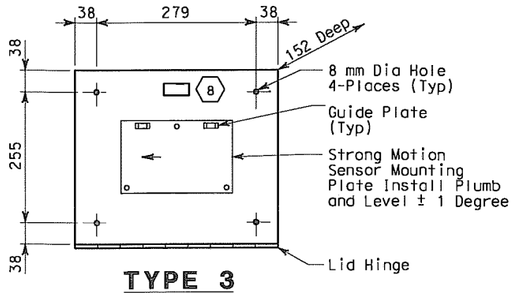

TYPE 3
STAINLESS STEEL BOX

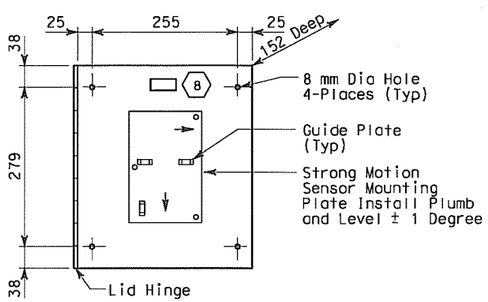

TYPE 4
STAINLESS STEEL BOX

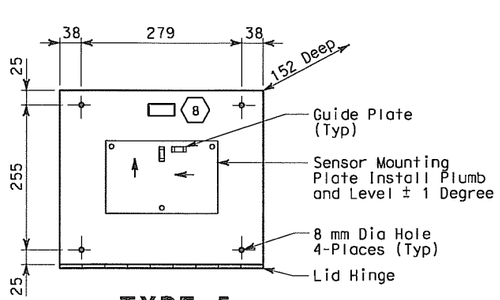

TYPE 5
STAINLESS STEEL BOX

ENCLOSURE DETAILS
FRONT VIEW

REGISTERED PROFESSIONAL ENGINEER
FADI WALIEDDINE
No. 11465
Exp. 12/31/2009
ELECTRICAL
STATE OF CALIFORNIA

FOR REVISION ONLY

THIS PLAN IS ACCURATE FOR ELECTRICAL WORK ONLY.

SHEET NOTES:

1. Punch hole for 27C.
2. 27C, schedule 40 PVC, 90 °elbow (female threaded-female slip).
3. 27 chase nipple, zinc.
4. 27C, schedule 40 PVC. Secure item in place with PVC cement (length as required, cut after installation).
5. Hose screen, Stainless steel screen material (used in washing machine).
6. 3.2 mm diameter drain hole. Drill at the lowest point of the box to drain ony moisture.
7. Enclosures for Strong Motion Recorders #3 and #2 shall be Caltrans Type S, corrosion resistont without shelves or police panels.
8. See Sheet E-379 for nameplate schedule for engravings and materials.

NOTES:

1. The high and low vent sides shall be selected os required to facilitate conduit entrances and mounting location.
2. Strong motion sensor enclosures and mounting plates shall be installed parallel and perpendicular to the structure unless otherwise noted. (2)
3. Strong motion enclosures shall be mounted to concrete with concrete fasteners, 6.35 dia, 40 mm depth embedment and allowable working load of tension at 1.223 kN and shear 2.91 kN. Enclosures mounted on structural steel shall be drill and tap. The strong motion sensor mounting plate shall be bolted through the enclosure to the structural steel. All hardware shall be stainless steel. (2)
4. For Downhole Enclosures details, see Sheet E-366A. (2)

REQUEST FOR INFORMATION NOT ADDRESSED IN THIS CCO REMAIN IN FORCE					
MARK	DATE	DESCRIPTIONS	BY	CH'D	CCO#
2	10/03/08	STRONG MOTION SYSTEM	RG	FW	74
1	02/19/08	ELECTRICAL MODIFICATIONS	MP EL	RR	42
REVISIONS					

CONTRACT CHANGE ORDER NO. 74
SHEET 19 OF 27

ALL DIMENSIONS ARE IN MILLIMETERS UNLESS OTHERWISE SHOWN.

DETAILS
STRONG MOTION DETECTION SYSTEM
SENSOR AND RECORDER ENCLOSURES
NO SCALE

E-378

DIST	COUNTY	ROUTE	KILOMETER POST TOTAL PROJECT	SHEET No	TOTAL SHEETS
04	SF	80	13.2/13.9	344 R2	1204

Jens Erlingsson 12/19/02
REGISTERED ELECTRICAL ENGINEER DATE

12-6-04
PLANS APPROVAL DATE

REGISTERED PROFESSIONAL ENGINEER
JENS ERLINGSSON
No. 8249
Exp. 9/30/06
ELECTRICAL
STATE OF CALIFORNIA

PB POWER, Inc.
A Parsons Brinckerhoff Company
303 Second St., Suite 700N
San Francisco, CA 94107-1317

The State of California or its officers or agents shall not be responsible for the accuracy or completeness of electronic copies of this plan sheet.

Caltrans now has a web site! To get to the web site, go to http://www.dot.ca.gov

DESIGNED BY	CALCULATED/ DESIGNED BY	CHECKED BY	DATE	REVISED BY	DATE REVISED
BEHZAD GOLEMOHAMMADI	EJL	CYF	10/00	11/00	

DESIGN OVERSIGHT

STATE OF CALIFORNIA - DEPARTMENT OF TRANSPORTATION
Caltrans

LAST REVISION 00-00-00
DATE PLOTTED => 10/3/2008
TIME PLOTTED => 4:06:32 PM

STRONG MOTION RECORDER SCHEDULE

CKT No.	Cable Type	Routing From	Routing To	Remarks
2910-2	IC	STRONG MOTION RECORDER #1	STRONG MOTION RECORDER #2-A	
2910-3	SSC			
2910-4	ISDN	STRONG MOTION RECORDER #1	TELEPHONE TERM. BOX #TEL-01E	
2910-6	IC	STRONG MOTION RECORDER #2-A	STRONG MOTION RECORDER #2-B	
2910-7	IC	STRONG MOTION RECORDER #2-B	STRONG MOTION RECORDER #3	
2910-8	SSC			
UP105-12	POWER	STRONG MOTION RECORDER #2-A	UTILITY PANEL UP-105	
2910-5	IC	STRONG MOTION RECORDER #2-A	RTU #10E	
2910-10	ISDN	STRONG MOTION RECORDER #2-B	TELEPHONE TERM. BOX #TEL-5	
UP105-14	POWER	STRONG MOTION RECORDER #2-B	UTILITY PANEL UP-105	
2910-13	IC	STRONG MOTION RECORDER #2-B	STRONG MOTION SENSOR ENCLOSURE 12-1 (EXISTING)	SENSOR ENCLOSURE 12-1 LOCATED AT HINGE AE IN THE SKYWAY STRUCTURE
2910-9	IC	STRONG MOTION RECORDER #2-B	RTU #10W	
	SSC			
UP210-12	POWER	STRONG MOTION RECORDER #3	UTILITY PANEL UP-210	
2910-12	ISDN	STRONG MOTION RECORDER #3	TELEPHONE TERM. BOX #TEL-5	
2910-11	IC	STRONG MOTION RECORDER #3	RTU #10E	

STRONG MOTION SENSOR ENCLOSURE NAME PLATE SCHEDULE

ENCLOSURE TYPE	Mounting Location LINE NO. 1	Mounting Location LINE NO. 2	Quantity
1	STRONG MOTION SENSOR	ENCLOSURE NO. 14-2	1
	STRONG MOTION SENSOR	ENCLOSURE NO. 15-2	1
	STRONG MOTION SENSOR	ENCLOSURE NO. 16-2	1
	STRONG MOTION SENSOR	ENCLOSURE NO. 24-3	1
	STRONG MOTION SENSOR	ENCLOSURE NO. 25-3	1
	STRONG MOTION SENSOR	ENCLOSURE NO. 26-3	1
	STRONG MOTION SENSOR	ENCLOSURE NO. 40-2	1
	STRONG MOTION SENSOR	ENCLOSURE NO. 41-2	1
	STRONG MOTION SENSOR	ENCLOSURE NO. 42-2	1

STRONG MOTION SENSOR ENCLOSURE NAME PLATE SCHEDULE

ENCLOSURE TYPE	Mounting Location LINE NO. 1	Mounting Location LINE NO. 2	Quantity
2	STRONG MOTION SENSOR	ENCLOSURE NO. 29-2	1
	STRONG MOTION SENSOR	ENCLOSURE NO. 37-3	1
	STRONG MOTION SENSOR	ENCLOSURE NO. 48-2	1
3	STRONG MOTION SENSOR	ENCLOSURE NO. 45-2	1
	STRONG MOTION SENSOR	ENCLOSURE NO. 46-2	1
4	STRONG MOTION SENSOR	ENCLOSURE NO. 17-2	1
	STRONG MOTION SENSOR	ENCLOSURE NO. 19-2	1
	STRONG MOTION SENSOR	ENCLOSURE NO. 27-2	1
	STRONG MOTION SENSOR	ENCLOSURE NO. 30-3	1
	STRONG MOTION SENSOR	ENCLOSURE NO. 31-3	1
	STRONG MOTION SENSOR	ENCLOSURE NO. 32-3	1
	STRONG MOTION SENSOR	ENCLOSURE NO. 33-2	1
	STRONG MOTION SENSOR	ENCLOSURE NO. 38-2	1
	STRONG MOTION SENSOR	ENCLOSURE NO. 44-2	1
	STRONG MOTION SENSOR	ENCLOSURE NO. 47-2	1
5	STRONG MOTION SENSOR	ENCLOSURE NO. 18-2	1
	STRONG MOTION SENSOR	ENCLOSURE NO. 43-2	1
6	STRONG MOTION SENSOR	ENCLOSURE NO. 21-3	1
	STRONG MOTION SENSOR	ENCLOSURE NO. 22-3	1
	STRONG MOTION SENSOR	ENCLOSURE NO. 35-3	1
	STRONG MOTION SENSOR	ENCLOSURE NO. 36-3	1
7	STRONG MOTION SENSOR	ENCLOSURE NO. 20-2	1
	STRONG MOTION SENSOR	ENCLOSURE NO. 28-2	1
	STRONG MOTION SENSOR	ENCLOSURE NO. 34-2	1
	STRONG MOTION SENSOR	ENCLOSURE NO. 39-2	1
Down Hole Junction Box	STRONG MOTION SENSOR	ENCLOSURE NO. 23-3	1
Caltrans Type S	LINE NO. 1	STRONG MOTION RECORDER NO. 2	1
	LINE NO. 2	BOX A	1
	LINE NO. 1	STRONG MOTION RECORDER NO. 2	1
	LINE NO. 2	BOX B	1
Recorder Enclosure	LINE NO. 1	STRONG MOTION RECORDER NO. 3	1

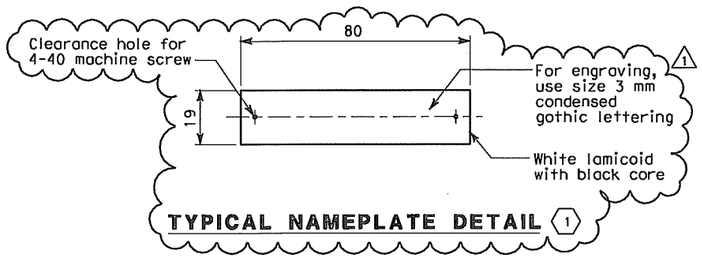

TYPICAL NAMEPLATE DETAIL (1)

SHEET NOTE:

(1) Nameplate shall be mounted to the enclosure door panel with 4-40 stainless steel machine screws. The enclosure door panel to be drilled and tapped. (No self-tapping screws).

NOTES:

1. For other related work not shown on this drawing, see Electrical Special Provisions.
2. References:
   - For cable block diagram, see sheets E-382, E-383 and E-384.
   - For general notes of the strong motion detection system, see sheet E-361.
   - For circuit and conduit/cable tray schedules, see sheets starting at E-401.

DIST	COUNTY	ROUTE	KILOMETER POST TOTAL PROJECT	SHEET No	TOTAL SHEETS
04	SF	80	13.2/13.9	345 R1	1204

Jens Erlingsson 12/19/02
REGISTERED ELECTRICAL ENGINEER DATE

12-6-04
PLANS APPROVAL DATE

REGISTERED PROFESSIONAL ENGINEER — JENS ERLINGSSON No. 8249 Exp. 9/30/06 ELECTRICAL — STATE OF CALIFORNIA

PB POWER, Inc.
A Parsons Brinckerhoff Company
303 Second St., Suite 700N
San Francisco, CA 94107-1317

The State of California or its officers or agents shall not be responsible for the accuracy or completeness of electronic copies of this plan sheet.

Caltrans now has a web site! To get to the web site, go to http://www.dot.ca.gov

REGISTERED PROFESSIONAL ENGINEER — FADI WALIEDDINE No. 11465 Exp. 12/31/2009 ELECTRICAL — STATE OF CALIFORNIA

FOR REVISION ONLY

REQUEST FOR INFORMATION NOT ADDRESSED IN THIS CCO REMAIN IN FORCE

MARK	DATE	DESCRIPTIONS	BY	CH'D	CCO#
		REVISIONS			
1	10/03/08	STRONG MOTION SYSTEM	RG	FW	74

CONTRACT CHANGE ORDER NO. 74
SHEET 20 OF 27

DETAILS
STRONG MOTION DETECTION SYSTEM
RECORDER SCHEDULES

NO SCALE

E-379

DESIGN OVERSIGHT	CALCULATED/ DESIGNED BY	DATE	REVISED BY
STATE OF CALIFORNIA - DEPARTMENT OF TRANSPORTATION	JW	2/02	DATE REVISED
Caltrans	CHECKED BY		5/02
BEHZAD GOLEMOHAMMADI	JW		

LAST REVISION 00-00-00
DATE PLOTTED => 10/2/2008
TIME PLOTTED => 6:06:59 PM

FOR REDUCED PLANS ORIGINAL SCALE IS IN MILLIMETERS 0 20 40 60 80

DGN FILE =>T:\13103\MS\pse\SAS Struc\CCO\SAS CCO74\Issued for Submittal 2008-10-03\04-0120F1_0345R01.dgn
USERNAME =>llorico

CU 04251 | EA 0120F1

STRONG MOTION DETECTION SYSTEM SCHEDULE

CKT No.	Cable Type	Number of Sensors	Sensor Enclosure No.	Enclosure Type No.	Mounting Locotion	Hinge Location	Recorder Connection	Remarks
2900-142A	SSC	1	14-2	1	Pier W2E, top of footing, southwest corner, just inside retaining wall.	N/A	Strong Motion Recorder #2-Box A	Cast metal box
2900-152A 2900-152B 2900-152C	SSC SSC SSC	3	15-2	1	Pier W2E, top of footing, southeast corner, just inside retaining wall.	N/A	Strong Motion Recorder #2-Box A	Cast metal box
2900-162A 2900-162B	SSC SSC	2	16-2	1	Pier W2E, top of footing, northeast corner, just inside retaining wall.	N/A	Strong Motion Recorder #2-Box A	Cast metal box
2900-172A 2900-172B 2900-172C	SSC SSC SSC	3	17-2	4 (1)	Inside EB girder (PP8) on south face of south longitudinol shear plate.	Down	Strong Motion Recorder #2-Box A	
2900-182A 2900-182B	SSC SSC	2	18-2	5	Inside WB girder (PP8) on south face of south longitudinal shear plate.	West (1)	Strong Motion Recorder #2-Box B	
2900-192A 2900-192B 2900-192C	SSC SSC SSC	3	19-2	4 (1)	At midspan west of tower (PP24), in box girder for "E" line, on south face of south longitudinal shear plate.	Down	Strong Motion Recorder #2-Box A	
2900-202A	SSC	1	20-2	7 (1)	At midspan west of tower (PP24), in box girder for "W" line, on north face of north longitudinal shear plate.	Down	Strong Motion Recorder #2-Box B	
2900-213A 2900-213B 2900-213C	SSC SSC SSC	3	21-3	6 (1)	At midspan west of tower (PP24), on south cable, mounted on bottom of stanchion on inboard side of suspender cable clamp.	Special	Strong Motion Recorder #3	See sheet E-377.
2900-223A 2900-223B 2900-223C	SSC SSC SSC	3	22-3	6 (1)	At midspan west of tower (PP24), on north cable, mounted on bottom of stanchion on inboard side of suspender cable clamp.	Special	Strong Motion Recorder #3	See sheet E-377.
2900-233A 2900-233B 2900-233C	SSC SSC SSC	3	23-3	N/A (1)	Downhole in pile of tower, at pile cap elevation.	N/A	Strong Motion Recorder #3	Pile-type downhole
2900-243A	SSC	1	24-3	1	Tower, top of footing, southwest corner.	N/A	Strong Motion Recorder #3	Cast metal box
2900-253A 2900-253B 2900-253C	SSC SSC SSC	3	25-3	1	Tower, top of footing, southwest corner.	N/A	Strong Motion Recorder #3	Cast metal box

DIST	COUNTY	ROUTE	KILOMETER POST TOTAL PROJECT	SHEET No	TOTAL SHEETS
04	SF	80	13.2/13.9	346 R1	1204

Jens Erlingsson 12/19/02
REGISTERED ELECTRICAL ENGINEER DATE

12-6-04
PLANS APPROVAL DATE

REGISTERED PROFESSIONAL ENGINEER — JENS ERLINGSSON No. 8249 Exp. 9/30/06 ELECTRICAL — STATE OF CALIFORNIA

PB POWER, Inc.
A Parsons Brinckerhoff Company
303 Second St., Suite 700N
San Francisco, CA 94107-1317

The State of California or its officers or agents shall not be responsible for the accuracy or completeness of electronic copies of this plan sheet.

Caltrans now has a web site! To get to the web site, go to http://www.dot.ca.gov

NOTE:

1. For reference drowings, see sheet E-381.

REGISTERED PROFESSIONAL ENGINEER — FADI WALIEDDINE No. 11465 Exp. 12/31/2009 ELECTRICAL — STATE OF CALIFORNIA

FOR REVISION ONLY

REQUEST FOR INFORMATION NOT ADDRESSED IN THIS CCO REMAIN IN FORCE

MARK	DATE	REVISIONS DESCRIPTIONS	BY	CH'D	CCO#
1	10/03/08	STRONG MOTION SYSTEM	RG	FW	74

CONTRACT CHANGE ORDER NO. 74
SHEET 21 OF 27

DETAILS
STRONG MOTION DETECTION SYSTEM SENSOR SCHEDULES
NO SCALE

E-380

REVISED BY	DATE	CALCULATED/ DESIGNED BY	CHECKED BY
JW	2/02		

DESIGN OVERSIGHT — BEHZAD GOLEMOHAMMADI

STATE OF CALIFORNIA - DEPARTMENT OF TRANSPORTATION — Caltrans

LAST REVISION 00-00-00 — DATE PLOTTED => 10/2/2008 — TIME PLOTTED => 6:07:30 PM

FOR REDUCED PLANS ORIGINAL SCALE IS IN MILLIMETERS 0 20 40 60 80

DGN FILE =>T:\13103\MS\pse\SAS Struc\CCO\SAS CCO74\Issued for Submittal 2008-10-03\04-0120f1_0346R01.dgn
USERNAME =>llorica

CU 04251 | EA 0120F1

STRONG MOTION DETECTION SYSTEM SCHEDULE

CKT No.	Cable Type	Number of Sensors	Sensor Enclosure No.	Enclosure Type No.	Mounting Location	Hinge Location	Recorder Connection	Remarks
2900-263A 2900-263B	SSC SSC	2	26-3	1	Tower, top of footing, northeast corner.	N/A	Strong Motion Recorder #3	Cast metal box
2900-272A 2900-272B 2900-272C	SSC SSC SSC	3	27-2	4	At tower, in box girder for "E" line, on south face of south longitudinal shear plate.	Down	Strong Motion Recorder #2-Box A	
2900-282A	SSC	1	28-2	7	At tower, in box girder for "W" line, on north face of north longitudinal shear plate.	Down	Strong Motion Recorder #2-Box B	
2900-292A	SSC	1	29-2	2 w/o plate	Between tower and eastbound structure, behind guardrail, transverse displacement sensor.*	Down	Strong Motion Recorder #2-Box A	Displacement sensor in SST box w/o venting.
2900-303A 2900-303B 2900-303C 2900-303D 2900-303E	SSC SSC SSC SSC SSC	5	30-3	4	Tower, inside northeast quadrant tower shaft at elev. 54 m, on east face of the west wall.	North	Strong Motion Recorder #3	(Includes 2 cables for Tilt sensors) Put a "T" body at the conduit entrance to the enclosure, with the extra opening temporarily plugged.
2900-313A 2900-313B 2900-313C	SSC SSC SSC	3	31-3	4	Tower, inside northeast quadrant tower shaft at elev. 94 m, on east face of the west wall.	North	Strong Motion Recorder #3	
2900-323A 2900-323B 2900-323C 2900-323D 2900-323E	SSC SSC SSC SSC SSC	5	32-3	4	Tower, inside northeast quadrant tower shaft at top of tower (elev. 156.750 m), on east face of the west wall.	North	Strong Motion Recorder #3	(Includes 2 cables for Tilt sensors) Put a "T" body at the conduit entrance to the enclosure, with the extra opening temporarily plugged.
2900-332A 2900-332B 2900-332C	SSC SSC SSC	3	33-2	4	At 1/3 pt of span east of tower (PP68), in box girder for "E" line, on south face of south longitudinal shear plate.	Down	Strong Motion Recorder #2-Box A	
2900-342A	SSC	1	34-2	7	At 1/3 pt of span east of tower (PP68), in box girder for "W" line, on north face of north longitudinal shear plate.	Down	Strong Motion Recorder #2-Box B	
2900-353A 2900-353B 2900-353C 2900-353D 2900-353E 2900-353F	SSC SSC SSC SSC SSC SSC	6	35-3	6	At 1/3 pt of span east of tower (PP68), on south cable, mounted to bottom of stanchion on inboard side of suspender cable clamp.	Special	Strong Motion Recorder #3	(Includes 3 accelerometers and 3 rotational sensors).
2900-363A 2900-363B 2900-363C	SSC SSC SSC	3	36-3	6	At 1/3 pt of span east of tower (PP68), on north cable, mounted to bottom of stanchion on inboard side of suspender cable clamp.	Special	Strong Motion Recorder #3	
2900-373A 2900-373B	SSC SSC	2	37-3	2 w/o plate	Tower, inside northeost quadrant tower shoft, at base, on east face of west wall.*	Down	Strong Motion Recorder #3	Two Tilt sensor in SST box w/o venting.
2900-382A 2900-382B 2900-382C	SSC SSC SSC	3	38-2	4	At 2/3 pt of span east of tower (PP94), in box girder for "E" line, on south face of south longitudinal shear plate.	Down	Strong Motion Recorder #2-Box A	
2900-392A	SSC	1	39-2	7	At 2/3 pt of span east of tower (PP94), in box girder for "W" line, on north face of north longitudinal shear plate.	Down	Strong Motion Recorder #2-Box B	

NOTES:

1. For other related work not shown on this drawing, see Electrical Special Provisions.
2. References:
   - For cable block diagram, see sheets E-382, E-383 and E-384.
   - For general notes of the strong motion detection system, see sheet E-361.
   - For circuit and conduit/cable tray schedules, see sheets starting at E-401.
3. All conduits and fittings located outside or inside pier shall be rigid galvanized steel, PVC coated.
4. Secure enclosure to concrete per note 3 on sheet E-378.
5. * = Displacement and tilt sensors will be installed by CDMG and do not need a pigtail or plate; leave 6 m of extra cable in enclosure specified.

FOR REVISION ONLY

CONTRACT CHANGE ORDER NO. 74
SHEET 22 OF 27

STRONG MOTION DETECTION SYSTEM SCHEDULE

CKT No.	Cable Type	Number of Sensors	Sensor Enclosure No.	Enclosure Type No.	Mounting Location	Hinge Locofion	Recorder Connection	Remarks
2900-402A	SSC	1	40-2	1	Pier E2, top of footing for Pier E2E, southwest corner.	N/A	Strong Motion Recorder #2-Box A	Cast metal box
2900-412A 2900-412B 2900-412C	SSC SSC SSC	3	41-2	1	Pier E2, top of footing for Pier E2E, southeast corner.	N/A	Strong Motion Recorder #2-Box A	Cast metal box
2900-422A 2900-422B	SSC SSC	2	42-2	1	Pier E2, top of footing for Pier E2E, northeast corner.	N/A	Strong Motion Recorder #2-Box A	Cast metal box
2900-432A 2900-432B	SSC SSC	2	43-2	5	Pier E2, inside steel box girder at "E" line, on west vertical face of transverse steel plate, 1 meter the girder plate.	North	Strong Motion Recorder #2-Box A	
2900-442A 2900-442B 2900-442C	SSC SSC SSC	3	44-2	4	East end of main span west side of hinge AE (PP127.5), at south edge of horizontal floor on horizontal flange of floor beam.	West	Strong Motion Recorder #2-Box A	
2900-452A 2900-452B	SSC SSC	2	45-2	3	East end of main span west side of hinge AE (PP127.5), at north edge of horizontal floor on horizontal flange of floor beam.	North	Strong Motion Recorder #2-Box A	
2900-462A 2900-462B	SSC SSC	2	46-2	3	East end of main span west side of hinge AW (PP127.5), at south edge of horizontal floor on horizontal flange of floor beam.	North	Strong Motion Recorder #2-Box B	
2900-472A 2900-472B 2900-472C	SSC SSC SSC	3	47-2	4	East end of main span west side of hinge AW (PP127.5), at north edge of horizontal floor on horizontal flange of floor beam.	West	Strong Motion Recorder #2-Box B	
2900-482A	SSC	1	48-2	2 w/o plate	East end of main span, west side of hinge AE, (PP126.5), on horizontal flange of floor beam.*	West	Strong Motion Recorder #2-Box B	Displacement sensor in SST box w/o vent.

DETAILS
STRONG MOTION DETECTION SYSTEM SENSOR SCHEDULES
NO SCALE

E-381

DIST	COUNTY	ROUTE	KILOMETER POST TOTAL PROJECT	SHEET No	TOTAL SHEETS
04	SF	80	13.2/13.9	347 R1	1204

REGISTERED ELECTRICAL ENGINEER — 12/19/02 DATE

12-6-04
PLANS APPROVAL DATE

JENS ERLINGSSON No. 8249 Exp. 9/30/06 ELECTRICAL — REGISTERED PROFESSIONAL ENGINEER — STATE OF CALIFORNIA

FADI WALIEDDINE No. 11465 Exp. 12/31/2009 ELECTRICAL — REGISTERED PROFESSIONAL ENGINEER — STATE OF CALIFORNIA

PB POWER, Inc.
A Parsons Brinckerhoff Company
303 Second St., Suite 700N
San Francisco, CA 94107-1317

The State of California or its officers or agents shall not be responsible for the accuracy or completeness of electronic copies of this plan sheet.

Caltrans now has a web site! To get to the web site, go to http://www.dot.ca.gov

REQUEST FOR INFORMATION NOT ADDRESSED IN THIS CCO REMAIN IN FORCE

MARK	DATE	DESCRIPTIONS	BY	CH'D	CCO#
		REVISIONS			
1	10/03/08	STRONG MOTION SYSTEM	RG	FW	74

DATE	REVISED BY	DATE REVISED
2/02	JW	

CALCULATED/DESIGNED BY — CHECKED BY

DESIGN OVERSIGHT — BEHZAD GOLEMOHAMMADI

STATE OF CALIFORNIA - DEPARTMENT OF TRANSPORTATION — Caltrans

LAST REVISION 00-00-00

DATE PLOTTED => 10/2/2008
TIME PLOTTED => 6:07:46 PM

FOR REDUCED PLANS ORIGINAL SCALE IS IN MILLIMETERS 0 20 40 60 80

DGN FILE =>T:\13103\MS\pse\SAS Struc\CCO\SAS CC074\Issued for Submittal 2008-10-03\04-0120F1_0347R01.dgn
USERNAME =>llorico

CU 04251 | EA 0120F1

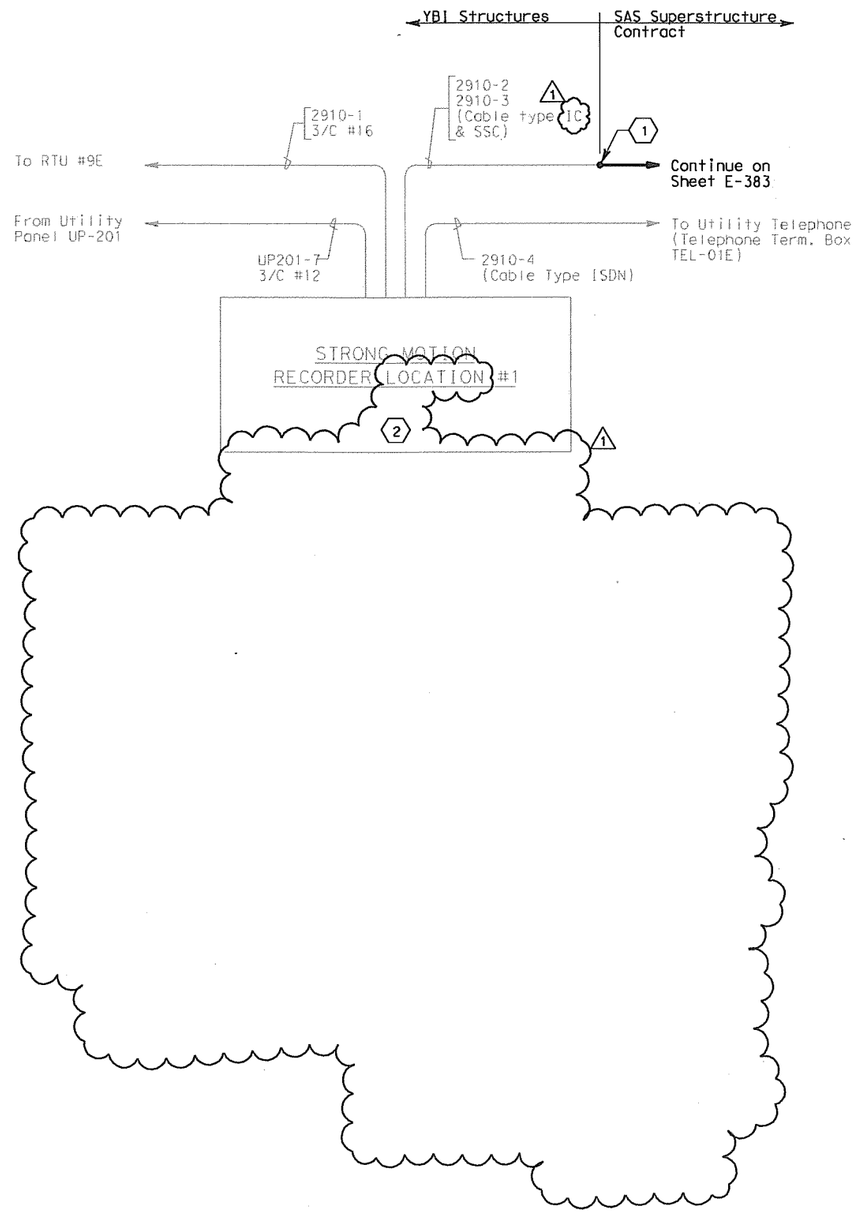

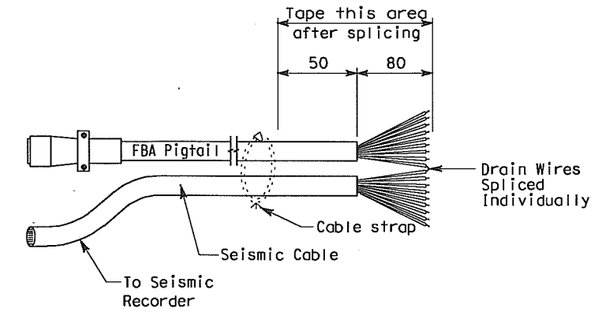

PIGTAIL SPLICING DETAIL

(1) (THIS DETAIL IS APPLICABLE TO CABLE SSC IN ALL STRONG MOTION SENSOR ENCLOSURES)

SPLICING INSTRUCTIONS:

1. Strip outer jacket cables back 80 mm.
2. Separate individual conductors and drain wires and splice matching colored wires and drain wires using jelly filled splice connectors and crimping tool.
3. Secure cables with cable straps approximately 50 mm from end of outer jacket.
4. Tape from cable strap to splice with vinyl electrical tape (3M Scotch Super 88 or equal). Tape shall cover all splices. Coat with sealing compound or equal, then tape with self-fusing tape and an outer layer of vinyl electrical tape.

   Note: Insure crimps are secure before taping.

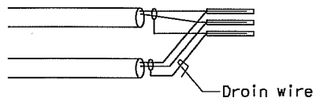

SPLICING DETAIL

1 Pair spliced (Typ. of 4)

SHEET NOTES:

(1) The Contractor shall extend and coil 5 meters of cable in manhole 27. All cables shall be tagged with circuit numbers as shown.

(1) (2) For seismic sensor cables see YBI Transition Structures.

NOTES:

1. For other related work not shown on this drawing, see Electrical Special Provisions.
2. References:
   - For general notes of the strong motion detection system, see sheet E-361.
   - For circuit and conduit/cable tray schedules, see sheets starting at E-401.
3. All conduits and fittings located outside or inside pier shall be rigid galvanized steel, PVC coated.
4. Secure enclosure to concrete (1) with manufacturer's recommended mounting and approved by the Engineer.

FOR REVISION ONLY

REQUEST FOR INFORMATION NOT ADDRESSED IN THIS CCO REMAIN IN FORCE					
MARK	DATE	REVISIONS	BY	CH'D	CCO#
1	10/03/08	STRONG MOTION SYSTEM	RG	FW	74

CONTRACT CHANGE ORDER NO. 74
SHEET 23 OF 27

DETAILS
STRONG MOTION DETECTION SYSTEM
CABLE BLOCK DIAGRAM

NO SCALE

E-382

DIST	COUNTY	ROUTE	KILOMETER POST TOTAL PROJECT	SHEET No	TOTAL SHEETS
04	SF	80	13.2/13.9	348 R1	1204

Jens Erlingsson 12/19/02
REGISTERED ELECTRICAL ENGINEER DATE

12-6-04
PLANS APPROVAL DATE

REGISTERED PROFESSIONAL ENGINEER — JENS ERLINGSSON No. 8249 Exp. 9/30/06 ELECTRICAL — STATE OF CALIFORNIA

PB POWER, Inc.
A Parsons Brinckerhoff Company
303 Second St., Suite 700N
San Francisco, CA 94107-1317

The State of California or its officers or agents shall not be responsible for the accuracy or completeness of electronic copies of this plan sheet.

Caltrans now has a web site! To get to the web site, go to http://www.dot.ca.gov

REGISTERED PROFESSIONAL ENGINEER — FADI WALIEDDINE No. 11465 Exp. 12/31/2009 ELECTRICAL — STATE OF CALIFORNIA

STATE OF CALIFORNIA - DEPARTMENT OF TRANSPORTATION — Caltrans

DESIGN OVERSIGHT: BEHZAD GOLEMOHAMMADI

CALCULATED/ DESIGNED BY	DATE	REVISED BY
JW	02/02	
CHECKED BY	DATE	REVISED
JW	05/02	

THIS PLAN IS ACCURATE FOR ELECTRICAL WORK ONLY.

ALL DIMENSIONS ARE IN MILLIMETERS UNLESS OTHERWISE SHOWN.

FOR REDUCED PLANS ORIGINAL SCALE IS IN MILLIMETERS 0 20 40 60 80

DGN FILE =>T:\13103\MS\pse\SAS Struc\CCO\SAS CCO74\Issued for Submittal 2008-10-03\04-0120f1_0348R01.dgn
USERNAME =>llorico

CU 04251 EA 0120F1

LAST REVISION 00-00-00

DATE PLOTTED => 10/2/2008
TIME PLOTTED => 6:08:12 PM

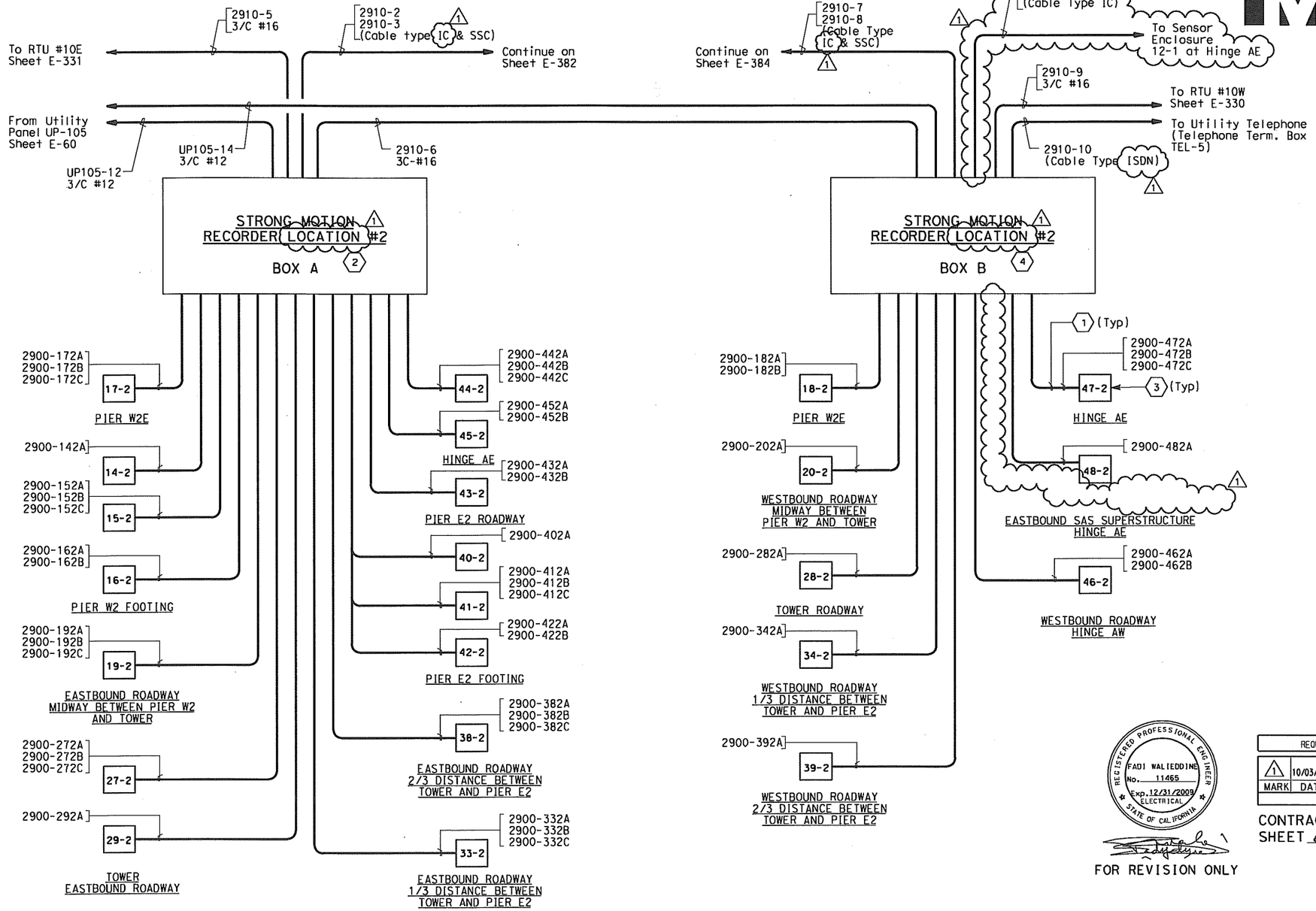

SHEET NOTES:

1. Strong Motion sensor cable Type SSC, unless otherwise indicated.
2. Strong Motion Recorder #2 Box A consists of two 18-channel recarders and one 12-channel recorder, connected to a total of 35 sensors.
3. Sensor enclosure with identification number as shown.
4. Strong Motion Recorder #2 Box B consist of one 18-channel recoder connected to o total of 12 sensors.

NOTES:

1. For other related work not shown on this drawing, see Electrical Special Provisions.
2. References:
   - For general notes of the strong motion detection system, see sheet E-361.
   - For circuit and conduit/cable tray schedules, see sheets starting at E-401.
3. All conduits and fittings located outside or inside pier shall be galvanized rigid steel, PVC coated.
4. Secure enclosure to concrete with manufacturer's recommended mounting and approved by the Engineer.
5. Strong motion recorder #2 box A and box B located on service platform 5, see sheet E-72.

DIST	COUNTY	ROUTE	KILOMETER POST TOTAL PROJECT	SHEET No	TOTAL SHEETS
04	SF	80	13.2/13.9	349 R1	1204

James Erlingsson 12/19/02
REGISTERED ELECTRICAL ENGINEER DATE

12-6-04
PLANS APPROVAL DATE

REGISTERED PROFESSIONAL ENGINEER
JENS ERLINGSSON
No. 8249
Exp. 9/30/06
ELECTRICAL
STATE OF CALIFORNIA

PB POWER, Inc.
A Parsons Brinckerhoff Company
303 Second St., Suite 700N
San Francisco, CA 94107-1317

The State of California or its officers or agents shall not be responsible for the accuracy or completeness of electronic copies of this plan sheet.

Caltrans now has a web site! To get to the web site, go to http://www.dot.ca.gov

REGISTERED PROFESSIONAL ENGINEER
FADI WALIEDDINE
No. 11465
Exp. 12/31/2009
ELECTRICAL
STATE OF CALIFORNIA

FOR REVISION ONLY

REQUEST FOR INFORMATION NOT ADDRESSED IN THIS CCO REMAIN IN FORCE

MARK	DATE	DESCRIPTIONS	BY	CH'D	CCO#
		REVISIONS			
1	10/03/08	STRONG MOTION SYSTEM	RG	FW	74

CONTRACT CHANGE ORDER NO. 74
SHEET 24 OF 27

DETAILS
STRONG MOTION DETECTION SYSTEM
CABLE BLOCK DIAGRAM

NO SCALE

E-383

DATE	REVISED BY	DATE REVISED
02/02	JW	-

CALCULATED/DESIGNED BY: BEHZAD GOLEMOHAMMADI
CHECKED BY: -

DESIGN OVERSIGHT

STATE OF CALIFORNIA - DEPARTMENT OF TRANSPORTATION
Caltrans

THIS PLAN IS ACCURATE FOR ELECTRICAL WORK ONLY.

FOR REDUCED PLANS ORIGINAL SCALE IS IN MILLIMETERS 0 20 40 60 80

DGN FILE =>T:\13103\MS\pse\SAS Struc\CCO\SAS CC074\Issued for Submittal 2008-10-03\04-0120f1_0349R01.dgn
USERNAME =>llorico

CU 04251 | EA 0120F1

LAST REVISION 00-00-00
DATE PLOTTED => 10/2/2008
TIME PLOTTED => 6:08:36 PM

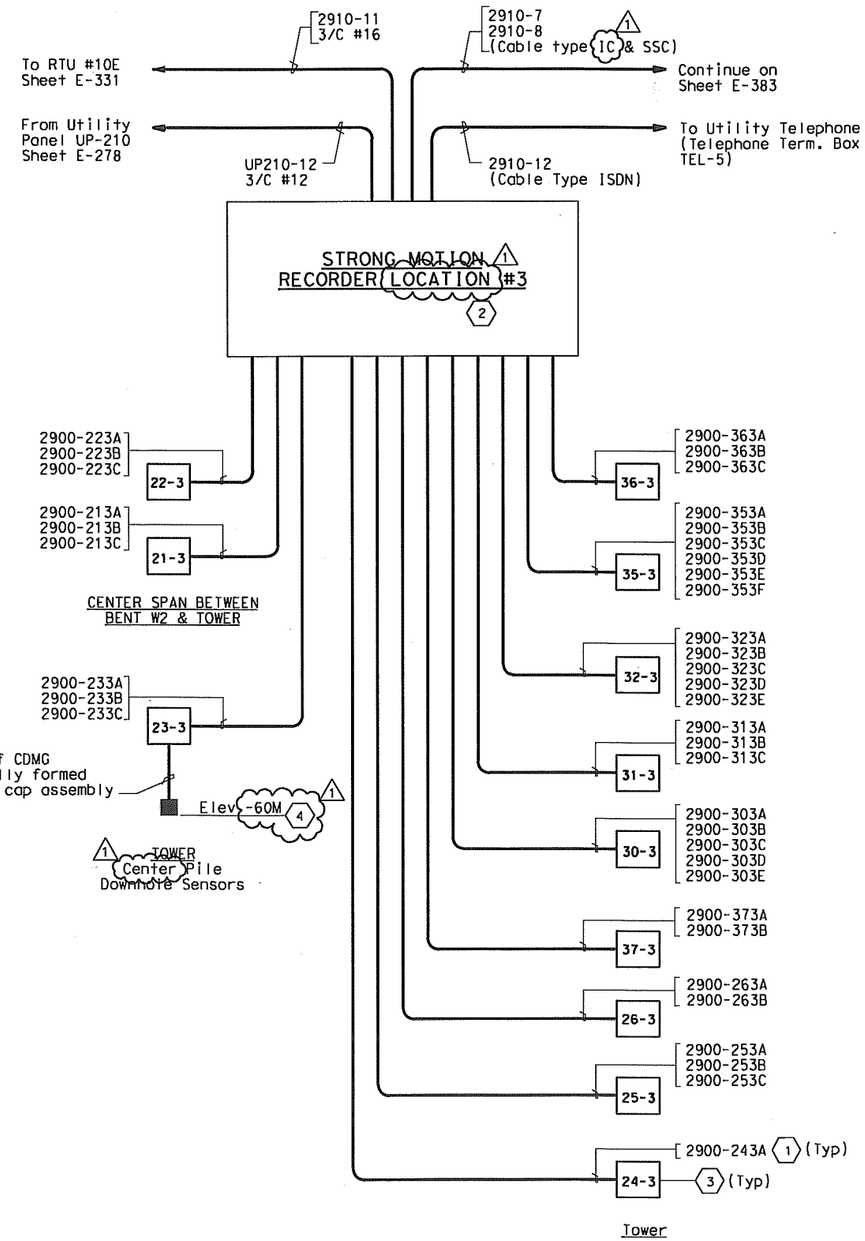

Tower

Caltrans Metric

DIST	COUNTY	ROUTE	KILOMETER POST TOTAL PROJECT	SHEET No	TOTAL SHEETS
04	SF	80	13.2/13.9	350 R1	1204

Jens Erlingsson 12/19/02
REGISTERED ELECTRICAL ENGINEER DATE

12-6-04
PLANS APPROVAL DATE

REGISTERED PROFESSIONAL ENGINEER
JENS ERLINGSSON
No. 8249
Exp. 9/30/06
ELECTRICAL
STATE OF CALIFORNIA

PB POWER, Inc.
A Parsons Brinckerhoff Company
303 Second St., Suite 700N
San Francisco, CA 94107-1317

The State of California or its officers or agents shall not be responsible for the accuracy or completeness of electronic copies of this plan sheet.

Caltrans now has a web site! To get to the web site, go to http://www.dot.ca.gov

SHEET NOTES:

1. Strong Motion sensor cable Type SSC, unless otherwise indicated.
2. Strong Motion Recorder #3 consists of one 18-channel recorder and two 12-channel recorders, connected to a total of 39 sensors.
3. Sensor enclosure with identification number as shown.
4. Sensor enclosure 23-3 at tower elevation 3M. Sensor orientation assembly at minus 60M. Installation of downhole sensor package and associated cabling by others.

NOTES:

1. For other related work not shown on this drawing, see Electrical Special Provisions.
2. References:
   - For general notes of the strong motion detection system, see sheet E-361.
   - For circuit and conduit/cable tray schedules, see sheets starting at E-401.
3. All conduits and fittings located outside or inside pier shall be galvanized rigid steel, PVC coated.
4. Secure enclosure to concrete with manufacturer's recommended mounting and approved by the Engineer.
5. Strong motion recorder #3 located at tower, see sheet E-366.

REGISTERED PROFESSIONAL ENGINEER
FADI WALIEDDINE
No. 11465
Exp. 12/31/2009
ELECTRICAL
STATE OF CALIFORNIA

FOR REVISION ONLY

REQUEST FOR INFORMATION NOT ADDRESSED IN THIS CCO REMAIN IN FORCE

MARK	DATE	DESCRIPTIONS (REVISIONS)	BY	CH'D	CCO#
1	10/03/08	STRONG MOTION SYSTEM	RG	FW	74

CONTRACT CHANGE ORDER NO. 74
SHEET 25 OF 27

DETAILS
STRONG MOTION DETECTION SYSTEM
CABLE BLOCK DIAGRAM

NO SCALE

E-384

STATE OF CALIFORNIA - DEPARTMENT OF TRANSPORTATION
Caltrans
DESIGN OVERSIGHT
BEHZAD GOLEMOHAMMADI
RIGHT

CALCULATED/ DESIGNED BY	JW	DATE 02/02	REVISED BY
CHECKED BY	-	-	DATE REVISED

THIS PLAN IS ACCURATE FOR ELECTRICAL WORK ONLY.

ALL DIMENSIONS ARE IN MILLIMETERS UNLESS OTHERWISE SHOWN.

FOR REDUCED PLANS ORIGINAL SCALE IS IN MILLIMETERS 0 20 40 60 80

DGN FILE =>T:\13103\WS\pse\SAS Struc\CCO\SAS CCO74\Issued for Submittal 2008-10-03\04-0120f1_0350R01.dgn
USERNAME =>llorico
CU 04251
EA 0120F1

LAST REVISION 00-00-00
DATE PLOTTED => 10/2/2008
TIME PLOTTED => 6:08:51 PM

DIST	COUNTY	ROUTE	KILOMETER POST TOTAL PROJECT	SHEET No	TOTAL SHEETS
04	SF	80	13.2/13.9	402 R1	1204

Jens Erlingsson 12/19/02
REGISTERED ELECTRICAL ENGINEER DATE

12-6-04
PLANS APPROVAL DATE

REGISTERED PROFESSIONAL ENGINEER
JENS ERLINGSSON
No. 8249
Exp. 9/30/06
ELECTRICAL
STATE OF CALIFORNIA

PB POWER, Inc.
A Parsons Brinckerhoff Company
303 Second St., Suite 700N
San Francisco, CA 94107-1317

The State of California or its officers or agents shall not be responsible for the accuracy or completeness of electronic copies of this plan sheet.

Caltrans now has a web site! To get to the web site, go to http://www.dot.ca.gov

Caltrans Metric

REGISTERED PROFESSIONAL ENGINEER
FADI WALIEDDINE
No. 11465
Exp. 12/31/2009
ELECTRICAL
STATE OF CALIFORNIA

REQUEST FOR INFORMATION NOT ADDRESSED IN THIS CCO REMAIN IN FORCE

MARK	DATE	DESCRIPTIONS	BY	CH'D	CCO#
1	10/03/08	STRONG MOTION SYSTEM	RG	FW	74

REVISIONS

FOR REVISION ONLY
CONTRACT CHANGE ORDER NO. 74
SHEET 26 OF 27

CONDUIT DATA

Conduit No	Reference	Size	Type	Total Fill (mm²)	Allowable Fill (mm²)	Included Cable No.	Conductor Type
9022	E-372	27	RGS conduit	94.84	229.03	2900-432A	4 pair #22, shielded pairs, FEP insulation
						Pull rope	Soft-Fiber Polyester
						2900-432B	4 pair #22, shielded pairs, FEP insulation
9023	E-373	27	RGS conduit	142.26	229.03	Pull rope	Soft-Fiber Polyester
						2900-472C	4 pair #22, shielded pairs, FEP insulation
						2900-472B	4 pair #22, shielded pairs, FEP insulation
						2900-472A	4 pair #22, shielded pairs, FEP insulation
9024	E-373	27	RGS conduit	94.84	229.03	Pull rope	Soft-Fiber Polyester
						2900-462B	4 pair #22, shielded pairs, FEP insulation
						2900-462A	4 pair #22, shielded pairs, FEP insulation
9025	E-373	27	RGS conduit	94.84	229.03	Pull rope	Soft-Fiber Polyester
						2900-452B	4 pair #22, shielded pairs, FEP insulation
						2900-452A	4 pair #22, shielded pairs, FEP insulation
9026	E-373	27	RGS conduit	142.26	229.03	Pull rope	Soft-Fiber Polyester
						2900-442B	4 pair #22, shielded pairs, FEP insulation
						2900-442A	4 pair #22, shielded pairs, FEP insulation
						2900-442C	4 pair #22, shielded pairs, FEP insulation
9027	E-362	41	RGS-PVC coated conduit	284.52	534.55	2900-162B	4 pair #22, shielded pairs, FEP insulation
						2900-152C	4 pair #22, shielded pairs, FEP insulation
						2900-152B	4 pair #22, shielded pairs, FEP insulation
						2900-152A	4 pair #22, shielded pairs, FEP insulation
						2900-162A	4 pair #22, shielded pairs, FEP insulation
						2900-142A	4 pair #22, shielded pairs, FEP insulation
						Pull rope	Soft-Fiber Polyester
9050	E-366A (1)	27	RGS-PVC coated conduit	47.42	229.03	2900-243A	4 pair #22, shielded pairs, FEP insulation
						Pull rope	Soft-Fiber Polyester
9051	E-366A (1)	27	RGS-PVC coated conduit	189.68	229.03	2900-253A	4 pair #22, shielded pairs, FEP insulation
						2900-253B	4 pair #22, shielded pairs, FEP insulation
						2900-243A	4 pair #22, shielded pairs, FEP insulation
						Pull rope	Soft-Fiber Polyester
						2900-253C	4 pair #22, shielded pairs, FEP insulation
9052	E-366A (1)	27	RGS-PVC coated conduit	94.84	229.03	2900-263A	4 pair #22, shielded pairs, FEP insulation
						2900-263B	4 pair #22, shielded pairs, FEP insulation
						Pull rope	Soft-Fiber Polyester
9053	E-366A (1)	27	RGS-PVC coated conduit	142.26	229.03	2900-253A	4 pair #22, shielded pairs, FEP insulation
						Pull rope	Soft-Fiber Polyester
						2900-253C	4 pair #22, shielded pairs, FEP insulation
						2900-253B	4 pair #22, shielded pairs, FEP insulation
9054	E-366A (1)	41	RGS-PVC coated conduit	237.10 (1)	534.55	2900-233A	4 pair #22, shielded pairs, FEP insulation
						~~2900-233C~~	~~4 pair #22, shielded pairs, FEP insulation~~
						2900-373A	4 pair #22, shielded pairs, FEP insulation
						Pull rope	Soft-Fiber Polyester
						~~2900-373B~~	~~4 pair #22, shielded pairs, FEP insulation~~
						2900-233B	4 pair #22, shielded pairs, FEP insulation
9055	E-366	41	RGS-PVC coated conduit	237.10	534.55	2900-303C	4 pair #22, shielded pairs, FEP insulation
						Pull rope	Soft-Fiber Polyester
						2900-303D	4 pair #22, shielded pairs, FEP insulation
						2900-303B	4 pair #22, shielded pairs, FEP insulation
						2900-303A	4 pair #22, shielded pairs, FEP insulation
						2900-303E	4 pair #22, shielded pairs, FEP insulation
9056	E-366	27	RGS-PVC coated conduit	49.21	229.03	Pull rope	Soft-Fiber Polyester
						UP210-12	2 + 1 gnd #12, #12, 600 V, RHH/RHW insulation
9057	E-264A, E-366	41	RGS-PVC coated conduit	320.61	534.55	2910-7	4 pair #24, overall shielded, 300 V, PE insulation
						2910-8	4 pair #22, shielded pairs, 300 V, PE insulation
						2910-12	4 pair #22, shielded pairs, 300 V, PE insulation
9058	E-366	27	RGS-PVC coated conduit	0.00	229.03	Pull rope	Soft-Fiber Polyester
9059	E-366	78	RGS-PVC coated conduit	1849.38	1935.24	2900-303C	4 pair #22, shielded pairs, FEP insulation
						2900-313C	4 pair #22, shielded pairs, FEP insulation
						2900-323C	4 pair #22, shielded pairs, FEP insulation
						2900-323D	4 pair #22, shielded pairs, FEP insulation

CONDUIT DATA

Conduit No	Reference	Size	Type	Total Fill (mm²)	Allowable Fill (mm²)	Included Cable No.	Conductor Type
9059 (con't)	E-366	78	RGS-PVC coated conduit	1849.38	1935.24	2900-323A	4 pair #22, shielded pairs, FEP insulation
						2900-323E	4 pair #22, shielded pairs, FEP insulation
						2900-323B	4 pair #22, shielded pairs, FEP insulation
						2900-313B	4 pair #22, shielded pairs, FEP insulation
						2900-313A	4 pair #22, shielded pairs, FEP insulation
						2900-303D	4 pair #22, shielded pairs, FEP insulation
						2900-373A	4 pair #22, shielded pairs, FEP insulation
						2900-303B	4 pair #22, shielded pairs, FEP insulation
						2900-303A	4 pair #22, shielded pairs, FEP insulation
						2900-263B	4 pair #22, shielded pairs, FEP insulation
						2900-303E	4 pair #22, shielded pairs, FEP insulation
						2900-353A	4 pair #22, shielded pairs, FEP insulation
						Pull rope	Soft-Fiber Polyester
						2900-363C	4 pair #22, shielded pairs, FEP insulation
						2900-363B	4 pair #22, shielded pairs, FEP insulation
						2900-363A	4 pair #22, shielded pairs, FEP insulation
						2900-353F	4 pair #22, shielded pairs, FEP insulation
						2900-353E	4 pair #22, shielded pairs, FEP insulation
						2900-223C	4 pair #22, shielded pairs, FEP insulation
						2900-353B	4 pair #22, shielded pairs, FEP insulation
						2900-373B	4 pair #22, shielded pairs, FEP insulation
						2900-263A	4 pair #22, shielded pairs, FEP insulation
						2900-223B	4 pair #22, shielded pairs, FEP insulation
						2900-223A	4 pair #22, shielded pairs, FEP insulation
						2900-213C	4 pair #22, shielded pairs, FEP insulation
						2900-213B	4 pair #22, shielded pairs, FEP insulation
						2900-213A	4 pair #22, shielded pairs, FEP insulation
						2900-353C	4 pair #22, shielded pairs, FEP insulation
						2900-253C	4 pair #22, shielded pairs, FEP insulation
						2900-253B	4 pair #22, shielded pairs, FEP insulation
						2900-253A	4 pair #22, shielded pairs, FEP insulation
						2900-243A	4 pair #22, shielded pairs, FEP insulation
						2900-233A	4 pair #22, shielded pairs, FEP insulation
						2900-233C	4 pair #22, shielded pairs, FEP insulation
						2900-233B	4 pair #22, shielded pairs, FEP insulation
						2900-353D	4 pair #22, shielded pairs, FEP insulation
9060	E-366, E-367	78	RGS-PVC coated conduit	1090.66	1935.24	2900-213C	4 pair #22, shielded pairs, FEP insulation
						2900-213B	4 pair #22, shielded pairs, FEP insulation
						2900-213A	4 pair #22, shielded pairs, FEP insulation
						2900-323E	4 pair #22, shielded pairs, FEP insulation
						2900-323D	4 pair #22, shielded pairs, FEP insulation
						2900-323C	4 pair #22, shielded pairs, FEP insulation
						2900-323B	4 pair #22, shielded pairs, FEP insulation
						2900-223A	4 pair #22, shielded pairs, FEP insulation
						2900-313B	4 pair #22, shielded pairs, FEP insulation
						~~2900-313C~~	~~4 pair #22, shielded pairs, FEP insulation~~
						2900-243C (1)	4 pair #22, shielded pairs, FEP insulation
						2900-253A	4 pair #22, shielded pairs, FEP insulation
						2900-253B	4 pair #22, shielded pairs, FEP insulation
						2900-253C	4 pair #22, shielded pairs, FEP insulation
						2900-263A	4 pair #22, shielded pairs, FEP insulation
						2900-263B	4 pair #22, shielded pairs, FEP insulation
						2900-233A	4 pair #22, shielded pairs, FEP insulation
						2900-233B	4 pair #22, shielded pairs, FEP insulation
						2900-233C	4 pair #22, shielded pairs, FEP insulation
						2900-273A	4 pair #22, shielded pairs, FEP insulation
						2900-273B	4 pair #22, shielded pairs, FEP insulation

For continuation, see next sheet.

CONDUIT AND TRAY SCHEDULE

E-447

CALCULATED/ DESIGNED BY	PBP	DATE 8/02	REVISED BY
CHECKED BY	AB	8/02	DATE REVISED

DESIGN OVERSIGHT
BEHZAD GOLEMOHAMMADI

STATE OF CALIFORNIA - DEPARTMENT OF TRANSPORTATION
Caltrans

DATE PLOTTED => 10/2/2008
TIME PLOTTED => 6:09:20 PM
LAST REVISION 00-00-00

FOR REDUCED PLANS ORIGINAL SCALE IS IN MILLIMETERS
0 20 40 60 80

DGN FILE =>T:\13103\MS\pse\SAS Struc\CCO\SAS CCO74\Issued for Submittal 2008-10-03\04-0120f1_0402R01.dgn
USERNAME =>llorico
CU 04251
EA 0120F1

CONDUIT DATA

Conduit No	Reference	Size	Type	Total Fill (mm²)	Allowable Fill (mm²)	Included Coble No.	Conductor Type
9060	E-366, E-367	78	RGS-PVC coated conduit	1090.66	1935.24	2900-323A	4 pair #22, shielded pairs, FEP insulation
(con't)						2900-363A	4 pair #22, shielded pairs, FEP insulation
						2900-363C	4 pair #22, shielded pairs, FEP insulation
						2900-313A	4 pair #22, shielded pairs, FEP insulation
						Pull rope	Soft-Fiber Polyester
						2900-223B	4 pair #22, shielded pairs, FEP insulation
						2900-363B	4 pair #22, shielded pairs, FEP insulation
						2900-353F	4 pair #22, shielded pairs, FEP insulation
						2900-353E	4 pair #22, shielded pairs, FEP insulation
						2900-353D	4 pair #22, shielded pairs, FEP insulation
						2900-353C	4 pair #22, shielded pairs, FEP insulation
						2900-353B	4 pair #22, shielded pairs, FEP insulation
						2900-353A	4 pair #22, shielded pairs, FEP insulation
						2900-223C	4 pair #22, shielded pairs, FEP insulation
9061	E-367	27	RGS-PVC coated conduit	142.26	229.03	2900-313C	4 pair #22, shielded pairs, FEP insulation
						Pull rope	Soft-Fiber Polyester
						2900-313B	4 pair #22, shielded pairs, FEP insulation
						2900-313A	4 pair #22, shielded pairs, FEP insulation
9062	E-365, E-367	78	RGS-PVC coated conduit	948.40	1935.24	Pull rope	Soft-Fiber Polyester
						2900-353B	4 pair #22, shielded pairs, FEP insulation
						2900-353C	4 pair #22, shielded pairs, FEP insulation
						2900-353D	4 pair #22, shielded pairs, FEP insulation
						2900-353F	4 pair #22, shielded pairs, FEP insulation
						2900-213B	4 pair #22, shielded pairs, FEP insulation
						2900-363C	4 pair #22, shielded pairs, FEP insulation
						2900-363B	4 pair #22, shielded pairs, FEP insulation
						2900-353E	4 pair #22, shielded pairs, FEP insulation
						2900-353A	4 pair #22, shielded pairs, FEP insulation
						2900-223C	4 pair #22, shielded pairs, FEP insulation
						2900-223B	4 pair #22, shielded pairs, FEP insulation
						2900-213C	4 pair #22, shielded pairs, FEP insulation
						2900-213A	4 pair #22, shielded pairs, FEP insulation
						2900-323E	4 pair #22, shielded pairs, FEP insulation
						2900-323D	4 pair #22, shielded pairs, FEP insulation
						2900-323C	4 pair #22, shielded pairs, FEP insulation
						2900-323B	4 pair #22, shielded pairs, FEP insulation
						2900-323A	4 pair #22, shielded pairs, FEP insulation
						2900-363A	4 pair #22, shielded pairs, FEP insulation
						2900-223A	4 pair #22, shielded pairs, FEP insulation
9064	E-367	41	RGS-PVC coated conduit	237.10	534.55	2900-323C	4 pair #22, shielded pairs, FEP insulation
						2900-323D	4 pair #22, shielded pairs, FEP insulation
						2900-323A	4 pair #22, shielded pairs, FEP insulation
						2900-323B	4 pair #22, shielded pairs, FEP insulation
						Pull rope	Soft-Fiber Polyester
						2900-323E	4 pair #22, shielded pairs, FEP insulation
9065	E-264A, E-366	27	RGS-PVC coated conduit	47.42	229.03	Pull rope	Soft-Fiber Polyester
						2900-292A	4 pair #22, shielded pairs, FEP insulation
9067	E-366A	27	RGS-PVC coated conduit	94.84	229.03	2900-373B	4 pair #22, shielded pairs, FEP insulation
						2900-373A	4 pair #22, shielded pairs, FEP insulation
						Pull rope	Soft-Fiber Polyester
9070	E-366A	27	RGS-PVC coated conduit	142.26	229.03	2900-233A	4 pair #22, shielded pairs, FEP insulation
						2900-233B	4 pair #22, shielded pairs, FEP insulation
						2900-233C	4 pair #22, shielded pairs, FEP insulation

FADI WALIEDDINE No. 11465 Exp. 12/31/2009 ELECTRICAL — REGISTERED PROFESSIONAL ENGINEER — STATE OF CALIFORNIA

CONTRACT CHANGE ORDER NO. 74

FOR REVISION ONLY SHEET 27 OF 27

Caltrans Metric

DIST	COUNTY	ROUTE	KILOMETER POST TOTAL PROJECT	SHEET No	TOTAL SHEETS
04	SF	80	13.2/13.9	403 R1	1204

12/19/02
REGISTERED ELECTRICAL ENGINEER DATE

12-6-04
PLANS APPROVAL DATE

JENS ERLINGSSON No. 8249 Exp. 9/30/06 ELECTRICAL — REGISTERED PROFESSIONAL ENGINEER — STATE OF CALIFORNIA

PB POWER, Inc.
A Parsons Brinckerhoff Company
303 Second St., Suite 700N
San Francisco, CA 94107-1317

The State of California or its officers or agents shall not be responsible for the accuracy or completeness of electronic copies of this plan sheet.

Caltrans now has a web site! To get to the web site, go to http://www.dot.ca.gov

REQUEST FOR INFORMATION NOT ADDRESSED IN THIS CCO REMAIN IN FORCE

MARK	DATE	DESCRIPTIONS	BY	CH'D	CCO#
		REVISIONS			
1	10/03/08	STRONG MOTION SYSTEM	RG	FW	74

CONDUIT DATA

Conduit No	Reference	Size	Type	Total Fill (mm²)	Allowable Fill (mm²)	Included Coble No.	Conductor Type
9068	E-366A	41	RGS-PVC coated conduit	284.52	534.55		
						2900-263B	4 pair #22, shielded pairs, FEP insulation
						2900-263A	4 pair #22, shielded pairs, FEP insulation
						2900-253C	4 pair #22, shielded pairs, FEP insulation
						2900-253B	4 pair #22, shielded pairs, FEP insulation
						2900-253A	4 pair #22, shielded pairs, FEP insulation
						2900-243A	4 pair #22, shielded pairs, FEP insulation
						Pull rope	Soft-Fiber Polyester
9069	E-374	27	RGS conduit	47.42	229.03	Pull rope	Soft-Fiber Polyester
						2900-482A	4 pair #22, shielded pairs, FEP insulation
9222	E-72	53	RGS conduit	62.07	879.42	2910-5	1-3/C #16, 600 V, EPR insulation
						Pull rope	Soft-Fiber Polyester
9223	E-72	53	RGS conduit	62.07	879.42	Pull rope	Soft-Fiber Polyester
						2910-9	1-3/C #16, 600 V, EPR insulation
9230	E-115	78	RGS conduit	1754.54	2564.19	2900-442B	4 pair #22, shielded pairs, FEP insulation
						2900-402A	4 pair #22, shielded pairs, FEP insulation
						2900-412A	4 pair #22, shielded pairs, FEP insulation
						2900-412B	4 pair #22, shielded pairs, FEP insulation
						2900-412C	4 pair #22, shielded pairs, FEP insulation
						2900-422A	4 pair #22, shielded pairs, FEP insulation
						2900-422B	4 pair #22, shielded pairs, FEP insulation
						2900-442A	4 pair #22, shielded pairs, FEP insulation
						2900-332A	4 pair #22, shielded pairs, FEP insulation
						2900-442C	4 pair #22, shielded pairs, FEP insulation
						2900-452A	4 pair #22, shielded pairs, FEP insulation
						2900-452B	4 pair #22, shielded pairs, FEP insulation
						2900-482A	4 pair #22, shielded pairs, FEP insulation
						2910-2	4 pair #22, shielded pairs, FEP insulation
						2910-3	4 pair #22, shielded pairs, FEP insulation
						Pull rope	Soft-Fiber Polyester
						2900-382C	4 pair #22, shielded pairs, FEP insulation
						2900-432A	4 pair #22, shielded pairs, FEP insulation
						2900-172A	4 pair #22, shielded pairs, FEP insulation
						2900-152A	4 pair #22, shielded pairs, FEP insulation
						2900-332C	4 pair #22, shielded pairs, FEP insulation
						2900-142A	4 pair #22, shielded pairs, FEP insulation
						2900-382B	4 pair #22, shielded pairs, FEP insulation
						2900-152B	4 pair #22, shielded pairs, FEP insulation
						2900-152C	4 pair #22, shielded pairs, FEP insulation
						2900-162B	4 pair #22, shielded pairs, FEP insulation
						2900-172B	4 pair #22, shielded pairs, FEP insulation
						2900-172C	4 pair #22, shielded pairs, FEP insulation
						2900-272C	4 pair #22, shielded pairs, FEP insulation
						2900-382A	4 pair #22, shielded pairs, FEP insulation
						2900-162A	4 pair #22, shielded pairs, FEP insulation
						2900-292A	4 pair #22, shielded pairs, FEP insulation
						2900-192A	4 pair #22, shielded pairs, FEP insulation
						2900-272B	4 pair #22, shielded pairs, FEP insulation
						2900-272A	4 pair #22, shielded pairs, FEP insulation
						2900-192C	4 pair #22, shielded pairs, FEP insulation
						2900-192B	4 pair #22, shielded pairs, FEP insulation
						2900-332B	4 pair #22, shielded pairs, FEP insulation

For continuation, see next sheet.

CONDUIT AND TRAY SCHEDULE

E-448

REVISED BY	DATE REVISED
PGP	8/02
AB	8/02

CALCULATED/DESIGNED BY
CHECKED BY

DESIGN OVERSIGHT
BEHZAD GOLEMOHAMMADI

STATE OF CALIFORNIA - DEPARTMENT OF TRANSPORTATION
Caltrans

LAST REVISION 00-00-00
DATE PLOTTED => 10/2/2008
TIME PLOTTED => 6:09:39 PM

FOR REDUCED PLANS ORIGINAL SCALE IS IN MILLIMETERS 0 20 40 60 80

DGN FILE =>T:\13103\MS\pse\SAS Struc\CCO\SAS CCO74\Issued for Submittal 2008-10-03\04-0120F1_0403R01.dgn
USERNAME =>llorico
CU 04251
EA 0120F1

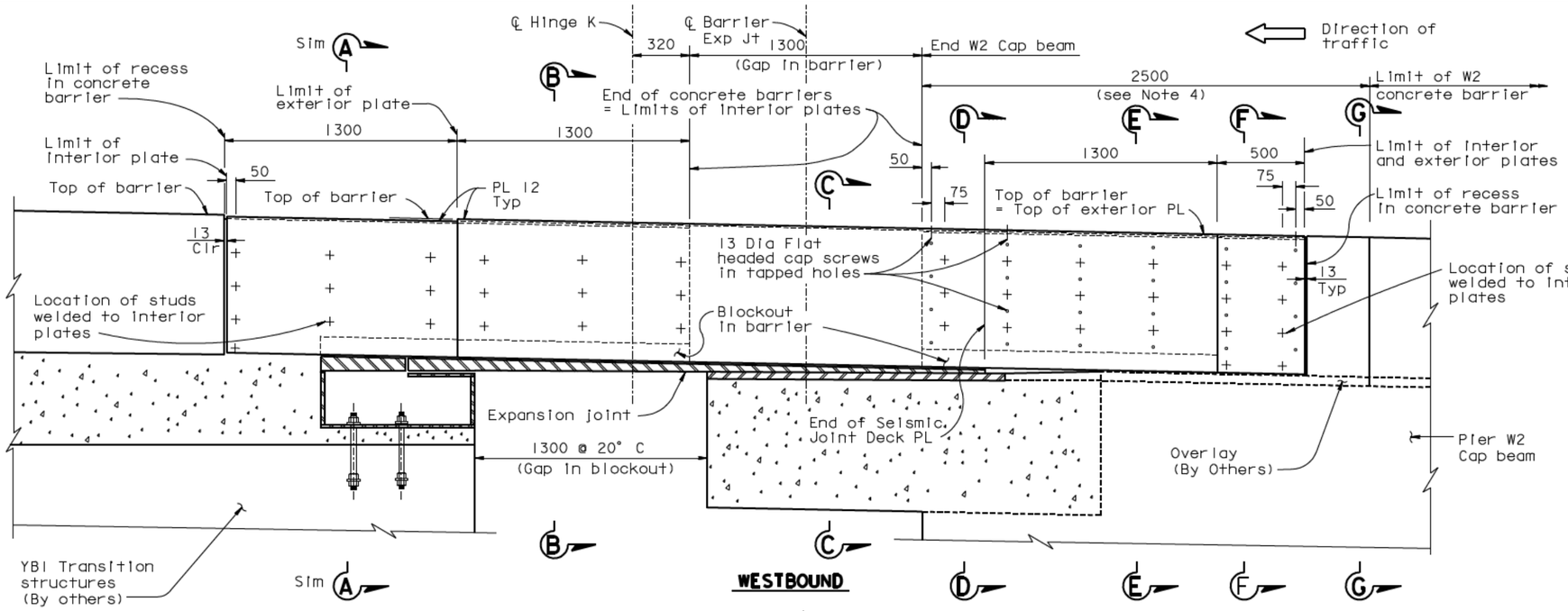

BARRIER AT HINGE K - ELEVATION

1:15

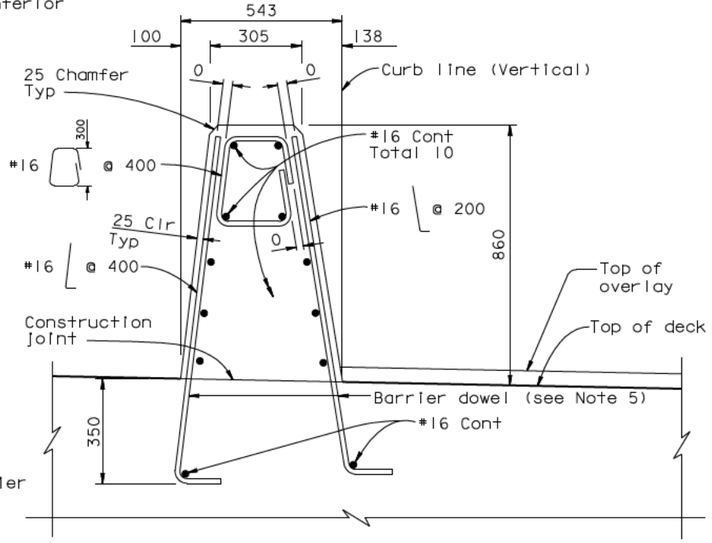

SECTION G-G

CONCRETE BARRIER TYPE 732 (MODIFIED)

1:10

LEGEND:

- Expansion Joint (By Others) (2)
- Blockout pourback concrete (By Others) (2)

(2)

NOTES:

1. For Sections A-A, B-B, C-C, D-D, E-E and F-F see "Barrier Details No.4" sheet.
2. For expansion joint details, see "Hinge K Expansion Joint Details" sheets.
3. All reinforcement in concrete barrier shall be epoxy coated.
4. In this region, only barrier dowels shall be constructed. Other barrier reinforcement and barrier concrete are by others.
5. Barrier dowels may be installed with a mechanical coupler splice. Couplers shall meet ultimate splice criteria.
6. Steel barrier, YBI Transition structures, expansion joint, blockout pourbacks and overlay is for information only, and By Others.

(2)

DIST.	COUNTY	ROUTE	KILOMETER POST TOTAL PROJECT	SHEET NO.	TOTAL SHEETS
04	SF	80	13.2/13.9	89IR2	1204

Caltrans Metric

REGISTERED ENGINEER - CIVIL

12-6-04
PLANS APPROVAL DATE

Tien Hung Ho No. C 43990 Exp. 6/30/09 CIVIL — REGISTERED PROFESSIONAL ENGINEER — STATE OF CALIFORNIA

The State of California or its officers or agents shall not be responsible for the accuracy or completeness of electronic copies of this plan sheet.

T.Y. LIN / MOFFATT & NICHOL
825 BATTERY STREET
SAN FRANCISCO, CA 94111

Caltrans now has a web site! To get to the web site, go to: http://www.dot.ca.gov

REQUESTS FOR INFORMATION NOT ADDRESSED IN THIS CCO REMAIN IN FORCE

MARK	DATE	DESCRIPTIONS	BY	CH'D	CCO#
		REVISIONS			
2	03/31/08	HINGE K SEISMIC JOINT	JD	TH	76
1	05/04/07	W2 CAP BEAM ISD RESOLUTION	JD	TH	3451

CONTRACT CHANGE ORDER NO. ____
SHEET ___ OF ___

	BY	CHECKED
DESIGN	T. Ho	M. Nader
DETAILS	G. Baker	M. Nader
QUANTITIES	S. Shi	K. Cormier

R. Vallzadeh/V. Toan/Y.L./W.L./F.C.
DESIGN OVERSIGHT
SIGN OFF DATE 03/31/08

Rev. Date: 5-18-98

ORIGINAL SCALE IN MILLIMETERS FOR REDUCED PLANS 0 10 20 30 40 50 60 70 80 90 100

ALL DIMENSIONS ARE IN MILLIMETERS UNLESS OTHERWISE SHOWN

PREPARED FOR THE STATE OF CALIFORNIA DEPARTMENT OF TRANSPORTATION

R. Manzanarez
PROJECT ENGINEER

CU 04
EA 0120F1

FILE -> $REQUEST

BRIDGE NO. 34-0006L/R
KILOMETER POST 13.2/13.9

SAN FRANCISCO OAKLAND BAY BRIDGE
EAST SPAN SEISMIC SAFETY PROJECT
SELF-ANCHORED SUSPENSION BRIDGE
(SUPERSTRUCTURE & TOWER)

BARRIER DETAILS NO. 3

DISREGARD PRINTS BEARING EARLIER REVISION DATES

REVISION DATES (PRELIMINARY STAGE ONLY): 08/28/98 | 05/31/01 | 04/08/02 | 07/01/02 | 12/19/02 | 07/18/03

SHEET 474R2 OF

DATE PLOTTED => $DATE
TIME PLOTTED => $TIME
USERNAME => $USER
100 % PS&E

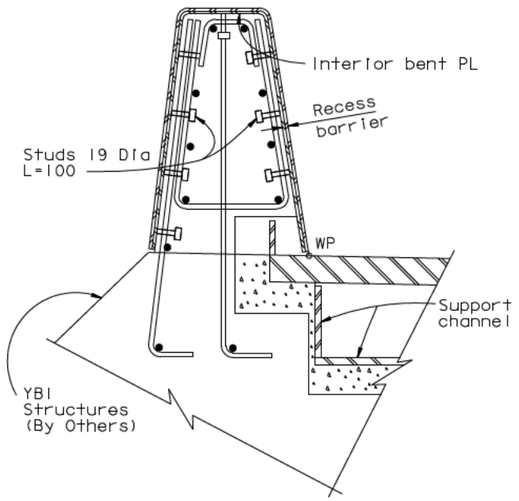

SECTION A-A
1:10
(By Others)

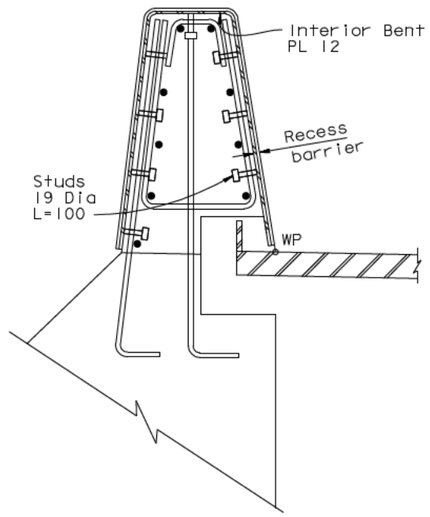

SECTION B-B
1:10
(By Others)

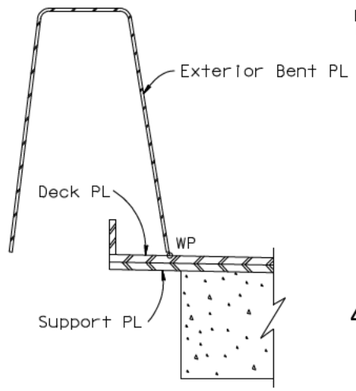

SECTION C-C
1:10
(By Others)

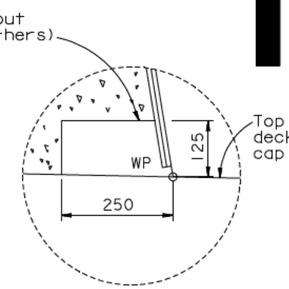

BARRIER BLOCKOUT DETAIL
No Scale

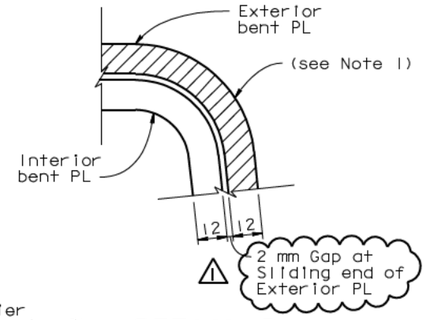

DETAIL B
No Scale

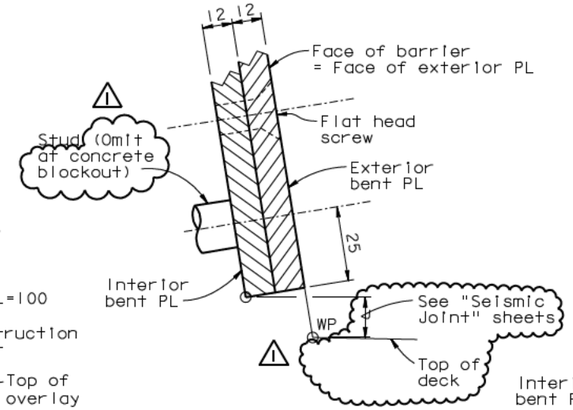

DETAIL A
No Scale

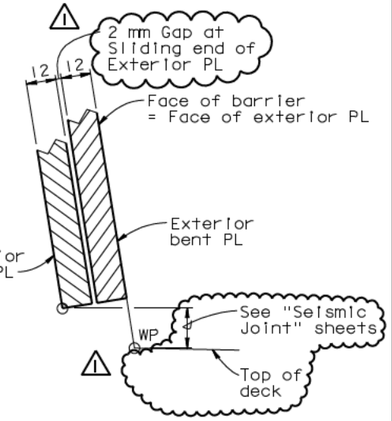

DETAIL C
No Scale

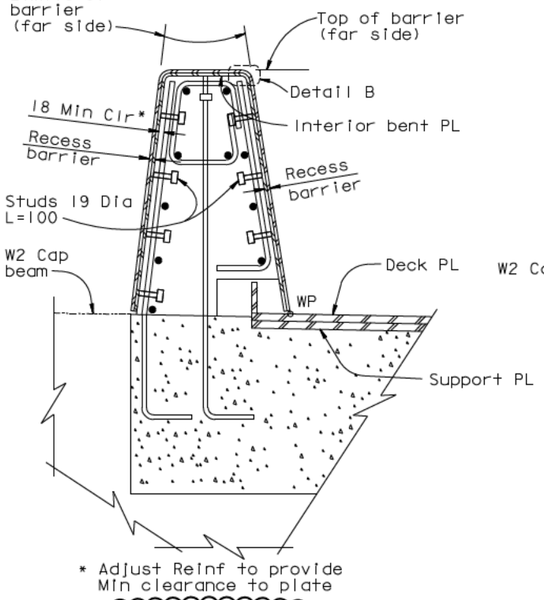

* Adjust Reinf to provide Min clearance to plate

SECTION D-D
1:10
(By Others)

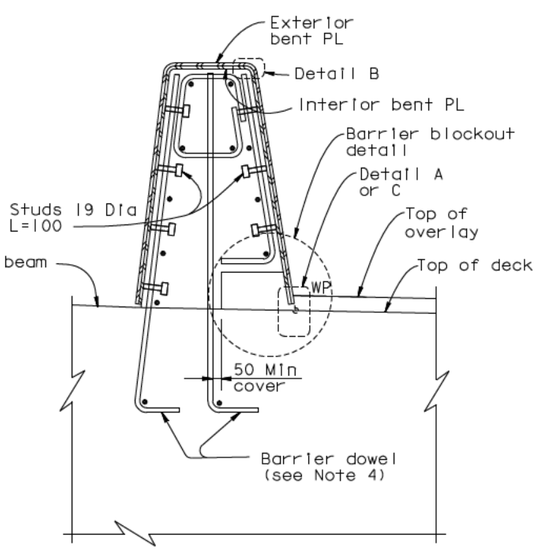

SECTION E-E
1:10
(Barrier & Overlay By Others)

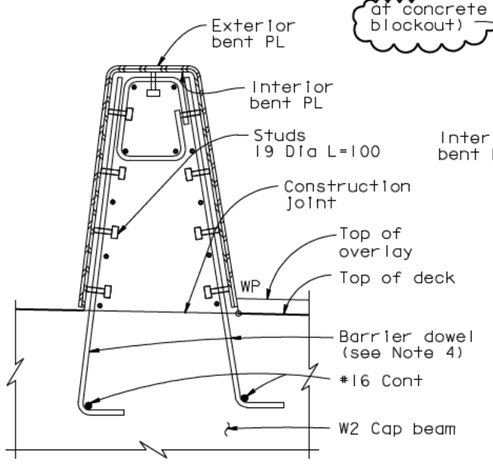

SECTION F-F
1:10
(Barrier & Overlay By Others)

NOTES:

1. Bend steel plates to conform to shape of concrete barrier.
2. Galvanize all metal hardware after fabrication.
3. Deck plate, support plate, support channel and consolidated concrete are parts of expansion Joint. For details, see "Seismic Joint" plans.
4. Barrier dowels may be installed with a mechanical coupler splice. Couplers shall meet ultimate splice criteria.

DIST.	COUNTY	ROUTE	KILOMETER POST TOTAL PROJECT	SHEET NO.	TOTAL SHEETS
04	SF	80	13.2/13.9	892RI	1204

Caltrans Metric

REGISTERED ENGINEER - CIVIL
Tien Hung Ho No. C 43990 Exp. 6/30/09 CIVIL
12-6-04
PLANS APPROVAL DATE

The State of California or its officers or agents shall not be responsible for the accuracy or completeness of electronic copies of this plan sheet.

T.Y. LIN / MOFFATT & NICHOL
825 BATTERY STREET
SAN FRANCISCO, CA 94111

Caltrans now has a web site! To get to the web site, go to: http://www.dot.ca.gov

REQUESTS FOR INFORMATION NOT ADDRESSED IN THIS CCO REMAIN IN FORCE

ALL DIMENSIONS ARE IN MILLIMETERS UNLESS OTHERWISE SHOWN

MARK	DATE	DESCRIPTIONS	BY	CH'D	CCO#
1	03/31/08	HINGE K SEISMIC JOINT	TH	JD	76

REVISIONS

CONTRACT CHANGE ORDER NO. ____
SHEET ___ OF ___

R. Valizadeh/V. Toan/Y.L./W.L./F.C.
DESIGN OVERSIGHT
SIGN OFF DATE 03/31/08

DESIGN	BY T. Ho	CHECKED M. Nader	
DETAILS	BY G. Baker	CHECKED M. Nader	
QUANTITIES	BY S. Shi	CHECKED K. Cormier	

PREPARED FOR THE STATE OF CALIFORNIA
DEPARTMENT OF TRANSPORTATION

R. Manzanarez
PROJECT ENGINEER

BRIDGE NO. 34-0006L/R
KILOMETER POST 13.2/13.9

CU 04
EA 0120F1

DISREGARD PRINTS BEARING EARLIER REVISION DATES

REVISION DATES (PRELIMINARY STAGE ONLY)								SHEET	OF
08/02/99	05/31/01	04/08/02	07/01/02	12/18/02	07/18/03			475RI	

SAN FRANCISCO OAKLAND BAY BRIDGE
EAST SPAN SEISMIC SAFETY PROJECT
SELF-ANCHORED SUSPENSION BRIDGE (SUPERSTRUCTURE & TOWER)

BARRIER DETAILS NO. 4

ORIGINAL SCALE IN MILLIMETERS FOR REDUCED PLANS 0 10 20 30 40 50 60 70 80 90 100

FILE -> I:\bb\04-012001\sas\contract plans and cco\cco\In progress\cco#76\dgn\akbar02.dgn

USERNAME => v\gnotovs\DATE PLOTTED => 04 APR 2008 TIME PLOTTED => 14:22:17

100% PS&E

CONTRACT CHANGE ORDER

Change Requested by: Engineer

CCO: 76 **Suppl. No. 0** **Contract No. 04 – 0120F4** **Road** SF-80-13.2/13.9 **FED. AID LOC.:**

To: **AMERICAN BRIDGE/FLUOR ENTERPRISES INC A JOINT VENTURE**

You are directed to make the following changes from the plans and specifications or do the following described work not included in the plans and specifications for this contract. ***NOTE: This change order is not effective until approved by the Engineer.***

Description of work to be done, estimate of quantities and prices to be paid. (Segregate between additional work at contract price, agreed price and force account.) Unless otherwise stated, rates for rental of equipment cover only such time as equipment is actually used and no allowance will be made for idle time. This last percentage shown is the net accumulated increase or decrease from the original quantity in the Engineer's Estimate.

Adjustment of Compensation at Lump Sum Price:

ITEM 1.

Adjust the seismic joint blockout and barrier reinforcement in the vicinity of Hinge K.

The following revised plan sheets detail all changes in this change order: 891R2 and 892R1 (of 1204) as shown on sheets 2 through 3 of this change order.

Adjustment of Compensation at Lump Sum Price..... $50,000.00

ITEM 2.

The items identified above in this change order have been paid as part of CCO 108S1 resolution. Therefore, the amount due under this change order will be adjusted by the amount paid under CCO 108S1 to prevent a double payment. Total amount paid under CCO 108S1, and to be credited to this change, is $50,000.00.

Adjustment of Compensation at Lump Sum Price..... <$50,000.00>

CHANGE ORDER COST AND TIME SUMMARY

(ITEM 1) Adjustment of Compensation for work pursuant to this change order	$50,000.00
(ITEM 2) Amount paid under CCO 108S1 for this change order	<$50,000.00>
Total net pay for this change order	$0.00

Contract time is addressed in CCO 108S1 for all work identified in this change order. Therefore, contract time will not be adjusted in this change order.

Estimated Cost: **Increase** ☐ **Decrease** ☐ **$0**

By reason of this order the time of completion will be adjusted as follows: **0 days**

Submitted by

Signature Kannu Balan **Resident Engineer** Kannu Balan, Senior.T.E. **Date** 7-2-10

Approval Recommended by

Signature Brian Boal **Supervising Bridge Engineer** Brian Boal, Actg Sup.BE. **Date** 7/2/2010

Engineer Approval by

Signature Brian Boal FOR PURSELL **Supervising Transportation Engineer** Gary Pursell, Sup. T.E. **Date** 7/27/2010

We the undersigned contractor, have given careful consideration to the change proposed and agree, if this proposal is approved, that we will provide all equipment, furnish the materials, except as otherwise be noted above, and perform all services necessary for the work above specified, and will accept as full payment therefor the prices shown above.

NOTE: If you, the contractor, do not sign acceptance of this order, your attention is directed to the requirements of the specifications as to proceeding with the ordered work and filing a written protest within the time therein specified.

Contractor Acceptance by

Signature Michael O. Flowers **(Print name and title)** Michael O. Flowers Project Director **Date** 7.23.10

STATE OF CALIFORNIA - DEPARTMENT OF TRANSPORTATION

CONTRACT CHANGE ORDER MEMORANDUM

DC-CEM-4903 (OLD HC-39 REV. 6/93) CT# 7541-3544-0

DATE: 12/08/2008

TO Pete Siegenthaler, Principal TE	FILE 04-0120F4 04-SF-80-13.2/13.9
FROM Gary Pursell, STE / Richard Morrow, SBE	
CCO NO. 77 / SUPPLEMENT NO. 0 / CATEGORY CODE C-H-S-A	CONTINGENCY BALANCE (including this change) **$124,135,313.40**
$3,999,324.00 INCREASE ☒ DECREASE ☐	HEADQUARTERS APPROVAL REQUIRED? YES ☒ NO ☐
SUPPLEMENTAL FUNDS PROVIDED $	IS THIS REQUEST IN ACCORDANCE WITH ENVIRONMENTAL DOCUMENTS? YES ☒ NO ☐
CCO DESCRIPTION: Welding Report and Green Tags	PROJECT DESCRIPTION CONSTRUCT SELF-ANCHORED SUSPENSION BRIDGE

Original Contract Time	Time Adj.: This Change	Previously Approved CCO Time Adjustments	Percentage Time Adjusted: (including this change)	Total # of Unreconciled Deferred Time CCO(s): (including this change)
2490 Day(s)	**0** Day(s)	**30** Day(s)	**0** %	**2**

THIS CHANGE ORDER PROVIDES FOR:

Providing Quality Assurance (QA) improvements for the Orthotropic Box Girder (OBG), and Tower assemblies. Quality Assurance shall be improved by increasing welding report requirements and by implementing a Quality Assurance database along with a physical tagging procedure (green tagging procedure) for fabricated assemblies. The tagging procedure, in conjunction with the database system, establishes a process that tracks, verifies, and documents incremental progress in real time for fabricated sub-assemblies and assembly stages.

Quality Control (QC) is the responsibility of the Contractor and Quality Assurance (QA) is the prerogative of the Engineer, as defined under the Standard Specifications and the Special Provisions. The established practice of the Department's QA program is such that QC processes are verified independently and separately but not until the fabricator has completed their QC process. The Department is required to accept all fabricated work, in accordance with the QA process, prior to shipment.

The SAS Orthotropic Box Girder (OBG) and tower are comprised of thousands of welded steel stiffened members. Multiple members are then joined and welded into larger sub-assemblies. All members and sub-assemblies must meet QA requirements before incorporation into larger assemblies. Resolving QA issues once members are assembled and buried in larger assemblies will be difficult without adversely impacting the schedule. Therefore, it is necessary to improve the Department's QA process to ensure the contract requirements are met continuously throughout fabrication.

Contract Special Provision Section 8-3, Welding, subcategory "Welding Quality Control", requires Contractor submission of QC welding reports every 10 days for welding completed on the project. This information is delivered in large volumes with numerous reports for completed welding non-destructive testing (NDT), repairs, repeated NDT, heat straightening, daily production logs and other documents. The contract requires QC inspection, testing, and reporting on all welding related work. However, the contract does not specify formatting or organization, of the information, and reports to be submitted.

The large volume of Contractor QC reporting documentation along with no contract specified formatting or organizational requirements has created serous challenges for the Department to fulfill it's QA responsibilities in a timely manner. QA process inefficiencies are causing delays to the verification and QA acceptance process that are difficult to recover from as the workload and documentation volume increases. In addition, there is also no contractually required means to enforce traceability between the subassemblies and the submitted weld reports.

This change order provides enhanced weld reporting, a Quality Assurance database along with a fabricated assembly tagging procedure (green tagging procedure). The implementation of the database system will provide traceability, organization, and reporting functions, which will be utilized in conjunction and to support the physical tagging procedure. These enhancements will allow the Department's QA personnel to verify the QC process in a timely fashion, mitigating possible schedule delays.

The physical tagging (Green Tagging) procedure in conjunction with the QA database will provide a uniform procedure for in-process inspection verification and acceptance of OBG and Tower components. The Green Tagging procedure along with QA database provides the following:

1. A process that creates a direct link between subassemblies and welding reports.
2. Allows the QC/QA process to be executed efficiently.
3. Information is accessible, available, and sort able in real-time.
4. Will ensure records are reconciled before components and assemblies are shipped.
5. Subassemblies will be accepted and certified upon completion.
6. Reports (data packets) for each assembly or sub-assembly shall be generated based on Department needs.
7. Provides a progress tracking capability for fabricated sub-assemblies and assembly stages.

This change order reduces the Department's exposure to potential fabrication delays caused by the discovery of unacceptable work late in the fabrication process or after shipment due to inefficiencies in the performance of QA acceptance. This change provides a searchable and traceable database documenting the QC/QA procedures for OBG and Tower components fabricated in China.

Payment to provide and input into the QA database system and implement the physical tagging (Green Tagging) procedure will be at Extra Work at Agreed Unit Price in the amount of $2,893,461.00. Payment to provide access and use of the Contractor's database, data base software, software training, and compensation for work previously authorized by Department Authority to Proceed (ATP) will be paid as Adjustment of Compensation at Agree Lump Sum in the amount of $1,105,863.00. This change is estimated to total $3,999,324.00, which can be financed from the contingency fund. A detailed cost estimate is on file.

This change order work is estimated for six months with the exception being the agreed lump sum items. This change will be re-evaluated after approximately five months to determine funding needs and/or modifications needed to continue the improved QA process. If it is determined that the improved QA process will continue through the duration of fabrication, then additional cost will be determined based upon past production rates and learning curves using a measured-mile approach.

The Contractor and the Department mutually agree that this change does not warrant a time adjustment, as it does not affect the controlling operation.

This change order has concurrence from Gary Pursell (Resident Engineer), Rick Morrow (Sup. Structure Rep), Patrick Lowry (METS), Ken Terpstra (Project Manager), Pete Siegenthaler (Principal TE), Mike Forner (Principal TE) and Marwan Nader (Project Engineer). TBPOC approval was obtained on 11/6/08 for the amount not to exceed $4,000,000.00. Design and Maintenance concurrences are not required for this change.

The Resident Engineer received an Issue and Approve (I&A) from the Division of Construction on 12/4/2008 for this change.

CONCURRED BY:	
CONSTRUCTION ENGINEER Res. Eng. Gary Pursell, Sup. TE	DATE 10/29/08
SR. BRIDGE ENGINEER Struct. Rep. Rick Morrow, Sup. TE	DATE 10/30/08
FHWA REPRESENTATIVE	DATE
PROJECT MANAGER Proj. Manager, Ken Terpstra	DATE 11/05/08
OTHER (SPECIFIY) TBPOC	DATE 11/06/08
Project Engineer, Marwan Nader	DATE 12/02/08
DISTRICT PRIOR APPROVAL BY	DATE
HQ (ISSUE & APPROVE) (TO PROCEED) BY Bob Molera	DATE 12/4/08
RESIDENT ENGINEER SIGNATURE Gary Pursell	DATE 12/11/08

HC-39 Word(Rev.9/96)

ESTIMATE OF COST	THIS REQUEST	TOTAL TO DATE
ITEMS	$0.00	$0.00
FORCE ACCOUNT	$0.00	$0.00
AGREED PRICE	$2,893,461.00	$2,893,461.00
ADJUSTMENT	$1,105,863.00	$1,105,863.00
TOTAL	$3,999,324.00	$3,999,324.00

FEDERAL PARTICIPATION

☐ PARTICIPATING ☐ PARTICIPATING IN PART ☒ NONE
☐ NON-PARTICIPATING (MAINTENANCE) ☐ NON-PARTICIPATING

FEDERAL SEGREGATION (IF MORE THAN ONE FUNDING SOURCE OR P.I.P. TYPE)

☐ CCO FUNDED PER CONTRACT ☐ CCO FUNDED AS FOLLOWS

FEDERAL FUNDING SOURCE	PERCENT

CONTRACT CHANGE ORDER

Change Requested by: Engineer

CCO: 77 Suppl. No. 0 Contract No. 04 – 0120F4 Road SF-80-13.2/13.9 FED. AID LOC.:

To: **AMERICAN BRIDGE/FLUOR ENTERPRISES INC A JOINT VENTURE**

You are directed to make the following changes from the plans and specifications or do the following described work not included in the plans and specifications for this contract. ***NOTE: This change order is not effective until approved by the Engineer.***

Description of work to be done, estimate of quantities and prices to be paid. (Segregate between additional work at contract price, agreed price and force account.) Unless otherwise stated, rates for rental of equipment cover only such time as equipment is actually used and no allowance will be made for idle time. This last percentage shown is the net accumulated increase or decrease from the original quantity in the Engineer's Estimate

This change order provides Quality Assurance (QA) improvements for the Orthotropic Box Girder (OBG), and Tower assemblies. Quality Assurance shall be improved by increasing welding report requirements and by implementing a Quality Assurance database along with a physical tagging procedure (green tagging procedure) for fabricated assemblies. The tagging procedure, in conjunction with the database system, establishes a process that tracks, verifies, and documents incremental progress for fabricated sub-assemblies and assembly stages.

Extra Work at Agreed Unit Price:

Input the following information into the QA database:

No.	Description	No.	Description	No.	Description
1	OBG or Tower	14	Joint Type	27	MT Acceptance Date
2	Lift	15	(Item Deleted)	28	Name of MT Level II
3	Segment	16	Filler Metal	29	Date of UT
4	Assembly	17	Date Welding Started	30	UT Result
5	Sub-Assembly	18	Date Welding Completed	31	Length of UT Defects
6	Plate Number	19	Date of VT	32	UT Acceptance Date
7	Weld ID	20	VT Result	33	Name of UT Level II
8	Total Weld Length	21	Length of VT Defects	34	Date of RT
9	Length of Defect	22	VT Acceptance Date	35	RT Result
10	Repair Report (Summarize)	23	Name of VT CWI	36	Length of RT Defects
11	Welder ID	24	Date of MT	37	RT Acceptance Date
12	Weld Process	25	MT Result	38	Name of RT Level II
13	Weld Position	26	Length of MT Defects		

The above listed input information is required per Special Provisions section 8-3.01 Welding and the Welding Quality Control Plan (WQCP), with the exception of "Item No. 8 - Total Weld Length" and summarization required to input "Item No. 10 - Repair Report." Update the Quality Assurance Database (QAD) daily with the latest information listed above.

Implement the following Quality Assurance Procedure (Green Tagging) for the Tower and Orthotropic Box Girders (OBG):

1. Purpose

1.1 This written procedure establishes the guidelines that shall be followed for In-Process and final Quality Assurance Acceptance of components on the SFOBB Project including the following

1.1.1. Production planning and scheduling
1.1.2. Documentation verification
1.1.3. Approval request notification

2. References

2.1. The following documents shall be used as guidelines for developing this written procedure:

2.1.1. QA Approval form
2.1.2. Fabricators Welding Reports
2.1.3. Welding Report Summary Log
2.1.4. Quality Assurance Acceptance package
2.1.5. SFOBB Status tags

2.2. This procedure is intended to provide a uniform procedure for all Quality Assurance (QA) and Quality Control (QC) personnel representing the Fabricator, the Contractor, and the Department. A team consisting of members from all parties shall be established to execute the In-Process inspection verification of components.

2.3. The In-Process inspection verification team shall have the authority to adopt necessary processes required to facilitate and expedite the acceptance described in this procedure.

3. Production Planning and Scheduling

3.1. The Contractor's Fabrication Manager shall be the person designated for the responsibility of production planning and scheduling.

3.2. Prior to submitting components for formal acceptance the Contractor shall implement In-Process verification that shall include the following:

3.2.1. The yellow In-Process tag (figure 1) shall be affixed to the component, by the Contractor's representative, before part is moved from welding station. The yellow tag shall document that the items listed below have been completed.
3.2.2. All contract required non-destructive examination (NDE) has been performed and is documented on the component as being acceptable.
3.2.3. All contract required visual inspections have been performed and is documented on the component as being acceptable.
3.2.4. All critical and non-critical weld repairs have been completed and re-inspected by the original method of inspection and are documented on the component as being acceptable.
3.2.5. All Heat Straightening Request and Internal Heat Straightening Reports have been completed and the affected welds inspected by the appropriate NDT method.
3.2.6. All Non-conformance reports issued by the Fabricator, Contractor, or Department for material and/or workmanship have been corrected.
3.2.7. All contract required dimensional inspections have been performed and found to be acceptable as part of the dimensional control plan.
3.2.8. Upon completion of welding, NDT and dimensional inspections the team described in section 2.2 shall mutually agree upon the status of the component and complete the yellow In-Process tag by initialing in the appropriate area.
3.2.9. If the specified inspection method is not applicable, the inspector shall write NA.
3.2.10. Tag numbers shall be issued and controlled by the Contractor's Quality Control Manager QCM.
3.2.11. Upon this mutual agreement, the team described in section 2.2 shall indicate acceptance of the In-Process verification on the QA Approval form (Figure 4). The Contractor shall submit the QA Approval form to the QCM for document verification as described in section 4 of this procedure.
3.2.12. After QA approval the yellow In-Process tag may be removed. The green Accept tag (figure 2) shall be placed by the QCM or designated representative.
3.2.13. Store components in accordance with approved Fabrication Procedure and the Contract Provisions.

3.3. The QA Approval form shall include the weld joint number (s) requesting approval, subassembly number, assembly number, grade and date. The QA Approval form shall be issued for the following subassemblies:

1) OBG

a. Bottom plates before assembly into three-panel unit.
b. Side Plates before assembly into three panel unit or corner assembly.
c. Edge Plates before assembly into corner assembly.
d. Deck Plates before assembly into three panel unit and installation of diaphragms or Corner assembly.
e. Longitudinal Diaphragms before segment assembly.
f. Floor beams before segment assembly. Applicable to FL-1, FL-2, FL-3, and whole unit assembles.
g. All three panel assemblies before they go into segment assembly and super panels.
h. Corner assemblies.
i. Segment assembly before painting and lift assembly.
j. Lift assembly and painting before loading onto ship.

2) Tower

a. Diaphragms before assembly into tower shaft.
b. Skin plates before stiffeners are welded onto it.
c. Skin plates with stiffeners before assembly into tower shaft.
d. Tower shaft assembly before painting.
e. Lift assembly and painting before loading onto ship.

3) Crossbeams

a. Bottom plates before assembly.
b. Side Plates before assembly.
c. Deck Plates before assembly.
d. Crossbeam assembly and painting before loading onto ship including matching to OBG.

4) Counterweights before installation onto the OBG or prior to shipping.

5) Suspender bracket before installation onto the OBG.

6) Bike Path brackets before shipping.

7) Bike Path prior to shipping.

8) Barrier prior to shipping.

9) Tower struts prior to shipping.

10) Cross Braces before shipping.

11) Other Sub-assemblies as directed by the Engineer.

3.4. A red Outstanding Repair tag (figure 3) shall be affixed near the yellow tag when any HSR, CWR or NCR is written to indicate an item that requires correction and/or closure prior to acceptance of the item. The red tag shall indicate the reason for tagging (specific HSR, CWR or NCR), the issuing body (the Fabricator, the Contractor, or the Department) and the date issued.

3.5. The issuing and placement of the red outstanding repair tag shall be the responsibility of the contractor's QC Department.

4. Documentation Verification

4.1. The Contractor's Quality Control Manager is responsible for the verification of documentation.

4.2. Following receipt of the QA Approval form, the Contractor's QC Department shall conduct a document review process that shall insure the following:

4.2.1. All contract required nondestructive examination (NDE) has been performed and reported acceptable as part of the weld report submitted by the Fabricator.
4.2.2. All contract required visual inspections have been performed and reported as acceptable as part of the weld report submitted by the Fabricator.
4.2.3. All critical and non-critical weld repairs have been re-inspected and reported to be acceptable per the original inspection method.
4.2.4. All Heat Straightening Requests and Internal Heat Straightening Reports have been completed and the appropriate NDT performed and reported to be acceptable per the original inspection method.
4.2.5. All related Non-Conformance Reports (NCR's) issued by the Fabricator, the Contractor, or the Department for material and/or workmanship shall be closed.
4.2.6. All contract required dimensional inspections have been performed and reported as acceptable as part of the dimensional control / dimensional verification plan.
4.2.7. Following the document review process the contractor's QC shall notify the fabricator's QC of any omitted or missing reports, records or logs. Notification shall be submitted in writing.
4.2.8. Omitted reports, records and logs shall be submitted and accepted by the Contractor prior to proceeding with formal acceptance by the Department as described by section 5 of this procedure.
4.2.9. A Weld Summary Log shall be created for all welds represented by the approved QA Approval form.
4.2.10. Acceptable QA Approval forms shall be signed by the Contractor's QA Manager and attached to the Weld Summary Log representing the components listed and shall be retained.

5. Approval Request Notification

5.1. The Contractor shall initiate approval Request Notification.

5.2. The contractor's QC shall submit the following to the Department for Quality Assurance Acceptance as part of the Quality Assurance Acceptance Package.

5.2.1. QA approval form.
5.2.2. Welding Summary Log.
5.2.3. Dimensional verification reports (when applicable).

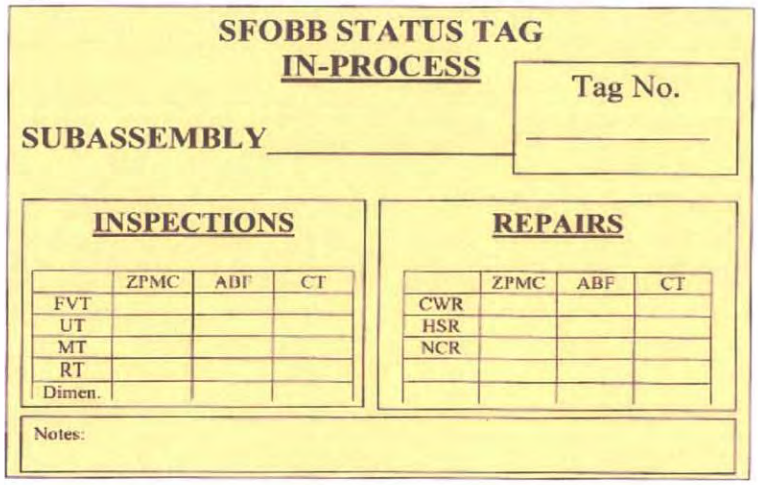

SFOBB STATUS TAG
IN-PROCESS

Tag No. _____

SUBASSEMBLY _____

INSPECTIONS

	ZPMC	ABF	CT
FVT			
UT			
MT			
RT			
Dimen.			

REPAIRS

	ZPMC	ABF	CT
CWR			
HSR			
NCR			

Notes:

Figure 1. SFOBB Status Tag (In-Process, Yellow Tag)

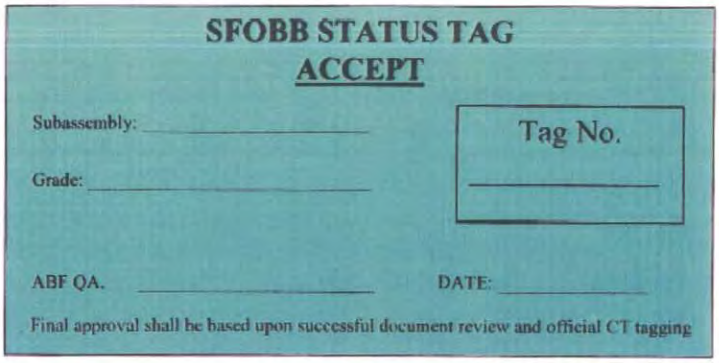

SFOBB STATUS TAG
ACCEPT

Subassembly: _____

Grade: _____

Tag No. _____

ABF QA. _____ DATE: _____

Final approval shall be based upon successful document review and official CT tagging

Figure 2. SFOBB Status Tag (Accept, Green Tag)

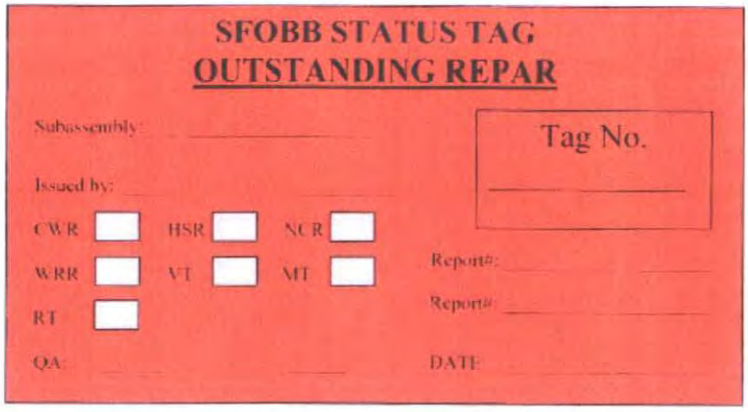

SFOBB STATUS TAG
OUTSTANDING REPAR

Subassembly: _____

Tag No. _____

Issued by: _____

CWR ☐ HSR ☐ NCR ☐

WRR ☐ VT ☐ MT ☐

RT ☐

Report#: _____

Report#: _____

QA: _____ DATE: _____

Figure 3. SFOBB Status Tag (Outstanding Repair, Red Tag)

QA APPROVAL REQUEST FORM
ATTACHMENT A

Component _____ Date _____

In-Process tag No. _____ Location _____
*Attach In-Process tag

Weld numbers _____

_____

_____ _____
ZPMC Team Representative Date

_____ _____
ABF Team Representative Date

_____ _____
CT Team Representative Date

DOCUMENTATION REVIEW

	Yes	No
NDE complete	☐	☐
Repairs complete	☐	☐
NCR's closed	☐	☐

_____ _____
ABF QA Manager Date

QA Approval Request form Rev 0

Figure 4. QA Approval Request Form

The following mutually agreed, all-inclusive monthly unit rates include straight time and overtime and constitute full compensation for the work, including all markups. The all-inclusive mutually agreed monthly unit rate will be paid for all staff that work 50% or more of the calendar days and are dedicated to the extra work described. The agreed unit prices are based on an exchange rate of 6.800 RMB/USD. No adjustment in compensation will be made for exchange rates that vary by less than 0.300 RMB/USD, i.e., between 6.500 RMB/USD and 7.100 RMB/USD. Should the exchange rate vary by more than 0.300 RMB/USD, a lump sum adjustment in compensation, increase or decrease, will be made at the end of the completion of the work described in this CCO. The adjustment will be based on the variations between 6.800 RMB/USD and the actual exchange rate paid in excess of 0.300 RMB/USD.

Description	Agreed Monthly Unit Rate in RMB's	Estimated* Monthly Unit Rate in USD	Estimated Man-months	Estimated Total
1. Data Processing & Input by Local Consultants	46,152	$ 6,787	50	$ 339,350
2. Data Processing & Input by Fabricator (ZPMC)	31,198	$ 4,588	76	$ 348,688
3. Data Collection & Green Tagging Inspectors	62,662	$ 9,215	175	$ 1,612,625
4. Contractor Inspectors and Oversight Personnel	NA	$ 16,937	35	$ 592,798
Total Est. Extra Work at Agreed Unit Price (6 Month Period)				**$ 2,893,461**

The Contractor must submit a monthly log of the additional labor force dedicated for the implementation of this contract change order. The log shall include the individual's name, labor description category, and days worked. A representative of the Contractor and a representative of the Department shall sign the monthly log prior to submittal for payment. This extra work at agreed unit price has been estimated for a duration of six (6) months, agreed prices and estimated units will be reevaluated with issuance of supplemental change order at the Contractor or Departments request.

Estimated Extra Work at Agreed Unit Price ..... $ 2,893,461.00

Adjustment of Compensation at Agreed Lump Sum

QUALITY ASSURANCE DATABASE

The Contractor shall provide web based Internet access capable of performing all task specified in this change order for use by the Contractor and Department personnel. The database shall be backed up off-site. The Department shall receive full access and use of the database. The Contractor shall implement the QA database for all information identified in this change order.

SOFTWARE AND HARDWARE

QA database hardware and software, including applicable licenses and annual maintenance renewal fees, shall be provided by the Contractor.

The Contractor shall submit, for approval by the Engineer, all software specifications the Contractor proposes to furnish. All database technical support and repair shall be performed by the Contractor. Software maintenance, including licensing and other fees shall be maintained for the duration of the change order. The Contractor shall instruct and assist the Engineer in the use of the software. Computer software shall remain the property of the Contractor and shall not be disabled until 30 days after the Contractor has received the final estimate, or as authorized by the Engineer.

CONTRACT CHANGE ORDER

Change Requested by: Engineer

CCO: 77 Suppl. No. 0 Contract No. 04 – 0120F4 Road SF-80-13.2/13.9 FED. AID LOC.:

TRAINING

After approval of the database system by the Engineer, the Contractor shall provide an initial 8-hour training session to the Department in the use of the software.

The Contractor shall provide training sessions, at 4 hours per session. The Contractor can expect subsequent training sessions to be distributed throughout the duration of the change order until all 8 sessions have been completed, refer to Database System Cost Break-Down for quantity and units.

Each training session shall accommodate up to 12 Department Employees. Training sessions shall be at a location, date and time acceptable to the Engineer.

The Session Trainer shall be approved by the Engineer.

DATA DELIVERY REQUIREMENTS

All documents generated for the Department shall also be supplied in an Adobe (.pdf) file format that is generated digitally, not scanned.

PAYMENT

The agreed lump sum price paid for the database system shall include full compensation for furnishing all labor, material, tools, equipment, and incidentals, and for doing all the work involved in providing and maintaining the database system.

If the Contractor fails to complete any of the work in providing and maintaining the QA Database required by this section, the Engineer shall make an adjustment in compensation in conformance with the provisions in Section 4-1.03C, "Changes in Character of Work," of the Standard Specifications for the work not performed. Adjustments in compensation for QA Database will not be made for any increased or decreased work ordered by the Engineer in furnishing QA Database.

The agreed lump sum price paid shall include full compensation for furnishing all labor, materials, tools, equipment, and incidentals, and for doing all the work involved.

Agreed Lump sum payment resolves all prior cost related to this change and association with authority to proceed issued by the Department. For this work, the Contractor will be paid the Agreed Lump Sum of $ 1,105,863.00; this sum constitutes full compensation, including markups, for this change.

Adjustment of Compensation at Agreed Lump Sum.....$ 1,105,863.00

Estimated Cost: **Increase** ☒ **Decrease** ☐ **$3,999,324.00**

By reason of this order the time of completion will be adjusted as follows: **0 days**

Submitted by

Signature **Resident Engineer** Darryl Schram for Gary Pursell, Sup.T.E. **Date** 12/4/08

Approval Recommended by

Signature Gary Pursell **Supervising Transportation Engineer** Gary Pursell, Sup.T.E. **Date** 12/4/08

Engineer Approval by

Signature P E Siegenthaler **Principal Transportation Engineer** Peter Siegenthaler, Prin.T.E. **Date** 12/8/08

We the undersigned contractor, have given careful consideration to the change proposed and agree, if this proposal is approved, that we will provide all equipment, furnish the materials, except as otherwise be noted above, and perform all services necessary for the work above specified, and will accept as full payment therefor the prices shown above.

NOTE: If you, the contractor, do not sign acceptance of this order, your attention is directed to the requirements of the specifications as to proceeding with the ordered work and filing a written protest within the time therein specified.

Contractor Acceptance by

Signature Michael D Flowers **(Print name and title)** Michael D Flowers Project Director **Date** 12-5-08

CONTRACT CHANGE ORDER

Change Requested by: Engineer

CCO: 77 Suppl. No. 1 Contract No. 04 – 0120F4 Road SF-80-13.2/13.9 FED. AID LOC.:

To: **AMERICAN BRIDGE/FLUOR ENTERPRISES INC A JOINT VENTURE**

You are directed to make the following changes from the plans and specifications or do the following described work not included in the plans and specifications for this contract. ***NOTE: This change order is not effective until approved by the Engineer.***

Description of work to be done, estimate of quantities and prices to be paid. (Segregate between additional work at contract price, agreed price and force account.) Unless otherwise stated, rates for rental of equipment cover only such time as equipment is actually used and no allowance will be made for idle time. This last percentage shown is the net accumulated increase or decrease from the original quantity in the Engineer's Estimate

This supplemental change order provides additional funds for Quality Assurance (QA) improvements for the Orthotropic Box Girder (OBG), and Tower assemblies. Funds are also provided for electronic version of QA database and other related work.

Extra Work at Unit Price:

Provide additional funds for the continued implementation of the Quality Assurance improvements. The following mutually agreed, all-inclusive monthly unit rates include straight time and overtime and constitute full compensation for the work, including all markups. The all-inclusive mutually agreed monthly unit rate will be paid for all staff that work 50% or more of the calendar days and are dedicated to the extra work described. The agreed unit prices are based on an exchange rate of 6.800 RMB/USD. No adjustment in compensation will be made for exchange rates that vary by less than 0.300 RMB/USD, i.e., between 6.500 RMB/USD and 7.100 RMB/USD. Should the exchange rate vary by more than 0.300 RMB/USD, a lump sum adjustment in compensation, increase or decrease, will be made at the end of the completion of the work described in this CCO. The adjustment will be based on the variations between 6.800 RMB/USD and the actual exchange rate paid in excess of 0.300 RMB/USD.

Description	Agreed Monthly Unit Rate in RMB's	Converted Monthly Unit Rate in USD	Estimated Man-months	Estimated Total
1. Data Processing & Input by Local Consultants	46,152	$6,787	240	$1,628,880
2. Data Processing & Input by Fabricator (ZPMC)	31,198	$4,588	407	$1,867,316
3. Data Collection & Green Tagging Inspectors	62,662	$9,215	338	$3,114,670
4. Contractor Inspectors and Oversight Personnel	NA	$16,937	70	$1,185,590
Total Estimated Cost of Extra Work at Unit Price				**$7,796,456**

The Contractor must submit a monthly log of the additional labor force dedicated for the implementation of this contract change order. The log shall include the individual's name, labor description category, and days worked. A representative of the Contractor and a representative of the Department shall sign the monthly log prior to submittal for payment. This extra work will be reevaluated with issuance of a supplemental change order at the Contractor or Departments request.

Estimated Cost of Extra Work at Unit Price $7,796,456.00

CONTRACT CHANGE ORDER

Change Requested by: Engineer

CCO: 77 Suppl. No. 1 Contract No. 04 – 0120F4 Road SF-80-13.2/13.9 FED. AID LOC.:

Adjustment of Compensation at Lump Sum:

The Contractor shall provide supervision, office space, and supplies required to fully support the extra work being performed at unit price in this change order. This lump sum payment provides full compensation for all support regardless of the ultimate duration of the work, including future supplemental Contract Change Orders, required to complete QA improvements in this change order.

If the Contractor fails to complete any of the work required by this section, the Engineer shall make an adjustment in compensation in conformance with the provisions in Section 4-1.03C, "Changes in Character of Work," of the Standard Specifications for the work not performed. Adjustments in compensation for QA Database will not be made for any increased or decreased work ordered by the Engineer in furnishing support for the QA Database.

The agreed lump sum price paid shall include full compensation for furnishing all labor, materials, tools, equipment, and incidentals, and for doing all the work involved.

For this work, the Contractor will be paid the agreed lump sum of $202,421.00, this sum constitutes full compensation, including markups, for this change.

Cost of Adjustment of Compensation at Lump Sum.....$202,421.00

Extra Work at Force Account:

Provide software and data, used and generated by this change, and additional support as directed by the Engineer. Additional work will include, but will not be limited to the following:

1. All data in a read only format.
2. Database software with full front-end capable of printing data with no restrictions, unlimited time, and a lifetime license.

Labor, equipment and material authorized by the Engineer, as necessary, will be paid in accordance with the provisions of Section 4-1.03D, "Extra Work" of the Standard Specifications and Section 5-1.24, "Force Account Payment" of the Special Provisions.

Estimated Cost of Extra Work at Force Account.....$100,000.00

Estimated Cost: **Increase** ☒ **Decrease** ☐ **$8,098,877.00**

By reason of this order the time of completion will be adjusted as follows: **0 days**

Submitted by

Signature **Resident Engineer** Darryl Schram for Gary Pursell, Sup.T.E. **Date** 2/11/09

Approval Recommended by

Signature Gary Pursell **Supervising Transportation Engineer** Gary Pursell, Sup.T.E. **Date** 3/11/09

Engineer Approval by

Signature P Siegenthaler **Principal Transportation Engineer** Peter Siegenthaler, Prin.T.E. **Date** 3/12/09

We the undersigned contractor, have given careful consideration to the change proposed and agree, if this proposal is approved, that we will provide all equipment, furnish the materials, except as otherwise be noted above, and perform all services necessary for the work above specified, and will accept as full payment therefor the prices shown above.

NOTE: If you, the contractor, do not sign acceptance of this order, your attention is directed to the requirements of the specifications as to proceeding with the ordered work and filing a written protest within the time therein specified.

Contractor Acceptance by

Signature (Print name and title) Michael D. Flowers Project Director **Date** 3-10-09

STATE OF CALIFORNIA - DEPARTMENT OF TRANSPORTATION

CONTRACT CHANGE ORDER MEMORANDUM

TO: Pete Siegenthaler, Prin. TE / Gary Pursell, P.E., Sup T.E.	FILE: E.A. 04 - 0120F4
FROM: Gary Pursell, P.E., Sup.T.E.	CO-RTE-PM SF-80-13.2/13.9
	FED. NO.
CCO#: 77 SUPPLEMENT#: 1 Category Code: CHSA	CONTINGENCY BALANCE (incl. this change) $116,003,393.40
COST: $8,098,877.00 INCREASE ☑ DECREASE ☐	HEADQUARTERS APPROVAL REQUIRED? ☑ YES ☐ NO
SUPPLEMENTAL FUNDS PROVIDED: $0.00	IS THIS REQUEST IN ACCORDANCE WITH ENVIRONMENTAL DOCUMENTS? ☑ YES ☐ NO
CCO DESCRIPTION: Welding Reports and Green Tags	**PROJECT DESCRIPTION:** CONSTRUCT SELF-ANCHORED SUSPENSION BRIDGE

Original Contract Time:	Time Adj. This Change:	Previously Approved CCO Time Adjustments:	Percentage Time Adjusted: (including this change)	Total # of Unreconciled Deferred Time CCO(s): (including this change)
2490 Day(s)	0 Day(s)	30 Day(s)	1 %	4

THIS CHANGE ORDER PROVIDES FOR:

Additional funding for Quality Assurance (QA) improvements for the Orthotropic Box Girder (OBG), and Tower assemblies. Funding is also provided for an electronic version of QA database and other related work as directed by the Engineer.

The original change order work was estimated for six months with the exception being the agreed lump sum items. It was anticipated that this change would be re-evaluated to determine funding needs and/or modifications needed to continue the improved QA process. Using the measured-mile estimating approach it has been estimated that an additional $7,796,456.00 will fund the extra work at agreed unit price portion of this change through fabrication completion. Resources required to perform this work vary, which may require the Department to re-valuate this change before fabrication completion.

An agreed lump sum payment of $202,421.00 is needed to provide supervision, office space, and supplies required to fully support the extra work being performed at unit price in this change order. This support work was not funded in the original change order. The Contractor agrees that this lump sum payment provides full compensation for all support regardless of the ultimate duration of the work, including future supplemental Contract Change Orders, required to complete QA improvements in this change order.

This change also provides provisions for preserving the electronic database data generated by this change. It is anticipated that the Quality Assurance Data being gathered will need to be accessed after fabrication completion. Preserving a fully functional electronic version of the database will enable Department personnel to sort and print all the data elements after fabrication and project completion. This tool will greatly enhance the Departments abilities to create meaningful reports from millions of data elements. Additional required support, to be approved and directed by the Engineer, will also needed to support this change. This extra work at force account is estimated at $100,000.00.

This supplemental change is estimated to total $8,098,877.00, which can be financed from the contingency fund. This will result in a cumulative amount of $12,098,201.00 for this change order. A detailed cost estimate is on file.

The Contractor and the Department mutually agree that this change does not warrant a time adjustment, as it does not affect the controlling operation.

This change order has concurrence from Gary Pursell (Resident Engineer), Rick Morrow (Sup. Structure Rep), Patrick Lowry METS), Ken Terpstra (Project Manager), Pete Siegenthaler (Principal TE), Mike Forner (Principal TE) and Marwan Nader Project Engineer). Design and Maintenance concurrences are not required for this change.

BPOC approved this change order at their February 4, 2009 meeting.

The Resident Engineer received an Issue and Approve (I&A) from Headquarters Division of Construction for this change on /13/2009.

ADA Notice: For individuals with sensory disabilities, this document is available in alternate formats. For information call: (916) 654-6410 or TDD (916) 654-3880 or write Records and Forms Management, 1120 N Street, MS-89, Sacramento, CA 95814.

CONCURRED BY:			
Construction Engineer:	Res. Eng., Gary Pursell, Sup. TE	Date	1/21/09
Bridge Engineer:	Struct Rep, Rick Morrow, Sup TE	Date	1/21/09
Project Engineer:	Design of Record, Marwan Nader,	Date	1/22/09
Project Manager:	Proj Manager, Ken Terpstra	Date	1/22/09
FHWA Rep.:		Date	
Environmental:		Date	
Other (specify):	HQ, Rich Foley	Date	1/22/09
Other (specify):	TBPOC	Date	2/4/09
District Prior Approval By:		Date	
HQ (Issue Approve) By:	HQ, Larry Salhaney	Date	2/13/09
Resident Engineer's Signature:		Date	

Gary Pursell 3/12/09

ESTIMATE OF COST

	THIS REQUEST	TOTAL TO DATE
ITEMS	$0.00	$0.00
FORCE ACCOUNT	$100,000.00	$100,000.00
AGREED PRICE	$7,796,456.00	$10,689,917.00
ADJUSTMENT	$202,421.00	$1,308,284.00
TOTAL	$8,098,877.00	$12,098,201.00

FEDERAL PARTICIPATION

☐ PARTICIPATING ☐ PARTICIPATING IN PART ☑ NONE
☐ NON-PARTICIPATING (MAINTENANCE) ☐ NON-PARTICIPATING

FEDERAL SEGREGATION (if more than one Funding Source or P.I.P. type)
☐ CCO FUNDED PER CONTRACT ☐ CCO FUNDED AS FOLLOWS

FEDERAL FUNDING SOURCE	PERCENT

ADA Notice: For individuals with sensory disabilities, this document is available in alternate formats. For information call: (916) 654-6410 or TDD (916) 654-3880 or write Records and Forms Management, 1120 N Street, MS-89, Sacramento, CA 95814.

CONTRACT CHANGE ORDER

Change Requested by: Engineer

CCO: 77 Suppl. No. 2 Contract No. 04 – 0120F4 Road SF-80-13.2/13.9 FED. AID LOC.:

To: **AMERICAN BRIDGE/FLUOR ENTERPRISES INC A JOINT VENTURE**

You are directed to make the following changes from the plans and specifications or do the following described work not included in the plans and specifications for this contract. ***NOTE: This change order is not effective until approved by the Engineer.***

Description of work to be done, estimate of quantities and prices to be paid. (Segregate between additional work at contract price, agreed price and force account.) Unless otherwise stated, rates for rental of equipment cover only such time as equipment is actually used and no allowance will be made for idle time. This last percentage shown is the net accumulated increase or decrease from the original quantity in the Engineer's Estimate

This supplemental change order:

- Revises, in Item 1 below, the method of payment from Extra Work at Unit Price to Extra Work at Agreed Lump Sum for implementing the Quality Assurance (QA) improvements/database specified in Contract Change Order 77, Supplements 0 and 1.
- Provides, in Item 1 below, an agreed lump sum payment of $1,410,690.00, in addition to estimated amounts previously provided in CCO 77 Supplements 0 and 1, for a total agreed lump sum payment of $12,100,607.00 for all QA improvements specified in this change order and CCO 77 Supplements 0 and 1. The total agreed lump sum payment includes all work completed to date and all future QA improvement work performed through the completion of fabrication at ZPMC's facilities in China.
- Modifies, in Item 2 below, the QA database software as needed to incorporate additional QA information, PAUT results, which was not included in CCO 77, Supplements 1 and 2, and provides for inputting PAUT test results for the Orthotropic Box Girder (OBG) deck panels into the QA database, including PAUT completed to-date and through completion of fabrication at ZPMC's facilities. Incorporating this additional QA information will be compensated for at an agreed lump sum amount of $35,000.00.
- Finalizes all cost and additional work for implementing and completing the QA database through fabrication completion at ZPMC's facilities in China regardless of the actual fabrication completion date, currently anticipated to be the summer of 2011, except as specified in this change order.

Extra Work at Agreed Lump Sum Price:

ITEM 1 – Complete all QA Improvements.

Revise method of payment from "Extra Work at Unit Price" to "Extra Work at Agreed Lump Sum" in Contract Change Order 77 Supplements 0 and 1 (CCO 77S0 and CCO 77S1), for implementing the Quality Assurance (QA) improvements. Payments made under the previous payment method, Extra Work at Unit Price, will be carried over and paid under the new payment method, Extra Work at Agreed Lump Sum.

Provide an additional agreed lump sum payment amount of $1,410,690.00 for completing all QA improvements, specified in this change order and CCO 77 Supplements 0 and 1, through fabrication completion at ZPMC's facilities in China.

This agreement is based on the scope of the existing Quality Assurance (QA) improvements as established in CCO 77S0 and CCO 77S1, which implements a database along with a process that tracks, verifies, and documents incremental progress for fabricated sub-assemblies and assembly stages.

The following table summarizes the payment revisions and additional payment provided in Item 1 of this change order:

Description	Total CCO Cost (Informational)	FROM: Extra Work at Unit Price	TO: Extra Work at Agreed Lump Sum
Revise Payment Method in CCO 77S0	$3,999,324.00	$2,893,461.00	$2,893,461.00
Revise Payment Method in CCO 77S1	$8,098,877.00	$7,796,456.00	$7,796,456.00
Add. (Item 1) Payment in this CCO 77S2	$1,445,690.00	$0.00	$1,410,690.00
Totals	$13,543,891.00	$10,689,917.00	**$12,100,607.00**

For this work, the Contractor will be paid the total agreed lump sum of $12,100,607.00, with partial payments made according to a schedule of values approved by the Engineer. This newly agreed lump sum payment amount of $12,100,607.00 is comprised of $10,689,917.00, previously provided in CCO 77 Supplements 0 and 1, and an additional agreed lump sum payment of $1,410,690.00 for completing all QA improvements through fabrication completion.

Total Cost of Extra Work at Lump Sum Price.....	$12,100,607.00
Less previously provided in CCO 77S0 and CCO 77S1	<$10,689,917.00>
(ITEM 1) Extra Work at Lump Sum (Complete all QA improvements)	$1,410,690.00

ITEM 2 – Phased Array Ultrasonic Testing (PAUT)

Modify QA database software and input all PAUT information for the Orthotropic Box Girder (OBG) deck panels. For this work, the Contractor will be paid the agreed lump sum of $35,000.00. This lump sum payment provides full compensation for furnishing all labor, materials, tools, equipment, and incidentals for doing all work required to complete work identified above.

Cost of Extra Work at Lump Sum Price..... $35,000.00

COST SUMMARY

ITEM 1 - Previously provided in CCO 77S0 and CCO 77S1	<$10,689,917.00>
ITEM 1 - Extra Work at Lump Sum (Complete all QA improvements)	$12,100,607.00
ITEM 1 Sub-Total - Extra Work at Lump Sum (Complete all QA improvements)	$1,410,690.00
ITEM 2 - Extra Work at Lump Sum (PAUT)	$35,000.00
Total net cost of this change order.....	$1,445,690.00

It is agreed there will be no further adjustment of compensation for the work specified herein and CCO 77 Supplements 0 and 1, whether fabrication is completed earlier or later than currently anticipated, and regardless of responsibility for delays to fabrication. However, additional adjustment of compensation will be considered if fabrication at ZPMC's facilities is delayed beyond January 1, 2012. This lump sum payment provides full compensation for furnishing all labor, materials, tools, equipment, and incidentals for doing all work required to complete QA improvements as specified in this change order.

Estimated Cost: **Increase** ☒ **Decrease** ☐ **$1,445,690.00**

By reason of this order the time of completion will be adjusted as follows: **0 days**

Submitted by
Signature **Resident Engineer** Darryl Schram for Gary Pursell, Sup.T.E. **Date** 4/28/10

Approval Recommended by
Signature **Supervising Transportation Engineer** Gary Pursell, Sup.T.E. **Date** 4/8/10

Engineer Approval by
Signature **Principal Transportation Engineer** Peter Siegenthaler, Prin.T.E. **Date** 4/27/10

We the undersigned contractor, have given careful consideration to the change proposed and agree, if this proposal is approved, that we will provide all equipment, furnish the materials, except as otherwise be noted above, and perform all services necessary for the work above specified, and will accept as full payment therefor the prices shown above.

NOTE: If you, the contractor, do not sign acceptance of this order, your attention is directed to the requirements of the specifications as to proceeding with the ordered work and filing a written protest within the time therein specified.

Contractor Acceptance by
Signature (Print name and title) Michael D. Flowers Project Director **Date** 4-26-10

STATE OF CALIFORNIA - DEPARTMENT OF TRANSPORTATION

CONTRACT CHANGE ORDER MEMORANDUM

DATE: 4/13/2010

DC-CEM-4903 (OLD HC-39 REV. 6/93) CT# 7541-3544-0

TO: Pete Siegenthaler, Principal TE	FILE 04-0120F4 04-SF-80-13.2/13.9
FROM: Gary Pursell, STE / Richard Morrow, SBE	
CCO #: 77 / SUPPLEMENT NO.: 2 / CATEGORY CODE: CHSA	CONTINGENCY BALANCE (including this change): $1,218,600.40
COST: $1,445,690.00 INCREASE ☒ DECREASE ☐	HEADQUARTERS APPROVAL REQUIRED? YES ☒ NO ☐
SUPPLEMENTAL FUNDS PROVIDED $0.00	IS THIS REQUEST IN ACCORDANCE WITH ENVIRONMENTAL DOCUMENTS? YES ☒ NO ☐
CCO DESCRIPTION: Modify Payment Clause	PROJECT DESCRIPTION CONSTRUCT SELF-ANCHORED SUSPENSION BRIDGE

Original Contract Time	Time Adj.: This Change	Previously Approved CCO Time Adjustments	Percentage Time Adjusted: (including this change)	Total # of Unreconciled Deferred Time CCO(s): (including this change)
2490 Day(s)	0 Day(s)	227 Day(s)	9 %	6

THIS CHANGE ORDER PROVIDES FOR:

- Revising the method of payment from Extra Work at Unit Price to Extra Work at Agreed Lump Sum for implementing the Quality Assurance (QA) improvements/database specified in Contract Change Order 77, Supplements 0 and 1.
- Providing an agreed lump sum payment of $1,410,690.00, in addition to estimated amounts previously provided in CCO 77 Supplements 0 and 1, for a total agreed lump sum payment of $12,100,607.00 for all QA improvements specified in the change order and CCO 77 Supplements 0 and 1. The total agreed lump sum payment includes all work completed to date and all future QA improvement work performed through the completion of fabrication at ZPMC's facilities in China.
- Modifying the QA database software as needed to incorporate additional QA information, PAUT results, which was not included in CCO 77, Supplements 1 and 2, and provides for inputting PAUT test results for the Orthotropic Box Girder (OBG) deck panels into the QA database, including PAUT completed to-date and through completion of fabrication at ZPMC's facilities. Incorporating this additional QA information will be compensated for at an agreed lump sum amount of $35,000.00.
- Finalizing all cost and additional work for implementing and completing the QA database through fabrication completion at ZPMC's facilities in China regardless of the actual fabrication completion date, currently anticipated to be the summer of 2011, except as specified in the change order.

The original QA improvements funded in CCO 77S0 were estimated for a six months period, with the knowledge that this change order would be re-evaluated to determine funding needs and/or modifications needed to continue the improved QA process. Using the measured-mile estimating approach it was estimated that an additional $7,796,456.00, provided in CCO 77S1 unit price section, would fund the QA process for another one to two years and possibly through fabrication completion. Although it was also anticipated, due to varying completion dates and resources required to perform this work, that the Department would need to again re-valuate this change before fabrication completion. Now that fabrication is well underway and the work required to complete and fully fund the QA process is understood the Department has determined that this supplemental change order, for an additional $1,445,690.00, will fully fund this work to completion.

In order to bring complete scope and funding closure to this change order it has been determined that the QA database include PAUT information and the payment terms be revised from Extra Work at Unit Price to Extra Work at Agreed Lump Sum. The Department directed the Contractor to perform additional PAUT testing of the OBG deck panels, which is not covered under any contract item or specification requirement. Incorporating the additional PAUT testing was not contemplated prior to issuing the original change order, therefore it was not included in the scope. Revising the method of payment to a lump sum will cap the cost to perform this work and significantly reduce the Departments risk too possible future cost escalation up to January 1, 2012. OBG and Tower assemblies' fabrication is currently scheduled to be complete by mid July 2011.

This supplemental change is estimated to total $1,445,690.00, which can be financed from the contingency fund. This will result in a cumulative amount of $13,543,891.00 for this change order. A detailed cost estimate is on file. The original Contractors estimate to perform this work was approximately $22 million.

The Contractor and the Department mutually agree that this change does not warrant a time adjustment, as it does not affect the controlling operation.

This change order has concurrence from Gary Pursell (Resident Engineer), Rick Morrow (Sup. Structure Rep), Patrick Lowry (METS), Ken Terpstra (Project Manager), Pete Siegenthaler (Principal TE), and Marwan Nader (Project Engineer). Maintenance concurrence is not required for this change.

TBPOC approved this change order on April 1, 2010.

The Resident Engineer requests an Issue and Approve (I&A) from Headquarters Division of Construction for this change.

CONCURRED BY:	
CONSTRUCTION ENGINEER Res. Eng. Gary Pursell, Sup. TE	DATE 3/29/10
SR. BRIDGE ENGINEER Struct. Rep. Rick Morrow, Sup. TE	DATE 3/29/10
FHWA REPRESENTATIVE	DATE
PROJECT MANAGER Proj. Manager, Ken Terpstra	DATE
OTHER (SPECIFIY) TBPOC	DATE 4/1/10
Design of Record, Marwan Nader	DATE 3/29/10
DISTRICT PRIOR APPROVAL BY	DATE
HQ (ISSUE & APPROVE) (TO PROCEED) BY	DATE
RESIDENT ENGINEER SIGNATURE Gary Pursell	DATE 4/13/10

ESTIMATE OF COST		
	THIS REQUEST	TOTAL TO DATE
ITEMS	$0.00	$0.00
FORCE ACCOUNT	$0.00	$100,000.00
AGREED PRICE	($10,689,917.00)	$0.00
ADJUSTMENT	$12,135,607.00	$13,443,891.00
TOTAL	$1,445,690.00	$13,443,891.00

FEDERAL PARTICIPATION

☐ PARTICIPATING ☐ PARTICIPATING IN PART ☒ NONE
☐ NON-PARTICIPATING (MAINTENANCE) ☐ NON-PARTICIPATING

FEDERAL SEGREGATION (IF MORE THAN ONE FUNDING SOURCE OR P.I.P. TYPE)
☐ CCO FUNDED PER CONTRACT ☐ CCO FUNDED AS FOLLOWS

FEDERAL FUNDING SOURCE	PERCENT

STATE OF CALIFORNIA - DEPARTMENT OF TRANSPORTATION

CONTRACT CHANGE ORDER

Change Requested by: Engineer

CCO: 78 Suppl. No. 0 Contract No. 04 – 0120F4 Road SF-80-13.2/13.9 **FED. AID LOC.:**

To: **AMERICAN BRIDGE/FLUOR ENTERPRISES INC A JOINT VENTURE**

You are directed to make the following changes from the plans and specifications or do the following described work not included in the plans and specifications for this contract. ***NOTE: This change order is not effective until approved by the Engineer.***

Description of work to be done, estimate of quantities and prices to be paid. (Segregate between additional work at contract price, agreed price and force account.) Unless otherwise stated, rates for rental of equipment cover only such time as equipment is actually used and no allowance will be made for idle time. This last percentage shown is the net accumulated increase or decrease from the original quantity in the Engineer's Estimate.

Adjustment of Compensation at Lump Sum Price:

ITEM 1.

Modify the dimensions of the bearing block base and change the material from ASTM A572M Grade 345 to ASTM A 148 Grade 550-345 in conformance with Section 10-1.59, "STEEL STRUCTURES," subsection, "CASTING," of the Special Provisions and as shown on sheets 2 through 4 of this change order. The following revised contract plan sheets detail all changes: 733R1, 736R1 and 737R1 (of 1204).

This change order resolves the costs associated with Contractor Request For Information (RFI) 1183 and 1293 with respect to changes listed above.

For this work, the Contractor will be paid the sum of $415,271.00. This sum constitutes full compensation, including all mark ups, for this work.

Adjustment of Compensation at Lump Sum Price..... $415,271.00

ITEM 2.

The items identified above in this change order have been paid as part of CCO 108 resolution. Therefore, the amount due under this change order will be adjusted by the amount paid under CCO 108 to prevent a double payment. Total amount paid under CCO 108, and to be credited to this change, is $415,271.00.

Adjustment of Compensation at Lump Sum Price..... <$415,271.00>

CHANGE ORDER COST AND TIME SUMMARY

(ITEM 1) Adjustment of Compensation for work pursuant to this change order	$415,271.00
(ITEM 2) Amount paid under CCO 108 for this change order	<$415,271.00>
Total net pay for this change order	$0.00

Contract time is addressed in CCO 108 for all work identified in this change order. Therefore, contract time will not be adjusted in this change order.

Estimated Cost: Increase ☐ Decrease ☐ $0.00

By reason of this order the time of completion will be adjusted as follows: 0 days

Submitted by

Signature **Resident Engineer** Brian Boal for Gary Pursell, Sup.T.E. **Date** 1 MARCH 2010

Approval Recommended by

Signature **Supervising Transportation Engineer** for Gary Pursell, Sup.T.E. **Date** 3/1/2010

Engineer Approval by

Signature **Supervising Transportation Engineer** Gary Pursell, Sup.T.E. **Date** 4/21/10

We the undersigned contractor, have given careful consideration to the change proposed and agree, if this proposal is approved, that we will provide all equipment, furnish the materials, except as otherwise be noted above, and perform all services necessary for the work above specified, and will accept as full payment therefor the prices shown above.

NOTE: If you, the contractor, do not sign acceptance of this order, your attention is directed to the requirements of the specifications as to proceeding with the ordered work and filing a written protest within the time therein specified.

Contractor Acceptance by

Signature (Print name and title) Michael D. Flowers Project Director **Date** 4-1-10

STATE OF CALIFORNIA - DEPARTMENT OF TRANSPORTATION

CONTRACT CHANGE ORDER MEMORANDUM

DATE: 4/15/2010 Page 1 of 1

DC-CEM-4903 (OLD HC-39 REV. 6/93) CT# 7541-3544-0

TO Pete Siegenthaler, Principal TE	FILE 04-0120F4 04-SF-80-13.2/13.9
FROM Pursell, STE / Richard Morrow, SBE	
CCO NO. 78 / SUPPLEMENT NO. 0 / CATEGORY CODE CHPT	CONTINGENCY BALANCE (including this change) $8,014,909.40
$0.00 INCREASE ☐ DECREASE ☐	HEADQUARTERS APPROVAL REQUIRED? YES ☐ NO ☒
SUPPLEMENTAL FUNDS PROVIDED $0.00	IS THIS REQUEST IN ACCORDANCE WITH ENVIRONMENTAL DOCUMENTS? YES ☒ NO ☐
CCO DESCRIPTION: Cast Bearing Blocks at E2	PROJECT DESCRIPTION CONSTRUCT SELF-ANCHORED SUSPENSION BRIDGE

Original Contract Time	Time Adj.: This Change	Previously Approved CCO Time Adjustments	Percentage Time Adjusted: (including this change)	Total # of Unreconciled Deferred Time CCO(s): (including this change)
2490 Day(s)	0 Day(s)	227 Day(s)	9 %	6

THIS CHANGE ORDER PROVIDES FOR:

Modifying the dimensions of the bearing block base and changing the material from ASTM A572M Grade 345 to ASTM A 148 Grade 550-345 in conformance with Section 10-1.59, "STEEL STRUCTURES," subsection, "CASTING," of the Special Provisions.

Plan specified bearing block material is not commercially available, therefore material will be changed. Changing the material also necessitates enlarging the bearing blocks in order to maintain strength requirements. This change order resolves Contractor Request For Information (RFI) Nos. 1183R0 and 1293R0 with respect to the changes listed above.

This work is not covered by any contract items. Therefore, payment for this work will be at Adjustment of Compensation at Lump Sum for the amount of $415,271.00. Since the cost, of $415,271.00 in this change, is included in Contract Change Order 108 Supplement 1 (CCO 108S1) Claim Settlement Report No. 1 resolution costs the net payment in this change order is zero.

A determination of the delay in completion of the contract due to work specified by this change order, has been made in CCO 108S1 and is part of the Claims Settlement Report (CSR) No. 1 for this project. Therefore, no adjustment of time is warranted by reason of this change order.

This change order received concurrence from Gary Pursell (Resident Engineer), Rick Morrow (Sup. Structure Rep), Peter Siegenthaler (Principal TE), Rich Foley (HQ Oversight), Ken Terpstra (Project Manager), Richard Land (Chief Engineer), Jon Tapping (HQ Coordinator), Tony Anziano (Toll Bridge Program Manager), Brian Maroney (Project Engineer), Wenyi Long (Design Oversight), and Lina Ellis (Structure Maintenance).

Claims Settlement Report (CSR) No. 1, for this project, revises the authority to "Issue and Approve" the changes listed in CCO 108S1 Appendices A & B. The authority to "Issue and Approve" the changes listed in Appendices A & B for the values of time and money contemplated therein has been delegated to the District for approval and approval of each of these change orders by the Headquarters CCO Desk will not be required. Since this change order is included in CCO 108S1 no Headquarters CCO Desk "Issue and Approve" is required, a copy of CCO 108S1 is attached for reference.

CONCURRED BY:	
CONSTRUCTION ENGINEER Res. Eng. Gary Pursell	DATE 12/21/09
SR. BRIDGE ENGINEER Rick Morrow	DATE 12/21/09
FHWA REPRESENTATIVE	DATE
PROJECT MANAGER Proj. Manager, Ken Terpstra	DATE 12/21/09
OTHER (SPECIFY) Chief Engineer, Richard Land	DATE 12/21/09
PCE, Peter Siegenthaler, Prin TE	DATE 12/21/09
DISTRICT PRIOR APPROVAL BY	DATE
ISSUE & APPROVE) (TO PROCEED) BY Malera (ISSUE & APPROVE)	DATE 12/31/09
RESIDENT ENGINEER SIGNATURE Gary Pursell	DATE 4/20/10

ESTIMATE OF COST	THIS REQUEST	TOTAL TO DATE
ITEMS	$0.00	$0.00
FORCE ACCOUNT	$0.00	$0.00
AGREED PRICE	$0.00	$0.00
ADJUSTMENT	$0.00	$0.00
TOTAL	$0.00	$0.00

FEDERAL PARTICIPATION

☐ PARTICIPATING ☐ PARTICIPATING IN PART ☒ NONE

☐ NON-PARTICIPATING (MAINTENANCE) ☐ NON-PARTICIPATING

FEDERAL SEGREGATION (IF MORE THAN ONE FUNDING SOURCE OR P.I.P. TYPE)

☐ CCO FUNDED PER CONTRACT ☐ CCO FUNDED AS FOLLOWS

FEDERAL FUNDING SOURCE	PERCENT

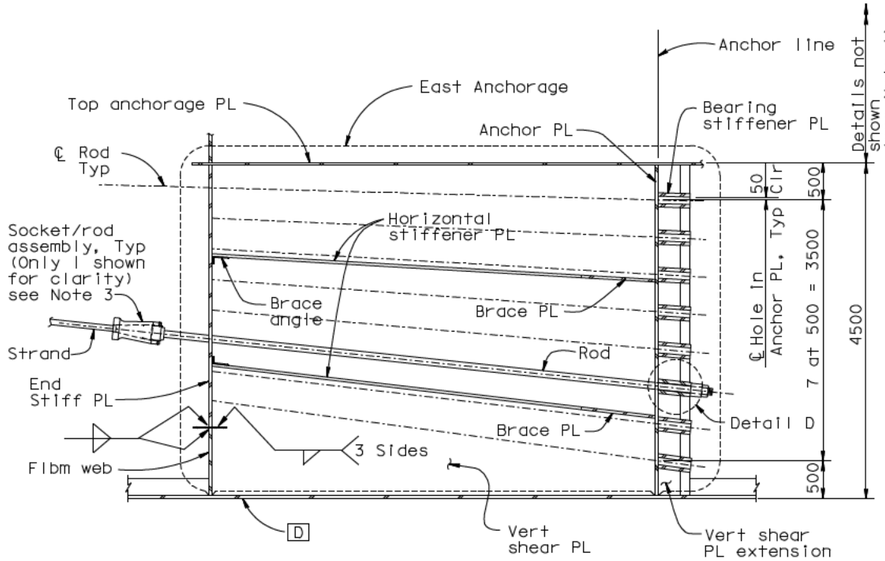

SECTION D-D
1:40

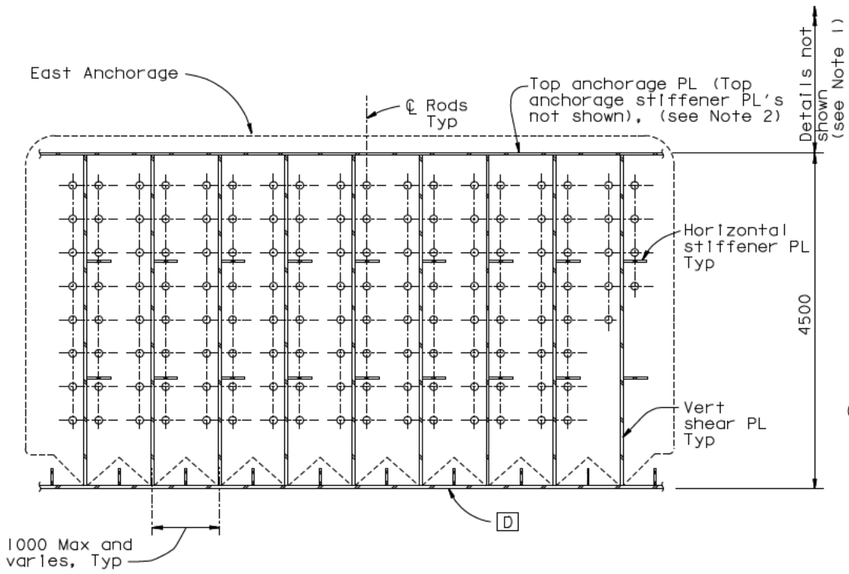

SECTION E-E
1:40

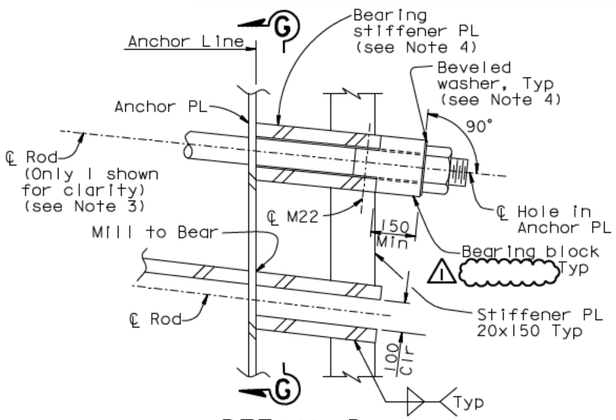

DETAIL D
1:10

DETAIL C
1:20

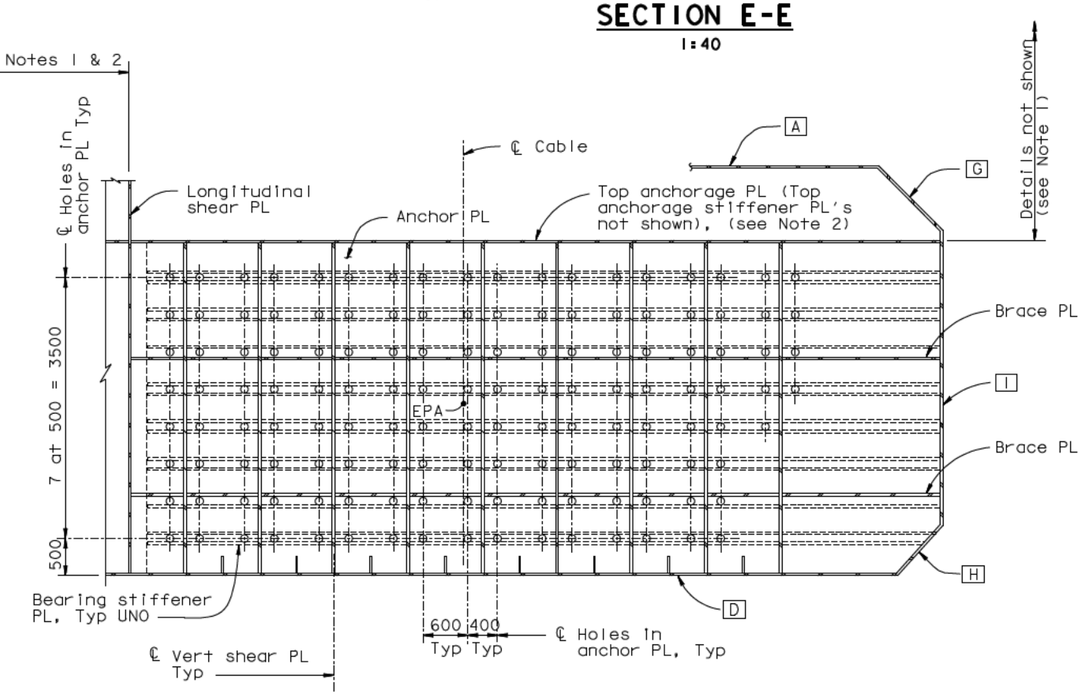

SECTION F-F
1:40

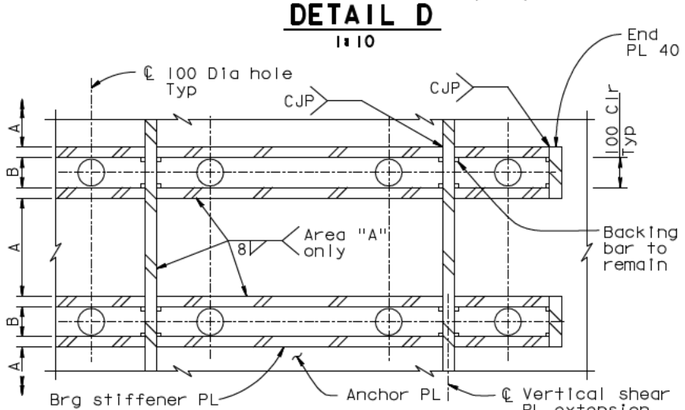

SECTION G-G
1:10

NOTES:

1. For girder details not shown, see "Girder At East Transition" sheets.
2. For top anchorage plate details not shown, see "Crossbeam at East Anchorage" and "Girder At East Transition" sheets.
3. For strand socket, transition anchor rod and bearing block details, see "East Cable Anchorage Details" sheet.
4. Bearing stiffener plates shall be machined to level the bearing block under the nut. Washers may be beveled to 1°.

Caltrans Metric

DIST.	COUNTY	ROUTE	KILOMETER POST TOTAL PROJECT	SHEET NO.	TOTAL SHEETS
04	SF	80	13.2/13.9	733R1	1204

George Baker
REGISTERED ENGINEER - CIVIL
12-6-04
PLANS APPROVAL DATE
REGISTERED PROFESSIONAL ENGINEER — George S. Baker — No. C57112 — Exp. 12/31/05 — CIVIL — STATE OF CALIFORNIA
The State of California or its officers or agents shall not be responsible for the accuracy or completeness of electronic copies of this plan sheet.

T.Y. LIN / MOFFATT & NICHOL
825 BATTERY STREET
SAN FRANCISCO, CA 94111

Caltrans now has a web site! To get to the web site, go to: http://www.dot.ca.gov

Daniel J. Turner
REGISTERED PROFESSIONAL ENGINEER — Daniel J. Turner — No. C 65033 — Exp. 06/30/11 — CIVIL — STATE OF CALIFORNIA
FOR REVISIONS ONLY

CONTRACT CHANGE ORDER NO. ____
SHEET ___ OF ___
REQUESTS FOR INFORMATION NOT ADDRESSED IN THIS CCO REMAIN IN FORCE

ALL DIMENSIONS ARE IN MILLIMETERS UNLESS OTHERWISE SHOWN

R. Vallzadeh/V. Toan/Y. ../W.L./F.C.
DESIGN OVERSIGHT
Ryan Vallzadeh / Vong Toan / Y. Liu
SIGN OFF DATE 08/28/09

MARK	DATE	DESCRIPTIONS	BY	CH'D	CCO#
		REVISIONS			
1	08/28/09	BEARING BLOCKS	DT	GB	78

	BY	CHECKED
DESIGN	G. Baker	J. Kulike
DETAILS	M. Guylas	T. McMeans
QUANTITIES	M. Guylas	M. Roberts

PREPARED FOR THE STATE OF CALIFORNIA
DEPARTMENT OF TRANSPORTATION

R. Manzanarez
PROJECT ENGINEER

BRIDGE NO. 34-0006L/R
KILOMETER POST 13.2/13.9

SAN FRANCISCO OAKLAND BAY BRIDGE
EAST SPAN SEISMIC SAFETY PROJECT
SELF-ANCHORED SUSPENSION BRIDGE
(SUPERSTRUCTURE & TOWER)

EAST CABLE ANCHORAGE "E" LINE LAYOUT NO. 3

Rev. Date: 5-18-98

ORIGINAL SCALE IN MILLIMETERS FOR REDUCED PLANS 0 10 20 30 40 50 60 70 80 90 100

CU 04
EA 0120F1

DISREGARD PRINTS BEARING EARLIER REVISION DATES

REVISION DATES (PRELIMINARY STAGE ONLY): 01/15/99 05/15/99 08/02/99 05/31/01 04/08/02 07/01/02 12/19/02 11/13/05

SHEET 316R1 OF

FILE -> I:\bb\04-012001\sas\contract plans and cco\cco\cco#78\1-original 08-28-09\dgn\again06.dgn

100 % PS&E
DATE PLOTTED => 27 AUG 2009
TIME PLOTTED => 15:38:43
USERNAME => GWinrow

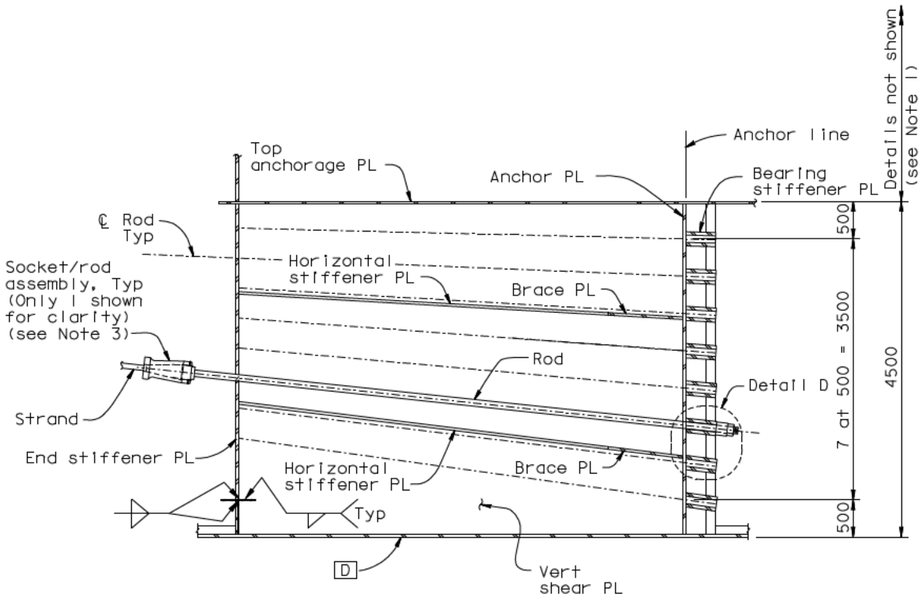

SECTION D-D
1:40

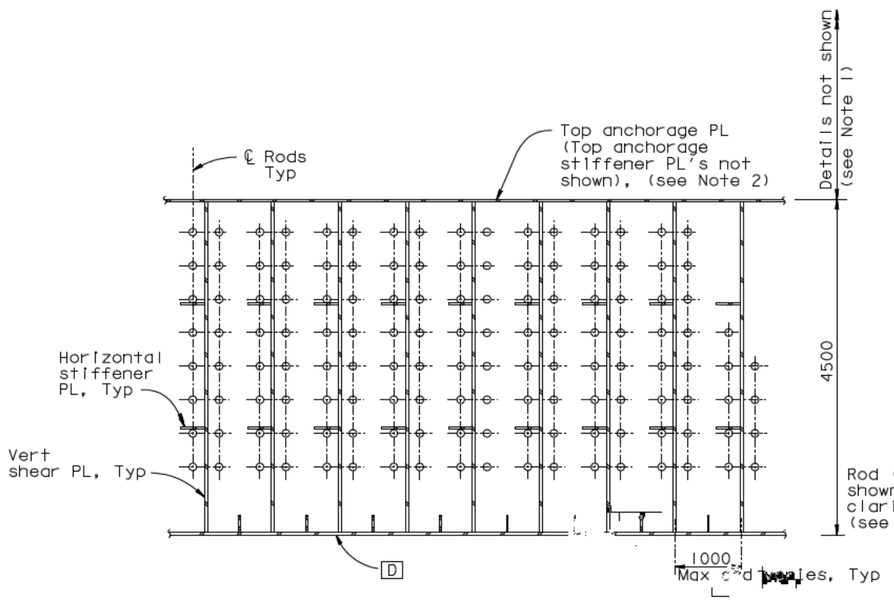

SECTION E-E
1:40

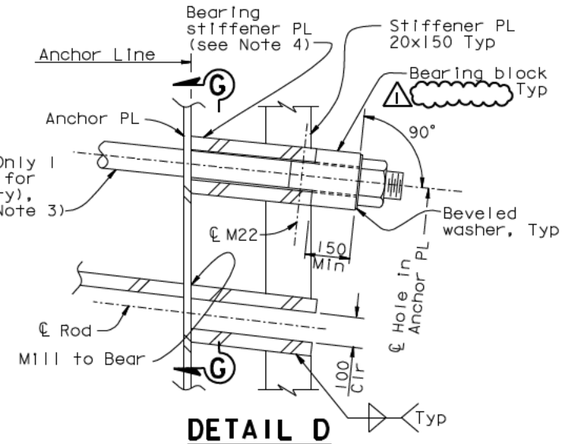

DETAIL D
1:10

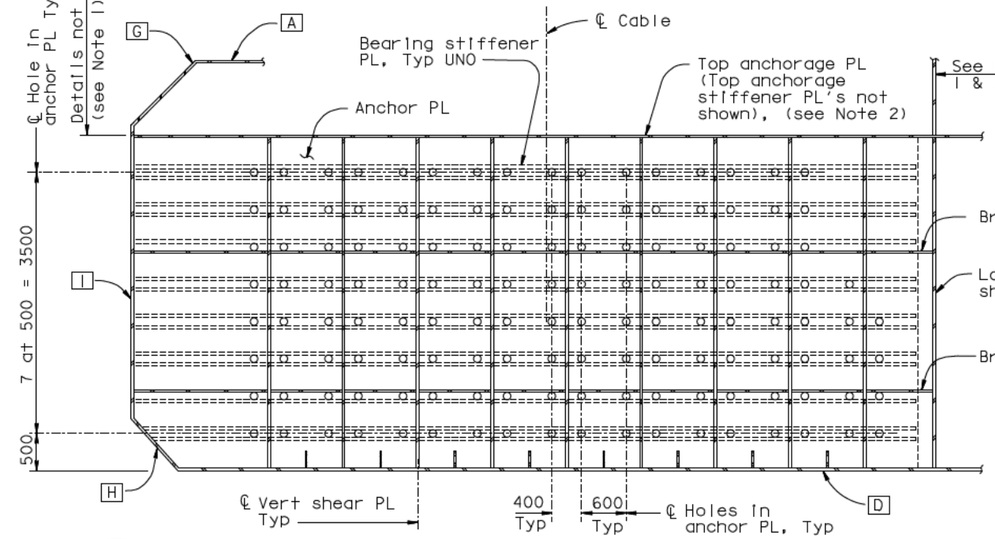

SECTION F-F
1:40

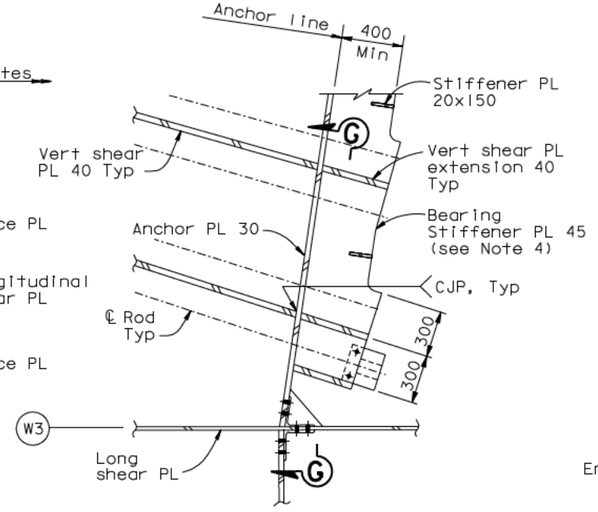

DETAIL C
1:20

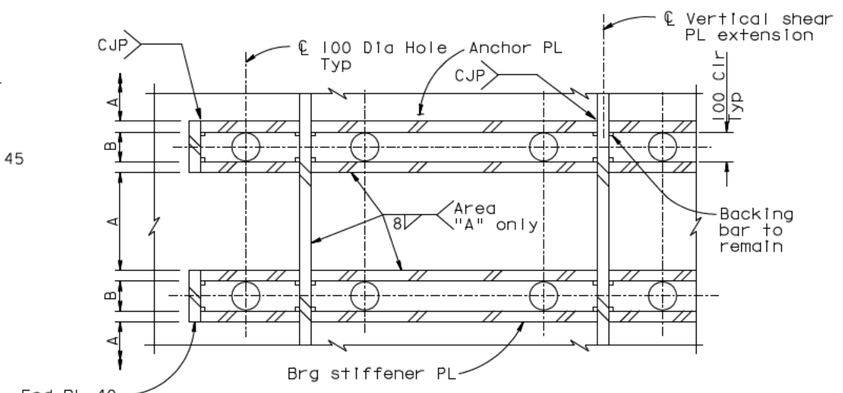

SECTION G-G
1:10

NOTES:

1. For girder details not shown, see "Girder At East Transition" sheets.
2. For top anchorage plate details not shown, see "Crossbeam At East Anchorage" and "Girder At East Transition" sheets.
3. For strand socket, transition anchor rod and bearing block details, see "East Cable Anchorage Details" sheet.
4. Bearing stiffeners plates shall be machined to level the bearing block under the nut. Washers may be beveled to 1°.

Daniel J. Turner
REGISTERED PROFESSIONAL ENGINEER
Daniel J. Turner
No. C 65033
Exp. 06/30/11
CIVIL
STATE OF CALIFORNIA

FOR REVISIONS ONLY

CONTRACT CHANGE ORDER NO. ____
SHEET ___ OF ___

REQUESTS FOR INFORMATION NOT ADDRESSED IN THIS CCO REMAIN IN FORCE

ALL DIMENSIONS ARE IN MILLIMETERS UNLESS OTHERWISE SHOWN

DIST.	COUNTY	ROUTE	KILOMETER POST TOTAL PROJECT	SHEET NO.	TOTAL SHEETS
04	SF	80	13.2/13.9	736R1	1204

Caltrans Metric

George Baker
REGISTERED ENGINEER - CIVIL
12-6-04
PLANS APPROVAL DATE

REGISTERED PROFESSIONAL ENGINEER — George S. Baker — No. C57112 — Exp. 12/31/05 — CIVIL — STATE OF CALIFORNIA

The State of California or its officers or agents shall not be responsible for the accuracy or completeness of electronic copies of this plan sheet.

T.Y. LIN / MOFFATT & NICHOL
825 BATTERY STREET
SAN FRANCISCO, CA 94111

Caltrans now has a web site! To get to the web site, go to: http://www.dot.ca.gov

MARK	DATE	DESCRIPTIONS	BY	CH'D	CCO#
1	08/28/09	BEARING BLOCKS	DT	GB	78

REVISIONS

	BY	CHECKED
DESIGN	G. Baker	J. Kulikl
DETAILS	M. Gulyas	T. McMeans
QUANTITIES	M. Gulyas	M. Roberts

PREPARED FOR THE STATE OF CALIFORNIA
DEPARTMENT OF TRANSPORTATION

R. Manzanarez
PROJECT ENGINEER

BRIDGE NO. 34-0006L/R
KILOMETER POST 13.2/13.9

R. Vallzadeh/V. Toan/Y.L./W.L./F.C.
DESIGN OVERSIGHT
SIGN OFF DATE 08/28/09

Rev. Date: 5-18-98

ORIGINAL SCALE IN MILLIMETERS FOR REDUCED PLANS 0 10 20 30 40 50 60 70 80 90 100

CU 04
EA 0120F1

SAN FRANCISCO OAKLAND BAY BRIDGE
EAST SPAN SEISMIC SAFETY PROJECT
SELF-ANCHORED SUSPENSION BRIDGE
(SUPERSTRUCTURE & TOWER)

EAST CABLE ANCHORAGE "W" LINE LAYOUT NO. 3

DISREGARD PRINTS BEARING EARLIER REVISION DATES

REVISION DATES (PRELIMINARY STAGE ONLY): 01/15/99 05/15/99 08/02/99 05/31/01 04/08/02 07/01/02 12/19/02 11/13/05

SHEET 319R1 OF

FILE -> I:\bb\04-012001\sas\contract plans and cco\cco\cco*78\1-original 08-28-09\dgn\again09.dgn

USERNAME => dwinrow DATE PLOTTED => 27 AUG 2009 TIME PLOTTED => 15:38:04

100 % PS&E

DIST.	COUNTY	ROUTE	KILOMETER POST TOTAL PROJECT	SHEET NO.	TOTAL SHEETS
04	SF	80	13.2/13.9	737R1	1204

George Baker
REGISTERED ENGINEER - CIVIL

12-6-04
PLANS APPROVAL DATE

REGISTERED PROFESSIONAL ENGINEER — George S. Baker — No. C57112 — Exp. 12/31/05 — CIVIL — STATE OF CALIFORNIA

The State of California or its officers or agents shall not be responsible for the accuracy or completeness of electronic copies of this plan sheet.

T.Y. LIN / MOFFATT & NICHOL
825 BATTERY STREET
SAN FRANCISCO, CA 94111

Caltrans now has a web site! To get to the web site, go to: http://www.dot.ca.gov

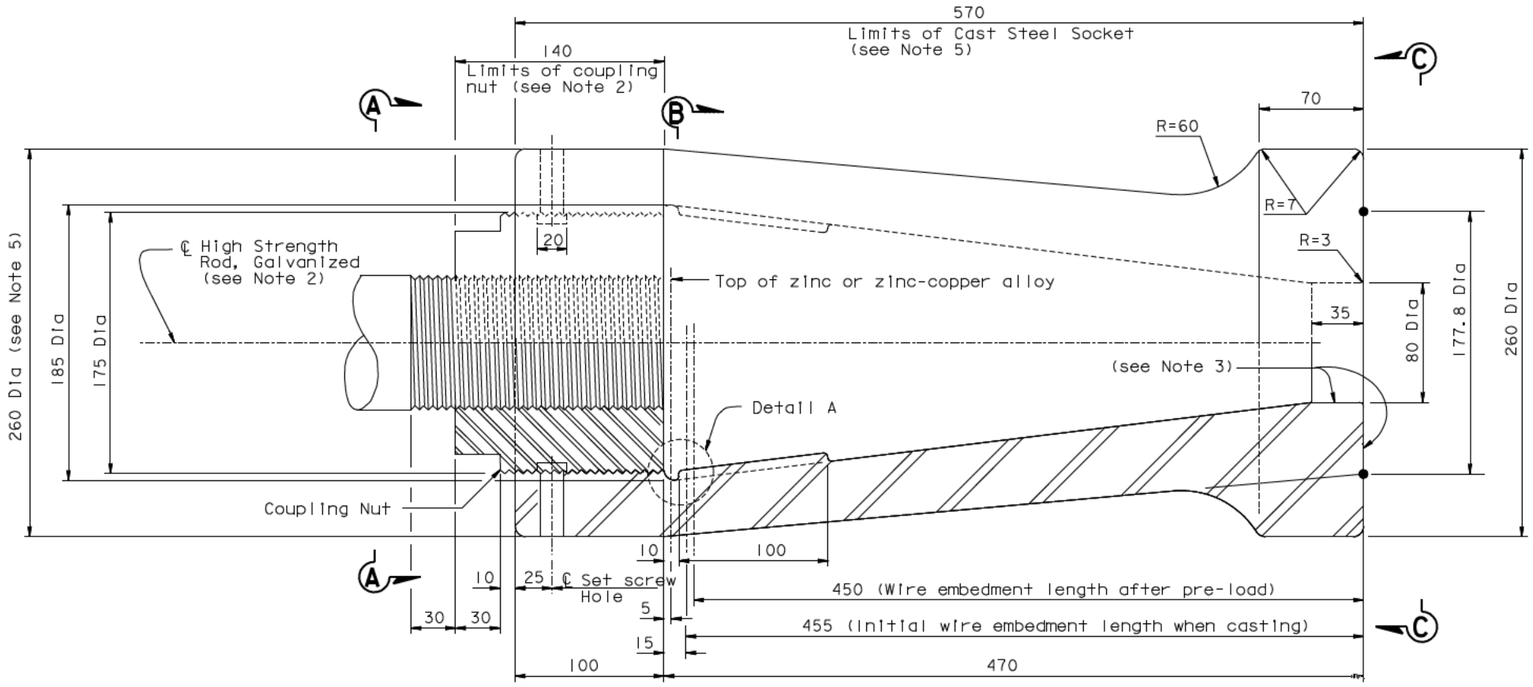

SOCKET DETAIL
1:2

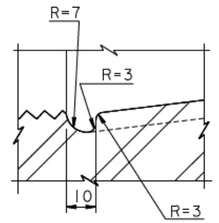

DETAIL A
1:1

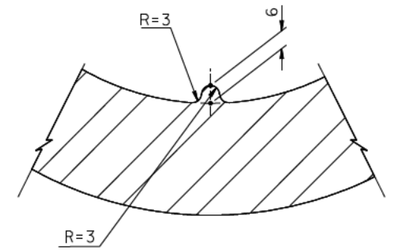

DETAIL B
1:1

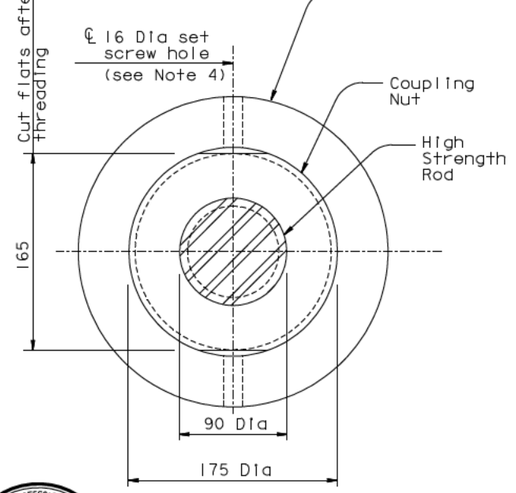

VIEW A-A
1:2.5

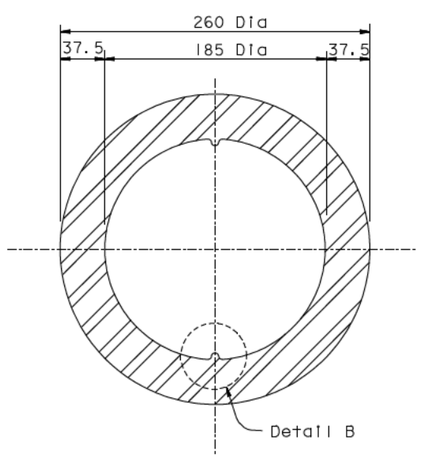

SECTION B-B
1:2.5

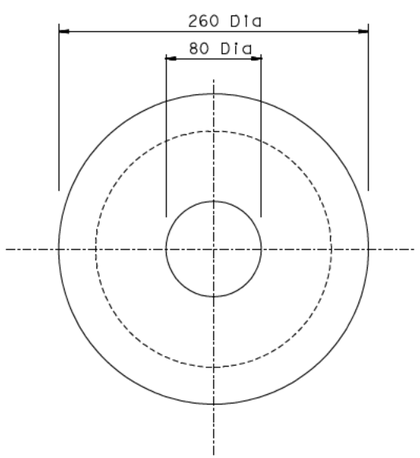

VIEW C-C
1:2.5

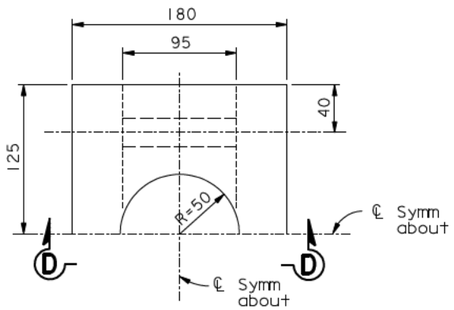

PLAN

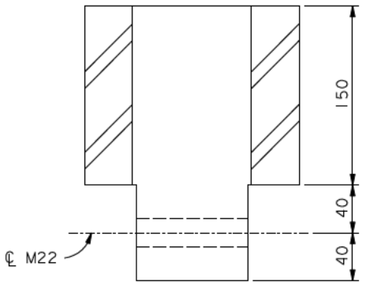

SECTION D-D

BEARING BLOCK DETAIL (See Note 6) ⚠1
1:2.5

NOTES:

1. Coupling nut and socket shall conform to ASTM A194 GR 7, with 4 threads per inch.
2. For main cable strand anchor rod and cable strand socket materials, see "General Notes" sheets.
3. Surface shall be finished to ANSI 500.
4. Provide 16 Dia stainless set screws in threaded hole.
5. All socket dimensions are for information only. The Contractor shall develop socket details consistent with his means and methods and the east cable anchorage geometry, and shall submit them to the Engineer for review and approval. The socket dimensions shall be such that adequate prestressing and erection clearance is provided.
6. ⚠1 Material for bearing blocks shall be ASTM A668 Grade F, or ASTM A148 Grade 550-345.

Daniel J. Turner — REGISTERED PROFESSIONAL ENGINEER — No. C 65033 — Exp. 06/30/11 — CIVIL — STATE OF CALIFORNIA

FOR REVISIONS ONLY

CONTRACT CHANGE ORDER NO. ____
SHEET ___ OF ___

REQUESTS FOR INFORMATION NOT ADDRESSED IN THIS CCO REMAIN IN FORCE

ALL DIMENSIONS ARE IN MILLIMETERS UNLESS OTHERWISE SHOWN

MARK	DATE	REVISIONS	DT BY	GB CH'D	78 CCO#
⚠1	08/28/09	BEARING BLOCKS			

DESIGN	BY G. Baker	CHECKED J. Kulikl	PREPARED FOR THE STATE OF CALIFORNIA DEPARTMENT OF TRANSPORTATION
DETAILS	BY M. Gulyas	CHECKED T. McMeans	
QUANTITIES	BY M. Gulyas	CHECKED M. Roberts	

R. Valizadeh/V. Toan/Y.L./W.L./F.C.
DESIGN OVERSIGHT
SIGN OFF DATE 08/28/09

R. Manzanarez
PROJECT ENGINEER

BRIDGE NO. 34-0006L/R
KILOMETER POST 13.2/13.9

SAN FRANCISCO OAKLAND BAY BRIDGE
EAST SPAN SEISMIC SAFETY PROJECT
SELF-ANCHORED SUSPENSION BRIDGE
(SUPERSTRUCTURE & TOWER)

EAST CABLE ANCHORAGE DETAILS

Rev. Date: 5-18-98

ORIGINAL SCALE IN MILLIMETERS FOR REDUCED PLANS 0 10 20 30 40 50 60 70 80 90 100

CU 04
EA 0120F1

DISREGARD PRINTS BEARING EARLIER REVISION DATES

REVISION DATES (PRELIMINARY STAGE ONLY): 08/28/09 | 05/27/01 | 04/08/02 | 07/01/02 | 12/19/02

SHEET 320R1 OF

FILE -> I:\bb\04-012001\sas\contract plans and cco\cco\cco#78\1-original 08-28-09\dgn\agand08a.dgn

USERNAME => dwinrow DATE PLOTTED => 27 AUG 2009 TIME PLOTTED => 15:37:06

100% PS&E

STATE OF CALIFORNIA - DEPARTMENT OF TRANSPORTATION

CONTRACT CHANGE ORDER

Change Requested by: Engineer

CCO: 80 **Suppl. No. 0** **Contract No. 04 – 0120F4** **Road** SF-80-13.2/13.9 **FED. AID LOC.:**

To: **AMERICAN BRIDGE/FLUOR ENTERPRISES INC A JOINT VENTURE**

You are directed to make the following changes from the plans and specifications or do the following described work not included in the plans and specifications for this contract. ***NOTE: This change order is not effective until approved by the Engineer.***

Description of work to be done, estimate of quantities and prices to be paid. (Segregate between additional work at contract price, agreed price and force account.) Unless otherwise stated, rates for rental of equipment cover only such time as equipment is actually used and no allowance will be made for idle time. This last percentage shown is the net accumulated increase or decrease from the original quantity in the Engineer's Estimate.

Adjustment of Compensation at Lump Sum:

Revise the project limits to encompass the limits between the Yerba Buena Island (YBI) tunnel to the San Francisco Oakland Bay Bridge (SFOBB) Toll Plaza as follows:

From: 04-SF-80 KP 13.2/13.9

To: 04-SF-80 KP 12.2/KP 14.3, 04-ALA-80 KP 0.0/KP 4.0

Provide compensation for direct and indirect impacts related to extending project limits that would not have otherwise been incurred within the project limits. This includes, but is not limited to, additional insurance premiums, mobilization, marine access, exposure to insurance deductibles and other risks. For this, the Contractor will be paid the agreed upon lump sum of $500,000.00. The agreed upon lump sum is based on an anticipated range of extra work within the extended project limits being between $10,000,000.00 and $20,000,000.00. The agreed upon lump sum will be subject to re-negotiation should the total extra work within the extended project limits fall below the lower or exceed the upper limit of the anticipated range.

Compensation for additional cost and/or time impacts associated with performing extra work within the extended contract limits will be addressed in separate change orders that direct the additional work.

The Contractor will not be required to perform additional work in the extended project limits without the consent of the Contractor. Within these extended limits, the Department will relieve the Contractor of responsibility for injury or damage resulting from use by public traffic or from the action of the elements or from any other cause but not from injury or damage resulting from the Contractor's own operations or from the Contractor's negligence.

Adjustment of Compensation at Lump Sum Price.....$500,000.00

Estimated Cost: Increase ☒ Decrease ☐ $500,000.00

By reason of this order the time of completion will be adjusted as follows: 0 Days

Submitted by

Signature _____ **Resident Engineer** Darryl Schram for: Gary Pursell, Sup.T.E. **Date** 11/9/09

Approval Recommended by

Signature _____ **Supervising Bridge Engineer** Gary Pursell, Sup.T.E. **Date** 11/10/09

Engineer Approval by

Signature _____ **Principal Transportation Engineer** Peter Siegenthaler, Prin.T.E. **Date** 12/2/09

We the undersigned contractor, have given careful consideration to the change proposed and agree, if this proposal is approved, that we will provide all equipment, furnish the materials, except as otherwise be noted above, and perform all services necessary for the work above specified, and will accept as full payment therefor the prices shown above.

NOTE: If you, the contractor, do not sign acceptance of this order, your attention is directed to the requirements of the specifications as to proceeding with the ordered work and filing a written protest within the time therein specified.

Contractor Acceptance by

Signature _____ (Print name and title) PVANDERWAART VAN GULIK **Date** 11/18/2009

STATE OF CALIFORNIA - DEPARTMENT OF TRANSPORTATION

CONTRACT CHANGE ORDER MEMORANDUM

DC-CEM-4903 (OLD HC-39 REV. 6/93) CT# 7541-3544-0

DATE: 11/18/2009

TO Pete Siegenthaler, Principal TE	FILE 04-0120F4 04-SF-80-13.2/13.9
FROM Gary Pursell, STE / Richard Morrow, SBE	
CCO NO. **80** / SUPPLEMENT NO. **0** / CATEGORY CODE **CXSX**	CONTINGENCY BALANCE (including this change) **$59,139,023.40**
$500,000.00 INCREASE ☒ DECREASE ☐	HEADQUARTERS APPROVAL REQUIRED? YES ☒ NO ☐
SUPPLEMENTAL FUNDS PROVIDED $	IS THIS REQUEST IN ACCORDANCE WITH ENVIRONMENTAL DOCUMENTS? YES ☒ NO ☐
CCO DESCRIPTION: Extend Project Limits	**PROJECT DESCRIPTION** CONSTRUCT SELF-ANCHORED SUSPENSION BRIDGE

Original Contract Time	Time Adj.: This Change	Previously Approved CCO Time Adjustments	Percentage Time Adjusted: (including this change)	Total # of Unreconciled Deferred Time CCO(s): (including this change)
2490 Day(s)	**0** Day(s)	**150** Day(s)	**6** %	**6**

THIS CHANGE ORDER PROVIDES FOR:

Revising the project limits to encompass the limits between the Yerba Buena Island (YBI) tunnel to the San Francisco Oakland Bay Bridge (SFOBB) Toll Plaza along the Route 80 corridor in San Francisco and Alameda counties and provide compensation for direct and indirect impacts related to extending project limits that would not have otherwise been incurred. This includes, but is not limited to, additional insurance premiums, mobilization, marine access, exposure to insurance deductibles and other risks.

The project limits are being revised in order for the Contractor to perform anticipated additional work within the extended limits. This anticipated work includes the final tie-in of electrical and communication lines along the I-80 corridor between the various projects. Additional work within the extended project limits has been deleted from other completed projects or is not included on other ongoing projects.

The Contractor is in agreement with this change. However they will be given the right to refuse work within the extended contract limits although it is not anticipated that this right will be exercised. The Contractor's right of refusal is needed to ensure his forces do not become overtaxed by Department demands to perform excessive amounts of additional work. The Department will also relieve the Contractor of responsibility for injury or damage resulting from use by public traffic or from the action of the elements or from any other cause but not from injury or damage resulting from the Contractor's own operations or from the Contractor's negligence. This clause is needed in order to protect the Contractor from inadvertently being held responsible for actions by others and any possible deficiencies of previously accepted work.

This change, which extends the project limits, is the first of several anticipated changes needed to consolidate Mechanical, Electrical & Plumbing (MEP) work into the Self-Anchored Suspension contract for the San Francisco Oakland Bay Bridge (SFOBB) corridor. Anticipated additional change order work, within the extended contract limits, will be addressed in separate change orders that direct the additional work. Project MEP consolidation is in response to a Toll Bridge Program Oversight Committee (TBPOC) request to mitigate corridor risks and accelerate contract completion. In October 2008, the Department proposed consolidating all remaining MEP work from contracts EA 04-012024 (Skyway) and EA 04-0120L4 (Oakland Touchdown) onto the SAS contract. This will reduce risk by providing greater integration of equipment throughout the corridor/structure. This concept, including extending project limits and performing work through the SAS Contract, was approved by the TBPOC in the 4th Quarter of 2008.

For this change, the Contractor will be paid the agreed upon lump sum of $500,000.00, which can be financed from the contingency fund. The agreed upon lump sum is based on an anticipated range of extra work within the extended project limits being between $10,000,000.00 and $20,000,000.00. The agreed upon lump sum will be subject to re-negotiation should the total extra work within the extended project limits fall below the lower or exceed the upper limit of the anticipated range. A cost analysis is on file.

This change order has been discussed with Jon Tapping, Headquarters Construction Coordinator - Toll Bridge, in regard to the need for a Director's Order as addressed in Section 5-302 of the Construction Manual. It has been determined that this change order is within the scope of the project and therefore a Director's Order is not required.

No time adjustment is warranted, as this change order does not affect the controlling operation.

This change order received concurrence from Pochana Chongchaikit (Program Manager), Ken Terpstra (Project Manager), Todd Van Santen (Department Legal Representative), Gary Pursell (Sup. TE), Richard Morrow (Sup. TE), Peter Siegenthaler (Principal TE), Rich Foley (HQ Rep) and Jon Tapping (HQ Principal). Maintenance and Design concurrences are not required for this change.

This change order received an Issue and Approve from the Division of Construction on November 16, 2009 (A copy is attached for reference).

CONCURRED BY:	
CONSTRUCTION ENGINEER Res. Eng. Gary Pursell, Sup. TE	DATE 6/18/08
SR. BRIDGE ENGINEER Rick Morrow	DATE 6/18/08
FHWA REPRESENTATIVE HQ Legal, Todd Van Santen	DATE 1/6/09
PROJECT MANAGER Proj. Manager, Ken Terpstra	DATE 2/9/09
OTHER (SPECIFY) Prog Manager, Pochana Chongchaikit	DATE 5/23/08
HQ, Rich Foley	11/10/09
PCE, Peter Siegenthaler, Prin TE	DATE 6/23/08
DISTRICT PRIOR APPROVAL BY HQ, Jon Tapping	DATE 11/16/09
HQ (ISSUE & APPROVE) (TO PROCEED) BY Larry Salhaney	DATE 11/16/09
RESIDENT ENGINEER SIGNATURE Gary Pursell	DATE 12/2/09

HC-39 Word(Rev.9/98)

ESTIMATE OF COST	THIS REQUEST	TOTAL TO DATE
ITEMS	$0.00	$0.00
FORCE ACCOUNT	$0.00	$0.00
AGREED PRICE	$0.00	$0.00
ADJUSTMENT	$500,000.00	$500,000.00
TOTAL	$500,000.00	$500,000.00

FEDERAL PARTICIPATION

☐ PARTICIPATING ☐ PARTICIPATING IN PART ☒ NONE
☐ NON-PARTICIPATING (MAINTENANCE) ☐ NON-PARTICIPATING

FEDERAL SEGREGATION (IF MORE THAN ONE FUNDING SOURCE OR P.I.P. TYPE)
☐ CCO FUNDED PER CONTRACT ☐ CCO FUNDED AS FOLLOWS

FEDERAL FUNDING SOURCE	PERCENT

CONTRACT CHANGE ORDER

Change Requested by: Engineer

CCO: 80 **Suppl. No. 1** **Contract No. 04 – 0120F4** **Road** SF-80-13.2/13.9 **FED. AID LOC.:**

To: **AMERICAN BRIDGE/FLUOR ENTERPRISES INC A JOINT VENTURE**

You are directed to make the following changes from the plans and specifications or do the following described work not included in the plans and specifications for this contract. ***NOTE: This change order is not effective until approved by the Engineer.***

Description of work to be done, estimate of quantities and prices to be paid. (Segregate between additional work at contract price, agreed price and force account.) Unless otherwise stated, rates for rental of equipment cover only such time as equipment is actually used and no allowance will be made for idle time. This last percentage shown is the net accumulated increase or decrease from the original quantity in the Engineer's Estimate.

Adjustment of Compensation at Lump Sum:

Revise the CCO 80 S0 liability statement as follows:

From:

The Contractor will not be required to perform additional work in the extended project limits without the consent of the Contractor. Within these extended limits, the Department will relieve the Contractor of responsibility for injury or damage resulting from use by public traffic or from the action of the elements or from any other cause but not from injury or damage resulting from the Contractor's own operations or from the Contractor's negligence.

To:

The Contractor will not be required to perform additional work in the extended project limits without the consent of the Contractor. Within these extended limits, the Department will relieve the Contractor of responsibility for injury or damage resulting from use by public traffic, any third party that the Department brings on to perform work in the extended project limits, from the action of the elements, or from any other cause but not from injury or damage resulting from the Contractor's own operations or from the Contractor's negligence.

Adjustment of Compensation at Lump Sum Price.....$0.00

Estimated Cost: Increase ☐ Decrease ☐ $0.00

By reason of this order the time of completion will be adjusted as follows: 0 Days

Submitted by

Signature Kannu Balan	**Resident Engineer** Kannu Balan, Senior T.E.	**Date** 3-23-12

Approval Recommended by

Signature	**Supervising Transportation Engineer** William Casey, Supervising T.E.	**Date** 3-28-12

Engineer Approval by

Signature	**Supervising Transportation Engineer** William Casey, Supervising T.E.	**Date** 4-4-12

We the undersigned contractor, have given careful consideration to the change proposed and agree, if this proposal is approved, that we will provide all equipment, furnish the materials, except as otherwise be noted above, and perform all services necessary for the work above specified, and will accept as full payment therefor the prices shown above.

NOTE: If you, the contractor, do not sign acceptance of this order, your attention is directed to the requirements of the specifications as to proceeding with the ordered work and filing a written protest within the time therein specified.

Contractor Acceptance by

Signature	(Print name and title) BRIAN A. PETERSEN - PROJECT DIRECTOR	**Date** 03APR12

STATE OF CALIFORNIA - DEPARTMENT OF TRANSPORTATION

CONTRACT CHANGE ORDER MEMORANDUM

DATE: 3/23/2012 Page 1 of 1

TO: Tony Anziano, Program Manager /	FILE: **E.A.** 04 - 0120F4
FROM: Kannu Balan, Senior TE	**CO-RTE-PM** SF-80-13.2/13.9
	FED. NO.
CCO#: **80** SUPPLEMENT#: **1** Category Code: **CXSX**	CONTINGENCY BALANCE (incl. this change) **$118,403,086.58**
COST: **$0.00** INCREASE ☐ DECREASE ☐	HEADQUARTERS APPROVAL REQUIRED? ☑ YES ☐ NO
SUPPLEMENTAL FUNDS PROVIDED: **$0.00**	IS THIS REQUEST IN ACCORDANCE WITH ENVIRONMENTAL DOCUMENTS? ☑ YES ☐ NO
CCO DESCRIPTION: Extend Project Limit-Liability Statement	**PROJECT DESCRIPTION:** CONSTRUCT SELF-ANCHORED SUSPENSION BRIDGE

Original Contract Time:	Time Adj. This Change:	Previously Approved CCO Time Adjustments:	Percentage Time Adjusted: (including this change)	Total # of Unreconciled Deferred Time CCO(s): (including this change)
2490 Day(s)	**0** Day(s)	**501** Day(s)	**20** %	**3**

THIS CHANGE ORDER PROVIDES FOR:

Revising the CCO 80 S0 liability statement to relieve the Contractor of responsibility for third parties that the Department brings on the extended project limits to perform work.

CCO 80 S0 revised the project limits so the Department could have the Contractor perform additional work within the extended project limits of the Skyway and Oakland Touchdown. This supplemental change order revises the CCO 80 S0 liability statement in order to address the Contractor's third party liability concerns resulting from the Department's decision to allow third parties into the extended project limits to perform other work separate from the SAS Contract. This change order is specific to the extended project limits and is consistent with Section 10-1.10 "Cooperation" of the Special Provisions. This supplement revises the CCO 80 S0 liability statement so that the Contractor is not responsible for third parties performing work within the extended project limits.

There shall be no change in cost to the Department by reason of this Change Order. The cumulative total of CCO 80 S0 and CCO 80 S1 is $500,000.00.

No time adjustment is warranted as this change order does not affect the controlling operation.

This change order has received concurrence from William Casey (Supervising TE), Ken Terpstra (Project Manager), and Rich Foley (HQ Oversight). Maintenance and Design concurrences are not required for this change.

CONCURRED BY:			
Construction Engineer:	William Casey, Sup TE	Date	3/16/12
Bridge Engineer:		Date	
Project Engineer:		Date	
Project Manager:	Proj Manager, Ken Terpstra	Date	3/22/12
FHWA Rep.:		Date	
Environmental:		Date	
Other (specify):	HQ, Rich Foley	Date	3/19/12
Other (specify):		Date	
District Prior Approval By:		Date	
HQ (Issue Approve) By:		Date	
Resident Engineer's Signature:	Kannu Balan	Date	3-23-12

ESTIMATE OF COST

	THIS REQUEST	TOTAL TO DATE
ITEMS	$0.00	$0.00
FORCE ACCOUNT	$0.00	$0.00
AGREED PRICE	$0.00	$0.00
ADJUSTMENT	$0.00	$500,000.00
TOTAL	$0.00	$500,000.00

FEDERAL PARTICIPATION

☐ PARTICIPATING ☐ PARTICIPATING IN PART ☑ NONE
☐ NON-PARTICIPATING (MAINTENANCE) ☐ NON-PARTICIPATING

FEDERAL SEGREGATION (if more than one Funding Source or P.I.P. type)
☐ CCO FUNDED PER CONTRACT ☐ CCO FUNDED AS FOLLOWS

FEDERAL FUNDING SOURCE	PERCENT

ADA Notice: For individuals with sensory disabilities, this document is available in alternate formats. For information call: (916) 654-6410 or TDD (916) 654-3880 or write Records and Forms Management, 1120 N Street, MS-89, Sacramento, CA 95814.

CONTRACT CHANGE ORDER

Change Requested by: Engineer

CCO: 81 **Suppl. No. 0** **Contract No. 04 – 0120F4** **Road** SF-80-13.2/13.9 **FED. AID LOC.:**

To: **AMERICAN BRIDGE/FLUOR ENTERPRISES INC A JOINT VENTURE**

You are directed to make the following changes from the plans and specifications or do the following described work not included in the plans and specifications for this contract. ***NOTE: This change order is not effective until approved by the Engineer.***

Description of work to be done, estimate of quantities and prices to be paid. (Segregate between additional work at contract price, agreed price and force account.) Unless otherwise stated, rates for rental of equipment cover only such time as equipment is actually used and no allowance will be made for idle time. This last percentage shown is the net accumulated increase or decrease from the original quantity in the Engineer's Estimate.

Adjustment of Compensation at Lump Sum:

ITEM 1.

Modify the Traffic Operation System (TOS) and Supervisory Control and Data Acquisition (SCADA) Remote Terminal Unit (RTU) system as follows:

- Provide model GE RX3i or equal for the SCADA RTU programmable logic controller system
- Revise Closed Circuit Television equipment
- Relocate TOS cameras at Tower elevation 144.165 M
- Revise the TOS cameras pedestals
- Reroute conduit risers on skin plate D of Northwest and Southeast shafts
- In lieu of splice cabinet at Manhole 27, fiber splice closures will be installed by separate contract

Revise Special Provisions Section 10-3.09 "PULL BOXES, SPLICE BOXES AND JUNCTION BOXES," subsection "FIBER OPTIC SPLICE CLOSURE" as shown on sheet 3 of this change order.

Revise Special Provisions Section 10-3.10 "CONDUCTORS, CABLES AND WIRING," subsection "FIBER OPTIC OUTSIDE PLANT CABLE" as shown on sheets 3 through 22 of this change order.

Revise Special Provisions Section 10-3.13 "TRAFFIC OPERATION SYSTEM" as shown on sheets 23 through 40 of this change order.

The following revised plan sheets detail the changes addressed in this change order: 149R5, 166R4, 167R4, 168R5, 169R4, 170R4, 216R2, 219R3, 284R3, 320R1, 320S1, 321R1, 322R1, 324R1, 325R1, 327R1, 328R1, 328S1, 328S2, 362R6, 363R6, 373R8, 373S1R2, 375R6, 376R5, 382R5, 383R4, 389R6, 395R7, and 407R5 (of 1204) as shown on sheets 41 through 70 of this change order.

This change order resolves the costs associated with Contractor Request for Information (RFI) numbers 1133 and 2921 with respect to changes listed above.

For this work, the Contractor will receive a lump sum price of $354,199.00. This sum constitutes full and complete compensation for furnishing all labor, material, tools and incidentals including all markups by reason of this change.

Adjustment of Compensation at Lump Sum..... $354,199.00

Estimate of Decrease in Contract Item at Contract Price:

ITEM 2.

Eliminate pan/tilt unit and video transmitter duplex data for TOS Cameras.
Revise fiber optic splice closures for TOS Cameras.

Item No. 112: Pan/Tilt Unit					
-2 EA	(-100.00%)	@	$4,500.00 /EA	=-$9,000.00	(-100.00%)
Item No. 114: Video Transmitter Duplex Data					
-2 EA	(-100.00%)	@	$3,000.00 /EA	=-$6,000.00	(-100.00%)
Item No. 119: Fiber Optic Splice Closure					
-2 EA	(-25.00%)	@	$1,300.00 /EA	=-$2,600.00	(-25.00%)

In accordance with Section 4-1.03B(3), "Eliminated Items," of the Standard Specifications, the adjustment due to the elimination of item Nos. 112 and 114 is zero.

The quantity decrease shown herein for item No. 119 when combined with the quantity shown in the engineer's estimate, and as modified by any previous change orders or revisions to dimensions made by the engineer, shall be the final quantity for which payment will be made.

Total Credit for Decrease in Contract Item..... ($17,600.00)

CHANGE ORDER COST AND TIME SUMMARY

(ITEM 1) Adjustment of Compensation at Lump Sum	$354,199.00
(ITEM 2) Decrease in Contract Items at Contract Prices	($17,600.00)
Total net pay for this change order	$336,599.00

This sum constitutes full and complete compensation for furnishing all labor, material, tools and incidentals including all markups by reason of this change.

Estimated Cost: **Increase** ☒ **Decrease** ☐ **$336,599.00**

By reason of this order the time of completion will be adjusted as follows: **0 Days**

Submitted by

Signature **Resident Engineer** Darryl Schram, Senior T.E. **Date** 10/26/12

Approval Recommended by

Signature **Supervising Transportation Engineer** William Casey, Supervising T.E. **Date** 10/26/12

Engineer Approval by

Signature **Supervising Transportation Engineer** William Casey, Supervising T.E. **Date** 11/2/12

We the undersigned contractor, have given careful consideration to the change proposed and agree, if this proposal is approved, that we will provide all equipment, furnish the materials, except as otherwise be noted above, and perform all services necessary for the work above specified, and will accept as full payment therefor the prices shown above.

NOTE: If you, the contractor, do not sign acceptance of this order, your attention is directed to the requirements of the specifications as to proceeding with the ordered work and filing a written protest within the time therein specified.

Contractor Acceptance by

Signature (Print name and title) BRIAN A. PETERSEN - PROJECT DIRECTOR **Date** 01NOV12

STATE OF CALIFORNIA - DEPARTMENT OF TRANSPORTATION

CONTRACT CHANGE ORDER MEMORANDUM

TO: Tony Anziano, Program Manager /	FILE: **E.A.** 04 - 0120F4
FROM: Darryl Schram, Senior TE	**CO-RTE-PM** SF-80-13.2/13.9
	FED. NO.
CCO#: **81** SUPPLEMENT#: **0** Category Code: **CBPC**	CONTINGENCY BALANCE (incl. this change): **$101,891,539.51**
COST: **$336,599.00** INCREASE ☑ DECREASE ☐	HEADQUARTERS APPROVAL REQUIRED? ☑ YES ☐ NO
SUPPLEMENTAL FUNDS PROVIDED: **$118,400.00**	IS THIS REQUEST IN ACCORDANCE WITH ENVIRONMENTAL DOCUMENTS? ☑ YES ☐ NO
CCO DESCRIPTION: TOS Modifications	**PROJECT DESCRIPTION:** CONSTRUCT SELF-ANCHORED SUSPENSION BRIDGE

Original Contract Time:	Time Adj. This Change:	Previously Approved CCO Time Adjustments:	Percentage Time Adjusted: (including this change)	Total # of Unreconciled Deferred Time CCO(s): (including this change)
2490 Day(s)	**0** Day(s)	**501** Day(s)	**20** %	**3**

THIS CHANGE ORDER PROVIDES FOR:

Modifying the Traffic Operation System (TOS) and the Supervisory Control and Data Acquisition (SCADA) Remote Terminal Unit (RTU) system by providing model GE RX3i or equal for the SCADA RTU programmable logic controller system, revising Closed Circuit Television equipment, relocating TOS cameras at Tower elevation 144.165 M, revising the TOS cameras pedestals, rerouting conduit risers on skin plate D of Northwest and Southeast shafts. In lieu of splice cabinet at Manhole 27, fiber splice closures will be installed by separate contract

Revising Special Provisions Sections 10-3.09 "PULL BOXES, SPLICE BOXES AND JUNCTION BOXES," 10-3.10 "CONDUCTORS, CABLES AND WIRING," and 10-3.13 "TRAFFIC OPERATION SYSTEM."

The original contract specifies cameras and programmable logic controller that are no longer available. Therefore, this change order is needed to provide compatible and available equipment. TOS cameras will be relocated to maximize the viewable area of the structure roadway and to provide safe maintainability of the equipment. The TOS camera mounting detail requires correcting on the pedestals. Conduit risers will be rerouted to resolve conflicts with the mechanical piping. The splice cabinet is larger than the manhole's access opening, therefore a fiber splice closure will be used. The pan/tilt unit and video transmitter duplex data bid items will be deleted and fiber optic splice closure bid item quantity revised to be consistent with the newer model cameras being provided.

This change order resolves the costs associated with Contractor Request for Information (RFI) numbers 1133 and 2921 with respect to changes listed above.

This change order eliminates Bid Items: 112 - Pan/Tilt Unit, 114 - Video Transmitter Duplex Data, and 119 - Fiber Optic Splice Closure. This change order modifies Bid Items: 111 - Camera With Housing Enclosure, 113 - Camera Control Unit, and 118 - Fiber Optic Cable (12-Fiber Indoor/Outdoor).

The cost of this change order consists of a lump sum of $354,199.0 and a bid item credit of ($17,600.00) for a total of $336,599.00, of which $118,400.00 will be financed from provided supplemental funds and the remaining $218,199.00 from the contingency fund. A detailed cost analysis is on file.

No time adjustment is warranted as this change order does not affect the controlling operation.

This change order has obtained concurrence from William Casey (Supervising TE), Ken Terpstra (Proj. Manager), Rich Foley (HQ Oversight), Wenyi Long (Bridge Design), Lina Ellis (Maintenance), and Jing Chen (District Design).

ADA Notice: For individuals with sensory disabilities, this document is available in alternate formats. For information call: (916) 654-6410 or TDD (916) 654-3880 or write Records and Forms Management, 1120 N Street, MS-89, Sacramento, CA 95814.

CONCURRED BY:			
Construction Engineer:	William Casey, Sup TE	Date	7/27/12
Bridge Engineer:	CT Oversight, Wenyi Long, P.E.	Date	10/5/11
Project Engineer:	District Design, Jing Chen	Date	9/26/11
Project Manager:	Proj Manager, Ken Terpstra	Date	7/30/12
FHWA Rep.:		Date	
Environmental:		Date	
Other (specify):	HQ, Rich Foley	Date	7/30/12
Other (specify):	Struct. Maint, Lina Ellis	Date	9/20/11
District Prior Approval By:	HQ, Larry Salhaney	Date	9/21/11
HQ (Issue Approve) By:		Date	
Resident Engineer's Signature:		Date	10/26/12

ESTIMATE OF COST

	THIS REQUEST	TOTAL TO DATE
ITEMS	($17,600.00)	($17,600.00)
FORCE ACCOUNT	$0.00	$0.00
AGREED PRICE	$0.00	$0.00
ADJUSTMENT	$354,199.00	$354,199.00
TOTAL	$336,599.00	$336,599.00

FEDERAL PARTICIPATION

☐ PARTICIPATING ☐ PARTICIPATING IN PART ☑ NONE
☐ NON-PARTICIPATING (MAINTENANCE) ☐ NON-PARTICIPATING

FEDERAL SEGREGATION (if more than one Funding Source or P.I.P. type)
☐ CCO FUNDED PER CONTRACT ☐ CCO FUNDED AS FOLLOWS

FEDERAL FUNDING SOURCE	PERCENT

ADA Notice: For individuals with sensory disabilities, this document is available in alternate formats. For information call: (916) 654-6410 or TDD (916) 654-3880 or write Records and Forms Management, 1120 N Street, MS-89, Sacramento, CA 95814.

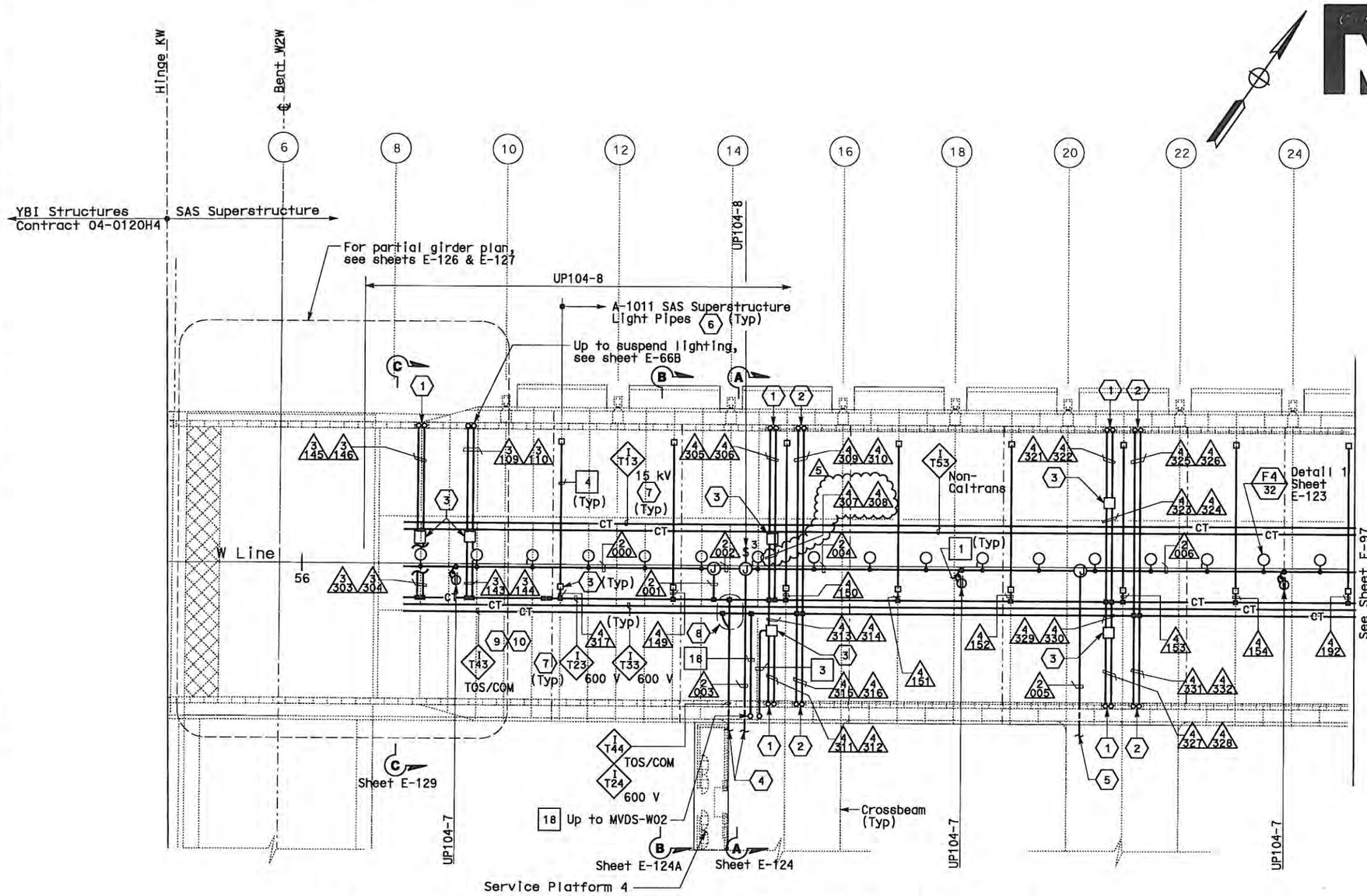

SAS SUPERSTRUCTURE - CONDUIT AND CABLE TRAY PLAN

SHEET NOTES:

1. Conduit up to PB-LTG located in barrier, see sheet E-46.
2. Conduit up to PB-COM located in barrier, see sheet E-46.
3. PB-2A locate on top of floor.
4. For cable tray run and lighting inside crossbeam, see sheet E-114.
5. For lighting inside crossbeam, see sheet E-119.
6. PB-2L with circuit for future light pipes. See sheet E-121 for installation details and E-130 for lighting schedule.
7. For cable tray & ground bar support, refer to sheet E-125.
8. For fiber splice tray detail, refer to sheet E-356.
9. Furnish and install 1-25.4 mm innerduct per BASE fiber optic cable in TOS/COM cable tray.
10. Furnish and install BASE fiber optic cable in innerduct. See sheet E-1100.

NOTES:

1. References:
   - TOS equipment is shown for conduit routing only. For typical details of TOS controller and devices, see sheets E-344 through E-357.
   - For types of pull boxes, splice boxes and enclosures, see sheet E-83.
   - For bridge grounding plan, see sheet E-111.
   - For circuit and conduit/cable tray schedules, see sheets starting at E-401.
2. For other work related to Hinge KW and items not shown on this sheet, see Electrical Special Provisions.
3. The girder lighting fixtures are shown diagrammatically. Contractor shall install fixtures at railing posts with a maximum of 8000 mm between fixtures. For types and typical lighting fixture installation details, see sheet E-123.
4. The cable trays are shown diagrammatically. For typical girder cable tray plans and sections, see sheets E-124 and E-125.

DIST	COUNTY	ROUTE	KILOMETER POST TOTAL PROJECT	SHEET NO	TOTAL SHEETS
04	SF	80	13.2/13.9	149 R5	1204

REGISTERED ELECTRICAL ENGINEER — 12/19/02 DATE

12-6-04
PLANS APPROVAL DATE

PB POWER, Inc.
A Parsons Brinckerhoff Company
303 Second St., Suite 700N
San Francisco, CA 94107-1317

JENS ERLINGSSON No. 8249 Exp. 9/30/06 ELECTRICAL — REGISTERED PROFESSIONAL ENGINEER — STATE OF CALIFORNIA

The State of California or its officers or agents shall not be responsible for the accuracy or completeness of electronic copies of this plan sheet.

Caltrans now has a web site! To get to the web site, go to http://www.dot.ca.gov

MARK	DATE	REVISIONS DESCRIPTIONS	BY	CH'D	CCO#
5	07/01/11	TOS MODIFICATIONS	RR	RG	81
4	03/01/11	BASE INTEGRATION	RSB	WB	150
3	06/25/09	WEST END BARRIER CONDUIT	RG	FW	44S1
2	02/25/08	CABLE TRAY CHANGES	RG	FW	42S1
1	02/19/08	ELECTRICAL MODIFICATIONS	MP EL	RR	42

REQUEST FOR INFORMATION NOT ADDRESSED IN THIS CCO REMAIN IN FORCE

CONTRACT CHANGE ORDER NO. 81
SHEET 41 OF 70

REGISTERED PROFESSIONAL ENGINEER — SYN YEE CHIN No. 19186 Exp. 09/30/2011 ELECTRICAL — STATE OF CALIFORNIA
FOR REVISION ONLY 4 5

REGISTERED PROFESSIONAL ENGINEER — FADI WALIEDDINE No. 11465 Exp. 12/31/2009 ELECTRICAL — STATE OF CALIFORNIA
FOR REVISION ONLY 2 3

REGISTERED PROFESSIONAL ENGINEER — MARCELL FLAVIO TAKACS No. E 8651 Exp. 9/30/2010 ELECTRICAL — STATE OF CALIFORNIA
FOR REVISION ONLY 1

THIS PLAN IS ACCURATE FOR ELECTRICAL WORK ONLY.

SAS SUPERSTRUCTURE GIRDER WESTBOUND
LIGHTING AND ELECTRICAL SYSTEMS

SCALE 1:200

ALL DIMENSIONS ARE IN MILLIMETERS UNLESS OTHERWISE SHOWN.

E-96

LAST REVISION	00-00-00
DATE PLOTTED =>	05-JUL-2011
TIME PLOTTED =>	14:54

STATE OF CALIFORNIA - DEPARTMENT OF TRANSPORTATION
DESIGN OVERSIGHT: BEHZAD GOLEMOHAMMADI
CALCULATED/DESIGNED BY: FK
CHECKED BY: IAH
DATE REVISED: 8/02
REVISED BY: DATE 8/02

FOR REDUCED PLANS ORIGINAL SCALE IS IN MILLIMETERS 0 20 40 60 80
DGN FILE =>04-0120f1_0149R05.dgn
USERNAME =>llorico
CU 04251
EA 0120F1

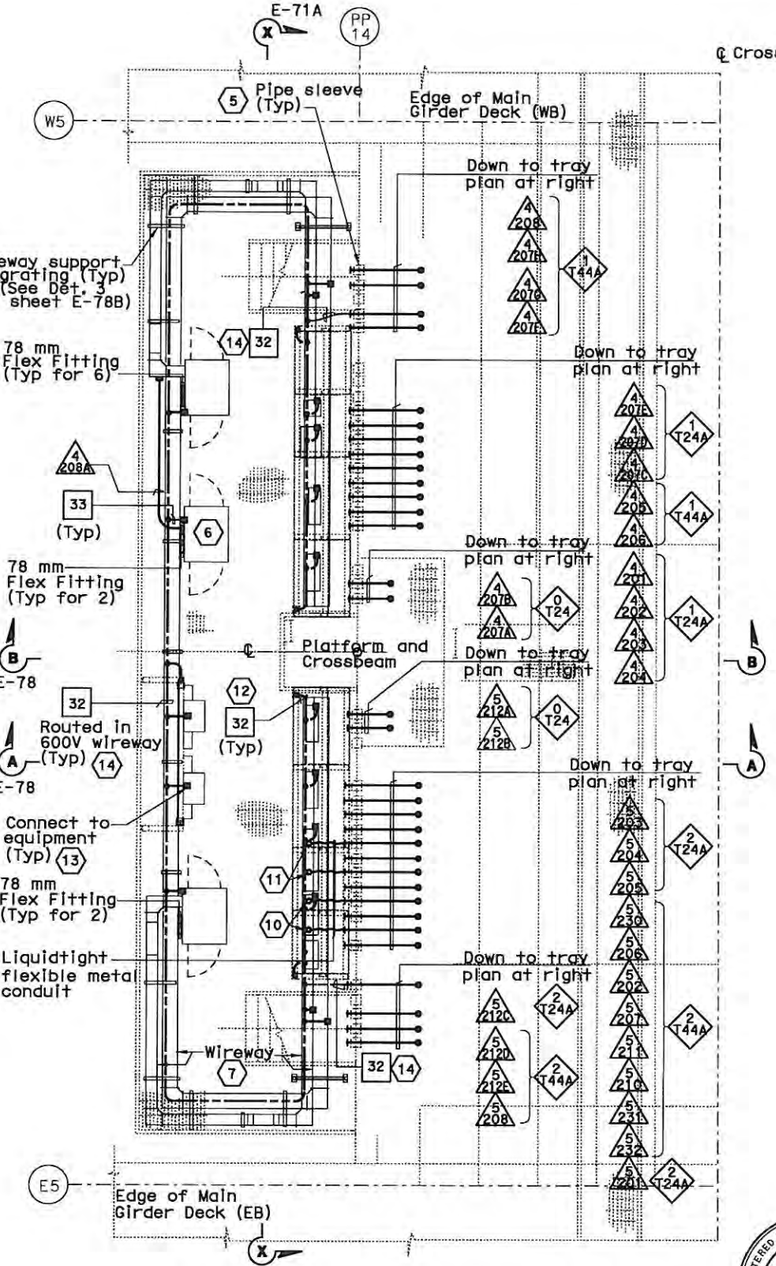

WIREWAY AND CONDUIT PLAN AT SERVICE PLATFORM

SCALE 1:40

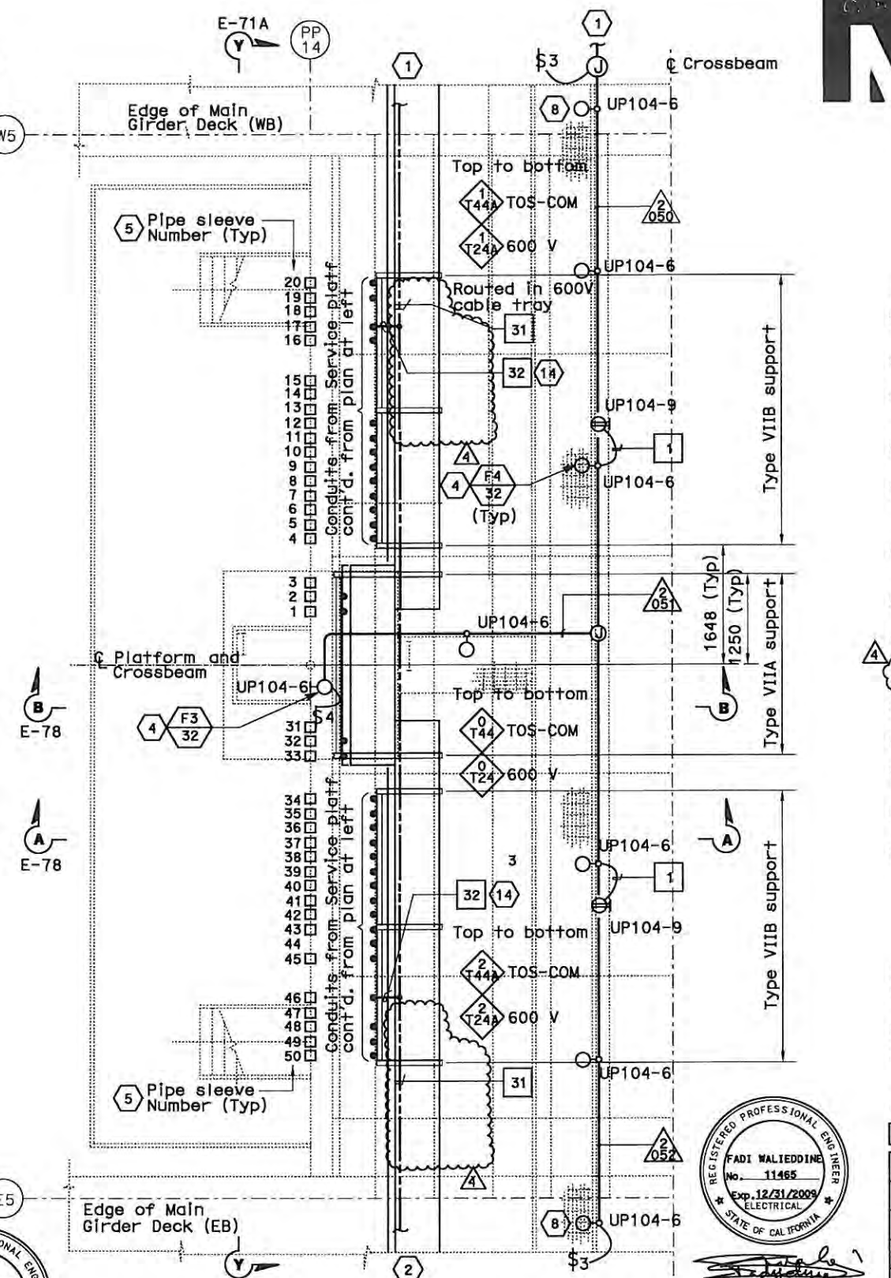

CABLE TRAY AND CONDUIT PLAN INSIDE CROSSBEAM

SCALE 1:40

SYN YEE CHIN
No. 18186
Exp. 09/30/2011
ELECTRICAL
STATE OF CALIFORNIA

Syn Yee Chin
FOR REVISION ONLY
4

FADI WALIEDDINE
No. 11465
Exp. 12/31/2009
ELECTRICAL
STATE OF CALIFORNIA

FOR REVISION ONLY
1 2 3

Metric

DIST	COUNTY	ROUTE	KILOMETER POST/TOTAL PROJECT	SHEET NO	TOTAL SHEETS
04	SF	80	13.2/13.9	166 R4	1204

James Erlingsson 12/19/02
REGISTERED ELECTRICAL ENGINEER

12-6-04
PLANS APPROVAL DATE

REGISTERED PROFESSIONAL ENGINEER
JENS ERLINGSSON
No. 8249
Exp. 9/30/06
ELECTRICAL
STATE OF CALIFORNIA

PB POWER, Inc.
A Parsons Brinckerhoff Company
303 Second St., Suite 700N
San Francisco, CA 94107-1317

The State of California or its officers or agents shall not be responsible for the accuracy or completeness of electronic copies of this plan sheet.

Caltrans now has a web site! To get to the web site, go to http://www.dot.ca.gov

SHEET NOTES:

1. For continuation inside WB girder, see sheets E-96 and E-114A.
2. For continuation inside EB girder, see sheet E-181 and E-114A.
3. Deleted.
4. For typical lighting fixture installation see Details 2 and 3, sheet E-123.
5. Pipe sleeve without conduit going through is spare. Contractor to provide plug or cap at both ends. For location see Section Y-Y on sheet E-71A.
6. TOS-4WB for the temporary mobile CMS. Control cabinet shall remain for future use. U.O.N.
7. For wireway numbers, see sheet E-71.
8. Locate light fixture approximate half way between girder wall and girder walkway.
9. DELETED
10. Terminate conduits at Terminal Box #TEL-4.
11. Terminate conduits at Terminal Box #COM-4.
12. See Detail 4, Dwg E-111B for Structural rack grounding.
13. #2 Bare Copper Wire in conduit, For installation details, see sheet E-71A.
14. Ground conductor shall be protected from damage when exposed outside the structure. Route ground conductor in liquidtight flexible metal conduit for protection, unless noted otherwise on plans. For additional installation details, see Detail 6, sheet E-111A.

NOTES:

1. Reference: - For circuit, conduit/cable tray schedules, see sheets starting at E-401.
2. For wireway support details, see AS sheets.
3. For location of pipe sleeves at the utility platform crossbeams, see Typical Crossbeam Details sheets.
4. For platform elevations, see sheet E-71A.

REQUEST FOR INFORMATION NOT ADDRESSED IN THIS CCO REMAIN IN FORCE

MARK	DATE	DESCRIPTIONS	BY	CH'D	CCO#
		REVISIONS			
4	07/01/11	TOS MODIFICATIONS	RR	RG	81
3	11/20/09	ELECTRICAL GROUNDING	AWG RR	RG FW	75
2	06/25/09	SERVICE PLATFORM ELECTRICAL CHANGES	RR RY	RG FW	55
1	03/30/09	SERVICE PLATFORM ELECTRICAL CHANGES	RR MP	RG FW	55

CONTRACT CHANGE ORDER NO. 81
SHEET 42 OF 70

DETAILS
SAS SUPERSTRUCTURE GIRDER WESTBOUND PLATFORM 4 CONDUIT, LIGHTING AND GROUNDING PLAN

SCALE AS NOTED

E-114

CALCULATED/DESIGNED BY	CHECKED BY
FK	IAH

NO	DATE	REVISED BY	DATE	REVISED
1	11/02			

STATE OF CALIFORNIA - DEPARTMENT OF TRANSPORTATION
DESIGN OVERSIGHT
BEHZAD GOLEMOHAMMADI
Caltrans

THIS PLAN IS ACCURATE FOR ELECTRICAL WORK ONLY.

ALL DIMENSIONS ARE IN MILLIMETERS UNLESS OTHERWISE SHOWN.

FOR REDUCED PLANS ORIGINAL SCALE IS IN MILLIMETERS 0 20 40 60 80

DGN FILE =04-0120f1_0166R04.dgn
USERNAME =klorico

CU 04251 EA 0120F1

LAST REVISION DATE PLOTTED =05-JUL-2011
TIME PLOTTED =11:14:54
00-00-00

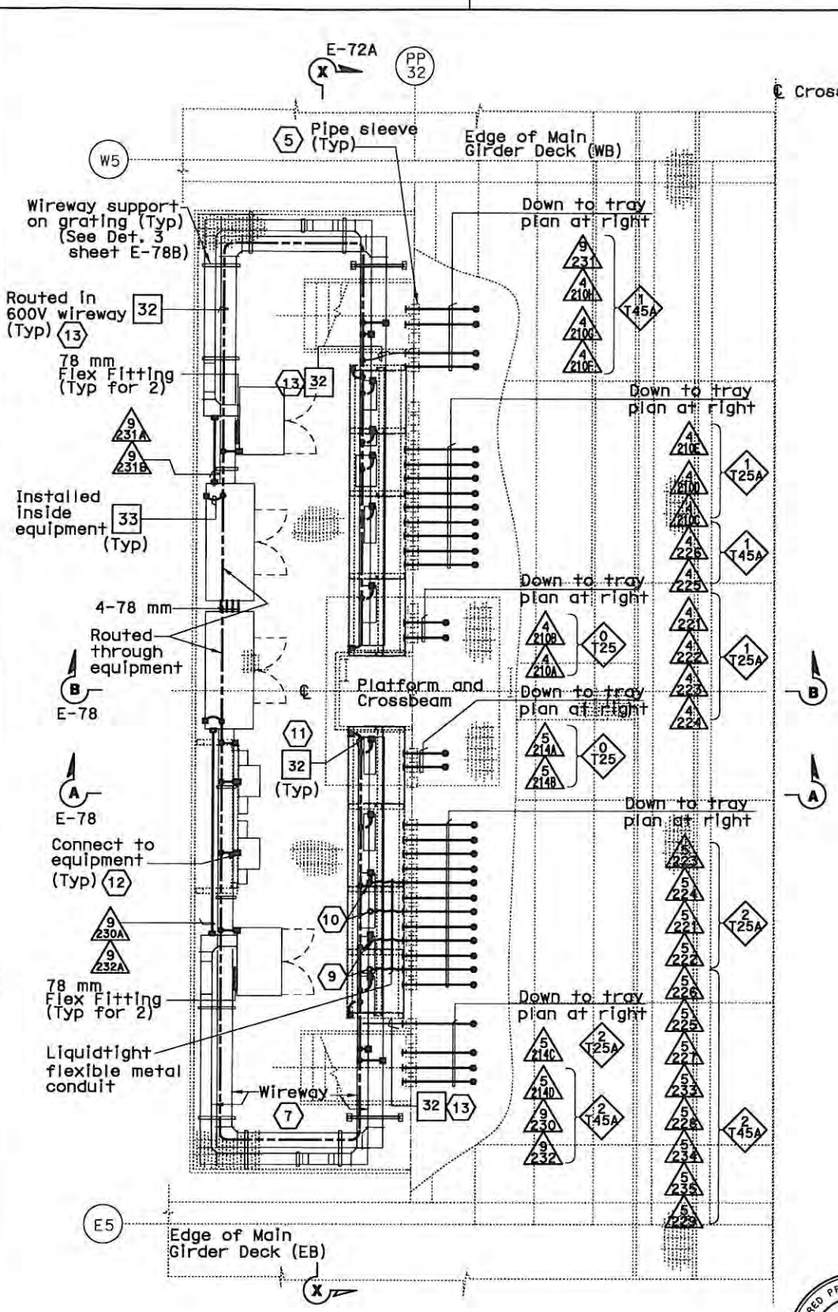

WIREWAY AND CONDUIT PLAN AT SERVICE PLATFORM

SCALE 1:40

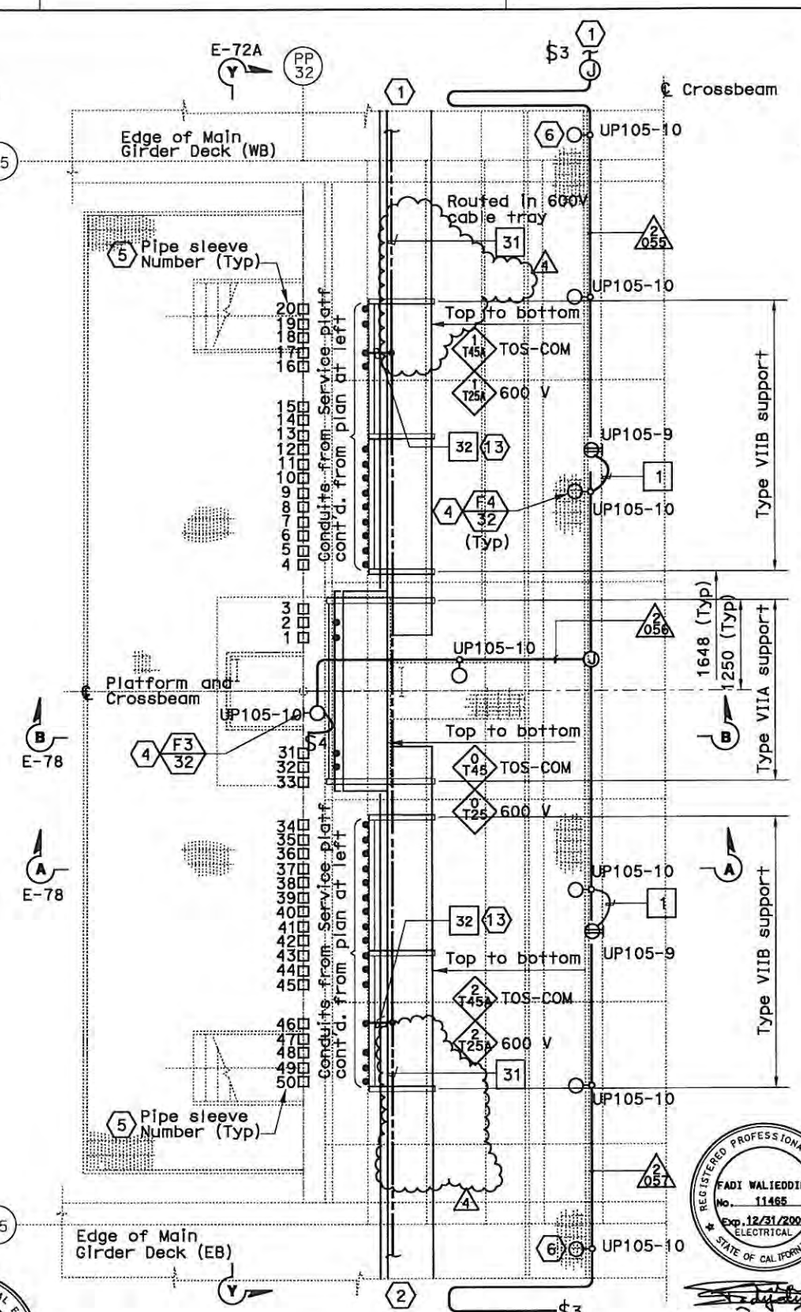

CABLE TRAY AND CONDUIT PLAN INSIDE CROSSBEAM

SCALE 1:40

SHEET NOTES:

1. For continuation inside WB girder, see sheets E-97 and E-114B.
2. For continuation inside EB girder, see sheet E-182 and E-114B.
3. Deleted.
4. For typical lighting fixture installation see Details 2 and 3, sheet E-123.
5. Pipe sleeve without conduit going through is spare. Contractor to provide plug or cap at both ends. For location see Section Y-Y on sheet E-72A.
6. Locate light fixture approximate half way between girder wall and girder walkway.
7. For wireway numbers, see sheet E-72.
8. DELETED
9. Terminate conduits at Terminal Box #TEL-5.
10. Terminate conduits at Terminal Box #COM-5.
11. See Detail 4, Dwg E-111B for Structural rack grounding.
12. #2 Bare Copper Wire in conduit, For installation details, see sheet E-72A.
13. Ground conductor shall be protected from damage when exposed outside the structure. Route ground conductor in liquidtight flexible metal conduit for protection, unless noted otherwise on plans. For additional installation details, see Detail 7, sheet E-111A.

NOTES:

1. Reference:- For circuit, conduit/cable tray schedules, see sheets starting at E-401.
2. For wireway support details, see AS sheets.
3. For location of pipe sleeves at the utility platform crossbeams, see Typical Crossbeam Details sheets.
4. For platform elevations, see sheet E-72A.

DIST	COUNTY	ROUTE	KILOMETER POST TOTAL PROJECT	SHEET NO	TOTAL SHEETS
04	SF	80	13.2/13.9	167 R4	1204

James Erlingsson 12/19/02
REGISTERED ELECTRICAL ENGINEER DATE

12-6-04
PLANS APPROVAL DATE

REGISTERED PROFESSIONAL ENGINEER — JENS ERLINGSSON No. 8249 Exp. 9/30/06 ELECTRICAL — STATE OF CALIFORNIA

PB POWER, Inc.
A Parsons Brinckerhoff Company
303 Second St., Suite 700N
San Francisco, CA 94107-1317

The State of California or its officers or agents shall not be responsible for the accuracy or completeness of electronic copies of this plan sheet.

Caltrans now has a web site! To get to the web site, go to http://www.dot.ca.gov

MARK	DATE	REVISIONS DESCRIPTIONS	BY	CH'D	CCO#
4	07/01/11	TOS MODIFICATIONS	RR	RG	81
3	11/20/09	ELECTRICAL GROUNDING	AWG RR	RG FW	75
2	06/25/09	SERVICE PLATFORM ELECTRICAL CHANGES	RR RY	RG FW	55
1	03/30/09	SERVICE PLATFORM ELECTRICAL CHANGES	RR MP	RG FW	55

REQUEST FOR INFORMATION NOT ADDRESSED IN THIS CCO REMAIN IN FORCE

REGISTERED PROFESSIONAL ENGINEER — FADI WALIEDDINE No. 11465 Exp. 12/31/2009 ELECTRICAL — STATE OF CALIFORNIA

FOR REVISION ONLY 1 2 3

REGISTERED PROFESSIONAL ENGINEER — SYN YEE CHIN No. 18186 Exp. 09/30/2011 ELECTRICAL — STATE OF CALIFORNIA

Syn Yee Chin
FOR REVISION ONLY 4

CONTRACT CHANGE ORDER NO. 81
SHEET 43 OF 70

DETAILS

SAS SUPERSTRUCTURE GIRDER WESTBOUND PLATFORM 5 CONDUIT, LIGHTING, AND GROUNDING PLAN

SCALE AS NOTED

E-115

CALCULATED/ DESIGNED BY	DATE	REVISED BY
CHECKED BY	12/01	DATE REVISED
JP	7/01	
BL		

STATE OF CALIFORNIA - DEPARTMENT OF TRANSPORTATION
DESIGN OVERSIGHT
BEHZAD GOLEMOHAMMADI

THIS PLAN IS ACCURATE FOR ELECTRICAL WORK ONLY.

ALL DIMENSIONS ARE IN MILLIMETERS UNLESS OTHERWISE SHOWN.

FOR REDUCED PLANS ORIGINAL SCALE IS IN MILLIMETERS 0 20 40 60 80

DGN FILE =>04-0120F1_0167R04.dgn
USERNAME =>florico

CU 04251 | EA 0120F1

LAST REVISION 00-00-00
DATE PLOTTED => 05-JUL-2011
TIME PLOTTED => 14:55

DIST	COUNTY	ROUTE	KILOMETER POST TOTAL PROJECT	SHEET No	TOTAL SHEETS
04	SF	80	13.2/13.9	168 R5	1204

REGISTERED ELECTRICAL ENGINEER — 12/19/02 DATE

12-6-04
PLANS APPROVAL DATE

REGISTERED PROFESSIONAL ENGINEER — JENS ERLINGSSON No. 8249 Exp. 9/30/06 ELECTRICAL — STATE OF CALIFORNIA

PB POWER, Inc.
A Parsons Brinckerhoff Company
303 Second St., Suite 700N
San Francisco, CA 94107-1317

The State of California or its officers or agents shall not be responsible for the accuracy or completeness of electronic copies of this plan sheet.

Caltrans now has a web site! To get to the web site, go to http://www.dot.ca.gov

Metric

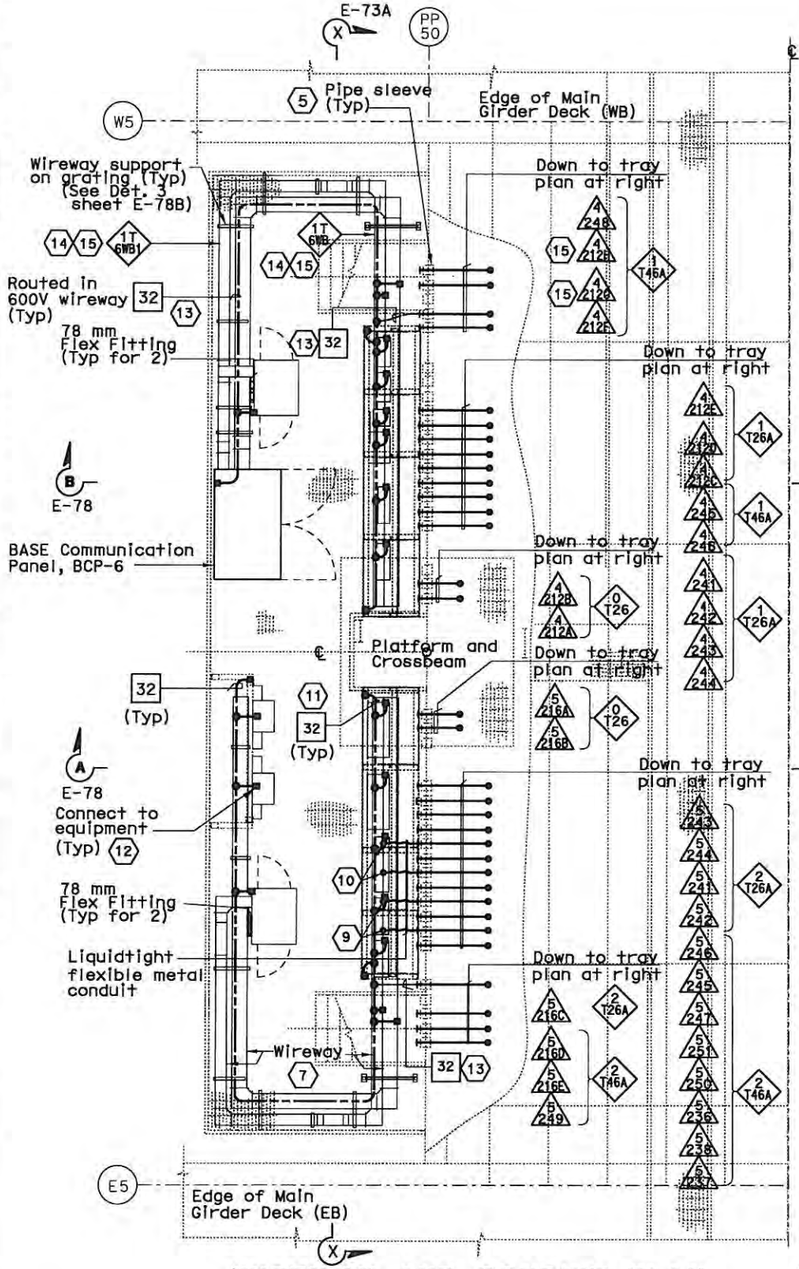

WIREWAY AND CONDUIT PLAN AT SERVICE PLATFORM

NOTES:

1. Reference:- For circuit, conduit/cable tray schedules, see sheets starting at E-401.
2. For wireway support details, see AS sheets.
3. For location of pipe sleeves at the utility platform crossbeams, see Typical Crossbeam Details sheets.
4. For platform elevations, see sheet E-73A.

THIS PLAN IS ACCURATE FOR ELECTRICAL WORK ONLY.

SYN YEE CHIN — REGISTERED PROFESSIONAL ENGINEER — No. 18186 Exp. 09/30/2011 ELECTRICAL — STATE OF CALIFORNIA

Syn Yee Chin
FOR REVISION ONLY
4 5

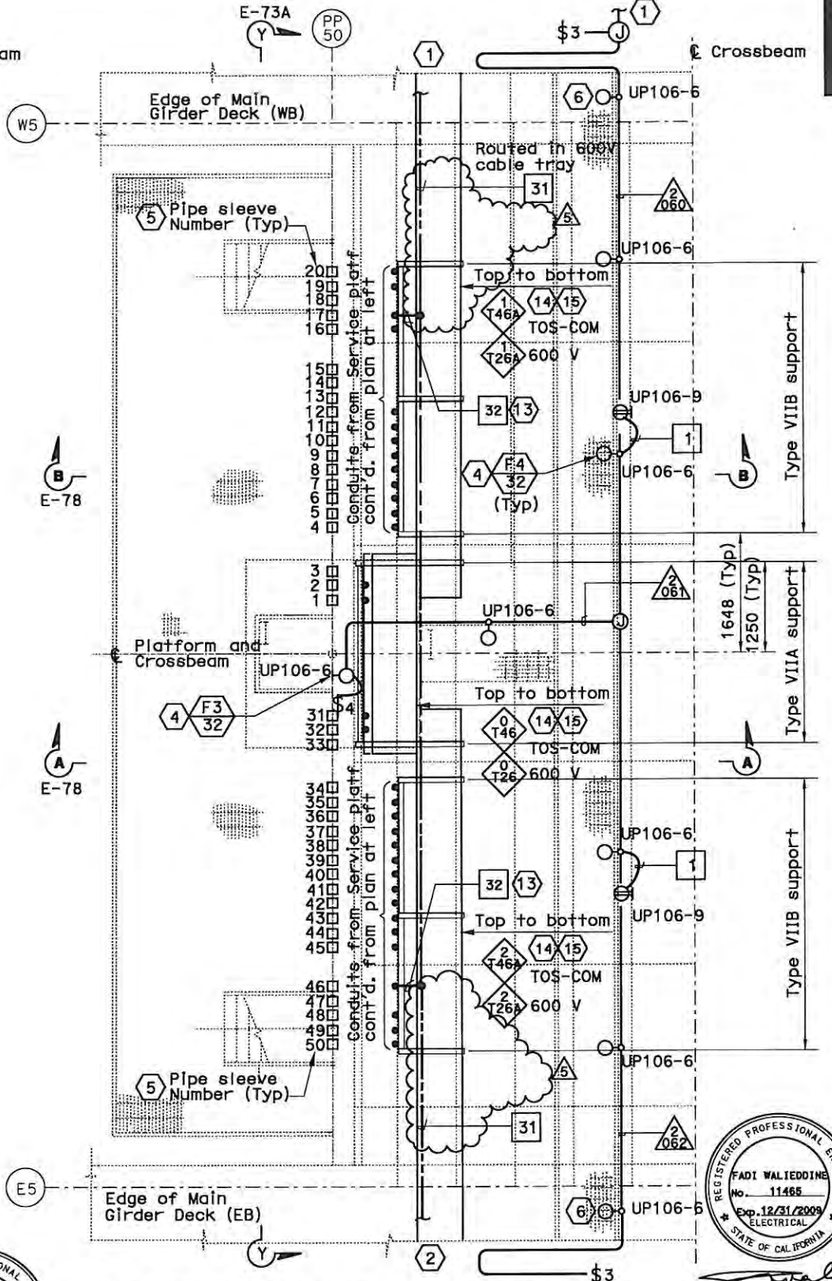

CABLE TRAY AND CONDUIT PLAN INSIDE CROSSBEAM

SCALE 1:40

FADI WALIEDDINE — REGISTERED PROFESSIONAL ENGINEER — No. 11465 Exp. 12/31/2009 ELECTRICAL — STATE OF CALIFORNIA

FOR REVISION ONLY
1 2 3

SHEET NOTES:

1. For continuation inside WB girder, see sheets E-98 and E-114B.
2. For continuation inside EB girder, see sheet E-183 and E-114B.
3. Deleted.
4. For typical lighting fixture installation see Details 2 and 3, sheet E-123.
5. Pipe sleeve without conduit going through is spare. Contractor to provide plug or cap at both ends. For location see Section Y-Y on sheet E-73A.
6. Locate light fixture approximate half way between girder wall and girder walkway.
7. For wireway numbers, see sheet E-73.
8. DELETED
9. Terminate conduits at Terminal Box #TEL-6.
10. Terminate conduits at Terminal Box #COM-6.
11. See Detail 4, Dwg E-111B for Structural rack grounding.
12. #2 Bare Copper Wire in conduit, For installation details, see sheet E-73A.
13. Ground conductor shall be protected from damage when exposed outside the structure. Route ground conductor in liquidtight flexible metal conduit for protection, unless noted otherwise on plans. For additional installation details, see Detail 7, sheet E-111A.
14. Furnish and install BCP-6 and 1-25.4 mm innerduct per BASE fiber optic cable in TOS/COM cable tray and 3-25.4 mm innerducts per conduit 4212H and 4212G.
15. Furnish and install BASE fiber optic cable in innerduct, conduit and wireway to BCP-6. See sheets E-1100 and E-1101.

REQUEST FOR INFORMATION NOT ADDRESSED IN THIS CCO REMAIN IN FORCE

MARK	DATE	DESCRIPTIONS	BY	CH'D	CCO#
		REVISIONS			
5	07/01/11	TOS MODIFICATIONS	RR	RG	81
4	03/01/11	BASE INTEGRATION	RSB	WB	150
3	11/20/09	ELECTRICAL GROUNDING	AWG RR	FW	75
2	06/25/09	SERVICE PLATFORM ELECTRICAL CHANGES	RR RY	RG FW	55
1	03/30/09	SERVICE PLATFORM ELECTRICAL CHANGES	RR MP	RG FW	55

CONTRACT CHANGE ORDER NO. 81
SHEET 44 OF 70

DETAILS
SAS SUPERSTRUCTURE GIRDER WESTBOUND PLATFORM 6 CONDUIT, LIGHTING, AND GROUNDING PLAN

SCALE AS NOTED

E-116

ALL DIMENSIONS ARE IN MILLIMETERS UNLESS OTHERWISE SHOWN.

FOR REDUCED PLANS ORIGINAL SCALE IS IN MILLIMETERS 0 20 40 60 80

DGN FILE =>04-0120F1_0168R05.dgn
USERNAME =>llorico

CU 04251 | EA 0120F1

DRAFT 1 (03/01/11)
STATE OF CALIFORNIA - DEPARTMENT OF TRANSPORTATION
Caltrans
DESIGN OVERSIGHT: BEHZAD GOLEMOHAMMADI
CALCULATED/DESIGNED BY | CHECKED BY
JP | BL
DATE 08/01 | 11/01
REVISED BY | REVISED

LAST REVISION 00-00-00
DATE PLOTTED => 05-JUL-2011
TIME PLOTTED => 14:55

DIST	COUNTY	ROUTE	KILOMETER POST TOTAL PROJECT	SHEET No	TOTAL SHEETS
04	SF	80	13.2/13.9	169 R4	1204

12/19/02
REGISTERED ELECTRICAL ENGINEER DATE

12-6-04
PLANS APPROVAL DATE

JENS ERLINGSSON No. 8249 Exp. 9/30/06 ELECTRICAL — REGISTERED PROFESSIONAL ENGINEER — STATE OF CALIFORNIA

PB POWER, Inc.
A Parsons Brinckerhoff Company
303 Second St., Suite 700N
San Francisco, CA 94107-1317

The State of California or its officers or agents shall not be responsible for the accuracy or completeness of electronic copies of this plan sheet.

Caltrans now has a web site! To get to the web site, go to http://www.dot.ca.gov

Metric

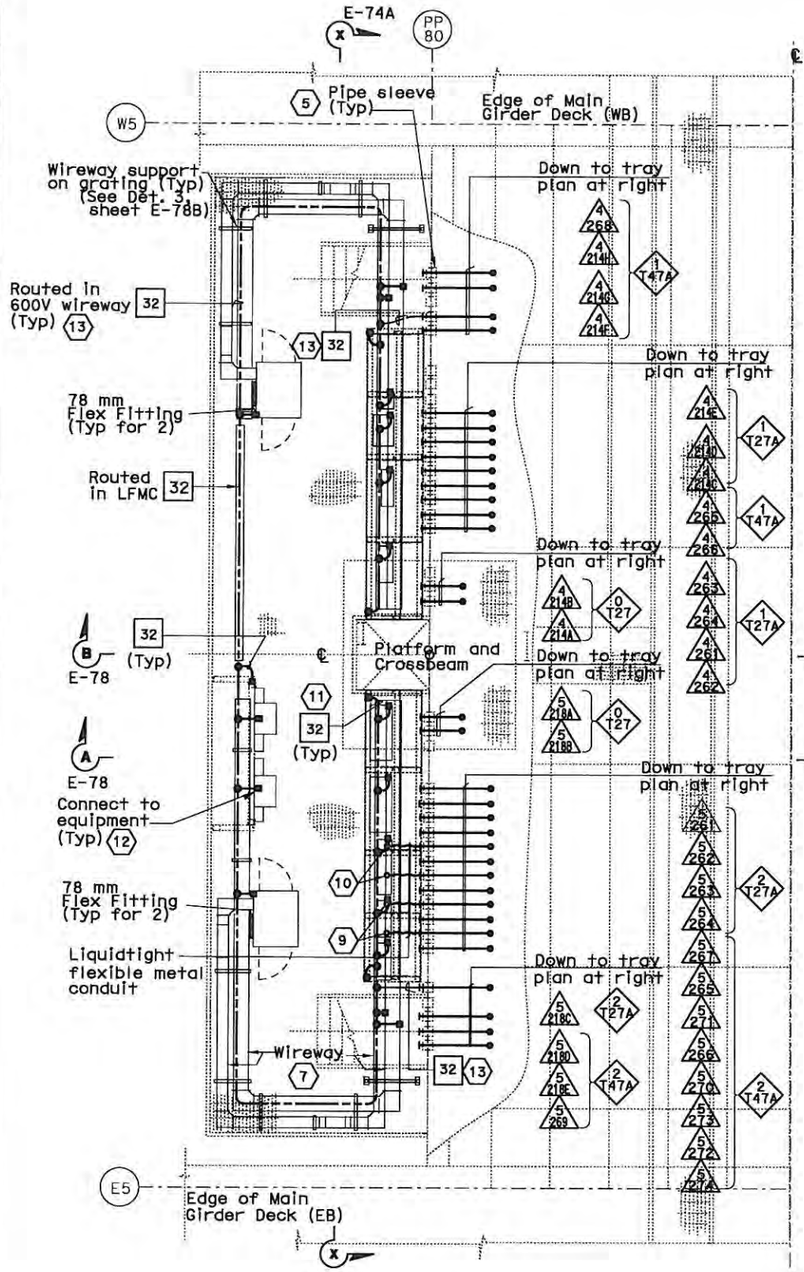

WIREWAY AND CONDUIT PLAN AT SERVICE PLATFORM

SCALE 1:40

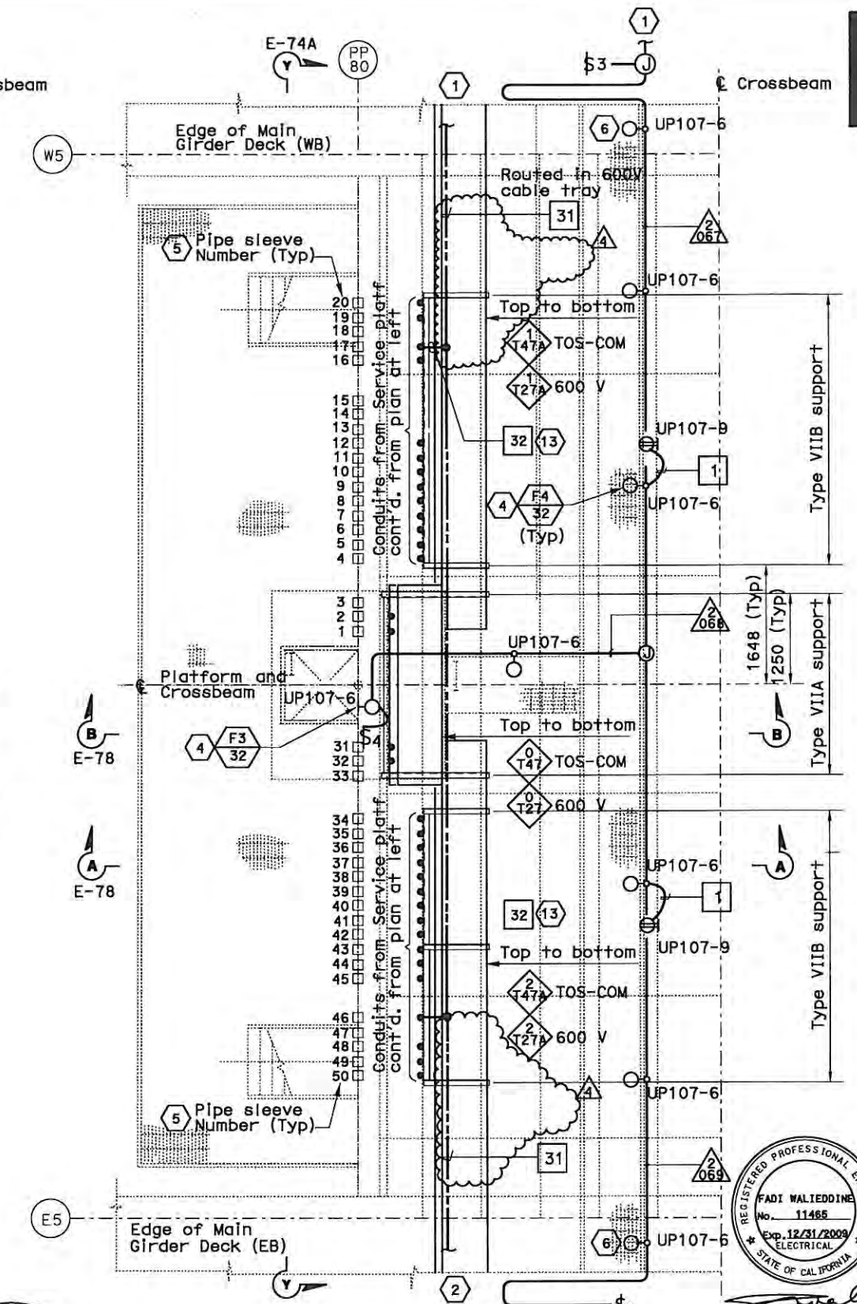

CABLE TRAY AND CONDUIT PLAN INSIDE CROSSBEAM

SCALE 1:40

SHEET NOTES:

1. For continuation inside WB girder, see sheets E-99 and E-114B.
2. For continuation inside EB girder, see sheet E-184 and E-114B.
3. Deleted.
4. For typical lighting fixture installation see Details 2 and 3, sheet E-123.
5. Pipe sleeve without conduit going through is spare. Contractor to provide plug or cap at both ends. For location see Section Y-Y on sheet E-74A.
6. Locate light fixture approximate half way between girder wall and girder walkway.
7. For wireway numbers, see sheet E-74.
8. DELETED
9. Terminate conduits at Terminal Box #TEL-7.
10. Terminate conduits at Terminal Box #COM-7.
11. See Detail 4, Dwg E-111B for Structural rack grounding.
12. #2 Bare Copper Wire in conduit, For installation details, see sheet E-74A.
13. Ground conductor shall be protected from damage when exposed outside the structure. Route ground conductor in liquidtight flexible metal conduit for protection, unless noted otherwise on plans. For additional installation details, see Detail 7, sheet E-111A.

NOTES:

1. Reference:- For circuit, conduit/cable tray schedules, see sheets starting at E-401.
2. For wireway support details, see AS sheets.
3. For location of pipe sleeves at the utility platform crossbeams, see Typical Crossbeam Details sheets.
4. For platform elevations, see sheet E-74A.

REQUEST FOR INFORMATION NOT ADDRESSED IN THIS CCO REMAIN IN FORCE

MARK	DATE	DESCRIPTIONS REVISIONS	BY	CH'D	CCO#
4	07/01/11	TOS MODIFICATIONS	RR	RG	81
3	11/20/09	ELECTRICAL GROUNDING	AWG RR	RG FW	75
2	06/25/09	SERVICE PLATFORM ELECTRICAL CHANGES	RR RY	RG FW	55
1	03/30/09	SERVICE PLATFORM ELECTRICAL CHANGES	RR MP	RG FW	55

FADI WALIEDDINE No. 11465 Exp. 12/31/2009 ELECTRICAL — REGISTERED PROFESSIONAL ENGINEER — STATE OF CALIFORNIA

FOR REVISION ONLY 1 2 3

SYN YEE CHIN No. 18186 Exp. 09/30/2011 ELECTRICAL — REGISTERED PROFESSIONAL ENGINEER — STATE OF CALIFORNIA

4

Syn Yee Chin
FOR REVISION ONLY

CONTRACT CHANGE ORDER NO. 81
SHEET 45 OF 70

DETAILS
SAS SUPERSTRUCTURE GIRDER WESTBOUND PLATFORM 7 CONDUIT, LIGHTING, AND GROUNDING PLAN

SCALE AS NOTED

E-117

STATE OF CALIFORNIA - DEPARTMENT OF TRANSPORTATION
Caltrans
DESIGN OVERSIGHT: BEHZAD GOLEMOHAMMADI
CALCULATED/DESIGNED BY
CHECKED BY
REVISED

LAST REVISION 00-00-00
DATE PLOTTED => 05-JUL-2011
TIME PLOTTED => 14:55

THIS PLAN IS ACCURATE FOR ELECTRICAL WORK ONLY.

ALL DIMENSIONS ARE IN MILLIMETERS UNLESS OTHERWISE SHOWN.

FOR REDUCED PLANS ORIGINAL SCALE IS IN MILLIMETERS 0 20 40 60 80

DGN FILE =>04-0120f1_0169R04.dgn
USERNAME =>liorico

CU 04251

EA 0120F1

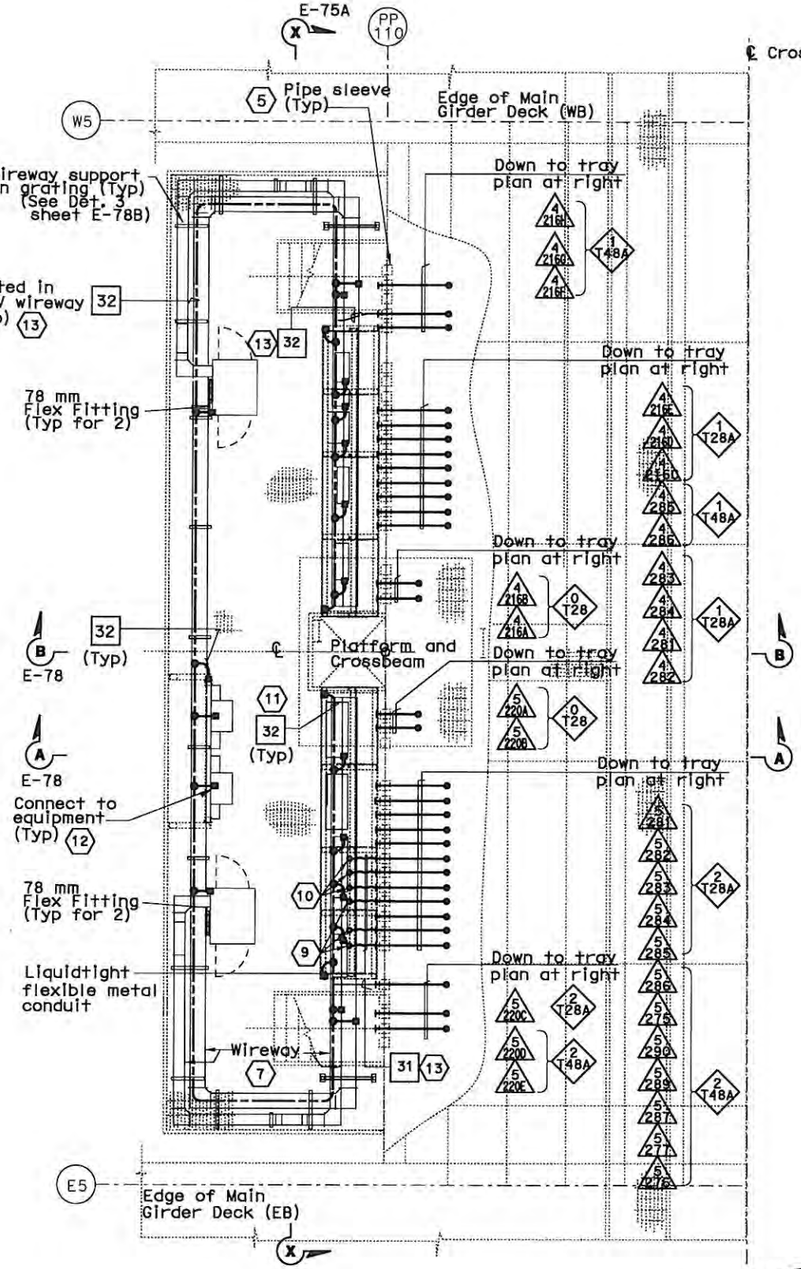

WIREWAY AND CONDUIT PLAN AT SERVICE PLATFORM

SCALE 1:40

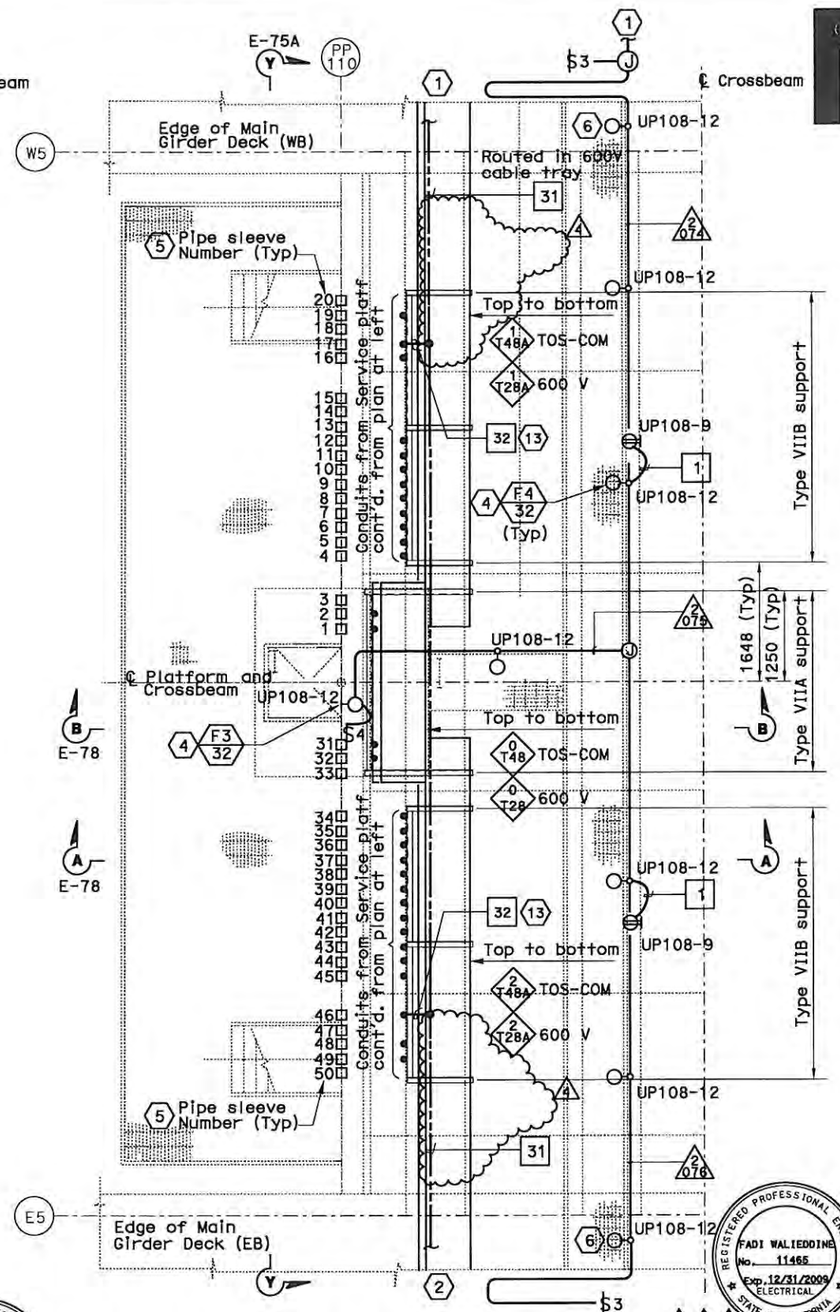

CABLE TRAY AND CONDUIT PLAN INSIDE CROSSBEAM

SCALE 1:40

SHEET NOTES:

1. For continuation inside WB girder, see sheets E-100 and E-114B.
2. For continuation inside EB girder, see sheet E-185 and E-114B.
3. Deleted.
4. For typical lighting fixture installation see Details 2 and 3, sheet E-123.
5. Pipe sleeve without conduit going through is spare. Contractor to provide plug or cap at both ends. For location see Section Y-Y on sheet E-75A.
6. Locate light fixture approximate half way between girder wall and girder walkway.
7. For wireway numbers, see sheet E-75.
8. DELETED
9. Terminate conduits at Terminal Box #TEL-8.
10. Terminate conduits at Terminal Box #COM-8.
11. See Detail 4, Dwg E-111B for Structural rack grounding.
12. #2 Bare Copper Wire in conduit, For installation details, see sheet E-75A.
13. Ground conductor shall be protected from damage when exposed outside the structure. Route ground conductor in liquidtight flexible metal conduit for protection, unless noted otherwise on plans. For additional installation details, see Detail 6, sheet E-111A.

NOTES:

1. Reference:- For circuit, conduit/cable tray schedules, see sheets starting at E-401.
2. For wireway support details, see AS sheets.
3. For location of pipe sleeves at the utility platform crossbeams, see Typical Crossbeam Details sheets.

DIST	COUNTY	ROUTE	KILOMETER POST TOTAL PROJECT	SHEET No	TOTAL SHEETS
04	SF	80	13.2/13.9	170 R4	1204

12/19/02
REGISTERED ELECTRICAL ENGINEER DATE

12-6-04
PLANS APPROVAL DATE

REGISTERED PROFESSIONAL ENGINEER — JENS ERLINGSSON No. 8249 Exp. 9/30/06 ELECTRICAL — STATE OF CALIFORNIA

PB POWER, Inc.
A Parsons Brinckerhoff Company
303 Second St., Suite 700N
San Francisco, CA 94107-1317

The State of California or its officers or agents shall not be responsible for the accuracy or completeness of electronic copies of this plan sheet.

Caltrans now has a web site! To get to the web site, go to http://www.dot.ca.gov

REGISTERED PROFESSIONAL ENGINEER — SYN YEE CHIN No. 18186 Exp. 09/30/2011 ELECTRICAL — STATE OF CALIFORNIA

4 Syn Yee Chin
FOR REVISION ONLY

REGISTERED PROFESSIONAL ENGINEER — FADI WALIEDDINE No. 11465 Exp. 12/31/2009 ELECTRICAL — STATE OF CALIFORNIA

1 2 3
FOR REVISION ONLY

REQUEST FOR INFORMATION NOT ADDRESSED IN THIS CCO REMAIN IN FORCE

MARK	DATE	REVISIONS DESCRIPTIONS	BY	CH'D	CCO#
4	07/01/11	TOS MODIFICATIONS	RR	RG	81
3	11/20/09	ELECTRICAL GROUNDING	AWG RR	RG FW	75
2	06/25/09	SERVICE PLATFORM ELECTRICAL CHANGES	RR RY	RG FW	55
1	03/30/09	SERVICE PLATFORM ELECTRICAL CHANGES	RR MP	RG FW	55

CONTRACT CHANGE ORDER NO. 81
SHEET 46 OF 70

DETAILS
SAS SUPERSTRUCTURE GIRDER WESTBOUND PLATFORM 8 CONDUIT, LIGHTING, AND GROUNDING PLAN

SCALE AS NOTED

E-118

DESIGN OVERSIGHT	CALCULATED/ DESIGNED BY	CHECKED BY	DATE	REVISED BY	DATE REVISED
BEHZAD GOLEMOHAMMADI	JP	BL	7/01		12/01

STATE OF CALIFORNIA - DEPARTMENT OF TRANSPORTATION
Caltrans

THIS PLAN IS ACCURATE FOR ELECTRICAL WORK ONLY.

ALL DIMENSIONS ARE IN MILLIMETERS UNLESS OTHERWISE SHOWN.

FOR REDUCED PLANS ORIGINAL SCALE IS IN MILLIMETERS 0 20 40 60 80

DGN FILE =>04-0120f1_0170R04.dgn
USERNAME =>llorico

CU 04251 | EA 0120F1

LAST REVISION 00-00-00
DATE PLOTTED => 05-JUL-2011
TIME PLOTTED => 14:55

DIST	COUNTY	ROUTE	KILOMETER POST TOTAL PROJECT	SHEET No	TOTAL SHEETS
04	SF	80	13.2/13.9	216 R2	1204

12/19/02
REGISTERED ELECTRICAL ENGINEER DATE

12-6-04
PLANS APPROVAL DATE

REGISTERED PROFESSIONAL ENGINEER — JENS ERLINGSSON No. 8249 Exp. 9/30/06 ELECTRICAL — STATE OF CALIFORNIA

PB POWER, Inc.
A Parsons Brinckerhoff Company
303 Second St., Suite 700N
San Francisco, CA 94107-1317

The State of California or its officers or agents shall not be responsible for the accuracy or completeness of electronic copies of this plan sheet.

Caltrans now has a web site! To get to the web site, go to http://www.dot.ca.gov

Metric

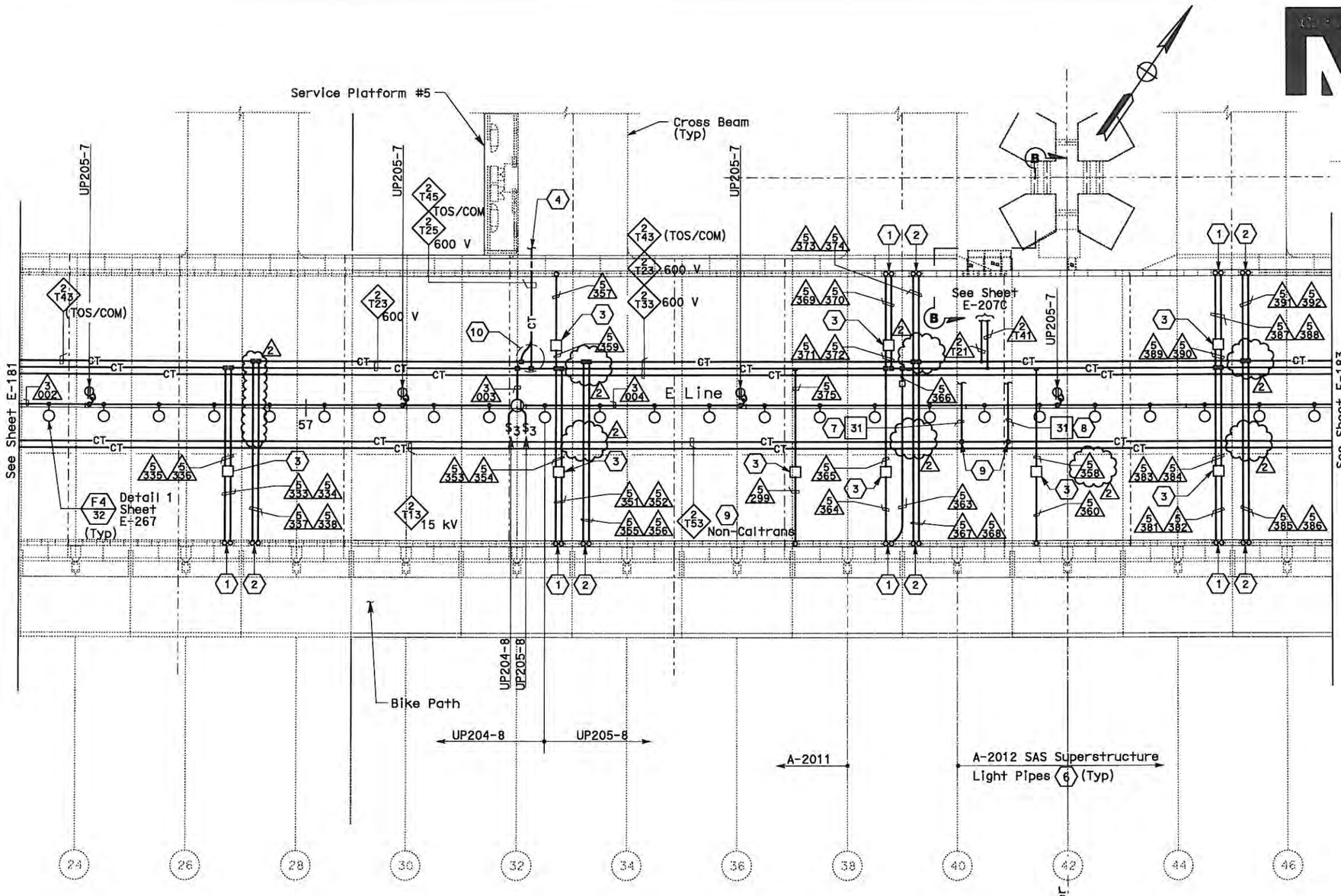

SHEET NOTES:

1. Conduit up to PB-LTG located in barrier, see sheet E-136.
2. Conduit up to PB-COM located in barrier, see sheet E-136.
3. PB-2A, locate on top of floor.
4. For cable tray run and lighting inside crossbeam, see sheet E-115.
5. For lighting inside crossbeam, see sheet E-119.
6. For future light pipe, see sheets E-202 thru E-204. For light pipe schedule, see sheet E-217.
7. Routed inside conduit 3330A.
8. Routed inside conduit 3339A.
9. 250 kcmil copper grounding conductor exothermically welded to 500 kcmil system grounding conductor.
10. For fiber splice tray detail, refer to sheet E-355.

NOTES:

1. References:
   - TOS equipment is shown for conduit routing only. For typical details of TOS controller and devices, see sheets E-344 through E-357.
   - For types of pull boxes, splice boxes and enclosures, see sheet E-169.
   - For bridge grounding plan, see sheet E-196.
   - For circuit and conduit/cable tray schedules, see sheets starting at E-401.
2. For other work related to items not shown on this sheet, see Electrical Special Provisions.
3. The girder lighting fixtures are shown diagrammatically. Contractor shall install fixtures at railing posts with a maximum of 8000 mm between fixtures. For types and typical lighting fixture installation details, see sheet E-206.
4. The cable trays are shown diagrammatically. For typical girder cable tray plans and sections, see sheets E-207 and E-208.
5. For Section B-B, see sheet E-264A.

SAS SUPERSTRUCTURE - CONDUIT AND CABLE TRAY PLAN

SAS SUPERSTRUCTURE GIRDER EASTBOUND
LIGHTING AND ELECTRICAL SYSTEMS

SCALE 1:200

REGISTERED PROFESSIONAL ENGINEER — S. A. ESTOQUE, JR. No. E-10151 Exp. 12/31/2008 ELECTRICAL — STATE OF CALIFORNIA — 1

FOR REVISION ONLY

REQUEST FOR INFORMATION NOT ADDRESSED IN THIS CCO REMAIN IN FORCE

MARK	DATE	DESCRIPTIONS REVISIONS	BY	CH'D	CCO#
2	07/01/11	TOS MODIFICATIONS	RR	RG	81
1	02/25/08	CABLE TRAY CHANGES	MP	RG SE	42S1

CONTRACT CHANGE ORDER NO. 81
SHEET 47 OF 70

REGISTERED PROFESSIONAL ENGINEER — SYN YEE CHIN No. 18186 Exp. 09/30/2011 ELECTRICAL — STATE OF CALIFORNIA — 2

Syn Yee Chin
FOR REVISION ONLY

THIS PLAN IS ACCURATE FOR ELECTRICAL WORK ONLY.

E-182

DESIGN OVERSIGHT	CALCULATED/ DESIGNED BY	DRAWN BY	CHECKED BY
BEHZAD GOLEMOHAMMADI			

DATE	REVISED BY	EDC	DATE REVISED
08/02		CYF	08/02

STATE OF CALIFORNIA - DEPARTMENT OF TRANSPORTATION
Caltrans

FOR REDUCED PLANS ORIGINAL SCALE IS IN MILLIMETERS 0 20 40 60 80

DGN FILE =>04-0120f1_0216R02.dgn
USERNAME =>llorico

CU 04251 | EA 0120F1

LAST REVISION 00-00-00 | DATE PLOTTED =>05-JUL-2011 | TIME PLOTTED =>14:55

DIST	COUNTY	ROUTE	KILOMETER POST TOTAL PROJECT	SHEET No	TOTAL SHEETS
04	SF	80	13.2/13.9	219 R3	1204

12/19/02
REGISTERED ELECTRICAL ENGINEER DATE

REGISTERED PROFESSIONAL ENGINEER — JENS ERLINGSSON No. 8249 Exp. 9/30/06 ELECTRICAL — STATE OF CALIFORNIA

12-6-04
PLANS APPROVAL DATE

PB POWER, Inc.
A Parsons Brinckerhoff Company
303 Second St., Suite 700N
San Francisco, CA 94107-1317

The State of California or its officers or agents shall not be responsible for the accuracy or completeness of electronic copies of this plan sheet.

Caltrans now has a web site! To get to the web site, go to http://www.dot.ca.gov

Metric

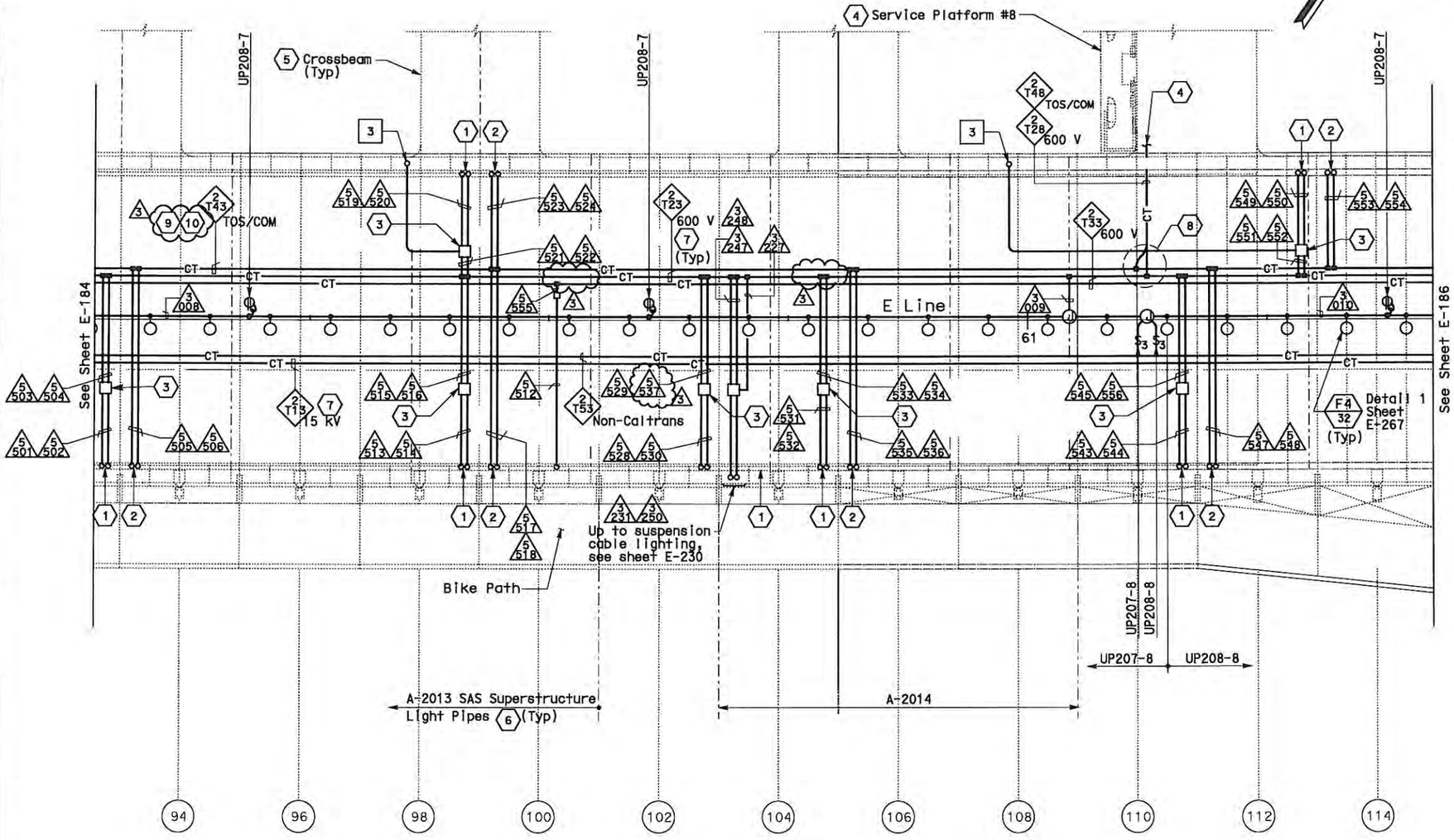

SHEET NOTES:

1. Conduit up to PB-LTG located in barrier, see sheet E-139.
2. Conduit up to PB-COM located in barrier, see sheet E-139.
3. PB-2A, locate on top of floor.
4. For cable tray run and lighting inside crossbeam, see sheet E-118.
5. For lighting inside crossbeam, see sheet E-119.
6. For future light pipes, see sheets E-202 thru E-204. For light pipe schedule, see sheet E-217.
7. For cable tray & ground bar support, refer to sheet E-208.
8. For fiber splice tray detail, refer to sheet E-355.
9. Furnish and install 1-25.4 mm innerduct per BASE fiber optic cable in TOS/COM cable tray.
10. Furnish and install BASE fiber optic cable in innerduct. See sheet E-1101.

NOTES:

1. References:
   - TOS equipment is shown for conduit routing only. For typical details of TOS controller and devices, see sheets E-344 through E-357.
   - For types of pull boxes, splice boxes and enclosures, see sheet E-169.
   - For bridge grounding plan, see sheet E-196.
   - For circuit and conduit/cable tray schedules, see sheets starting at E-401.
2. For other work related to items not shown on this sheet, see Electrical Special Provisions.
3. The girder lighting fixtures are shown diagrammatically. Contractor shall install fixtures at railing posts with a maximum of 8000 mm between fixtures. For types and typical lighting fixture installation details, see sheet E-206.
4. The cable trays are shown diagrammatically. For typical girder cable tray plans and sections, see sheets E-207 and E-208.

SAS SUPERSTRUCTURE - CONDUIT AND CABLE TRAY PLAN

REGISTERED PROFESSIONAL ENGINEER — WARREN FUMIO TAKATA No. E 8651 Exp. 9/30/2008 ELECTRICAL — STATE OF CALIFORNIA

FOR REVISION ONLY 1

REGISTERED PROFESSIONAL ENGINEER — SYN YEE CHIN No. 18186 Exp. 09/30/2011 ELECTRICAL — STATE OF CALIFORNIA

FOR REVISION ONLY 2 3

REQUEST FOR INFORMATION NOT ADDRESSED IN THIS CCO REMAIN IN FORCE

MARK	DATE	REVISIONS DESCRIPTIONS	BY	CH'D	CCO#
3	07/01/11	TOS MODIFICATIONS	RR	RG	81
2	03/01/11	BASE INTEGRATION	RSB	WB	150
1	02/19/08	ELECTRICAL MODIFICATIONS	MP EL	RR	42

CONTRACT CHANGE ORDER NO. 81
SHEET 48 OF 70

SAS SUPERSTRUCTURE GIRDER EASTBOUND LIGHTING AND ELECTRICAL SYSTEMS

SCALE 1:200

E-185

DRAFT 1 (03/01/11)
STATE OF CALIFORNIA - DEPARTMENT OF TRANSPORTATION
Caltrans
DESIGN OVERSIGHT: BEHZAD GOLEMOHAMMADI
CALCULATED/ DESIGNED BY | CHECKED BY | EDC CYF | DATE 08/02 08/02 | REVISED BY | DATE REVISED

THIS PLAN IS ACCURATE FOR ELECTRICAL WORK ONLY.

ALL DIMENSIONS ARE IN METERS UNLESS OTHERWISE SHOWN.

FOR REDUCED PLANS ORIGINAL SCALE IS IN MILLIMETERS 0 20 40 60 80

DGN FILE =>04-0120f1_0219R03.dgn
USERNAME =>florico

CU 04251 | EA 0120F1

LAST REVISION 00-00-00 | DATE PLOTTED => 05-JUL-2011 | TIME PLOTTED => 14:55

REQUEST FOR INFORMATION NOT ADDRESSED IN THIS CCO REMAIN IN FORCE					
5	09/12/11	TOS MODIFICATIONS	RG RR	ML	81
2	12/11/09	TOWER UTILITY PANELS	TW	RG FW	70
1	02/19/08	ELECTRICAL MODIFICATIONS	MP EL	RR	42
MARK	DATE	DESCRIPTIONS REVISIONS	BY	CH'D	CCO#

CONTRACT CHANGE ORDER NO. 81
SHEET 49 OF 70

SEAN COUGHLIN
No. 12227
Exp. 9/30/08
ELECTRICAL
REGISTERED PROFESSIONAL ENGINEER
STATE OF CALIFORNIA
REGISTERED ELECTRICAL ENGINEER
1

FADI WALIEDDINE
No. 11465
Exp. 12/31/2009
ELECTRICAL
REGISTERED PROFESSIONAL ENGINEER
STATE OF CALIFORNIA
FOR REVISION ONLY
2

M.P. Lee
No. 13435
Exp. 9-30-12
ELECT
REGISTERED PROFESSIONAL ENGINEER
STATE OF CALIFORNIA
FOR REVISION ONLY
3

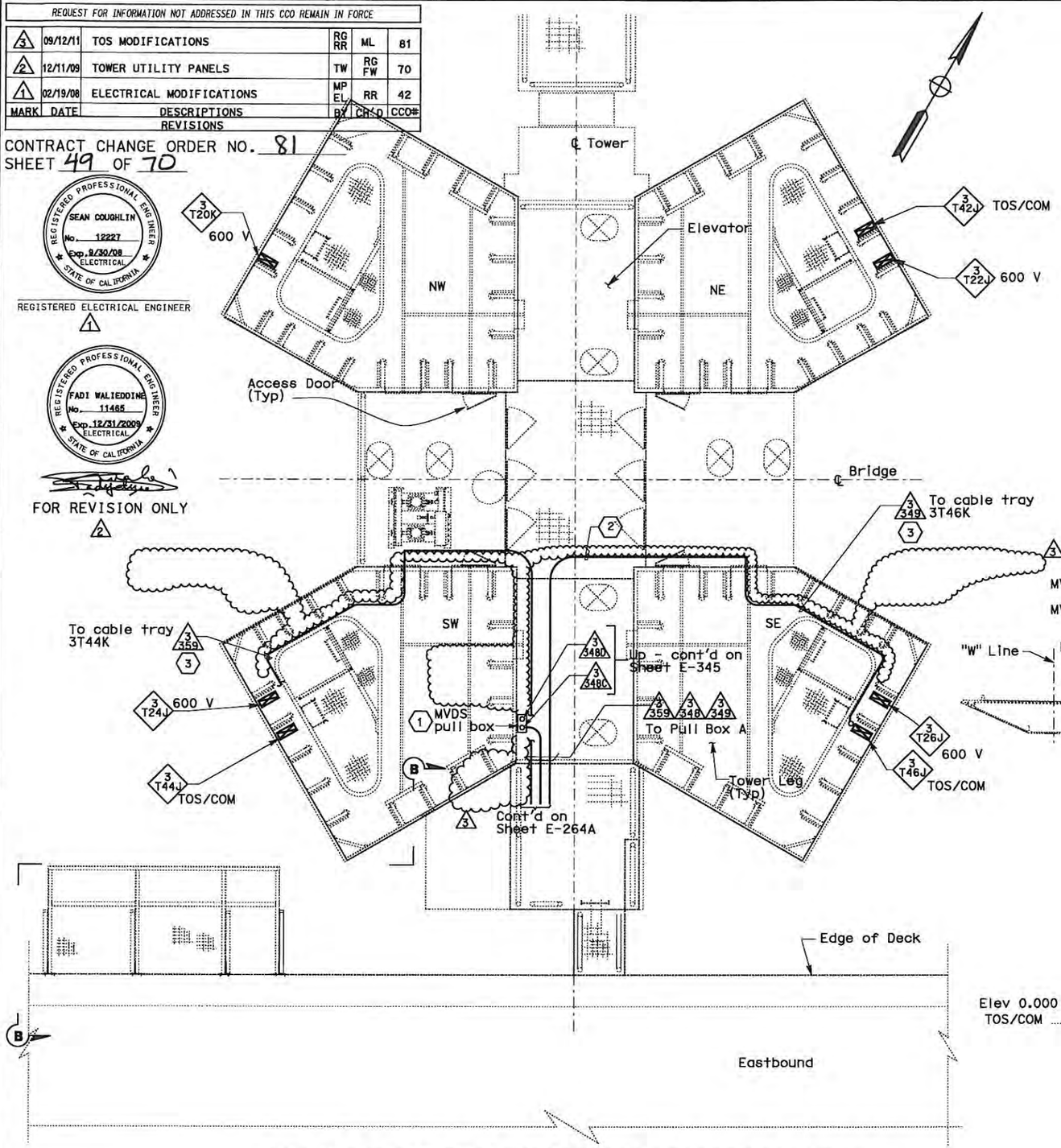

PLAN AT ACCESS PLATFORM AT ELEV 53.85 m

Some conduits and equipment are not shown for clarity.
See sheets E-264, E-264B, E-345, and E-366
for more conduit and equipment information.

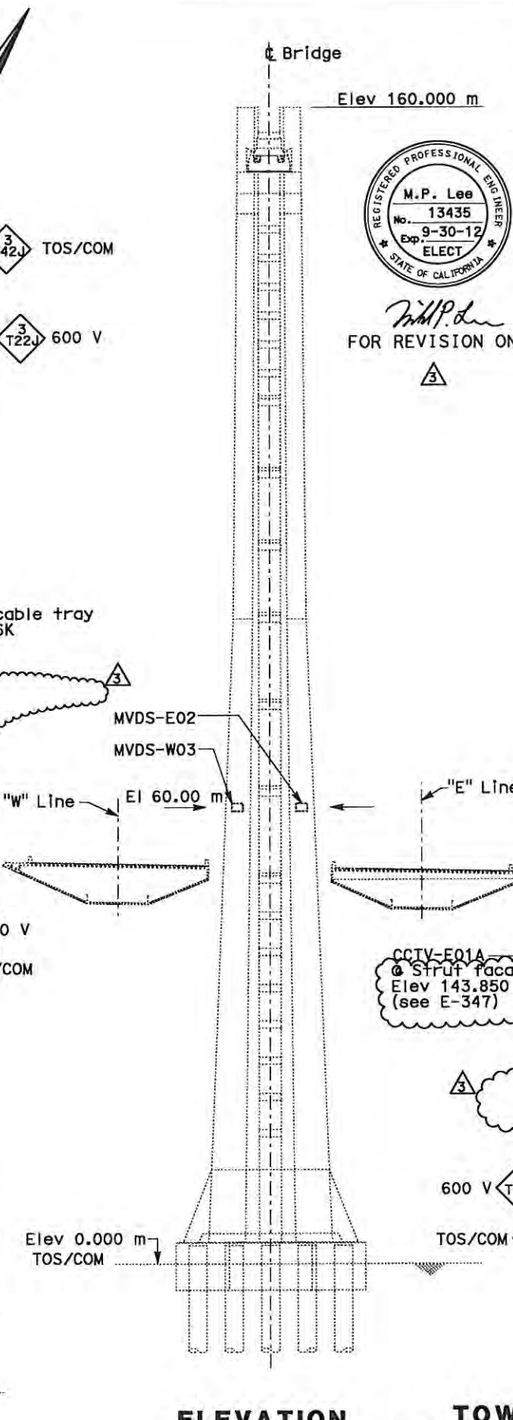

ELEVATION

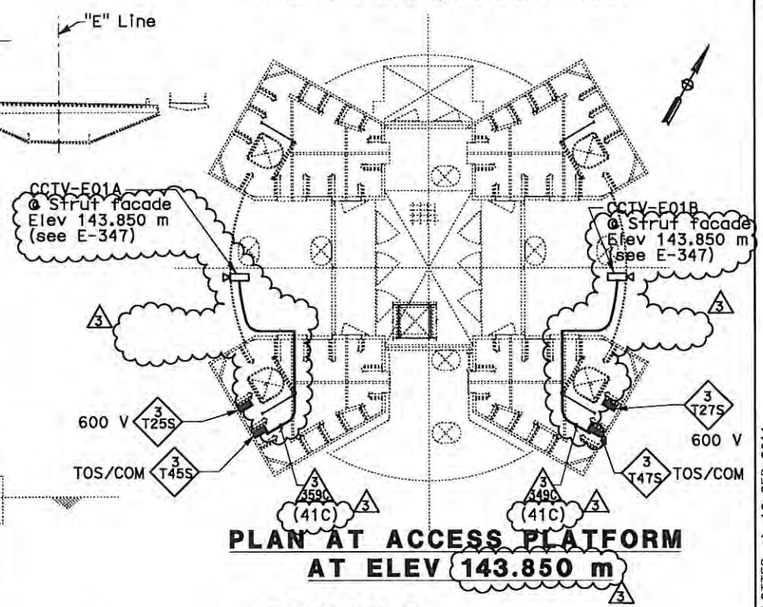

PLAN AT ACCESS PLATFORM AT ELEV 143.850 m

DETAILS
TOWER AND SUSPENSION CABLE TRAFFIC OPERATIONS SYSTEM CONDUIT

NO SCALE

SHEET NOTES:

1. For conduit routing to MVDS units. See elevation on this sheet and sheet E-345.
2. All conduits which thereafter cross the access walkways shall be raised to a level of at least 2438 above the grating to pass overhead, allowing free walkways on the remaining three quadrants of the platform. Door on north face of SE tower shaft shall remain accessible.
3. Conduits are at El 56.422 and connected to 600 V cable tray at this elevation inside respective tower shaft.

NOTES:

1. References:
   - For conduit and cable tray schedules, see sheets starting at E-401.
2. For Section B-B, see sheet E-264A.

THIS PLAN ACCURATE FOR ELECTRICAL WORK ONLY.

ALL DIMENSIONS IN MILLIMETERS UNLESS OTHERWISE SHOWN

DIST	COUNTY	ROUTE	KILOMETER POST TOTAL PROJECT	SHEET No	TOTAL SHEETS
04	SF	80	13.2/13.9	284 R3	1204

M.P. Lee 12/19/02
REGISTERED CIVIL ENGINEER DATE

12-6-04
PLANS APPROVAL DATE

Michael Dahlin
No. 47186
Exp. 12/31/05
CIVIL
REGISTERED PROFESSIONAL ENGINEER
STATE OF CALIFORNIA

PB POWER, Inc.
A Parsons Brinckerhoff Company
303 Second St., Suite 700N
San Francisco, CA 94107-1317

The State of California or its officers or agents shall not be responsible for the accuracy or completeness of electronic copies of this plan sheet.

Caltrans now has a web site! To get to the web site, go to http://www.dot.ca.gov

STATE OF CALIFORNIA - DEPARTMENT OF TRANSPORTATION
Caltrans

DESIGN OVERSIGHT	CALCULATED/ DESIGNED BY	DRAWN BY	CHECKED BY	DATE	REVISED BY	DATE REVISED
BEHZAD GOLEMOHAMMADI	MD	WADI	PBF	11/01	12/01	

LAST REVISION 00-00-00
DATE PLOTTED => 12-SEP-2011
TIME PLOTTED => 10:33

FOR REDUCED PLANS ORIGINAL SCALE IS IN MILLIMETERS 0 20 40 60 80

DGN FILE =>04-0120f1_0284R03.dgn
USERNAME =>llorico

CU 04251 EA 0120F1

E-281

DIST	COUNTY	ROUTE	KILOMETER POST TOTAL PROJECT	SHEET No	TOTAL SHEETS
04	SF	80	13.2/13.9	320R1	1204

REGISTERED CIVIL ENGINEER — DATE 12/19/02

12-6-04
PLANS APPROVAL DATE

REGISTERED PROFESSIONAL ENGINEER — Michael Dahlin — No. 47186 — Exp. 12/31/05 — CIVIL — STATE OF CALIFORNIA

PB Farradyne
A Parsons Brinckerhoff Company
303 Second St., Suite 700N
San Francisco, CA 94107-1317

The State of California or its officers or agents shall not be responsible for the accuracy or completeness of electronic copies of this plan sheet.

Caltrans now has a web site! To get to the web site, go to: http://www.dot.ca.gov

REQUEST FOR INFORMATION NOT ADDRESSED IN THIS CCO REMAIN IN FORCE					
MARK	DATE	REVISIONS / DESCRIPTIONS	BY	CH'D	CCO#
1	07/01/11	TOS MODIFICATIONS	RG RR	ML	81

CONTRACT CHANGE ORDER NO. 81
SHEET 50 OF 70

REGISTERED PROFESSIONAL ENGINEER — M.P. Lee — No. 13435 — Exp. 9-30-12 — ELECT — STATE OF CALIFORNIA

1

FOR REVISION ONLY

SHEET NOTES:

1. For all platform details, see structural plans.
2. See sheet E-349 for CCTV system layout.
3. See sheet E-281 for CCTV conduit routing.

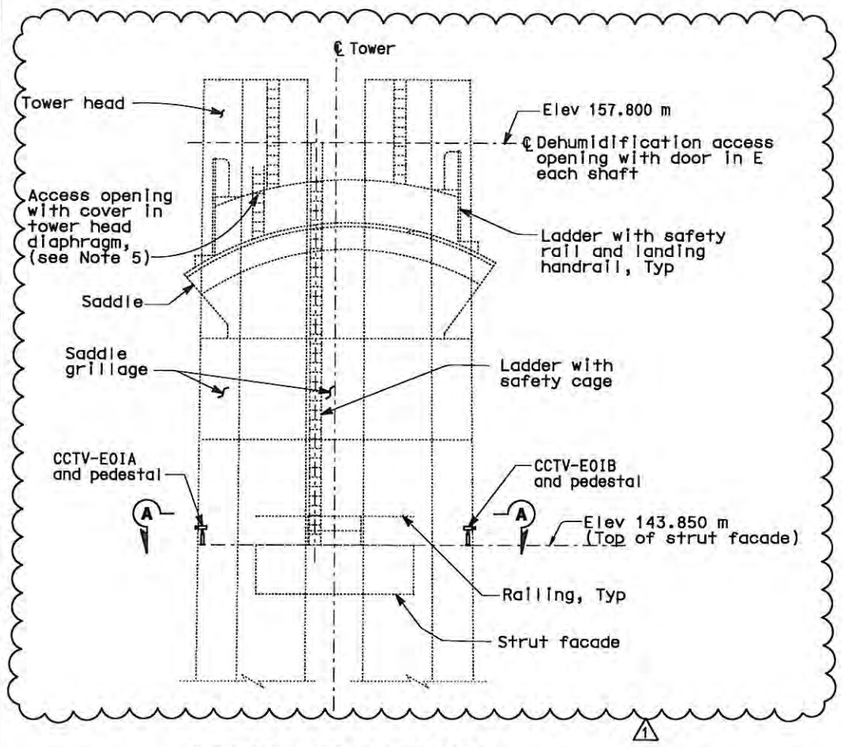

TOWER ELEVATION
SCALE 1:100

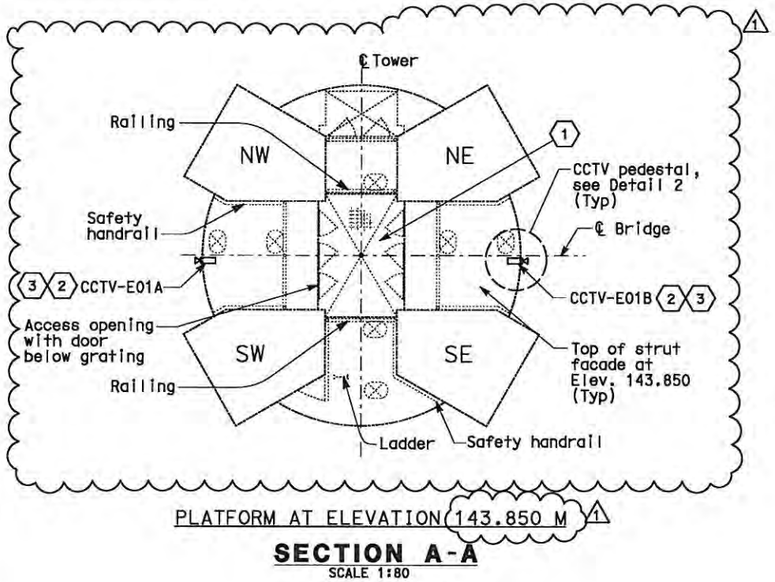

PLATFORM AT ELEVATION 143.850 M

SECTION A-A
SCALE 1:80

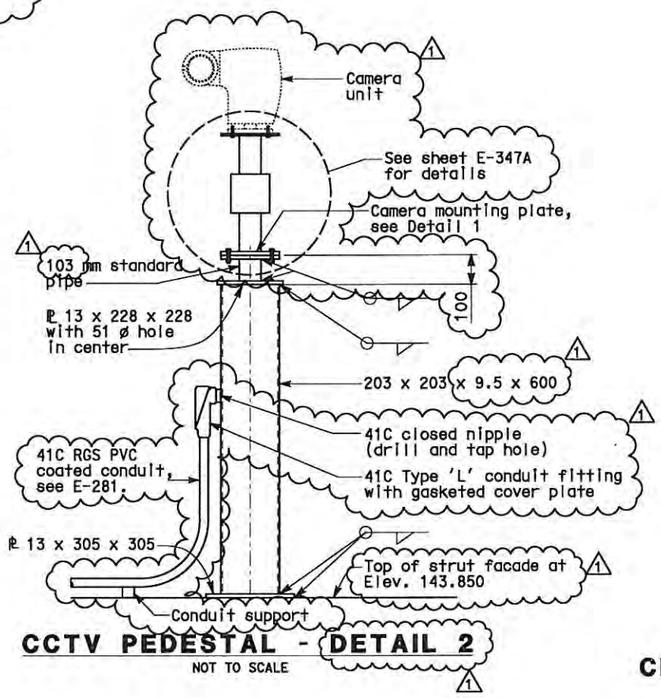

CCTV PEDESTAL - DETAIL 2
NOT TO SCALE

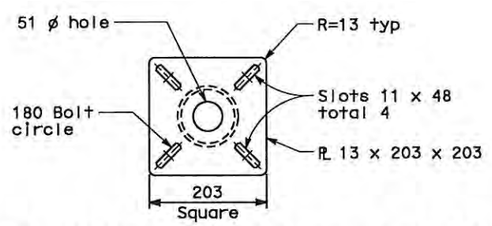

CAMERA MOUNTING PLATE - DETAIL 1
NOT TO SCALE

CCTV SCHEDULE				
ID #	STATION	CABINET ID #	TOWER REFERENCE SHEET	SERVICE PLATFORM REFERENCE SHEET
CCTV-E01A	E 57+70	TOS-6EA	E-281	E-73
CCTV-E01B	E 57+70	TOS-6WA	E-281	E-73

DETAILS
TRAFFIC OPERATIONS SYSTEM
CLOSED CIRCUIT TELEVISION CAMERA STATION
TOWER INSTALLATION
SCALE AS NOTED

E-347

THIS PLAN IS ACCURATE FOR ELECTRICAL WORK ONLY.

ALL DIMENSIONS IN MILLIMETERS UNLESS OTHERWISE SHOWN.

STATE OF CALIFORNIA - DEPARTMENT OF TRANSPORTATION — Caltrans
DESIGN OVERSIGHT — BEHZAD GOLEMOHAMMADI
CALCULATED/ DESIGNED BY — MD
CHECKED BY — PBF
DATE REVISED — 12/01
REVISED BY — DATE 11/01

LAST REVISION 00-00-00 — DATE PLOTTED => 05-JUL-2011 — TIME PLOTTED => 14:55

FOR REDUCED PLANS ORIGINAL SCALE IS IN MILLIMETERS 0 20 40 60 80

DGN FILE =>04-0120f1_0320R01.dgn
USERNAME =>llorico

CU 04251

EA 0120F1

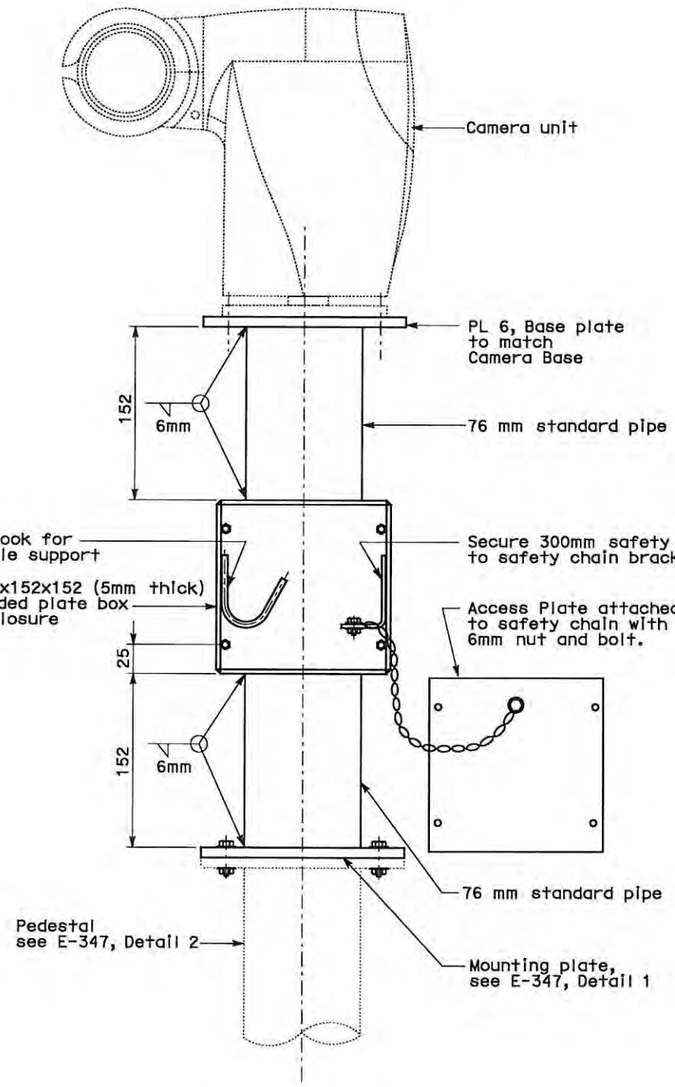

DETAIL 1
CCTV POLE MOUNTING ADAPTER

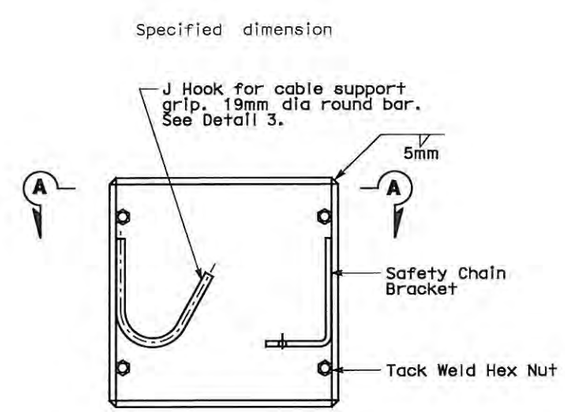

DETAIL 2
BOX ENCLOSURE

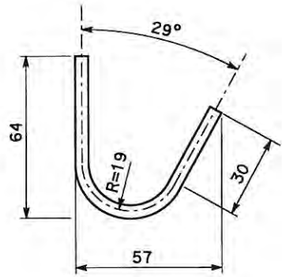

DETAIL 3
J HOOK

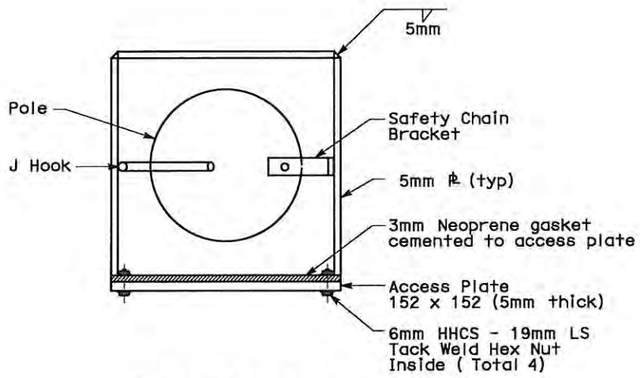

SECTION A-A

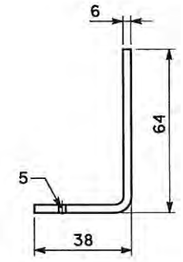

DETAIL 4
SAFETY CHAIN BRACKET

DIST	COUNTY	ROUTE	KILOMETER POST TOTAL PROJECT	SHEET No	TOTAL SHEETS
04	SF	80	13.2/13.9	320S1	1204

M.P. Lee 03/08/10
REGISTERED ELECTRICAL ENGINEER DATE

M.P. Lee No. 13435 Exp. 9-30-12 ELECT
REGISTERED PROFESSIONAL ENGINEER — STATE OF CALIFORNIA

PLANS APPROVAL DATE

PB AMERICAS, Inc.
A Parsons Brinckerhoff Company
303 Second St., Suite 700N
San Francisco, CA 94107-1317

The State of California or its officers or agents shall not be responsible for the accuracy or completeness of electronic copies of this plan sheet.

Caltrans now has a web site! To get to the web site, go to http://www.dot.ca.gov

MARK	DATE	REVISIONS	BY	CH'D	CCO#
0	07/01/11	TOS MODIFICATIONS	RG RR	ML	81

REQUEST FOR INFORMATION NOT ADDRESSED IN THIS CCO REMAIN IN FORCE

CONTRACT CHANGE ORDER NO. 81
SHEET 51 OF 70

DETAILS
TRAFFIC OPERATIONS SYSTEM
CCTV POLE MOUNTING DETAILS

NO SCALE

E-347A

ALL DIMENSIONS ARE IN MILLIMETERS UNLESS OTHERWISE SHOWN

STATE OF CALIFORNIA - DEPARTMENT OF TRANSPORTATION
Caltrans

DESIGN OVERSIGHT: BEHZAD GOLEMOHAMMADI
CALCULATED/DESIGNED BY:
CHECKED BY:
DRAWN BY:
DATE REVISED:
REVISED BY:
DATE:

LAST REVISION 00-00-00
DATE PLOTTED => 05-JUL-2011
TIME PLOTTED => 14:56

FOR REDUCED PLANS ORIGINAL SCALE IS IN MILLIMETERS 0 20 40 60 80
DGN FILE =>04-0120f1_0320S01.dgn
USERNAME =>llorico
CU 04251
EA 0120F1

DIST	COUNTY	ROUTE	KILOMETER POST TOTAL PROJECT	SHEET No	TOTAL SHEETS
04	SF	80	13.2/13.9	321R1	1204

REGISTERED CIVIL ENGINEER — 12/19/02 DATE

12-6-04
PLANS APPROVAL DATE

Michael Dahlin, No. 47186, Exp. 12/31/05 CIVIL — REGISTERED PROFESSIONAL ENGINEER — STATE OF CALIFORNIA

PB Farradyne
A Parsons Brinckerhoff Company
303 Second St., Suite 700N
San Francisco, CA 94107-1317

The State of California or its officers or agents shall not be responsible for the accuracy or completeness of electronic copies of this plan sheet.

Caltrans now has a web site! To get to the web site, go to: http://www.dot.ca.gov

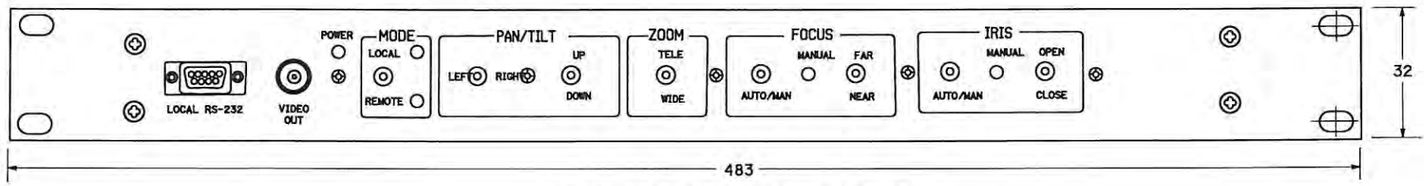

CCU FRONT PANEL LAYOUT

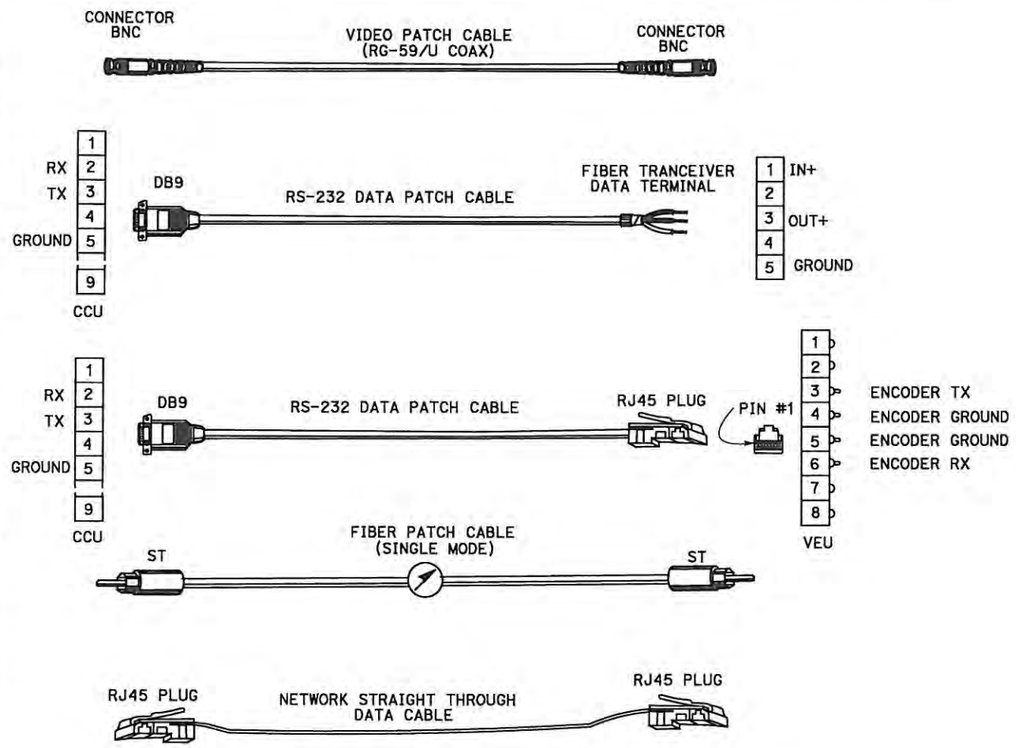

INTERFACE CABLE DETAILS

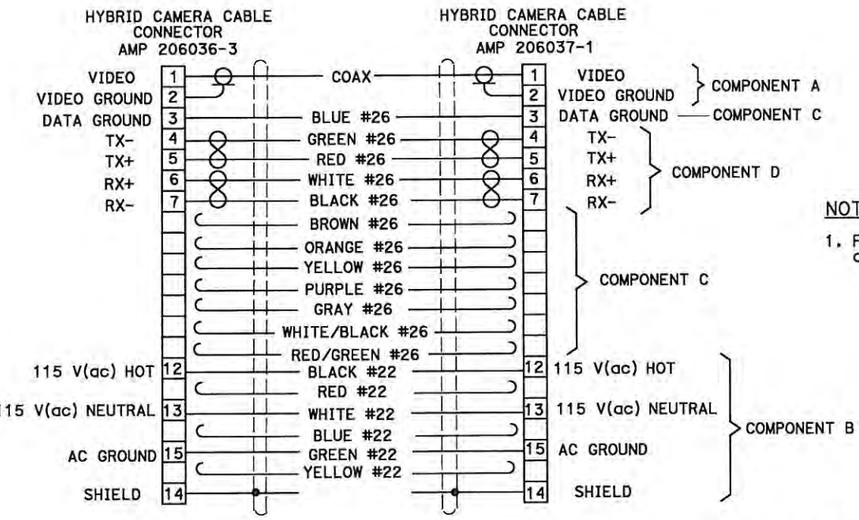

NOTES:

1. For CCTV Controller Cabinet wiring diagram, see E-349.

M.P. Lee, No. 13435, Exp. 9-30-12 ELECT — REGISTERED PROFESSIONAL ENGINEER — STATE OF CALIFORNIA

1 FOR REVISION ONLY

COMPONENT	CONDUCTOR	DESCRIPTION
A	COAX	75 OHM, RG-59/U TYPE, STANDARD ANALOG VIDEO CABLE, 6 MM NOMINAL DIAMETER
B	6 CONDUCTOR	22 AWG, COPPER INSULATED CONDUCTOR, 1.22 MM NOMINAL DIAMETER, COLOR CODED: B1-BLACK, B2-RED, B3-GREEN, B4-WHITE, B5-BLUE, B6-YELLOW
C	8 CONDUCTOR	26 AWG, COPPER INSULATED CONDUCTOR, 0.94 MM NOMINAL DIAMETER, COLOR CODED: C1-BROWN, C2-BLUE, C3-ORANGE, C4-YELLOW, C5-PURPLE, C6-GRAY, C7-WHITE/BLACK, C8-RED/GREEN
D	4 CONDUCTOR	26 AWG, COPPER INSULATED CONDUCTOR, 0.94 MM NOMINAL DIAMETER, COLOR CODED: D1-BLACK & WHITE, D2-RED & GREEN

HYBRID CAMERA CABLE AND CONNECTORS DETAIL

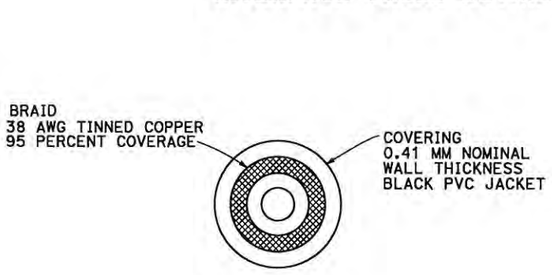

COMPONENT A

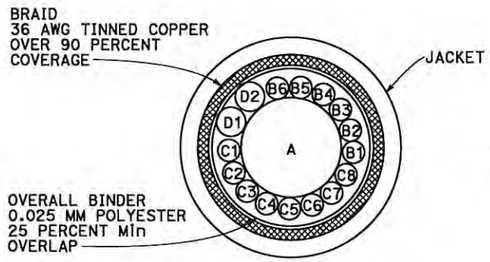

HYBRID CAMERA CABLE CROSS SECTION

REQUEST FOR INFORMATION NOT ADDRESSED IN THIS CCO REMAIN IN FORCE					
MARK	DATE	REVISIONS DESCRIPTIONS	BY	CH'D	CCO#
1	07/01/11	TOS MODIFICATIONS	RG RR	ML	81

CONTRACT CHANGE ORDER NO. 81
SHEET 52 OF 70

1 ORIGINAL SHEET SUPERCEDED

DETAILS
TRAFFIC OPERATIONS SYSTEM
CLOSED CIRCUIT TELEVISION CAMERA EQUIPMENT
INTERCONNECTING CABLE ASSEMBLY

NO SCALE

E-348

REVISED BY	DATE	CALCULATED/ DESIGNED BY	CHECKED BY
MD	11/01	PBF	12/01

DESIGN OVERSIGHT — BEHZAD GOLEMOHAMMADI

STATE OF CALIFORNIA - DEPARTMENT OF TRANSPORTATION — Caltrans

THIS PLAN ACCURATE FOR ELECTRICAL WORK ONLY.

ALL DIMENSIONS ARE IN MILLIMETERS UNLESS OTHERWISE SHOWN

FOR REDUCED PLANS ORIGINAL SCALE IS IN MILLIMETERS 0 20 40 60 80

DGN FILE =>04-0120f1_0321R01.dgn
USERNAME =>llorico

CU 04251 | EA 0120F1

LAST REVISION 00-00-00 — DATE PLOTTED => 05-JUL-2011 — TIME PLOTTED => 14:56

DIST	COUNTY	ROUTE	KILOMETER POST TOTAL PROJECT	SHEET No	TOTAL SHEETS
04	SF	80	13.2/13.9	322R1	1204

REGISTERED CIVIL ENGINEER — DATE 12/19/02

12-6-04
PLANS APPROVAL DATE

Michael Dahlin, No. 47186, Exp. 12/31/05, CIVIL — REGISTERED PROFESSIONAL ENGINEER — STATE OF CALIFORNIA

PB Farradyne
A Parsons Brinckerhoff Company
303 Second St., Suite 700N
San Francisco, CA 94107-1317

The State of California or its officers or agents shall not be responsible for the accuracy or completeness of electronic copies of this plan sheet.

Caltrans now has a web site! To get to the web site, go to: http://www.dot.ca.gov

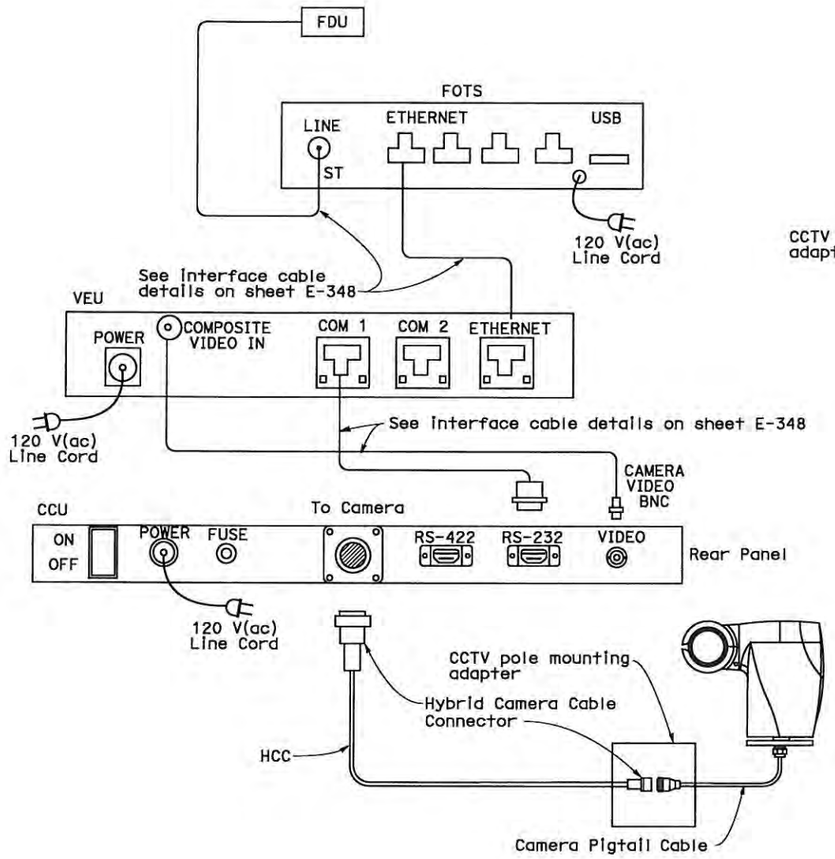

CCTV SYSTEM LAYOUT

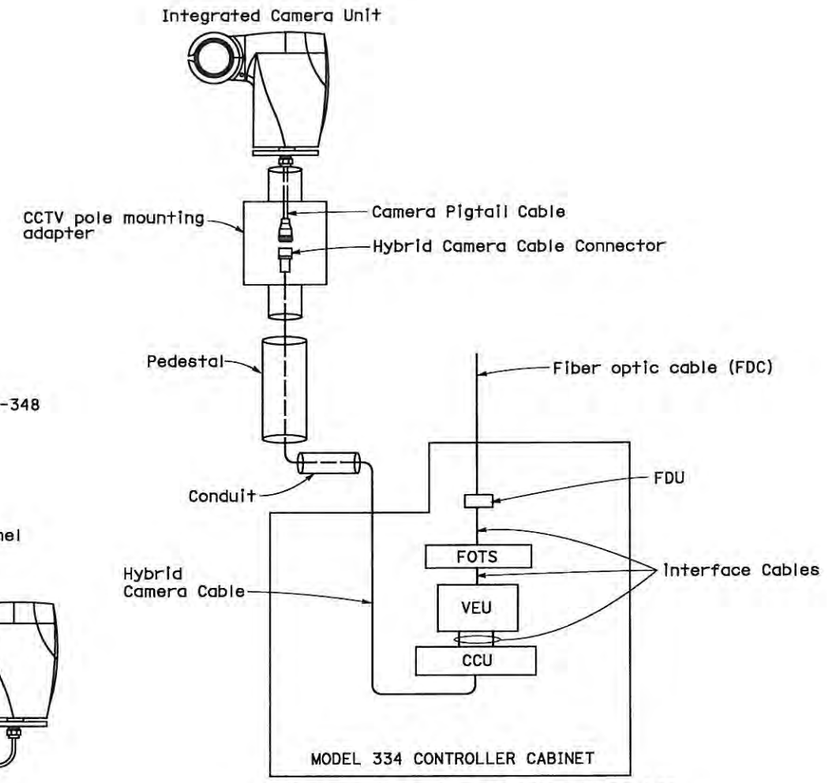

CCTV SYSTEM BLOCK DIAGRAM

HCC - HYBRID CAMERA CABLE
TBO - TERMINAL BLOCK O
PDA - POWER DISTRIBUTION ASSEMBLY
CCU - CAMERA CONTROL UNIT
VEU - VIDEO ENCODER UNIT
FOTS - FIBER OPTIC TRANSMITTERS
FDU - FIBER DISTRIBUTION UNIT

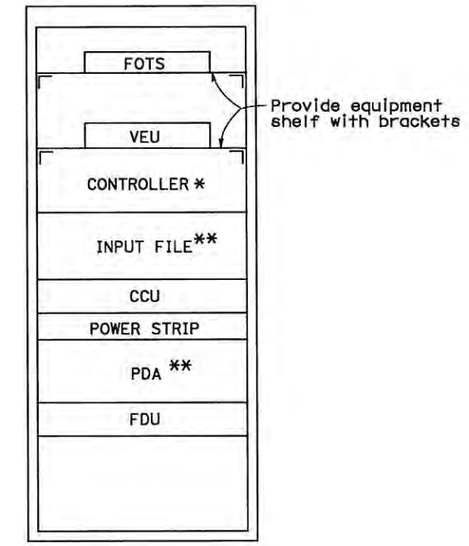

MODEL 334 CONTROLLER CABINET LAYOUT (FRONT VIEW)

* STATE-FURNISHED

** PDA AND INPUT FILE WILL BE INCLUDED ONLY WITH STATE-FURNISHED CONTROLLER CABINET.

NOTES:

1. Wiring diagram represents connection of one CCTV. Refer to CCTV Schedule for list of CCTV.
2. For CCTV pedestal mount detail, see E-347, Detail 2.
3. For CCTV pole mounting adapter detail, see E-347A.

CCTV SCHEDULE

ID #	STATION	CABINET ID #	TOWER REFERENCE SHEET	SERVICE PLATFORM REFERENCE SHEET
CCTV-E01A	E 57+70	TOS-6EA	E-281	E-73
CCTV-E01B	E 57+70	TOS-6WA	E-281	E-73

M.P. Lee, No. 13435, Exp. 9-30-12, ELECT — REGISTERED PROFESSIONAL ENGINEER — STATE OF CALIFORNIA

1 FOR REVISION ONLY

1 **ORIGINAL SHEET SUPERCEDED**

REQUEST FOR INFORMATION NOT ADDRESSED IN THIS CCO REMAIN IN FORCE

MARK	DATE	REVISIONS / DESCRIPTIONS	BY	CH'D	CCO#
1	07/01/11	TOS MODIFICATIONS	RG RR	ML	81

CONTRACT CHANGE ORDER NO. 81
SHEET 53 OF 70

DETAILS
TRAFFIC OPERATIONS SYSTEM
CLOSED CIRCUIT TELEVISION CAMERA CONTROLLER CABINET WIRING DIAGRAM

NO SCALE

E-349

THIS PLAN ACCURATE FOR ELECTRICAL WORK ONLY.

ALL DIMENSIONS ARE IN MILLIMETERS UNLESS OTHERWISE SHOWN

FOR REDUCED PLANS ORIGINAL SCALE IS IN MILLIMETERS 0 20 40 60 80

DGN FILE =>04-0120f1_0322R01.dgn
USERNAME =>llorico

CU 04251 | EA 0120F1

LAST REVISION 00-00-00
DATE PLOTTED => 05-JUL-2011
TIME PLOTTED => 14:56

STATE OF CALIFORNIA - DEPARTMENT OF TRANSPORTATION
DESIGN OVERSIGHT
BEHZAD GOLEMOHAMMADI
CALCULATED/ DESIGNED BY MD
CHECKED BY PBF
DATE 11/01 12/01
REVISED BY
DATE REVISED

DIST	COUNTY	ROUTE	KILOMETER POST TOTAL PROJECT	SHEET No	TOTAL SHEETS
04	SF	80	13.2/13.9	324R1	1204

REGISTERED CIVIL ENGINEER — DATE 12/19/02

12-6-04
PLANS APPROVAL DATE

REGISTERED PROFESSIONAL ENGINEER — Michael Dahlin — No. 47186 — Exp. 12/31/05 — CIVIL — STATE OF CALIFORNIA

PB Farradyne
A Parsons Brinckerhoff Company
303 Second St., Suite 700N
San Francisco, CA 94107-1317

The State of California or its officers or agents shall not be responsible for the accuracy or completeness of electronic copies of this plan sheet.

Caltrans now has a web site! To get to the web site, go to: http://www.dot.ca.gov

MARK	DATE	REVISED BY
	11/01	DATE REVISED

CALCULATED/DESIGNED BY: MD
CHECKED BY: PBF
DATE: 12/01

STATE OF CALIFORNIA - DEPARTMENT OF TRANSPORTATION
Caltrans

DESIGN OVERSIGHT
BEHZAD GOLEMOHAMMADI

⚠ ORIGINAL SHEET SUPERCEDED

REGISTERED PROFESSIONAL ENGINEER — M.P. Lee — No. 13435 — Exp. 9-30-12 — ELECT — STATE OF CALIFORNIA

⚠1 FOR REVISION ONLY

REQUEST FOR INFORMATION NOT ADDRESSED IN THIS CCO REMAIN IN FORCE

MARK	DATE	REVISIONS	BY	CH'D	CCO#
⚠1	07/01/11	TOS MODIFICATIONS	RG RR	ML	81

CONTRACT CHANGE ORDER NO. 81
SHEET 54 OF 70

DETAILS
TRAFFIC OPERATIONS SYSTEM
CONTROLLER CABINET CONFIGURATION
NO SCALE

E-352

THIS PLAN IS ACCURATE FOR ELECTRICAL WORK ONLY.

LAST REVISION 00-00-00
DATE PLOTTED => 05-JUL-2011
TIME PLOTTED => 14:56

FOR REDUCED PLANS ORIGINAL SCALE IS IN MILLIMETERS 0 20 40 60 80

DGN FILE =>04-0120f1_0324R01.dgn
USERNAME =>llorico

CU 04251

EA 0120F1

DIST	COUNTY	ROUTE	KILOMETER POST TOTAL PROJECT	SHEET No	TOTAL SHEETS
04	SF	80	13.2/13.9	325R1	1204

REGISTERED CIVIL ENGINEER — 12/19/02 DATE

12-6-04
PLANS APPROVAL DATE

Michael Dahlin, No. 47186, Exp. 12/31/05 CIVIL, REGISTERED PROFESSIONAL ENGINEER, STATE OF CALIFORNIA

PB Farradyne
A Parsons Brinckerhoff Company
303 Second St., Suite 700N
San Francisco, CA 94107-1317

The State of California or its officers or agents shall not be responsible for the accuracy or completeness of electronic copies of this plan sheet.

Caltrans now has a web site! To get to the web site, go to: http://www.dot.ca.gov

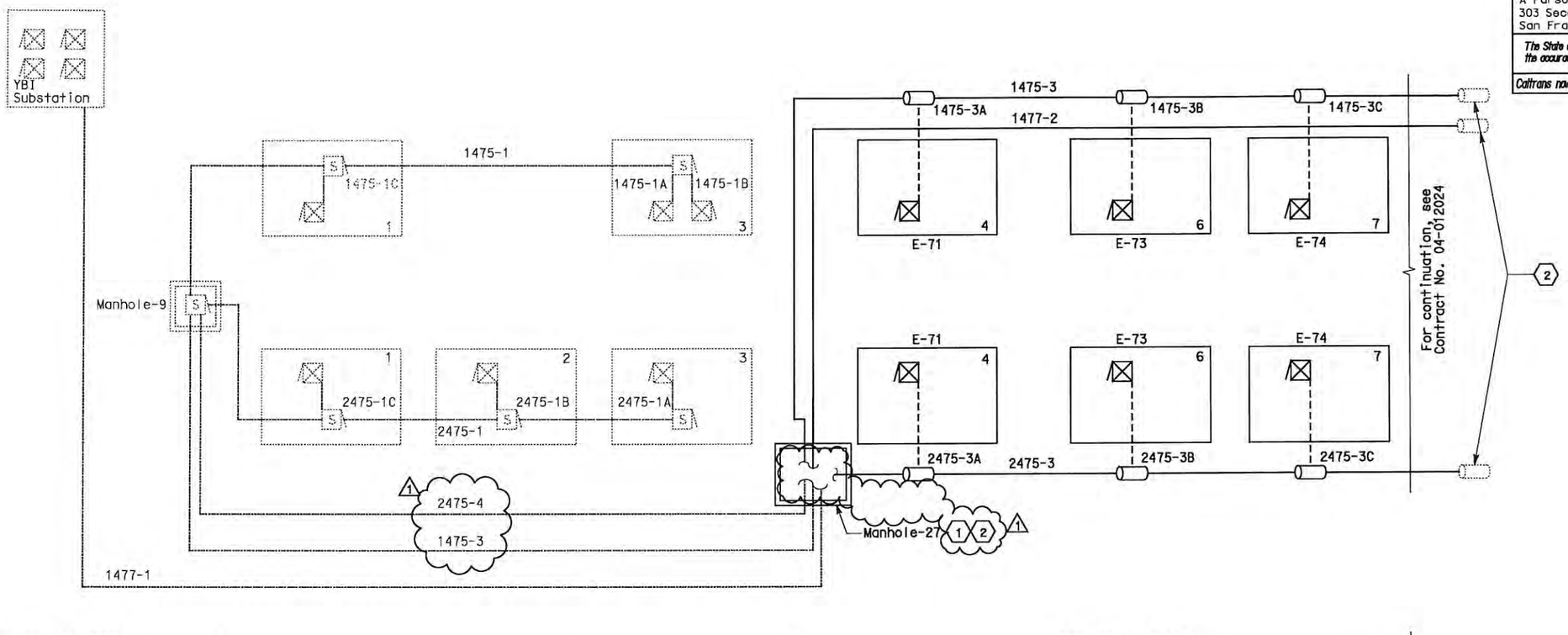

SHEET NOTES:

1. For splice details, see sheet E-355.
2. For splices at contract boundaries, refer to sheet E-357, Fiber Optic Interface Plan and Cable Block Diagram.

LEGEND:

- 72 Fiber Optic Cable
- 12 Fiber Optic Cable
- Fiber Splice Closure
- Fiber Splice Cabinet
- Controller Cabinet
- Manhole
- E-XXX — Corresponding Platform Layout sheet
- Platform
- Platform ID

NOTES:

1. For Manhole 27 location, see sheet E-11.
2. For cable numbering scheme, see Project Notes.

REGISTERED PROFESSIONAL ENGINEER — M.P. Lee, No. 13435, Exp. 9-30-12 ELECT, STATE OF CALIFORNIA

FOR REVISION ONLY

REQUEST FOR INFORMATION NOT ADDRESSED IN THIS CCO REMAIN IN FORCE					
1	09/12/11	TOS MODIFICATIONS	RG RR	ML	81
MARK	DATE	DESCRIPTIONS	BY	CH'D	CCO#
REVISIONS					

CONTRACT CHANGE ORDER NO. 81
SHEET 55 OF 70

DETAILS
TRAFFIC OPERATIONS SYSTEM
COMMUNICATION CABLE BLOCK DIAGRAM

NO SCALE

E-353

THIS PLAN IS ACCURATE FOR ELECTRICAL WORK ONLY.

FOR REDUCED PLANS ORIGINAL SCALE IS IN MILLIMETERS 0 20 40 60 80

DGN FILE =>04-0120f1_0325R01.dgn
USERNAME =>llorico

CU 04251 | EA 0120F1

LAST REVISION 00-00-00
DATE PLOTTED => 12-SEP-2011
TIME PLOTTED => 11:22

STATE OF CALIFORNIA - DEPARTMENT OF TRANSPORTATION
DESIGN OVERSIGHT BEHZAD GOLEMOHAMMADI
CALCULATED/DESIGNED BY MD 11/01 DATE REVISED
CHECKED BY PBF 12/01 DATE REVISED

DIST	COUNTY	ROUTE	KILOMETER POST TOTAL PROJECT	SHEET No	TOTAL SHEETS
04	SF	80	13.2/13.9	327R1	1204

REGISTERED CIVIL ENGINEER — 12/19/02 DATE

12-6-04
PLANS APPROVAL DATE

REGISTERED PROFESSIONAL ENGINEER — Michael Dahlin — No. 47186 — Exp. 12/31/05 — CIVIL — STATE OF CALIFORNIA

PB Farradyne
A Parsons Brinckerhoff Company
303 Second St., Suite 700N
San Francisco, CA 94107-1317

The State of California or its officers or agents shall not be responsible for the accuracy or completeness of electronic copies of this plan sheet.

Caltrans now has a web site! To get to the web site, go to: http://www.dot.ca.gov

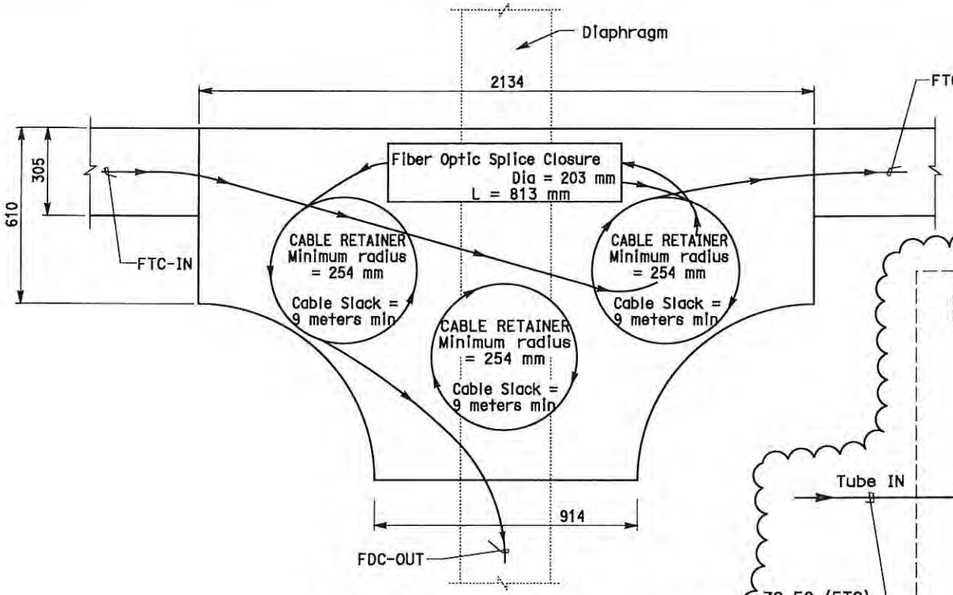

FIBER SPLICE TRAY DETAIL

NOT TO SCALE

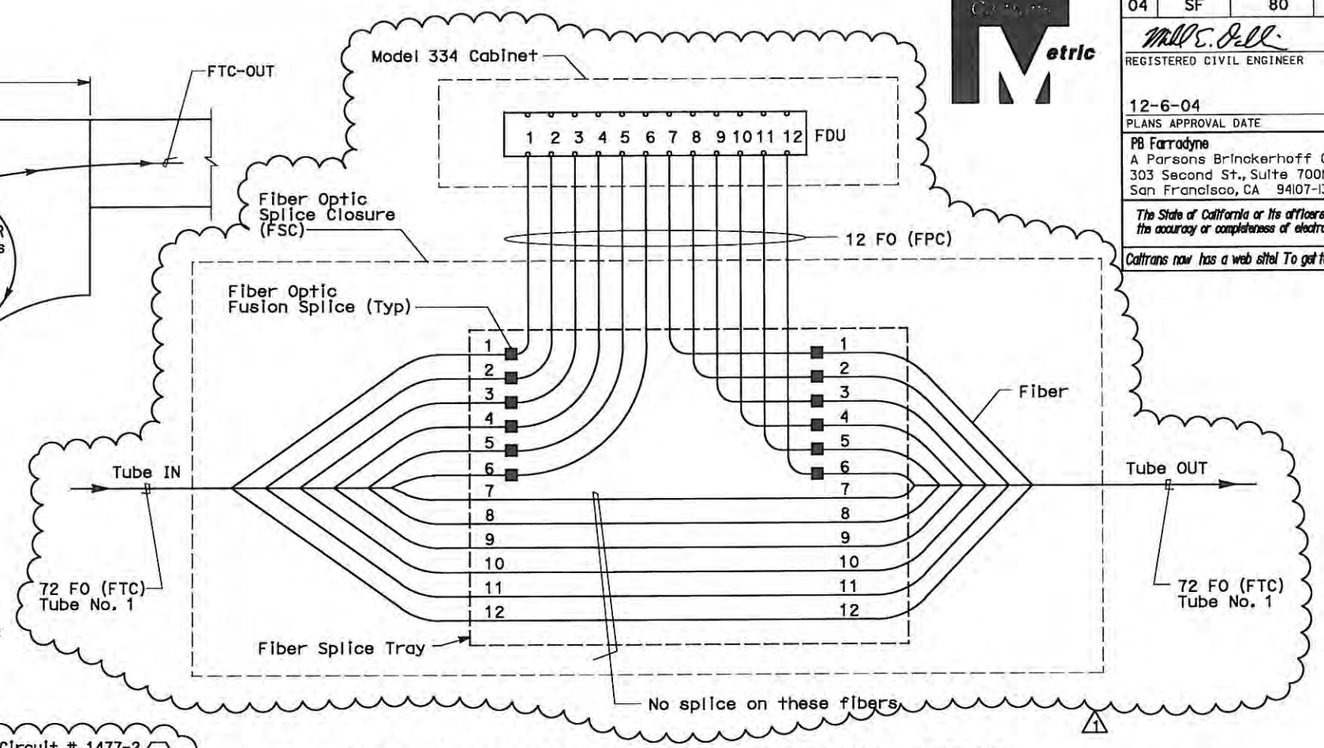

FIBER OPTIC SPLICE CLOSURE TYPICAL DETAIL

(SHOWN FOR TUBE No. 1)

NO SCALE

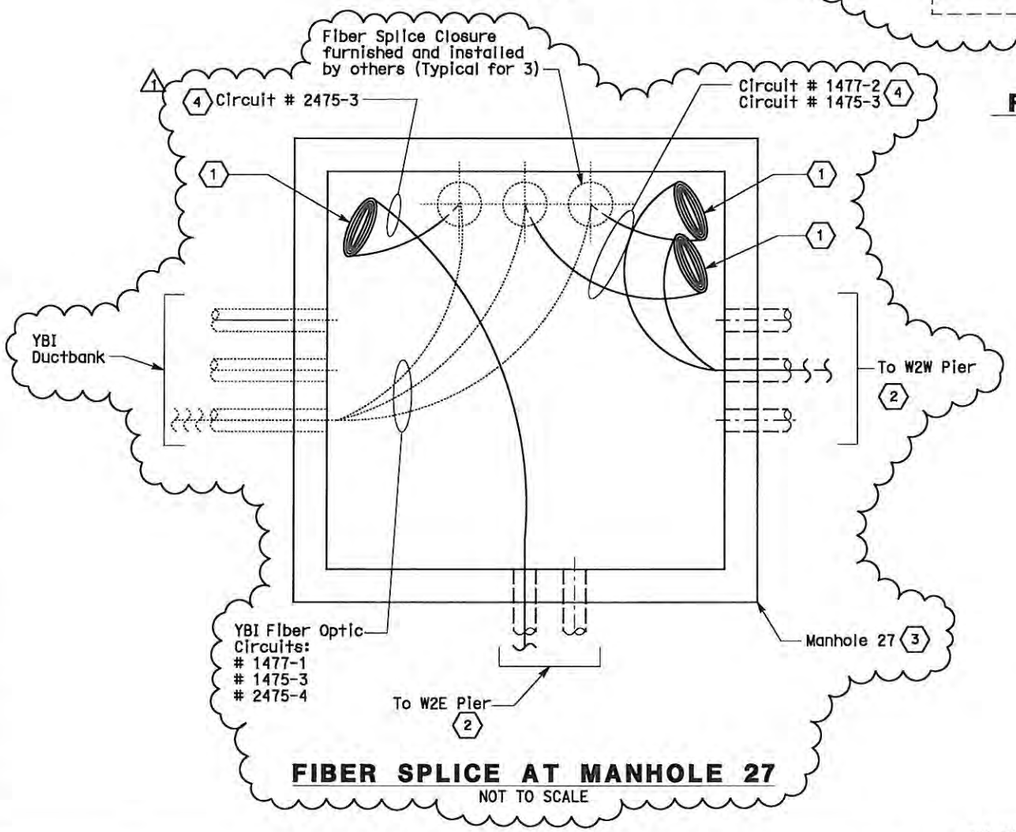

FIBER SPLICE AT MANHOLE 27

NOT TO SCALE

REGISTERED PROFESSIONAL ENGINEER — M.P. Lee — No. 13435 — Exp. 9-30-12 — ELECT — STATE OF CALIFORNIA — 1

FOR REVISION ONLY

REQUEST FOR INFORMATION NOT ADDRESSED IN THIS CCO REMAIN IN FORCE					
1	09/12/11	TOS MODIFICATIONS	RG RR	ML	81
MARK	DATE	DESCRIPTIONS REVISIONS	BY	CH'D	CCO#

CONTRACT CHANGE ORDER NO. 81
SHEET 56 OF 70

SHEET NOTES:

1. The Contractor shall not exceed minimum bending radius of 254 mm. Cable slack shall be a minimum of 18 meters.
2. For Conduit locations refer to underground plan on E-11 and Ductbank details on E-16
3. For location of Manhole 27, see underground plan, sheet E-11.
4. Refer to E-357 for overall TOS Fiber Optic Interface Plan and Cable Block Diagram.
5. Refer to E-357A & E-357B for Fiber Optic cable terminations.

NOTES:

1. The Contractor shall submit cable installation plan and any recommendation of the manufacturer to the Engineer for review and approval.

DETAILS
TRAFFIC OPERATIONS SYSTEM
FIBER OPTIC SPLICE

NO SCALE

E-355

REVISED BY	MD	CALCULATED/ DESIGNED BY	DESIGN OVERSIGHT
DATE REVISED	DATE 11/01	CHECKED BY	BEHZAD GOLEMOHAMMADI
	12/01		
	PBF		

STATE OF CALIFORNIA - DEPARTMENT OF TRANSPORTATION
Caltrans

LAST REVISION 00-00-00
DATE PLOTTED => 12-SEP-2011
TIME PLOTTED => 11:22

ALL DIMENSIONS ARE IN MILLIMETERS UNLESS OTHERWISE SHOWN.

FOR REDUCED PLANS ORIGINAL SCALE IS IN MILLIMETERS 0 20 40 60 80

DGN FILE =>04-0120f1_0327R01.dgn
USERNAME =>florico

CU 04251 | EA 0120F1

DIST	COUNTY	ROUTE	KILOMETER POST TOTAL PROJECT	SHEET No	TOTAL SHEETS
04	SF	80	13.2/13.9	328R1	1204

REGISTERED CIVIL ENGINEER — 12/19/02 DATE

12-6-04
PLANS APPROVAL DATE

Michael Dahlin No. 47186 Exp. 12/31/05 CIVIL — REGISTERED PROFESSIONAL ENGINEER — STATE OF CALIFORNIA

PB Farradyne
A Parsons Brinckerhoff Company
303 Second St., Suite 700N
San Francisco, CA 94107-1317

The State of California or its officers or agents shall not be responsible for the accuracy or completeness of electronic copies of this plan sheet.

Caltrans now has a web site! To get to the web site, go to: http://www.dot.ca.gov

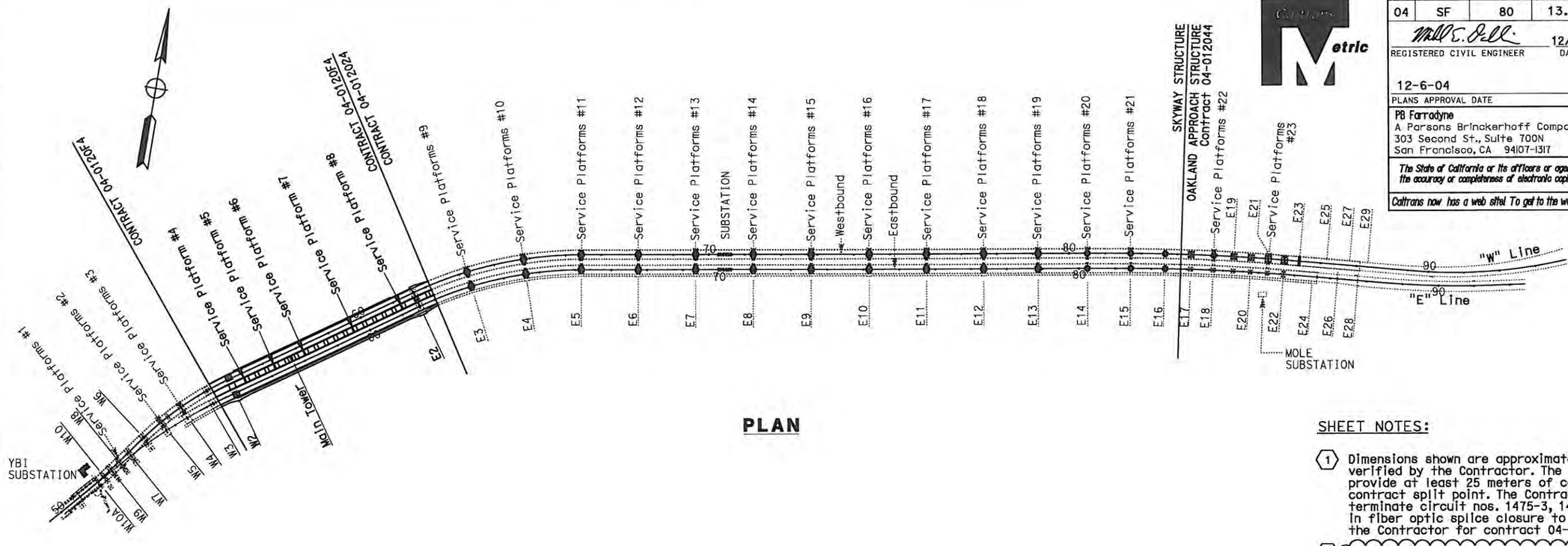

PLAN

SHEET NOTES:

1. Dimensions shown are approximate and shall be verified by the Contractor. The Contractor to provide at least 25 meters of cables beyond the contract split point. The Contractor shall terminate circuit nos. 1475-3, 1477-2 and 2475-3 in fiber optic splice closure to be provided by the Contractor for contract 04-012024.
2. Fiber splice closures furnished and installed under separate contract for circuit nos. 1475-3, 1477-2 and 2475-3.

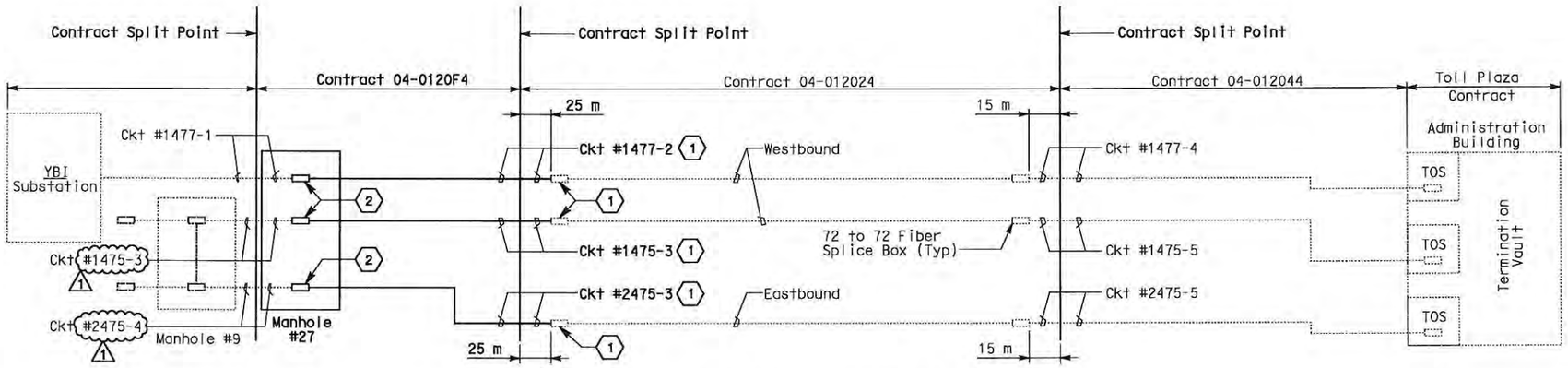

CABLE BLOCK DIAGRAM

M.P. Lee No. 13435 Exp. 9-30-12 ELECT — REGISTERED PROFESSIONAL ENGINEER — STATE OF CALIFORNIA (1)

FOR REVISION ONLY

REQUEST FOR INFORMATION NOT ADDRESSED IN THIS CCO REMAIN IN FORCE

MARK	DATE	DESCRIPTIONS	RG RR	ML	CH'D	CCO#
		REVISIONS				
1	09/12/11	TOS MODIFICATIONS				81

CONTRACT CHANGE ORDER NO. 81
SHEET 57 OF 70

DETAILS
TRAFFIC OPERATIONS SYSTEM
FIBER OPTIC INTERFACE PLAN AND CABLE BLOCK DIAGRAM
NO SCALE

E-357

THIS PLAN ACCURATE FOR ELECTRICAL WORK ONLY.

STATE OF CALIFORNIA - DEPARTMENT OF TRANSPORTATION
DESIGN OVERSIGHT: BEHZAD GOLEMOHAMMADI
CALCULATED/DESIGNED BY: MD 11/01 — REVISED BY
CHECKED BY: PBF 12/01 — DATE REVISED

DATE PLOTTED => 12-SEP-2011
TIME PLOTTED => 11:22
LAST REVISION 00-00-00

FOR REDUCED PLANS ORIGINAL SCALE IS IN MILLIMETERS 0 20 40 60 80

DGN FILE =>04-0120f1_0328R01.dgn
USERNAME =>llorico

CU 04251 | EA 0120F1

DIST	COUNTY	ROUTE	KILOMETER POST TOTAL PROJECT	SHEET No	TOTAL SHEETS
04	SF,Ala	80	12.2/14.3 0.0/4.0	328S1	1204

REGISTERED ELECTRICAL ENGINEER DATE

M.P. Lee No. 13435 Exp. 9-30-10 ELECTRICAL — REGISTERED PROFESSIONAL ENGINEER — STATE OF CALIFORNIA

PLANS APPROVAL DATE

The State of California or its officers or agents shall not be responsible for the accuracy or completeness of electronic copies of this plan sheet.

Caltrans now has a web site! To get to the web site, go to http://www.dot.ca.gov

REQUEST FOR INFORMATION NOT ADDRESSED IN THIS CCO REMAIN IN FORCE					
MARK	DATE	REVISIONS	RG RR BY	ML CH'D	81 CCO#
0	07/01/11	TOS MODIFICATIONS			

CONTRACT CHANGE ORDER NO. 81
SHEET 58 OF 70

		YBI-1			SAS			SKYWAY											OTD-1		OTD-2				
		YBI-SUB										CCTV-W03					CCTV-W02						CCTV-E10		CCTV-W03	SFOBB-HUB	EQ ID
		TOS-Y04	01WA	03WA	CCTV-W01 03WB	04WA	CCTV-E01B 06WA	07WA	09WA	10WA	11WA	11WB	12WA	13WA	15WA	16WA	17WA	18WA	20WA	21WA	22WA	23WA	26A	24A	25A	ADMIN BLDG	cabinet ID
		(FDU-W)	01W	03W	03W	04W	06W	07W	09W	10WA	11W	11W	12W	13W	15W	16W	17W	18W	20W	21W	22W	23W	23W	23W	23W	TOS-A04	FSC ID
			W 52.18	W 54.44	W 54.44	W 56.38	W 58.18	W 59.62	W 63.23	W 64.83	W 66.43	W 66.43	W 68.03	W 69.63	W 72.83	W 74.43	W 76.03	W 77.63	W 80.51	W 81.71	W 84.04	W 85.55	MS 86+70	MN 88.25	MN 90.50	(FDU-W)	cabinet station
Tube 1	1	X			X X				X X				X X				X X				X X				X X	X	Circuit 1
	2	X			X X				X X				X X				X X				X X				X X	X	Circuit 1
	3	X			X X				X X				X X				X X				X X				X X	X	Circuit 2
	4	X			X X				X X				X X				X X				X X				X X	X	Circuit 2
	5	X			X X				X X				X X				X X				X X				X X	X	Circuit 3
	6	X			X X				X X				X X				X X				X X				X X	X	Circuit 3
	7	X																								X	SPARE
	8	X																								X	
	9	X																								X	
	10	X																								X	
	11	X																								X	
	12	X																								X	
Tube 2	13	X						X X				X X				X X				X X			X X			X	Circuit 4
	14	X						X X				X X				X X				X X			X X			X	Circuit 4
	15	X						X X				X X				X X				X X			X X			X	Circuit 5
	16	X						X X ①				X X				X X				X X			X X			X	Circuit 5
	17	X						X X				X X				X X				X X			X X			X	Circuit 6
	18	X						X X				X X				X X				X X			X X			X	Circuit 6
	19	X																								X	SPARE
	20	X																								X	
	21	X																								X	
	22	X																								X	
	23	X																								X	
	24	X																								X	
Tube 3	25	X		X X			X X			X X				X X				X X						X X		X	Circuit 7
	26	X		X X			X X			X X				X X				X X						X X		X	Circuit 7
	27	X		X X			X X			X X				X X				X X						X X		X	Circuit 8
	28	X		X X			X X ①			X X				X X				X X						X X		X	Circuit 8
	29	X		X X			X X			X X				X X				X X						X X		X	Circuit 9
	30	X		X X			X X			X X				X X				X X						X X		X	Circuit 9
	31	X																								X	SPARE
	32	X																								X	
	33	X																								X	
	34	X																								X	
	35	X																								X	
	36	X																								X	
Tube 4	37	X	X X			X X			X X				X X				X X				X X					X	Circuit 10
	38	X	X X			X X			X X				X X				X X				X X					X	Circuit 10
	39	X	X X			X X			X X				X X				X X				X X					X	Circuit 11
	40	X	X X			X X			X X				X X				X X				X X					X	Circuit 11
	41	X	X X			X X			X X				X X				X X				X X					X	Circuit 12
	42	X	X X			X X ①			X X				X X				X X				X X					X	Circuit 12
	43	X																								X	SPARE
	44	X																								X	
	45	X																								X	
	46	X																								X	
	47	X																								X	
	48	X																								X	
Tube 5	49~60	X																								X	SPARES
Tube 6	61~72	X																								X	SPARES

SHEET NOTES:

① Terminate fibers at this location, represented with bold "X".

② These terminations by others.

GENERAL NOTE:

1. For notes, abbreviations and legend, see sheets E-8 and E-970.

FIBER OPTIC TERMINATIONS - WESTBOUND

DETAILS
TRAFFIC OPERATIONS SYSTEM
FTC-WESTBOUND
NO SCALE

E-357A

THIS PLAN ACCURATE FOR ELECTRICAL WORK ONLY.

STATE OF CALIFORNIA - DEPARTMENT OF TRANSPORTATION — Caltrans

DESIGN OVERSIGHT — MICHAEL P. LEE

CALCULATED/DESIGNED BY — ML — DATE 09/09
CHECKED BY — FW — 12/09
REVISED BY — DATE REVISED

LAST REVISION 00-00-00 — DATE PLOTTED => 05-JUL-2011 — TIME PLOTTED => 14:56

BORDER LAST REVISED 3/1/2009 — RELATIVE BORDER SCALE IS IN MILLIMETERS 0 20 40 60 80 — DGN FILE => 04-0120f1_0328S01.dgn — USERNAME => llorico — CU 04251 — EA 0120F1

REQUEST FOR INFORMATION NOT ADDRESSED IN THIS CCO REMAIN IN FORCE					
MARK	DATE	REVISIONS DESCRIPTIONS	RG RR BY	ML CH'D	81 CCO#
0	07/12/11	TOS MODIFICATIONS			

CONTRACT CHANGE ORDER NO. 81
SHEET 59 OF 70

DIST	COUNTY	ROUTE	KILOMETER POST TOTAL PROJECT	SHEET No	TOTAL SHEETS
04	SF,Ala	80	12.2/14.3 0.0/4.0	328S2	1204

REGISTERED ELECTRICAL ENGINEER DATE

M.P. Lee No. 13435 Exp. 9-30-10 ELECTRICAL — REGISTERED PROFESSIONAL ENGINEER — STATE OF CALIFORNIA

PLANS APPROVAL DATE

The State of California or its officers or agents shall not be responsible for the accuracy or completeness of electronic copies of this plan sheet.

Caltrans now has a web site! To get to the web site, go to http://www.dot.ca.gov

	YBI-1				SAS			SKYWAY											OTD-1	OTD-2		
	YBI-SUB TOS-Y04 (FDU-E)	01EA 1E E 52.16	RM01 1E R1 51.80	02EA 2E E 53.70	03EA 3E E 54.38	04EA 4E E 56.29	CCTV-E01 06EA 6E E 58.10	07EA 7E E 59.54	09EA 9E E 63.08	10EA 10E E 64.62	11EA 11E E 66.15	12EA 12E E 67.75	13EA 13E E 69.36	CCTV-E02 13EB 13E E 69.36	15EA 15E E 72.55	16EA 16E E 74.16	17EA 17E E 75.75	18EA 18E E 77.36	CCTV-XXX 20EA 20E E 80.24	21EA 21E E 81.43	CCTV-E03 22EA 22E E 83.75	23EA 23E E 85.24	SFOBB-HUB ADMIN BLDG TOS-A04 (FDU-E)	EQ ID cabinet ID FSC ID cabinet station
Tube 1	1	X	X X			X X				X X			X X				X X				X X	X	Circuit 1
	2	X	X X			X X				X X			X X				X X				X X	X	Circuit 1
	3	X	X X			X X	(1)			X X			X X				X X				X X	X	Circuit 2
	4	X	X X			X X				X X			X X				X X				X X	X	Circuit 2
	5	X	X X			X X				X X			X X				X X				X X	X	Circuit 3
	6	X	X X			X X				X X			X X				X X				X X	X	Circuit 3
	7	X																				X	SPARE
	8	X																				X	
	9	X																				X	
	10	X																				X	
	11	X																				X	
	12	X																				X	
Tube 2	13	X		X X			X X				X X				X X			X X				X	Circuit 4
	14	X		X X			X X				X X				X X			X X				X	Circuit 4
	15	X		X X			X X				X X				X X			X X				X	Circuit 5
	16	X		X X			X X	(1)			X X				X X			X X				X	Circuit 5
	17	X		X X			X X				X X				X X			X X				X	Circuit 6
	18	X		X X			X X				X X				X X			X X				X	Circuit 6
	19	X																				X	SPARE
	20	X																				X	
	21	X																				X	
	22	X																				X	
	23	X																				X	
	24	X																				X	
Tube 3	25	X			X X			X X				X X				X X				X X		X	Circuit 7
	26	X			X X			X X				X X				X X				X X		X	Circuit 7
	27	X			X X			X X				X X				X X				X X		X	Circuit 8
	28	X			X X			X X	(1)			X X				X X				X X		X	Circuit 8
	29	X			X X			X X				X X				X X				X X		X	Circuit 9
	30	X			X X			X X				X X				X X				X X		X	Circuit 9
	31	X																				X	SPARE
	32	X																				X	
	33	X																				X	
	34	X																				X	
	35	X																				X	
	36	X																				X	
Tube 4	37	X				X X			X X				X X			X X				X X		X	Circuit 10
	38	X				X X			X X				X X			X X				X X		X	Circuit 10
	39	X				X X			X X				X X			X X				X X		X	Circuit 11
	40	X				X X			X X				X X			X X				X X		X	Circuit 11
	41	X				X X			X X				X X			X X				X X		X	Circuit 12
	42	X				X X			X X				X X			X X				X X		X	Circuit 12
	43	X																				X	SPARE
	44	X																				X	
	45	X																				X	
	46	X																				X	
	47	X																				X	
	48	X																				X	
Tube 5	49~60	X																				X	SPARES
Tube 6	61~72	X																				X	SPARES

SHEET NOTES:

(1) Terminate fibers at this location, represented with bold "X".

(2) These terminations by others.

GENERAL NOTE:

1. For notes, abbreviations and legend, see sheets E-8 and E-970.

FIBER OPTIC TERMINATIONS - EASTBOUND

DETAILS
TRAFFIC OPERATIONS SYSTEMS FTC-EASTBOUND

NO SCALE

E-357B

THIS PLAN ACCURATE FOR ELECTRICAL WORK ONLY.

STATE OF CALIFORNIA - DEPARTMENT OF TRANSPORTATION — DESIGN OVERSIGHT — MICHAEL P. LEE

CALCULATED/DESIGNED BY ML — CHECKED BY FW — DATE 05/09 — REVISED BY 12/09 — DATE REVISED

LAST REVISION 00-00-00 — DATE PLOTTED => 12-JUL-2011 — TIME PLOTTED => 09:37

BORDER LAST REVISED 3/1/2009 — RELATIVE BORDER SCALE IS IN MILLIMETERS 0 20 40 60 80 — DGN FILE => 04-0120f1_0328S02.dgn — USERNAME => llorico — CU 04251 — EA 0120F1

DIST	COUNTY	ROUTE	KILOMETER POST TOTAL PROJECT	SHEET No	TOTAL SHEETS
04	SF	80	13.2/13.9	362 R6	1204

12/19/02
REGISTERED ELECTRICAL ENGINEER DATE

12-6-04
PLANS APPROVAL DATE

REGISTERED PROFESSIONAL ENGINEER — JENS ERLINGSSON — No. 8249 — Exp. 9/30/06 ELECTRICAL — STATE OF CALIFORNIA

PB POWER, Inc.
A Parsons Brinckerhoff Company
303 Second St., Suite 700N
San Francisco, CA 94107-1317

The State of California or its officers or agents shall not be responsible for the accuracy or completeness of electronic copies of this plan sheet.

Caltrans now has a web site! To get to the web site, go to http://www.dot.ca.gov

REQUEST FOR INFORMATION NOT ADDRESSED IN THIS CCO REMAIN IN FORCE					
6	07/01/11	TOS MODIFICATIONS	RR	RG	81
5	01/07/11	ELECTRICAL WARNING SYSTEMS	TW	RG	61
4	03/26/10	DEHUMIDIFIER SCADA INTERFACE	RR	RG FW	130
3	03/30/09	SERVICE PLATFORM ELECTRICAL CHANGES	RY RR	RG MP	55
2	02/25/08	CABLE TRAY CHANGES	RR TW	RG	42S1
1	03/04/08	BARRIER MODIFICATIONS	JS BM	RG	44
MARK	DATE	DESCRIPTIONS REVISIONS	BY	CH'D	CCO#

CONTRACT CHANGE ORDER NO. 81
SHEET 60 OF 70

REGISTERED PROFESSIONAL ENGINEER — S. A. ESTOQUE, JR. — No. E-10151 — Exp. 12/31/2008 ELECTRICAL — STATE OF CALIFORNIA
FOR REVISION ONLY
1 2

REGISTERED PROFESSIONAL ENGINEER — FADI WALIEDDINE — No. 11465 — Exp. 12/31/2009 ELECTRICAL — STATE OF CALIFORNIA
FOR REVISION ONLY
3

REGISTERED PROFESSIONAL ENGINEER — SYN YEE CHIN — No. 18186 — Exp. 09/30/2011 ELECTRICAL — STATE OF CALIFORNIA
FOR REVISION ONLY
4 5 6

CONDUIT DATA

Conduit No.	Reference	Size	Type	Total Fill (mm²)	Allowable Fill (mm²)	Included Cable No.	Conductor Type
						A-3009-1	1-3/C + gnd #2, 600 V, EPR Insulation
						S-3021-1	1-3/C + gnd #4, 600 V, EPR Insulation
						S-3023-1	1-3/C + gnd #4, 600 V, EPR Insulation
						S-3056-1	1-3/C + gnd #6, 600 V, EPR Insulation
						S-1031-3	1-3/C + gnd #4, 600 V, EPR Insulation
						S-1032-1	1-3/C + gnd #4, 600 V, EPR Insulation
						A-1035-1	1-3/C + gnd #6, 600 V, EPR Insulation
						1202-3	1-7/C #16, 600 V, EPR Insulation
						1099	1-3/C + gnd #2, 600 V, EPR Insulation
						1098	1-3/C + gnd #2, 600 V, EPR Insulation
						1097	1-3/C + gnd #2, 600 V, EPR Insulation
						1096	1-3/C + gnd #2, 600 V, EPR Insulation
						1095	1-3/C + gnd #2, 600 V, EPR Insulation
						1117	1-3/C + gnd #2/0, 600 V, EPR Insulation
						1256-1	1-3/C #16, 600 V, EPR Insulation
						1202-1	1-2/C + gnd #10 ,600 V, EPR Insulation
						1255-2	1-3/C #16, 600 V, EPR Insulation
						A-3008-1	1-2/C + gnd #8, 600 V, EPR Insulation
						1202-2	1-3/C #14, 600 V, EPR Insulation
						A-3011-1	1-3/C + gnd #2, 600 V, EPR Insulation
1T24	E-114	610	152.4 mm siderail ladder tray	1652.27	18064.48	UP104-7	1-2/C + gnd #8, 600 V, EPR Insulation
						1095	1-3/C + gnd #2, 600 V, EPR Insulation
						Pull rope	Soft-Fiber Polyester
						UP104-9	1-2/C + gnd #10, 600 V, EPR Insulation
						UP104-8	1-2/C + gnd #8, 600 V, EPR Insulation
						1255-1	1-3/C #16, 600 V, EPR Insulation
						UP104-3	1-2/C + gnd #10, 600 V, EPR Insulation
						UP204-1	1-2/C + gnd #10, 600 V, EPR Insulation
						UP104-6	1-2/C + gnd #8 ,600 V, EPR Insulation
1T25	E-114B	610	152.4 mm siderail ladder tray	2798.19	18064.48	UP105-10	1-2/C + gnd #8, 600 V, EPR Insulation
						1201-1	1-2/C + gnd #10, 600 V, EPR Insulation
						1201-2	1-2/C + gnd #10, 600 V, EPR Insulation
						1201-6	1-2/C + gnd #10, 600 V, EPR Insulation
						1096	1-3/C + gnd #2, 600 V, EPR Insulation
						1255-1	1-3/C #16, 600 V, EPR Insulation
						1202-4	1-3/C #14, 600 V, EPR Insulation
						UP105-8	1-2/C + gnd #8, 600 V, EPR Insulation
						UP205-1	1-2/C + gnd #10, 600 V, EPR Insulation
						1202-3	1-7/C #16, 600 V, EPR Insulation
						1202-2	1-3/C #14, 600 V, EPR Insulation
						Pull rope	Soft-Fiber Polyester
						UP105-3	1-2/C + gnd #10, 600 V, EPR Insulation
						UP105-9	1-2/C + gnd #8, 600 V, EPR Insulation
						UP105-7	1-2/C + gnd #8, 600 V, EPR Insulation
						S-3056-5	1-4/C #14, 600 V, EPR Insulation
						S-3056-7	1-2/C #14, 600 V, EPR Insulation
1T26	E-116	610	152.4 mm siderail ladder tray	2557.83 (6)	18064.48	UP106-1	1-2/C + gnd #8, 600 V, EPR Insulation
						UP106-8	1-2/C + gnd #8, 600 V, EPR Insulation
						UP106-3	1-2/C + gnd #8, 600 V, EPR Insulation
						1255-2	1-3/C #16, 600 V, EPR Insulation
						UP206-1	1-2/C + gnd #10, 600 V, EPR Insulation
						Pull rope	Soft-Fiber Polyester
						1202-2	1-3/C #14, 600 V, EPR Insulation
						1202-3	1-7/C #16, 600 V, EPR Insulation
						UP106-6	1-2/C + gnd #8, 600 V, EPR Insulation
						UP106-7	1-2/C + gnd #8, 600 V, EPR Insulation (6)
						UP106-9	1-2/C + gnd #8, 600 V, EPR Insulation
						1097	1-3/C + gnd #2, 600 V, EPR Insulation
						1202-4	1-3/C #14, 600 V, EPR Insulation
						1202-1	1-2/C + gnd #10, 600 V, EPR Insulation
						1202-3A	1-2/C #14, 600 V, EPR Insulation
1T27	E-117	610	152.4 mm siderail ladder tray	1726.55	18064.48	UP107-6	1-2/C + gnd #8, 600 V, EPR Insulation
						Pull rope	Soft-Fiber Polyester
						UP107-7	1-2/C + gnd #8, 600 V, EPR Insulation
						UP107-9	1-2/C + gnd #8, 600 V, EPR Insulation
						1256-1	1-3/C #16 ,600V, EPR Insulation
						UP107-8	1-2/C + gnd #8, 600 V, EPR Insulation
						1098	1-3/C + gnd #2, 600 V, EPR Insulation
						UP107-3	1-2/C + gnd #8, 600 V, EPR Insulation

CONDUIT DATA

Conduit No.	Reference	Size	Type	Total Fill (mm²)	Allowable Fill (mm²)	Included Cable No.	Conductor Type
1T28	E-118	610	152.4 mm siderail ladder tray	2851.38	18064.48	UP108-8	1-2/C + gnd #8, 600 V, EPR Insulation
						UP108-3	1-2/C + gnd #8, 600 V, EPR Insulation
						UP108-10	1-2/C + gnd #8, 600 V, EPR Insulation
						S-3056-8	1-4/C #14, 600 V, EPR Insulation
						2201-4A	1-2/C #14, 600 V, EPR Insulation
						Pull rope	Soft-Fiber Polyester
						UP108-7	1-2/C + gnd #8, 600 V, EPR Insulation
						2201-5	1-3/C #14, 600 V, EPR Insulation
						2201-1	1-2/C + gnd #10, 600 V, EPR Insulation
						UP108-9	1-2/C + gnd #8, 600 V, EPR Insulation
						UP108-12	1-2/C + gnd #8, 600 V, EPR Insulation
						1099	1-3/C + gnd #2, 600 V, EPR Insulation
						1256-1	1-3/C #16, 600 V, EPR Insulation
1T29	E-20B, E-126	610	152.4 mm siderail ladder tray	12114.34	18064.48	1106	1-3/C + gnd #6, 600 V, EPR Insulation
						S-1032-1	1-3/C + gnd #4, 600 V, EPR Insulation
						A-3002-1	1-3/C + gnd #4, 600 V, EPR Insulation
						A-3001-1	1-3/C + gnd #4, 600 V, EPR Insulation
						A-3013-1	1-3/C + gnd #2, 600 V, EPR Insulation
						A-3012-1	1-3/C + gnd #2, 600 V, EPR Insulation
						S-3023-1	1-3/C + gnd #4, 600 V, EPR Insulation
						1097	1-3/C + gnd #2, 600 V, EPR Insulation
						S-3051-1	1-3/C + gnd #4, 600 V, EPR Insulation
						A-1035-1	1-3/C + gnd #6, 600 V, EPR Insulation
						A-3011-1	1-3/C + gnd #2, 600 V, EPR Insulation
						S-3021-1	1-3/C + gnd #4, 600 V, EPR Insulation
						S-3022-1	1-3/C + gnd #2, 600 V, EPR Insulation
						S-3056-1	1-3/C + gnd #6, 600 V, EPR Insulation
						1098	1-3/C + gnd #2, 600 V, EPR Insulation
						1096	1-3/C + gnd #2, 600 V, EPR Insulation
						1095	1-3/C + gnd #2, 600 V, EPR Insulation
						S-1031-1	1-3/C + gnd #2, 600 V, EPR Insulation
						Pull rope	Soft-Fiber Polyester
						1099	1-3/C + gnd #2, 600 V, EPR Insulation
						A-3008-1	1-2/C + gnd #8, 600 V, EPR Insulation
						1117	1-3/C + gnd #2/0, 600 V, EPR Insulation
						A-3010-1	1-3/C + gnd #2, 600 V, EPR Insulation
						1115	1-3/C + gnd #1/0, 600 V, EPR Insulation
						A-3009-1	1-3/C + gnd #2, 600 V, EPR Insulation

For continuation, see next sheet.

CONDUIT AND TRAY SCHEDULE

E-407

REVISED BY	DATE 8/02	PBP	CALCULATED/ DESIGNED BY	CHECKED BY
DATE REVISED	8/02	AB		

DESIGN OVERSIGHT
BEHZAD GOLEMOHAMMADI

STATE OF CALIFORNIA - DEPARTMENT OF TRANSPORTATION
Caltrans

LAST REVISION 00-00-00
DATE PLOTTED => 05-JUL-2011
TIME PLOTTED => 14:56

FOR REDUCED PLANS ORIGINAL SCALE IS IN MILLIMETERS 0 20 40 60 80

DGN FILE =>04-0120f1_0362R06.dgn
USERNAME =>florico

CU 04251 | EA 0120F1

CONDUIT DATA

Conduit No	Reference	Size	Type	Total Fill (mm²)	Allowable Fill (mm²)	Included Cable No.	Conductor Type
1T33	E-114B	610	152.4 mm siderail ladder tray	7720.94	18064.48	UP104-8	1-2/C + gnd #8, 600 V, EPR Insulation
						UP108-12	1-2/C + gnd #8, 600 V, EPR Insulation
						UP108-9	1-2/C + gnd #8, 600 V, EPR Insulation
						A-1011-1	1-3/C + gnd #2, 600 V, EPR Insulation
						A-1012-1	1-3/C + gnd #2, 600 V, EPR Insulation
						UP104-3	1-2/C + gnd #10, 600 V, EPR Insulation
						UP107-3	1-2/C + gnd #8, 600 V, EPR Insulation
						UP105-9	1-2/C + gnd #8, 600 V, EPR Insulation
						UP104-9	1-2/C + gnd #10, 600 V, EPR Insulation
						Pull rope	Soft-Fiber Polyester
						UP108-4	1-2/C + gnd #8, 600 V, EPR Insulation
						UP108-2	1-2/C + gnd #8, 600 V, EPR Insulation
						UP108-7	1-2/C + gnd #8, 600 V, EPR Insulation
						UP107-7	1-2/C + gnd #8, 600 V, EPR Insulation
						UP106-7	1-2/C + gnd #8, 600 V, EPR Insulation
						UP105-7	1-2/C + gnd #8, 600 V, EPR Insulation
						A-1013-1	1-3/C + gnd #2, 600 V, EPR Insulation
						UP107-9	1-2/C + gnd #8, 600 V, EPR Insulation
						A-1014-1	1-3/C + gnd #2, 600 V, EPR Insulation
						UP106-3	1-2/C + gnd #8, 600 V, EPR Insulation
						UP105-3	1-2/C + gnd #10, 600 V, EPR Insulation
						UP106-6	1-2/C + gnd #8, 600 V, EPR Insulation
						UP105-10	1-2/C + gnd #8, 600 V, EPR Insulation
						UP104-6	1-2/C + gnd #8, 600 V, EPR Insulation
						UP107-8	1-2/C + gnd #8, 600 V, EPR Insulation
						UP106-8	1-2/C + gnd #8, 600 V, EPR Insulation
						UP105-8	1-2/C + gnd #8, 600 V, EPR Insulation
						UP104-7	1-2/C + gnd #8, 600 V, EPR Insulation
						UP108-8	1-2/C + gnd #8, 600 V, EPR Insulation
						UP106-9	1-2/C + gnd #8, 600 V, EPR Insulation
						UP108-10	1-2/C + gnd #8, 600 V, EPR Insulation
1T39	E-20B, E-126	610	152.4 mm siderail ladder tray	1054.36	18064.48	A-1011-1	1-3/C + gnd #2, 600 V, EPR Insulation
						A-1014-1	1-3/C + gnd #2, 600 V, EPR Insulation
						Pull rope	Soft-Fiber Polyester
1T43	E-114B	610	152.4 mm siderail solid bottom tray	13605.16	38709.60	MVDSW04A	MVDS DLC
						1144	1 - 2 pair, shielded #18 with IS/OA , 300 V, PVC Jacket
						1475-3C	12 Fiber, single mode fiberoptic cable
						1475-3A	12 Fiber, single mode fiberoptic cable
						1474-4	50 pair #18, shielded pairs, IS/OS shield 600 V, XLPE Insul., PVC Jacket
						1145	1 - 2 pair, shielded #18 with IS/OA , 300 V, PVC Jacket
						1474-5	50 pair #18, shielded pairs, IS/OS shield 600 V, XLPE Insul., PVC Jacket
						1474-7	50 pair #18, shielded pairs, IS/OS shield 600 V, XLPE Insul., PVC Jacket
						1477-2	72 Fiber, single mode fiberoptic riser cable
						1475-3	72 Fiber, single mode fiberoptic riser cable
						MVDSW02A	MVDS DLC
						1115-1	1-2PR #18 Twisted Shielded w/overall shield
						1117-1	1-2PR #18 Twisted Shielded w/overall shield
						1475-3B	12 Fiber, single mode fiberoptic cable
						2900-472B	4 pair #22, shielded pairs, FEP Insulation
						2900-182A	4 pair #22, shielded pairs, FEP Insulation
						2900-182B	4 pair #22, shielded pairs, FEP Insulation
						2900-202A	4 pair #22, shielded pairs, FEP Insulation
						2900-282A	4 pair #22, shielded pairs, FEP Insulation
						2900-342A	4 pair #22, shielded pairs, FEP Insulation
						2900-392A	4 pair #22, shielded pairs, FEP Insulation
						2900-462A	4 pair #22, shielded pairs, FEP Insulation
						2900-472A	4 pair #22, shielded pairs, FEP Insulation
						Pull rope	Soft-Fiber Polyester
						2900-472C	4 pair #22, shielded pairs, FEP Insulation
						1474-8	50 pair #18, shielded pairs, IS/OS shield 600 V, XLPE Insul., PVC Jacket
						1473-5	50 pair #18, shielded pairs, IS/OS shield 600 V, XLPE Insul., PVC Jacket
						1473-7	50 pair #18, shielded pairs, IS/OS shield 600 V, XLPE Insul., PVC Jacket
						1473-10	50 pair #18, shielded pairs, IS/OS shield 600V, XLPE Insul., PVC Jacket
						1474-10	50 pair #18, shielded pairs, IS/OS shield 600 V, XLPE Insul., PVC Jacket
						2900-462B	4 pair #22, shielded pairs, FEP Insulation
						1479-1	72 Fiber, single mode fiber optic riser cable inside brown innerduct
						1479-2	72 Fiber, single mode fiber optic riser cable inside brown innerduct
						1481-2	12 Fiber, single mode fiber optic cable inside brown innerduct

REQUEST FOR INFORMATION NOT ADDRESSED IN THIS CCO REMAIN IN FORCE					
6	07/01/11	TOS MODIFICATIONS	RR	RG	81
5	03/01/11	BASE INTEGRATION	RSB	WB	150
4	03/26/10	DEHUMIDIFIER SCADA INTERFACE	RR	RG FW	130
3	03/30/09	SERVICE PLATFORM ELECTRICAL CHANGES	RY RR	RG MP	55
2	02/25/08	CABLE TRAY CHANGES	RR TW	RG	42S1
1	03/04/08	BARRIER MODIFICATIONS	JS BM	RG	44
MARK	DATE	DESCRIPTIONS REVISIONS	BY	CH'D	CCO#

CONTRACT CHANGE ORDER NO. 81
SHEET 61 OF 70

REGISTERED PROFESSIONAL ENGINEER — S. A. ESTOQUE, JR. — No. E-10151 — Exp. 12/31/2008 ELECTRICAL — STATE OF CALIFORNIA — 1 2

REGISTERED PROFESSIONAL ENGINEER — FADI WALIEDDINE — No. 11455 — Exp. 12/31/2009 ELECTRICAL — STATE OF CALIFORNIA — 3

REGISTERED PROFESSIONAL ENGINEER — SYN YEE CHIN — No. 18186 — Exp. 09/30/2013 ELECTRICAL — STATE OF CALIFORNIA — 4 5 6

FOR REVISION ONLY FOR REVISION ONLY FOR REVISION ONLY

CONDUIT DATA

Conduit No	Reference	Size	Type	Total Fill (mm²)	Allowable Fill (mm²)	Included Cable No.	Conductor Type
1T44	E-114A	610	152.4 mm siderail solid bottom tray	3785.76	38709.60	1473-5	50 pair #18, shielded pairs, IS/OS shield 600 V, XLPE Insul., PVC Jacket
						1474-5	50 pair #18, shielded pairs, IS/OS shield 600 V, XLPE Insul., PVC Jacket
						1475-3A	12 Fiber, single mode fiberoptic cable
						MVDSW02A	MVDS DLC
						Pull rope	Soft-Fiber Polyester
						1474-4	50 pair #18, shielded pairs, IS/OS shield 600 V, XLPE Insul., PVC Jacket
1T45	E-114B	610	152.4 mm siderail solid bottom tray	2972.95	38709.60	Pull rope	Soft-Fiber Polyester
						2900-182A	4 pair #22, shielded pairs, FEP Insulation
						2910-10	4 pair #22, shielded pairs, 300 V, PE Insulation
						2910-8	4 pair #22, shielded pairs, 300 V, PE Insulation
						1473-5	50 pair #18, shielded pairs, IS/OS shield 600 V, XLPE Insul., PVC Jacket
						1474-5	50 pair #18, shielded pairs, IS/OS shield 600 V, XLPE Insul., PVC Jacket
						1474-5B	1 - 6 pair, shielded #18 with overall shield , 300 V, PVC Jacket
						1474-5A	1 - 6 pair, shielded #18 with overall shield , 300 V, PVC Jacket
						2900-472C	4 pair #22, shielded pairs, FEP Insulation
						2900-182B	4 pair #22, shielded pairs, FEP Insulation
						2900-472A	4 pair #22, shielded pairs, FEP Insulation
						2900-462B	4 pair #22, shielded pairs, FEP Insulation
						2900-462A	4 pair #22, shielded pairs, FEP Insulation
						2900-392A	4 pair #22, shielded pairs, FEP Insulation
						2900-342A	4 pair #22, shielded pairs, FEP Insulation
						2900-282A	4 pair #22, shielded pairs, FEP Insulation
						2910-7	4 pair #24, overall shielded, 30 V, PE Insulation
						2900-472B	4 pair #22, shielded pairs, FEP Insulation
						2900-202A	4 pair #22, shielded pairs, FEP Insulation
						1115-1	1-2PR #18 Twisted Shielded w/overall shield
1T46	E-98, E-114	610	152.4 mm siderail solid bottom tray	5211.36 6	38709.60	CCTVE01B	HCC 6
						1474-7	50 pair #18, shielded pairs, IS/OS shield 600 V, XLPE Insul., PVC Jacket
						MVDSW03A	MVDS DLC 6
						1475-3B	12 Fiber, single mode fiberoptic cable
						Pull rope	Soft-Fiber Polyester
						1473-7	50 pair #18, shielded pairs, IS/OS shield 600 V, XLPE Insul., PVC Jacket
						1479-1	72 Fiber, single mode fiber optic riser cable inside brown innerduct
						1479-2	72 Fiber, single mode fiber optic riser cable inside brown innerduct
						1481-2	12 Fiber, single mode fiber optic cable inside brown innerduct

For continuation, see next sheet.

CONDUIT AND TRAY SCHEDULE

E-408

DIST	COUNTY	ROUTE	KILOMETER POST TOTAL PROJECT	SHEET No	TOTAL SHEETS
04	SF	80	13.2/13.9	363 R6	1204

James Erlingsson 12/19/02
REGISTERED ELECTRICAL ENGINEER DATE

REGISTERED PROFESSIONAL ENGINEER — JENS ERLINGSSON — No. 8249 — Exp. 9/30/06 ELECTRICAL — STATE OF CALIFORNIA

12-6-04
PLANS APPROVAL DATE

PB POWER, Inc.
A Parsons Brinckerhoff Company
303 Second St., Suite 700N
San Francisco, CA 94107-1317

The State of California or its officers or agents shall not be responsible for the accuracy or completeness of electronic copies of this plan sheet.

Caltrans now has a web site! To get to the web site, go to http://www.dot.ca.gov

DESIGN OVERSIGHT — BEHZAD GOLEMOHAMMADI
CALCULATED/DESIGNED BY — PBP — DATE 8/02 — REVISED BY
CHECKED BY — AB — 8/02 — DATE REVISED

DIST	COUNTY	ROUTE	KILOMETER POST TOTAL PROJECT	SHEET No	TOTAL SHEETS
04	SF	80	13.2/13.9	373 R8	1204

REGISTERED ELECTRICAL ENGINEER — 12/19/02 (DATE)

JENS ERLINGSSON, No. 8249, Exp. 9/30/06, ELECTRICAL, REGISTERED PROFESSIONAL ENGINEER, STATE OF CALIFORNIA

12-6-04
PLANS APPROVAL DATE

PB POWER, Inc.
A Parsons Brinckerhoff Company
303 Second St., Suite 700N
San Francisco, CA 94107-1317

The State of California or its officers or agents shall not be responsible for the accuracy or completeness of electronic copies of this plan sheet.

Caltrans now has a web site! To get to the web site, go to: http://www.dot.ca.gov

REQUEST FOR INFORMATION NOT ADDRESSED IN THIS CCO REMAIN IN FORCE

MARK	DATE	DESCRIPTIONS REVISIONS	BY	CH'D	CCO#
8	07/01/11	TOS MODIFICATIONS	RR	RG	81
7	03/24/11	BIKE PATH CONDUIT	TW	RG	73
6	01/07/11	ELECTRICAL WARNING SYSTEMS	TW	RG	61
5	06/11/10	BIKE PATH CONDUIT	TW	RG	73
4	03/26/10	DEHUMIDIFIER SCADA INTERFACE	RR	RG FW	130
3	03/30/09	SERVICE PLATFORM ELECTRICAL CHANGES	RY RR	RG MP	55
2	02/25/08	CABLE TRAY CHANGES	RR TW	RG	42S1
1	03/04/08	BARRIER MODIFICATIONS	JS BM	RG	44

SHEET OF
CONTRACT CHANGE ORDER NO. 81
62 70

REVISIONS SUPERCEDED

SYN YEE CHIN, No. 18186, Exp. 09/30/2011, ELECTRICAL, REGISTERED PROFESSIONAL ENGINEER, STATE OF CALIFORNIA

Syn Yee Chin
FOR REVISION ONLY
4 5 6 7 8

FADI WALIEDDINE, No. 11465, Exp. 12/31/2009, ELECTRICAL, REGISTERED PROFESSIONAL ENGINEER, STATE OF CALIFORNIA

3

FOR REVISION ONLY

S. A. ESTOQUE, No. E-10151, Exp. 12/31/2008, ELECTRICAL, REGISTERED PROFESSIONAL ENGINEER, STATE OF CALIFORNIA

1 2

FOR REVISION ONLY

CONDUIT DATA

Conduit No	Reference	Size	Type	Total Fill (mm²)	Allowable Fill (mm²)	Included Cable No.	Conductor Type
2959	E-139	41	RGS conduit	0.00	534.55	Pull rope	Soft-Fiber Polyester
2960	E-139	41	RGS conduit	212.85	534.55	Pull rope	Soft-Fiber Polyester
						LP223-2A,4A	3 + 1 gnd #6,#8, 600 V, RHH/RHW Insulation
2961	E-139	41	RGS conduit	0.00	534.55	Pull rope	Soft-Fiber Polyester
2962	E-138	41	RGS conduit	0.00	534.55	Pull rope	Soft-Fiber Polyester
2963	E-138	41	RGS conduit	0.00	534.55	Pull rope	Soft-Fiber Polyester
2964	E-138	41	RGS conduit	0.00	534.55	Pull rope	Soft-Fiber Polyester
2965	E-138	41	RGS conduit	0.00	534.55	Pull rope	Soft-Fiber Polyester
2966	E-138	41	RGS conduit	0.00	534.55	Pull rope	Soft-Fiber Polyester
2967	E-138	41	RGS conduit	0.00	534.55	Pull rope	Soft-Fiber Polyester
2T13	E-181 Thru E-186	305	152.4 mm siderail ladder tray	2780.99	8387.08	Pull rope	Soft-Fiber Polyester
	E-212A					2391	3-1/C #4/0 + 1/C #1/0 gnd, 15kV, EPR Insulation
2T14	E-212, E-21B	305	152.4 mm siderail ladder tray	2780.99	8387.08	Pull rope	Soft-Fiber Polyester
						2391	3-1/C #4/0 + 1/C #1/0 gnd, 15kV, EPR Insulation
2T14A	E-21, E-21E	305	152.4 mm siderail ladder tray	0.00	8387.08		
2T14B	E-21, E-21E	305	152.4 mm siderail ladder tray	0.00	8387.08		
2T21	E182,E207C,E264	610	152.4 mm siderail ladder tray	2120.21	16774.16	2121	1-3/C + gnd #1/0,600 V, EPR Insulation
						2120	1-3/C + gnd #1/0,600 V, EPR Insulation
						1201-1	1-2/C + gnd #10, 600 V, EPR Insulation
						1201-2	1-2/C + gnd #10, 600 V, EPR Insulation
						1201-6	1-2/C + gnd #10, 600 V, EPR Insulation
						1201-4A	1-2/C #14, 600 V, EPR Insulation
						1201-4B	1-2/C #14, 600 V, EPR Insulation
						1201-4C	1-2/C #14, 600 V, EPR Insulation
2T23	E-114B	760	152.4 mm siderail ladder tray	21921.01 8	22580.60	2202-2	1-3/C #14,600 V, EPR Insulation
						A-3004-1	1-3/C + gnd #2,600 V, EPR Insulation
						A-3003-1	1-3/C + gnd #4,600 V, EPR Insulation
						A-2013-1	1-3/C + gnd #2,600 V, EPR Insulation
						A-2012-1	1-3/C + gnd #2,600 V, EPR Insulation
						2123	1-3/C + gnd #2,600 V, EPR Insulation
						2202-3	1-7/C #16,600 V, EPR Insulation
						2105	1-3/C + gnd #2,600 V, EPR Insulation
						2106	1-3/C + gnd #2,600 V, EPR Insulation
						2202-4	1-3/C #14,600 V, EPR Insulation
						2104	1-3/C + gnd #2,600 V, EPR Insulation
						2121	1-3/C + gnd #1/0,600 V, EPR Insulation
						2204-1	1-3/C #14, 600 V, EPR Insulation
						UP204-7	1-2/C + gnd #8,600 V, EPR Insulation
						2119-A	1-3/C + gnd 250 Kcmil,600 V, EPR Insulation
						8	
						2201-2	1-2/C + gnd #10,600 V, EPR Insulation
						2123-2	1-3/C + gnd #2/0,600 V, EPR Insulation
						2123-3	1-3/C + gnd #2/0,600 V, EPR Insulation
						1118	1-3/C + gnd #2/0,600 V, EPR Insulation
						2095	1-3/C + gnd #2,600 V, EPR Insulation
						2096	1-3/C + gnd #2,600 V, EPR Insulation
						2097	1-3/C + gnd #2,600 V, EPR Insulation
						2098	1-3/C + gnd #2,600 V, EPR Insulation
						2099	1-3/C + gnd #2,600 V, EPR Insulation
						S-3053-1	1-3/C + gnd #2,600 V, EPR Insulation
						2107	1-3/C + gnd #2,600 V, EPR Insulation
						2120	1-3/C + gnd #1/0,600 V, EPR Insulation
						2201-6	1-2/C + gnd #10,600 V, EPR Insulation
						1201-1	1-2/C + gnd #10,600 V, EPR Insulation
						2202-1	1-2/C + gnd #10,600 V, EPR Insulation
						1201-2	1-2/C + gnd #10,600 V, EPR Insulation
						1201-6	1-2/C + gnd #10,600 V, EPR Insulation
						2204-2	1-3/C #16,600 V, EPR Insulation
						Pull rope	Soft-Fiber Polyester
						A-3041-1	1-3/C + gnd #2,600 V, EPR Insulation
						S-3052-1	1-3/C + gnd #2,600 V, EPR Insulation
						2125	1-3/C + gnd 250 Kcmil,600 V, EPR Insulation
						2103	1-3/C + gnd #2,600 V, EPR Insulation
						S-3056-9	1-4/C #14,600 V, EPR Insulation
						8	
						S-3056-6	1-4/C #14,600 V, EPR Insulation
						2202-3A	1-2/C #14, 600 V, EPR Insulation
						2201-4B	1-2/C #14, 600 V, EPR Insulation
						2201-4C	1-2/C #14, 600 V, EPR Insulation
						1201-4A	1-2/C #14, 600 V, EPR Insulation
						1201-4B	1-2/C #14, 600 V, EPR Insulation
						1201-4C	1-2/C #14, 600 V, EPR Insulation

CONDUIT DATA

Conduit No	Reference	Size	Type	Total Fill (mm²)	Allowable Fill (mm²)	Included Cable No.	Conductor Type
						LP219-2,4	1-3/C + gnd #6,600 V, EPR Insulation
						LP219-6,8	1-3/C + gnd #6,600 V, EPR Insulation
						LP220-2,4	1-3/C + gnd #6,600 V, EPR Insulation
						LP220-6,8	1-3/C + gnd #6,600 V, EPR Insulation
						LP221-2,4	1-3/C + gnd #6,600 V, EPR Insulation
						LP221-6,8	1-3/C + gnd #6,600 V, EPR Insulation
						LP222-2,4	1-3/C + gnd #6,600 V, EPR Insulation
						LP222-6,8	1-3/C + gnd #6,600 V, EPR Insulation
						LP223-2,4	1-3/C + gnd #6,600 V, EPR Insulation
						LP223-6,8	1-3/C + gnd #6,600 V, EPR Insulation

For continuation, see next sheet.

CONDUIT AND TRAY SCHEDULE

E-418

DESIGN OVERSIGHT — BEHZAD GOLEMOHAMMADI
CALCULATED/DESIGNED BY — CHECKED BY — PBP — AB
DATE 8/02 — 8/02
REVISED BY — DATE REVISED

STATE OF CALIFORNIA - DEPARTMENT OF TRANSPORTATION
Caltrans

FOR REDUCED PLANS ORIGINAL SCALE IS IN MILLIMETERS 0 20 40 60 80

DGN FILE =>04-0120F1_0373R08.dgn
USERNAME =>llorico

CU 04251

EA 0120F1

LAST REVISION 00-00-00

DATE PLOTTED => 05-JUL-2011
TIME PLOTTED => 14:57

CONDUIT DATA

Conduit No	Reference	Size	Type	Total Fill (mm²)	Allowable Fill (mm²)	Included Cable No.	Conductor Type
2T24	E-114, E-182	610	152.4 mm siderail ladder tray	2191.50	18064.48	LP219-2,4	1-3/C + gnd #6, 600 V, EPR Insulation
						LP219-6,8	1-3/C + gnd #6, 600 V, EPR Insulation
						Pull rope	Soft-Fiber Polyester
						UP204-7	1-2/C + gnd #8,600 V, EPR Insulation
						UP204-1	1-2/C + gnd #10,600 V, EPR Insulation
						UP204-8	1-2/C + gnd #8,600 V, EPR Insulation
						2103	1-3/C + gnd #2,600 V, EPR Insulation
						2095	1-3/C + gnd #2,600 V, EPR Insulation
2T25	E-115, E-182	610	152.4 mm siderail ladder tray	3155.19	18064.48	UP205-7	1-2/C + gnd #8,600 V, EPR Insulation
						UP205-1	1-2/C + gnd #10,600 V, EPR Insulation
						LP220-2,4	1-3/C + gnd #6,600 V, EPR Insulation
						LP220-6,8	1-3/C + gnd #6,600 V, EPR Insulation
						Pull rope	Soft-Fiber Polyester
						S-3056-6	1-4/C #14,600 V, EPR Insulation
						2202-2	1-3/C #14,600 V, EPR Insulation
						2204-2	1-3/C #16,600 V, EPR Insulation
						2096	1-3/C + gnd #2,600 V, EPR Insulation
						2204-1	1-3/C #14, 600 V, EPR Insulation
						2104	1-3/C + gnd #2,600 V, EPR Insulation
						UP205-8	1-2/C + gnd #8,600 V, EPR Insulation
						2202-3	1-7/C #16,600 V, EPR Insulation
						1201-1	1-2/C + gnd #10, 600 V, EPR Insulation
						1201-2	1-2/C + gnd #10, 600 V, EPR Insulation
						1201-6	1-2/C + gnd #10, 600 V, EPR Insulation
						1201-4A	1-2/C #14, 600 V, EPR Insulation
						1201-4B	1-2/C #14, 600 V, EPR Insulation
						1201-4C	1-2/C #14, 600 V, EPR Insulation
2T26	E-117, E-183	610	152.4 mm siderail ladder tray	3050.84 (2)	18064.48	2202-1	1-2/C + gnd #10, 600 V, EPR Insulation (2)
						LP221-2,4	1-3/C + gnd #6,600 V, EPR Insulation
						Pull rope	Soft-Fiber Polyester (2)
						LP221-6,8	1-3/C + gnd #6,600 V, EPR Insulation
						UP206-7	1-2/C + gnd #8,600 V, EPR Insulation
						UP207-1	1-2/C + gnd #10,600 V, EPR Insulation
						UP206-1	1-2/C + gnd #10,600 V, EPR Insulation
						2202-2	1-3/C #14, 600 V, EPR Insulation
						2105	1-3/C + gnd #2,600 V, EPR Insulation
						2097	1-3/C + gnd #2,600 V, EPR Insulation
						UP206-8	1-2/C + gnd #8,600 V, EPR Insulation
						2202-3	1-7/C #16,600 V, EPR Insulation
						2202-3A	1-2/C #14, 600 V, EPR Insulation

THIS PLAN ACCURATE FOR ELECTRICAL WORK ONLY.

REQUEST FOR INFORMATION NOT ADDRESSED IN THIS CCO REMAIN IN FORCE					
2	07/01/11	TOS MODIFICATIONS	RR	RG	81
1	03/24/11	BIKE PATH CONDUIT	TW	RG	73
0	01/07/11	ELECTRICAL WARNING SYSTEMS	TW	RG	61
MARK	DATE	DESCRIPTIONS REVISIONS	BY	CH'D	CCO#

CONTRACT CHANGE ORDER NO. 81
SHEET 63 OF 70

CONDUIT DATA

Conduit No	Reference	Size	Type	Total Fill (mm²)	Allowable Fill (mm²)	Included Cable No.	Conductor Type

For continuation, see next sheet.

CONDUIT AND TRAY SCHEDULE

E-418A

DIST	COUNTY	ROUTE	KILOMETER POST TOTAL PROJECT	SHEET No	TOTAL SHEETS
04	SF	80	13.2/13.9	373 S1R2	1204

Syn Yee Chin 01/07/11
REGISTERED ELECTRICAL ENGINEER DATE

SYN YEE CHIN No. 18186 Exp. 09/30/2011 ELECTRICAL — REGISTERED PROFESSIONAL ENGINEER — STATE OF CALIFORNIA

PLANS APPROVAL DATE

PB AMERICAS, Inc.
A Parsons Brinckerhoff Company
303 Second St., Suite 700N
San Francisco, CA 94107-1317

The State of California or its officers or agents shall not be responsible for the accuracy or completeness of electronic copies of this plan sheet.

Caltrans now has a web site! To get to the web site, go to http://www.dot.ca.gov

DESIGN OVERSIGHT — BEHZAD GOLEMOHAMMADI
CALCULATED/DESIGNED BY — XX
CHECKED BY — XX/10
DATE REVISED — XX/10
REVISED BY

STATE OF CALIFORNIA - DEPARTMENT OF TRANSPORTATION

LAST REVISION 00-00-00
DATE PLOTTED => 05-JUL-2011
TIME PLOTTED => 14:57

FOR REDUCED PLANS ORIGINAL SCALE IS IN MILLIMETERS 0 20 40 60 80

DGN FILE =>04-0120f1_0373S01R02.dgn
USERNAME =>llorico

CU 04251

EA 0120F1

CONDUIT DATA

Conduit No	Reference	Size	Type	Total Fill (mm²)	Allowable Fill (mm²)	Included Cable No.	Conductor Type
2T43	E-114B	610		6 10572.67	38709.60	2900-152C	4 pair #22, shielded pairs, FEP insulation
						2900-292A	4 pair #22, shielded pairs, FEP insulation
						2900-272C	4 pair #22, shielded pairs, FEP insulation
						2900-272B	4 pair #22, shielded pairs, FEP insulation
						2900-272A	4 pair #22, shielded pairs, FEP insulation
						2900-192C	4 pair #22, shielded pairs, FEP insulation
						2900-192B	4 pair #22, shielded pairs, FEP insulation
						2900-192A	4 pair #22, shielded pairs, FEP insulation
						2900-172C	4 pair #22, shielded pairs, FEP insulation
						2900-172B	4 pair #22, shielded pairs, FEP insulation
						2900-172A	4 pair #22, shielded pairs, FEP insulation
						1473-6	50 pair #18, shielded pairs, IS/OS shield 600 V, XLPE insul., PVC jacket
						2900-162A	4 pair #22, shielded pairs, FEP insulation
						2900-332C	4 pair #22, shielded pairs, FEP insulation
						2900-152B	4 pair #22, shielded pairs, FEP insulation
						2900-152A	4 pair #22, shielded pairs, FEP insulation
						2900-142A	4 pair #22, shielded pairs, FEP insulation
						2910-8	4 pair #22, shielded pairs, 300 V, PE insulation
						2119-2	4 pair #22, shielded pairs, 300 V, PE insulation
						2475-3C	12 Fiber, single mode fiberoptic cable
						MVDSE03A	MVDS DLC
						MVDSE01A	MVDS DLC
						MVDSE02A	MVDS DLC
						2154	1 - 2 pair, shielded #18 with IS/OA, 300 V, PVC jacket
						2900-162B	4 pair #22, shielded pairs, FEP insulation
						2900-442A	4 pair #22, shielded pairs, FEP insulation
						2474-10	50 pair #18, shielded pairs, IS/OS shield 600 V, XLPE insul., PVC jacket
						1474-6	50 pair #18, shielded pairs, IS/OS shield 600 V, XLPE insul., PVC jacket
						1473-4	50 pair #18, shielded pairs, IS/OS shield 600 V, XLPE insul., PVC jacket
						2910-7	4 pair #24, overall shielded, 300V, PE insulation
						2910-3	4 pair #22, shielded pairs, FEP insulation
						2910-2	4 pair #22, shielded pairs, FEP insulation
						2910-12	4 pair #22, shielded pairs, 300 V, PE insulation
						2910-11	1-3/C #16,600 V, EPR insulation
						2900-482A	4 pair #22, shielded pairs, FEP insulation
						2900-452B	4 pair #22, shielded pairs, FEP insulation
						2900-452A	4 pair #22, shielded pairs, FEP insulation
						2900-332A	4 pair #22, shielded pairs, FEP insulation
						2900-442B	4 pair #22, shielded pairs, FEP insulation
						2900-332B	4 pair #22, shielded pairs, FEP insulation
						2900-432A	4 pair #22, shielded pairs, FEP insulation
						2900-422B	4 pair #22, shielded pairs, FEP insulation
						2900-422A	4 pair #22, shielded pairs, FEP insulation
						2900-412C	4 pair #22, shielded pairs, FEP insulation
						2900-412B	4 pair #22, shielded pairs, FEP insulation
						2900-412A	4 pair #22, shielded pairs, FEP insulation
						2900-402A	4 pair #22, shielded pairs, FEP insulation
						2900-382C	4 pair #22, shielded pairs, FEP insulation
						2900-382B	4 pair #22, shielded pairs, FEP insulation
						2900-382A	4 pair #22, shielded pairs, FEP insulation
						2148	1 - 2 pair, shielded #18 with IS/OA, 300 V, PVC jacket
						2900-442C	4 pair #22, shielded pairs, FEP insulation
						6 CCTVE01A	HCC
						1473-8	50 pair #18, shielded pairs, IS/OS shield 600 V, XLPE insul., PVC jacket
						Pull rope	Soft-Fiber Polyester
						2475-3A	12 Fiber, single mode fiberoptic cable
						2475-3B	12 Fiber, single mode fiberoptic cable
						2475-3	72 Fiber, single mode fiberoptic riser cable
						6 CCTVE01B	HCC
						2900-432B	4 pair #22, shielded pairs, FEP insulation
						MVDSW03A	MVDS DLC
						2120-1	1-2PR #18 Twisted Shielded w/overall Shield
						1118-1	1-2PR #18 Twisted Shielded w/overall Shield
						2121-1	1-2PR #18 Twisted Shielded w/overall Shield
						2479-1	72 Fiber, single mode fiber optic riser cable inside brown Innerduct

REQUEST FOR INFORMATION NOT ADDRESSED IN THIS CCO REMAIN IN FORCE					
MARK	DATE	DESCRIPTIONS	BY	CH'D	CCO#
		REVISIONS			
6	07/12/11	TOS MODIFICATIONS	RR	RG	81
5	03/01/11	BASE INTEGRATION	RSB	WB	150
4	03/26/10	DEHUMIDIFIER SCADA INTERFACE	RR	RG FW	130
3	03/30/09	SERVICE PLATFORM ELECTRICAL CHANGES	RY RR	RG MP	55
2	02/25/08	CABLE TRAY CHANGES	TW	RG	42S1
1	03/04/08	BARRIER MODIFICATIONS	JS BM	RG SE	44

CONTRACT CHANGE ORDER NO. 81
SHEET 10 OF 10

REGISTERED PROFESSIONAL ENGINEER — S. A. ESTOQUE, JR. — No. E-10161 — Exp. 12/31/2009 — ELECTRICAL — STATE OF CALIFORNIA — 1 2

FOR REVISION ONLY

REGISTERED PROFESSIONAL ENGINEER — FADI WALIEDDINE — No. 11465 — Exp. 12/31/2009 — ELECTRICAL — STATE OF CALIFORNIA — 3

FOR REVISION ONLY

REGISTERED PROFESSIONAL ENGINEER — SYN YEE CHIN — No. 18186 — Exp. 09/30/2011 — ELECTRICAL — STATE OF CALIFORNIA — 4 5 6

FOR REVISION ONLY

DIST	COUNTY	ROUTE	KILOMETER POST TOTAL PROJECT	SHEET No	TOTAL SHEETS
04	SF	80	13.2/13.9	375 R6	1204

Jens Erlingsson 12/19/02
REGISTERED ELECTRICAL ENGINEER DATE

12-6-04
PLANS APPROVAL DATE

REGISTERED PROFESSIONAL ENGINEER — JENS ERLINGSSON — No. 8249 — Exp. 9/30/06 — ELECTRICAL — STATE OF CALIFORNIA

PB POWER, Inc.
A Parsons Brinckerhoff Company
303 Second St., Suite 700N
San Francisco, CA 94107-1317

The State of California or its officers or agents shall not be responsible for the accuracy or completeness of electronic copies of this plan sheet.

Caltrans now has a web site! To get to the web site, go to: http://www.dot.ca.gov

CONDUIT DATA

Conduit No	Reference	Size	Type	Total Fill (mm²)	Allowable Fill (mm²)	Included Cable No.	Conductor Type
						MVDSW03A	MVDS DLC
2T44	E-115, E-182	610	152.4 mm siderail solid bottom tray	5109.21	38709.60	2119-2	4 pair #22, shielded pairs, 300 V, PE insulation
						1473-4	50 pair #18, shielded pairs, IS/OS shield 600 V, XLPE insul., PVC jacket
						1474-5	50 pair #18, shielded pairs, IS/OS shield 600 V, XLPE insul., PVC jacket
						1474-4	50 pair #18, shielded pairs, IS/OS shield 600 V, XLPE insul., PVC jacket
						Pull rope	Soft-Fiber Polyester
						MVDSE01A	MVDS DLC
						2475-3A	12 Fiber, single mode fiberoptic cable
						1473-5	50 pair #18, shielded pairs, IS/OS shield 600 V, XLPE insul., PVC jacket
2T45	E-115, E-182	610	152.4 mm siderail solid bottom tray	7725.32	38709.60	2900-432B	4 pair #22, shielded pairs, FEP insulation
						2910-12	4 pair #22, shielded pairs, 300 V, PE insulation
						Pull rope	Soft-Fiber Polyester
						2900-412A	4 pair #22, shielded pairs, FEP insulation
						2910-11	1-3/C #16,600 V, EPR insulation
						2910-7	4 pair #24, overall shielded, 30V, PE insulation
						2910-10	4 pair #22, shielded pairs, 300 V, PE insulation
						2910-8	4 pair #22, shielded pairs, 300 V, PE insulation
						2900-422B	4 pair #22, shielded pairs, FEP insulation
						2900-422A	4 pair #22, shielded pairs, FEP insulation
						2900-412C	4 pair #22, shielded pairs, FEP insulation
						2900-412B	4 pair #22, shielded pairs, FEP insulation
						2900-382C	4 pair #22, shielded pairs, FEP insulation
						2900-402A	4 pair #22, shielded pairs, FEP insulation
						2900-272C	4 pair #22, shielded pairs, FEP insulation
						2900-382B	4 pair #22, shielded pairs, FEP insulation
						2900-382A	4 pair #22, shielded pairs, FEP insulation
						2900-332C	4 pair #22, shielded pairs, FEP insulation
						2900-332B	4 pair #22, shielded pairs, FEP insulation
						2900-332A	4 pair #22, shielded pairs, FEP insulation
						2900-292A	4 pair #22, shielded pairs, FEP insulation
						2900-172A	4 pair #22, shielded pairs, FEP insulation
						2900-192B	4 pair #22, shielded pairs, FEP insulation
						2900-142A	4 pair #22, shielded pairs, FEP insulation
						1474-5A	1 - 6 pair, shielded #18 with overall shield, 300 V, PVC jacket
						2910-3	4 pair #22, shielded pairs, FEP insulation
						2910-2	4 pair #22, shielded pairs, FEP insulation
						2900-482A	4 pair #22, shielded pairs, FEP insulation
						2900-452B	4 pair #22, shielded pairs, FEP insulation
						2120-1	1-2PR #18 Twisted Shielded w/overall Shield
						2121-1	1-2PR #18 Twisted Shielded w/overall Shield
						2155	1 - 2 pair, shielded #18 with IS/OA, 300 V, PVC jacket

For continuation, see next sheet

CONDUIT AND TRAY SCHEDULE

E-420

DRAFT 1 (03/01/11)
STATE OF CALIFORNIA - DEPARTMENT OF TRANSPORTATION
Caltrans
DESIGN OVERSIGHT
BEHZAD GOLEMOHAMMADI
CALCULATED/ DESIGNED BY
CHECKED BY
PBP AB
DATE 8/02 8/02
REVISED BY DATE REVISED

LAST REVISION 00-00-00
DATE PLOTTED => 12-JUL-2011
TIME PLOTTED => 09:37

FOR REDUCED PLANS ORIGINAL SCALE IS IN MILLIMETERS 0 20 40 60 80

DGN FILE =>04-0120f1_0375R06.dgn
USERNAME =>llorico

CU 04251 EA 0120F1

DIST	COUNTY	ROUTE	KILOMETER POST TOTAL PROJECT	SHEET No	TOTAL SHEETS
04	SF	80	13.2/13.9	376 R5	1204

Jens Erlingsson 12/19/02
REGISTERED ELECTRICAL ENGINEER DATE

12-6-04
PLANS APPROVAL DATE

REGISTERED PROFESSIONAL ENGINEER — JENS ERLINGSSON No. 8249 Exp. 9/30/06 ELECTRICAL — STATE OF CALIFORNIA

PB POWER, Inc.
A Parsons Brinckerhoff Company
303 Second St., Suite 700N
San Francisco, CA 94107-1317

The State of California or its officers or agents shall not be responsible for the accuracy or completeness of electronic copies of this plan sheet.

Caltrans now has a web site! To get to the web site, go to http://www.dot.ca.gov

REQUEST FOR INFORMATION NOT ADDRESSED IN THIS CCO REMAIN IN FORCE					
5	07/01/11	TOS MODIFICATIONS	RR	RG	81
4	03/01/11	BASE INTEGRATION	RSB	WB	150
3	03/26/10	DEHUMIDIFIER SCADA INTERFACE	TW	RG SYC	130
2	02/25/08	CABLE TRAY CHANGES	TW	RG	42S1
1	03/04/08	BARRIER MODIFICATIONS	JS BM	RG SE	44
MARK	DATE	DESCRIPTIONS REVISIONS	BY	CH'D	CCO#

CONTRACT CHANGE ORDER NO. 8
SHEET 65 OF 70

REGISTERED PROFESSIONAL ENGINEER — SYN YEE CHIN No. 18186 Exp. 09/30/2011 ELECTRICAL — STATE OF CALIFORNIA

3 4 5 Syn Yee Chin
FOR REVISION ONLY

REGISTERED PROFESSIONAL ENGINEER — S. A. ESTOQUE, JR. No. E-10151 Exp. 12/31/2008 ELECTRICAL — STATE OF CALIFORNIA

1 2 S. Estoque
FOR REVISION ONLY

CONDUIT DATA

Conduit No	Reference	Size	Type	Total Fill (mm²)	Allowable Fill (mm²)	Included Cable No.	Conductor Type
						2900-452A	4 pair #22, shielded pairs, FEP insulation
						2900-442A	4 pair #22, shielded pairs, FEP insulation
						2900-442C	4 pair #22, shielded pairs, FEP insulation
						2900-442B	4 pair #22, shielded pairs, FEP insulation
						2900-272A	4 pair #22, shielded pairs, FEP insulation
						2900-162A	4 pair #22, shielded pairs, FEP insulation
						2900-192C	4 pair #22, shielded pairs, FEP insulation
						1474-5	50 pair #18, shielded pairs, IS/OS shield 600 V, XLPE insul., PVC jacket
						2900-432A	4 pair #22, shielded pairs, FEP insulation
						2900-192A	4 pair #22, shielded pairs, FEP insulation
						2900-172C	4 pair #22, shielded pairs, FEP insulation
						2900-172B	4 pair #22, shielded pairs, FEP insulation
						2900-162B	4 pair #22, shielded pairs, FEP insulation
						2900-152C	4 pair #22, shielded pairs, FEP insulation
						2900-152B	4 pair #22, shielded pairs, FEP insulation
						2900-152A	4 pair #22, shielded pairs, FEP insulation
						1474-5B	1 - 6 pair, shielded #18 with overall shield, 300 V, PVC jacket
						1474-6	50 pair #18, shielded pairs, IS/OS shield 600 V, XLPE insul., PVC jacket
						1473-5	50 pair #18, shielded pairs, IS/OS shield 600 V, XLPE insul., PVC jacket
						1473-6	50 pair #18, shielded pairs, IS/OS shield 600 V, XLPE insul., PVC jacket
						2900-272B	4 pair #22, shielded pairs, FEP insulation
2T46	E-115, E-183	610	152.4 mm siderail solid bottom tray	6170.68 (5)	38709.60	1474-6	50 pair #18, shielded pairs, IS/OS shield 600 V, XLPE insul., PVC jacket
						Pull rope	Soft-Fiber Polyester
						MVDSE02A	MVDS DLC
						5 CCTVE01A	HCC
						MVDSE03A	MVDS DLC
						5 CCTVE01B	HCC
						1473-7	50 pair #18, shielded pairs, IS/OS shield 600 V, XLPE insul., PVC jacket
						1474-7	50 pair #18, shielded pairs, IS/OS shield 600 V, XLPE insul., PVC jacket
						1473-6	50 pair #18, shielded pairs, IS/OS shield 600 V, XLPE insul., PVC jacket
						2475-3B	12 Fiber, single mode fiber optic cable
						2479-1	72 Fiber, single mode fiber optic riser cable inside brown innerduct
2T47	E-117, E-184	610	152.4 mm siderail solid bottom tray	4987.47	38709.60	1474-7	50 pair #18, shielded pairs, IS/OS shield 600 V, XLPE insul., PVC jacket
						MVDSE03A	MVDS DLC
						2475-3C	12 Fiber, single mode fiber optic cable
						1473-8	50 pair #18, shielded pairs, IS/OS shield 600 V, XLPE insul., PVC jacket
						1473-7	50 pair #18, shielded pairs, IS/OS shield 600 V, XLPE insul., PVC jacket
						1474-8	50 pair #18, shielded pairs, IS/OS shield 600 V, XLPE insul., PVC jacket
						Pull rope	Soft-Fiber Polyester
2T48	E-118, E-185	610	152.4 mm siderail solid bottom tray	6816.85	38709.60	Pull rope	Soft-Fiber Polyester
						1474-10	50 pair #18, shielded pairs, IS/OS shield 600 V, XLPE insul., PVC jacket
						1474-8A	1 - 6 pair, shielded #18 with overall shield, 300 V, PVC jacket
						1474-8B	1 - 6 pair, shielded #18 with overall shield, 300 V, PVC jacket
						1474-8	50 pair #18, shielded pairs, IS/OS shield 600 V, XLPE insul., PVC jacket
						2154	1 - 2 pair, shielded #18 with IS/OA, 300 V, PVC jacket
						2148	1 - 2 pair, shielded #18 with IS/OA, 300 V, PVC jacket
						2149	1 - 2 pair, shielded #18 with IS/OA, 300 V, PVC jacket
						1473-10	50 pair #18, shielded pairs, IS/OS shield 600 V, XLPE insul., PVC jacket
						1473-8	50 pair #18, shielded pairs, IS/OS shield 600 V, XLPE insul., PVC jacket
						2474-10	50 pair #18, shielded pairs, IS/OS shield 600 V, XLPE insul., PVC jacket
						2150	1 - 2 pair, shielded #18 with IS/OA, 300 V, PVC jacket
						1118-1	1-2PR #18 Twisted Shielded w/overall shield

CONDUIT DATA

Conduit No	Reference	Size	Type	Total Fill (mm²)	Allowable Fill (mm²)	Included Cable No.	Conductor Type
2T49	E-212, E-218	305	152.4 mm siderail ladder tray	1904.72	19354.80	Pull rope	Soft-Fiber Polyester
						2900-152A	4 pair #22, shielded pairs, FEP insulation
						2900-152C	4 pair #22, shielded pairs, FEP insulation
						2900-162A	4 pair #22, shielded pairs, FEP insulation
						2900-162B	4 pair #22, shielded pairs, FEP insulation
						2910-2	4 pair #22, shielded pairs, FEP insulation
						2910-3	4 pair #22, shielded pairs, FEP insulation
						1473-4	50 pair #18, shielded pairs, IS/OS shield 600 V, XLPE insul., PVC jacket
						2475-3	72 Fiber, single mode fiberoptic riser cable
						2900-152B	4 pair #22, shielded pairs, FEP insulation
						2900-142A	4 pair #22, shielded pairs, FEP insulation
2T53	E-181 Thru E-186 E-212A	610	152.4 mm siderail solid bottom tray	0.00	38709.60	Pull rope	Soft-Fiber Polyester
2T54	E-212, E-218	610	152.4 mm siderail ladder tray	0.00	16774.16	Pull rope	Soft-Fiber Polyester
3000		41	RGS conduit	323.69	534.55	UP204-8-2	2 + 1gnd #8,#10, 600 V, RHH/RHW Insulation
						UP204-7-1	1-2/C + gnd #8,600 V, EPR Insulation
3001		41	RGS conduit	454.92	534.55	UP204-7	1-2/C + gnd #8,600 V, EPR Insulation
						UP204-8	1-2/C + gnd #8,600 V, EPR Insulation
3002		53	RGS conduit	684.34	879.42	UP204-7	1-2/C + gnd #8,600 V, EPR Insulation
						UP205-7-1	1-2/C + gnd #8,600 V, EPR Insulation
						UP204-8-2	2 + 1gnd #8,#10, 600 V, RHH/RHW Insulation
						UP204-8-1	3 + 1gnd #8,#10, 600 V, RHH/RHW Insulation
3003		41	RGS conduit	454.92	534.55	UP205-8	1-2/C + gnd #8,600 V, EPR Insulation
						UP205-7	1-2/C + gnd #8,600 V, EPR Insulation
3004		53	RGS conduit	684.34	879.42	UP205-8-2	2 + 1gnd #8,#10, 600 V, RHH/RHW Insulation
						UP205-8-1	3 + 1gnd #8,#10, 600 V, RHH/RHW Insulation
						UP206-7-1	1-2/C + gnd #8,600 V, EPR Insulation
						UP205-7	1-2/C + gnd #8,600 V, EPR Insulation
3005		41	RGS conduit	454.92	534.55	UP206-8	1-2/C + gnd #8,600 V, EPR Insulation
						UP206-7	1-2/C + gnd #8,600 V, EPR Insulation
3006		53	RGS conduit	684.34	879.42	UP206-7	1-2/C + gnd #8,600 V, EPR Insulation
						UP207-7-1	1-2/C + gnd #8,600 V, EPR Insulation
						UP206-8-1	3 + 1gnd #8,#10, 600 V, RHH/RHW Insulation
						UP206-8-2	2 + 1gnd #8,#10, 600 V, RHH/RHW Insulation
3007		41	RGS conduit	454.92	534.55	UP207-8	1-2/C + gnd #8,600 V, EPR Insulation
						UP207-7	1-2/C + gnd #8,600 V, EPR Insulation
3008		53	RGS conduit	684.34	879.42	UP207-8-2	2 + 1gnd #8,#10, 600 V, RHH/RHW Insulation
						UP207-8-1	3 + 1gnd #8,#10, 600 V, RHH/RHW Insulation
						UP207-7	1-2/C + gnd #8,600 V, EPR Insulation
						UP208-7-1	1-2/C + gnd #8,600 V, EPR Insulation
3009		41	RGS conduit	454.92	534.55	UP208-8	1-2/C + gnd #8,600 V, EPR Insulation
						UP208-7	1-2/C + gnd #8,600 V, EPR Insulation

For continuation, see next sheet.

CONDUIT AND TRAY SCHEDULE

E-421

ALL DIMENSIONS ARE IN MILLIMETERS UNLESS OTHERWISE SHOWN

FOR REDUCED PLANS ORIGINAL SCALE IS IN MILLIMETERS 0 20 40 60 80

DGN FILE =>04-0120f1_0376R05.dgn
USERNAME =>llorico

CU 04251 | EA 0120F1

LAST REVISION 00-00-00 | DATE PLOTTED => 06-JUL-2011 | TIME PLOTTED => 14:57

DRAFT 1 (03/01/11)

STATE OF CALIFORNIA - DEPARTMENT OF TRANSPORTATION
Caltrans

DESIGN OVERSIGHT
BEHZAD GOLEMOHAMMADI

CALCULATED/ DESIGNED BY | CHECKED BY

DATE	BY	REVISED BY	DATE REVISED
8/02	AB		

DIST	COUNTY	ROUTE	KILOMETER POST TOTAL PROJECT	SHEET No	TOTAL SHEETS
04	SF	80	13.2/13.9	382 R5	1204

James Erlingsson 12/19/02
REGISTERED ELECTRICAL ENGINEER DATE

12-6-04
PLANS APPROVAL DATE

REGISTERED PROFESSIONAL ENGINEER — JENS ERLINGSSON — No. 8249 — Exp. 9/30/06 ELECTRICAL — STATE OF CALIFORNIA

PB POWER, Inc.
A Parsons Brinckerhoff Company
303 Second St., Suite 700N
San Francisco, CA 94107-1317

The State of California or its officers or agents shall not be responsible for the accuracy or completeness of electronic copies of this plan sheet.

Caltrans now has a web site! To get to the web site, go to http://www.dot.ca.gov

REQUEST FOR INFORMATION NOT ADDRESSED IN THIS CCO REMAIN IN FORCE

REVISIONS

MARK	DATE	DESCRIPTIONS	BY	CH'D	CCO#
5	07/01/11	TOS MODIFICATIONS	RR	RG	81
4	03/26/10	DEHUMIDIFIER SCADA INTERFACE	RR	RG FW	130
3	12/23/09	TOWER BASE MEP	RR AWG	RG FW	79
2	09/18/09	TOWER UTILITY PANELS	JS TW	RG	70
1	02/19/08	ELECTRICAL MODIFICATIONS	MP EL	RR	42

Caltrans Metric

CONTRACT CHANGE ORDER NO. 81
SHEET 66 OF 70

REGISTERED PROFESSIONAL ENGINEER — MARWELL FUMIO TAKAKI — No. E 8651 — Exp. 9/30/2008 ELECTRICAL — STATE OF CALIFORNIA — 1

REGISTERED PROFESSIONAL ENGINEER — FADI WALIEDDINE — No. 11465 — Exp. 12/31/2009 ELECTRICAL — STATE OF CALIFORNIA — 2 3

REGISTERED PROFESSIONAL ENGINEER — SYN YEE CHIN — No. 18186 — Exp. 09/30/2011 ELECTRICAL — STATE OF CALIFORNIA — 4 5

FOR REVISION ONLY — FOR REVISION ONLY — FOR REVISION ONLY

CONDUIT DATA

Conduit No.	Reference	Size	Type	Total Fill (mm²)	Allowable Fill (mm²)	Included Cable No.	Conductor Type
3297	E-264, E-264A	27	RGS-PVC coated conduit	219.84	229.03	Pull rope	Soft-Fiber Polyester
						2119-2	4 pair #22,shielded pairs,300 V,PE Insulation
						2121-1	1-2PR #18 Twisted Shielded w/overall shield
3298	E-265	53	RGS-PVC coated conduit	102.61	879.42	Pull rope	Soft-Fiber Polyester
						UP210-9	1-3/C #12,600 V, EPR Insulation
3299	E-287	27	RGS-PVC coated conduit	196.20	229.03	Pull rope	Soft-Fiber Polyester
						2120-1	1-2PR #18 Twisted Shielded w/overall shield
3303	E-96	53	RGS conduit	490.14		Pull rope	Soft-Fiber Polyester
3304	E-96	53	RGS conduit	490.14		Pull rope	Soft-Fiber Polyester
3307	E-266	41	RGS conduit	262.68	534.55	Pull rope	Soft-Fiber Polyester
						UP210-16	1-3/C + gnd #8, 600V EPR Insulation
3308	E-266	53	RGS conduit	717.60	879.42	Pull rope	Soft-Fiber Polyester
						UP210-14	1-3/C + gnd #8, 600V EPR Insulation
						UP210-23	1-2/C + gnd #8, 600V EPR Insulation
						UP210-26	1-2/C + gnd #8, 600V EPR Insulation
3309	E-266	53	RGS conduit	490.14		Pull rope	Soft-Fiber Polyester
						UP210-15	1-3/C + gnd #8, 600V EPR Insulation
						UP210-22	1-2/C + gnd #8, 600V EPR Insulation
3311	E-265	53	RGS-PVC coated conduit	0.00	879.42	Pull rope	Soft-Fiber Polyester
3313	E-266, E-266A	53	RGS-PVC coated conduit	454.92	879.42	Pull rope	Soft-Fiber Polyester
						UP210-21	1-2/C + gnd #8, 600V EPR Insulation
						UP210-23	1-2/C + gnd #8, 600V EPR Insulation
3314	E-266, E-266A	53	RGS-PVC coated conduit	454.92	879.42	Pull rope	Soft-Fiber Polyester
						UP210-22	1-2/C + gnd #8, 600V EPR Insulation
						UP210-24	1-2/C + gnd #8, 600V EPR Insulation
3315	E-266, E-266A	53	RGS-PVC coated conduit	286.0	879.42	Pull rope	Soft-Fiber Polyester
						UP210-5 & 7	1-4/C + gnd #8 600V EPR Insulation
3316	E-264B, E-264C	78	RGS-PVC coated conduit	1300.80	1935.24	Pull rope	Soft-Fiber Polyester
	E-278, E-284					UP210-2 & 4	1-4/C + gnd #6, 600 V, EPR Insulation
						UP210-14 & 18	1-4/C + gnd #8, 600 V, EPR Insulation
						UP210-21	1-2/C + gnd #8, 600V EPR Insulation
						UP210-23	1-2/C + gnd #8, 600V EPR Insulation
						UP210-26	1-2/C + gnd #8, 600V EPR Insulation
3316A	E-266	53	RGS-PVC coated conduit	581.18	879.42	Pull rope	Soft-Fiber Polyester
						UP210-2	1-2/C + gnd #8, 600V EPR Insulation
						UP210-4	1-2/C + gnd #8, 600V EPR Insulation
						UP210-21	1-2/C + gnd #8, 600V EPR Insulation
3316B	E-266	53	RGS-PVC coated conduit	559.91	879.42	Pull rope	Soft-Fiber Polyester
						UP210-2 & 4	1-4/C + gnd #6, 600 V, EPR Insulation
						UP210-21	1-2/C + gnd #8, 600V EPR Insulation
3319	E-264, E-264A	78	RGS-PVC coated conduit	1521.28	1935.24	2121	1-3/C + gnd #1/0, 600 V, EPR Insulation
						2120	1-3/C + gnd #1/0, 600 V, EPR Insulation
						Pull rope	Soft-Fiber Polyester
3320	E-264	78	RGS-PVC coated conduit	1281.36	1935.24	2120	1-3/C + gnd #1/0, 600 V, EPR Insulation
						Pull rope	Soft-Fiber Polyester
						2123-2	1-3/C + gnd #2, 600 V, EPR Insulation
3320A	E-287	53	RGS-PVC coated conduit	754.18	879.42	2120	1-3/C + gnd #1/0, 600 V, EPR Insulation
						Pull rope	Soft-Fiber Polyester
3322	E-264, E-264A	78	RGS-PVC coated conduit	754.18	1935.24	2119-A	1-3/C + gnd #1/0, 600 V, EPR Insulation
						Pull rope	Soft-Fiber Polyester
3322C	E-265	78	RGS-PVC coated conduit	754.18	1935.24	2119-A	1-3/C + gnd #1/0, 600 V, EPR Insulation
						Pull rope	Soft-Fiber Polyester
3323	E-264	78	RGS-PVC coated conduit	754.18	1935.24		
						Pull rope	Soft-Fiber Polyester
						2121	1-3/C + gnd #1/0,600 V, EPR Insulation
3323A	E-286	78	RGS-PVC coated conduit	959.40	1935.24		
						Pull rope	Soft-Fiber Polyester
						2121	1-3/C + gnd #1/0,600 V, EPR Insulation
						UP210-28	1-2/C + gnd #12, 600V EPR Insulation
						UP210-30	1-2/C + gnd #12, 600V EPR Insulation

CONDUIT DATA

Conduit No.	Reference	Size	Type	Total Fill (mm²)	Allowable Fill (mm²)	Included Cable No.	Conductor Type
3323B	E-286, E-287	78	RGS-PVC coated conduit	959.40	1935.24		
						Pull rope	Soft-Fiber Polyester
						2121	1-3/C + gnd #1/0,600 V, EPR Insulation
						UP210-28	
						UP210-30	1-2/C #12 + gnd, 600V, EPR Insulation
3323C	E-287, E-287A	78	RGS-PVC coated conduit	959.40	1935.24		
						Pull rope	Soft-Fiber Polyester
						2121	1-3/C + gnd #1/0,600 V, EPR Insulation
						UP210-28	1-2/C #12 + gnd, 600V, EPR Insulation
						UP210-30	1-2/C #12 + gnd, 600V, EPR Insulation
3324	E-286	53	RGS-PVC coated conduit	98.10	879.42	Pull rope	Soft-Fiber Polyester
						2121-1	1-2PR #18 Twisted shielded with overall shield
3324A	E-286, E-287	53	RGS-PVC coated conduit	131.79	879.42	Pull rope	Soft-Fiber Polyester
						2121-1	1-2PR #18 Twisted shielded with overall shield
3324B	E-264	53	RGS-PVC coated conduit	0.00	879.42	Pull rope	Soft-Fiber Polyester
3324C	E-287, E-287A	53	RGS-PVC coated conduit	98.10	879.42	Pull rope	Soft-Fiber Polyester
						2121-1	1-2PR #18 Twisted shielded with overall shield
3329	E-265	53	RGS-PVC coated conduit	0.00	879.42	Pull rope	Soft-Fiber Polyester
~~3330~~							
~~3330C~~							
~~3330D~~							
~~3330E~~							
~~3330F~~							
3333	E-264	78	RGS-PVC coated conduit	754.18	1935.24	Pull rope	Soft-Fiber Polyester
						2123	1-3/C + gnd #1/0, 600 V, EPR Insulation
3337	E-264B	78	RGS-PVC coated conduit	618.45	1935.24	Pull rope	Soft-Fiber Polyester
						UP210-6 & 8	1-4/C + gnd #6, 600 V, EPR Insulation
						UP210-13 & 17	1-4/C + gnd #8, 600 V, EPR Insulation
3337A	E-266	53	RGS-PVC coated conduit	585.13	879.42	Pull rope	Soft-Fiber Polyester
						UP210-6 & 8	1-4/C + gnd #6, 600 V, EPR Insulation
						UP210-13	1-3/C + gnd #8, 600V EPR Insulation

For continuation, see next sheet.

CONDUIT AND TRAY SCHEDULE

E-427

DESIGN OVERSIGHT	CALCULATED/ DESIGNED BY	CHECKED BY	DATE 8/02	REVISED BY	DATE REVISED
BEHZAD GOLEMOHAMMADI	PBP	AB	8/02		

STATE OF CALIFORNIA - DEPARTMENT OF TRANSPORTATION
Caltrans

FOR REDUCED PLANS ORIGINAL SCALE IS IN MILLIMETERS 0 20 40 60 80

DGN FILE =>04-0120f1_0382R05.dgn
USERNAME =>llorico

CU 04251 | EA 0120F1

LAST REVISION 00-00-00 | DATE PLOTTED => 05-JUL-2011 | TIME PLOTTED => 14:57

DIST	COUNTY	ROUTE	KILOMETER POST TOTAL PROJECT	SHEET No	TOTAL SHEETS
04	SF	80	13.2/13.9	383 R4	1204

REGISTERED ELECTRICAL ENGINEER — James Erlingsson — 12/19/02

12-6-04
PLANS APPROVAL DATE

JENS ERLINGSSON No. 8249 Exp. 9/30/06 ELECTRICAL — REGISTERED PROFESSIONAL ENGINEER — STATE OF CALIFORNIA

PB POWER, Inc.
A Parsons Brinckerhoff Company
303 Second St., Suite 700N
San Francisco, CA 94107-1317

The State of California or its officers or agents shall not be responsible for the accuracy or completeness of electronic copies of this plan sheet.

Caltrans now has a web site! To get to the web site, go to http://www.dot.ca.gov

REQUEST FOR INFORMATION NOT ADDRESSED IN THIS CCO REMAIN IN FORCE					
4	07/01/11	TOS MODIFICATIONS	RR	RG	81
3	03/26/10	DEHUMIDIFIER SCADA INTERFACE	TW	RG SYC	130
2	09/18/09	TOWER UTILITY PANELS	JS TW	RG FW	70
1	02/19/08	ELECTRICAL MODIFICATIONS	MP EL	RR	42
MARK	DATE	DESCRIPTIONS REVISIONS	BY	CH'D	CCO#

CONTRACT CHANGE ORDER NO. 81
SHEET 67 OF 70

REGISTERED PROFESSIONAL ENGINEER — SYN YEE CHIN No. 18186 Exp. 09/30/2011 ELECTRICAL — STATE OF CALIFORNIA
Syn Yee Chin
FOR REVISION ONLY 3 4

REGISTERED PROFESSIONAL ENGINEER — MANUEL FUMIO TAKAKI No. E 8651 Exp. 9/30/2008 ELECTRICAL — STATE OF CALIFORNIA
FOR REVISION ONLY 1

REGISTERED PROFESSIONAL ENGINEER — FADI WALIEDDINE No. 11465 Exp. 12/31/2009 ELECTRICAL — STATE OF CALIFORNIA
FOR REVISION ONLY 2

CONDUIT DATA

Conduit No.	Reference	Size	Type	Total Fill (mm²)	Allowable Fill (mm²)	Included Cable No.	Conductor Type
3339	E-264, E-264A	53	RGS-PVC coated conduit	754.18	879.42	2125	1-3/C +gnd #1/0, 600 V,EPR Insulation
3348	E-264A, E-281	41	RGS-PVC coated conduit	300.88	534.55	MVDSE02A	MVDS DLC
						MVDSW03A	MVDS DLC
3348C	E-345, E-281	27	RGS-PVC coated conduit	150.44	229.03	MVDSE02A	MVDS DLC
3348D	E-345, E-281	27	RGS-PVC coated conduit	150.44	229.03	MVDSW03A	MVDS DLC
3349	E-264A, E-281	41	RGS-PVC coated conduit	176.6 (4)	534.55	CCTVE01B	HCC (4)
						2120-1	1-2PR #18 Twisted Shielded w/ overall shield
3349C	E-281	41	RGS-PVC coated conduit	78.5 (4)	534.55	CCTVE01B	HCC (4)
3351A	E-264	53	RGS-PVC coated conduit	527.18	879.42	Pull rope	Soft-Fiber Polyester
						2123-3	1-3C#2 + gnd, 600 V, EPR Insulation
3353	E285B	53	RGS-PVC coated conduit	306.56	879.42	Pull Rope	Soft-Fiber Polyester
						UP210-1B-13 & 14	4-#10+gnd, 600V, RHH/RHW Insulation
						UP210-1B-5	1-2C#12 + gnd, 600V, EPR Insulation
						UP210-1A-5	1-2C#12 + gnd, 600V, EPR Insulation
3354	E285B	53	RGS conduit	491.22	879.42	Pull Rope	Soft-Fiber Polyester
						UP210-1B-5	1-2C#12 + gnd, 600V, EPR Insulation
						UP210-1A-5	1-2C#12 + gnd, 600V, EPR Insulation
						UP210-1B-1 & 6	1-4C#8 + gnd, 600V, EPR Insulation

CONDUIT DATA

Conduit No.	Reference	Size	Type	Total Fill (mm²)	Allowable Fill (mm²)	Included Cable No.	Conductor Type
3359	E-264A,E-281	41	RGS-PVC coated conduit	78.5 (4)	534.55	CCTVE01A	HCC (4)
3359C	E-281	41	RGS-PVC coated conduit	78.5 (4)	534.55	CCTVE01A	HCC (4)
3364	E-285B	53	RGS-PVC coated conduit	205.22	879.42	Pull Rope	Soft-Fiber Polyester
						UP210-1A-5	1-2C#12 + gnd, 600V, EPR Insulation
						UP210-1B-5	1-2C#12 + gnd, 600V, EPR Insulation

For continuation, see next sheet.

CONDUIT AND TRAY SCHEDULE

E-428

REVISED BY	DATE REVISED
PBP	8/02
DATE	8/02

CALCULATED/DESIGNED BY
CHECKED BY
DESIGN OVERSIGHT
BEHZAD GOLEMOHAMMADI

STATE OF CALIFORNIA - DEPARTMENT OF TRANSPORTATION
Caltrans

FOR REDUCED PLANS ORIGINAL SCALE IS IN MILLIMETERS 0 20 40 60 80

DGN FILE =>04-0120f1_0383R04.dgn
USERNAME =>llorico

CU 04251

EA 0120F1

LAST REVISION 00-00-00
DATE PLOTTED => 05-JUL-2011
TIME PLOTTED => 14:57

DIST	COUNTY	ROUTE	KILOMETER POST TOTAL PROJECT	SHEET NO	TOTAL SHEETS
04	SF	80	13.2/13.9	389 R6	1204

12/19/02
REGISTERED ELECTRICAL ENGINEER DATE

12-6-04
PLANS APPROVAL DATE

JENS ERLINGSSON No. 8249 Exp. 9/30/06 ELECTRICAL — REGISTERED PROFESSIONAL ENGINEER — STATE OF CALIFORNIA

PB POWER, Inc.
A Parsons Brinckerhoff Company
303 Second St., Suite 700N
San Francisco, CA 94107-1317

The State of California or its officers or agents shall not be responsible for the accuracy or completeness of electronic copies of this plan sheet.

Caltrans now has a web site! To get to the web site, go to http://www.dot.ca.gov

Metric

CONDUIT DATA

Conduit No	Reference	Size	Type	Total Fill (mm²)	Allowable Fill (mm²)	Included Cable No.	Conductor Type
4224	E-115	78	RGS conduit	227.46	1935.24	Pull rope	Soft-Fiber Polyester
						UP105-9	1-2/C + gnd #8,600 V, EPR Insulation
4225	E-115	53	RGS conduit	317.80	1935.24	Pull rope	Soft-Fiber Polyester
						1474-5B	1 - 6 pair, shielded #18 with overall shield, 300 V, PVC jacket
						1474-5A	1 - 6 pair, shielded #18 with overall shield, 300 V, PVC jacket
4226	E-115	78	RGS conduit	98.10	1935.24	Pull rope	Soft-Fiber Polyester
						1115-1	
4241	E-116	78	RGS conduit	446.81	1935.24	1255-2	1-3/C #16,600 V, EPR Insulation
						1202-3	1-7/C #16,600 V, EPR Insulation
						1202-2	1-3/C #14,600 V, EPR Insulation
						1202-1	1-2/C + gnd #10, 600 V, EPR Insulation
						Pull rope	Soft-Fiber Polyester
						1202-3A	1-2/C #14,600 V, EPR Insulation
4242	E-116	78	RGS conduit	821.29 △6	1935.24	△6	
						Pull rope	Soft-Fiber Polyester
						UP106-6	1-2/C + gnd #8, 600 V, EPR Insulation
						UP106-8	1-2/C + gnd #8, 600 V, EPR Insulation
						2202-1	1-2/C + gnd #10, 600 V, EPR Insulation
						2202-3A	1-2/C #14,600 V, EPR Insulation
4243	E-116	53	RGS conduit	527.18	879.42	Pull rope	Soft-Fiber Polyester
						1096	1-3/C + gnd #2,600 V, EPR Insulation
4244	E-116	53	RGS conduit	527.18	879.42	Pull rope	Soft-Fiber Polyester
						1097	1-3/C + gnd #2,600 V, EPR Insulation
4245	E-116	53	RGS conduit	0.00	1935.24	Pull rope	Soft-Fiber Polyester
4246	E-116	78	RGS conduit	324.26	1935.24	MVDSW03A	MVDS DLC
						Pull rope	Soft-Fiber Polyester
						CCTVE01BD	TVL
						CCTVE01BC	TVC
4248	E-116	78	RGS-PVC coated conduit	30.19	1935.24	Pull rope	Soft-Fiber Polyester
						1475-3B	12 Fiber, single mode fiberoptic cable
4261	E-117	78	RGS conduit	62.07	1935.24	Pull rope	Soft-Fiber Polyester
						1256-1	1-3/C #16,600 V, EPR Insulation
4262	E-117	78	RGS conduit	0.00	1935.24	Pull rope	Soft-Fiber Polyester
4263	E-117	53	RGS conduit	527.18	879.42	Pull rope	Soft-Fiber Polyester
						1098	1-3/C + gnd #2,600 V, EPR Insulation
4264	E-117	78	RGS conduit	0.00	1935.24	Pull rope	Soft-Fiber Polyester
4265	E-117	53	RGS conduit	150.44	1935.24	Pull rope	Soft-Fiber Polyester
						MVDSW04A	MVDS DLC
4266	E-117	78	RGS conduit	0.00	1935.24	Pull rope	Soft-Fiber Polyester
4268	E-117	78	RGS-PVC coated conduit	30.19	1935.24	Pull rope	Soft-Fiber Polyester
						1475-3C	12 Fiber, single mode fiberoptic cable
4281	E-118	78	RGS conduit	0.00	1935.24	Pull rope	Soft-Fiber Polyester

REQUEST FOR INFORMATION NOT ADDRESSED IN THIS CCO REMAIN IN FORCE					
△6	07/01/11	TOS MODIFICATIONS	RR	RG	81
△5	01/07/11	ELECTRICAL WARNING SYSTEMS	TW	RG	61
△4	03/26/10	DEHUMIDIFIER SCADA INTERFACE	RR	RG FW	130
△3	08/03/09	ELECTRICAL WARNING SYSTEMS	RY RR	RG FW	61
△2	03/30/09	SERVICE PLATFORM ELECTRICAL CHANGES	RR RY	RG MP	55
△1	03/04/08	BARRIER MODIFICATIONS	JS BM	RG SE	44
MARK	DATE	DESCRIPTIONS	BY	CH'D	CCO#
		REVISIONS			

CONTRACT CHANGE ORDER NO. 81
SHEET 68 OF 70

SYN YEE CHIN No. 18186 Exp. 09/30/2011 ELECTRICAL — REGISTERED PROFESSIONAL ENGINEER — STATE OF CALIFORNIA

Syn Yee Chin
FOR REVISION ONLY △4 △5 △6

FADI WALIEDDINE No. 11465 Exp. 12/31/2009 ELECTRICAL — REGISTERED PROFESSIONAL ENGINEER — STATE OF CALIFORNIA

FOR REVISION ONLY △2 △3

S. A. ESTOQUE No. E-10151 Exp. 12/31/2009 ELECTRICAL — REGISTERED PROFESSIONAL ENGINEER — STATE OF CALIFORNIA

FOR REVISION ONLY △1

CONDUIT DATA

Conduit No	Reference	Size	Type	Total Fill (mm²)	Allowable Fill (mm²)	Included Cable No.	Conductor Type
4282	E-118	78	RGS conduit	932.14	1935.24		
						2201-1	1-2/C + gnd #10, 600 V, EPR Insulation
						2201-2	1-2/C + gnd #10, 600 V, EPR Insulation
						2201-6	1-2/C + gnd #10, 600 V, EPR Insulation
						Pull rope	Soft-Fiber Polyester
						2201-4	1-9/C #16,600 V, EPR Insulation
						2201-3	1-3/C #14,600 V, EPR Insulation
						S-3056-8	1-4/C #14,600 V, EPR Insulation
						2201-4A	1-2/C #14,600 V, EPR Insulation
						2201-4B	1-2/C #14,600 V, EPR Insulation
						2201-4C	1-2/C #14,600 V, EPR Insulation
4283	E-118	53	RGS conduit	527.18	879.42	1099	1-3/C + gnd #2,600 V, EPR Insulation
						Pull rope	Soft-Fiber Polyester
4284	E-118	78	RGS conduit	454.92	1935.24	Pull rope	Soft-Fiber Polyester
						UP108-3	1-2/C + gnd #8,600 V, EPR Insulation
						UP108-2	1-2/C + gnd #8,600 V, EPR Insulation
4285	E-118	53	RGS conduit	317.80	1935.24	Pull rope	Soft-Fiber Polyester
						1474-8A	1 - 6 pair, shielded #18 with overall shield, 300 V, PVC jacket
						1474-8B	1 - 6 pair, shielded #18 with overall shield, 300 V, PVC jacket
4286	E-118	78	RGS conduit	98.10	1935.24	Pull rope	Soft-Fiber Polyester
						1117-1	1-2PR #18 Twisted Shielded w/overall Shield
4301	E-96	78	RGS conduit	366.10	1935.24	A-3001-1	1-3/C + gnd #4,600 V, EPR Insulation
						Pull rope	Soft-Fiber Polyester
4303	E-96	41	RGS conduit	0.00	534.55	Pull rope	Soft-Fiber Polyester
4304	E-96	41	RGS conduit	212.85	534.55	Pull rope	Soft-Fiber Polyester
						A-3001-2	3 + 1 gnd #6,#8, 600 V, RHH/RHW Insulation
4305	E-96	41	RGS conduit	0.00	534.55	Pull rope	Soft-Fiber Polyester
4306	E-96	41	RGS conduit	0.00	534.55	Pull rope	Soft-Fiber Polyester
4307	E-96	53	RGS conduit	0.00	879.42	Pull rope	Soft-Fiber Polyester
4308	E-96	53	RGS conduit	0.00	879.42	Pull rope	Soft-Fiber Polyester
4309	E-96	41	RGS conduit	0.00	534.55	Pull rope	Soft-Fiber Polyester
4310	E-96	41	RGS conduit	0.00	534.55	Pull rope	Soft-Fiber Polyester

For continuation, see next sheet.

CONDUIT AND TRAY SCHEDULE

E-434

STATE OF CALIFORNIA - DEPARTMENT OF TRANSPORTATION
Caltrans

DESIGN OVERSIGHT
BEHZAD GOLEMOHAMMADI

CALCULATED/ DESIGNED BY	CHECKED BY	DATE 8/02	PBP	AB

REVISED BY	DATE REVISED

FOR REDUCED PLANS ORIGINAL SCALE IS IN MILLIMETERS 0 20 40 60 80

DGN FILE =>04-0120f1_0389R06.dgn
USERNAME =>llorico

CU 04251

EA 0120F1

LAST REVISION 00-00-00
DATE PLOTTED => 05-JUL-2011
TIME PLOTTED => 14:57

CONDUIT DATA

Conduit No	Reference	Size	Type	Total Fill (mm²)	Allowable Fill (mm²)	Included Cable No.	Conductor Type
5210	E-114	78	RGS conduit	1323.45	1935.24	Pull rope	Soft-Fiber Polyester
						2119-2	4 pair #22, shielded pairs, 300 V, PE Insulation
						1473-5	50 pair #18, shielded pairs, IS/OS shield 600 V, XLPE Insul., PVC Jacket
5210A	E-71A	41	Liquidtight Flex. Metal cond.		534.55	Pull rope	Soft-Fiber Polyester
5211	E-114	78	RGS conduit	0.00	1935.24	Pull rope	Soft-Fiber Polyester
5221	E-115	78	RGS conduit	187.79	1935.24	2202-2	1-3/C #14, 600 V, EPR Insulation
						Pull rope	Soft-Fiber Polyester
						2202-3	1-7/C #16, 600 V, EPR Insulation
5222	E-115	78	RGS conduit	830.76	1935.24	LP220-2,4	1-3/C + gnd #6, 600 V, EPR Insulation
						LP220-6,8	1-3/C + gnd #6, 600 V, EPR Insulation
						Pull rope	Soft-Fiber Polyester
						S-3056-6	1-4/C #14, 600 V, EPR Insulation
						2204-2	1-3/C #14, 600 V, EPR Insulation
						2204-1	1-3/C #14, 600 V, EPR Insulation
5223	E-115	78	RGS conduit	1235.86	1935.24	UP205-1	1-2/C + gnd #10 ,600 V, EPR Insulation
						Pull rope	Soft-Fiber Polyester
						UP206-1	1-2/C + gnd #10 ,600 V, EPR Insulation
						UP205-8	1-2/C + gnd #8, 600 V, EPR Insulation
						2096	1-3/C + gnd #2, 600 V, EPR Insulation
						UP205-7	1-2/C + gnd #8, 600 V, EPR Insulation
5224	E-115	78	RGS conduit	227.46	1935.24	Pull rope	Soft-Fiber Polyester
						UP205-6	1-2/C + gnd #8, 600 V, EPR Insulation
5225	E-115	53	RGS conduit	527.18	879.42	Pull rope	Soft-Fiber Polyester
						2104	1-3/C + gnd #2, 600 V, EPR Insulation
5226	E-115	78	RGS conduit	1558.08	1935.24	2120-1	1-2PR #18 Twisted Shielded w/overall Shield
						2121-1	1-2PR #18 Twisted Shielded w/overall Shield
						2910-11	1-3/C #16, 600 V, EPR Insulation
						1474-5	50 pair #18, shielded pairs, IS/OS shield 600 V, XLPE Insul., PVC Jacket
						2155	1-2 pair, shielded #18 with IS/OA, 300V PVC Jacket
						Pull rope	Soft-Fiber Polyester
5227	E-115	78	RGS conduit	1201.71	1935.24	Pull rope	Soft-Fiber Polyester
						1474-6	50 pair #18, shielded pairs, IS/OS shield 600 V, XLPE Insul., PVC Jacket
5228	E-115	78	RGS conduit	1445.19	1935.24	2910-10	4 pair #22, shielded pairs, 300 V, PE Insulation
						Pull rope	Soft-Fiber Polyester
						1473-5	50 pair #18, shielded pairs, IS/OS shield 600 V, XLPE Insul., PVC Jacket
						2910-12	4 pair #22, shielded pairs, 300 V, PE Insulation
5229	E-115	78	RGS conduit	317.80	1935.24	1474-5A	1 - 6 pair, shielded #18 with overall shield, 300 V, PVC Jacket
						Pull rope	Soft-Fiber Polyester
						1474-5B	1 - 6 pair, shielded #18 with overall shield, 300 V, PVC Jacket
5230	E-114	78	RGS conduit	0.00	1935.24	Pull rope	Soft-Fiber Polyester
5231	E-114	78	RGS conduit	0.00	1935.24	Pull rope	Soft-Fiber Polyester
5232	E-114	78	RGS conduit	1201.71	1935.24	1473-4	50 pair #18, shielded pairs, IS/OS shield 600 V, XLPE Insul., PVC Jacket
						Pull rope	Soft-Fiber Polyester
5233	E-115	78	RGS conduit	98.10	1935.24	Pull rope	Soft-Fiber Polyester
						2120-1	1-2PR #18 Twisted Shielded w/overall Shield
5234	E-115	78	RGS conduit	0.00	1935.24	Pull rope	Soft-Fiber Polyester
5235	E-115	78	RGS conduit	1201.71	1935.24	Pull rope	Soft-Fiber Polyester
						1473-6	50 pair #18, shielded pairs, IS/OS shield 600 V, XLPE Insul., PVC Jacket
5236	E-116	53	RGS conduit	0.00	1935.24	Pull rope	Soft-Fiber Polyester

THIS PLAN ACCURATE FOR ELECTRICAL WORK ONLY.

REQUEST FOR INFORMATION NOT ADDRESSED IN THIS CCO REMAIN IN FORCE					
7	07/01/11	TOS MODIFICATIONS	RR	RG	81
6	03/24/11	BIKE PATH CONDUIT	TW	RG	73
5	06/11/10	BIKE PATH CONDUIT	TW	RG	73
4	03/26/10	DEHUMIDIFIER SCADA INTERFACE	RR	RG FW	130
3	08/03/09	ELECTRICAL WARNING SYSTEMS	RY RR	RG FW	61
2	03/30/09	SERVICE PLATFORM ELECTRICAL CHANGES	RR RY	RG MP	55
1	03/04/08	BARRIER MODIFICATIONS	JS BM	RG SE	44
MARK	DATE	DESCRIPTIONS REVISIONS	BY	CH'D	CCO#

CONTRACT CHANGE ORDER NO. 81
SHEET 69 OF 70

S. A. ESTOQUE, JR. — REGISTERED PROFESSIONAL ENGINEER — No. E-10151 — Exp. 12/31/2008 ELECTRICAL — STATE OF CALIFORNIA
FOR REVISION ONLY 1

FADI WALIEDDINE — REGISTERED PROFESSIONAL ENGINEER — No. 11465 — Exp. 12/31/2011 ELECTRICAL — STATE OF CALIFORNIA
FOR REVISION ONLY 2 3

SYN YEE CHIN — REGISTERED PROFESSIONAL ENGINEER — No. 18186 — Exp. 09/30/2011 ELECTRICAL — STATE OF CALIFORNIA
FOR REVISION ONLY 4 5 6 7

5 REVISIONS SUPERCEDED

CONDUIT DATA

Conduit No	Reference	Size	Type	Total Fill (mm²)	Allowable Fill (mm²)	Included Cable No.	Conductor Type
5237	E-116	78	RGS conduit	0.00	1935.24	Pull rope	Soft-Fiber Polyester
5238	E-116	78	RGS conduit	1201.71	1935.24	1473-6	50 pair #18, shielded pairs, IS/OS shield 600 V, XLPE Insul., PVC Jacket
						Pull rope	Soft-Fiber Polyester
5241	E-116	78	RGS conduit	942.43	1935.24	2202-3	1-7/C #16, 600 V, EPR Insulation
						2202-2	1-3/C #14, 600 V, EPR Insulation
						2105	1-3/C + gnd #2, 600 V, EPR Insulation
						2202-1	1-2/C + gnd #8, 600 V, EPR Insulation
						Pull rope	Soft-Fiber Polyester
5242	E-116	53	RGS conduit	0.00 (4)	1935.24	Pull rope	Soft-Fiber Polyester (1)
5243	E-116	53	RGS conduit	527.18	879.42	Pull rope	Soft-Fiber Polyester
						2097	1-3/C + gnd #2, 600 V, EPR Insulation
5244	E-116	78	RGS conduit	648.58	1935.24	Pull rope	Soft-Fiber Polyester
						LP221-2,4	1-3/C + gnd #6, 600 V, EPR Insulation
						LP221-6,8	1-3/C + gnd #6, 600 V, EPR Insulation
5245	E-116	78	RGS conduit	642.71	1935.24	2202-1	1-2/C + gnd #8, 600 V, EPR Insulation
						2202-2	1-3/C #14, 600 V, EPR Insulation
						UP206-9	1-2/C + gnd #8, 600 V, EPR Insulation
						2204-3	1-7/C #16, 600 V, EPR Insulation
						Pull rope	Soft-Fiber Polyester
5246	E-116	78	RGS conduit	1201.71	1935.24	1474-6	50 pair #18, shielded pairs, IS/OS shield 600 V, XLPE Insul., PVC Jacket
						Pull rope	Soft-Fiber Polyester
5247	E-116	78	RGS conduit	1430.65 (4)	1935.24	Pull rope	Soft-Fiber Polyester
						MVDSE02A	MVDS DLC
						CCTVE01A	HCC (1)
						1474-7	50 pair #18, shielded pairs, IS/OS shield 600 V, XLPE Insul., PVC Jacket
5249	E-116	78	RGS-PVC coated conduit	30.19	1935.24	2475-38	12 Fiber, single mode fiberoptic cable
						Pull rope	Soft-Fiber Polyester
5250	E-116	78	RGS conduit	1201.71	1935.24	1473-7	50 pair #18, shielded pairs, IS/OS shield 600 V, XLPE Insul., PVC Jacket
						Pull rope	Soft-Fiber Polyester

For continuation, see next sheet.

CONDUIT AND TRAY SCHEDULE

E-440

DIST	COUNTY	ROUTE	KILOMETER POST TOTAL PROJECT	SHEET No	TOTAL SHEETS
04	SF	80	13.2/13.9	395 R7	1204

Jens Erlingsson 12/19/02
REGISTERED ELECTRICAL ENGINEER DATE

JENS ERLINGSSON — REGISTERED PROFESSIONAL ENGINEER — No. 8249 — Exp. 9/30/06 ELECTRICAL — STATE OF CALIFORNIA

12-6-04
PLANS APPROVAL DATE

PB POWER, Inc.
A Parsons Brinckerhoff Company
303 Second St., Suite 700N
San Francisco, CA 94107-1317

The State of California or its officers or agents shall not be responsible for the accuracy or completeness of electronic copies of this plan sheet.

Caltrans now has a web site! To get to the web site, go to http://www.dot.ca.gov

DESIGN OVERSIGHT: BEHZAD GOLEMOHAMMADI
CALCULATED/DESIGNED BY: PBP
CHECKED BY: AB
DATE REVISED: 8/02
REVISED BY:

STATE OF CALIFORNIA - DEPARTMENT OF TRANSPORTATION
Caltrans

LAST REVISION 00-00-00
DATE PLOTTED => 05-JUL-2011
TIME PLOTTED => 14:57

FOR REDUCED PLANS ORIGINAL SCALE IS IN MILLIMETERS 0 20 40 60 80

DGN FILE =>04-0120f1_0395R07.dgn
USERNAME =>llorico

CU 04251 | EA 0120F1

DIST	COUNTY	ROUTE	KILOMETER POST TOTAL PROJECT	SHEET No	TOTAL SHEETS
04	SF	80	13.2/13.9	407 R5	1204

Jens Erlingsson 12/19/02
REGISTERED ELECTRICAL ENGINEER DATE

12-6-04
PLANS APPROVAL DATE

PB POWER, Inc.
A Parsons Brinckerhoff Company
303 Second St., Suite 700N
San Francisco, CA 94107-1317

REGISTERED PROFESSIONAL ENGINEER — JENS ERLINGSSON No. 8249 Exp. 8/30/06 ELECTRICAL — STATE OF CALIFORNIA

The State of California or its officers or agents shall not be responsible for the accuracy or completeness of electronic copies of this plan sheet.

Caltrans now has a web site! To get to the web site, go to http://www.dot.ca.gov

MARK	DATE	DESCRIPTIONS REVISIONS	BY	CH'D	CCO#
5	07/01/11	TOS MODIFICATIONS	RR	RG	81
4	01/07/11	ELECTRICAL WARNING SYSTEMS	TW	RG	61
3	03/26/10	DEHUMIDIFIER SCADA INTERFACE	RR	RG FW	130
2	02/25/08	CABLE TRAY CHANGES	RG	SE	42S1
1	02/19/08	ELECTRICAL MODIFICATIONS	MP EL	RR	42

REQUEST FOR INFORMATION NOT ADDRESSED IN THIS CCO REMAIN IN FORCE

CONTRACT CHANGE ORDER NO. 81
SHEET 70 OF 70

REGISTERED PROFESSIONAL ENGINEER — S. A. ESTOQUE, JR. No. E-10151 Exp. 12/31/2008 ELECTRICAL — STATE OF CALIFORNIA
FOR REVISION ONLY 1 2

REGISTERED PROFESSIONAL ENGINEER — SYN YEE CHIN No. 18186 Exp. 09/30/2011 ELECTRICAL — STATE OF CALIFORNIA
FOR REVISION ONLY 3 4 5

CONDUIT DATA

Conduit No	Reference	Size	Type	Total Fill (mm²)	Allowable Fill (mm²)	Included Cable No.	Conductor Type
3177A	E-264A	78	Liquidtight flex metal conduit	1889.83	1928.98	2119-B	3+1gnd, #250 kcmil, #1/0, 600V, EPR Insulation
						2204-2	1-3/C #14, 600V, EPR Insulation
						A-3057-1	1-3/C + gnd #2, 600V, EPR Insulation
3177B	E-264A	78	RGS - PVC coated conduit	1889.83	1935.24	2119-B	3+1gnd, #250 kcmil, #1/0, 600V, EPR Insulation
						2204-2	1-3/C #14, 600V, EPR Insulation
						A-3057-1	1-3/C + gnd #2, 600V, EPR Insulation
3278A	E-264A	78	Liquidtight flex metal conduit	1827.85	1928.98	2123-2	1-3/C + gnd #2/0, 600V, EPR Insulation
						2123-3	1-3/C + gnd #2/0, 600V, EPR Insulation
						2910-11	1-3/C #16, 600V, EPR Insulation
3278B	E-264A	78	RGS - PVC coated conduit	1827.85	1953.24	2123-2	1-3/C + gnd #2/0, 600V, EPR Insulation
						2123-3	1-3/C + gnd #2/0, 600V, EPR Insulation
						2910-11	1-3/C #16, 600V, EPR Insulation
3294A	E-264A	78	Liquidtight flex metal conduit		1928.98	Pull rope	Soft-fiber polyester
3294B	E-264A	78	RGS - PVC coated conduit		1935.24	Pull rope	Soft-fiber polyester
3319A	E-264A	78	Liquidtight flex metal conduit	1675.89 5	1928.98	2121	1-3/C + gnd #1/0, 600V, EPR Insulation
						2120	1-3/C + gnd #1/0, 600V, EPR Insulation
						GND	1-#250 kcmil, bare copper 5
3319B	E-264A	78	RGS - PVC coated conduit	1675.89 5	1935.24	2121	1-3/C + gnd #1/0, 600V, EPR Insulation
						2120	1-3/C + gnd #1/0, 600V, EPR Insulation
						GND	1-#250 kcmil, bare copper 5
3322A	E-264A	78	Liquidtight flex metal conduit	1889.83	1928.98	2119-A	3+1gnd, #250 kcmil, #1/0, 600V, EPR Insulation
						2123	1-3/C + gnd #2, 600V, EPR Insulation
						2204-1	1-3/C #14, 600V, EPR Insulation
3322B	E-264A	78	RGS - PVC coated conduit	1889.83	1935.24	2119-A	3+1gnd, #250 kcmil, #1/0, 600V, EPR Insulation
						2123	1-3/C + gnd #2, 600V, EPR Insulation
						2204-1	1-3/C #14, 600V, EPR Insulation
3330A	E-264A	78	Liquidtight flex metal conduit	0.00 5	1928.98	Pull rope	Soft-fiber polyester 5
3330B	E-264A	78	RGS - PVC coated conduit	0.00 5	1935.24	Pull rope	Soft-fiber polyester
3339A	E-264A	78	Liquidtight flex metal conduit	1445.00	1928.98	2125	3+1gnd, #250 kcmil, #1/0, 600V, EPR Insulation
						GND	1-#250 kcmil, bare copper
3339B	E-264A	78	RGS - PVC coated conduit	1445.00	1935.24	2125	3+1gnd, #250 kcmil, #1/0, 600V, EPR Insulation
						GND	1-#250 kcmil, bare copper
3348A	E-264A	78	Liquidtight flex metal conduit		1928.98	Pull rope	Soft-fiber polyester
3348B	E-264A	78	RGS - PVC coated conduit		1935.24	Pull rope	Soft-fiber polyester
3349A	E-264A	78	Liquidtight flex metal conduit	196.20	1928.98	Pull rope	Soft-fiber polyester
						2120-1	1-2 pair #18 twisted shielded w/overall shield
						2121-1	1-2 pair #18 twisted shielded w/overall shield
3349B	E-264A	78	RGS - PVC coated conduit	196.20	1928.98	Pull rope	Soft-fiber polyester
						2120-1	1-2 pair #18 twisted shielded w/overall shield
						2121-1	1-2 pair #18 twisted shielded w/overall shield

CONDUIT DATA

Conduit No	Reference	Size	Type	Total Fill (mm²)	Allowable Fill (mm²)	Included Cable No.	Conductor Type
3359A	E-264A	78	Liquidtight flex metal conduit	457.88 5	1928.98	CCTVE01A	HCC 5
						MVDSE02A	MVDS DLC
						MVDSE03A	MVDS DLC
						CCTVE01B	HCC 5
3359B	E-264A	78	RGS - PVC coated conduit	457.88 5	1935.24	CCTVE01A	HCC 5
						MVDSE02A	MVDS DLC
						MVDSE03A	MVDS DLC
						CCTVE01B	HCC 5
8011A	E-264A	78	Liquidtight flex metal conduit	697.03	1928.98	Pull rope	Soft-fiber polyester
						1201-1	1-2/C + gnd #10, 600V, EPR Insulation
						1201-2	1-2/C + gnd #10, 600V, EPR Insulation
						1201-6	1-2/C + gnd #10, 600V, EPR Insulation
						1201-4A	1-2/C #14, 600V, EPR Insulation
						1201-4B	1-2/C #14, 600V, EPR Insulation
						1201-4C	1-2/C #14, 600V, EPR Insulation
						2204-2	1-3/C + gnd #14, 600V, EPR Insulation
8011B	E-264A	78	RGS - PVC coated conduit	697.03	1935.24	Pull rope	Soft-fiber polyester
						1201-1	1-2/C + gnd #10, 600V, EPR Insulation
						1201-2	1-2/C + gnd #10, 600V, EPR Insulation
						1201-6	1-2/C + gnd #10, 600V, EPR Insulation
						1201-4A	1-2/C #14, 600V, EPR Insulation
						1201-4B	1-2/C #14, 600V, EPR Insulation
						1201-4C	1-2/C #14, 600V, EPR Insulation
						2204-2	1-3/C + gnd #14, 600V, EPR Insulation
9057A	E-264A	78	Liquidtight flex metal conduit	442.35	1928.98	2910-12	4 pair #22, shielded pairs, 300V, PE Insulation
						2910-8	4 pair #22, shielded pairs, 300V, PE Insulation
						2910-7	4 pair #24, overall shielded, 300V, PE Insulation
						2119-2	4 pair #22, shielded pairs, 300V, PE Insulation
9057B	E-264A	78	RGS - PVC coated conduit	442.35	1935.24	2910-12	4 pair #22, shielded pairs, 300V, PE Insulation
						2910-8	4 pair #22, shielded pairs, 300V, PE Insulation
						2910-7	4 pair #24, overall shielded, 300V, PE Insulation
						2119-2	4 pair #22, shielded pairs, 300V, PE Insulation
9057C	E-264A, E-366	21	RGS - PVC coated conduit	62.07	187.69	2910-11	1-3/C #16, 600V, EPR Insulation

CONDUIT AND TRAY SCHEDULE E-449C

DESIGNED BY	CALCULATED/	CHECKED BY
BEHZAD GOLEMOHAMMADI	EJL	JE

DESIGN OVERSIGHT	DATE	REVISED BY
	3/04	DATE REVISED

STATE OF CALIFORNIA - DEPARTMENT OF TRANSPORTATION
Caltrans

LAST REVISION 00-00-00
DATE PLOTTED => 05-JUL-2011
TIME PLOTTED => 14:57

FOR REDUCED PLANS ORIGINAL SCALE IS IN MILLIMETERS 0 20 40 60 80

DGN FILE =>04-0120f1_0407R05.dgn
USERNAME =>llarico

CU 04251 | EA 0120F1

STATE OF CALIFORNIA - DEPARTMENT OF TRANSPORTATION

CONTRACT CHANGE ORDER

Change Requested by: Contractor

CCO: 82	Suppl. No. 0	Contract No. 04 - 0120F4	Road SF-80-13.2/13.9	FED. AID LOC.:

To: **AMERICAN BRIDGE/FLUOR ENTERPRISES INC A JOINT VENT**

You are directed to make the following changes from the plans and specifications or do the following described work not included in the plans and specifications for this contract. ***NOTE: This change order is not effective until approved by the Engineer.***

Description of work to be done, estimate of quantities and prices to be paid. (Segregate between additional work at contract price, agreed price and force account.) Unless otherwise stated, rates for rental of equipment cover only such time as equipment is actually used and no allowance will be made for idle time. This last percentage shown is the net accumulated increase or decrease from the original quantity in the Engineer's Estimate.

Adjustment of Compensation at Lump Sum:

Modify Section 10-1.41 "TEMPORARY TOWERS," Sub-section "DRIVEN PILING", Sub-section "Driving Equipment," to allow the Contractor to use a diesel hammer to drive temporary piles. The first sentence of this section shall be revised as follows:

From: "Diesel and steam hammers shall not be used to install driven piling."

To: "Steam hammers shall not be used to install driven piling."

For this work, the Department shall receive an credit of ($10,000.00). This sum constitutes full compensation, including markups, for this change.

Cost of Adjustment of Compensation at Lump Sum .....($10,000.00)

Estimated Cost: Increase ☐ Decrease ☑ **($10,000.00)**

By reason of this order the time of completion will be adjusted as follows: 0 days

Submitted by

Signature	Resident Engineer	Date
Gil Klebanov	Gil Klebanov for Gary Pursell, P.E., Sup.T.E.	6/5/08

Approval Recommended by

Signature	Supervising Bridge Engineer	Date
	Richard Morrow, P.E., Sup. BE	6/5/08

Engineer Approval by

Signature	Supervising Transportation Engineer	Date
Gary Pursell	Gary Pursell, P.E., Sup. TE	6/17/08

We the undersigned contractor, have given careful consideration to the change proposed and agree, if this proposal is approved, that we will provide all equipment, furnish the materials, except as may otherwise be noted above, and perform all services necessary for the work above specified, and will accept as full payment therefor the prices shown above.

NOTE: If you, the contractor, do not sign acceptance of this order, your attention is directed to the requirements of the specifications as to proceeding with the ordered work and filing a written protest within the time therein specified.

Contractor Acceptance by

Signature	(Print name and title)	Date
Michael D. Flowers	Michael D. Flowers	6-13-08

STATE OF CALIFORNIA - DEPARTMENT OF TRANSPORTATION

CONTRACT CHANGE ORDER MEMORANDUM

DATE: 6/13/2008 Page 1 of 1

TO: Mike Forner, Prin. TE / Gary Pursell, P.E., Sup T.E.

FROM: Gary Pursell, P.E., Sup.T.E.

FILE: E.A. 04 - 0120F4
CO-RTE-PM SF-80-13.2/13.9
FED. NO.

CCO#: 82 | SUPPLEMENT#: 0 | Category Code: CHSA

CONTINGENCY BALANCE (incl. this change) $138,728,056.40

COST: ($10,000.00) INCREASE ☐ DECREASE ☑

HEADQUARTERS APPROVAL REQUIRED? ☑ YES ☐ NO

SUPPLEMENTAL FUNDS PROVIDED: $0.00

IS THIS REQUEST IN ACCORDANCE WITH ENVIRONMENTAL DOCUMENTS? ☑ YES ☐ NO

CCO DESCRIPTION:
Diesel Hamer for Temp Piles

PROJECT DESCRIPTION:
CONSTRUCT SELF-ANCHORED SUSPENSION BRIDGE

Original Contract Time:	Time Adj. This Change:	Previously Approved CCO Time Adjustments:	Percentage Time Adjusted: (including this change)	Total # of Unreconciled Deferred Time CCO(s): (including this change)
2490 Day(s)	0 Day(s)	30 Day(s)	1 %	0

THIS CHANGE ORDER PROVIDES FOR:

Modifying Section 10-1.41 "TEMPORARY TOWERS," Sub-section "DRIVEN PILING," Sub-section "Driving Equipment," to allow the Contractor to use a diesel hammer to drive temporary piles.

The Contractor is requesting this change primarily to drive battered temporary piles with a lighter hammer than the hydraulic hammer called for in the Special Provisions. The weight of the hydraulic hammer may bend the temporary piles and not allow the correct placement of these piles required to support the temporary structures. This allowance may also benefit risk management of the project since this modification will allow the Contractor to use a hydraulic hammer and diesel hammer at two different locations at the same time.

For this change, the Department will receive a credit of $10,000.00, which will be returned to the contingency. A detailed analysis of the cost adjustment is on file in the project files.

No adjustment of contract time is warranted, as this change does not affect the controlling operation.

The SAS Environmental division has approved the use of the diesel hammer on this project. The Contractor will have to implement additional BMP measures to implement this change.

This change order received concurrence from Rick Morrow (Structure Representative), Ken Terpstra (Project Manager), Mike Forner (Principal Construction Engineer), Amy Fowler (Environmental) and Patrick Treacy (Division of Construction Representative). Maintenance concurrence is not required for his change as this work is temporary in nature.

The Division of Construction approved this change on June 10, 2008. A copy is attached for your reference.

CONCURRED BY:

Construction Engineer:	Res. Eng., Gary Pursell, Sup. TE	Date	5/7/08
Bridge Engineer:	Struct Rep, Rick Morrow, Sup TE	Date	5/1/08
Project Engineer:		Date	
Project Manager:	Proj Manager, Ken Terpstra	Date	6/5/08
FHWA Rep.:		Date	
Environmental:	PCE, Mike Forner, Prin TE	Date	5/8/08
Other (specify):	Environmental, Amy Fowler	Date	4/30/08
Other (specify):	HQ, Patrick Treacy	Date	5/2/08
District Prior Approval By:		Date	
HQ (Issue Approve) By:	HQ, Ken Darby	Date	6/10/08
Resident Engineer's Signature:	Gary Pursell	Date	6/17/08

ESTIMATE OF COST

	THIS REQUEST	TOTAL TO DATE
ITEMS	$0.00	$0.00
FORCE ACCOUNT	$0.00	$0.00
AGREED PRICE	$0.00	$0.00
ADJUSTMENT	($10,000.00)	($10,000.00)
TOTAL	($10,000.00)	($10,000.00)

FEDERAL PARTICIPATION

☐ PARTICIPATING ☐ PARTICIPATING IN PART ☑ NONE
☐ NON-PARTICIPATING (MAINTENANCE) ☐ NON-PARTICIPATING

FEDERAL SEGREGATION (if more than one Funding Source or P.I.P. type)
☑ CCO FUNDED PER CONTRACT ☐ CCO FUNDED AS FOLLOWS

FEDERAL FUNDING SOURCE	PERCENT

ADA Notice: For individuals with sensory disabilities, this document is available in alternate formats. For information call: (916) 654-6410 or TDD (916) 654-3880 or write Records and Forms Management, 1120 N Street, MS-89, Sacramento, CA 95814.

STATE OF CALIFORNIA - DEPARTMENT OF TRANSPORTATION

CONTRACT CHANGE ORDER

Change Requested by: Engineer

CCO: 83 **Suppl. No.** 0 **Contract No.** 04 – 0120F4 **Road** SF-80-13.2/13.9 **FED. AID LOC.:**

To: **AMERICAN BRIDGE/FLUOR ENTERPRISES INC A JOINT VENTURE**

You are directed to make the following changes from the plans and specifications or do the following described work not included in the plans and specifications for this contract. ***NOTE: This change order is not effective until approved by the Engineer.***

Description of work to be done, estimate of quantities and prices to be paid. (Segregate between additional work at contract price, agreed price and force account.) Unless otherwise stated, rates for rental of equipment cover only such time as equipment is actually used and no allowance will be made for idle time. This last percentage shown is the net accumulated increase or decrease from the original quantity in the Engineer's Estimate.

Adjustment of Compensation at Lump Sum Price:

Revise mechanical work including, but not limited to, the following:

- Add PS-2 pipe support for the 10 NPS sewer line at the W2 cap beam
- Modify the PS-7, PS-13, and PS-20 pipe supports along the bikepath
- Relocate the expansion tank at elevation 53.85 m
- Reroute dehumidifier ductwork at the east cable anchorage and tower heads
- Allow pipe supports to be field welded to the girder plates
- Provide PS-15 pipe support details
- Reroute the 4" NPS compressed air pipe over the north cable housing at the east cable anchorage
- Change spacing of the PS-3 pipe supports at the cable shroud
- Change PS-3 pipe support to bolted connection to the PS-1 and PS-24
- Any new steel and any damaged existing steel shall be cleaned, primed, and finish painted in accordance with Special Provisions Section 10-1.69 "CLEAN AND PAINT STRUCTURAL STEEL."
- Provide full compensation for additional shop drawing structural detailing related to mechanical modifications in CCO 83 plan sheets.

The following revised plan sheets detail all changes in this change order: 46R6, 47R2, 49S1R1, 50R2, 51R5, 52R3, 54R3, 55R3, 56R5, 57R6, 64R1, 65R1, 66R1, 67R1, 958R1, and 961R3 (of 1204) as shown on sheets 2 through 17 of this change order.

This change order resolves the costs associated with Contractor Request for Information (RFI) numbers 738, 1219, 1404R3, 1471, 1871R0, 1871R1, 2007, 2079, 2114, 2174, 2178, 2197, and 2227 with respect to changes listed above.

For this work, the Contractor will receive a lump sum price of $136,747.00. This sum constitutes full and complete compensation for furnishing all labor, material, tools and incidentals including all markups by reason of this change.

Adjustment of Compensation at Lump Sum..... $136,747.00

Estimated Cost: Increase ☒ **Decrease** ☐ **$136,747.00**

By reason of this order the time of completion will be adjusted as follows: **0 Days**

Submitted by

Signature **Resident Engineer** Darryl Schram, Senior T.E. **Date** 7/23/12

Approval Recommended by

Signature **Supervising Transportation Engineer** William Casey, Supervising T.E **Date** 7/27/12

Engineer Approval by

Signature **Supervising Transportation Engineer** William Casey, Supervising T.E. **Date** 8-7-12

We the undersigned contractor, have given careful consideration to the change proposed and agree, if this proposal is approved, that we will provide all equipment, furnish the materials, except as otherwise be noted above, and perform all services necessary for the work above specified, and will accept as full payment therefor the prices shown above.

NOTE: If you, the contractor, do not sign acceptance of this order, your attention is directed to the requirements of the specifications as to proceeding with the ordered work and filing a written protest within the time therein specified.

Contractor Acceptance by

Signature (Print name and title) BRIAN A. PETERSEN - PROJECT DIRECTOR **Date** 07AUG12

STATE OF CALIFORNIA - DEPARTMENT OF TRANSPORTATION

CONTRACT CHANGE ORDER MEMORANDUM

DATE: 7/23/2012 Page 1 of 1

TO: Tony Anziano, Program Manager /

FROM: Darryl Schram, Senior TE

FILE: **E.A.** 04 - 0120F4
CO-RTE-PM SF-80-13.2/13.9
FED. NO.

CCO#: **83** SUPPLEMENT#: **0** Category Code: **CLPK**

CONTINGENCY BALANCE (incl. this change) **$103,255,023.58**

COST: **$136,747.00** INCREASE ☑ DECREASE ☐

HEADQUARTERS APPROVAL REQUIRED? ☐ YES ☑ NO

SUPPLEMENTAL FUNDS PROVIDED: **$136,747.00**

IS THIS REQUEST IN ACCORDANCE WITH ENVIRONMENTAL DOCUMENTS? ☑ YES ☐ NO

CCO DESCRIPTION:
Misc. Mechanical

PROJECT DESCRIPTION:
CONSTRUCT SELF-ANCHORED SUSPENSION BRIDGE

Original Contract Time:	Time Adj. This Change:	Previously Approved CCO Time Adjustments.	Percentage Time Adjusted: (including this change)	Total # of Unreconciled Deferred Time CCO(s): (including this change)
2490 Day(s)	**0** Day(s)	**501** Day(s)	**20** %	**3**

THIS CHANGE ORDER PROVIDES FOR:

Revising mechanical work including modifying pipe supports, relocating an expansion tank, and rerouting ductwork and piping.

Through the Contractor Request for Information (RFI) process as well as internal constructibility review meetings with the designer, it was determined that revisions were needed to the mechanical pipe supports and dehumidifiers. Revisions were made to the pipe supports when conflicts did not allow them to be installed per design. The expansion tank was relocated to eliminate interference with the hatch cover. Modifications were made to the dehumidification units and ductwork to resolve constructibility conflicts.

This change order resolves the costs associated with Contractor Request for Information (RFI) numbers 738, 1219, 1404R3, 1471, 1871R0, 1871R1, 2007, 2079, 2114, 2174, 2178, 2197, and 2227 with respect to changes listed above.

The total cost of this change order is $136,747.00 lump sum, which can be financed from supplemental funds. A detailed cost analysis is on file.

No time adjustment is warranted, as this change order does not affect the controlling operation.

This change order has concurrence from Rick Morrow (Supervising BE), Wenyi Long (Bridge Design), Jing Chen (District Design) and Lina Ellis (Maintenance).

CONCURRED BY:

Construction Engineer:		Date	
Bridge Engineer:	Rick Morrow, Sup BE	Date	11/12/09
Project Engineer:	CT Oversight, Wenyi Long, P.E.	Date	6/4/12
Project Manager:		Date	
FHWA Rep.:		Date	
Environmental:		Date	
Other (specify):	Struct. Maint, Lina Ellis	Date	6/5/12
Other (specify):	District Design, Jing Chen	Date	6/5/12
District Prior Approval By:		Date	
HQ (Issue Approve) By:		Date	
Resident Engineer's Signature:		Date	7/23/12

ESTIMATE OF COST

	THIS REQUEST	TOTAL TO DATE
ITEMS	$0.00	$0.00
FORCE ACCOUNT	$0.00	$0.00
AGREED PRICE	$0.00	$0.00
ADJUSTMENT	$136,747.00	$136,747.00
TOTAL	$136,747.00	$136,747.00

FEDERAL PARTICIPATION

☐ PARTICIPATING ☐ PARTICIPATING IN PART ☑ NONE
☐ NON-PARTICIPATING (MAINTENANCE) ☐ NON-PARTICIPATING

FEDERAL SEGREGATION (if more than one Funding Source or P.I.P. type)
☐ CCO FUNDED PER CONTRACT ☐ CCO FUNDED AS FOLLOWS

FEDERAL FUNDING SOURCE	PERCENT

ADA Notice: For individuals with sensory disabilities, this document is available in alternate formats. For information call: (916) 654-6410 or TDD (916) 654-3880 or write Records and Forms Management, 1120 N Street, MS-89, Sacramento, CA 95814.

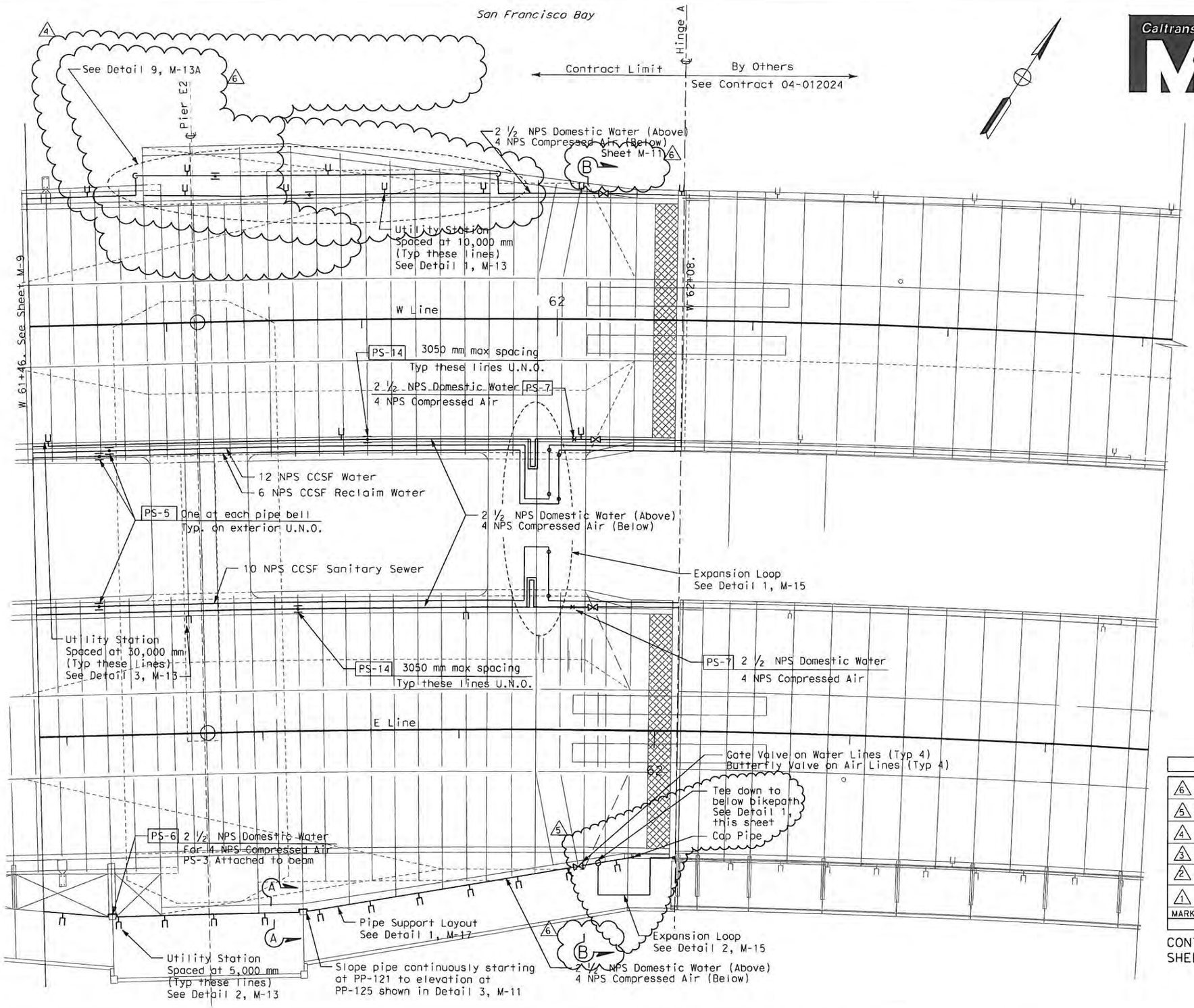

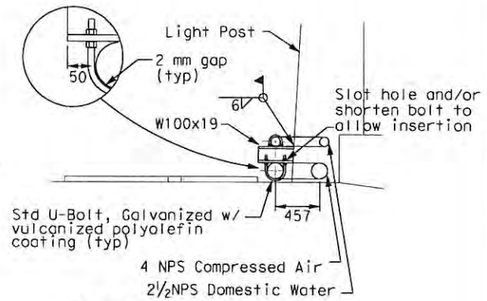

SECTION A-A

Pipe routing at PP-117 & PP121
Pipe support typ at PP-121 only

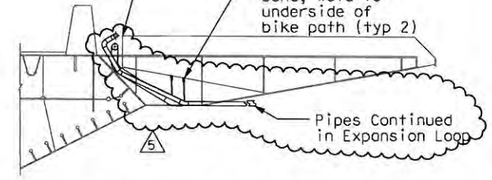

Pipe Transition to Below Bikepath

DETAIL 1

REQUEST FOR INFORMATION NOT ADDRESSED IN THIS CCO REMAIN IN FORCE					
6	8/20/10	MISCELLANEOUS MECHANICAL	CH	BM	83
5	6/25/10	MISCELLANEOUS MECHANICAL	CH	BM	83
4	11/18/09	MISCELLANEOUS MECHANICAL	CH	BM	83
3	8/12/08	MECHANICAL MODIFICATIONS	VY	BM	31
2	1/18/08	MECHANICAL MODIFICATIONS	VY	BM	31
1	9/05/07	MECHANICAL MODIFICATIONS	BM	RM	31
MARK	DATE	DESCRIPTIONS	BY	CH'D	CCO#
		REVISIONS			

CONTRACT CHANGE ORDER NO. 83
SHEET 2 OF 17

MAIN SPAN STRUCTURE PIPING PLAN

SCALE: 1:200

M-10

DIST	COUNTY	ROUTE	KILOMETER POST TOTAL PROJECT	SHEET No	TOTAL SHEETS
04	SF	80	13.2/13.9	46R6	1204

Bobby J. Melvin 11/25/2009
REGISTERED MECHANICAL ENGINEER DATE

PLANS APPROVAL DATE

REGISTERED PROFESSIONAL ENGINEER — Bobby J. Melvin — No. 28585 — Exp. 6/30/11 — MECHANICAL — STATE OF CALIFORNIA

PARSONS BRINCKERHOFF QUADE & DOUGLAS, INC.
303 SECOND STREET, SUITE 700 N
SAN FRANCISCO, CA 94107

The State of California or its officers or agents shall not be responsible for the accuracy or completeness of electronic copies of this plan sheet.

Caltrans now has a web site! To get to the web site, go to http://www.dot.ca.gov

DATE	REVISED BY	DATE REVISED
10/31/02	BM	11/15/02

CALCULATED/DESIGNED BY: BM
CHECKED BY: KH

PROJECT ENGINEER: Rich Newell

STATE OF CALIFORNIA - DEPARTMENT OF TRANSPORTATION
Caltrans

ALL DIMENSIONS IN MILIMETERS UNLESS OTHERWISE SHOWN

FOR REDUCED PLANS ORIGINAL SCALE IS IN MILLIMETERS 0 20 40 60 80

USERNAME => hawkinsc
DGN FILE => J:\13103k - SFOBB\RFI-Construction Support\CCO\83\83 Draft 8-04-0120f1_0046R06.dgn

CU 04251 EA 0120F1

LAST REVISION 00-00-00
DATE PLOTTED => 8/20/2010
TIME PLOTTED => 2:52:35 PM

DIST	COUNTY	ROUTE	KILOMETER POST TOTAL PROJECT	SHEET No.	TOTAL SHEETS
04	SF	80	13.2/13.9	47R2	1204

Bobby J. Melvin 12/19/2002
REGISTERED MECHANICAL ENGINEER DATE

REGISTERED PROFESSIONAL ENGINEER — Bobby J. Melvin — No. 28685 — Exp. 6/30/11 — MECHANICAL — STATE OF CALIFORNIA

12-6-04
PLANS APPROVAL DATE

PARSONS BRINCKERHOFF QUADE & DOUGLAS, INC.
303 SECOND STREET, SUITE 700 N
SAN FRANCISCO, CA 94107

The State of California or its officers or agents shall not be responsible for the accuracy or completeness of electronic copies of this plan sheet.

Caltrans now has a web site! To get to the web site, go to http://www.dot.ca.gov

Caltrans Metric

4 NPS Compressed Air
2½ NPS Domestinc Water
See Detail 5 this sheet

12 NPS CCSF Water
6 NPS CCSF Reclaim Water
4 NPS Compressed Air
2½ NPS Domestic Water
See Detail 2 this sheet

10 NPS CCSF Sewer
4 NPS Compressed Air
2½ NPS Domestic Water
See Detail 4 this sheet

4 NPS Compressed Air
2½ NPS Domestic Water
See Detail 6 this sheet

SECTION A — M-5 thru M-10

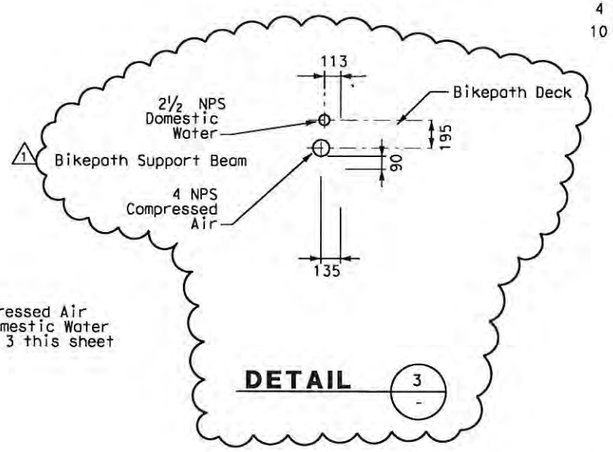

DETAIL 3

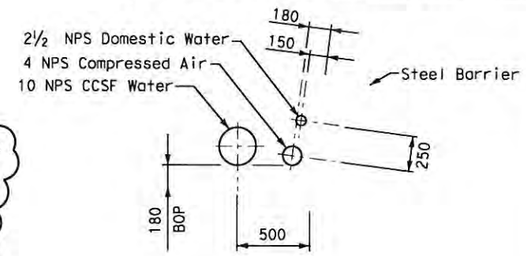

DETAIL 4

4 NPS Compressed Air
2½ NPS Domestic Water
Align with Skyway as-built locations
2

12 NPS CCSF Water
6 NPS CCSF Reclaim Water
4 NPS Compressed Air
2½ NPS Domestic Water
Align with Skyway as-built locations
2

10 NPS CCSF Sewer
4 NPS Compressed Air
2½ NPS Domestic Water
Align with Skyway as-built locations
2

4 NPS Compressed Air
2½ NPS Domestic Water
See Detail 3 this sheet

SECTION B — M-10

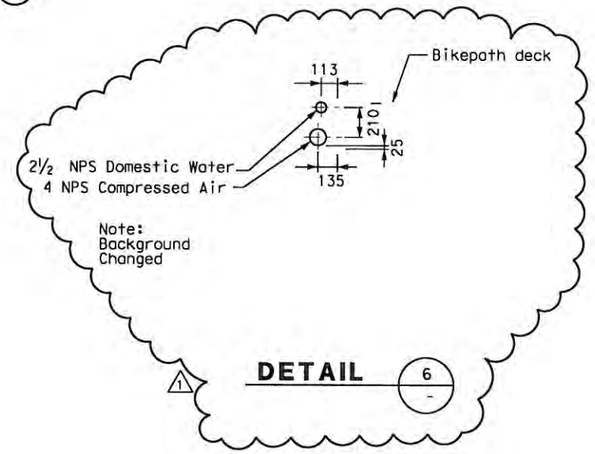

DETAIL 6

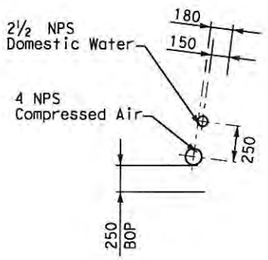

DETAIL 5

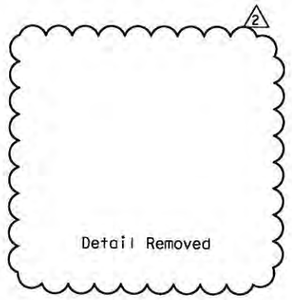

DETAIL 1

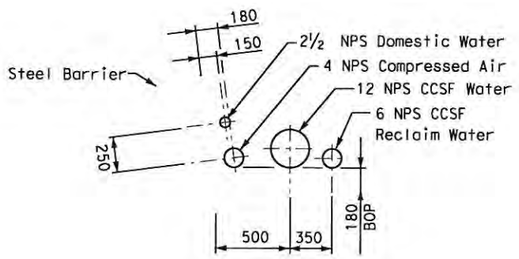

DETAIL 2

MARK	DATE	DESCRIPTIONS	BY	CK	CCO
		REVISIONS			
2	8/17/10	Miscellaneous Mechanical	CH	BM	83
1	9/05/07	Mechanical Modifications	BM	RM	31

CONTRACT CHANGE ORDER NO. 83
SHEET 3 OF 17

MECHANICAL PIPING SECTIONS AND DETAILS NO. 1

NO SCALE

M-11

ALL DIMENSIONS IN MILLIMETERS UNLESS OTHERWISE SHOWN

FOR REDUCED PLANS ORIGINAL SCALE IS IN MILLIMETERS 0 20 40 60 80

USERNAME => KoonC
DGN FILE => 04-0120f1_0047R02.dgn

CU 04251

EA 0120F1

STATE OF CALIFORNIA - DEPARTMENT OF TRANSPORTATION
Caltrans

PROJECT ENGINEER
Rich Newell

CALCULATED/DESIGNED BY
CHECKED BY

DATE	REVISED BY	DATE REVISED
10/31/02	BM	11/15/02 KH

LAST REVISION 00-00-00 DATE PLOTTED => 7/23/2012 TIME PLOTTED => 1:23:07 PM

DIST	COUNTY	ROUTE	KILOMETER POST TOTAL PROJECT	SHEET No	TOTAL SHEETS
04	SF	80	13.2/13.9	49S1R1	1204

Bobby J. Melvin 12/9/2009
REGISTERED MECHANICAL ENGINEER DATE

PLANS APPROVAL DATE

REGISTERED PROFESSIONAL ENGINEER — Bobby J. Melvin — No. 28685 — Exp. 6/30/11 — MECHANICAL — STATE OF CALIFORNIA

PARSONS BRINCKERHOFF QUADE & DOUGLAS, INC.
303 SECOND STREET, SUITE 700 N
SAN FRANCISCO, CA 94107

The State of California or its officers or agents shall not be responsible for the accuracy or completeness of electronic copies of this plan sheet.

Caltrans now has a web site! To get to the web site, go to http://www.dot.ca.gov

DATE	REVISED BY	DATE REVISED
10/31/02	BM	KH 11/15/02

CALCULATED/DESIGNED BY
CHECKED BY

PROJECT ENGINEER — Rich Newell

STATE OF CALIFORNIA - DEPARTMENT OF TRANSPORTATION — Caltrans

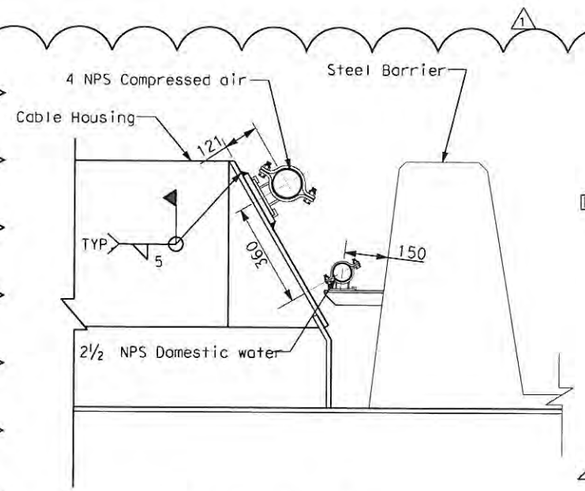

SECTION C-C

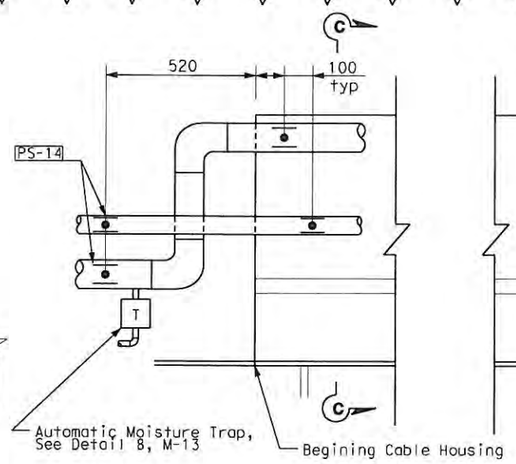

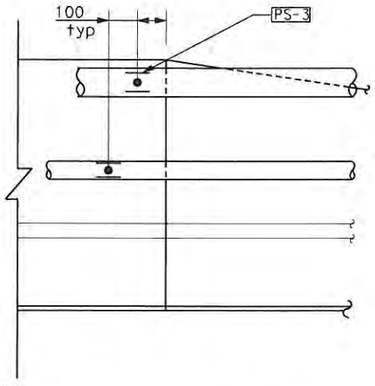

SECTION A-A

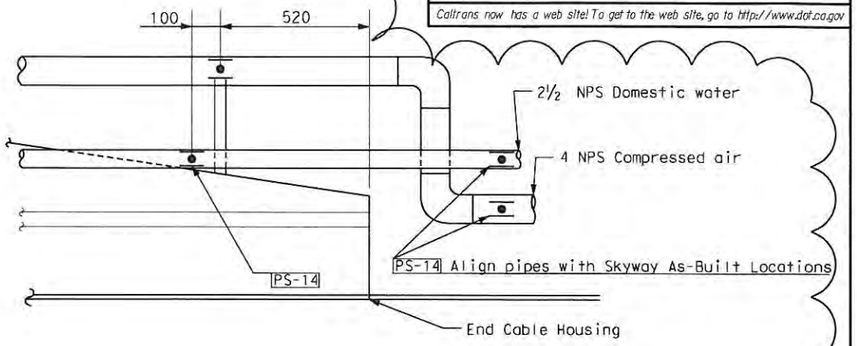

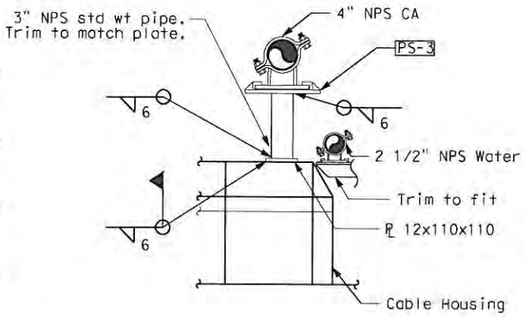

SECTION B-B

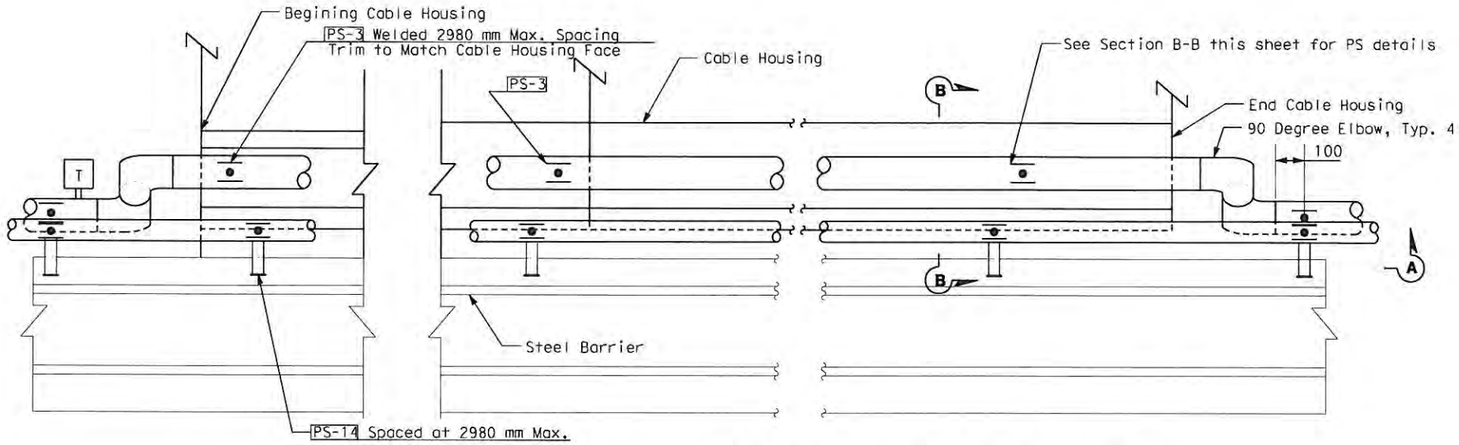

CABLE HOUSING PIPING PLAN (WESTBOUND)

DETAIL 9 / M-10

REQUEST FOR INFORMATION NOT ADDRESSED IN THIS CCO REMAIN IN FORCE					
1	8/17/10	MISCELLANEOUS MECHANICAL	CH	BM	83
0	12/9/09	MISCELLANEOUS MECHANICAL	CH	BM	83
MARK	DATE	DESCRIPTIONS REVISIONS	BY	CH'D	CCO#

CONTRACT CHANGE ORDER NO. 83
SHEET 4 OF 17

MECHANICAL PIPING SECTIONS AND DETAILS NO. 3A

NO SCALE

M-13A

ALL DIMENSIONS IN MILLIMETERS UNLESS OTHERWISE SHOWN

FOR REDUCED PLANS ORIGINAL SCALE IS IN MILLIMETERS 0 20 40 60 80

USERNAME => hawkinsc
DGN FILE => J:\13103k - SFOBB\RFI-Construction Support\CCO\83\83 04-0120F1_0049s01R01.dgn

CU 04251 EA 0120F1

LAST REVISION 00-00-00 DATE PLOTTED => 8/17/2010 TIME PLOTTED => 5:57:08 PM

DIST	COUNTY	ROUTE	KILOMETER POST TOTAL PROJECT	SHEET No	TOTAL SHEETS
04	SF	80	13.2/13.9	50R2	1204

Bobby J. Melvin 11/25/2009
REGISTERED MECHANICAL ENGINEER DATE

REGISTERED PROFESSIONAL ENGINEER — Bobby J. Melvin — No. 28585 — Exp. 6/30/11 — MECHANICAL — STATE OF CALIFORNIA

PLANS APPROVAL DATE

PARSONS BRINCKERHOFF QUADE & DOUGLAS, INC.
303 SECOND STREET, SUITE 700 N
SAN FRANCISCO, CA 94107

The State of California or its officers or agents shall not be responsible for the accuracy or completeness of electronic copies of this plan sheet.

Caltrans now has a web site! To get to the web site, go to http://www.dot.ca.gov

Caltrans Metric

CALCULATED/ DESIGNED BY	CHECKED BY	DATE	REVISED BY	DATE REVISED
BM	KH	10/31/02		

PROJECT ENGINEER — Rich Newell

STATE OF CALIFORNIA - DEPARTMENT OF TRANSPORTATION — Caltrans

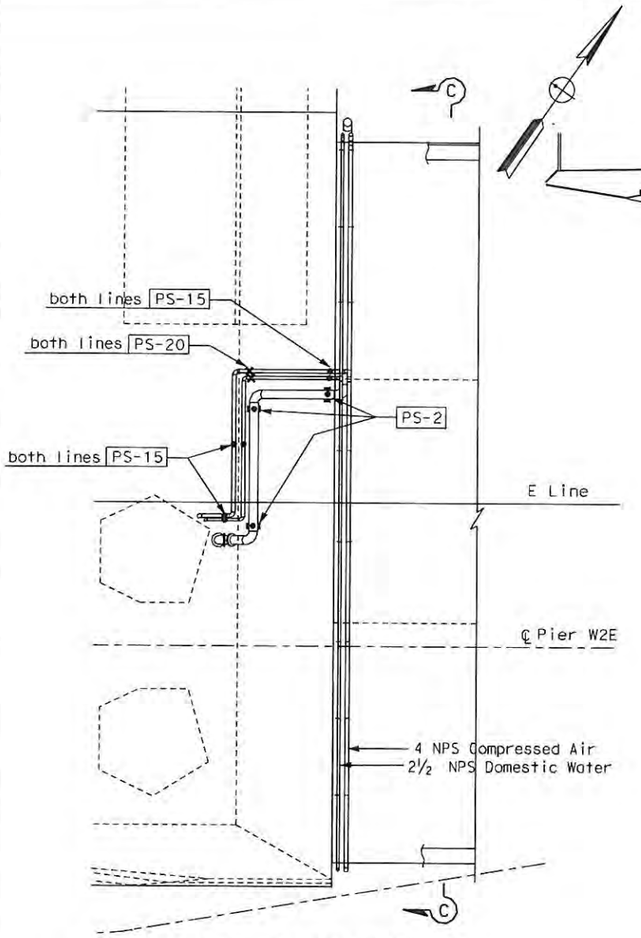

PIER W-2, EAST BOUND

DETAIL 1 / M-5

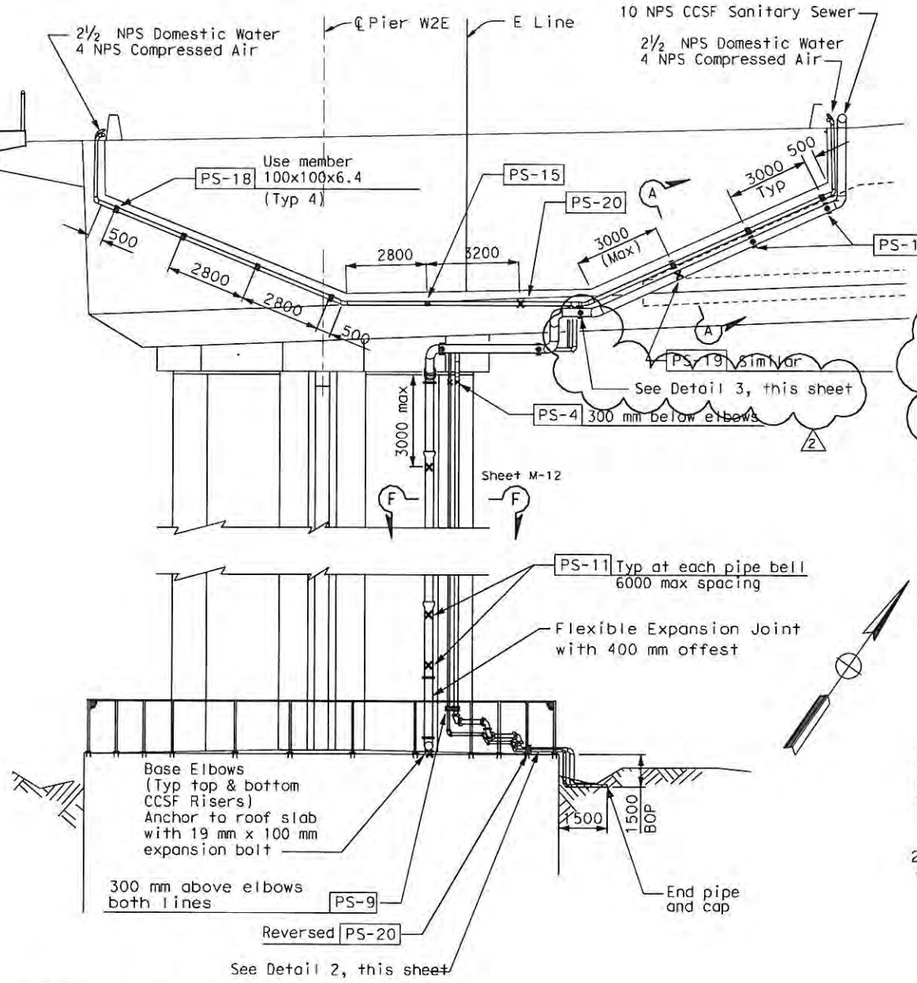

SECTION C-C

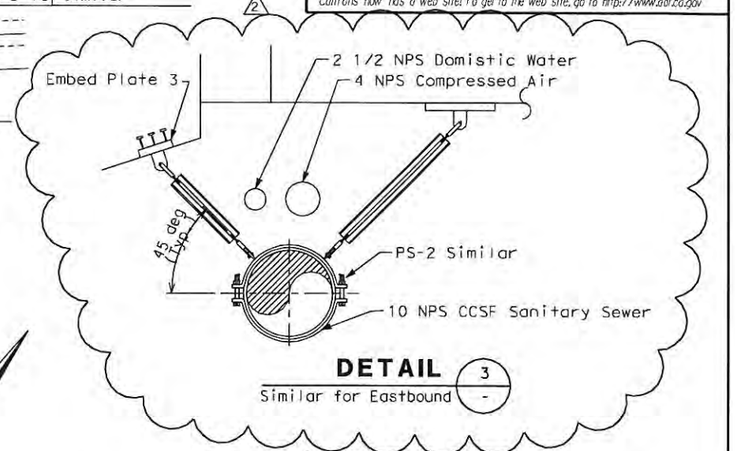

DETAIL 3 / - Similar for Eastbound

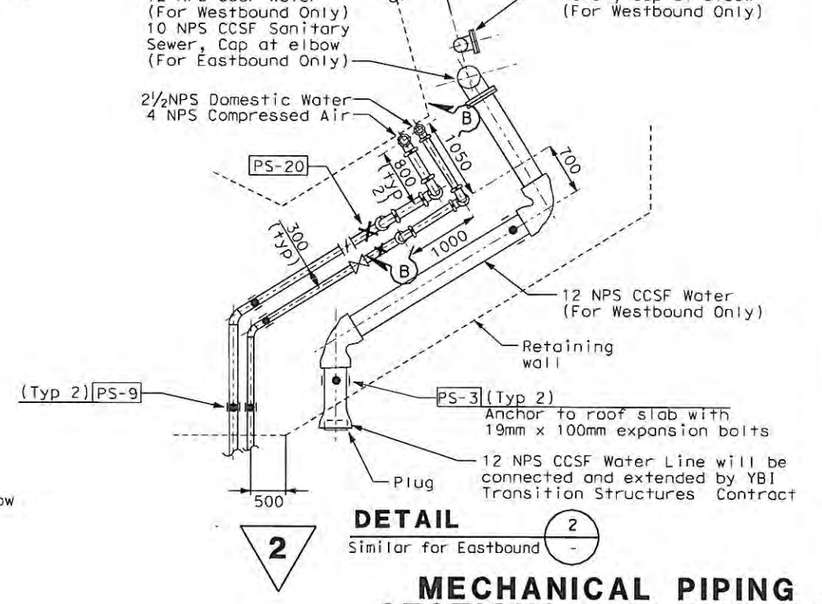

DETAIL 2 / - Similar for Eastbound

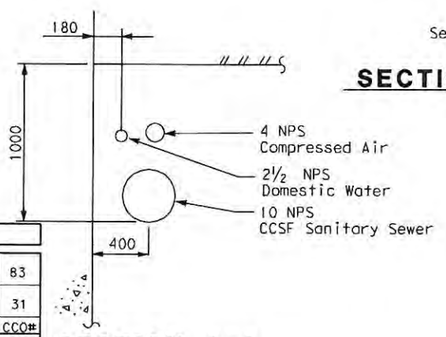

SECTION A-A

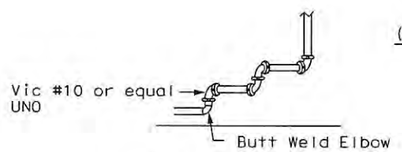

SECTION B-B

MARK	DATE	DESCRIPTIONS	BY	CH'D	CCO#
		REVISIONS			
2	3/18/09	MISCELLANEOUS MECHANICAL	CH	BM	83
1	1/17/08	MECHANICAL MODIFICATIONS	VY	BM	31

REQUEST FOR INFORMATION NOT ADDRESSED IN THIS CCO REMAIN IN FORCE

CONTRACT CHANGE ORDER NO. 83
SHEET 5 OF 17

2 REVISED PER ADDENDUM NO. 2 DATED SEPTEMBER 29, 2005

MECHANICAL PIPING SECTIONS AND DETAILS NO. 4

NO SCALE

M-14

ALL DIMENSIONS IN MILLIMETERS UNLESS OTHERWISE SHOWN

LAST REVISION 00-00-00 — DATE PLOTTED => 11/25/2009 TIME PLOTTED => 10:55:32 AM

FOR REDUCED PLANS ORIGINAL SCALE IS IN MILLIMETERS 0 20 40 60 80

USERNAME => hawkinsc
DGN FILE => J:\13103K - SFOBB\CCO\CCO 83\04-0120f1_0050R02.dgn

CU 04251 | EA 0120F1

DIST	COUNTY	ROUTE	KILOMETER POST TOTAL PROJECT	SHEET No	TOTAL SHEETS
04	SF	80	13.2/13.9	51R5	1204

Bobby J. Melvin 12/19/2002
REGISTERED MECHANICAL ENGINEER — DATE

PLANS APPROVAL DATE

REGISTERED PROFESSIONAL ENGINEER — Bobby J. Melvin No. 28685 Exp. 6/30/11 MECHANICAL — STATE OF CALIFORNIA

PARSONS BRINCKERHOFF QUADE & DOUGLAS, INC.
303 SECOND STREET, SUITE 700 N
SAN FRANCISCO, CA 94107

The State of California or its officers or agents shall not be responsible for the accuracy or completeness of electronic copies of this plan sheet.

To get to the web site, go to http://www.dot.ca.gov

Caltrans Metric

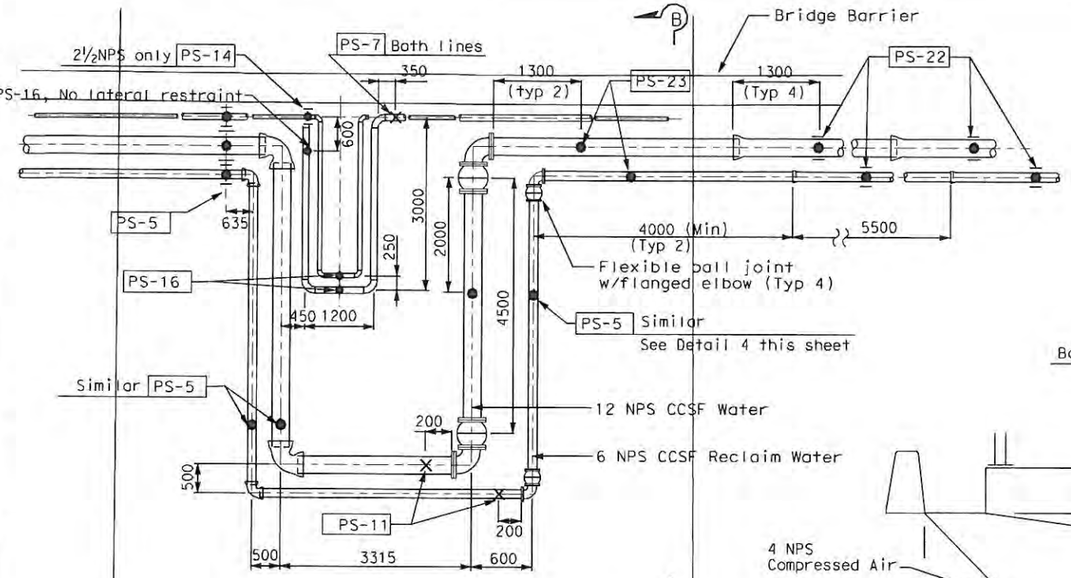

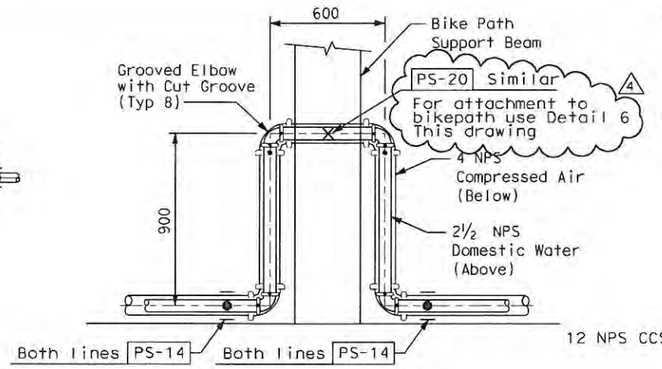

DETAIL 3 / -

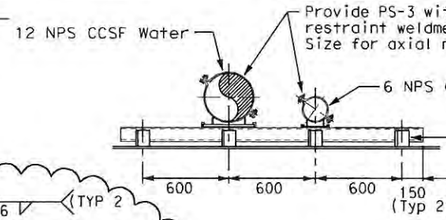

DETAIL 4 / -

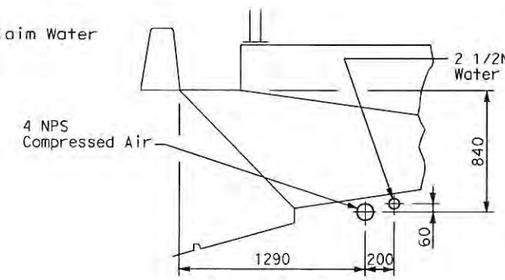

SECTION C-C
Tie-in points with Skyway Structure

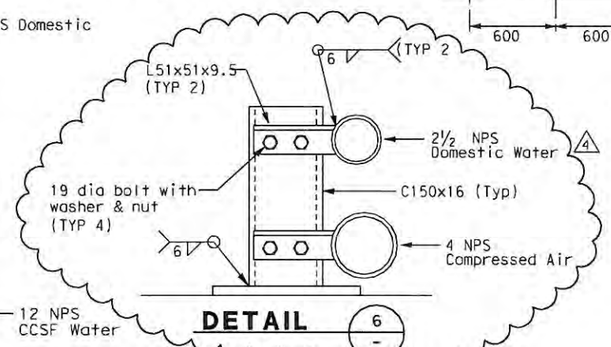

DETAIL 6 / -

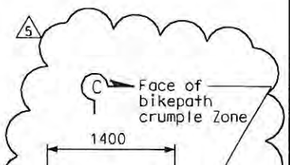

SECTION B-B

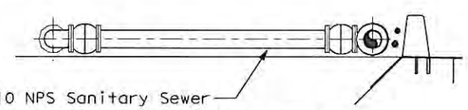

SECTION A-A

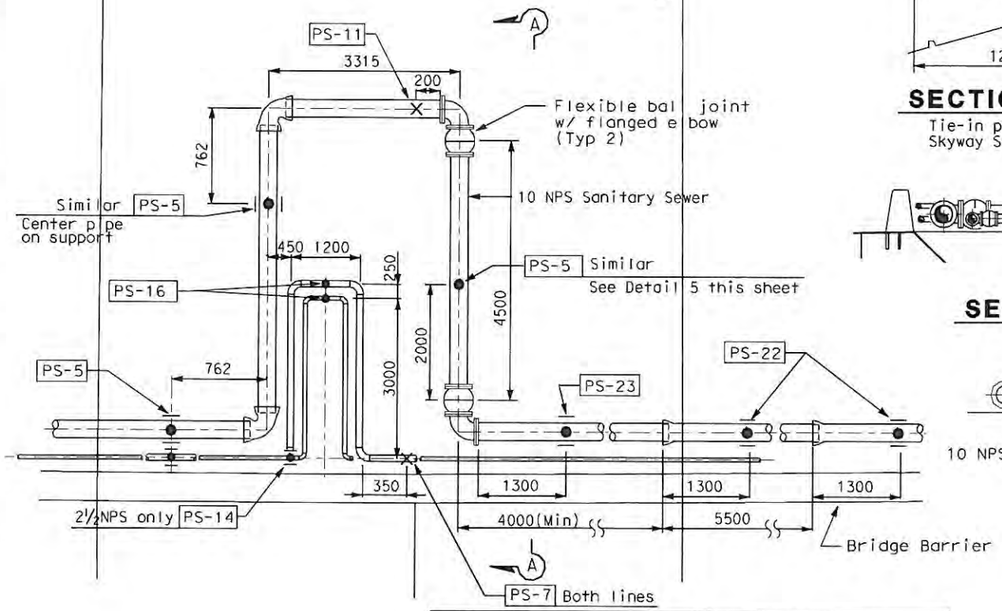

EXPANSION JOINTS FOR HINGE A

DETAIL 1 / M-10

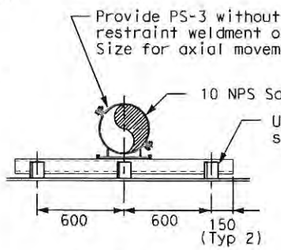

DETAIL 5 / -

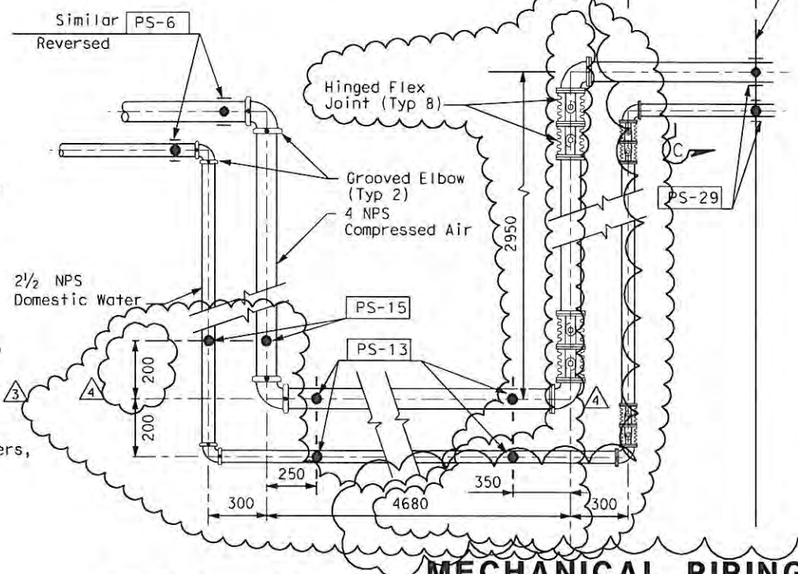

DETAIL 2 / -

MARK	DATE	DESCRIPTIONS	BY	CH'D	CCO#
		REVISIONS			
5	6/25/10	MISCELLANEOUS MECHANICAL	CH	BM	83
4	4/23/10	MISCELLANEOUS MECHANICAL	CH	BM	83
3	2/11/09	MISCELLANEOUS MECHANICAL	CM	BM	83
2	1/18/08	MECHANICAL MODIFICATIONS	VY	BM	31
1	9/05/07	MECHANICAL MODIFICATIONS	BM	RM	31

REQUEST FOR INFORMATION NOT ADDRESSED IN THIS CCO REMAIN IN FORCE

CONTRACT CHANGE ORDER NO. 83
SHEET 6 OF 17

MECHANICAL PIPING SECTIONS AND DETAILS NO. 5

NO SCALE

M-15

ALL DIMENSIONS IN MILLIMETERS UNLESS OTHERWISE SHOWN

CALCULATED/ DESIGNED BY	CHECKED BY	DATE	REVISED BY	DATE REVISED
BM	KH	10/31/02	11/15/02	

PROJECT ENGINEER — Rich Newell

STATE OF CALIFORNIA - DEPARTMENT OF TRANSPORTATION — Caltrans

LAST REVISION 00-00-00 — DATE PLOTTED => 6/25/2010 TIME PLOTTED => 11:03:12 AM

FOR REDUCED PLANS ORIGINAL SCALE IS IN MILLIMETERS 0 20 40 60 80

DGN FILE => J:\13103k - SFOBB\RFI-Construction Support\CCO\83\83r4\04-0120f1_005tR05.dgn
USERNAME => hawkinsc

CU 04251

EA 0120F1

DIST	COUNTY	ROUTE	KILOMETER POST TOTAL PROJECT	SHEET NO	TOTAL SHEETS
04	SF	80	13.2/13.9	52R3	1204

Bobby J. Melvin 11/25/2009
REGISTERED MECHANICAL ENGINEER DATE

PLANS APPROVAL DATE

REGISTERED PROFESSIONAL ENGINEER — Bobby J. Melvin — No. 28685 — Exp. 6/30/11 — MECHANICAL — STATE OF CALIFORNIA

PARSONS BRINCKERHOFF QUADE & DOUGLAS, INC.
303 SECOND STREET, SUITE 700 N
SAN FRANCISCO, CA 94107

The State of California or its officers or agents shall not be responsible for the accuracy or completeness of electronic copies of this plan sheet.

To get to the web site, go to http://www.dot.ca.gov

Caltrans Metric

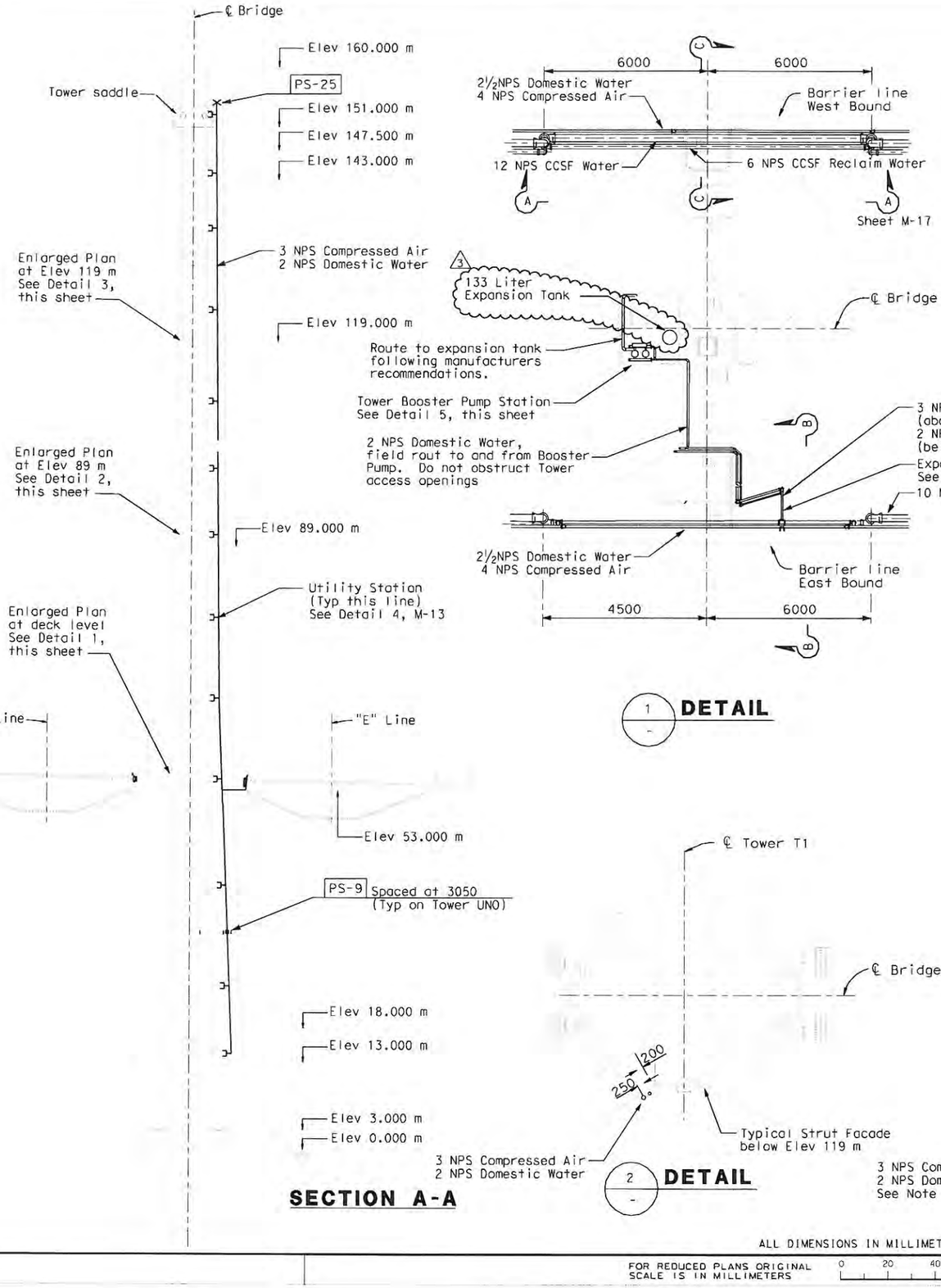

NOTE:
1. Provide penetration sleeve thru Strut Facade 1 full pipe size larger than pipe. Extend 25mm beyond Facade and weld all around (Typ Facade Type A)

REQUEST FOR INFORMATION NOT ADDRESSED IN THIS CCO REMAIN IN FORCE

MARK	DATE	DESCRIPTIONS	BY	CH'D	CCO#
		REVISIONS			
3	2/26/09	MISCELLANEOUS MECHANICAL	CM	BM	83
2	1/18/08	MECHANICAL MODIFICATIONS	VY	BM	31
1	9/05/07	MECHANICAL MODIFICATIONS	BM	RM	31

CONTRACT CHANGE ORDER NO. 83
SHEET 7 OF 17

MECHANICAL PIPING SECTIONS AND DETAILS NO. 6

M-16

NO SCALE

ALL DIMENSIONS IN MILLIMETERS UNLESS OTHERWISE SHOWN

FOR REDUCED PLANS ORIGINAL SCALE IS IN MILLIMETERS 0 20 40 60 80

USERNAME => hawkinsc
DGN FILE => J:\13103k - SFOBB\CCO\CCO 83\04-0120F1_0052R03.dgn

CU 04251

EA 0120F1

LAST REVISION 00-00-00
DATE PLOTTED => 11/25/2009
TIME PLOTTED => 10:51:34 AM

STATE OF CALIFORNIA - DEPARTMENT OF TRANSPORTATION
Caltrans
PROJECT ENGINEER: Rich Newell
CALCULATED/DESIGNED BY
CHECKED BY
BM 10/31/02 REVISED BY
KH 11/15/02 DATE REVISED

F:\13103K\DGN\CONTRACT1\13103M1016.dgn 6-21-01

DIST	COUNTY	ROUTE	KILOMETER POST TOTAL PROJECT	SHEET No	TOTAL SHEETS
04	SF	80	13.2/13.9	54R3	1204

Bobby J. Melvin 11/25/2009
REGISTERED MECHANICAL ENGINEER — DATE

PLANS APPROVAL DATE

REGISTERED PROFESSIONAL ENGINEER — Bobby J. Melvin No. 28685 Exp. 6/30/11 MECHANICAL — STATE OF CALIFORNIA

PARSONS BRINCKERHOFF QUADE & DOUGLAS, INC.
303 SECOND STREET, SUITE 700 N
SAN FRANCISCO, CA 94107

The State of California or its officers or agents shall not be responsible for the accuracy or completeness of electronic copies of this plan sheet.

To get to the web site, go to http://www.dot.ca.gov

Caltrans Metric

Table for PS-1

PIPE	"A"	"B"	"C"	Values for PS-3 Vert. (kg)	Lat. (kg)	Move. (mm)
2½NPS Water	W150X22	2	6	70	45	±38
4 NPS Air	W150X22	2	6	130	80	±38
6 NPS Water	W150X30	3	6	450	200	±38
10 NPS Sewer	W150X30	3	6	1000	440	±38
12 NPS Water	W150X30	3	6	1300	600	±38

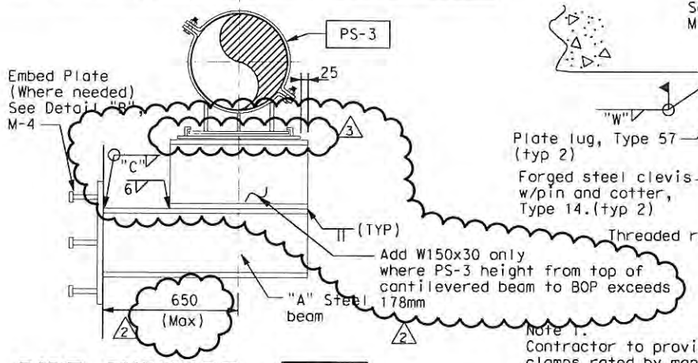

PIPE SUPPORT DETAIL **PS-1**

Add 300mm W150x23 riser where PS-1 height from bottom of beam to BOP exceeds 178mm

Table for PS-2

PIPE SIZE	ROD STIFFENER SIZE	ROD SIZE	CLAMP RATING (KG)	MIN. CLAMP WIDTH	"W"	"Y"	"A"	"B"
6 NPS	L 50X50X9.5	16	600	65	6	4-12	2	2
10,12 NPS	L 75X75X6.4	19	1230	80	6	4-12	2	2

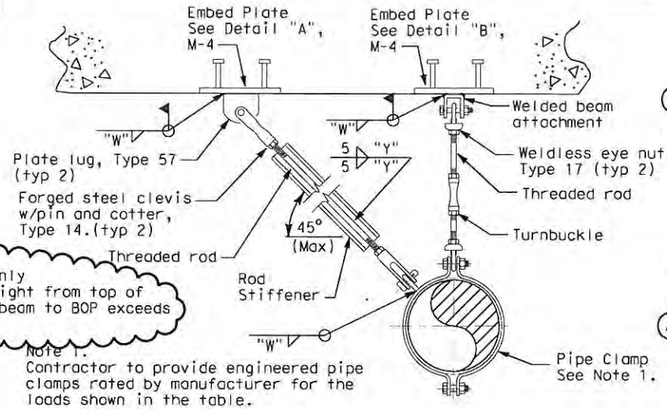

PIPE SUPPORT DETAIL **PS-2**

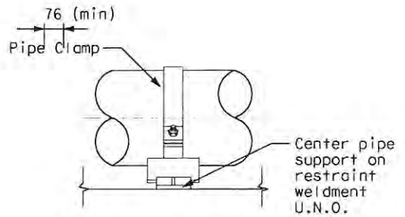

SECTION A-A

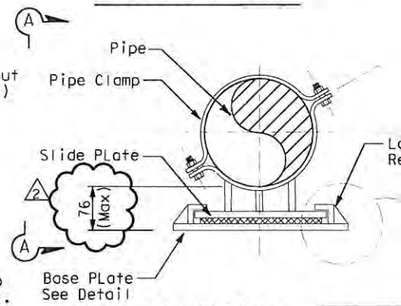

PIPE SUPPORT DETAIL **PS-3**

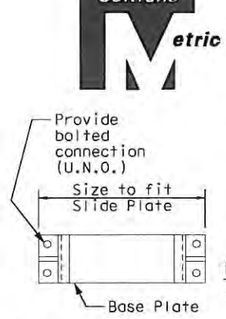

BASE PLATE

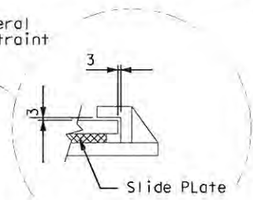

REQUEST FOR INFORMATION NOT ADDRESSED IN THIS CCO REMAIN IN FORCE					
3	8/17/09	MISCELLANEOUS MECHANICAL	CH	BM	83
2	9/23/09	MISCELLANEOUS MECHANICAL	CH	BM	83
1	9/05/07	MECHANICAL MODIFICATIONS	BM	RM	31
MARK	DATE	DESCRIPTIONS	BY	CH'D	CCO#
		REVISIONS			

CONTRACT CHANGE ORDER NO. 83
SHEET 8 OF 17

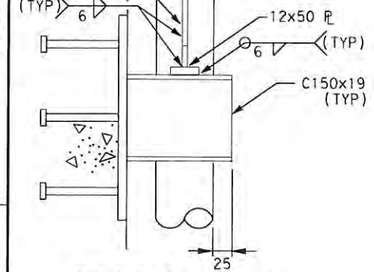

SECTION C-C

Table for PS-6

Pipe	"A"	Data for PS-3 Vert. Load (kg)	Lat. Load (kg)	Axial Move (mm)
2½ NPS	L51x51x7.9	50	25	38
4 NPS	C75x6	110	55	38

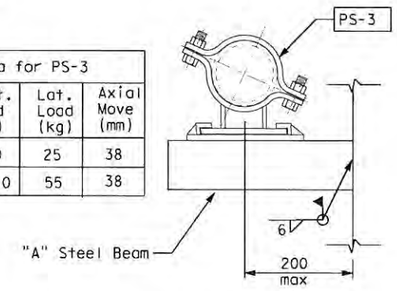

PIPE SUPPORT DETAIL **PS-6**

Table for PS-3 to be used with PS-5

PIPE	Vert. Load (kg)	Lat. Load (kg)	Axial Move. (mm)
4 NPS Air	130	80	±38
6 NPS Water	450	200	±38
10 NPS Sewer	1000	440	±38
12 NPS Water	1300	600	±38

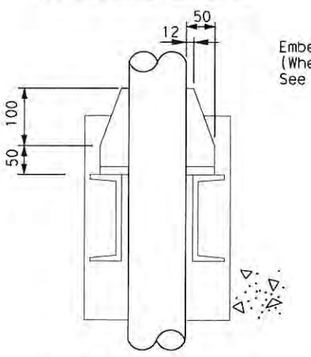

SECTION B-B

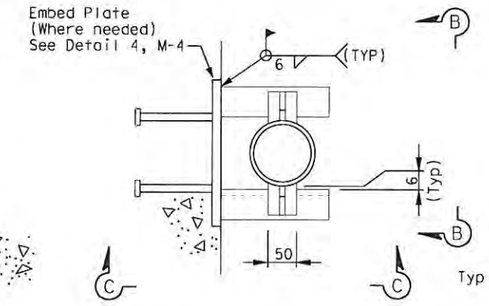

PIPE SUPPORT DETAIL **PS-4**

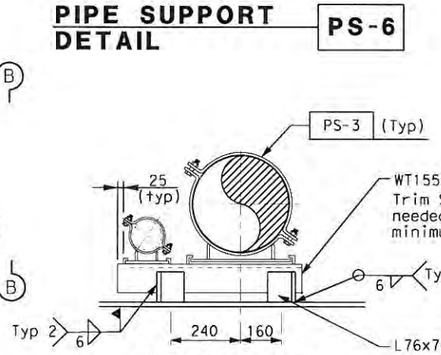

EASTBOUND

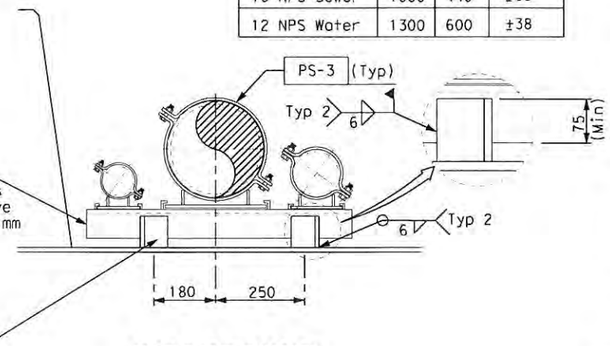

WESTBOUND

PIPE SUPPORT DETAIL **PS-5**

ALL DIMENSIONS IN MILLIMETERS UNLESS OTHERWISE SHOWN

NOTES FOR PS-3

1. Contractor to provide engineered supports rated by manufacturer for the loads and movements shown in the details.
2. Support configuration shown is intended to illustrate general form of support. Actual configurations may vary depending on manufacturer, loads and movements.
3. Slide pads shall be Teflon or Ultra-HDPE running on a stainless steel plate.
4. Submit product data for each support. Each support shall be identified by a unique support model number corresponding to performance data from the manufacturer.
5. Pipe support loads act on pipe centerline.
6. Slide plates not required on supports for piping 6 NPS and smaller.
7. Minimum clamp width for use with ductile iron pipe = 75 mm U.N.O.

GENERAL NOTES FOR PIPE SUPPORTS

1. For piping outside of bridge girder, all steel surfaces of pipe supports and components shall be hot dip galvanized except supplementary steel members attached to bridge structure and components requiring field welding. Pipe supports inside bridge girder shall be painted.
2. All manufactured support components shall be load rated by manufacturer.
3. Expand all grooved and restrained joint couplings prior to setting pipe clamp locations.
4. All supports shall meet the requirements of applicable MSS Standards
5. Provide all necessary nuts, bolts, pins washers etc. to complete pipe support assemblies.
6. Holes for bolts, pins etc. shall not be torch cut unless approved by engineer.
7. All welding for pipe supports shall be per project welding specification and vendor instructions.
8. "Type" Designation for manufactured hanger components refers to MSS-SP69.
9. Support components welded to embed plates shall be centered on embed plates, U.N.O.
10. For embed plate details see drawing M-4.
11. Maintain minimum 200 mm clearance between pipe rolls and piping obstructions, ie; pipe bells, welds, branches etc.
12. Pipe supports shall not be field welded to steel box girder. All welding to girders shall be shop weld.

MECHANICAL PIPE SUPPORT DETAILS NO. 1

NO SCALE

M-18

DATE	REVISED BY	DATE	REVISED
10/31/02	BM	11/15/02	KH

CALCULATED/DESIGNED BY
CHECKED BY

PROJECT ENGINEER
Rich Newell

STATE OF CALIFORNIA - DEPARTMENT OF TRANSPORTATION
Caltrans

LAST REVISION 00-00-00
DATE PLOTTED => 8/17/2010
TIME PLOTTED => 5:58:32 PM

FOR REDUCED PLANS ORIGINAL SCALE IS IN MILLIMETERS 0 20 40 60 80

USERNAME => hawkinsg
DGN FILE => J:\13103k - SFOBB\RFI-Construction Support\CCO\83\83 brdr 8_04-0120f1_0054R03.dgn

CU 04251 EA 0120F1

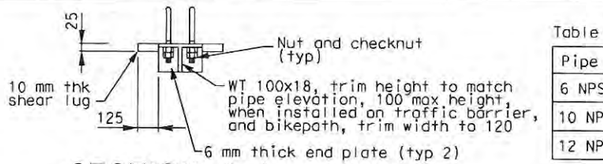

SECTION A-A

Table for PS-8

Pipe	"A"	"B"	"C"
6 NPS Reclaim Water	W250x49x250long	3	16 mm,ASTM A325
10 NPS Sewer	W250x73x355long	1	19 mm,ASTM A325
12 NPS Water	W250x73x355long	1	19 mm,ASTM A325

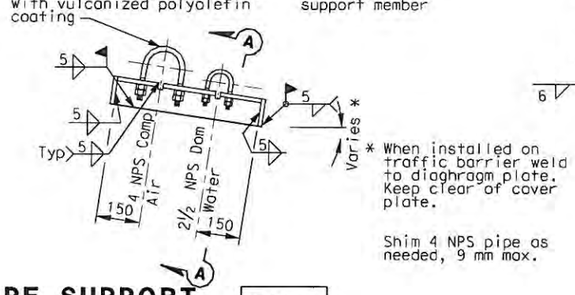

PIPE SUPPORT DETAIL PS-7 (typ)

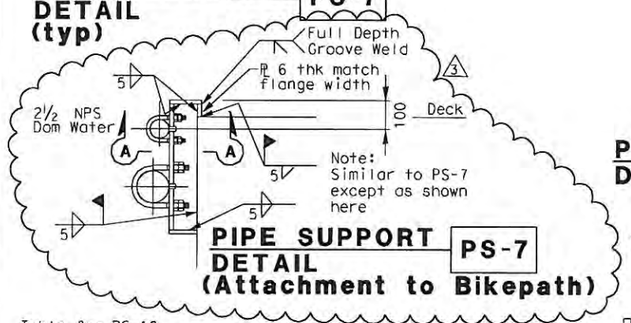

PIPE SUPPORT DETAIL PS-7 (Attachment to Bikepath)

Table for PS-10

PIPE	"A"	"B"	"C"	"D"
6 NPS Reclaim Water	W200X36	4	6	19 mm BOLT - ASTM A325
10 NPS Sewer	W200X46	3	6	19 mm BOLT - ASTM A325
12 NPS Water	W200X46	3	6	19 mm BOLT - ASTM A325

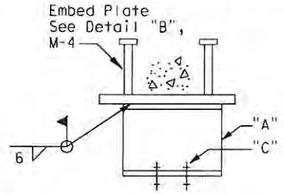

PIPE SUPPORT DETAIL PS-8

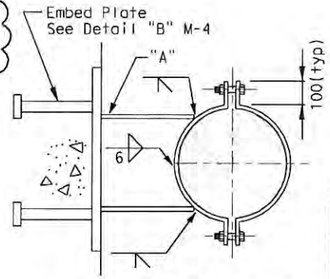

SECTION C-C

Table for PS-11

Pipe	"A"	"B"	"C"
6 NPS Reclaim Water	W150X30	4	13
10 NPS Sewer	W200X46	4	13
12 NPS Water	W200X46	4	13

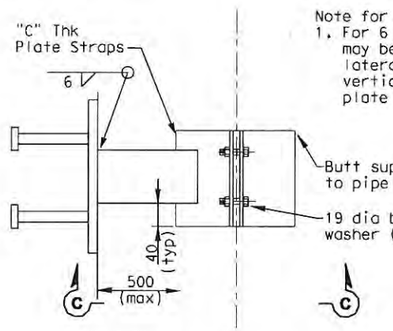

Note for PS-11
1. For 6 NPS Pipe, support may be located ± 38mm laterally and ± 51mm vertically from embed plate centerline.

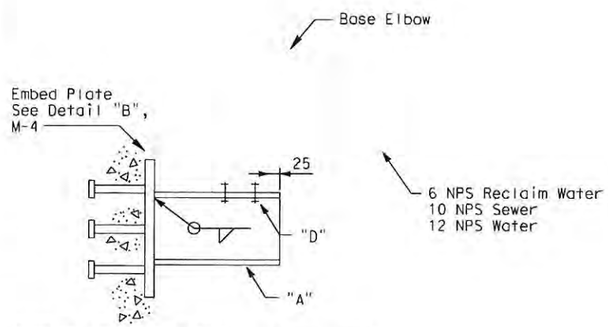

PIPE SUPPORT DETAIL PS-10

PIPE SUPPORT DETAIL PS-11

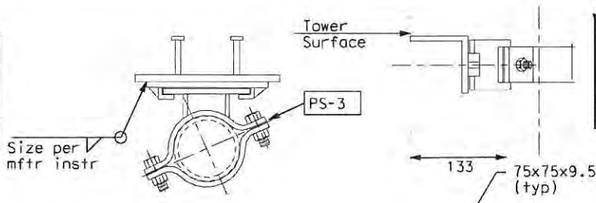

PIPE SUPPORT DETAIL PS-9 (Attachment to Concrete)

PIPE SUPPORT DETAIL PS-9 (Attachment to Tower)

Thrust Collar for PS-12

Pipe	Axial Load Rating (kg)
6 NPS	6,000
10 NPS	13,000
12 NPS	18,000

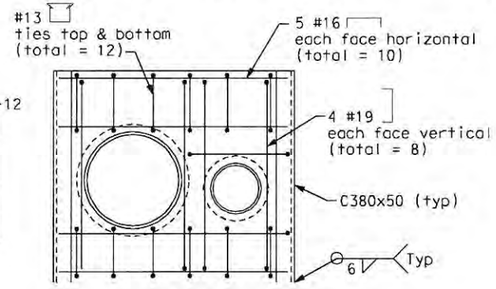

SECTION D-D

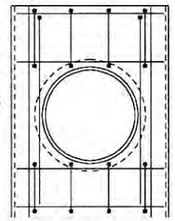

SECTION D-D
East Bound

Table for PS-3 to use with PS-9

Pipe	Vert. Load (kg)	Lat. Load (kg)	Axial Move (mm)
2 NPS	-	30	38
2½ NPS	-	30	38
3 NPS	-	40	38
4 NPS	-	60	38

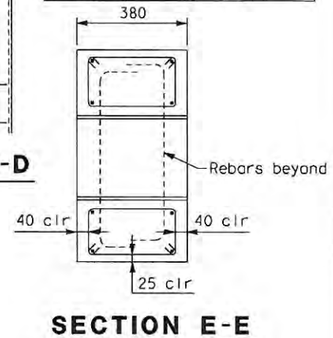

SECTION E-E

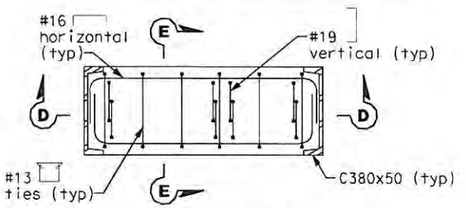

PLAN NEAR TOP

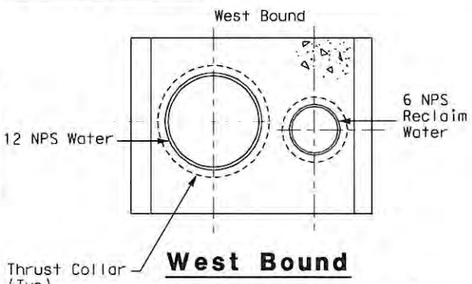

West Bound

PIPE SUPPORT DETAIL PS-12

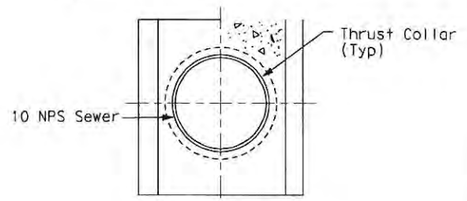

East Bound

REQUEST FOR INFORMATION NOT ADDRESSED IN THIS CCO REMAIN IN FORCE					
3	4/22/09	MISCELLANEOUS MECHANICAL	CM	BM	83
2	1/18/08	MECHANICAL MODIFICATIONS	VY	BM	31
1	9/05/07	MECHANICAL MODIFICATIONS	BM	RM	31
MARK	DATE	DESCRIPTIONS	BY	CH'D	CCO#
		REVISIONS			

CONTRACT CHANGE ORDER NO. 83
SHEET 9 OF 17

MECHANICAL PIPE SUPPORT DETAILS No. 2

NO SCALE

M-19

ALL DIMENSIONS IN MILLIMETERS UNLESS OTHERWISE SHOWN

DIST	COUNTY	ROUTE	KILOMETER POST TOTAL PROJECT	SHEET NO	TOTAL SHEETS
04	SF	80	13.2/13.9	55R3	1204

Bobby J. Melvin 11/25/2009
REGISTERED MECHANICAL ENGINEER DATE

REGISTERED PROFESSIONAL ENGINEER — Bobby J. Melvin — No. 28685 — Exp. 6/30/11 — MECHANICAL — STATE OF CALIFORNIA

PLANS APPROVAL DATE

PARSONS BRINCKERHOFF QUADE & DOUGLAS, INC.
303 SECOND STREET, SUITE 700 N
SAN FRANCISCO, CA 94107

The State of California or its officers or agents shall not be responsible for the accuracy or completeness of electronic copies of this plan sheet.

To get to the web site, go to http://www.dot.ca.gov

DATE	REVISED BY	DATE REVISED
10/31/02	BM	11/15/02

CALCULATED/DESIGNED BY
CHECKED BY
PROJECT ENGINEER
Rich Newell

STATE OF CALIFORNIA - DEPARTMENT OF TRANSPORTATION
Caltrans

FOR REDUCED PLANS ORIGINAL SCALE IS IN MILLIMETERS 0 20 40 60 80

USERNAME => bowkirsc
DGN FILE => J:\13103k - SFOBB\CCO\CCO 83\04-0120f1_0055R03.dgn

CU 04251

EA 0120F1

LAST REVISION 00-00-00
DATE PLOTTED => 11/25/2009
TIME PLOTTED => 10:48:46 AM

DIST	COUNTY	ROUTE	KILOMETER POST TOTAL PROJECT	SHEET NO	TOTAL SHEETS
04	SF	80	13.2/13.9	56R5	1204

Bobby J. Melvin 11/25/2009
REGISTERED MECHANICAL ENGINEER DATE

REGISTERED PROFESSIONAL ENGINEER — Bobby J. Melvin — No. 28585 — Exp. 6/30/11 MECHANICAL — STATE OF CALIFORNIA

PLANS APPROVAL DATE

PARSONS BRINCKERHOFF QUADE & DOUGLAS, INC.
303 SECOND STREET, SUITE 700 N
SAN FRANCISCO, CA 94107

The State of California or its officers or agents shall not be responsible for the accuracy or completeness of electronic copies of this plan sheet.

Caltrans now has a web site! To get to the web site, go to http://www.dot.ca.gov

Caltrans Metric

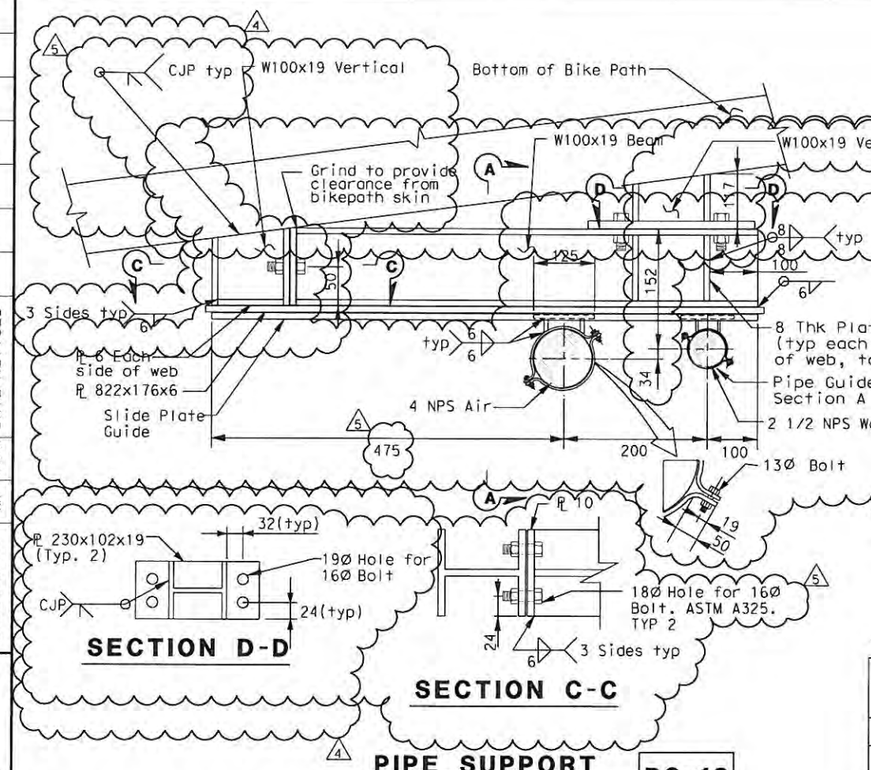

PIPE SUPPORT DETAIL PS-13

Table for PS-3 to be used with PS-14

PIPE	Vert. Load (kg)	Lat. Load (kg)	Axial Move. (mm)
2½ NPS Water	70	45	±38
4 NPS Air	130	80	±38

Table for PS-3 to be used with PS-17

PIPE	Vert. Load (kg)	Lat. Load (kg)	Axial Move. (mm)
2½ NPS Dom Water	70	73	25
4 NPS Comp Air	130	140	25
6 NPS Sewer	340	340	25
10 NPS Sewer	650	720	25
12 NPS Water	900	1000	25

Table for PS-3 to be used with PS-16

PIPE	Vert. Load (kg)	Long. Load (kg)	Lat Move. (mm)
2 NPS Water	50	50	38
2-1/2 NPS Water	70	70	38
3 NPS Air	90	70	38
4 NPS Air	130	130	38

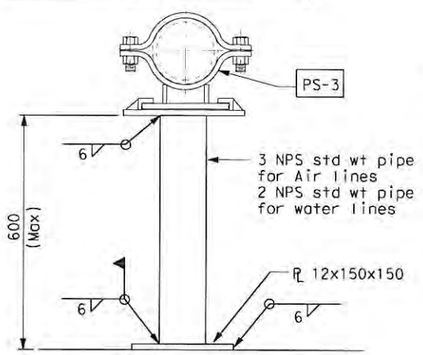

PIPE SUPPORT DETAIL PS-16

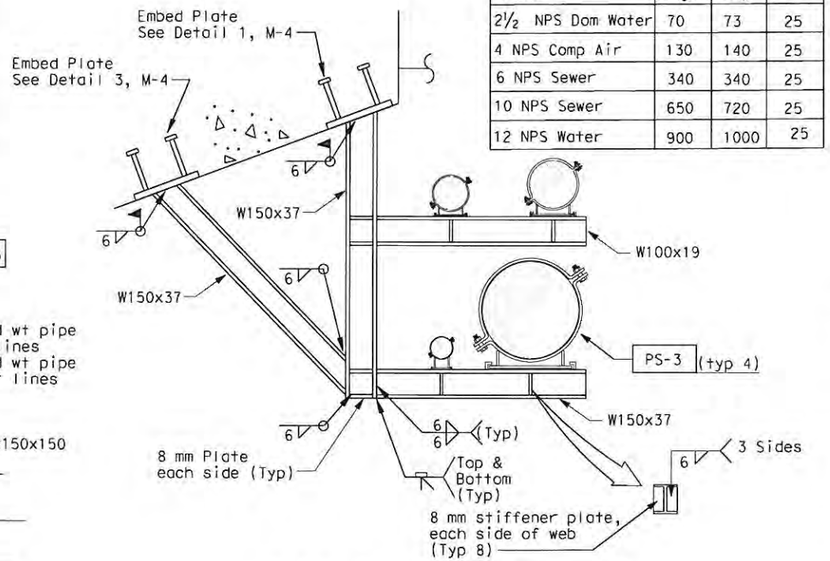

PIPE SUPPORT DETAIL PS-17

ALL DIMENSIONS IN MILLIMETERS UNLESS OTHERWISE SHOWN

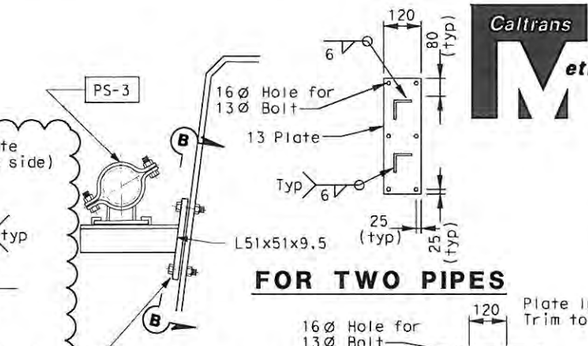

PIPE SUPPORT DETAIL PS-14

Table for PS-3 to be used with PS-18

PIPE	Vert. Load (kg)	Lat. Load (kg)	Axial Move. (mm)
2½ NPS Dom Water	70	45	25
4 NPS Comp Air	130	80	25
6 NPS Sewer	340	160	25
10 NPS Sewer	650	340	25
12 NPS Water	900	500	25

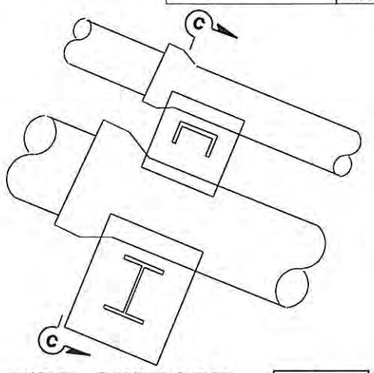

PIPE SUPPORT DETAIL PS-18

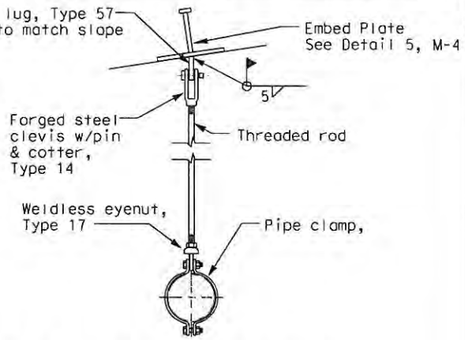

PIPE SUPPORT DETAIL PS-15

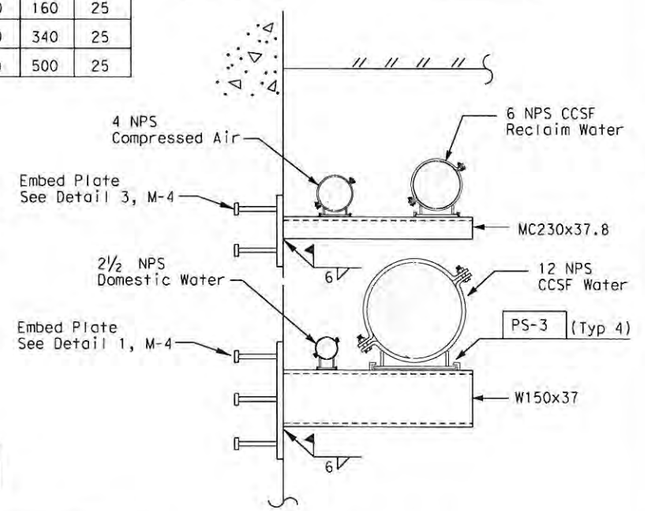

SECTION C-C

MARK	DATE	DESCRIPTIONS REVISIONS	BY	CH'D	CCO#
5	10/12/10	MISCELLANEOUS MECHANICAL	CH	BM	83
4	4/27/10	MISCELLANEOUS MECHANICAL	CH	BM	83
3	2/11/09	MISCELLANEOUS MECHANICAL	CH	BM	83
2	3/10/08	MECHANICAL MODIFICATIONS	VY	BM	31
1	9/05/07	MECHANICAL MODIFICATIONS	BM	RM	31

REQUEST FOR INFORMATION NOT ADDRESSED IN THIS CCO REMAIN IN FORCE

CONTRACT CHANGE ORDER NO. 83
SHEET 10 OF 17

MECHANICAL PIPE SUPPORT DETAILS NO. 3

NO SCALE

M-20

REVISED BY	DATE REVISED
BM	10/31/02
KH	11/15/02

CALCULATED/DESIGNED BY
CHECKED BY

PROJECT ENGINEER
Rich Newell

STATE OF CALIFORNIA - DEPARTMENT OF TRANSPORTATION
Caltrans

FOR REDUCED PLANS ORIGINAL SCALE IS IN MILLIMETERS 0 20 40 60 80

DGN FILE => J:\13103k - SFOBB\RFI-Construction Support\CCO\83\83 Draft 9\04-0120f1_0056R05.dgn
USERNAME => hawkinsc

CU 04251 EA 0120F1

LAST MENUS ON: 00-00-00
DATE PLOTTED => 10/22/2010
TIME PLOTTED => 9:12:39 AM

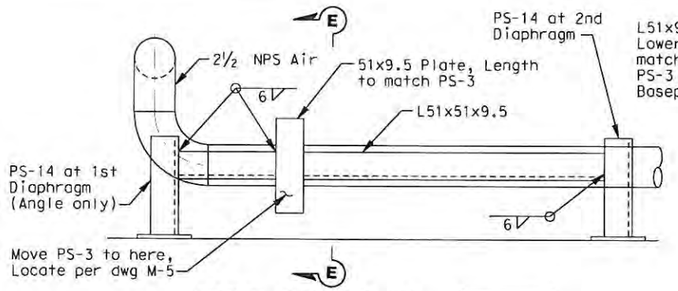

PIPE SUPPORT DETAIL PS-28

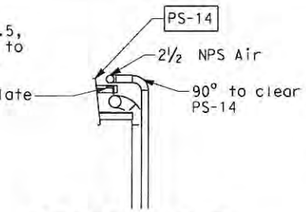

SECTION E-E

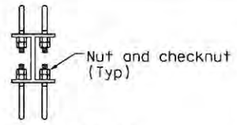

SECTION A-A

Table for PS-3 to be used with PS-21

PIPE	Vert. Load (kg)	Lat. Load (kg)	Axial Move. (mm)
2½ NPS Dom Water	70	45	38
4 NPS Comp Air	130	80	38

Caltrans Metric

DIST	COUNTY	ROUTE	KILOMETER POST TOTAL PROJECT	SHEET No.	TOTAL SHEETS
04	SF	80	13.2/13.9	57R6	1204

Bobby J. Melvin 11/25/2009
REGISTERED MECHANICAL ENGINEER DATE

PLANS APPROVAL DATE

REGISTERED PROFESSIONAL ENGINEER — Bobby J. Melvin No. 28585 EXP. 6/30/11 MECHANICAL — STATE OF CALIFORNIA

PARSONS BRINCKERHOFF QUADE & DOUGLAS, INC.
303 SECOND STREET, SUITE 700 N
SAN FRANCISCO, CA 94107

The State of California or its officers or agents shall not be responsible for the accuracy or completeness of electronic copies of this plan sheet.

Caltrans now has a web site! To get to the web site, go to http://www.dot.ca.gov

Table for PS-3 to be used with PS-19

PIPE	Vert. Load (kg)	Lat. Load (kg)	Axial Load (kg)
2½ NPS Dom Water	70	45	95
4 NPS Comp Air	130	80	190

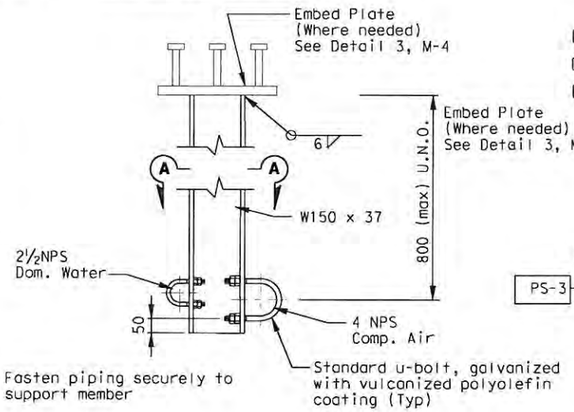

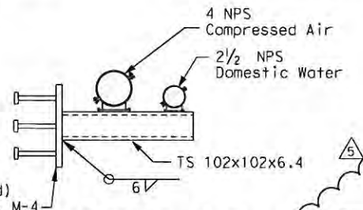

SECTION C-C

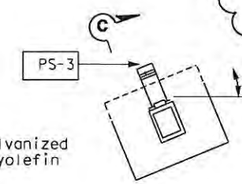

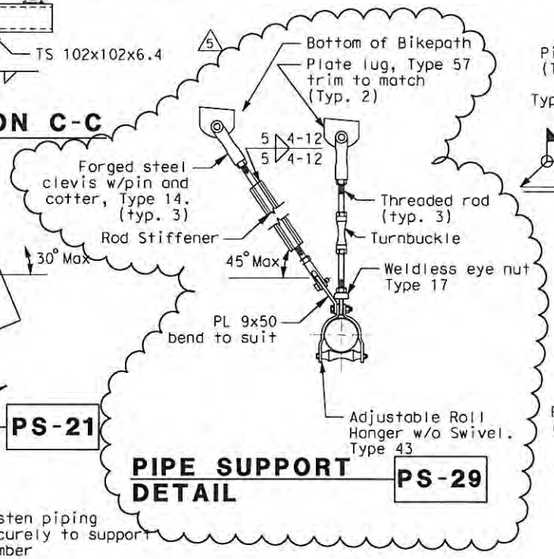

PIPE SUPPORT DETAIL PS-29

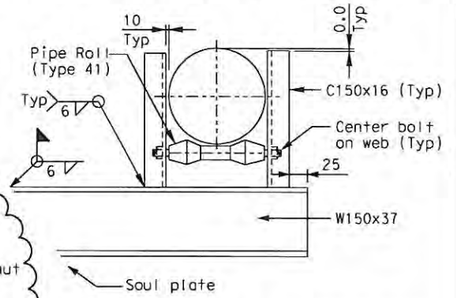

PIPE SUPPORT DETAIL PS-22

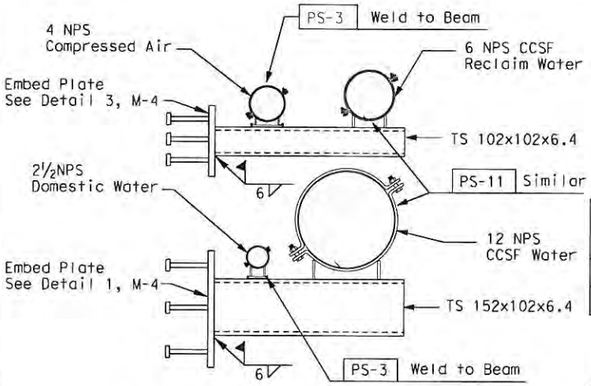

PIPE SUPPORT DETAIL PS-20

PIPE SUPPORT DETAIL PS-21

Table for PS-25

Pipe Size	Rod Size (mm)	"A"	"B"	"W"	"Y"	Vertical Travel (mm)	Hot Load (kg)	Cold Load (kg)
2 NPS	16	W150x22	50	6	6	25	365	415
3 NPS	19	W150x22	75	6	6	31	545	615

* Fasten piping securely to support member

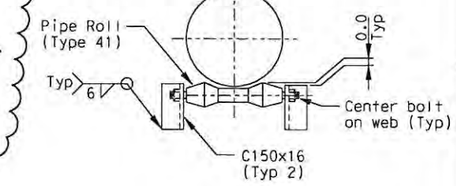

PIPE SUPPORT DETAIL PS-23

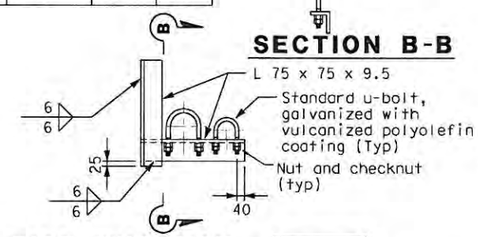

SECTION B-B

PIPE SUPPORT DETAIL PS-26

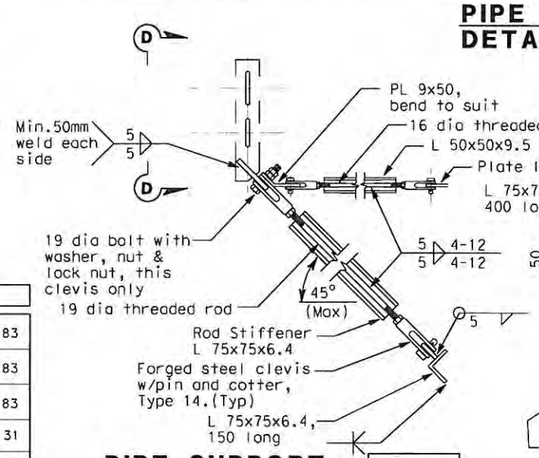

PIPE SUPPORT DETAIL PS-27

SECTION D-D

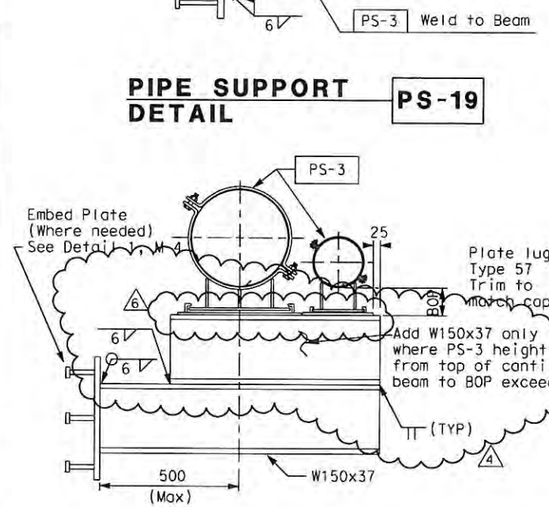

PIPE SUPPORT DETAIL PS-19

PIPE SUPPORT DETAIL PS-24

PIPE SUPPORT DETAIL PS-25

REQUEST FOR INFORMATION NOT ADDRESSED IN THIS CCO REMAIN IN FORCE					
6	8/17/10	MISCELLANEOUS MECHANICAL	CH	BM	83
5	6/25/10	MISCELLANEOUS MECHANICAL	CH	BM	83
4	9/23/09	MISCELLANEOUS MECHANICAL	CH	BM	83
3	9/26/08	MECHANICAL MODIFICATIONS	CM	BM	31
2	1/18/08	MECHANICAL MODIFICATIONS	VY	BM	31
1	9/05/07	MECHANICAL MODIFICATIONS	BM	RM	31
MARK	DATE	DESCRIPTIONS	BY	CH'D	CCO#
		REVISIONS			

CONTRACT CHANGE ORDER NO. 83
SHEET 11 OF 17

ALL DIMENSIONS IN MILLIMETERS UNLESS OTHERWISE SHOWN

MECHANICAL PIPE SUPPORT DETAILS NO. 4

NO SCALE

M-21

CALCULATED/ DESIGNED BY	CHECKED BY
BM	KH

DATE	REVISED BY	DATE REVISED
10/31/02		11/15/02

PROJECT ENGINEER: Rich Newell

STATE OF CALIFORNIA - DEPARTMENT OF TRANSPORTATION — Caltrans

LAST REVISION 00-00-00

DATE PLOTTED => 8/17/2010
TIME PLOTTED => 6:00:02 PM

FOR REDUCED PLANS ORIGINAL SCALE IS IN MILLIMETERS 0 20 40 60 80

USERNAME => hawkinsc
DGN FILE => J:\13103k - SFOBB\RFI-Construction Support\CCO\83\83 0120f1_0057R06.dgn

CU 04251 EA 0120F1

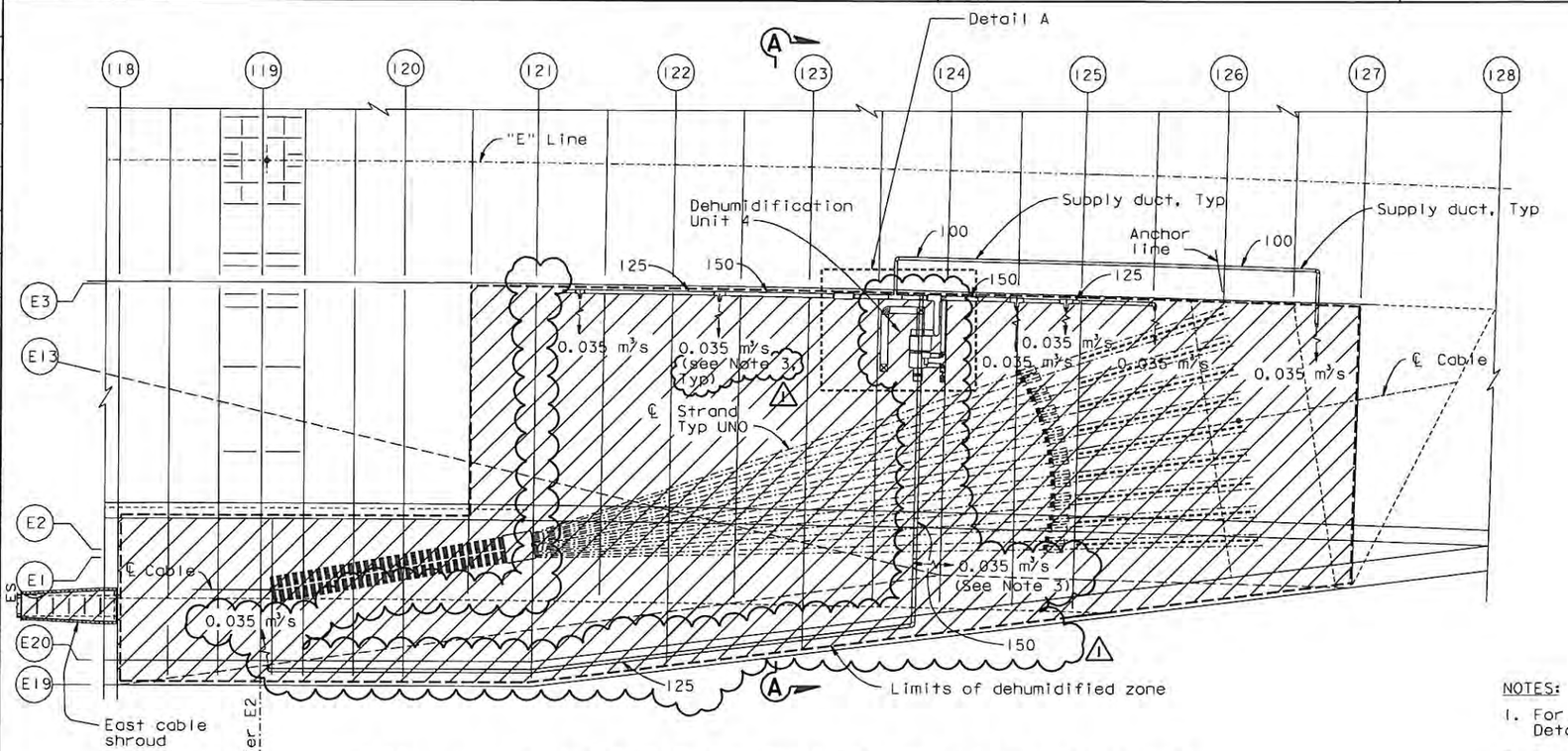

PLAN - DEHUMIDIFICATION CHAMBER AT EAST ANCHORAGE

("E" LINE SHOWN, "W" LINE SIMILAR)

1:100

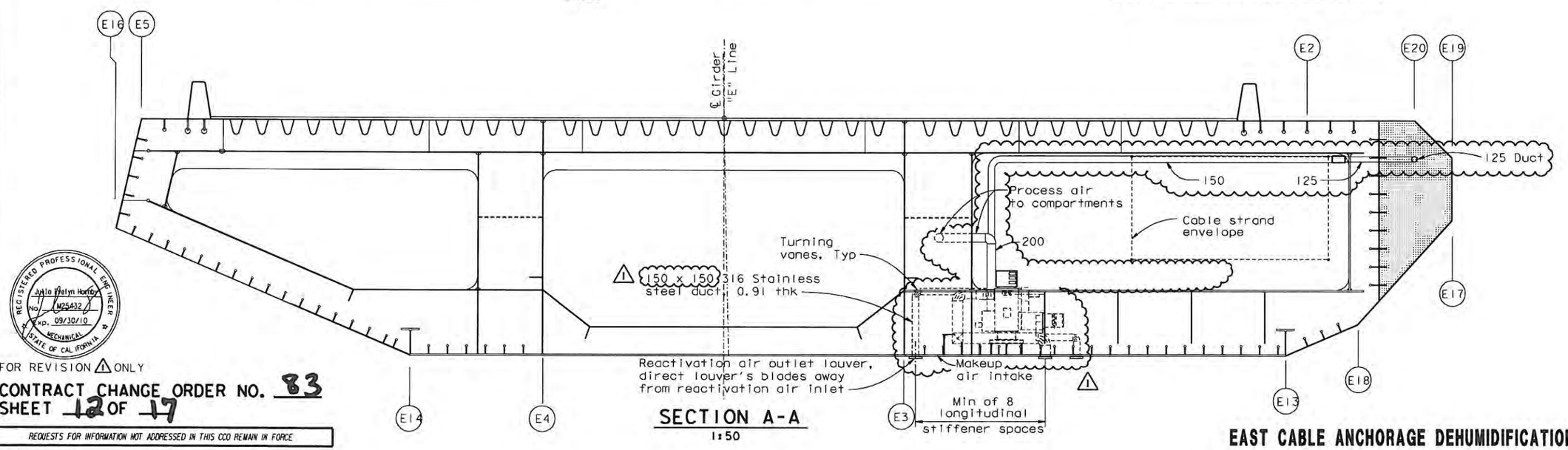

SECTION A-A

1:50

EAST CABLE ANCHORAGE DEHUMIDIFICATION DETAIL NO. 1

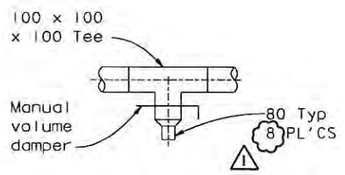

DISTRIBUTION DETAIL

NOT TO SCALE

NOTES:

1. For Detail A, see "East Cable Anchorage Dehumidification Detail No. 2" sheet.
2. For duct connection to wall of area of dehumidification, see "Tower Head Dehumidification No.2" sheet.
3. See "Distribution Detail". 1

DIST	COUNTY	ROUTE	KILOMETER POST TOTAL PROJECT	SHEET NO	TOTAL SHEETS
04	SF	80	13.2/13.9	64R1	1204

Robert E Bethel
REGISTERED MECHANICAL ENGINEER

12-6-04
PLANS APPROVAL DATE

REGISTERED PROFESSIONAL ENGINEER — ROBERT E. BETHEL — No. M018543 — EXP. 9/30/06 — MECHANICAL — STATE OF CALIFORNIA

T.Y. LIN / MOFFATT & NICHOL
825 BATTERY STREET
SAN FRANCISCO, CA 94111

The State of California or its officers or agents shall not be responsible for the accuracy or completeness of electronic copies of this plan sheet.

Caltrans now has a web site! To get to the web site, go to: http://www.dot.ca.gov

REGISTERED PROFESSIONAL ENGINEER — Julio Evelyn Hondy — No. M25432 — EXP. 09/30/10 — MECHANICAL — STATE OF CALIFORNIA

FOR REVISION 1 ONLY

CONTRACT CHANGE ORDER NO. 83
SHEET 12 OF 17

REQUESTS FOR INFORMATION NOT ADDRESSED IN THIS CCO REMAIN IN FORCE

MARK	DATE	DESCRIPTIONS	BY	CH'D	CCO#
		REVISIONS			
1	04/16/10	MISCELLANEOUS MECHANICAL	JB	JH	83

DATE	REVISED BY	CALCULATED/ DESIGNED BY
5/3/02	ES	CHECKED BY
5/3/02	RB	DATE REVISED

DESIGN OVERSIGHT — Bob Zandipour

STATE OF CALIFORNIA - DEPARTMENT OF TRANSPORTATION

SAS STRUCTURE

ALL DIMENSION ARE IN MILLIMETERS UNLESS OTHERWISE SHOWN

M-28

LAST REVISION 00-00-00

DATE PLOTTED => 23 APR 2010
TIME PLOTTED => 11:12:01

0 20 40 60 80

FILE => I:\bb\04-012001\sas\contract plans and cco\cco\cco#83\2-revision 04-16-10\dgn\40120fub028.dgn
USERNAME => arivera

CU 04251 EA 0120F1

DIST	COUNTY	ROUTE	KILOMETER POST TOTAL PROJECT	SHEET NO	TOTAL SHEETS
04	SF	80	13.2/13.9	65R1	1204

Robert E Bethel
REGISTERED MECHANICAL ENGINEER

12-6-04
PLANS APPROVAL DATE

REGISTERED PROFESSIONAL ENGINEER — ROBERT E. BETHEL — No. M018543 — Exp. 9/30/06 — MECHANICAL — STATE OF CALIFORNIA

T.Y. LIN / MOFFATT & NICHOL
825 BATTERY STREET
SAN FRANCISCO, CA 94111

The State of California or its officers or agents shall not be responsible for the accuracy or completeness of electronic copies of this plan sheet.

Caltrans now has a web site! To get to the web site, go to: http://www.dot.ca.gov

Caltrans Metric

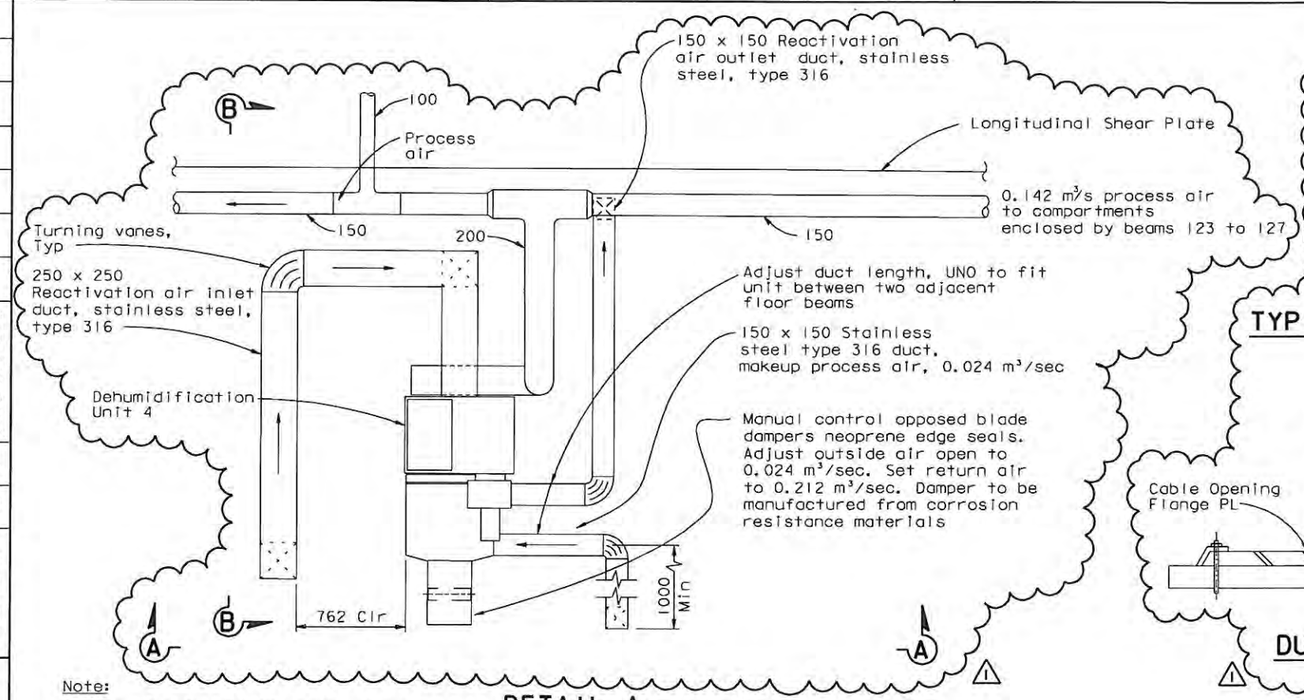

Note:
1. "W" Line Dehumidification Chamber, with Unit 3, is similar.

DETAIL A
1:20

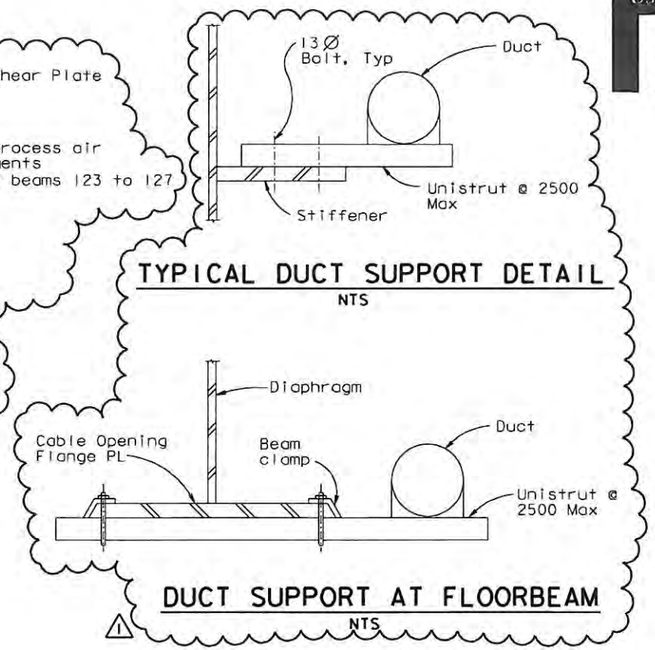

TYPICAL DUCT SUPPORT DETAIL
NTS

DUCT SUPPORT AT FLOORBEAM
NTS

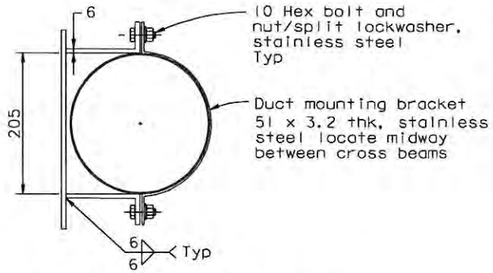

DUCT MOUNTING DETAIL B
NOT TO SCALE

NOTES:
1. For location of Detail A, see "East Cable Anchorage Dehumidification Detail No. 1" sheet.
2. For Dehumidifier support, see "Dehumidification Support Details No. 3" sheet.
3. For typical duct penetration details, see "Dehumidification Support Details No. 5" sheet.

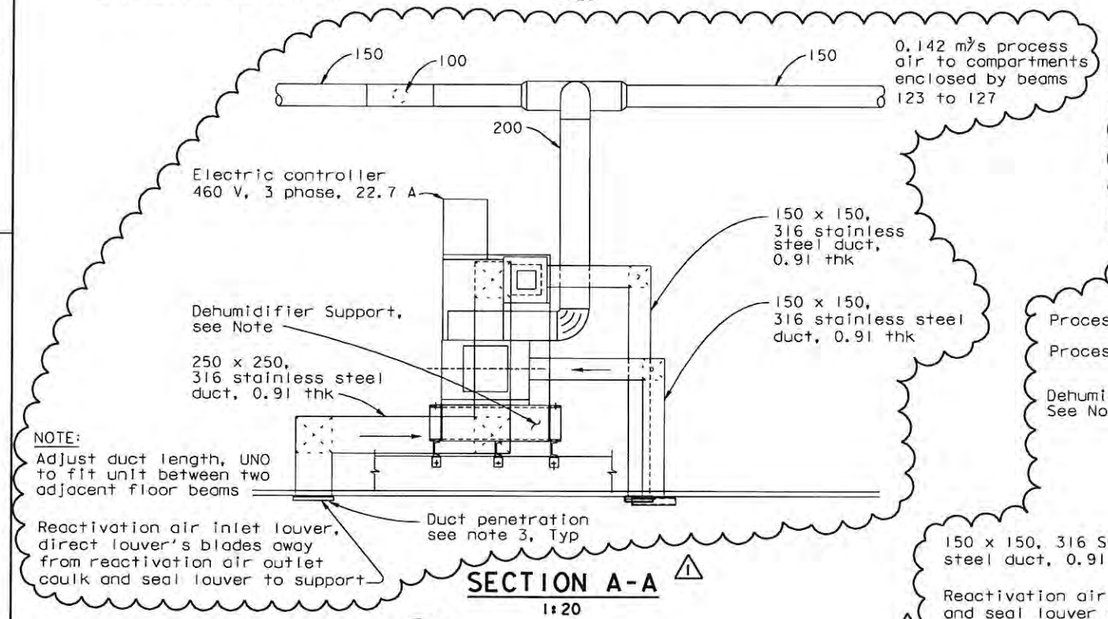

SECTION A-A
1:20

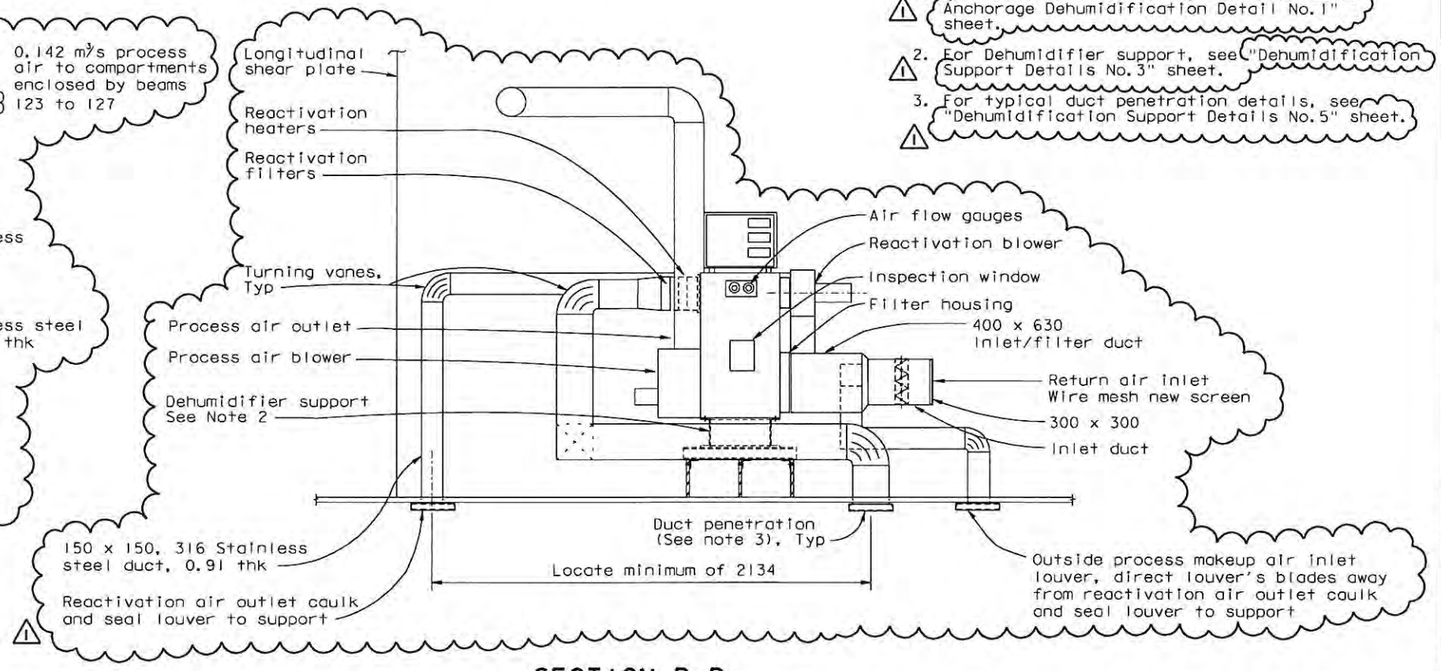

SECTION B-B
1:20

EAST CABLE ANCHORAGE DEHUMIDIFICATION DETAIL NO. 2

ALL DIMENSION ARE IN MILLIMETERS UNLESS OTHERWISE SHOWN

M-29

CONTRACT CHANGE ORDER NO. 83
SHEET 13 OF 17

REQUESTS FOR INFORMATION NOT ADDRESSED IN THIS CCO REMAIN IN FORCE

MARK	DATE	REVISIONS DESCRIPTIONS	BY	CH'D	CCO#
1	04/03/09	MISCELLANEOUS MECHANICAL	JB	JH	83

REGISTERED PROFESSIONAL ENGINEER — Julia Evelyn Hamby — No. M25432 — Exp. 09/30/10 — MECHANICAL — STATE OF CALIFORNIA

FOR REVISION 1 ONLY

REVISED BY	DATE	DATE REVISED
ES	5/3/02	5/3/02
RB		

CALCULATED/DESIGNED BY
CHECKED BY

DESIGN OVERSIGHT — Bob Zandipour

STATE OF CALIFORNIA - DEPARTMENT OF TRANSPORTATION
SAS STRUCTURE
Caltrans

LAST REVISION 00-00-00
DATE PLOTTED => 03 APR 2009
TIME PLOTTED => 14:10:02

FOR REDUCED PLANS ORIGINAL SCALE IS IN MILLIMETERS 0 20 40 60 80

FILE => I:\bb\04-012001\sas\contract plans and cco\cco\cco#83\original 4-03-09\dgn\c40120fub029.dgn
USERNAME => dwinrow

CU 04251 | EA 0120F1

DIST	COUNTY	ROUTE	KILOMETER POST TOTAL PROJECT	SHEET No	TOTAL SHEETS
04	SF	80	13.2/13.9	66R1	1204

Robert E Bethel
REGISTERED MECHANICAL ENGINEER

12-6-04
PLANS APPROVAL DATE

REGISTERED PROFESSIONAL ENGINEER — ROBERT E. BETHEL — No. M018543 — Exp. 9/30/06 — MECHANICAL — STATE OF CALIFORNIA

T.Y. LIN / MOFFATT & NICHOL
825 BATTERY STREET
SAN FRANCISCO, CA 94111

The State of California or its officers or agents shall not be responsible for the accuracy or completeness of electronic copies of this plan sheet.

Caltrans now has a web site! To get to the web site, go to: http://www.dot.ca.gov

MARK	DATE	REVISED BY	DATE REVISED
1	04/16/10	MISCELLANEOUS MECHANICAL	5/3/02

CALCULATED/ DESIGNED BY	CHECKED BY
ES	RB

DESIGN OVERSIGHT — Bob Zandipour

STATE OF CALIFORNIA - DEPARTMENT OF TRANSPORTATION
SAS STRUCTURE

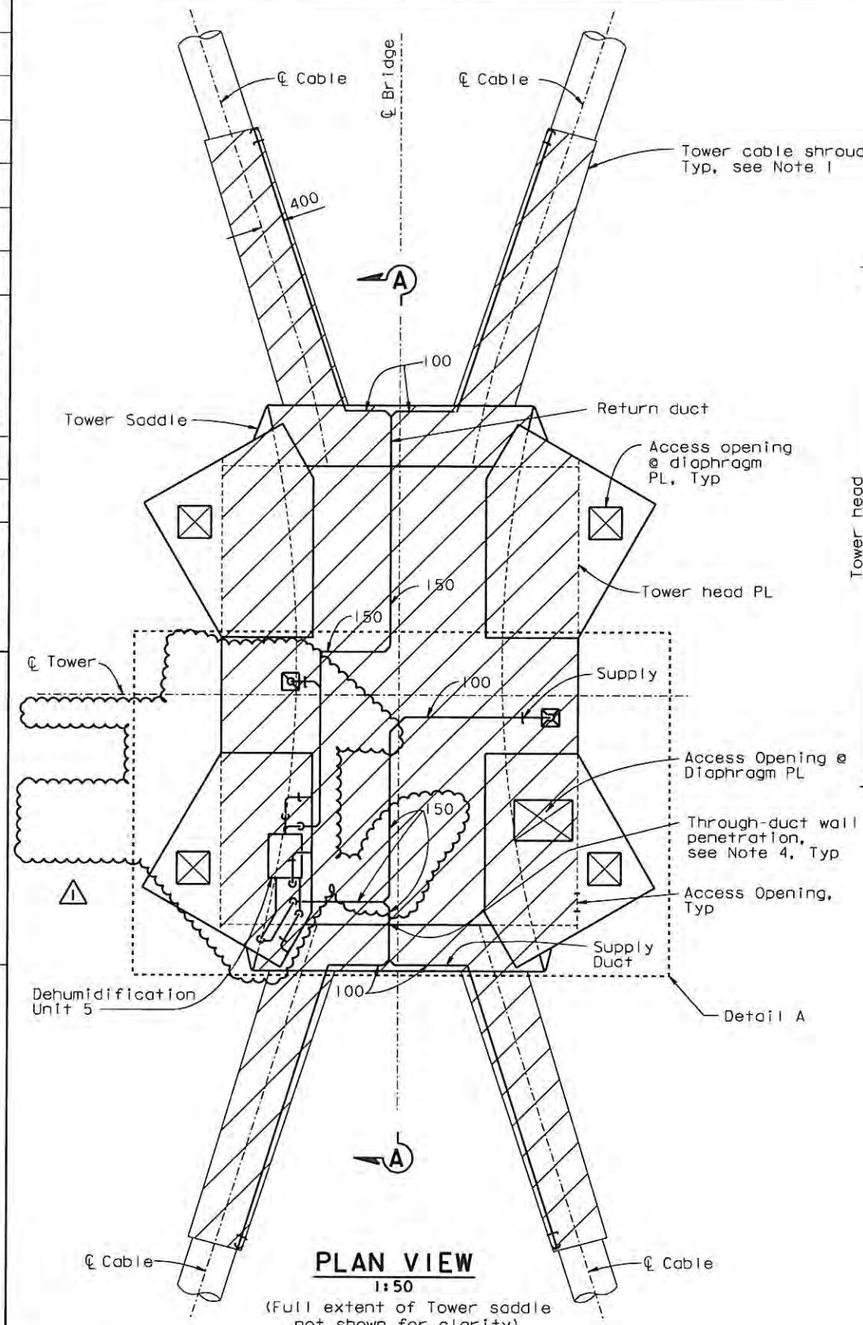

PLAN VIEW
1:50
(Full extent of Tower saddle not shown for clarity)

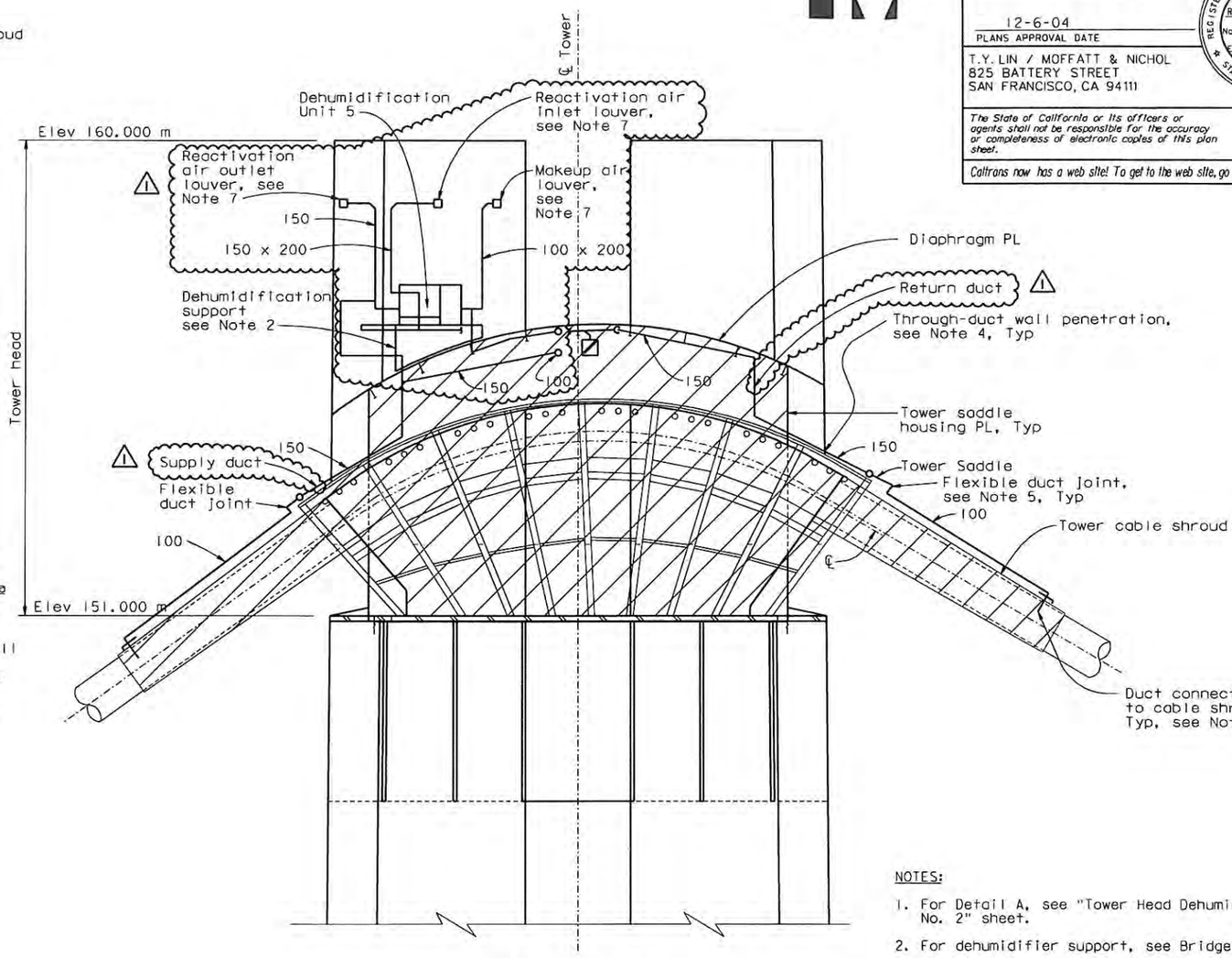

SECTION A-A
1:50

NOTES:

1. For Detail A, see "Tower Head Dehumidification No. 2" sheet.
2. For dehumidifier support, see Bridge Plans.
3. For duct penetration, see Bridge Plans.
4. For through-duct wall penetration, see "Tower Head Dehumidification No. 2" sheet.
5. At flexible ducting, supports shall be located at immediately adjacent non-flexible ducting. Flexible ducting shall be 316 stainless steel corrugated duct, 0.25 minimum thickness.
6. For duct connection to cable shroud, see "Dehumidification Support Details No. 5" sheet.
7. Provide louver shroud, see "Dehumidification Support Details No. 5" sheet.

TOWER HEAD DEHUMIDIFICATION NO. 1
SCALE: 1:50

ALL DIMENSION ARE IN MILLIMETERS UNLESS OTHERWISE SHOWN

M-30

CONTRACT CHANGE ORDER NO. 83
SHEET 14 OF 17

REQUESTS FOR INFORMATION NOT ADDRESSED IN THIS CCO REMAIN IN FORCE

MARK	DATE	DESCRIPTIONS	BY	CH'D	CCO#
		REVISIONS			
1	04/16/10	MISCELLANEOUS MECHANICAL	JB	JH	83

REGISTERED PROFESSIONAL ENGINEER — Jyoti Evelyn Hornby — M25432 — Exp. 09/30/10 — MECHANICAL — STATE OF CALIFORNIA

FOR REVISION 1 ONLY

LAST REVISION 00-00-00
DATE PLOTTED => 27 APR 2010
TIME PLOTTED => 14:15:04

FOR REDUCED PLANS ORIGINAL SCALE IS IN MILLIMETERS 0 20 40 60 80

FILE => I:\bb\04-012001\sas\contract plans and cco\cco\cco#83\3-revision 04-16-10 v.2\dgn\401120fub030.dgn
USERNAME -> arivera

CU 04251 EA 0120F1

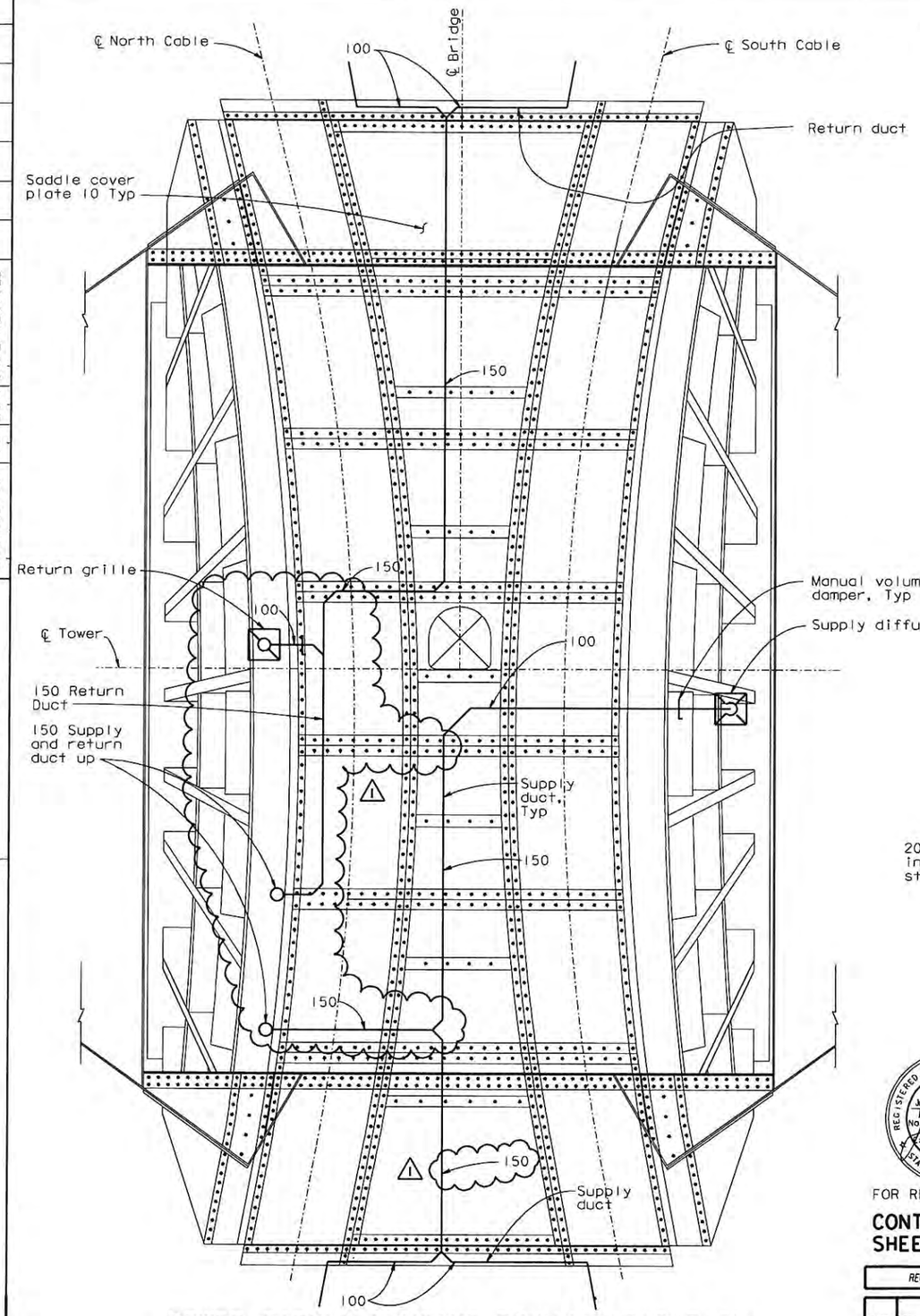

TOWER SADDLE HOUSING DEHUMIDIFICATION

1:25

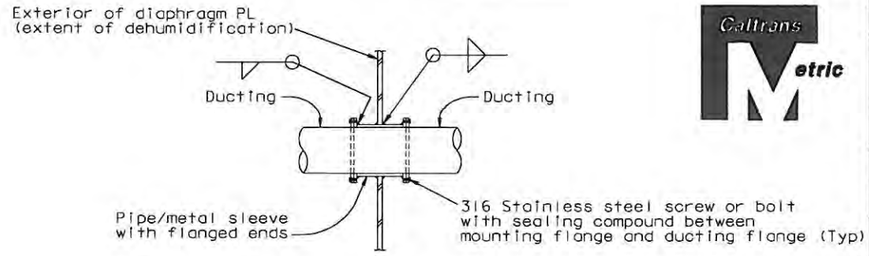

DETAIL B

(Through-duct wall penetration and duct connection to cable shroud)

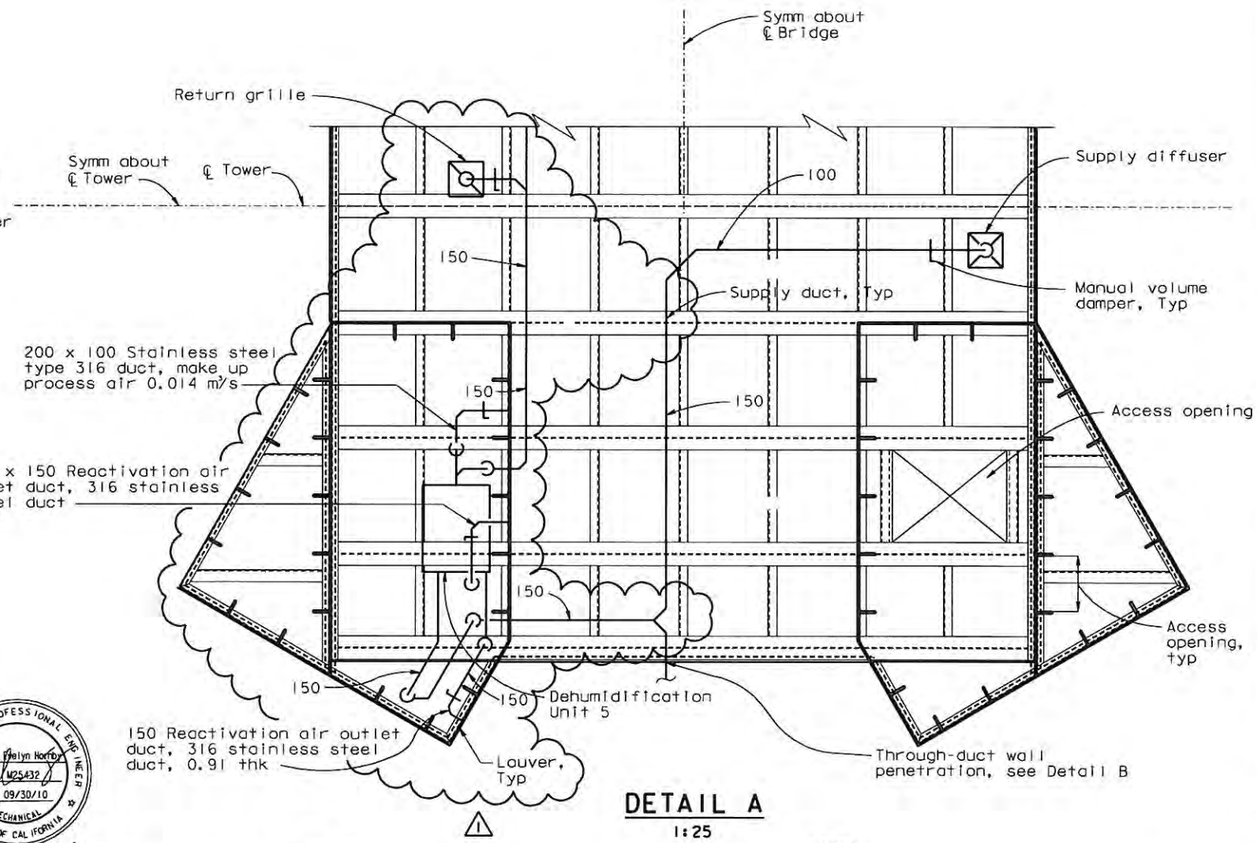

DETAIL A

1:25

NOTES:

1. For location of Detail A, see "Tower Head Dehumidification No. 1" sheet.

TOWER HEAD DEHUMIDIFICATION NO. 2

SCALE: 1:25

ALL DIMENSION ARE IN MILLIMETERS UNLESS OTHERWISE SHOWN

M-31

DIST	COUNTY	ROUTE	KILOMETER POST TOTAL PROJECT	SHEET NO	TOTAL SHEETS
04	SF	80	13.2/13.9	67R1	1204

Robert E. Bethel
REGISTERED MECHANICAL ENGINEER

12-6-04
PLANS APPROVAL DATE

REGISTERED PROFESSIONAL ENGINEER — ROBERT E. BETHEL — No. M018543 — Exp. 9/30/06 — MECHANICAL — STATE OF CALIFORNIA

T.Y. LIN / MOFFATT & NICHOL
825 BATTERY STREET
SAN FRANCISCO, CA 94111

The State of California or its officers or agents shall not be responsible for the accuracy or completeness of electronic copies of this plan sheet.

Caltrans now has a web site! To get to the web site, go to: http://www.dot.ca.gov

REGISTERED PROFESSIONAL ENGINEER — Julio Evelyn Hornby — No. M25432 — Exp. 09/30/10 — MECHANICAL — STATE OF CALIFORNIA

FOR REVISION 1 ONLY

CONTRACT CHANGE ORDER NO. 83
SHEET 15 OF 17

REQUESTS FOR INFORMATION NOT ADDRESSED IN THIS CCO REMAIN IN FORCE

MARK	DATE	DESCRIPTIONS	BY	CH'D	CCO#
		REVISIONS			
1	04/16/10	MISCELLANEOUS MECHANICAL	JB	JH	83

CALCULATED/ DESIGNED BY	CHECKED BY	DATE	REVISED BY	DATE REVISED
ES	RB	5/3/02		5/3/02

DESIGN OVERSIGHT — Bob Zandipour

STATE OF CALIFORNIA - DEPARTMENT OF TRANSPORTATION — SAS STRUCTURE — Caltrans

FOR REDUCED PLANS ORIGINAL SCALE IS IN MILLIMETERS — 0 20 40 60 80

FILE => I:\bb\04-012001\sas\contract plans and cco\cco\cco#83\2-revision 04-16-10\dgn\40120fub031.dgn
USERNAME => arivera

CU 04251 | EA 0120F1

LAST REVISION 00-00-00 — DATE PLOTTED => 15 APR 2010 — TIME PLOTTED => 14:00:56

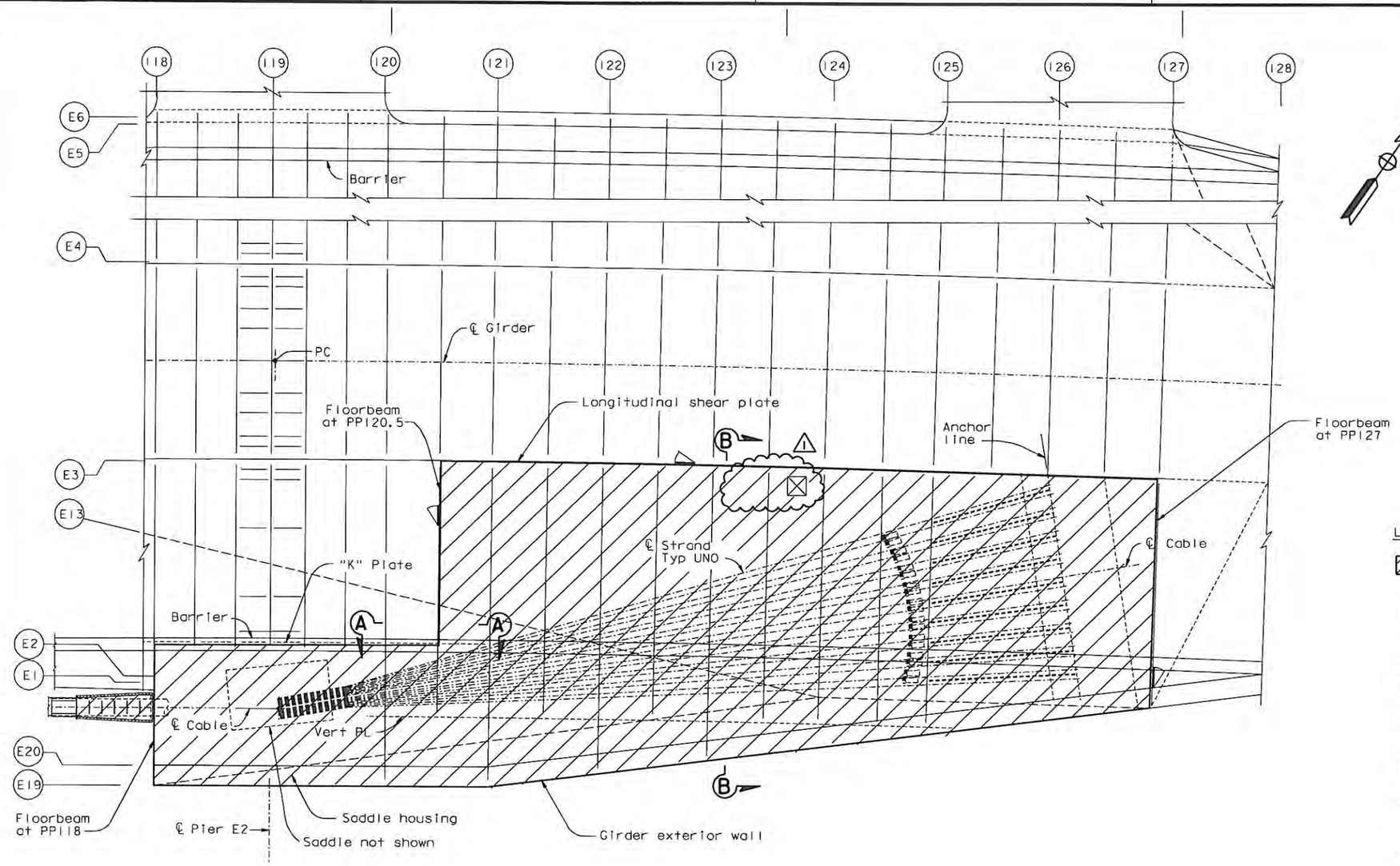

GIRDER PLAN AT EAST APPROACH

DETAIL A

1:100

LEGEND:

- Limits of dehumidification
- Access opening with door (See Note 1)
- Dehumidifier

NOTES:

1. For access opening details not shown, see "Typical Girder Details No.7" sheet. For door details not shown, see "Tower Access Details No.4" sheet.
2. For "K" plate, see "Girder At East Transition Details No.1" sheet.
3. For longitudinal shear plate along E3 line, see "Typical Girder Details No.7" and "Girder At East Transition No.15 " sheets.
4. For floorbeam at PP118, 120.5 and 127, see "Floorbeam At East Transition No.2", "Floorbeam At East Transition No.4" and " Floorbeam At East Transition No.8" sheets.
5. For saddle housing details, see "East Saddle Housing Details" sheets.
6. For cable shroud details, see "East Cable Shroud Details" sheets.
7. Closure plates of Type ⟨1⟩ girder ribs shall be sealed at splice locations. For details, see "Girder At Pier W2 No.3" sheet.
8. For Section A-A and B-B, see "Dehumidification Support Details No.3" sheet.
9. "E" Line girder shown, "W" Line girder similar.

Caltrans Metric

DIST.	COUNTY	ROUTE	KILOMETER POST TOTAL PROJECT	SHEET NO.	TOTAL SHEETS
04	SF	80	13.2/13.9	958R1	1204

George Baker
REGISTERED ENGINEER - CIVIL

12-6-04
PLANS APPROVAL DATE

REGISTERED PROFESSIONAL ENGINEER — George S. Baker — No. C 57112 — Exp. 12/31/05 — CIVIL — STATE OF CALIFORNIA

The State of California or its officers or agents shall not be responsible for the accuracy or completeness of electronic copies of this plan sheet.

T.Y. LIN / MOFFATT & NICHOL
825 BATTERY STREET
SAN FRANCISCO, CA 94111

Caltrans now has a web site! To get to the web site, go to: http://www.dot.ca.gov

REGISTERED PROFESSIONAL ENGINEER — Tien Hung Ho — No. C 43990 — Exp. 06/30/09 — CIVIL — STATE OF CALIFORNIA

FOR REVISIONS ONLY

CONTRACT CHANGE ORDER NO. 83
SHEET 16 OF 17

REQUESTS FOR INFORMATION NOT ADDRESSED IN THIS CCO REMAIN IN FORCE

ALL DIMENSIONS ARE IN MILLIMETERS UNLESS OTHERWISE SHOWN

DESIGN OVERSIGHT	MARK	DATE	DESCRIPTIONS	BY	CH'D	CCO#
R. Valizadeh/V. Toan/Y.L./W.L./F.C.	1	04/03/09	MISCELLANEOUS MECHANICAL	TH	GB	83
SIGN OFF DATE 04/03/09			REVISIONS			

Rev. Date: 5-18-98

	BY	CHECKED
DESIGN	G. Baker	T. Ho
DETAILS	C. Mauch	T. Ho
QUANTITIES	C. Mauch	D. Harrison

PREPARED FOR THE STATE OF CALIFORNIA DEPARTMENT OF TRANSPORTATION

R. Manzanarez
PROJECT ENGINEER

ORIGINAL SCALE IN MILLIMETERS FOR REDUCED PLANS 0 10 20 30 40 50 60 70 80 90 100

CU 04
EA 0120F1

BRIDGE NO. 34-0006L/R
KILOMETER POST 13.2/13.9

DISREGARD PRINTS BEARING EARLIER REVISION DATES

REVISION DATES (PRELIMINARY STAGE ONLY): 01/25/99 05/25/99 08/20/99 05/31/01 04/08/02 07/29/02 12/31/02 12/01/05

SHEET 541R1 OF

SAN FRANCISCO OAKLAND BAY BRIDGE
EAST SPAN SEISMIC SAFETY PROJECT
SELF-ANCHORED SUSPENSION BRIDGE
(SUPERSTRUCTURE & TOWER)

DEHUMIDIFICATION SUPPORT DETAILS NO.2

100% PS&E

FILE => L:\BB\04-0120O1\SAS\Contract Plans and CCO\CCO\CCO#83\Original 4-03-09\DGN\akdeh02.dgn

USERNAME => dwinrow DATE PLOTTED => 03 APR 2009 TIME PLOTTED => 14:06:15

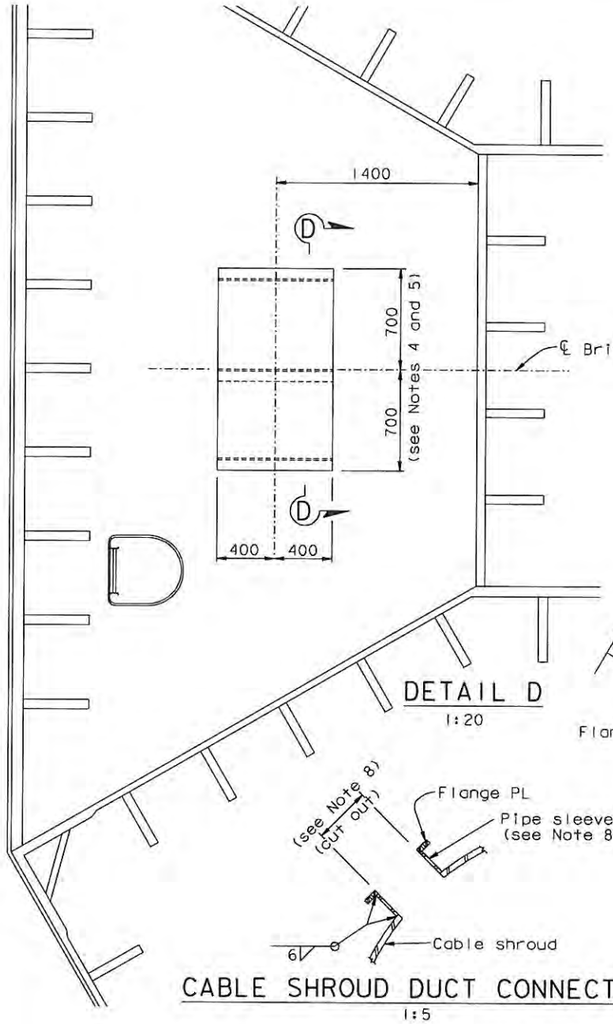

DETAIL D
1:20

CABLE SHROUD DUCT CONNECTION (see Note 8)
1:5

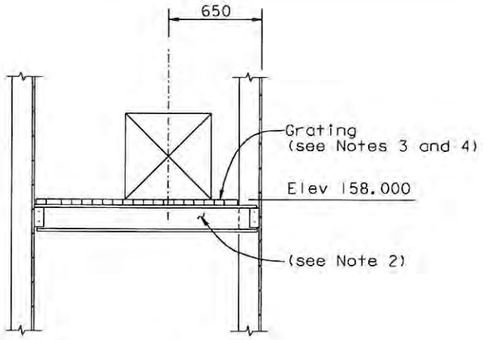

SECTION E-E
1:20

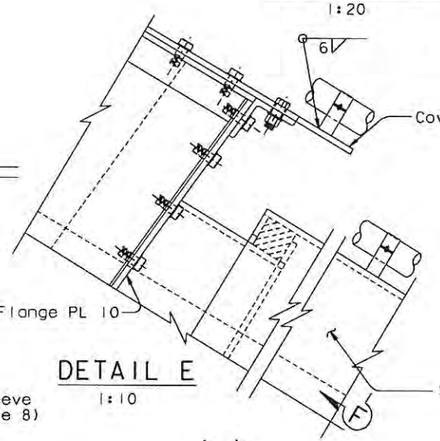

DETAIL E
1:10

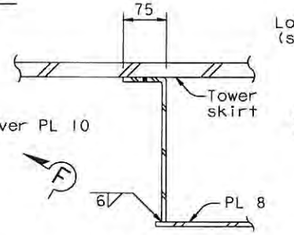

SECTION I-I
NTS

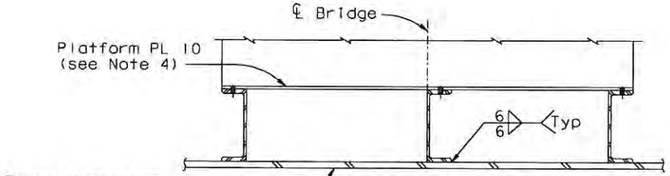

SECTION D-D
1:10

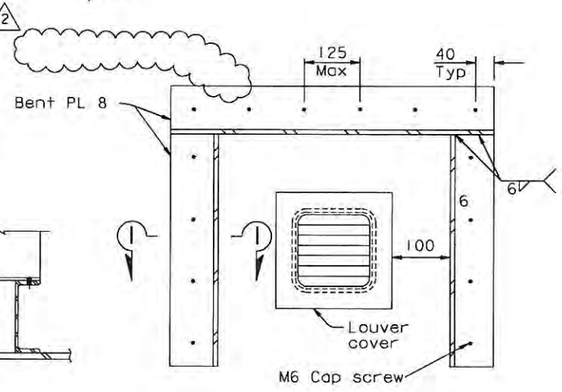

SECTION H-H
NTS

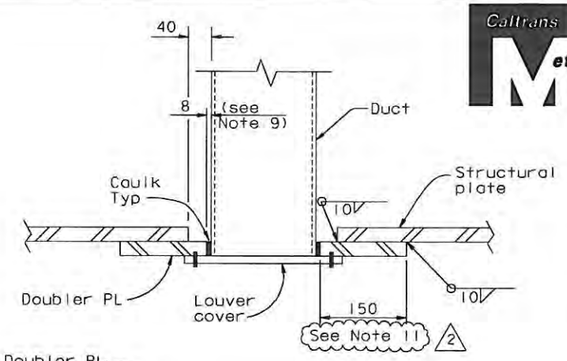

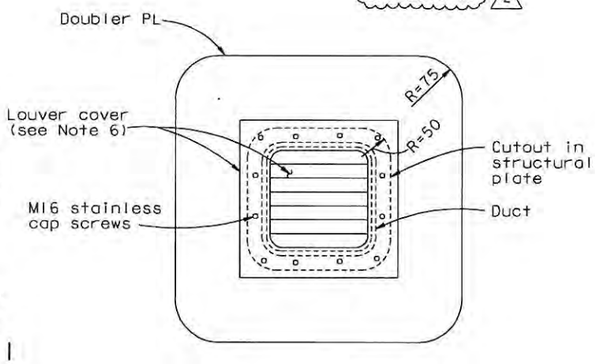

DUCT OPENING DETAIL (see Note 1)
1:5
Rectangular shown, circular similar

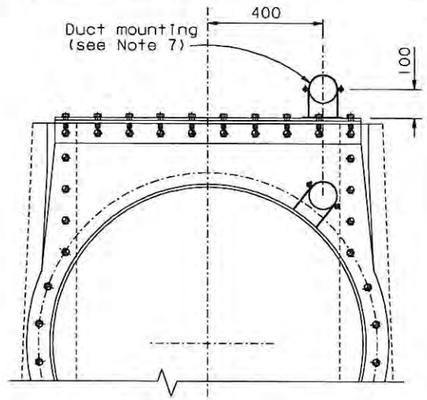

SECTION F-F
1:10

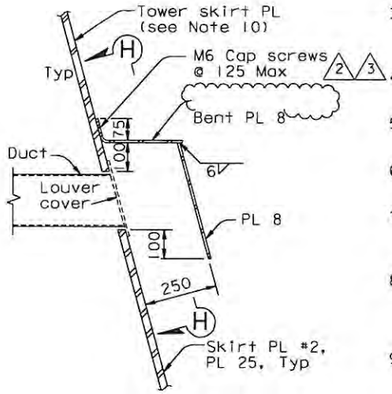

SECTION G-G
NTS

NOTES:

1. For all duct openings doubler plates shall equal the penetrated structural plate.
2. For walkway support beams, see "Tower Access Details No.3" sheet.
3. Galvanized steel grating with fasteners to be provided by contractor. Grating working load shall be 7.0 kN/m (145 psf).
4. Base frames, support beams and fasteners shall be detailed to fit the dehumidifier.
5. For support platform details not shown, see "Dehumidification Support Details No.3" sheet.
6. For louver locations and details, see "East Cable Anchorage Dehumidification" sheets.
7. For similar duct mounting, see Detail B on "East Cable Anchorage Dehumidification Detail No.2" in the mechanical sheets.
8. Cable shroud pipe sleeve and duct connection shall be detailed to permit airtight bolted attachment of the dehumidification ducts. See mechanical sheets.
9. At Contractor's option, a gap of up to 25 mm may be used. For 25 mm gap, caulking with backing shall be used.
10. For tower skirt, doubler PL not used.
11. For 14 mm floorbeams, the doubler plates need only extend 100 mm beyond the duct opening.

ALL DIMENSIONS ARE IN MILLIMETERS UNLESS OTHERWISE SHOWN

Caltrans Metric

DIST.	COUNTY	ROUTE	KILOMETER POST TOTAL PROJECT	SHEET NO.	TOTAL SHEETS
04	SF	80	13.2/13.9	961R3	1204

George Baker
REGISTERED ENGINEER - CIVIL
1-27-03
PLANS APPROVAL DATE
The State of California or its officers or agents shall not be responsible for the accuracy or completeness of electronic copies of this plan sheet.

REGISTERED PROFESSIONAL ENGINEER — George S. Baker — No. C 57112 — Exp. 12/31/05 — CIVIL — STATE OF CALIFORNIA

T.Y. LIN / MOFFATT & NICHOL
825 BATTERY STREET
SAN FRANCISCO, CA 94111

Caltrans now has a web site! To get to the web site, go to: http://www.dot.ca.gov

Daniel J. Turner
REGISTERED PROFESSIONAL ENGINEER — No. C 65033 — Exp. 06/30/11 — CIVIL — STATE OF CALIFORNIA
FOR REVISIONS ONLY

CONTRACT CHANGE ORDER NO. 83
SHEET 17 OF 17

REQUESTS FOR INFORMATION NOT ADDRESSED IN THIS CCO REMAIN IN FORCE

MARK	DATE	DESCRIPTIONS	BY	CH'D	CCO#
3	09/08/10	MISCELLANEOUS MECHANICAL	GB	DT	83
2	05/04/10	MISCELLANEOUS MECHANICAL	GB	DT	83
1	05/23/07	DEHUMIDIFICATION SYSTEM	GB	DT	32

REVISIONS

R. Valizadeh/V. Toan/Y.L./W.L./F.C.
DESIGN OVERSIGHT
SIGN OFF DATE 09/08/10

Rev. Date: 5-18-98

	BY	CHECKED
DESIGN	G. Baker	T. Ho
DETAILS	C. Mauch	T. Ho
QUANTITIES	C. Mauch	D. Harrison

PREPARED FOR THE STATE OF CALIFORNIA
DEPARTMENT OF TRANSPORTATION

R. Manzanarez
PROJECT ENGINEER

BRIDGE NO. 34-0006L/R
KILOMETER POST 13.2/13.9

ORIGINAL SCALE IN MILLIMETERS FOR REDUCED PLANS 0 10 20 30 40 50 60 70 80 90 100

CU 04
EA 0120F1

DISREGARD PRINTS BEARING EARLIER REVISION DATES →

REVISION DATES (PRELIMINARY STAGE ONLY)										SHEET	OF
01/30/02	01/31/02	12/19/02								544R3	

SAN FRANCISCO OAKLAND BAY BRIDGE
EAST SPAN SEISMIC SAFETY PROJECT
SELF-ANCHORED SUSPENSION BRIDGE
(SUPERSTRUCTURE & TOWER)

DEHUMIDIFICATION SUPPORT DETAILS NO.5

100 % PS&E

USERNAME => drivera DATE PLOTTED => 08 SEP 2010 TIME PLOTTED => 07:45:19

FILE => I:\bb\04-0120F1\sas\contract plans and cco\cco\cco*83\6-revision 09-08-10\dgn\akdah05.dgn

CONTRACT CHANGE ORDER

Change Requested by: Engineer

CCO: 84 **Suppl. No. 0** **Contract No. 04 – 0120F4** **Road** SF-80-13.2/13.9 **FED. AID LOC.:**

To: **AMERICAN BRIDGE/FLUOR ENTERPRISES INC A JOINT VENTURE**

You are directed to make the following changes from the plans and specifications or do the following described work not included in the plans and specifications for this contract. ***NOTE: This change order is not effective until approved by the Engineer.***

Description of work to be done, estimate of quantities and prices to be paid. (Segregate between additional work at contract price, agreed price and force account.) Unless otherwise stated, rates for rental of equipment cover only such time as equipment is actually used and no allowance will be made for idle time. This last percentage shown is the net accumulated increase or decrease from the original quantity in the Engineer's Estimate.

Extra Work At Agreed Lump Sum:

ITEM 1.

Reimburse ABF for engineering time necessary to investigate using load cells or calibrated jacks to accurately weigh completed box girder segments at the fabrication site prior to shipping

Extra Work at Agreed Lump Sum..... $10,000.00

ITEM 2.

The items identified above in this change order have been paid as part of CCO 108S1 resolution. Therefore, the amount due under this change order will be adjusted by the amount paid under CCO 108S1 to prevent a double payment. Total amount paid under CCO 108S1, and to be credited to this change, is $10,000.00.

Adjustment of Compensation at Lump Sum Price..... <$10,000.00>

CHANGE ORDER COST AND TIME SUMMARY

(ITEM 1) Extra work at agreed lump sum pursuant to this change order	$10,000.00
(ITEM 2) Amount paid under CCO 108S1 for this change order	<$10,000.00>
Total net pay for this change order	$0.00

There is no time adjustment pursuant to this extra work.

Estimated Cost: **Increase** ☐ **Decrease** ☐ **$0**

By reason of this order the time of completion will be adjusted as follows: **0 days**

Submitted by

Signature **Resident Engineer** Kannu Balan, Senior T.E. **Date** 7-6-10

Approval Recommended by

Signature **Supervising Bridge Engineer** Brian Boal, Sup. B.E. **Date** 7/6/10

Engineer Approval by

Signature **Supervising Transportation Engineer** Gary Pursell, Sup. T.E. **Date** 7/12/10

We the undersigned contractor, have given careful consideration to the change proposed and agree, if this proposal is approved, that we will provide all equipment, furnish the materials, except as otherwise be noted above, and perform all services necessary for the work above specified, and will accept as full payment therefor the prices shown above.

NOTE: If you, the contractor, do not sign acceptance of this order, your attention is directed to the requirements of the specifications as to proceeding with the ordered work and filing a written protest within the time therein specified.

Contractor Acceptance by

Signature (Print name and title) Michael D. Flowers Project Director **Date** 7-8-10

STATE OF CALIFORNIA - DEPARTMENT OF TRANSPORTATION

CONTRACT CHANGE ORDER MEMORANDUM

DATE: 12/1/2009 Page 1 of 1

TO: Pete Siegenthaler, Prin TE /	FILE: **E.A.** 04 - 0120F4
FROM: Gary Pursell, Sup. TE	**CO-RTE-PM** SF-80-13.2/13.9
	FED. NO.
CCO#: **84** SUPPLEMENT#: **0** Category Code: **CHPT**	CONTINGENCY BALANCE (incl. this change) **$33,747,102.40**
COST: **$0.00** INCREASE ☐ DECREASE ☐	HEADQUARTERS APPROVAL REQUIRED? ☐ YES ☑ NO
SUPPLEMENTAL FUNDS PROVIDED: **$0.00**	IS THIS REQUEST IN ACCORDANCE WITH ENVIRONMENTAL DOCUMENTS? ☑ YES ☐ NO
CCO DESCRIPTION: Weighing OBG Sections	**PROJECT DESCRIPTION:** CONSTRUCT SELF-ANCHORED SUSPENSION BRIDGE

Original Contract Time:	Time Adj. This Change:	Previously Approved CCO Time Adjustments:	Percentage Time Adjusted: (including this change)	Total # of Unreconciled Deferred Time CCO(s): (including this change)
2490 Day(s)	**0** Day(s)	**227** Day(s)	**9** %	**6**

THIS CHANGE ORDER PROVIDES FOR:

The additional cost incurred for engineering time necessary to investigate using load cells or calibrated jacks to accurately weigh completed box girder segments at the fabrication site prior to shipping.

Section 10-1.59, "STEEL STRUCTURES," Sub-section "WEIGHT CONTROL," calls for using "nominal weights taken off the fabrication drawings increased by 3%" for the Contractor's erection analysis. Originally this CCO was developed to validate the 3% figure used in the specifications by requesting the contractor to either physically weigh the OBG segments or to measure and analyze actual plate thickness versus nominal plate thickness. Eventually the Department decided not to pursue this request but evaluate the weights by other means during the erection of the OBGs. This CCO compensates for the cost incurred by the contractor for the preparation of weighing operation at ZPMC facility.

Since the cost, of $10,000.00 in this change, is included in Contract Change Order 108 Supplement 1 (CCO 108S1) Claim Settlement Report No. 1 resolution costs the net payment in this change order is zero.

No time adjustment is warranted as this change order does not affect the controlling operation.

This change order received concurrence from Gary Pursell (Resident Engineer), Brial Boal(Sup. Structure Rep), Mike Forner (Principal TE), Ken Terpstra (Project Manager), Design of Record, Marwan Nader, P.E.

Claims Settlement Report (CSR) No. 1, for this project, revises the authority to "Issue and Approve" the changes listed in CCO 108S1 Appendices A & B. The authority to "Issue and Approve" the changes listed in Appendices A & B for the values of time and money contemplated therein has been delegated to the District for approval, therefore approval of this change order by the Headquarters CCO Desk will not be required. Since this change order is included in CCO 108S1 no Headquarters CCO Desk "Issue and Approve" is required, a copy of CCO 108S1 is attached for reference

CONCURRED BY:			
Construction Engineer:	Res. Eng., Gary Pursell, Sup. TE	Date	7/28/08
Bridge Engineer:	Brian Boal, Actg Sup BE	Date	8/4/08
Project Engineer:	Design of Record, Marwan Nader,	Date	4/9/08
Project Manager:	Proj Manager, Ken Terpstra	Date	12/8/08
FHWA Rep.:		Date	
Environmental:		Date	
Other (specify):	PCE, Mike Forner, Prin TE	Date	7/29/08
Other (specify):		Date	
District Prior Approval By:		Date	
HQ (Issue Approve) By:		Date	
Resident Engineer's Signature:	Gary Pursell 7/6/10	Date	

ESTIMATE OF COST		
	THIS REQUEST	TOTAL TO DATE
ITEMS	$0.00	$0.00
FORCE ACCOUNT	$0.00	$0.00
AGREED PRICE	$0.00	$0.00
ADJUSTMENT	$0.00	$0.00
TOTAL	$0.00	$0.00

FEDERAL PARTICIPATION

☐ PARTICIPATING ☐ PARTICIPATING IN PART ☐ NONE
☐ NON-PARTICIPATING (MAINTENANCE) ☐ NON-PARTICIPATING

FEDERAL SEGREGATION (if more than one Funding Source or P.I.P. type)
☐ CCO FUNDED PER CONTRACT ☐ CCO FUNDED AS FOLLOWS

FEDERAL FUNDING SOURCE PERCENT

ADA Notice: For individuals with sensory disabilities, this document is available in alternate formats. For information call: (916) 654-6410 or TDD (916) 654-3880 or write Records and Forms Management, 1120 N Street, MS-89, Sacramento, CA 95814.

CONTRACT CHANGE ORDER

Change Requested by: Engineer

CCO: 85 **Suppl. No. 0** **Contract No. 04 – 0120F4** **Road** SF-80-13.2/13.9 **FED. AID LOC.:**

To: **AMERICAN BRIDGE/FLUOR ENTERPRISES INC A JOINT VENTURE**

You are directed to make the following changes from the plans and specifications or do the following described work not included in the plans and specifications for this contract. ***NOTE: This change order is not effective until approved by the Engineer.***

Description of work to be done, estimate of quantities and prices to be paid. (Segregate between additional work at contract price, agreed price and force account.) Unless otherwise stated, rates for rental of equipment cover only such time as equipment is actually used and no allowance will be made for idle time. This last percentage shown is the net accumulated increase or decrease from the original quantity in the Engineer's Estimate.

Adjustment of Compensation at Lump Sum:

Item 1.

Revise the Tower elevator.

Revise Special Provisions Section 10-4.05 "ELEVATOR" as shown on sheets 3 through 14 of this change order.

Adjustment of Compensation at Lump Sum..... $906,334.00

Estimate of Increase in Contract Item at Contract Price:

Item 2.

- Revise ship ladder supports at 15 m.
- Add grating at 127 m for new elevator stop.

Item No. 52: FURNISH STRUCTURAL STEEL (BRIDGE) (TOWER)
223 KG (+0.00%) @ $10.00 /KG =+$ 2,230.00 (+0.00%)

Item No. 53: ERECT STRUCTURAL STEEL (BRIDGE) (TOWER)
223 KG (+0.00%) @ $1.00 /KG =+$ 223.00 (+0.00%)

The quantity increases shown herein for Items #52 and 53, when combined with the quantity shown in the Engineer's Estimate, and as modified by any previous change orders or revisions to dimensions made by the Engineer, shall be the final quantity for which payment will be made.

Total Cost for Increase in Contract Item..... $2,453.00

The following revised plan sheets detail the changes addressed in this change order: 69R2, 70R2, 531R1, 917R5, 919R2, 939R3, 940R2, 940S1R1, 940S2R1, 940S3R1, and 940S4 (of 1204) as shown on sheets 15 through 25 of this change order.

This change order resolves the costs associated with Contractor Request for Information (RFI) numbers 236, 538, 818, 994R0, 1851, 1951, 1975, 2249R1, 2377, 2587, and TC-RFI-0057 with respect to changes listed above.

CONTRACT CHANGE ORDER

Change Requested by: Engineer

CCO: 85 **Suppl. No.** 0 **Contract No.** 04 – 0120F4 **Road** SF-80-13.2/13.9 **FED. AID LOC.:**

CHANGE ORDER COST AND TIME SUMMARY

(ITEM 1) Adjustment of Compensation at Lump Sum	$906,334.00
(ITEM 2) Increase in Contract Items at Contract Prices	$2,453.00
Total net pay for this change order	$908,787.00

This sum constitutes full and complete compensation for furnishing all labor, material, tools and incidentals including all markups by reason of this change.

Estimated Cost: **Increase** ☒ **Decrease** ☐ **$908,787.00**

By reason of this order the time of completion will be adjusted as follows: 0

Submitted by

Signature Kannu Balan **Resident Engineer** Kannu Balan, Senior T.E. **Date** 2-9-12

Approval Recommended by

Signature **Supervising Transportation Engineer** William Casey, Sup. T.E. **Date** 2-10-12

Engineer Approval by

Signature **Supervising Transportation Engineer** William Casey, Sup T.E. **Date** 2-22-12

We the undersigned contractor, have given careful consideration to the change proposed and agree, if this proposal is approved, that we will provide all equipment, furnish the materials, except as otherwise be noted above, and perform all services necessary for the work above specified, and will accept as full payment therefor the prices shown above.

NOTE: If you, the contractor, do not sign acceptance of this order, your attention is directed to the requirements of the specifications as to proceeding with the ordered work and filing a written protest within the time therein specified.

Contractor Acceptance by

Signature (Print name and title) BRIAN A. PETERSEN - PROJECT DIRECTOR **Date** 22 FEB 12

STATE OF CALIFORNIA - DEPARTMENT OF TRANSPORTATION

CONTRACT CHANGE ORDER MEMORANDUM

TO: Tony Anziano, Program Manager /	FILE: **E.A.** 04 - 0120F4
	CO-RTE-PM SF-80-13.2/13.9
FROM: Kannu Balan, Senior TE	**FED. NO.**
CCO#: **85** SUPPLEMENT#: **0** Category Code: **CXSA**	CONTINGENCY BALANCE (incl. this change) **$113,813,658.58**
COST: **$908,787.00** INCREASE ☑ DECREASE ☐	HEADQUARTERS APPROVAL REQUIRED? ☑ YES ☐ NO
SUPPLEMENTAL FUNDS PROVIDED: **$0.00**	IS THIS REQUEST IN ACCORDANCE WITH ENVIRONMENTAL DOCUMENTS? ☑ YES ☐ NO
CCO DESCRIPTION: Elevator Details	**PROJECT DESCRIPTION:** CONSTRUCT SELF-ANCHORED SUSPENSION BRIDGE

Original Contract Time:	Time Adj. This Change:	Previously Approved CCO Time Adjustments:	Percentage Time Adjusted: (including this change)	Total # of Unreconciled Deferred Time CCO(s): (including this change)
2490 Day(s)	**0** Day(s)	**501** Day(s)	**20** %	**3**

THIS CHANGE ORDER PROVIDES FOR:

Revising the Tower elevator. Revising ship ladder supports at 15 m. Adding grating at 127 m for a new elevator stop.

Revising Special Provisions Section 10-4.05 "ELEVATOR."

Design requested these elevator changes. Sufficient details were not provided in the Contract Plan Sheets for the elevator supports, safety enclosures, and gates, therefore these details are clarified and upgraded. ASME A17.1-1996 was in effect at the time of the project bid and the Contractor will be compensated for changed requirements due to the current ASME A17.1-2007 code. The elevator controller room enclosure height is revised to meet the new code requirements. An additional elevator stop is provided at elevation 127.85 m for maintenance operations. The elevator stop at 54.97 m and front cab door are eliminated since the Vacuum Abrasive Blasting platform was deleted in CCO 114 (Handrail and Platforms) and access is no longer needed. The elevator cab is redesigned to include windows, which added weight to the cab requiring larger motors. The door is changed to a single power assisted vertical opening to accommodate the additional weight from adding glass panels. The elevator door width and opening orientation are changed to alleviate safety concerns. The elevator cab will be painted to match the color of the bridge. The flooring and roofing materials are changed to aluminum to reduce car weight and increase durability. The maintenance landing ladder is changed to a ships ladder to provide better maintenance access, which did not leave enough clearance for the controller and it will be relocated. The buffer system is changed to hydraulic to better protect the glass cab during a buffer engagement. Safety doors will have keyed access to prevent them from opening when access gratings are removed. Safety enclosures (16 total) were added at strut facades where there are no elevator stops.

This change order resolves the costs associated with Contractor Request for Information (RFI) numbers 236, 538, 818, 994R0, 1851, 1951, 1975, 2249R1, 2377, 2587, and TC-RFI-0057 with respect to changes listed above.

The total cost of this change order is $906,334.00 lump sum and $2,453.00 increase in contract items for a total of $908,787.00 for this change, which can be financed from the contingency fund. A detailed cost analysis is on file.

No time adjustment is warranted as this change order does not affect the controlling operation.

This change order has concurrence from Tony Anziano (Program Manager), William Casey (Supervising TE), Rich Foley (HQ Liaison), Ken Terpstra (Project Manager), Wenyi Long (Bridge Design), Jing Chen (District Design), and Lina Ellis (Maintenance).

Toll Bridge Program Oversight Committee (TBPOC) approved this change order on December 1, 2011, for a value not to exceed amount of $1.4M.

ADA Notice: For individuals with sensory disabilities, this document is available in alternate formats. For information call: (916) 654-6410 or TDD (916) 654-3880 or write Records and Forms Management, 1120 N Street, MS-89, Sacramento, CA 95814.

CONTRACT CHANGE ORDER MEMORANDUM

CONCURRED BY:			
Construction Engineer:	William Casey, Sup TE	Date	11/22/11
Bridge Engineer:	CT Oversight, Wenyi Long, P.E.	Date	9/14/11
Project Engineer:	District Design, Jing Chen	Date	9/14/11
Project Manager:	Proj Manager, Ken Terpstra	Date	12/1/11
FHWA Rep.:	HQ, Rich Foley	Date	12/1/11
Environmental:		Date	
Other (specify):	Struct. Maint, Lina Ellis	Date	9/15/11
Other (specify):	TB Program Manager, Tony Anzian	Date	12/6/11
District Prior Approval By:	HQ, Bob Molera	Date	7/13/09
HQ (Issue Approve) By:		Date	
Resident Engineer's Signature:		Date	2-9-12

ESTIMATE OF COST

	THIS REQUEST	TOTAL TO DATE
ITEMS	$2,453.00	$2,453.00
FORCE ACCOUNT	$0.00	$0.00
AGREED PRICE	$0.00	$0.00
ADJUSTMENT	$906,334.00	$906,334.00
TOTAL	$908,787.00	$908,787.00

FEDERAL PARTICIPATION

☐ PARTICIPATING ☐ PARTICIPATING IN PART ☑ NONE
☐ NON-PARTICIPATING (MAINTENANCE) ☐ NON-PARTICIPATING

FEDERAL SEGREGATION (if more than one Funding Source or P.I.P. type)
☐ CCO FUNDED PER CONTRACT ☐ CCO FUNDED AS FOLLOWS

FEDERAL FUNDING SOURCE	PERCENT

ADA Notice: For individuals with sensory disabilities, this document is available in alternate formats. For information call: (916) 654-6410 or TDD (916) 654-3880 or write Records and Forms Management, 1120 N Street, MS-89, Sacramento, CA 95814.

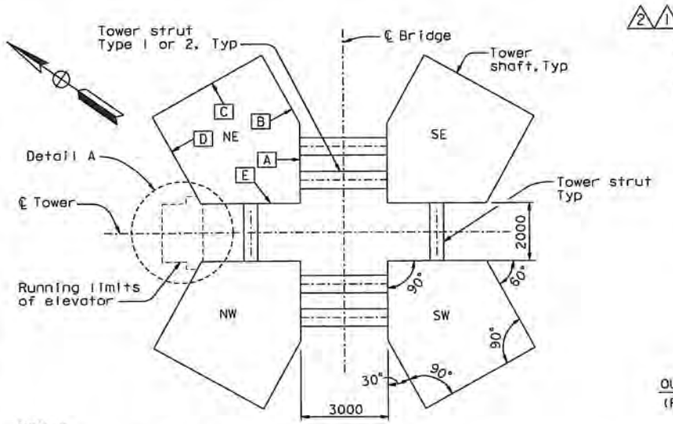

Notes:

1. For longitudinal elevation looking North see "Elevator Detail No. 2" Sheet.

PLAN
1:100

LEGEND:

NE Northeast tower shaft designation

[A] Tower shaft skin plate designation

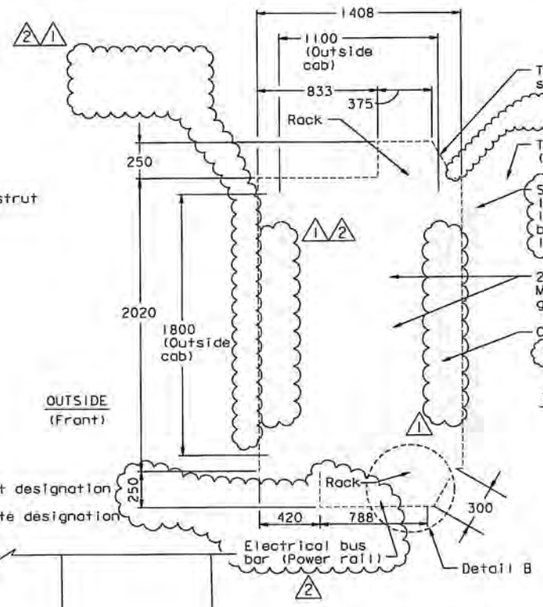

DETAIL A
1:20

NOTES:

1. Elevator to be USA Hoist Co., Inc. model 2000 DR, or approved equal. USA Hoist model 2000 DR shown.
2. Elevator to pass through running limits shown.
3. Elevator minimum clear inside dimensions shall be approximately 1676 wide x 965 deep x 2590 high.
4. Design wind velocity 190 km/hr at bridge deck.
5. Elevator minimum door size shall be 1475 wide x 2438 high.
6. Elevator guide rail mast shall attach to tower shaft NE & NW skin plate [D] only at the locations shown in Detail B. No supports, bracing or drive mechanisms are permitted between tower shafts.
7. For safety gate details see Special Provisions.

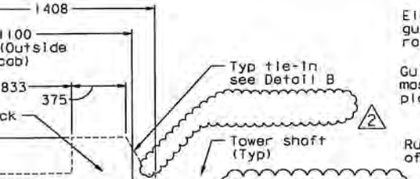

DETAIL B
(Plan Typ. Tie-In)
3048 max. Spacing
1:10

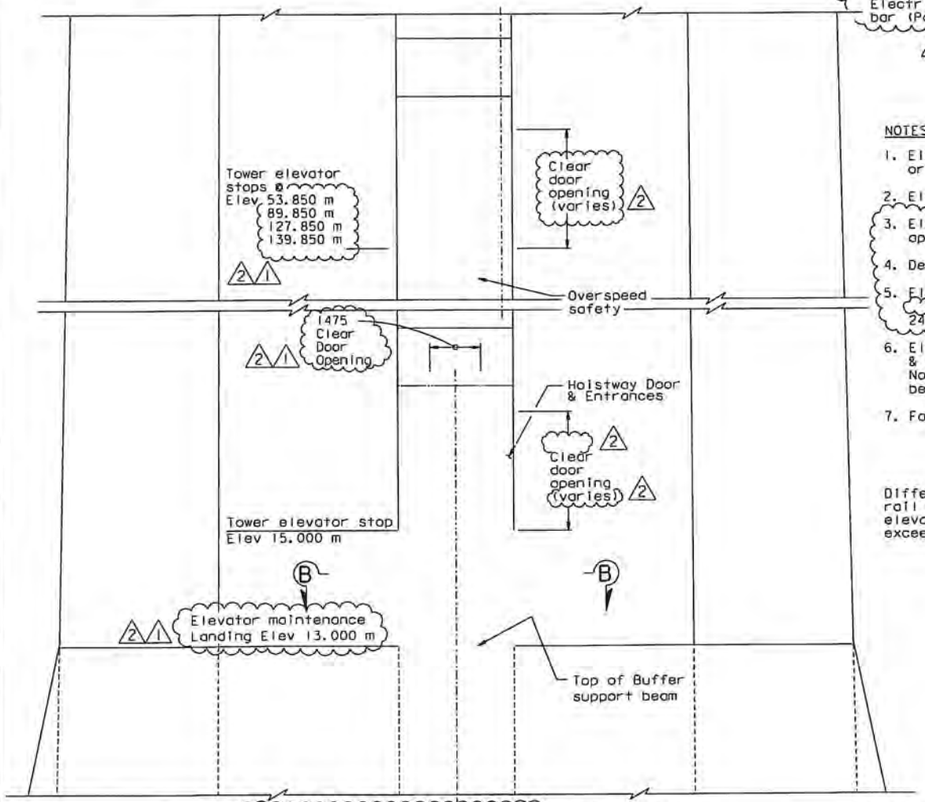

TOWER SIDE (CAB REAR) ELEVATION
Not To Scale

NOTES:

1. For tower shaft details, see Bridge Plans.
2. The elevator guide rail mast runs along the edge of tower shaft skin plate [D]
3. Details shown are for illustrative purposes only. Final design configuration and details, including guide rails and supports, are the responsibility of the elevator manufacturer.

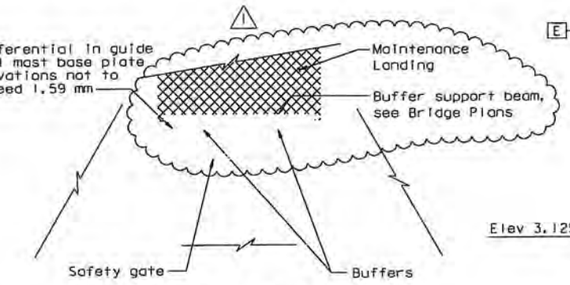

SECTION B-B
(Plan at Buffer Support)
1:50

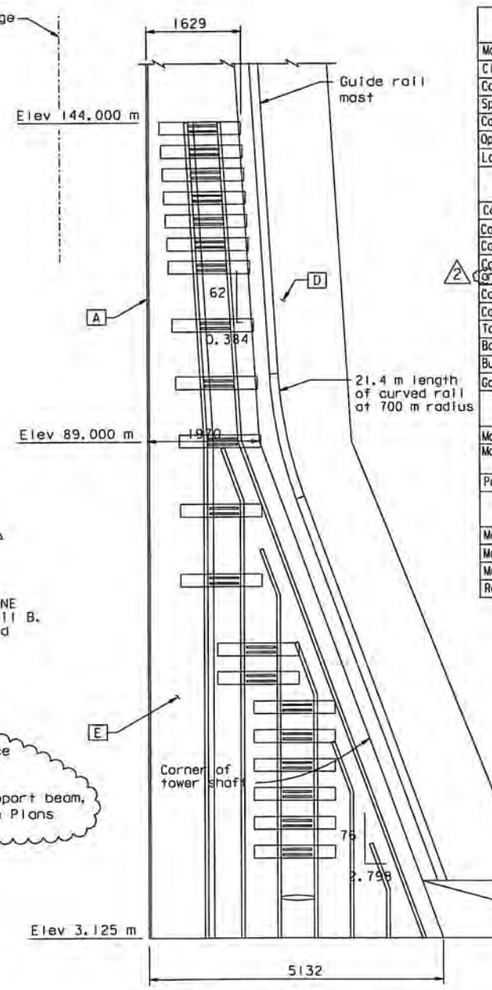

GUIDE RAIL GEOMETRY DEFINITION
Horiz=1:50
Vert =1:500

Horizontal Seismic Loads At Guide Rail Mast Tie-Ins

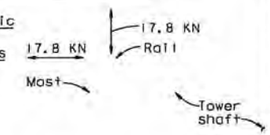

GENERAL DATA	
Model	2000 DR (USA Hoist Co.)
Classification	Rack & Pinion Elevator
Capacity	907 Kg
Speed	0.76 m/s
Car Weight	2948 Kg
Operation	Single Automatic Operation
Landing Served	1, 2, 3, 4 & 5
2/1 Car & Hoistway Enclosure	
Car Safety	Rack & Pinion
Car/Hoistway Doors	Single vertical sliding panel/sliding door
Car Flooring/Roof	Aluminum Tread Plate
Car Walls Exterior and Interior	Galvanized - G90 (MCU Primer with Polysiloxane Top Coat (White) or Equal
Car Sled	Hot Dipped Galvanized
Car Glass Panels	Laminated Glass
Tower Tie-in	Hot Dipped Galvanized
Base Enclosure	Galvanized - G90
Buffer/Stroke	Spring Buffer/127 or Hydraulic Buffer/229
Governor/Trip Speed	210 fpm / 1.07 m/s
Machine Data	
Motor/Gear Box/Brake	90 Helical Bevel
Motor Kw	(2) 25HP / 18.6 Kw (Max Amp Operating Load Req. - 56.2)
Power Supply	480 Volts 100 A. 3 ph 60 Cy.
Guide Rail Mast (2 Each)	
Mast Section	TS 152 x 152 x 7.9 - A 500 Grade B
Mast Section Finish	Hot Dipped Galvanized
Mast Weight	113.4 Kg
Rack Material	AISI 1045 or Equiv.

Vertical Loads At Bottom Of Guide Rail Masts (KN)		
	Per Mast	Per Buffer
Load Case 1 (Safety Set)	118.50	0
Load Case 2 (Buffer Impact)	127.29	63.65
Load Case 3	168.20	
Seismic (1g)		0

CONTRACT CHANGE ORDER NO. 85
SHEET 15 OF 25

MARK	DATE	DESCRIPTIONS	BY	CH'D	CCO
REVISIONS					
2	08/26/11	ELEVATOR DETAILS	JNB	FS	85
1	07/17/09	ELEVATOR DETAILS	JNB	FS	85

FOR REVISIONS 1 & 2 ONLY

REGISTERED PROFESSIONAL ENGINEER — JAL BIRDY — No. 41547 — Exp. 12-31-13 — CIVIL — STATE OF CALIFORNIA

ELEVATOR DETAIL NO. 1

ALL DIMENSION ARE IN MILLIMETERS UNLESS OTHERWISE SHOWN

M-33

DIST	COUNTY	ROUTE	KILOMETER POST TOTAL PROJECT	SHEET No	TOTAL SHEETS
04	SF	80	13.2/13.9	69R2	1204

Robert E. Bethel
REGISTERED MECHANICAL ENGINEER

12-6-04
PLANS APPROVAL DATE

REGISTERED PROFESSIONAL ENGINEER — ROBERT E. BETHEL — No. M018543 — Exp. 9/30/06 — MECHANICAL — STATE OF CALIFORNIA

T.Y. LIN / MOFFATT & NICHOL
825 BATTERY STREET
SAN FRANCISCO, CA 94111

The State of California or its officers or agents shall not be responsible for the accuracy or completeness of electronic copies of this plan sheet.

Caltrans now has a web site! To get to the web site, go to: http://www.dot.ca.gov

Caltrans Metric

DATE	BY	REVISED	DATE REVISED
5/3/02	ES	RB	5/3/02
		JNB	4/21/09

CALCULATED/DESIGNED BY
CHECKED BY

DESIGN OVERSIGHT — Bob Zandipour — May 12, 2009

STATE OF CALIFORNIA - DEPARTMENT OF TRANSPORTATION — Caltrans

SAS STRUCTURE

LAST REVISION 00-00-00 — DATE PLOTTED => 26 AUG 2011 — TIME PLOTTED => 10:01:42

FOR REDUCED PLANS ORIGINAL SCALE IS IN MILLIMETERS 0 20 40 60 80

FILE => I:\bb\04-0120O1\sas\contract plans and cco\cco\cco*85\5-update 08-26-11\dgn\40120fub033.dgn
USERNAME => DWinrow

CU 04251 EA 0120F1

DIST	COUNTY	ROUTE	KILOMETER POST TOTAL PROJECT	SHEET No.	TOTAL SHEETS
04	SF	80	13.2/13.9	70R2	1204

Robert E Bethel
REGISTERED MECHANICAL ENGINEER

12-6-04
PLANS APPROVAL DATE

REGISTERED PROFESSIONAL ENGINEER — ROBERT E. BETHEL — No. M018543 — Exp. 9/30/06 — MECHANICAL — STATE OF CALIFORNIA

T.Y. LIN / MOFFATT & NICHOL
825 BATTERY STREET
SAN FRANCISCO, CA 94111

The State of California or its officers or agents shall not be responsible for the accuracy or completeness of electronic copies of this plan sheet.

Caltrans now has a web site! To get to the web site, go to: http://www.dot.ca.gov

Caltrans Metric

REGISTERED PROFESSIONAL ENGINEER — JAL BIRDY — No. 41547 — Exp. 12-31-13 — CIVIL — STATE OF CALIFORNIA

FOR REVISIONS 1 & 2 ONLY

CONTRACT CHANGE ORDER NO. 85
SHEET 16 OF 25

MARK	DATE	DESCRIPTIONS	BY	CH'D	CCO
		REVISIONS			
1	07/17/09	ELEVATOR DETAILS	JNB	FS	85
2	08/19/11	ELEVATOR DETAILS	JNB	FS	85

NOTES:
1. Elevation of tower elevation stops are given at the foot level (tower strut facade top PL, tower diaphragm at elevation 13.000 m).
2. For tower strut facade details, see Bridge Plans.
3. For tower diaphragm at elevation 13.000 m details, see Bridge Plans.
4. When elevator is not in use, it shall be parked at elev 15.000.
5. For elevator safety enclosures, see "Tower Elevator Enclosures" sheets.
6. For Tower Stop Elevation see "Elevator Detail No. 1" sheet.

Legend: Tower elevator stop

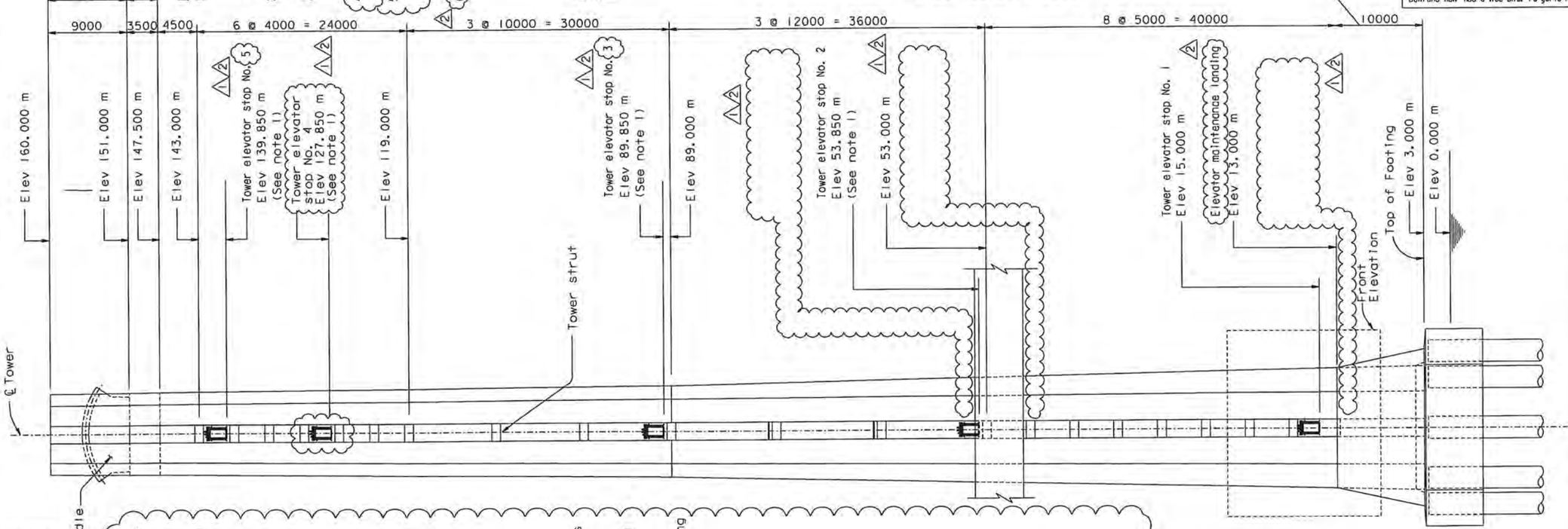

LONGITUDINAL ELEVATION LOOKING-NORTH
1:250

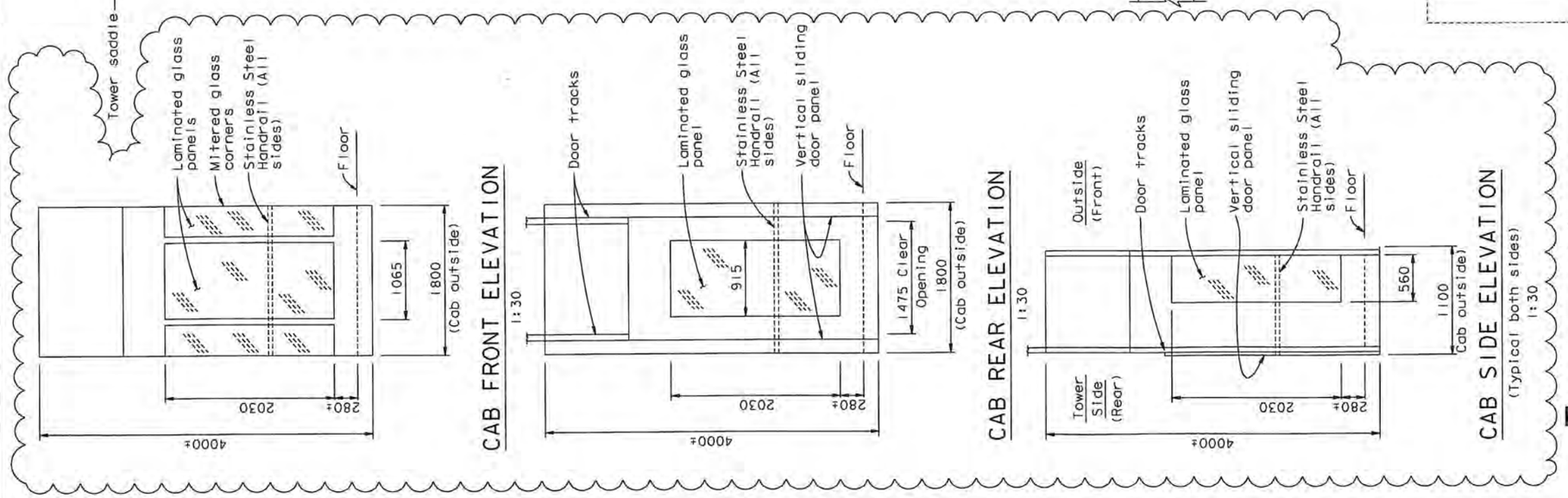

ELEVATOR DETAIL NO. 2

SCALE: 1:250

ALL DIMENSION ARE IN MILLIMETERS UNLESS OTHERWISE SHOWN

M-34

	CALCULATED/ DESIGNED BY	ES	5/3/02	REVISED BY	JNB	4/21/09
	CHECKED BY	RB	5/3/02	DATE REVISED		

STATE OF CALIFORNIA - DEPARTMENT OF TRANSPORTATION
SAS STRUCTURE
May 12, 2009
DESIGN OVERSIGHT
Bob Zandipour
Caltrans

FOR REDUCED PLANS ORIGINAL SCALE IS IN MILLIMETERS 0 20 40 60 80

FILE => I:\sb\04-012001\sas\contract plans and cco\cco\cco*85\4-revision 08-19-11\dgn\40120fsb034.dgn
USERNAME => DWinrow

CU 04251 | EA 0120F1

LAST REVISION 00-00-00
DATE PLOTTED => 19 AUG 2011
TIME PLOTTED => 14:21:01

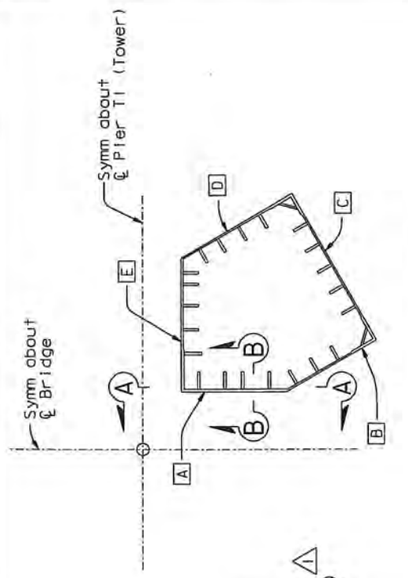

KEY PLAN

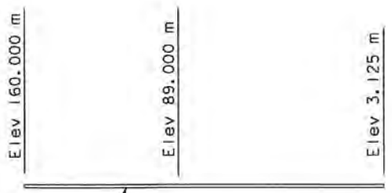

SECTION B-B
(Profile of Skin Plate "A")
(Longitudinal stiffener plates not shown for clarity)
Horiz=1:120
Vert =1:1200

Table 1

STIFFENER DESIGNATION	CUTOFF ELEVATION (m)
A1	144.000
A2	144.000
A3	144.000
A4	144.000

Table 2

ELEVATION (m)	SKIN PL THICKNESS (mm)
3.125-30.000	70
30.000-144.000	90

Table 3

ELEVATION (m)	TYPICAL STIFFENER SIZE (mm x mm)	STIFFENER A1 SIZE (mm x mm)
3.125-47.000	65x450	65x450
47.000-121.000	75x520	75x375
121.000-144.000	65x450	65x250

(See Note 7)

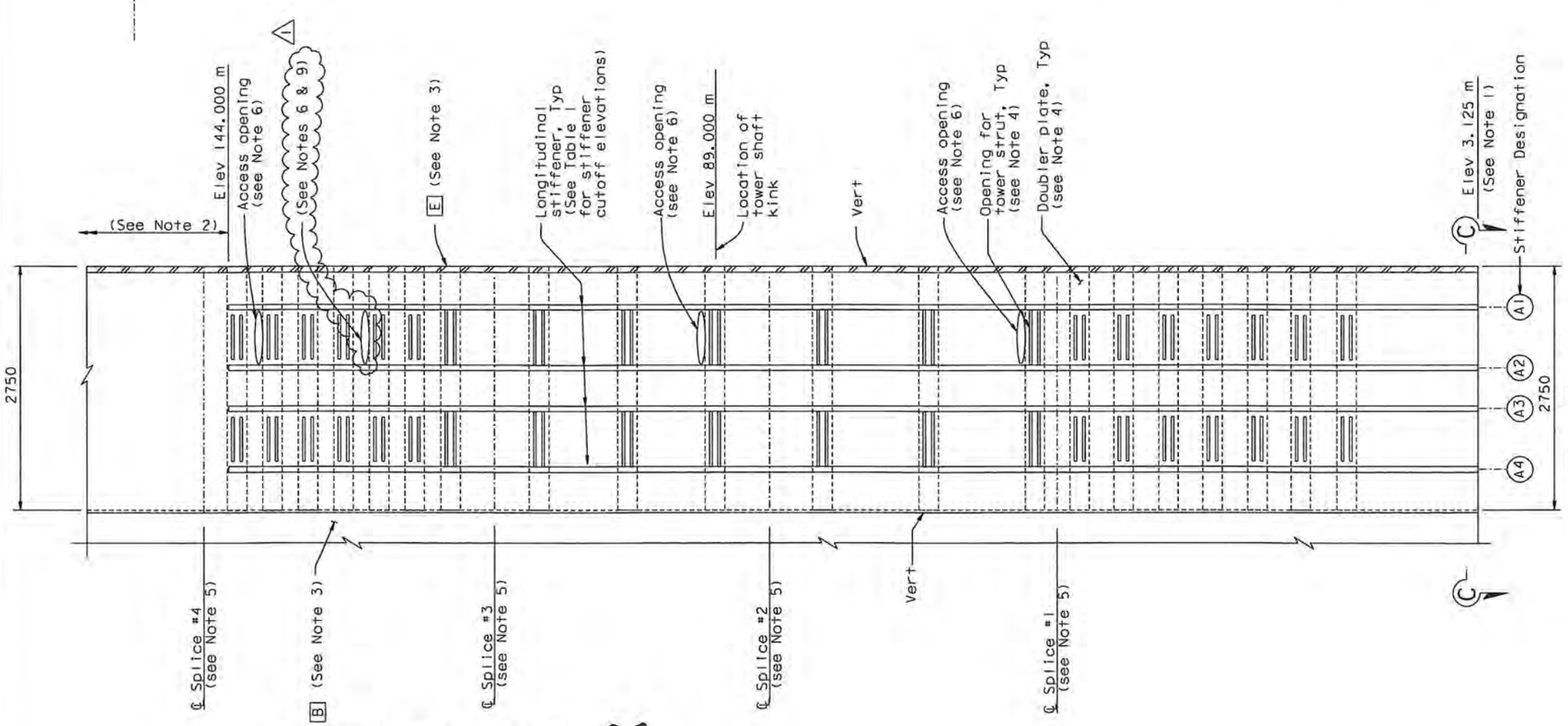

SECTION A-A
(Elevation of Skin Plate "A")
Horiz=1:30
Vert =1:300

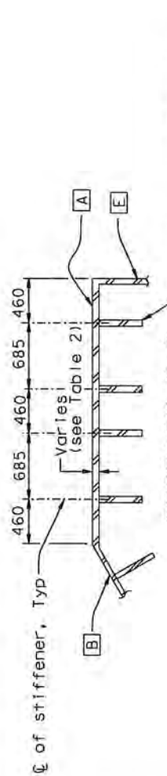

SECTION C-C
(Partial plan of Skin Plate "A")
1:30
(See Note 8)

NOTES:

1. For tower anchorage details (not shown for clarity), see "Tower Anchorage Details" sheets.
2. For tower saddle grillage and tower head details (not shown for clarity), see "Tower Saddle Grillage Details" and "Tower Head Details" sheets.
3. Longitudingl stiffeners on tower skin PL B & E not shown for clarity.
4. For tower strut and doubler plate opening, see "Tower Shaft Details No.10" sheet.
5. For tower shaft splice details, see "Tower Splice Details" sheets.
6. For access openings details, see "Tower Access Details" sheets.
7. For longitudinal stiffener transition at tower splices, see sheets "Tower Splice Details No.7", "Tower Splice Details No.12", "Tower Splice Details No.17", and "Tower Splice Details No.19".
8. Anchorage bearing stiffener plates are not shown for clarity. For details see "Tower Anchorage Details" sheets.
9. Provide additional access openings at locations shown.

⚠1

100 % PS&E

CONTRACT CHANGE ORDER NO. 85
SHEET 17 OF 25

REQUESTS FOR INFORMATION NOT ADDRESSED IN THIS CCO REMAIN IN FORCE

ALL DIMENSIONS ARE IN MILLIMETERS UNLESS OTHERWISE SHOWN

DIST.	COUNTY	ROUTE	KILOMETER POST TOTAL PROJECT	SHEET NO.	TOTAL SHEETS
04	SF	80	13.2/13.9	531R1	1204

REGISTERED ENGINEER - CIVIL
12-6-04
PLANS APPROVAL DATE
Marwan N. Nader, No. C 054426, Exp. 12/31/11, CIVIL, STATE OF CALIFORNIA

The State of California or its officers or agents shall not be responsible for the accuracy or completeness of electronic copies of this plan sheet.

T.Y. LIN / MOFFATT & NICHOL
825 BATTERY STREET
SAN FRANCISCO, CA 94111

Caltrans now has a web site! To get to the web site, go to: http://www.dot.ca.gov

MARK	DATE	REVISIONS	BY	CH'D	CCO#
⚠1	08/19/11	ELEVATOR DETAILS	TH	MN	85

	BY	CHECKED
DESIGN	M. Nader	M. Gulyas
DETAILS	L. Rus	M. Gulyas
QUANTITIES	L. Rus	Y. Zhang

PREPARED FOR THE STATE OF CALIFORNIA DEPARTMENT OF TRANSPORTATION

R. Manzanarez
PROJECT ENGINEER

BRIDGE NO. 34-0006L/R
KILOMETER POST 13.2/13.9

SAN FRANCISCO OAKLAND BAY BRIDGE
EAST SPAN SEISMIC SAFETY PROJECT
SELF-ANCHORED SUSPENSION BRIDGE
(SUPERSTRUCTURE & TOWER)

TOWER SHAFT DETAILS NO. 3

R. Vaiizadeh/V. Toan/Y.L./W.L./F.C.
DESIGN OVERSIGHT
SIGN OFF DATE 08/19/11

Rev. Date: 5-18-98

ORIGINAL SCALE IN MILLIMETERS FOR REDUCED PLANS 0 10 20 30 40 50 60 70 80 90 100

CU 04
EA 0120F1

DISREGARD PRINTS BEARING EARLIER REVISION DATES

REVISION DATES (PRELIMINARY STAGE ONLY): 05/07/99 | 09/07/99 | 05/07/01 | 09/07/01 | 07/07/02 | 12/13/02 | 11/13/03

SHEET 114R1 OF

FILE => I:\bb\04-0120f1\sas\contract plans and cco\cco\cco#85\4-revision 08-19-11\dgn\aet1d03.dgn

USERNAME => DWinrow DATE PLOTTED => 19 AUG 2011 TIME PLOTTED => 14:21:50

Caltrans Metric

REGISTERED ENGINEER - CIVIL
12-6-04
PLANS APPROVAL DATE

Marwan N. Nader No. C 054426 Exp. 12/31/11 CIVIL — REGISTERED PROFESSIONAL ENGINEER — STATE OF CALIFORNIA

The State of California or its officers or agents shall not be responsible for the accuracy or completeness of electronic copies of this plan sheet.

T.Y. LIN / MOFFATT & NICHOL
825 BATTERY STREET
SAN FRANCISCO, CA 94111

Caltrans now has a web site! To get to the web site, go to: http://www.dot.ca.gov

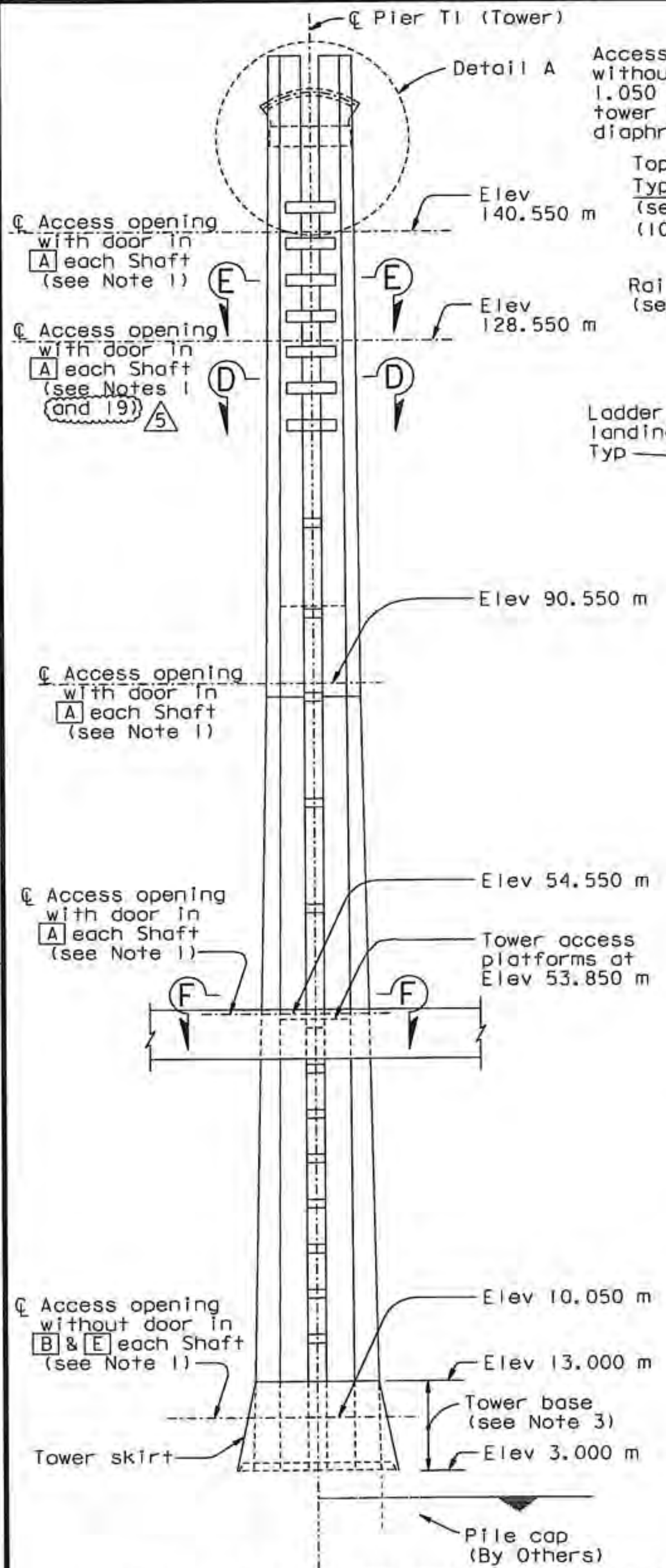

ELEVATION
1:400
(Looking North)

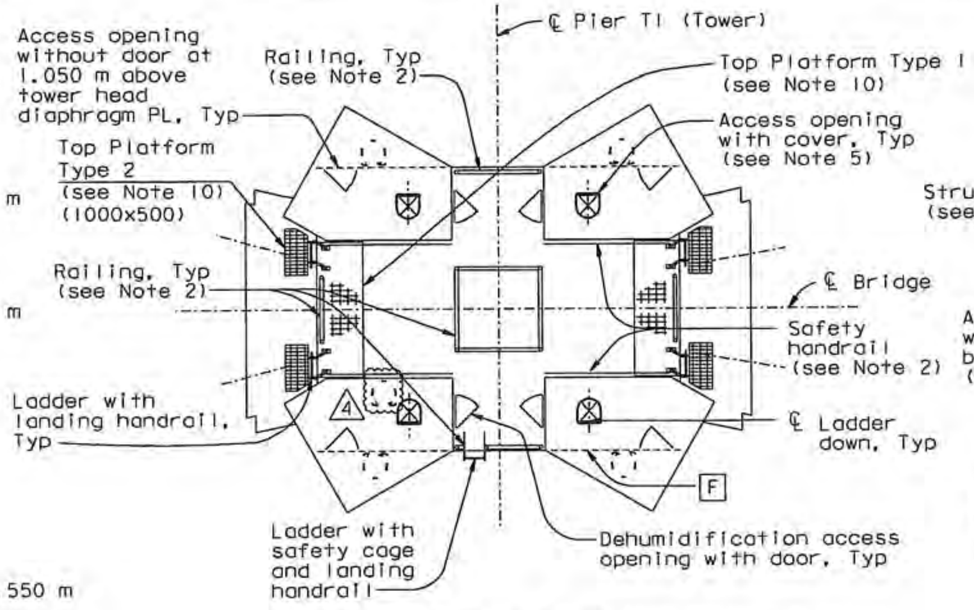

VIEW B-B (See Notes 7 & 18)
1:80

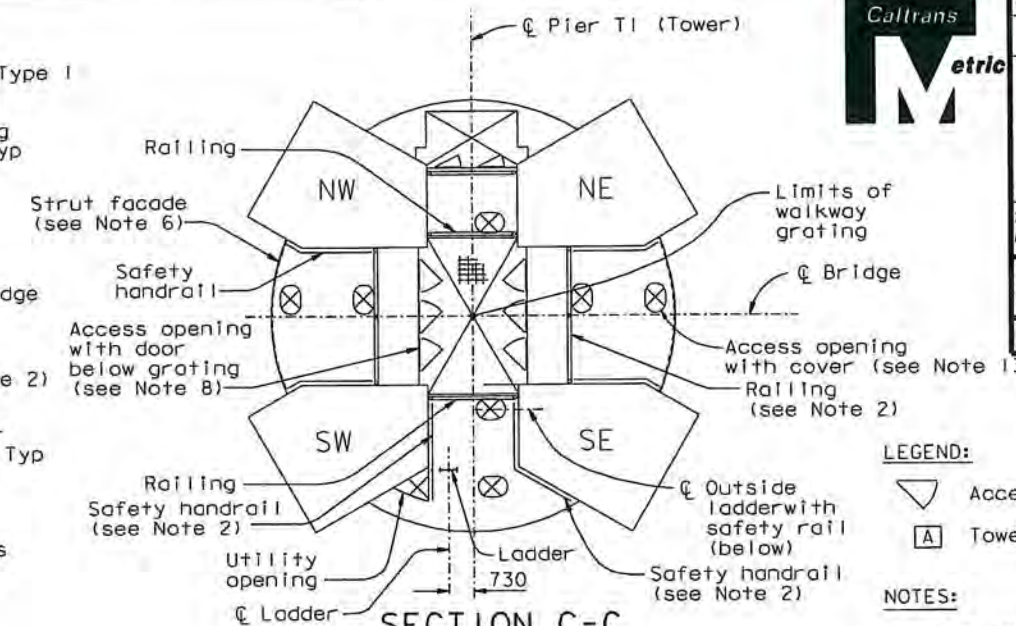

SECTION C-C
1:80

LEGEND:

▽ Access opening (see Notes 1, 3, 8 & 14)

[A] Tower shaft skin plate A

NOTES:

1. For location of access openings in tower shafts, see "Tower Shaft Details" sheets.
2. For railing and safety handrail details, see "Tower Access Details No. 8" sheet.
3. For additional access details in tower base, see "Tower Access Details No. 2" sheet.
4. For ladder details not shown, see "Tower Access Details No. 7" sheet.
5. For access opening details, see Detail E on "Tower Access Details No. 8" sheet. For cover details, see "Tower Access Details No. 9" sheet.
6. For strut facade, see "Tower Strut Facade Details" sheets.
7. For location of access openings in tower head, see "Tower Head Details" sheets.
8. For access opening and door details, see "Tower Access Detail No. 4" sheet. Access openings are without door unless noted otherwise.
9. For Section D-D and E-E, see "Tower Access Details No. 3" sheet.
10. For Top Platform Types 1 and 2, see "Tower Access Detail No. 9" sheet.
11. For Section F-F, see "Tower Access Details No. 10" sheet.
12. For walkway grating and support beam, see "Tower Access Details No. 3" sheet.
13. For access opening cover details, see "Tower Access Details No. 9" sheet.
14. For location of access openings in strut facade, see "Tower Strut Facade Details" sheets.
15. For location of saddle access opening and ladder, see "Tower Saddle Housing Details" sheets.
16. At locations where ladder lengths exceed 6.5 meters, contraction joints shall be provided. Ladder length is defined as the distance between the centerlines of the top and bottom end supports. Contraction joints shall be located below ladder supports unless noted otherwise. For contraction joint details, see "Tower Access Details No. 7" sheet.
17. Ladder supports shall be spaced at 6 meters maximum.
18. For ladder, railing and safety handrail, and top platform details not shown, see "Tower Access Details No. 1A" sheet.
19. Provide additional access openings at locations shown. (5)

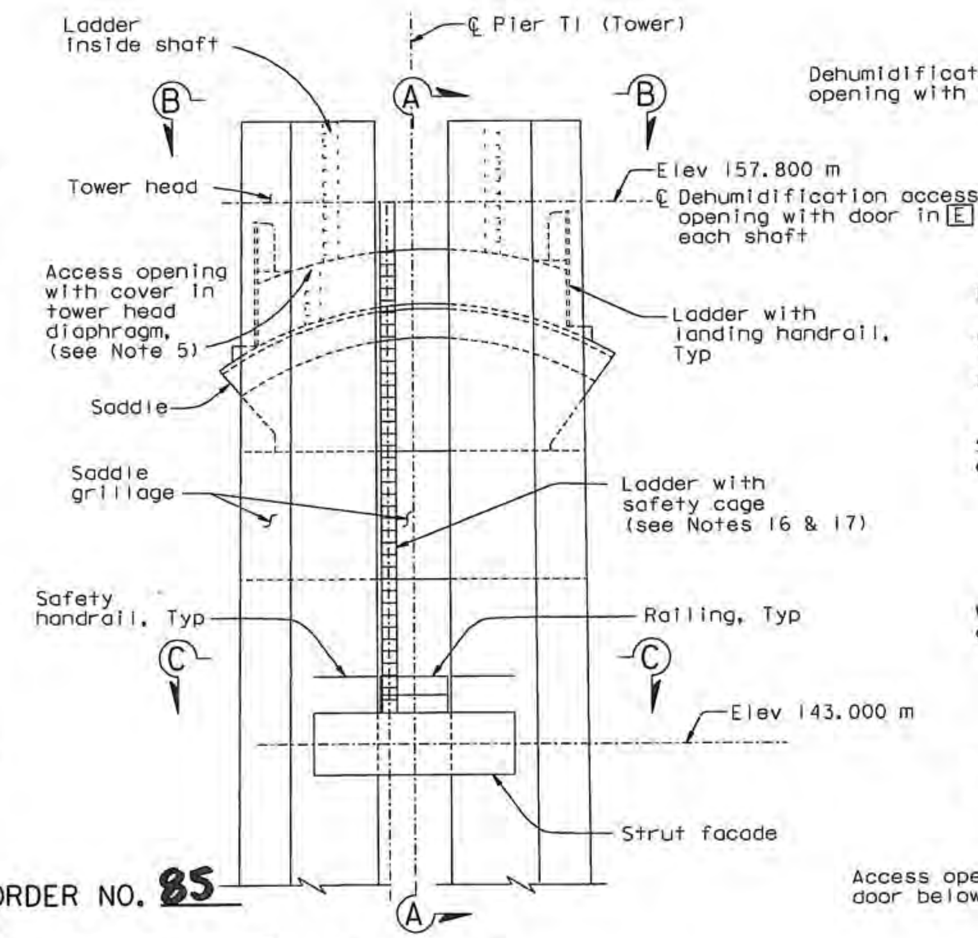

DETAIL A
1:100

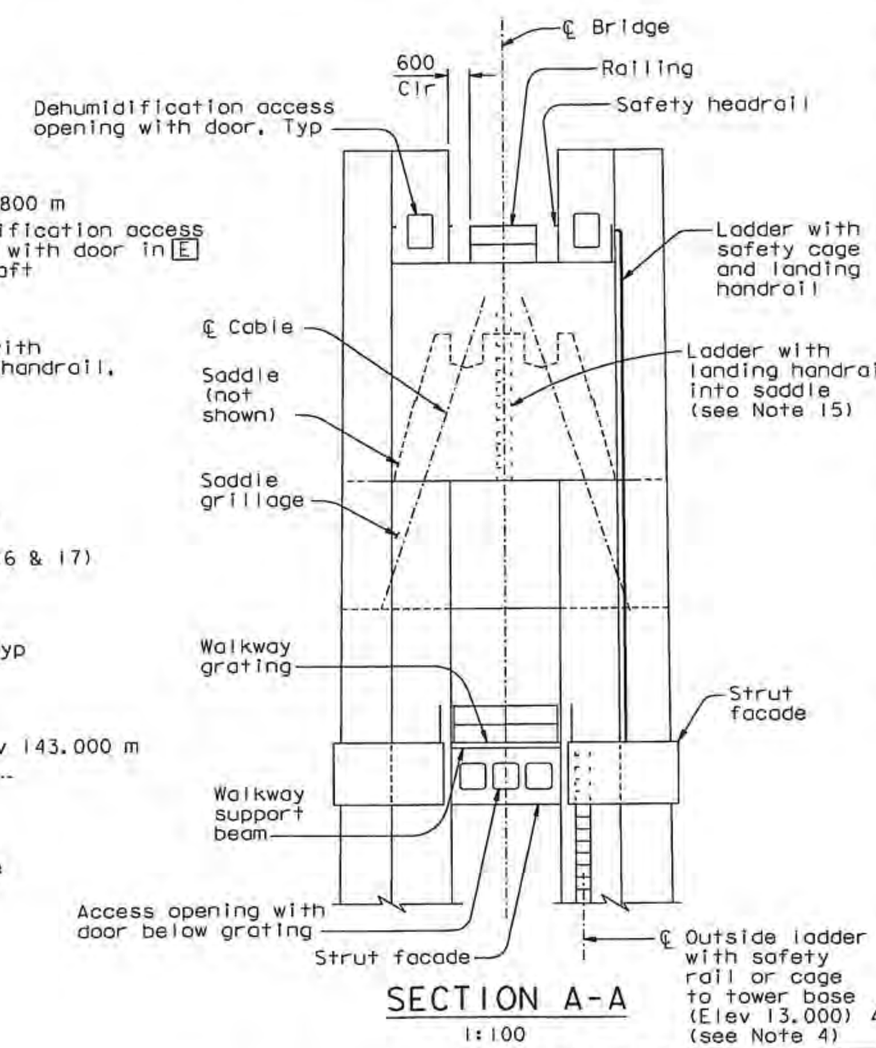

SECTION A-A
1:100

ALL DIMENSIONS ARE IN MILLIMETERS UNLESS OTHERWISE SHOWN

CONTRACT CHANGE ORDER NO. 85
SHEET 18 OF 25

REQUESTS FOR INFORMATION NOT ADDRESSED IN THIS CCO REMAIN IN FORCE

MARK	DATE	DESCRIPTIONS	BY	CH'D	CCO#
5	08/19/11	ELEVATOR DETAILS	NV	MN	85
4	10/29/10	DOORS AND LADDER CAGES	NV	MN	118
3	10/22/10	TOWER HEAD DETAILS	NV	MN	93
2	07/17/09	ELEVATOR DETAILS	TH	MN	85
1	07/18/08	TOWER ACCESS	NV	MN	65

REVISIONS

R. Valizadeh/V. Toan/Y. L./W. L./F. C.
DESIGN OVERSIGHT
SIGN OFF DATE 08/19/11

	BY		CHECKED	
DESIGN	M. Nader			M. Gulyas
DETAILS	G. Baker			L. Rus
QUANTITIES	D. Turner			J. Leventini

PREPARED FOR THE STATE OF CALIFORNIA DEPARTMENT OF TRANSPORTATION

R. Manzanarez
PROJECT ENGINEER

BRIDGE NO. 34-0006L/R
KILOMETER POST 13.2/13.9

SAN FRANCISCO OAKLAND BAY BRIDGE
EAST SPAN SEISMIC SAFETY PROJECT
SELF-ANCHORED SUSPENSION BRIDGE
(SUPERSTRUCTURE & TOWER)

TOWER ACCESS DETAILS NO. 1

ORIGINAL SCALE IN MILLIMETERS FOR REDUCED PLANS 0 10 20 30 40 50 60 70 80 90 100

CU 04
EA 0120F1

DISREGARD PRINTS BEARING EARLIER REVISION DATES

REVISION DATES (PRELIMINARY STAGE ONLY)

SHEET 500R5

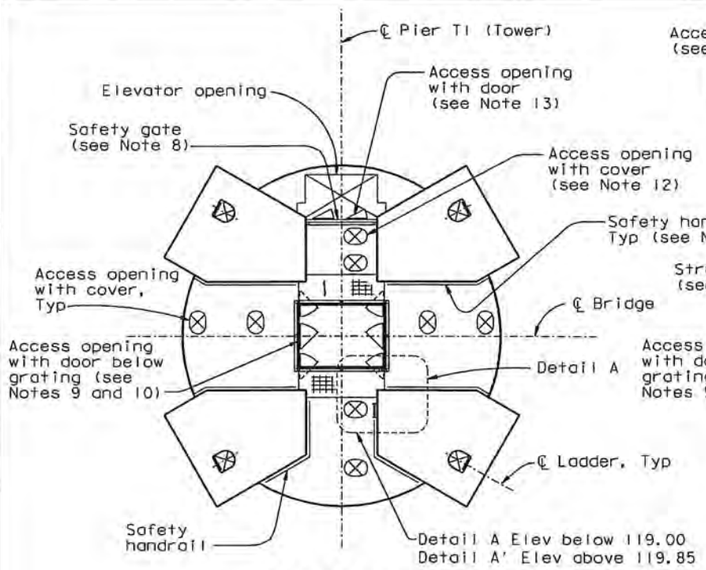

SECTION D-D

NTS

Typical for all tower strut facades UNO in Section E-E. Facade Type A is shown. Type B similar (see Notes 5 and 10)

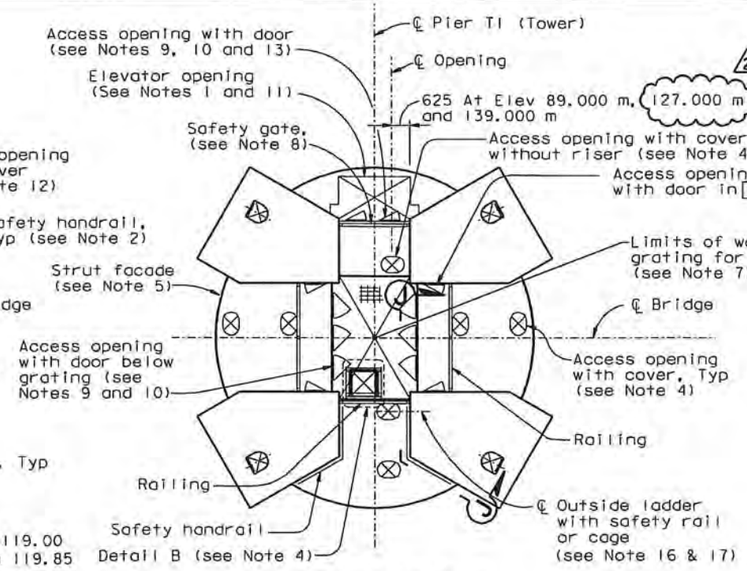

SECTION E-E

NTS

(Shown for tower strut facade corresponding to tower strut at Elev 139.000 m, safety gates and door locations at Elev 53.000 m, 89.000 m and 2 127.000 m are similar)

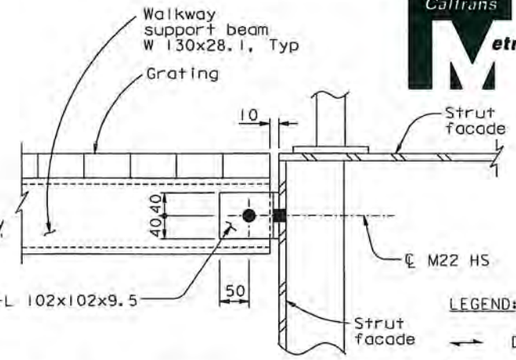

SECTION G-G

(Section G'-G' similar)

1:5

LEGEND:

- Direction of main reinforcement of grating
- Access opening
- A Tower shaft skin plate A

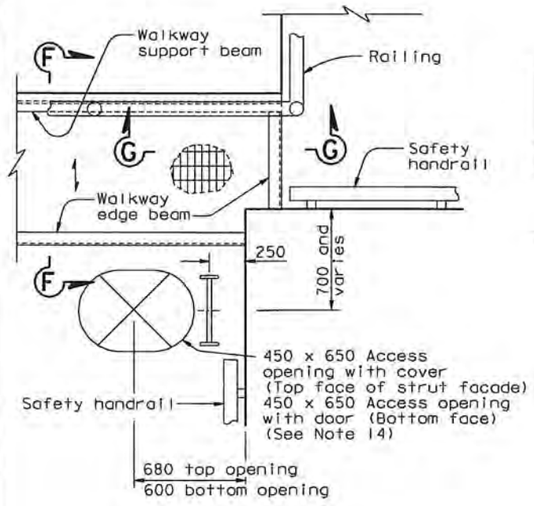

DETAIL A

1:20

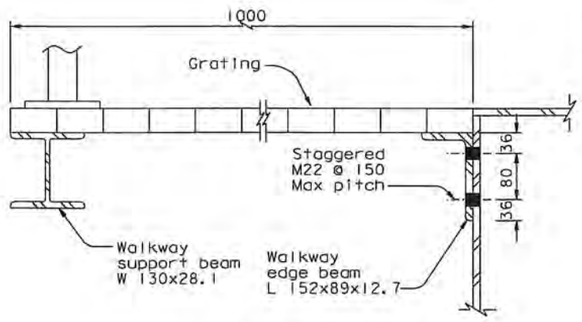

SECTION F-F

1:5

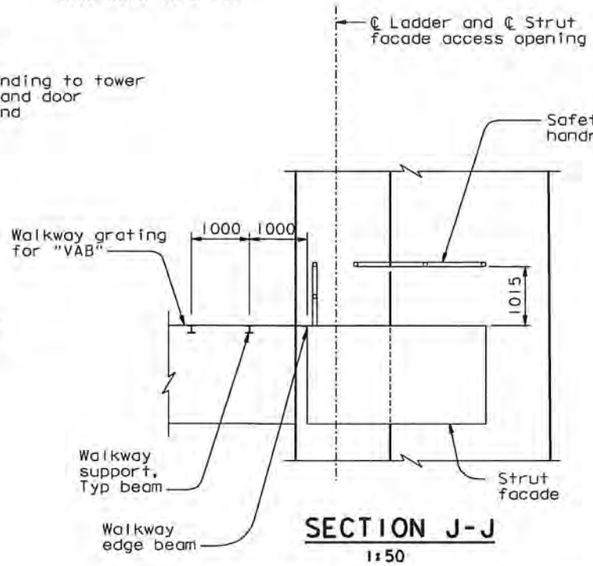

SECTION J-J

1:50

NOTES:

1. For elevator opening details, see "Tower Strut Facade Details" sheets.
2. For railing and safety handrail details, see "Tower Access Details No.8" sheet.
3. For ladder details not shown, see "Tower Access Details No.7" sheet.
4. For Detail B and access cover details, see "Tower Access Details No.9" sheet. All covers are with risers, unless noted otherwise.
5. For strut facade, see "Tower Strut Facade Details" sheets.
6. Galvanized steel grating with fasteners to be provided by Contractor. Grating working load shall be 4.8 kN/m² (100psf) unless noted otherwise.
7. Gratings at elevations 53.000, 89.000 and 139.000 shall support "VAB" equipment, to be supplied by others. Walkway grating for "VAB" shall be galvanized steel grating with fasteners to be provided by Contractor. Grating working load shall be 14.8 kN/m² (300psf).
8. For Safety gate details, see "Road Plans" sheets.
9. For access opening and door details, see "Tower Access Details No.4" sheet. Access openings are without door unless noted otherwise.
10. For location of access openings in strut facade, see "Tower Strut Facade Details" sheets.
11. For location of elevator landing and safety enclosures, see "Tower Elevator Support Details" sheets.
12. This access opening is to be provided in strut facades from elevation 18.000 m to 77.000 m only.
13. These access openings are to be provided between elevation 89.000 m to 143.000 m.
14. For bottom face access opening provide door to swing in. Door shall open clear of obstructions. For other details, see door at vertical face of tower strut facade on "Tower Access Details No.4" sheet.
15. The Contractor shall provide ladders inside the front facades to align with the exterior ladder segments. Ladder do not penetrate the strut facade plates.
16. At locations where ladder lengths exceed 6.5 meters, contraction joints shall be provided. Ladder length is defined as the distance between the centerlines of the top and bottom end supports. Contraction joints shall be located below ladder supports unless noted otherwise. For contraction joint details, see "Tower Access Details No.7" sheet.
17. Ladder supports shall be spaced at 6 meters maximum.
18. For Section Z-Z and Detail A', see "Tower Access Details No.3A" sheet.

ALL DIMENSIONS ARE IN MILLIMETERS UNLESS OTHERWISE SHOWN

DIST.	COUNTY	ROUTE	KILOMETER POST TOTAL PROJECT	SHEET NO.	TOTAL SHEETS
04	SF	80	13.2/13.9	919R2	1204

REGISTERED ENGINEER - CIVIL

12-6-04
PLANS APPROVAL DATE

Marwan N. Nader, No. C 054426, Exp. 12/31/09, CIVIL, REGISTERED PROFESSIONAL ENGINEER, STATE OF CALIFORNIA

The State of California or its officers or agents shall not be responsible for the accuracy or completeness of electronic copies of this plan sheet.

T.Y. LIN / MOFFATT & NICHOL
825 BATTERY STREET
SAN FRANCISCO, CA 94111

Caltrans now has a web site! To get to the web site, go to: http://www.dot.ca.gov

CONTRACT CHANGE ORDER NO. 85
SHEET 19 OF 25

REQUESTS FOR INFORMATION NOT ADDRESSED IN THIS CCO REMAIN IN FORCE

MARK	DATE	DESCRIPTIONS	BY	CH'D	CCO#
2	07/17/09	ELEVATOR DETAILS	TH	MN	85
1	07/18/08	TOWER ACCESS	NV	MN	65

REVISIONS

R. Vallzadeh/V. Toan/Y.L./W.L./F.C.
DESIGN OVERSIGHT
SIGN OFF DATE 07/17/09

	BY	CHECKED
DESIGN	M. Nader	M. Gulyas
DETAILS	G. Baker	L. Rus
QUANTITIES	D. Turner	J. Leventini

PREPARED FOR THE STATE OF CALIFORNIA DEPARTMENT OF TRANSPORTATION

R. Manzanarez
PROJECT ENGINEER

BRIDGE NO. 34-0006L/R
KILOMETER POST 13.2/13.9

SAN FRANCISCO OAKLAND BAY BRIDGE
EAST SPAN SEISMIC SAFETY PROJECT
SELF-ANCHORED SUSPENSION BRIDGE
(SUPERSTRUCTURE & TOWER)

TOWER ACCESS DETAILS NO. 3

Rev. Date: 5-18-98

ORIGINAL SCALE IN MILLIMETERS FOR REDUCED PLANS 0 10 20 30 40 50 60 70 80 90 100

CU 04
EA 0120F1

DISREGARD PRINTS BEARING EARLIER REVISION DATES

REVISION DATES (PRELIMINARY STAGE ONLY): 05/07/09 05/07/09 05/08/09 05/08/09 07/17/09 12/15/03

SHEET 502R2 OF

FILE => I:\bb\04-0120F1\sos\contract plans and cco\cco\cco#85\2-revision 07-17-09\dgn\akacc14.dgn

100% PS&E

DATE PLOTTED => 17 JUL 2009 TIME PLOTTED => 15:25:17

USERNAME => dwinrow

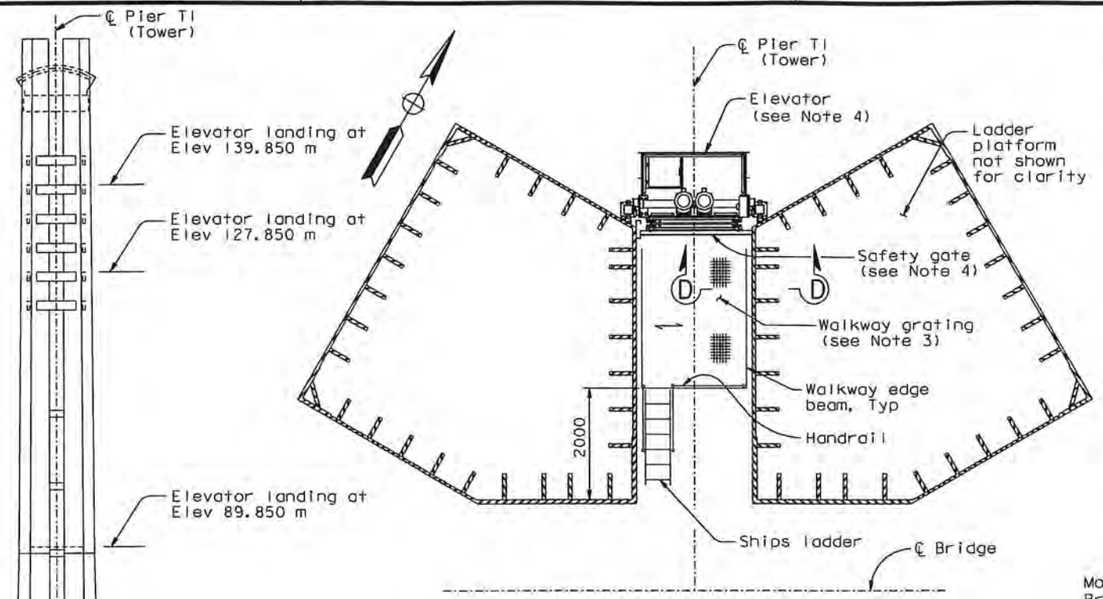

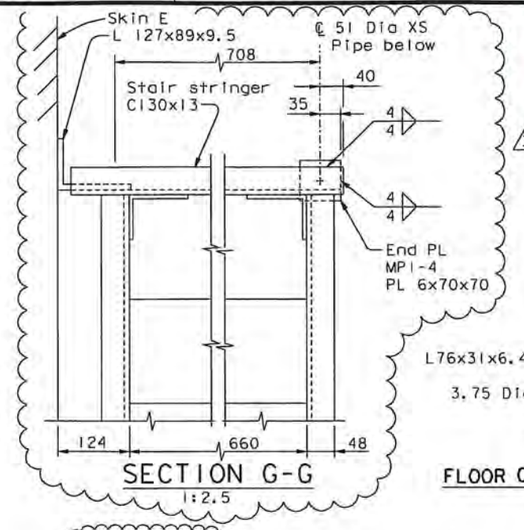

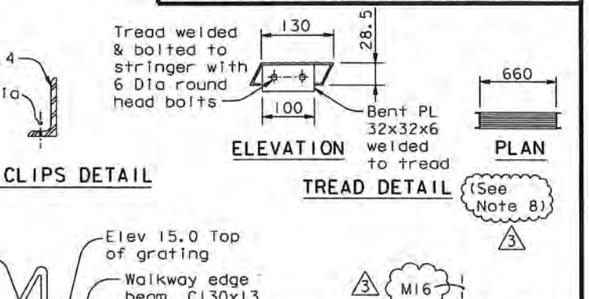

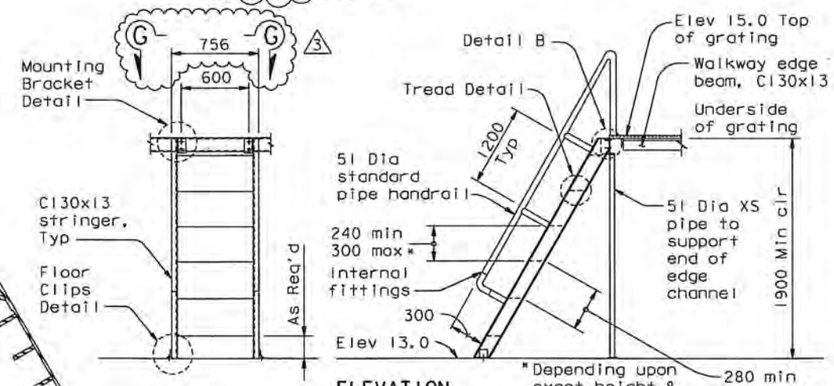

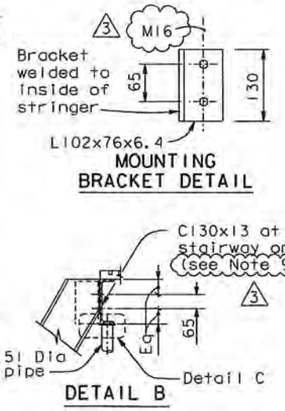

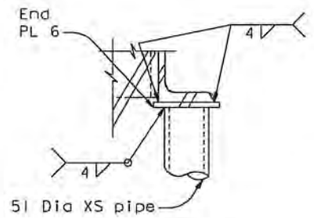

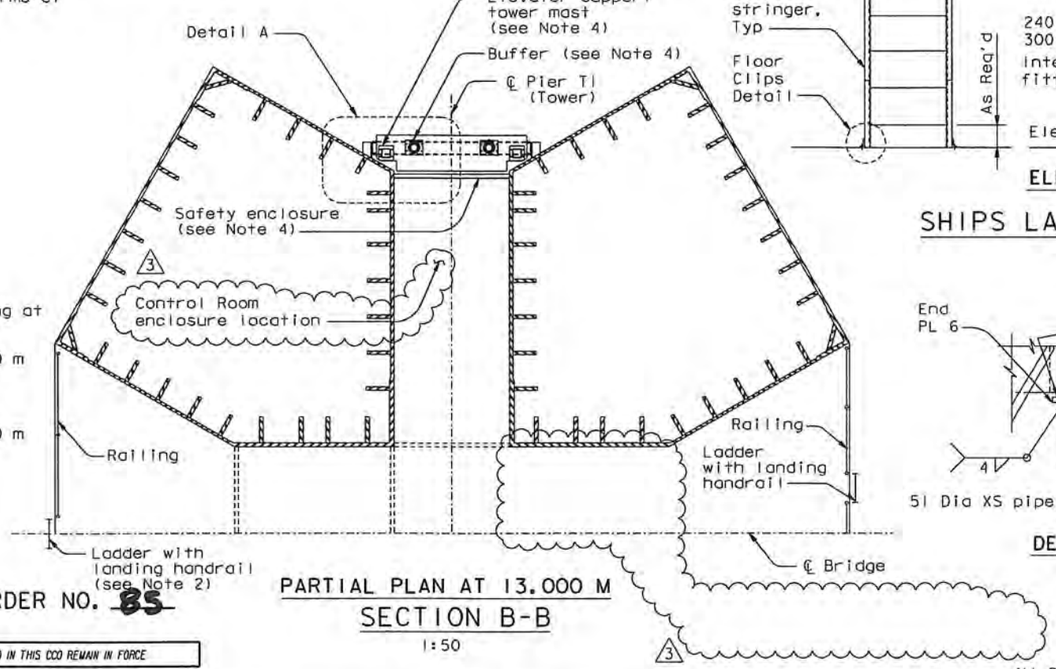

NOTES:

1. For elevator landing details at elevations 139.850 and 89.850, see "Tower Access Details No.3" sheet.
2. For ladder and landing handrail details, see "Tower Access Details No.7" sheet. For railing details, see Tower Access Details No.8" sheet.
3. Gratings at elevation 15.000 shall have a working load of 7 kN/m (145psf).
4. For elevator and elevator appurtenances, see "Road Plans" sheets.
5. (NOTE DELETED)
6. For elevator landing details at elevation 53.850, see "Tower Access Details No.10" sheet.
7. For Detail A, Section C-C and Section D-D, see "Tower Elevator Support Details No.2" sheet.
8. At the Contractor's option, stair treads may be C130x13. The top outward facing corner of each channel shall be ground to radius of 3 mm. Tread shall be provided with a slip-resistant surface.
9. At the Contractor's option, C130x10.4 may be used for the platform grating support beam at top of stairway only.

DIST.	COUNTY	ROUTE	KILOMETER POST TOTAL PROJECT	SHEET NO.	TOTAL SHEETS
04	SF	80	13.2/13.9	939R3	1204

George Baker
REGISTERED ENGINEER - CIVIL
12-6-04
PLANS APPROVAL DATE

REGISTERED PROFESSIONAL ENGINEER — George S. Baker, No. C 57112, Exp. 12/31/05, CIVIL, STATE OF CALIFORNIA

The State of California or its officers or agents shall not be responsible for the accuracy or completeness of electronic copies of this plan sheet.

T.Y. LIN / MOFFATT & NICHOL
825 BATTERY STREET
SAN FRANCISCO, CA 94111

Caltrans now has a web site! To get to the web site, go to: http://www.dot.ca.gov

Tien Hung Ha, No. C 43990, Exp. 06/30/13, CIVIL — REGISTERED PROFESSIONAL ENGINEER, STATE OF CALIFORNIA

CONTRACT CHANGE ORDER NO. 85
SHEET 20 OF 25

REQUESTS FOR INFORMATION NOT ADDRESSED IN THIS CCO REMAIN IN FORCE

MARK	DATE	REVISIONS	BY	CH'D	CCO#
3	08/19/11	ELEVATOR DETAILS	TH	MN	85
2	10/15/10	HANDRAIL AND PLATFORMS	TH	MN	114
1	07/17/09	ELEVATOR DETAILS	TH	MN	85

FOR REVISIONS ONLY

R. Vallizadeh/V. Toan/Y.L./W.L./F.C.
DESIGN OVERSIGHT
SIGN OFF DATE 08/19/11

Rev. Date: 5-18-98

DESIGN BY G. Baker — CHECKED L. Rus
DETAILS BY S. Camo — CHECKED L. Rus
QUANTITIES BY D. Turner — CHECKED J. Leventini

PREPARED FOR THE STATE OF CALIFORNIA DEPARTMENT OF TRANSPORTATION

R. Manzanarez
PROJECT ENGINEER

BRIDGE NO. 34-0006L/R
KILOMETER POST 13.2/13.9

ALL DIMENSIONS ARE IN MILLIMETERS UNLESS OTHERWISE SHOWN

ORIGINAL SCALE IN MILLIMETERS FOR REDUCED PLANS 0 10 20 30 40 50 60 70 80 90 100

CU 04
EA 0120F1

DISREGARD PRINTS BEARING EARLIER REVISION DATES → 04/20/12 | 07/27/12 | 12/19/12 | 11/13/13

FILE => I:\bb\04-0120f1\sas\contract plans and cco\cco\cco#85\4-revision 08-19-11\dgn\dkele01.dgn

SAN FRANCISCO OAKLAND BAY BRIDGE
EAST SPAN SEISMIC SAFETY PROJECT
SELF-ANCHORED SUSPENSION BRIDGE
(SUPERSTRUCTURE & TOWER)

TOWER ELEVATOR SUPPORT DETAILS NO.1

SHEET 522R3 OF

100 % PS&E

DATE PLOTTED => 19 AUG 2011 TIME PLOTTED => 14:27:53

USERNAME => DWinrow

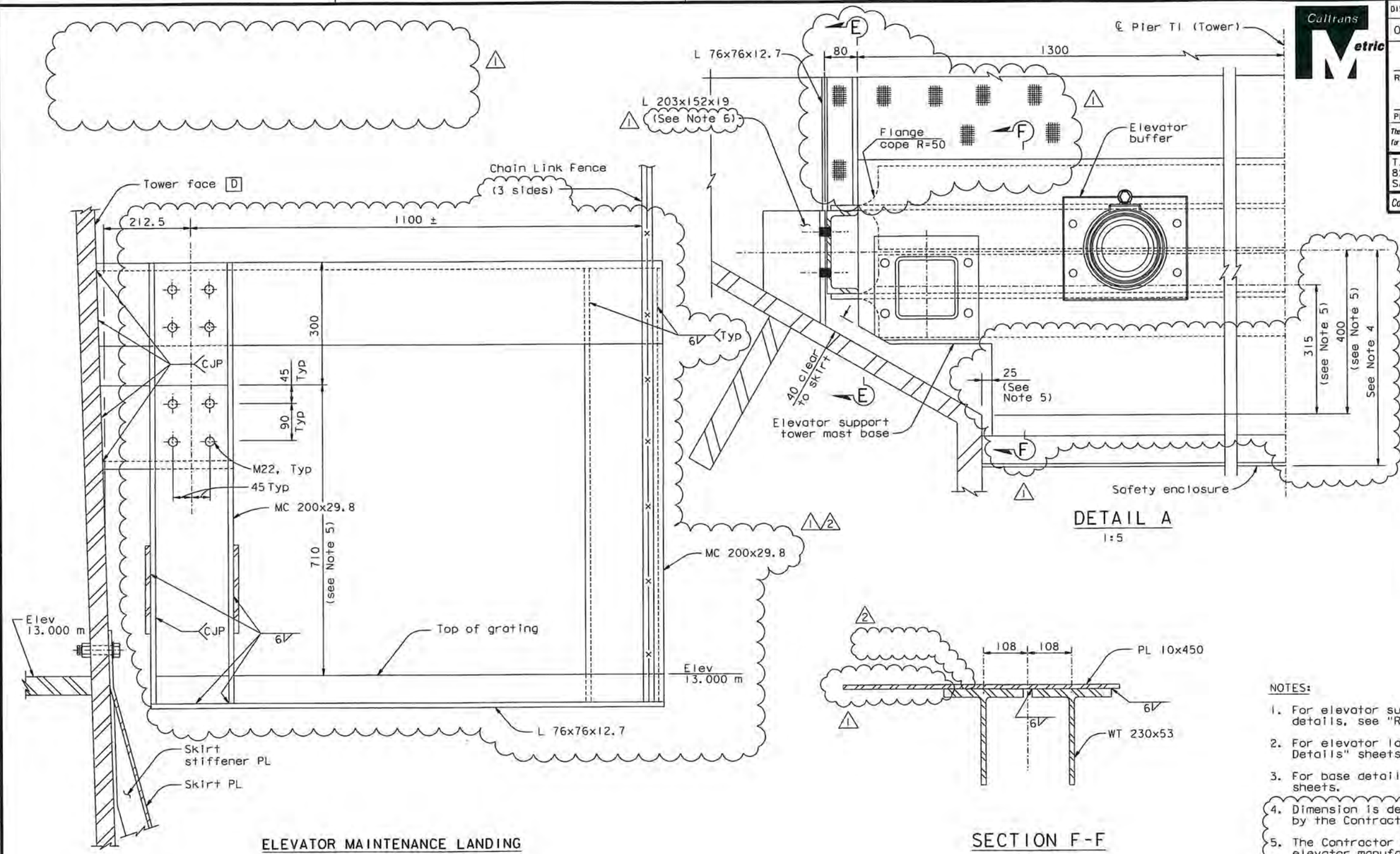

ELEVATOR MAINTENANCE LANDING

SECTION E-E

1:5

DETAIL A

1:5

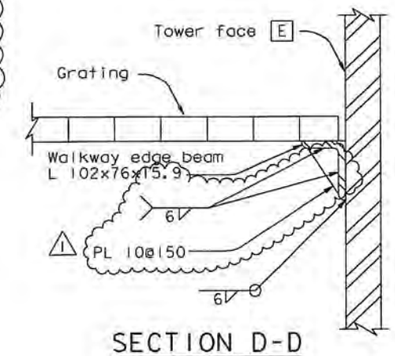

SECTION D-D

1:5

SECTION F-F

1:5

NOTES:

1. For elevator support tower mast and elevator buffer details, see "Road Plans" sheets.
2. For elevator landing details, see "Tower Access Details" sheets.
3. For base details and fasteners, see "Road Plans" sheets.
4. Dimension is dependent on elevator system selected by the Contractor.
5. The Contractor shall coordinate dimensions with elevator manufacturer.
6. The Contractor may use built-up shape with CJP in lieu of L 203x152x19, subject to review and approval of the Engineer.

DIST.	COUNTY	ROUTE	KILOMETER POST TOTAL PROJECT	SHEET NO.	TOTAL SHEETS
04	SF	80	13.2/13.9	940R2	1204

George Baker
REGISTERED ENGINEER - CIVIL
12-6-04
PLANS APPROVAL DATE

REGISTERED PROFESSIONAL ENGINEER — George S. Baker — No. C 57112 — Exp. 12/31/05 — CIVIL — STATE OF CALIFORNIA

The State of California or its officers or agents shall not be responsible for the accuracy or completeness of electronic copies of this plan sheet.

T.Y. LIN / MOFFATT & NICHOL
825 BATTERY STREET
SAN FRANCISCO, CA 94111

Caltrans now has a web site! To get to the web site, go to: http://www.dot.ca.gov

Tien Hung Ho — No. C 43990 — Exp. 06/30/13 — CIVIL — STATE OF CALIFORNIA

FOR REVISIONS ONLY

CONTRACT CHANGE ORDER NO. 85
SHEET 21 OF 25

REQUESTS FOR INFORMATION NOT ADDRESSED IN THIS CCO REMAIN IN FORCE

ALL DIMENSIONS ARE IN MILLIMETERS UNLESS OTHERWISE SHOWN

MARK	DATE	REVISIONS	BY	CH'D	CCO#
2	08/26/11	ELEVATOR DETAILS	TH	MN	85
1	07/17/09	ELEVATOR DETAILS	TH	MN	85

DESIGN OVERSIGHT: R. Vallizadeh/V. Toan/Y.L./W.L./F.C.
SIGN OFF DATE 08/26/11

DESIGN: BY G. Baker — CHECKED L. Rus
DETAILS: BY S. Camo — CHECKED L. Rus
QUANTITIES: BY D. Turner — CHECKED J. Leventini

PREPARED FOR THE STATE OF CALIFORNIA DEPARTMENT OF TRANSPORTATION

R. Manzanarez
PROJECT ENGINEER

BRIDGE NO. 34-0006L/R
KILOMETER POST 13.2/13.9

CU 04
EA 0120F1

SAN FRANCISCO OAKLAND BAY BRIDGE
EAST SPAN SEISMIC SAFETY PROJECT
SELF-ANCHORED SUSPENSION BRIDGE
(SUPERSTRUCTURE & TOWER)

TOWER ELEVATOR SUPPORT DETAILS NO.2

DISREGARD PRINTS BEARING EARLIER REVISION DATES
REVISION DATES (PRELIMINARY STAGE ONLY): 04/20/12 | 07/27/12 | 12/15/12
SHEET 523R2 OF

ORIGINAL SCALE IN MILLIMETERS FOR REDUCED PLANS 0 10 20 30 40 50 60 70 80 90 100

Rev. Date: 5-18-98

FILE => I:\bb\04-012001\sas\contract plans and cco\cco\cco#85\5-update 08-26-11\dgn\okele02.dgn

100 % PS&E

DATE PLOTTED => 26 AUG 2011 TIME PLOTTED => 10:00:55
USERNAME => DWinrow

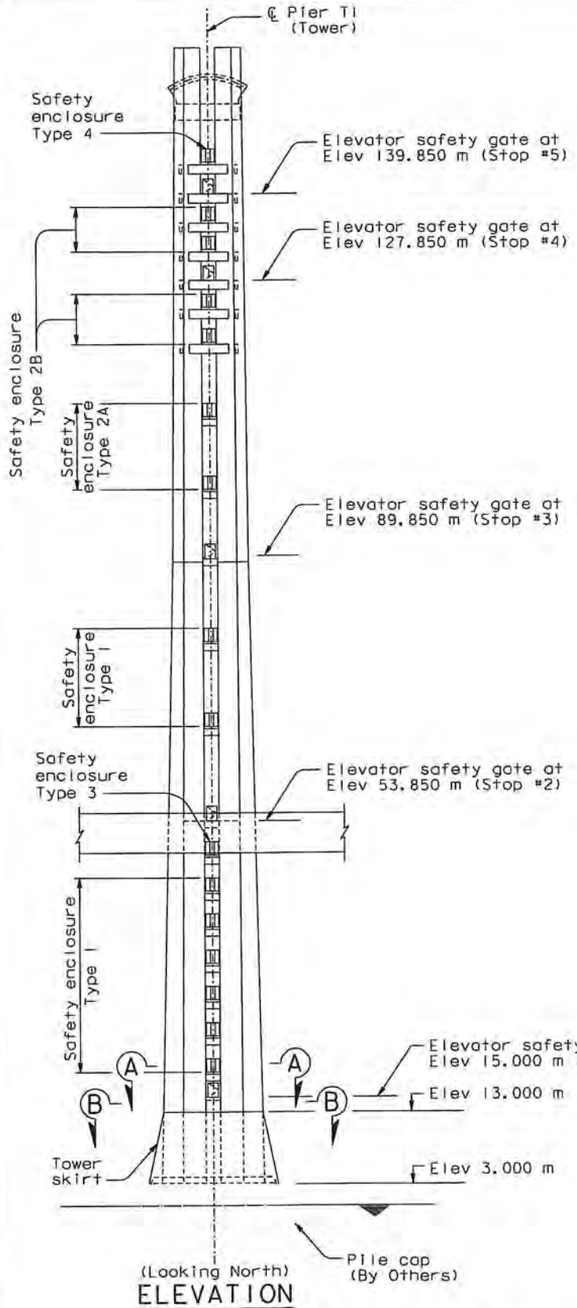

(Looking North)

ELEVATION

1:400

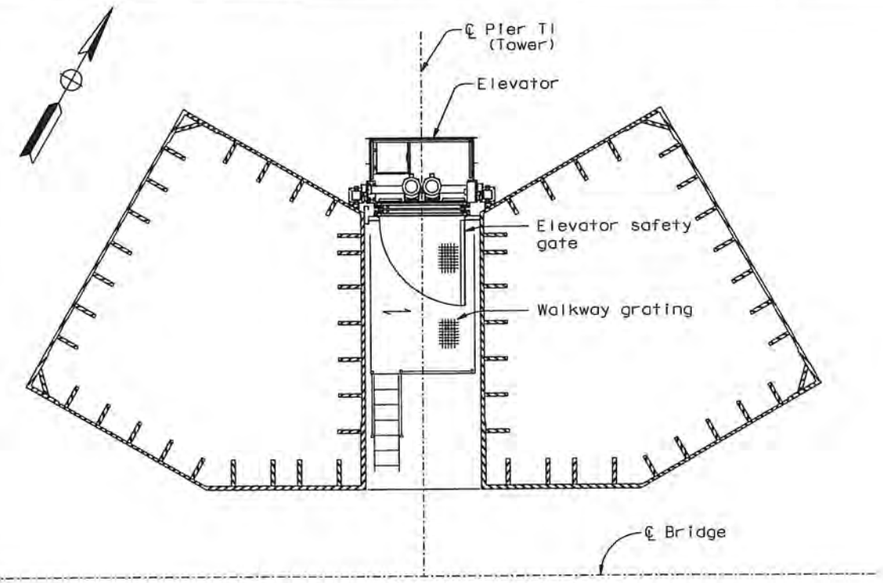

PARTIAL PLAN AT 15.000 M

SECTION A-A

1:50

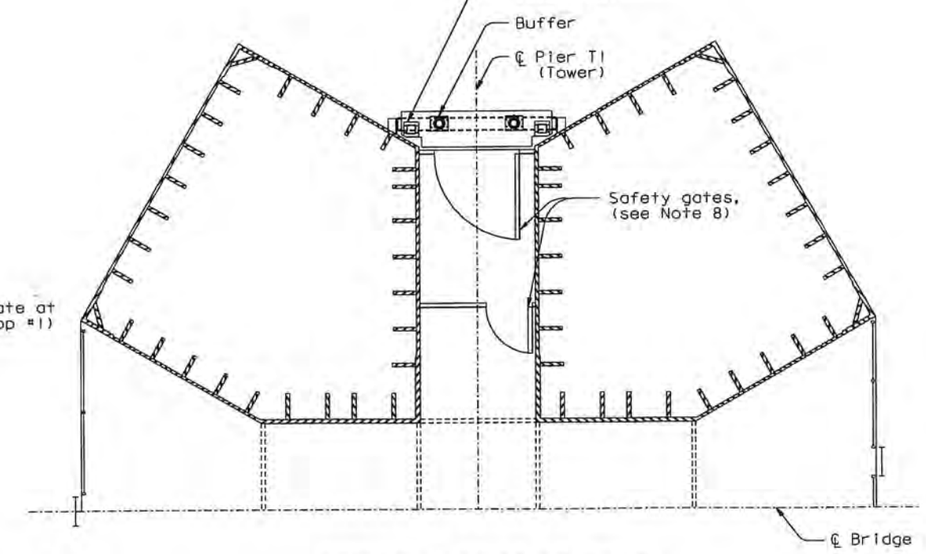

PARTIAL PLAN AT 13.000 M

SECTION B-B

1:50

NOTES:

1. For elevator safety gate details, see "Tower Elevator Enclosure Details No. 2" sheet.
2. For elevator safety enclosure details, see "Tower Elevator Enclosure Details No. 3" sheet.
3. ~~All C, L, WT~~ sections and plates shall be galvanized structural steel A709M Grade 345. All components for elevator safety gates and elevator safety enclosures shall be powder coated black.
4. ~~Welded~~ wire mesh shall be of 4 mm (5/32 inch) Dia galvanized steel wires complete with (1"x 1"x16 gauge) U-band frames, powder coated black, by Flynn Enslow or equivalent.
5. Cables shall be 3.2 mm (1/8 inch) diameter 1x19 wire ropes galvanized steel, powder coated black, by Cable Moore or equivalent. Cables shall be tensioned to 350 pound force maximum at both ends with Tuner Turnbuckle tensioners by Cable Moore or equivalent.
6. Gate hinges shall be 120 mm weld-on fixed hinge pin stainless steel #SSWM048FP, powder coated black, by H.A. Guden or equivalent.
7. Cable/wire mesh connections shall be galvanized steel "Separator clamps", powder coated black, by Cable Moore or equivalent.
8. For safety gates at Elev 13.000 m, see "Road Plans".
9. The Contractor shall field verify the clear distance between tower shafts at all gates and enclosures elevations prior to fabrication.

DIST.	COUNTY	ROUTE	KILOMETER POST TOTAL PROJECT	SHEET NO.	TOTAL SHEETS
04	SF	80	13.2/13.9	940SIRI	1204

REGISTERED ENGINEER - CIVIL

Tien Hung Ho No. C 43990 Exp. 06/30/13 CIVIL STATE OF CALIFORNIA

08-26-11

PLANS APPROVAL DATE

The State of California or its officers or agents shall not be responsible for the accuracy or completeness of electronic copies of this plan sheet.

T.Y. LIN / MOFFATT & NICHOL
825 BATTERY STREET
SAN FRANCISCO, CA 94111

Caltrans now has a web site! To get to the web site, go to: http://www.dot.ca.gov

CONTRACT CHANGE ORDER NO. 85
SHEET 22 OF 25

REQUESTS FOR INFORMATION NOT ADDRESSED IN THIS CCO REMAIN IN FORCE

MARK	DATE	DESCRIPTIONS	BY	CH'D	CCO#
1	11/03/11	ELEVATOR DETAILS	GM	TH	85
0	08/26/11	ELEVATOR DETAILS	GM	TH	85

REVISIONS

R. Valizadeh/V. Toan/Y. L./W. L./F. C.
DESIGN OVERSIGHT
SIGN OFF DATE 11/03/11

Rev. Date: 5-18-98

DESIGN BY G. Mok CHECKED T. Ho
DETAILS BY G. Mok CHECKED T. Ho
QUANTITIES BY G. Mok CHECKED T. Ho

ORIGINAL SCALE IN MILLIMETERS FOR REDUCED PLANS 0 10 20 30 40 50 60 70 80 90 100

PREPARED FOR THE STATE OF CALIFORNIA DEPARTMENT OF TRANSPORTATION

ALL DIMENSIONS ARE IN MILLIMETERS UNLESS OTHERWISE SHOWN

R. Manzanarez
PROJECT ENGINEER

BRIDGE NO. 34-0006L/R
KILOMETER POST 13.2/13.9

CU 04
EA 0120F1

DISREGARD PRINTS BEARING EARLIER REVISION DATES → 08/26/11

SAN FRANCISCO OAKLAND BAY BRIDGE
EAST SPAN SEISMIC SAFETY PROJECT
SELF-ANCHORED SUSPENSION BRIDGE
(SUPERSTRUCTURE & TOWER)

TOWER ELEVATOR ENCLOSURE DETAILS NO. 1

REVISION DATES (PRELIMINARY STAGE ONLY)

SHEET 623SIRI OF

FILE => L:\BB\04-0120F1\SAS\Contract Plans and CCO\CCO\CCO#85\6-Revision 11-03-11\DGN\akele03.dgn

100 % PS&E

DATE PLOTTED => 04 NOV 2011 TIME PLOTTED => 09:37:13

USERNAME => grivera

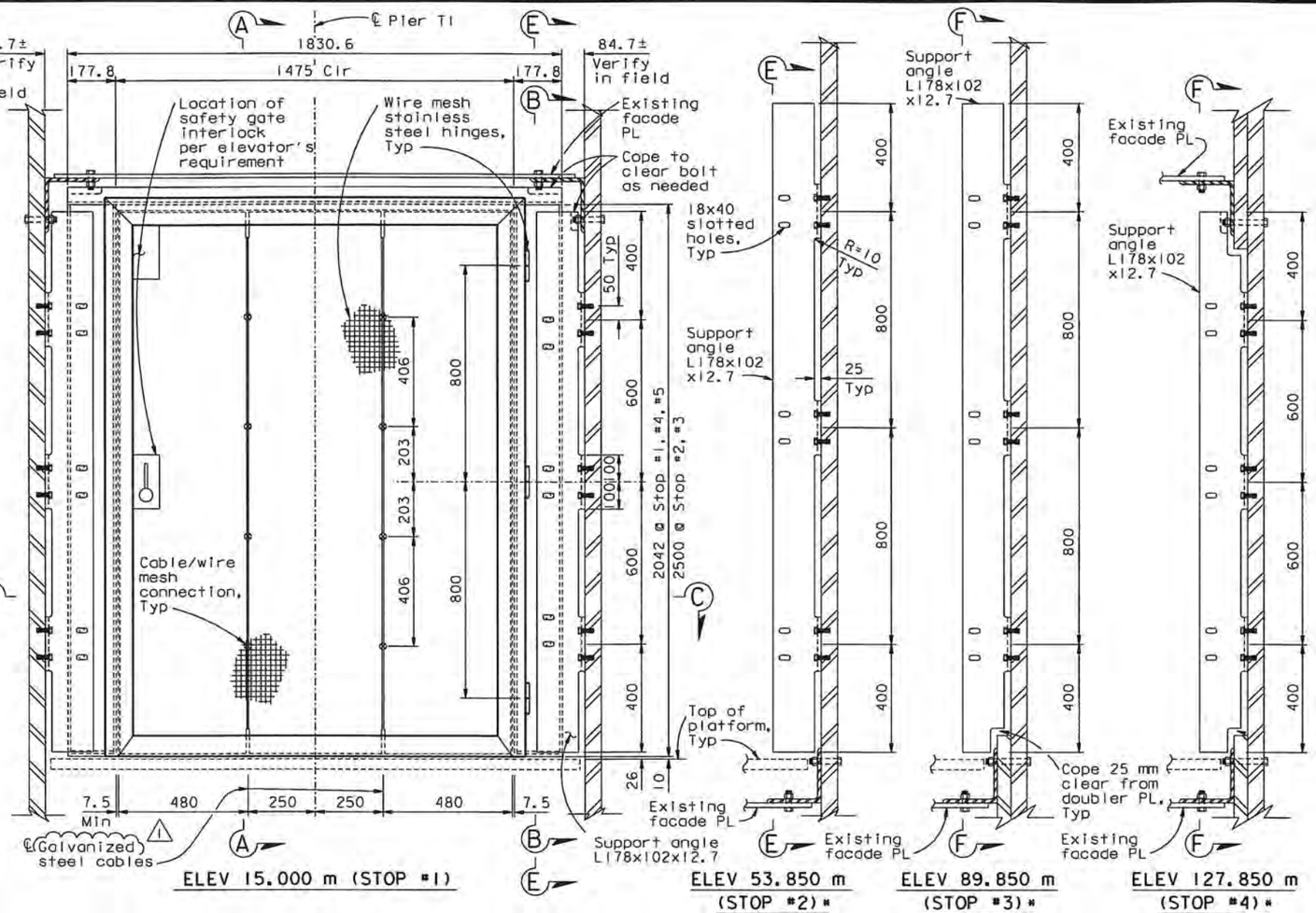

ELEVATOR SAFETY GATE

1:10 (*See Stop #1 for details not shown)

(Looking north towards elevator)

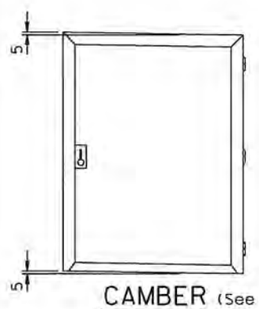

CAMBER (See Note 1)

NTS

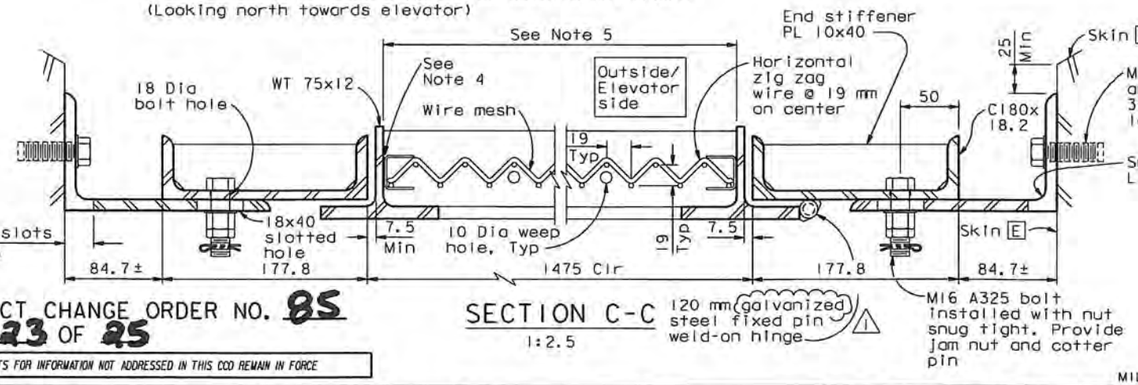

SECTION C-C

1:2.5

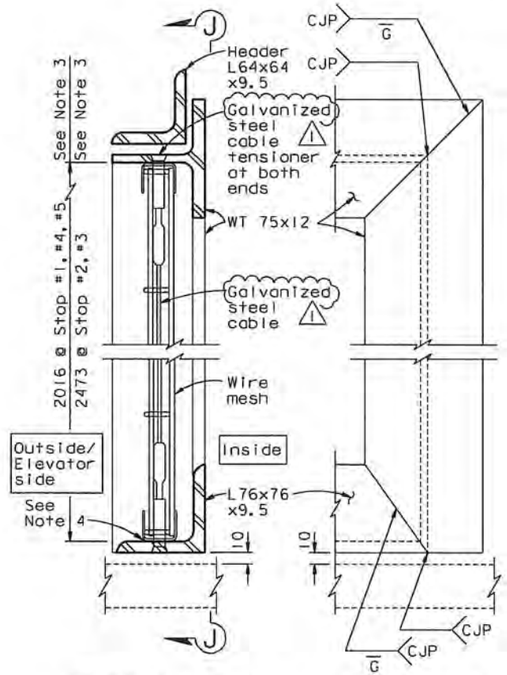

SECTION A-A

1:2.5

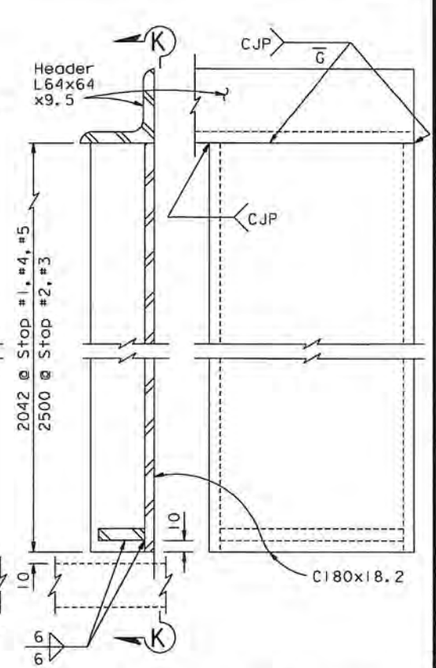

VIEW J-J

1:2.5

(Header not shown for clarity)

SECTION B-B

1:2.5

VIEW K-K

1:2.5

(Support angle not shown for clarity)

NOTES:

1. Provide 5 mm camber to account for self weight deflection of safety gate.
2. For Section E-E & F-F, see "Tower Elevator Enclosure Detail No.4" sheet.
3. Vertical height of steel frames shall be adjusted to receive the horizontal zigzag wires with U-band frame at top and bottom.
4. Welding of wire mesh U-band frame to steel frame shall be in accordance with wire mesh manufacturer's recommendations.
5. Width of steel frames shall be adjusted to receive the wire mesh with U-band frame.

CONTRACT CHANGE ORDER NO. 85

SHEET 23 OF 25

REQUESTS FOR INFORMATION NOT ADDRESSED IN THIS CCO REMAIN IN FORCE

ALL DIMENSIONS ARE IN MILLIMETERS UNLESS OTHERWISE SHOWN

DIST.	COUNTY	ROUTE	KILOMETER POST TOTAL PROJECT	SHEET NO.	TOTAL SHEETS
04	SF	80	13.2/13.9	940528I	1204

REGISTERED ENGINEER - CIVIL

08-19-11

PLANS APPROVAL DATE

REGISTERED PROFESSIONAL ENGINEER — Tien Hung Ho — No. C 43990 — Exp. 06/30/13 — CIVIL — STATE OF CALIFORNIA

The State of California or its officers or agents shall not be responsible for the accuracy or completeness of electronic copies of this plan sheet.

T.Y. LIN / MOFFATT & NICHOL
825 BATTERY STREET
SAN FRANCISCO, CA 94111

Caltrans now has a web site! To get to the web site, go to: http://www.dot.ca.gov

MARK	DATE	DESCRIPTIONS	BY	CH'D	CCO#
1	11/03/11	ELEVATOR DETAILS	GM	TH	85
0	08/19/11	ELEVATOR DETAILS	GM	TH	85

REVISIONS

	BY	CHECKED
DESIGN	G. Mok	T. Ho
DETAILS	G. Mok	T. Ho
QUANTITIES	G. Mok	T. Ho

PREPARED FOR THE STATE OF CALIFORNIA DEPARTMENT OF TRANSPORTATION

R. Manzanarez
PROJECT ENGINEER

BRIDGE NO. 34-0006L/R
KILOMETER POST 13.2/13.9

SAN FRANCISCO OAKLAND BAY BRIDGE
EAST SPAN SEISMIC SAFETY PROJECT
SELF-ANCHORED SUSPENSION BRIDGE
(SUPERSTRUCTURE & TOWER)

TOWER ELEVATOR ENCLOSURE DETAILS NO. 2

R. Valizadeh/V. Toan/Y.L./W.L./F.C.
DESIGN OVERSIGHT
SIGN OFF DATE 11/03/11

Rev. Date: 5-18-98

ORIGINAL SCALE IN MILLIMETERS FOR REDUCED PLANS 0 10 20 30 40 50 60 70 80 90 100

CU 04
EA 0120F1

DISREGARD PRINTS BEARING EARLIER REVISION DATES →

REVISION DATES (PRELIMINARY STAGE ONLY): 08/19/11

SHEET 523528I OF

FILE => I:\bb\04-0120F1\sas\contract plans and cco\cco\cco#85\6-revision 11-03-11\dgn\akele04.dgn

USERNAME => arivera DATE PLOTTED => 04 NOV 2011 TIME PLOTTED => 09:36:04

100 % PS&E

DIST.	COUNTY	ROUTE	KILOMETER POST TOTAL PROJECT	SHEET NO.	TOTAL SHEETS
04	SF	80	13.2/13.9	94053R1	1204

REGISTERED ENGINEER - CIVIL

08-19-11
PLANS APPROVAL DATE

Tien Hung Ha
No. C 43990
Exp. 06/30/13
CIVIL
REGISTERED PROFESSIONAL ENGINEER
STATE OF CALIFORNIA

The State of California or its officers or agents shall not be responsible for the accuracy or completeness of electronic copies of this plan sheet.

T.Y. LIN / MOFFATT & NICHOL
825 BATTERY STREET
SAN FRANCISCO, CA 94111

Caltrans now has a web site! To get to the web site, go to: http://www.dot.ca.gov

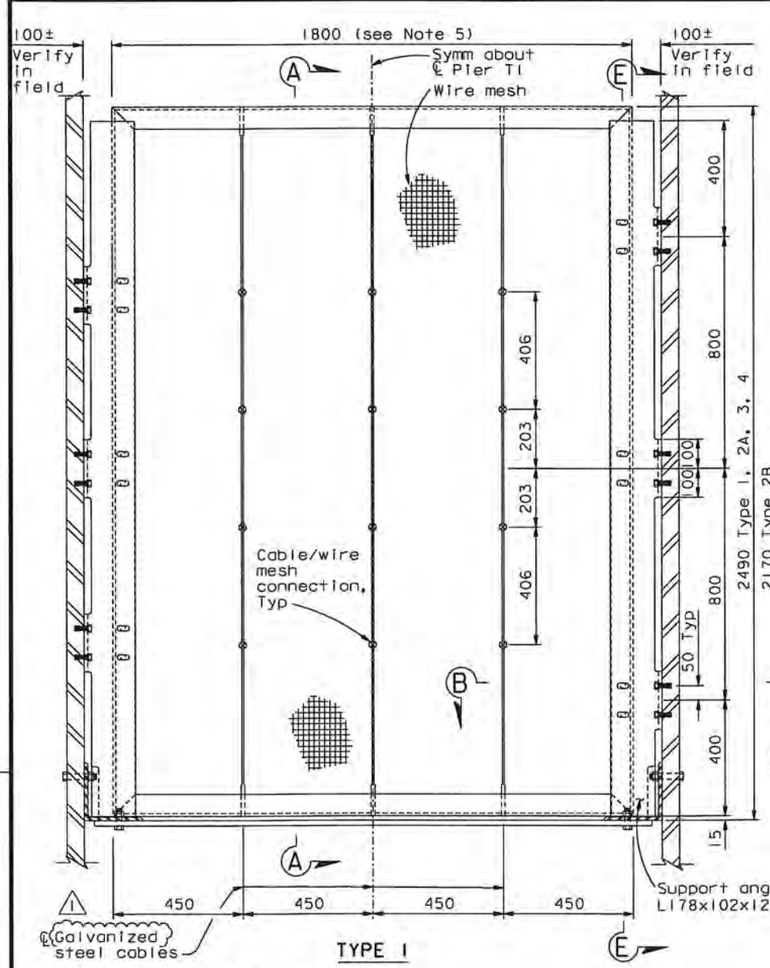

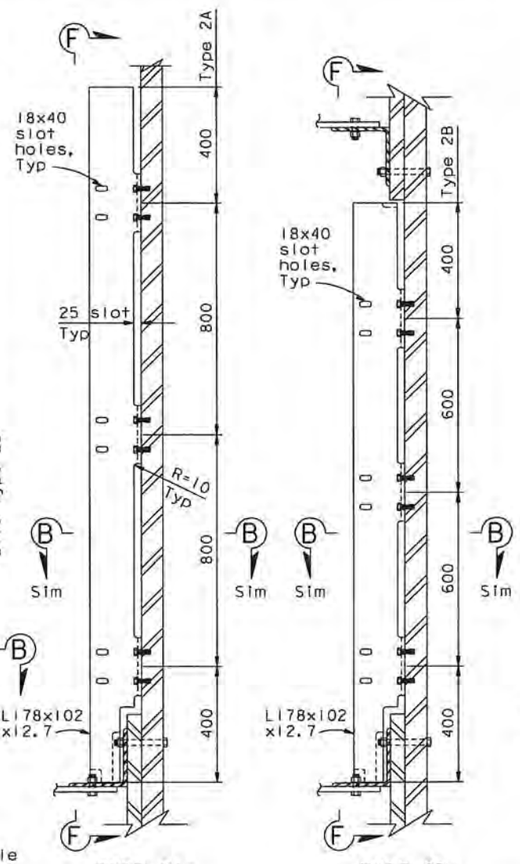

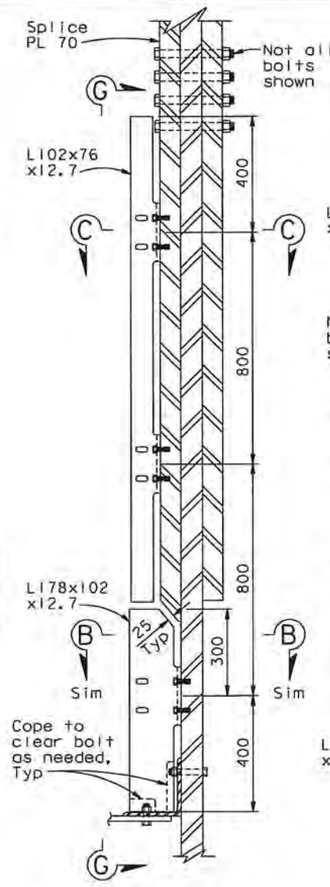

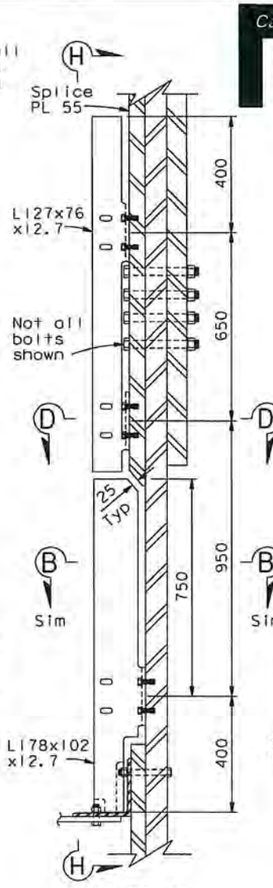

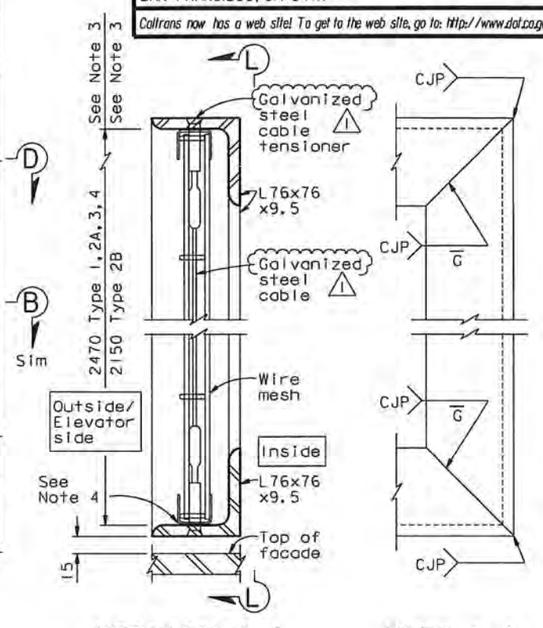

SAFETY ENCLOSURE DETAILS

(*See Type 1 for details not shown)

1:10

(Looking north towards elevator)

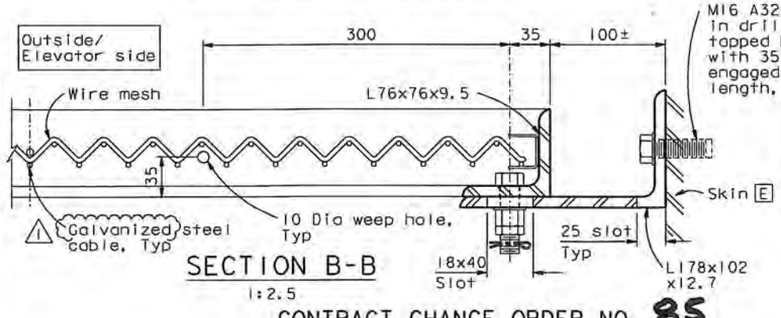

SECTION B-B
1:2.5

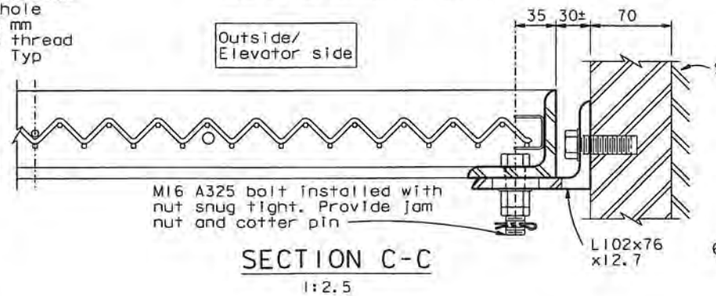

SECTION C-C
1:2.5

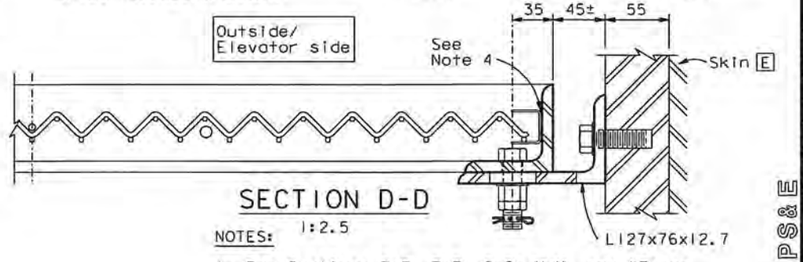

SECTION D-D
1:2.5

NOTES:

1. For Sections E-E, F-F, G-G, H-H, see "Tower Elevator Enclosure Details No.4" sheet.
2. Attachment of wire mesh to steel frames shall be per wire mesh manufacturer's requirements.
3. Vertical clear height of steel frames shall be adjusted to receive the wire mesh U-band frame.
4. Welding of wire mesh U-band frame to steel frame shall be in accordance with wire mesh manufacturer's recommendations.
5. Width of steel frames shall be adjusted to receive the wire mesh with U-band frame.
6. For details not shown, see "Tower Elevator Enclosure Details No.2" sheet.

CONTRACT CHANGE ORDER NO. 85
SHEET 24 OF 25

REQUESTS FOR INFORMATION NOT ADDRESSED IN THIS CCO REMAIN IN FORCE

ALL DIMENSIONS ARE IN MILLIMETERS UNLESS OTHERWISE SHOWN

100 % PS&E

MARK	DATE	REVISIONS	BY	CH'D	CCO#
1	11/03/11	ELEVATOR DETAILS	GM	TH	85
0	08/19/11	ELEVATOR DETAILS	GM	TH	85

DESIGN: BY G. Mok — CHECKED T. Ho
DETAILS: BY G. Mok — CHECKED T. Ho
QUANTITIES: BY G. Mok — CHECKED T. Ho

PREPARED FOR THE STATE OF CALIFORNIA DEPARTMENT OF TRANSPORTATION

R. Manzanarez
PROJECT ENGINEER

BRIDGE NO. 34-0006L/R
KILOMETER POST 13.2/13.9

SAN FRANCISCO OAKLAND BAY BRIDGE
EAST SPAN SEISMIC SAFETY PROJECT
SELF-ANCHORED SUSPENSION BRIDGE
(SUPERSTRUCTURE & TOWER)

TOWER ELEVATOR ENCLOSURE DETAILS NO. 3

R. Vallzadeh/V. Toan/Y.L./W.L./F.C.
DESIGN OVERSIGHT
SIGN OFF DATE 11/03/11

Rev. Date: 5-18-98

ORIGINAL SCALE IN MILLIMETERS FOR REDUCED PLANS 0 10 20 30 40 50 60 70 80 90 100

CU 04
EA 0120F1

DISREGARD PRINTS BEARING EARLIER REVISION DATES → REVISION DATES (PRELIMINARY STAGE ONLY) 08/19/11

SHEET 52353R1 OF

FILE => L:\BB\04-01200I\SAS\Contract Plans and CCO\CCO\CCO#85\6-Revision 11-03-11\DGN\akele05.dgn

USERNAME => crivera DATE PLOTTED => 04 NOV 2011 TIME PLOTTED => 09:38:18

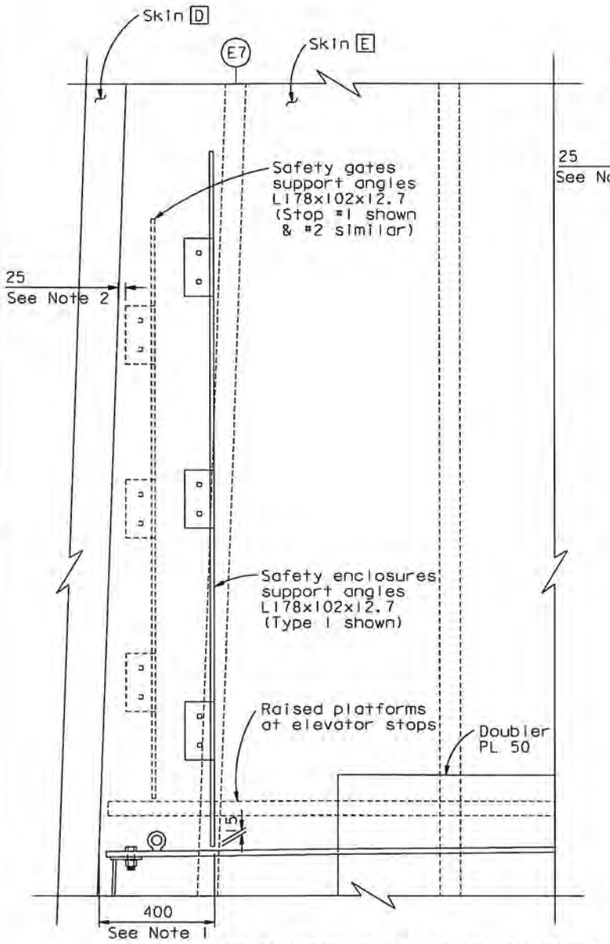

SECTION E-E (Elev 15.000 m thru Elev 77.850 m)

1:10
(North shaft shown, West shaft similar & opposite handed)

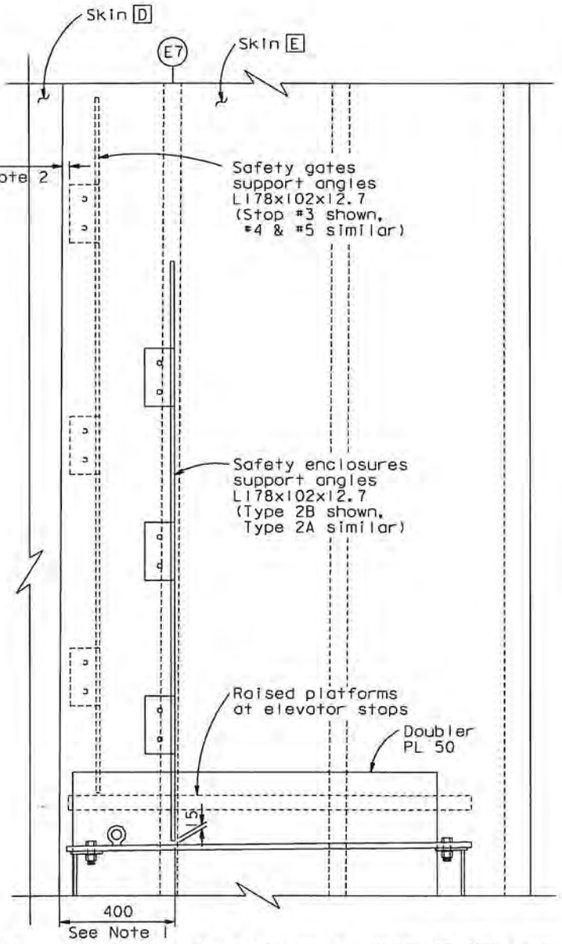

SECTION F-F (Elev 89.850 m thru Elev 139.850 m)

1:10
(North shaft shown, West shaft similar & opposite handed)

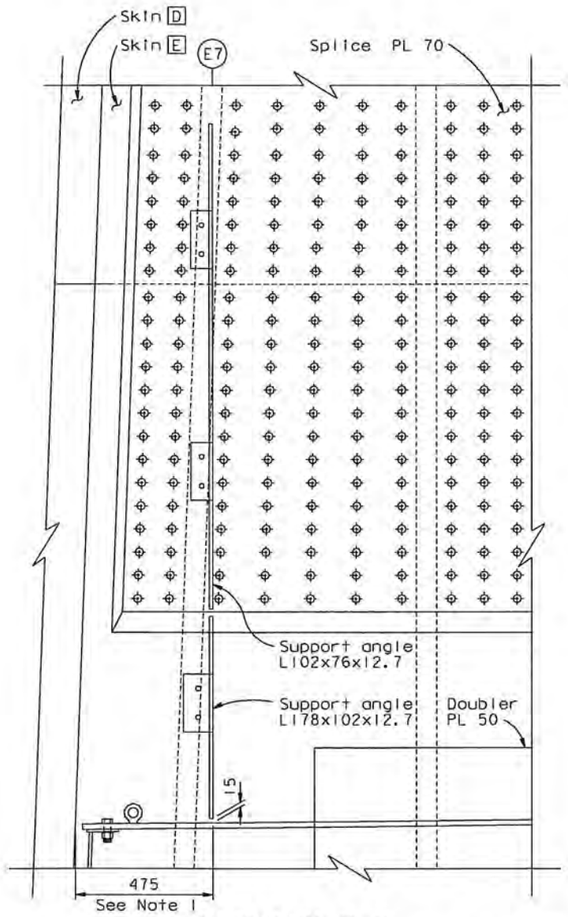

SECTION G-G (Elev 48.450 m)

1:10
(North shaft shown, West shaft similar & opposite handed)

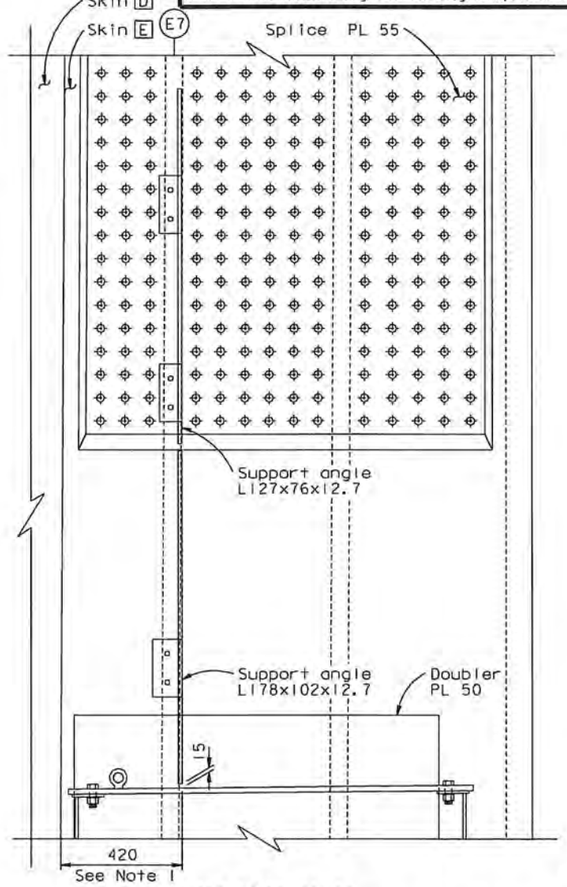

SECTION H-H (Elev 143.850 m)

1:10
(North shaft shown, West shaft similar & opposite handed)

NOTES:

1. Dimension may be adjusted to clear splice bolts, pad eyes and other interferences.
2. Dimension may be increased so that safety gate interlock will not interfere with the elevator.

CONTRACT CHANGE ORDER NO. 85
SHEET 25 OF 25

REQUESTS FOR INFORMATION NOT ADDRESSED IN THIS CCO REMAIN IN FORCE

ALL DIMENSIONS ARE IN MILLIMETERS UNLESS OTHERWISE SHOWN

DIST.	COUNTY	ROUTE	KILOMETER POST TOTAL PROJECT	SHEET NO.	TOTAL SHEETS
04	SF	80	13.2/13.9	940S4	1204

Caltrans Metric

REGISTERED ENGINEER - CIVIL
Tien Hung Ho
No. C 43990
Exp. 06/30/13
CIVIL
REGISTERED PROFESSIONAL ENGINEER
STATE OF CALIFORNIA

08-19-11
PLANS APPROVAL DATE

The State of California or its officers or agents shall not be responsible for the accuracy or completeness of electronic copies of this plan sheet.

T.Y. LIN / MOFFATT & NICHOL
825 BATTERY STREET
SAN FRANCISCO, CA 94111

Caltrans now has a web site! To get to the web site, go to: http://www.dot.ca.gov

MARK	DATE	REVISIONS	BY	CH'D	CCO#
0	08/19/11	ELEVATOR DETAILS	GM	TH	85

	BY	CHECKED
DESIGN	G. Mak	T. Ho
DETAILS	G. Mak	T. Ho
QUANTITIES	G. Mak	T. Ho

PREPARED FOR THE STATE OF CALIFORNIA DEPARTMENT OF TRANSPORTATION

R. Manzanarez
PROJECT ENGINEER

BRIDGE NO. 34-0006L/R
KILOMETER POST 13.2/13.9

SAN FRANCISCO OAKLAND BAY BRIDGE
EAST SPAN SEISMIC SAFETY PROJECT
SELF-ANCHORED SUSPENSION BRIDGE
(SUPERSTRUCTURE & TOWER)

TOWER ELEVATOR ENCLOSURE DETAILS NO. 4

R. Vaziadeh/V. Toan/Y. L./W. L./F. C.
DESIGN OVERSIGHT
SIGN OFF DATE 08/19/11

Rev. Date: 5-18-98

ORIGINAL SCALE IN MILLIMETERS FOR REDUCED PLANS 0 10 20 30 40 50 60 70 80 90 100

CU 04
EA 0120F1

DISREGARD PRINTS BEARING EARLIER REVISION DATES →

REVISION DATES (PRELIMINARY STAGE ONLY) 08/19/11

SHEET 523S4 OF

FILE => L:\BB\04-0120F1\SAS\Contract Plans and CCO\CCO\CCO#85\4-Revision 08-19-11\DGN\akele06.dgn

100% PS&E

TIME PLOTTED => 14:41:17
DATE PLOTTED => 19 AUG 2011
USERNAME => DWinrow

CONTRACT CHANGE ORDER

Change Requested by: Engineer

CCO: 87 **Suppl. No. 0** **Contract No. 04 – 0120F4** **Road** SF-80-13.2/13.9 **FED. AID LOC.:**

To: **AMERICAN BRIDGE/FLUOR ENTERPRISES INC A JOINT VENTURE**

You are directed to make the following changes from the plans and specifications or do the following described work not included in the plans and specifications for this contract. ***NOTE: This change order is not effective until approved by the Engineer.***

Description of work to be done, estimate of quantities and prices to be paid. (Segregate between additional work at contract price, agreed price and force account.) Unless otherwise stated, rates for rental of equipment cover only such time as equipment is actually used and no allowance will be made for idle time. This last percentage shown is the net accumulated increase or decrease from the original quantity in the Engineer's Estimate.

Adjustment of Compensation at Lump Sum:

Revise the East end Orthotropic Box Girder (OBG) Lifts 12 through 14 including, but not limited to, anchorage, floorbeams, longitudinal diaphragms, architectural housing, saddle housing and grillage, cable strand cutouts, saddle support beams, connections, access openings, stiffeners, plates, and counterweights.

This change order includes East end OBG additional fabrication costs identified prior to August 26, 2010, and compensated for in CCO 160 "East End Delay Impacts."

The following revised plan sheets detail the changes addressed in this change order: 426R1, 622R3, 625R1, 627R2, 628R2, 629R4, 630R2, 631R3, 632R1, 633R3, 633S1, 634R1, 635R1, 635S1, 635S2, 635S3, 638R3, 640R1, 640S1R1, 653R1, 664R1, 674R1, 675R3, 675S1, 676R1, 676S1, 677R1, 678R1, 679R1, 679S1, 680R1, 681R1, 681S1, 682R2, 683R1, 685R1, 686R1, 687R1, 688R1, 691R1, 693R1, 693S1, 694R3, 694S1R1, 695R3, 695S1R1, 696R3, 697R3, 698R3, 699R1, 699S1, 700R1, 701R1, 702R1, 703R2, 703S1, 704R2, 704S1R1, 705R1, 706R2, 707R1, 708R2, 709R2, 710R3, 710S1R1, 711R1, 712R2, 714R3, 715R1, 716R1, 716S1, 717R1, 718R1, 719R1, 720R1, 721R1, 722R2, 722S1, 723R1, 725R2, 725S1, 726R2, 727R1, 727S1, 732R3, 732S1, 733R4, 733S1, 733S2, 735R4, 736R5, 737R4, 740R3, 785R1, 786R1, 789R1, 790R1, 790S1, 790S2, 805R1, 805S1, 806R1, 806S1, 811R1, 877R3, 878R3, 943R3, 943S1R1, 949R2, 951R4, 959R1, 986R1 and 986S1 (of 1204) as shown on sheets 3 through 115 of this change order.

This change order resolves the costs associated with Contractor Request for Information (RFI) numbers 22, 62, 89R1, 106, 254R2, 258, 268, 325, 341, 342, 347, 364R0, 364R1, 425, 443, 446, 491, 503, 504, 508R4, 513, 517, 550, 551, 552, 558, 582, 597, 605R0, 606R1, 664, 744, 747, 762R0, 762R2, 772, 777R2, 777R4, 777R5, 777R6, 777R7, 783, 814R0, 814R1, 869, 889, 894, 904, 929, 930R0, 930R1, 930R2, 980, 992, 1003, 1031, 1078, 1081R1, 1126, 1137R1, 1165R0, 1165R1, 1170R0, 1171, 1200, 1201R0, 1201R1, 1201R2, 1209, 1210R0, 1210R1, 1213, 1214, 1220, 1226, 1228, 1230, 1231, 1232R0, 1232R1, 1235R0, 1246, 1261R0, 1261R1, 1270R0, 1270R1, 1271, 1273R0, 1273R1, 1276, 1282, 1289, 1300, 1301R0, 1301R1, 1302, 1303R0, 1303R1, 1304, 1305R0, 1305R1, 1305R2, 1305R3, 1309R1, 1309R2, 1310R0, 1310R1, 1310R2, 1311R0, 1313, 1324R0, 1324R1, 1335R0, 1335R1, 1335R2, 1336, 1338R0, 1341, 1342R0, 1342R1, 1343, 1344, 1347, 1349, 1355, 1358R0, 1358R1, 1373, 1375, 1377, 1386, 1394R0, 1394R1, 1421R1, 1421R2, 1421R3, 1421R4, 1428, 1429R1, 1430, 1459R0, 1463, 1467, 1485, 1503R0, 1503R1, 1511R0, 1516, 1555, 1572, 1573, 1628, 1640, 1644R0, 1644R3, 1673, 1753R0, 1766, 1882R1, 1977, 2032, TC-RFI-0002R0, TC-RFI-0005R0, TC-RFI-0011R0, TC-RFI-0018R1, TC-RFI-0031R0, TC-RFI-0034R0, TC-RFI-0034R2, TC-RFI-0035R0, TC-RFI-0043R0, TC-RFI-0045R0, TC-RFI-0051R0, TC-RFI-0055R0, TC-RFI-0055R1, TC-RFI-0060R0, TC-RFI-0061R0, TC-RFI-0062R0, TC-RFI-0074R0, TC-RFI-0080R0, TC-RFI-0086R0, TC-RFI-0088R0, TC-RFI-0094R0, TC-RFI-0097R1, TC-RFI-0102R0, TC-RFI-0115R0, TC-RFI-00125R0, TVC-RFI-0004R0, TVC-RFI-0010R0, TVC-RFI-0026R0, TVC-RFI-0029R0, TVC-RFI-0033R0, TVC-RFI-0035R0, TVC-RFI-0036R0, TVC-RFI-0037R0, TVC-RFI-0039R0, TVC-RFI-0042R0, TVC-RFI-0042R1, TVC-RFI-0065R0, TVC-RFI-0067R0, TVC-RFI-0070R0, TVC-RFI-0071R0, TVC-RFI-0079R0, TVC-RFI-0123R0, TVC-RFI-0125R0, TVC-RFI-0137R0, TVC-RFI-0142R0, TVC-RFI-0144R1, TVC-RFI-0148R0, TVC-RFI-0153R0, TVC-RFI-0156R2, TVC-RFI-0161R0, TVC-RFI-0162R1, TVC-RFI-0206R0, TVC-RFI-0209R0, TVC-RFI-210R0, TVC-RFI-0231R0, TVC-RFI-0234R0, TVC-RFI-0237R0, TVC-RFI-0238R0, TVC-RFI-0257R0, TVC-RFI-0261R0, TVC-RFI-0261R1, TVC-RFI-0272R0, TVC-RFI-0327R0, TVC-RFI-0575R0, TVC-RFI-0575R1, and TVC-RFI-0646R0 with respect to changes listed above.

CONTRACT CHANGE ORDER

Change Requested by: Engineer

CCO: 87 **Suppl. No.** 0 **Contract No.** 04 – 0120F4 **Road** SF-80-13.2/13.9 **FED. AID LOC.:**

This is a no cost change, since the cost for these change order items has been included in CCO 160. This sum constitutes full and complete compensation for furnishing all labor, material, tools and incidentals including all markups by reason of this change.

Adjustment of Compensation at Lump Sum Price.....$0.00

Estimated Cost: **Increase** ☐ **Decrease** ☐ **$0.00**

By reason of this order the time of completion will be adjusted as follows: **0 Days**

Submitted by

Signature **Resident Engineer** Darryl Schram, Senior T.E. **Date** 1-28-13

Approval Recommended by

Signature **Supervising Transportation Engineer** William Casey, Supervising T.E. **Date** 1-28-13

Engineer Approval by

Signature **Supervising Transportation Engineer** William Casey, Supervising T.E. **Date** 2-20-13

We the undersigned contractor, have given careful consideration to the change proposed and agree, if this proposal is approved, that we will provide all equipment, furnish the materials, except as otherwise be noted above, and perform all services necessary for the work above specified, and will accept as full payment therefor the prices shown above.

NOTE: If you, the contractor, do not sign acceptance of this order, your attention is directed to the requirements of the specifications as to proceeding with the ordered work and filing a written protest within the time therein specified.

Contractor Acceptance by

Signature (Print name and title) BRIAN A. PETERSEN - PROJECT DIRECTOR **Date** 19FEB13

STATE OF CALIFORNIA - DEPARTMENT OF TRANSPORTATION

CONTRACT CHANGE ORDER MEMORANDUM

TO: Tony Anziano, Program Manager /	FILE: **E.A.** 04 - 0120F4
FROM: Darryl Schram, Senior TE	**CO-RTE-PM** SF-80-13.2/13.9
	FED. NO.
CCO#: **87** SUPPLEMENT#: **0** Category Code: **CHPT**	CONTINGENCY BALANCE (incl. this change) **$93,703,044.99**
COST: **$0.00** INCREASE ☐ DECREASE ☐	HEADQUARTERS APPROVAL REQUIRED? ☐ YES ☑ NO
SUPPLEMENTAL FUNDS PROVIDED: **$0.00**	IS THIS REQUEST IN ACCORDANCE WITH ENVIRONMENTAL DOCUMENTS? ☑ YES ☐ NO
CCO DESCRIPTION: East End OBG	**PROJECT DESCRIPTION:** CONSTRUCT SELF-ANCHORED SUSPENSION BRIDGE

Original Contract Time:	Time Adj. This Change:	Previously Approved CCO Time Adjustments:	Percentage Time Adjusted: (including this change)	Total # of Unreconciled Deferred Time CCO(s): (including this change)
2490 Day(s)	**0** Day(s)	**501** Day(s)	**20** %	**3**

THIS CHANGE ORDER PROVIDES FOR:

Revising the East end Orthotropic Box Girder (OBG) Lifts 12 through 14 including anchorage, floorbeams, longitudinal diaphragms, architectural housing, saddle housing and grillage, cable strand cutouts, saddle support beams and connections, access openings, stiffeners, plates, and counterweights.

Through the Contractor submittal and RFI process, various conflicts between the details shown in the plan sheets were corrected and revisions were made to avoid interferences within the East end OBG. The costs for CCO 87 were included in CCO 160 "East End Delay Impacts." CCO 160 compensated the Contractor for all East end OBG element changes in Lifts 12 through 14 as of August 26, 2010.

This change order resolves the costs associated with Contractor Request for Information (RFI) numbers 22, 62, 89R1, 106, 254R2, 258, 268, 325, 341, 342, 347, 364R0, 364R1, 425, 443, 446, 491, 503, 504, 508R4, 513, 517, 550, 551, 552, 558, 582, 597, 605R0, 606R1, 664, 744, 747, 762R0, 762R2, 772, 777R2, 777R4, 777R5, 777R6, 777R7, 783, 814R0, 814R1, 869, 889, 894, 904, 929, 930R0, 930R1, 930R2, 980, 992, 1003, 1031, 1078, 1081R1, 1126, 1137R1, 1165R0, 1165R1, 1170R0, 1171, 1200, 1201R0, 1201R1, 1201R2, 1209, 1210R0, 1210R1, 1213, 1214, 1220, 1226, 1228, 1230, 1231, 1232R0, 1232R1, 1235R0, 1246, 1261R0, 1261R1, 1270R0, 1270R1, 1271, 1273R0, 1273R1, 1276, 1282, 1289, 1300, 1301R0, 1301R1, 1302, 1303R0, 1303R1, 1304, 1305R0, 1305R1, 1305R2, 1305R3, 1309R1, 1309R2, 1310R0, 1310R1, 1310R2, 1311R0, 1313, 1324R0, 1324R1, 1335R0, 1335R1, 1335R2, 1336, 1338R0, 1341, 1342R0, 1342R1, 1343, 1344, 1347, 1349, 1355, 1358R0, 1358R1, 1373, 1375, 1377, 1386, 1394R0, 1394R1, 1421R1, 1421R2, 1421R3, 1421R4, 1428, 1429R1, 1430, 1459R0, 1463, 1467, 1485, 1503R0, 1503R1, 1511R0, 1516, 1555, 1572, 1573, 1628, 1640, 1644R0, 1644R3, 1673, 1753R0, 1766, 1882R1, 1977, 2032, TC-RFI-0002R0, TC-RFI-0005R0, TC-RFI-0011R0, TC-RFI-0018R1, TC-RFI-0031R0, TC-RFI-0034R0, TC-RFI-0034R2, TC-RFI-0035R0, TC-RFI-0043R0, TC-RFI-0045R0, TC-RFI-0051R0, TC-RFI-0055R0, TC-RFI-0055R1, TC-RFI-0060R0, TC-RFI-0061R0, TC-RFI-0062R0, TC-RFI-0074R0, TC-RFI-0080R0, TC-RFI-0086R0, TC-RFI-0088R0, TC-RFI-0094R0, TC-RFI-0097R1, TC-RFI-0102R0, TC-RFI-0115R0, TC-RFI-00125R0, TVC-RFI-0004R0, TVC-RFI-0010R0, TVC-RFI-0026R0, TVC-RFI-0029R0, TVC-RFI-0033R0, TVC-RFI-0035R0, TVC-RFI-0036R0, TVC-RFI-0037R0, TVC-RFI-0039R0, TVC-RFI-0042R0, TVC-RFI-0042R1, TVC-RFI-0065R0, TVC-RFI-0067R0, TVC-RFI-0070R0, TVC-RFI-0071R0, TVC-RFI-0079R0, TVC-RFI-0123R0, TVC-RFI-0125R0, TVC-RFI-0137R0, TVC-RFI-0142R0, TVC-RFI-0144R1, TVC-RFI-0148R0, TVC-RFI-0153R0, TVC-RFI-0156R2, TVC-RFI-0161R0, TVC-RFI-0162R1, TVC-RFI-0206R0, TVC-RFI-0209R0, TVC-RFI-210R0, TVC-RFI-0231R0, TVC-RFI-0234R0, TVC-RFI-0237R0, TVC-RFI-0238R0, TVC-RFI-0257R0, TVC-RFI-0261R0, TVC-RFI-0261R1, TVC-RFI-0272R0, TVC-RFI-0327R0, TVC-RFI-0575R0, TVC-RFI-0575R1, and TVC-RFI-0646R0 with respect to changes listed above.

Since the cost for these change order items has been included in Contract Change Order 160 (CCO 160) resolution costs, the net payment in this change order is zero.

A determination of the delay in completion of the contract due to work specified by Contract Change Order 87, has been made in CCO 160. Therefore, no adjustment of time is warranted by reason of this change order.

This change order has concurrence from William Casey (Supervising TE), Wenyi Long (Bridge Design), Jing Chen (District Design), and Lina Ellis (Maintenance).

ADA Notice: For individuals with sensory disabilities, this document is available in alternate formats. For information call: (916) 654-6410 or TDD (916) 654-3880 or write Records and Forms Management, 1120 N Street, MS-89, Sacramento, CA 95814.

CONCURRED BY:			
Construction Engineer:	William Casey, Sup TE	Date	11/2/10
Bridge Engineer:		Date	
Project Engineer:	CT Oversight, Wenyi Long, P.E.	Date	9/2/11
Project Manager:		Date	
FHWA Rep.:		Date	
Environmental:		Date	
Other (specify):	Struct. Maint, Lina Ellis	Date	9/2/11
Other (specify):	District Design, Jing Chen	Date	9/2/11
District Prior Approval By:		Date	
HQ (Issue Approve) By:		Date	
Resident Engineer's Signature:		Date	1-28-13

ESTIMATE OF COST

	THIS REQUEST	TOTAL TO DATE
ITEMS	$0.00	$0.00
FORCE ACCOUNT	$0.00	$0.00
AGREED PRICE	$0.00	$0.00
ADJUSTMENT	$0.00	$0.00
TOTAL	$0.00	$0.00

FEDERAL PARTICIPATION

☐ PARTICIPATING ☐ PARTICIPATING IN PART ☑ NONE
☐ NON-PARTICIPATING (MAINTENANCE) ☐ NON-PARTICIPATING

FEDERAL SEGREGATION (if more than one Funding Source or P.I.P. type)
☐ CCO FUNDED PER CONTRACT ☐ CCO FUNDED AS FOLLOWS

FEDERAL FUNDING SOURCE PERCENT

ADA Notice: For individuals with sensory disabilities, this document is available in alternate formats. For information call: (916) 654-6410 or TDD (916) 654-3880 or write Records and Forms Management, 1120 N Street, MS-89, Sacramento, CA 95814.

STRUCTURAL COMPONENT	PANEL POINTS PP	STEEL GRADE	SPCM	TM/SRM	TTP
BOX GIRDER					
Girder Plates					
Face A	PP8 - PP110	A 709M Grade 345		X	
Face B, H	PP8 - PP110	A 709M Grade 345	*	X	
Face C	PP8 - PP110	A 709M Grade 345	*	X	
Face D	PP8 - PP110	A 709M Grade 345	*	X	
Face E	PP8 - PP110	A 709M Grade 345	*	X	
Face F	PP8 - PP110	A 709M Grade 345	*	X	
Face Q	PP8 - PP110	A 709M Grade 345			
All Faces (except architectural plates)	PP 110-Hinge A	A 709M Grade 345	*	X	*
Architectural Plates	PP 110-Hinge A	A 709M Grade 345			
Girder Stiffeners					
All Faces	PP8-PP110	A 709M Grade 345**		X	
Architectural Plates	PP 110-Hinge A	A 709M Grade 345			
All Other Faces	PP 110-Hinge A	A 709M Grade 345**		X	
Rib Transitions and terminations		A 709M Grade 345		X	
Longitudinal Shear Plates					
Type 1		A 709M Grade 345		X	
Type 2 (W3 & E3 Lines)	PP120-PP127	A 709M Grade 345	X	X	*
Type 2 (Typical)				X	
Longitudinal Truss Gusset C & E	PP 9 to 118	A 709M Grade 345		X	
Stiffeners Plates for Access from Girder to Cross Beam	Typical at Cross Beams	A 709M Grade 345			
CROSS BEAM					
Typical and at Pier E2	PP8 - PP119	A 709M Grade 345	*	X	*
At East Anchorage			X	X	
FLOOR BEAM		A 709M Grade 345	*	X	*
HINGE A BULKHEADS	PP 127, 128.3	A 709M Grade 345	*	X	
SUSPENSION SYSTEM					
Suspender Brackets		A 709M Grade 345		X	
Cable Brackets		A 709M Grade 345		X	
Saddle Support Beam		A 709M Grade 345		X	
EAST CABLE ANCHORAGE		A 709M Grade 345	X	X	
Top Anchorage Plate		A 709M Grade 345	X	X	
PT Strand Stiffeners	PP 8	A 709M Grade 345		X	
End Stiffeners Plates	PP 8	A 709M Grade 345		X	
Bearing Stiffeners, Shear Key Stiffeners, Girder Key Plates, PL 50x700 (1)	PP119	A 709M Grade 345		X	X
Girder Diaphragm Plates	PP119	A 709M Grade 345		X	X
East Saddle Grillages	PP119	A 709M Grade 345	X	X	X
Girder Edge Beams	PP115 to PP128	A 709M Grade 345		X	
Girder Plate "K"	PP 117.5 to PP121	A 709M Grade 345	X	X	
Girder Plate "Vertical"	PP 120 to PP125	A 709M Grade 345	X	X	
End Block Plate	PP 128.3 to Hinge A	A 709M Grade 345		X	

** Stiffener plates 2 and 10 from PP8 to Hinge A are A709M HPS 485W

ABBREVIATIONS:

SPCM - Seismic Performance Critical Member
TM/SRM - Tension Member / Stress Reversal Member (See note 3)
TTP - Through Thickness Properties

STRUCTURAL COMPONENT	STEEL GRADE	SPCM	TM/SRM	TTP
Tower Shaft				
Tower Skin PL	A 709M Grade 345		See Note 4	X
Longitudinal Stiffener PL	A 709M Grade 345		See Note 4	X
Diagonal Stiffener PL	A 709M Grade 345		See Note 4	X
Tower Base Shear PL				
Tower Base Shear PL (Skin PL)	A 709M Grade 345			X
Tower Base Shear PL (Stiffener PL)	A 709M Grade 345			X
Tower Splice at 50.300 m, 83.000 m, 114.000 m				
Typical	A 709M Grade 345		See Note 4	X
Longitudinal Stiffener Splice PL	A 709M HPS 485W		See Note 4	X
Tower Splice at 146.280 m	A 709M HPS 485W		See Note 4	X
Tower Strut				
Shear Link	Shear Link Grade 345	X	X	X
Shear Link at Connection	Shear Link Grade 485	X	X	X
Shear Link Stiffener PL	A 709M Grade 345	X	X	X
Flange Splice PL	Shear Link Grade 485	X	X	X
Web Connection PL	Shear Link Grade 485	X	X	X
Doubler PL	A 709M HPS 485W		X	X
Tower Cross Bracing	A 709M Grade 345	X	X	X
Tower Strut Facade	A 709M Grade 345			
Tower Diaphragm Type 1A and 1B	A 709M Grade 345			
Tower Diaphragm Type 2A, 2B, 2C, 3A and 3B				
Diaphragm PL	A 709M HPS 485W		X	X
Web PL	A 709M HPS 485W			X
Connection PL	A 709M HPS 485W			X
Splice PL	A 709M HPS 485W			X
Channel	A 709M Grade 345			
Fit Lug PL	A 709M Grade 345			
Intermediate Stiffener PL	A 709M Grade 345			
Tower Diaphragm at 9 m and 13 m	A 709M Grade 345			
Tower Anchorage	A 709M Grade 345		See Note 4	X
Tower Skirt	A 709M Grade 345			
Tower Saddle Grillage				
Typical	A 709M HPS 485W		X	X
Top PL	A 709M Grade 345			X
Angle	A 709M Grade 345			
Bracket For Suspender at Tower	A 709M HPS 485W		X	X
Tower Saddle				
Built-up Portion (t ≤ 100)	A 709M Grade 345			X
Built-up Portion (t > 100)	A 572M (modified) Grade 345			X
Tower Head				
Tower Head Skin PL	A 709M Grade 345			
Tower Head Stiffener PL	A 709M Grade 345			
Tower Head Diaphragm	A 709M Grade 345			
Tower Top Diaphragm	A 709M Grade 345			

STRUCTURAL COMPONENT	STEEL GRADE	SPCM	TM/SRM	TTP
Extra Strong Steel Pipe				
At Cap Beam Transverse Tendons	A 53 Type S Grade B			
At Tie Down Cables	A 709M Grade 345			
Closure Joint	A 709M HPS 485W		X	X
Hinge K Beam				
Pipe Beam Tubular (t=100)	Pipe Beam Grade 690	X	X	X
Pipe Beam Tubular (t=80)	Pipe Beam Grade 485	X	X	X
Anchorage PLs, Ring Stiffener PLs, Stiffener PLs	Pipe Beam Grade 485		X	X
West Deviation Saddle				
Built-up Portion (t ≤ 100)	A 709M HPS 485W			X
Built-up Portion (t > 100)	A 572M (modified) Grade 345			X
West Jacking Frame				
Jacking Frame	A 709M HPS 485W			X
Frame Blocking	A 709M HPS 485W			

LEGEND:

X - "Indicates that the entire structural component has the indicated property".

* - "Indicates that a limited portion of the structural component has the indicated property, as shown on the plans".

NOTES:

1. For definition of structural components, see the detail drawings.
2. All welds and splice plates to SPCM plates shall be SPCM quality.
3. A blank in "TM/SRM" Column Indicates member does not sustain tension.
4. The "TM/SRM" designation shall apply only to welds which are within 30° of horizontal in their final erected position.
5. At the Contractor's option, it is acceptable to use SPCM/TTP grade steel for panels with lifting lugs in areas where SPCM/TTP is not required per design. (1)

CONTRACT CHANGE ORDER NO. ____
SHEET ___ OF ___

REQUESTS FOR INFORMATION NOT ADDRESSED IN THIS CCO REMAIN IN FORCE

ALL DIMENSIONS ARE IN MILLIMETERS UNLESS OTHERWISE SHOWN

DIST.	COUNTY	ROUTE	KILOMETER POST TOTAL PROJECT	SHEET NO.	TOTAL SHEETS
04	SF	80	13.2/13.9	426R1	1204

Caltrans Metric

REGISTERED ENGINEER - CIVIL

12-6-04
PLANS APPROVAL DATE

The State of California or its officers or agents shall not be responsible for the accuracy or completeness of electronic copies of this plan sheet.

REGISTERED PROFESSIONAL ENGINEER
Marwan N. Nader
No. C 054426
Exp. 12/31/11
CIVIL
STATE OF CALIFORNIA

T.Y. LIN / MOFFATT & NICHOL
825 BATTERY STREET
SAN FRANCISCO, CA 94111

Caltrans now has a web site! To get to the web site, go to: http://www.dot.ca.gov

MARK	DATE	DESCRIPTIONS	BY	CH'D	CCO#
1	09/01/11	EAST END OBG	MN	DT	87
REVISIONS					

R. Vallzadeh/V. Toan/Y.L./W.L./F.C.
DESIGN OVERSIGHT
SIGN OFF DATE 09/01/11

	BY	CHECKED
DESIGN	M. Nader	S. Rodriguez
DETAILS	T. Ho	S. Rodriguez
QUANTITIES	D. Harrison	N. Vo

PREPARED FOR THE
STATE OF CALIFORNIA
DEPARTMENT OF TRANSPORTATION

R. Manzanarez
PROJECT ENGINEER

BRIDGE NO. 34-0006L/R
KILOMETER POST 13.2/13.9

SAN FRANCISCO OAKLAND BAY BRIDGE
EAST SPAN SEISMIC SAFETY PROJECT
SELF-ANCHORED SUSPENSION BRIDGE
(SUPERSTRUCTURE & TOWER)

GENERAL NOTES NO. 4

Rev. Date: 5-18-98

ORIGINAL SCALE IN MILLIMETERS FOR REDUCED PLANS 0 10 20 30 40 50 60 70 80 90 100

CU 04
EA 0120F1

DISREGARD PRINTS BEARING EARLIER REVISION DATES

REVISION DATES (PRELIMINARY STAGE ONLY): 09/28/02 07/01/02 12/19/02 10/13/05 12/07/05

SHEET 009R1 OF

FILE -> I:\bb\04-012001\sas\contract plans and cco\cco\cco#87\1-original 09-01-11\dgn\aagen04.dgn

USERNAME -> PTam
DATE PLOTTED -> 30 AUG 2011
TIME PLOTTED -> 09:32:32
100% PS&E

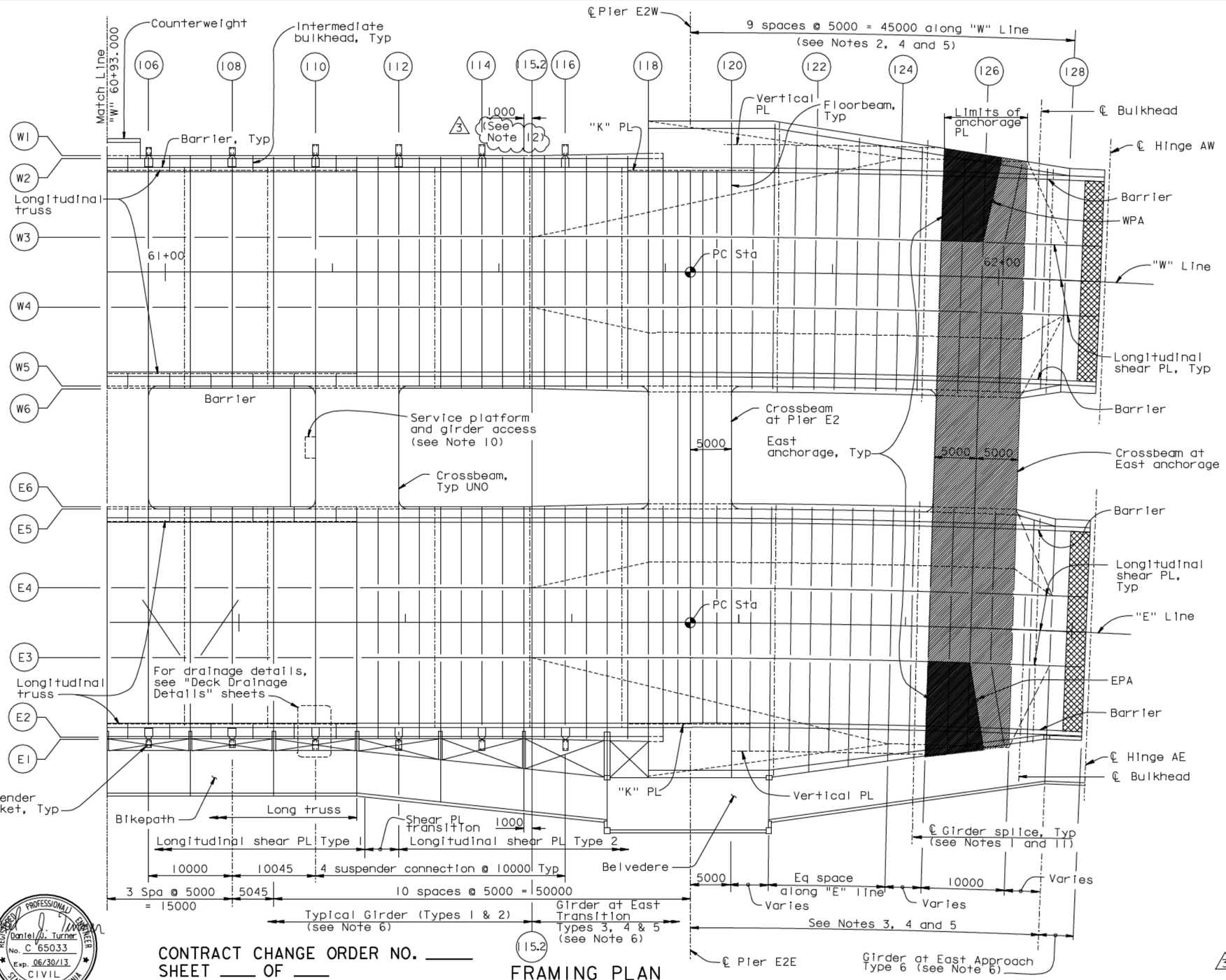

CONTRACT CHANGE ORDER NO. ____
SHEET ___ OF ___

REQUESTS FOR INFORMATION NOT ADDRESSED IN THIS CCO REMAIN IN FORCE

FRAMING PLAN
1:250

LEGEND:

- East anchorage
- Top anchorage
- Blockout for modular joint (see Note 7)

NOTES:

1. For girder splice details, see "Typical Girder Details" sheets.
2. "W" Line floorbeams from PP120.5 through PP124.5, and PP126, PP127.5 and PP128 are radial with respect to "W" Line curve.
3. "E" Line floorbeams from PP120.5 through PP124.5, and PP126, PP127.5 and 128 are aligned with "W" Line floorbeams and radial with respect to "E" Line curve.
4. "W" and "E" Line floorbeams from PP118 through PP120 are parallel.
5. "W" and "E" Line floorbeams from PP125 through PP127 are parallel. At the Contractor's option, 3 "E" line floorbeam at PP127.5 may be parallel to "E" line floorbeam at PP127, subject to review and approval of the engineer.
6. For typical girder details, see "Typical Girder Details" sheets. For girder details and transition at East transition PP118 through PP128, see "Girder at East Transition" and "Girder At Pier E2" sheets.
7. For modular joint details, see "Hinge A Expansion Joint Details" sheets.
8. For Hinge A bulkheads, floorbeams and joint blockouts, see "Hinge A Details" sheets.
9. For "K" and vertical plates, see "Girder At East Transition Details" sheets.
10. For service platform details, see "Road Plans". For girder access details, see "Girder Access Details" sheets.
11. From PP115 through PP128, the distance between center line of girder splice and adjacent floorbeam is 800.
3 12. At the Contractor's option, the girder splice near PP115.2 may be relocated to PP115-700, subject to review and approval of the Engineer.

ALL DIMENSIONS ARE IN MILLIMETERS UNLESS OTHERWISE SHOWN

MARK	DATE	DESCRIPTIONS	BY	CH'D	CCO#
3	09/01/11	EAST END OBG	DT	GB	87
2	01/16/09	BOX GIRDER AXIAL CAMBER	GB	DT	103
1	08/24/07	BARRIER MODIFICATIONS	GB	DT	44

REVISIONS

	BY	CHECKED
DESIGN	G. Baker	T. McMeans
DETAILS	M. Gulyas	T. McMeans
QUANTITIES	G. Baker	M. Roberts

PREPARED FOR THE STATE OF CALIFORNIA
DEPARTMENT OF TRANSPORTATION

R. Manzanarez
PROJECT ENGINEER

BRIDGE NO. 34-0006L/R
KILOMETER POST 13.2/13.9

SAN FRANCISCO OAKLAND BAY BRIDGE
EAST SPAN SEISMIC SAFETY PROJECT
SELF-ANCHORED SUSPENSION BRIDGE (SUPERSTRUCTURE & TOWER)

GIRDER FRAMING PLAN NO. 4

DIST.	COUNTY	ROUTE	KILOMETER POST TOTAL PROJECT	SHEET NO.	TOTAL SHEETS
04	SF	80	13.2/13.9	622R3	1204

George Baker
REGISTERED ENGINEER - CIVIL
12-6-04
PLANS APPROVAL DATE

REGISTERED PROFESSIONAL ENGINEER — George S. Baker — No. C57112 — Exp. 12/31/05 — CIVIL — STATE OF CALIFORNIA

The State of California or its officers or agents shall not be responsible for the accuracy or completeness of electronic copies of this plan sheet.

T.Y. LIN / MOFFATT & NICHOL
825 BATTERY STREET
SAN FRANCISCO, CA 94111

Caltrans now has a web site! To get to the web site, go to: http://www.dot.ca.gov

Daniel J. Turner — REGISTERED PROFESSIONAL ENGINEER — No. C 65033 — Exp. 06/30/13 — CIVIL — STATE OF CALIFORNIA
FOR REVISIONS ONLY

R. Valizadeh/V. Toan/Y.L./W.L./F.C.
DESIGN OVERSIGHT
SIGN OFF DATE 09/01/11

Rev. Date: 5-18-98

ORIGINAL SCALE IN MILLIMETERS FOR REDUCED PLANS 0 10 20 30 40 50 60 70 80 90 100

CU 04
EA 0120F1

DISREGARD PRINTS BEARING EARLIER REVISION DATES

REVISION DATES (PRELIMINARY STAGE ONLY): 01/15/99 05/15/99 09/06/99 04/26/01 05/31/01 04/09/02 07/01/02 12/19/02

SHEET 205R3 OF

FILE -> I:\bb\04-0120I\sas\contract plans and cco\cco\cco#87\I-original 09-01-11\dgn\aggir04.dgn

USERNAME -> ALishansky DATE PLOTTED -> 30 AUG 2011 TIME PLOTTED -> 13:28:13

100% PS&E

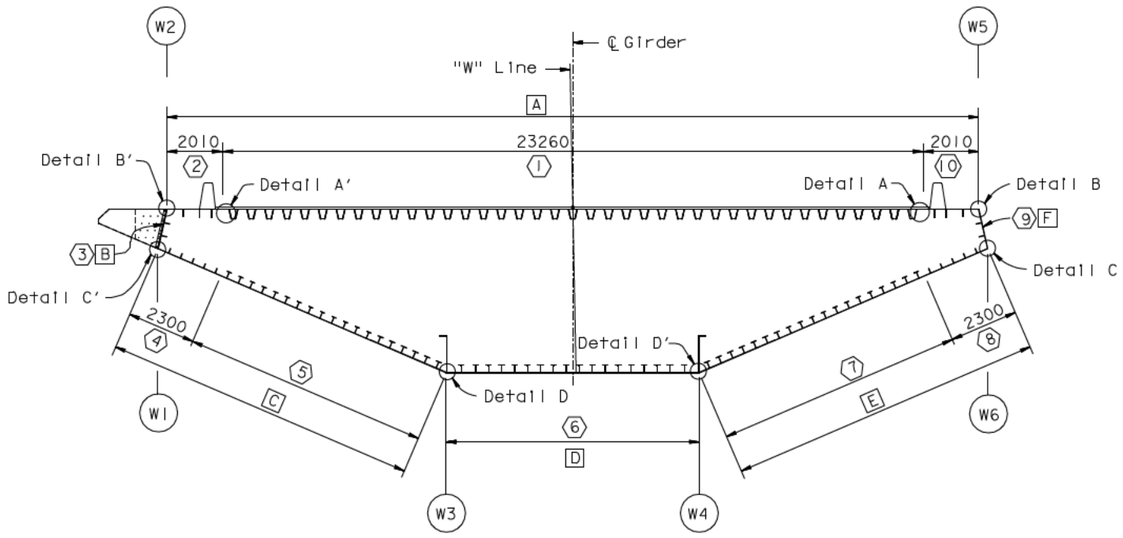

TYPICAL SECTION (See Note 3)

1:100

("W" LINE TYPE 1A SHOWN)

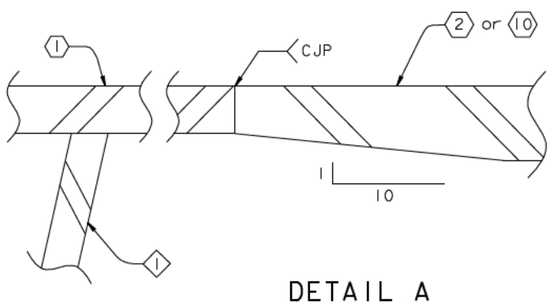

DETAIL A

1:1

(DETAIL A' SIMILAR)

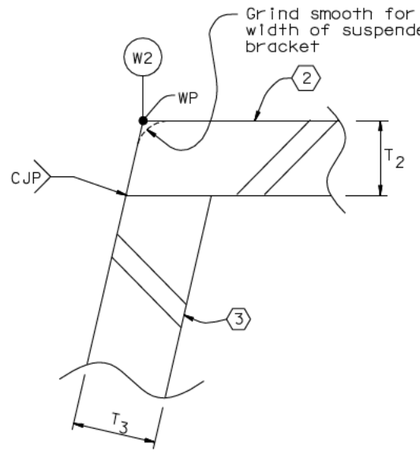

DETAIL B'

1:1

(DETAIL B SIMILAR)

LEGEND:

- 1 — Girder Stiffener Type 1
- 3 — Girder Plate Type 3
- A — Girder face designation A
- T_2 — Thickness of plate Type 2
- d — Diameter of fastener
- † — Thickness of thinner connected member

CONTRACT CHANGE ORDER NO. _____

SHEET ____ OF ____

REQUESTS FOR INFORMATION NOT ADDRESSED IN THIS CCO REMAIN IN FORCE

Daniel J. Turner — REGISTERED PROFESSIONAL ENGINEER — No. C 65033 — Exp. 06/30/13 — CIVIL — STATE OF CALIFORNIA

FOR REVISIONS ONLY

BOLT DIMENSION TABLE

Spacing	Minimum	3d	
	Maximum	Lesser of 178 or (100+4t)	
	Preferred	3.43d	
Minimum Edge Distance	Flame cut edges		1.75d
	Rolled or planed edges		1.43d
	Beams or Channels		1.3d
Maximum Edge Distance		Lesser of 125 or 8t	

GIRDER PLATE THICKNESS TABLE

Plate Type	Girder Face	PANEL POINT												
		West Transition		Typical (See Note 4)			East Transition (See Note 3)							
		8-10	10-14	14-30	30-112	112-115	115-116	116-118	118-120	120-122	122-125	125-127	127-128	128-Hinge A
1	A	28	20	14	14	20	20	20	20	20	20	20	20	20
2	A	20	20	20	20	20	20	20	20	20	20	20	20	20
3	B	22	20	25	28	18	18	18	NA	NA	NA	NA	NA	NA
4	C	18	18	18	18	16	16	18	18	18	NA	NA	NA	NA
5	C	28	20	22	18	20	20	22	25	22	25	NA	NA	1 NA
5	N	NA	NA	NA	NA	NA	NA	NA	NA	NA	NA	NA	12	12
6	D	35	35	20	20	28	28	35	60	35	22	22	18	18
7	E	28	20	16	16	16	16	25	22	22	16	16	12	12
7	M	NA	NA	NA	NA	NA	NA	NA	NA	NA	NA	NA	12	12
8	E	18	18	16	16	16	16	18	18	18	16	16	12	NA
9	F	22	20	18	18	18	18	18	18	18	18	18	18	NA
10	A	20	20	20	20	20	20	20	20	20	20	20	20	20
13	D	NA	NA	NA	NA	NA	25	28	60	25	30	35	20	NA
14	D	NA	NA	NA	NA	NA	22	28	60	22	16	16	16	NA
15	H	22	NA	NA	18	NA	NA	NA	12	12	12	12	NA	NA
16	I	NA	NA	NA	NA	NA	NA	NA	NA	12	12	25	12	NA
17	G	NA	NA	NA	NA	NA	NA	NA	12	12	12	20	16	16
18	A	NA	NA	NA	NA	NA	NA	NA	12	12	12	NA	NA	NA
18	L	NA	NA	NA	NA	NA	NA	NA	NA	NA	NA	NA	16	16
19	Q	22	NA	NA	NA	NA	NA	NA	NA	NA	NA	NA	NA	NA

NOTES:

1. For Details B through D, see "Typical Girder Details No.2" sheet.
2. For details and dimensions not shown, see "Typical Girder Details" sheets.
3. For east transition girder plate type layout and limits, see "Girder At Pier E2" and "Girder At East Transition" sheets.
4. For tapers and limits of girder plates E, F and H between PP38 and PP46, see "Girder Transition Near Tower" sheets.
5. For "Typical Girder Details" sheets all bolts shall be detailed according to the bolt dimension table. All bolts are HS, UNO.
6. For "Typical Girder Details" sheets, UNO all fillet welds shall be 6 mm, for plate sizes not greater than 20 mm. For plates sizes greater than 20 mm fillet welds shall be 8 mm UNO.

ALL DIMENSIONS ARE IN MILLIMETERS UNLESS OTHERWISE SHOWN

DIST.	COUNTY	ROUTE	KILOMETER POST TOTAL PROJECT	SHEET NO.	TOTAL SHEETS
04	SF	80	13.2/13.9	625R1	1204

Caltrans Metric

George Baker
REGISTERED ENGINEER - CIVIL

12-6-04
PLANS APPROVAL DATE

REGISTERED PROFESSIONAL ENGINEER — George S. Baker — No. C57112 — Exp. 12/31/05 — CIVIL — STATE OF CALIFORNIA

The State of California or its officers or agents shall not be responsible for the accuracy or completeness of electronic copies of this plan sheet.

T.Y. LIN / MOFFATT & NICHOL
825 BATTERY STREET
SAN FRANCISCO, CA 94111

Caltrans now has a web site! To get to the web site, go to: http://www.dot.ca.gov

DATE PLOTTED -> 30 AUG 2011 TIME PLOTTED -> 10:44:24
100 % PS&E
USERNAME -> PTom

R. Valizadeh/V. Toan/Y. L./W.L./F.C.
DESIGN OVERSIGHT
SIGN OFF DATE 09/01/11

MARK	DATE	REVISIONS	DT	GB	87
1	09/01/11	EAST END OBG	BY	CH'D	CCO#

	BY	CHECKED
DESIGN	G. Baker	P. Ritchie
DETAILS	S. Camo	T. McMeans
QUANTITIES	G. Baker	M. Roberts

PREPARED FOR THE STATE OF CALIFORNIA DEPARTMENT OF TRANSPORTATION

R. Manzanarez
PROJECT ENGINEER

BRIDGE NO. 34-0006L/R
KILOMETER POST 13.2/13.9

CU 04
EA 0120F1

DISREGARD PRINTS BEARING EARLIER REVISION DATES

REVISION DATES (PRELIMINARY STAGE ONLY): 01/15/99 05/15/99 08/02/99 05/31/01 04/02/02 07/01/02 12/19/02

SHEET 208R1 OF

SAN FRANCISCO OAKLAND BAY BRIDGE
EAST SPAN SEISMIC SAFETY PROJECT
SELF-ANCHORED SUSPENSION BRIDGE
(SUPERSTRUCTURE & TOWER)

TYPICAL GIRDER DETAILS NO. 1

Rev. Date: 5-18-98

ORIGINAL SCALE IN MILLIMETERS FOR REDUCED PLANS 0 10 20 30 40 50 60 70 80 90 100

FILE -> I:\bb\04-0120I\sas\contract plans and cco\cco\cco#87\1-original 09-01-11\dgn\agdkd01.dgn

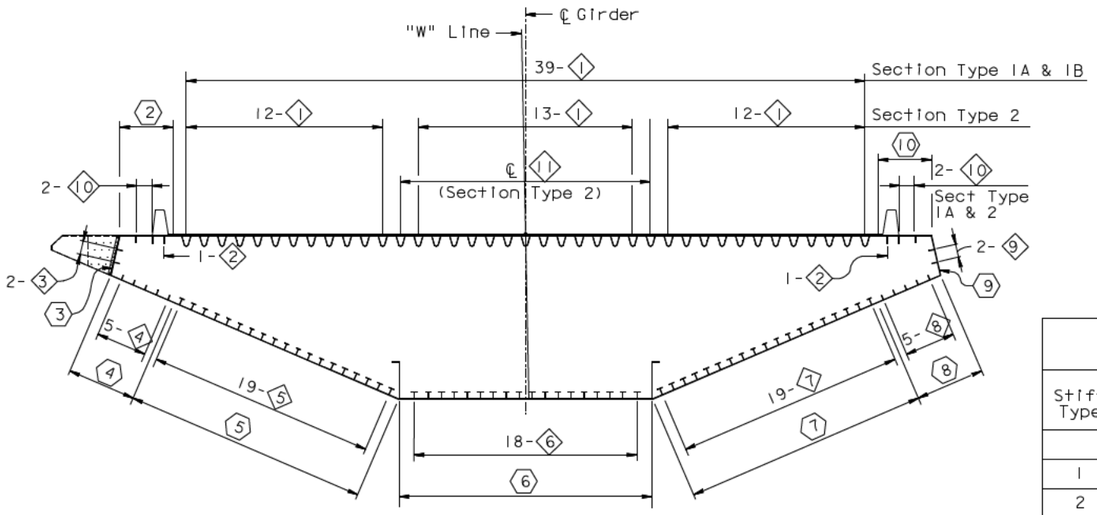

("W" LINE SECTION TYPE 1A SHOWN. SEE NOTE 1)

TYPICAL SECTION

1:100

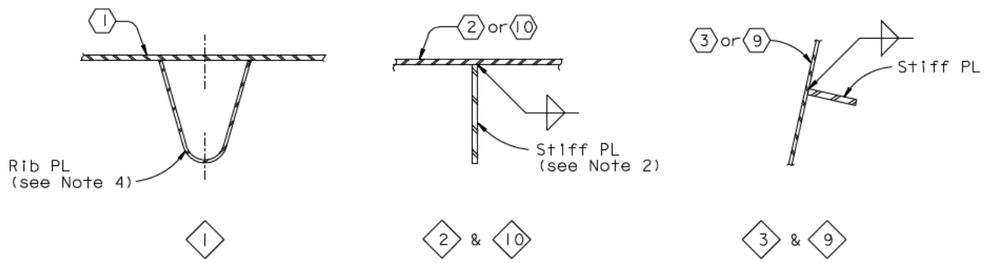

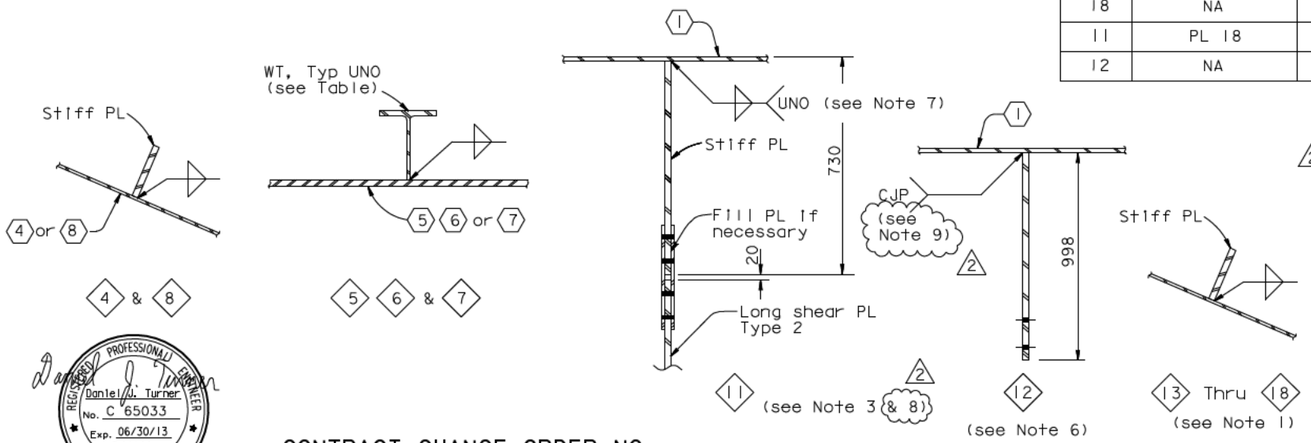

GIRDER STIFFENER SIZE TABLE

Stiff Type	PANEL POINT										
	West Transition	Main Span				East Transition					
	8-10	10-14	14-30	30-112	112-115	115-118	118-120	120-122	122-125	125-127	127-Hinge A
1	Varies	Rib 12	Rib 12	Rib 12	Rib 12	Rib 12	Rib 12	Rib 12	Rib 12	Rib 12	Rib 12
2	PL 35x275	PL 35x275	PL 35x275	PL 35x275	PL 35x275	PL 35x275	PL 35x275	PL 35x275	PL 35x275	PL 35x275	PL 35x275
3	PL 22x200	PL 20x180	PL 22x200	PL 28x260	PL 20x180	PL 22x200	PL 22x200	2 NA	NA	NA	NA
4	PL 22x200	PL 22x200	PL 22x200	PL 22x200	PL 20x180	PL 22x200	PL 25x230	PL 20x180	NA	NA	NA
5	PL 25x230	PL 22x200	WT 265x42.5	WT 265x42.5	WT 265x42.5	WT 265x42.5	PL 25x230	PL 22x200	PL 22x200	PL 22X200	PL 16x140
6	PL 35x320	PL 35x320	WT 265x42.5	WT 265x42.5	WT 305x46	WT 305x46	PL 28x255	PL 25x230	PL 25x230	PL 25x230	PL 25x230
7	PL 25x230	PL 22x200	WT 230x34	WT 230x34	WT 230x34	WT 265x42.5	PL 22x200	PL 22x200	PL 20x180	PL 20x180	PL 16x140
8	PL 22x200	PL 22x200	PL 20x180	PL 20x170	PL 20x180	PL 22x185	PL 20x180	PL 22x200	PL 20x180	PL 20x180	PL 16x140
9	PL 22x200	PL 20x180	PL 20x180	PL 18x170	PL 20x180	PL 22x200	PL 22x185	PL 22x185	PL 22x185	PL 22x185	PL 22x185
10	PL 30x235	PL 30x235	PL 30x235	PL 30x235	PL 30x235	PL 30x235	PL 30x235	PL 30x235	PL 30x235	PL 30x235	PL 30x235
13	NA	NA	NA	NA	NA	PL 25x230	PL 28x255	PL 25x230	PL 25x230	PL 25x230	PL 20x180
14	NA	NA	NA	NA	NA	PL 25x230	PL 28x255	PL 22x200	PL 20x180	PL 20x180	PL 20x180
15	NA	NA	NA	NA	NA	NA	PL 16x140	PL 16x140	PL 16x140	PL 16x140	NA
16	NA	NA	NA	NA	NA	NA	NA	PL 16x140	PL 16x140	PL 25x230	PL 16x140
17	NA	NA	NA	NA	NA	NA	PL 16x140	PL 16x140	PL 16x140	PL 22x200	PL 18x170
18	NA	NA	NA	NA	NA	NA	PL 18x155	PL 18x155	PL 18x155	NA	PL 18x170
11	PL 18	PL 18	NA	NA	PL 18	(see Note 3)					
12	NA	NA	NA	NA	NA	NA	NA	NA	NA	PL 22 UNO	NA

2 8. At the Contractor's option, PL 20 may be used in lieu of PL 18, subject to review and approval of the Engineer.

9. At the Contractor's option, a double-sided (20 mm) fillet or a double-sided PJP (6 mm effective with 10 mm reinforcing fillets) may be used in lieu of a CJP, subject to review and approval of the Engineer.

NOTES:

1. For stiffener layout in girder section Type 1B, see "Partial Typical Section No.3" sheet. For stiffener layout of east transition girder, see "Girder At East Transition" sheets.
2. Stiffener Types 2 and 10 shall be ASTM A709M HPS Grade 485W steel.
3. For details of stiffener Type 11 not shown, see "Girder At East Transition No.9", "Girder At East Transition No.15" and "Girder At East Transition No.16" sheets.
4. For details of stiffener Type 1, see "Typical Girder Details No.4" sheet.
5. For details of longitudinal shear plates, see "Typical Girder Details No. 7" sheet.
6. For details of stiffener Type 12 not shown, see "Girder At East Transition No.5", "Girder At East Transition No.6" and "Girder At East Transition No.17" sheets.
7. This weld shall be CJP from PP112 to PP128.3.

Caltrans Metric

DIST.	COUNTY	ROUTE	KILOMETER POST TOTAL PROJECT	SHEET NO.	TOTAL SHEETS
04	SF	80	13.2/13.9	627R2	1204

George Baker
REGISTERED ENGINEER - CIVIL
12-6-04
PLANS APPROVAL DATE

PROFESSIONAL ENGINEER — George S. Baker — No. C57112 — Exp. 12/31/05 — CIVIL — STATE OF CALIFORNIA

The State of California or its officers or agents shall not be responsible for the accuracy or completeness of electronic copies of this plan sheet.

T.Y. LIN / MOFFATT & NICHOL
825 BATTERY STREET
SAN FRANCISCO, CA 94111

Caltrans now has a web site! To get to the web site, go to: http://www.dot.ca.gov

LEGEND:

1 Girder plate Type 1

1 Girder stiffener Type 1

REGISTERED PROFESSIONAL ENGINEER — Daniel J. Turner — No. C 65033 — Exp. 06/30/13 — CIVIL — STATE OF CALIFORNIA

FOR REVISIONS ONLY

CONTRACT CHANGE ORDER NO. ____
SHEET ___ OF ___

REQUESTS FOR INFORMATION NOT ADDRESSED IN THIS CCO REMAIN IN FORCE

STIFFENER DETAILS

1:10

ALL DIMENSIONS ARE IN MILLIMETERS UNLESS OTHERWISE SHOWN

MARK	DATE	DESCRIPTIONS	BY	CH'D	CCO#
2	09/01/11	EAST END OBG	DT	GB	87
1	07/31/09	LONGITUDINAL SHEAR PLATE	DT	GB	122

REVISIONS

R. Valizadeh/V. Toan/Y. L./W. L./F. C.
DESIGN OVERSIGHT
SIGN OFF DATE 09/09/11

DESIGN BY G. Baker — CHECKED P. Ritchie
DETAILS BY S. Camo — CHECKED T. McMeans
QUANTITIES BY G. Baker — CHECKED M. Roberts

PREPARED FOR THE STATE OF CALIFORNIA DEPARTMENT OF TRANSPORTATION

R. Manzanarez
PROJECT ENGINEER

BRIDGE NO. 34-0006L/R
KILOMETER POST 13.2/13.9

SAN FRANCISCO OAKLAND BAY BRIDGE
EAST SPAN SEISMIC SAFETY PROJECT
SELF-ANCHORED SUSPENSION BRIDGE
(SUPERSTRUCTURE & TOWER)

TYPICAL GIRDER DETAILS NO. 3

Rev. Date: 5-18-98

ORIGINAL SCALE IN MILLIMETERS FOR REDUCED PLANS 0 10 20 30 40 50 60 70 80 90 100

CU 04
EA 0120F1

DISREGARD PRINTS BEARING EARLIER REVISION DATES

REVISION DATES (PRELIMINARY STAGE ONLY): 05/15/99 08/20/99 05/31/01 04/08/02 07/01/02 12/19/02

SHEET 210R2 OF

FILE -> I:\bb\04-012001\sas\contract plans and cco\cco\cco#87\1-original 09-01-11\dgn\agdkd02.dgn

USERNAME -> PTom
DATE PLOTTED -> 30 AUG 2011 TIME PLOTTED -> 10:45:45
100 % PS&E

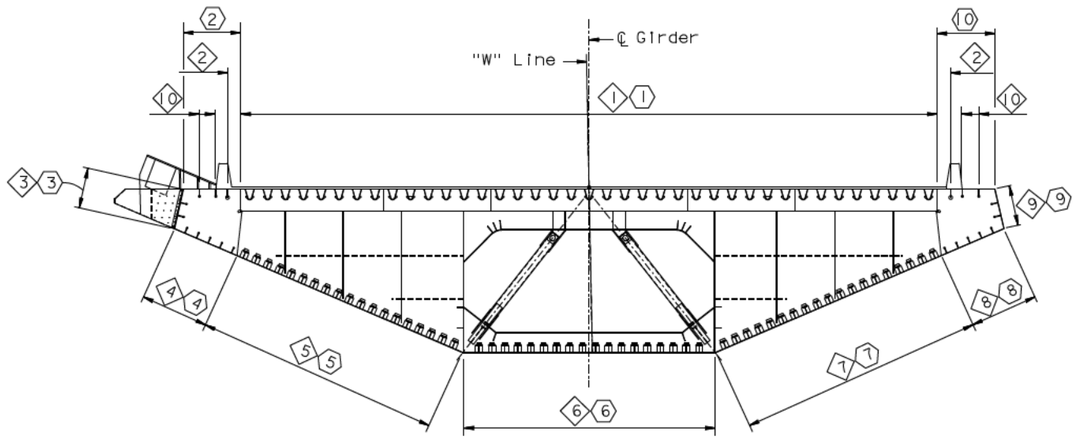

("W" LINE SECTION TYPE 1A SHOWN)

SECTION AT FLOORBEAM

1:100

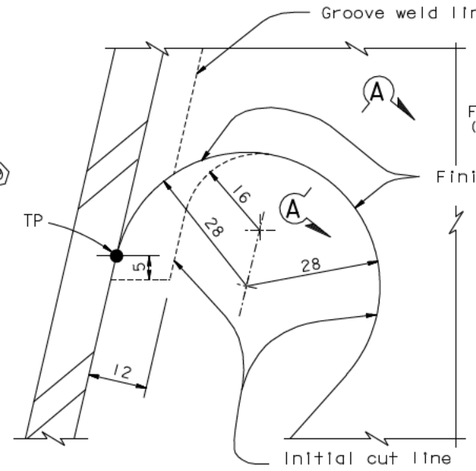

DETAIL A

NTS

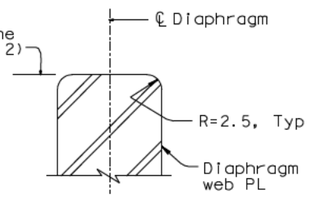

GRINDING DETAIL SECTION A-A

NTS

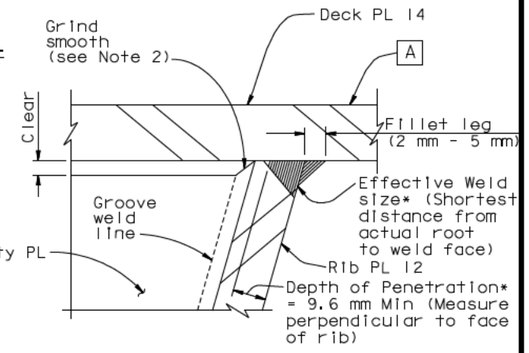

DETAIL B (Typical)

NTS

*NOTE: Depth of Penetration & Effective Weld size shall be measured on macroetch specimens without the 3 mm deduction per D1.5, Sections 2.3.1.3 and 2.3.4.

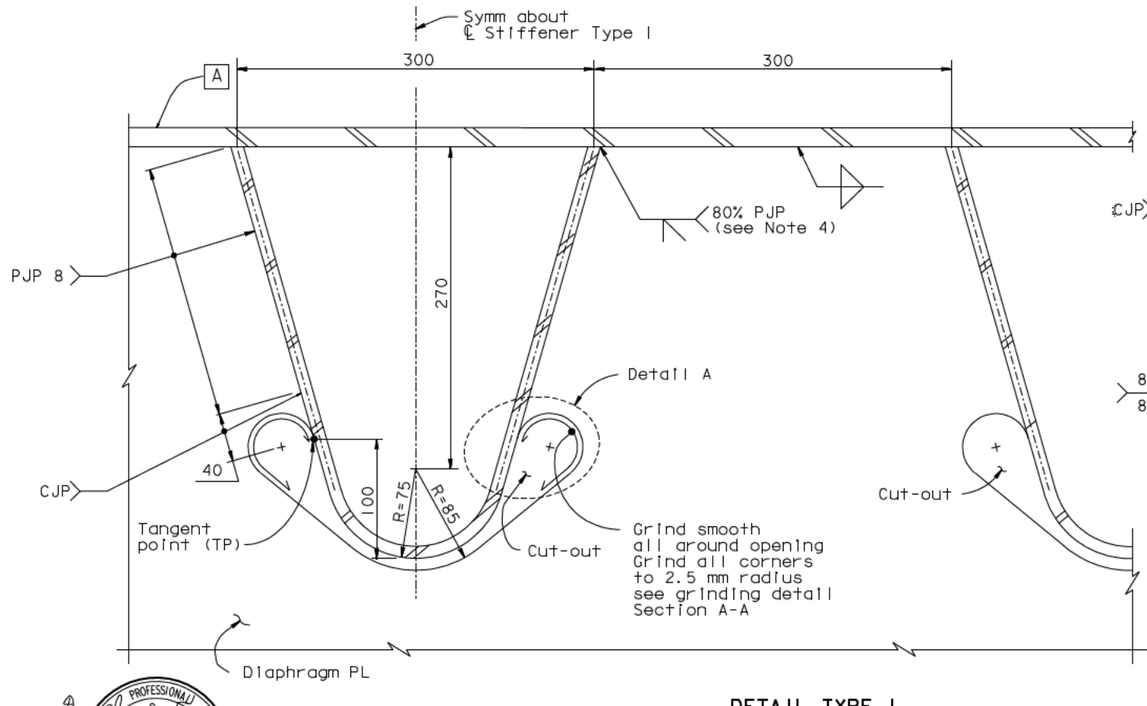

DETAIL TYPE 1

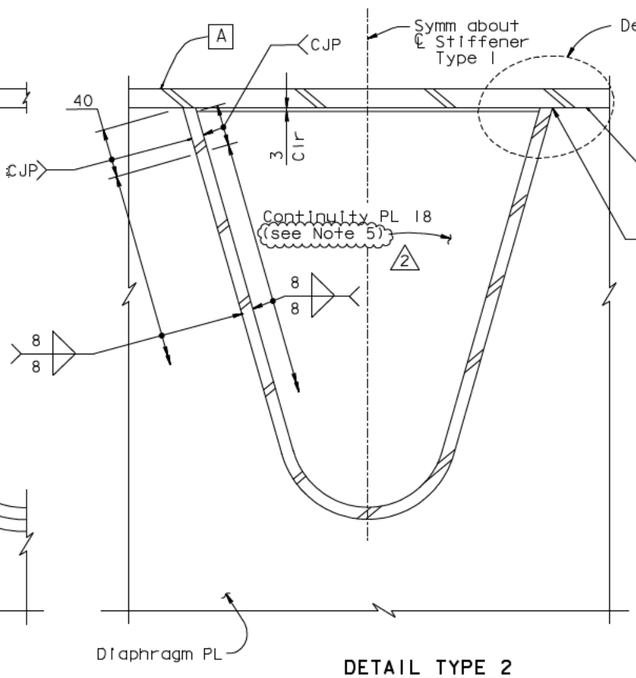

DETAIL TYPE 2

⟨1⟩ STIFFENER DETAIL AT FLOORBEAM (See Table)

1:2.5

DETAIL TYPE LOCATION TABLE		
PANEL POINT	DETAIL TYPE	WELD
8 Thru 14.5	2	As Shown
15 Thru 111	1	As Shown
111.5 Thru 120.5	2	As Shown
121 Thru 126.5	2	See Note 3
127 to Hinge A	2	As Shown

NOTES:

1. Unless otherwise indicated, stiffener Type 1 is continuous through floorbeam diaphragm PL.
2. For stiffener Type 1, finish surface of cut-out shall be in accordance with ANSI 500 roughness.
3. At floorbeam cable opening, weld of diaphragm PL to girder PL A shall be CJP. For CJP weld limits, see "Floorbeam At East Transition" sheets.
4. Closed ribs shall be sealed with diaphragm. See Diaphragm Detail on "Typical Girder Details No.11" sheet.

⟨2⟩ 5. At the PL 35 diaphragms @ E2, use PL 35 continuity plate.

ALL DIMENSIONS ARE IN MILLIMETERS UNLESS OTHERWISE SHOWN

CONTRACT CHANGE ORDER NO. ____
SHEET ___ OF ___

FOR REVISIONS ONLY

REQUESTS FOR INFORMATION NOT ADDRESSED IN THIS CCO REMAIN IN FORCE

MARK	DATE	DESCRIPTIONS	BY	CH'D	CCO#
⟨2⟩	09/01/11	EAST END OBG	DT	GB	87
⟨1⟩	10/03/08	U-RIB & TOWER CORNER SEALING	DT	NV	69

REVISIONS

R. Valizadeh/V. Toan/Y.L./W.L./F.C.
DESIGN OVERSIGHT
SIGN OFF DATE 09/01/11

	BY	CHECKED
DESIGN	G. Baker	P. Ritchie
DETAILS	S. Camo	T. McMeans
QUANTITIES	G. Baker	M. Roberts

PREPARED FOR THE STATE OF CALIFORNIA DEPARTMENT OF TRANSPORTATION

R. Manzanarez
PROJECT ENGINEER

BRIDGE NO. 34-0006L/R
KILOMETER POST 13.2/13.9

SAN FRANCISCO OAKLAND BAY BRIDGE
EAST SPAN SEISMIC SAFETY PROJECT
SELF-ANCHORED SUSPENSION BRIDGE
(SUPERSTRUCTURE & TOWER)

TYPICAL GIRDER DETAILS NO. 4

Rev. Date: 5-18-98

ORIGINAL SCALE IN MILLIMETERS FOR REDUCED PLANS 0 10 20 30 40 50 60 70 80 90 100

CU 04
EA 0120F1

DISREGARD PRINTS BEARING EARLIER REVISION DATES →

REVISION DATES (PRELIMINARY STAGE ONLY): 01/15/99 05/15/99 08/02/99 05/31/01 04/26/02 07/01/02 12/19/02

SHEET 211R2 OF

FILE -> I:\bb\04-012001\sas\contract plans and cco\cco\cco#87\1-original 09-01-11\dgn\agdkd03.dgn

USERNAME -> PTom
DATE PLOTTED -> 30 AUG 2011
TIME PLOTTED -> 11:00:11
100 % PS&E

DIST.	COUNTY	ROUTE	KILOMETER POST TOTAL PROJECT	SHEET NO.	TOTAL SHEETS
04	SF	80	13.2/13.9	628R2	1204

George Baker
REGISTERED ENGINEER - CIVIL

12-6-04
PLANS APPROVAL DATE

The State of California or its officers or agents shall not be responsible for the accuracy or completeness of electronic copies of this plan sheet.

REGISTERED PROFESSIONAL ENGINEER — George S. Baker — No. C57112 — Exp. 12/31/05 — CIVIL — STATE OF CALIFORNIA

T.Y. LIN / MOFFATT & NICHOL
825 BATTERY STREET
SAN FRANCISCO, CA 94111

Caltrans now has a web site! To get to the web site, go to: http://www.dot.ca.gov

REGISTERED PROFESSIONAL ENGINEER — Daniel J. Turner — No. C 65033 — Exp. 06/30/13 — CIVIL — STATE OF CALIFORNIA

DIST.	COUNTY	ROUTE	KILOMETER POST TOTAL PROJECT	SHEET NO.	TOTAL SHEETS
04	SF	80	13.2/13.9	629R4	1204

George Baker
REGISTERED ENGINEER - CIVIL

12-6-04
PLANS APPROVAL DATE

REGISTERED PROFESSIONAL ENGINEER — George S. Baker — No. C57112 — Exp. 12/31/07 — CIVIL — STATE OF CALIFORNIA

The State of California or its officers or agents shall not be responsible for the accuracy or completeness of electronic copies of this plan sheet.

T.Y. LIN / MOFFATT & NICHOL
825 BATTERY STREET
SAN FRANCISCO, CA 94111

Caltrans now has a web site! To get to the web site, go to: http://www.dot.ca.gov

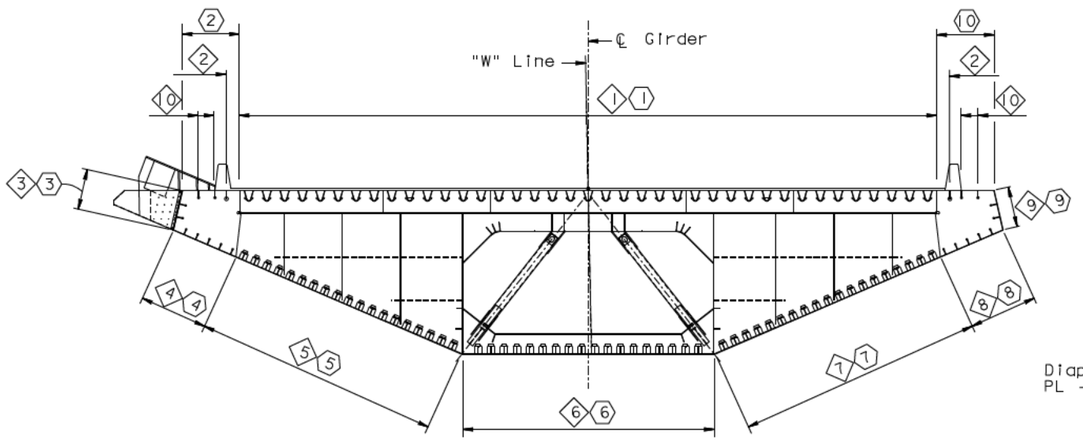

("W" LINE SECTION TYPE 1A SHOWN)

SECTION AT FLOORBEAM

1:100

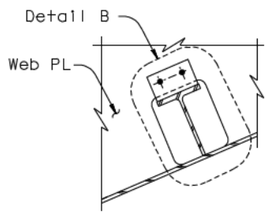

WT TYPE AT CROSSBEAM

7

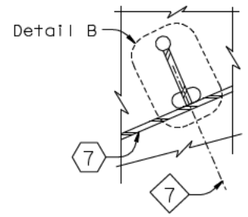

PLATE TYPE AT CROSSBEAM

7

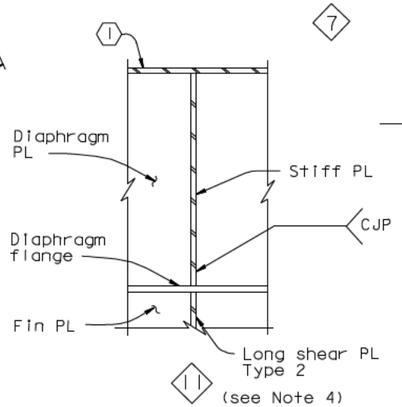

11 (see Note 4)

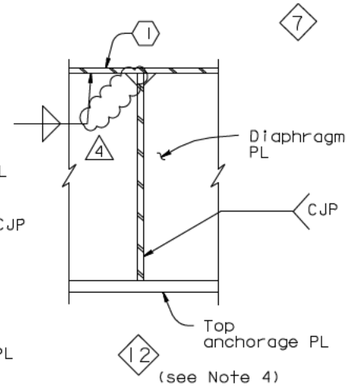

12 (see Note 4)

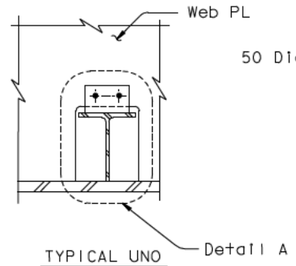

TYPICAL UNO

5 6 & 7 Except at crossbeam

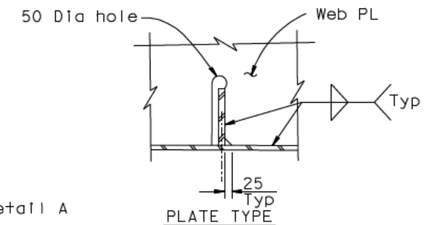

PLATE TYPE

5 6 & 7 Except at crossbeam (see Note 7)

4 14 (optional)

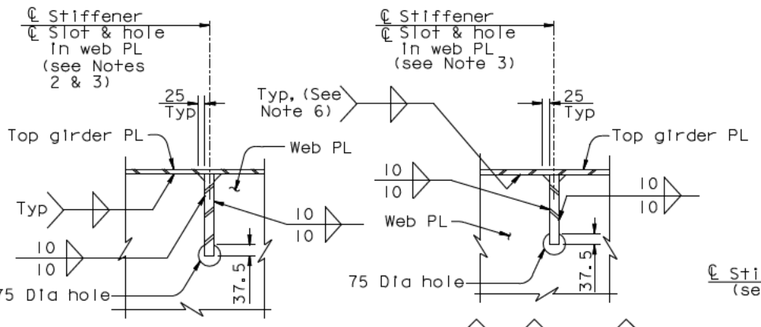

2

10, 13 thru 18

4 (see Note 8)

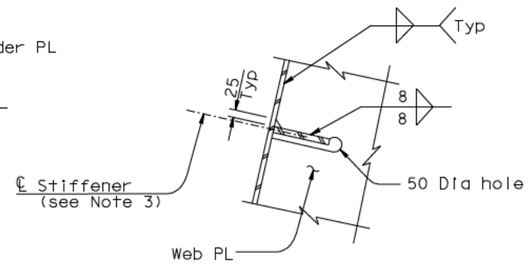

3 (see Note 5)

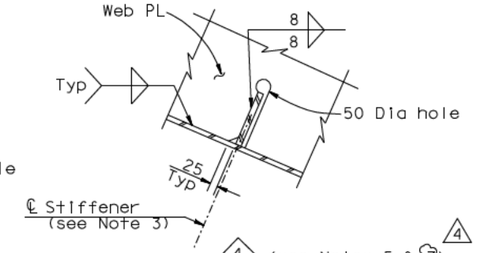

4 (see Notes 5 & 7) 4

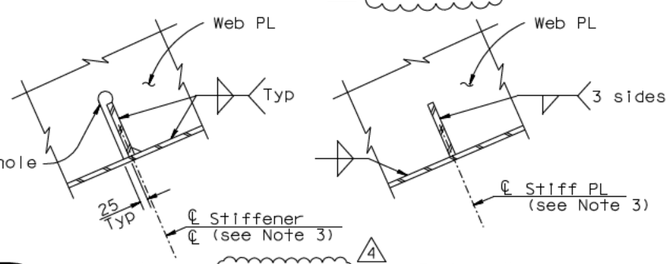

TYPICAL UNO (see Note 7) 4

8

AT CROSSBEAM

8

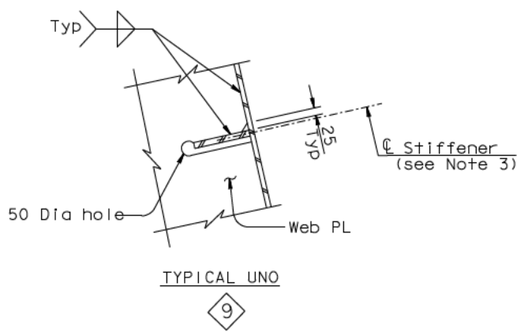

TYPICAL UNO

9

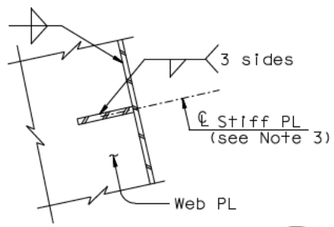

AT CROSSBEAM

9

STIFFENER DETAILS AT FLOORBEAM (See Note 3)

1:10

NOTES:

1. For Details A and B, see "Typical Girder Details No.6" sheet.
2. For details at PP117 to PP121, see "Girder at East Transition Details No.1" and "Girder At Pier E2 No.9" sheets.
3. All typical girder stiffeners are continuous through floorbeam web except for 8 and 9 at crossbeam, and 1 typically, and unless otherwise specified in the plans.
4. For locations of stiffener Types 1 thru 8, see "Girder at East Transition" sheets.
5. Typical details for 3 and 4 shown. For details at suspender location, see "Typical Girder Details No.6" sheet.
6. For welds at suspender brackets, see "Suspender Bracket Details No.1" sheet.
4. 7. East of PP117, in lieu of floorbeam cut-out, PL stiffeners may be welded to the floorbeam webs using a CJP with a reinforcing fillet wrapped around at top and bottom of stiffener. Use of drop-in pieces is permitted, subject to review and approval of the Engineer. At splices, drop-in piece on same side as the splice shall extend from the floorbeam web to the splice. The Type 5 stiffener drop-in piece parallel to the Lines E13/W13 may be welded to the floorbeam web using CJP with backing bar to remain, subject to review and approval of the Engineer.
8. For alternative details for Type 13 stiffeners, see "Typical Girder Details No.6" sheet.

Daniel J. Turner
REGISTERED PROFESSIONAL ENGINEER — Daniel J. Turner — No. C 65033 — Exp. 06/30/09 — CIVIL — STATE OF CALIFORNIA

FOR REVISIONS 2 & 3 ONLY

Marwan N. Nader
REGISTERED PROFESSIONAL ENGINEER — Marwan N. Nader — No. C 054426 — Exp. 12/31/13 — CIVIL — STATE OF CALIFORNIA

FOR REVISION 4 ONLY

CONTRACT CHANGE ORDER NO. ____
SHEET ___ OF ___

REQUESTS FOR INFORMATION NOT ADDRESSED IN THIS CCO REMAIN IN FORCE

MARK	DATE	REVISIONS	BY	CH'D	CCO#
4	04/18/12	EAST END OBG	MN	GB	87
3	07/31/09	LONGITUDINAL SHEAR PLATE	GB	DT	122
2	02/20/09	SUSPENDER BRACKETS	GB	DT	104
1	07/26/06	ADD STIFFENER TYPES 13 THRU 18	GB	NV	22

ALL DIMENSIONS ARE IN MILLIMETERS UNLESS OTHERWISE SHOWN

R. Vallzadeh/V. Toan/Y.L./W.L./F.C.
DESIGN OVERSIGHT
Roya Valizadeh / Vong Toan / Y. Liu
SIGN OFF DATE 04/18/12

	BY	CHECKED
DESIGN	G. Baker	P. Ritchie
DETAILS	S. Camo	T. McMeans
QUANTITIES	G. Baker	M. Roberts

PREPARED FOR THE STATE OF CALIFORNIA DEPARTMENT OF TRANSPORTATION

R. Manzanarez
PROJECT ENGINEER

BRIDGE NO. 34-0006L/R
KILOMETER POST 13.2/13.9

SAN FRANCISCO OAKLAND BAY BRIDGE
EAST SPAN SEISMIC SAFETY PROJECT
SELF-ANCHORED SUSPENSION BRIDGE (SUPERSTRUCTURE & TOWER)

TYPICAL GIRDER DETAILS NO. 5

Rev. Date: 5-18-98

ORIGINAL SCALE IN MILLIMETERS FOR REDUCED PLANS 0 10 20 30 40 50 60 70 80 90 100

CU 04
EA 0120F1

DISREGARD PRINTS BEARING EARLIER REVISION DATES

REVISION DATES (PRELIMINARY STAGE ONLY): 01/15/99 05/15/99 08/02/99 05/31/01 04/08/02 07/31/02 12/19/02 11/13/05

SHEET 212R4 OF

FILE -> L:\BB\04-0120F1\SAS\Contract Plans and CCO\CCO\CCO#87\temp\agdkd03a.dgn

USERNAME -> DWinrow DATE PLOTTED -> 18 APR 2012 TIME PLOTTED -> 10:55:43

100% PS&E

DIST.	COUNTY	ROUTE	KILOMETER POST TOTAL PROJECT	SHEET NO.	TOTAL SHEETS
04	SF	80	13.2/13.9	630R2	1204

George Baker
REGISTERED ENGINEER - CIVIL
12-6-04
PLANS APPROVAL DATE

REGISTERED PROFESSIONAL ENGINEER — George S. Baker — No. C57112 — Exp. 12/31/05 — CIVIL — STATE OF CALIFORNIA

The State of California or its officers or agents shall not be responsible for the accuracy or completeness of electronic copies of this plan sheet.

T.Y. LIN / MOFFATT & NICHOL
825 BATTERY STREET
SAN FRANCISCO, CA 94111

Caltrans now has a web site! To get to the web site, go to: http://www.dot.ca.gov

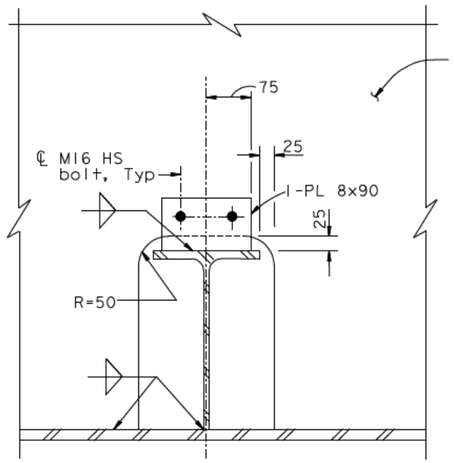

TYPE 1 OPENING

5 6 or 7 (see Note 1)

DETAIL A
1:5

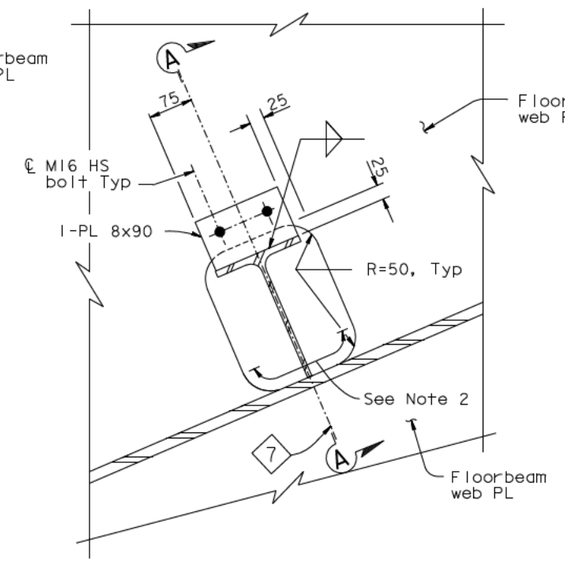

TYPE 2 OPENING, WT TYPE

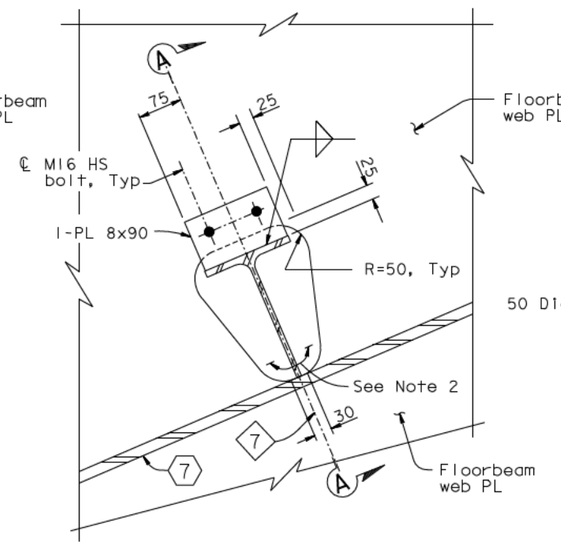

TYPE 3 OPENING, WT TYPE

7 AT CROSSBEAM (see Note 1)

DETAIL B
1:5

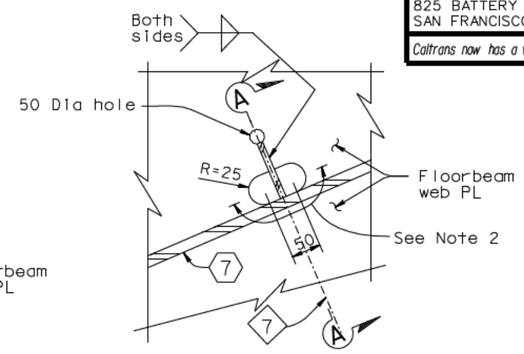

TYPE 2 & 3 OPENING, PLATE TYPE

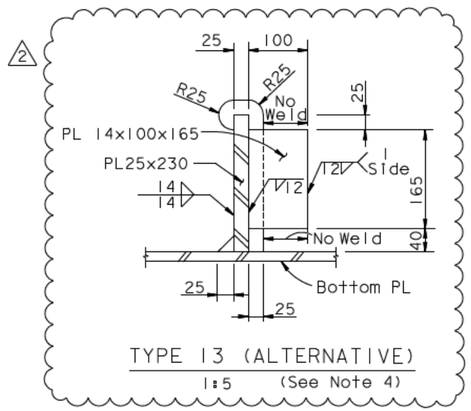

TYPE 13 (ALTERNATIVE)
1:5 (See Note 4)

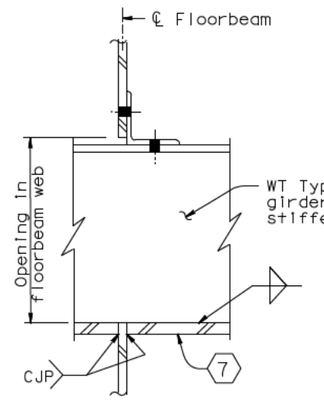

WT TYPE STIFFENER

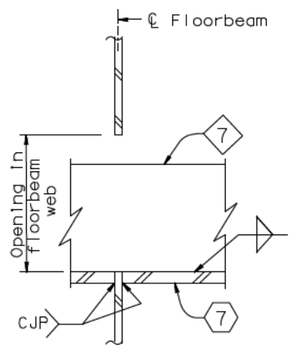

PLATE TYPE STIFFENER

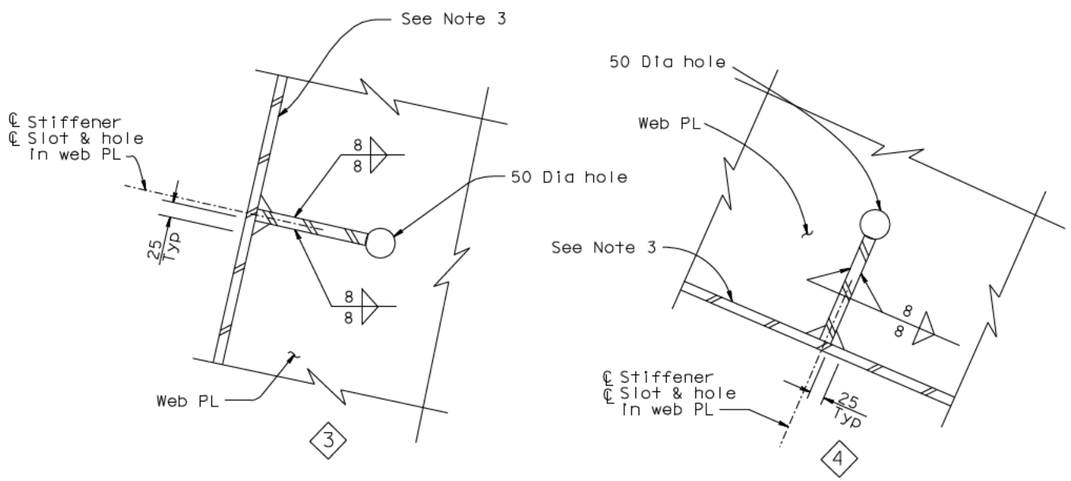

STIFFENER DETAILS AT SUSPENDER
1:5

NOTES:

1. For location of opening types, see "Typical Floorbeam Details No.2" sheet.
2. For limits shown, finish surface of the cutout shall be have ANSI 500 roughness.
3. For welds at suspender brackets, see "Suspender Bracket Details No. 1" sheet.
2. 4. Traveler rail connection bracket fill plates may be used as fit lugs.

SECTION A-A
1:5

CONTRACT CHANGE ORDER NO. ____
SHEET ____ OF ____

REQUESTS FOR INFORMATION NOT ADDRESSED IN THIS CCO REMAIN IN FORCE

Marwan N. Nader — No. C 054426 — Exp. 12/31/13 — CIVIL — REGISTERED PROFESSIONAL ENGINEER — STATE OF CALIFORNIA

FOR REVISIONS ONLY

ALL DIMENSIONS ARE IN MILLIMETERS UNLESS OTHERWISE SHOWN

MARK	DATE	DESCRIPTIONS	BY	CH'D	CCO#
2	04/18/12	EAST END OBG	MN	GB	87
1	02/20/09	SUSPENDER BRACKETS	GB	DT	104

REVISIONS

	BY	CHECKED
DESIGN	G. Baker	P. Ritchie
DETAILS	S. Camo	T. McMeans
QUANTITIES	G. Baker	M. Roberts

PREPARED FOR THE STATE OF CALIFORNIA
DEPARTMENT OF TRANSPORTATION

R. Manzanarez
PROJECT ENGINEER

BRIDGE NO. 34-0006L/R
KILOMETER POST 13.2/13.9

SAN FRANCISCO OAKLAND BAY BRIDGE
EAST SPAN SEISMIC SAFETY PROJECT
SELF-ANCHORED SUSPENSION BRIDGE
(SUPERSTRUCTURE & TOWER)

TYPICAL GIRDER DETAILS NO. 6

R. Valizadeh/V. Toan/Y. L./W. L./F. C.
DESIGN OVERSIGHT
Roya Valizadeh / Vong Toan / Y. Liu
SIGN OFF DATE 04/18/12

Rev. Date: 5-18-98

ORIGINAL SCALE IN MILLIMETERS FOR REDUCED PLANS 0 10 20 30 40 50 60 70 80 90 100

CU 04
EA 0120F1

DISREGARD PRINTS BEARING EARLIER REVISION DATES

REVISION DATES (PRELIMINARY STAGE ONLY): 01/15/99 | 05/15/99 | 08/02/99 | 05/31/01 | 04/08/02 | 07/01/02 | 12/19/02

SHEET 213R2 OF

FILE -> I:\bb\04-01200I\sas\contract plans and cco\cco\cco#87\temp\agdkd03b.dgn

100% PS&E
DATE PLOTTED -> 18 APR 2012
TIME PLOTTED -> 10:56:50
USERNAME -> DWinrow

Caltrans now has a web site! To get to the web site, go to: http://www.dot.ca.gov

DIST.	COUNTY	ROUTE	KILOMETER POST TOTAL PROJECT	SHEET NO.	TOTAL SHEETS
04	SF	80	13.2/13.9	631R3	1204

Caltrans Metric

George Baker
REGISTERED ENGINEER - CIVIL
12-6-04
PLANS APPROVAL DATE

REGISTERED PROFESSIONAL ENGINEER — George S. Baker — No. C57112 — Exp. 12/31/05 — CIVIL — STATE OF CALIFORNIA

The State of California or its officers or agents shall not be responsible for the accuracy or completeness of electronic copies of this plan sheet.

T.Y. LIN / MOFFATT & NICHOL
825 BATTERY STREET
SAN FRANCISCO, CA 94111

OPENING LOCATION TABLE

SHEAR PLATE TYPE	WORKING LINE	PANEL POINT (see Note 5)
2	E3, W3	8.5 (East), 9.5, 10.5, 11.5, 12.5, 13.5, 112.5, 113.5, 114.5
2	E4, W4	8.5 (East), 9.5, 10.5, 11.5, 12.5, 13.5, 112.5, 113.5, 114.5

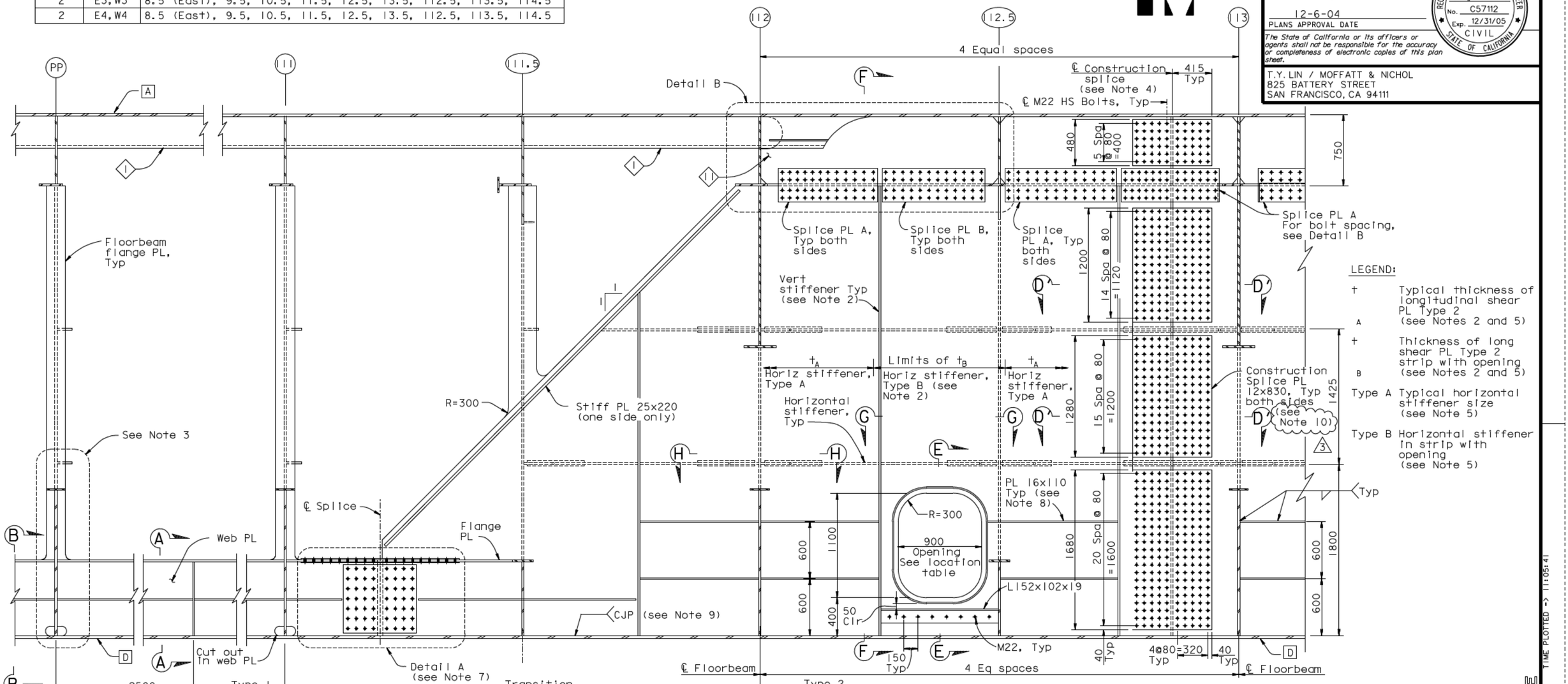

Transition @ PP111 to PP112 shown. Transition @ PP14 to PP15 similar
For details @ PP8.5, see "Girder At Pier W2 No.4" sheet.

LONGITUDINAL SHEAR PLATE ELEVATION

1:20

LEGEND:

- t — Typical thickness of longitudinal shear PL Type 2 (see Notes 2 and 5)
- tA — Thickness of long shear PL Type 2 strip with opening (see Notes 2 and 5)
- tB
- Type A Typical horizontal stiffener size (see Note 5)
- Type B Horizontal stiffener in strip with opening (see Note 5)

NOTES:

1. For Sections A-A, B-B and Detail A, see "Typical Girder Details No.8" sheet.
2. For Sections E-E, F-F, G-G, H-H, Detail B and details not shown, see "Typical Girder Details No.9" sheet.
3. For floorbeam details, see "Typical Floorbeam Details" sheets.
4. For location of girder splice, see "Girder Framing Plan" sheets.
5. For plate sizes and openings in east transition, see "Girder At East Transition No.9" sheet.
6. Shear plates at lines W3 and E4shown. W4 and E3 lines are similar.
7. Detail A shall be used to splice the longitudinal shear PL Type 1 at box girder splice locations.
8. Lower panel stiffeners shall be placed as shown in Longitudinal shear PL along E3, E4, W3 and W4 lines from PP111.75 to the E2 floorbeam, and from the E2 floorbeam to PP120. Stiffeners shall also be placed along E4 and W4 lines from PP120 to 127. For details at the E2 floorbeam, see "Girder at Pier E2 No.2" sheet.
9. The longitudinal shear PL to girder face "D" weld shall be a CJP from the CL plice near PP111 to PP128.7.

3 10. The thickness of the construction splice PL shall match the thickness of splice PL A.

ALL DIMENSIONS ARE IN MILLIMETERS UNLESS OTHERWISE SHOWN

Daniel J. Turner
REGISTERED PROFESSIONAL ENGINEER — No. C 65033 — Exp. 06/30/13 — CIVIL — STATE OF CALIFORNIA
FOR REVISIONS ONLY

CONTRACT CHANGE ORDER NO. _____
SHEET ___ OF ___

REQUESTS FOR INFORMATION NOT ADDRESSED IN THIS CCO REMAIN IN FORCE

MARK	DATE	DESCRIPTIONS	BY	CH'D	CCO#
3	09/01/11	EAST END OBG	DT	GB	87
2	07/31/09	LONGITUDINAL SHEAR PLATE	DT	GB	122
1	07/30/07	HINGE A REACTION-SHEAR PLATES	DT	GB	50

REVISIONS

R. Vallzadeh/V. Toan/Y.L./W.L./F.C.
DESIGN OVERSIGHT
SIGN OFF DATE 09/01/11

	BY	CHECKED
DESIGN	G. Baker	P. Ritchie
DETAILS	S. Camo	T. McMeans
QUANTITIES	G. Baker	M. Roberts

PREPARED FOR THE STATE OF CALIFORNIA DEPARTMENT OF TRANSPORTATION

R. Manzanarez
PROJECT ENGINEER

BRIDGE NO. 34-0006L/R
KILOMETER POST 13.2/13.9

SAN FRANCISCO OAKLAND BAY BRIDGE
EAST SPAN SEISMIC SAFETY PROJECT
SELF-ANCHORED SUSPENSION BRIDGE (SUPERSTRUCTURE & TOWER)

TYPICAL GIRDER DETAILS NO.7

Rev. Date: 5-18-98

ORIGINAL SCALE IN MILLIMETERS FOR REDUCED PLANS 0 10 20 30 40 50 60 70 80 90 100

CU 04
EA 0120F1

DISREGARD PRINTS BEARING EARLIER REVISION DATES

REVISION DATES (PRELIMINARY STAGE ONLY): 01/15/99 | 05/15/99 | 09/02/99 | 05/31/01 | 04/08/02 | 07/01/02 | 12/19/02

SHEET 214R3 OF

FILE -> I:\bb\04-012001\sas\contract plans and cco\cco\cco#87\1-original 09-01-11\dgn\agdkd04.dgn

USERNAME -> PTam
DATE PLOTTED -> 30 AUG 2011
TIME PLOTTED -> 11:05:41
100 % PS&E

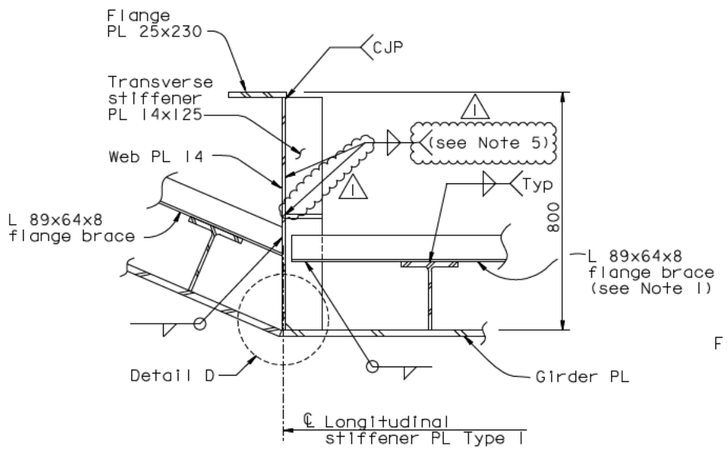

SECTION A-A
1:10

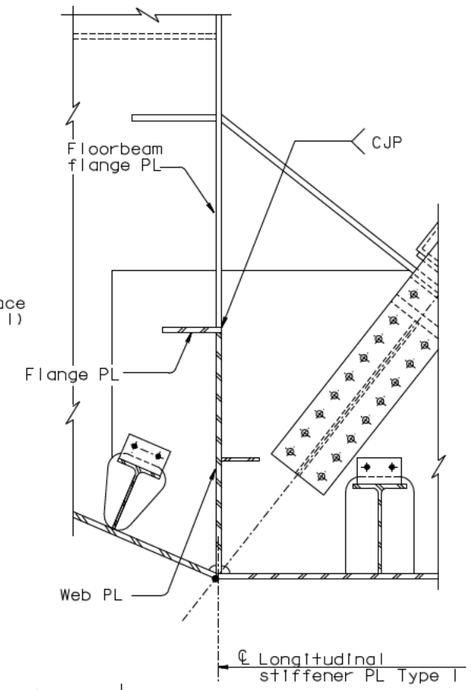

SECTION B-B
1:10

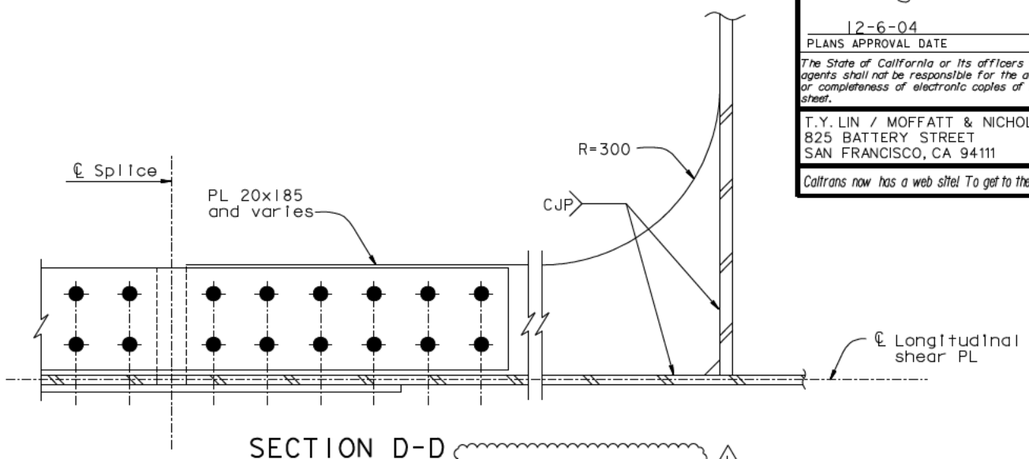

SECTION D-D
1:5

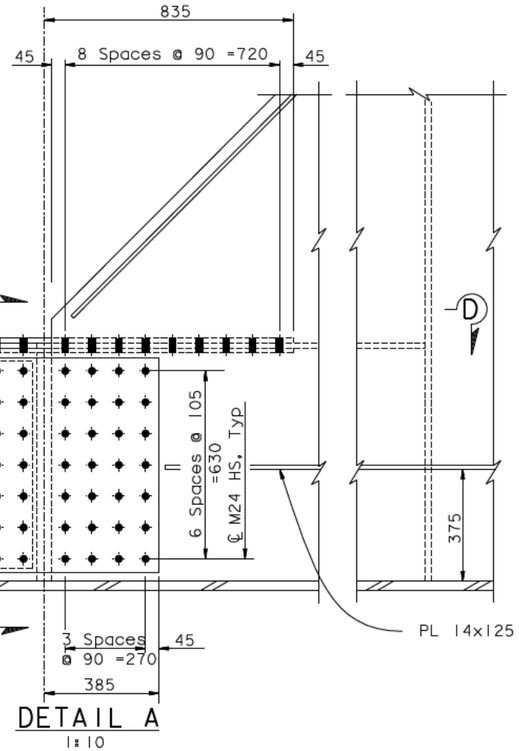

DETAIL A
1:10

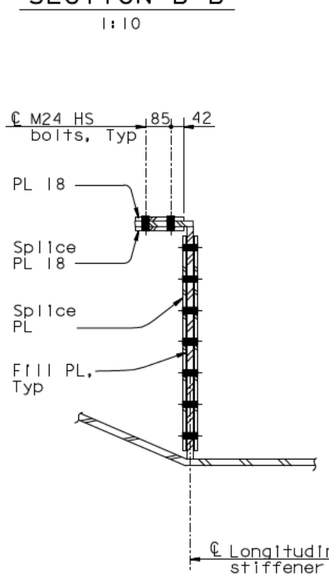

SECTION C-C
1:10

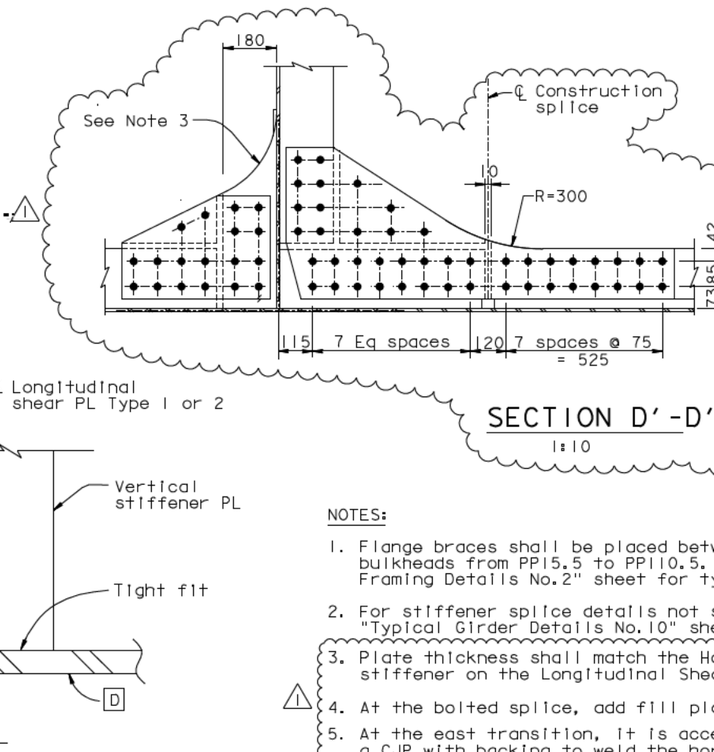

DETAIL D
1:2.5

SECTION D'-D' (OPPOSITE HAND)
1:10
(See Note 2)

NOTES:

1. Flange braces shall be placed between intermediate bulkheads from PP15.5 to PP110.5. See "Girder Framing Details No.2" sheet for typical locations.
2. For stiffener splice details not shown, see "Typical Girder Details No.10" sheet.
3. Plate thickness shall match the Horizontal stiffener on the Longitudinal Shear PL Type 2.
4. At the bolted splice, add fill plates as required.
5. At the east transition, it is acceptable to use a CJP with backing to weld the horizontal PL14x125 stiffener to the Longitudinal Shear PL Type 1.

ALL DIMENSIONS ARE IN MILLIMETERS UNLESS OTHERWISE SHOWN

CONTRACT CHANGE ORDER NO. ____
SHEET ___ OF ___

REQUESTS FOR INFORMATION NOT ADDRESSED IN THIS CCO REMAIN IN FORCE

FOR REVISIONS ONLY

Marwan N. Nader
No. C 054426
Exp. 12/31/13
CIVIL
REGISTERED PROFESSIONAL ENGINEER
STATE OF CALIFORNIA

DIST.	COUNTY	ROUTE	KILOMETER POST TOTAL PROJECT	SHEET NO.	TOTAL SHEETS
04	SF	80	13.2/13.9	632R	1204

Caltrans Metric

George Baker
REGISTERED ENGINEER - CIVIL

12-6-04
PLANS APPROVAL DATE

REGISTERED PROFESSIONAL ENGINEER
George S. Baker
No. C57112
Exp. 12/31/05
CIVIL
STATE OF CALIFORNIA

The State of California or its officers or agents shall not be responsible for the accuracy or completeness of electronic copies of this plan sheet.

T.Y. LIN / MOFFATT & NICHOL
825 BATTERY STREET
SAN FRANCISCO, CA 94111

Caltrans now has a web site! To get to the web site, go to: http://www.dot.ca.gov

MARK	DATE	REVISIONS	BY	CH'D	CCO#
1	04/18/12	EAST END OBG	MN	GB	87

R. Valizadeh/V. Toan/Y.L./W.L./F.C.
DESIGN OVERSIGHT
Ryan Valizadeh / Vinyl Toan / Y. Liu
SIGN OFF DATE 04/18/12

	BY	CHECKED
DESIGN	G. Baker	P. Ritchie
DETAILS	S. Camo	T. McMeans
QUANTITIES	G. Baker	M. Roberts

PREPARED FOR THE
STATE OF CALIFORNIA
DEPARTMENT OF TRANSPORTATION

R. Manzanarez
PROJECT ENGINEER

BRIDGE NO. 34-0006L/R
KILOMETER POST 13.2/13.9

SAN FRANCISCO OAKLAND BAY BRIDGE
EAST SPAN SEISMIC SAFETY PROJECT
SELF-ANCHORED SUSPENSION BRIDGE
(SUPERSTRUCTURE & TOWER)

TYPICAL GIRDER DETAILS NO.8

Rev. Date: 5-18-98

ORIGINAL SCALE IN MILLIMETERS FOR REDUCED PLANS 0 10 20 30 40 50 60 70 80 90 100

CU 04
EA 0120F1

DISREGARD PRINTS BEARING EARLIER REVISION DATES

REVISION DATES (PRELIMINARY STAGE ONLY): 05/15/99 | 08/02/99 | 05/31/01 | 04/08/02 | 07/01/02 | 12/19/02

SHEET 215R1 OF

FILE -> I:\bb\04-012001\sas\contract plans and cco\cco\cco#87\temp\aggdkd05.dgn

USERNAME -> DWinrow DATE PLOTTED -> 18 APR 2012 TIME PLOTTED -> 10:57:53

100 % PS&E

DIST.	COUNTY	ROUTE	KILOMETER POST TOTAL PROJECT	SHEET NO.	TOTAL SHEETS
04	SF	80	13.2/13.9	633R3	1204

Caltrans Metric

George Baker
REGISTERED ENGINEER - CIVIL

12-6-04
PLANS APPROVAL DATE

The State of California or its officers or agents shall not be responsible for the accuracy or completeness of electronic copies of this plan sheet.

REGISTERED PROFESSIONAL ENGINEER — George S. Baker — No. C57112 — Exp. 12/31/05 — CIVIL — STATE OF CALIFORNIA

T.Y. LIN / MOFFATT & NICHOL
825 BATTERY STREET
SAN FRANCISCO, CA 94111

Caltrans now has a web site! To get to the web site, go to: http://www.dot.ca.gov

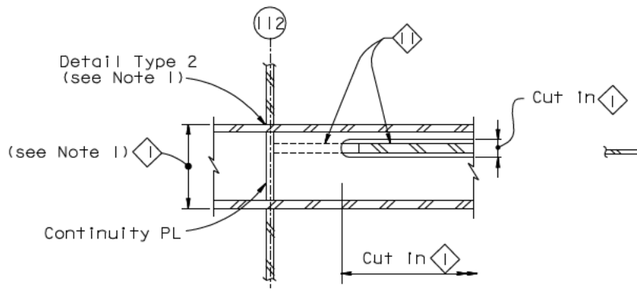

SECTION K-K
1:5

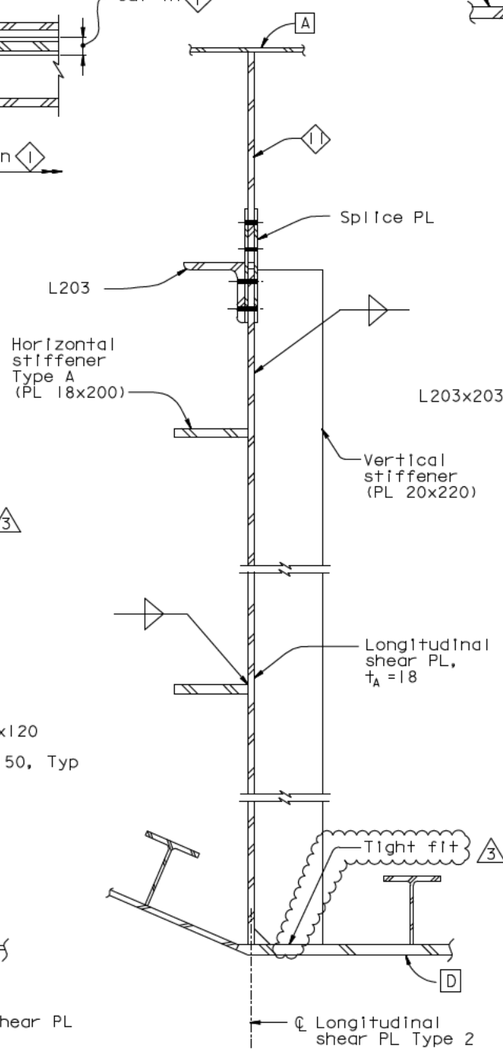

SECTION F-F
1:10

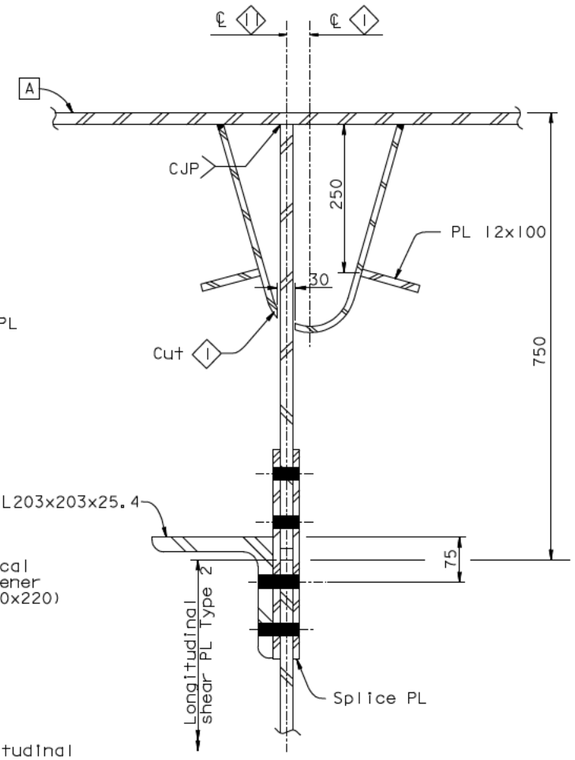

SECTION J-J
1:5

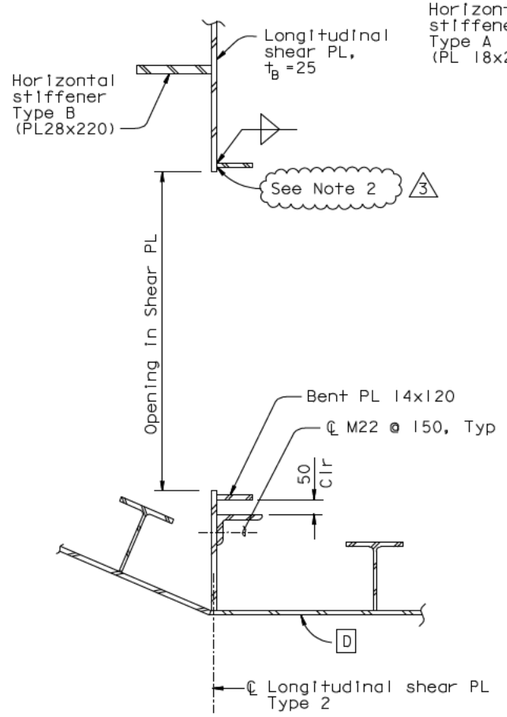

SECTION E-E
1:10

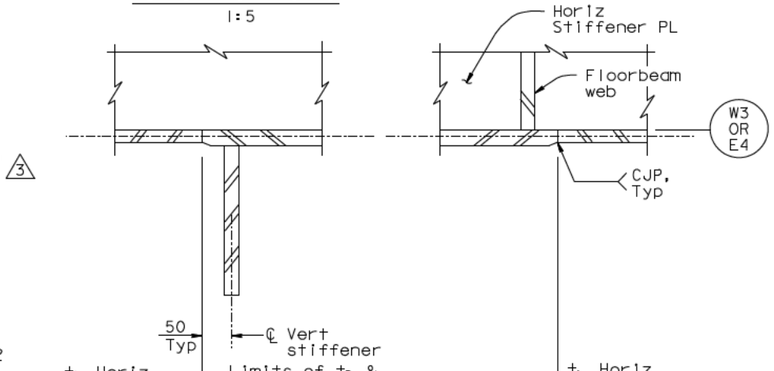

SECTION G-G
1:5

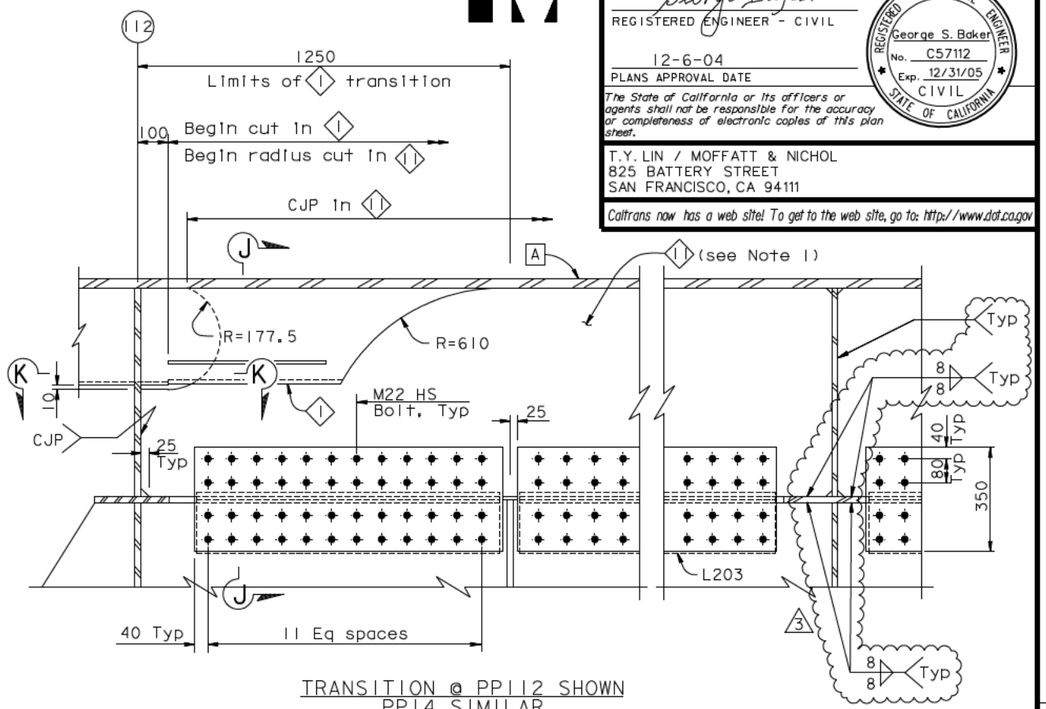

TRANSITION @ PP112 SHOWN
PP14 SIMILAR

DETAIL B
1:10

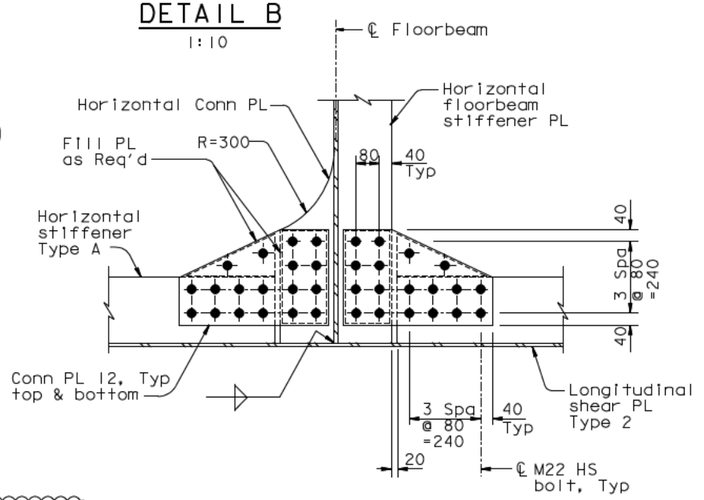

HORIZONTAL CONNECTION PLATE DETAIL

SECTION H-H
1:10

NOTES:

1. For details of 1 and 11, see "Typical Girder Details No. 3" and "Typical Girder Details No. 4" sheets.

3 2. Where access opening flange is within 100 mm of web stiffeners, a single PJP (10) may be used in lieu of the double fillet weld, subject to review and approval of the Engineer. Flange is not required within 50 mm of web stiffeners.

ALL DIMENSIONS ARE IN MILLIMETERS UNLESS OTHERWISE SHOWN

REGISTERED PROFESSIONAL ENGINEER — Marwan N. Nader — No. C 054426 — Exp. 12/31/13 — CIVIL — STATE OF CALIFORNIA

FOR REVISIONS ONLY

CONTRACT CHANGE ORDER NO. ____
SHEET ___ OF ___

REQUESTS FOR INFORMATION NOT ADDRESSED IN THIS CCO REMAIN IN FORCE

MARK	DATE	DESCRIPTIONS	BY	CH'D	CCO#
3	04/18/12	EAST END OBG	MN	GB	87
2	07/31/09	LONGITUDINAL SHEAR PLATE	DT	GB	122
1	07/30/07	HINGE A REACTION-SHEAR PLATES	DT	GB	50

REVISIONS

R. Valizadeh/V. Toan/Y.L./W.L./F.C.
DESIGN OVERSIGHT
Roya Valizadeh / Vong Toan / Y. Liu
SIGN OFF DATE 04/18/12

	BY	CHECKED
DESIGN	G. Baker	P. Ritchie
DETAILS	S. Camo	T. McMeans
QUANTITIES	G. Baker	M. Roberts

PREPARED FOR THE STATE OF CALIFORNIA
DEPARTMENT OF TRANSPORTATION

R. Manzanarez
PROJECT ENGINEER

BRIDGE NO. 34-0006L/R
KILOMETER POST 13.2/13.9

SAN FRANCISCO OAKLAND BAY BRIDGE
EAST SPAN SEISMIC SAFETY PROJECT
SELF-ANCHORED SUSPENSION BRIDGE
(SUPERSTRUCTURE & TOWER)

TYPICAL GIRDER DETAILS NO. 9

Rev. Date: 5-18-98

ORIGINAL SCALE IN MILLIMETERS FOR REDUCED PLANS 0 10 20 30 40 50 60 70 80 90 100

CU 04
EA 0120F1

DISREGARD PRINTS BEARING EARLIER REVISION DATES

REVISION DATES (PRELIMINARY STAGE ONLY): 05/07/01 | 04/08/02 | 07/01/02 | 12/13/02

SHEET 216R3 OF

FILE -> I:\bb\04-0120I\sas\contract plans and cco\cco\cco#87\temp\agdkd05a.dgn

USERNAME -> DWinrow DATE PLOTTED -> 18 APR 2012 TIME PLOTTED -> 10:58:55

100 % PS&E

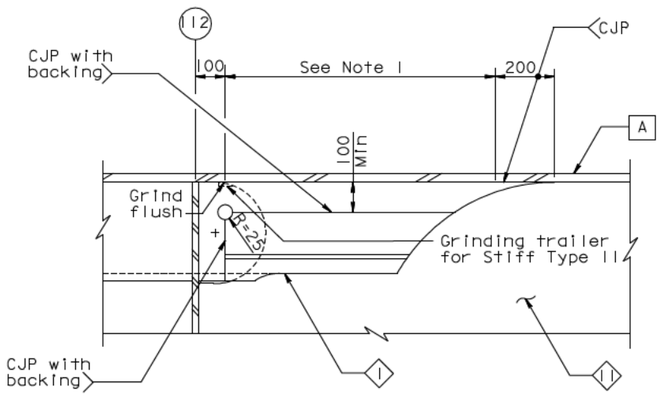

OPTION 1

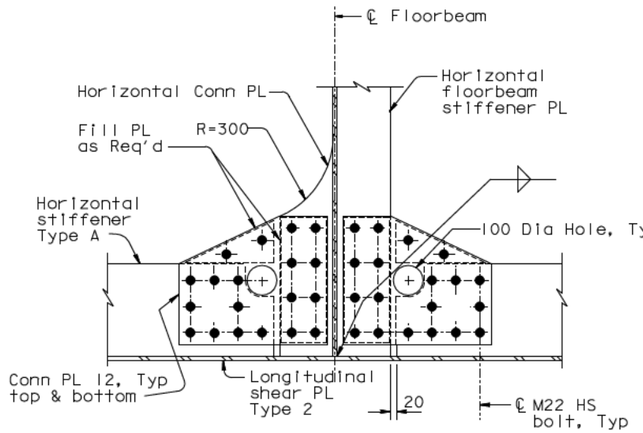

ALTERNATIVE 1

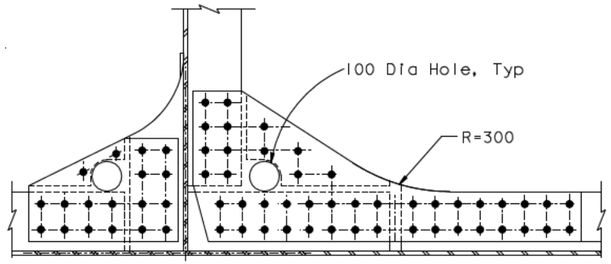

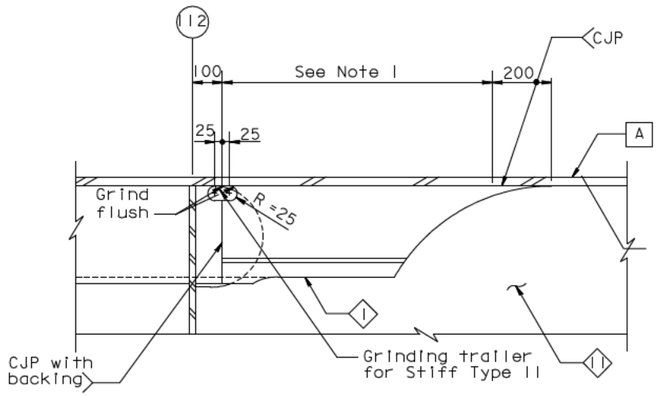

OPTION 2

TRANSITION @ PP112 SHOWN
PP14 SIMILAR

ALTERNATE RIB TRANSITION DETAIL

1:10

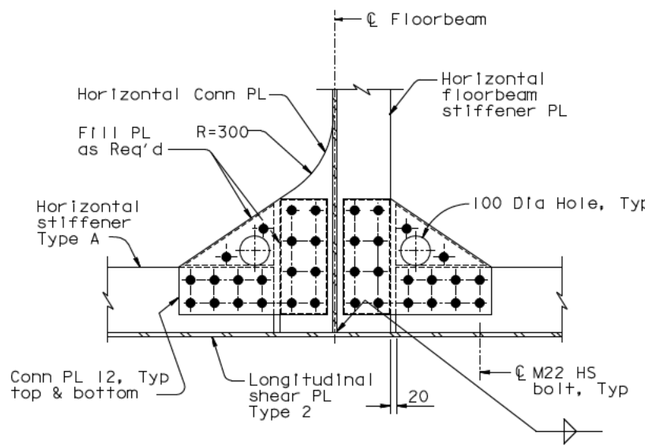

ALTERNATIVE 2

HORIZONTAL CONNECTION PLATE DETAIL

ALTERNATE SECTION H-H

1:10

ALTERNATE SECTION D'-D' (OPPOSITE HAND)

1:10 (See Note 2)

NOTES:

1. Manual welding in this zone is acceptable, subject to review and approval of the Engineer
2. To accommodate the Contractor's lifting rods, the Contractor may use alternative Sections D'-D' and H-H to accommodate temporary lifting rods. Holes for lifting rods may remain provided all edge sealing requirements are satisfied by the bolts layout.

CONTRACT CHANGE ORDER NO. ____
SHEET ___ OF ___

REQUESTS FOR INFORMATION NOT ADDRESSED IN THIS CCO REMAIN IN FORCE

ALL DIMENSIONS ARE IN MILLIMETERS UNLESS OTHERWISE SHOWN

DIST.	COUNTY	ROUTE	KILOMETER POST TOTAL PROJECT	SHEET NO.	TOTAL SHEETS
04	SF	80	13.2/13.9	633SI	1204

REGISTERED ENGINEER - CIVIL
04-18-12
PLANS APPROVAL DATE

REGISTERED PROFESSIONAL ENGINEER — Marwan N. Nader — No. C 054426 — Exp. 12/31/13 — CIVIL — STATE OF CALIFORNIA

The State of California or its officers or agents shall not be responsible for the accuracy or completeness of electronic copies of this plan sheet.

T.Y. LIN / MOFFATT & NICHOL
825 BATTERY STREET
SAN FRANCISCO, CA 94111

Caltrans now has a web site! To get to the web site, go to: http://www.dot.ca.gov

MARK	DATE	DESCRIPTIONS	BY	CH'D	CCO#
0	04/18/12	EAST END OBG	GB	MN	87

REVISIONS

	BY		CHECKED
DESIGN	G. Baker		M. Nader
DETAILS	G. Baker		D. Turner
QUANTITIES	G. Baker		D. Turner

PREPARED FOR THE STATE OF CALIFORNIA DEPARTMENT OF TRANSPORTATION

R. Manzanarez
PROJECT ENGINEER

BRIDGE NO. 34-0006L/R
KILOMETER POST 13.2/13.9

SAN FRANCISCO OAKLAND BAY BRIDGE
EAST SPAN SEISMIC SAFETY PROJECT
SELF-ANCHORED SUSPENSION BRIDGE
(SUPERSTRUCTURE & TOWER)

TYPICAL GIRDER DETAILS NO. 9A

R. Vallzadeh/V. Toan/Y.L./W.L./F.C.
DESIGN OVERSIGHT
Roya Vallzadeh / Vinh Toan / Y. Liu
SIGN OFF DATE 04/18/12

Rev. Date: 5-18-98

ORIGINAL SCALE IN MILLIMETERS FOR REDUCED PLANS 0 10 20 30 40 50 60 70 80 90 100

CU 04
EA 0120F1

DISREGARD PRINTS BEARING EARLIER REVISION DATES

REVISION DATES (PRELIMINARY STAGE ONLY) 04/18/12

SHEET 216SI OF

FILE -> I:\bb\04-0120I\sas\contract plans and cco\cco\cco#87\temp\aggdkd04b.dgn

USERNAME -> DWinrow DATE PLOTTED -> 18 APR 2012 TIME PLOTTED -> 10:59:52

100% PS&E

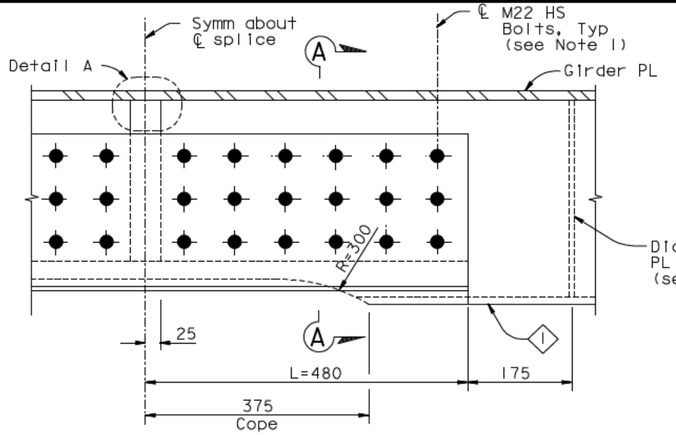

AT RIB STIFFENER TYPE I (See Note 5)

1:5

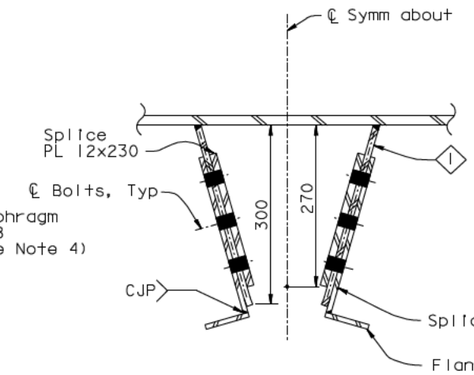

SECTION A-A

1:5

(Section A'-A' similar)

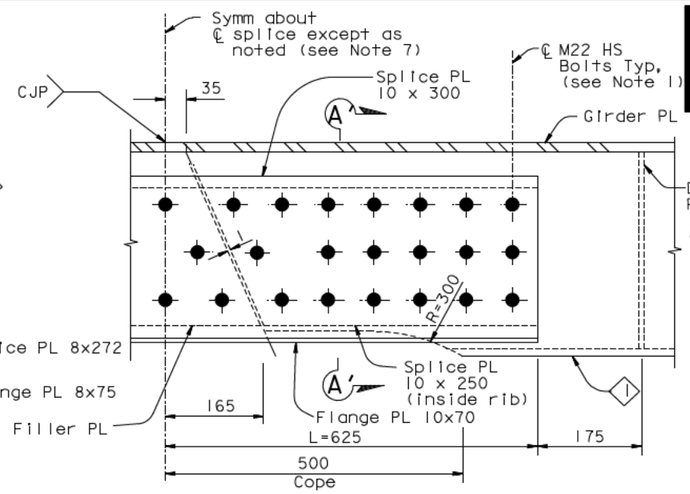

AT RIB STIFFENER TYPE I (See Note 6)

1:5

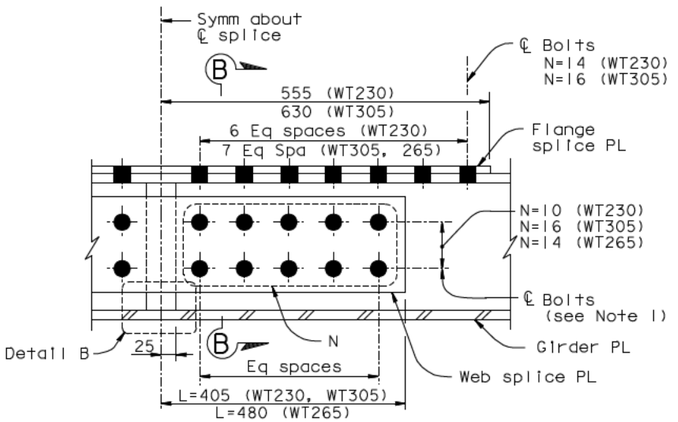

AT WT STIFFENER (See Notes 2 & 9)

1:5

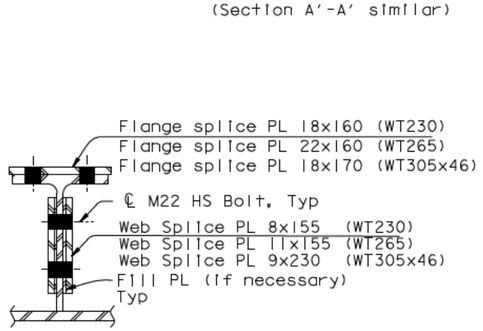

SECTION B-B

1:5

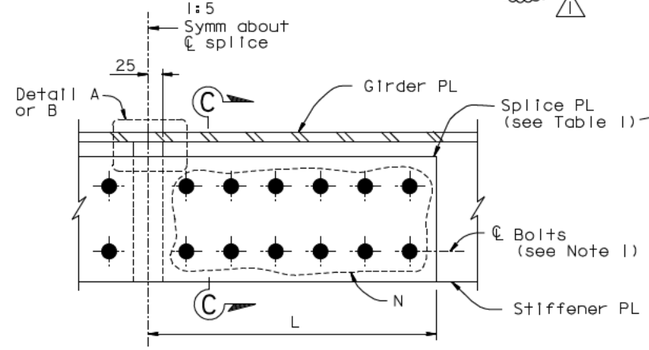

AT PLATE STIFFENER, t ≤ 30 (See Note 2)

1:5

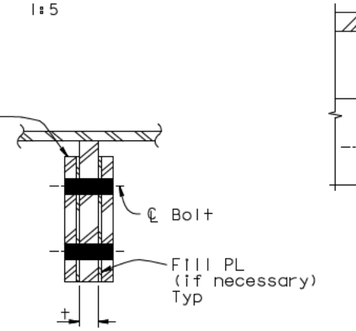

SECTION C-C (See Note 8)

1:5

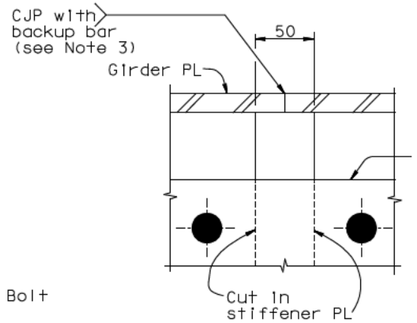

DETAIL A

1:2.5

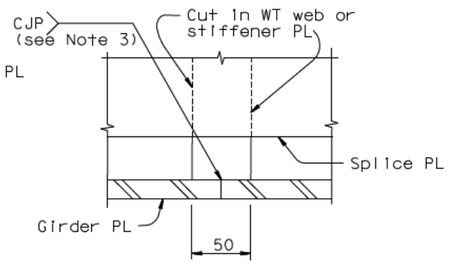

DETAIL B

1:2.5

BOLTED TYPE CONNECTION
GIRDER SPLICE DETAILS

LEGEND:

t Stiffener PL thickness

N Number of bolts required for half-splice

L Length of half-splice

NOTES:

1. For "Typical Girder Details" sheets, all bolts shall be detailed according to the bolt dimension table. See "Typical Girder Details No.1" sheet. All bolts are HS, unless noted otherwise.
2. For location of connection type, see Table 2 on "Typical Girder Details No.11" sheet.
3. Girder plate weld details shown in Details A and B are applicable for both field and shop splices on all box girder faces.
4. Sealing diaphragm. See note 4 on "Typical Girder Details No.4" sheet.
5. Splice details are applicable for shop and field splices for panel points 8 through 115.
6. Splice details are applicable for shop and field splices for panel points 115 through 128.
7. At the floorbeam side of the splice, the diaphragm plate shall not be used. Continuity plate shall be sealed according to diaphragm plate requirements.
8. For Section C-C at optional kinks, see "Typical Girder Details No.11A" sheet.
9. For bolted connections details at kinked field splice PP116-PP118, see "Typical Girder Details No.11B" sheet.
10. The diaphragm PL may be shifted by 50 mm to facilitate installation of the inside splice plate, subject to review and approval of the Engineer.

STIFFENER SPLICE TABLE 1

PLATE STIFFENER THICKNESS †	SPLICE PLATE PLATE SIZE	SPLICE PLATE L	HS BOLT N	HS BOLT SIZE
14	8 x 120	555	7	M22
16	14 x 100	620	7	M24
1 18 (depth 155)	14 x 140	650	12	M22
18 (depth 170)	12 x 155	475	12	M22
20	14 x 155	555	14	M22
22	18 x 150	565	16	M22
25	18 x 215	500	21	M22
28	18 x 245	565	21	M24
30	NA - See Table 2			
35	NA - See Table 2			

DIST.	COUNTY	ROUTE	KILOMETER POST TOTAL PROJECT	SHEET NO.	TOTAL SHEETS
04	SF	80	13.2/13.9	634R1	1204

George Baker
REGISTERED ENGINEER - CIVIL
12-6-04
PLANS APPROVAL DATE

REGISTERED PROFESSIONAL ENGINEER George S. Baker No. C57112 Exp. 12/31/05 CIVIL STATE OF CALIFORNIA

The State of California or its officers or agents shall not be responsible for the accuracy or completeness of electronic copies of this plan sheet.

T.Y. LIN / MOFFATT & NICHOL
825 BATTERY STREET
SAN FRANCISCO, CA 94111

Caltrans now has a web site! To get to the web site, go to: http://www.dot.ca.gov

REGISTERED PROFESSIONAL ENGINEER Marwan N. Nader No. C 054426 Exp. 12/31/13 CIVIL STATE OF CALIFORNIA

FOR REVISIONS ONLY

ALL DIMENSIONS ARE IN MILLIMETERS UNLESS OTHERWISE SHOWN

CONTRACT CHANGE ORDER NO. ____
SHEET ___ OF ___

REQUESTS FOR INFORMATION NOT ADDRESSED IN THIS CCO REMAIN IN FORCE

MARK	DATE	DESCRIPTIONS	BY	CH'D	CCO#
1	04/18/12	EAST END OBG	MN	GB	87

REVISIONS

R. Vallzadeh/V. Toan/Y.L./W.L./F.C.
DESIGN OVERSIGHT
SIGN OFF DATE 04/18/12

	BY	CHECKED
DESIGN	G. Baker	P. Ritchie
DETAILS	S. Camo	T. McMeans
QUANTITIES	G. Baker	M. Roberts

PREPARED FOR THE STATE OF CALIFORNIA DEPARTMENT OF TRANSPORTATION

R. Manzanarez
PROJECT ENGINEER

BRIDGE NO. 34-0006L/R
KILOMETER POST 13.2/13.9

SAN FRANCISCO OAKLAND BAY BRIDGE
EAST SPAN SEISMIC SAFETY PROJECT
SELF-ANCHORED SUSPENSION BRIDGE
(SUPERSTRUCTURE & TOWER)

TYPICAL GIRDER DETAILS NO. 10

Rev. Date: 5-18-98

ORIGINAL SCALE IN MILLIMETERS FOR REDUCED PLANS 0 10 20 30 40 50 60 70 80 90 100

CU 04
EA 0120F1

DISREGARD PRINTS BEARING EARLIER REVISION DATES

REVISION DATES (PRELIMINARY STAGE ONLY): 05/15/98 08/28/98 05/31/01 04/08/02 07/01/02 12/19/02

SHEET 217R1 OF

FILE -> I:\bb\04-012001\sas\contract plans and cco\cco\cco#87\temp\aggdkd06.dgn

USERNAME -> DWinrow DATE PLOTTED -> 18 APR 2012 TIME PLOTTED -> 11:01:24

100% PS&E

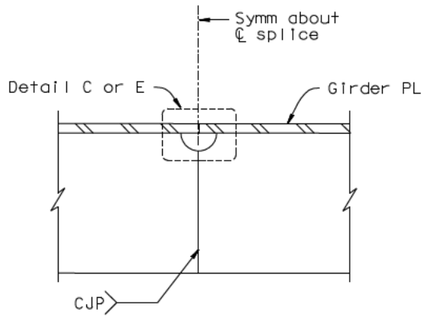

PLATE STIFFENER (See Note 5) ⚠
1:5

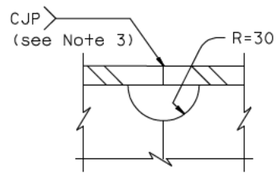

DETAIL C
1:2.5

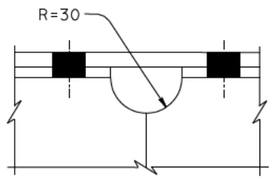

DETAIL D
1:2.5

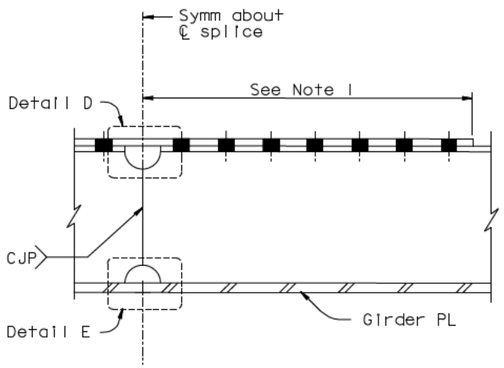

WT STIFFENER
1:5

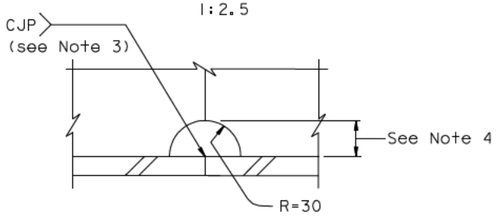

DETAIL E
1:2.5

TABLE 2
LOCATION OF GIRDER CONNECTION TYPE
(See Notes 1 and 2)

STIFFENER TYPE	FIELD SPLICE	SHOP SPLICE
Rib	Bolted	Bolted
WT	Bolted	Welded
Plate, <30	Bolted	Welded
Plate, ≥30	Welded	Welded

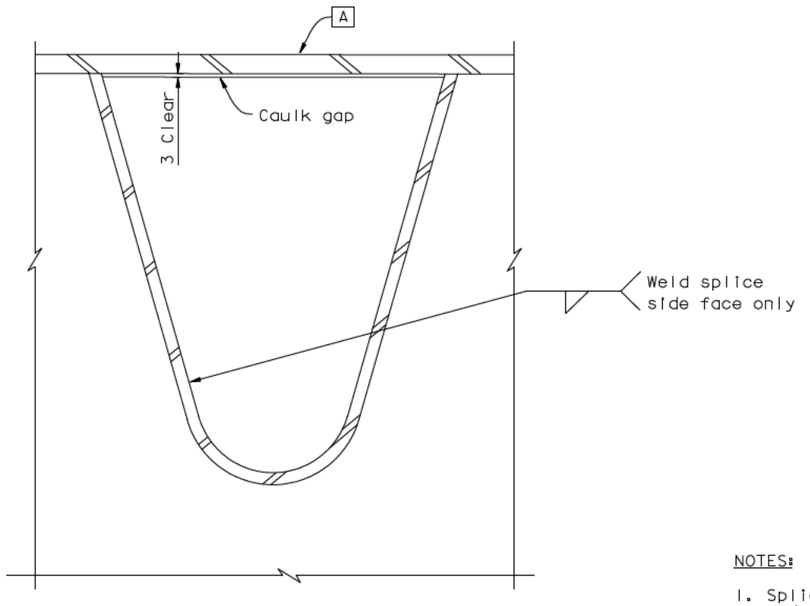

DIAPHRAGM DETAIL
1:2.5

NOTES:

1. Splice of WT flange is bolted for both bolted and welded type connection. For details, see "Typical Girder Details No.10" sheet.
2. For bolted type connection, see "Typical Girder Details No.10" sheet.
3. Girder plate weld details shown in Details C and E are applicable for both field and shop splices.
4. For stiffeners less than 200, height of opening shall not exceed 15% of stiffener height.
5. ⚠ For welded plate stiffener splice at optional kinks, see "Typical Girder Details No.11A" sheet.

WELDED TYPE CONNECTION
GIRDER SPLICE DETAILS

CONTRACT CHANGE ORDER NO. ____
SHEET ___ OF ___

REQUESTS FOR INFORMATION NOT ADDRESSED IN THIS CCO REMAIN IN FORCE

FOR REVISIONS ONLY

ALL DIMENSIONS ARE IN MILLIMETERS UNLESS OTHERWISE SHOWN

DIST.	COUNTY	ROUTE	KILOMETER POST TOTAL PROJECT	SHEET NO.	TOTAL SHEETS
04	SF	80	13.2/13.9	635R1	1204

Caltrans Metric

George Baker
REGISTERED ENGINEER - CIVIL
12-6-04
PLANS APPROVAL DATE

REGISTERED PROFESSIONAL ENGINEER — George S. Baker — No. C57112 — Exp. 12/31/05 — CIVIL — STATE OF CALIFORNIA

The State of California or its officers or agents shall not be responsible for the accuracy or completeness of electronic copies of this plan sheet.

T.Y. LIN / MOFFATT & NICHOL
825 BATTERY STREET
SAN FRANCISCO, CA 94111

Caltrans now has a web site! To get to the web site, go to: http://www.dot.ca.gov

Marwan N. Nader — No. C 054426 — Exp. 12/31/13 — CIVIL — REGISTERED PROFESSIONAL ENGINEER — STATE OF CALIFORNIA

R. Valizadeh/V. Toan/Y.L. /W/L/F.C.
DESIGN OVERSIGHT
Roya Valizadeh / Vong Toan / Y. Liu
SIGN OFF DATE 04/18/12

MARK	DATE	DESCRIPTIONS	BY	CH'D	CCO#
1	04/18/12	EAST END OBG	MN	GB	87

REVISIONS

	BY	CHECKED
DESIGN	G. Baker	P. Ritchie
DETAILS	S. Camo	T. McMeans
QUANTITIES	G. Baker	M. Roberts

PREPARED FOR THE STATE OF CALIFORNIA
DEPARTMENT OF TRANSPORTATION

R. Manzanarez
PROJECT ENGINEER

BRIDGE NO. 34-0006L/R
KILOMETER POST 13.2/13.9

SAN FRANCISCO OAKLAND BAY BRIDGE
EAST SPAN SEISMIC SAFETY PROJECT
SELF-ANCHORED SUSPENSION BRIDGE
(SUPERSTRUCTURE & TOWER)

TYPICAL GIRDER DETAILS NO. 11

Rev. Date: 5-18-98

ORIGINAL SCALE IN MILLIMETERS FOR REDUCED PLANS 0 10 20 30 40 50 60 70 80 90 100

CU 04
EA 0120F1

DISREGARD PRINTS BEARING EARLIER REVISION DATES

REVISION DATES (PRELIMINARY STAGE ONLY): 05/15/99 | 08/02/99 | 05/31/01 | 04/08/02 | 07/01/02 | 12/19/02

SHEET 218R1 OF

FILE => I:\bb\04-0120F1\sas\contract plans and cco\cco\cco*87\temp\agdkd06a.dgn

USERNAME -> DWinrow DATE PLOTTED -> 18 APR 2012 TIME PLOTTED => 11:02:32

100 % PS&E

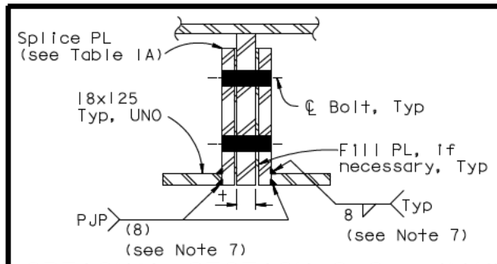

OPTIONAL SECTION C-C @ KINKS (See Note 1)

1:5

STIFFENER SPLICE @ KINKS					
PLATE STIFFENER THICKNESS t	SPLICE PLATE			HS BOLT	
	PLATE SIZE	FLANGE PLATE (See Note 5)	L	N	SIZE
16 x 140	14 x 100	18 x 100	715	9	M24
18 x 155	14 x 140	18 x 65	785	13	M24
20 x 180	18 x 165	18 x 125	685	16	M24
22 x 200	18 x 185	18 x 125	720	16	M27
25 x 230	18 x 215	18 x 125	785	18	M27
22 x 185	20 x 170	18 x 125	785	15	M27
25 x 200	20 x 185	18 x 125	785	18	M27
28 x 220	20 x 200	18 x 125	785	18	M27
28 x 240	20 x 225	18 x 125	785	18	M27
28 x 255	20 x 245	25 x 125	785	20	M27
28 x 300	20 x 275	18 x 125	785	22	M27

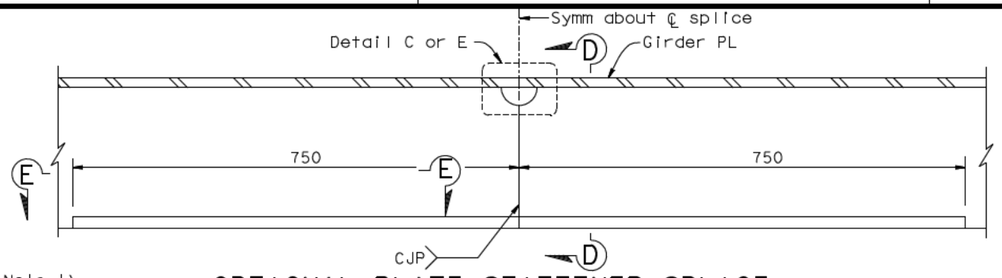

OPTIONAL PLATE STIFFENER SPLICE AT KINKS FOR RIBS TYPE 2 AND 10 (See Note 1)

1:5

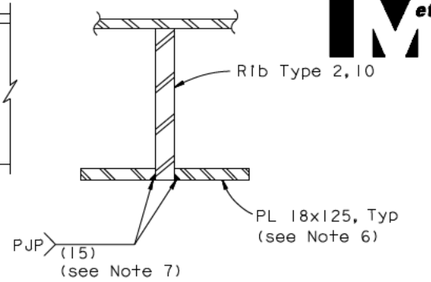

SECTION D-D

1:5

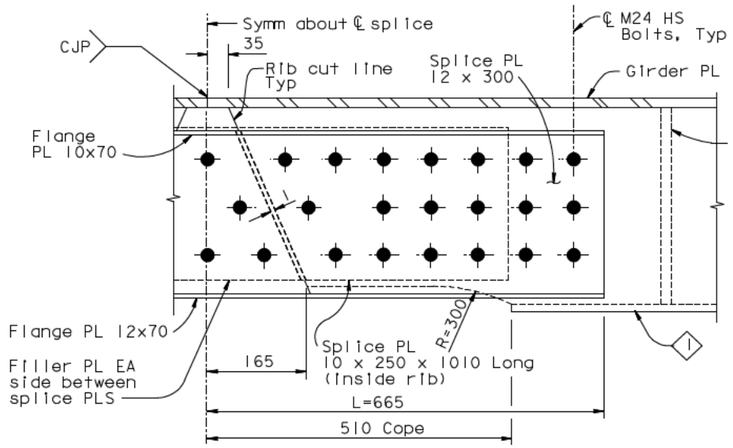

ALTERNATIVE SPLICE DETAIL NO. 1 AT RIB STIFFENER TYPE 1

1:5

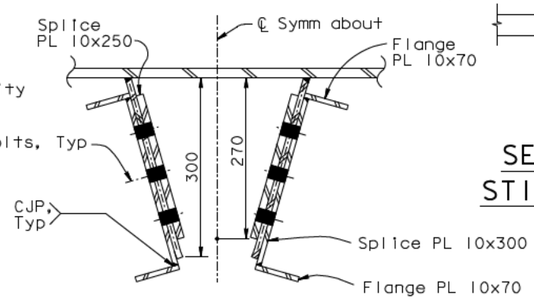

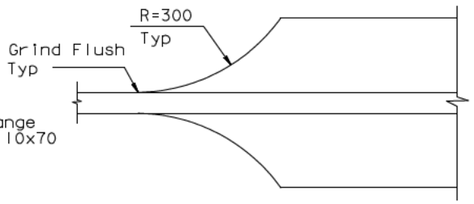

SECTION E-E TYPICAL STIFFENER TERMINATION

1:5

SECTION A'-A'

1:5

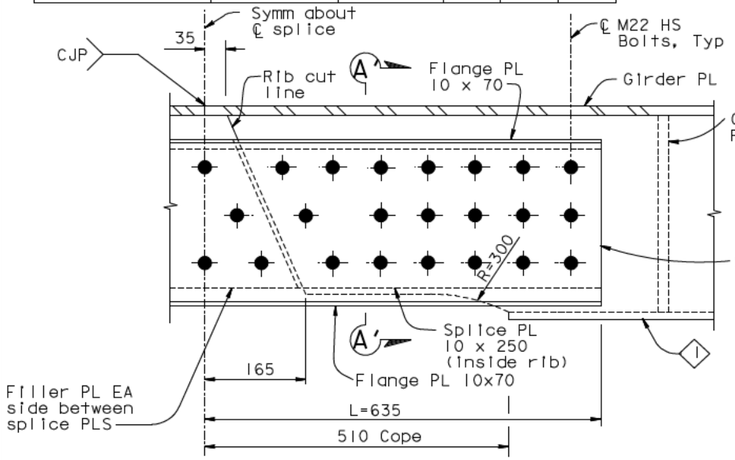

BOLTED TYPE CONNECTION GIRDER SPLICE DETAIL AT RIB STIFFENER TYPE 1 AT KINK

1:5

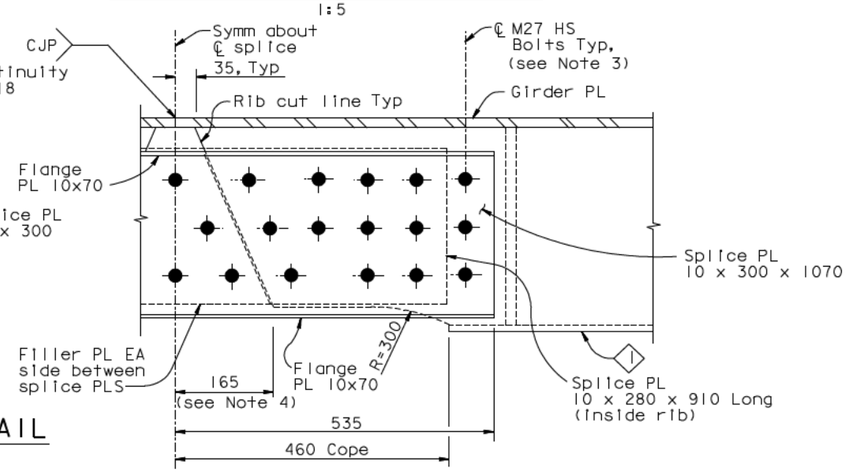

ALTERNATIVE SPLICE DETAIL NO. 2 AT RIB STIFFENER TYPE 1

1:5

NOTES:

1. For stiffeners indicated as curved on the Plans, the Contractor may elect to fabricate the ribs as straight segments, subject to review and approval of the Engineer. Rib kinks shall be placed within 50 mm of a floorbeam web or at segment splices. For ribs kinked at a segment splice, reinforcing flanges shall be provided as shown. This reinforcing shall be required for kinks greater than 0.0015 radians in open ribs or 0.005 radians in closed ribs, or as approved by the Engineer.
2. At the Contractor's option, "Alternative Splice Detail No.1" or "Alternative Splice Detail No.2" may be used between PP127 and PP127.5, subject to review and approval of the Engineer.
3. Minimum bolt edge distance: 48 mm.
   Minimum bolt spacing: 82 mm.
4. Dimensions may be reduced by up to 20 mm to accommodate tight space.
5. Flange PL 25x100 may be used in lieu of PL 18x125.
6. Reinforcing flanges shall be ASTM A709M HPS Grade 485W.
7. At the Contractor's option, the web to flange web may be a 12 mm effective PJP, subject to review and approval of the Engineer.

DIST.	COUNTY	ROUTE	KILOMETER POST TOTAL PROJECT	SHEET NO.	TOTAL SHEETS
04	SF	80	13.2/13.9	635SI	1204

REGISTERED ENGINEER - CIVIL

04-18-12
PLANS APPROVAL DATE

Marwan N. Nader
No. C 054426
Exp. 12/31/13
CIVIL
REGISTERED PROFESSIONAL ENGINEER
STATE OF CALIFORNIA

The State of California or its officers or agents shall not be responsible for the accuracy or completeness of electronic copies of this plan sheet.

T.Y. LIN / MOFFATT & NICHOL
825 BATTERY STREET
SAN FRANCISCO, CA 94111

Caltrans now has a web site! To get to the web site, go to: http://www.dot.ca.gov

CONTRACT CHANGE ORDER NO. ____
SHEET ___ OF ___

REQUESTS FOR INFORMATION NOT ADDRESSED IN THIS CCO REMAIN IN FORCE

ALL DIMENSIONS ARE IN MILLIMETERS UNLESS OTHERWISE SHOWN

R. Vallzadeh/V. Toan/Y.L./W.L./F.C.
DESIGN OVERSIGHT
Roya Vallzadeh / Vong Toan / Y. Liu
SIGN OFF DATE 04/18/12

MARK	DATE	DESCRIPTIONS	BY	CH'D	CCO#
0	04/18/12	EAST END OBG	GB	MN	87

REVISIONS

	BY	CHECKED
DESIGN	G. Baker	M. Nader
DETAILS	G. Baker	D. Turner
QUANTITIES	G. Baker	D. Turner

PREPARED FOR THE STATE OF CALIFORNIA
DEPARTMENT OF TRANSPORTATION

R. Manzanarez
PROJECT ENGINEER

BRIDGE NO. 34-0006L/R
KILOMETER POST 13.2/13.9

SAN FRANCISCO OAKLAND BAY BRIDGE
EAST SPAN SEISMIC SAFETY PROJECT
SELF-ANCHORED SUSPENSION BRIDGE
(SUPERSTRUCTURE & TOWER)

TYPICAL GIRDER DETAILS NO. 11A

Rev. Date: 5-18-98

ORIGINAL SCALE IN MILLIMETERS FOR REDUCED PLANS 0 10 20 30 40 50 60 70 80 90 100

CU 04
EA 0120F1

DISREGARD PRINTS BEARING EARLIER REVISION DATES

REVISION DATES (PRELIMINARY STAGE ONLY) 04/18/12

SHEET 218SI OF

FILE -> I:\bb\04-0120F1\sas\contract plans and cco\cco\cco#87\temp\aggdkd06h.dgn

100% PS&E
DATE PLOTTED => 18 APR 2012 TIME PLOTTED -> 11:03:31
USERNAME => DWinrow

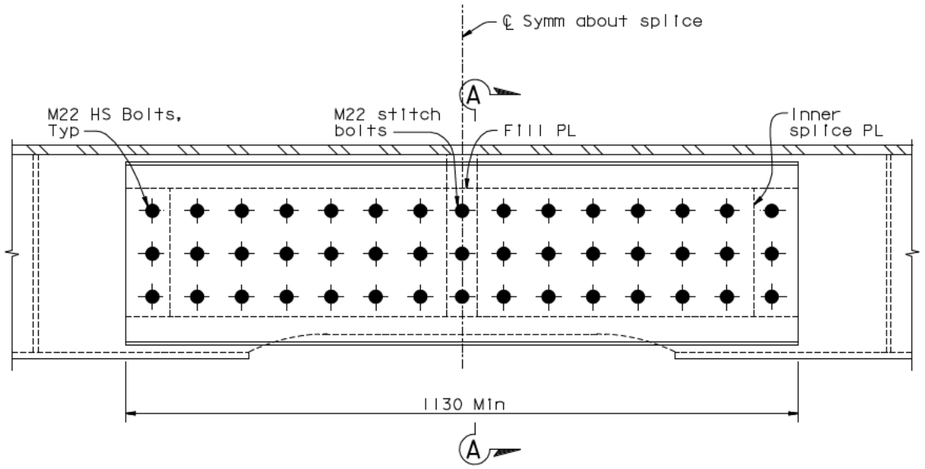

ALTERNATIVE SPLICE FOR REPAIR OF MISALIGNMENT

1:5

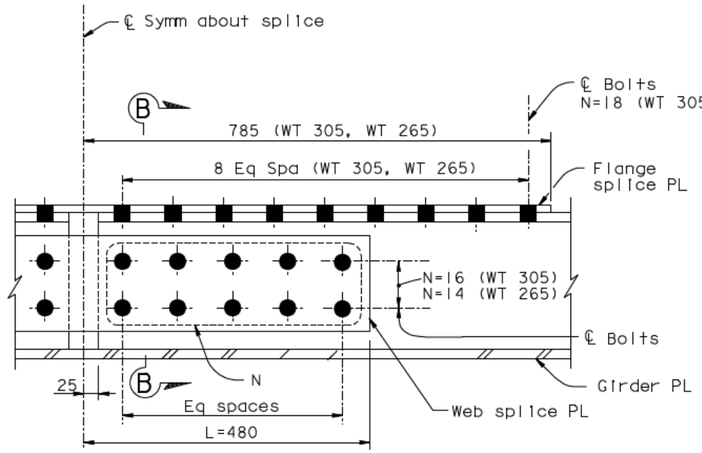

AT WT STIFFENER

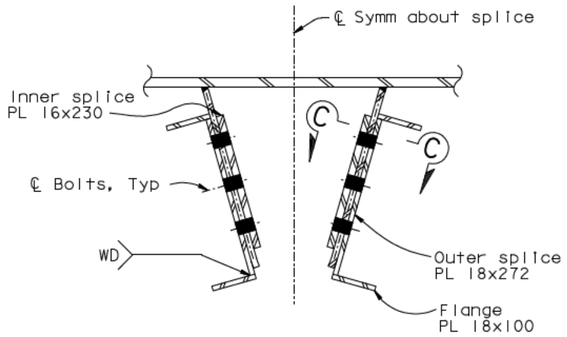

SECTION A-A (See Note 1)

1:5

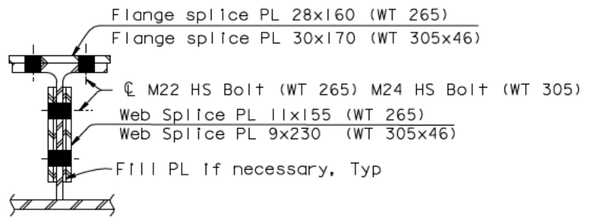

SECTION B-B

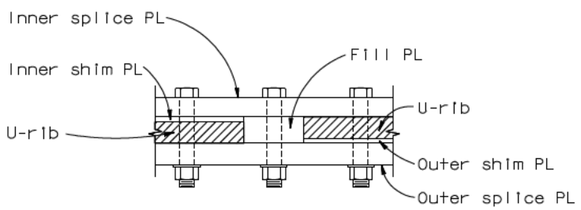

SECTION C-C

1:10

BOLTED TYPE CONNECTION AT WT STIFFENER AT KINKED FIELD SPLICE PP116 - PP118

1:5

CONTRACT CHANGE ORDER NO. _____

SHEET ___ OF ___

REQUESTS FOR INFORMATION NOT ADDRESSED IN THIS CCO REMAIN IN FORCE

NOTES:

1. All faying surfaces of ribs and splice plates shall be brought to flush fit-up without forcing prior to bolt tensioning, using up to 10 mm total shims at each rib plate.
2. For u-ribs with one or both sloping faces misaligned at any point by more than 4 mm, but not more than 10 mm, this reinforced splice shall be applied to both faces of the rib.
3. Where misalignment between the top and bottom of a rib face differs by more than 2 mm then tapered shims shall be used.
4. At each rib wall up to two plies of shimming may be used.

ALL DIMENSIONS ARE IN MILLIMETERS UNLESS OTHERWISE SHOWN

DIST.	COUNTY	ROUTE	KILOMETER POST TOTAL PROJECT	SHEET NO.	TOTAL SHEETS
04	SF	80	13.2/13.9	635S2	1204

REGISTERED ENGINEER - CIVIL

04-18-12

PLANS APPROVAL DATE

Marwan N. Nader No. C 054426 Exp. 12/31/13 CIVIL — REGISTERED PROFESSIONAL ENGINEER — STATE OF CALIFORNIA

The State of California or its officers or agents shall not be responsible for the accuracy or completeness of electronic copies of this plan sheet.

T.Y. LIN / MOFFATT & NICHOL
825 BATTERY STREET
SAN FRANCISCO, CA 94111

Caltrans now has a web site! To get to the web site, go to: http://www.dot.ca.gov

MARK	DATE	DESCRIPTIONS	BY	CH'D	CCO#
0	04/18/12	EAST END OBG	GB	MN	87

REVISIONS

	BY		CHECKED	
DESIGN	G. Baker		M. Nader	
DETAILS	G. Baker		D. Turner	
QUANTITIES	G. Baker		D. Turner	

PREPARED FOR THE STATE OF CALIFORNIA DEPARTMENT OF TRANSPORTATION

R. Manzanarez
PROJECT ENGINEER

BRIDGE NO. 34-0006L/R
KILOMETER POST 13.2/13.9

R. Vallzadeh/V. Toan/Y.L./W.L./F.C.
DESIGN OVERSIGHT
SIGN OFF DATE 04/18/12

SAN FRANCISCO OAKLAND BAY BRIDGE
EAST SPAN SEISMIC SAFETY PROJECT
SELF-ANCHORED SUSPENSION BRIDGE (SUPERSTRUCTURE & TOWER)

TYPICAL GIRDER DETAILS NO. 11B

Rev. Date: 5-18-98

ORIGINAL SCALE IN MILLIMETERS FOR REDUCED PLANS 0 10 20 30 40 50 60 70 80 90 100

CU 04
EA 0120F1

DISREGARD PRINTS BEARING EARLIER REVISION DATES →

REVISION DATES (PRELIMINARY STAGE ONLY): 04/18/12

SHEET 218S2 OF

FILE -> I:\bb\04-01200\sas\contract plans and cco\cco\cco#87\temp\aggdkd06K.dgn

100% PS&E

DATE PLOTTED => 18 APR 2012 TIME PLOTTED -> 11:04:33

USERNAME -> DWinrow

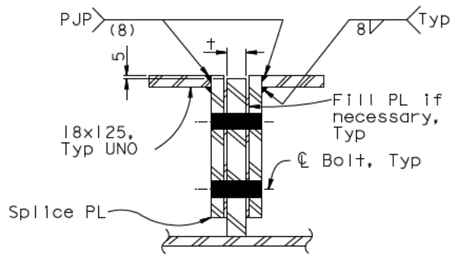

OPTIONAL SECTION C-C @ KINKS (NEAR TRAVELER RAIL SUPPORT)

1:5

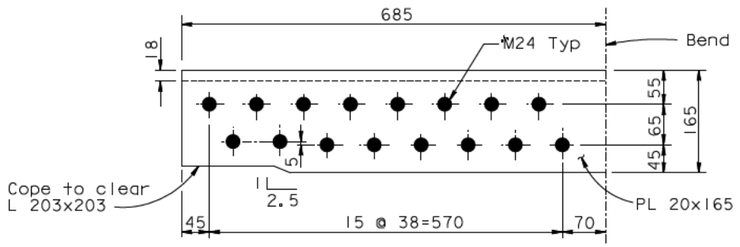

AT TYPE 14 PLATE STIFFENERS @ PP120-PP125 NEAR TRAVELER RAIL SUPPORT

NTS

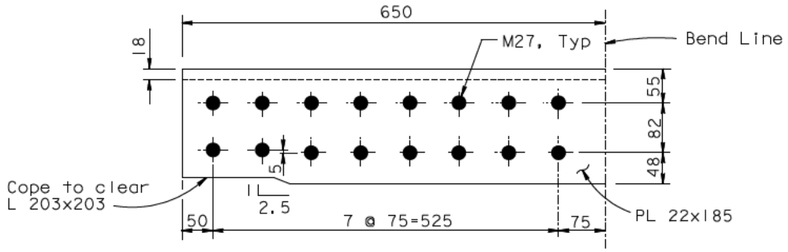

AT TYPE 14 PLATE STIFFENERS @ PP120-PP122 NEAR TRAVELER RAIL SUPPORT

NTS

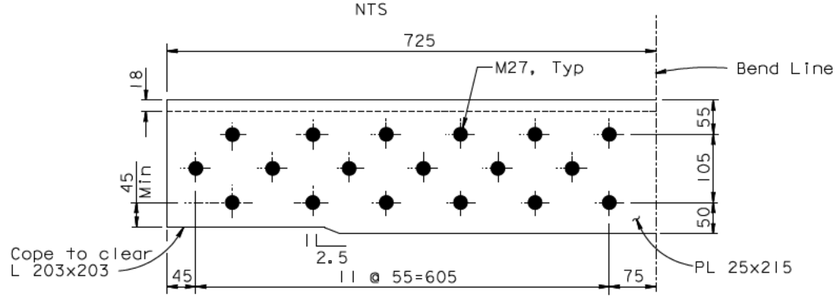

AT TYPE 6 AND TYPE 13 PLATE STIFFENERS NEAR TRAVELER RAIL SUPPORT

NTS

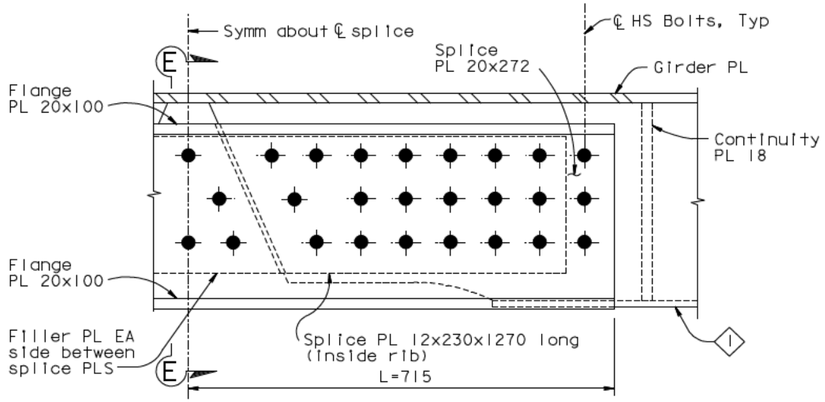

ALTERNATIVE SPLICE FOR REPAIR OF MISALIGNED U-RIB AT DETAILED KINK > 0.005 RAD

NTS

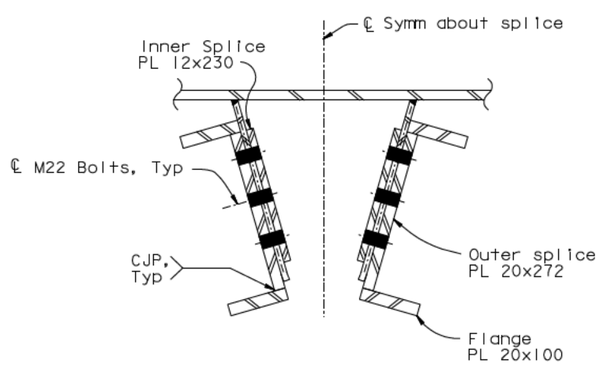

SECTION E-E (See Note 1)

NTS

U-RIB CONFIGURATION	MISALIGNMENT (mm)	SOURCE
Straight	up to 4	Contract Sheet 634, Section A-A
Misaligned	>4 to 10	RFI 1766R0 Response Attachment
Kinked	up to 4	SK-777R4-1
Misaligned & Kinked	>4 to 10	-

NOTES:

1. All faying surfaces of ribs and splice plates shall be brought to flush fit-up without forcing prior to bolt tensioning, using up to 10 mm total shims at each rib plate.
2. For u-ribs with one or both sloping faces misaligned at any point by more than 4 mm, but not more than 10 mm, this reinforced splice shall be applied to both faces of the rib.
3. Where misalignment between the top and bottom of a rib face differs by more than 2 mm, then tapered shims shall be used.
4. At each rib wall up to two plies of shimming may be used.

CONTRACT CHANGE ORDER NO. _____
SHEET ___ OF ___

REQUESTS FOR INFORMATION NOT ADDRESSED IN THIS CCO REMAIN IN FORCE

ALL DIMENSIONS ARE IN MILLIMETERS UNLESS OTHERWISE SHOWN

DIST.	COUNTY	ROUTE	KILOMETER POST TOTAL PROJECT	SHEET NO.	TOTAL SHEETS
04	SF	80	13.2/13.9	635S3	1204

REGISTERED ENGINEER - CIVIL

04-18-12
PLANS APPROVAL DATE

PROFESSIONAL ENGINEER — Marwan N. Nader — No. C 054426 — Exp. 12/31/13 — CIVIL — STATE OF CALIFORNIA

The State of California or its officers or agents shall not be responsible for the accuracy or completeness of electronic copies of this plan sheet.

T.Y. LIN / MOFFATT & NICHOL
825 BATTERY STREET
SAN FRANCISCO, CA 94111

Caltrans now has a web site! To get to the web site, go to: http://www.dot.ca.gov

MARK	DATE	DESCRIPTIONS	BY	CH'D	CCO#
0	04/18/12	EAST END OBG	GB	MN	87

REVISIONS

R. Vallzadeh/V. Toan/Y.L./W.L./F.C.
DESIGN OVERSIGHT
Roya Valizadeh / Vong Toan / Y. Liu
SIGN OFF DATE 04/18/12

	BY	CHECKED
DESIGN	G. Baker	M. Nader
DETAILS	G. Baker	D. Turner
QUANTITIES	G. Baker	D. Turner

PREPARED FOR THE STATE OF CALIFORNIA DEPARTMENT OF TRANSPORTATION

R. Manzanarez
PROJECT ENGINEER

BRIDGE NO. 34-0006L/R
KILOMETER POST 13.2/13.9

SAN FRANCISCO OAKLAND BAY BRIDGE
EAST SPAN SEISMIC SAFETY PROJECT
SELF-ANCHORED SUSPENSION BRIDGE
(SUPERSTRUCTURE & TOWER)

TYPICAL GIRDER DETAILS NO. 11C

Rev. Date: 5-18-98

ORIGINAL SCALE IN MILLIMETERS FOR REDUCED PLANS 0 10 20 30 40 50 60 70 80 90 100

CU 04
EA 0120F1

DISREGARD PRINTS BEARING EARLIER REVISION DATES

REVISION DATES (PRELIMINARY STAGE ONLY) 04/18/12

SHEET 218S3 OF

FILE -> I:\bb\04-0120I\sas\contract plans and cco\cco\cco#87\temp\aggdkd06m.dgn

USERNAME -> DWinrow DATE PLOTTED -> 18 APR 2012 TIME PLOTTED -> 11:05:59

100 % PS&E

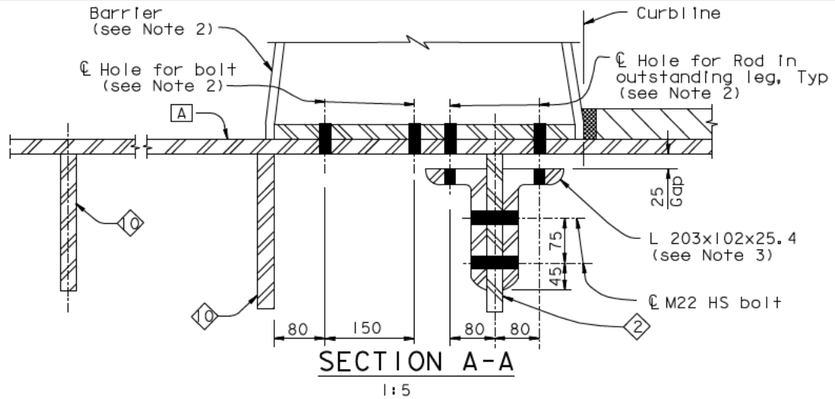

SECTION A-A

1:5

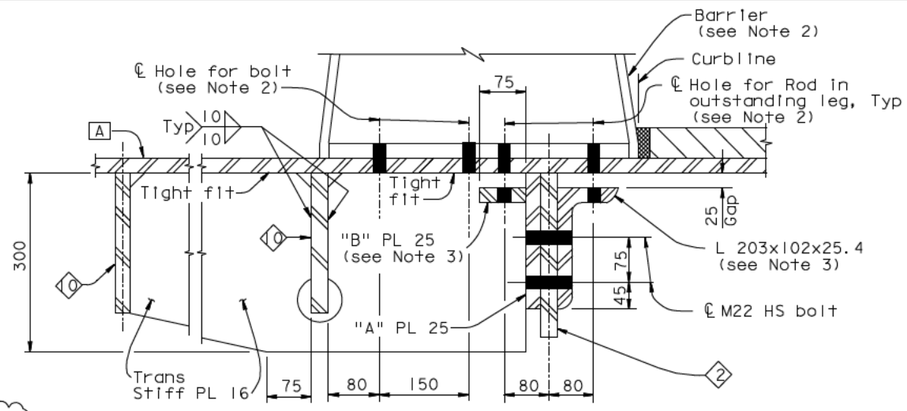

SECTION B-B

1:5

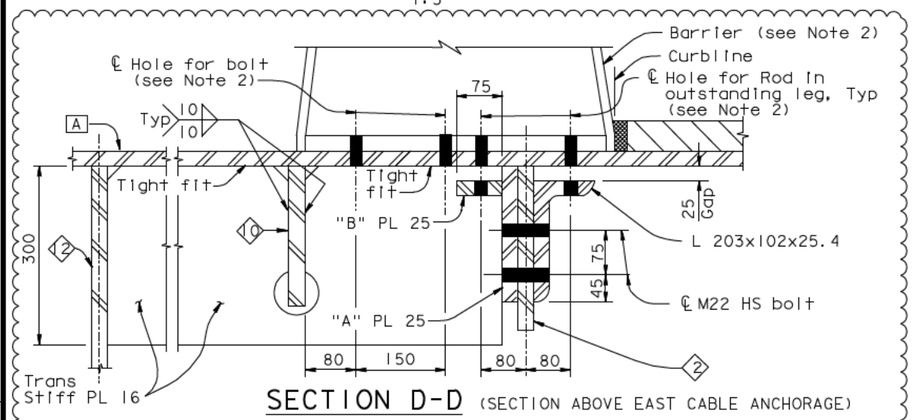

SECTION D-D (SECTION ABOVE EAST CABLE ANCHORAGE)

1:5

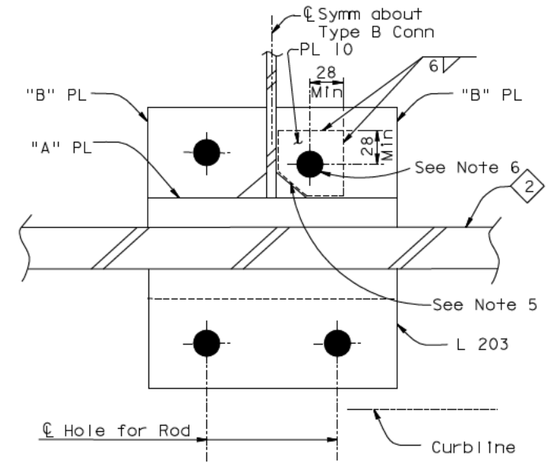

ALTERNATE

SECTION C-C (See Note 4)

1:2.5

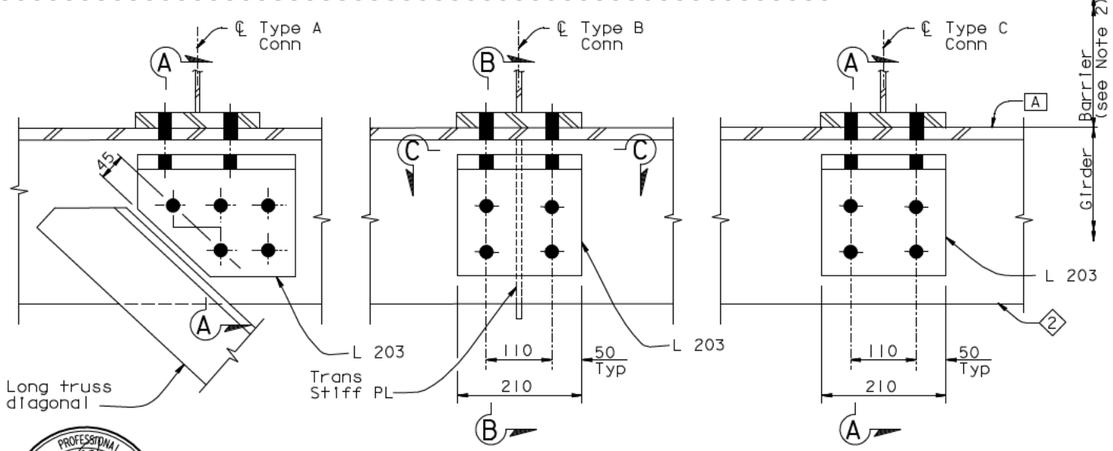

BARRIER CONNECTION DETAILS (See Note 1)

1:5

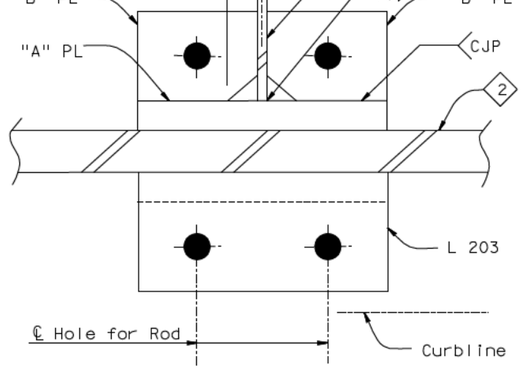

SECTION C-C

1:2.5

NOTES:

1. For location of typical barrier connection types A,B and C, see "Typical Girder Details No.12" sheet.
2. For typical barrier details, see "Barrier Details" sheets.
3. For bolt hole deviation due to fit-up tolerance, the minimum acceptable edge distance shall be 28 mm for angles and 32 mm for fabricated plate or cut edges.
4. As a result of mis-drilled holes during fabication, Alternate Section C-C may be used on a Fit-for-purpose basis where edge distance is less than 22 mm. For details not shown, see Section C-C.
5. Snipe PL 10 to clear weld. Grind weld to 10 mm fillet if necessary.
6. Match drill PL 10 bolt hole from deck.

DIST.	COUNTY	ROUTE	KILOMETER POST TOTAL PROJECT	SHEET NO.	TOTAL SHEETS
04	SF	80	13.2/13.9	638R3	1204

Caltrans Metric

George Baker
REGISTERED ENGINEER - CIVIL

12-6-04
PLANS APPROVAL DATE

REGISTERED PROFESSIONAL ENGINEER — George S. Baker — No. C 57112 — Exp. 12/31/05 — CIVIL — STATE OF CALIFORNIA

The State of California or its officers or agents shall not be responsible for the accuracy or completeness of electronic copies of this plan sheet.

T.Y. LIN / MOFFATT & NICHOL
825 BATTERY STREET
SAN FRANCISCO, CA 94111

Caltrans now has a web site! To get to the web site, go to: http://www.dot.ca.gov

REGISTERED PROFESSIONAL ENGINEER — Marwan N. Nader — No. C 054426 — Exp. 12/31/11 — CIVIL — STATE OF CALIFORNIA

FOR REVISIONS ONLY

CONTRACT CHANGE ORDER NO. ____
SHEET ___ OF ___

REQUESTS FOR INFORMATION NOT ADDRESSED IN THIS CCO REMAIN IN FORCE

MARK	DATE	DESCRIPTIONS	BY	CH'D	CCO#
3	09/01/11	EAST END OBG	MN	DT	87
2	09/14/10	BARRIER MODIFICATIONS	GB	MN	44
1	04/05/10	BARRIER MODIFICATIONS	GB	MN	44

REVISIONS

R. Valizadeh/V. Toan/Y. L./W. L./F. C.
DESIGN OVERSIGHT
SIGN OFF DATE 09/01/11

	BY	CHECKED
DESIGN	G. Baker	P. Ritchie
DETAILS	C. Mauch	T. McMeans
QUANTITIES	G. Baker	M. Roberts

PREPARED FOR THE STATE OF CALIFORNIA DEPARTMENT OF TRANSPORTATION

R. Manzanarez
PROJECT ENGINEER

ALL DIMENSIONS ARE IN MILLIMETERS UNLESS OTHERWISE SHOWN

BRIDGE NO. 34-0006L/R
KILOMETER POST 13.2/13.9

SAN FRANCISCO OAKLAND BAY BRIDGE
EAST SPAN SEISMIC SAFETY PROJECT
SELF-ANCHORED SUSPENSION BRIDGE
(SUPERSTRUCTURE & TOWER)

TYPICAL GIRDER DETAILS NO. 14

Rev. Date: 5-18-98

ORIGINAL SCALE IN MILLIMETERS FOR REDUCED PLANS 0 10 20 30 40 50 60 70 80 90 100

CU 04
EA 0120F1

DISREGARD PRINTS BEARING EARLIER REVISION DATES

REVISION DATES (PRELIMINARY STAGE ONLY): 05/31/01 04/08/02 07/01/02 12/19/02

SHEET 221R3 OF

FILE -> I:\bb\04-0120I\sas\contract plans and cco\cco\cco#87\1-original 09-01-11\dgn\agdkd09.dgn

USERNAME -> PTom

DATE PLOTTED -> 30 AUG 2011 TIME PLOTTED -> 11:29:22

100 % PS&E

DIST.	COUNTY	ROUTE	KILOMETER POST TOTAL PROJECT	SHEET NO.	TOTAL SHEETS
04	SF	80	13.2/13.9	640RI	1204

George Baker
REGISTERED ENGINEER - CIVIL

12-6-04
PLANS APPROVAL DATE

REGISTERED PROFESSIONAL ENGINEER — George S. Baker — No. C57112 — Exp. 12/31/05 — CIVIL — STATE OF CALIFORNIA

The State of California or its officers or agents shall not be responsible for the accuracy or completeness of electronic copies of this plan sheet.

T.Y. LIN / MOFFATT & NICHOL
825 BATTERY STREET
SAN FRANCISCO, CA 94111

Caltrans now has a web site! To get to the web site, go to: http://www.dot.ca.gov

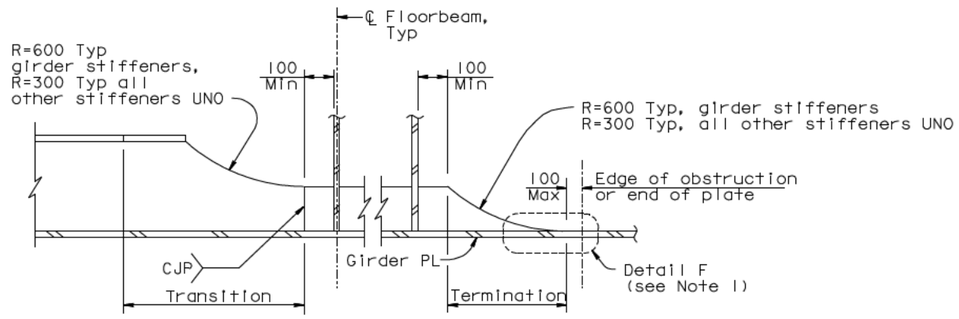

SECTION A-A

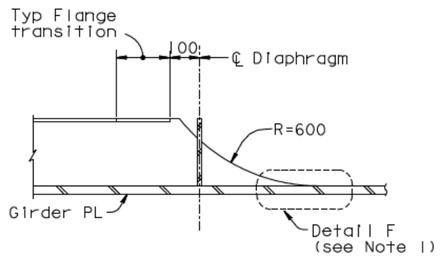

SECTION B-B

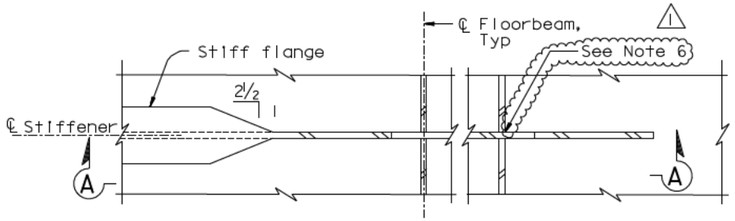

PLAN VIEW

TYPICAL STIFFENER TRANSITION AND TERMINATION

1:10

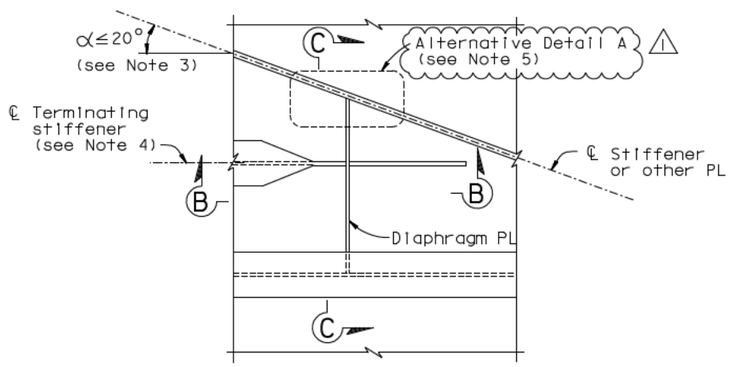

PLAN VIEW

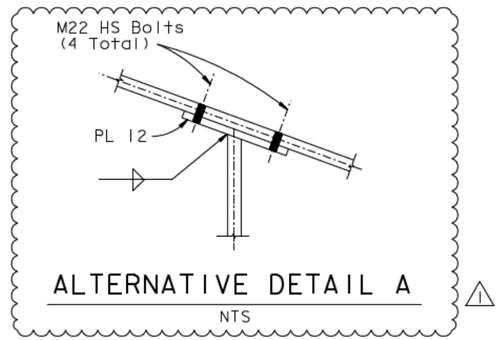

ALTERNATIVE DETAIL A

NTS

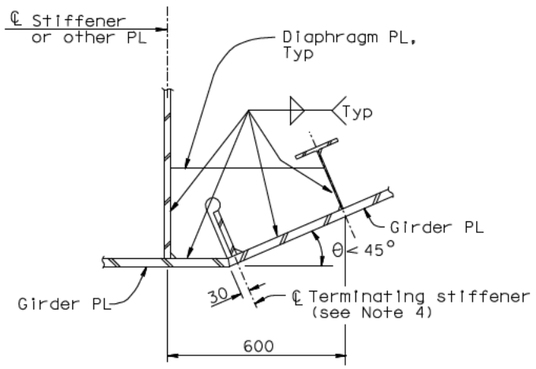

FOR θ<45 °

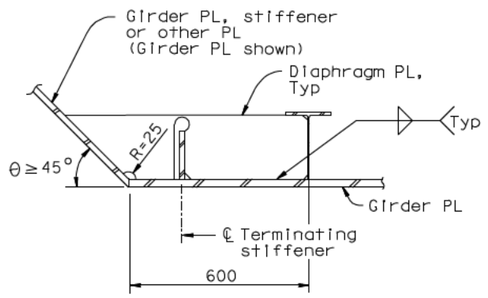

FOR 45 °≤ θ ≤90 °

PLAN VIEW

STIFFENER TRANSITION AT GIRDER TRANSITION

1:10

NOTES:

1. For Detail F, see "Typical Floorbeam Details No.4" sheet.
2. These details apply to WT and PL type stiffeners.
3. Angle varies, see "Girder At East Transition" sheets.
4. For penetration of diaphragm PL, use stiffener details "Typical Girder Details No.5" sheet.
5. ⚠1 At the Contractor's option, alternative Detail A may be used in lieu of fillet welds between the diaphragm and the stiffener webs. This detail may be used at either or both ends of the diaphragm.
6. For "Plan of Optional Stiffener Transition", see "Typical Girder Details No.16A" sheet.

Daniel J. Turner — REGISTERED PROFESSIONAL ENGINEER — No. C 65033 — Exp. 06/30/13 — CIVIL — STATE OF CALIFORNIA

FOR REVISIONS ONLY

SECTION C-C

1:10

CONTRACT CHANGE ORDER NO. ____
SHEET ___ OF ___

REQUESTS FOR INFORMATION NOT ADDRESSED IN THIS CCO REMAIN IN FORCE

STIFFENER DETAILS

ALL DIMENSIONS ARE IN MILLIMETERS UNLESS OTHERWISE SHOWN

MARK	DATE	DESCRIPTIONS	BY	CH'D	CCO#
⚠1	09/01/11	EAST END OBG	DT	GB	87

REVISIONS

R. Vallizadeh/V. Toan/Y.L./W.L./F.C.
DESIGN OVERSIGHT
SIGN OFF DATE 09/01/11

	BY	CHECKED
DESIGN	G. Baker	P. Ritchie
DETAILS	D. Veytsman	T. McMeans
QUANTITIES	G. Baker	M. Roberts

PREPARED FOR THE STATE OF CALIFORNIA DEPARTMENT OF TRANSPORTATION

R. Manzanarez
PROJECT ENGINEER

BRIDGE NO. 34-0006L/R
KILOMETER POST 13.2/13.9

SAN FRANCISCO OAKLAND BAY BRIDGE
EAST SPAN SEISMIC SAFETY PROJECT
SELF-ANCHORED SUSPENSION BRIDGE
(SUPERSTRUCTURE & TOWER)

TYPICAL GIRDER DETAILS NO. 16

Rev. Date: 5-18-98

ORIGINAL SCALE IN MILLIMETERS FOR REDUCED PLANS 0 10 20 30 40 50 60 70 80 90 100

CU 04
EA 0120F1

DISREGARD PRINTS BEARING EARLIER REVISION DATES

REVISION DATES (PRELIMINARY STAGE ONLY): 09/02/99 | 05/31/01 | 04/08/02 | 07/19/02 | 12/19/02

SHEET 223RI OF

FILE -> I:\bb\04-012001\sas\contract plans and cco\cco\cco#87\1-original 09-01-11\dgn\agdkd06f.dgn

USERNAME -> PTam
DATE PLOTTED -> 30 AUG 2011
TIME PLOTTED -> 11:16:11
100 % PS&E

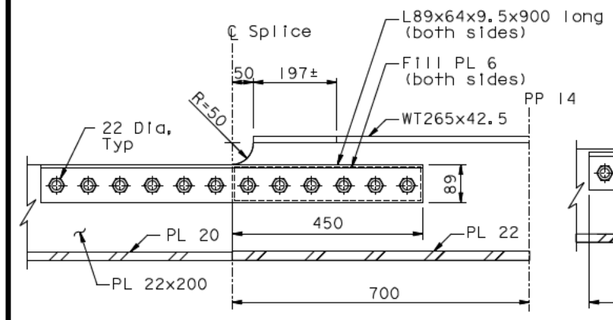

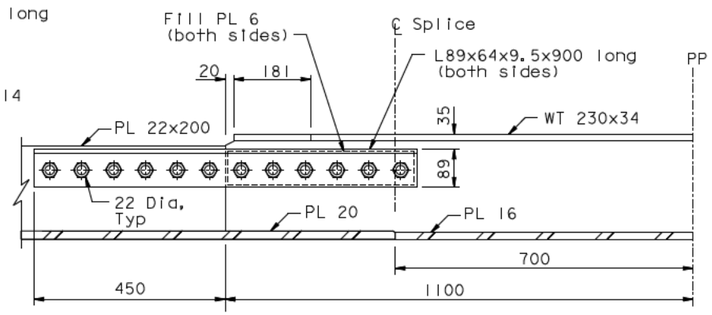

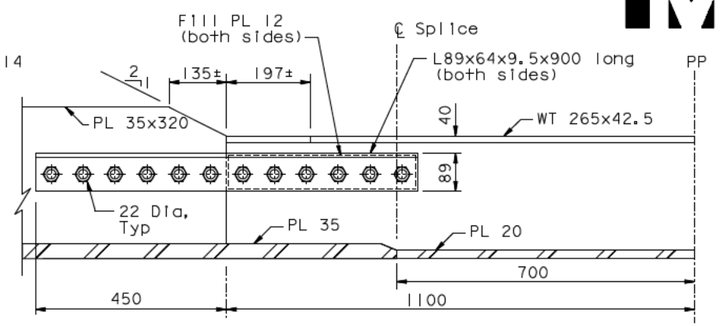

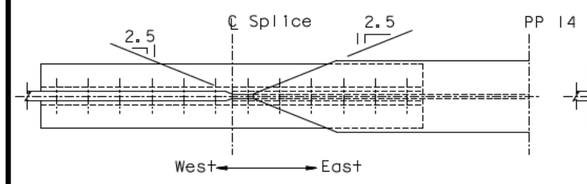

PP 14 SKIN PLATE 5

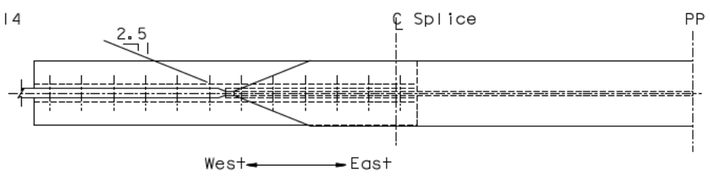

PP 14 SKIN PLATE 7

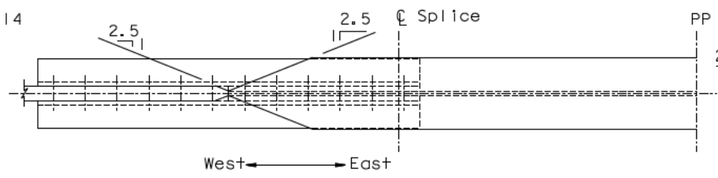

PP 14 SKIN PLATE 6

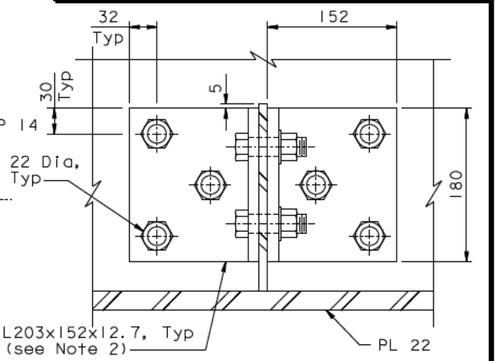

SECTION A-A

1:3.5

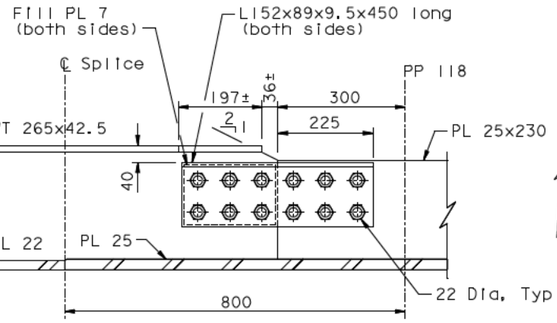

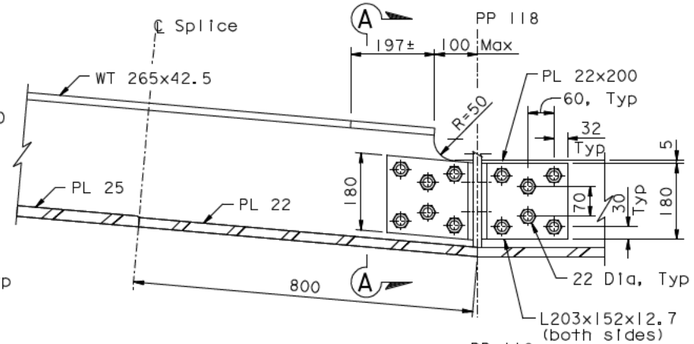

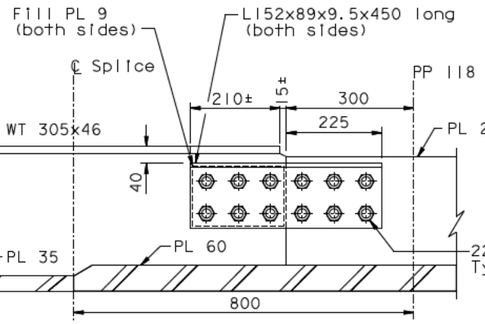

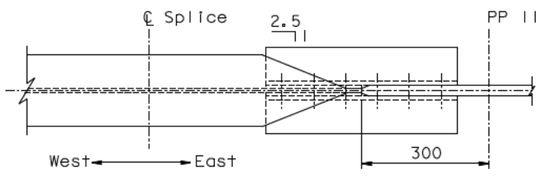

PP 118 SKIN PLATE 5

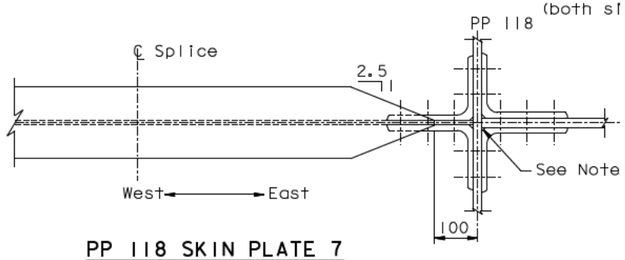

PP 118 SKIN PLATE 7

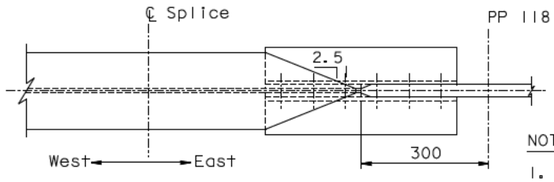

PP 118 SKIN PLATE 6

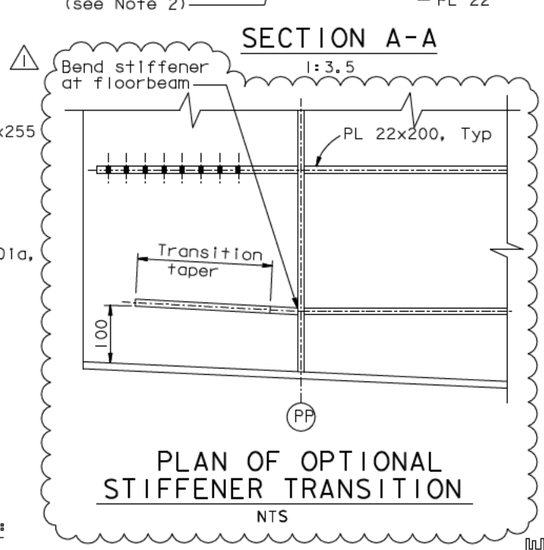

PLAN OF OPTIONAL STIFFENER TRANSITION

NTS

STIFFENER TRANSITION DETAILS @ PP14 & PP118

NTS

NOTES:

1. The L203x152x19, shall be chamfered 10 mm x 10 mm to provide access for the stiffener to web CJP.
2. For the two Type 7 stiffeners adjacent to Line E14, the 152 leg of the angle shall be trimmed to 115 where necessary. For the stiffener parallel to Line E14, the angles shall be bent.
3. Bolt spacing may be reduced to 2.75d where necessary.
4. All bolts shall be ASTM A325.

CONTRACT CHANGE ORDER NO. ____
SHEET ___ OF ___

REQUESTS FOR INFORMATION NOT ADDRESSED IN THIS CCO REMAIN IN FORCE

DIST.	COUNTY	ROUTE	KILOMETER POST TOTAL PROJECT	SHEET NO.	TOTAL SHEETS
04	SF	80	13.2/13.9	640SIRI	1204

REGISTERED ENGINEER - CIVIL
05-20-11
PLANS APPROVAL DATE
Marwan N. Nader, No. C 054426, Exp. 12/31/11, CIVIL, REGISTERED PROFESSIONAL ENGINEER, STATE OF CALIFORNIA

The State of California or its officers or agents shall not be responsible for the accuracy or completeness of electronic copies of this plan sheet.

T.Y. LIN / MOFFATT & NICHOL
825 BATTERY STREET
SAN FRANCISCO, CA 94111

Caltrans now has a web site! To get to the web site, go to: http://www.dot.ca.gov

MARK	DATE	DESCRIPTIONS	BY	CH'D	CCO#
1	09/01/11	EAST END OBG	DT	MN	87
0	05/20/11	STIFFENER TRANSITIONS AT PP14 & PP118	DT	GB	204

REVISIONS

	BY		CHECKED
DESIGN	D. Turner		G. Baker
DETAILS	D. Turner		G. Baker
QUANTITIES	D. Turner		G. Baker

PREPARED FOR THE STATE OF CALIFORNIA DEPARTMENT OF TRANSPORTATION

ALL DIMENSIONS ARE IN MILLIMETERS UNLESS OTHERWISE SHOWN

R. Manzanarez
PROJECT ENGINEER

BRIDGE NO. 34-0006L/R
KILOMETER POST 13.2/13.9

SAN FRANCISCO OAKLAND BAY BRIDGE
EAST SPAN SEISMIC SAFETY PROJECT
SELF-ANCHORED SUSPENSION BRIDGE
(SUPERSTRUCTURE & TOWER)

TYPICAL GIRDER DETAILS NO. 16A

R. Valizadeh/V. Toan/Y.L./W.L./F.C.
DESIGN OVERSIGHT
Sign Off Date 09/01/11

Rev. Date: 5-18-98

ORIGINAL SCALE IN MILLIMETERS FOR REDUCED PLANS 0 10 20 30 40 50 60 70 80 90 100

CU 04
EA 0120F1

DISREGARD PRINTS BEARING EARLIER REVISION DATES

REVISION DATES (PRELIMINARY STAGE ONLY): 05/20/11

SHEET 223SIRI OF

FILE -> I:\bb\04-0120I\sas\contract plans and cco\cco\cco#87\1-original 09-01-11\dgn\agdkd06s.dgn

100 % PS&E
DATE PLOTTED -> 30 AUG 2011
TIME PLOTTED -> 11:27:35
USERNAME -> PTom

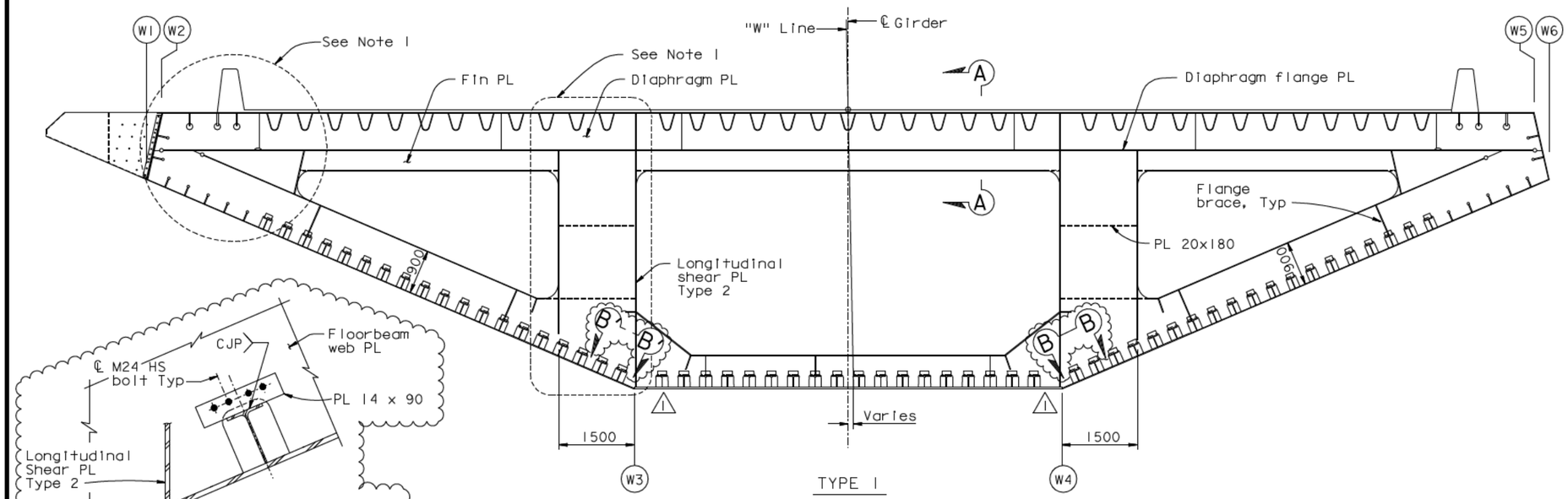

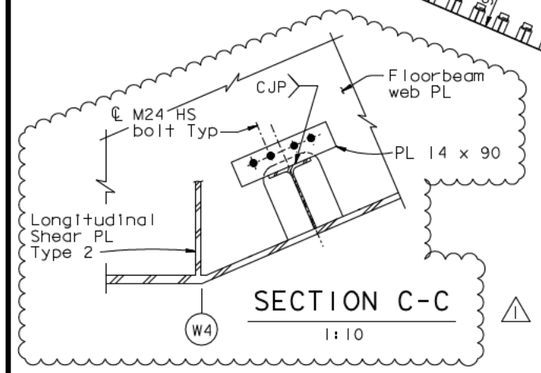

SECTION C-C
1:10

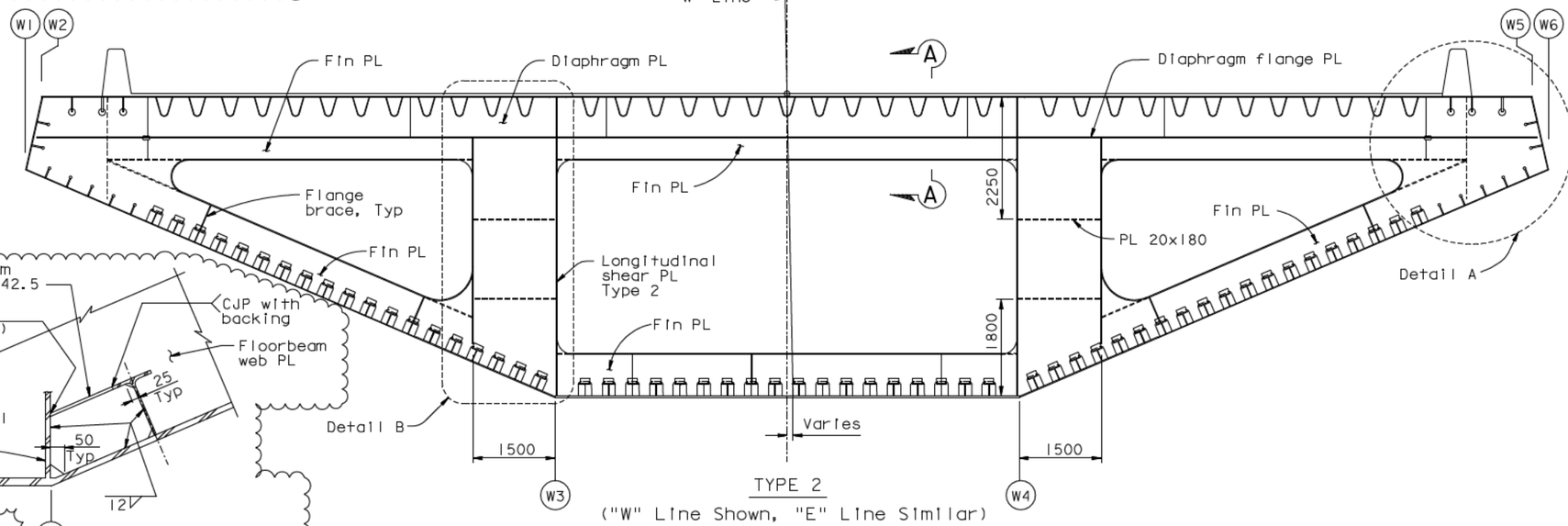

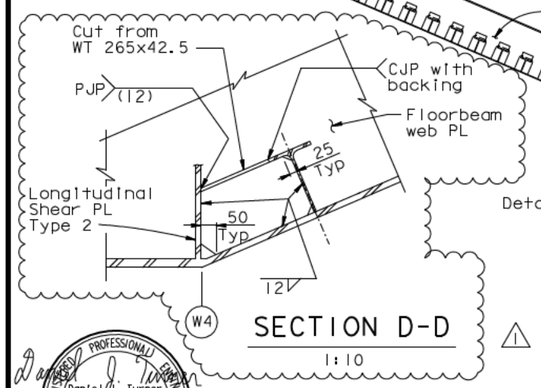

SECTION D-D
1:10

TYPICAL INTERMEDIATE SECTIONS (See Table)
1:50

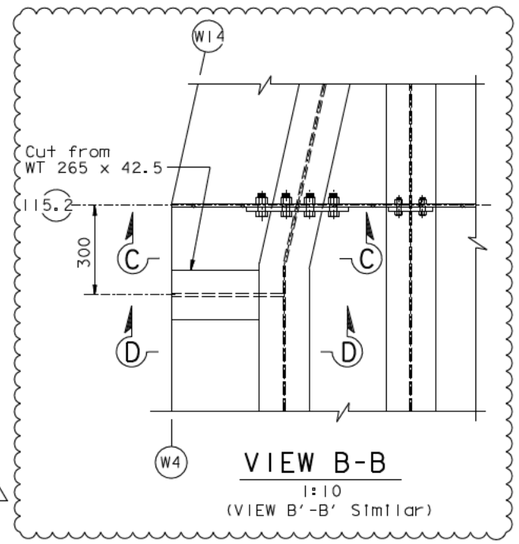

VIEW B-B
1:10
(VIEW B'-B' Similar)

INTERMEDIATE FLOORBEAM LOCATION TABLE	
TYPE 1	TYPE 2
	PP 111.5
PP 10.5	PP 112.5
PP 11.5	PP 113.5
PP 12.5	PP 114.5
PP 13.5	PP 115.5
PP 115.2	

NOTES:

1. Typical intermediate floorbeam Type 1 is similar to floorbeam at PP116. For details, see "Floorbeam At East Transition No.1" sheet.
2. For details not shown, see "Typical Floorbeam Details" sheets.
3. For Details A and B, see "Typical Floorbeam Details No.9" sheet.
4. View B-B & B'-B' at PP115.2 only.

DIST.	COUNTY	ROUTE	KILOMETER POST TOTAL PROJECT	SHEET NO.	TOTAL SHEETS
04	SF	80	13.2/13.9	653R1	1204

George Baker
REGISTERED ENGINEER - CIVIL
1-27-03
PLANS APPROVAL DATE
The State of California or its officers or agents shall not be responsible for the accuracy or completeness of electronic copies of this plan sheet.

REGISTERED PROFESSIONAL ENGINEER George S. Baker No. C57112 Exp. 12/31/05 CIVIL STATE OF CALIFORNIA

T.Y. LIN / MOFFATT & NICHOL
825 BATTERY STREET
SAN FRANCISCO, CA 94111

Caltrans now has a web site! To get to the web site, go to: http://www.dot.ca.gov

REGISTERED PROFESSIONAL ENGINEER Daniel J. Turner No. C 65033 Exp. 06/30/13 CIVIL STATE OF CALIFORNIA

FOR REVISIONS ONLY

CONTRACT CHANGE ORDER NO. _____
SHEET ___ OF ___
REQUESTS FOR INFORMATION NOT ADDRESSED IN THIS CCO REMAIN IN FORCE

ALL DIMENSIONS ARE IN MILLIMETERS UNLESS OTHERWISE SHOWN

R. Vallzadeh/V. Toan/Y.L./W.L./F.C.
DESIGN OVERSIGHT
SIGN OFF DATE 09/01/11

MARK	DATE	REVISIONS	BY	CH'D	CCO#
1	09/01/11	EAST END OBG	DT	GB	87

	BY	CHECKED
DESIGN	G. Baker	P. Ritchie
DETAILS	S. Camo	T. McMeans
QUANTITIES	C. Mauch	M. Roberts

PREPARED FOR THE STATE OF CALIFORNIA DEPARTMENT OF TRANSPORTATION

R. Manzanarez
PROJECT ENGINEER

BRIDGE NO. 34-0006L/R
KILOMETER POST 13.2/13.9

SAN FRANCISCO OAKLAND BAY BRIDGE
EAST SPAN SEISMIC SAFETY PROJECT
SELF-ANCHORED SUSPENSION BRIDGE
(SUPERSTRUCTURE & TOWER)

TYPICAL FLOORBEAM DETAILS NO. 8

Rev. Date: 5-18-98

ORIGINAL SCALE IN MILLIMETERS FOR REDUCED PLANS 0 10 20 30 40 50 60 70 80 90 100

CU 04
EA 0120F1

DISREGARD PRINTS BEARING EARLIER REVISION DATES

REVISION DATES (PRELIMINARY STAGE ONLY): 01/15/99 05/15/99 08/02/99 05/31/01 09/06/02 07/01/02 12/19/02

SHEET 236R1 OF

FILE -> I:\bb\04-012001\sas\contract plans and cco\cco\cco#87\1-original 09-01-11\dgn\agftb07.dgn

USERNAME -> AL\shansk$ DATE PLOTTED -> 30 AUG 2011 TIME PLOTTED -> 11:17:07

100 % PS&E

DIST.	COUNTY	ROUTE	KILOMETER POST TOTAL PROJECT	SHEET NO.	TOTAL SHEETS
04	SF	80	13.2/13.9	664RI	1204

Caltrans Metric

George Baker
REGISTERED ENGINEER - CIVIL

12-6-04
PLANS APPROVAL DATE

The State of California or its officers or agents shall not be responsible for the accuracy or completeness of electronic copies of this plan sheet.

REGISTERED PROFESSIONAL ENGINEER — George S. Baker — No. C57112 — Exp. 12/31/05 — CIVIL — STATE OF CALIFORNIA

T.Y. LIN / MOFFATT & NICHOL
825 BATTERY STREET
SAN FRANCISCO, CA 94111

Caltrans now has a web site! To get to the web site, go to: http://www.dot.ca.gov

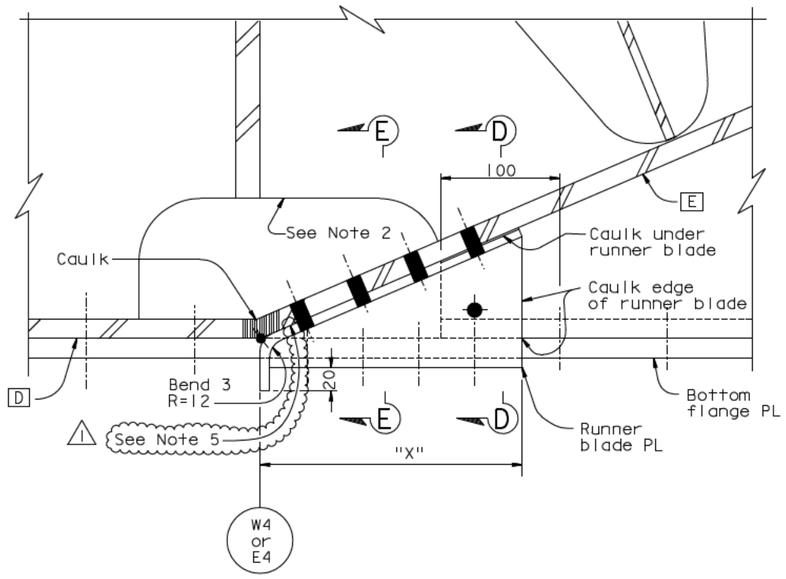

RUNNER BLADE DETAIL

SECTION B-B

1:2.5

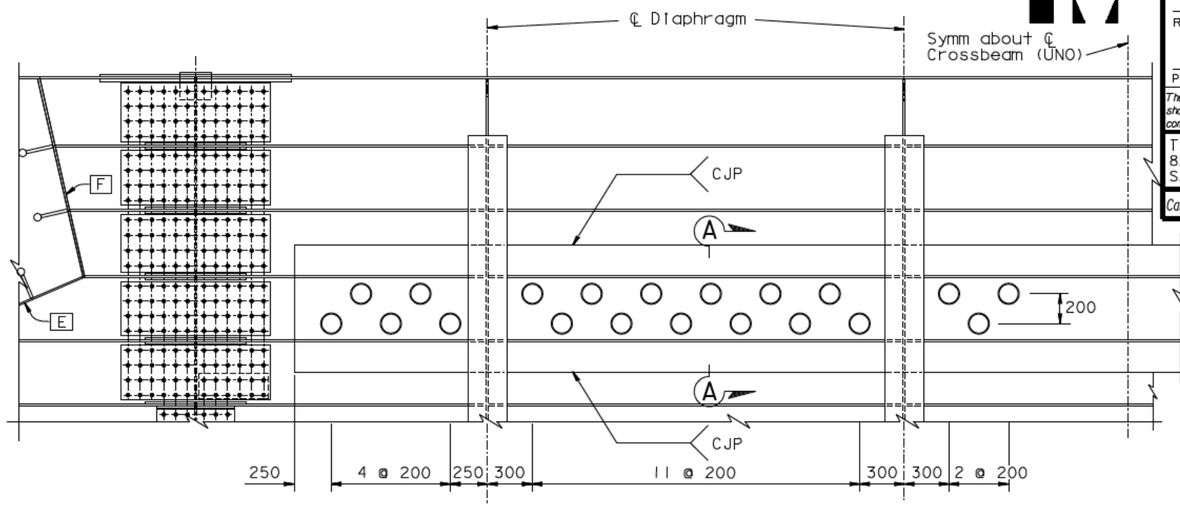

UTILITY OPENINGS AT PANEL POINTS 14, 32, 50, 80, 110 ONLY

DETAIL J

1:20

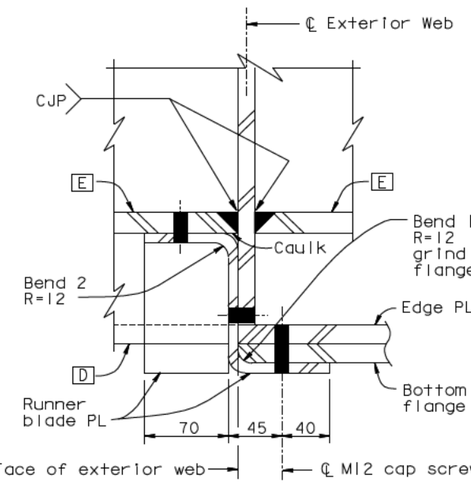

SECTION D-D

1:2.5

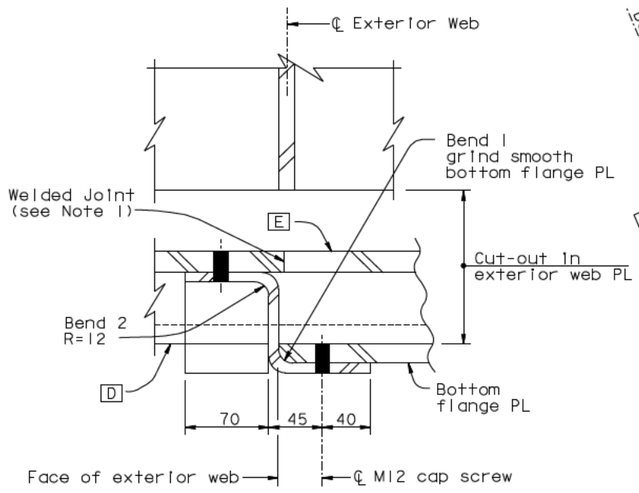

SECTION E-E

1:2.5

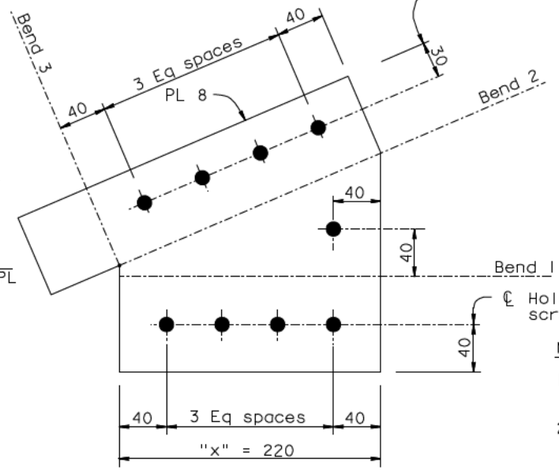

NOTE: Plate shown prior to bending

RUNNER BLADE PLATE LAYOUT

1:2.5

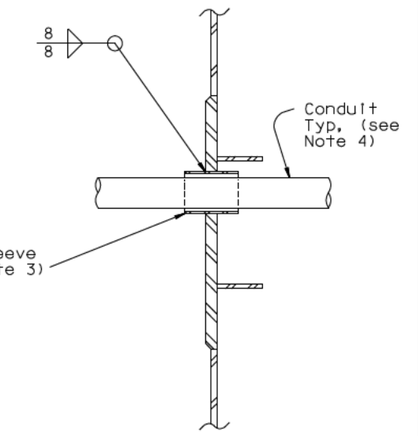

SECTION A-A

1:10

NOTES:

1. For detail of girder plate E welded joint, see "Typical Crossbeam Details No.9" sheet.
2. After completion of welding, the finish surface of the cutout shall be 6 microns in accordance ANSI B46.1.
3. For pipe sleeve details not shown, see "Utility Details No.1" sheet. Pipe sleeves not used for utility conduits in this contract shall be sealed with a steel threaded cap on the outside.
4. For conduit locations and sizes, see "Road Plans".
5. At PP118, PP120 and as required the exterior face of shim PL CJP welds shall be ground flush to ensure a tight fit of the runner blade.

ALL DIMENSIONS ARE IN MILLIMETERS UNLESS OTHERWISE SHOWN

Daniel J. Turner
REGISTERED PROFESSIONAL ENGINEER — Daniel J. Turner — No. C 65033 — Exp. 06/30/13 — CIVIL — STATE OF CALIFORNIA

FOR REVISIONS ONLY

CONTRACT CHANGE ORDER NO. ____
SHEET ___ OF ___

REQUESTS FOR INFORMATION NOT ADDRESSED IN THIS CCO REMAIN IN FORCE

MARK	DATE	DESCRIPTIONS	DT BY	GB CH'D	87 CCO#
1	09/01/11	EAST END OBG			

REVISIONS

	BY	CHECKED
DESIGN	G. Baker	P. Ritchie
DETAILS	D. Veytsman	T. McMeans
QUANTITIES	G. Baker	M. Roberts

PREPARED FOR THE STATE OF CALIFORNIA DEPARTMENT OF TRANSPORTATION

R. Manzanarez
PROJECT ENGINEER

BRIDGE NO. 34-0006L/R
KILOMETER POST 13.2/13.9

SAN FRANCISCO OAKLAND BAY BRIDGE
EAST SPAN SEISMIC SAFETY PROJECT
SELF-ANCHORED SUSPENSION BRIDGE
(SUPERSTRUCTURE & TOWER)

TYPICAL CROSSBEAM DETAILS NO. 10

R. Valizadeh/V. Toan/Y.L./W.L./F.C.
DESIGN OVERSIGHT
SIGN OFF DATE 09/01/11

Rev. Date: 5-18-98

ORIGINAL SCALE IN MILLIMETERS FOR REDUCED PLANS 0 10 20 30 40 50 60 70 80 90 100

CU 04
EA 0120F1

DISREGARD PRINTS BEARING EARLIER REVISION DATES → REVISION DATES (PRELIMINARY STAGE ONLY): 05/15/99 09/02/99 05/31/01 09/06/02 01/07/02 12/19/02

SHEET 247RI OF

FILE -> I:\bb\04-012001\sas\contract plans and cco\cco\cco#87\1-original 09-01-11\dgn\agcrs10.dgn

USERNAME -> arivera DATE PLOTTED -> 30 AUG 2011 TIME PLOTTED -> 16:27:20

100 % PS&E

DIST.	COUNTY	ROUTE	KILOMETER POST TOTAL PROJECT	SHEET NO.	TOTAL SHEETS
04	SF	80	13.2/13.9	674R1	1204

George Baker
REGISTERED ENGINEER - CIVIL

12-6-04
PLANS APPROVAL DATE

The State of California or its officers or agents shall not be responsible for the accuracy or completeness of electronic copies of this plan sheet.

REGISTERED PROFESSIONAL ENGINEER — George S. Baker — No. C 57112 — Exp. 12/31/05 — CIVIL — STATE OF CALIFORNIA

T.Y. LIN / MOFFATT & NICHOL
825 BATTERY STREET
SAN FRANCISCO, CA 94111

Caltrans now has a web site! To get to the web site, go to: http://www.dot.ca.gov

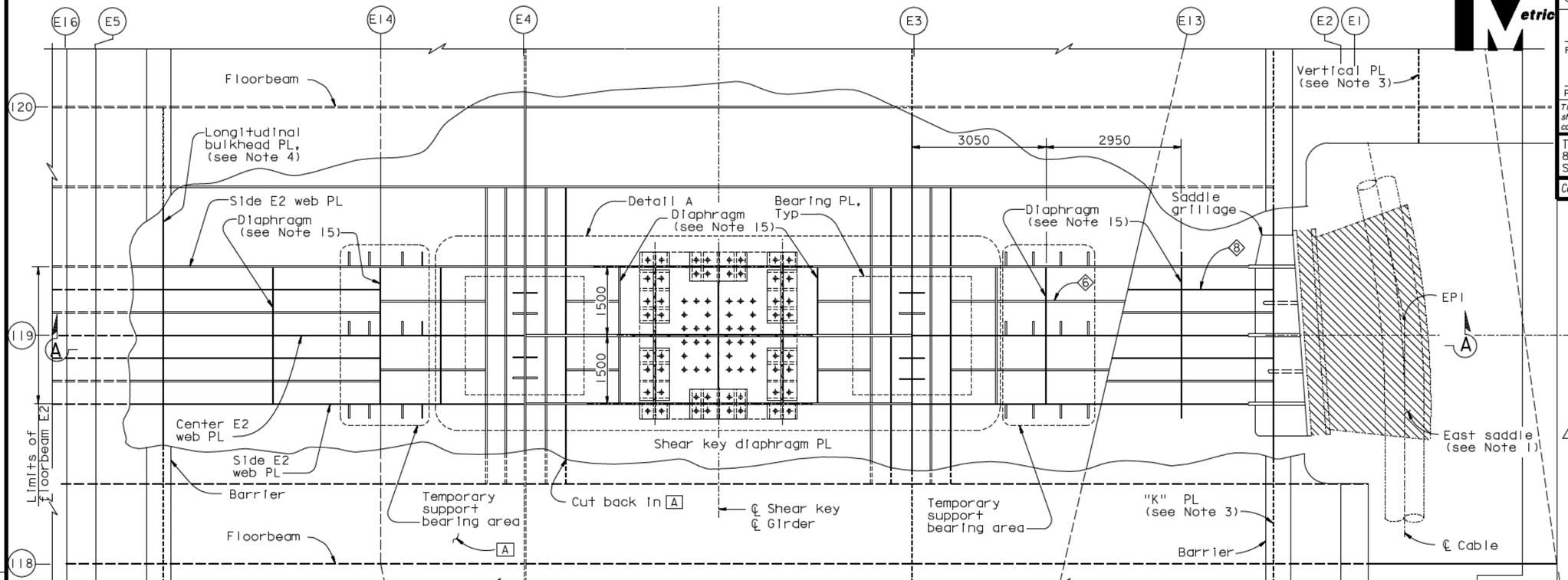

PLAN AT PIER E2

("E" Line shown, "W" Line similar)

1:50

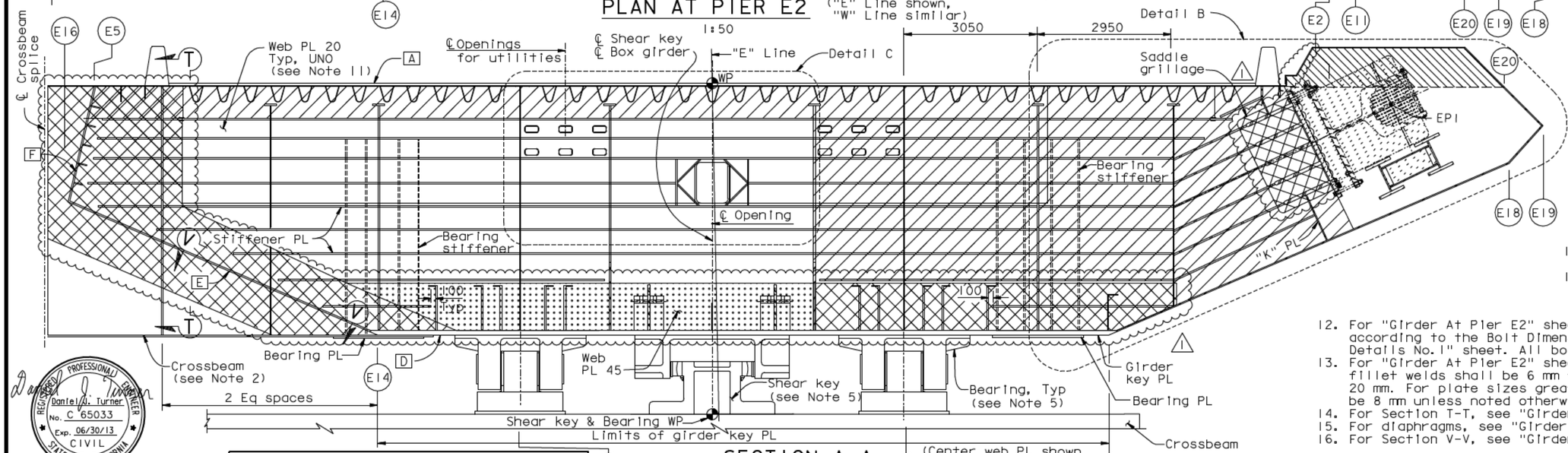

SECTION A-A

1:50

(Center web PL shown, side web PL's similar)

℄ Floorbeam E2 &
℄ Shear key

LEGEND:

- East saddle (see Note 1)
- Saddle housing (see Note 7)
- 1 "Indicates SPCM web PL"
- "Indicates TTP web PL"
- "Indicates SPCM & TTP web PL"

NOTES:

1. For saddle details, see "East Saddle Details" sheets.
2. For crossbeam, see "Crossbeam At Pier E2" sheets.
3. For "K" PL and vertical PL details, see "Girder At East Transition Details" sheets.
4. For longitudinal bulkhead PL details, see "Girder At Pier E2 No. 9" sheet.
5. For shear key & bearing details, see "Pier E2 Shear Key Details" and "Pier E2 Bearing Details" sheets.
6. For clarity, typical girder stiffeners are not shown in plan.
7. For saddle housing details, see "Saddle Housing Details" sheets.
8. For Detail A, see "Girder At Pier E2 No. 2" sheet.
9. For Detail B, see "Girder At Pier E2 No. 5" sheet.
10. For Detail C, see "Girder At Pier E2 No. 4" sheet.
11. For E2 floorbeam web layout, see "Girder At Pier E2 No. 4" sheet.
12. For "Girder At Pier E2" sheets, all bolts shall be detailed according to the Bolt Dimension Table. See "Typical Girder Details No. 1" sheet. All bolts are HS unless noted otherwise.
13. For "Girder At Pier E2" sheets, unless noted otherwise, all fillet welds shall be 6 mm for plate sizes not greater than 20 mm. For plate sizes greater than 20 mm, fillet welds shall be 8 mm unless noted otherwise.
14. For Section T-T, see "Girder At Pier E2 No. 9" sheet.
15. For diaphragms, see "Girder At Pier E2 No. 6" sheet.
16. For Section V-V, see "Girder At Pier E2 No. 9" sheet.

100 % PS&E — TIME PLOTTED -> 10:01:51 — DATE PLOTTED -> 09 MAR 2012 — USERNAME -> DWinrow

Daniel J. Turner — REGISTERED PROFESSIONAL ENGINEER — Daniel J. Turner — No. C 65033 — Exp. 06/30/13 — CIVIL — STATE OF CALIFORNIA

FOR REVISIONS ONLY

REQUESTS FOR INFORMATION NOT ADDRESSED IN THIS CCO REMAIN IN FORCE

MARK	DATE	DESCRIPTIONS	BY	CH'D	CCO#
1	03/09/12	EAST END OBG	DT	GB	87

REVISIONS

CONTRACT CHANGE ORDER NO. ____
SHEET ____ OF ____

	BY	CHECKED
DESIGN	G. Baker	P. Ritchie
DETAILS	C. Mauch	T. McMeans
QUANTITIES	D. Turner	M. Roberts

PREPARED FOR THE STATE OF CALIFORNIA DEPARTMENT OF TRANSPORTATION

R. Manzanarez
PROJECT ENGINEER

ALL DIMENSIONS ARE IN MILLIMETERS UNLESS OTHERWISE SHOWN

BRIDGE NO. 34-0006L/R
KILOMETER POST 13.2/13.9

CU 04
EA 0120F1

DISREGARD PRINTS BEARING EARLIER REVISION DATES

REVISION DATES (PRELIMINARY STAGE ONLY)										SHEET	OF
05/15/99	08/02/99	05/31/01	04/08/02	07/01/02	12/13/02	10/13/05	11/13/05	12/07/05		257R1	

SAN FRANCISCO OAKLAND BAY BRIDGE
EAST SPAN SEISMIC SAFETY PROJECT
SELF-ANCHORED SUSPENSION BRIDGE
(SUPERSTRUCTURE & TOWER)

GIRDER AT PIER E2 NO. 1

R. Vallzadeh/V. Toan/Y.L./W.L./F.C.
DESIGN OVERSIGHT
SIGN OFF DATE 03/09/12

Rev. Date: 5-18-98

ORIGINAL SCALE IN MILLIMETERS FOR REDUCED PLANS 0 10 20 30 40 50 60 70 80 90 100

FILE -> I:\bb\04-012001\sas\contract plans and cco\cco\cco#87\2-update 03-09-12\dgn\aggadd06.dgn

DIST.	COUNTY	ROUTE	KILOMETER POST TOTAL PROJECT	SHEET NO.	TOTAL SHEETS
04	SF	80	13.2/13.9	675R3	1204

George Baker
REGISTERED ENGINEER - CIVIL

12-6-04
PLANS APPROVAL DATE

The State of California or its officers or agents shall not be responsible for the accuracy or completeness of electronic copies of this plan sheet.

REGISTERED PROFESSIONAL ENGINEER — George S. Baker — No. C 57112 — Exp. 12/31/05 — CIVIL — STATE OF CALIFORNIA

T.Y. LIN / MOFFATT & NICHOL
825 BATTERY STREET
SAN FRANCISCO, CA 94111

Caltrans now has a web site! To get to the web site, go to: http://www.dot.ca.gov

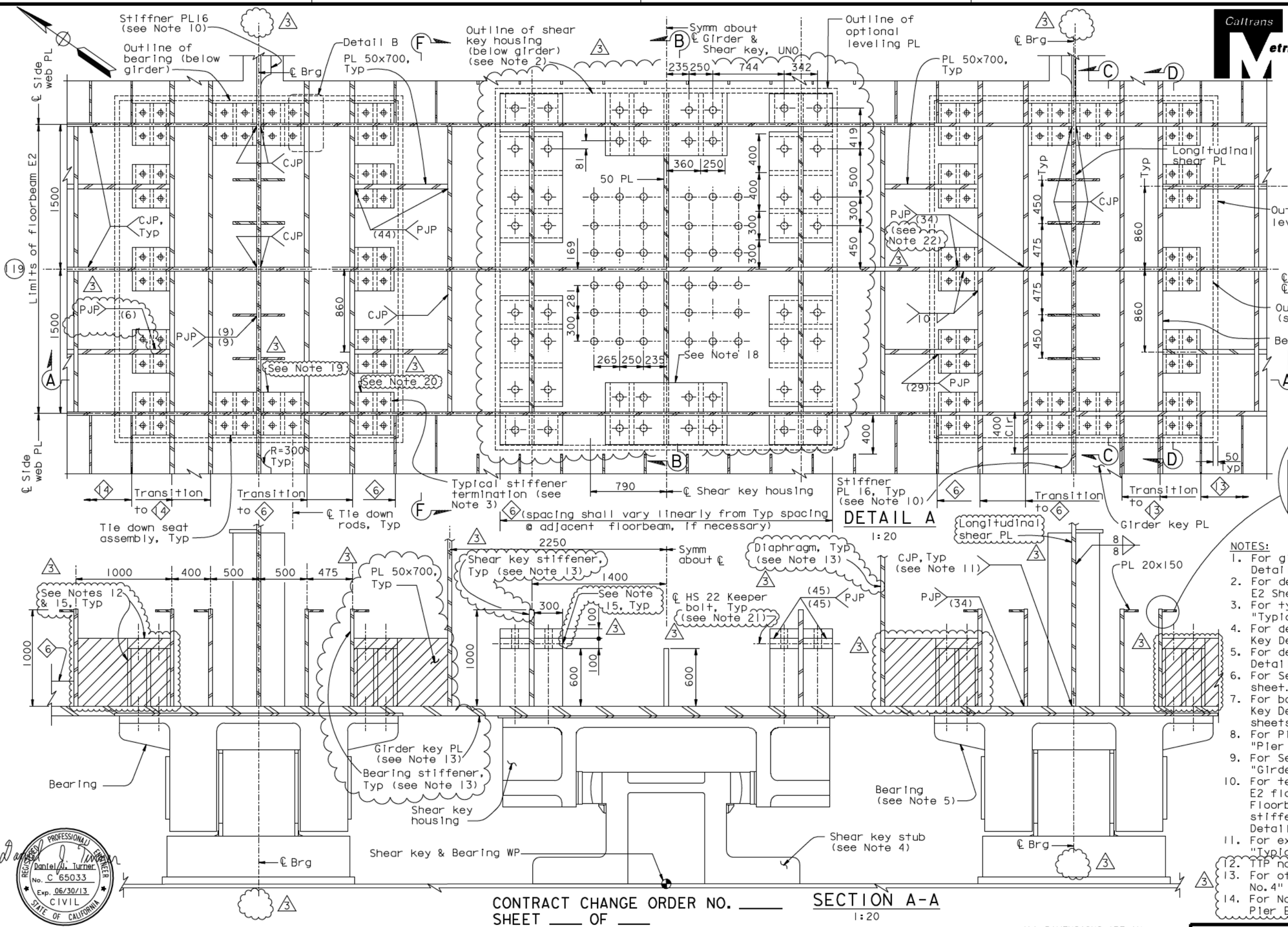

DETAIL A
1:20

SECTION A-A
1:20

LEGEND
- ⌖ - 75 Dia anchor bolt (A354 Gr. BD) (see Note 15)
- ⌖ - 50 Dia anchor bolt (A354 Gr. BD) (see Note 15)
- † - Thickness of terminating PL in T-Joint
- "Indicates TTP Web PL"

NOTES:
1. For girder PL thickness, see "Typical Girder Details No.1" sheet.
2. For details of shear key housing, see "Pier E2 Shear Key" sheets.
3. For typical girder stiffener termination, see "Typical Girder Details No.16" sheet.
4. For details of shear key, see "Pier E2 Shear Key Details" sheets.
5. For details of bearing, see "Pier E2 Bearing Details" sheets.
6. For Section F-F, see "Girder At Pier E2 No.6" sheet.
7. For bolt and rod locations, see "Pier E2 Shear Key Details" and "Pier E2 Bearing Details" sheets.
8. For Pier E2 bearing and shear key location, see "Pier E2 Bearing And Shear Key Layout" sheet.
9. For Sections B-B, C-C, D-D and Detail B, see "Girder At Pier E2 No.3" sheet.
10. For termination of stiffener PL 16 at E2 floorbeam, see Detail G on "Typical Floorbeam Details No.4" sheet. For other stiffener details, see "Typical Girder Details No.7" sheet.
11. For extent of CJP weld, see Note 12 on "Typical Girder Details No.7" sheet.
12. TTP not required for seat assembly, Typ.
13. For other TTP plates, see " General Notes No.4" sheet.
14. For Notes 15 and above, see "Girder at Pier E2 No. 2A" sheet.

Daniel J. Turner
REGISTERED PROFESSIONAL ENGINEER — Daniel J. Turner — No. C 65033 — Exp. 06/30/13 — CIVIL — STATE OF CALIFORNIA

FOR REVISIONS ONLY

CONTRACT CHANGE ORDER NO. ____
SHEET ____ OF ____

REQUESTS FOR INFORMATION NOT ADDRESSED IN THIS CCO REMAIN IN FORCE

MARK	DATE	DESCRIPTIONS	BY	CH'D	CCO#
3	03/09/12	EAST END OBG	DT	GB	87
2	07/31/09	LONGITUDINAL SHEAR PLATE	DT	GB	122
1	07/30/07	HINGE A REACTION-SHEAR PLATES	DT	GB	50

REVISIONS

	BY	CHECKED
DESIGN	G. Baker	P. Ritchie
DETAILS	C. Mauch	T. McMeans
QUANTITIES	D. Turner	M. Roberts

PREPARED FOR THE STATE OF CALIFORNIA DEPARTMENT OF TRANSPORTATION

ALL DIMENSIONS ARE IN MILLIMETERS UNLESS OTHERWISE SHOWN

R. Manzanarez
PROJECT ENGINEER

BRIDGE NO. 34-0006L/R
KILOMETER POST 13.2/13.9

SAN FRANCISCO OAKLAND BAY BRIDGE
EAST SPAN SEISMIC SAFETY PROJECT
SELF-ANCHORED SUSPENSION BRIDGE
(SUPPERSTRUCTURE & TOWER)

GIRDER AT PIER E2 NO. 2

R. Vallzadeh/V. Toan/Y.L./W.L./F.C.
DESIGN OVERSIGHT
SIGN OFF DATE 03/09/12

Rev. Date: 5-18-98

ORIGINAL SCALE IN MILLIMETERS FOR REDUCED PLANS 0 10 20 30 40 50 60 70 80 90 100

CU 04
EA 0120F1

DISREGARD PRINTS BEARING EARLIER REVISION DATES

REVISION DATES (PRELIMINARY STAGE ONLY): 05/15/99 | 08/02/99 | 05/31/01 | 04/08/02 | 07/31/02 | 12/13/02 | 10/15/05 | 11/15/05 | 12/07/05

SHEET 258R3 OF

FILE -> I:\bb\04-0120I\sas\contract plans and cco\cco\cco#87\2-update 03-09-12\dgn\aggdd07.dgn

100 % PS&E
USERNAME -> DWinrow DATE PLOTTED -> 09 MAR 2012 TIME PLOTTED -> 10:02:42

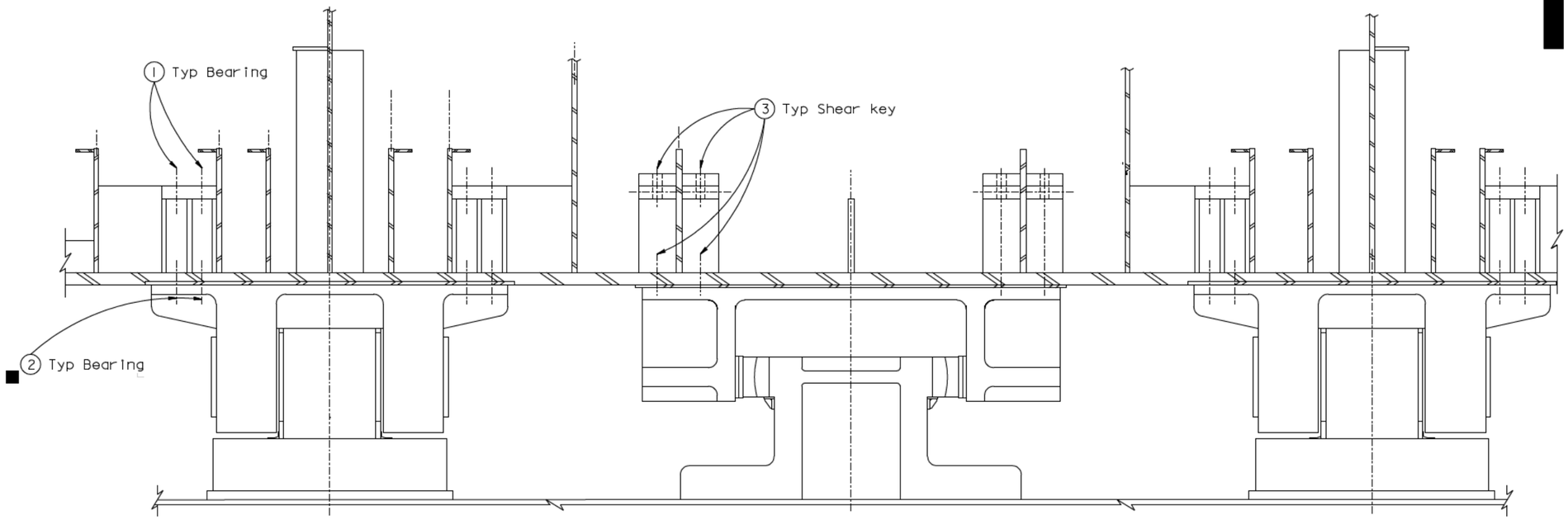

SECTION A-A (See Note 15)

1:20

DIST.	COUNTY	ROUTE	KILOMETER POST TOTAL PROJECT	SHEET NO.	TOTAL SHEETS
04	SF	80	13.2/13.9	675S1	1204

Daniel J. Turner

REGISTERED ENGINEER - CIVIL

03-09-12

PLANS APPROVAL DATE

REGISTERED PROFESSIONAL ENGINEER — Daniel J. Turner — No. C 65033 — Exp. 06/30/13 — CIVIL — STATE OF CALIFORNIA

The State of California or its officers or agents shall not be responsible for the accuracy or completeness of electronic copies of this plan sheet.

T.Y. LIN / MOFFATT & NICHOL
825 BATTERY STREET
SAN FRANCISCO, CA 94111

Caltrans now has a web site! To get to the web site, go to: http://www.dot.ca.gov

NOTES:

15. At the Contractor's option, oversize holes may be used for the anchor bolt and keeper bolt in the top anchor plates of the seat assemblies, and in the key PL.
16. At the Contractor's option, an equivalent PJP may be used in lieu of a double sided fillet weld.
17. At the Contractor's option, the flange may be placed on the opposite side of the bearing stiffener.
18. At the Contractor's option, the top bearing PL may be detailed to overhang the side stiffener plates by 5 mm, subject to review and approval of the Engineer.
19. At the Contractor's option, the top bearing PL may be detailed to provide 5 mm gap at the floorbeams and abutting longitudinal members.
20. At the Contractor's option, the top bearing PL may be detailed to provide 5 mm gap at the abutting longitudinal members.
21. At the Contractor's option, keeper bolts may be placed in the upper top bearing plate. Oversized holes may be used in the bearing plates and vertical plates at keeper bolt locations, subject to review and approval of the Engineer.
22. At the Contractor's option, double-sided 24 mm fillet may be used on selected stiffener to floorbeam welds, subject to review and approval of the Engineer.

CONTRACT CHANGE ORDER NO. ____
SHEET ____ OF ____

REQUESTS FOR INFORMATION NOT ADDRESSED IN THIS CCO REMAIN IN FORCE

ALL DIMENSIONS ARE IN MILLIMETERS UNLESS OTHERWISE SHOWN

R. Vallzadeh/V. Toan/Y.L./W.L./F.C.
DESIGN OVERSIGHT
SIGN OFF DATE 03/09/12

MARK	DATE	DESCRIPTIONS	BY	CH'D	CCO#
0	03/09/12	EAST END OBG	DT	GB	87

REVISIONS

	BY	CHECKED
DESIGN	D. Turner	G. Baker
DETAILS	D. Turner	G. Baker
QUANTITIES	D. Turner	G. Baker

PREPARED FOR THE STATE OF CALIFORNIA DEPARTMENT OF TRANSPORTATION

R. Manzanarez
PROJECT ENGINEER

BRIDGE NO. 34-0006L/R
KILOMETER POST 13.2/13.9

SAN FRANCISCO OAKLAND BAY BRIDGE
EAST SPAN SEISMIC SAFETY PROJECT
SELF-ANCHORED SUSPENSION BRIDGE
(SUPPERSTRUCTURE & TOWER)

GIRDER AT PIER E2 NO. 2A

Rev. Date: 5-18-98

ORIGINAL SCALE IN MILLIMETERS FOR REDUCED PLANS 0 10 20 30 40 50 60 70 80 90 100

CU 04
EA 0120F1

DISREGARD PRINTS BEARING EARLIER REVISION DATES

REVISION DATES (PRELIMINARY STAGE ONLY): 03/09/12

SHEET 258S1 OF

FILE -> I:\bb\04-01200I\sas\contract plans and cco\cco\cco#87\2-update 03-09-12\dgn\aggdd07a.dgn

100% PS&E
USERNAME -> DWinrow DATE PLOTTED -> 09 MAR 2012 TIME PLOTTED -> 10:03:37

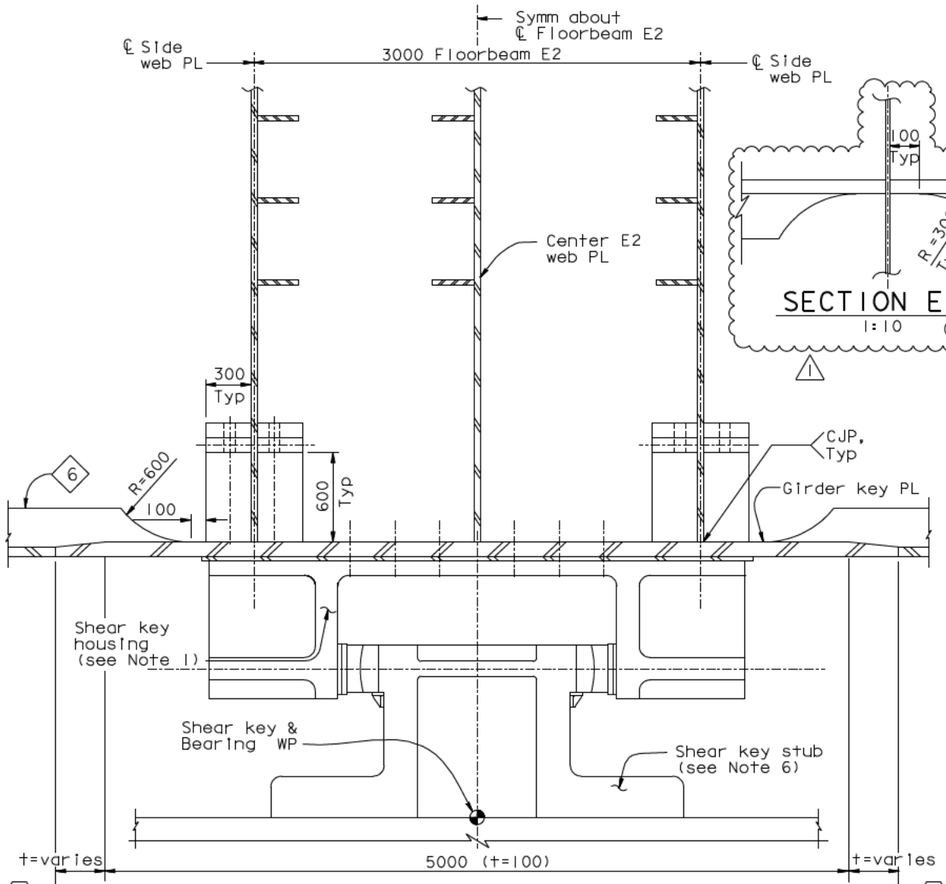

SECTION B-B
1:20

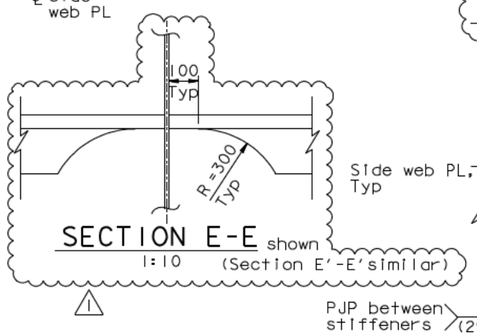

SECTION E-E shown
1:10 (Section E'-E' similar)

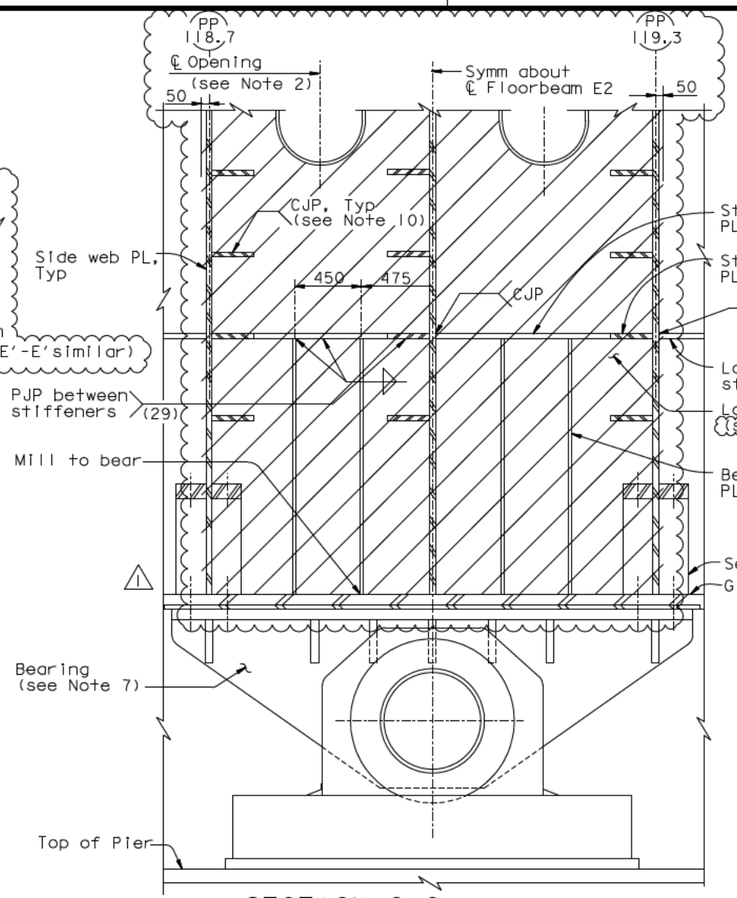

SECTION C-C
1:20

SECTION F-F
1:20

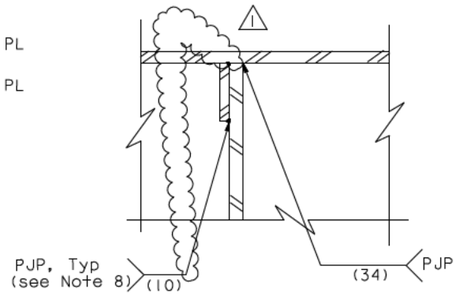

DETAIL B - ALTERNATIVE
STIFFENER WELD

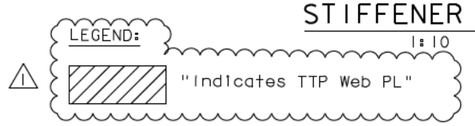

NOTES:

1. For shear key housing details, see "Pier E2 Shear Key Details" sheet.
2. For opening details, see "Typical Girder Details No.7" sheet.
3. For typical girder details not shown, see "Typical Girder Details" sheets.
4. For anchor bolt, see "Pier E2 Bearing Details" sheets.
5. For transverse limits of girder key PL, see "Girder At Pier E2 No.1" sheet.
6. For shear key details, see "Pier E2 Shear Key Details" sheets.
7. For Pier E2 bearing details, see "Pier E2 Bearing Details" sheets.
8. For bearing stiffeners in faying contact with diaphragms or webs, stiffener corners and welds may be ground to allow fit-up.
9. Leveling PL may be used to compensate for the permissible out-of-flatness of the girder key plate. Leveling plates shall be tapered as required to ensure proper alignment of the bearings and shear keys in both longitudinal and transverse directions.
10. Stiffeners welded to the longitudinal shear PL shall be coped. See stiffener type ⑨ in similar Section D-D on "Typical Crossbeam Details No.6" sheet.
11. At the Contractor's option and subject to review and approval of the Engineer, a 1:2.5 taper may be used in lieu of the 1:10 taper. The overall width of the girder key PL shall remain 5800 mm.
12. For Detail D and Section H-H, see "Girder At Pier E2 No.3A" sheet.
13. The longitudinal shear PL shall have Through Thickness Properties (TTP).

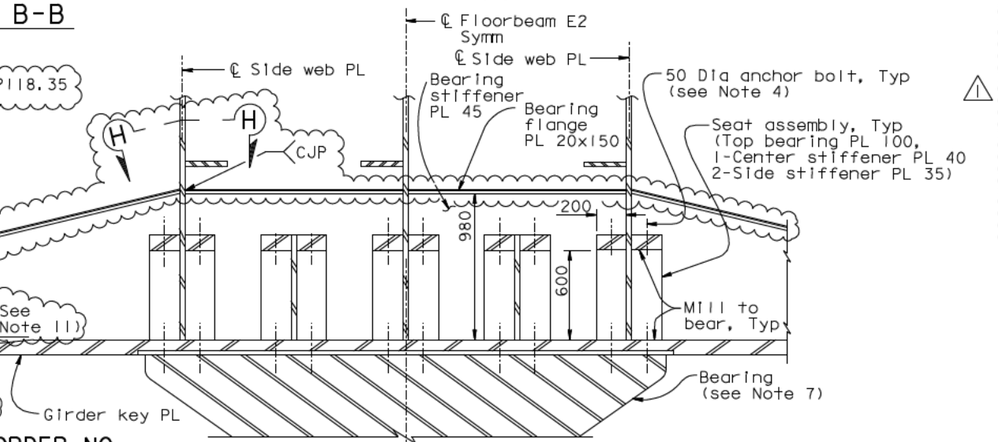

SECTION D-D
1:20

DIST.	COUNTY	ROUTE	KILOMETER POST TOTAL PROJECT	SHEET NO.	TOTAL SHEETS
04	SF	80	13.2/13.9	676R1	1204

George Baker
REGISTERED ENGINEER - CIVIL
12-6-04
PLANS APPROVAL DATE

The State of California or its officers or agents shall not be responsible for the accuracy or completeness of electronic copies of this plan sheet.

REGISTERED PROFESSIONAL ENGINEER — George S. Baker — No. C 57112 — Exp. 12/31/05 — CIVIL — STATE OF CALIFORNIA

T.Y. LIN / MOFFATT & NICHOL
825 BATTERY STREET
SAN FRANCISCO, CA 94111

Caltrans now has a web site! To get to the web site, go to: http://www.dot.ca.gov

REGISTERED PROFESSIONAL ENGINEER — Marwan N. Nader — No. C 054426 — Exp. 12/31/13 — CIVIL — STATE OF CALIFORNIA

CONTRACT CHANGE ORDER NO. ____
SHEET ___ OF ___

FOR REVISIONS ONLY

REQUESTS FOR INFORMATION NOT ADDRESSED IN THIS CCO REMAIN IN FORCE

ALL DIMENSIONS ARE IN MILLIMETERS UNLESS OTHERWISE SHOWN

R. Vallzadeh/V. Toan/Y.L./W.L./F.C.
DESIGN OVERSIGHT
SIGN OFF DATE 04/18/12

MARK	DATE	DESCRIPTIONS	BY	CH'D	CCO#
1	04/18/12	EAST END OBG	GB	MN	87

REVISIONS

	BY	CHECKED
DESIGN	G. Baker	P. Ritchie
DETAILS	C. Mauch	T. McMeans
QUANTITIES	D. Turner	M. Roberts

PREPARED FOR THE STATE OF CALIFORNIA
DEPARTMENT OF TRANSPORTATION

R. Manzanarez
PROJECT ENGINEER

BRIDGE NO. 34-0006L/R
KILOMETER POST 13.2/13.9

SAN FRANCISCO OAKLAND BAY BRIDGE
EAST SPAN SEISMIC SAFETY PROJECT
SELF-ANCHORED SUSPENSION BRIDGE
(SUPERSTRUCTURE & TOWER)

GIRDER AT PIER E2 NO. 3

Rev. Date: 5-18-98

ORIGINAL SCALE IN MILLIMETERS FOR REDUCED PLANS 0 10 20 30 40 50 60 70 80 90 100

CU 04
EA 0120F1

DISREGARD PRINTS BEARING EARLIER REVISION DATES

REVISION DATES (PRELIMINARY STAGE ONLY): 5/15/99 08/02/99 05/31/01 04/08/02 07/01/02 12/19/02 10/13/05 11/13/05 12/07/05

SHEET 259R1 OF

FILE -> I:\bb\04-0120I\sas\contract plans and cco\cco\cco#87\temp\aggdd08.dgn

USERNAME -> DWinrow
DATE PLOTTED -> 18 APR 2012
TIME PLOTTED -> 11:07:13
100% PS&E

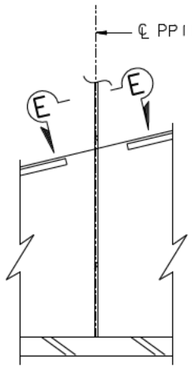

ALTERNATIVE 1

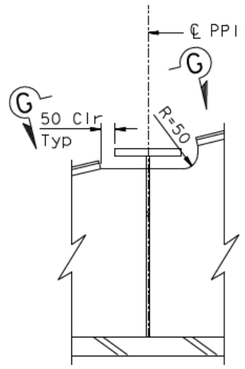

ALTERNATIVE 2

DETAIL D
1:10

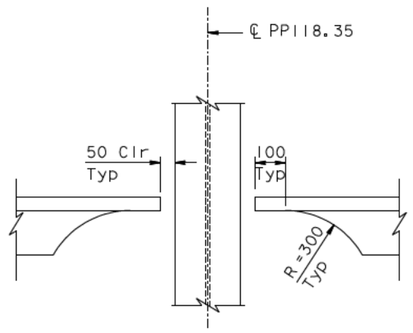

SECTION G-G
1:10

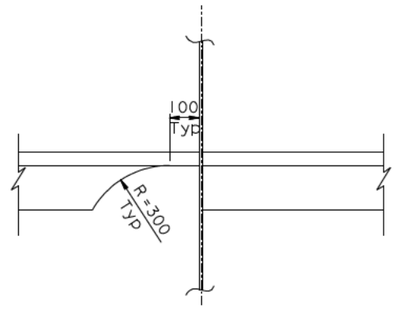

SECTION H-H
1:10

DIST.	COUNTY	ROUTE	KILOMETER POST TOTAL PROJECT	SHEET NO.	TOTAL SHEETS
04	SF	80	13.2/13.9	676SI	1204

REGISTERED ENGINEER - CIVIL

04-18-12
PLANS APPROVAL DATE

REGISTERED PROFESSIONAL ENGINEER
Marwan N. Nader
No. C 054426
Exp. 12/31/13
CIVIL
STATE OF CALIFORNIA

The State of California or its officers or agents shall not be responsible for the accuracy or completeness of electronic copies of this plan sheet.

T.Y. LIN / MOFFATT & NICHOL
825 BATTERY STREET
SAN FRANCISCO, CA 94111

Caltrans now has a web site! To get to the web site, go to: http://www.dot.ca.gov

100 % PS&E

DATE PLOTTED -> 18 APR 2012 TIME PLOTTED -> 11:08:16

USERNAME -> DWinrow

NOTES:

1. For Section E-E, see "Girder At Pier E2 No.3" sheet.

CONTRACT CHANGE ORDER NO. _____
SHEET ____ OF ____

REQUESTS FOR INFORMATION NOT ADDRESSED IN THIS CCO REMAIN IN FORCE

ALL DIMENSIONS ARE IN MILLIMETERS UNLESS OTHERWISE SHOWN

R. Vallzadeh/V. Toan/Y.L./W.L./F.C.
DESIGN OVERSIGHT
Ryan Vallzadeh / Vonn Toan / Y Liu
SIGN OFF DATE 04/18/12

MARK	DATE	REVISIONS	BY	CH'D	CCO#
0	04/18/12	EAST END OBG	GB	MN	87

	BY	CHECKED
DESIGN	G. Baker	M. Nader
DETAILS	G. Baker	D. Turner
QUANTITIES	G. Baker	D. Turner

PREPARED FOR THE STATE OF CALIFORNIA DEPARTMENT OF TRANSPORTATION

R. Manzanarez
PROJECT ENGINEER

BRIDGE NO. 34-0006L/R
KILOMETER POST 13.2/13.9

SAN FRANCISCO OAKLAND BAY BRIDGE
EAST SPAN SEISMIC SAFETY PROJECT
SELF-ANCHORED SUSPENSION BRIDGE
(SUPERSTRUCTURE & TOWER)

GIRDER AT PIER E2 NO. 3A

Rev. Date: 5-18-98

ORIGINAL SCALE IN MILLIMETERS FOR REDUCED PLANS 0 10 20 30 40 50 60 70 80 90 100

CU 04
EA 0120F1

DISREGARD PRINTS BEARING EARLIER REVISION DATES →

REVISION DATES (PRELIMINARY STAGE ONLY): 04/18/12

SHEET 259SI OF

FILE -> I:\bb\04-012001\sas\contract plans and cco\cco\cco#87\temp\aggdd08a.dgn

DIST.	COUNTY	ROUTE	KILOMETER POST TOTAL PROJECT	SHEET NO.	TOTAL SHEETS
04	SF	80	13.2/13.9	677RI	1204

George Baker
REGISTERED ENGINEER - CIVIL

12-6-04
PLANS APPROVAL DATE

The State of California or its officers or agents shall not be responsible for the accuracy or completeness of electronic copies of this plan sheet.

REGISTERED PROFESSIONAL ENGINEER — George S. Baker — No. C 57112 — Exp. 12/31/05 — CIVIL — STATE OF CALIFORNIA

T.Y. LIN / MOFFATT & NICHOL
825 BATTERY STREET
SAN FRANCISCO, CA 94111

Caltrans now has a web site! To get to the web site, go to: http://www.dot.ca.gov

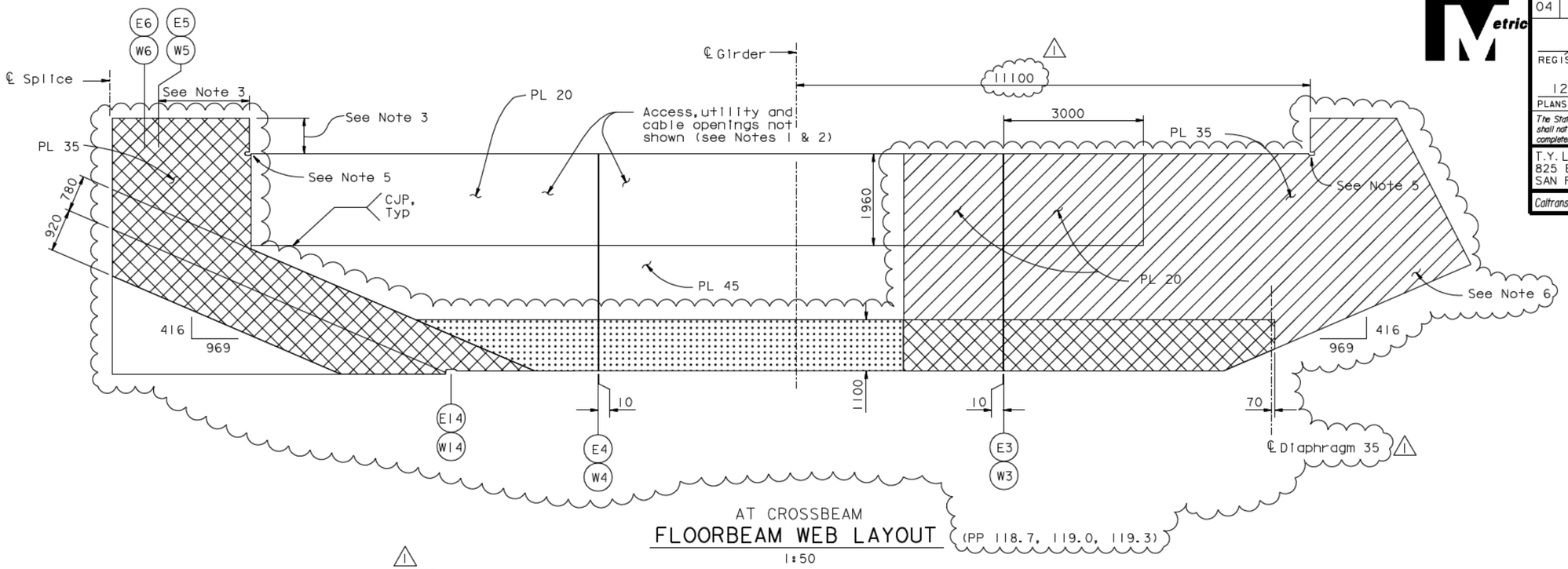

AT CROSSBEAM
FLOORBEAM WEB LAYOUT
1:50

(PP 118.7, 119.0, 119.3)

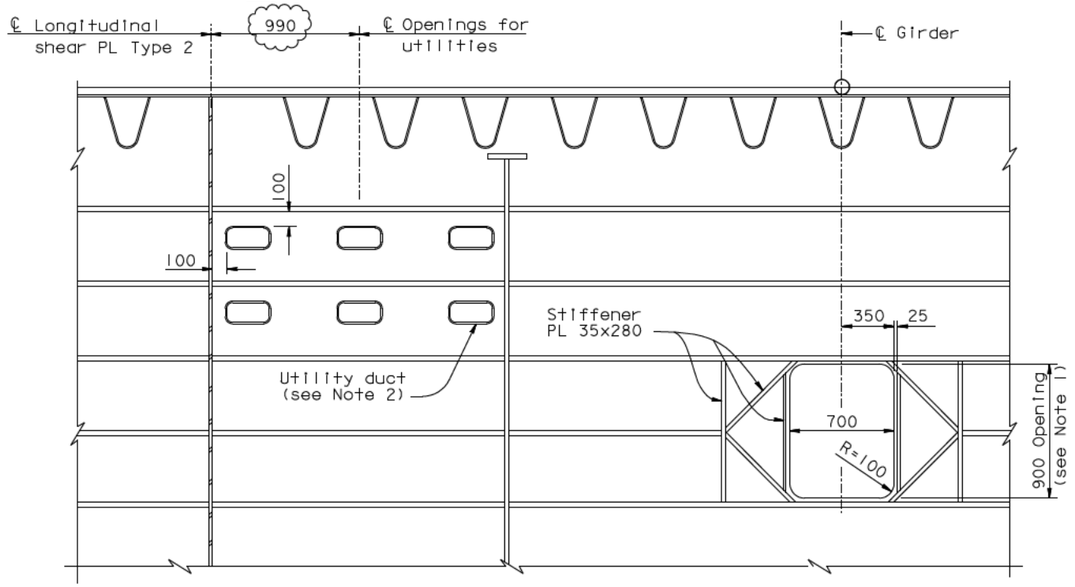

DETAIL C
1:20

LEGEND:
- "Indicates SPCM web PL"
- "Indicates TTP web PL"
- "Indicates SPCM & TTP web PL"

NOTES:
1. For opening details not shown, see "Typical Girder Details No.7" sheets.
2. For utility details not shown, see "Utility Details" sheets.
3. For dimensions not shown, see "Partial Typical Sections", "Typical Girder Details" and "Girder At Pier E2 No.1" sheets.
4. For stiffener cutouts, see "Typical Girder Details No.3", "Typical Girder Details No.5" and "Typical Girder Details No.6" sheets.
5. For cutout detail, see "Typical Floorbeam Details No.3" sheet.
6. For floorbeam web cutout at East Saddle Grillage, see "Girder At Pier E2 No.5" sheet.

Daniel J. Turner
REGISTERED PROFESSIONAL ENGINEER — Daniel J. Turner — No. C 65033 — Exp. 06/30/13 — CIVIL — STATE OF CALIFORNIA

FOR REVISIONS ONLY

CONTRACT CHANGE ORDER NO. ____
SHEET ____ OF ____

REQUESTS FOR INFORMATION NOT ADDRESSED IN THIS CCO REMAIN IN FORCE

ALL DIMENSIONS ARE IN MILLIMETERS UNLESS OTHERWISE SHOWN

MARK	DATE	DESCRIPTIONS	BY	CH'D	CCO#
1	09/01/11	EAST END OBG	GB	DT	87

REVISIONS

R. Vallzadeh/V. Toan/Y.L./W.L./F.C.
DESIGN OVERSIGHT
SIGN OFF DATE 09/01/11

	BY	CHECKED
DESIGN	G. Baker	P. Ritchie
DETAILS	C. Mauch	T. McMeans
QUANTITIES	D. Turner	M. Roberts

PREPARED FOR THE STATE OF CALIFORNIA DEPARTMENT OF TRANSPORTATION

R. Manzanarez
PROJECT ENGINEER

BRIDGE NO. 34-0006L/R
KILOMETER POST 13.2/13.9

SAN FRANCISCO OAKLAND BAY BRIDGE
EAST SPAN SEISMIC SAFETY PROJECT
SELF-ANCHORED SUSPENSION BRIDGE (SUPERSTRUCTURE & TOWER)

GIRDER AT PIER E2 NO. 4

Rev. Date: 5-18-98

ORIGINAL SCALE IN MILLIMETERS FOR REDUCED PLANS 0 10 20 30 40 50 60 70 80 90 100

CU 04
EA 0120F1

DISREGARD PRINTS BEARING EARLIER REVISION DATES

REVISION DATES (PRELIMINARY STAGE ONLY): 5/15/99 08/02/99 05/31/01 04/08/02 07/01/02 12/19/02 12/07/05

SHEET 260RI OF

FILE -> I:\bb\04-0120I\sas\contract plans and cco\cco\cco#87\I-original 09-01-11\dgn\aggdd09.dgn

USERNAME -> ALIshansky DATE PLOTTED -> 30 AUG 2011 TIME PLOTTED -> 11:37:51

100 % PS&E

DIST.	COUNTY	ROUTE	KILOMETER POST TOTAL PROJECT	SHEET NO.	TOTAL SHEETS
04	SF	80	13.2/13.9	678RI	1204

George Baker
REGISTERED ENGINEER - CIVIL

12-6-04
PLANS APPROVAL DATE

The State of California or its officers or agents shall not be responsible for the accuracy or completeness of electronic copies of this plan sheet.

REGISTERED PROFESSIONAL ENGINEER — George S. Baker — No. C 57112 — Exp. 12/31/05 — CIVIL — STATE OF CALIFORNIA

T.Y. LIN / MOFFATT & NICHOL
825 BATTERY STREET
SAN FRANCISCO, CA 94111

Caltrans now has a web site! To get to the web site, go to: http://www.dot.ca.gov

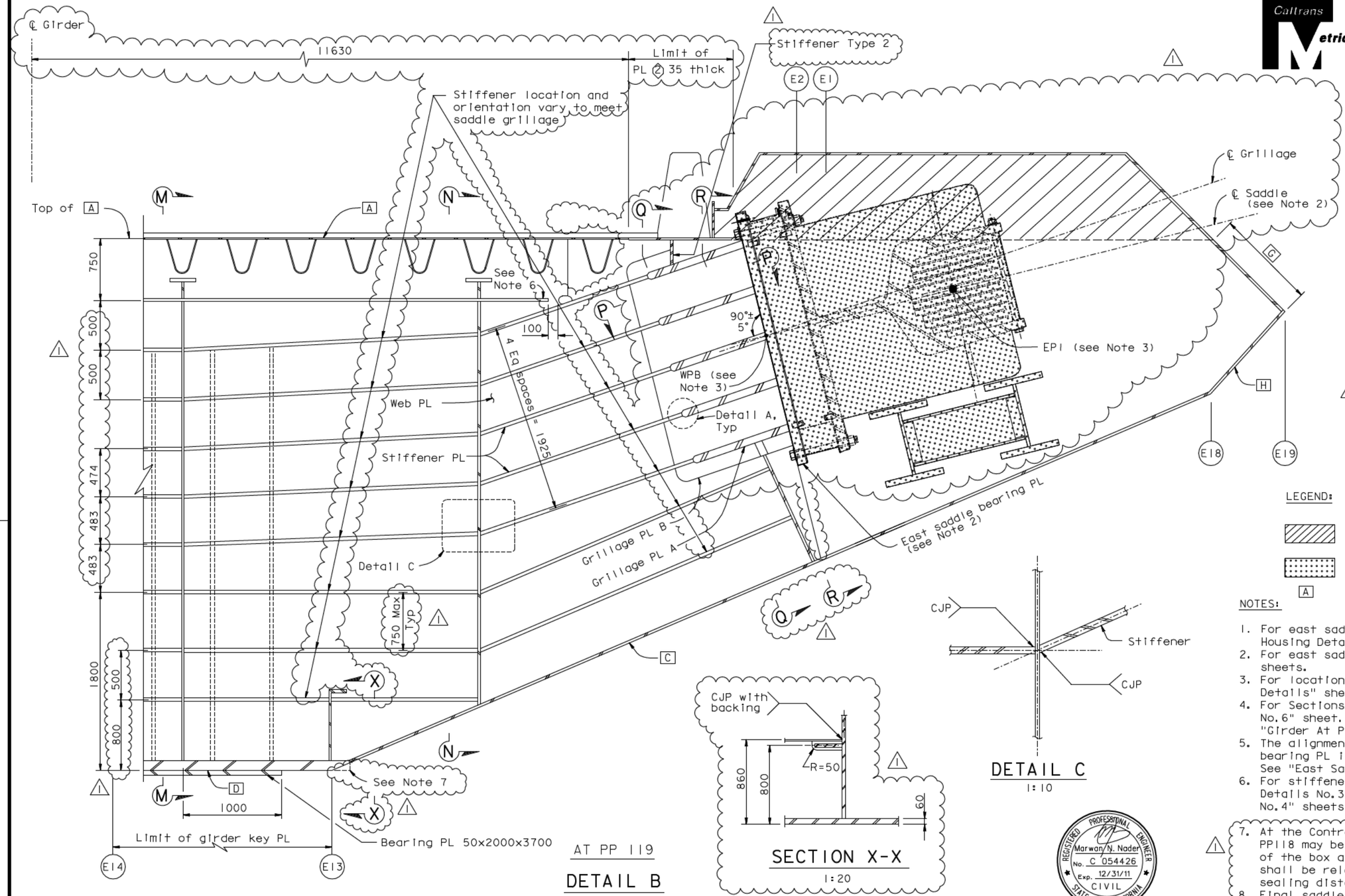

DETAIL A
1:5

SECTION X-X
1:20

AT PP 119

DETAIL B
1:20

DETAIL C
1:10

LEGEND:

- Limits of east saddle housing (see Note 1)
- East saddle (see Note 2)
- A — Girder PL A

NOTES:

1. For east saddle housing details, see "East Saddle Housing Details" sheets.
2. For east saddle details, see "East Saddle Details" sheets.
3. For locations of EP1 and WPB, see "East Saddle Details" sheets.
4. For Sections M-M and N-N, see "Girder At Pier E2 No.6" sheet. For Sections P-P, Q-Q and R-R, see "Girder At Pier E2 No.7" sheet.
5. The alignment of the saddle grillage and saddle bearing PL is related to the saddle layout. See "East Saddle Details" sheets.
6. For stiffener terminations, see "Typical Floorbeam Details No.3" and "Typical Floorbeam Details No.4" sheets.
7. At the Contractor's option, the bearing PL 50 at PP118 may be trimmed flush with the bottom edge of the box along line W13. The bearing PL bolts shall be relocated so as to maintain minimum sealing distance along the bearing PL edge.
8. Final saddle grillage orientation shall be determined from final cable geometry.

REGISTERED PROFESSIONAL ENGINEER — Marwan N. Nader — No. C 054426 — Exp. 12/31/11 — CIVIL — STATE OF CALIFORNIA

FOR REVISIONS ONLY

CONTRACT CHANGE ORDER NO. ____
SHEET ___ OF ___

REQUESTS FOR INFORMATION NOT ADDRESSED IN THIS CCO REMAIN IN FORCE

ALL DIMENSIONS ARE IN MILLIMETERS UNLESS OTHERWISE SHOWN

R. Vallzadeh/V. Toan/Y.L./W.L./F.C.
DESIGN OVERSIGHT
Roya Vallzadeh / Vong Toan / Y. Lui
SIGN OFF DATE 09/01/11

MARK	DATE	DESCRIPTIONS	BY	CH'D	CCO#
1	09/01/11	EAST END OBG	GB	MN	87

REVISIONS

	BY		CHECKED
DESIGN	G. Baker		P. Ritchie
DETAILS	C. Mauch		T. McMeans
QUANTITIES	D. Turner		M. Roberts

PREPARED FOR THE STATE OF CALIFORNIA DEPARTMENT OF TRANSPORTATION

R. Manzanarez
PROJECT ENGINEER

BRIDGE NO. 34-0006L/R
KILOMETER POST 13.2/13.9

SAN FRANCISCO OAKLAND BAY BRIDGE
EAST SPAN SEISMIC SAFETY PROJECT
SELF-ANCHORED SUSPENSION BRIDGE (SUPERSTRUCTURE & TOWER)

GIRDER AT PIER E2 NO.5

Rev. Date: 5-18-98

ORIGINAL SCALE IN MILLIMETERS FOR REDUCED PLANS 0 10 20 30 40 50 60 70 80 90 100

CU 04
EA 0120F1

DISREGARD PRINTS BEARING EARLIER REVISION DATES →

REVISION DATES (PRELIMINARY STAGE ONLY): 05/18/98 | 08/28/98 | 05/31/01 | 04/08/02 | 07/31/02 | 12/19/02 | 12/07/05

SHEET 261RI OF

FILE -> I:\bb\04-0120F1\sas\contract plans and cco\cco\cco#87\1-original 09-01-11\dgn\aggdd10.dgn

USERNAME -> ALshansk DATE PLOTTED -> 30 AUG 2011 TIME PLOTTED -> 11:39:23

100 % PS&E

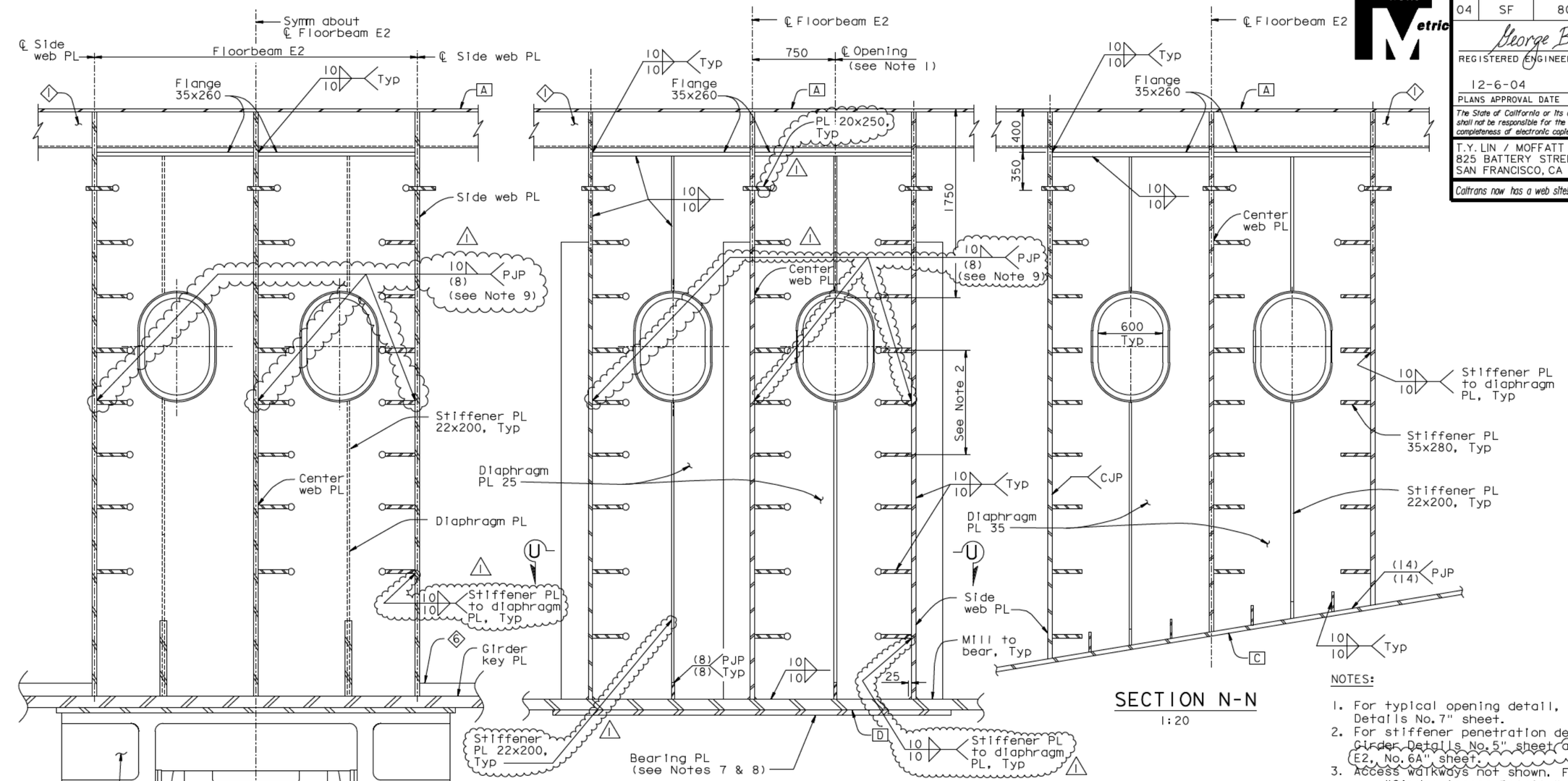

SECTION F-F
1:20

SECTION M-M (See Note 5)
1:20

SECTION N-N
1:20

CONTRACT CHANGE ORDER NO. ____
SHEET ___ OF ___

REQUESTS FOR INFORMATION NOT ADDRESSED IN THIS CCO REMAIN IN FORCE

FOR REVISIONS ONLY

NOTES:

1. For typical opening detail, see "Typical Girder Details No.7" sheet.
2. For stiffener penetration details, see "Typical Girder Details No.5" sheet and "Girder At Pier E2, No.6A" sheet. ⚠1
3. Access walkways not shown. For access details, see "Girder Access Details" sheets.
4. For Section U-U, see "Girder At Pier E2 No.8" sheet.
5. For typical diaphragm details, Section M-M shall apply.
6. For shear key stub and shear key housing details, see "Pier E2 Shear Key Details" sheets.
7. For plan of bearing PL, see "Crossbeam at Pier E2 No.7" sheet.
8. Bearing PL is counterbored to accomodate bolt heads. See Detail J on "Crossbeam At Pier E2 No.3" sheet.
9. ⚠1 At web PL taper, provide (8) PJP weld in lieu of fillet weld.

ALL DIMENSIONS ARE IN MILLIMETERS UNLESS OTHERWISE SHOWN

DIST.	COUNTY	ROUTE	KILOMETER POST TOTAL PROJECT	SHEET NO.	TOTAL SHEETS
04	SF	80	13.2/13.9	679R1	1204

George Baker
REGISTERED ENGINEER - CIVIL
12-6-04
PLANS APPROVAL DATE

REGISTERED PROFESSIONAL ENGINEER — George S. Baker — No. C 57112 — Exp. 12/31/05 — CIVIL — STATE OF CALIFORNIA

The State of California or its officers or agents shall not be responsible for the accuracy or completeness of electronic copies of this plan sheet.

T.Y. LIN / MOFFATT & NICHOL
825 BATTERY STREET
SAN FRANCISCO, CA 94111

Caltrans now has a web site! To get to the web site, go to: http://www.dot.ca.gov

Daniel J. Turner — REGISTERED PROFESSIONAL ENGINEER — Daniel J. Turner — No. C 65033 — Exp. 06/30/13 — CIVIL — STATE OF CALIFORNIA

MARK	DATE	DESCRIPTIONS	BY	CH'D	CCO#
⚠1	09/01/11	EAST END OBG	GB	DT	87

REVISIONS

	BY		CHECKED	
DESIGN	G. Baker		P. Ritchie	
DETAILS	C. Mauch		T. McMeans	
QUANTITIES	D. Turner		M. Roberts	

PREPARED FOR THE STATE OF CALIFORNIA DEPARTMENT OF TRANSPORTATION

R. Manzanarez
PROJECT ENGINEER

BRIDGE NO. 34-0006L/R
KILOMETER POST 13.2/13.9

R. Vallzadeh/V. Toan/Y.L./W.L./F.C.
DESIGN OVERSIGHT
SIGN OFF DATE 09/01/11

SAN FRANCISCO OAKLAND BAY BRIDGE
EAST SPAN SEISMIC SAFETY PROJECT
SELF-ANCHORED SUSPENSION BRIDGE
(SUPERSTRUCTURE & TOWER)

GIRDER AT PIER E2 NO. 6

Rev. Date: 5-18-98

ORIGINAL SCALE IN MILLIMETERS FOR REDUCED PLANS 0 10 20 30 40 50 60 70 80 90 100

CU 04
EA 0120F1

DISREGARD PRINTS BEARING EARLIER REVISION DATES

REVISION DATES (PRELIMINARY STAGE ONLY): 05/18/99 | 08/02/99 | 05/31/01 | 04/08/02 | 07/01/02 | 12/18/02 | 10/13/05 | 11/13/05 | 12/07/05

SHEET 262R1 OF

FILE -> I:\bb\04-012001\sas\contract plans and cco\cco\cco#87\1-original 09-01-11\dgn\aggdd12.dgn

USERNAME -> alshansk DATE PLOTTED -> 30 AUG 2011 TIME PLOTTED -> 11:42:35

100 % PS&E

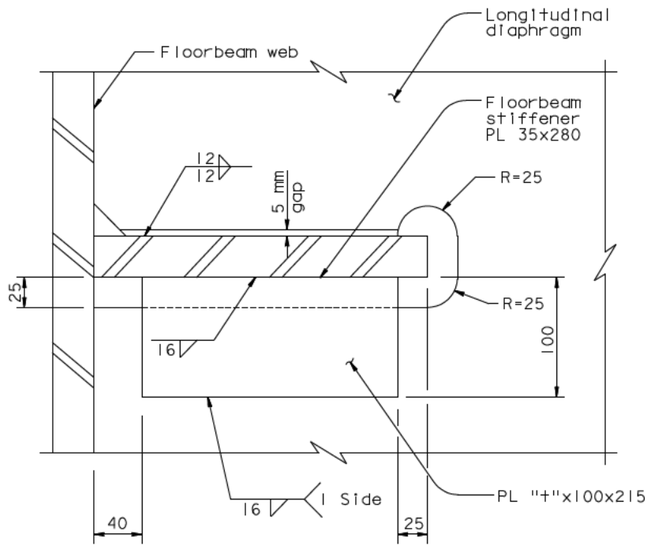

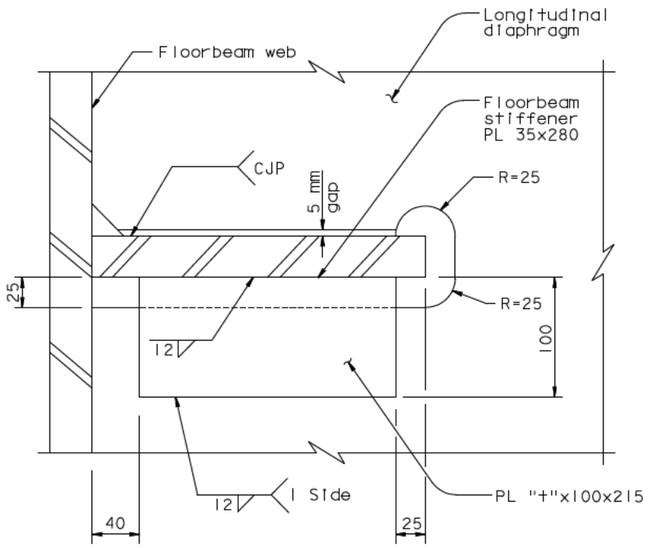

SINGLE FIT LUG OPTIONS (See Note 1)

PIER E2 LONGITUDINAL DIAPHRAGM CUT-OUTS

1:2.5

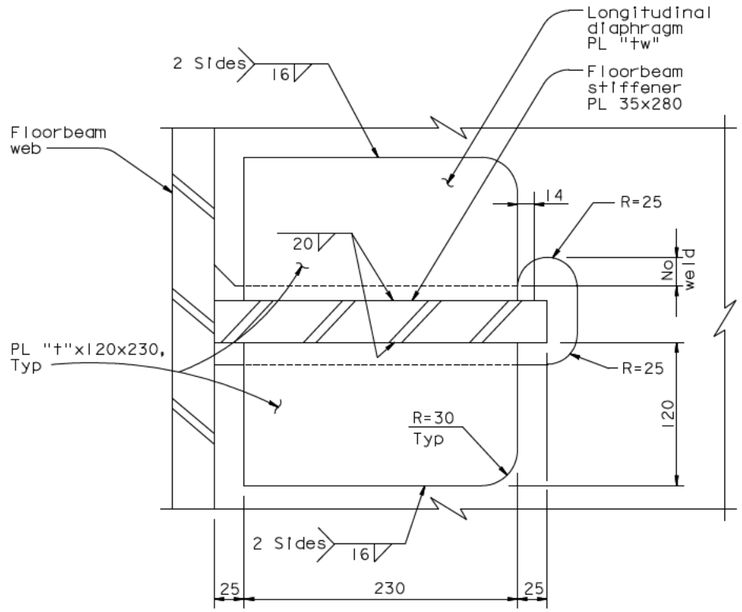

DOUBLE FIT LUG OPTION

1:2.5

NOTES:

1. Lug thickness "t" shall match the longitudinal diaphragm thickness.
2. For tw=20, t=22. For tw=25, t=25.

DIST.	COUNTY	ROUTE	KILOMETER POST TOTAL PROJECT	SHEET NO.	TOTAL SHEETS
04	SF	80	13.2/13.9	679SI	1204

REGISTERED ENGINEER - CIVIL

04-18-12
PLANS APPROVAL DATE

REGISTERED PROFESSIONAL ENGINEER — Marwan N. Nader — No. C 054426 — Exp. 12/31/13 — CIVIL — STATE OF CALIFORNIA

The State of California or its officers or agents shall not be responsible for the accuracy or completeness of electronic copies of this plan sheet.

T.Y. LIN / MOFFATT & NICHOL
825 BATTERY STREET
SAN FRANCISCO, CA 94111

Caltrans now has a web site! To get to the web site, go to: http://www.dot.ca.gov

CONTRACT CHANGE ORDER NO. ____
SHEET ___ OF ___

REQUESTS FOR INFORMATION NOT ADDRESSED IN THIS CCO REMAIN IN FORCE

ALL DIMENSIONS ARE IN MILLIMETERS UNLESS OTHERWISE SHOWN

R. Vallzadeh/V. Toan/Y.L./W.L./F.C.
DESIGN OVERSIGHT
SIGN OFF DATE 04/18/12

MARK	DATE	DESCRIPTIONS	BY	CH'D	CCO#
0	04/18/12	EAST END OBG	GB	MN	87

REVISIONS

	BY	CHECKED
DESIGN	G. Baker	M. Nader
DETAILS	G. Baker	D. Turner
QUANTITIES	G. Baker	D. Turner

PREPARED FOR THE STATE OF CALIFORNIA DEPARTMENT OF TRANSPORTATION

R. Manzanarez
PROJECT ENGINEER

BRIDGE NO. 34-0006L/R
KILOMETER POST 13.2/13.9

SAN FRANCISCO OAKLAND BAY BRIDGE
EAST SPAN SEISMIC SAFETY PROJECT
SELF-ANCHORED SUSPENSION BRIDGE
(SUPERSTRUCTURE & TOWER)

GIRDER AT PIER E2 NO. 6A

Rev. Date: 5-18-98

ORIGINAL SCALE IN MILLIMETERS FOR REDUCED PLANS 0 10 20 30 40 50 60 70 80 90 100

CU 04
EA 0120F1

DISREGARD PRINTS BEARING EARLIER REVISION DATES →

REVISION DATES (PRELIMINARY STAGE ONLY): 04/18/12

SHEET 262SI OF

FILE -> I:\bb\04-012001\sas\contract plans and cco\cco\cco#87\temp\aggdd12a.dgn

100% PS&E
TIME PLOTTED -> 11:09:17
DATE PLOTTED -> 18 APR 2012
USERNAME -> DWinrow

DIST.	COUNTY	ROUTE	KILOMETER POST TOTAL PROJECT	SHEET NO.	TOTAL SHEETS
04	SF	80	13.2/13.9	680RI	1204

George Baker
REGISTERED ENGINEER - CIVIL

12-6-04
PLANS APPROVAL DATE

The State of California or its officers or agents shall not be responsible for the accuracy or completeness of electronic copies of this plan sheet.

REGISTERED PROFESSIONAL ENGINEER — George S. Baker — No. C 57112 — Exp. 12/31/05 — CIVIL — STATE OF CALIFORNIA

T.Y. LIN / MOFFATT & NICHOL
825 BATTERY STREET
SAN FRANCISCO, CA 94111

Caltrans now has a web site! To get to the web site, go to: http://www.dot.ca.gov

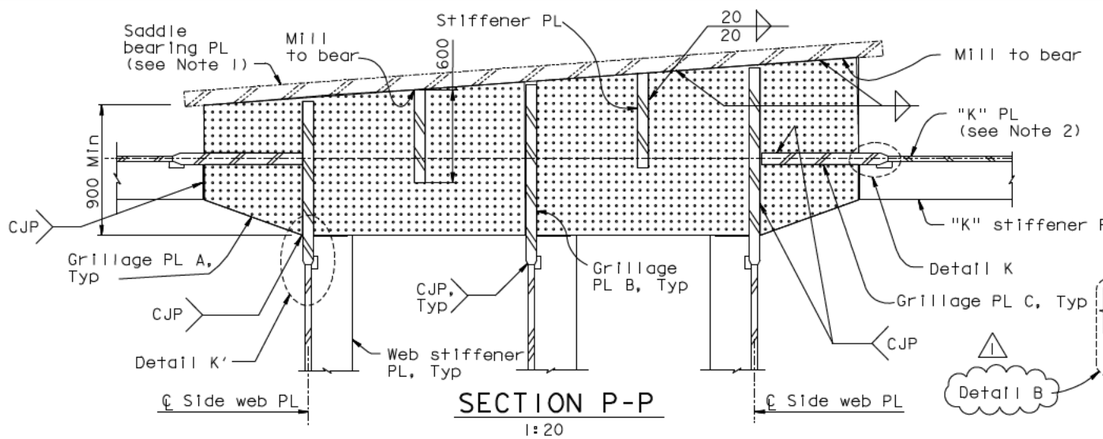

SECTION P-P
1:20

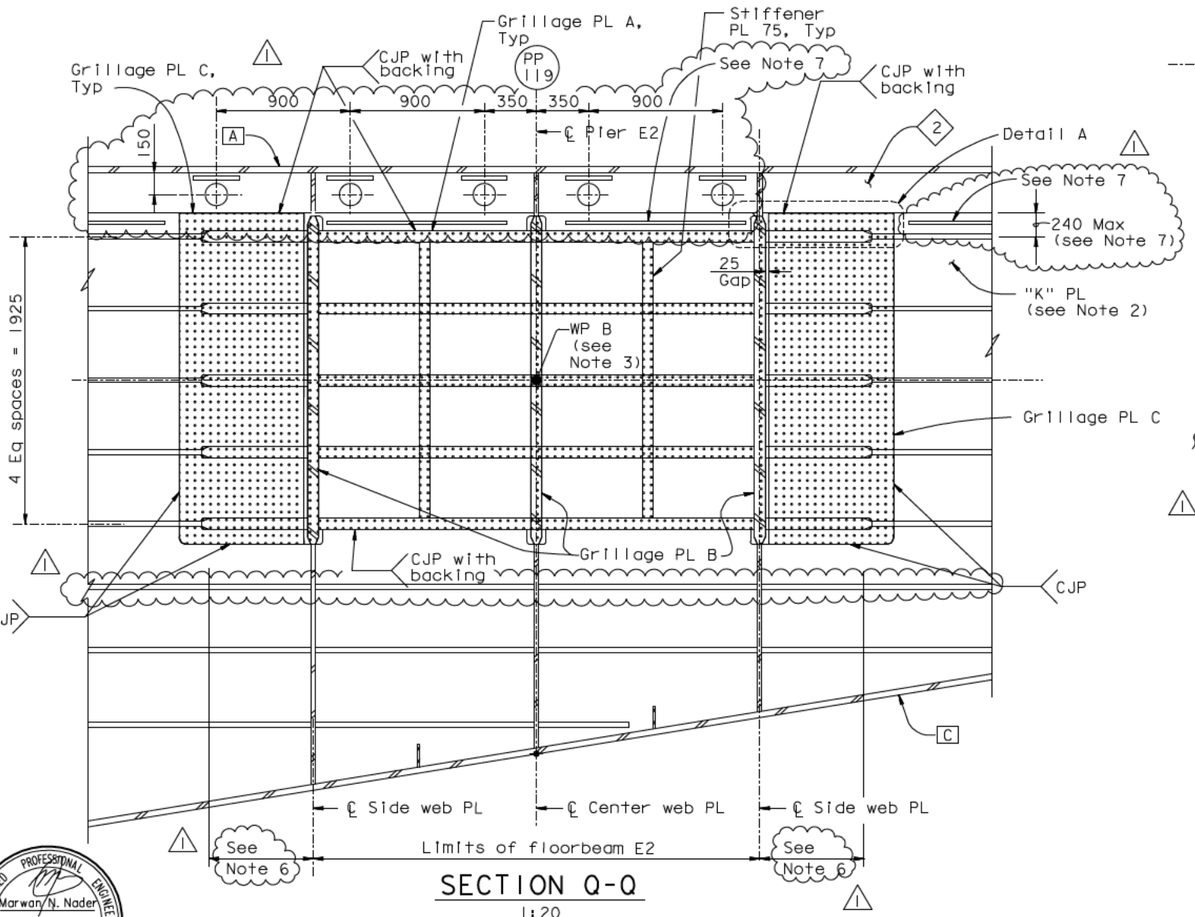

SECTION Q-Q
1:20

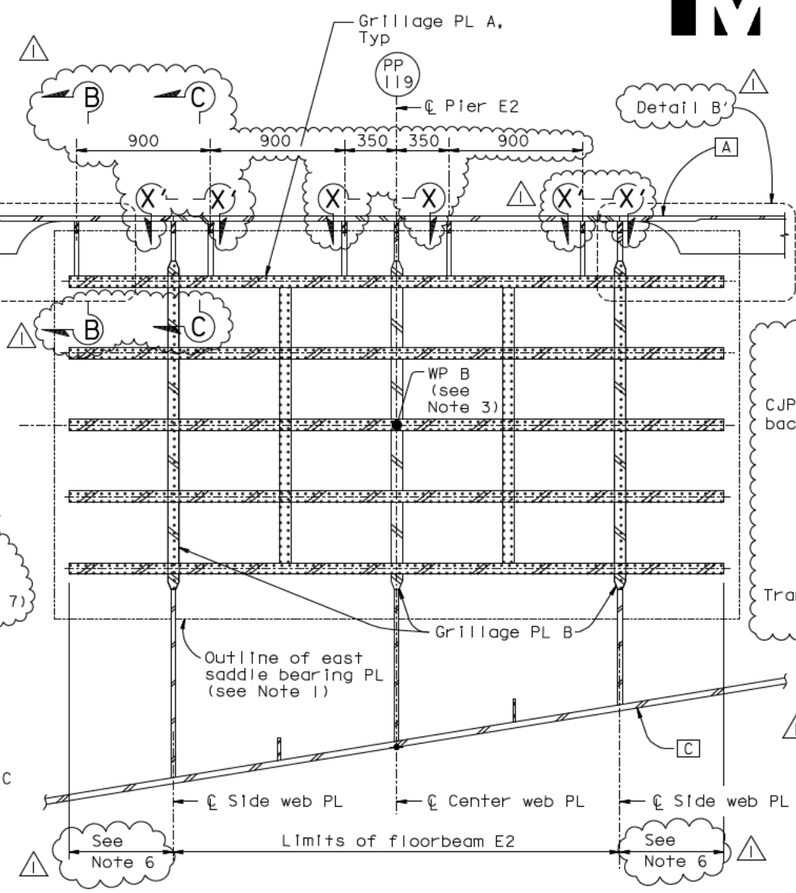

SECTION R-R
1:20

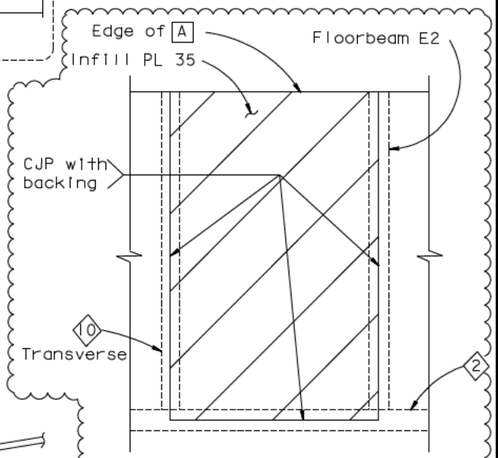

SECTION X-X SHOWN
SECTION X'-X' SIMILAR
1:5

LEGEND:

Saddle grillage

NOTES:

1. For east saddle bearing PL details, see "East Saddle Details" sheets.
2. For "K" PL details, see "Girder At East Transition Details No.1" sheet.
3. For location of WPB, see "East Saddle Details" sheets.
4. All saddle grillage connections shall be welded using complete joint penetration welds unless noted otherwise.
5. For Details A and K, see "Girder At Pier E2 No.8" sheet.
6. The dimensions of grillage plates A and C shall be determined from the east saddle layout geometry. See "East Saddle Details No.1" through "East Saddle Details No.3" sheets.
7. Stiffener shall be added as required to insure stiffening within 240 mm of the top of "K" PL.
8. For Detail B, see "Girder At Pier E2 No.8A" sheet.
9. For Sections B-B and C-C, see "Girder At Pier E2 No.8" sheet.

100% PS&E

TIME PLOTTED -> 11:10:20
DATE PLOTTED -> 18 APR 2012
USERNAME -> DWinrow

Marwan N. Nader — No. C 054426 — Exp. 12/31/13 — CIVIL — STATE OF CALIFORNIA

FOR REVISIONS ONLY

CONTRACT CHANGE ORDER NO. ____
SHEET ____ OF ____

REQUESTS FOR INFORMATION NOT ADDRESSED IN THIS CCO REMAIN IN FORCE

ALL DIMENSIONS ARE IN MILLIMETERS UNLESS OTHERWISE SHOWN

MARK	DATE	DESCRIPTIONS	BY	CH'D	CCO#
1	04/18/12	EAST END OBG	GB	MN	87

REVISIONS

R. Vallzadeh/V. Toan/Y.L./W.L./F.C.
DESIGN OVERSIGHT
SIGN OFF DATE 04/18/12

	BY	CHECKED
DESIGN	G. Baker	P. Ritchie
DETAILS	C. Mauch	T. McMeans
QUANTITIES	D. Turner	M. Roberts

PREPARED FOR THE STATE OF CALIFORNIA DEPARTMENT OF TRANSPORTATION

R. Manzanarez
PROJECT ENGINEER

CU 04
EA 0120F1

BRIDGE NO. 34-0006L/R
KILOMETER POST 13.2/13.9

SAN FRANCISCO OAKLAND BAY BRIDGE
EAST SPAN SEISMIC SAFETY PROJECT
SELF-ANCHORED SUSPENSION BRIDGE
(SUPERSTRUCTURE & TOWER)

GIRDER AT PIER E2 NO.7

Rev. Date: 5-18-98

ORIGINAL SCALE IN MILLIMETERS FOR REDUCED PLANS 0 10 20 30 40 50 60 70 80 90 100

DISREGARD PRINTS BEARING EARLIER REVISION DATES

REVISION DATES (PRELIMINARY STAGE ONLY): 05/15/99 08/02/99 05/31/01 04/08/02 07/01/02 12/13/02 11/13/05

SHEET 263RI OF

FILE -> I:\bb\04-012001\sas\contract plans and cco\cco\cco#87\temp\aggdd11.dgn

DIST.	COUNTY	ROUTE	KILOMETER POST TOTAL PROJECT	SHEET NO.	TOTAL SHEETS
04	SF	80	13.2/13.9	681R1	1204

George Baker
REGISTERED ENGINEER - CIVIL
12/6/04
PLANS APPROVAL DATE

REGISTERED PROFESSIONAL ENGINEER — George S. Baker — No. C 57112 — Exp. 12/31/05 — CIVIL — STATE OF CALIFORNIA

The State of California or its officers or agents shall not be responsible for the accuracy or completeness of electronic copies of this plan sheet.

T.Y. LIN / MOFFATT & NICHOL
825 BATTERY STREET
SAN FRANCISCO, CA 94111

Caltrans now has a web site! To get to the web site, go to: http://www.dot.ca.gov

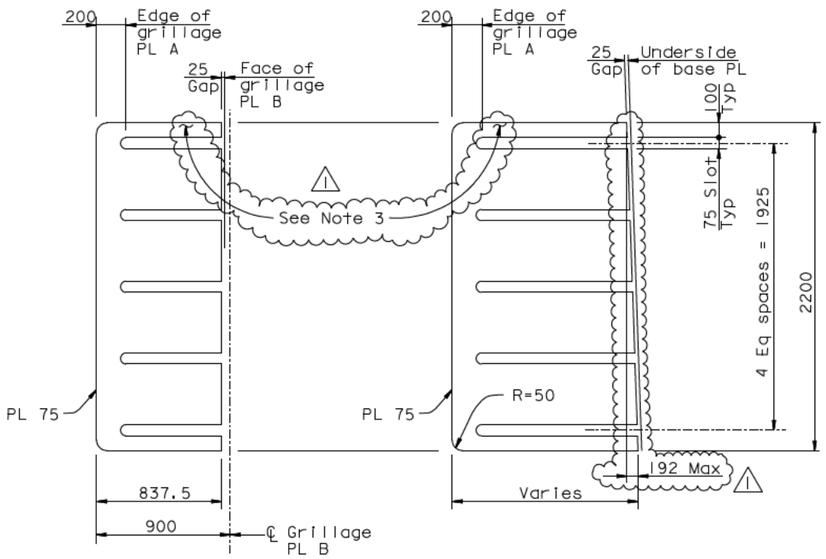

GRILLAGE PLATE DETAILS
1:20

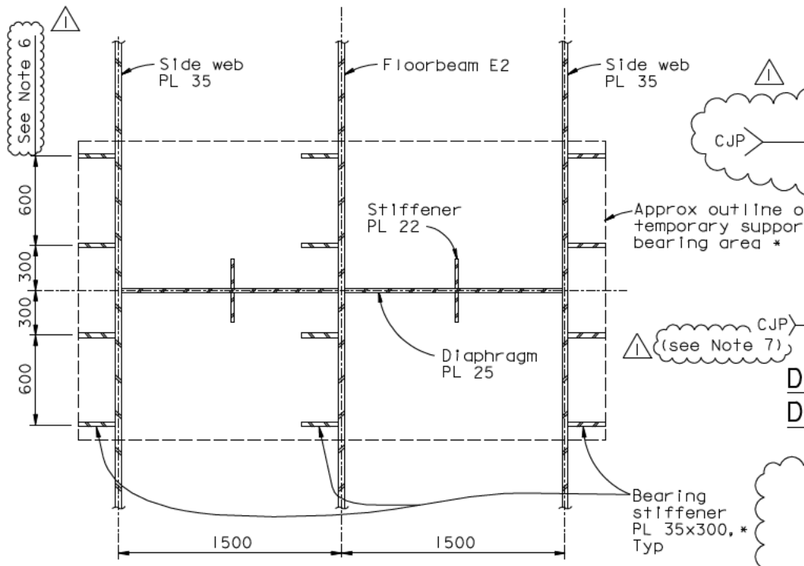

SECTION U-U (* For Bearing Replacement)
1:20

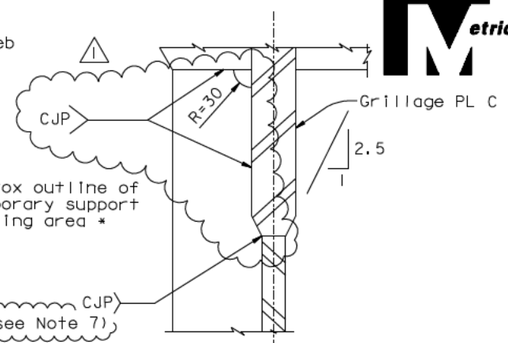

DETAIL K SHOWN, DETAIL K' SIMILAR
1:5

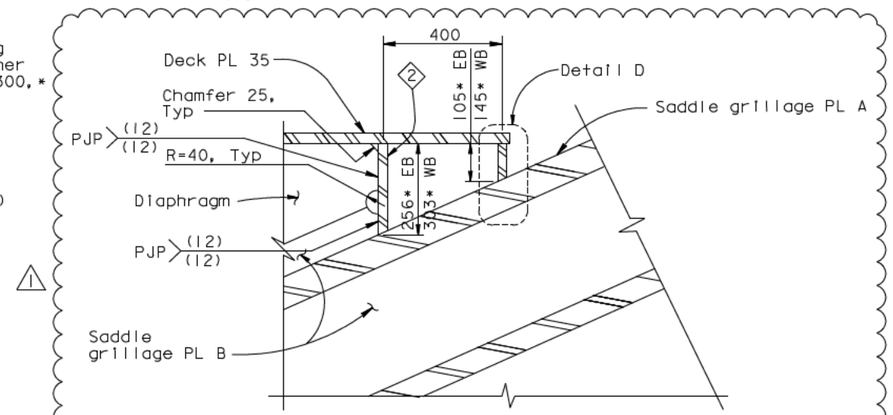

SECTION C-C (EB shown, WB Section C'-C' similar)
1:10

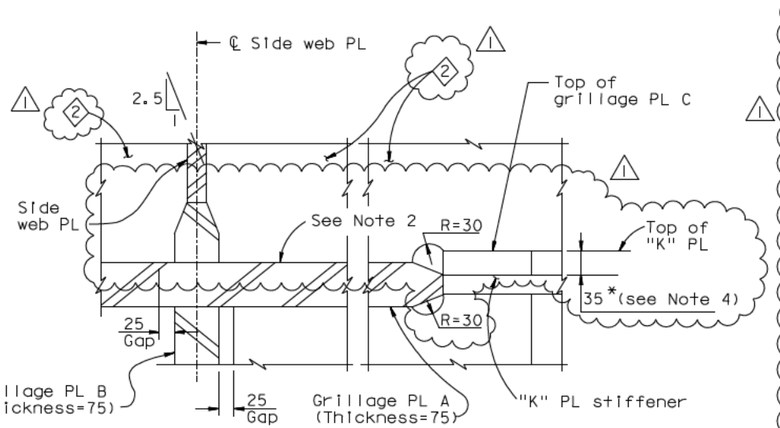

DETAIL A
1:5

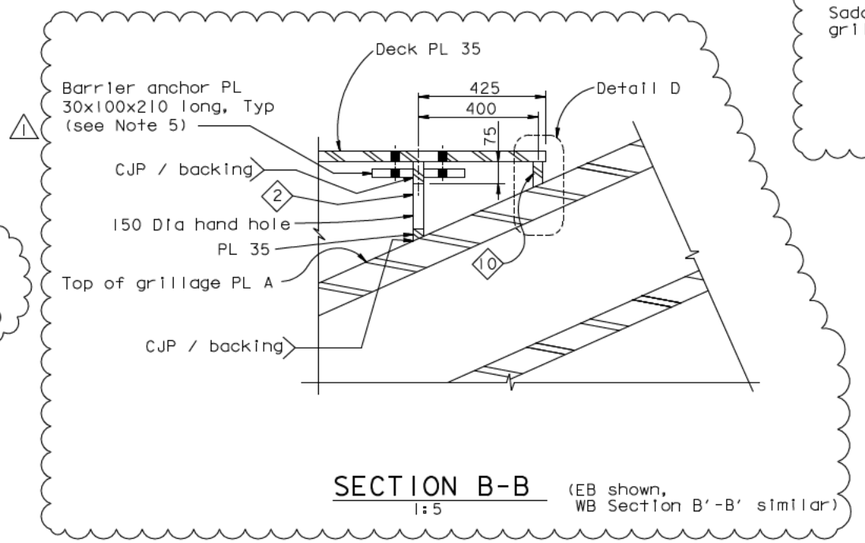

SECTION B-B (EB shown, WB Section B'-B' similar)
1:5

NOTES:

1. For typical stiffener termination, see "Typical Floorbeam Details No.6" sheet.
2. Extend or trim stiffener Type 2 to meet grillage PL A based on final cable geometry.
3. Trim grillage Plate B and C as shown on "Section C-C" and "Detail A" respectively.
4. Dimensions marked with an asterisk shall be revised based on the final cable geometry.
5. Barrier anchor shall be 310 long if detailing per "Alternative Barrier Connection Detail" on "Typical Girder Details No.14" sheet.
6. At the Contractor's option, stiffener may be offset +/- 5 mm, subject to review and approval of the Engineer.
7. At the Contractor's option, to accommodate updates in the fabrication procedure, a rathole (R=30) in the stiffener is acceptable to allow grillage PL B to Floorbeam web weld.

Marwan N. Nader — No. C 054426 — Exp. 12/31/11 — CIVIL — PROFESSIONAL ENGINEER — STATE OF CALIFORNIA

FOR REVISIONS ONLY

CONTRACT CHANGE ORDER NO. ____
SHEET ___ OF ___

REQUESTS FOR INFORMATION NOT ADDRESSED IN THIS CCO REMAIN IN FORCE

ALL DIMENSIONS ARE IN MILLIMETERS UNLESS OTHERWISE SHOWN

R. Vallzadeh/V. Toan/Y.L./W.L./F.C.
DESIGN OVERSIGHT
Ryan Vallzadeh / Vonal Toan / Y Liu
SIGN OFF DATE 09/01/11

MARK	DATE	DESCRIPTIONS	BY	CH'D	CCO#
1	09/01/11	EAST END OBG	GB	MN	87

REVISIONS

	BY	CHECKED
DESIGN	G. Baker	P. Ritchie
DETAILS	C. Mauch	T. McMeans
QUANTITIES	D. Turner	M. Roberts

PREPARED FOR THE STATE OF CALIFORNIA DEPARTMENT OF TRANSPORTATION

R. Manzanarez
PROJECT ENGINEER

BRIDGE NO. 34-0006L/R
KILOMETER POST 13.2/13.9

SAN FRANCISCO OAKLAND BAY BRIDGE
EAST SPAN SEISMIC SAFETY PROJECT
SELF-ANCHORED SUSPENSION BRIDGE
(SUPERSTRUCTURE & TOWER)

GIRDER AT PIER E2 NO. 8

Rev. Date: 5-18-98

ORIGINAL SCALE IN MILLIMETERS FOR REDUCED PLANS 0 10 20 30 40 50 60 70 80 90 100

CU 04
EA 0120F1

DISREGARD PRINTS BEARING EARLIER REVISION DATES →

REVISION DATES (PRELIMINARY STAGE ONLY)								SHEET	OF
05/15/98	08/02/98	05/31/01	04/08/02	07/01/02	12/19/02	11/15/05		264R1	

FILE -> I:\bb\04-012001\sas\contract plans and cco\cco\cco#87\1-original 09-01-11\dgn\aggdd13.dgn

USERNAME -> Alfshansk DATE PLOTTED -> 30 AUG 2011 TIME PLOTTED ->

100% PS&E

DIST.	COUNTY	ROUTE	KILOMETER POST TOTAL PROJECT	SHEET NO.	TOTAL SHEETS
04	SF	80	13.2/13.9	681SI	1204

REGISTERED ENGINEER - CIVIL

09-01-11

PLANS APPROVAL DATE

The State of California or its officers or agents shall not be responsible for the accuracy or completeness of electronic copies of this plan sheet.

REGISTERED PROFESSIONAL ENGINEER — Marwan N. Nader — No. C 054426 — Exp. 12/31/11 — CIVIL — STATE OF CALIFORNIA

T.Y. LIN / MOFFATT & NICHOL
825 BATTERY STREET
SAN FRANCISCO, CA 94111

Caltrans now has a web site! To get to the web site, go to: http://www.dot.ca.gov

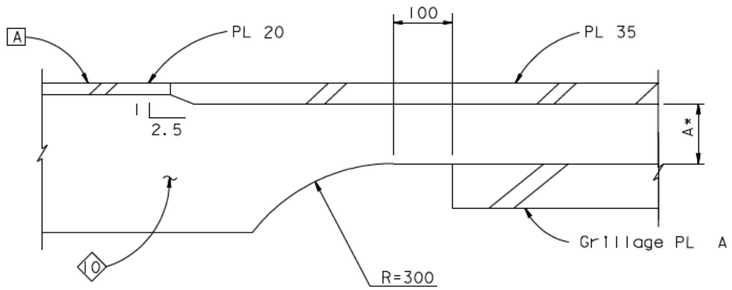

ALTERNATIVE 1 A* > 40

DETAIL B (Detail B' similar)
1:5

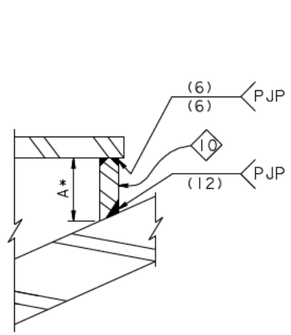

FOR A* ≥ 40

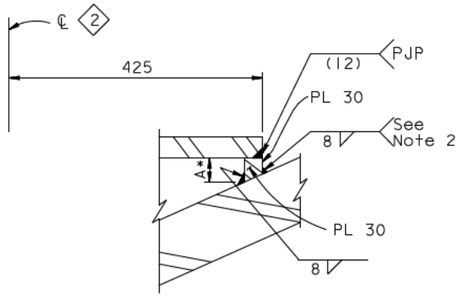

FOR 15 ≤ A* ≤ 40

DETAIL D (Eastbound)
1:5

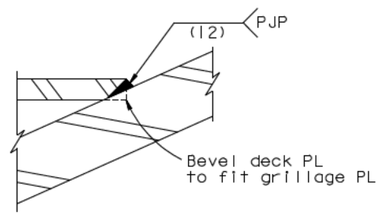

FOR A* < 15

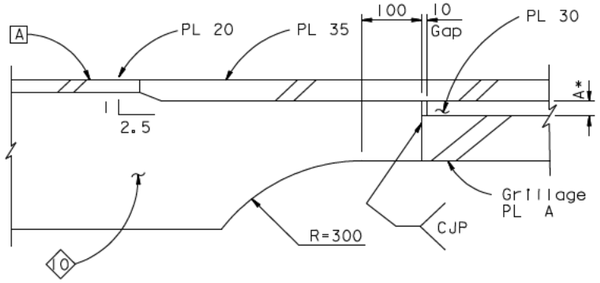

ALTERNATIVE 2 A* < 40

DETAIL B (Detail B' similar)
1:5

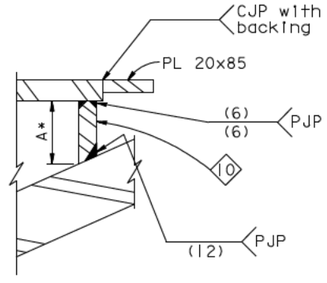

FOR A* ≥ 60

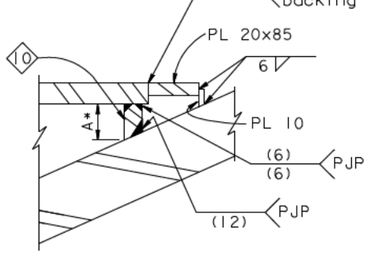

FOR 60 > A* ≥ 35

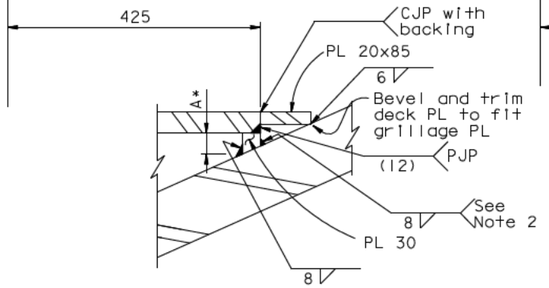

FOR 10 ≤ A* ≤ 35

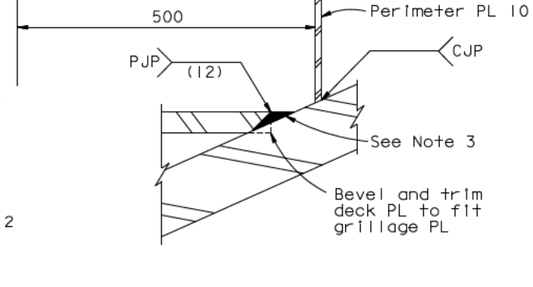

FOR A* < 10

DETAIL D' (Westbound)
1:5

NOTES:

1. Dimensions marked with an asterisk shall be revised based on the final cable geometry.
2. For A* < 20, the 8 mm fillet shall be applied as reinforcement to the (12) PJP.
3. Fill with weld and grind flush with top of deck.

CONTRACT CHANGE ORDER NO. ____
SHEET ___ OF ___

REQUESTS FOR INFORMATION NOT ADDRESSED IN THIS CCO REMAIN IN FORCE

ALL DIMENSIONS ARE IN MILLIMETERS UNLESS OTHERWISE SHOWN

R. Valizadeh/V. Toan/Y.L./W.L./F.C.
DESIGN OVERSIGHT
SIGN OFF DATE 09/01/11

MARK	DATE	DESCRIPTIONS	BY	CH'D	CCO#
0	09/01/11	EAST END OBG	GB	MN	87

REVISIONS

	BY	CHECKED
DESIGN	D. Turner	G. Baker
DETAILS	D. Turner	G. Baker
QUANTITIES	D. Turner	G. Baker

PREPARED FOR THE STATE OF CALIFORNIA DEPARTMENT OF TRANSPORTATION

R. Manzanarez
PROJECT ENGINEER

BRIDGE NO. 34-0006L/R
KILOMETER POST 13.2/13.9

SAN FRANCISCO OAKLAND BAY BRIDGE
EAST SPAN SEISMIC SAFETY PROJECT
SELF-ANCHORED SUSPENSION BRIDGE
(SUPERSTRUCTURE & TOWER)

GIRDER AT PIER E2 NO. 8A

Rev. Date: 5-18-98

ORIGINAL SCALE IN MILLIMETERS FOR REDUCED PLANS 0 10 20 30 40 50 60 70 80 90 100

CU 04
EA 0120F1

DISREGARD PRINTS BEARING EARLIER REVISION DATES

REVISION DATES (PRELIMINARY STAGE ONLY): 09/01/11

SHEET 264SI OF

FILE -> I:\bb\04-012001\sas\contract plans and cco\cco\cco#87\1-original 09-01-11\dgn\aggddl3a.dgn

100% PS&E

USERNAME -> AL shanak DATE PLOTTED -> 30 AUG 2011 TIME PLOTTED ->

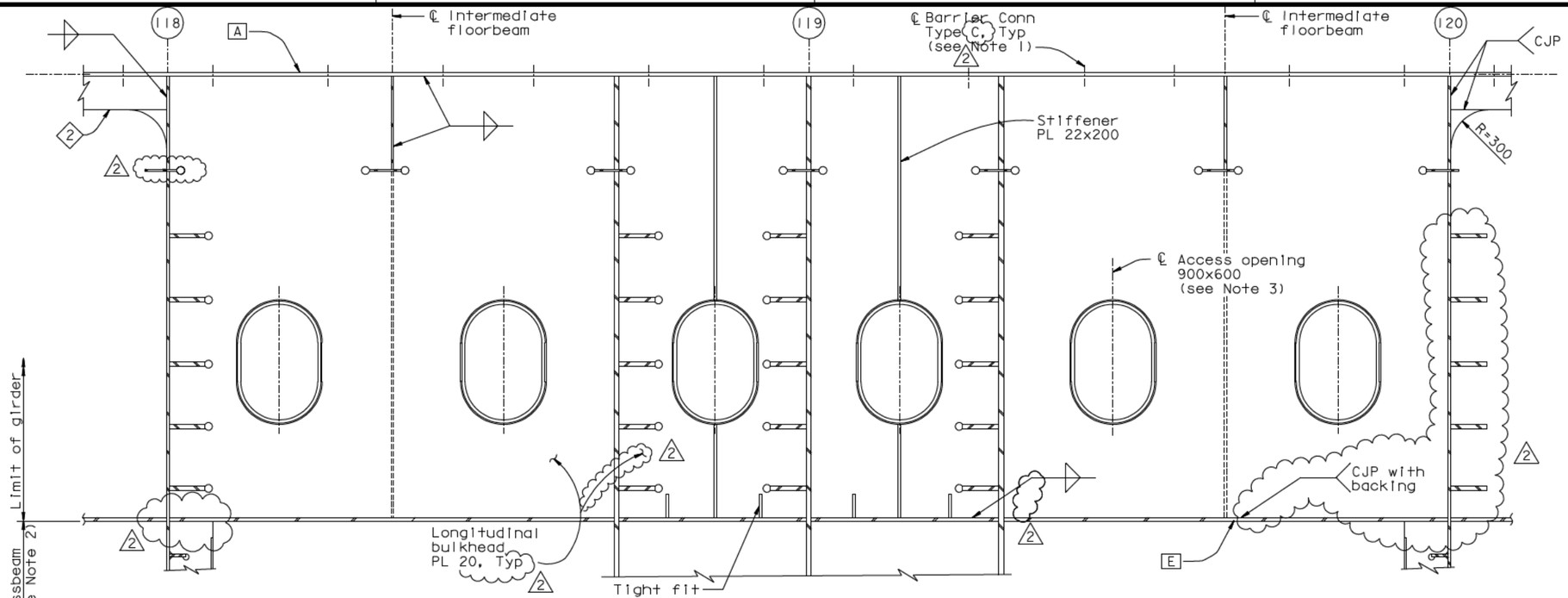

SECTION T-T (Longitudinal Bulkhead At Pier E2 Crossbeam)

1:20

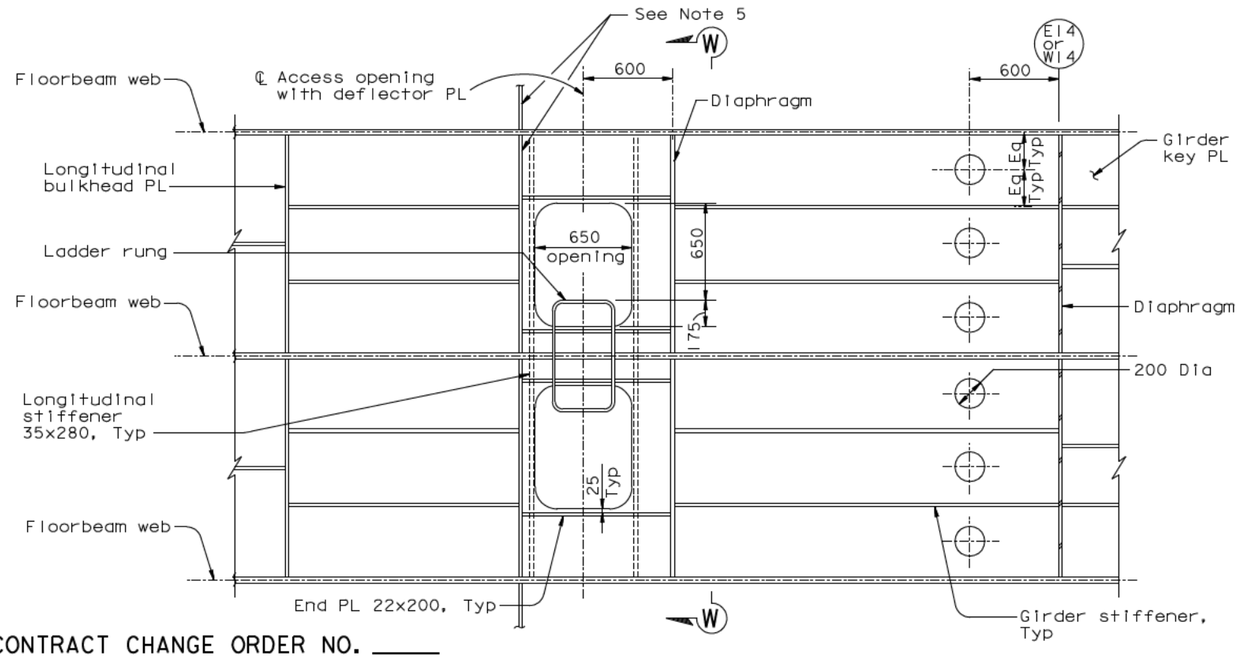

SECTION V-V

1:20

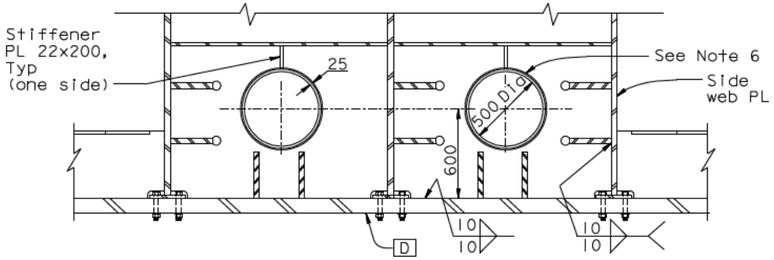

SECTION W-W

1:20

NOTES:

2

1. For details and connection spacing, see "Typical Girder Details No.12" and "Typical Girder Details No.14" sheets.
2. For details, see "Crossbeam At Pier E2" sheets.
3. For opening details, see "Typical Girder Details No.7" sheet.
4. For Section V-V opening details, see "Typical Girder Details No.15" sheet.
5. Access opening stiffener shall align with the longitudinal stiffener.
6. For opening details not shown, see "Typical Girder Details No.7" sheet.

Caltrans Metric

DIST.	COUNTY	ROUTE	KILOMETER POST TOTAL PROJECT	SHEET NO.	TOTAL SHEETS
04	SF	80	13.2/13.9	682R2	1204

George Baker
REGISTERED ENGINEER - CIVIL

12-6-04
PLANS APPROVAL DATE

REGISTERED PROFESSIONAL ENGINEER George S. Baker No. C57112 Exp. 12/31/05 CIVIL STATE OF CALIFORNIA

The State of California or its officers or agents shall not be responsible for the accuracy or completeness of electronic copies of this plan sheet.

T.Y. LIN / MOFFATT & NICHOL
825 BATTERY STREET
SAN FRANCISCO, CA 94111

Caltrans now has a web site! To get to the web site, go to: http://www.dot.ca.gov

REGISTERED PROFESSIONAL ENGINEER Marwan N. Nader No. C 054426 Exp. 12/31/13 CIVIL STATE OF CALIFORNIA

FOR REVISIONS ONLY

CONTRACT CHANGE ORDER NO. ____
SHEET ___ OF ___

REQUESTS FOR INFORMATION NOT ADDRESSED IN THIS CCO REMAIN IN FORCE

ALL DIMENSIONS ARE IN MILLIMETERS UNLESS OTHERWISE SHOWN

MARK	DATE	DESCRIPTIONS	BY	CH'D	CCO#
2	04/18/12	EAST END OBG	GB	MN	87
1	11/05/10	PP119 ACCESS & PP125 PLATES	GB	DT	86

REVISIONS

R. Valizadeh/V. Toan/Y.L./W.L./F.C.
DESIGN OVERSIGHT
SIGN OFF DATE 04/18/12

	BY		CHECKED
DESIGN	G. Baker		P. Ritchie
DETAILS	C. Mauch		T. McMeans
QUANTITIES	D. Turner		M. Roberts

PREPARED FOR THE STATE OF CALIFORNIA DEPARTMENT OF TRANSPORTATION

R. Manzanarez
PROJECT ENGINEER

BRIDGE NO. 34-0006L/R
KILOMETER POST 13.2/13.9

SAN FRANCISCO OAKLAND BAY BRIDGE
EAST SPAN SEISMIC SAFETY PROJECT
SELF-ANCHORED SUSPENSION BRIDGE (SUPERSTRUCTURE & TOWER)

GIRDER AT PIER E2 NO. 9

Rev. Date: 5-18-98

ORIGINAL SCALE IN MILLIMETERS FOR REDUCED PLANS 0 10 20 30 40 50 60 70 80 90 100

CU 04
EA 0120F1

DISREGARD PRINTS BEARING EARLIER REVISION DATES

REVISION DATES (PRELIMINARY STAGE ONLY): 05/15/99 08/06/99 05/31/01 04/08/02 07/01/02 12/19/02 11/15/05 12/07/05

SHEET 265R2 OF

FILE -> I:\bb\04-012001\sas\contract plans and cco\cco\cco#87\temp\aggdd14.dgn

USERNAME -> DWinrow DATE PLOTTED -> 18 APR 2012 TIME PLOTTED -> 11:11:13

100% PS&E

Caltrans now has a web site! To get to the web site, go to: http://www.dot.ca.gov

DIST.	COUNTY	ROUTE	KILOMETER POST TOTAL PROJECT	SHEET NO.	TOTAL SHEETS
04	SF	80	13.2/13.9	683RI	1204

George Baker
REGISTERED ENGINEER - CIVIL

12-6-04
PLANS APPROVAL DATE

REGISTERED PROFESSIONAL ENGINEER — George S. Baker — No. C 57112 — Exp. 12/31/05 — CIVIL — STATE OF CALIFORNIA

The State of California or its officers or agents shall not be responsible for the accuracy or completeness of electronic copies of this plan sheet.

T.Y. LIN / MOFFATT & NICHOL
825 BATTERY STREET
SAN FRANCISCO, CA 94111

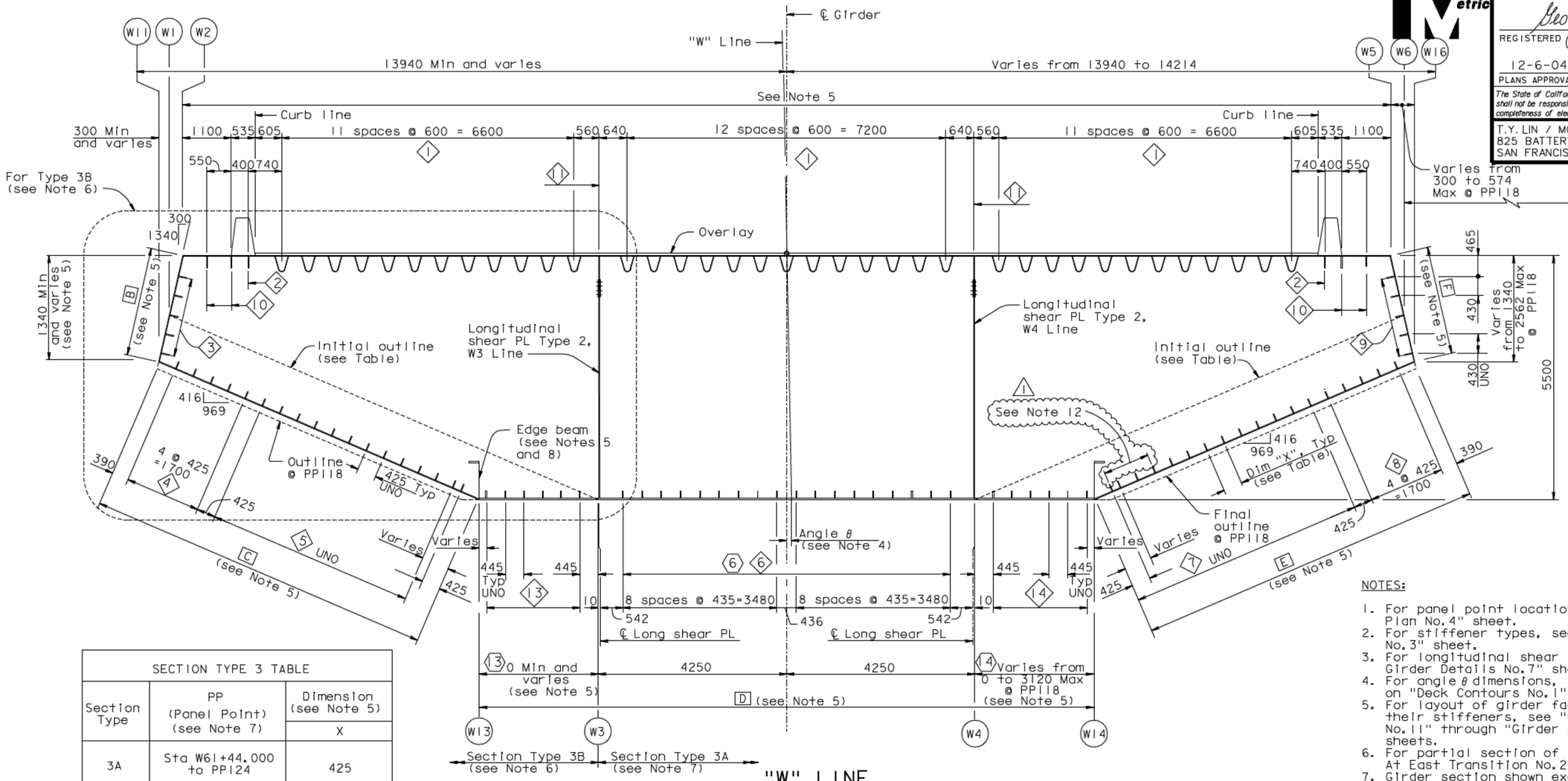

"W" LINE

SECTION TYPE 3 (East Transition)

1:50

SECTION TYPE 3 TABLE		
Section Type	PP (Panel Point) (see Note 7)	Dimension (see Note 5) X
3A	Sta W61+44.000 to PP124	425
3B	PP118 to PP119	425
3B	PP119 to PP124	425

LEGEND:

A — Girder face designation A

4 — Girder stiffener Type 4

14 — Girder PL Type 14

⚠1 12. At the Contractor's option, three equal spaces no greater than 425 may be provided between PP119.3 and PP127. Stiffener lines shall be continuous.

NOTES:

1. For panel point locations, see "Girder Framing Plan No.4" sheet.
2. For stiffener types, see "Typical Girder Details No.3" sheet.
3. For longitudinal shear PL details, see "Typical Girder Details No.7" sheet.
4. For angle θ dimensions, see superelevation diagram on "Deck Contours No.1" sheet.
5. For layout of girder faces A, B, C, D, E & F and their stiffeners, see "Girder At East Transition No.11" through "Girder At East Transition No.14" sheets.
6. For partial section of Type 3B girder, see "Girder At East Transition No.2" sheet.
7. Girder section shown excludes girder at floorbeam E2. For girder section at floorbeam E2, see "Girder At Pier E2" sheets.
8. Edge beam shall have same dimensions and details as longitudinal shear PL Type 1. For details, see "Typical Girder Details No.8" and "Typical Floorbeam Details No.5" sheets.
9. For "Girder At East Transition" sheets, all bolts shall be detailed according to the Bolt Dimension Table. See "Typical Girder Details No.1" sheet. All bolts are HS UNO.
10. For "Girder At East Transition" sheets UNO, all fillet welds shall be 6 mm for plate sizes not greater than 20 mm. For plate sizes greater than 20 mm, fillet welds shall be 8 mm UNO.
11. For layout of working points in east transition, see "Girder At East Transition No.9" and "Girder At East Transition No.10" sheets.

Daniel J. Turner — REGISTERED PROFESSIONAL ENGINEER — No. C 65033 — Exp. 06/30/13 — CIVIL — STATE OF CALIFORNIA

FOR REVISIONS ONLY

CONTRACT CHANGE ORDER NO. _____
SHEET ___ OF ___

REQUESTS FOR INFORMATION NOT ADDRESSED IN THIS CCO REMAIN IN FORCE

ALL DIMENSIONS ARE IN MILLIMETERS UNLESS OTHERWISE SHOWN

R. Vallzadeh/V. Toan/Y.L./W.L./F.C.
DESIGN OVERSIGHT
Roya Valizadeh / Vonn Toan / Y Liu
SIGN OFF DATE 09/01/11

MARK	DATE	DESCRIPTIONS	BY	CH'D	CCO#
⚠1	09/01/11	EAST END OBG	GB	DT	87

REVISIONS

	BY	CHECKED
DESIGN	G. Baker	P. Ritchie
DETAILS	M. Gulyas	T. McMeans
QUANTITIES	G. Baker	M. Roberts

PREPARED FOR THE STATE OF CALIFORNIA DEPARTMENT OF TRANSPORTATION

R. Manzanarez
PROJECT ENGINEER

BRIDGE NO. 34-0006L/R
KILOMETER POST 13.2/13.9

SAN FRANCISCO OAKLAND BAY BRIDGE
EAST SPAN SEISMIC SAFETY PROJECT
SELF-ANCHORED SUSPENSION BRIDGE
(SUPERSTRUCTURE & TOWER)

GIRDER AT EAST TRANSITION NO.1

Rev. Date: 5-18-98

ORIGINAL SCALE IN MILLIMETERS FOR REDUCED PLANS 0 10 20 30 40 50 60 70 80 90 100

CU 04
EA 0120F1

DISREGARD PRINTS BEARING EARLIER REVISION DATES →

REVISION DATES (PRELIMINARY STAGE ONLY)
01/15/99 | 05/15/99 | 08/02/99 | 05/31/01 | 04/08/02 | 07/01/02 | 12/19/02

SHEET 266RI OF

FILE -> I:\bb\04-0120F1\sas\contract plans and cco\cco\cco#87\1-original 09-01-11\dgn\agegd01.dgn

USERNAME -> AL1shansk$DATE PLOTTED -> 30 AUG 2011 TIME PLOTTED -> 10:03:01

100 % PS&E

DIST.	COUNTY	ROUTE	KILOMETER POST TOTAL PROJECT	SHEET NO.	TOTAL SHEETS
04	SF	80	13.2/13.9	685R	1204

George Baker
REGISTERED ENGINEER - CIVIL

12-6-04
PLANS APPROVAL DATE

REGISTERED PROFESSIONAL ENGINEER — George S. Baker — No. C 57112 — Exp. 12/31/05 — CIVIL — STATE OF CALIFORNIA

The State of California or its officers or agents shall not be responsible for the accuracy or completeness of electronic copies of this plan sheet.

T.Y. LIN / MOFFATT & NICHOL
825 BATTERY STREET
SAN FRANCISCO, CA 94111

Caltrans now has a web site! To get to the web site, go to: http://www.dot.ca.gov

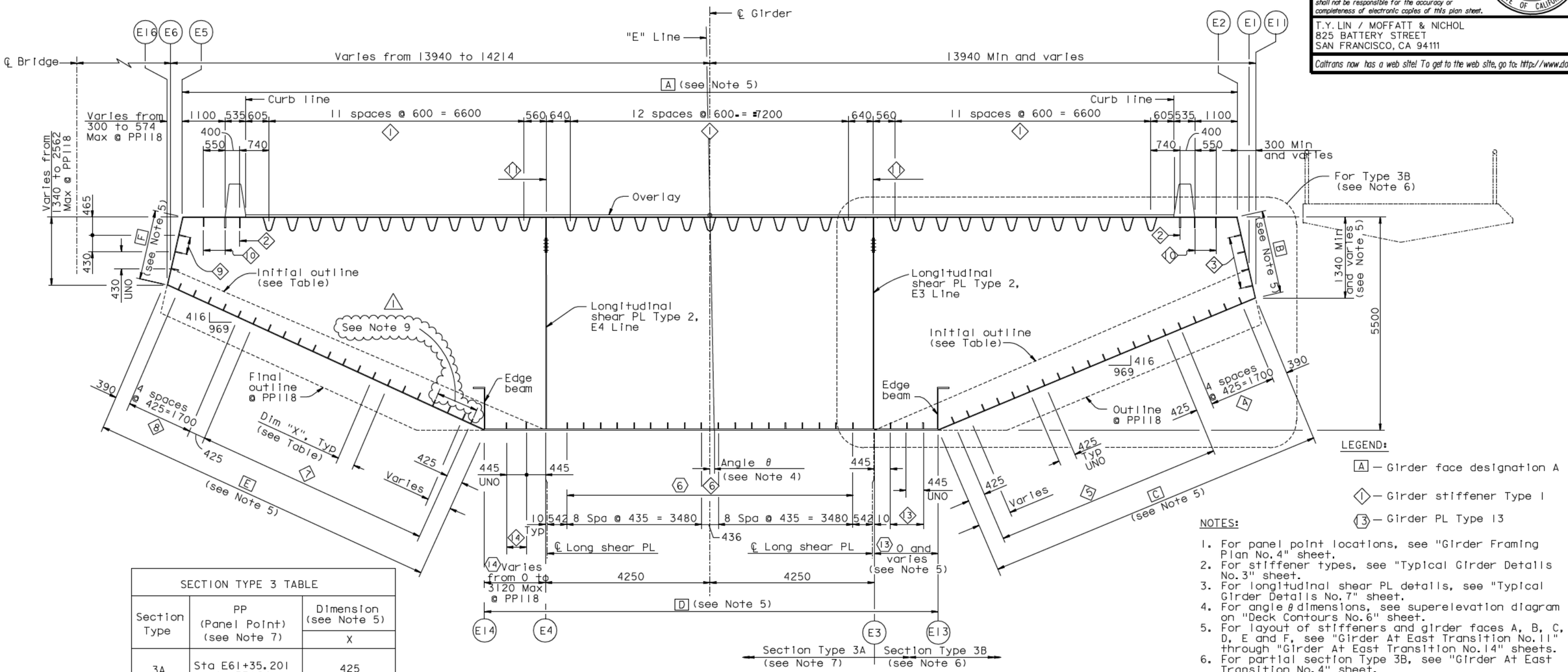

"E" LINE

SECTION TYPE 3 (East Transition)

1:50

LEGEND:

A — Girder face designation A

1 — Girder stiffener Type 1

13 — Girder PL Type 13

NOTES:

1. For panel point locations, see "Girder Framing Plan No.4" sheet.
2. For stiffener types, see "Typical Girder Details No.3" sheet.
3. For longitudinal shear PL details, see "Typical Girder Details No.7" sheet.
4. For angle θ dimensions, see superelevation diagram on "Deck Contours No.6" sheet.
5. For layout of stiffeners and girder faces A, B, C, D, E and F, see "Girder At East Transition No.11" through "Girder At East Transition No.14" sheets.
6. For partial section Type 3B, see "Girder At East Transition No.4" sheet.
7. Girder section shown excludes girder at floorbeam E2. For girder section at floorbeam E2, see "Girder At Pier E2" sheets.
8. For layout of working points in east transition, see "Girder At East Transition No.9 and "Girder At East Transition No.10" sheets.

1 9. At the Contractor's option, three equal spaces no greater than 425 may be provided between PP119.3 and PP127. Stiffener lines shall be continuous.

SECTION TYPE 3 TABLE

Section Type	PP (Panel Point) (see Note 7)	Dimension (see Note 5) X
3A	Sta E61+35.201 to PP124	425
3B	118 To 119	425
3B	119 To 124	425

Daniel J. Turner
REGISTERED PROFESSIONAL ENGINEER — Daniel J. Turner — No. C 65033 — Exp. 06/30/13 — CIVIL — STATE OF CALIFORNIA

FOR REVISIONS ONLY

CONTRACT CHANGE ORDER NO. ____
SHEET ____ OF ____

REQUESTS FOR INFORMATION NOT ADDRESSED IN THIS CCO REMAIN IN FORCE

ALL DIMENSIONS ARE IN MILLIMETERS UNLESS OTHERWISE SHOWN

R. Vallzadeh/V. Toan/Y.L./W.L./F.C.
DESIGN OVERSIGHT
SIGN OFF DATE 09/01/11

MARK	DATE	DESCRIPTIONS	BY	CH'D	CCO#
1	09/01/11	EAST END OBG	GB	DT	87

REVISIONS

	BY	CHECKED
DESIGN	G. Baker	P. Ritchie
DETAILS	M. Gulyas	T. McMeans
QUANTITIES	G. Baker	M. Roberts

PREPARED FOR THE STATE OF CALIFORNIA DEPARTMENT OF TRANSPORTATION

R. Manzanarez
PROJECT ENGINEER

BRIDGE NO. 34-0006L/R
KILOMETER POST 13.2/13.9

SAN FRANCISCO OAKLAND BAY BRIDGE
EAST SPAN SEISMIC SAFETY PROJECT
SELF-ANCHORED SUSPENSION BRIDGE (SUPERSTRUCTURE & TOWER)

GIRDER AT EAST TRANSITION NO. 3

Rev. Date: 5-18-98

ORIGINAL SCALE IN MILLIMETERS FOR REDUCED PLANS 0 10 20 30 40 50 60 70 80 90 100

CU 04
EA 0120F1

DISREGARD PRINTS BEARING EARLIER REVISION DATES

REVISION DATES (PRELIMINARY STAGE ONLY): 01/15/99 05/15/99 08/02/99 05/31/01 04/30/02 07/01/02 12/19/02

SHEET 268R1 OF

FILE -> I:\bb\04-0120F1\sas\contract plans and cco\cco\cco#87\1-original 09-01-11\dgn\agegd03.dgn

USERNAME -> ALshansk DATE PLOTTED -> 30 AUG 2013 AUG 2013 PLOTTED BY TIME PLOTTED -> 12:01

100 % PS&E

DIST.	COUNTY	ROUTE	KILOMETER POST TOTAL PROJECT	SHEET NO.	TOTAL SHEETS
04	SF	80	13.2/13.9	686R	1204

George Baker
REGISTERED ENGINEER - CIVIL

12-6-04
PLANS APPROVAL DATE

REGISTERED PROFESSIONAL ENGINEER — George S. Baker — No. C 57112 — Exp. 12/31/05 — CIVIL — STATE OF CALIFORNIA

The State of California or its officers or agents shall not be responsible for the accuracy or completeness of electronic copies of this plan sheet.

T.Y. LIN / MOFFATT & NICHOL
825 BATTERY STREET
SAN FRANCISCO, CA 94111

Caltrans now has a web site! To get to the web site, go to: http://www.dot.ca.gov

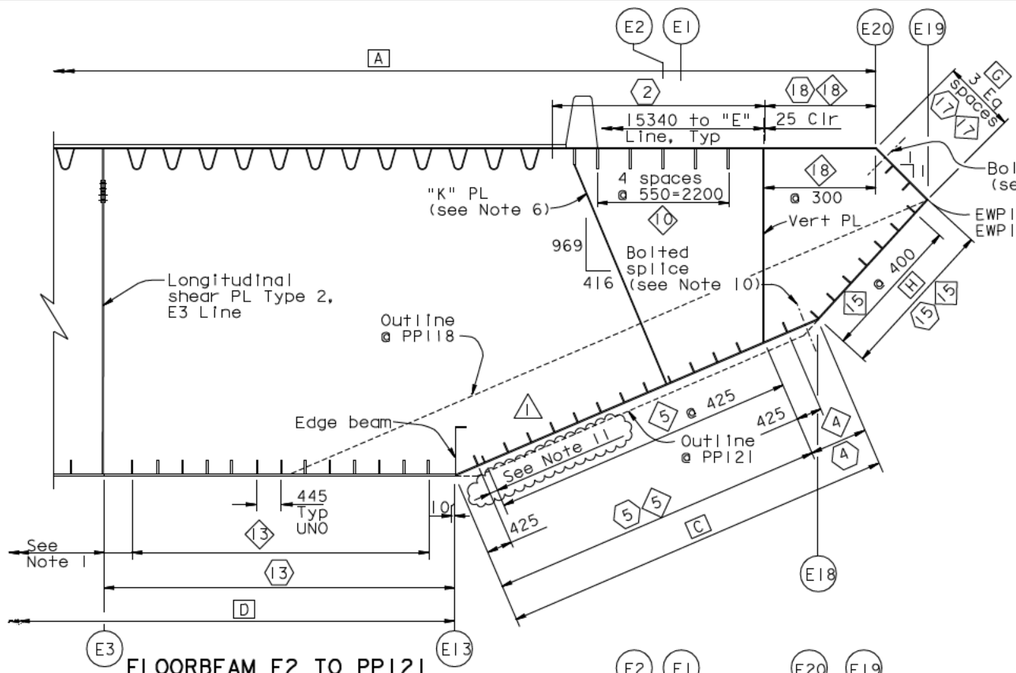

FLOORBEAM E2 TO PP121
(See Note 7)

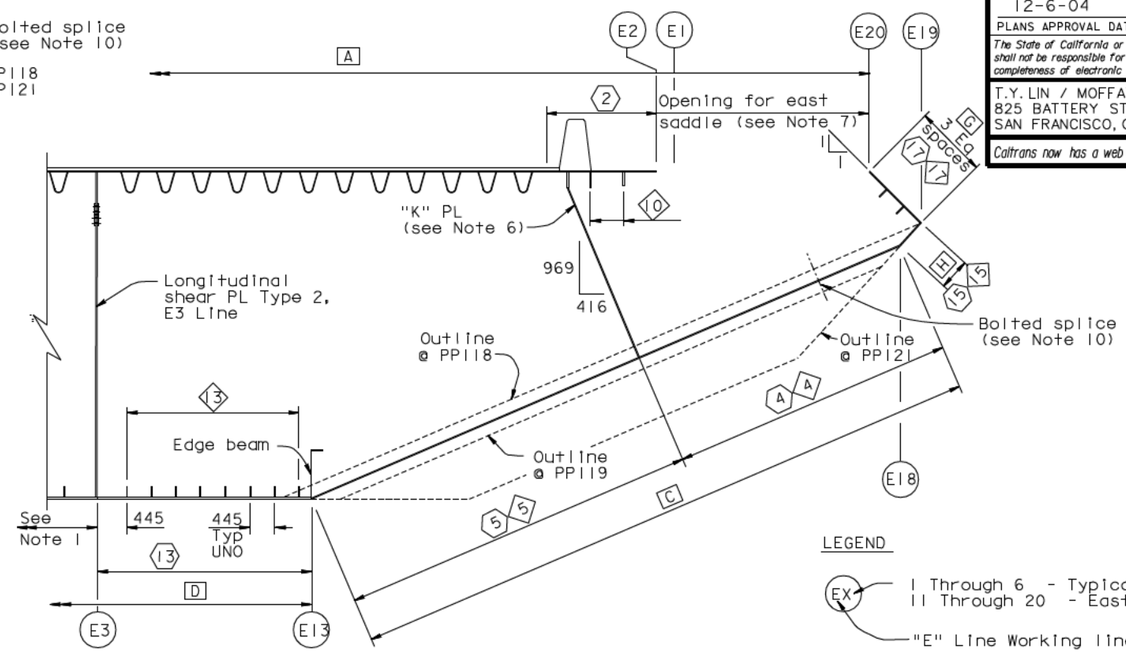

PP118 TO FLOORBEAM E2
(See Note 7)

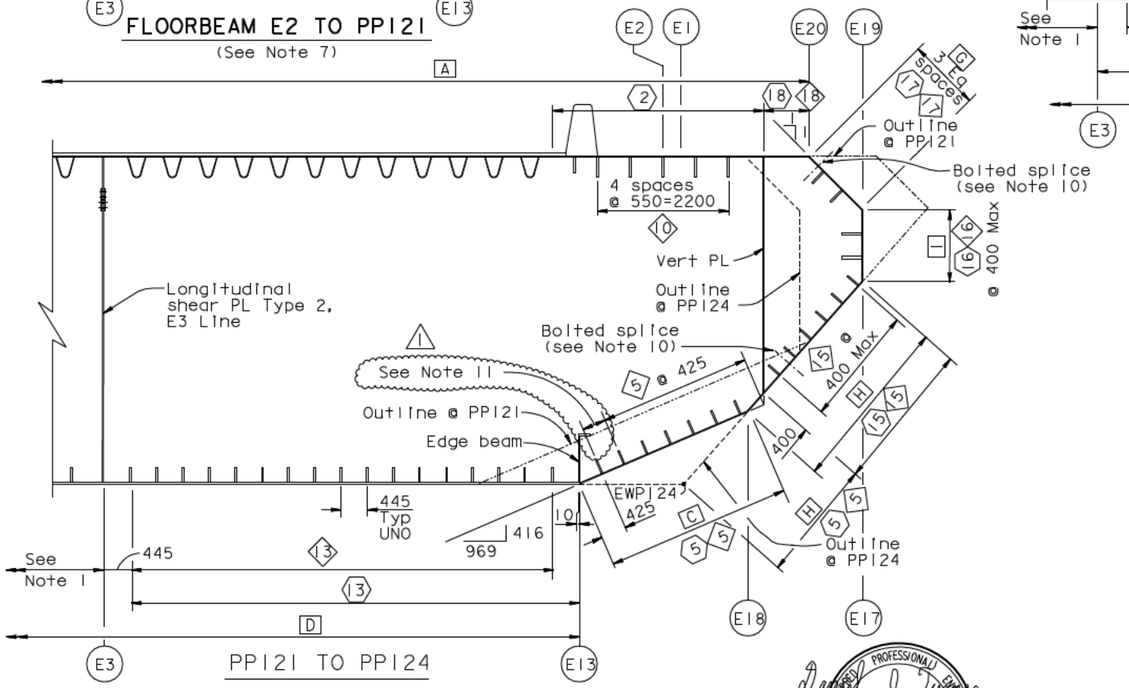

PP121 TO PP124

"E" LINE-PARTIAL SECTION TYPE 3B (East Transition)
1:50

CONTRACT CHANGE ORDER NO. ____
SHEET ___ OF ___

REQUESTS FOR INFORMATION NOT ADDRESSED IN THIS CCO REMAIN IN FORCE

Daniel J. Turner — REGISTERED PROFESSIONAL ENGINEER — No. C 65033 — Exp. 06/30/13 — CIVIL — STATE OF CALIFORNIA

FOR REVISIONS ONLY

LEGEND

- EX — I Through 6 - Typical, constant; II Through 20 - East Transition, varies
- "E" Line Working line
- EWP - "E" Line Working point
- A - Girder face designation A
- 1 - Girder stiffener Type 1
- 13 - Girder PL Type 13

NOTES:

1. For section and details not shown, see "Girder At East Transition No.3" and "Floorbeam At East Transition" sheets.
2. For stiffener types, see "Typical Girder Details No.3" sheet.
3. For longitudinal shear PL details, see "Typical Girder Details No.7" sheet.
4. For girder geometry, see "Girder At East Transition No.9" sheet.
5. For layout of girder faces A, C, D, G, H and I and their stiffeners, see "Girder At East Transition No.11" through "Girder At East Transition No.14" sheets.
6. For "K" PL details, see "Girder At East Transition Details No.1" sheet.
7. Saddle not shown for clarity. Girder section shown excludes girder at floorbeam E2. For girder section at floorbeam E2, see "Girder At Pier E2" sheets.
8. For details not shown, see "Girder At East Transition No.2" sheet.
9. For layout of working points in east transition, see "Girder At East Transition No.9" and "Girder At East Transition No.10" sheets.
10. Girder faces G, H and I are architectural from PP118 to PP125. For bolted splices, see "Girder At East Transition Details No.3" sheet. For splice locations, see "Girder At East Transition Nos.11 to 14" sheets.
11. At the Contractor's option, shorter spacing may be relocated to another location on PL C, subject to review and approval of the Engineer.

ALL DIMENSIONS ARE IN MILLIMETERS UNLESS OTHERWISE SHOWN

100% PS&E
TIME PLOTTED -> 10:13:15
DATE PLOTTED -> 30 AUG 2011
USERNAME -> Al/shansk

R. Vallzadeh/V. Toan/Y.L./W.L./F.C.
DESIGN OVERSIGHT
SIGN OFF DATE 09/01/11

MARK	DATE	REVISIONS	BY	CH'D	CCO#
1	09/01/11	EAST END OBG	GB	DT	87

	BY	CHECKED
DESIGN	G. Baker	P. Ritchie
DETAILS	M. Gulyas	T. McMeans
QUANTITIES	G. Baker	M. Roberts

PREPARED FOR THE STATE OF CALIFORNIA DEPARTMENT OF TRANSPORTATION

R. Manzanarez
PROJECT ENGINEER

BRIDGE NO.	34-0006L/R
KILOMETER POST	13.2/13.9

SAN FRANCISCO OAKLAND BAY BRIDGE
EAST SPAN SEISMIC SAFETY PROJECT
SELF-ANCHORED SUSPENSION BRIDGE (SUPERSTRUCTURE & TOWER)

GIRDER AT EAST TRANSITION NO. 4

Rev. Date: 5-18-98

ORIGINAL SCALE IN MILLIMETERS FOR REDUCED PLANS 0 10 20 30 40 50 60 70 80 90 100

CU 04
EA 0120F1

DISREGARD PRINTS BEARING EARLIER REVISION DATES

REVISION DATES (PRELIMINARY STAGE ONLY)									SHEET	OF
01/15/98	05/15/98	09/02/99	05/31/01	04/26/02	07/01/02	12/13/02			269R1	

FILE -> I:\bb\04-012001\sas\contract plans and cco\cco\cco#87\1-original 09-01-11\dgn\agegd04.dgn

Caltrans now has a web site! To get to the web site, go to: http://www.dot.ca.gov

Caltrans Metric

DIST.	COUNTY	ROUTE	KILOMETER POST TOTAL PROJECT	SHEET NO.	TOTAL SHEETS
04	SF	80	13.2/13.9	687R	1204

George Baker
REGISTERED ENGINEER - CIVIL

12-6-04
PLANS APPROVAL DATE

REGISTERED PROFESSIONAL ENGINEER — George S. Baker — No. C 57112 — Exp. 12/31/05 — CIVIL — STATE OF CALIFORNIA

The State of California or its officers or agents shall not be responsible for the accuracy or completeness of electronic copies of this plan sheet.

T.Y. LIN / MOFFATT & NICHOL
825 BATTERY STREET
SAN FRANCISCO, CA 94111

LEGEND:

[A] — Girder face designation A

⟨1⟩ — Girder stiffener Type 1

⟨12⟩ — Girder PL Type 12

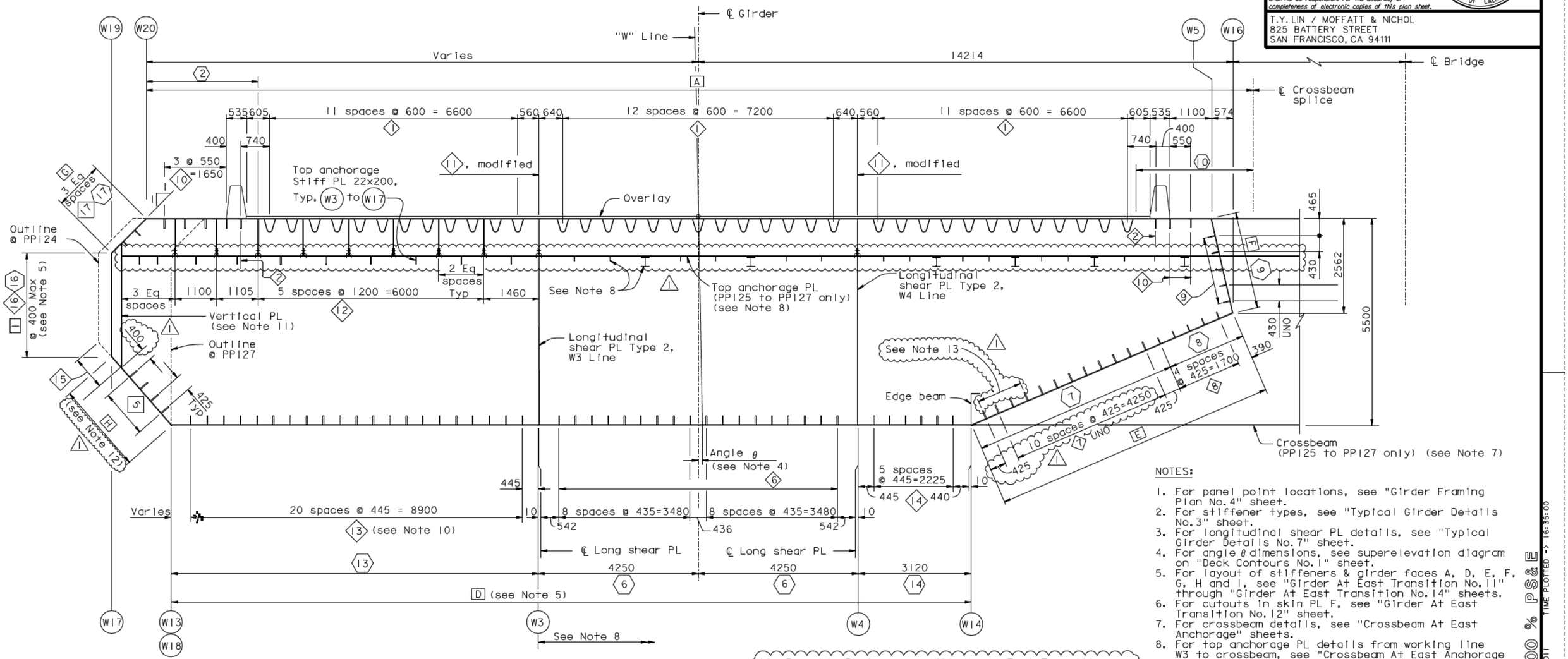

PP124 TO PP127

"W" LINE

SECTION TYPE 4 (East Transition)

1:50

NOTES:

1. For panel point locations, see "Girder Framing Plan No.4" sheet.
2. For stiffener types, see "Typical Girder Details No.3" sheet.
3. For longitudinal shear PL details, see "Typical Girder Details No.7" sheet.
4. For angle θ dimensions, see superelevation diagram on "Deck Contours No.1" sheet.
5. For layout of stiffeners & girder faces A, D, E, F, G, H and I, see "Girder At East Transition No.11" through "Girder At East Transition No.14" sheets.
6. For cutouts in skin PL F, see "Girder At East Transition No.12" sheet.
7. For crossbeam details, see "Crossbeam At East Anchorage" sheets.
8. For top anchorage PL details from working line W3 to crossbeam, see "Crossbeam At East Anchorage No.2" sheet.
9. For layout of working points in east transition, see "Girder At East Transition No.9" and "Girder At East Transition No.10" sheets.
10. Dimensions given at PP124. For framing details, see "Girder At East Transition No.12" and "Girder At East Transition No.14" sheets.
11. For vertical plate details, see "Girder At East Transition Details No.2" sheet.

⚠1

12. For skin PL type, see "Girder At East Transition No.13" and "Girder At East Transition No.14" sheets.
13. At the Contractor's option, three equal spaces no greater than 425 may be provided between PP119.3 and PP127. Stiffener lines shall be continuous.
14. Upstation of the intersection of the vertical PL and the I plate to PP127, the I plate stiffeners shall be continuous with the vertical PL stiffeners (@ 425 spacing). See "Vertical Plate Elevation" on "Girder At East Transition Details No.2" sheet.

Daniel J. Turner — REGISTERED PROFESSIONAL ENGINEER — No. C 65033 — Exp. 06/30/13 — CIVIL — STATE OF CALIFORNIA

FOR REVISIONS ONLY

CONTRACT CHANGE ORDER NO. ____
SHEET ____ OF ____

REQUESTS FOR INFORMATION NOT ADDRESSED IN THIS CCO REMAIN IN FORCE

ALL DIMENSIONS ARE IN MILLIMETERS UNLESS OTHERWISE SHOWN

R. Vallzadeh/V. Toan/Y.L./W.L./F.C.
DESIGN OVERSIGHT
Roya Vahl / Vonn Toan / Y Liu
SIGN OFF DATE 09/01/11

MARK	DATE	DESCRIPTIONS	BY	CH'D	CCO#
⚠1	09/01/11	EAST END OBG	GB	DT	87

REVISIONS

	BY	CHECKED
DESIGN	G. Baker	P. Ritchie
DETAILS	M. Gulyas	T. McMeans
QUANTITIES	G. Baker	M. Roberts

PREPARED FOR THE STATE OF CALIFORNIA DEPARTMENT OF TRANSPORTATION

R. Manzanarez
PROJECT ENGINEER

BRIDGE NO. 34-0006L/R
KILOMETER POST 13.2/13.9

SAN FRANCISCO OAKLAND BAY BRIDGE
EAST SPAN SEISMIC SAFETY PROJECT
SELF-ANCHORED SUSPENSION BRIDGE
(SUPERSTRUCTURE & TOWER)

GIRDER AT EAST TRANSITION NO. 5

Rev. Date: 5-18-98

ORIGINAL SCALE IN MILLIMETERS FOR REDUCED PLANS 0 10 20 30 40 50 60 70 80 90 100

CU 04
EA 0120F1

DISREGARD PRINTS BEARING EARLIER REVISION DATES →

REVISION DATES (PRELIMINARY STAGE ONLY): 01/15/98 05/15/98 09/02/99 05/24/01 04/08/02 07/01/02 12/19/02

SHEET 270R1 OF

FILE -> I:\bb\04-0120F1\sas\contract plans and cco\cco\cco#87\I-original 09-01-11\dgn\agegd04a.dgn

USERNAME -> arivera DATE PLOTTED -> 30 AUG 2011 TIME PLOTTED -> 16:35:00

100 % PS&E

DIST.	COUNTY	ROUTE	KILOMETER POST TOTAL PROJECT	SHEET NO.	TOTAL SHEETS
04	SF	80	13.2/13.9	688R	1204

George Baker
REGISTERED ENGINEER - CIVIL

12-6-04
PLANS APPROVAL DATE

The State of California or its officers or agents shall not be responsible for the accuracy or completeness of electronic copies of this plan sheet.

REGISTERED PROFESSIONAL ENGINEER — George S. Baker — No. C 57112 — Exp. 12/31/05 — CIVIL — STATE OF CALIFORNIA

T.Y. LIN / MOFFATT & NICHOL
825 BATTERY STREET
SAN FRANCISCO, CA 94111

Caltrans now has a web site! To get to the web site, go to: http://www.dot.ca.gov

△1 15. Upstation of the intersection of the vertical PL and the 1 PL to PP127, 1 PL stiffeners shall be continuous with the vertical PL stiffeners (@425 spacing). See "Vertical Plate Elevation" on "Girder At East Transition Details No.2" sheet.

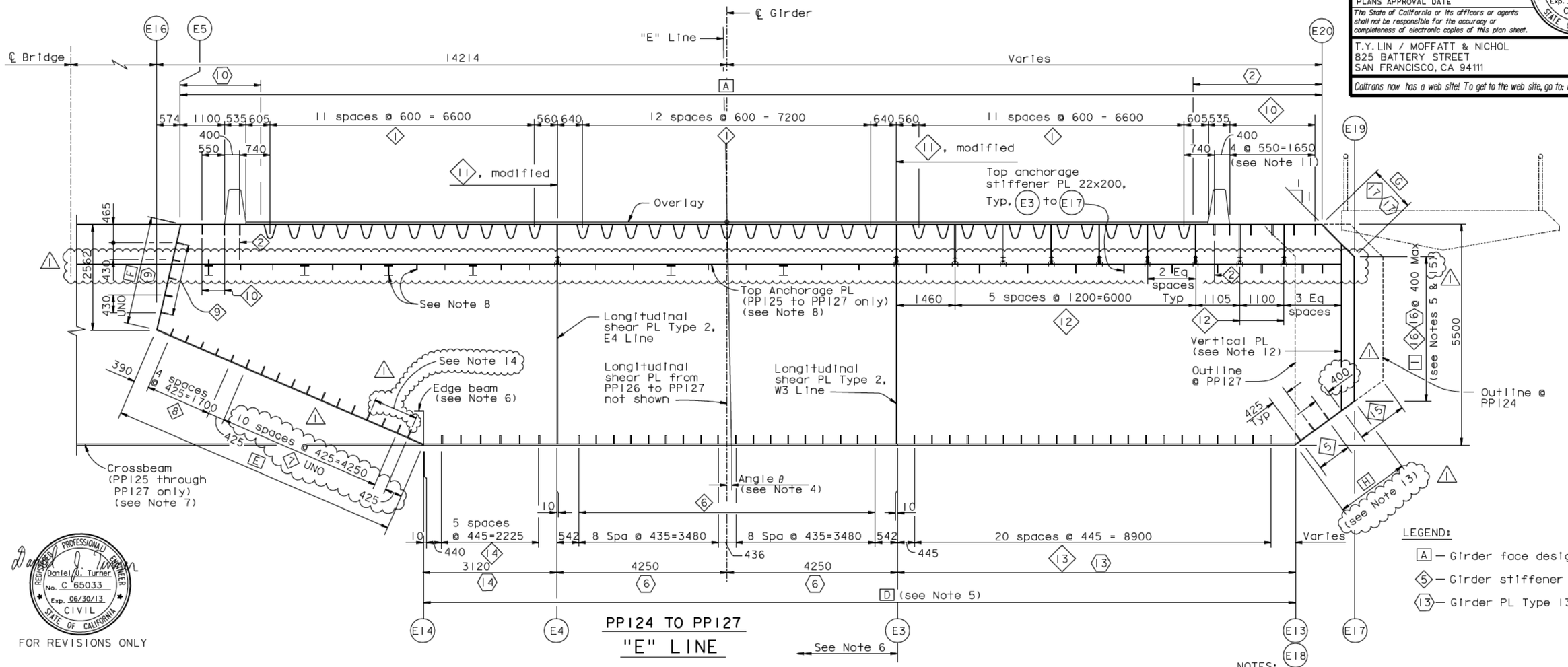

PP124 TO PP127
"E" LINE

SECTION TYPE 4 (East Transition)

1:50

LEGEND:
- A — Girder face designation A
- 5 — Girder stiffener Type 5
- 13 — Girder PL Type 13

NOTES:
1. For panel point locations, see "Girder Framing Plan No.4" sheet.
2. For stiffener types, see "Typical Girder Details No.3" sheet.
3. For longitudinal shear PL details, see "Typical Girder Details No.7" sheet.
4. For angle θ dimensions, see superelevation diagram on "Deck Contours No.6" sheet.
5. For layout of stiffeners & girder faces A, D, E, F, G, H and I, see "Girder At East Transition No.11" through "Girder At East Transition No.14" sheets.

△1
13. For skin PL type, see "Girder At East Transition No.13" and "Girder At East Transition No.14" sheets.
14. At the Contractor's option, three equal spaces no greater than 425 may be provided between PP119.3 and PP127. Stiffener lines shall be continuous.

10. Dimensions given at PP124. For framing details, see "Girder At East Transition No.12" and "Girder At East Transition No.14" sheets.
11. "E" and "W" Line girders are similar but not identical due to HWY curvature.
12. For vertical PL details, see "Girder At East Transition Details No.2" sheet.

6. Edge beam shall have same dimensions and details as longitudinal shear PL Type 1. For details, see "Typical Girder Details No.8" sheet.
7. For crossbeam details, see "Crossbeam at East Anchorage" sheets.
8. For top anchorage PL details from working line W3 to crossbeam, see "Crossbeam At East Anchorage No.2" sheet.
9. For "Girder at East Transition" sheets, all bolts shall be detailed according to the Bolt Dimension Table. See "Typical Girder Details No.1" sheet. All bolts are HS UNO.

ALL DIMENSIONS ARE IN MILLIMETERS UNLESS OTHERWISE SHOWN

Daniel J. Turner
REGISTERED PROFESSIONAL ENGINEER — Daniel J. Turner — No. C 65033 — Exp. 06/30/13 — CIVIL — STATE OF CALIFORNIA
FOR REVISIONS ONLY

CONTRACT CHANGE ORDER NO. ____
SHEET ____ OF ____
REQUESTS FOR INFORMATION NOT ADDRESSED IN THIS CCO REMAIN IN FORCE

R. Vallzadeh/V. Toan/Y.L./W.L./F.C.
DESIGN OVERSIGHT
SIGN OFF DATE 09/01/11

MARK	DATE	REVISIONS	BY	CH'D	CCO#
1	09/01/11	EAST END OBG	GB	DT	87

	BY	CHECKED
DESIGN	G. Baker	P. Ritchie
DETAILS	M. Gulyas	T. McMeans
QUANTITIES	G. Baker	M. Roberts

PREPARED FOR THE STATE OF CALIFORNIA DEPARTMENT OF TRANSPORTATION

R. Manzanarez
PROJECT ENGINEER

BRIDGE NO. 34-0006L/R
KILOMETER POST 13.2/13.9

SAN FRANCISCO OAKLAND BAY BRIDGE
EAST SPAN SEISMIC SAFETY PROJECT
SELF-ANCHORED SUSPENSION BRIDGE
(SUPERSTRUCTURE & TOWER)

GIRDER AT EAST TRANSITION NO.6

Rev. Date: 5-18-98

ORIGINAL SCALE IN MILLIMETERS FOR REDUCED PLANS 0 10 20 30 40 50 60 70 80 90 100

CU 04
EA 0120F1

DISREGARD PRINTS BEARING EARLIER REVISION DATES

REVISION DATES (PRELIMINARY STAGE ONLY): 01/15/99 05/15/99 08/02/99 05/21/01 04/08/02 07/8/02 12/19/02

SHEET 271R1 OF

FILE -> I:\bb\04-012001\sas\contract plans and cco\cco\cco#87\1-original 09-01-11\dgn\agegd04b.dgn

USERNAME -> ALTshansk DATE PLOTTED -> 30 AUG 2011 TIME PLOTTED -> 10:28:42

100% PS&E 100% PS&E

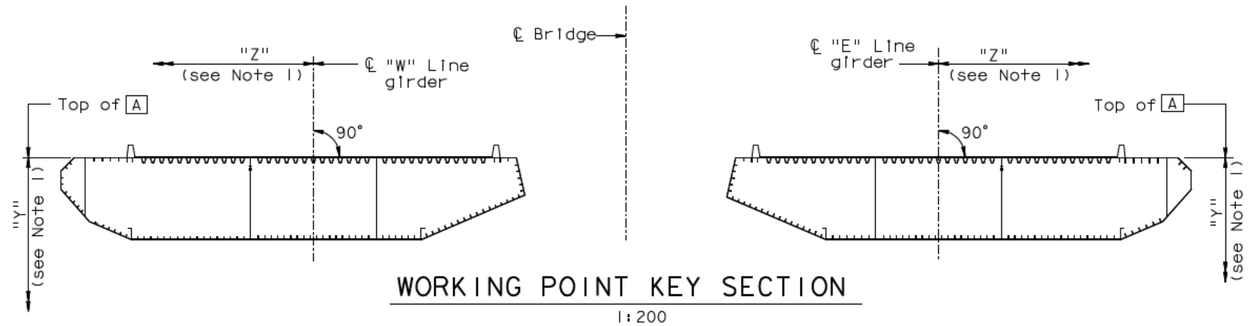

WORKING POINT KEY SECTION

1:200

LONGITUDINAL SHEAR PLATE DIMENSION TABLE (See Note 2)

MEMBER DESIGNATION		PANEL POINT										
		ALONG WORKING LINES E3 and W3				ALONG WORKING LINES E4 and W4				ALONG "E" LINE & "W" LINE		
		1 9-15, 111-120	120-127	1 8-9, 127-128.3	128.3-Hinge	1 9-15, 111-126	126-127	1 8-9, 127-128.3	128.3-Hinge	126-127	127-128.3	128.3-Hinge
Shear PL	t_A	18	25*	1 35	18	18 1	22	1 35	18	22	22	NA
	t_B	25	28*	NA	22	25	NA	NA	22	NA	NA	NA
Horizontal Stiffener	Type A	PL 22x200	PL 25x230*	PL 28x300	PL 16x170	PL 22x200	PL 25x200	PL 28x300	PL 16x170	PL 25x200	PL 25x200	NA
	Type B	PL 28x220	PL 28x240*	NA	PL 20x220	PL 28x220	NA	NA	PL 20x220	NA	NA	NA
	No of Rows	2	9	1 2	2	2	2	2	2	2	2	NA
Vertical Stiffener		PL 22x240	WT 305x4 (*)	PL 30x330	PL 20x220	PL 22x240	PL 22x240	PL 30x330	PL 20x220	PL 20x240	PL 20x240	NA
11 (See Note 4)		1 PL 18	PL 25*	PL 35	PL 18	PL 18	PL 22	PL 35 1	PL 18	PL 22	PL 22	NA
Longitudinal Splice	PL A	12	16*	22	12	12	14	22	12	14	NA	NA
	PL B	16	18*	NA	14	16	NA	NA	14	NA	NA 1	NA
	Bolts @ Max Spacing	M24@85	M27@85	M27@85	M24@85	M24@85 1	M24@85	M27@85	M24@85	M24@85	M24@85	NA
Construction Splice	Bolts	M22 1	M27	M27	M24	M22	M24	M27	M24	M24	M24	NA
Access Opening Location		PP115.5	PP122.5 (With Door)	NA	Hinge (West of)	PP115.5, PP122.5, PP125.5 1	NA	NA	Hinge (West of)	NA	NA	NA

* Indicates SPCM PL

BOX GIRDER DECK SUPERELEVATION TRANSITION

(TOP OF STEEL)

ROADWAY	BEGIN		END	
	STATION	SUPERELEVATION	STATION	SUPERELEVATION
EB	61+60.0	2%	61+81.17	3%
WB	61+68.8	2%	61+91.30	3%

1

WORKING POINT COORDINATE TABLE

LOCATION		WORKING POINT	Y	Z
GIRDER	PANEL POINT			
"W" LINE	118	WWP118	868	18169
	121	WWP121	868	18225
	124	WWP124	5500	14102
	127	WWP127	5500	14144
	128	WWP128	868	13408
"E" LINE	118	EWP118	868	18362
	121	EWP121	868	18325
	124	EWP124	5500	14179
	127	EWP127	5500	14177
	128	EWP128	868	13408

GENERAL LAYOUT OF EAST TRANSITION

All sections through the girder are dimensioned with respect to the "W" and "E" lines, which are determined from the highway drawings. Dimensions shown as horizontal are measured parallel to the roadway deck, and dimensions shown as vertical are measured perpendicular to the deck. Due to the highway curvatures and superelevations, the directions shown as horizontal and vertical vary with the station. The layout of the transition structures may be achieved by performing the following tasks:

1. Determine the "W" and "E" line locations.
2. Determine the spatial orientations of all floorbeams.
3. Determine the spatial locations of the working points given in the table.
4. Determine the locations of all working lines.
5. Determine the intersections of the working lines with the planes of the floorbeams.

The following working lines are straight lines between the defined working points:

Line	Start	End
E17	EWP121	EWP127
E18	EWP118	EWP124
E19	EWP118	EWP121
E19	EWP121	EWP128
E13/E18	EWP124	EWP127
E18	EWP127	EWP128
E13	EWP127	Pt Q
W17	WWP121	WWP127
W18	WWP118	WWP124
W19	WWP118	WWP121
W19	WWP121	WWP128
W13/W18	WWP124	WWP127
W18	WWP127	WWP128
W13	WWP127	Pt Q

Lines E13, E14, W13, W14 shall be straight lines in plan only. They shall be located vertically as shown in the sections.

LEGEND:

t_A Typical thickness of longitudinal shear PL Type 2 (see Note 2)

t_B Thickness of Long shear PL Type 2 strip with opening (see Note 2)

NOTES:

1. Dimension "Y" is measured perpendicular to the slope of girder PL A. Dimension "Z" is measured parallel to the slope of girder PL A.
2. For longitudinal shear PL Type 2 details, see "Girder At East Transition No.15" sheet.
3. The Contractor shall submit geometric layouts to the Engineer for approval prior to producing shop drawings of the East Transition Girders.
1 To simplify fabrication, values in the "Working Point Coordinate Table" may be adjusted, subject to review and approval of the Engineer.
4. At the Contractor's option, PL 20 may be used in lieu of PL 18, subject to review and approval of the Engineer.

Caltrans Metric

DIST.	COUNTY	ROUTE	KILOMETER POST TOTAL PROJECT	SHEET NO.	TOTAL SHEETS
04	SF	80	13.2/13.9	691R1	1204

George Baker
REGISTERED ENGINEER - CIVIL

12-6-04
PLANS APPROVAL DATE

REGISTERED PROFESSIONAL ENGINEER — George S. Baker — No. C 57112 — Exp. 12/31/05 — CIVIL — STATE OF CALIFORNIA

The State of California or its officers or agents shall not be responsible for the accuracy or completeness of electronic copies of this plan sheet.

T.Y. LIN / MOFFATT & NICHOL
825 BATTERY STREET
SAN FRANCISCO, CA 94111

Caltrans now has a web site! To get to the web site, go to: http://www.dot.ca.gov

Marwan N. Nader — REGISTERED PROFESSIONAL ENGINEER — No. C 054426 — Exp. 12/31/13 — CIVIL — STATE OF CALIFORNIA

FOR REVISIONS ONLY

CONTRACT CHANGE ORDER NO. ____
SHEET ____ OF ____

REQUESTS FOR INFORMATION NOT ADDRESSED IN THIS CCO REMAIN IN FORCE

ALL DIMENSIONS ARE IN MILLIMETERS UNLESS OTHERWISE SHOWN

100 % PS&E

TIME PLOTTED -> 11:12:39
DATE PLOTTED -> 18 APR 2012
USERNAME -> DWinrow

R. Vallzadeh/V. Toan/Y.L./W.L./F.C.
DESIGN OVERSIGHT
Ryan Vallzadeh / Vong Toan / Y Liu
SIGN OFF DATE 04/18/12

MARK	DATE	DESCRIPTIONS	BY	CH'D	CCO#
1	04/18/12	EAST END OBG	GB	MN	87

REVISIONS

	BY		CHECKED	
DESIGN	BY	G. Baker	CHECKED	P. Ritchie
DETAILS	BY	M. Gulyas	CHECKED	T. McMeans
QUANTITIES	BY	G. Baker	CHECKED	M. Roberts

PREPARED FOR THE STATE OF CALIFORNIA
DEPARTMENT OF TRANSPORTATION

R. Manzanarez
PROJECT ENGINEER

BRIDGE NO. 34-0006L/R
KILOMETER POST 13.2/13.9

SAN FRANCISCO OAKLAND BAY BRIDGE
EAST SPAN SEISMIC SAFETY PROJECT
SELF-ANCHORED SUSPENSION BRIDGE
(SUPERSTRUCTURE & TOWER)

GIRDER AT EAST TRANSITION NO. 9

Rev. Date: 5-18-98

ORIGINAL SCALE IN MILLIMETERS FOR REDUCED PLANS 0 10 20 30 40 50 60 70 80 90 100

CU 04
EA 0120F1

DISREGARD PRINTS BEARING EARLIER REVISION DATES →

REVISION DATES (PRELIMINARY STAGE ONLY): 01/15/99 05/15/99 08/02/99 05/31/01 04/08/02 07/01/02 12/19/02

SHEET 274R1 OF

FILE -> I:\bb\04-012001\sas\contract plans and cco\cco\cco#87\temp\agegd04e.dgn

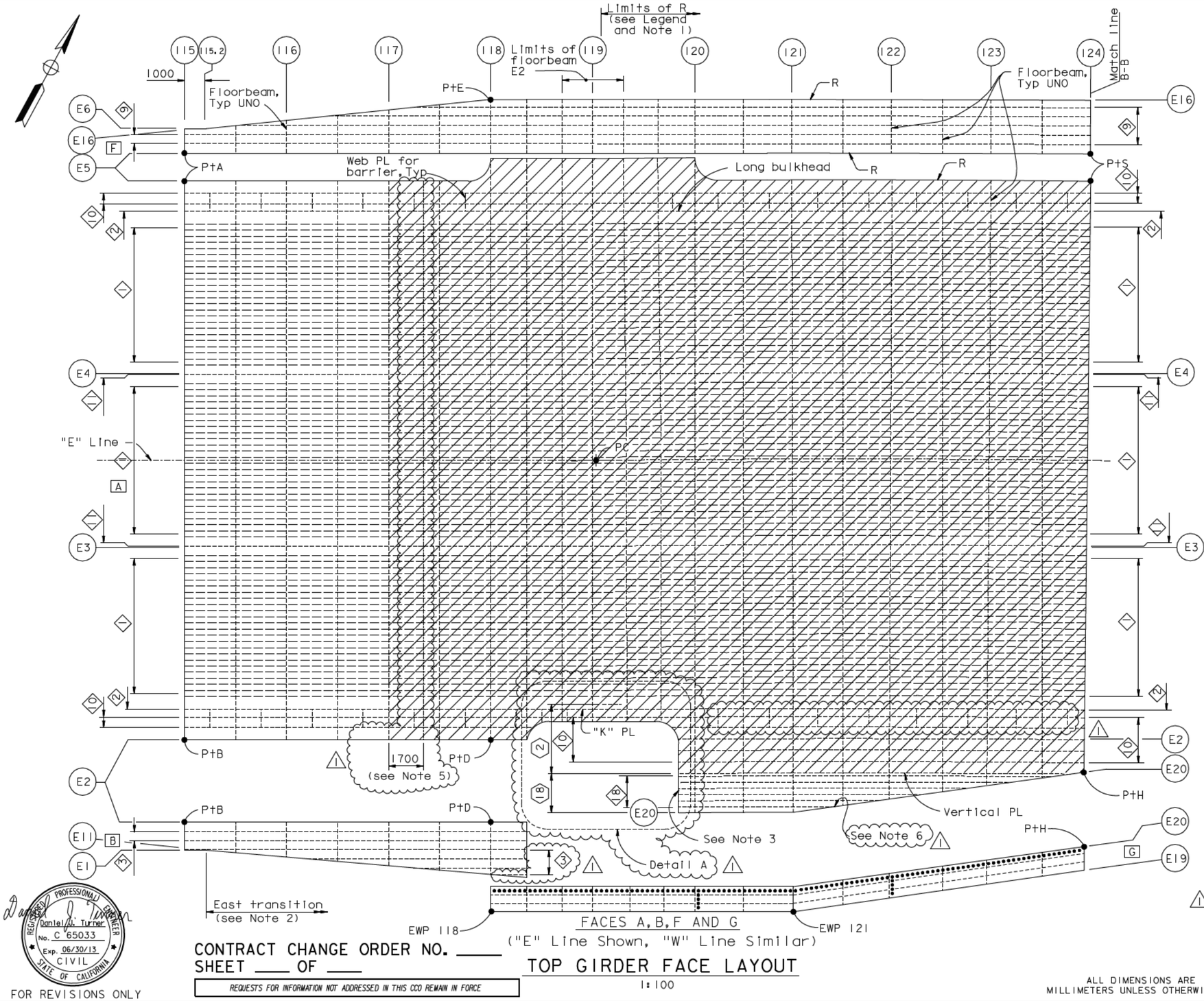

TOP GIRDER FACE LAYOUT

1:100

CONTRACT CHANGE ORDER NO. ____
SHEET ____ OF ____

REQUESTS FOR INFORMATION NOT ADDRESSED IN THIS CCO REMAIN IN FORCE

FOR REVISIONS ONLY

Daniel J. Turner
REGISTERED PROFESSIONAL ENGINEER
No. C 65033
Exp. 06/30/13
CIVIL
STATE OF CALIFORNIA

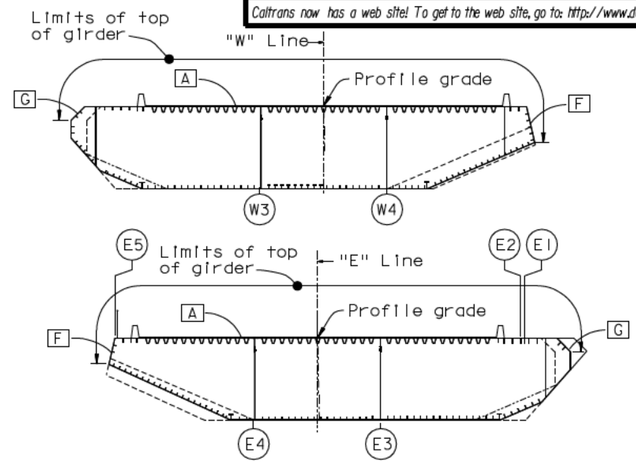

FACE KEY SECTION

1:200

LEGEND:

- [A] Girder face designation A
- ------ Typical girder stiffener Type 2, 3, 9, 10, 11 or other stiffener
- ––––– Typical girder stiffener Type 1
- ◇ Stiffener Type 1 designation
- R - Radius (see Note 1)
- P†A - Point A
- ------ Floorbeam, unless noted otherwise
- •••••••• Bolted splice (see Note 4)
- "Indicates SPCM shell PL"

NOTES:

1. Plate edges identified with "R" are curved. All other plate edges are straight.
2. For location of east transition, see "Girder Framing Plan No.4" sheet.
3. For saddle cutout limits, see "East Saddle Housing Details No.1" sheet.
4. For PP118 to 124 [G] is an architectural housing. For bolted splice details, see "Girder At East Transition Details No.3" sheet. Housing shall be installed after full cable dead load force is applied to the box girder.
5. At the Contractor's option, non-SPCM material may be provided within these limits.
6. For stiffener Type 18, diaphragm at stiffener termination is not required along line E20.
7. For SPCM shell PL ranges west of PP115 - 700mm, see "Girder Framing Details No.1" sheet.
8. For Detail A, see "Girder At East Transition No.11A" sheet.

ALL DIMENSIONS ARE IN MILLIMETERS UNLESS OTHERWISE SHOWN

DIST.	COUNTY	ROUTE	KILOMETER POST TOTAL PROJECT	SHEET NO.	TOTAL SHEETS
04	SF	80	13.2/13.9	693R	1204

George Baker
REGISTERED ENGINEER - CIVIL
12-6-04
PLANS APPROVAL DATE

REGISTERED PROFESSIONAL ENGINEER
George S. Baker
No. C 57112
Exp. 12/31/05
CIVIL
STATE OF CALIFORNIA

The State of California or its officers or agents shall not be responsible for the accuracy or completeness of electronic copies of this plan sheet.

T.Y. LIN / MOFFATT & NICHOL
825 BATTERY STREET
SAN FRANCISCO, CA 94111

Caltrans now has a web site! To get to the web site, go to: http://www.dot.ca.gov

MARK	DATE	DESCRIPTIONS	BY	CH'D	CCO#
1	03/09/12	EAST END OBG	GB	DT	87

REVISIONS

	BY		CHECKED
DESIGN	G. Baker		P. Ritchie
DETAILS	M. Gulyas		T. McMeans
QUANTITIES	G. Baker		M. Roberts

PREPARED FOR THE STATE OF CALIFORNIA
DEPARTMENT OF TRANSPORTATION

R. Manzanarez
PROJECT ENGINEER

BRIDGE NO. 34-0006L/R
KILOMETER POST 13.2/13.9

SAN FRANCISCO OAKLAND BAY BRIDGE
EAST SPAN SEISMIC SAFETY PROJECT
SELF-ANCHORED SUSPENSION BRIDGE (SUPERSTRUCTURE & TOWER)

GIRDER AT EAST TRANSITION NO. 11

R. Vallzadeh/V. Toan/Y.L./W.L./F.C.
DESIGN OVERSIGHT
SIGN OFF DATE 03/09/12

Rev. Date: 5-18-98

ORIGINAL SCALE IN MILLIMETERS FOR REDUCED PLANS 0 10 20 30 40 50 60 70 80 90 100

CU 04
EA 0120F1

DISREGARD PRINTS BEARING EARLIER REVISION DATES

REVISION DATES (PRELIMINARY STAGE ONLY): 05/31/01 | 04/08/02 | 07/01/02 | 12/19/02

SHEET 276R1 OF

FILE -> I:\bb\04-012001\sas\contract plans and cco\cco\cco#87\2-update 03-09-12\dgn\agegd07.dgn

USERNAME -> DWinrow DATE PLOTTED -> 09 MAR 2012 TIME PLOTTED -> 10:06:02

100% PS&E

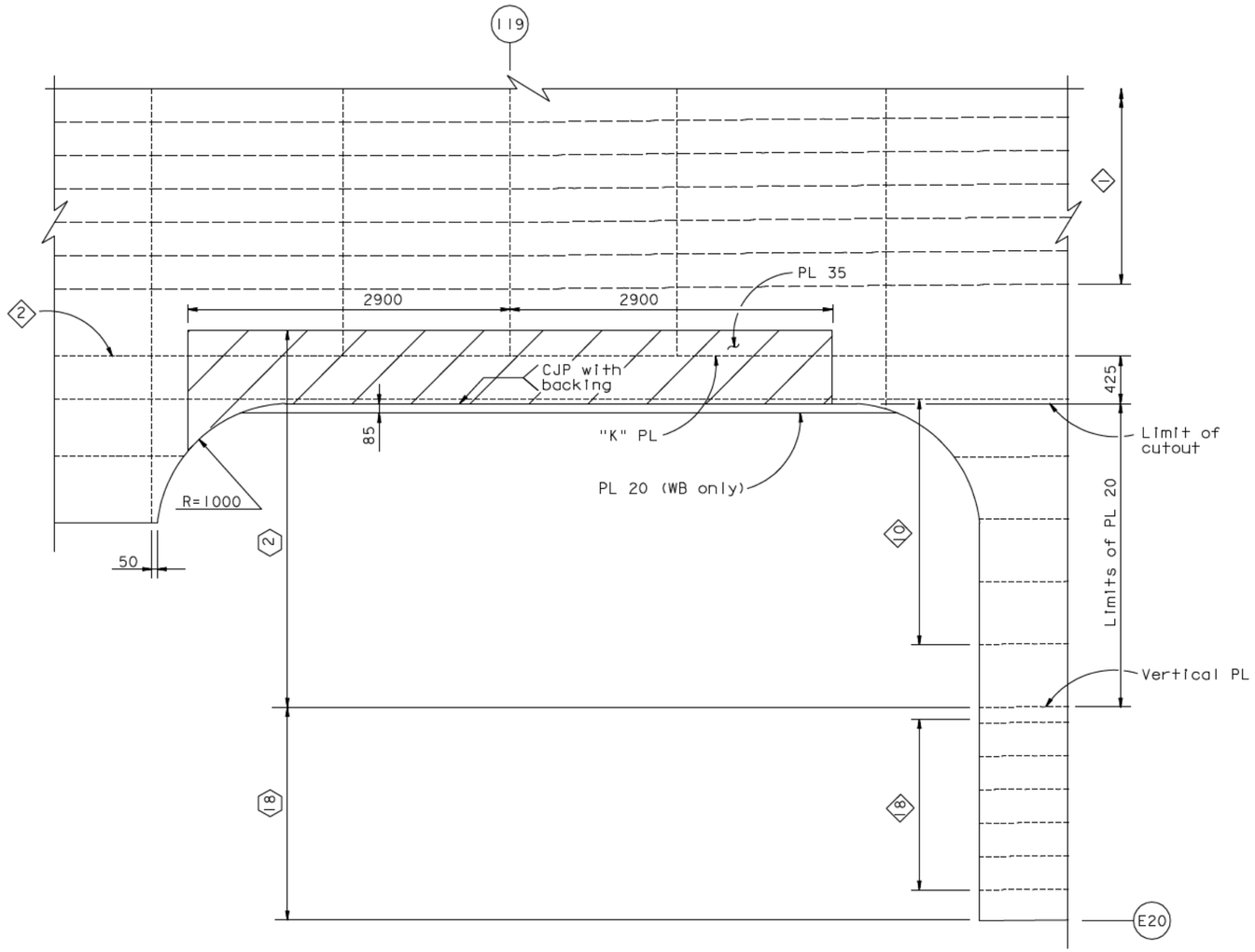

DETAIL A (EB shown, WB similar and opposite hand)
1:50

DIST.	COUNTY	ROUTE	KILOMETER POST TOTAL PROJECT	SHEET NO.	TOTAL SHEETS
04	SF	80	13.2/13.9	693S1	1204

REGISTERED ENGINEER - CIVIL

09-01-11
PLANS APPROVAL DATE

REGISTERED PROFESSIONAL ENGINEER
Marwan N. Nader
No. C 054426
Exp. 12/31/11
CIVIL
STATE OF CALIFORNIA

The State of California or its officers or agents shall not be responsible for the accuracy or completeness of electronic copies of this plan sheet.

T.Y. LIN / MOFFATT & NICHOL
825 BATTERY STREET
SAN FRANCISCO, CA 94111

Caltrans now has a web site! To get to the web site, go to: http://www.dot.ca.gov

CONTRACT CHANGE ORDER NO. ____
SHEET ____ OF ____

REQUESTS FOR INFORMATION NOT ADDRESSED IN THIS CCO REMAIN IN FORCE

ALL DIMENSIONS ARE IN MILLIMETERS UNLESS OTHERWISE SHOWN

R. Vallzadeh/V. Toan/Y.L./W.L./F.C.
DESIGN OVERSIGHT
SIGN OFF DATE 09/01/11

MARK	DATE	DESCRIPTIONS	BY	CH'D	CCO#
0	09/01/11	EAST END OBG	GB	MN	87

REVISIONS

	BY		CHECKED
DESIGN	G. Baker		M. Nader
DETAILS	G. Baker		M. Nader
QUANTITIES	G. Baker		M. Nader

PREPARED FOR THE STATE OF CALIFORNIA DEPARTMENT OF TRANSPORTATION

R. Manzanarez
PROJECT ENGINEER

BRIDGE NO. 34-0006L/R
KILOMETER POST 13.2/13.9

SAN FRANCISCO OAKLAND BAY BRIDGE
EAST SPAN SEISMIC SAFETY PROJECT
SELF-ANCHORED SUSPENSION BRIDGE
(SUPERSTRUCTURE & TOWER)

GIRDER AT EAST TRANSITION NO. 11A

Rev. Date: 5-18-98

ORIGINAL SCALE IN MILLIMETERS FOR REDUCED PLANS 0 10 20 30 40 50 60 70 80 90 100

CU 04
EA 0120F1

DISREGARD PRINTS BEARING EARLIER REVISION DATES →

REVISION DATES (PRELIMINARY STAGE ONLY): 09/01/11

SHEET 276S1 OF

FILE -> I:\bb\04-0120F1\sas\contract plans and cco\cco\cco#87\1-original 09-01-11\dgn\agegd07a.dgn

100 % PS&E
TIME PLOTTED -> 10:39:35
DATE PLOTTED -> 30 AUG 2011
USERNAME -> ALishansk

Caltrans now has a web site! To get to the web site, go to: http://www.dot.ca.gov

DIST.	COUNTY	ROUTE	KILOMETER POST TOTAL PROJECT	SHEET NO.	TOTAL SHEETS
04	SF	80	13.2/13.9	694R3	1204

Caltrans Metric

George Baker
REGISTERED ENGINEER - CIVIL

12-6-04
PLANS APPROVAL DATE

The State of California or its officers or agents shall not be responsible for the accuracy or completeness of electronic copies of this plan sheet.

REGISTERED PROFESSIONAL ENGINEER — George S. Baker — No. C 57112 — Exp. 12/31/05 — CIVIL — STATE OF CALIFORNIA

T.Y. LIN / MOFFATT & NICHOL
825 BATTERY STREET
SAN FRANCISCO, CA 94111

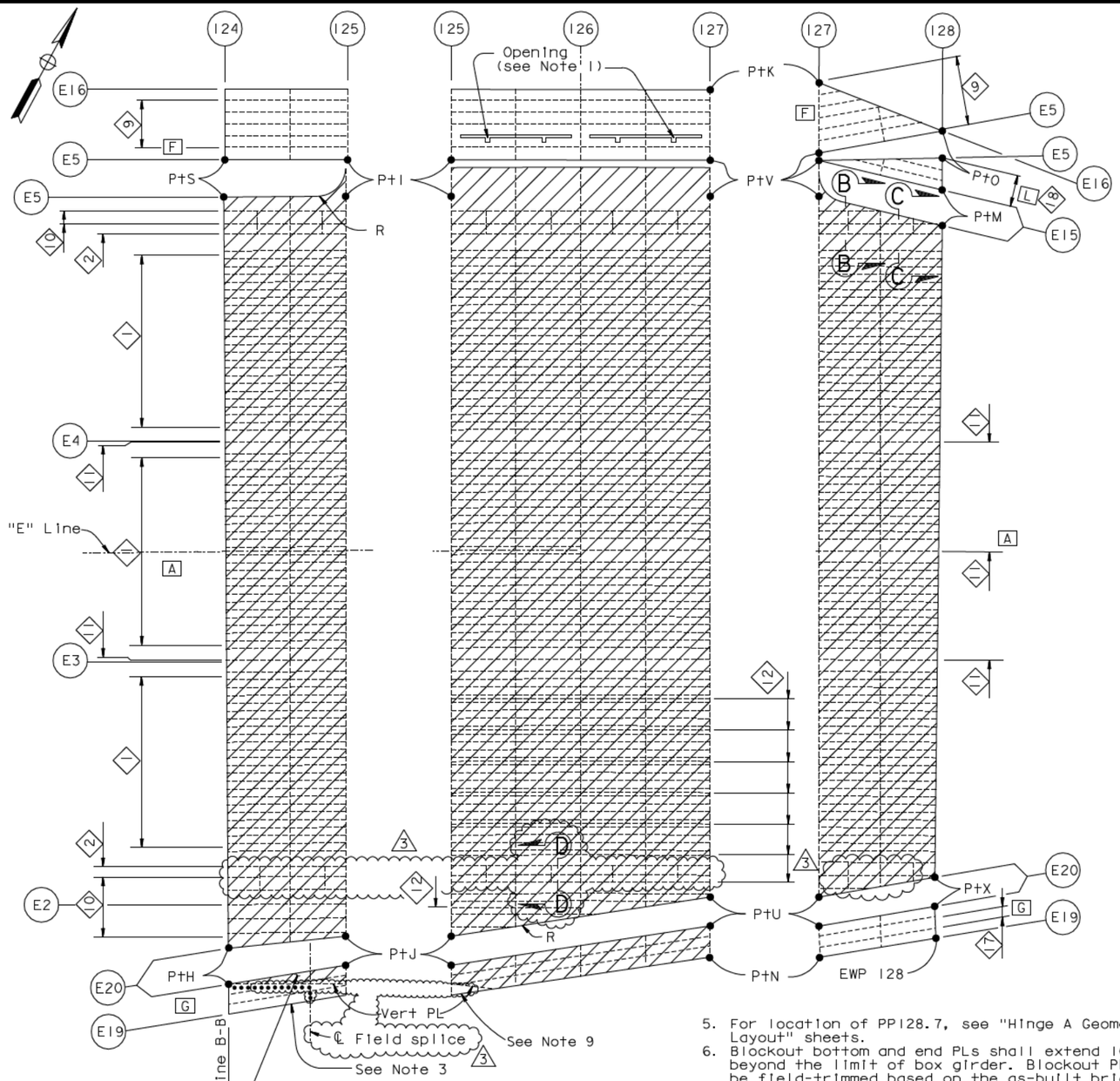

FACES A, F, G and L
("E" Line Shown, "W" Line Similar)
TOP GIRDER FACE LAYOUT
1:100

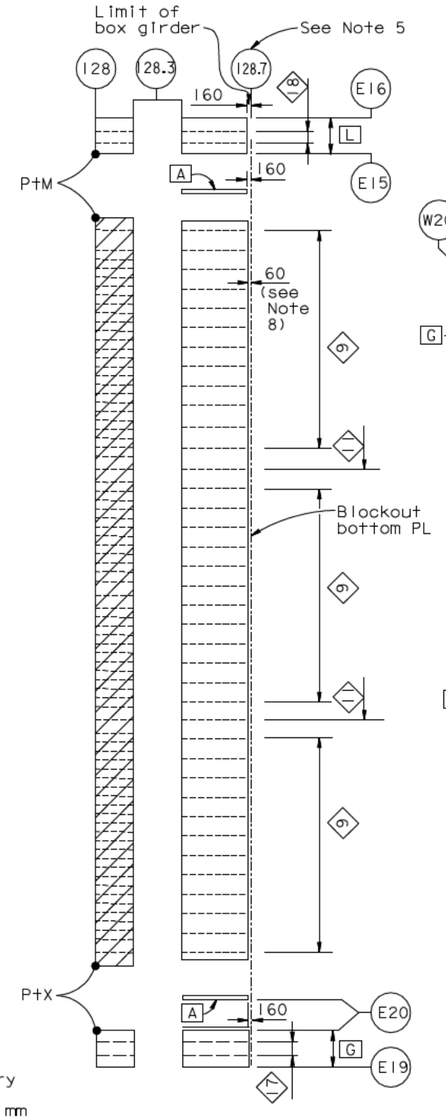

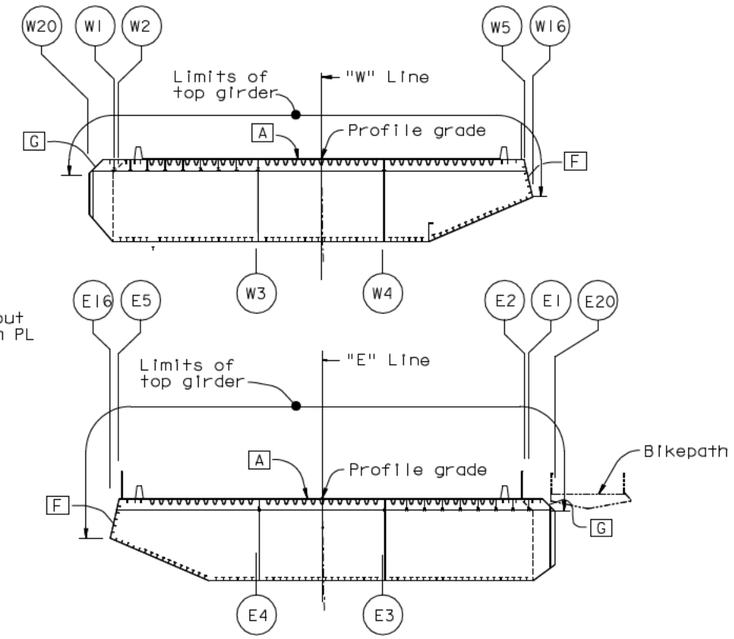

FACE KEY SECTION
1:200

LEGEND:
- [A] Girder face designation A
- ------- Stiffener Type 2, 9, 10, 11 or other stiffener
- Stiffener Type 1 leg
- ------- Floorbeam unless noted otherwise
- ◇1 Stiffener Type 1 designation
- R - Radius (see Note 2)
- •••••••• Bolted splice (see Notes 3 & 8) △3
- "Indicates SPCM shell PL"
- See Note 4

NOTES:
1. For opening details in girder PL F, see "Crossbeam At East Anchorage" sheets.
2. Plate edges identified with "R" are curved. All other plate edges are straight.
3. For PP124 to 125, the indicated portion of [G] is an architectural housing. For bolted splice details, see "Girder At East Transition Details No.3" sheet. Housing shall be installed after full cable dead load force is applied to the box girder.
4. Deleted.
5. For location of PP128.7, see "Hinge A Geometry Layout" sheets.
6. Blockout bottom and end PLs shall extend 100 mm beyond the limit of box girder. Blockout PLs shall be field-trimmed based on the as-built bridge as directed by the Engineer.
7. For Sections B-B, C-C & D-D, see "Girder at East Transition No.12A" sheet.
8. Plates inboard of the architectural splice shall be SPCM. Thickness of architectural housing shall be taken from "Girder at East Transition Details No.3A" sheet.
9. △3 Thickness of non-SPCM PL shall be taken from "Girder at East Transition Details No.3A" sheet.
10. For stiffener termination at architectural splice, see "Typical Girder Details No.16" sheet.

REGISTERED PROFESSIONAL ENGINEER — Marwan N. Nader — No. C 054426 — Exp. 12/31/11 — CIVIL — STATE OF CALIFORNIA

FOR REVISIONS ONLY

CONTRACT CHANGE ORDER NO. ____
SHEET ___ OF ___

REQUESTS FOR INFORMATION NOT ADDRESSED IN THIS CCO REMAIN IN FORCE

MARK	DATE	DESCRIPTIONS	BY	CH'D	CCO#
△3	09/01/11	EAST END OBG	MN	DT	87
△2	11/05/10	PP119 ACCESS & PP125 PLATES	MN	GB	86
△1	04/09/10	HINGE A MODIFICATIONS	MN	GB	120

REVISIONS

	BY	CHECKED
DESIGN	G. Baker	P. Ritchie
DETAILS	M. Gulyas	T. McMeans
QUANTITIES	G. Baker	M. Roberts

PREPARED FOR THE STATE OF CALIFORNIA DEPARTMENT OF TRANSPORTATION

R. Vallzadeh/V. Toan/Y.L./W.L./F.C.
DESIGN OVERSIGHT
SIGN OFF DATE 09/01/11

R. Manzanarez
PROJECT ENGINEER

ALL DIMENSIONS ARE IN MILLIMETERS UNLESS OTHERWISE SHOWN

BRIDGE NO.	34-0006L/R
KILOMETER POST	13.2/13.9

SAN FRANCISCO OAKLAND BAY BRIDGE
EAST SPAN SEISMIC SAFETY PROJECT
SELF-ANCHORED SUSPENSION BRIDGE
(SUPERSTRUCTURE & TOWER)

GIRDER AT EAST TRANSITION NO. 12

Rev. Date: 5-18-98

ORIGINAL SCALE IN MILLIMETERS FOR REDUCED PLANS 0 10 20 30 40 50 60 70 80 90 100

CU 04
EA 0120F1

DISREGARD PRINTS BEARING EARLIER REVISION DATES →

REVISION DATES (PRELIMINARY STAGE ONLY)											
05/31/01	04/09/02	07/01/02	12/18/02	05/16/03	09/06/04						

SHEET 277R3 OF

FILE -> I:\bb\04-012001\sas\contract plans and cco\cco\cco#87\1-original 09-01-11\dgn\agegd08.dgn

USERNAME -> ALishansk DATE PLOTTED -> 30 AUG 2011 TIME PLOTTED -> 10:53:28

100 % PS&E

DIST.	COUNTY	ROUTE	KILOMETER POST TOTAL PROJECT	SHEET NO.	TOTAL SHEETS
04	SF	80	13.2/13.9	694SIRI	1204

REGISTERED ENGINEER - CIVIL

04-09-10
PLANS APPROVAL DATE

The State of California or its officers or agents shall not be responsible for the accuracy or completeness of electronic copies of this plan sheet.

REGISTERED PROFESSIONAL ENGINEER — Marwan N. Nader — No. C 054426 — Exp. 12/31/11 — CIVIL — STATE OF CALIFORNIA

T.Y. LIN / MOFFATT & NICHOL
825 BATTERY STREET
SAN FRANCISCO, CA 94111

Caltrans now has a web site! To get to the web site, go to: http://www.dot.ca.gov

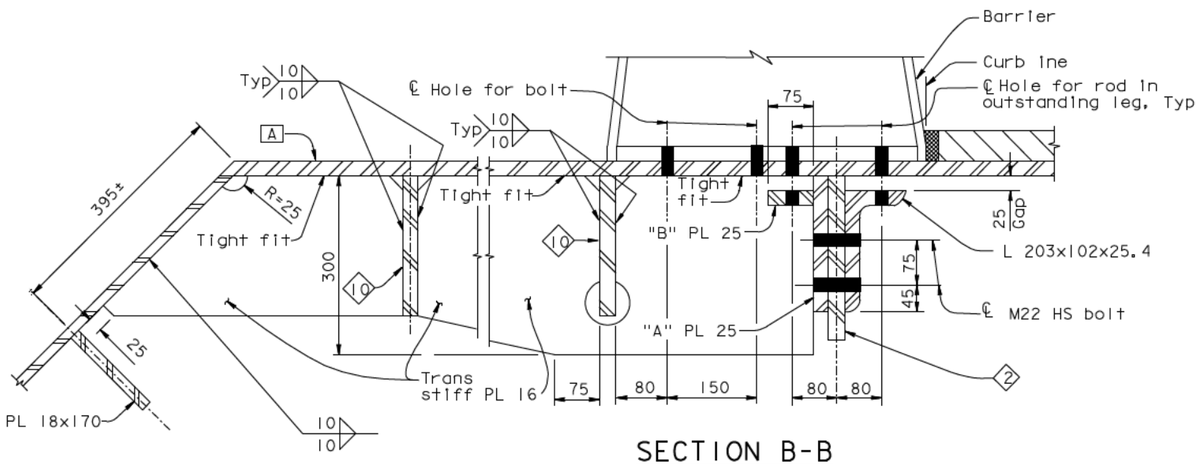

SECTION B-B

1:5

(Section at PP 127.25 Line E/W 15)

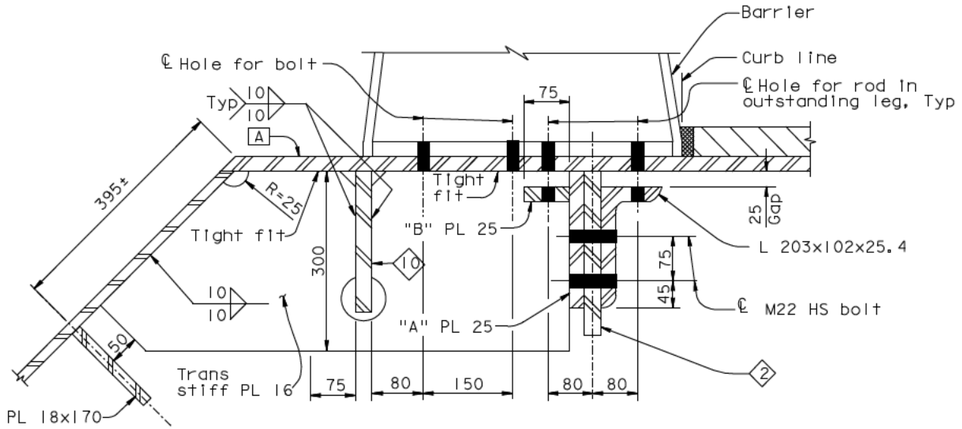

SECTION C-C

1:5

(Section at PP 127.75 Line E/W 15)

1

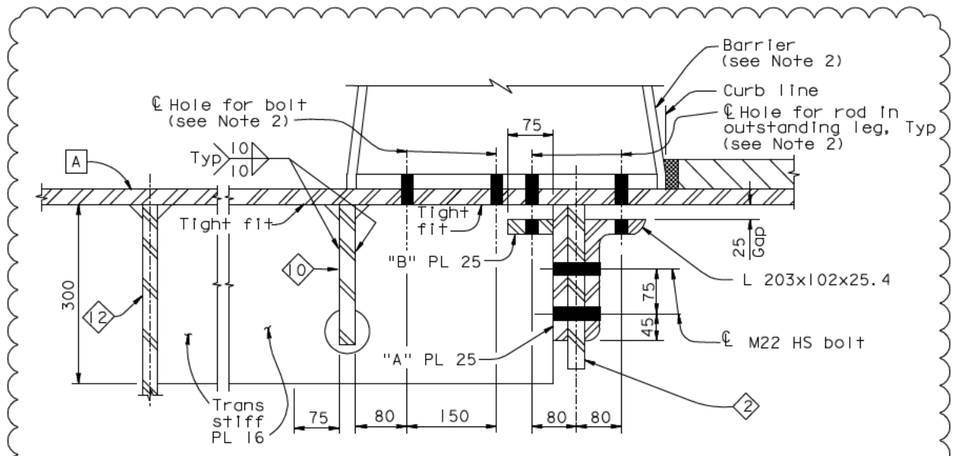

SECTION D-D

1:5

(Section above east cable anchorage)

NOTES:

1. For typical barrier connection details not shown, see "Typical Girder Details No.14" sheet.
2. For typical barrier details, see "Barrier Details" sheets.

CONTRACT CHANGE ORDER NO. ____
SHEET ____ OF ____

REQUESTS FOR INFORMATION NOT ADDRESSED IN THIS CCO REMAIN IN FORCE

ALL DIMENSIONS ARE IN MILLIMETERS UNLESS OTHERWISE SHOWN

MARK	DATE	DESCRIPTIONS	BY	CH'D	CCO#
1	09/01/11	EAST END OBG	MN	DT	87
0	04/09/10	HINGE A MODIFICATIONS	HT	MN	120

REVISIONS

R. Valizadeh/V. Toan/Y.L./W.L./F.C.
DESIGN OVERSIGHT
Ryan Valizadeh / Vong Toan / Y. Liu
SIGN OFF DATE 09/01/11

Rev. Date: 5-18-98

DESIGN	BY H. Tazlr	CHECKED M. Nader
DETAILS	BY H. Tazlr	CHECKED M. Nader
QUANTITIES	BY H. Tazlr	CHECKED M. Nader

PREPARED FOR THE STATE OF CALIFORNIA DEPARTMENT OF TRANSPORTATION

R. Manzanarez
PROJECT ENGINEER

CU 04
EA 0120F1

BRIDGE NO. 34-0006L/R
KILOMETER POST 13.2/13.9

DISREGARD PRINTS BEARING EARLIER REVISION DATES →

REVISION DATES (PRELIMINARY STAGE ONLY): 04/09/10

SHEET 277SIRI OF

ORIGINAL SCALE IN MILLIMETERS FOR REDUCED PLANS 0 10 20 30 40 50 60 70 80 90 100

SAN FRANCISCO OAKLAND BAY BRIDGE
EAST SPAN SEISMIC SAFETY PROJECT
SELF-ANCHORED SUSPENSION BRIDGE
(SUPERSTRUCTURE & TOWER)

GIRDER AT EAST TRANSITION NO. 12A

100% PS&E

DATE PLOTTED -> 30 AUG 2011 TIME PLOTTED -> 10:56:11
USERNAME -> ALTshansk

FILE -> I:\bb\04-012001\sas\contract plans and cco\cco\cco#87\1-original 09-01-11\dgn\agegd08a.dgn

DIST.	COUNTY	ROUTE	KILOMETER POST TOTAL PROJECT	SHEET NO.	TOTAL SHEETS
04	SF	80	13.2/13.9	695R3	1204

George Baker
REGISTERED ENGINEER - CIVIL

12-6-04
PLANS APPROVAL DATE

The State of California or its officers or agents shall not be responsible for the accuracy or completeness of electronic copies of this plan sheet.

REGISTERED PROFESSIONAL ENGINEER — George S. Baker — No. C57112 — Exp. 12/31/05 — CIVIL — STATE OF CALIFORNIA

T.Y. LIN / MOFFATT & NICHOL
825 BATTERY STREET
SAN FRANCISCO, CA 94111

Caltrans now has a web site! To get to the web site, go to: http://www.dot.ca.gov

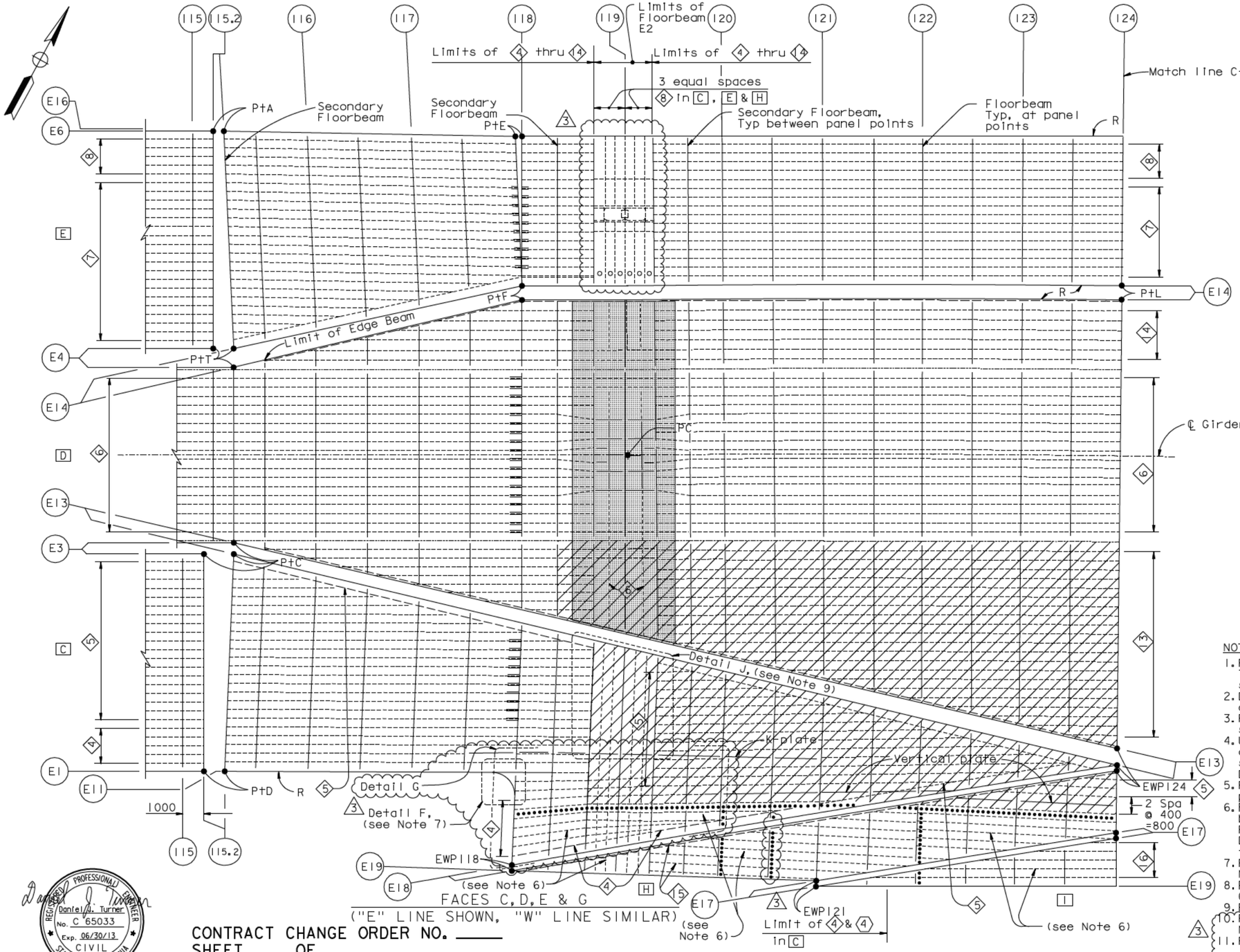

BOTTOM GIRDER FACE LAYOUT

1:100

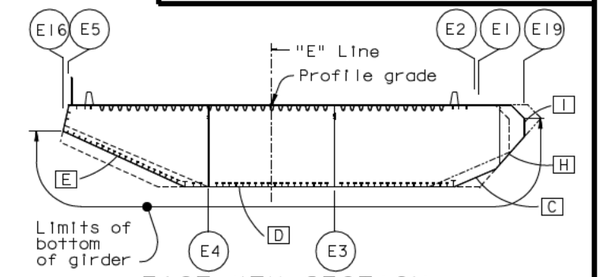

FACE KEY SECTION

1:200

LEGEND:

- "Indicates Key Plate", key plate shall be TTP (see Note 3)
- Indicates SPCM shell plate only UNO
- D — Girder face designation D
- -------- Stiffener type 5, 6, 7, 8 or 9
- -------- Other stiffener
- – – – – Edge beam, (see Note 4)
- ---------- Longitudinal shear plate type 2
- •••••••• Bolted splice, (see Note 6)
- ◇5 — Stiffener type 5 designation
- R - Radius, (see Note 2)
- Pt A - Point A, (see Note 2)
- EWP - "E" Line working point
- ——— K-plate, vertical plate

NOTES:

1. For details and dimensions not shown, see "Girder At East Transition No.1" through "Girder At East Transition No.4" sheets.
2. Dimensions not given shall be determined from the highway geometry and box girder working points.
3. For Details at Floorbeam E2, see "Girder At Pier E2 No.1" sheet.
4. Unless noted otherwise, edge beam shall have the same dimensions and details as longitudinal shear plate type 1, see "Typical Girder Details No.8" and "Typical Floorbeam Details No.5" sheets.
5. Plate edges identified with "R" are curved. All other plate edges are straight.
6. For PP118 to 124 the indicated portions of C, H and I, bounded by the bolted splices are architectural housings. For bolted splice details, see "Girder At East Transition Details No.3" sheet. Housing shall be installed after full cable dead load force is applied to the box girder.
7. For Detail F, see "Girder At East Transition Details No.4" sheet.
8. For stiffener transition details near PP118, see "Typical Girder Details No.16A" sheet.
9. For Detail J, see "Girder At East Transition No.13A" sheet.
10. For Detail G, see "Girder At East Transition Details No.13A" sheet.
11. For SPCM shell PL ranges west of PP 115 -700 mm, see "Girder Framing Details, No.2" sheet.

Daniel J. Turner — REGISTERED PROFESSIONAL ENGINEER — No. C 65033 — Exp. 06/30/13 — CIVIL — STATE OF CALIFORNIA

FOR REVISIONS ONLY

CONTRACT CHANGE ORDER NO. ____
SHEET ____ OF ____

REQUESTS FOR INFORMATION NOT ADDRESSED IN THIS CCO REMAIN IN FORCE

MARK	DATE	DESCRIPTIONS	BY	CH'D	CCO#
3	03/21/12	EAST END OBG	DT	GB	87
2	03/02/12	OBG RETROFIT AT PP119	GB	MN	238
1	05/20/11	STIFFENER TRANSITIONS AT PP14 & PP18	DT	GB	204

REVISIONS

ALL DIMENSIONS ARE IN MILLIMETERS UNLESS OTHERWISE SHOWN

R. Vallzadeh/V. Toan/Y.L./W.L./F.C.
DESIGN OVERSIGHT
SIGN OFF DATE 03/21/12

	BY	CHECKED
DESIGN	G. Baker	P. Ritchie
DETAILS	M. Gulyas	T. McMeans
QUANTITIES	G. Baker	M. Roberts

PREPARED FOR THE STATE OF CALIFORNIA DEPARTMENT OF TRANSPORTATION

R. Manzanarez
PROJECT ENGINEER

BRIDGE NO. 34-0006L/R
KILOMETER POST 13.2/13.9

SAN FRANCISCO OAKLAND BAY BRIDGE
EAST SPAN SEISMIC SAFETY PROJECT
SELF-ANCHORED SUSPENSION BRIDGE
(SUPERSTRUCTURE & TOWER)

GIRDER AT EAST TRANSITION NO. 13

Rev. Date: 5-18-98

ORIGINAL SCALE IN MILLIMETERS FOR REDUCED PLANS 0 10 20 30 40 50 60 70 80 90 100

CU 04
EA 0120F1

DISREGARD PRINTS BEARING EARLIER REVISION DATES

REVISION DATES (PRELIMINARY STAGE ONLY): 05/31/01 | 04/08/02 | 07/01/02 | 12/19/02

SHEET 278R3 OF

FILE -> I:\bb\04-012001\sas\contract plans and cco\cco\cco#87\3-update 03-21-12\dgn\agegd09.dgn

USERNAME -> DMinrow DATE PLOTTED -> 21 MAR 2012 TIME PLOTTED -> 11:45:43

100 % PS&E

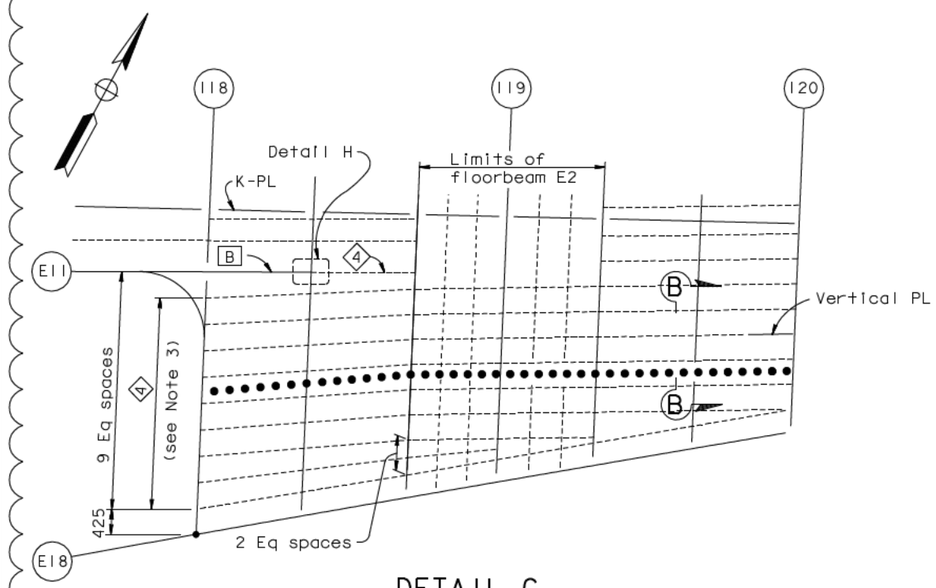

DETAIL G
1:50

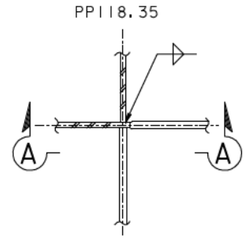

DETAIL H
1:5

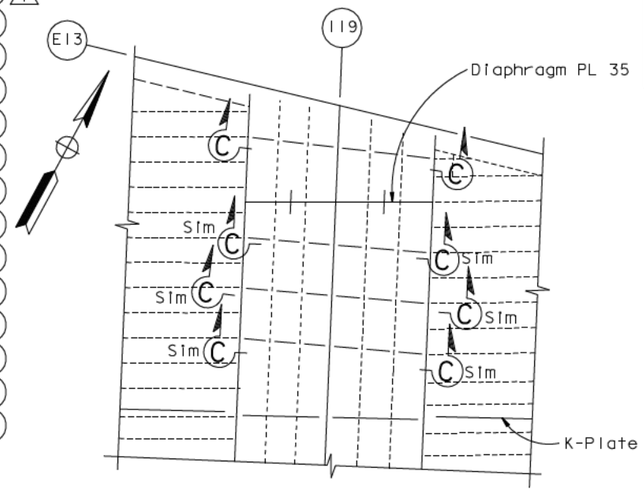

DETAIL J
1:50
("E"-LINE SHOWN, "W"-LINE SIMILAR)

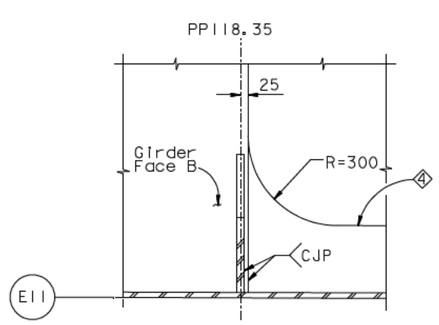

SECTION A-A
1:5

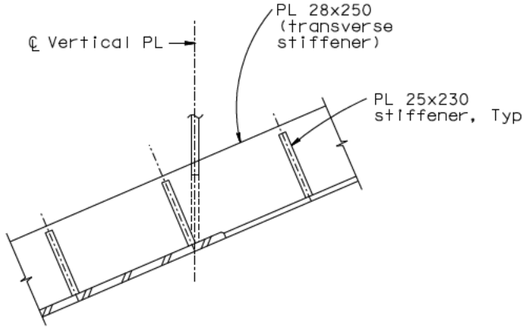

SECTION B-B
1:10

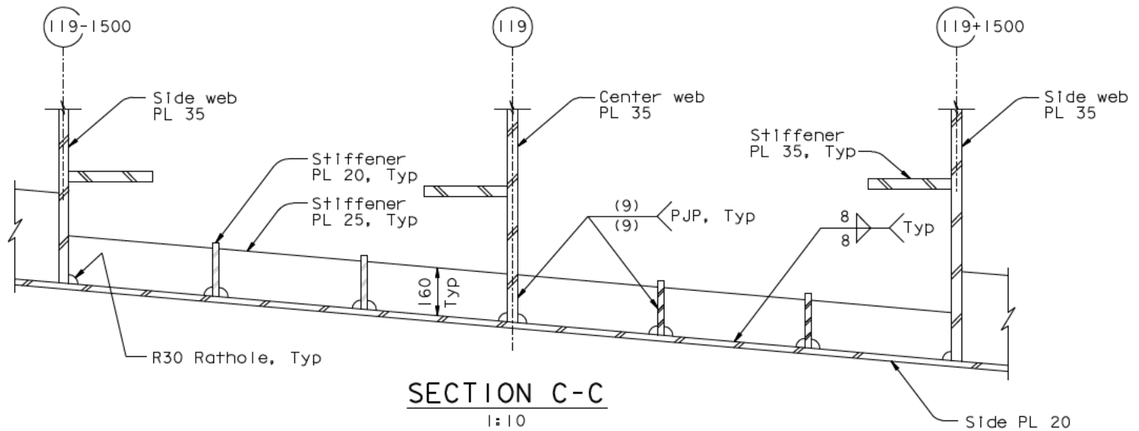

SECTION C-C
1:10

NOTES:

1. At the Contractor's option, bolts in the longitudinal architectural splice between PP118 and PP120 may be shop-tightened.
2. The long slots shall be in the longitudinal direction of the Bridge. The outer shim PL shall not be slotted.
3. Plate stiffeners to be trimmed to provide 60 mm Min clearance underneath the outboard saddle support beam, subject to review and approval of the Engineer.

DIST.	COUNTY	ROUTE	KILOMETER POST TOTAL PROJECT	SHEET NO.	TOTAL SHEETS
04	SF	80	13.2/13.9	695SIR	1204

REGISTERED ENGINEER - CIVIL

04-18-12
PLANS APPROVAL DATE

REGISTERED PROFESSIONAL ENGINEER
Marwan N. Nader
No. C 054426
Exp. 12/31/13
CIVIL
STATE OF CALIFORNIA

The State of California or its officers or agents shall not be responsible for the accuracy or completeness of electronic copies of this plan sheet.

T.Y. LIN / MOFFATT & NICHOL
825 BATTERY STREET
SAN FRANCISCO, CA 94111

Caltrans now has a web site! To get to the web site, go to: http://www.dot.ca.gov

CONTRACT CHANGE ORDER NO. ____
SHEET ____ OF ____

REQUESTS FOR INFORMATION NOT ADDRESSED IN THIS CCO REMAIN IN FORCE

ALL DIMENSIONS ARE IN MILLIMETERS UNLESS OTHERWISE SHOWN

MARK	DATE	DESCRIPTIONS	BY	CH'D	CCO#
1	04/18/12	EAST END OBG	GB	MN	87
0	03/02/12	OBG RETROFIT AT PP119	GB	MN	238

REVISIONS

R. Vallzadeh/V. Toan/Y. L./W. L./F. C.
DESIGN OVERSIGHT
SIGN OFF DATE 04/18/12

DESIGN BY G. Baker CHECKED M. Nader
DETAILS BY G. Baker CHECKED D. Turner
QUANTITIES BY G. Baker CHECKED D. Turner

PREPARED FOR THE STATE OF CALIFORNIA DEPARTMENT OF TRANSPORTATION

R. Manzanarez
PROJECT ENGINEER

BRIDGE NO. 34-0006L/R
KILOMETER POST 13.2/13.9

SAN FRANCISCO OAKLAND BAY BRIDGE
EAST SPAN SEISMIC SAFETY PROJECT
SELF-ANCHORED SUSPENSION BRIDGE (SUPERSTRUCTURE & TOWER)

GIRDER AT EAST TRANSITION NO. 13A

Rev. Date: 5-18-98

ORIGINAL SCALE IN MILLIMETERS FOR REDUCED PLANS 0 10 20 30 40 50 60 70 80 90 100

DISREGARD PRINTS BEARING EARLIER REVISION DATES

REVISION DATES (PRELIMINARY STAGE ONLY): 04/18/12

CU 04
EA 0120F1

SHEET 278SIR OF

FILE -> I:\bb\04-0120I\sas\contract plans and cco\cco\cco#87\temp\agegd09a.dgn

USERNAME -> DWinrow DATE PLOTTED -> 18 APR 2012 TIME PLOTTED -> 11:13:41

100 % PS&E

Caltrans now has a web site! To get to the web site, go to: http://www.dot.ca.gov

DIST.	COUNTY	ROUTE	KILOMETER POST TOTAL PROJECT	SHEET NO.	TOTAL SHEETS
04	SF	80	13.2/13.9	696R3	1204

Caltrans Metric

George Baker
REGISTERED ENGINEER - CIVIL

12-6-04
PLANS APPROVAL DATE

The State of California or its officers or agents shall not be responsible for the accuracy or completeness of electronic copies of this plan sheet.

REGISTERED PROFESSIONAL ENGINEER — George S. Baker — No. C 57112 — Exp. 12/31/05 — CIVIL — STATE OF CALIFORNIA

T.Y. LIN / MOFFATT & NICHOL
825 BATTERY STREET
SAN FRANCISCO, CA 94111

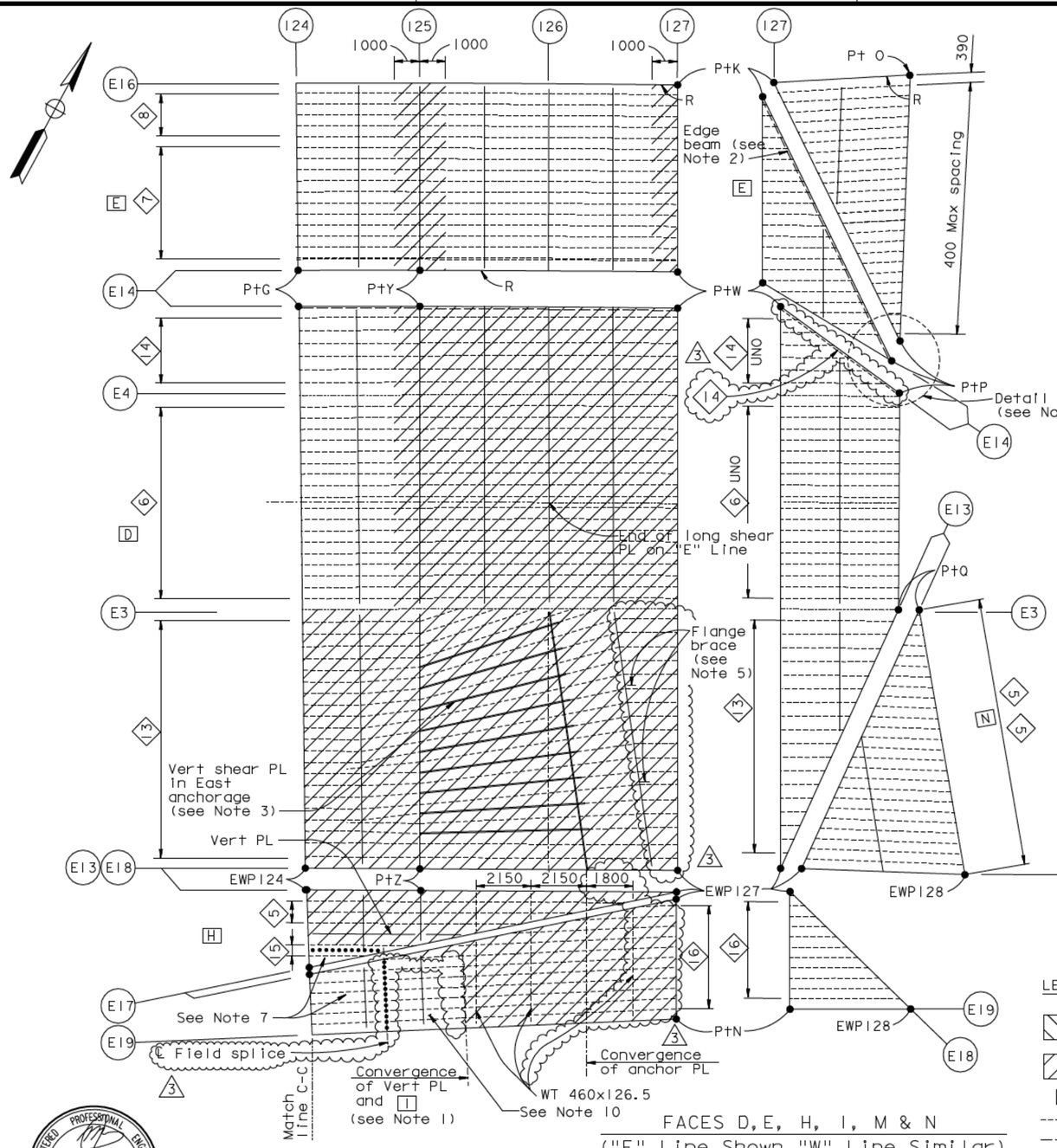

FACES D, E, H, I, M & N
("E" Line Shown, "W" Line Similar)

BOTTOM GIRDER FACE LAYOUT
1:100

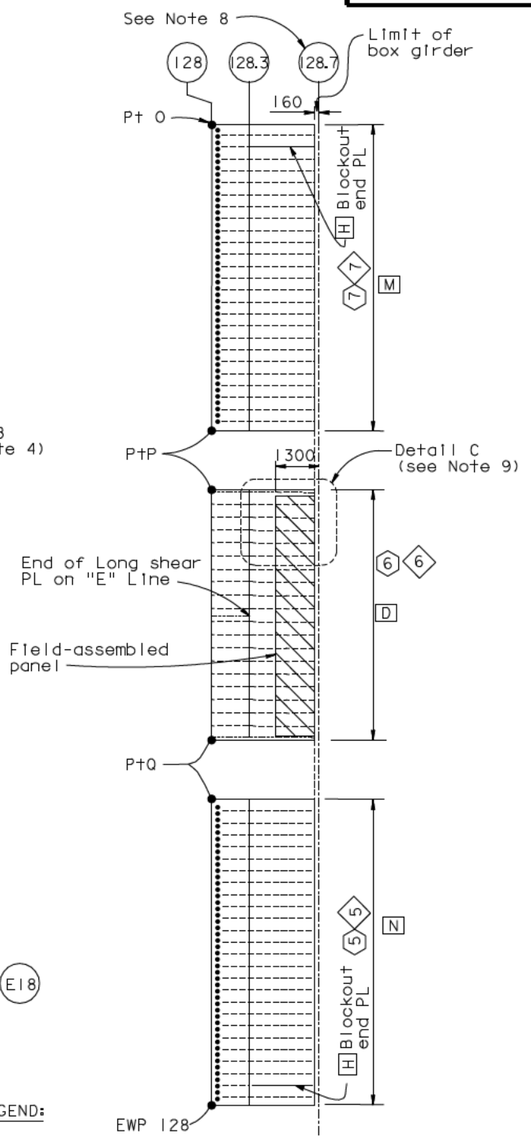

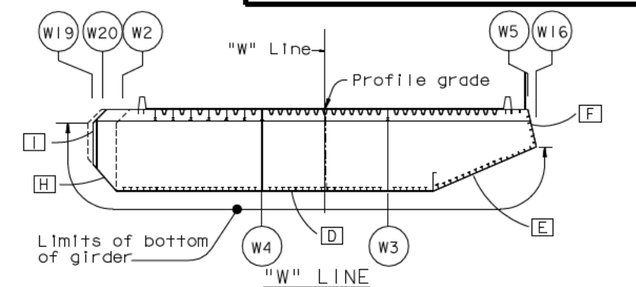

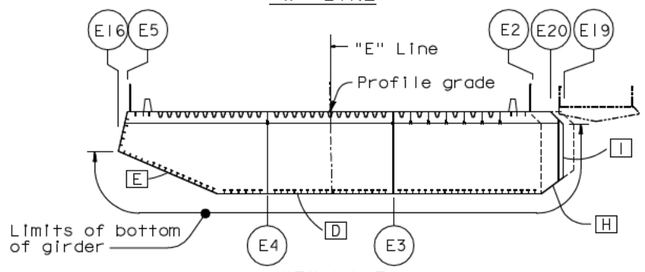

FACE KEY SECTION
1:200

NOTES:

1. For details of convergence of vertical PL and girder PL I, see "Girder At East Transition Details No.3" sheet.
2. Edge beam shall have same dimensions and details as longitudinal shear PL Type 1 UNO. See "Typical Girder Details No.8" and "Typical Floorbeam Details No.5" sheets. For edge beam connection at PP128, see Detail B on "Girder At East Transition Details No.3" sheet.
3. For east anchorage details, see "East Cable Anchorage "E" Line Layout" sheets.
4. For Detail B, see "Girder At East Transition Details No.3" sheet.
5. For flange brace details, see "Floorbeam At East Transition" sheets.
6. Plate edges identified with "R" are curved. All other plate edges are straight.
7. For PP124 to 125.5, the indicated portions of H and I bounded by the bolted splices are architectural housings. For bolted splice details, see "Girder At East Transition Details No.3" sheet. Housing shall be installed after full cable dead load force is applied to the box girder.
8. For location of PP128.7, see "Hinge A Geometry Layout" sheets.
9. For Detail C, see "Girder At East Transition Details No.5" sheet.
10. Thickness of non-SPCM PL shall be taken from PP122-PP125 column on Girder Plate Thickness Table, see "Typical Girder Details No.1" sheet.

LEGEND:

- "Indicates Field-Assembled panel"
- "Indicates SPCM shell PL"
- D — Girder face designation D
- -------- Stiffener Type 5, 6, 7, 8, 9, 13, 14, 15.
- ———— Edge beam (see Note 2)
- ---------- Longitudinal shear PL Type 2, UNO
- •••••••• Bolted splice (see Note 7)
- 5 — Stiffener Type 5
- R - Radius
- Pt A - Point A

ALL DIMENSIONS ARE IN MILLIMETERS UNLESS OTHERWISE SHOWN

REGISTERED PROFESSIONAL ENGINEER — Marwan N. Nader — No. C 054426 — Exp. 12/31/13 — CIVIL — STATE OF CALIFORNIA

FOR REVISIONS ONLY

CONTRACT CHANGE ORDER NO. ____
SHEET ____ OF ____

REQUESTS FOR INFORMATION NOT ADDRESSED IN THIS CCO REMAIN IN FORCE

MARK	DATE	DESCRIPTIONS	BY	CH'D	CCO#
3	03/09/12	EAST END OBG	MN	DT	87
2	11/05/10	PP119 ACCESS & PP125 PLATES	MN	GB	86
1	04/09/10	HINGE A MODIFICATIONS	MN	GB	120

REVISIONS

R. Vallzadeh/V. Toan/Y.L./W.L./F.C.
DESIGN OVERSIGHT
SIGN OFF DATE 03/09/12

	BY	CHECKED
DESIGN	G. Baker	P. Ritchie
DETAILS	M. Gulyas	T. McMeans
QUANTITIES	G. Baker	M. Roberts

PREPARED FOR THE STATE OF CALIFORNIA DEPARTMENT OF TRANSPORTATION

R. Manzanarez
PROJECT ENGINEER

BRIDGE NO. 34-0006L/R
KILOMETER POST 13.2/13.9

SAN FRANCISCO OAKLAND BAY BRIDGE
EAST SPAN SEISMIC SAFETY PROJECT
SELF-ANCHORED SUSPENSION BRIDGE
(SUPERSTRUCTURE & TOWER)

GIRDER AT EAST TRANSITION NO. 14

Rev. Date: 5-18-98

ORIGINAL SCALE IN MILLIMETERS FOR REDUCED PLANS 0 10 20 30 40 50 60 70 80 90 100

CU 04
EA 0120F1

DISREGARD PRINTS BEARING EARLIER REVISION DATES

REVISION DATES (PRELIMINARY STAGE ONLY): 08/28/99 | 05/31/01 | 01/08/02 | 07/08/02 | 12/13/02 | 05/16/03

SHEET 279R3 OF

FILE -> I:\bb\04-012001\sas\contract plans and cco\cco\cco#87\2-update 03-09-12\dgn\agegd10.dgn

USERNAME -> DWinrow DATE PLOTTED -> 09 MAR 2012 TIME PLOTTED -> 10:07:52

100% PS&E

Caltrans now has a web site! To get to the web site, go to: http://www.dot.ca.gov

Caltrans Metric

DIST.	COUNTY	ROUTE	KILOMETER POST TOTAL PROJECT	SHEET NO.	TOTAL SHEETS
04	SF	80	13.2/13.9	697R3	1204

George Baker
REGISTERED ENGINEER - CIVIL

12-6-04
PLANS APPROVAL DATE

The State of California or its officers or agents shall not be responsible for the accuracy or completeness of electronic copies of this plan sheet.

REGISTERED PROFESSIONAL ENGINEER — George S. Baker — No. C 57112 — Exp. 12/31/05 — CIVIL — STATE OF CALIFORNIA

T.Y. LIN / MOFFATT & NICHOL
825 BATTERY STREET
SAN FRANCISCO, CA 94111

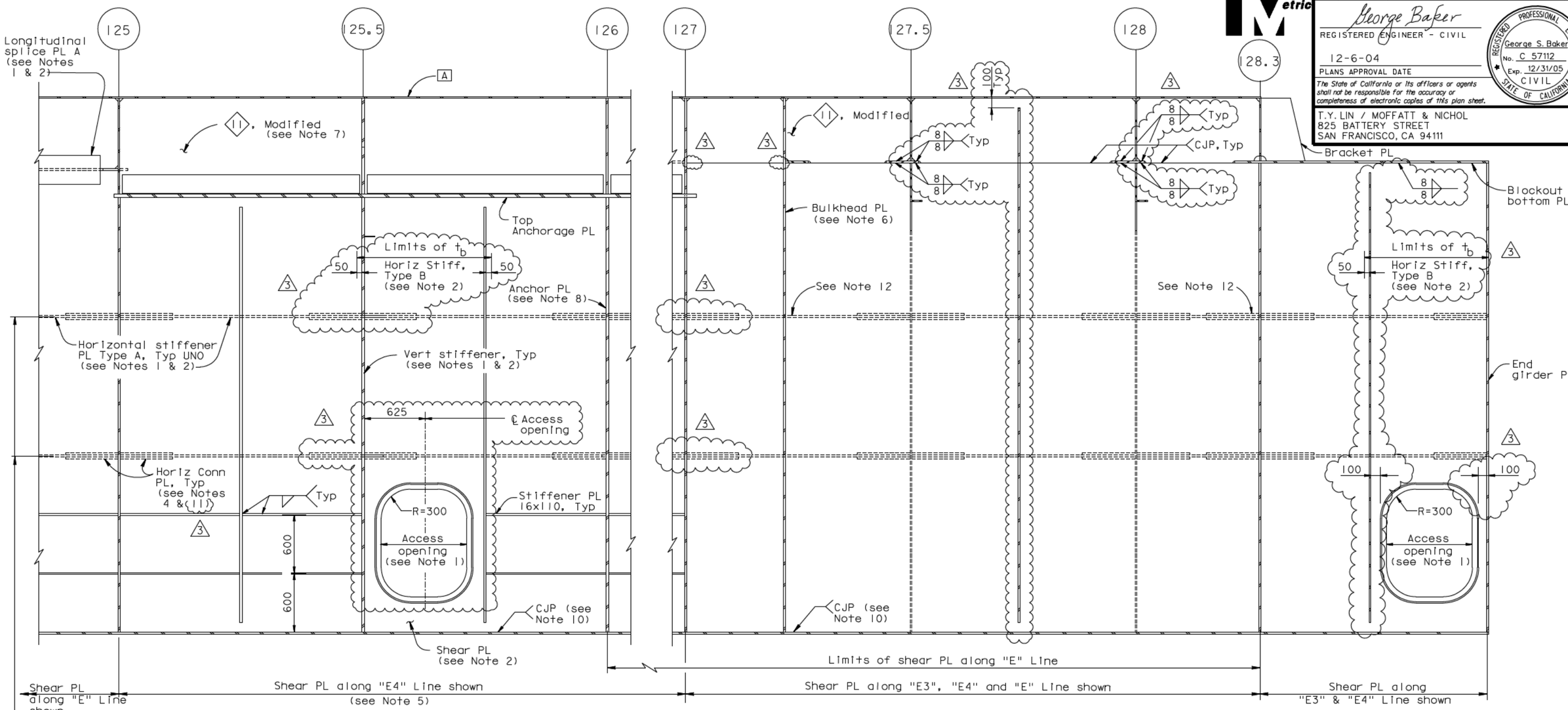

ELEVATION
LONGITUDINAL SHEAR PLATE TYPE 2
SECTION B-B

1:20

("E" Line girder shown, "W" Line girder similar)

Location to match horizontal stiffener spacing in typical girder section Type 2 (see Note 1)

10. The longitudinal shear PL to girder face "D" weld shall be a CJP from the CL splice near PP111 to PP128.7.

11. Horizontal connection detail applies only where existing floorbeam horizontal stiffeners coincide with shear PL stiffeners.

NOTES:

1. Longitudinal shear PL Type 2 from PP115 to PP125 is similar to longitudinal shear PL Type 2 in typical girder section Type 2. For details not shown, see "Typical Girder Details No.7" sheet.
2. For longitudinal shear PL Dimension Table and access opening locations from PP115 to hinge A, see "Girder At East Transition No.9" sheet.
3. For floorbeam details not shown, see "Floorbeam At East Transition" sheets.
4. For horizontal connection PL detail, see "Typical Girder Details No.9" sheet.
5. For detail of longitudinal shear PL Type 2 along "E3" Line from PP125 to PP127, see "Girder At East Transition No.6" sheet.
6. For details of bulkhead PL, see "Floorbeam At Transition No.8" sheet.
7. For details of 11, Modified not shown, see 12 on "Girder At East Transition No.17" sheet.
8. For details of anchor PL, see "East Cable Anchorage "E" Line Layout" and "East Cable Anchorage "W" Line Layout" sheets.
9. For details of end girder PL, see "Floorbeam At East Transition No.10" sheet.

ALL DIMENSIONS ARE IN MILLIMETERS UNLESS OTHERWISE SHOWN

CONTRACT CHANGE ORDER NO. ____
SHEET ___ OF ___

REQUESTS FOR INFORMATION NOT ADDRESSED IN THIS CCO REMAIN IN FORCE

Marwan N. Nader — No. C 054426 — Exp. 12/31/13 — CIVIL — STATE OF CALIFORNIA

FOR REVISIONS ONLY

MARK	DATE	DESCRIPTIONS	BY	CH'D	CCO#
3	03/09/12	EAST END OBG	GB	MN	87
2	07/31/09	LONGITUDINAL SHEAR PLATE	DT	GB	122
1	07/30/07	HINGE A REACTION-SHEAR PLATES	DT	GB	50

REVISIONS

R. Vallzadeh/V. Toan/Y. L./W. L./F. C.
DESIGN OVERSIGHT
SIGN OFF DATE 03/09/12

	BY	CHECKED
DESIGN	G. Baker	P. Ritchie
DETAILS	M. Gulyas	T. McMeans
QUANTITIES	G. Baker	M. Roberts

PREPARED FOR THE STATE OF CALIFORNIA DEPARTMENT OF TRANSPORTATION

R. Manzanarez
PROJECT ENGINEER

BRIDGE NO. 34-0006L/R
KILOMETER POST 13.2/13.9

CU 04
EA 0120F1

SAN FRANCISCO OAKLAND BAY BRIDGE
EAST SPAN SEISMIC SAFETY PROJECT
SELF-ANCHORED SUSPENSION BRIDGE
(SUPERSTRUCTURE & TOWER)

GIRDER AT EAST TRANSITION NO. 15

Rev. Date: 5-18-98

ORIGINAL SCALE IN MILLIMETERS FOR REDUCED PLANS 0 10 20 30 40 50 60 70 80 90 100

DISREGARD PRINTS BEARING EARLIER REVISION DATES

REVISION DATES (PRELIMINARY STAGE ONLY): 05/18/99 | 08/22/99 | 05/31/01 | 04/08/02 | 07/01/02 | 12/19/02 | 11/13/05

SHEET 280R3 OF

FILE -> L:\BB\04-012001\SAS\Contract Plans and CCO\CCO\CCO#87\2-Update 03-09-12\DGN\agand17.dgn

USERNAME -> DWinrow DATE PLOTTED -> 09 MAR 2012 TIME PLOTTED -> 10:09:33

100% PS&E

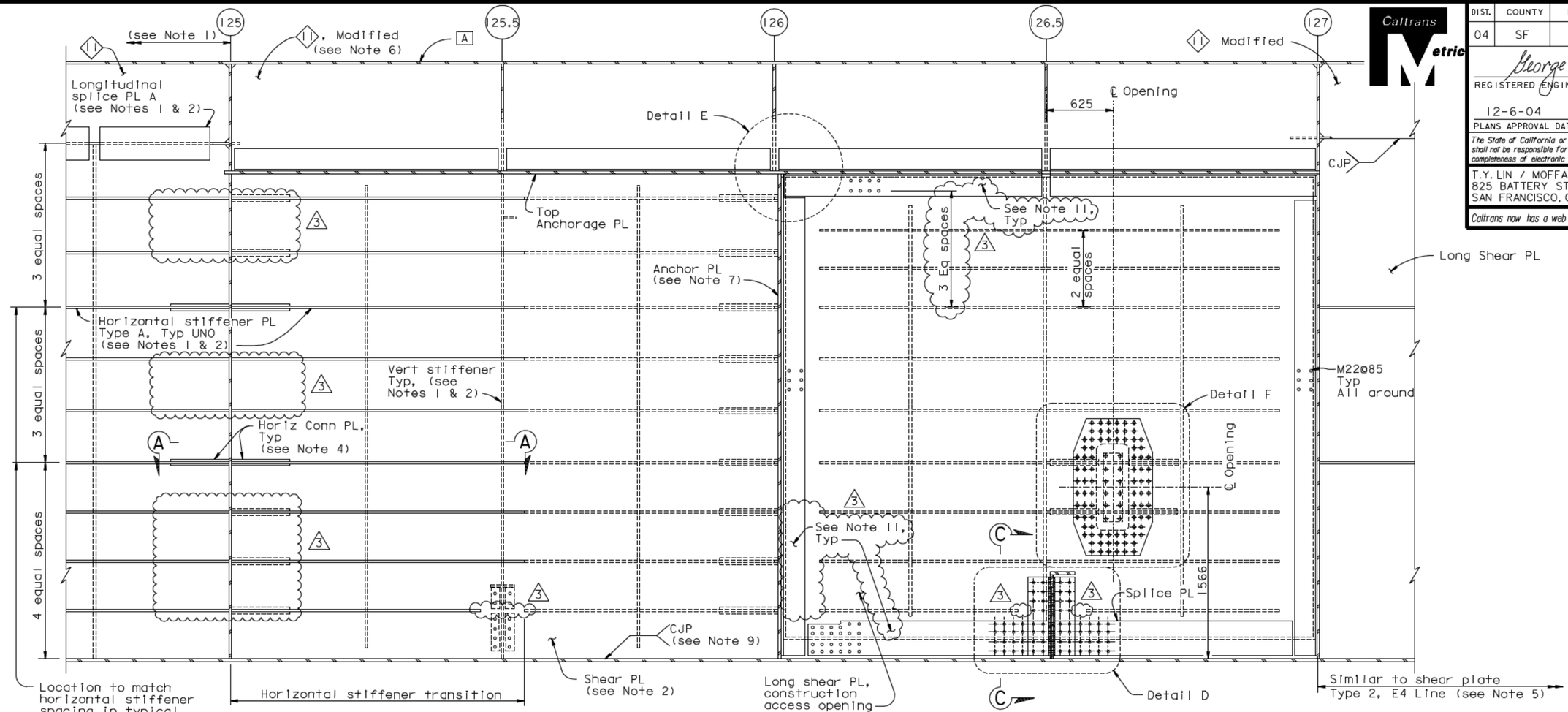

ELEVATION - LONGITUDINAL SHEAR PLATE TYPE 2, E3, W3 LINE ONLY (PP120 TO PP127)

SECTION C-C

1:20

(E3 Line shown, W3 Line similar)

NOTES:

1. Longitudinal shear plate Type 2 from PP115 to PP120 is similar to longitudinal shear plate Type 2 in typical girder section Type 2. For details not shown, see "Typical Girder Details No.7" sheet.
2. For longitudinal shear plate dimension table and access opening locations from PP115 to hinge A, see "Girder At East Transition No.9" sheet.
3. For floorbeam details not shown, see "Floorbeam At East Transition" sheets.
4. For horizontal connection plate detail, see "Typical Girder Details No.9" sheet.
5. For detail of longitudinal shear plate Type 2 from PP127 to PP128.7, see "Girder At East Transition No.15" sheet.
6. For details of ⟨11⟩, Modified not shown, see ⟨12⟩ on "Girder At East Transition No.17" sheet.
7. For details of anchor PL, see "East Cable Anchorage "W" Line Layout" and "East Cable Anchorage "W" Line Layout" sheets.
8. For Sections A-A, C-C and Details D and E, see "Girder At East Transition Details No.4" sheet.
9. The Longitudinal Shear Plate to Girder Face "D" weld shall be a CJP from the CL Splice near PP111 to PP128.7.
10. For Detail F, see "Girder At East Transition Details No.6" sheet.

△3 11. At the Contractor's option, the bolted splice between PP126 and PP127 may be replaced with a CJP weld, subject to review and approval of the Engineer.

ALL DIMENSIONS ARE IN MILLIMETERS UNLESS OTHERWISE SHOWN

Caltrans Metric

DIST.	COUNTY	ROUTE	KILOMETER POST TOTAL PROJECT	SHEET NO.	TOTAL SHEETS
04	SF	80	13.2/13.9	698R3	1204

George Baker
REGISTERED ENGINEER - CIVIL
12-6-04
PLANS APPROVAL DATE

REGISTERED PROFESSIONAL ENGINEER — George S. Baker — No. C 57112 — Exp. 12/31/05 — CIVIL — STATE OF CALIFORNIA

The State of California or its officers or agents shall not be responsible for the accuracy or completeness of electronic copies of this plan sheet.

T.Y. LIN / MOFFATT & NICHOL
825 BATTERY STREET
SAN FRANCISCO, CA 94111

Caltrans now has a web site! To get to the web site, go to: http://www.dot.ca.gov

Marwan N. Nader — No. C 054426 — Exp. 12/31/11 — CIVIL — REGISTERED PROFESSIONAL ENGINEER — STATE OF CALIFORNIA

FOR REVISIONS ⟨1⟩ AND ⟨2⟩ ONLY

Daniel J. Turner — No. C 65033 — Exp. 06/30/13 — CIVIL — REGISTERED PROFESSIONAL ENGINEER — STATE OF CALIFORNIA

FOR REVISIONS △3 ONLY

CONTRACT CHANGE ORDER NO. ____
SHEET ____ OF ____

REQUESTS FOR INFORMATION NOT ADDRESSED IN THIS CCO REMAIN IN FORCE

MARK	DATE	DESCRIPTIONS	BY	CH'D	CCO#
△3	09/01/11	EAST END OBG	DT	GB	87
△2	06/10/11	ADDITIONAL ACCESS AT EAST END	DT	MN	202
△1	07/31/09	LONGITUDINAL SHEAR PLATE	DT	GB	122

REVISIONS

	BY	CHECKED
DESIGN	G. Baker	P. Ritchie
DETAILS	M. Gulyas	T. McMeans
QUANTITIES	G. Baker	M. Roberts

R. Valizadeh/V. Toan/Y.L./W.L./F.C.
DESIGN OVERSIGHT
SIGN OFF DATE 09/01/11

PREPARED FOR THE STATE OF CALIFORNIA DEPARTMENT OF TRANSPORTATION

R. Manzanarez
PROJECT ENGINEER

BRIDGE NO. 34-0006L/R
KILOMETER POST 13.2/13.9

SAN FRANCISCO OAKLAND BAY BRIDGE EAST SPAN SEISMIC SAFETY PROJECT
SELF-ANCHORED SUSPENSION BRIDGE (SUPERSTRUCTURE & TOWER)

GIRDER AT EAST TRANSITION NO. 16

Rev. Date: 5-18-98

ORIGINAL SCALE IN MILLIMETERS FOR REDUCED PLANS 0 10 20 30 40 50 60 70 80 90 100

CU 04
EA 0120F1

DISREGARD PRINTS BEARING EARLIER REVISION DATES

REVISION DATES (PRELIMINARY STAGE ONLY): 5/18/98 08/06/98 05/27/01 04/08/02 07/18/02 12/19/02

SHEET 281R3 OF

FILE -> I:\bb\04-012001\sas\contract plans and cco\cco\cco#87\1-original 09-01-11\dgn\agandl0.dgn

USERNAME -> PTam DATE PLOTTED -> 30 AUG 2011 TIME PLOTTED -> 09:36:36

100% PS&E

DIST.	COUNTY	ROUTE	KILOMETER POST TOTAL PROJECT	SHEET NO.	TOTAL SHEETS
04	SF	80	13.2/13.9	699R	1204

George Baker
REGISTERED ENGINEER - CIVIL

12-6-04
PLANS APPROVAL DATE

The State of California or its officers or agents shall not be responsible for the accuracy or completeness of electronic copies of this plan sheet.

REGISTERED PROFESSIONAL ENGINEER — George S. Baker — No. C57112 — Exp. 12/31/05 — CIVIL — STATE OF CALIFORNIA

T.Y. LIN / MOFFATT & NICHOL
825 BATTERY STREET
SAN FRANCISCO, CA 94111

Caltrans now has a web site! To get to the web site, go to: http://www.dot.ca.gov

LEGEND:

"Indicates SPCM PL"

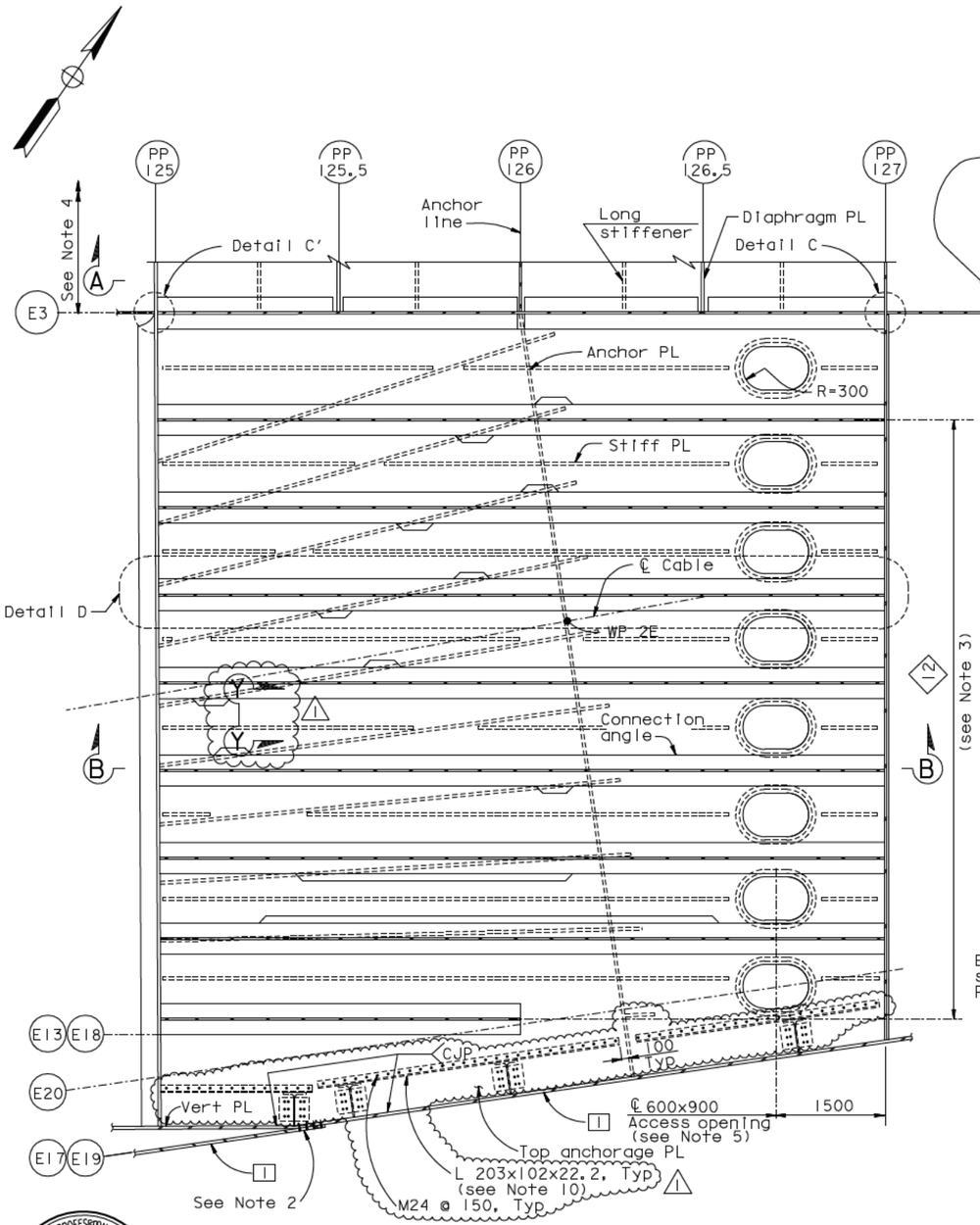

AT LEVEL OF TOP ANCHORAGE PLATE

PLAN SECTION

1:40

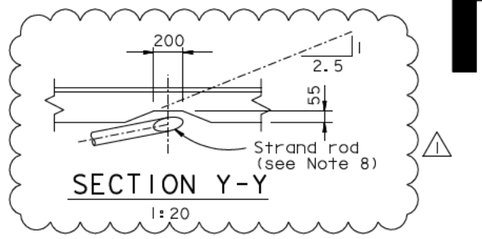

SECTION Y-Y

1:20

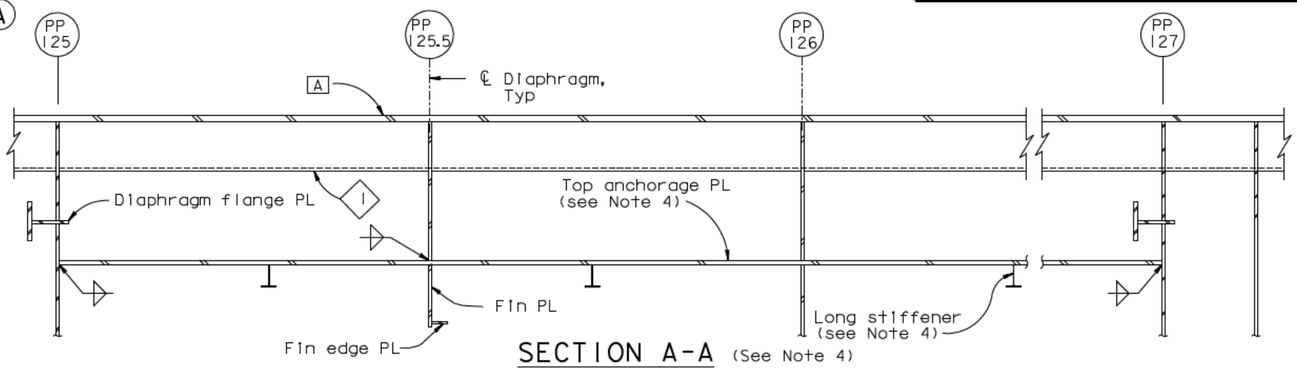

SECTION A-A (See Note 4)

1:20

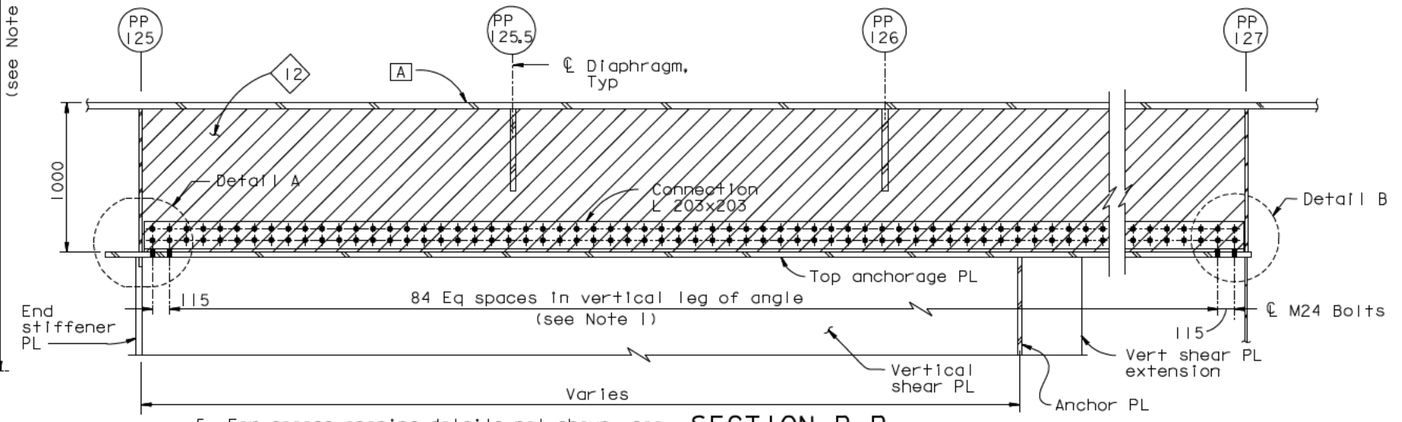

SECTION B-B

1:20

5. For access opening details not shown, see "Typical Girder Details No.7" sheet.
6. For bulkhead, see "Hinge A Details" sheets.
7. For Details A, B, C, C' and D, see "Girder At East Transition No.18" sheet.
8. Section Y-Y shall apply as required to provide 20 Min clearance to strand rod.
9. Top anchorage PL stiffener plates may be coped to provide additional clearance from strands, subject to review and approval of the Engineer.
10. At the Contractor's option, an equivalent built-up shape may be used, subject to review and approval of the Engineer.

NOTES:

1. For connection details of connection angle to top anchor PL, see "Girder At East Transition No.18" sheet.
2. For connection of vertical PL to girder PL 1, see "Girder At East Transition Details No.3" sheet.
3. For 12 spacing, see "Girder At East Transition No.6" sheet.
4. For details of top anchorage PL not shown, see "Crossbeam At East Anchorage" sheets.

REGISTERED PROFESSIONAL ENGINEER — Marwan N. Nader — No. C 054426 — Exp. 12/31/13 — CIVIL — STATE OF CALIFORNIA

FOR REVISIONS ONLY

CONTRACT CHANGE ORDER NO. ____
SHEET ___ OF ___

REQUESTS FOR INFORMATION NOT ADDRESSED IN THIS CCO REMAIN IN FORCE

ALL DIMENSIONS ARE IN MILLIMETERS UNLESS OTHERWISE SHOWN

SAN FRANCISCO OAKLAND BAY BRIDGE
EAST SPAN SEISMIC SAFETY PROJECT
SELF-ANCHORED SUSPENSION BRIDGE
(SUPERSTRUCTURE & TOWER)

GIRDER AT EAST TRANSITION NO. 17

R. Vallzadeh/V. Toan/Y.L./W.L./F.C.
DESIGN OVERSIGHT
Roya Vallzadeh / Vong Toan / Y Liu
SIGN OFF DATE 04/18/12

MARK	DATE	DESCRIPTIONS	BY	CH'D	CCO#
1	04/18/12	EAST END OBG	MN	GB	87

REVISIONS

	BY	CHECKED
DESIGN	G. Baker	P. Ritchie
DETAILS	M. Gulyas	T. McMeans
QUANTITIES	G. Baker	M. Roberts

PREPARED FOR THE STATE OF CALIFORNIA DEPARTMENT OF TRANSPORTATION

R. Manzanarez
PROJECT ENGINEER

BRIDGE NO.	34-0006L/R
KILOMETER POST	13.2/13.9

Rev. Date: 5-18-98

ORIGINAL SCALE IN MILLIMETERS FOR REDUCED PLANS 0 10 20 30 40 50 60 70 80 90 100

CU 04
EA 0120F1

DISREGARD PRINTS BEARING EARLIER REVISION DATES

REVISION DATES (PRELIMINARY STAGE ONLY): 01/15/99 05/15/99 08/02/99 05/31/01 04/08/02 07/01/02 12/19/02

SHEET 282R1 OF

FILE -> L:\BB\04-0120F1\SAS\Contract Plans and CCO\CCO\CCO#87\temp\agandll.dgn

USERNAME -> DWirrow DATE PLOTTED -> 18 APR 2012 TIME PLOTTED -> 11:15:37

100 % PS&E

DIST.	COUNTY	ROUTE	KILOMETER POST TOTAL PROJECT	SHEET NO.	TOTAL SHEETS
04	SF	80	13.2/13.9	699S	1204

REGISTERED ENGINEER - CIVIL

04-18-12

PLANS APPROVAL DATE

REGISTERED PROFESSIONAL ENGINEER
Marwan N. Nader
No. C 054426
Exp. 12/31/13
CIVIL
STATE OF CALIFORNIA

The State of California or its officers or agents shall not be responsible for the accuracy or completeness of electronic copies of this plan sheet.

T.Y. LIN / MOFFATT & NICHOL
825 BATTERY STREET
SAN FRANCISCO, CA 94111

Caltrans now has a web site! To get to the web site, go to: http://www.dot.ca.gov

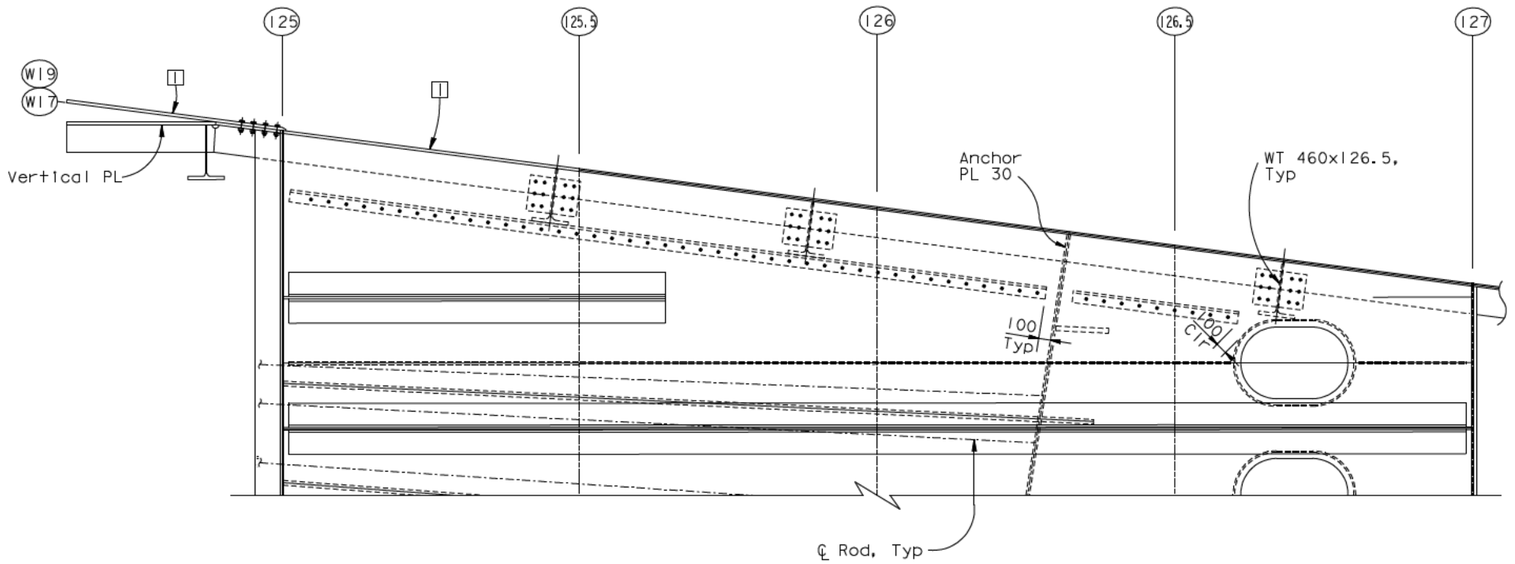

PARTIAL PLAN - TOP ANCHORAGE PLATE (1000 mm below deck)

1:25

CONTRACT CHANGE ORDER NO. _____
SHEET ____ OF ____

REQUESTS FOR INFORMATION NOT ADDRESSED IN THIS CCO REMAIN IN FORCE

ALL DIMENSIONS ARE IN MILLIMETERS UNLESS OTHERWISE SHOWN

R. Vallzadeh/V. Toan/Y.L./W.L./F.C.
DESIGN OVERSIGHT
SIGN OFF DATE 04/18/12

MARK	DATE	REVISIONS	BY	CH'D	CCO#
0	04/18/12	EAST END OBG	GB	MN	87

DESIGN	BY G. Baker	CHECKED M. Nader
DETAILS	BY G. Baker	CHECKED D. Turner
QUANTITIES	BY G. Baker	CHECKED D. Turner

PREPARED FOR THE STATE OF CALIFORNIA DEPARTMENT OF TRANSPORTATION

R. Manzanarez
PROJECT ENGINEER

BRIDGE NO. 34-0006L/R
KILOMETER POST 13.2/13.9

SAN FRANCISCO OAKLAND BAY BRIDGE
EAST SPAN SEISMIC SAFETY PROJECT
SELF-ANCHORED SUSPENSION BRIDGE
(SUPERSTRUCTURE & TOWER)

GIRDER AT EAST TRANSITION NO. 17A

Rev. Date: 5-18-98

ORIGINAL SCALE IN MILLIMETERS FOR REDUCED PLANS 0 10 20 30 40 50 60 70 80 90 100

CU 04
EA 0120F1

DISREGARD PRINTS BEARING EARLIER REVISION DATES →

REVISION DATES (PRELIMINARY STAGE ONLY): 04/18/12

SHEET 282S1 OF

FILE -> I:\bb\04-01200I\sas\contract plans and cco\cco\cco#87\temp\agandlla.dgn

100 % PS&E
DATE PLOTTED -> 18 APR 2012
TIME PLOTTED -> 11:16:49
USERNAME -> DWinrow

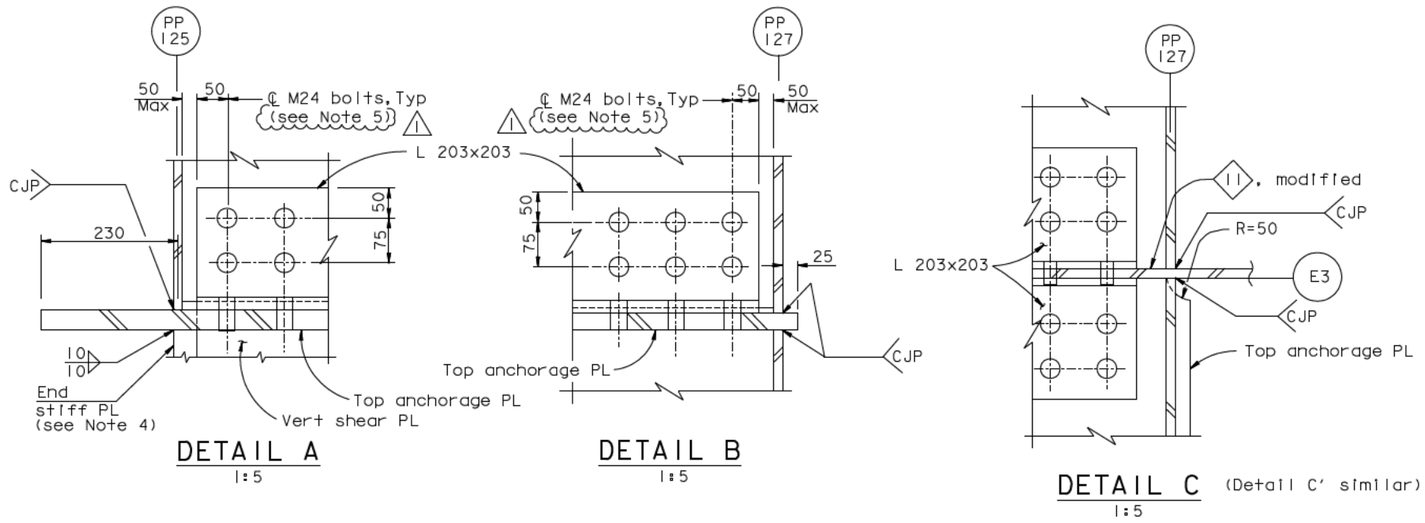

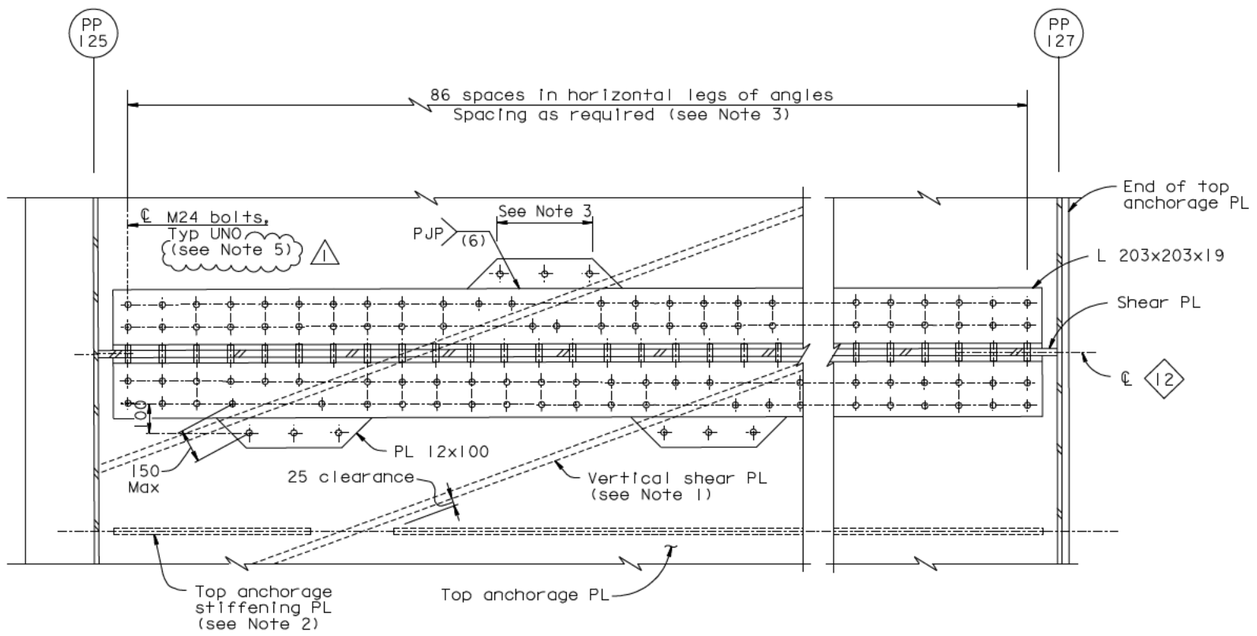

LEGEND:

⌖ High strength bolt

NOTES:

1. For details of vertical shear PL in east anchorage, see "East Cable Anchorage "E" Line Layout" and "East Cable Anchorage "W" Line Layout" sheets.
2. For spacing of top anchorage stiffening plates, see "Girder At East Transition No.5" and "Girder At East Transition No.6" sheets.
3. At each vertical shear PL, the bolt spaces in the L203 connection angles shall be detailed according to the Bolt Dimension Table on "Typical Girder Details No.1" sheet. Where the vertical shear PL interferes with placement of the indicated number of bolts, or the permissible maximum bolt spacing, then an outrigger PL shall be used as shown in Detail D. The length and placement of the outrigger shall be sufficient to seal the connection angle and to accommodate the displaced number of bolts.
4. For end stiffener PL, see "East Cable Anchorage "E" Line Layout No.2" sheet.
5. ⚠1 Oversize holes are acceptable for both the vertical and horizontal legs of the L 203x203x19 and the top anchor PL.

DIST.	COUNTY	ROUTE	KILOMETER POST TOTAL PROJECT	SHEET NO.	TOTAL SHEETS
04	SF	80	13.2/13.9	700R1	1204

George Baker
REGISTERED ENGINEER - CIVIL
12-6-04
PLANS APPROVAL DATE

REGISTERED PROFESSIONAL ENGINEER — George S. Baker — No. C 57112 — Exp. 12/31/05 — CIVIL — STATE OF CALIFORNIA

The State of California or its officers or agents shall not be responsible for the accuracy or completeness of electronic copies of this plan sheet.

T.Y. LIN / MOFFATT & NICHOL
825 BATTERY STREET
SAN FRANCISCO, CA 94111

Caltrans now has a web site! To get to the web site, go to: http://www.dot.ca.gov

REGISTERED PROFESSIONAL ENGINEER — Marwan N. Nader — No. C 054426 — Exp. 12/31/11 — CIVIL — STATE OF CALIFORNIA

FOR REVISIONS ONLY

CONTRACT CHANGE ORDER NO. ____
SHEET ___ OF ___

REQUESTS FOR INFORMATION NOT ADDRESSED IN THIS CCO REMAIN IN FORCE

ALL DIMENSIONS ARE IN MILLIMETERS UNLESS OTHERWISE SHOWN

100 % PS&E

DATE PLOTTED -> 30 AUG 2011 TIME PLOTTED -> 09:42:47

USERNAME -> PTom

DESIGN	BY G. Baker	CHECKED P. Ritchie	PREPARED FOR THE STATE OF CALIFORNIA DEPARTMENT OF TRANSPORTATION	R. Manzanarez PROJECT ENGINEER	BRIDGE NO. 34-0006L/R
DETAILS	BY S. Camo	CHECKED T. McMeans			KILOMETER POST 13.2/13.9
QUANTITIES	BY G. Baker	CHECKED M. Roberts			

SAN FRANCISCO OAKLAND BAY BRIDGE
EAST SPAN SEISMIC SAFETY PROJECT
SELF-ANCHORED SUSPENSION BRIDGE
(SUPERSTRUCTURE & TOWER)

GIRDER AT EAST TRANSITION NO. 18

MARK	DATE	DESCRIPTIONS	BY	CH'D	CCO#
⚠1	09/01/11	EAST END OBG	GB	MN	87

REVISIONS

R. Vallzadeh/V. Toan/Y.L./W.L./F.C.
DESIGN OVERSIGHT
SIGN OFF DATE 09/01/11

Rev. Date: 5-18-98

ORIGINAL SCALE IN MILLIMETERS FOR REDUCED PLANS 0 10 20 30 40 50 60 70 80 90 100

CU 04
EA 0120F1

DISREGARD PRINTS BEARING EARLIER REVISION DATES

REVISION DATES (PRELIMINARY STAGE ONLY)									SHEET	OF
05/15/99	08/22/99	05/31/01	04/08/02	07/01/02	12/18/02	11/13/05			283R1	

FILE -> I:\bb\04-0120I\sas\contract plans and cco\cco\cco#87\1-original 09-01-11\dgn\agandl2.dgn

DIST.	COUNTY	ROUTE	KILOMETER POST TOTAL PROJECT	SHEET NO.	TOTAL SHEETS
04	SF	80	13.2/13.9	70IR1	1204

George Baker
REGISTERED ENGINEER - CIVIL
12-6-04
PLANS APPROVAL DATE

The State of California or its officers or agents shall not be responsible for the accuracy or completeness of electronic copies of this plan sheet.

REGISTERED PROFESSIONAL ENGINEER — George S. Baker — No. C57112 — Exp. 12/31/05 — CIVIL — STATE OF CALIFORNIA

T.Y. LIN / MOFFATT & NICHOL
825 BATTERY STREET
SAN FRANCISCO, CA 94111

Caltrans now has a web site! To get to the web site, go to: http://www.dot.ca.gov

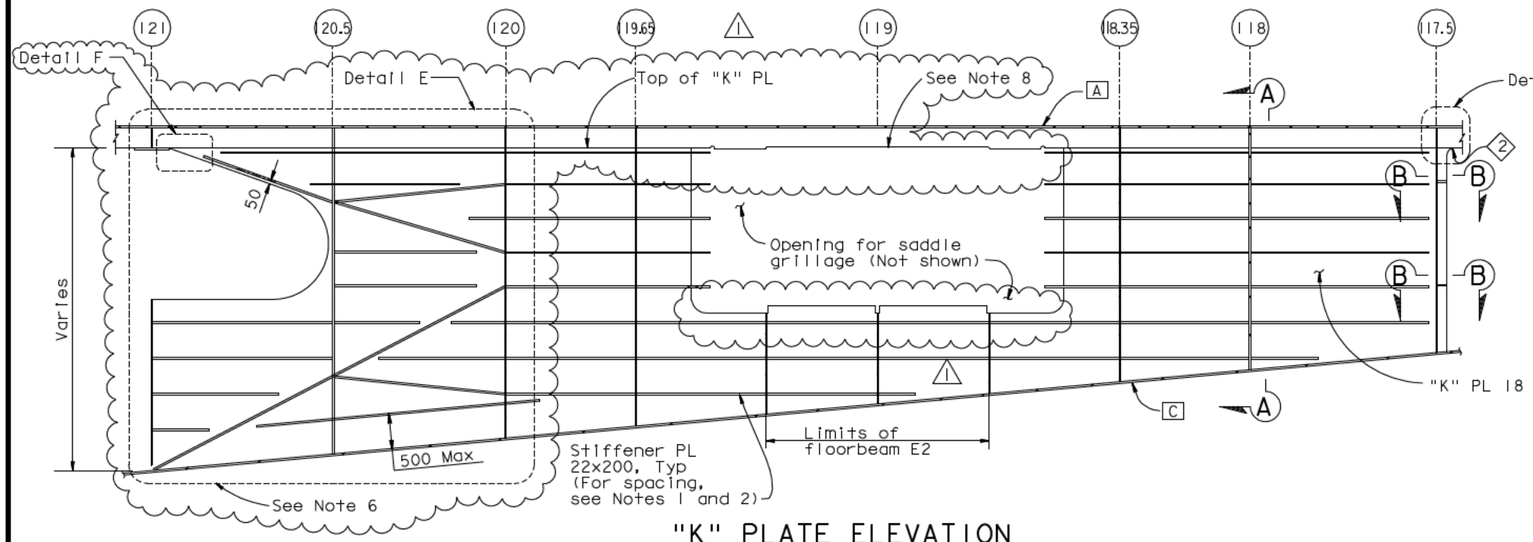

"K" PLATE ELEVATION
1:40

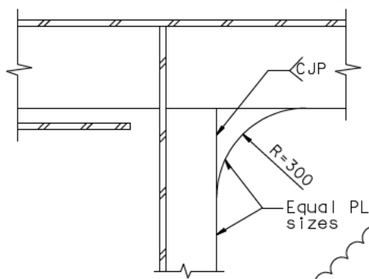

DETAIL D
1:10

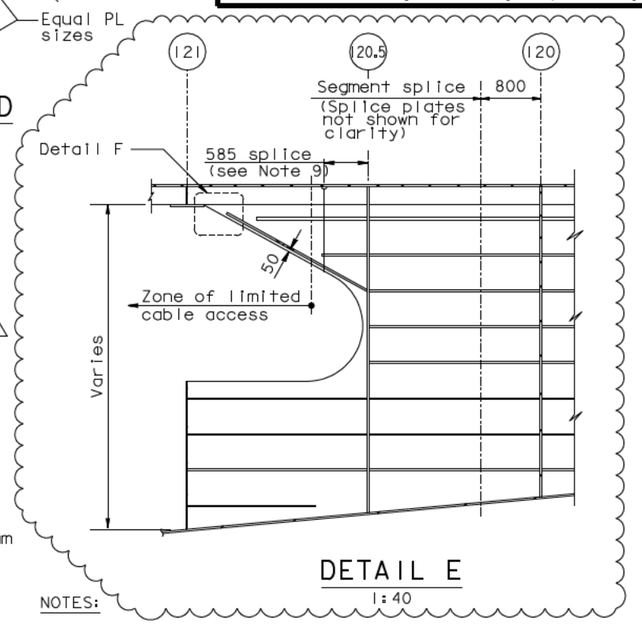

DETAIL E
1:40

SECTION A-A (Eastbound shown, Westbound similar)
1:40

DETAIL C
1:10

SECTION B-B
1:10

SECTION C-C
1:10

NOTES:

1. Spacing of "K" PL stiffeners shall match spacing of saddle grillage PL A, unless noted otherwise. For details, see "Girder At Pier E2 No. 5" sheet.
2. For transition and termination of stiffeners and other plates, see "Typical Girder Details No. 16" sheets.
3. For "K" PL location, see "Girder At East Transition No. 2" and "Girder At East Transition No. 4" sheets.
4. For "Girder at East Transition Details" sheets, all bolts shall be detailed according to the Bolt Dimension Table. See "Typical Girder Details No. 1" sheet. All bolts are HS UNO.
5. For "Girder at East Transition Details" sheets, UNO all fillet welds shall be 6 mm for plate sizes not greater than 20 mm. For plate sizes greater than 20 mm, fillet welds shall be 8 mm UNO.
6. For alternative stiffener layout, see Detail E.
7. For Detail F, see "Section Z-Z" on "Floorbeam At East Transition Details No. 3" sheet.
8. Trim or extend ⟨2⟩ stiffener to meet top grillage PL A based on final cable geometry.
9. The Contractor shall check the splice location welding access in area of cable.

Daniel A. Turner
REGISTERED PROFESSIONAL ENGINEER — Daniel A. Turner — No. C 65033 — Exp. 06/30/13 — CIVIL — STATE OF CALIFORNIA

FOR REVISIONS ONLY

CONTRACT CHANGE ORDER NO. _____
SHEET ____ OF ____

REQUESTS FOR INFORMATION NOT ADDRESSED IN THIS CCO REMAIN IN FORCE

ALL DIMENSIONS ARE IN MILLIMETERS UNLESS OTHERWISE SHOWN

R. Vallzadeh/V. Toan/Y.L./W.L./F.C.
DESIGN OVERSIGHT
SIGN OFF DATE 09/01/11

MARK	DATE	DESCRIPTIONS	BY	CH'D	CCO#
1	09/01/11	EAST END OBG	DT	GB	87

REVISIONS

DESIGN	BY G. Baker	CHECKED P. Ritchie
DETAILS	BY D. Veytsman	CHECKED T. McMeans
QUANTITIES	BY G. Baker	CHECKED M. Roberts

PREPARED FOR THE STATE OF CALIFORNIA
DEPARTMENT OF TRANSPORTATION

R. Manzanarez
PROJECT ENGINEER

BRIDGE NO. 34-0006L/R
KILOMETER POST 13.2/13.9

SAN FRANCISCO OAKLAND BAY BRIDGE
EAST SPAN SEISMIC SAFETY PROJECT
SELF-ANCHORED SUSPENSION BRIDGE
(SUPERSTRUCTURE & TOWER)

GIRDER AT EAST TRANSITION DETAILS NO. 1

Rev. Date: 5-18-98

ORIGINAL SCALE IN MILLIMETERS FOR REDUCED PLANS 0 10 20 30 40 50 60 70 80 90 100

CU 04
EA 0120F1

DISREGARD PRINTS BEARING EARLIER REVISION DATES

REVISION DATES (PRELIMINARY STAGE ONLY): 08/22/99 | 05/27/01 | 04/26/02 | 07/29/02 | 12/19/02

SHEET 284R1 OF

FILE -> I:\bb\04-0120F1\sas\contract plans and cco\cco\cco#87\1-original 09-01-11\dgn\agandl3.dgn

USERNAME -> PTom
DATE PLOTTED -> 30 AUG 2011
TIME PLOTTED -> 09:45:50
100 % PS&E

DIST.	COUNTY	ROUTE	KILOMETER POST TOTAL PROJECT	SHEET NO.	TOTAL SHEETS
04	SF	80	13.2/13.9	702R	1204

George Baker
REGISTERED ENGINEER - CIVIL

12-6-04
PLANS APPROVAL DATE

The State of California or its officers or agents shall not be responsible for the accuracy or completeness of electronic copies of this plan sheet.

REGISTERED PROFESSIONAL ENGINEER — George S. Baker — No. C57112 — Exp. 12/31/05 — CIVIL — STATE OF CALIFORNIA

T.Y. LIN / MOFFATT & NICHOL
825 BATTERY STREET
SAN FRANCISCO, CA 94111

Caltrans now has a web site! To get to the web site, go to: http://www.dot.ca.gov

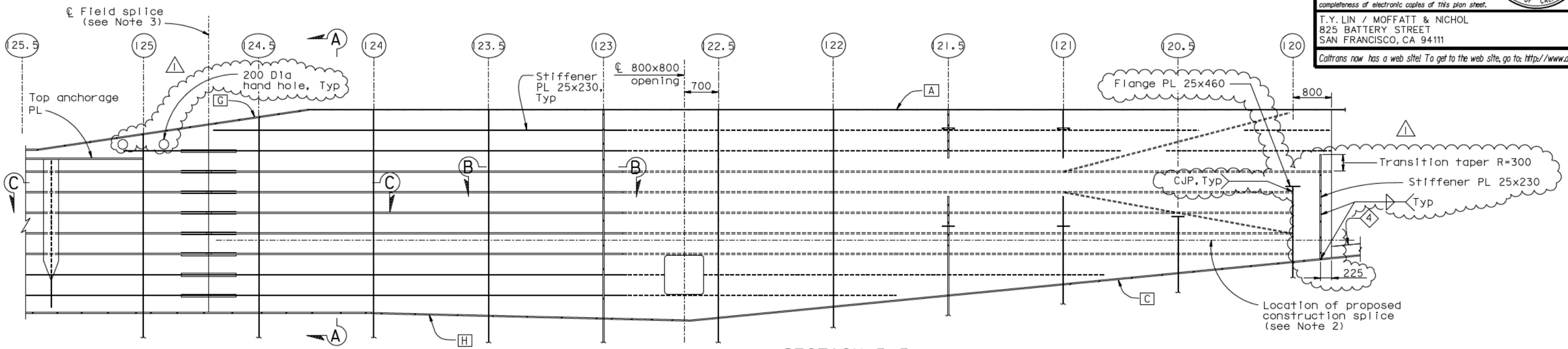

SECTION B-B
1:20

"E" Line girder shown
"W" Line girder similar & opposite hand (See Note 1)

VERTICAL PLATE ELEVATION
1:40

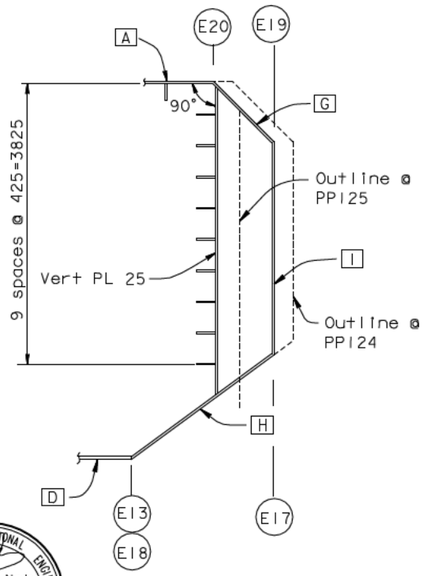

SECTION A-A
1:40

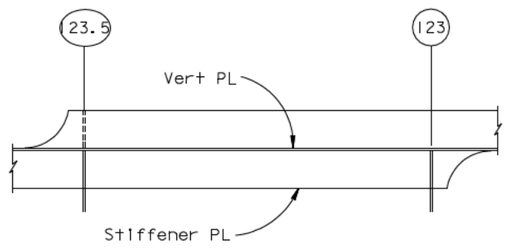

STIFFENER TRANSITION

SECTION B-B
1:20

NOTES:

1. Vertical PL is perpendicular to girder face A. For location, see "Girder At East Transition No.2" and "Girder At East Transition No.4" sheets.
2. For construction splice details not shown, see "East Anchorage Construction Details" sheets
3. For field splice details and for Section C-C, see "Girder At East Transition Details No.3" sheet.

Marwan N. Nader — No. C 054426 — Exp. 12/31/13 — CIVIL — STATE OF CALIFORNIA

FOR REVISIONS ONLY

CONTRACT CHANGE ORDER NO. ____
SHEET ___ OF ___

REQUESTS FOR INFORMATION NOT ADDRESSED IN THIS CCO REMAIN IN FORCE

ALL DIMENSIONS ARE IN MILLIMETERS UNLESS OTHERWISE SHOWN

R. Vallzadeh/V. Toan/Y.L./W.L./F.C.
DESIGN OVERSIGHT
SIGN OFF DATE 04/18/12

MARK	DATE	REVISIONS	BY	CH'D	CCO#
1	04/18/12	EAST END OBG	MN	GB	87

	BY	CHECKED
DESIGN	G. Baker	P. Ritchie
DETAILS	M. Gulyas	T. McMeans
QUANTITIES	G. Baker	M. Roberts

PREPARED FOR THE STATE OF CALIFORNIA DEPARTMENT OF TRANSPORTATION

R. Manzanarez
PROJECT ENGINEER

BRIDGE NO. 34-0006L/R
KILOMETER POST 12.6/13.9

SAN FRANCISCO OAKLAND BAY BRIDGE
EAST SPAN SEISMIC SAFETY PROJECT
SELF-ANCHORED SUSPENSION BRIDGE
(SUPERSTRUCTURE & TOWER)

GIRDER AT EAST TRANSITION DETAILS NO.2

Rev. Date: 5-18-98

ORIGINAL SCALE IN MILLIMETERS FOR REDUCED PLANS 0 10 20 30 40 50 60 70 80 90 100

CU 04
EA 012061

DISREGARD PRINTS BEARING EARLIER REVISION DATES

REVISION DATES (PRELIMINARY STAGE ONLY)									
05/27/99	05/31/01	01/08/02	07/31/02	12/19/02					

SHEET 285R1 OF

FILE -> I:\bb\04-012001\sas\contract plans and cco\cco\cco#87\temp\agand14.dgn

USERNAME -> DWinrow DATE PLOTTED -> 18 APR 2012 TIME PLOTTED -> 11:17:58

100 % PS&E

DIST.	COUNTY	ROUTE	KILOMETER POST TOTAL PROJECT	SHEET NO.	TOTAL SHEETS
04	SF	80	13.2/13.9	703R2	1204

George Baker
REGISTERED ENGINEER - CIVIL

12-6-04
PLANS APPROVAL DATE

The State of California or its officers or agents shall not be responsible for the accuracy or completeness of electronic copies of this plan sheet.

REGISTERED PROFESSIONAL ENGINEER — George S. Baker — No. C57112 — Exp. 12/31/05 — CIVIL — STATE OF CALIFORNIA

T.Y. LIN / MOFFATT & NICHOL
825 BATTERY STREET
SAN FRANCISCO, CA 94111

Caltrans now has a web site! To get to the web site, go to: http://www.dot.ca.gov

Caltrans Metric

9. At the Contractor's option, ASTM A992 or ASTM A572 Gr 345 may be used in lieu of ASTM A709 for rib splice angles for Types 5 & 7 stiffeners.

10. At the Contractor's option, an equivalent built-up shape may be used, subject to review and approval of the Engineer.

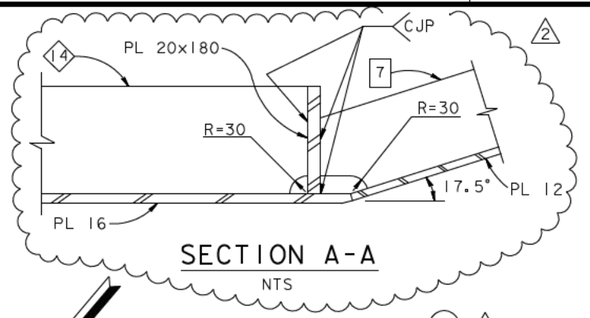

SECTION A-A
NTS

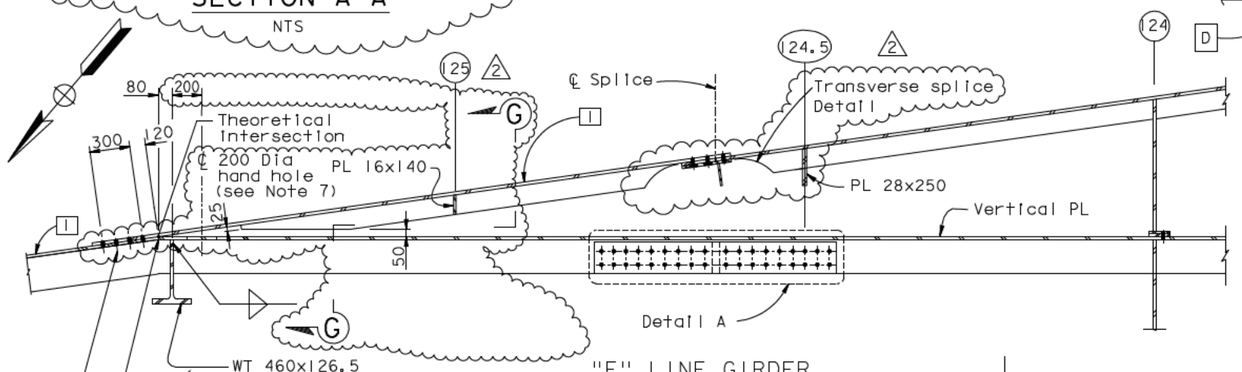

"E" LINE GIRDER
SECTION C-C
1:20

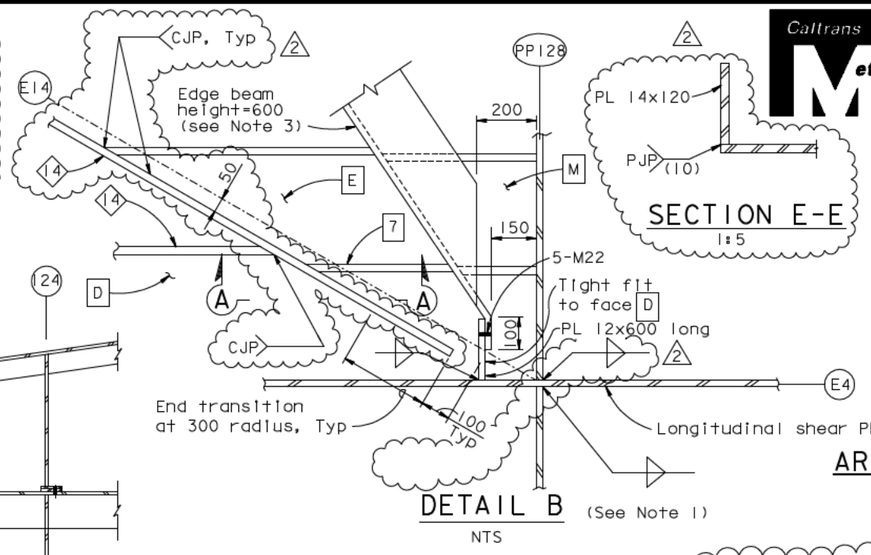

DETAIL B (See Note 1)
NTS

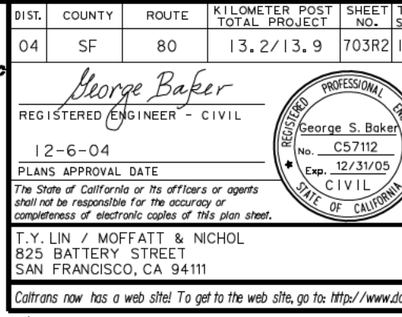

SECTION E-E
1:5

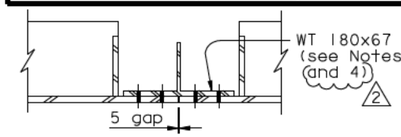

ARCHITECTURAL SPLICE DETAIL
1:10

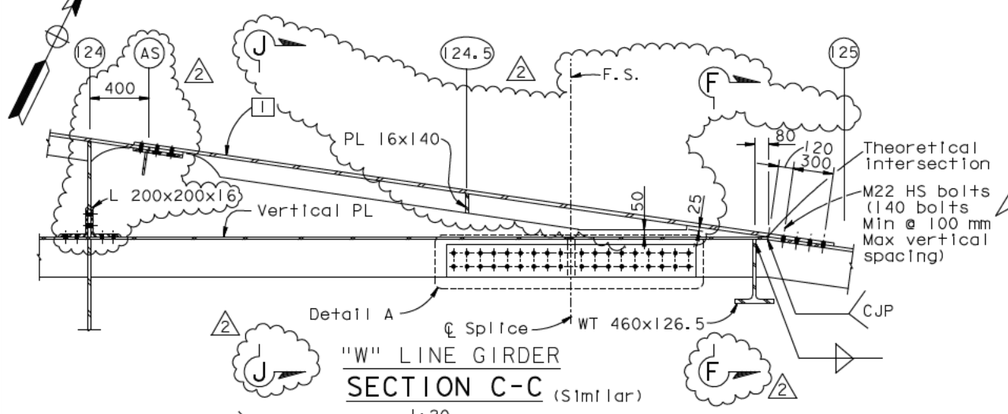

"W" LINE GIRDER
SECTION C-C (Similar)
1:20

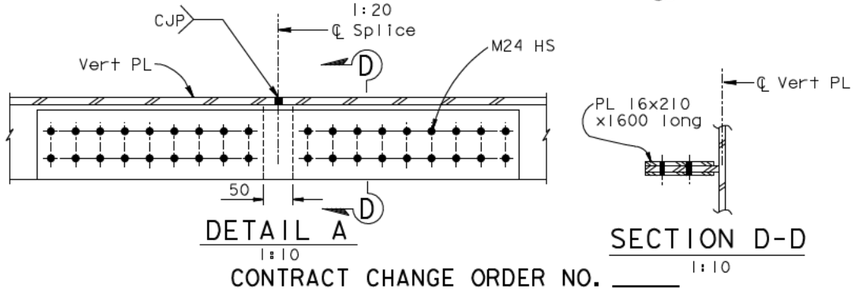

DETAIL A
1:10

SECTION D-D
1:10

CONTRACT CHANGE ORDER NO. _____
SHEET ___ OF ___

REQUESTS FOR INFORMATION NOT ADDRESSED IN THIS CCO REMAIN IN FORCE

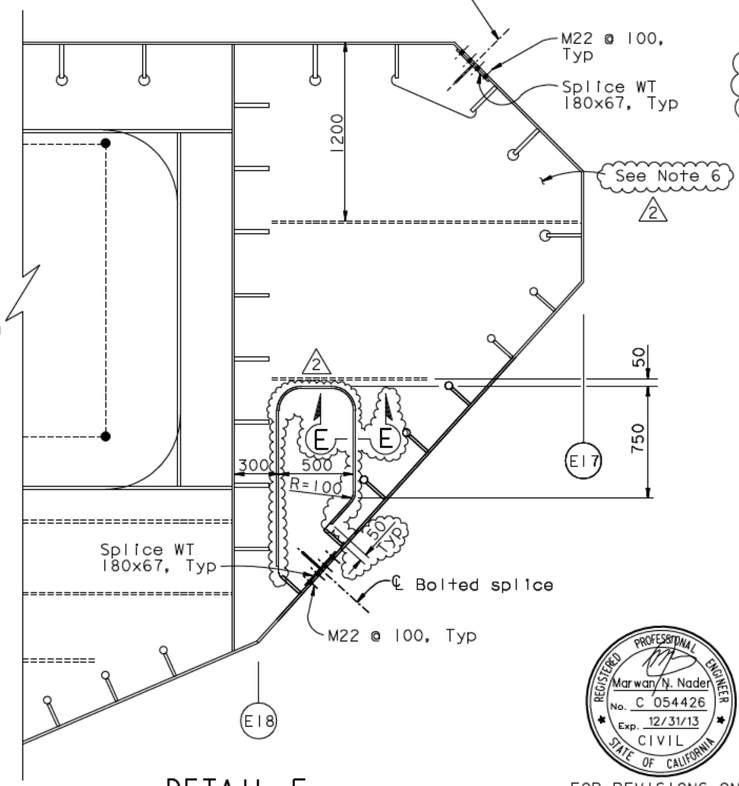

DETAIL E
ARCHITECTURAL PLATE SPLICES
1:20

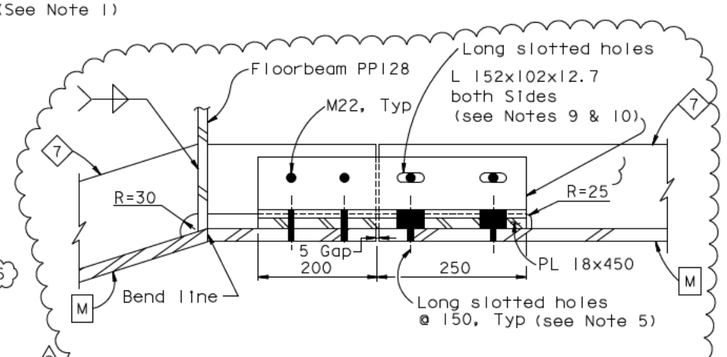

ARCHITECTURAL SPLICE DETAIL AT PP128
1:5

NOTES:

1. Detail B shown at E4; W4 similar. For location of Detail B, see Detail A on "Girder At East Transition No. 14" sheet.
2. Bolt holes in architectural splice plates shall be long slotted in the longitudinal direction of the bridge.
3. Edge beam shall have same dimensions and details as longitudinal shear PL Type 1 UNO. See "Typical Girder Details No. 8" and "Typical Floorbeam Details No. 5" sheets.
4. WT 180x67 A709 Grade 345 may be substituted with grade A992 rolled shape of equivalent Imperial size, subject to review and approval of the Engineer.
5. The long slots shall be in the longitudinal direction of the Bridge. The outer shim PL shall not be slotted.
6. For optional splice details, see "East Anchorage Details" sheets.
7. Handhole centered 150 above girder face H.
8. For Sections F-F, G-G and J-J, see "Girder East Transition Details No. 3A" sheet.

REGISTERED PROFESSIONAL ENGINEER — Marwan N. Nader — No. C 054426 — Exp. 12/31/13 — CIVIL — STATE OF CALIFORNIA

FOR REVISIONS ONLY

ALL DIMENSIONS ARE IN MILLIMETERS UNLESS OTHERWISE SHOWN

MARK	DATE	DESCRIPTIONS	BY	CH'D	CCO#
2	04/18/12	EAST END OBG	MN	GB	87
1	11/05/10	PP119 ACCESS & PP125 PLATES	GB	DT	86

REVISIONS

R. Vallzadeh/V. Toan/Y.L./W.L./F.C.
DESIGN OVERSIGHT
SIGN OFF DATE 04/18/12

	BY	CHECKED
DESIGN	G. Baker	P. Ritchie
DETAILS	D. Veytsman	T. McMeans
QUANTITIES	G. Baker	M. Roberts

PREPARED FOR THE STATE OF CALIFORNIA
DEPARTMENT OF TRANSPORTATION

R. Manzanarez
PROJECT ENGINEER

BRIDGE NO. 34-0006L/R
KILOMETER POST 13.2/13.9

SAN FRANCISCO OAKLAND BAY BRIDGE
EAST SPAN SEISMIC SAFETY PROJECT
SELF-ANCHORED SUSPENSION BRIDGE (SUPERSTRUCTURE & TOWER)

GIRDER AT EAST TRANSITION DETAILS NO. 3

Rev. Date: 5-18-98

ORIGINAL SCALE IN MILLIMETERS FOR REDUCED PLANS 0 10 20 30 40 50 60 70 80 90 100

CU 04
EA 0120F1

DISREGARD PRINTS BEARING EARLIER REVISION DATES

REVISION DATES (PRELIMINARY STAGE ONLY): 08/02/99 05/31/01 09/06/02 07/01/02 12/19/02

SHEET 286R2 OF

FILE -> I:\bb\04-012001\sas\contract plans and cco\cco\cco#87\temp\agand16.dgn

USERNAME -> DWinrow DATE PLOTTED -> 18 APR 2012 TIME PLOTTED -> 11:18:47

100 % PS&E

DIST.	COUNTY	ROUTE	KILOMETER POST TOTAL PROJECT	SHEET NO.	TOTAL SHEETS
04	SF	80	13.2/13.9	703SI	1204

REGISTERED ENGINEER - CIVIL

09/01/11

PLANS APPROVAL DATE

Registered Professional Engineer — Marwan N. Nader — No. C 054426 — Exp. 12/31/11 — CIVIL — State of California

The State of California or its officers or agents shall not be responsible for the accuracy or completeness of electronic copies of this plan sheet.

T.Y. LIN / MOFFATT & NICHOL
825 BATTERY STREET
SAN FRANCISCO, CA 94111

Caltrans now has a web site! To get to the web site, go to: http://www.dot.ca.gov

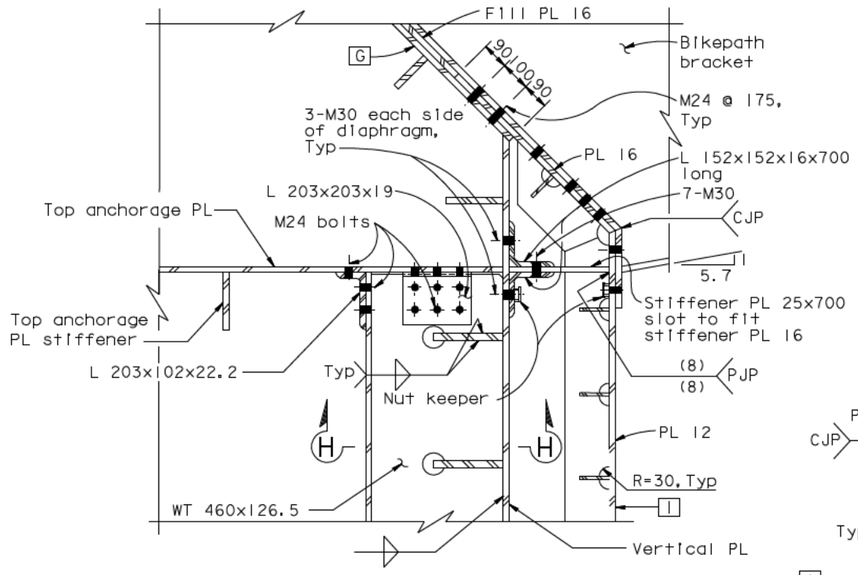

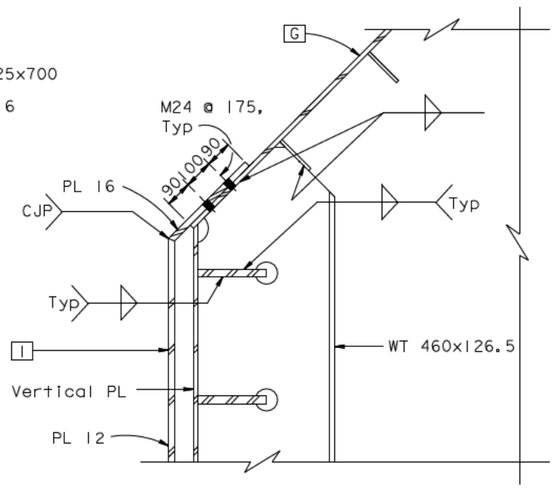

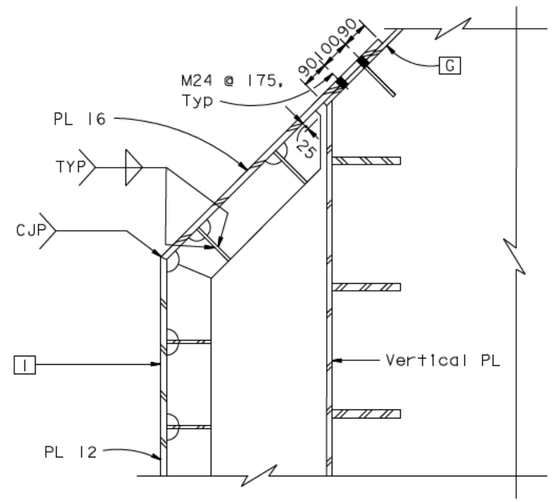

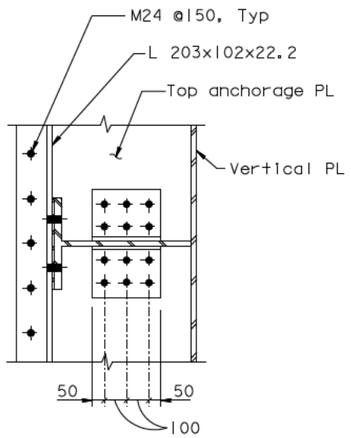

SECTION H-H (See Note 1)
1:10

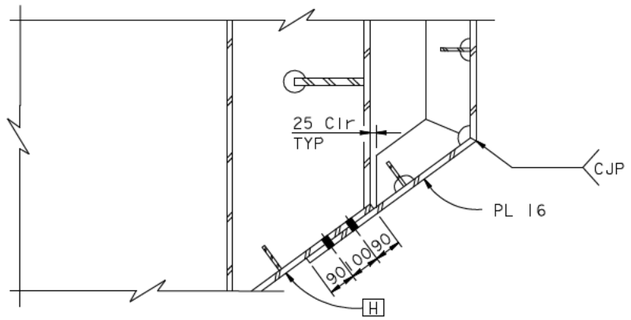

SECTION G-G
1:10

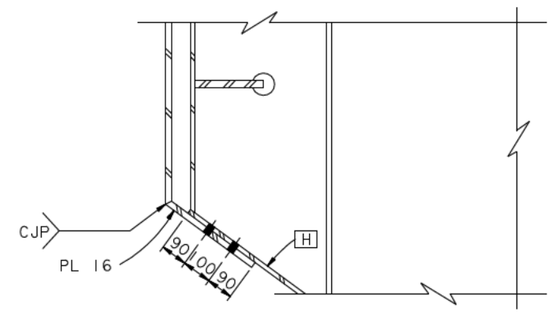

SECTION F-F
1:10

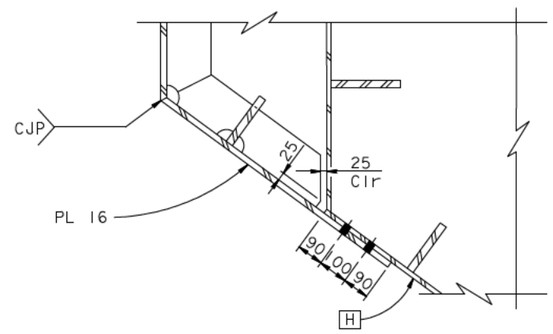

SECTION J-J
1:10

NOTES:

1. Section H-H applies at all WT connections to top anchorage PL "E" Line and "W" Line.

CONTRACT CHANGE ORDER NO. _____
SHEET ____ OF ____

REQUESTS FOR INFORMATION NOT ADDRESSED IN THIS CCO REMAIN IN FORCE

ALL DIMENSIONS ARE IN MILLIMETERS UNLESS OTHERWISE SHOWN

R. Vallzadeh/V. Toan/Y.L./W.L./F.C.
DESIGN OVERSIGHT
SIGN OFF DATE 09/01/11

MARK	DATE	DESCRIPTIONS	BY	CH'D	CCO#
0	09/01/11	EAST END OBG	GB	MN	87

REVISIONS

	BY		CHECKED	
DESIGN	BY	G. Baker	CHECKED	M. Nader
DETAILS	BY	G. Baker	CHECKED	D. Turner
QUANTITIES	BY	G. Baker	CHECKED	D. Turner

PREPARED FOR THE STATE OF CALIFORNIA DEPARTMENT OF TRANSPORTATION

R. Manzanarez
PROJECT ENGINEER

BRIDGE NO.	34-0006L/R
KILOMETER POST	13.2/13.9

SAN FRANCISCO OAKLAND BAY BRIDGE
EAST SPAN SEISMIC SAFETY PROJECT
SELF-ANCHORED SUSPENSION BRIDGE
(SUPERSTRUCTURE & TOWER)

GIRDER AT EAST TRANSITION DETAILS NO. 3A

Rev. Date: 5-18-98

ORIGINAL SCALE IN MILLIMETERS FOR REDUCED PLANS 0 10 20 30 40 50 60 70 80 90 100

CU 04
EA 0120F1

DISREGARD PRINTS BEARING EARLIER REVISION DATES →

REVISION DATES (PRELIMINARY STAGE ONLY): 09/01/11

SHEET 286SI OF

FILE -> I:\bb\04-0120F1\sas\contract plans and cco\cco\cco#87\1-original 09-01-11\dgn\agandl6a.dgn

USERNAME -> PTom
DATE PLOTTED -> 30 AUG 2011 TIME PLOTTED -> 09:55:09
100 % @ PS&E

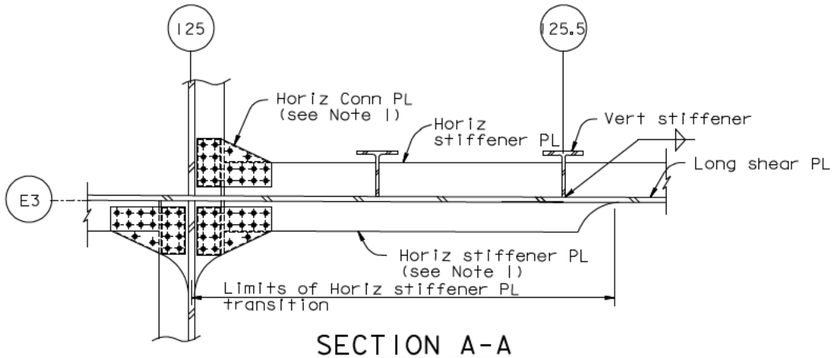

SECTION A-A
1:20

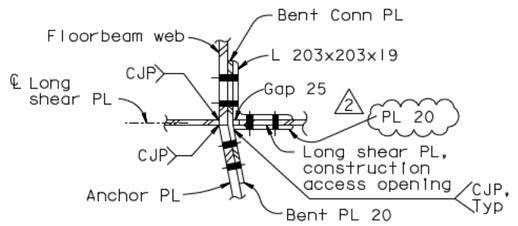

SECTION B-B (See Note 2) 2
1:10

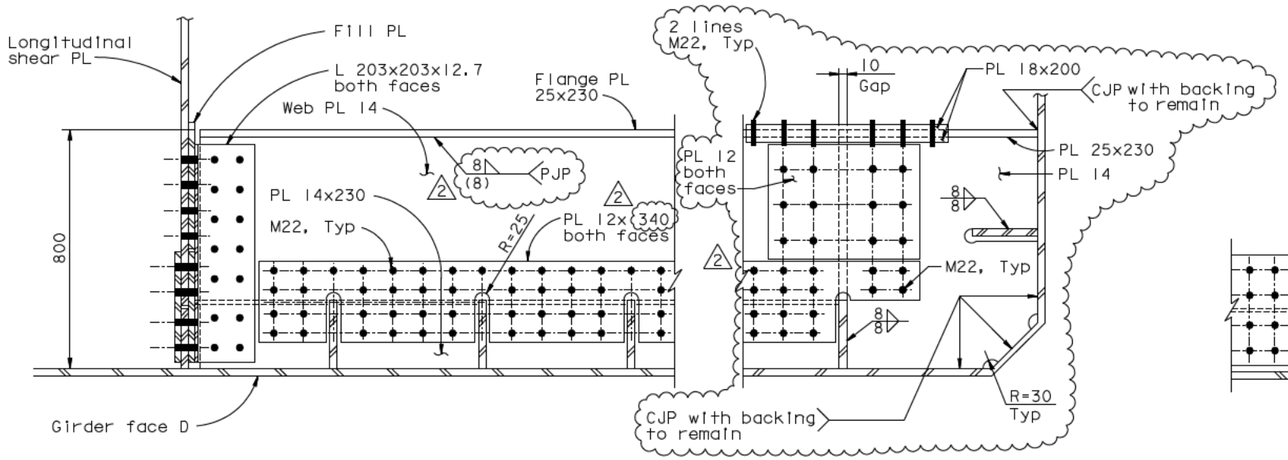

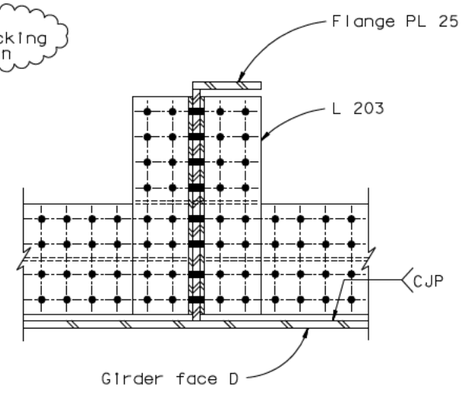

DETAIL D
1:10

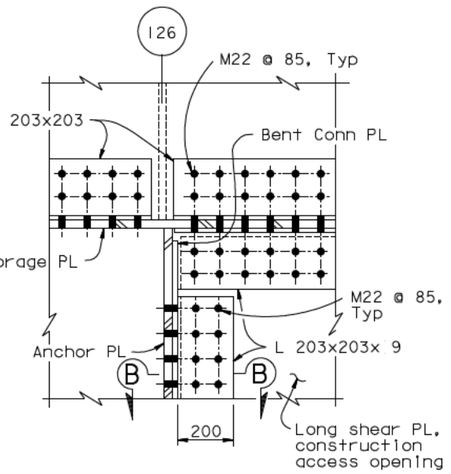

DETAIL E
1:10

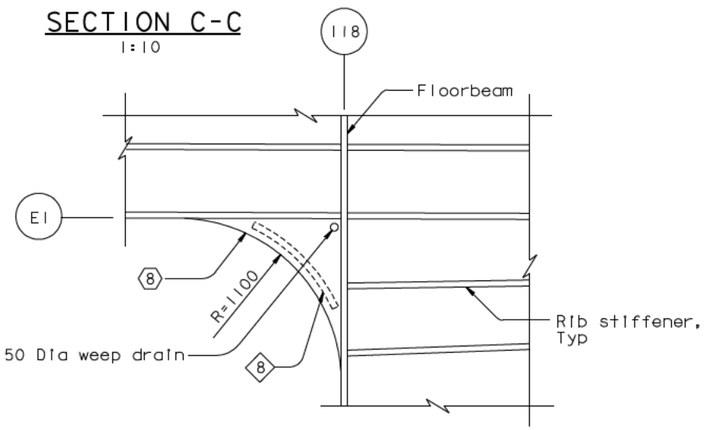

DETAIL F
1:20

SECTION C-C
1:10

NOTES:

1. For horizontal connection PL detail, see "Typical Girder Details No.9" sheet.

2 2. At the Contractor's option, the bolted splice at the longitudinal shear plate construction access opening may be replaced with a CJP weld, subject to review and approval of the Engineer.

ALL DIMENSIONS ARE IN MILLIMETERS UNLESS OTHERWISE SHOWN

CONTRACT CHANGE ORDER NO. ____
SHEET ___ OF ___

REQUESTS FOR INFORMATION NOT ADDRESSED IN THIS CCO REMAIN IN FORCE

FOR REVISIONS ONLY

Marwan N. Nader
No. C 054426
Exp. 12/31/13
CIVIL
STATE OF CALIFORNIA

DIST.	COUNTY	ROUTE	KILOMETER POST TOTAL PROJECT	SHEET NO.	TOTAL SHEETS
04	SF	80	13.2/13.9	704R2	1204

George Baker
REGISTERED ENGINEER - CIVIL
12-6-04
PLANS APPROVAL DATE

George S. Baker
No. C 57112
Exp. 12/31/05
CIVIL
STATE OF CALIFORNIA

The State of California or its officers or agents shall not be responsible for the accuracy or completeness of electronic copies of this plan sheet.

T.Y. LIN / MOFFATT & NICHOL
825 BATTERY STREET
SAN FRANCISCO, CA 94111

Caltrans now has a web site! To get to the web site, go to: http://www.dot.ca.gov

MARK	DATE	REVISIONS	BY	CH'D	CCO#
2	04/18/12	EAST END OBG	MN	GB	87
1	07/31/09	LONGITUDINAL SHEAR PLATE	DT	GB	122

R. Vallzadeh/V. Toan/Y.L./W.L./F.C.
DESIGN OVERSIGHT
SIGN OFF DATE 04/18/12

	BY	CHECKED
DESIGN	G. Baker	P. Ritchie
DETAILS	D. Veytsman	T. McMeans
QUANTITIES	G. Baker	M. Roberts

PREPARED FOR THE STATE OF CALIFORNIA
DEPARTMENT OF TRANSPORTATION

R. Manzanarez
PROJECT ENGINEER

BRIDGE NO. 34-0006L/R
KILOMETER POST 13.2/13.9

SAN FRANCISCO OAKLAND BAY BRIDGE
EAST SPAN SEISMIC SAFETY PROJECT
SELF-ANCHORED SUSPENSION BRIDGE
(SUPERSTRUCTURE & TOWER)

GIRDER AT EAST TRANSITION DETAILS NO. 4

Rev. Date: 5-18-98

ORIGINAL SCALE IN MILLIMETERS FOR REDUCED PLANS 0 10 20 30 40 50 60 70 80 90 100

CU 04
EA 0120F1

DISREGARD PRINTS BEARING EARLIER REVISION DATES

REVISION DATES (PRELIMINARY STAGE ONLY) 04/18/12 07/31/12 12/19/12

SHEET 287R2 OF

FILE -> I:\bb\04-0120F1\sas\contract plans and cco\cco\cco#87\temp\agand15.dgn

USERNAME -> DWinrow DATE PLOTTED -> 18 APR 2012 TIME PLOTTED -> 11:19:49

100 % PS&E

DIST.	COUNTY	ROUTE	KILOMETER POST TOTAL PROJECT	SHEET NO.	TOTAL SHEETS
04	SF	80	13.2/13.9	704SIR1	1204

REGISTERED ENGINEER - CIVIL

04-09-10
PLANS APPROVAL DATE

REGISTERED PROFESSIONAL ENGINEER — Marwan N. Nader — No. C 054426 — Exp. 12/31/11 — CIVIL — STATE OF CALIFORNIA

The State of California or its officers or agents shall not be responsible for the accuracy or completeness of electronic copies of this plan sheet.

T.Y. LIN / MOFFATT & NICHOL
825 BATTERY STREET
SAN FRANCISCO, CA 94111

Caltrans now has a web site! To get to the web site, go to: http://www.dot.ca.gov

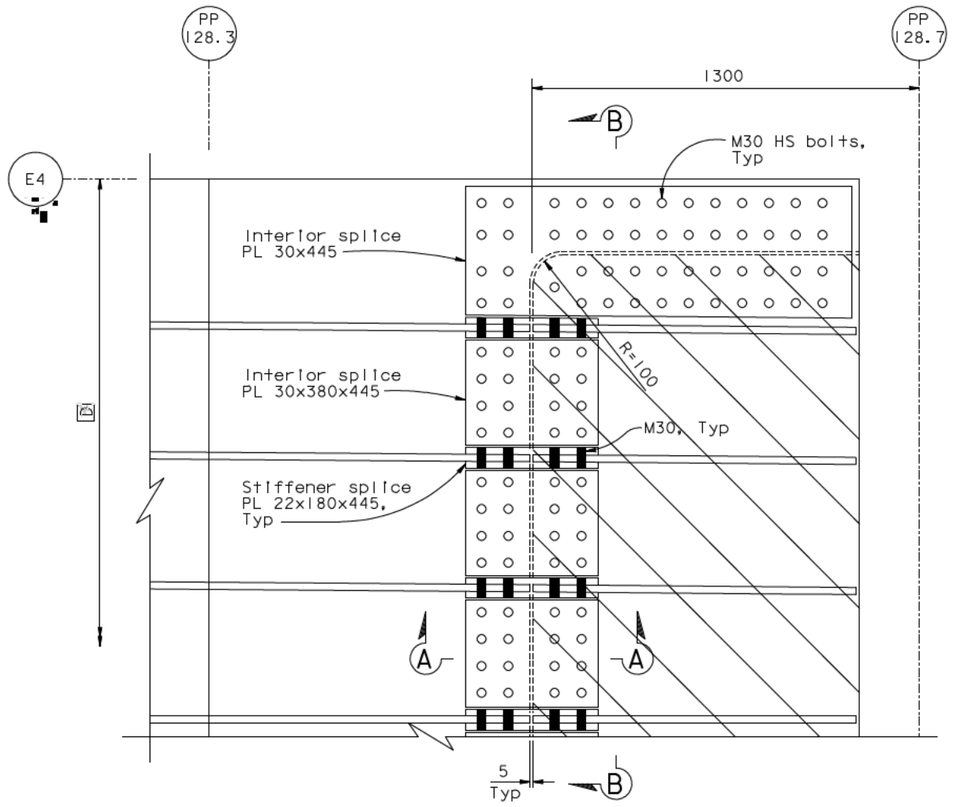

DETAIL C
("E" Line shown "W" Line similar)
1:10

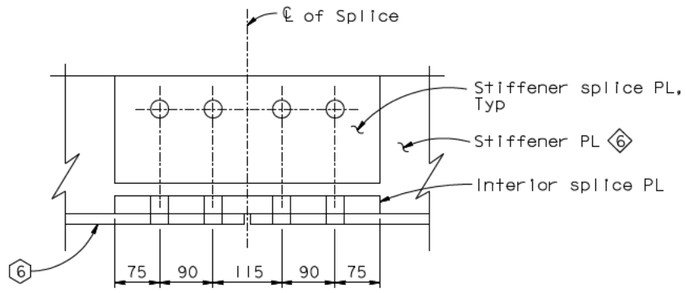

SECTION A-A
1:5

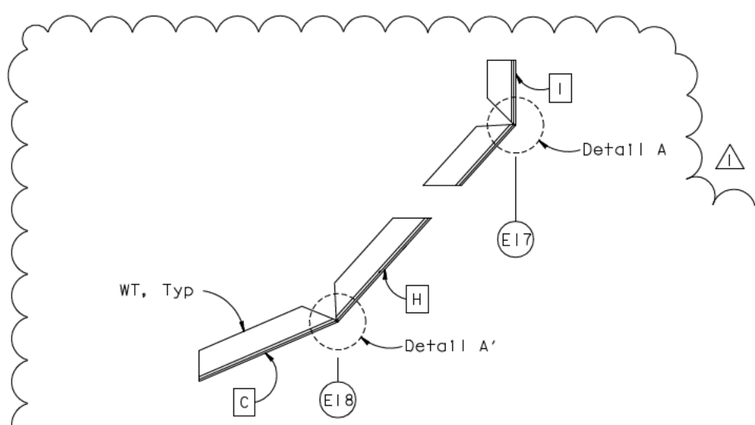

ARCHITECTURAL PLATE SPLICES AT CORNERS
1:20

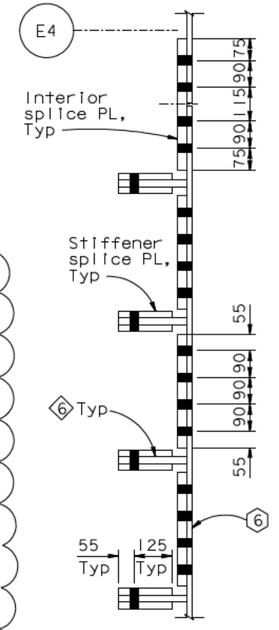

SECTION B-B
1:10

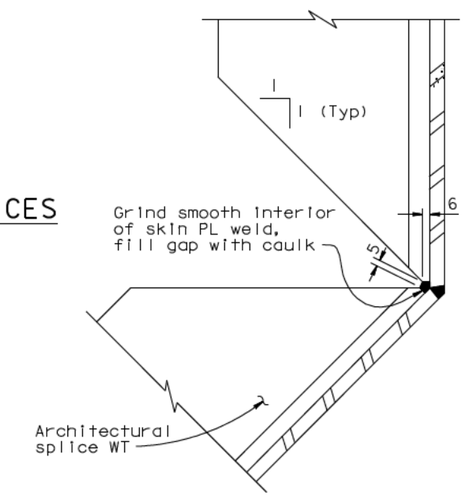

DETAIL A
(Shown, Detail A' Similar)
1:2.5

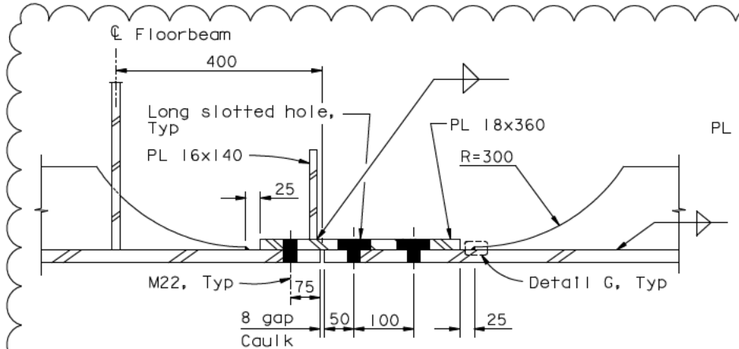

TRANSVERSE ARCHITECTURAL SPLICE DETAIL
1:5

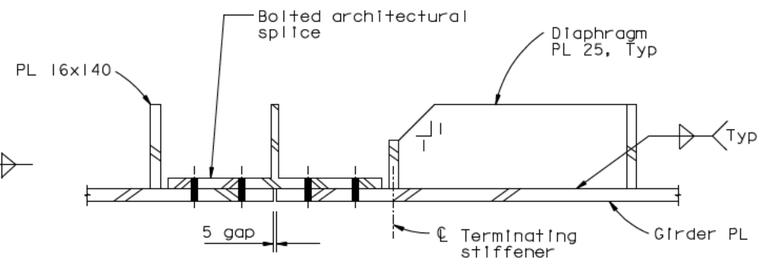

TERMINATING STIFFENER AT ARCHITECTURAL SPLICE DETAIL
1:5

LEGEND:
Indicates Field Installed Panel

CONTRACT CHANGE ORDER NO. ____
SHEET ____ OF ____

REQUESTS FOR INFORMATION NOT ADDRESSED IN THIS CCO REMAIN IN FORCE

ALL DIMENSIONS ARE IN MILLIMETERS UNLESS OTHERWISE SHOWN

MARK	DATE	DESCRIPTIONS	BY	CH'D	CCO#
1	09/01/11	EAST END OBG	DT	MN	87
0	04/09/10	HINGE A MODIFICATIONS	SS	MN	120

REVISIONS

R. Vallzadeh/V. Toan/Y.L./W.L./F.C.
DESIGN OVERSIGHT
SIGN OFF DATE 09/01/11

DESIGN	S. Shi	M. Nader
DETAILS	S. Shi	M. Nader
QUANTITIES	S. Shi	M. Nader

PREPARED FOR THE STATE OF CALIFORNIA DEPARTMENT OF TRANSPORTATION

R. Manzanarez
PROJECT ENGINEER

BRIDGE NO. 34-0006L/R
KILOMETER POST 13.2/13.9

SAN FRANCISCO OAKLAND BAY BRIDGE
EAST SPAN SEISMIC SAFETY PROJECT
SELF-ANCHORED SUSPENSION BRIDGE (SUPERSTRUCTURE & TOWER)

GIRDER AT EAST TRANSITION DETAILS NO. 5

Rev. Date: 5-18-98

ORIGINAL SCALE IN MILLIMETERS FOR REDUCED PLANS 0 10 20 30 40 50 60 70 80 90 100

CU 04
EA 0120F1

DISREGARD PRINTS BEARING EARLIER REVISION DATES

REVISION DATES (PRELIMINARY STAGE ONLY): 04/09/10

SHEET 287SIR1 OF

FILE -> I:\bb\04-01200I\sas\contract plans and cco\cco\cco#87\I-original 09-01-11\dgn\agandl5a.dgn

USERNAME -> PTom
DATE PLOTTED -> 30 AUG 2011
TIME PLOTTED -> 12:49:34
100 % PS&E

DIST.	COUNTY	ROUTE	KILOMETER POST TOTAL PROJECT	SHEET NO.	TOTAL SHEETS
04	SF	80	13.2/13.9	705R1	1204

George Baker
REGISTERED ENGINEER - CIVIL

12-6-04
PLANS APPROVAL DATE

The State of California or its officers or agents shall not be responsible for the accuracy or completeness of electronic copies of this plan sheet.

REGISTERED PROFESSIONAL ENGINEER — George S. Baker — No. C57112 — Exp. 12/31/05 — CIVIL — STATE OF CALIFORNIA

T.Y. LIN / MOFFATT & NICHOL
825 BATTERY STREET
SAN FRANCISCO, CA 94111

Caltrans now has a web site! To get to the web site, go to: http://www.dot.ca.gov

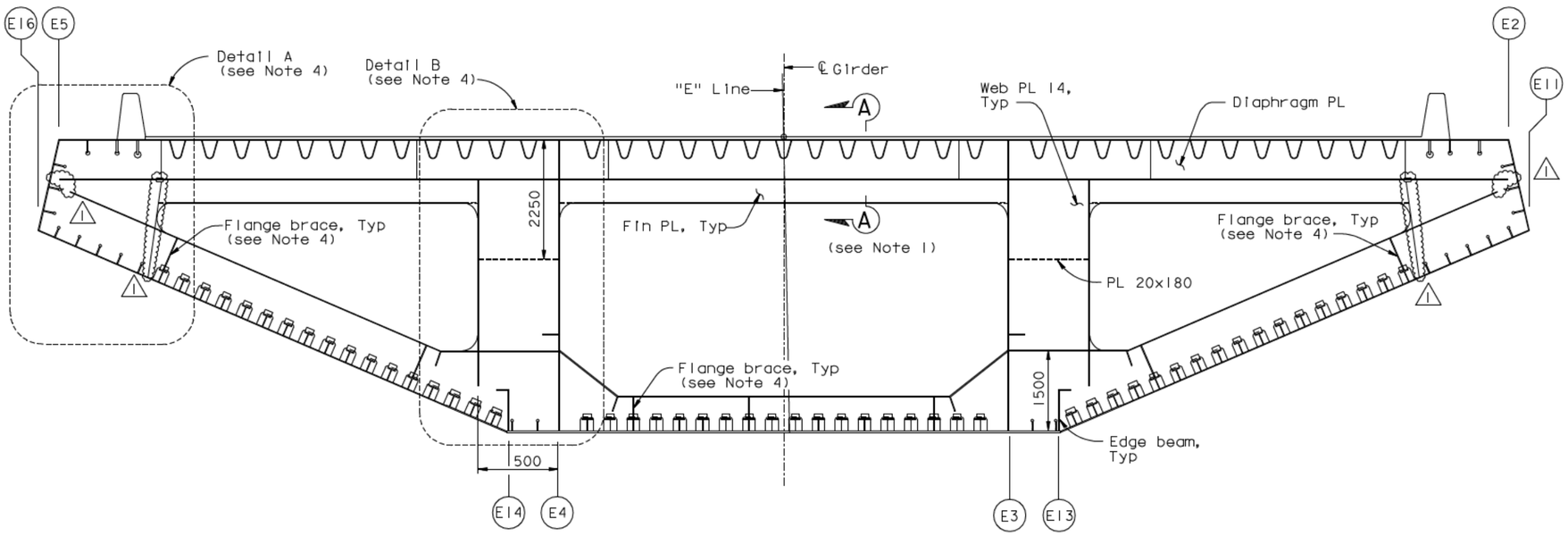

PP 116 (Shown) & PP 116.5 (Similar) (PP115.5 not shown, see Note 1)
1:50

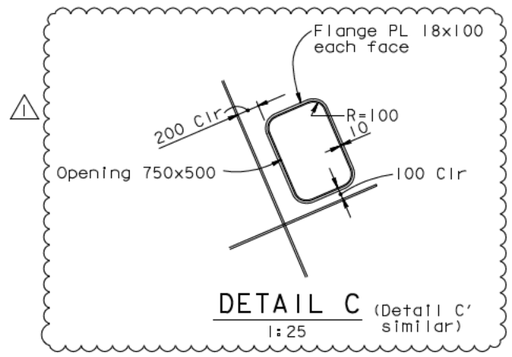

DETAIL C (Detail C' similar)
1:25

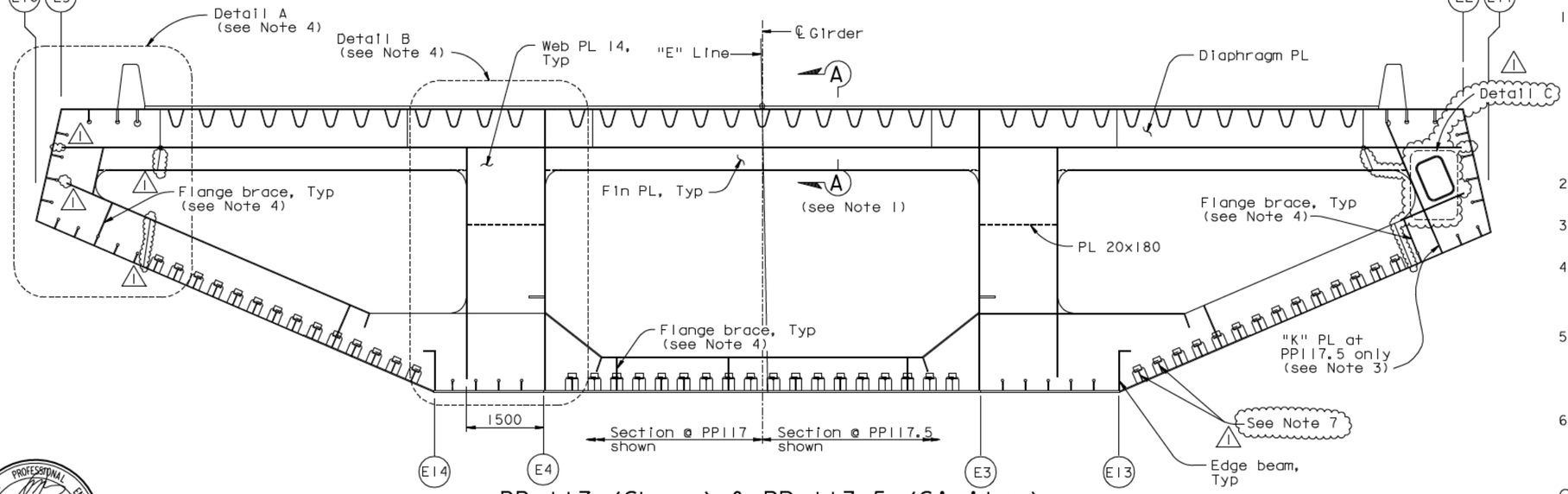

PP 117 (Shown) & PP 117.5 (Similar) (See Note 1)

"E" LINE SECTION (See Note 2)

1:50

NOTES:

1. Floorbeam at PP115.5 is similar to typical intermediate floorbeam Type 2. Floorbeams at PP116, PP116.5, PP117 and PP117.5 are similar to typical intermediate floorbeam Type 1 except as indicated. For details, including Section A-A, see "Typical Floorbeam Details No.8" and "Typical Floorbeam Details No.9" sheets. For other floorbeam details not shown, see "Typical Floorbeam Details" sheets. For girder dimensions not shown, see "Girder At East Transition" sheets.
2. "E" line girder is shown, "W" line girder is similar.
3. For "K" PL details, see "Girder At East Transition Details No.1" sheet.
4. For flange brace details and Details A and B, see "Floorbeam At East Transition Details No.1" and "Floorbeam At East Transition Details No.2" sheets.
5. For "Floorbeam At East Transition" sheets, all bolts shall be detailed according to the Bolt Dimension Table. See "Typical Girder Details No.1" sheet. All bolts are HS, unless noted otherwise.
6. For "Floorbeam At East Transition" sheets unless noted otherwise, all fillet welds shall be 6 mm for plate sizes not greater than 20 mm. For plate sizes greater than 20 mm, fillet welds shall be 8 mm unless noted otherwise.
7. For the two adjacent WT stiffeners at PP117.5, it is acceptable to use an enlarged cutout, subject to review and approval of the Engineer.

100% PS&E

REGISTERED PROFESSIONAL ENGINEER — Marwan N. Nader — No. C 054426 — Exp. 12/31/13 — CIVIL — STATE OF CALIFORNIA

FOR REVISIONS ONLY

CONTRACT CHANGE ORDER NO. ____
SHEET ___ OF ___

REQUESTS FOR INFORMATION NOT ADDRESSED IN THIS CCO REMAIN IN FORCE

ALL DIMENSIONS ARE IN MILLIMETERS UNLESS OTHERWISE SHOWN

R. Vallzadeh/V. Toan/Y.L./W.L./F.C.
DESIGN OVERSIGHT
SIGN OFF DATE 04/18/12

MARK	DATE	DESCRIPTIONS	BY	CH'D	CCO#
1	04/18/12	EAST END OBG	MN	GB	87

REVISIONS

DESIGN	BY G. Baker	CHECKED	P. Ritchie
DETAILS	BY S. Camo	CHECKED	T. McMeans
QUANTITIES	BY C. Mauch	CHECKED	M. Roberts

PREPARED FOR THE STATE OF CALIFORNIA
DEPARTMENT OF TRANSPORTATION

R. Manzanarez
PROJECT ENGINEER

BRIDGE NO. 34-0006L/R
KILOMETER POST 13.2/13.9

SAN FRANCISCO OAKLAND BAY BRIDGE
EAST SPAN SEISMIC SAFETY PROJECT
SELF-ANCHORED SUSPENSION BRIDGE
(SUPERSTRUCTURE & TOWER)

FLOORBEAM AT EAST TRANSITION NO. 1

Rev. Date: 5-18-98

ORIGINAL SCALE IN MILLIMETERS FOR REDUCED PLANS 0 10 20 30 40 50 60 70 80 90 100

CU 04
EA 0120F1

DISREGARD PRINTS BEARING EARLIER REVISION DATES

REVISION DATES (PRELIMINARY STAGE ONLY): 01/15/99 05/15/99 08/06/99 05/31/01 04/08/02 07/01/02 12/19/02

SHEET 288R1 OF

FILE -> I:\bb\04-012001\sas\contract plans and cco\cco\cco#87\temp\agefd01.dgn

USERNAME -> DWinrow DATE PLOTTED -> 18 APR 2012 TIME PLOTTED -> 11:21:06

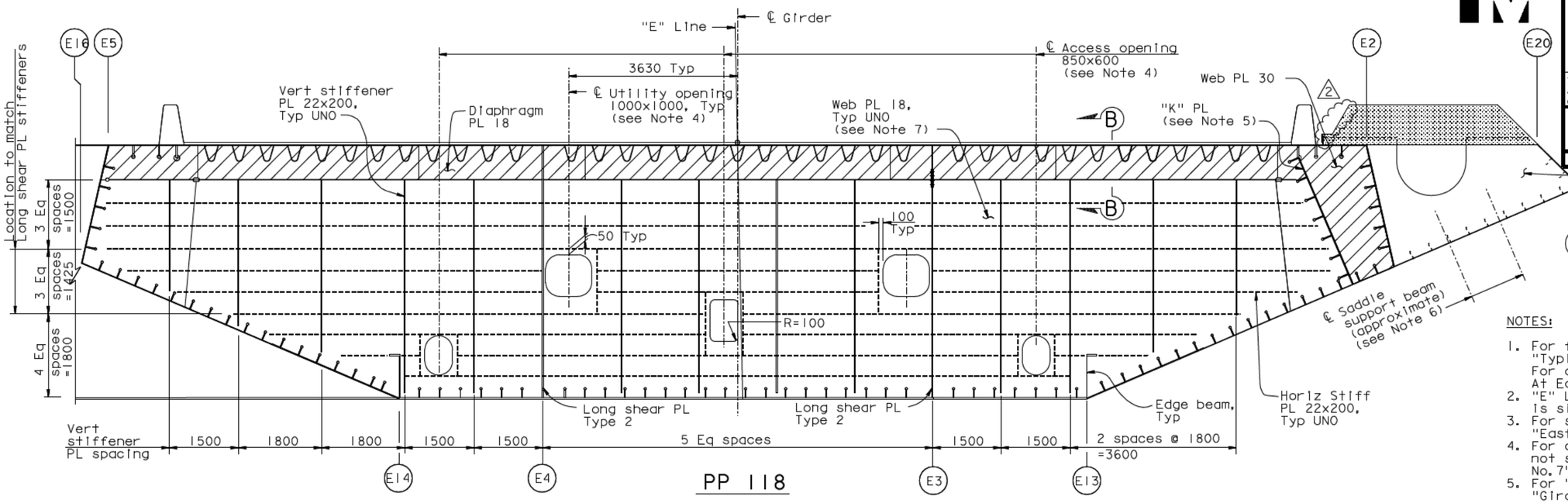

PP 118

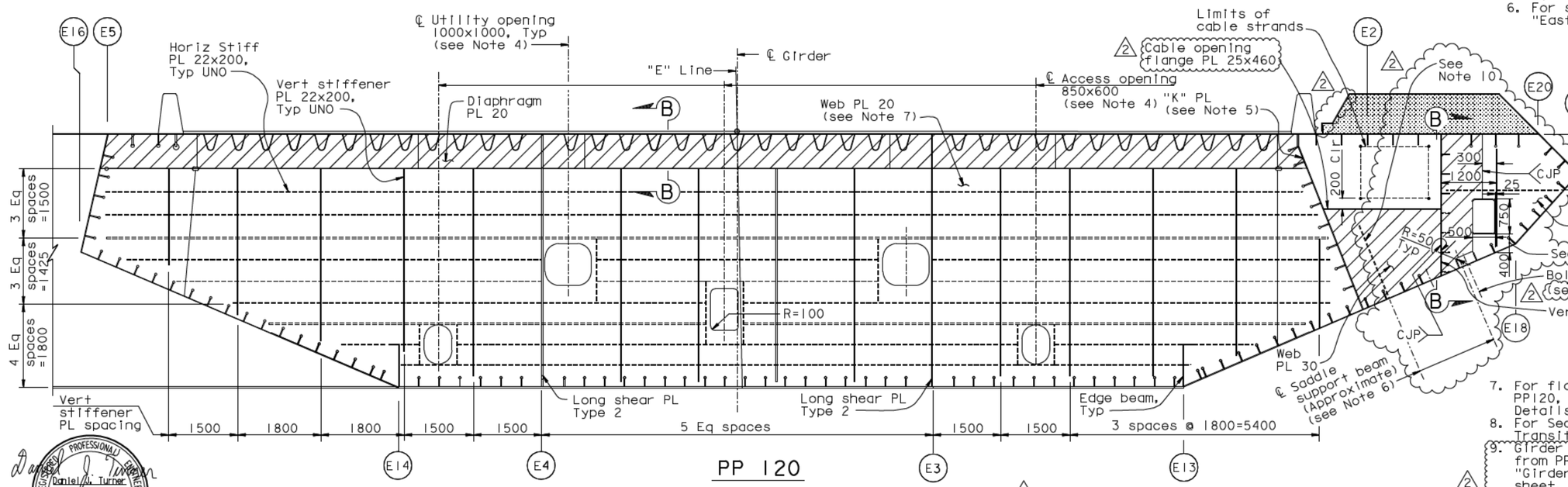

PP 120

"E" LINE SECTION (See Note 2)

1:50

NOTES:

1. For floorbeam details not shown, see "Typical Floorbeam Details No.1" sheet. For dimensions not shown, see "Girder At East Transition" sheets.
2. "E" Line girder is shown, "W" Line girder is similar.
3. For saddle housing details, see "East Saddle Housing Details" sheets.
4. For details of access and utility opening not shown, see "Typical Girder Details No.7" sheet, similar.
5. For "K" PL and vertical PL details, see "Girder At East Transition Details" sheets.
6. For saddle support beam details, see "East Saddle Details No.7" sheet.
7. For floorbeam web PL details at PP118 and PP120, see "Floorbeam. At East Transition Details No.2" sheet.
8. For Section B-B, see "Floorbeam At East Transition Details No.1" sheet.
9. Girder faces G, H and I are architectural from PP118 to PP125. For bolted splices, see "Girder At East Transition Details No.3" sheet. For splice locations, see "Girder At East Transition Nos.11 to 14" sheets.
10. Stiffener shall align with the web of the saddle support beam.

2 11. At the Contractor's option, the 400 dimension may be increased up to 450 mm.

ALL DIMENSIONS ARE IN MILLIMETERS UNLESS OTHERWISE SHOWN

DIST.	COUNTY	ROUTE	KILOMETER POST TOTAL PROJECT	SHEET NO.	TOTAL SHEETS
04	SF	80	13.2/13.9	706R2	1204

George Baker
REGISTERED ENGINEER - CIVIL

12-6-04
PLANS APPROVAL DATE

The State of California or its officers or agents shall not be responsible for the accuracy or completeness of electronic copies of this plan sheet.

REGISTERED PROFESSIONAL ENGINEER — George S. Baker — No. C57112 — Exp. 12/31/05 — CIVIL — STATE OF CALIFORNIA

T.Y. LIN / MOFFATT & NICHOL
825 BATTERY STREET
SAN FRANCISCO, CA 94111

Caltrans now has a web site! To get to the web site, go to: http://www.dot.ca.gov

Daniel J. Turner — REGISTERED PROFESSIONAL ENGINEER — No. C 65033 — Exp. 06/30/13 — CIVIL — STATE OF CALIFORNIA

FOR REVISIONS ONLY

CONTRACT CHANGE ORDER NO. ____
SHEET ____ OF ____

REQUESTS FOR INFORMATION NOT ADDRESSED IN THIS CCO REMAIN IN FORCE

R. Vallzadeh/V. Toan/Y.L./W.L./F.C.
DESIGN OVERSIGHT
SIGN OFF DATE 09/01/11

MARK	DATE	DESCRIPTIONS	BY	CH'D	CCO#
2	09/01/11	EAST END OBG	DT	GB	87
1	01/09/08	CABLE TRAY CHANGES	GB	DT	4251

REVISIONS

	BY		CHECKED
DESIGN	G. Baker		P. Ritchie
DETAILS	S. Camo		T. McMeans
QUANTITIES	C. Mauch		M. Roberts

PREPARED FOR THE STATE OF CALIFORNIA DEPARTMENT OF TRANSPORTATION

R. Manzanarez
PROJECT ENGINEER

BRIDGE NO. 34-0006L/R
KILOMETER POST 13.2/13.9

SAN FRANCISCO OAKLAND BAY BRIDGE
EAST SPAN SEISMIC SAFETY PROJECT
SELF-ANCHORED SUSPENSION BRIDGE
(SUPERSTRUCTURE & TOWER)

FLOORBEAM AT EAST TRANSITION NO. 2

Rev. Date: 5-18-98

ORIGINAL SCALE IN MILLIMETERS FOR REDUCED PLANS 0 10 20 30 40 50 60 70 80 90 100

CU 04
EA 0120F1

DISREGARD PRINTS BEARING EARLIER REVISION DATES

REVISION DATES (PRELIMINARY STAGE ONLY): 01/15/99 05/15/99 08/02/99 05/31/01 04/08/02 07/01/02 12/19/02

SHEET 289R2 OF

FILE -> I:\bb\04-01200I\sas\contract plans and cco\cco\cco#87\I-original 09-01-11\dgn\agefd02.dgn

USERNAME -> PTom DATE PLOTTED -> 30 AUG 2011 TIME PLOTTED -> 11:32:40

100% PS&E

DIST.	COUNTY	ROUTE	KILOMETER POST TOTAL PROJECT	SHEET NO.	TOTAL SHEETS
04	SF	80	13.2/13.9	707R1	1204

George Baker
REGISTERED ENGINEER - CIVIL

12-6-04
PLANS APPROVAL DATE

The State of California or its officers or agents shall not be responsible for the accuracy or completeness of electronic copies of this plan sheet.

REGISTERED PROFESSIONAL ENGINEER — George S. Baker — No. C57112 — Exp. 12/31/05 — CIVIL — STATE OF CALIFORNIA

T.Y. LIN / MOFFATT & NICHOL
825 BATTERY STREET
SAN FRANCISCO, CA 94111

Caltrans now has a web site! To get to the web site, go to: http://www.dot.ca.gov

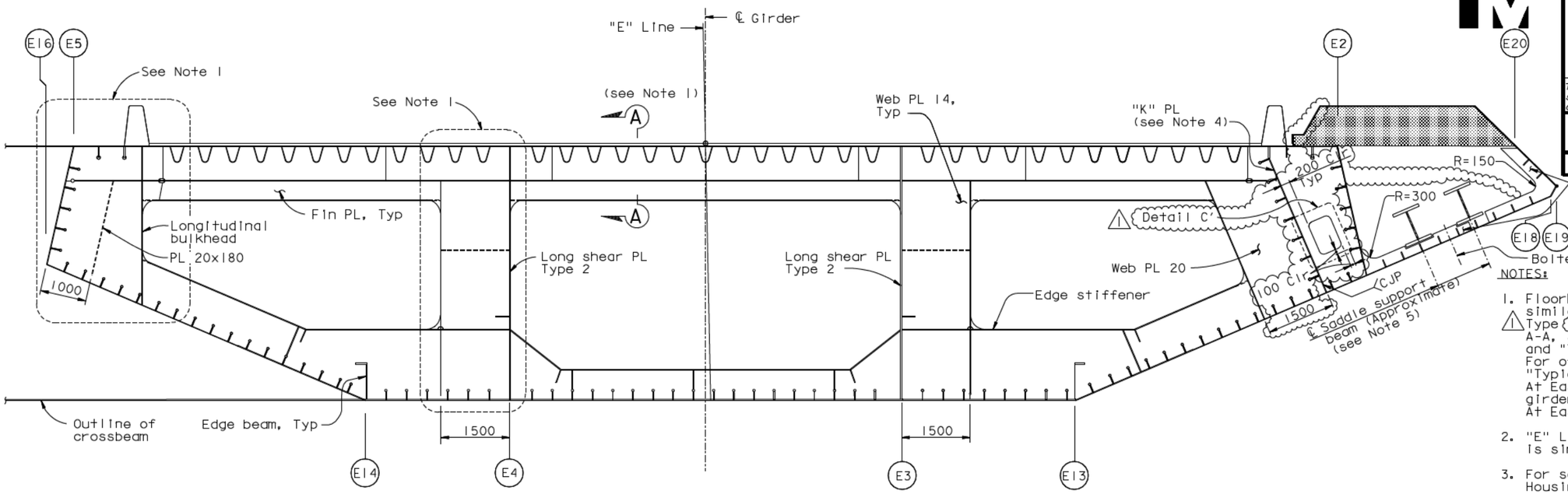

PP 118.35 (See Note 1)

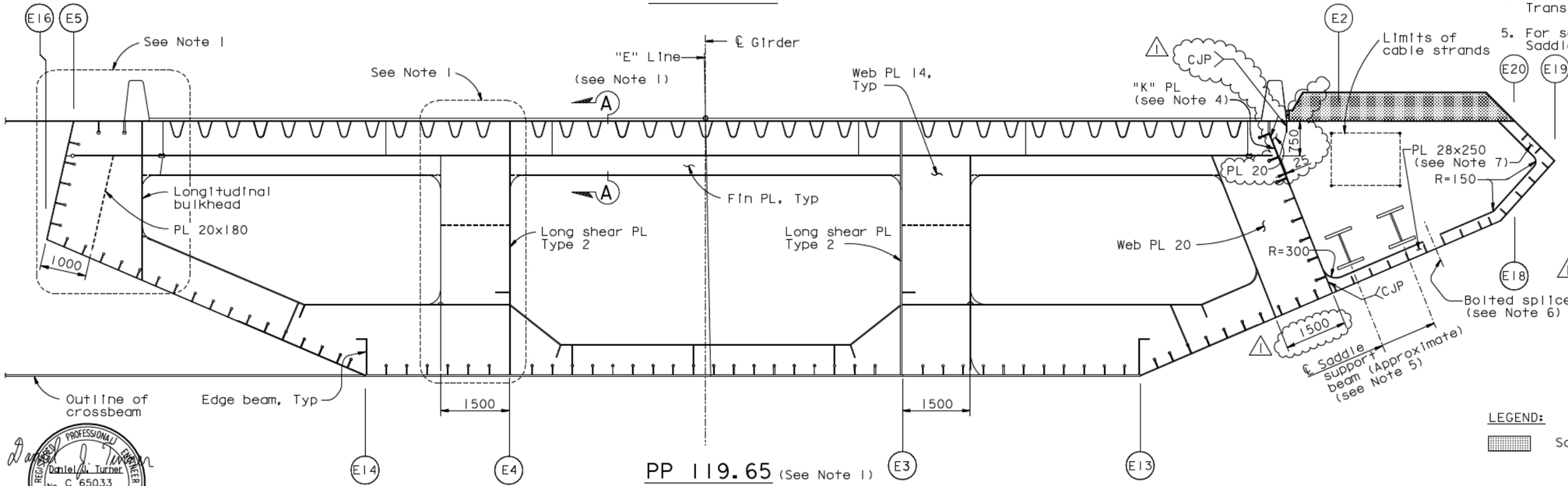

PP 119.65 (See Note 1)

"E" LINE SECTION (See Note 2)
1:50

NOTES:

1. Floorbeams at PP118.35 and PP119.65 are similar to typical intermediate floorbeam Type ⚠1. For these details, including Section A-A, see "Typical Floorbeam Details No.8" and "Typical Floorbeam Details No.9" sheets. For other floorbeam details not shown, see "Typical Floorbeam Details" and "Floorbeam At East Transition Details" sheets. For girder dimensions not shown, see "Girder At East Transition" sheets.
2. "E" Line girder is shown, "W" Line girder is similar.
3. For saddle housing details, see "East Saddle Housing Details" sheets.
4. For "K" PL details, see "Girder At East Transition Details No.1" sheet.
5. For saddle support beam details, see "East Saddle Details No.7" sheet.
6. Girder faces G, H and I are architectural from PP118 to PP125. For bolted splices, see "Girder At East Transition Details No.3" sheet. For splice locations, see "Girder At East Transition No.11 to 14" sheets.
7. Longitudinal stiffeners are welded to each face of transverse stiffener PL. For details, see stiffener Type ⟨9⟩ on "Typical Girder Details No.5" sheet. Also provide transverse stiffeners around saddle opening at the three floorbeam webs at PP119.
8. ⚠1 For Detail C', see "Floorbeam At East Transition No.1" sheet.

LEGEND:
Saddle housing (see Note 3)

CONTRACT CHANGE ORDER NO. ____
SHEET ___ OF ___

REQUESTS FOR INFORMATION NOT ADDRESSED IN THIS CCO REMAIN IN FORCE

Daniel J. Turner
REGISTERED PROFESSIONAL ENGINEER — No. C 65033 — Exp. 06/30/13 — CIVIL — STATE OF CALIFORNIA

FOR REVISIONS ONLY

ALL DIMENSIONS ARE IN MILLIMETERS UNLESS OTHERWISE SHOWN

MARK	DATE	DESCRIPTIONS	BY	CH'D	CCO#
⚠1	09/01/11	EAST END OBG	DT	GB	87

REVISIONS

R. Vallzadeh/V. Toan/Y.L./W.L./F.C.
DESIGN OVERSIGHT
SIGN OFF DATE 09/01/11

	BY	CHECKED
DESIGN	G. Baker	P. Ritchie
DETAILS	S. Camo	T. McMeans
QUANTITIES	C. Mauch	M. Roberts

PREPARED FOR THE STATE OF CALIFORNIA DEPARTMENT OF TRANSPORTATION

R. Manzanarez
PROJECT ENGINEER

BRIDGE NO. 34-0006L/R
KILOMETER POST 13.2/13.9

CU 04
EA 0120F1

SAN FRANCISCO OAKLAND BAY BRIDGE
EAST SPAN SEISMIC SAFETY PROJECT
SELF-ANCHORED SUSPENSION BRIDGE
(SUPERSTRUCTURE & TOWER)

FLOORBEAM AT EAST TRANSITION NO. 3

DISREGARD PRINTS BEARING EARLIER REVISION DATES

REVISION DATES (PRELIMINARY STAGE ONLY): 01/15/99 | 05/15/99 | 08/09/99 | 05/31/01 | 04/30/02 | 07/01/02 | 12/19/02

SHEET 290R1 OF

Rev. Date: 5-18-98

ORIGINAL SCALE IN MILLIMETERS FOR REDUCED PLANS 0 10 20 30 40 50 60 70 80 90 100

FILE -> I:\bb\04-012001\sas\contract plans and cco\cco\cco#87\1-original 09-01-11\dgn\agefd08.dgn

USERNAME -> ALIshansk DATE PLOTTED -> 30 AUG 2011 TIME PLOTTED -> 09:49:54

100% PS&E

DIST.	COUNTY	ROUTE	KILOMETER POST TOTAL PROJECT	SHEET NO.	TOTAL SHEETS
04	SF	80	13.2/13.9	708R2	1204

George Baker
REGISTERED ENGINEER - CIVIL
12-6-04
PLANS APPROVAL DATE

REGISTERED PROFESSIONAL ENGINEER — George S. Baker — No. C57112 — Exp. 12/31/05 — CIVIL — STATE OF CALIFORNIA

The State of California or its officers or agents shall not be responsible for the accuracy or completeness of electronic copies of this plan sheet.

T.Y. LIN / MOFFATT & NICHOL
825 BATTERY STREET
SAN FRANCISCO, CA 94111

Caltrans now has a web site! To get to the web site, go to: http://www.dot.ca.gov

REGISTERED PROFESSIONAL ENGINEER — Marwan N. Nader — No. C 054426 — Exp. 12/31/11 — CIVIL — STATE OF CALIFORNIA

FOR REVISIONS ONLY

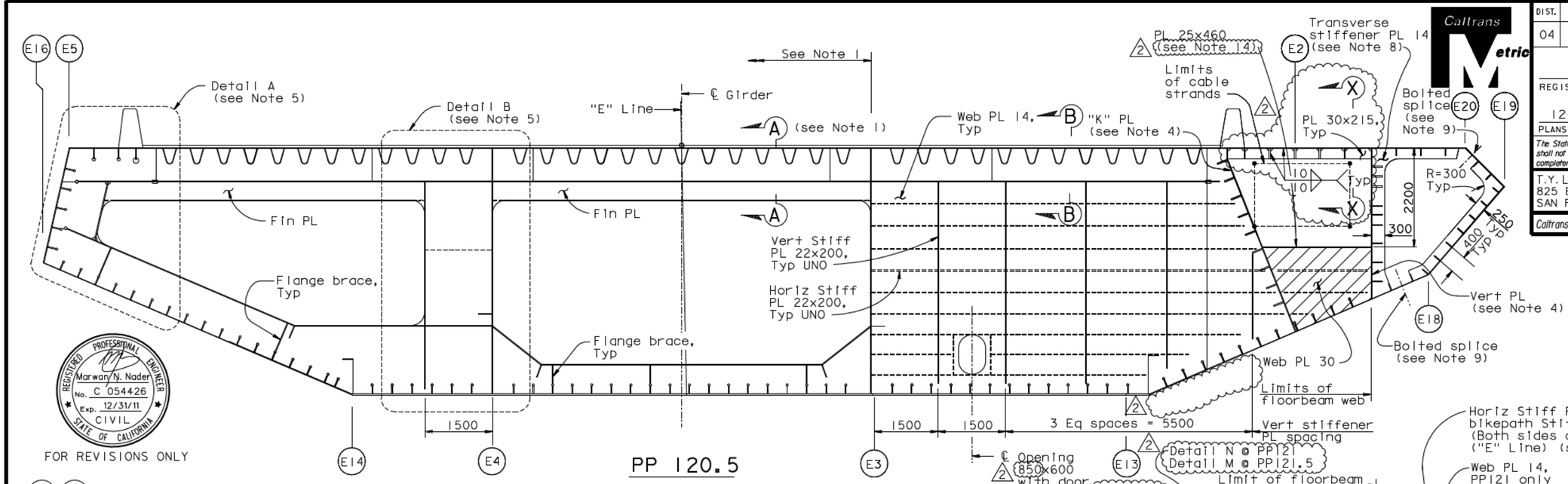

PP 121 (Shown) & PP 121.5 (Similar) (see Note 2)

1:50

LEGEND:
"Indicates SPCM web PL"

NOTES:

1. Floorbeams at PP120.5, PP121 and PP121.5 are similar to typical intermediate floorbeam Type 1 from working lines E3 to E16. For these details, including Section A-A, see "Typical Floorbeam Details No.8" and "Typical Floorbeam Details No.9" sheets. For other details not shown, see "Typical Floorbeam Details" sheets. For girder dimensions not shown, see "Girder At East Transition" sheets.
2. "E" Line girder is shown, "W" Line girder is similar.
3. For saddle housing details, see "East Saddle Housing Details" sheet.
4. For "K" PL and vertical PL details, see "Girder At East Transition Details" sheets.
5. For Details A, B and Section B-B, see "Floorbeam At East Transition Details No.1" sheet. (2)
6. Bikepath bearing stiffeners shall be welded to girder PL using PJP with 80% penetration welds. Girder stiffener plates shall be coped on either side of bikepath stiffener. Bikepath stiffeners shall align with the bottom flanges of the bikepath cantilever beams at PP121, PP123 and PP125. For locations of bikepath cantilever beams, see "Bikepath Details" sheets.
7. Weld of diaphragm PL to girder PL A shall be CJP.
8. Longitudinal stiffeners are welded to each face of transverse stiffener PL. For details, see stiffener Type 9 on "Typical Girder Details No.5" sheet. Also provide tranverse stiffeners around openings at PP121.5, PP122.5, PP123.5 and PP124.5. (2) For stiffener PL size @ PP124.5, see "Girder At East Transition Details No.3" sheet.
9. Girder faces G, H and I are architectural from PP118 to PP125. For bolted splices, see "Girder At East Transition Details No.3" sheet. For splice locations, see "Girder At East Transition Nos.11 to 14" sheet.
10. Web opening similar to Detail E. See "Girder At East Transition Details No.3" sheet.
11. When the access opening edge is within 50 mm of a floorbeam stiffener, the reinforcing flange shall be omitted on the side of that stiffener.
12. For additional details, see "Dehumidification Support Details No.2" sheet.
13. For Detail M, Detail N and Section X-X, see "Floorbeam At East Transition Details No.3" sheet.
14. At the Contractor's option, two PL 25x225 flanges may be used in lieu of the PL 25x460 flange, subject to review and approval of the Engineer. (2)

CONTRACT CHANGE ORDER NO. ____
SHEET ___ OF ___
REQUESTS FOR INFORMATION NOT ADDRESSED IN THIS CCO REMAIN IN FORCE

ALL DIMENSIONS ARE IN MILLIMETERS UNLESS OTHERWISE SHOWN

MARK	DATE	DESCRIPTIONS	BY	CH'D	CCO#
2	09/01/11	EAST END OBG	GB	MN	87
1	11/05/10	PP119 ACCESS & PP125 PLATES	GB	DT	86

REVISIONS

R. Vallzadeh/V. Toan/Y.L./W.L./F.C.
DESIGN OVERSIGHT
SIGN OFF DATE 09/01/11

	BY	CHECKED
DESIGN	G. Baker	P. Ritchie
DETAILS	S. Camo	T. McMeans
QUANTITIES	C. Mauch	M. Roberts

PREPARED FOR THE STATE OF CALIFORNIA DEPARTMENT OF TRANSPORTATION

R. Manzanarez
PROJECT ENGINEER

BRIDGE NO. 34-0006L/R
KILOMETER POST 13.2/13.9

SAN FRANCISCO OAKLAND BAY BRIDGE
EAST SPAN SEISMIC SAFETY PROJECT
SELF-ANCHORED SUSPENSION BRIDGE
(SUPERSTRUCTURE & TOWER)

FLOORBEAM AT EAST TRANSITION NO. 4

Rev. Date: 5-18-98

ORIGINAL SCALE IN MILLIMETERS FOR REDUCED PLANS 0 10 20 30 40 50 60 70 80 90 100

CU 04
EA 0120F1

DISREGARD PRINTS BEARING EARLIER REVISION DATES

REVISION DATES (PRELIMINARY STAGE ONLY)								SHEET	OF
01/15/99	05/15/99	08/06/99	05/01/01	08/06/02	07/01/02	12/19/02	11/13/05	291R2	

FILE -> I:\bb\04-012001\sas\contract plans and cco\cco\cco#87\1-original 09-01-11\dgn\agefd07.dgn

USERNAME -> PTom
DATE PLOTTED -> 30 AUG 2011
TIME PLOTTED -> 11:42:54
100 % PS&E

DIST.	COUNTY	ROUTE	KILOMETER POST TOTAL PROJECT	SHEET NO.	TOTAL SHEETS
04	SF	80	13.2/13.9	709R2	1204

George Baker
REGISTERED ENGINEER - CIVIL

12-6-04
PLANS APPROVAL DATE

The State of California or its officers or agents shall not be responsible for the accuracy or completeness of electronic copies of this plan sheet.

REGISTERED PROFESSIONAL ENGINEER — George S. Baker — No. C 57112 — Exp. 12/31/05 — CIVIL — STATE OF CALIFORNIA

T.Y. LIN / MOFFATT & NICHOL
825 BATTERY STREET
SAN FRANCISCO, CA 94111

Caltrans now has a web site! To get to the web site, go to: http://www.dot.ca.gov

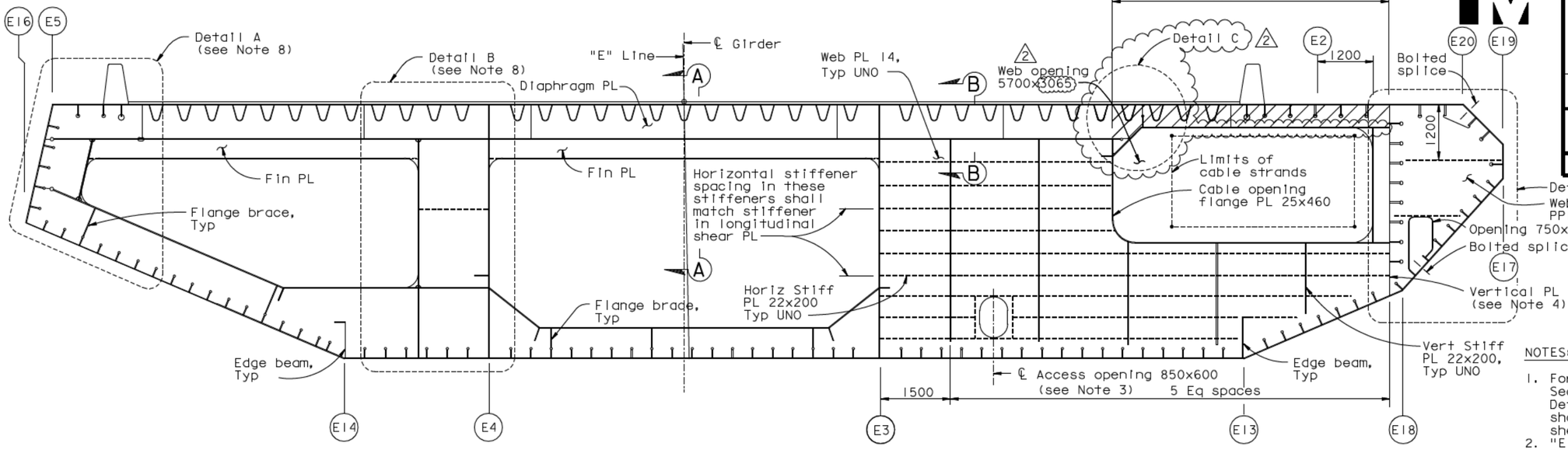

PP 122 (Shown) & PP 122.5 (Similar)

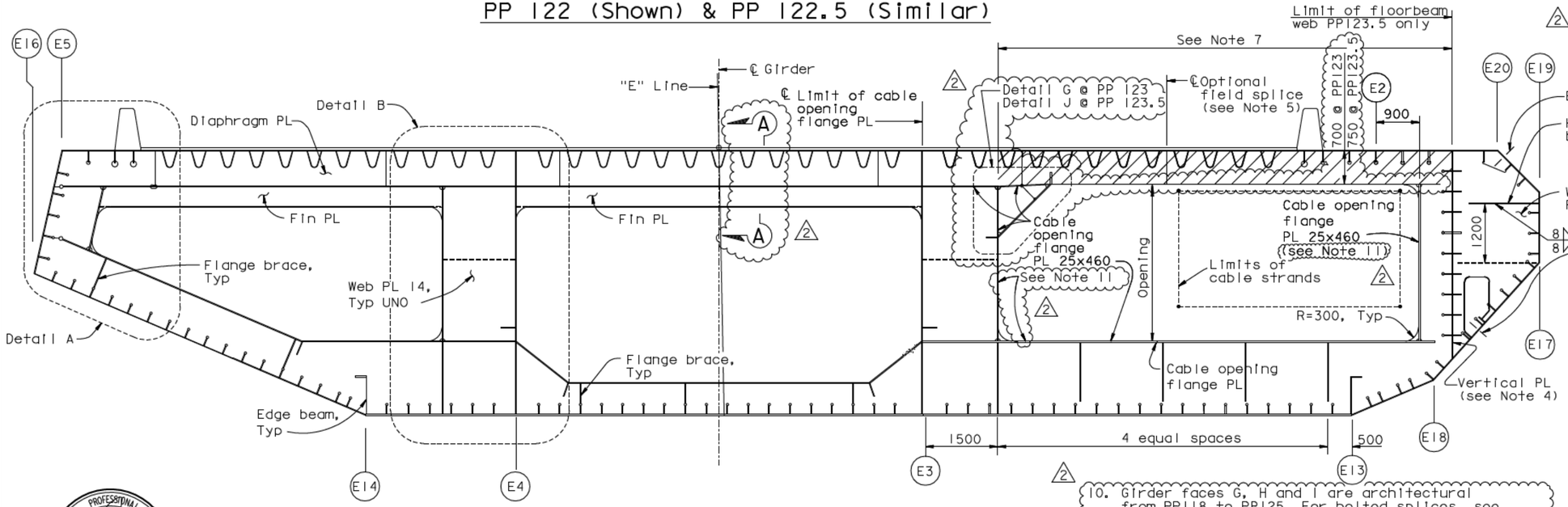

PP 123 (Shown) & PP 123.5 (Similar)

"E" LINE SECTION (See Note 2)
1:50

LEGEND:
"Indicates SPCM web PL"

NOTES:
1. For floorbeam details not shown and Section A-A, see "Typical Floorbeam Details" sheets. For dimensions not shown, see "Girder At East Transition" sheets.
2. "E" Line girder is shown, "W" Line girder is similar.
2 3. When the access opening edge is within 50 mm of a floorbeam stiffener, the reinforcing flange shall be omitted on the side of that stiffener.
4. For vertical PL details, see "Girder At East Transition Details" sheets.
5. For optional field splice details, see "East Anchorage Construction Details" sheets.
6. Bikepath bearing stiffeners shall be welded to girder PL using PJP with 80% penetration welds. Girder stiffener plates shall be coped on either side of bikepath stiffener. Bikepath stiffeners shall align with the bottom flanges of the bikepath cantilever beams at PP123.
7. Weld of diaphragm PL to girder PL A shall be CJP.
8. For Details A, B and C, and Section B-B, see "Floorbeam At East Transition Details No.1" sheet. For Details G & J, 2 see "Floorbeam at East Transition Details No.3" sheet.
9. For Detail E, see "Girder At East Transition Details No.3" sheet.
10. Girder faces G, H and I are architectural from PP118 to PP125. For bolted splices, see "Girder At East Transition Details No.3" sheet. For splice locations, see "Girder At East Transition Nos.11 to 14" sheets.
11. At the Contractor's option, two PL 25x225 may be used in lieu of PL 25x460 at bottom and sides of cable opening only, subject to review and approval of the Engineer.

ALL DIMENSIONS ARE IN MILLIMETERS UNLESS OTHERWISE SHOWN

REGISTERED PROFESSIONAL ENGINEER — Marwan N. Nader — No. C 054426 — Exp. 12/31/11 — CIVIL — STATE OF CALIFORNIA

FOR REVISIONS ONLY

CONTRACT CHANGE ORDER NO. ____
SHEET ____ OF ____

REQUESTS FOR INFORMATION NOT ADDRESSED IN THIS CCO REMAIN IN FORCE

MARK	DATE	DESCRIPTIONS	BY	CH'D	CCO#
2	09/01/11	EAST END OBG	GB	MN	87
1	11/05/10	PP119 ACCESS & PP125 PLATES	GB	DT	86

REVISIONS

R. Valfzadeh/V. Toan/Y.L./W.L./F.C.
DESIGN OVERSIGHT
Ron Vakili / Vann Toan / Y Liu
SIGN OFF DATE 09/01/11

Rev. Date: 5-18-98

	BY	CHECKED
DESIGN	G. Baker	P. Ritchie
DETAILS	S. Camo	T. McMeans
QUANTITIES	C. Mauch	M. Roberts

PREPARED FOR THE STATE OF CALIFORNIA
DEPARTMENT OF TRANSPORTATION

R. Manzanarez
PROJECT ENGINEER

BRIDGE NO. 34-0006L/R
KILOMETER POST 13.2/13.9

SAN FRANCISCO OAKLAND BAY BRIDGE
EAST SPAN SEISMIC SAFETY PROJECT
SELF-ANCHORED SUSPENSION BRIDGE
(SUPERSTRUCTURE & TOWER)

FLOORBEAM AT EAST TRANSITION NO. 5

ORIGINAL SCALE IN MILLIMETERS FOR REDUCED PLANS 0 10 20 30 40 50 60 70 80 90 100

CU 04
EA 0120F1

DISREGARD PRINTS BEARING EARLIER REVISION DATES

REVISION DATES (PRELIMINARY STAGE ONLY): 05/15/99 08/02/99 05/31/01 04/08/02 07/31/02 12/18/02 11/13/05

SHEET 292R2 OF

FILE -> I:\bb\04-0120F1\sas\contract plans and cco\cco\cco#87\1-original 09-01-11\dgn\agefd03.dgn

100% PS&E
DATE PLOTTED -> 30 AUG 2011
TIME PLOTTED -> 11:33:49
USERNAME -> PTom

DIST.	COUNTY	ROUTE	KILOMETER POST TOTAL PROJECT	SHEET NO.	TOTAL SHEETS
04	SF	80	13.2/13.9	710R3	1204

George Baker
REGISTERED ENGINEER - CIVIL

12-6-04
PLANS APPROVAL DATE

The State of California or its officers or agents shall not be responsible for the accuracy or completeness of electronic copies of this plan sheet.

REGISTERED PROFESSIONAL ENGINEER — George S. Baker — No. C 57112 — Exp. 12/31/05 — CIVIL — STATE OF CALIFORNIA

T.Y. LIN / MOFFATT & NICHOL
825 BATTERY STREET
SAN FRANCISCO, CA 94111

Caltrans now has a web site! To get to the web site, go to: http://www.dot.ca.gov

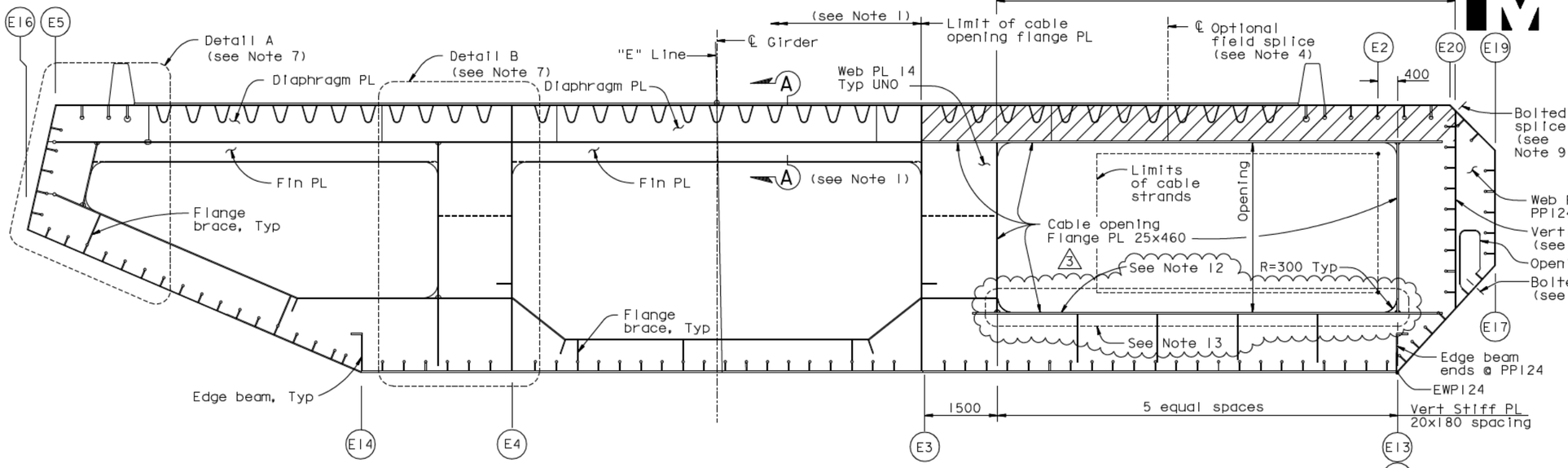

LEGEND:

"Indicates SPCM web plate"

NOTES:

1. Floorbeams at PP124 and PP124.5 are similar to typical intermediate floorbeam Type 1 from working lines E3 to E16. For these details, including Section A-A, see "Typical Floorbeam Details No.8" and "Typical Floorbeam Details No.9" sheets. For other details not shown, see "Typical Floorbeam Details" sheet. For girder dimensions not shown, see "Girder At East Transition" sheets.
2. "E" Line girder is shown, "W" Line girder is similar.
3. For vertical plate details, see "Girder At East Transition Details No.2" sheet.
4. When the access opening edge is within 50 mm of a floorbeam stiffener, the reinforcing flange shall be omitted on the side of that stiffener.
5. For optional field splice details, see "East Anchorage Construction Details" sheets.
6. For floorbeam web plate details at PP125, see "Floorbeam At East Transition Details No.2" sheet.
7. For Details A and B, and Section B-B, see "Floorbeam At East Transition Details No.1" sheet.
8. Weld of diaphragm PL to girder PL [A] shall be CJP.
9. Girder faces G, H and I are architectural from PP118 to PP125. For bolted splices, see "Girder At East Transition Details No.3" sheet. For splice locations, see "Girder At East Transition Nos. 11 to 14" sheet.
10. Ventilation openings shall be reinforced with doubler plates. For doubler plate details, see "Floorbeam At East Transition No.6A" sheet.
11. This ventilation opening occurs in E-Line girder only.
12. At the contractor's option, two PL 25x225 may be used in lieu of PL 25x460, at bottom and sides of cable opening only, subject to review and approval of the Engineer.
13. For details at PP124.5 on "E" Line and "W" Line girders, see "Floorbeams At East Transition No.6A" sheet.

PP 124 (Shown) & PP 124.5 (Similar)

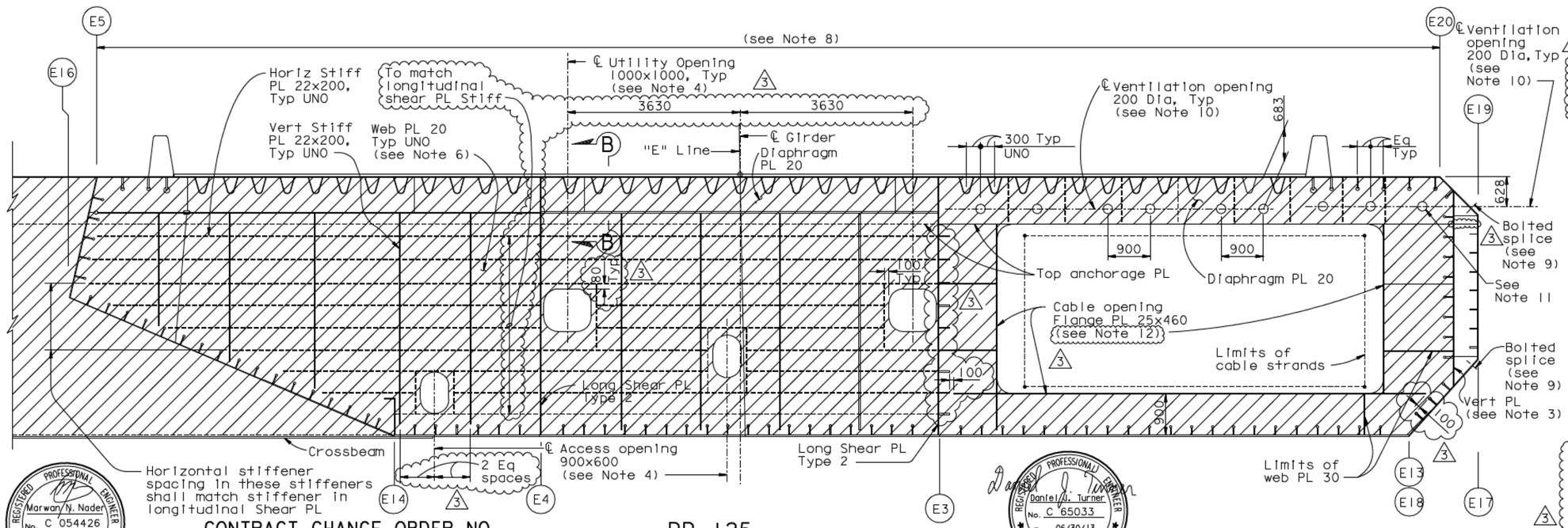

CONTRACT CHANGE ORDER NO. _____
SHEET ___ OF ___

PP 125

"E" LINE SECTION (See Note 2)
1:50

REGISTERED PROFESSIONAL ENGINEER — Marwan N. Nader — No. C 054426 — Exp. 12/31/11 — CIVIL — STATE OF CALIFORNIA

FOR REVISIONS 1 AND 2 ONLY

REGISTERED PROFESSIONAL ENGINEER — Daniel J. Turner — No. C 65033 — Exp. 06/30/13 — CIVIL — STATE OF CALIFORNIA

FOR REVISIONS 3 ONLY

ALL DIMENSIONS ARE IN MILLIMETERS UNLESS OTHERWISE SHOWN

REQUESTS FOR INFORMATION NOT ADDRESSED IN THIS CCO REMAIN IN FORCE

MARK	DATE	DESCRIPTIONS	BY	CH'D	CCO#
3	09/01/11	EAST END OBG	DT	GB	87
2	06/10/11	ADDITIONAL ACCESS AT EAST END	DT	MN	202
1	11/05/10	PP119 ACCESS & PP125 PLATES	GB	DT	86

REVISIONS

	BY	CHECKED
DESIGN	G. Baker	P. Ritchie
DETAILS	S. Camo	T. McMeans
QUANTITIES	C. Mauch	M. Roberts

PREPARED FOR THE STATE OF CALIFORNIA DEPARTMENT OF TRANSPORTATION

R. Manzanarez
PROJECT ENGINEER

BRIDGE NO. 34-0006L/R
KILOMETER POST 13.2/13.9

R. Vallzadeh/V. Toan/Y.L./W.L./F.C.
DESIGN OVERSIGHT
SIGN OFF DATE 09/01/11

SAN FRANCISCO OAKLAND BAY BRIDGE
EAST SPAN SEISMIC SAFETY PROJECT
SELF-ANCHORED SUSPENSION BRIDGE (SUPERSTRUCTURE & TOWER)

FLOORBEAM AT EAST TRANSITION NO. 6

Rev. Date: 5-18-98

ORIGINAL SCALE IN MILLIMETERS FOR REDUCED PLANS 0 10 20 30 40 50 60 70 80 90 100

CU 04
EA 0120F1

DISREGARD PRINTS BEARING EARLIER REVISION DATES

REVISION DATES (PRELIMINARY STAGE ONLY): 05/15/99 | 08/02/99 | 05/31/01 | 04/08/02 | 07/01/02 | 12/19/02

SHEET 293R3 OF

FILE -> I:\bb\04-012001\sas\contract plans and cco\cco\cco#87\1-original 09-01-11\dgn\agefd04.dgn

USERNAME -> PTam
DATE PLOTTED -> 30 AUG 2011
TIME PLOTTED -> 11:35:52
100 % PS&E

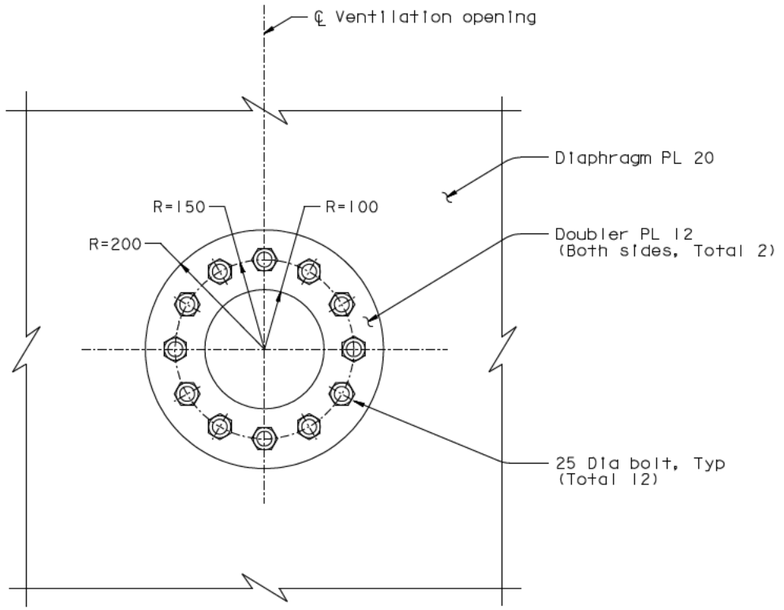

DOUBLER PLATE DETAIL
1:5

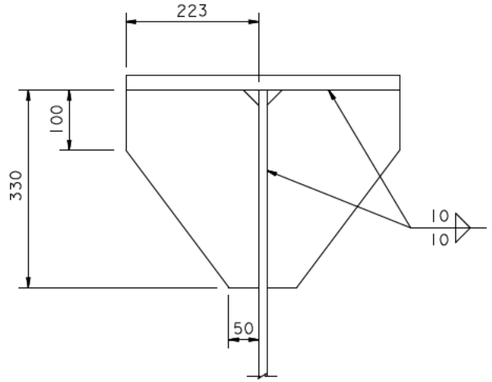

SECTION A-A
1:5

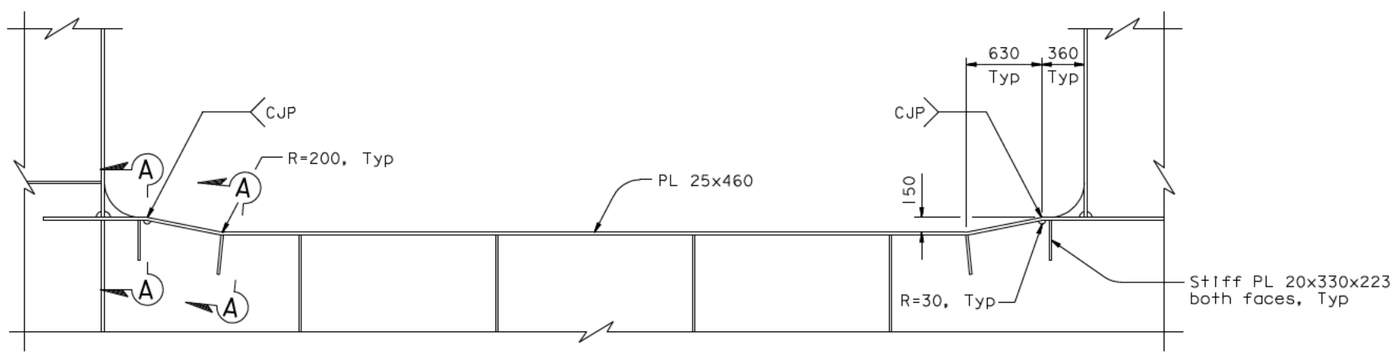

FLOORBEAM SECTION
1:25
(Below cable opening at PP 124.5)
("E" Line shown, "W" Line similar)

NOTES:
1. All faying surfaces of doubler plates and diaphragm PL shall comply with Class B surface.
2. Grind smooth all cut edges.

CONTRACT CHANGE ORDER NO. ____
SHEET ____ OF ____

REQUESTS FOR INFORMATION NOT ADDRESSED IN THIS CCO REMAIN IN FORCE

ALL DIMENSIONS ARE IN MILLIMETERS UNLESS OTHERWISE SHOWN

DIST.	COUNTY	ROUTE	KILOMETER POST TOTAL PROJECT	SHEET NO.	TOTAL SHEETS
04	SF	80	13.2/13.9	710SIRI	1204

REGISTERED ENGINEER - CIVIL
06-10-11
PLANS APPROVAL DATE
The State of California or its officers or agents shall not be responsible for the accuracy or completeness of electronic copies of this plan sheet.
REGISTERED PROFESSIONAL ENGINEER — Marwan N. Nader — No. C 054426 — Exp. 12/31/13 — CIVIL — STATE OF CALIFORNIA

T.Y. LIN / MOFFATT & NICHOL
825 BATTERY STREET
SAN FRANCISCO, CA 94111

Caltrans now has a web site! To get to the web site, go to: http://www.dot.ca.gov

MARK	DATE	DESCRIPTIONS	BY	CH'D	CCO#
1	04/18/12	EAST END OBG	GB	MN	87
0	06/10/11	ADDITIONAL ACCESS AT EAST END	DT	MN	202

REVISIONS

R. Vallzadeh/V. Toan/Y. L./W. L./F. C.
DESIGN OVERSIGHT
SIGN OFF DATE 04/18/12

	BY	CHECKED
DESIGN	D. Turner	M. Nader
DETAILS	D. Turner	G. Baker
QUANTITIES	D. Turner	G. Baker

PREPARED FOR THE STATE OF CALIFORNIA DEPARTMENT OF TRANSPORTATION

R. Manzanarez
PROJECT ENGINEER

BRIDGE NO. 34-0006L/R
KILOMETER POST 13.2/13.9

SAN FRANCISCO OAKLAND BAY BRIDGE
EAST SPAN SEISMIC SAFETY PROJECT
SELF-ANCHORED SUSPENSION BRIDGE
(SUPERSTRUCTURE & TOWER)

FLOORBEAM AT EAST TRANSITION NO. 6A

Rev. Date: 5-18-98
ORIGINAL SCALE IN MILLIMETERS FOR REDUCED PLANS 0 10 20 30 40 50 60 70 80 90 100
CU 04
EA 0120F1
DISREGARD PRINTS BEARING EARLIER REVISION DATES
REVISION DATES (PRELIMINARY STAGE ONLY) 06/10/11
SHEET 293SIRI OF
FILE -> I:\bb\04-0120F1\sas\contract plans and cco\cco\cco#87\temp\agefd04a.dgn

100% PS&E
DATE PLOTTED -> 18 APR 2012 TIME PLOTTED -> 11:22:05
USERNAME -> DWinrow

DIST.	COUNTY	ROUTE	KILOMETER POST TOTAL PROJECT	SHEET NO.	TOTAL SHEETS
04	SF	80	13.2/13.9	711R1	1204

George Baker
REGISTERED ENGINEER - CIVIL

12-6-04
PLANS APPROVAL DATE

REGISTERED PROFESSIONAL ENGINEER — George S. Baker — No. C57112 — Exp. 12/31/05 — CIVIL — STATE OF CALIFORNIA

The State of California or its officers or agents shall not be responsible for the accuracy or completeness of electronic copies of this plan sheet.

T.Y. LIN / MOFFATT & NICHOL
825 BATTERY STREET
SAN FRANCISCO, CA 94111

Caltrans now has a web site! To get to the web site, go to: http://www.dot.ca.gov

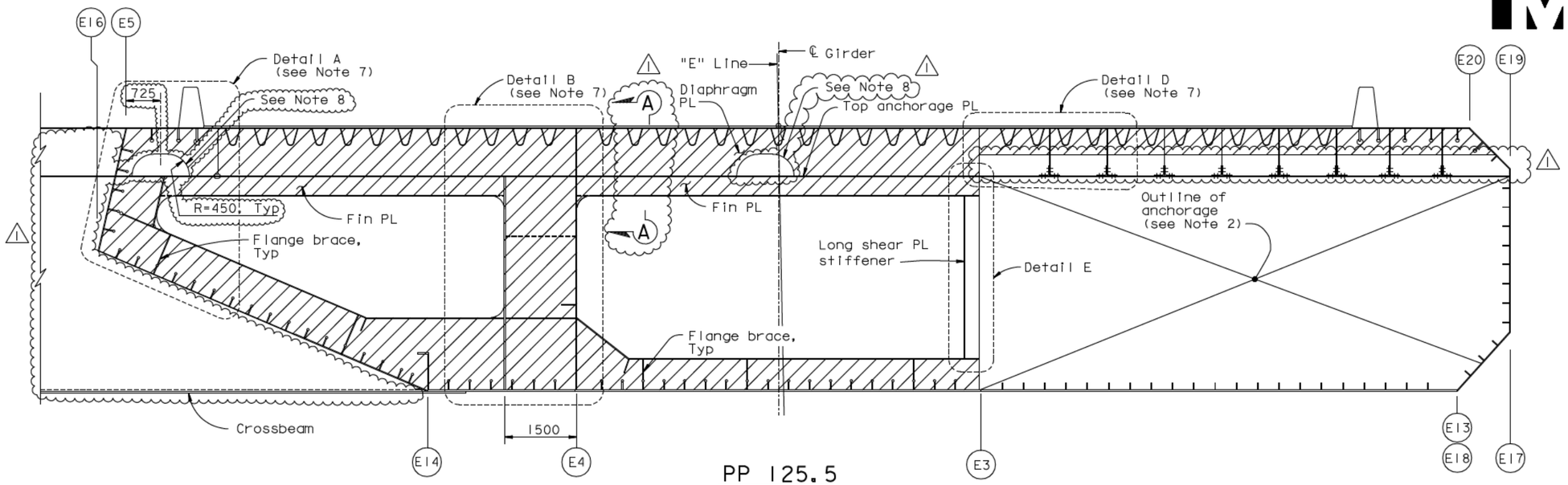

PP 125.5

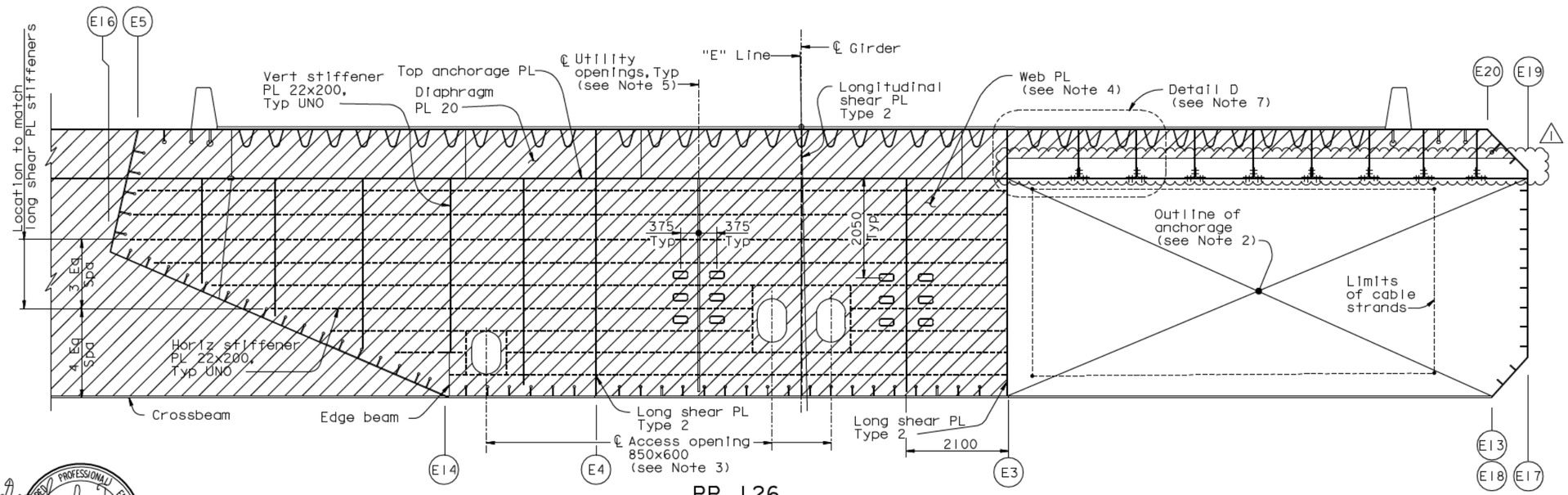

PP 126

"E" LINE SECTION (See Note 6)

1:50

LEGEND:

▨ "Indicates SPCM web PL"

NOTES:

1. For floorbeam details not shown and Section A-A, see "Typical Floorbeam Details" sheets and "Floorbeam At East Transition Details" sheets.
2. For anchorage details, see "East Cable "E" Line Anchorage Layout" sheets and "Girder At East Transition No.14" sheet.
3. For details of access opening, see "Typical Girder Details No.7" sheet.
4. For floorbeam web PL details at PP126, see "Floorbeam At East Transition Details No.2" sheet.
5. For utility opening details not shown, see "Girder At Pier E2 No.4" sheet.
6. "E" Line girder is shown, "W" Line girder is similar.
7. For Details A, B, D and E, see "Floorbeam At East Transition Details" sheets.
8. ⚠1 It is acceptable to use a single straight stiffener along the top edge of the opening 1000 mm long with typical termination details in lieu of a stiffening flange at this location, subject to review and approval of the Engineer.

Daniel J. Turner
REGISTERED PROFESSIONAL ENGINEER — Daniel J. Turner — No. C 65033 — Exp. 06/30/13 — CIVIL — STATE OF CALIFORNIA

FOR REVISIONS ONLY

CONTRACT CHANGE ORDER NO. ____
SHEET ____ OF ____

REQUESTS FOR INFORMATION NOT ADDRESSED IN THIS CCO REMAIN IN FORCE

ALL DIMENSIONS ARE IN MILLIMETERS UNLESS OTHERWISE SHOWN

R. Vallzadeh/V. Toan/Y.L./W.L./F.C.
DESIGN OVERSIGHT
SIGN OFF DATE 09/01/11

MARK	DATE	DESCRIPTIONS	BY	CH'D	CCO#
⚠1	09/01/11	EAST END OBG	DT	GB	87

REVISIONS

	BY	CHECKED
DESIGN	G. Baker	P. Ritchie
DETAILS	S. Camo	T. McMeans
QUANTITIES	C. Mauch	M. Roberts

PREPARED FOR THE STATE OF CALIFORNIA DEPARTMENT OF TRANSPORTATION

R. Manzanarez
PROJECT ENGINEER

BRIDGE NO. 34-0006L/R
KILOMETER POST 13.2/13.9

SAN FRANCISCO OAKLAND BAY BRIDGE
EAST SPAN SEISMIC SAFETY PROJECT
SELF-ANCHORED SUSPENSION BRIDGE
(SUPERSTRUCTURE & TOWER)

FLOORBEAM AT EAST TRANSITION NO. 7

Rev. Date: 5-18-98

ORIGINAL SCALE IN MILLIMETERS FOR REDUCED PLANS 0 10 20 30 40 50 60 70 80 90 100

CU 04
EA 0120F1

DISREGARD PRINTS BEARING EARLIER REVISION DATES →

REVISION DATES (PRELIMINARY STAGE ONLY): 05/15/99 | 08/02/99 | 05/31/01 | 04/08/02 | 07/01/02 | 12/19/02

SHEET 294R1 OF

FILE -> I:\bb\04-012001\sas\contract plans and cco\cco\cco#87\1-original 09-01-11\dgn\agefd05.dgn

DATE PLOTTED -> 30 AUG 2011 TIME PLOTTED -> 11:39:23
USERNAME -> PTom
100 % PS&E

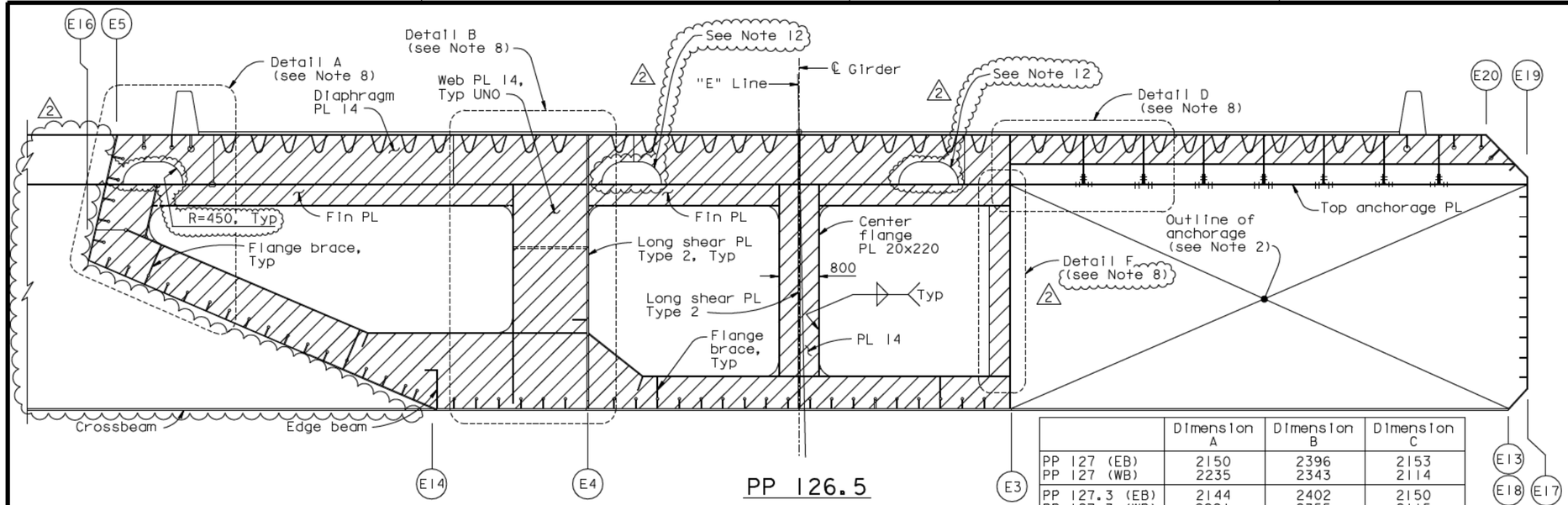

PP 126.5

	Dimension A	Dimension B	Dimension C
PP 127 (EB)	2150	2396	2153
PP 127 (WB)	2235	2343	2114
PP 127.3 (EB)	2144	2402	2150
PP 127.3 (WB)	2221	2355	2115

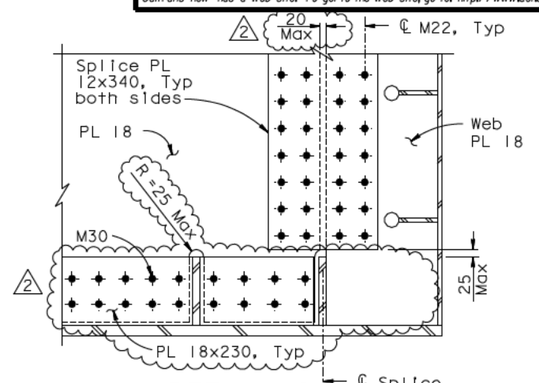

DETAIL C

1:10

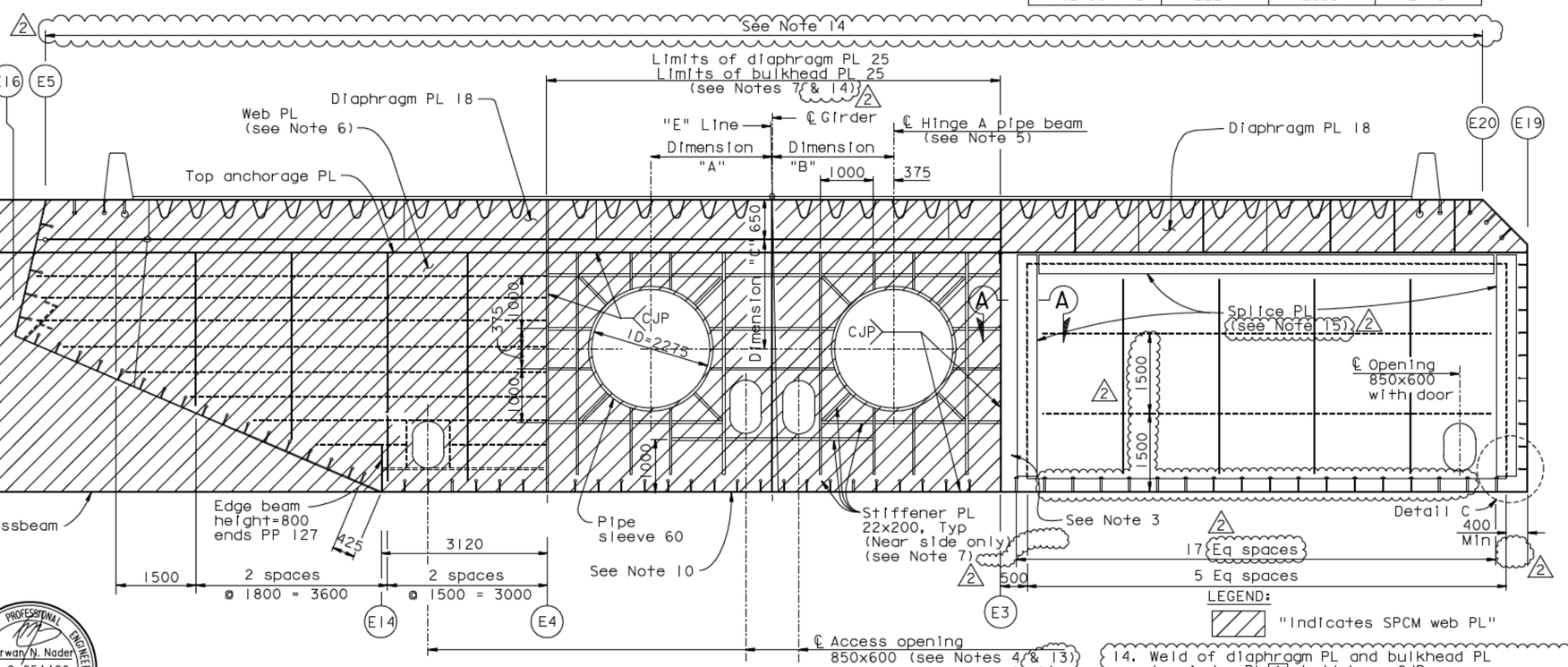

PP 127

"E" LINE SECTION (See Note 9)

1:50

LEGEND:

"Indicates SPCM web PL"

NOTES:

1. For floorbeam details not shown, see "Typical Floorbeam Details" sheets. For dimensions not shown, see "Girder At East Transition" sheets.
2. For anchorage details, see "East Cable Anchorage "E" Line Layout" sheets and "Girder At East Transition No.14" sheet.
3. For splice of floorbeam to longitudinal shear PL at PP127, see "Girder At East Transition" sheets.
4. For details of access opening, see "Typical Girder Details No.7" sheet. Center access openings between adjacent stiffeners.
5. For details of pipe beam, see "Hinge A Details" sheets.
6. For floorbeam web PL details at PP127, see "Floorbeam At East Transition Details No.2" sheet.
7. Bulkhead is similar to diaphragm PL. For details of diaphragm and bulkhead not shown, see "Hinge A Details" sheets.
8. For Details A, B, D and F, see "Floorbeam At East Transition Details" sheets.
9. "E" Line girder is shown, "W" Line girder is similar. For both "E" Line and "W" Line, Dimension A shall be taken to the North of the CL girder and Dimension B to the South of the CL girder.
10. For stiffener transitions, see "Typical Girder Details No.16" sheet.
11. For Section A-A, see "Floorbeam At East Transition No.8A" sheet.
12. It is acceptable to use a single straight stiffener along the top edge of the opening 1000 mm long with typical termination details in lieu of a stiffening flange at this location, subject to review and approval of the Engineer.
13. Taper the horizontal stiffener in the longitudinal shear PL at 1 to 2.5 to be flush with the edge of the access opening. Stiffener remains tapered between PP127-400 and PP127.3+400. In addition, the access opening reinforcing flange shall be discontinuous. This flange crosses @ PP127 and PP127.3; fillet weld the access opening stiffener at each face of the longitudinal shear PL stiffener.
14. Weld of diaphragm PL and bulkhead PL to girder PL A shall be a CJP.
15. At the Contractor's option, the bolted splice may be replaced with a CJP, subject to review and approval of the Engineer.

ALL DIMENSIONS ARE IN MILLIMETERS UNLESS OTHERWISE SHOWN

DIST.	COUNTY	ROUTE	KILOMETER POST TOTAL PROJECT	SHEET NO.	TOTAL SHEETS
04	SF	80	13.2/13.9	712R2	1204

George Baker
REGISTERED ENGINEER - CIVIL

12-6-04
PLANS APPROVAL DATE

The State of California or its officers or agents shall not be responsible for the accuracy or completeness of electronic copies of this plan sheet.

REGISTERED PROFESSIONAL ENGINEER — George S. Baker — No. C57112 — Exp. 12/31/05 — CIVIL — STATE OF CALIFORNIA

T.Y. LIN / MOFFATT & NICHOL
825 BATTERY STREET
SAN FRANCISCO, CA 94111

Caltrans now has a web site! To get to the web site, go to: http://www.dot.ca.gov

REGISTERED PROFESSIONAL ENGINEER — Marwan N. Nader — No. C 054426 — Exp. 12/31/11 — CIVIL — STATE OF CALIFORNIA

FOR REVISIONS ONLY

CONTRACT CHANGE ORDER NO. ____
SHEET ____ OF ____

REQUESTS FOR INFORMATION NOT ADDRESSED IN THIS CCO REMAIN IN FORCE

MARK	DATE	DESCRIPTIONS	BY	CH'D	CCO#
2	09/01/11	EAST END OBG	MN	DT	87
1	04/09/10	HINGE A MODIFICATIONS	MN	GB	120

REVISIONS

R. Vallzadeh/V. Toan/Y.L./W.L./F.C.
DESIGN OVERSIGHT
SIGN OFF DATE 09/01/11

DESIGN	BY G. Baker	CHECKED P. Ritchie	
DETAILS	BY S. Camo	CHECKED T. McMeans	
QUANTITIES	BY C. Mauch	CHECKED M. Roberts	

PREPARED FOR THE STATE OF CALIFORNIA
DEPARTMENT OF TRANSPORTATION

R. Manzanarez
PROJECT ENGINEER

BRIDGE NO. 34-0006L/R
KILOMETER POST 13.2/13.9

SAN FRANCISCO OAKLAND BAY BRIDGE
EAST SPAN SEISMIC SAFETY PROJECT
SELF-ANCHORED SUSPENSION BRIDGE
(SUPERSTRUCTURE & TOWER)

FLOORBEAM AT EAST TRANSITION NO. 8

Rev. Date: 5-18-98

ORIGINAL SCALE IN MILLIMETERS FOR REDUCED PLANS 0 10 20 30 40 50 60 70 80 90 100

CU 04
EA 0120F1

DISREGARD PRINTS BEARING EARLIER REVISION DATES

REVISION DATES (PRELIMINARY STAGE ONLY): 05/15/99 | 08/02/99 | 05/31/01 | 04/08/02 | 07/01/02 | 12/19/02

SHEET 295R2 OF

FILE -> I:\bb\04-012001\sas\contract plans and cco\cco\cco#87\1-original 09-01-11\dgn\agefd09.dgn

USERNAME -> ALTshansk DATE PLOTTED -> 30 AUG 2011 TIME PLOTTED -> 09:52:18

100 % PS&E

DIST.	COUNTY	ROUTE	KILOMETER POST TOTAL PROJECT	SHEET NO.	TOTAL SHEETS
04	SF	80	13.2/13.9	714R3	1204

George Baker
REGISTERED ENGINEER - CIVIL

12-6-04
PLANS APPROVAL DATE

The State of California or its officers or agents shall not be responsible for the accuracy or completeness of electronic copies of this plan sheet.

REGISTERED PROFESSIONAL ENGINEER — George S. Baker — No. C 57112 — Exp. 12/31/05 — CIVIL — STATE OF CALIFORNIA

T.Y. LIN / MOFFATT & NICHOL
825 BATTERY STREET
SAN FRANCISCO, CA 94111

Caltrans now has a web site! To get to the web site, go to: http://www.dot.ca.gov

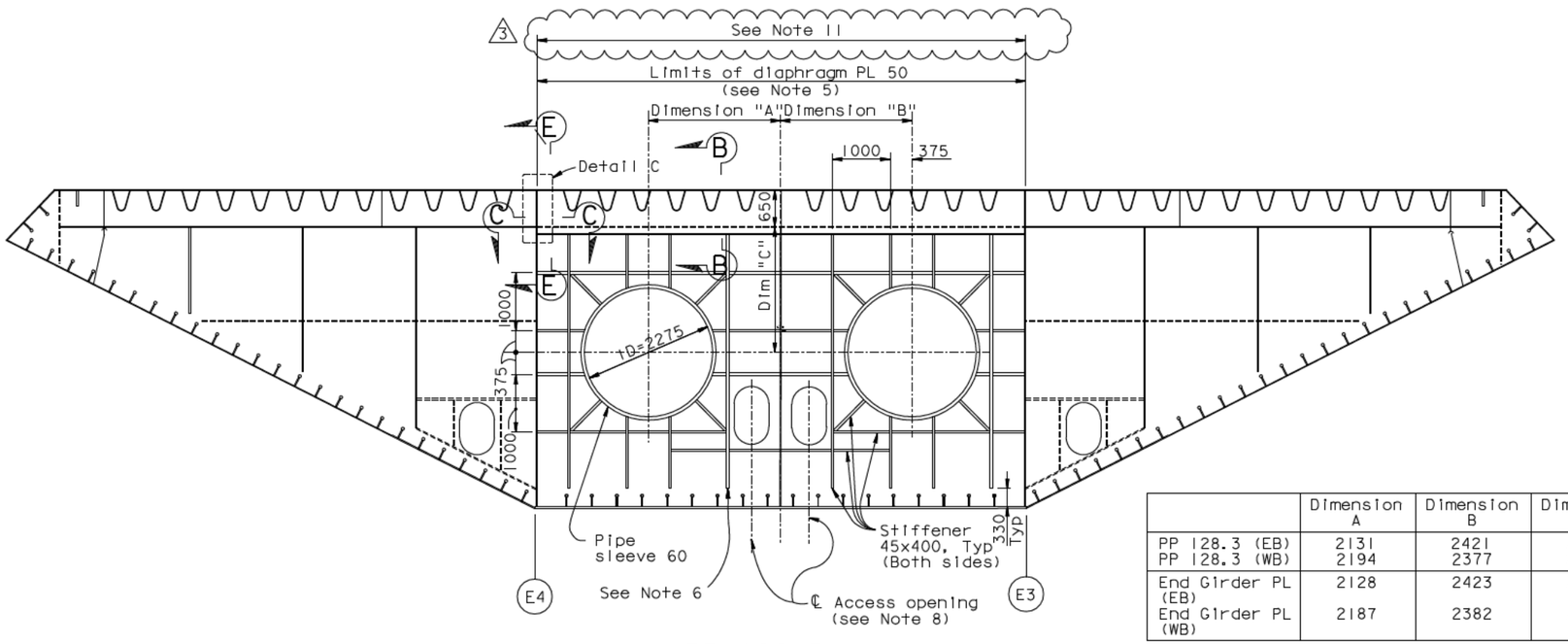

PP 128.3

	Dimension A	Dimension B	Dimension C
PP 128.3 (EB)	2131	2421	2138
PP 128.3 (WB)	2194	2377	2119
End Girder PL (EB)	2128	2423	2134
End Girder PL (WB)	2187	2382	2122

LEGEND:

▨ Field installed panel

NOTES:

1. "E" Line girder is shown, "W" Line girder is similar. For both "E" Line and "W" Line, Dimension A shall be taken to the North of CL girder and Dimension B to the South of the CL girder.
2. The two side portions of floorbeam at PP128.3 and the end girder plate are similar to the typical floorbeam. For details not shown, see "Typical Floorbeam Details No.1" sheet.
3. For details of pipe beam, see "Hinge A Details" sheets.
4. For details of access opening, see "Typical Girder Details No.7" sheet.
5. Diaphragm layout is similar to diaphragm at PP 127. See "Floorbeam At East Transition No.8" sheet. For other details not shown, see "Hinge A Details" sheets.
6. Stiffener transition radius is 600 mm. For other stiffener transition details, see "Typical Girder Details No.16" sheet.
7. Deleted.
8. Center access openings between adjacent stiffeners.
9. For Sections B-B, C-C and E-E, and "Detail B" and Detail C" see "Floorbeam At East Transition No.11" sheet.
10. For catwalk at PP128.7, see "Girder Access Details No.13" sheet.
11. (3) Weld of diaphragm PL 50 to girder PL A shall be PJP (25) full length.

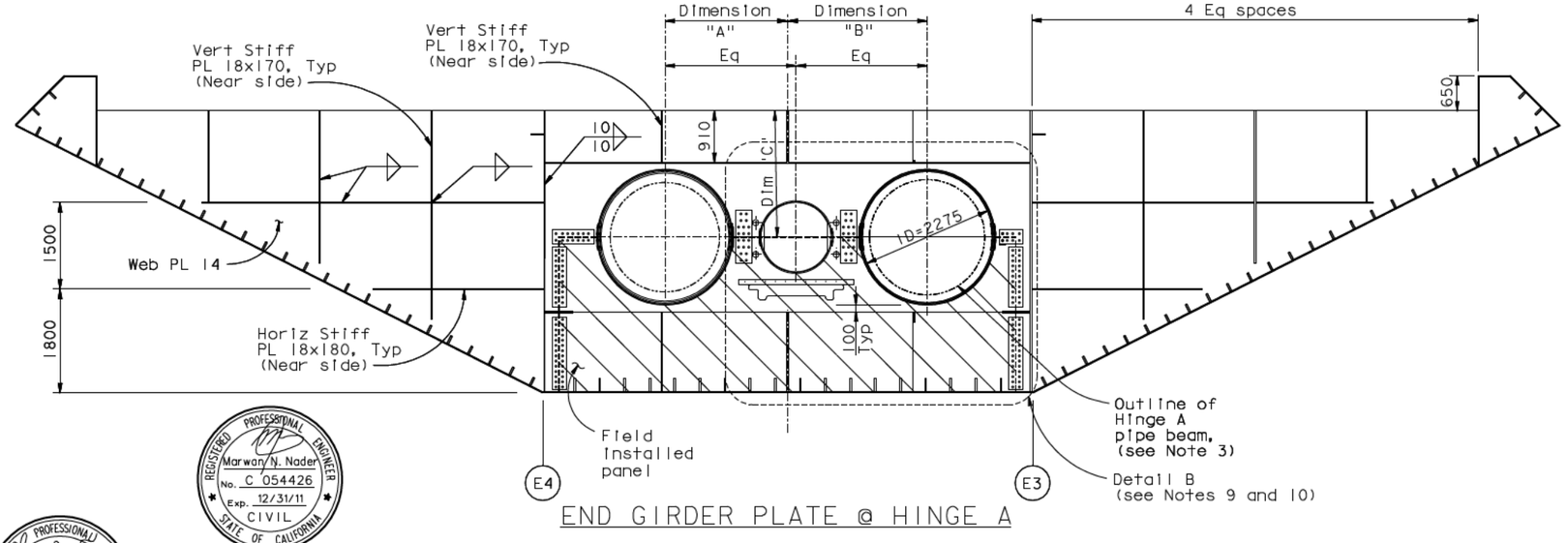

END GIRDER PLATE @ HINGE A

"E" LINE SECTION (See Note 1)
1:50

Marwan N. Nader — No. C 054426 — Exp. 12/31/11 — CIVIL — STATE OF CALIFORNIA
FOR REVISION (3) ONLY

Daniel J. Turner — No. C 65033 — Exp. 06/30/13 — CIVIL — STATE OF CALIFORNIA
FOR REVISIONS (1) & (2) ONLY

CONTRACT CHANGE ORDER NO. ____
SHEET ___ OF ___

REQUESTS FOR INFORMATION NOT ADDRESSED IN THIS CCO REMAIN IN FORCE

MARK	DATE	DESCRIPTIONS	BY	CH'D	CCO#
3	09/01/11	EAST END OBG	MN	DT	87
2	06/10/11	ADDITIONAL ACCESS AT EAST END	DT	GB	202
1	04/09/10	HINGE A MODIFICATIONS	GB	MN	120

REVISIONS

R. Vallizadeh/V. Toan/Y.L./W.L./F.C.
DESIGN OVERSIGHT
SIGN OFF DATE 09/01/11

Rev. Date: 5-18-98

	BY	CHECKED
DESIGN	G. Baker	P. Ritchie
DETAILS	M. Gulyas	T. McMeans
QUANTITIES	C. Mauch	M. Roberts

PREPARED FOR THE STATE OF CALIFORNIA DEPARTMENT OF TRANSPORTATION

R. Manzanarez
PROJECT ENGINEER

CU 04
EA 0120F1

ALL DIMENSIONS ARE IN MILLIMETERS UNLESS OTHERWISE SHOWN

ORIGINAL SCALE IN MILLIMETERS FOR REDUCED PLANS 0 10 20 30 40 50 60 70 80 90 100

BRIDGE NO. 34-0006L/R
KILOMETER POST 13.2/13.9

DISREGARD PRINTS BEARING EARLIER REVISION DATES →

REVISION DATES (PRELIMINARY STAGE ONLY): 01/15/99 | 05/15/99 | 08/02/99 | 05/21/01 | 04/08/02 | 07/01/02 | 12/19/02 | 05/16/03 | 09/06/04

SAN FRANCISCO OAKLAND BAY BRIDGE
EAST SPAN SEISMIC SAFETY PROJECT
SELF-ANCHORED SUSPENSION BRIDGE
(SUPERSTRUCTURE & TOWER)

FLOORBEAM AT EAST TRANSITION NO. 10

SHEET 297R3 OF

FILE -> I:\bb\04-0120I\sas\contract plans and cco\cco\cco#87\1-original 09-01-11\dgn\agefd06f-r1.dgn

USERNAME -> PTom
DATE PLOTTED -> 30 AUG 2011
TIME PLOTTED -> 11:41:23
100 % PS&E

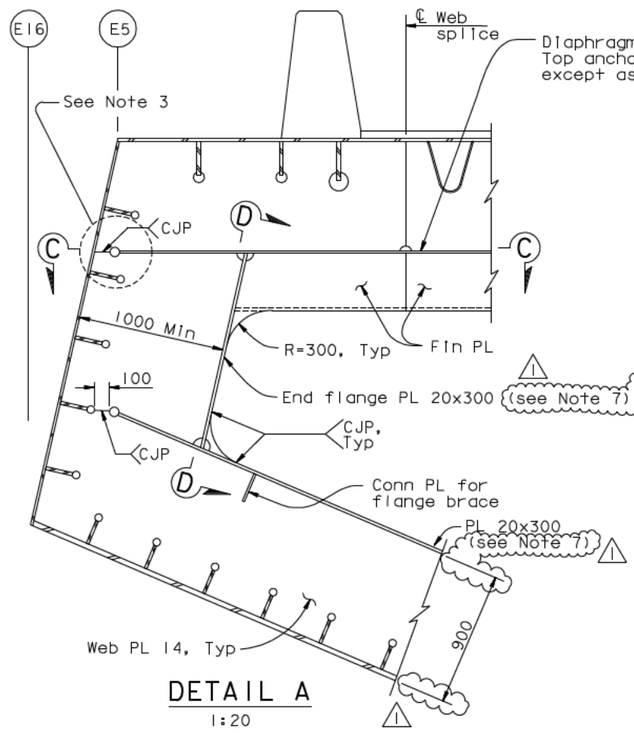

DETAIL A
1:20

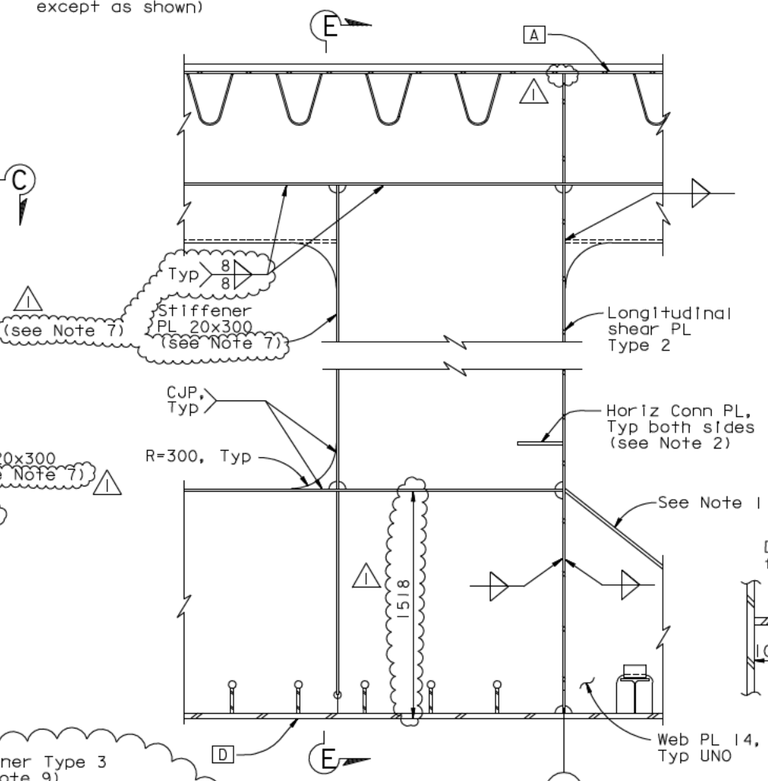

DETAIL B
1:20

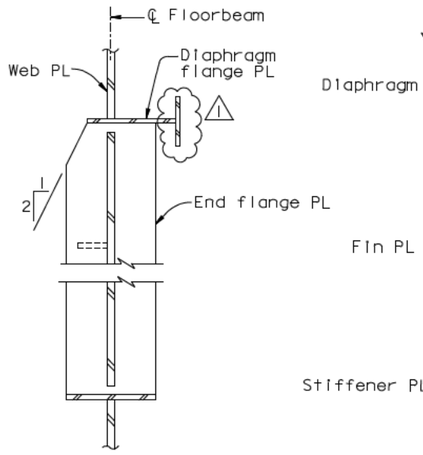

SECTION D-D
1:10

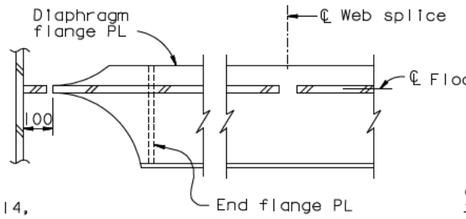

SECTION C-C
1:10

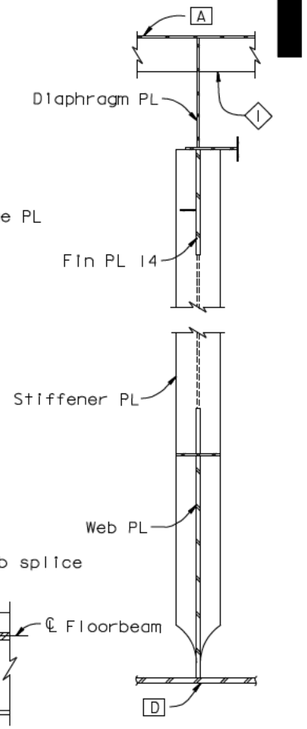

SECTION E-E
1:20

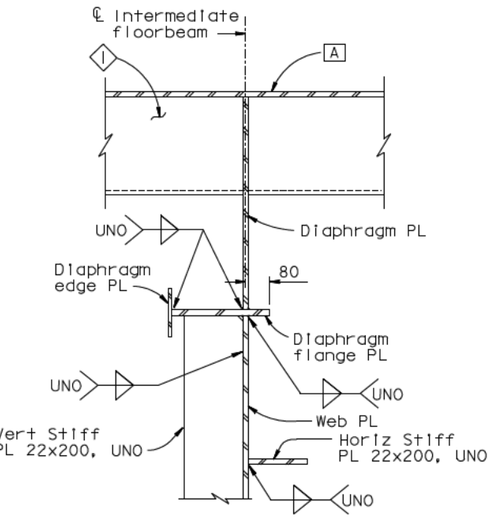

SECTION B-B
1:10

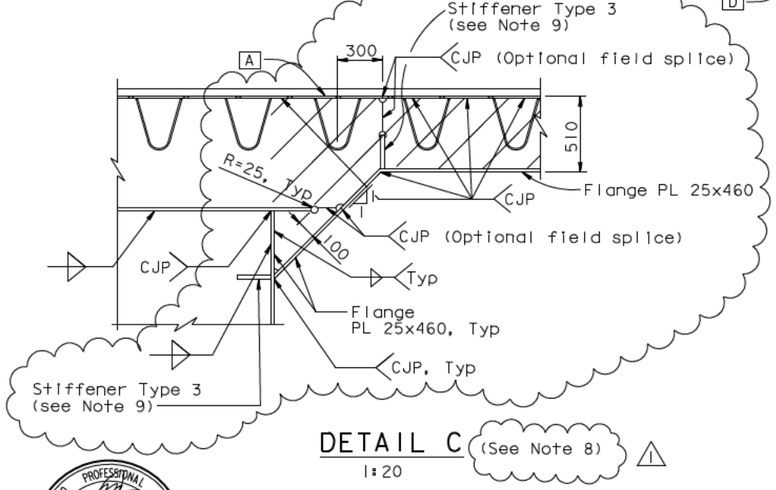

DETAIL C (See Note 8)
1:20

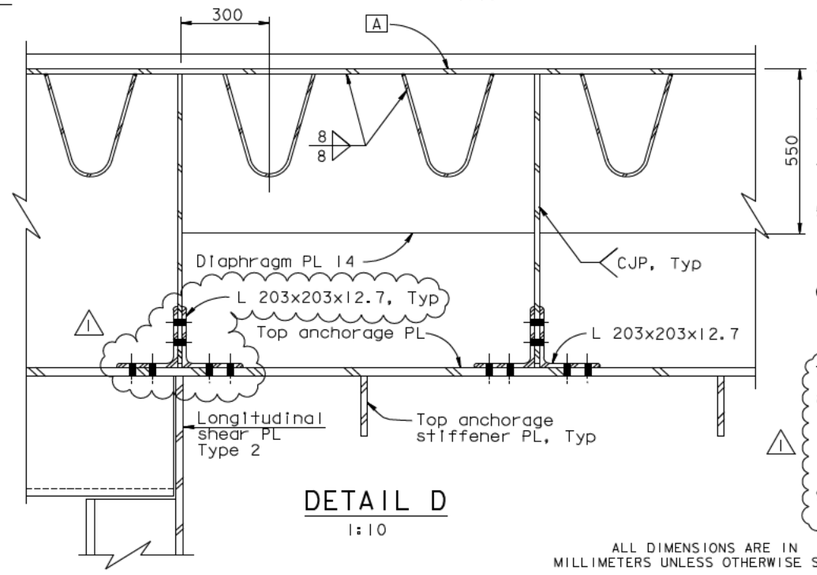

DETAIL D
1:10

NOTES:

1. For details not shown, see "Typical Floorbeam Details" sheets.
2. For horizontal connection PL detail at longitudinal shear PL, see "Typical Girder Details No.9" sheet.
3. For details of top anchorage PL through girder at crossbeam, see "Crossbeam At East Anchorage" sheets.
4. For details of stiffener Type 1, see "Typical Girder Details No.4" sheet.
5. For "Floorbeam At East Transition Details" sheets, all bolts shall be detailed according to the Bolt Dimension Table. See "Typical Girder Details No.1" sheet. All bolts are HS UNO.
6. For "Floorbeam At East Transition Details" sheets UNO, all fillet welds shall be 6 mm for plate sizes not greater than 20 mm. For plates greater than 20 mm, fillet welds shall be 8 mm UNO.
7. In lieu of PL 20x300, two PL 20x145 may be used.
8. For flanges of cable opening, two PL 25x225 may be used in lieu of PL 25x460. In this case, the CJP flange weld in each flange shall be extended 100 mm and the fillet welds for the lower flanges shall overlap the CJP welds in the extension.
9. For stiffener Type 3, see "Floorbeam At East Transition Details No.3" sheet.

ALL DIMENSIONS ARE IN MILLIMETERS UNLESS OTHERWISE SHOWN

Caltrans Metric

DIST.	COUNTY	ROUTE	KILOMETER POST TOTAL PROJECT	SHEET NO.	TOTAL SHEETS
04	SF	80	13.2/13.9	715R1	1204

George Baker
REGISTERED ENGINEER - CIVIL
12-6-04
PLANS APPROVAL DATE

REGISTERED PROFESSIONAL ENGINEER — George S. Baker — No. C57112 — Exp. 12/31/05 — CIVIL — STATE OF CALIFORNIA

The State of California or its officers or agents shall not be responsible for the accuracy or completeness of electronic copies of this plan sheet.

T.Y. LIN / MOFFATT & NICHOL
825 BATTERY STREET
SAN FRANCISCO, CA 94111

Caltrans now has a web site! To get to the web site, go to: http://www.dot.ca.gov

REGISTERED PROFESSIONAL ENGINEER — Marwan N. Nader — No. C 054426 — Exp. 12/31/11 — CIVIL — STATE OF CALIFORNIA

CONTRACT CHANGE ORDER NO. ____
SHEET ____ OF ____

REQUESTS FOR INFORMATION NOT ADDRESSED IN THIS CCO REMAIN IN FORCE

FOR REVISIONS ONLY

R. Vallzadeh/V. Toan/Y.L./W.L./F.C.
DESIGN OVERSIGHT
SIGN OFF DATE 09/01/11

MARK	DATE	DESCRIPTIONS	BY	CH'D	CCO#
1	09/01/11	EAST END OBG	GB	MN	87

REVISIONS

	BY	CHECKED
DESIGN	G. Baker	P. Ritchie
DETAILS	M. Gulyas	T. McMeans
QUANTITIES	C. Mauch	M. Roberts

PREPARED FOR THE STATE OF CALIFORNIA
DEPARTMENT OF TRANSPORTATION

R. Manzanarez
PROJECT ENGINEER

BRIDGE NO. 34-0006L/R
KILOMETER POST 13.2/13.9

SAN FRANCISCO OAKLAND BAY BRIDGE
EAST SPAN SEISMIC SAFETY PROJECT
SELF-ANCHORED SUSPENSION BRIDGE
(SUPERSTRUCTURE & TOWER)

FLOORBEAM AT EAST TRANSITION DETAILS NO.1

Rev. Date: 5-18-98

ORIGINAL SCALE IN MILLIMETERS FOR REDUCED PLANS 0 10 20 30 40 50 60 70 80 90 100

CU 04
EA 0120F1

DISREGARD PRINTS BEARING EARLIER REVISION DATES

REVISION DATES (PRELIMINARY STAGE ONLY): 05/15/99 | 08/02/99 | 05/31/01 | 04/08/02 | 07/01/02 | 12/15/02 | 11/13/05

SHEET 298R1 OF

FILE -> I:\bb\04-012001\sas\contract plans and cco\cco\cco#87\1-original 09-01-11\dgn\agefdl3.dgn

USERNAME -> ALtshansky DATE PLOTTED -> 30 AUG 2011 TIME PLOTTED -> 09:54:08

100 % PS&E

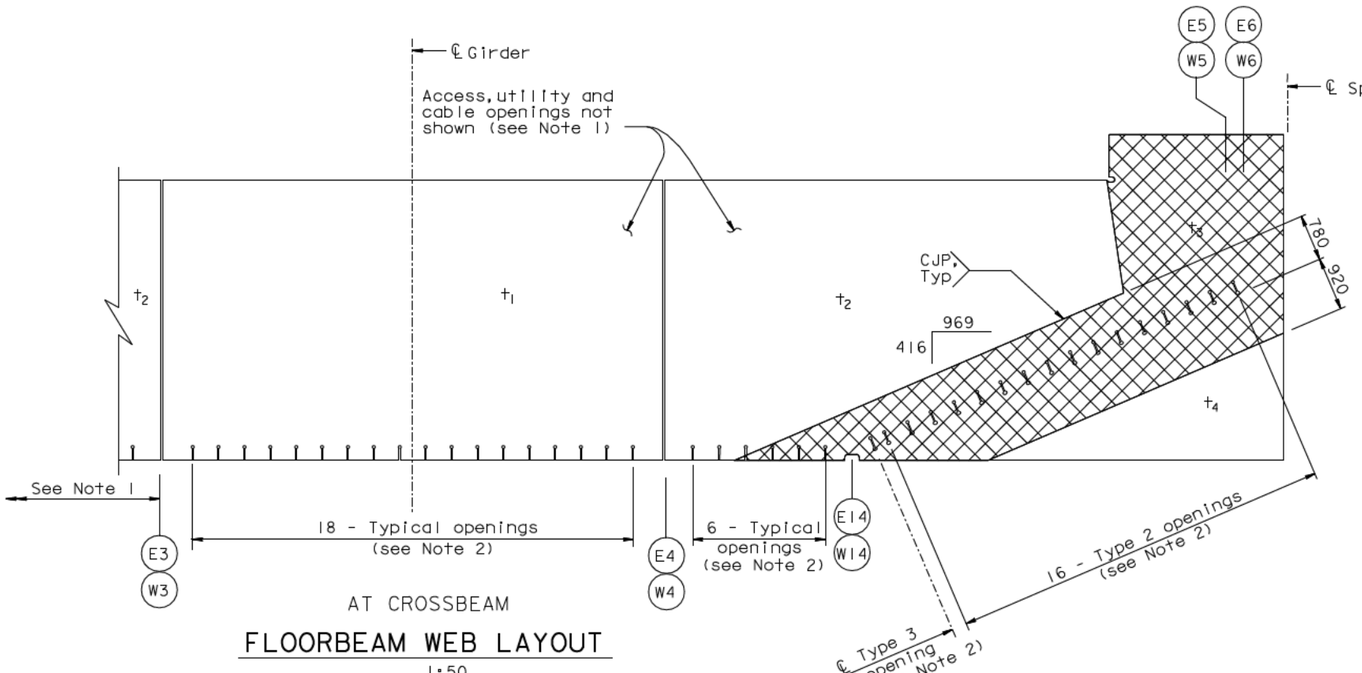

AT CROSSBEAM

FLOORBEAM WEB LAYOUT

1:50

FLOORBEAM WEB THICKNESS TABLE				
PP	t_1	t_2	t_3	t_4
118	18	18	22	18
120	20	20	25	20
125	20	20	25	20
126	30	20	25	20
127	25	18	22	18

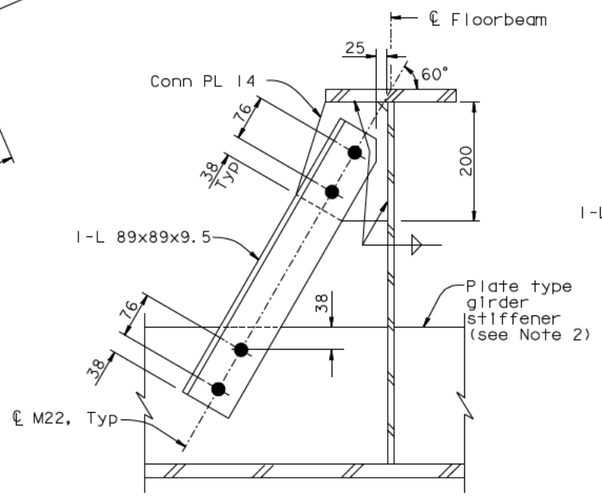

PLATE TYPE STIFFENER

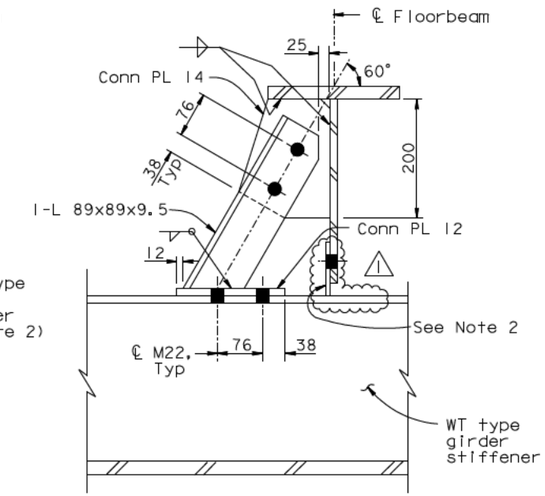

WT TYPE STIFFENER

FLANGE BRACE DETAIL

1:5

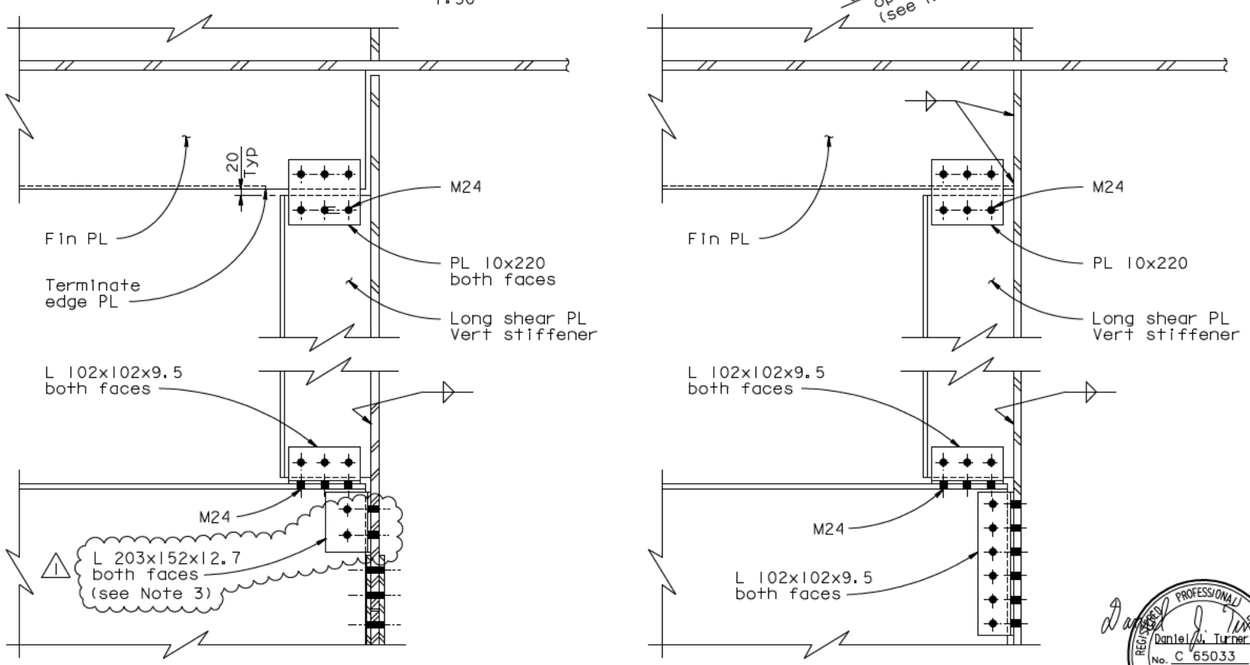

DETAIL F

1:10

DETAIL E

1:10

LEGEND:

"Indicates SPCM & TTP, web PL"

NOTES:

1. For locations of openings and details of floorbeams not shown, see "Floorbeam At East Transition" sheets.
2. For details of girder stiffener opening at floorbeams, see "Typical Girder Details No.6" sheet.
3. At the Contractor's option, ASTM A992 or ASTM A572 Gr 345 may be used in lieu of ASTM A709 for the L 203x152x12.7.

CONTRACT CHANGE ORDER NO. ____
SHEET ____ OF ____

REQUESTS FOR INFORMATION NOT ADDRESSED IN THIS CCO REMAIN IN FORCE

FOR REVISIONS ONLY

ALL DIMENSIONS ARE IN MILLIMETERS UNLESS OTHERWISE SHOWN

DIST.	COUNTY	ROUTE	KILOMETER POST TOTAL PROJECT	SHEET NO.	TOTAL SHEETS
04	SF	80	13.2/13.9	716R1	1204

George Baker
REGISTERED ENGINEER - CIVIL
12-6-04
PLANS APPROVAL DATE

REGISTERED PROFESSIONAL ENGINEER George S. Baker No. C57112 Exp. 12/31/05 CIVIL STATE OF CALIFORNIA

The State of California or its officers or agents shall not be responsible for the accuracy or completeness of electronic copies of this plan sheet.

T.Y. LIN / MOFFATT & NICHOL
825 BATTERY STREET
SAN FRANCISCO, CA 94111

Caltrans now has a web site! To get to the web site, go to: http://www.dot.ca.gov

Daniel J. Turner
REGISTERED PROFESSIONAL ENGINEER Daniel J. Turner No. C 65033 Exp. 06/30/13 CIVIL STATE OF CALIFORNIA

MARK	DATE	DESCRIPTIONS	BY	CH'D	CCO#
1	09/01/11	EAST END OBG	DT	GB	87

REVISIONS

R. Vallzadeh/V. Toan/Y.L./W.L./F.C.
DESIGN OVERSIGHT
SIGN OFF DATE 09/01/11

	BY	CHECKED
DESIGN	G. Baker	P. Ritchie
DETAILS	M. Gulyas	T. McMeans
QUANTITIES	C. Mauch	M. Roberts

PREPARED FOR THE STATE OF CALIFORNIA DEPARTMENT OF TRANSPORTATION

R. Manzanarez
PROJECT ENGINEER

BRIDGE NO. 34-0006L/R
KILOMETER POST 13.2/13.9

SAN FRANCISCO OAKLAND BAY BRIDGE
EAST SPAN SEISMIC SAFETY PROJECT
SELF-ANCHORED SUSPENSION BRIDGE (SUPERSTRUCTURE & TOWER)

FLOORBEAM AT EAST TRANSITION DETAILS NO. 2

Rev. Date: 5-18-98

ORIGINAL SCALE IN MILLIMETERS FOR REDUCED PLANS 0 10 20 30 40 50 60 70 80 90 100

CU 04
EA 0120F1

DISREGARD PRINTS BEARING EARLIER REVISION DATES

REVISION DATES (PRELIMINARY STAGE ONLY): 08/22/99 05/31/01 04/08/02 07/01/02 12/19/02

SHEET 299R1 OF

FILE -> I:\bb\04-0120I\sas\contract plans and cco\cco\cco#87\1-original 09-01-11\dgn\agefdl4.dgn

100 % PS&E
TIME PLOTTED --> 09:56:11
DATE PLOTTED --> 30 AUG 2011
USERNAME --> ALIshansk

DIST.	COUNTY	ROUTE	KILOMETER POST TOTAL PROJECT	SHEET NO.	TOTAL SHEETS
04	SF	80	13.2/13.9	716S1	1204

REGISTERED ENGINEER - CIVIL

09-01-11
PLANS APPROVAL DATE

REGISTERED PROFESSIONAL ENGINEER
Marwan N. Nader
No. C 054426
Exp. 12/31/11
CIVIL
STATE OF CALIFORNIA

The State of California or its officers or agents shall not be responsible for the accuracy or completeness of electronic copies of this plan sheet.

T.Y. LIN / MOFFATT & NICHOL
825 BATTERY STREET
SAN FRANCISCO, CA 94111

Caltrans now has a web site! To get to the web site, go to: http://www.dot.ca.gov

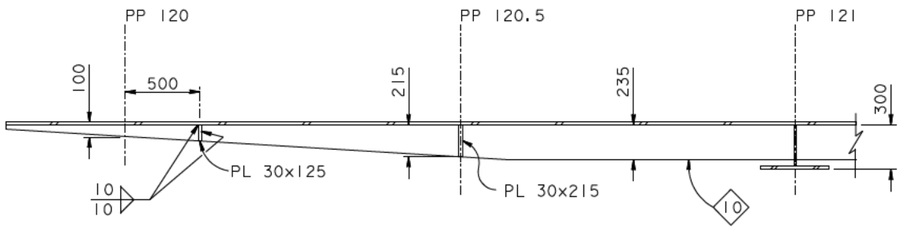

SECTION X-X
1:20

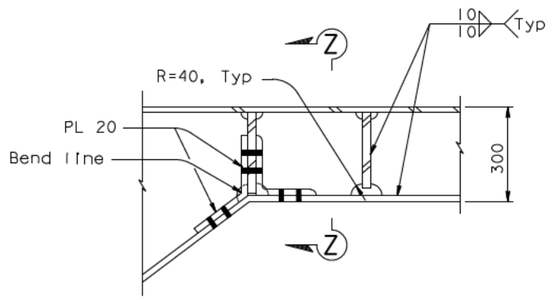

DETAIL H
1:10

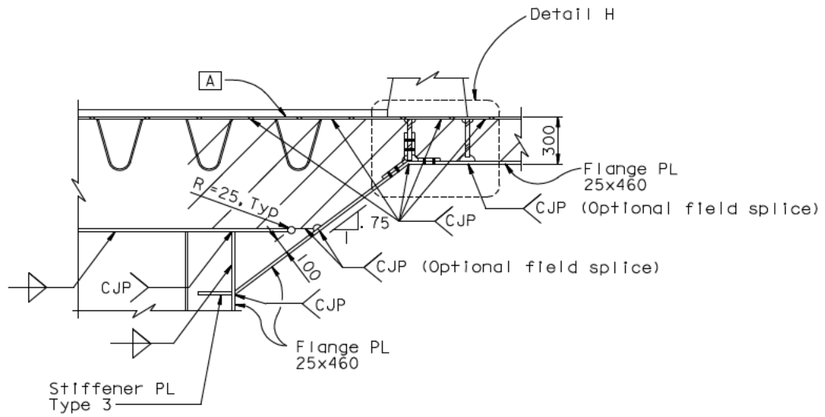

DETAIL N (@ PP 121)
1:20

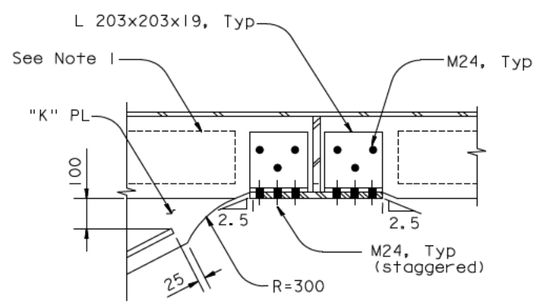

SECTION Z-Z (Detail F similar)
1:10

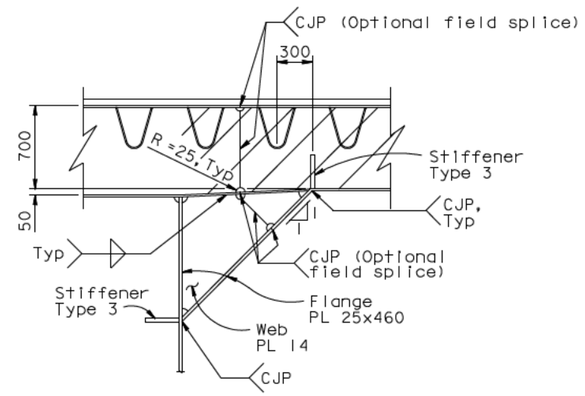

DETAIL G (@ PP 123)
1:25

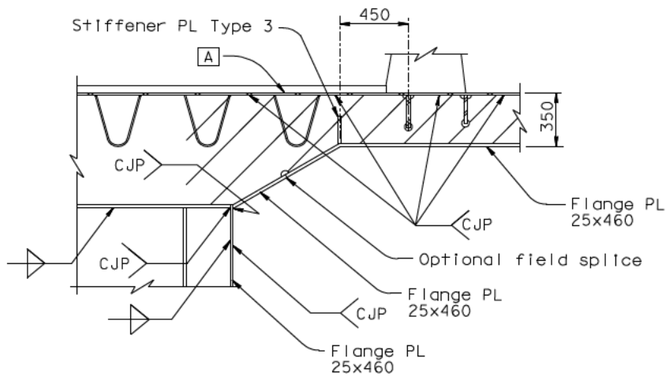

DETAIL M (@ PP 121.5)
1:20

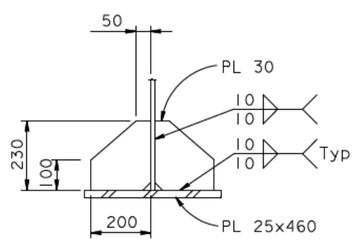

STIFFENER PLATE TYPE 3 DETAIL
1:5

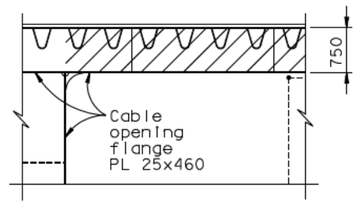

DETAIL J (@ PP 123.5)
1:25

NOTES:
1. Barrier connection not shown.

CONTRACT CHANGE ORDER NO. ____
SHEET ____ OF ____

REQUESTS FOR INFORMATION NOT ADDRESSED IN THIS CCO REMAIN IN FORCE

ALL DIMENSIONS ARE IN MILLIMETERS UNLESS OTHERWISE SHOWN

R. Vallzadeh/V. Toan/Y.L./W.L./F.C.
DESIGN OVERSIGHT
SIGN OFF DATE 09/01/11

MARK	DATE	REVISIONS	BY	CH'D	CCO#
0	09/01/11	EAST END OBG	GB	MN	87

	BY	CHECKED
DESIGN	G. Baker	M. Nader
DETAILS	G. Baker	M. Nader
QUANTITIES	G. Baker	M. Nader

PREPARED FOR THE
STATE OF CALIFORNIA
DEPARTMENT OF TRANSPORTATION

R. Manzanarez
PROJECT ENGINEER

BRIDGE NO. 34-0006L/R
KILOMETER POST 13.2/13.9
CU 04
EA 0120F1

SAN FRANCISCO OAKLAND BAY BRIDGE
EAST SPAN SEISMIC SAFETY PROJECT
SELF-ANCHORED SUSPENSION BRIDGE
(SUPERSTRUCTURE & TOWER)

FLOORBEAM AT EAST TRANSITION DETAILS NO. 3

Rev. Date: 5-18-98

ORIGINAL SCALE IN MILLIMETERS FOR REDUCED PLANS 0 10 20 30 40 50 60 70 80 90 100

DISREGARD PRINTS BEARING EARLIER REVISION DATES → 09/01/11

REVISION DATES (PRELIMINARY STAGE ONLY)

SHEET 299S1 OF

FILE -> I:\bb\04-012001\sas\contract plans and cco\cco\cco#87\1-original 09-01-11\dgn\agefdl4a.dgn

USERNAME -> AlTshansk DATE PLOTTED -> 30 AUG 2011 TIME PLOTTED -> 09:59:43

100 % PS&E

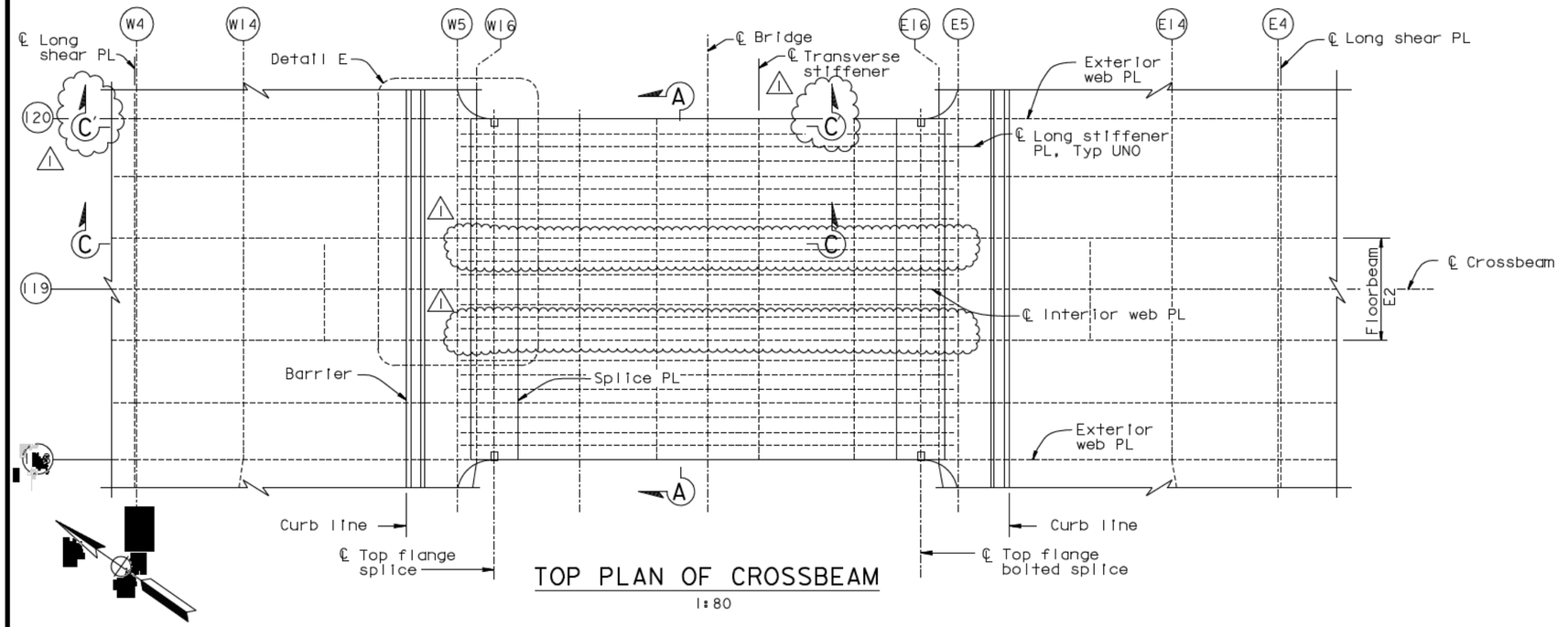

TOP PLAN OF CROSSBEAM

1:80

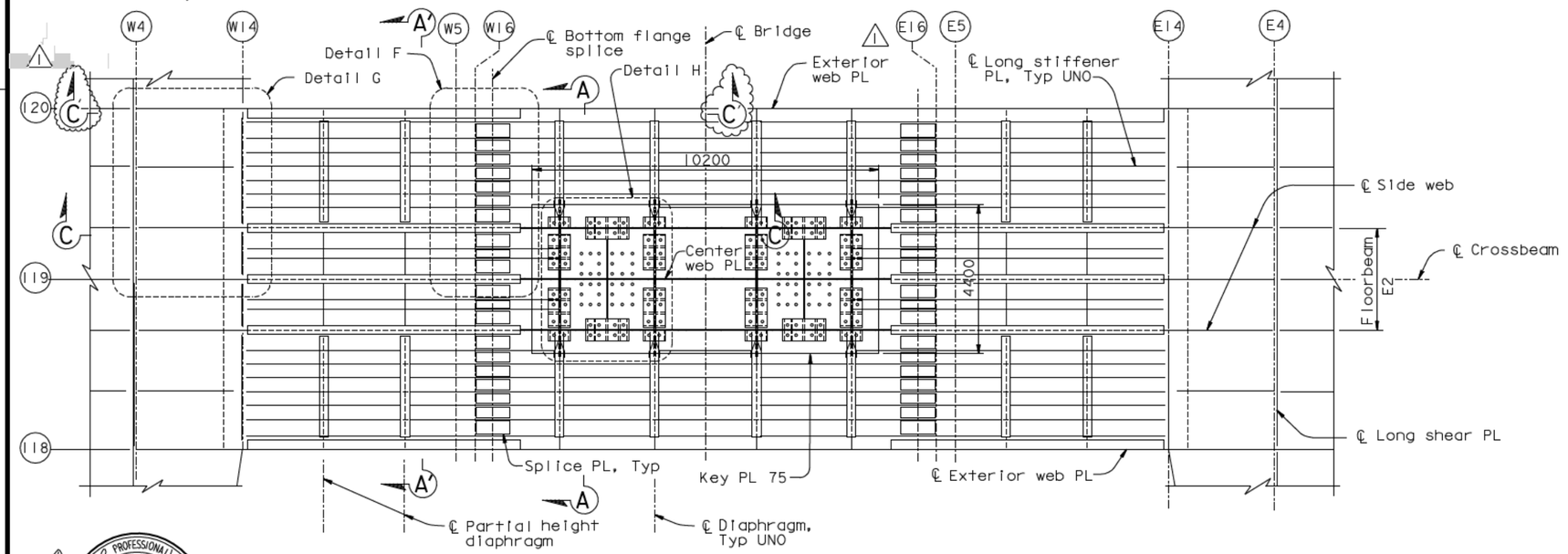

BOTTOM PLAN OF CROSSBEAM

1:80

NOTES:

1. For details not shown, see "Typical Crossbeam Details" sheets.
2. For Section C-C, see "Crossbeam At Pier E2 No.6" sheet. For Section C'-C', see "Crossbeam At Pier E2 No.6A" sheet.
3. For locations of W14, W16, E14 & E16, see "Girder At East Transition No. 1" and "Girder At East Transition No.3" sheets.
4. For all "Crossbeam At Pier E2" sheets, all bolts shall be detailed according to the Bolt Dimension Table. See "Typical Girder Details No.1" sheet. All bolts are HS unless noted otherwise.
5. For "Crossbeam At Pier E2" sheets unless noted otherwise, all fillet welds shall be 6 mm for plate sizes not greater than 20 mm. For plates greater than 20 mm, fillet welds shall be 8 mm unless noted otherwise.
6. For Detail E, see "Crossbeam At Pier E2 No.4" sheet.
7. For Detail F, see "Crossbeam At Pier E2 No.5" sheet.
8. For Detail G, see "Crossbeam At Pier E2 No.7" sheet.
9. For Sections A-A and A'-A', see "Crossbeam At Pier E2 No.2" sheet.

Caltrans Metric

DIST.	COUNTY	ROUTE	KILOMETER POST TOTAL PROJECT	SHEET NO.	TOTAL SHEETS
04	SF	80	13.2/13.9	717R1	1204

George Baker
REGISTERED ENGINEER - CIVIL

12-6-04
PLANS APPROVAL DATE

REGISTERED PROFESSIONAL ENGINEER — George S. Baker — No. C 57112 — Exp. 12/31/05 — CIVIL — STATE OF CALIFORNIA

The State of California or its officers or agents shall not be responsible for the accuracy or completeness of electronic copies of this plan sheet.

T.Y. LIN / MOFFATT & NICHOL
825 BATTERY STREET
SAN FRANCISCO, CA 94111

Caltrans now has a web site! To get to the web site, go to: http://www.dot.ca.gov

Daniel J. Turner — REGISTERED PROFESSIONAL ENGINEER — No. C 65033 — Exp. 06/30/13 — CIVIL — STATE OF CALIFORNIA

FOR REVISIONS ONLY

CONTRACT CHANGE ORDER NO. _____
SHEET ___ OF ___

REQUESTS FOR INFORMATION NOT ADDRESSED IN THIS CCO REMAIN IN FORCE

ALL DIMENSIONS ARE IN MILLIMETERS UNLESS OTHERWISE SHOWN

R. Vallzadeh/V. Toan/Y.L./W.L./F.C.
DESIGN OVERSIGHT
SIGN OFF DATE 09/01/11

MARK	DATE	REVISIONS	BY	CH'D	CCO#
1	09/01/11	EAST END OBG	DT	GB	87

		CHECKED
DESIGN	G. Baker	P. Ritchie
DETAILS	D. Veystman	T. McMeans
QUANTITIES	D. Turner	M. Roberts

PREPARED FOR THE STATE OF CALIFORNIA DEPARTMENT OF TRANSPORTATION

R. Manzanarez
PROJECT ENGINEER

BRIDGE NO. 34-0006L/R
KILOMETER POST 13.2/13.9

SAN FRANCISCO OAKLAND BAY BRIDGE
EAST SPAN SEISMIC SAFETY PROJECT
SELF-ANCHORED SUSPENSION BRIDGE
(SUPERSTRUCTURE & TOWER)

CROSSBEAM AT PIER E2 NO. 1

Rev. Date: 5-18-98

ORIGINAL SCALE IN MILLIMETERS FOR REDUCED PLANS 0 10 20 30 40 50 60 70 80 90 100

DISREGARD PRINTS BEARING EARLIER REVISION DATES →

REVISION DATES (PRELIMINARY STAGE ONLY)									SHEET	OF
05/15/99	08/02/99	05/31/01	04/08/02	07/01/02	12/18/02	12/07/05			300R1	

CU 04
EA 0120F1

FILE -> I:\bb\04-0120I\sas\contract plans and cco\cco\cco#87\1-original 09-01-11\dgn\agcrs05a.dgn

USERNAME -> Ptom
DATE PLOTTED -> 30 AUG 2011
TIME PLOTTED -> 10:21:20

100 % PS&E

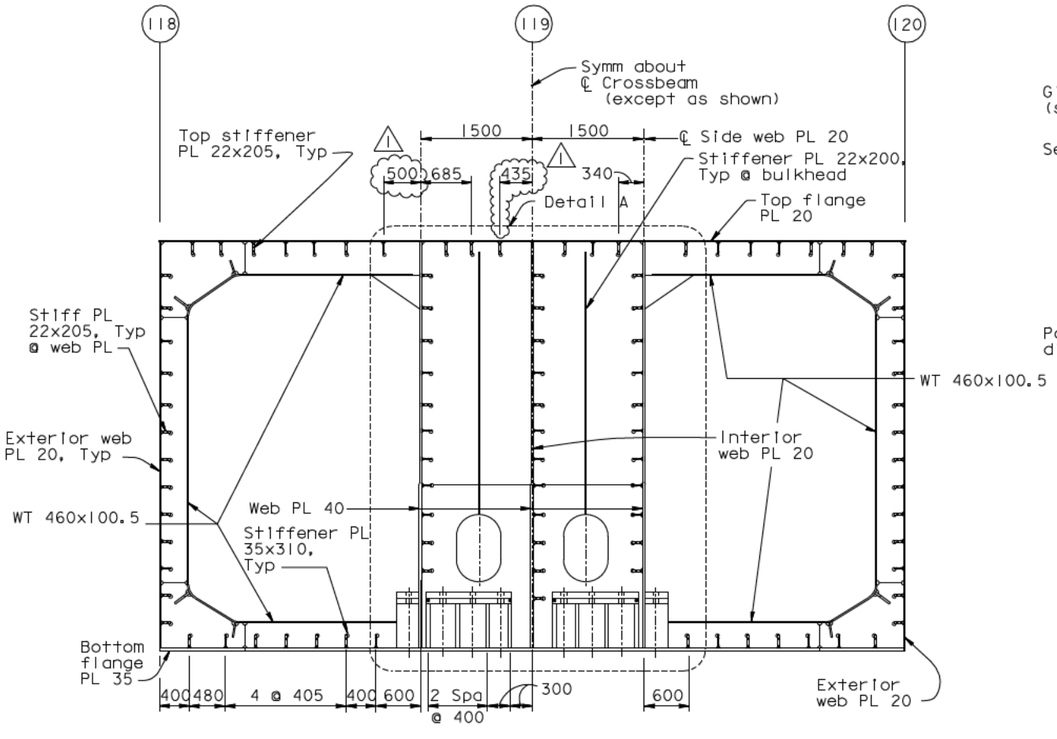

TYPICAL DIAPHRAGM

SECTION A-A

1:40

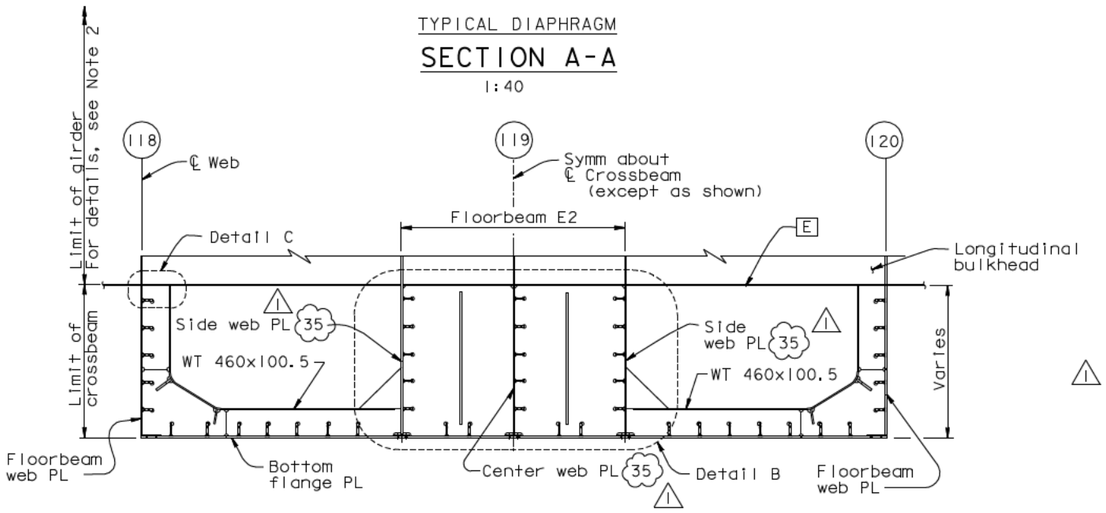

PARTIAL HEIGHT DIAPHRAGM

SECTION A'-A'

1:40

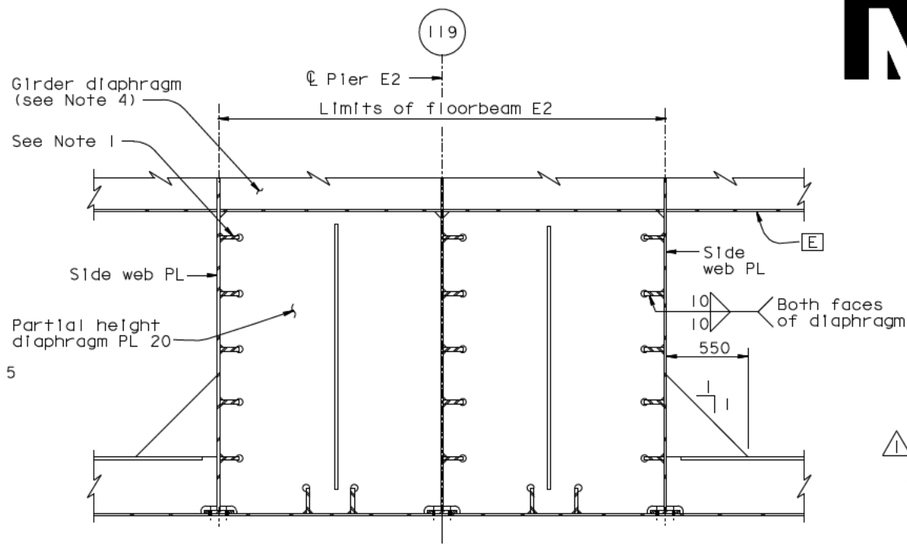

DETAIL B

1:20

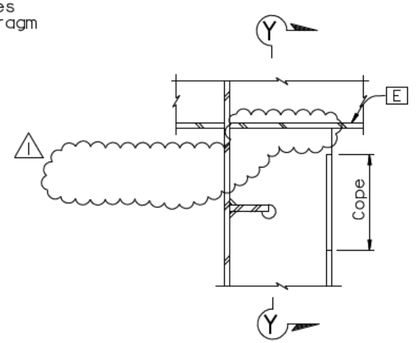

DETAIL C

1:10

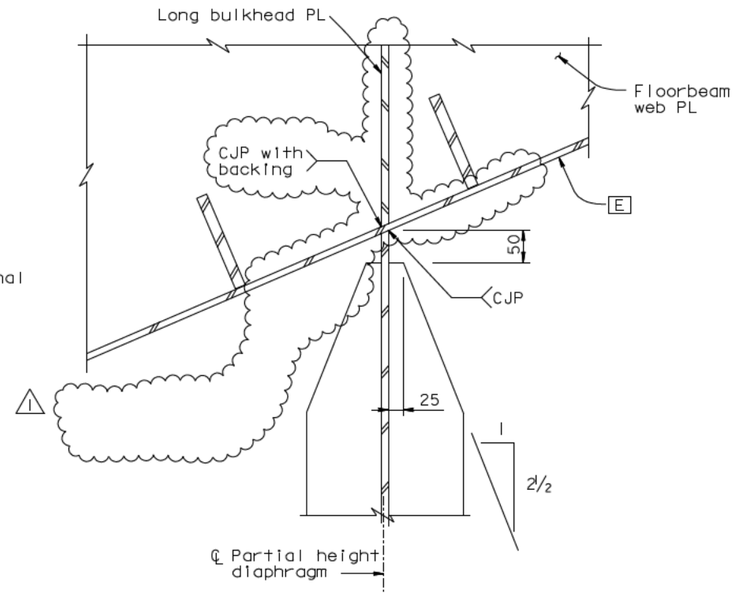

SECTION Y-Y

1:5

NOTES:

1. For details not shown, see "Typical Crossbeam Details" sheets.
2. For girder details, see "Girder At Pier E2" sheets
3. For Detail A, see "Crossbeam At Pier E2 No.3" sheet.
4. For diaphragm in girder, see "Girder At Pier E2 No.6" sheet.

Caltrans Metric

DIST.	COUNTY	ROUTE	KILOMETER POST TOTAL PROJECT	SHEET NO.	TOTAL SHEETS
04	SF	80	13.2/13.9	718R1	1204

George Baker
REGISTERED ENGINEER - CIVIL

12-6-04
PLANS APPROVAL DATE

REGISTERED PROFESSIONAL ENGINEER — George S. Baker — No. C 57112 — Exp. 12/31/05 — CIVIL — STATE OF CALIFORNIA

The State of California or its officers or agents shall not be responsible for the accuracy or completeness of electronic copies of this plan sheet.

T.Y. LIN / MOFFATT & NICHOL
825 BATTERY STREET
SAN FRANCISCO, CA 94111

Caltrans now has a web site! To get to the web site, go to: http://www.dot.ca.gov

Marwan N. Nader — No. C 054426 — Exp. 12/31/11 — CIVIL — REGISTERED PROFESSIONAL ENGINEER — STATE OF CALIFORNIA

FOR REVISIONS ONLY

CONTRACT CHANGE ORDER NO. ____
SHEET ___ OF ___

REQUESTS FOR INFORMATION NOT ADDRESSED IN THIS CCO REMAIN IN FORCE

ALL DIMENSIONS ARE IN MILLIMETERS UNLESS OTHERWISE SHOWN

R. Vallizadeh/V. Toan/Y.L./W.L./F.C.
DESIGN OVERSIGHT
SIGN OFF DATE 09/01/11

MARK	DATE	REVISIONS	BY	CH'D	CCO#
1	09/01/11	EAST END OBG	GB	MN	87

	BY	CHECKED
DESIGN	G. Baker	P. Ritchie
DETAILS	D. Veytsman	T. McMeans
QUANTITIES	D. Turner	M. Roberts

PREPARED FOR THE STATE OF CALIFORNIA DEPARTMENT OF TRANSPORTATION

R. Manzanarez
PROJECT ENGINEER

BRIDGE NO. 34-0006L/R
KILOMETER POST 13.2/13.9

SAN FRANCISCO OAKLAND BAY BRIDGE
EAST SPAN SEISMIC SAFETY PROJECT
SELF-ANCHORED SUSPENSION BRIDGE
(SUPERSTRUCTURE & TOWER)

CROSSBEAM AT PIER E2 NO.2

Rev. Date: 5-18-98

ORIGINAL SCALE IN MILLIMETERS FOR REDUCED PLANS 0 10 20 30 40 50 60 70 80 90 100

CU 04
EA 0120F1

DISREGARD PRINTS BEARING EARLIER REVISION DATES

REVISION DATES (PRELIMINARY STAGE ONLY): 05/15/99 | 08/02/99 | 05/31/01 | 04/08/02 | 07/01/02 | 12/07/05

SHEET 30 IRI OF

FILE -> I:\bb\04-012001\sas\contract plans and cco\cco\cco#87\1-original 09-01-11\dgn\agcrs13.dgn

USERNAME -> PTom DATE PLOTTED -> 30 AUG 2011 TIME PLOTTED -> 10:28:38

100 % PS&E

DIST.	COUNTY	ROUTE	KILOMETER POST TOTAL PROJECT	SHEET NO.	TOTAL SHEETS
04	SF	80	13.2/13.9	719R1	1204

George Baker
REGISTERED ENGINEER - CIVIL

12-6-04
PLANS APPROVAL DATE

The State of California or its officers or agents shall not be responsible for the accuracy or completeness of electronic copies of this plan sheet.

REGISTERED PROFESSIONAL ENGINEER — George S. Baker — No. C 57112 — Exp. 12/31/05 — CIVIL — STATE OF CALIFORNIA

T.Y. LIN / MOFFATT & NICHOL
825 BATTERY STREET
SAN FRANCISCO, CA 94111

Caltrans now has a web site! To get to the web site, go to: http://www.dot.ca.gov

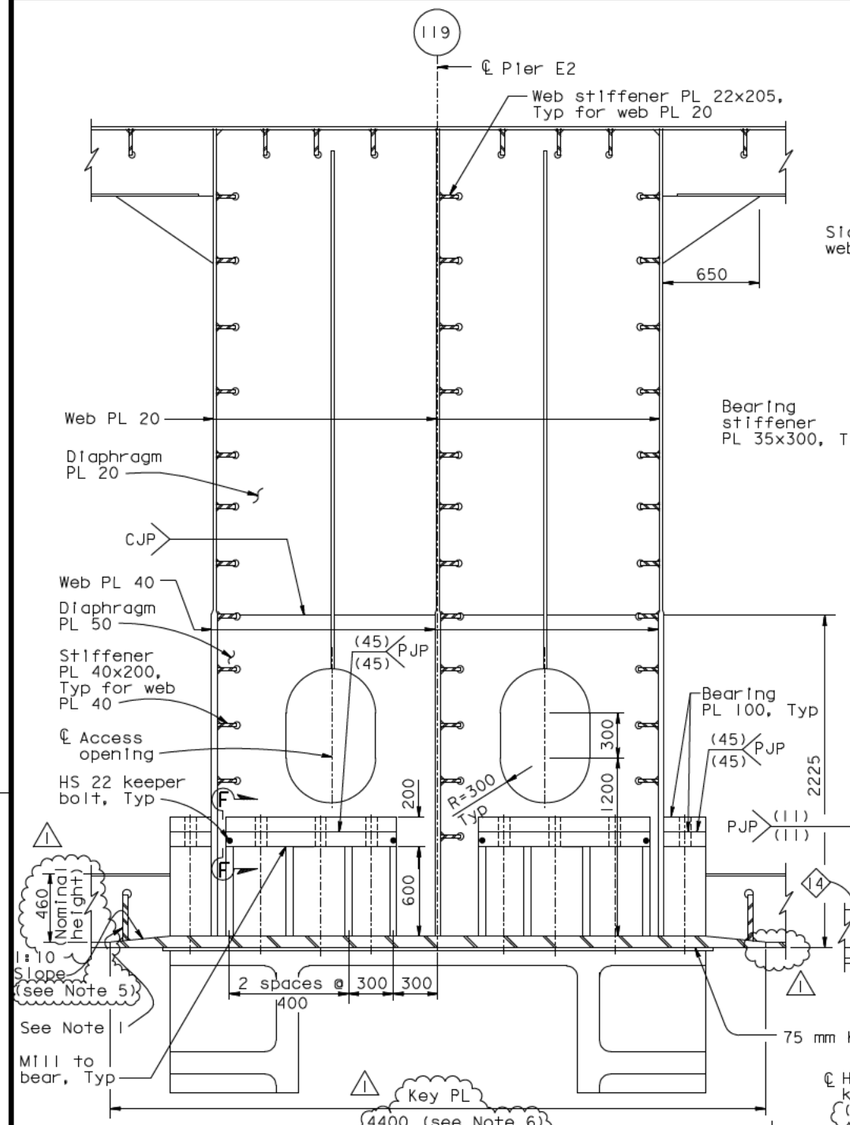

DETAIL A
1:20

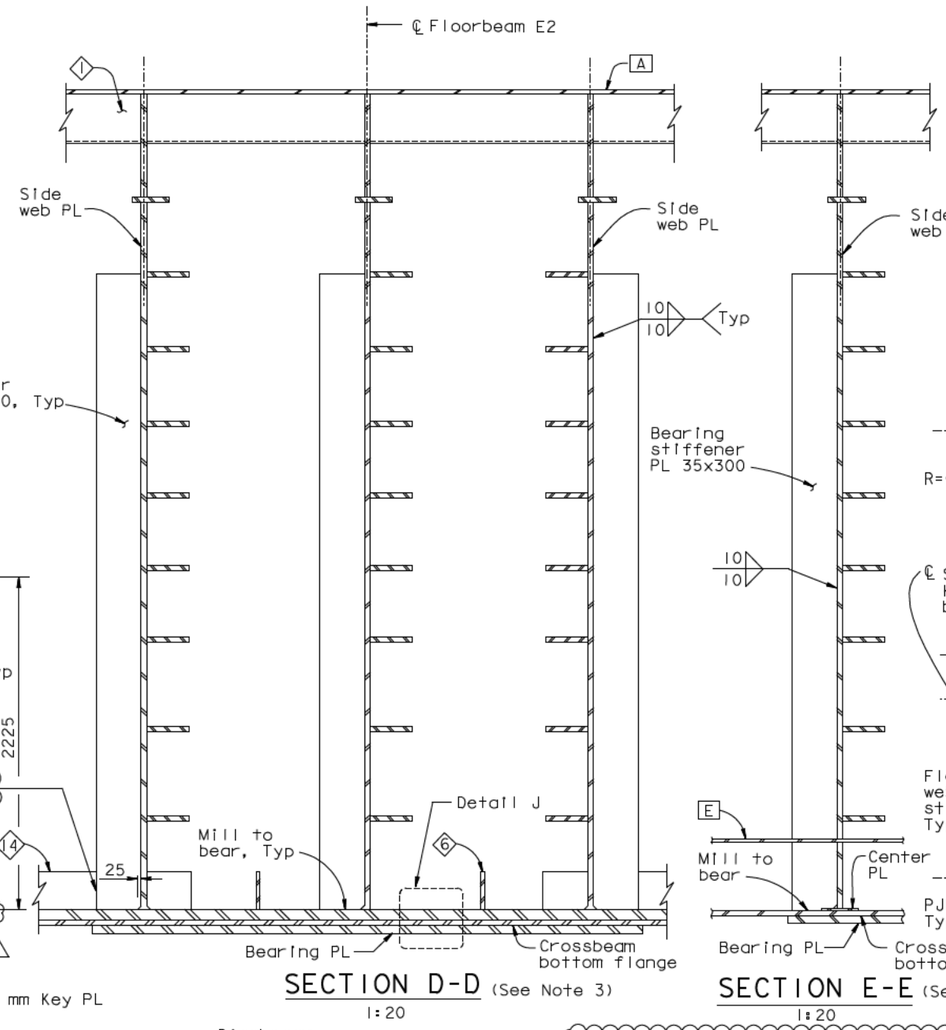

SECTION D-D (See Note 3)
1:20

SECTION E-E (See Note 3)
1:20

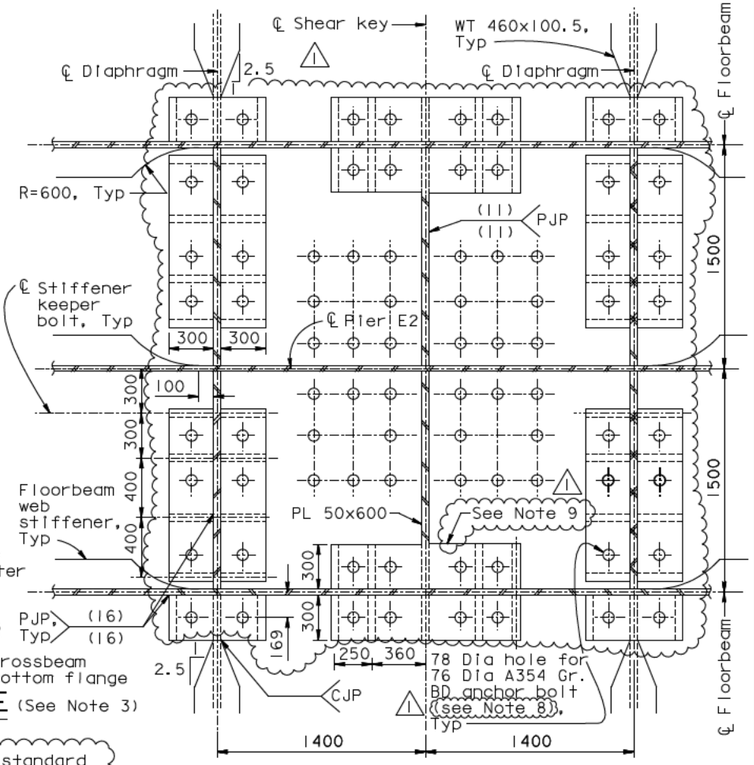

DETAIL H
1:20

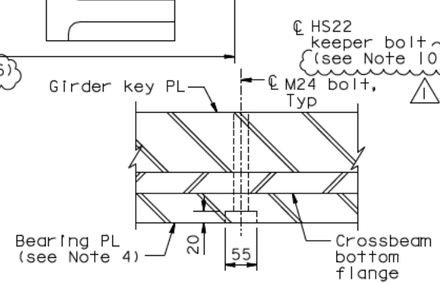

DETAIL J
1:5 (See Note 7)

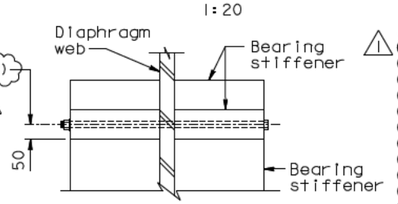

SECTION F-F
1:10

LEGEND:

⊕ 76 Dia anchor bolt (A354 Gr. BD)

7. At the Contractor's option, standard oversized holes may be used in the key PL and the temporary bearing PL. For this option, a counterbore diameter of 61 mm and a counterbore depth of 25 mm shall be provided.
8. At the Contractor's option, 100 Dia holes may be used in the key PL and bearing PL, subject to review and approval of the Engineer.
9. At the Contractor's option, the top bearing plates may be detailed to overhang the side stiffener plates by 5 mm, subject to review and approval of the Engineer.
10. At the Contractor's option, keeper bolts may be placed in the upper bearing plate. Oversized holes may be used in the bearing plates and vertical plates at keeper bolt locations, subject to review and approval of the Engineer.

NOTES:

1. No weld to diaphragm this face of stiffener.
2. For details not shown, see "Typical Crossbeam Details" sheets.
3. For Section D-D and E-E callouts, see "Crossbeam At Pier E2 No.7" sheet.
4. Bearing PL is counterbored to accomodate bolt heads.
5. Cope WT460 as required over the key PL.
6. At the Contractor's option and subject to review and approval of the Engineer, it is acceptable to use a taper at 1:2.5 slope at the Key PL. The taper shall end 100 clear of the nearest stiffener. Key PL width shall be 4000 Min.

ALL DIMENSIONS ARE IN MILLIMETERS UNLESS OTHERWISE SHOWN

REGISTERED PROFESSIONAL ENGINEER — Marwan N. Nader — No. C 054426 — Exp. 12/31/13 — CIVIL — STATE OF CALIFORNIA

FOR REVISIONS ONLY

CONTRACT CHANGE ORDER NO. ____
SHEET ____ OF ____

REQUESTS FOR INFORMATION NOT ADDRESSED IN THIS CCO REMAIN IN FORCE

100% PS&E

TIME PLOTTED -> 11:23:31
DATE PLOTTED -> 18 APR 2012
USERNAME -> DWinrow

R. Valizadeh/V. Toan/Y.L./W.L./F.C.
DESIGN OVERSIGHT
Ryan Valizadeh / Vong Toan / Y. Liu
SIGN OFF DATE 04/18/12

Rev. Date: 5-18-98

MARK	DATE	DESCRIPTIONS	BY	CH'D	CCO#
1	04/18/12	EAST END OBG	MN	GB	87

REVISIONS

DESIGN	G. Baker	CHECKED	P. Ritchie
DETAILS	BY D. Veytsman	CHECKED	T. McMeans
QUANTITIES	BY D. Turner	CHECKED	M. Roberts

PREPARED FOR THE STATE OF CALIFORNIA
DEPARTMENT OF TRANSPORTATION

R. Manzanarez
PROJECT ENGINEER

BRIDGE NO. 34-0006L/R
KILOMETER POST 13.2/13.9

SAN FRANCISCO OAKLAND BAY BRIDGE
EAST SPAN SEISMIC SAFETY PROJECT
SELF-ANCHORED SUSPENSION BRIDGE
(SUPERSTRUCTURE & TOWER)

CROSSBEAM AT PIER E2 NO. 3

ORIGINAL SCALE IN MILLIMETERS FOR REDUCED PLANS 0 10 20 30 40 50 60 70 80 90 100

CU 04
EA 0120F1

DISREGARD PRINTS BEARING EARLIER REVISION DATES

REVISION DATES (PRELIMINARY STAGE ONLY): 05/15/99 08/02/99 05/31/01 04/08/02 07/01/02 12/19/02 12/07/05

SHEET 302R1 OF

FILE -> I:\bb\04-0120I\sas\contract plans and cco\cco\cco#87\temp\aggrs14.dgn

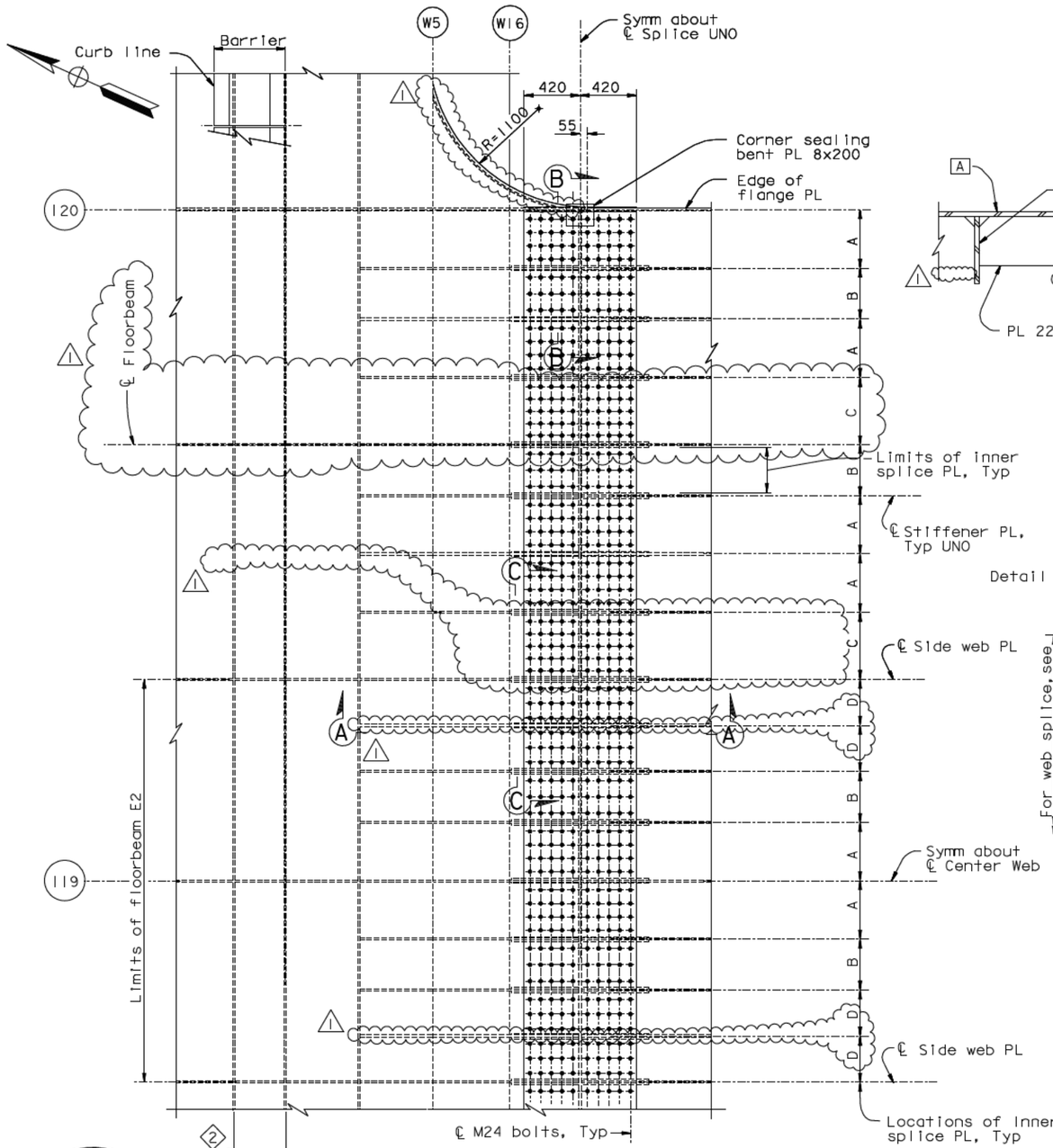

TOP FLANGE SPLICE DETAIL E

1:20

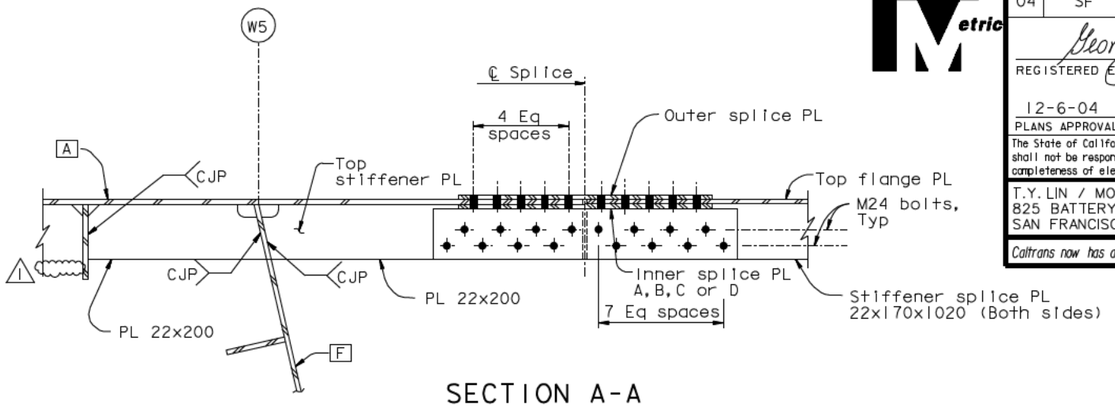

SECTION A-A

1:10

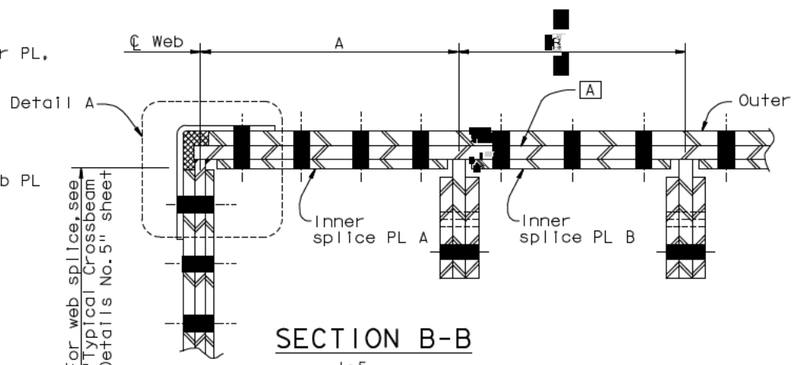

SECTION B-B

1:5

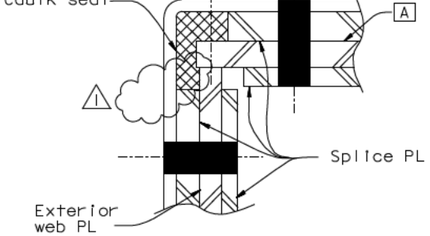

DETAIL A

1:2.5

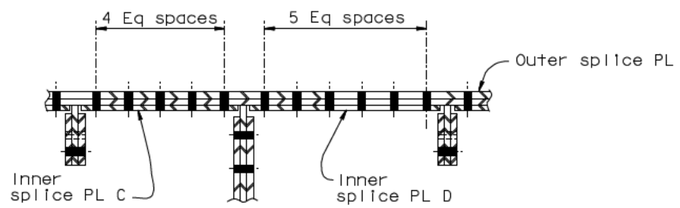

SECTION C-C

1:10

SPLICE PLATE TABLE	
Plate Type	Dimensions
Inner PL "A"	PL 16x900x375
Inner PL "B"	PL 16x900x320
Inner PL "C"	PL 16x900x440 ⟨1⟩
Inner PL "D"	PL 18x900x270 ⟨1⟩
Outer PL	PL 25x900x9960

NOTES:

1. For details not shown, see "Typical Crossbeam Details" sheets.

CONTRACT CHANGE ORDER NO. ____
SHEET ___ OF ___

REQUESTS FOR INFORMATION NOT ADDRESSED IN THIS CCO REMAIN IN FORCE

FOR REVISIONS ONLY

Daniel J. Turner
REGISTERED PROFESSIONAL ENGINEER
No. C 65033
Exp. 06/30/13
CIVIL
STATE OF CALIFORNIA

ALL DIMENSIONS ARE IN MILLIMETERS UNLESS OTHERWISE SHOWN

DIST.	COUNTY	ROUTE	KILOMETER POST TOTAL PROJECT	SHEET NO.	TOTAL SHEETS
04	SF	80	13.2/13.9	720R1	1204

George Baker
REGISTERED ENGINEER - CIVIL
12-6-04
PLANS APPROVAL DATE

REGISTERED PROFESSIONAL ENGINEER
George S. Baker
No. C57112
Exp. 12/31/05
CIVIL
STATE OF CALIFORNIA

The State of California or its officers or agents shall not be responsible for the accuracy or completeness of electronic copies of this plan sheet.

T.Y. LIN / MOFFATT & NICHOL
825 BATTERY STREET
SAN FRANCISCO, CA 94111

Caltrans now has a web site! To get to the web site, go to: http://www.dot.ca.gov

MARK	DATE	REVISIONS	BY	CH'D	CCO#
1	09/01/11	EAST END OBG	DT	GB	87

DESIGN OVERSIGHT: R. Vallzadeh/V. Toan/Y.L./W.L./F.C.
SIGN OFF DATE 09/01/11

	BY	CHECKED
DESIGN	G. Baker	P. Ritchie
DETAILS	S. Camo	T. McMeans
QUANTITIES	D. Turner	M. Roberts

PREPARED FOR THE STATE OF CALIFORNIA DEPARTMENT OF TRANSPORTATION

R. Manzanarez
PROJECT ENGINEER

BRIDGE NO. 34-0006L/R
KILOMETER POST 13.2/13.9

CU 04
EA 0120F1

DISREGARD PRINTS BEARING EARLIER REVISION DATES

REVISION DATES (PRELIMINARY STAGE ONLY): 05/15/99 08/02/99 05/31/01 04/08/02 07/01/02 12/19/02 12/01/05

SHEET 303R1 OF

SAN FRANCISCO OAKLAND BAY BRIDGE
EAST SPAN SEISMIC SAFETY PROJECT
SELF-ANCHORED SUSPENSION BRIDGE
(SUPERSTRUCTURE & TOWER)

CROSSBEAM AT PIER E2 NO. 4

Rev. Date: 5-18-98

ORIGINAL SCALE IN MILLIMETERS FOR REDUCED PLANS 0 10 20 30 40 50 60 70 80 90 100

FILE -> I:\bb\04-012001\sas\contract plans and cco\cco\cco#87\1-original 09-01-11\dgn\agcrs15.dgn

USERNAME -> PTom
DATE PLOTTED -> 30 AUG 2011
TIME PLOTTED -> 10:31:57
100 % PS&E

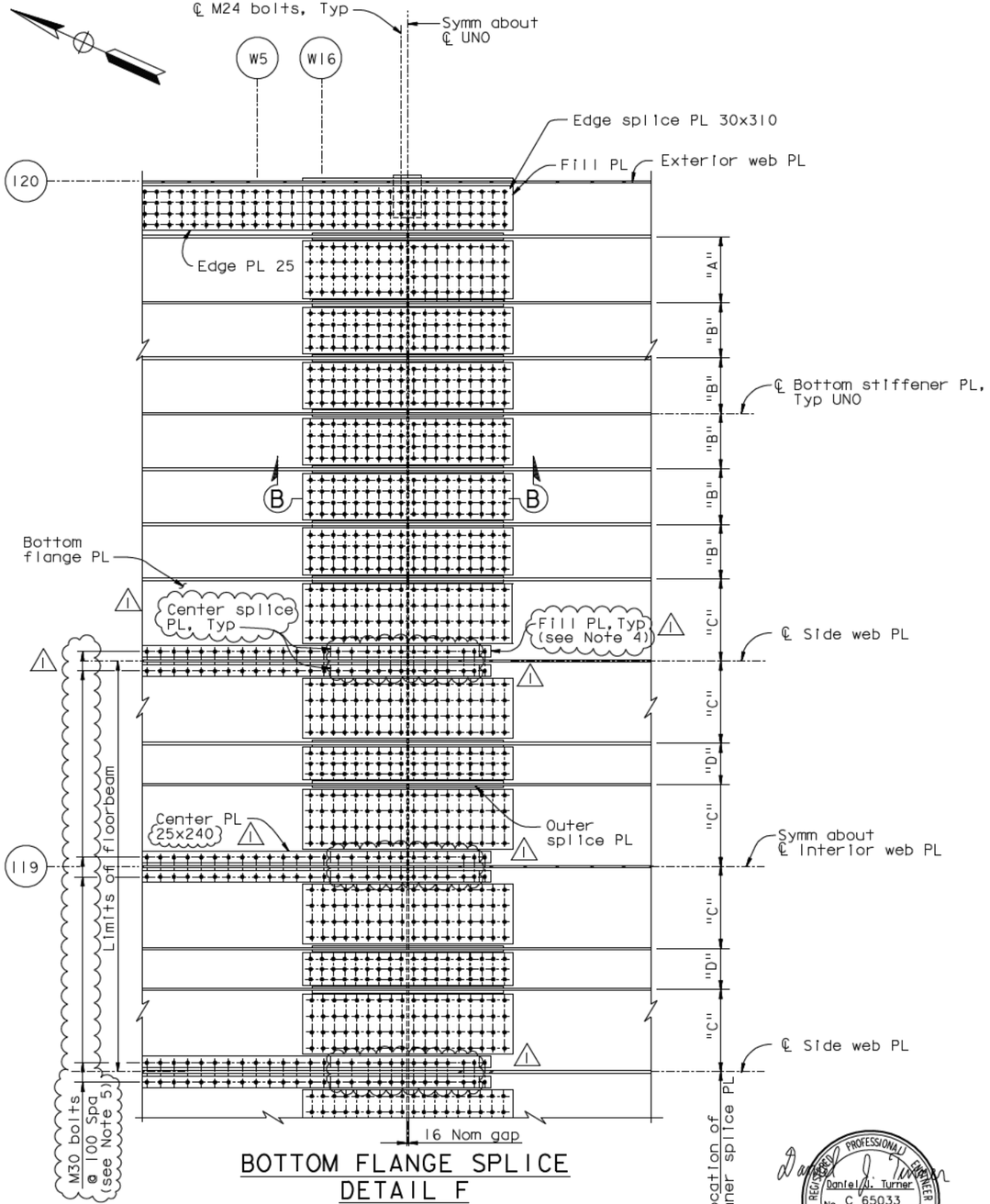

BOTTOM FLANGE SPLICE DETAIL F

1:20

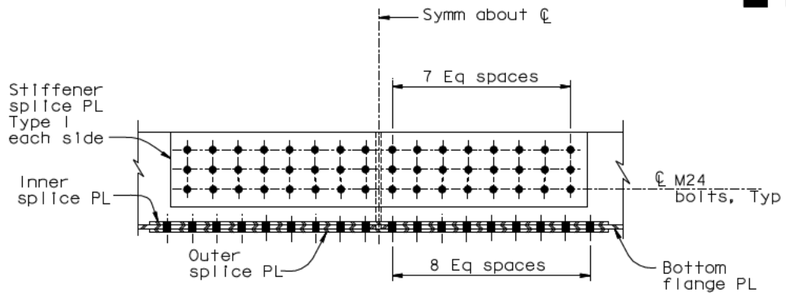

SECTION B-B

1:10

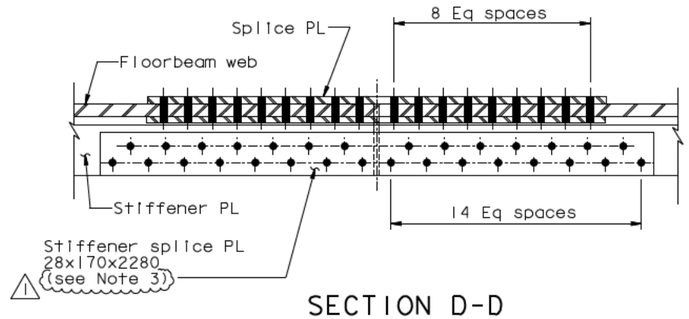

SECTION D-D

1:10

SPLICE PLATE TABLE	
Plate Type	Dimensions
Inner PL "A"	PL 25x1620x420
Inner PL "B"	PL 25x1620x340
Inner PL "C"	PL 25x1620x440
Inner PL "D"	PL 25x1620x240
Outer PL	PL 30x1620x9980
Stiff PL Type I	PL 30x250x1440

NOTES:

1. For details not shown, see "Typical Crossbeam Details No.8" sheet.
2. For details not shown, see "Typical Crossbeam Details" sheets.
3. At the Contractor's option, the stiffener splice PL length may be reduced to 1740, subject to review and approval of the Engineer.
4. For crossbeam segments which vary in depth within the specified tolerances, the Contractor shall use fill plates in the bottom splice to correct for the variation. Fill plates shown on the plans shall be adjusted as required to bring splice plates into contact.
5. At the Contractor's option, it is acceptable to space the M30 bolts at 90 mm, subject to review and approval of the Engineer.

CONTRACT CHANGE ORDER NO. ____
SHEET ___ OF ___

REQUESTS FOR INFORMATION NOT ADDRESSED IN THIS CCO REMAIN IN FORCE

Daniel L. Turner — REGISTERED PROFESSIONAL ENGINEER — No. C 65033 — Exp. 06/30/13 — CIVIL — STATE OF CALIFORNIA

FOR REVISIONS ONLY

ALL DIMENSIONS ARE IN MILLIMETERS UNLESS OTHERWISE SHOWN

DIST.	COUNTY	ROUTE	KILOMETER POST TOTAL PROJECT	SHEET NO.	TOTAL SHEETS
04	SF	80	13.2/13.9	721R1	1204

George Baker
REGISTERED ENGINEER - CIVIL
12-6-04
PLANS APPROVAL DATE

George S. Baker — REGISTERED PROFESSIONAL ENGINEER — No. C57112 — Exp. 12/31/05 — CIVIL — STATE OF CALIFORNIA

The State of California or its officers or agents shall not be responsible for the accuracy or completeness of electronic copies of this plan sheet.

T.Y. LIN / MOFFATT & NICHOL
825 BATTERY STREET
SAN FRANCISCO, CA 94111

Caltrans now has a web site! To get to the web site, go to: http://www.dot.ca.gov

R. Valizadeh/V. Toan/Y.L./W.L./F.C.
DESIGN OVERSIGHT
SIGN OFF DATE 09/01/11

MARK	DATE	REVISIONS	BY	CH'D	CCO#
1	09/01/11	EAST END OBG	DT	GB	87

	BY	CHECKED
DESIGN	G. Baker	P. Ritchie
DETAILS	D. Veytsman	T. McMeans
QUANTITIES	D. Turner	M. Roberts

PREPARED FOR THE STATE OF CALIFORNIA DEPARTMENT OF TRANSPORTATION

R. Manzanarez
PROJECT ENGINEER

BRIDGE NO. 34-0006L/R
KILOMETER POST 13.2/13.9

SAN FRANCISCO OAKLAND BAY BRIDGE
EAST SPAN SEISMIC SAFETY PROJECT
SELF-ANCHORED SUSPENSION BRIDGE
(SUPERSTRUCTURE & TOWER)

CROSSBEAM AT PIER E2 NO. 5

Rev. Date: 5-18-98

ORIGINAL SCALE IN MILLIMETERS FOR REDUCED PLANS 0 10 20 30 40 50 60 70 80 90 100

CU 04
EA 0120F1

DISREGARD PRINTS BEARING EARLIER REVISION DATES

REVISION DATES (PRELIMINARY STAGE ONLY): 05/15/99 | 08/02/99 | 05/31/01 | 04/08/02 | 07/01/02 | 12/18/02 | 12/01/05

SHEET 304R1 OF

FILE -> I:\bb\04-012001\sas\contract plans and cco\cco\cco#87\1-original 09-01-11\dgn\agcrs16.dgn

USERNAME -> PTom
DATE PLOTTED -> 30 AUG 2011
TIME PLOTTED -> 10:33:40

100 % PS&E

DIST.	COUNTY	ROUTE	KILOMETER POST TOTAL PROJECT	SHEET NO.	TOTAL SHEETS
04	SF	80	13.2/13.9	722R2	1204

George Baker
REGISTERED ENGINEER - CIVIL

12-6-04
PLANS APPROVAL DATE

The State of California or its officers or agents shall not be responsible for the accuracy or completeness of electronic copies of this plan sheet.

REGISTERED PROFESSIONAL ENGINEER — George S. Baker — No. C57112 — Exp. 12/31/05 — CIVIL — STATE OF CALIFORNIA

T.Y. LIN / MOFFATT & NICHOL
825 BATTERY STREET
SAN FRANCISCO, CA 94111

Caltrans now has a web site! To get to the web site, go to: http://www.dot.ca.gov

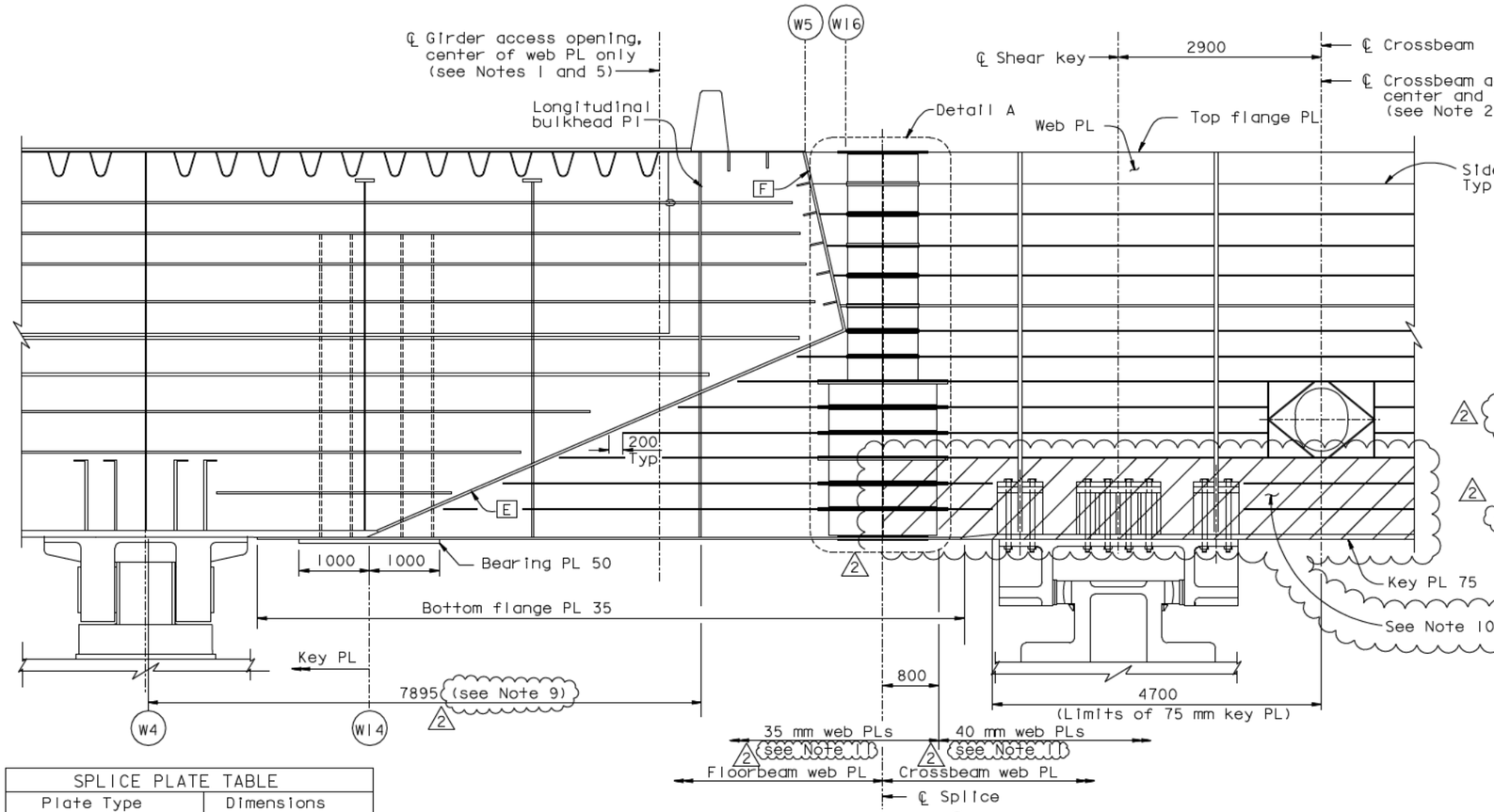

SECTION C-C
1:40

SPLICE PLATE TABLE	
Plate Type	Dimensions
Inner Splice PL "A"	PL 22x1000x390
Inner Splice PL "B"	PL 22x1620x310
Outer Splice PL "D"	PL 28x1000x3170
Inner Splice PL "C"	PL 22x1000x310
Outer Splice PL "E"	PL 28x1620x2140

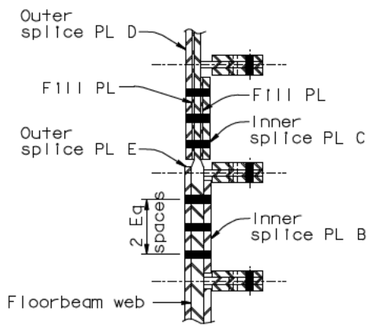

SECTION A-A
1:10

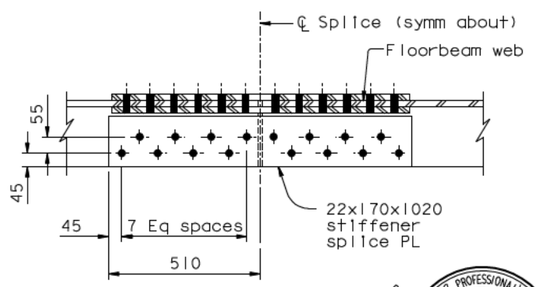

SECTION B-B
1:10

LEGEND:
"Indicates TTP Web PL"

NOTES:
1. For details at girder access opening, see "Typical Girder Details No.15" sheet.
2. For details of crossbeam access opening not shown, see "Typical Crossbeam Details No.6" sheet.
3. For details not shown, see "Typical Crossbeam Details" sheets.
4. For layout of E2 floorbeam web, see "Girder At Pier E2 No.4" sheet.
5. For girder access locations, see "Girder Access Details No.3" sheet.
6. For details not shown, see "Typical Crossbeam Details No.5" sheet.
7. Transitions not required for crossbeam web stiffeners terminating at Face F.
8. For Section D-D, see "Crossbeam At Pier E2 No.5" sheet.
9. For the EB girder, this dimension is 7885.
10. Through Thickness Properties (TTP) area shown applies to PP118.7, 119.0 and 119.3.
11. It is acceptable to extend the limit of the 40 mm web PL to the centerline of the splice from 800 mm from the splice, provided the fill plates on the 35 mm web are placed on the interior faces of the crossbeam.

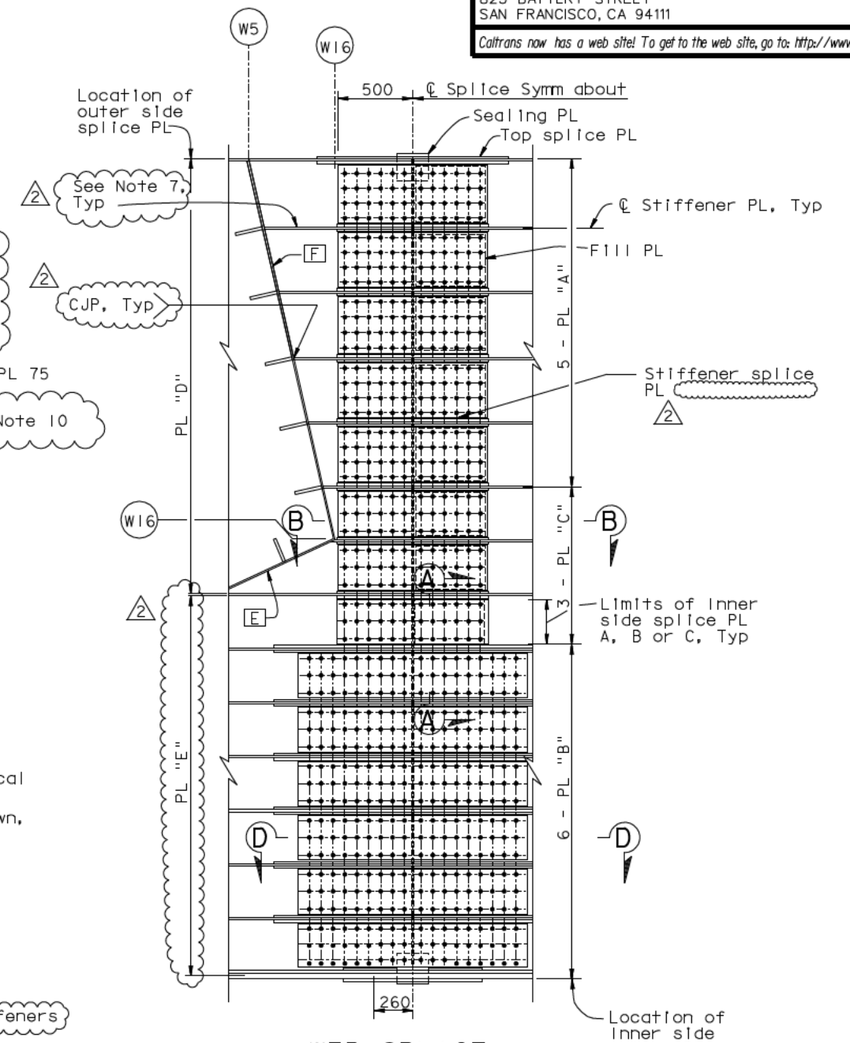

WEB SPLICE
DETAIL A
1:20

CONTRACT CHANGE ORDER NO. ____
SHEET ___ OF ___

REQUESTS FOR INFORMATION NOT ADDRESSED IN THIS CCO REMAIN IN FORCE

REGISTERED PROFESSIONAL ENGINEER — Daniel J. Turner — No. C 65033 — Exp. 06/30/13 — CIVIL — STATE OF CALIFORNIA

FOR REVISIONS ONLY

ALL DIMENSIONS ARE IN MILLIMETERS UNLESS OTHERWISE SHOWN

MARK	DATE	DESCRIPTIONS	BY	CH'D	CCO#
2	09/01/11	EAST END OBG	DT	GB	87
1	11/05/10	PP119 ACCESS & PP125 PLATES	GB	DT	86
		REVISIONS			

R. Vallzadeh/V. Toan/Y.L./W.L./F.C.
DESIGN OVERSIGHT
SIGN OFF DATE 09/01/11

	BY	CHECKED
DESIGN	G. Baker	P. Ritchie
DETAILS	D. Veytsman	T. McMeans
QUANTITIES	D. Turner	M. Roberts

PREPARED FOR THE STATE OF CALIFORNIA
DEPARTMENT OF TRANSPORTATION

R. Manzanarez
PROJECT ENGINEER

BRIDGE NO. 34-0006L/R
KILOMETER POST 13.2/13.9

SAN FRANCISCO OAKLAND BAY BRIDGE
EAST SPAN SEISMIC SAFETY PROJECT
SELF-ANCHORED SUSPENSION BRIDGE
(SUPERSTRUCTURE & TOWER)

CROSSBEAM AT PIER E2 NO.6

Rev. Date: 5-18-98

ORIGINAL SCALE IN MILLIMETERS FOR REDUCED PLANS 0 10 20 30 40 50 60 70 80 90 100

CU 04
EA 0120F1

DISREGARD PRINTS BEARING EARLIER REVISION DATES

REVISION DATES (PRELIMINARY STAGE ONLY)									SHEET	OF
08/02/99	05/31/01	04/08/02	07/01/02	12/13/02	12/01/05				305R2	

FILE -> I:\bb\04-0120I\sas\contract plans and cco\cco\cco#87\I-original 09-01-11\dgn\agcrs17.dgn

100% PS&E
DATE PLOTTED -> 30 AUG 2011
TIME PLOTTED -> 10:35:34
USERNAME -> PTom

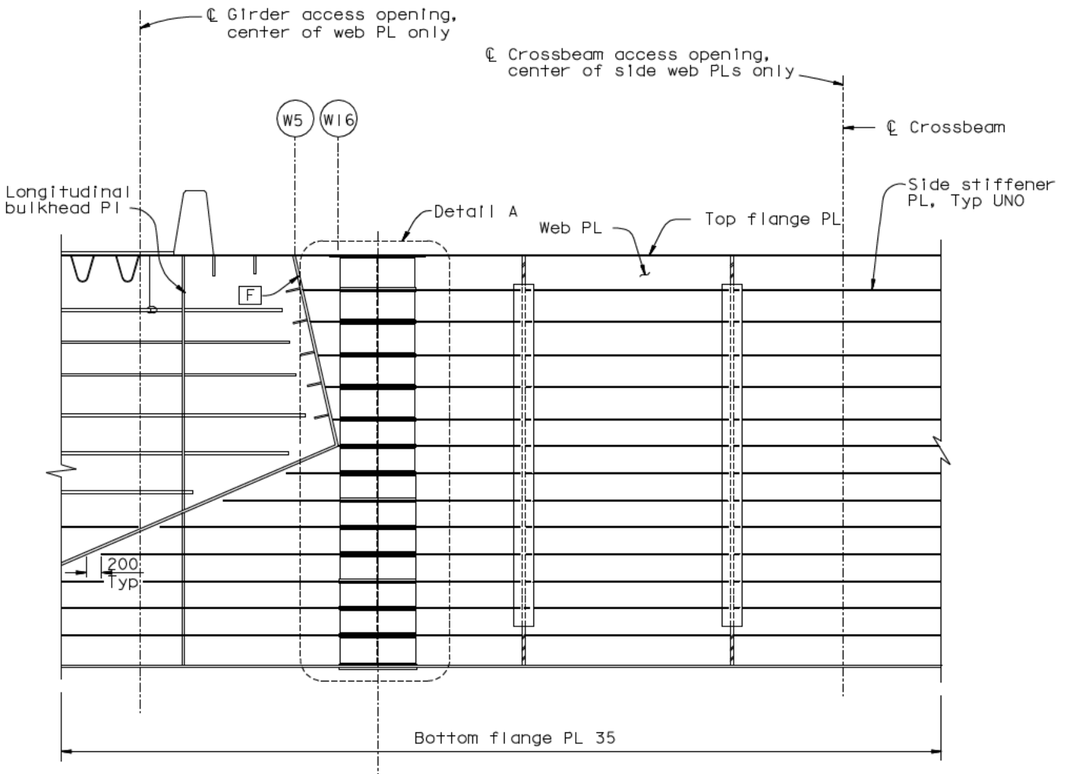

SECTION C'-C'

1:40

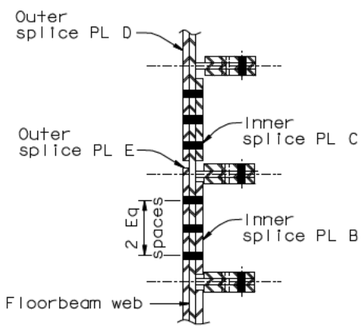

SECTION A-A

1:10

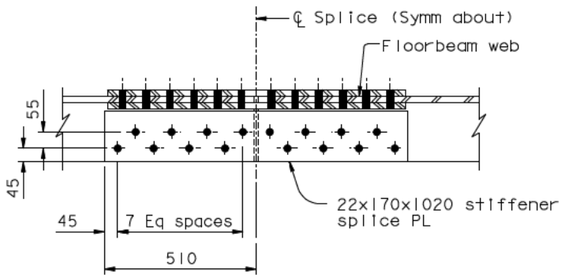

SECTION B-B

1:10

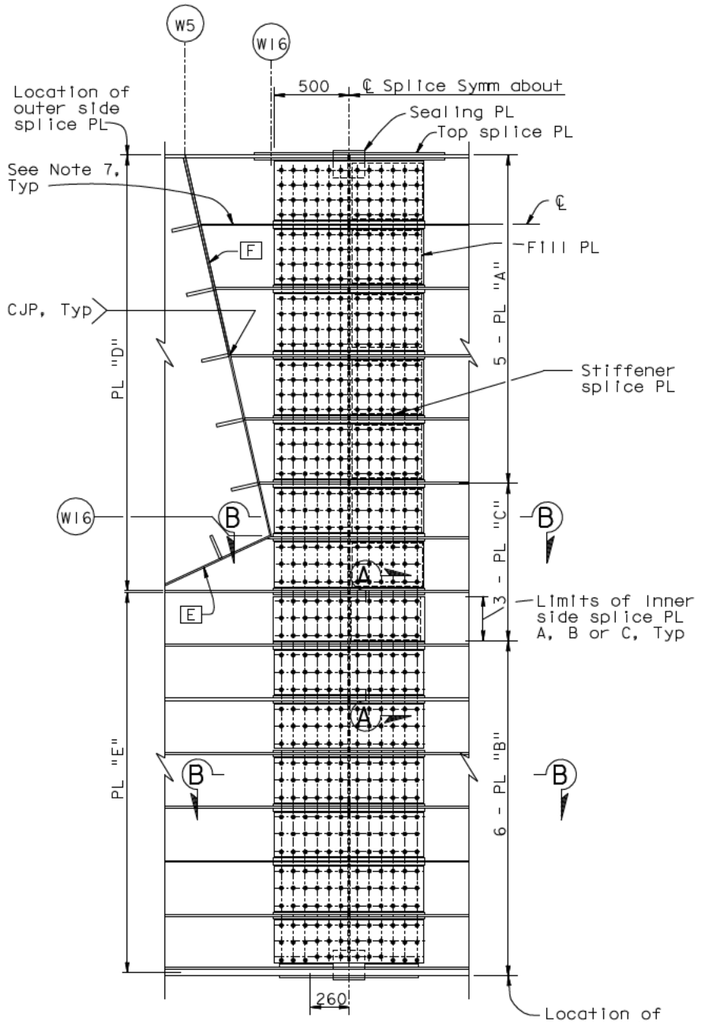

WEB SPLICE DETAIL A

1:20

SPLICE PLATE TABLE	
Plate Type	Dimensions
Inner Splice PL "A"	PL 22x1000x390
Inner Splice PL "B"	PL 22x1000x310
Outer Splice PL "D"	PL 28x1000x3170
Inner Splice PL "C"	PL 22x1000x310
Outer Splice PL "E"	PL 28x1000x2140

NOTES:

1. For details at girder access opening, see "Typical Girder Details No. 15" sheet.
2. For details of crossbeam access opening not shown, see "Typical Crossbeam Details No. 6" sheet.
3. For details not shown, see "Typical Crossbeam Details" sheets.
4. For layout of E2 floorbeam web, see "Girder At Pier E2 No. 4" sheet.
5. For girder access locations, see "Girder Access Details No. 3" sheet.
6. For details not shown, see "Typical Crossbeam Details No. 5" sheet.
7. Transitions not required for crossbeam web stiffeners terminating at Face F.
8. For Section D-D, see "Crossbeam At Pier E2 No. 5" sheet.

CONTRACT CHANGE ORDER NO. ____
SHEET ____ OF ____

REQUESTS FOR INFORMATION NOT ADDRESSED IN THIS CCO REMAIN IN FORCE

ALL DIMENSIONS ARE IN MILLIMETERS UNLESS OTHERWISE SHOWN

DIST.	COUNTY	ROUTE	KILOMETER POST TOTAL PROJECT	SHEET NO.	TOTAL SHEETS
04	SF	80	13.2/13.9	722SI	1204

REGISTERED ENGINEER - CIVIL

04-18-12
PLANS APPROVAL DATE

Registered Professional Engineer — Marwan N. Nader — No. C 054426 — Exp. 12/31/13 — CIVIL — State of California

The State of California or its officers or agents shall not be responsible for the accuracy or completeness of electronic copies of this plan sheet.

T.Y. LIN / MOFFATT & NICHOL
825 BATTERY STREET
SAN FRANCISCO, CA 94111

Caltrans now has a web site! To get to the web site, go to: http://www.dot.ca.gov

100 % PS&E

TIME PLOTTED -> 11:24:22
DATE PLOTTED -> 18 APR 2012
USERNAME -> DWinrow

R. Vallzadeh/V. Toan/Y.L./W.L./F.C.
DESIGN OVERSIGHT
SIGN OFF DATE 04/18/12

MARK	DATE	DESCRIPTIONS	BY	CH'D	CCO#
0	04/18/12	EAST END OBG	GB	MN	87

REVISIONS

	BY	CHECKED
DESIGN	G. Baker	M. Nader
DETAILS	G. Baker	D. Turner
QUANTITIES	G. Baker	D. Turner

PREPARED FOR THE STATE OF CALIFORNIA DEPARTMENT OF TRANSPORTATION

R. Manzanarez
PROJECT ENGINEER

BRIDGE NO. 34-0006L/R
KILOMETER POST 13.2/13.9

SAN FRANCISCO OAKLAND BAY BRIDGE
EAST SPAN SEISMIC SAFETY PROJECT
SELF-ANCHORED SUSPENSION BRIDGE (SUPERSTRUCTURE & TOWER)

CROSSBEAM AT PIER E2 NO. 6A

Rev. Date: 5-18-98

ORIGINAL SCALE IN MILLIMETERS FOR REDUCED PLANS 0 10 20 30 40 50 60 70 80 90 100

CU 04
EA 0120F1

DISREGARD PRINTS BEARING EARLIER REVISION DATES →

REVISION DATES (PRELIMINARY STAGE ONLY): 04/18/12

SHEET 305SI OF

FILE -> I:\bb\04-012001\sas\contract plans and cco\cco\cco#87\temp\agcrs17a.dgn

DIST.	COUNTY	ROUTE	KILOMETER POST TOTAL PROJECT	SHEET NO.	TOTAL SHEETS
04	SF	80	13.2/13.9	723R1	1204

George Baker
REGISTERED ENGINEER - CIVIL

12-6-04
PLANS APPROVAL DATE

The State of California or its officers or agents shall not be responsible for the accuracy or completeness of electronic copies of this plan sheet.

REGISTERED PROFESSIONAL ENGINEER — George S. Baker — No. C 57112 — Exp. 12/31/05 — CIVIL — STATE OF CALIFORNIA

T.Y. LIN / MOFFATT & NICHOL
825 BATTERY STREET
SAN FRANCISCO, CA 94111

Caltrans now has a web site! To get to the web site, go to: http://www.dot.ca.gov

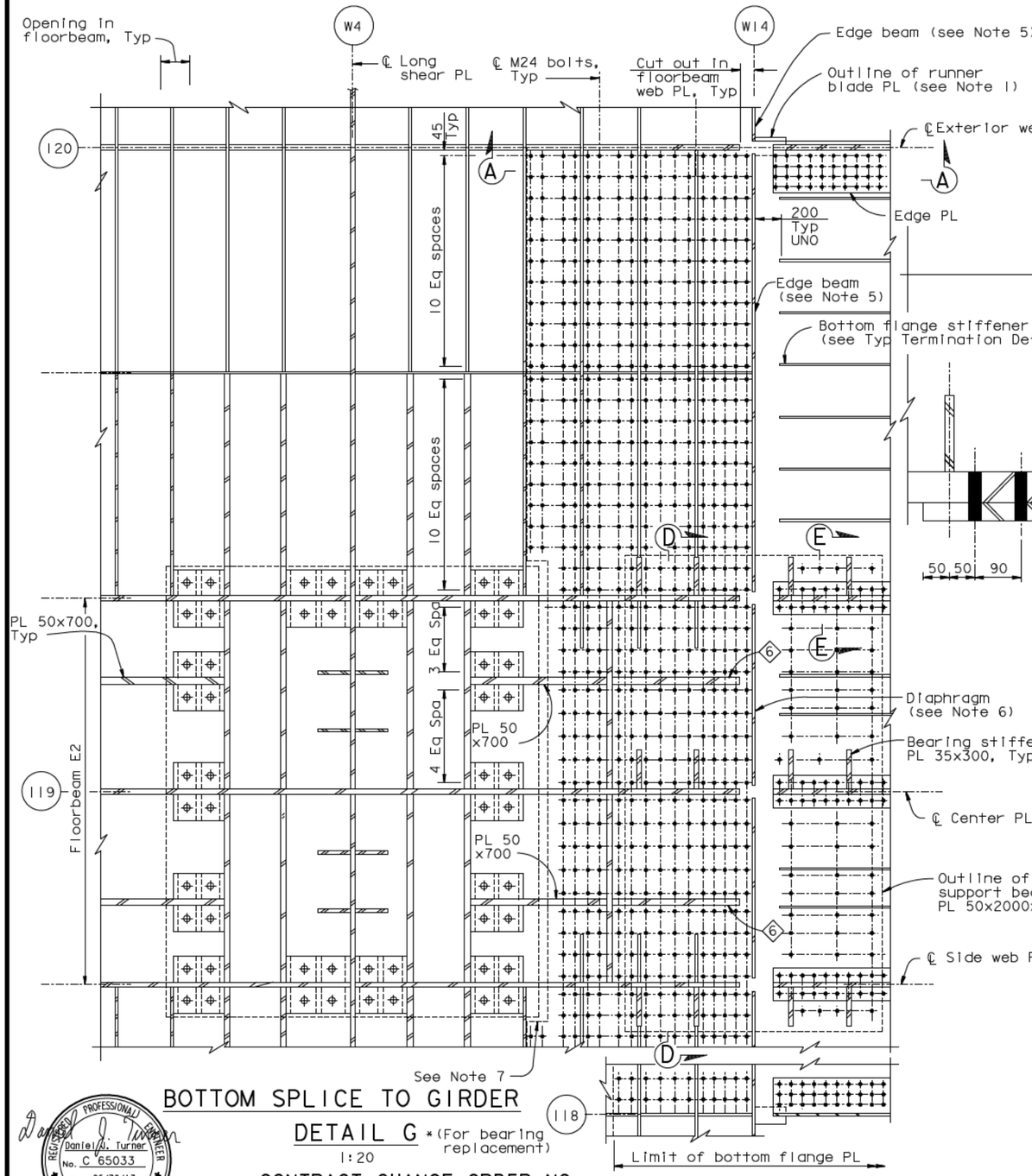

BOTTOM SPLICE TO GIRDER

DETAIL G *(For bearing replacement)

1:20

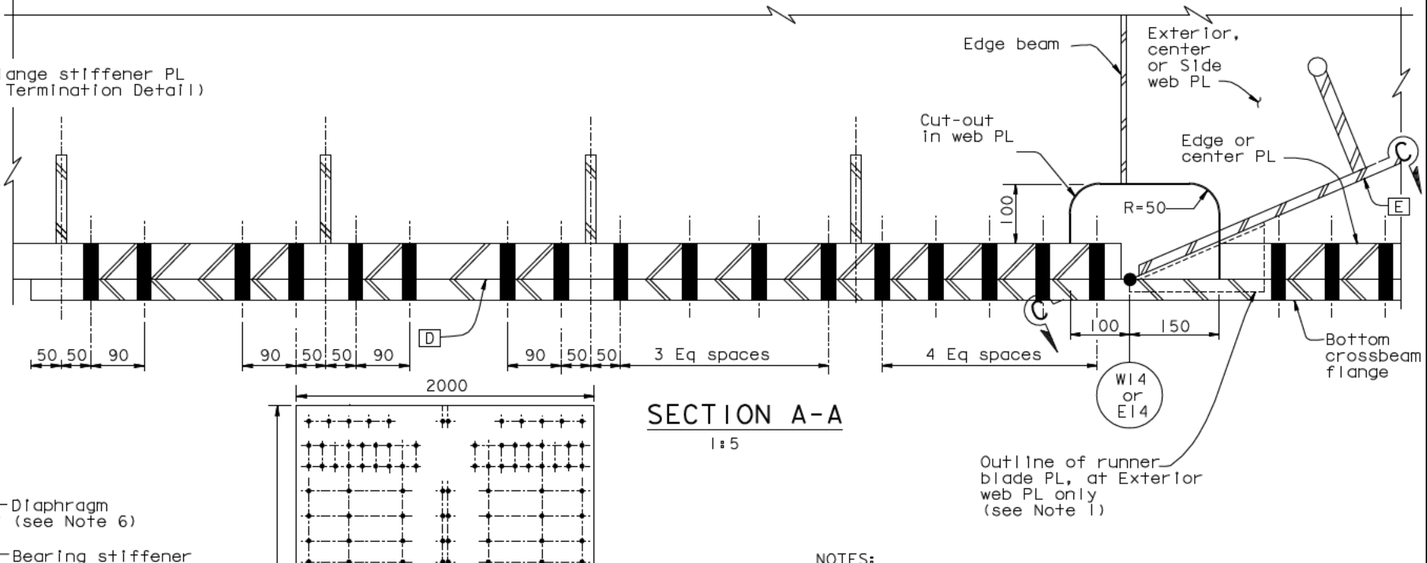

SECTION A-A

1:5

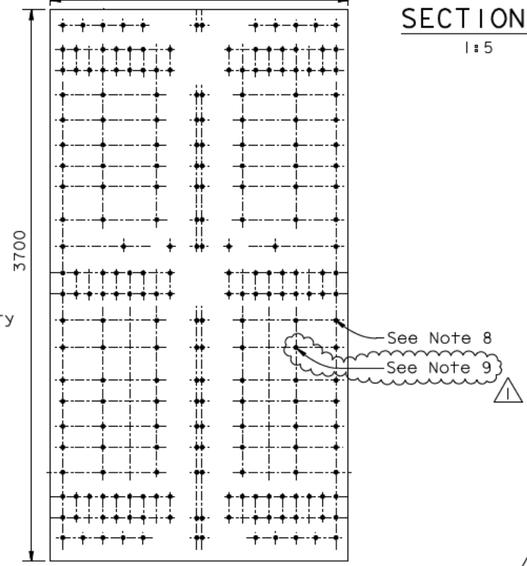

BEARING PLATE AT TEMPORARY SUPPORT AT LINE E13/W13 - PLAN

NOTES:

1. For details of runner blade, see "Typical Crossbeam Details No.10" sheet.
2. For Section C-C, see "Typical Crossbeam Details No.9" sheet.
3. For details not shown, see "Typical Crossbeam Details" sheets.
4. For Sections D-D and E-E, see "Crossbeam At Pier E2 No.3" sheet.
5. For edge beam, see longitudinal shear PL Type 1 in "Typical Girder Details No.7" sheet.
6. For diaphragm details, see "Girder At Pier E2 No.6" sheet.
7. Cope crossbeam bottom flange to clear bearing top PL.
8. Stitch and sealing bolts shall be detailed to avoid stiffeners.
1. At the Contractor's option, standard oversize holes may be used for anchor bolts of the temporary bearings at E13/W13 and E14/W14.

Daniel J. Turner
REGISTERED PROFESSIONAL ENGINEER — Daniel J. Turner — No. C 65033 — Exp. 06/30/13 — CIVIL — STATE OF CALIFORNIA

FOR REVISIONS ONLY

CONTRACT CHANGE ORDER NO. ____
SHEET ___ OF ___

REQUESTS FOR INFORMATION NOT ADDRESSED IN THIS CCO REMAIN IN FORCE

ALL DIMENSIONS ARE IN MILLIMETERS UNLESS OTHERWISE SHOWN

R. Vallizadeh/V. Toan/Y.L./W.L./F.C.
DESIGN OVERSIGHT
SIGN OFF DATE 09/01/11

MARK	DATE	DESCRIPTIONS (REVISIONS)	BY	CH'D	CCO#
1	09/01/11	EAST END OBG	DT	GB	87

	BY	CHECKED
DESIGN	G. Baker	P. Ritchie
DETAILS	D. Veytsman	T. McMeans
QUANTITIES	D. Turner	M. Roberts

PREPARED FOR THE STATE OF CALIFORNIA DEPARTMENT OF TRANSPORTATION

R. Manzanarez
PROJECT ENGINEER

BRIDGE NO. 34-0006L/R
KILOMETER POST 13.2/13.9

SAN FRANCISCO OAKLAND BAY BRIDGE
EAST SPAN SEISMIC SAFETY PROJECT
SELF-ANCHORED SUSPENSION BRIDGE (SUPERSTRUCTURE & TOWER)

CROSSBEAM AT PIER E2 NO.7

Rev. Date: 5-18-98

ORIGINAL SCALE IN MILLIMETERS FOR REDUCED PLANS 0 10 20 30 40 50 60 70 80 90 100

CU 04
EA 0120F1

DISREGARD PRINTS BEARING EARLIER REVISION DATES

REVISION DATES (PRELIMINARY STAGE ONLY): 08/27/99 | 05/31/01 | 04/08/02 | 07/01/02 | 12/13/02 | 10/13/05 | 12/07/05

SHEET 306R1 OF

FILE -> I:\bb\04-0120F1\sas\contract plans and cco\cco\cco#87\1-original 09-01-11\dgn\agcrs18.dgn

USERNAME -> PTam
DATE PLOTTED -> 30 AUG 2011
TIME PLOTTED -> 10:39:19
100 % PS&E

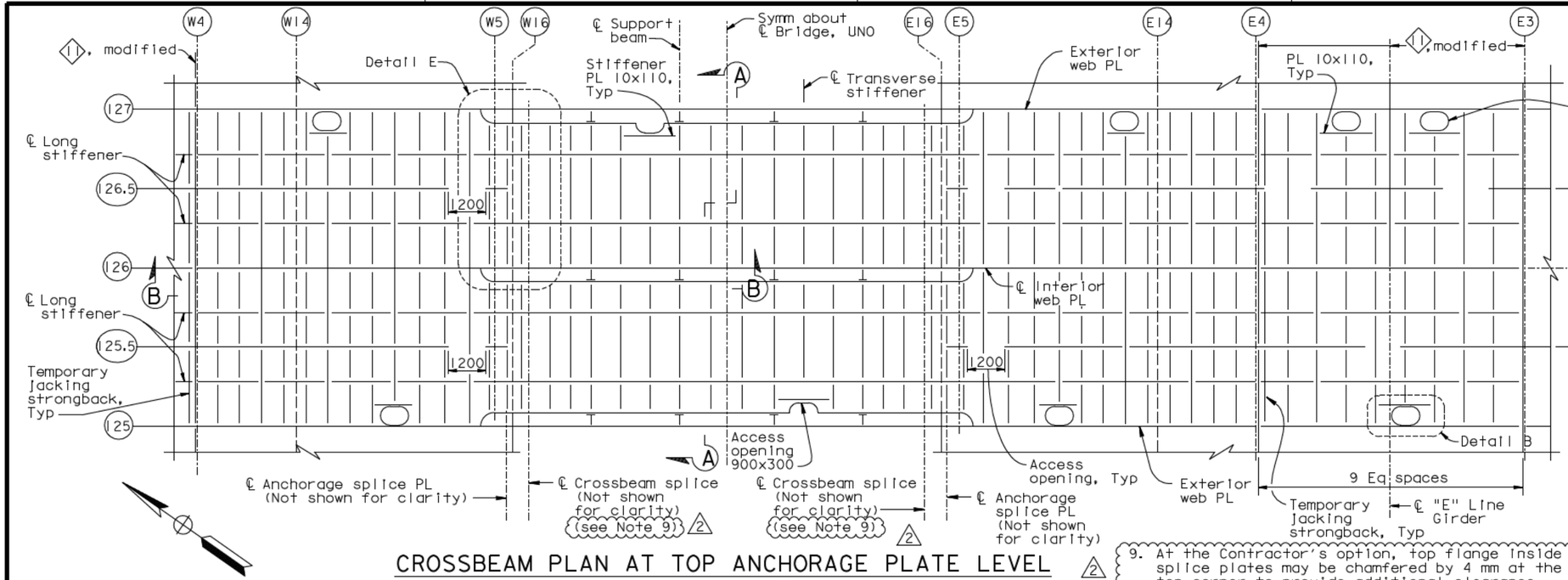

CROSSBEAM PLAN AT TOP ANCHORAGE PLATE LEVEL

1:80

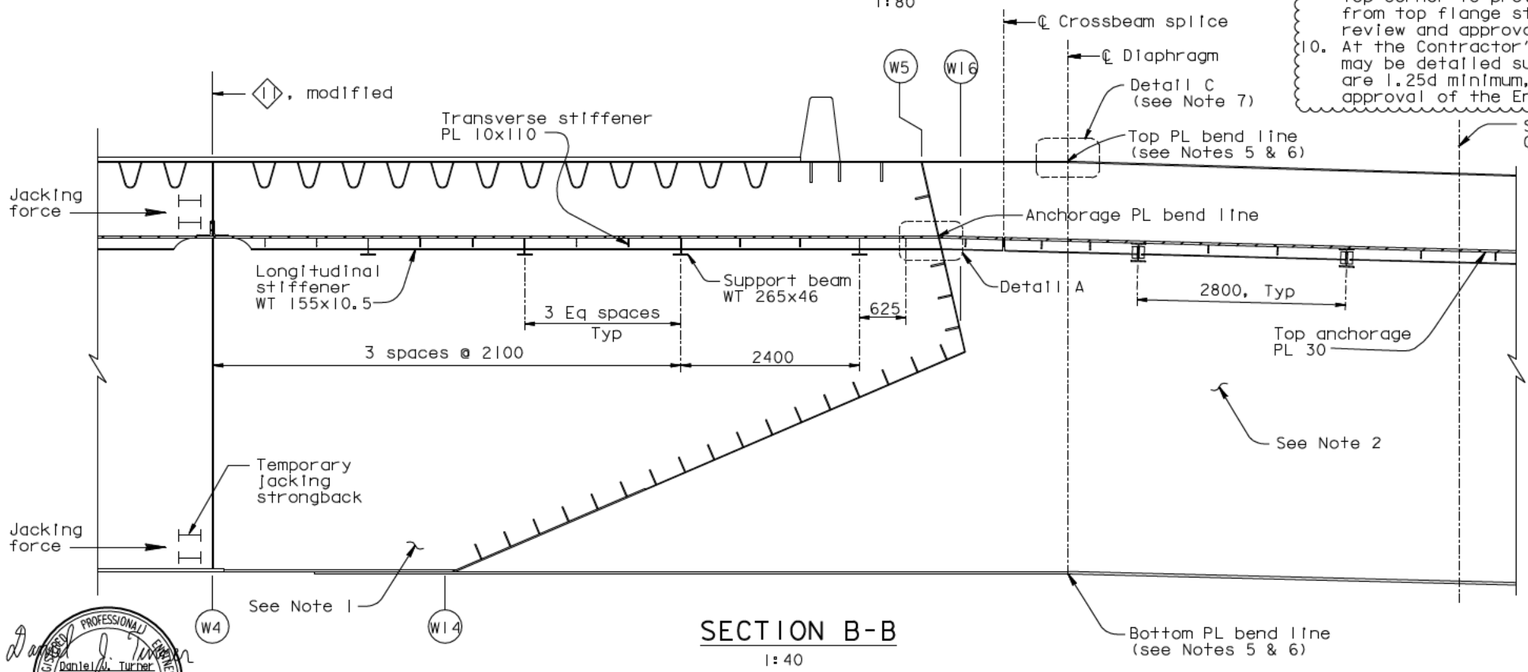

SECTION B-B

1:40

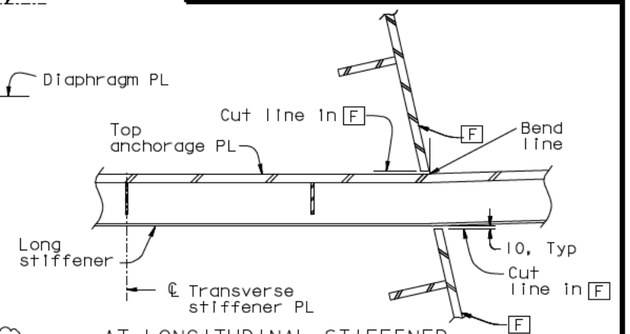

AT LONGITUDINAL STIFFENER

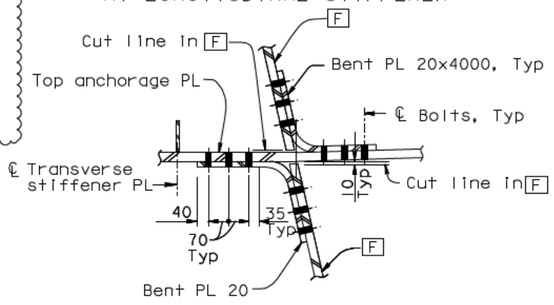

BETWEEN LONGITUDINAL STIFFENERS

DETAIL A (See Note 8) 2

1:10

9. At the Contractor's option, top flange inside splice plates may be chamfered by 4 mm at the top corner to provide additional clearance from top flange stiffener welds, subject to review and approval of the Engineer.
10. At the Contractor's option, the web splice may be detailed such that bolt edge distances are 1.25d minimum, subject to review and approval of the Engineer.

NOTES:

1. For girder details not shown, see "Girder At East Transition" and "Floorbeam At East Transition" sheets.
2. For crossbeam details not shown, see "Crossbeam At Pier E2" sheets.
2. At the Contractor's option, PL 22x200 plate stiffeners at the east anchorage crossbeam webs may be used in lieu of PL 22x205 plate stiffeners, subject to review and approval of the Engineer.
3. For Section A-A and Detail E, see "Crossbeam At East Anchorage No.3" sheet.
4. For Detail B, see "Crossbeam At East Anchorage No.4" sheet.
5. The location of the angular changes to the top and bottom skin plates due to the roadway geometry shall be at the first diaphragm inside the crossbeam field splice, towards the centerline of the bridge.
6. Stiffeners at the angle change, running longitudinal to the crossbeam, shall be interrupted and welded to the diaphragm with a CJP weld. Stiffeners on opposite faces of the diaphragm shall be aligned within the tolerances specified for stiffener splices.
7. For Detail C, see similar Section B-B on "Typical Crossbeam Details No.4" sheet.
2. 8. For alternate Detail A, see "Crossbeam At East Anchorage No.3" sheet.

Caltrans Metric

DIST.	COUNTY	ROUTE	KILOMETER POST TOTAL PROJECT	SHEET NO.	TOTAL SHEETS
04	SF	80	13.2/13.9	725R2	1204

George Baker
REGISTERED ENGINEER - CIVIL
12-6-04
PLANS APPROVAL DATE

REGISTERED PROFESSIONAL ENGINEER — George S. Baker, No. C 57112, Exp. 12/31/05, CIVIL, STATE OF CALIFORNIA

The State of California or its officers or agents shall not be responsible for the accuracy or completeness of electronic copies of this plan sheet.

T.Y. LIN / MOFFATT & NICHOL
825 BATTERY STREET
SAN FRANCISCO, CA 94111

Caltrans now has a web site! To get to the web site, go to: http://www.dot.ca.gov

Daniel J. Turner — REGISTERED PROFESSIONAL ENGINEER, No. C 65033, Exp. 06/30/13, CIVIL, STATE OF CALIFORNIA

FOR REVISIONS ONLY

CONTRACT CHANGE ORDER NO. ____
SHEET ____ OF ____

REQUESTS FOR INFORMATION NOT ADDRESSED IN THIS CCO REMAIN IN FORCE

ALL DIMENSIONS ARE IN MILLIMETERS UNLESS OTHERWISE SHOWN

R. Vallzadeh/V. Toan/Y.L./W.L./F.C.
DESIGN OVERSIGHT
SIGN OFF DATE 09/01/11

MARK	DATE	DESCRIPTIONS	BY	CH'D	CCO#
2	09/01/11	EAST END OBG	DT	GB	87
1	04/02/07	CROSSBEAM KINK	GB	DT	38

REVISIONS

	BY	CHECKED
DESIGN	G. Baker	P. Ritchie
DETAILS	D. Veytsman	T. McMeans
QUANTITIES	C. Mauch	M. Roberts

PREPARED FOR THE STATE OF CALIFORNIA DEPARTMENT OF TRANSPORTATION

R. Manzanarez
PROJECT ENGINEER

BRIDGE NO. 34-0006L/R
KILOMETER POST 13.2/13.9

SAN FRANCISCO OAKLAND BAY BRIDGE
EAST SPAN SEISMIC SAFETY PROJECT
SELF-ANCHORED SUSPENSION BRIDGE (SUPERSTRUCTURE & TOWER)

CROSSBEAM AT EAST ANCHORAGE NO. 2

Rev. Date: 5-18-98

ORIGINAL SCALE IN MILLIMETERS FOR REDUCED PLANS 0 10 20 30 40 50 60 70 80 90 100

CU 04
EA 0120F1

DISREGARD PRINTS BEARING EARLIER REVISION DATES

REVISION DATES (PRELIMINARY STAGE ONLY): 05/15/98, 08/02/99, 05/24/01, 04/08/02, 07/01/02, 12/19/02

SHEET 308R2 OF

FILE -> I:\bb\04-012001\sas\contract plans and cco\cco\cco#87\1-original 09-01-11\dgn\agcrs11.dgn

100% PS&E
DATE PLOTTED -> 30 AUG 2011
TIME PLOTTED -> 10:24:23
USERNAME -> PTom

DIST.	COUNTY	ROUTE	KILOMETER POST TOTAL PROJECT	SHEET NO.	TOTAL SHEETS
04	SF	80	13.2/13.9	725S	1204

Daniel J. Turner
REGISTERED ENGINEER - CIVIL

09-01-11
PLANS APPROVAL DATE

Daniel J. Turner, No. C 65033, Exp. 06/30/13, CIVIL, REGISTERED PROFESSIONAL ENGINEER, STATE OF CALIFORNIA

The State of California or its officers or agents shall not be responsible for the accuracy or completeness of electronic copies of this plan sheet.

T.Y. LIN / MOFFATT & NICHOL
825 BATTERY STREET
SAN FRANCISCO, CA 94111

Caltrans now has a web site! To get to the web site, go to: http://www.dot.ca.gov

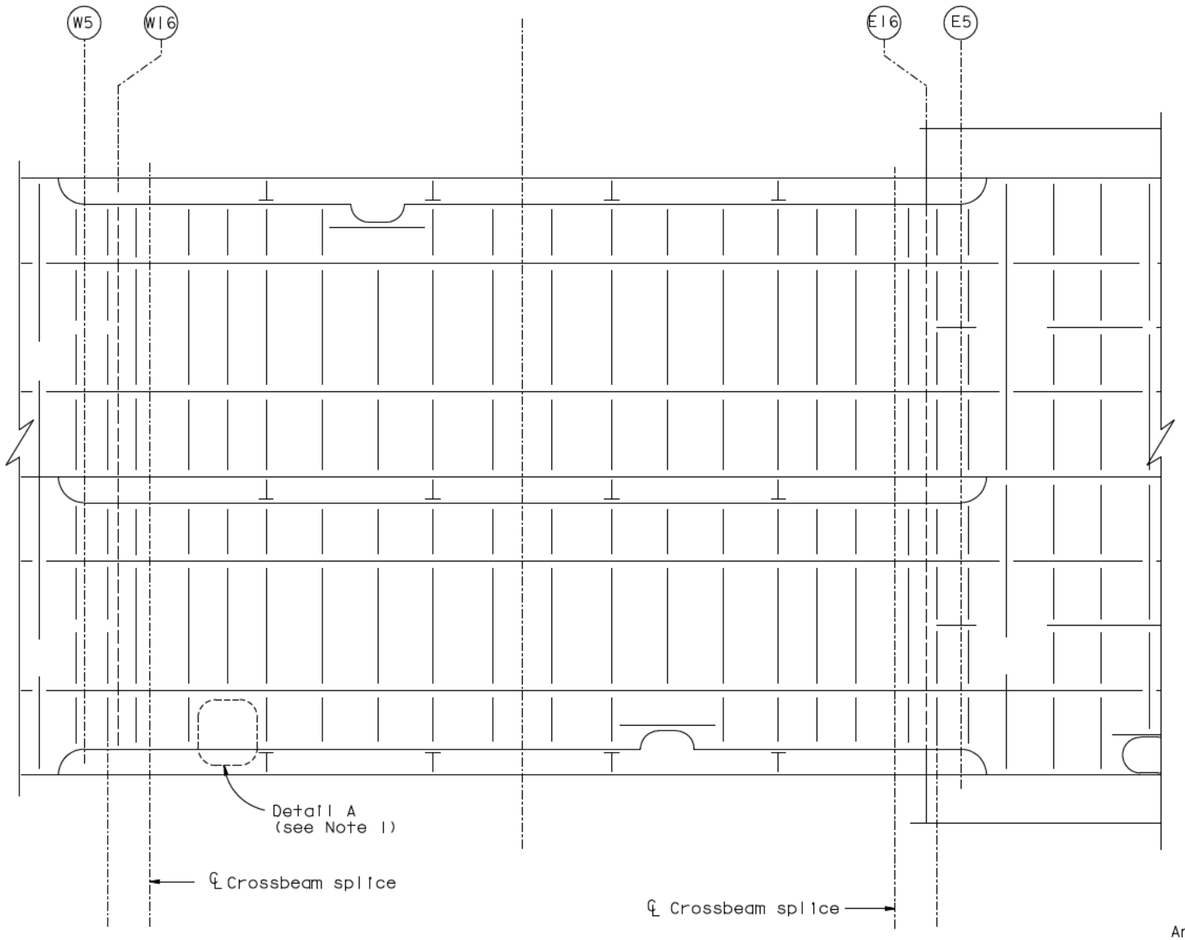

PLAN OF TOP ANCHORAGE PLATE

1:50

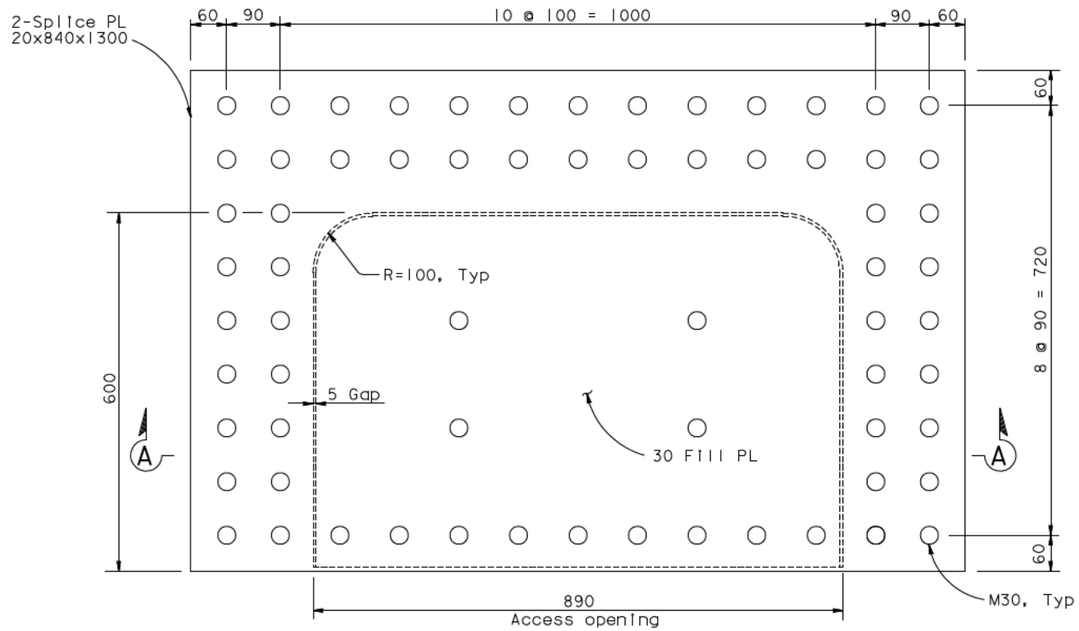

DETAIL A

(Optional access opening, Typ)
(See Note 2)

1:5

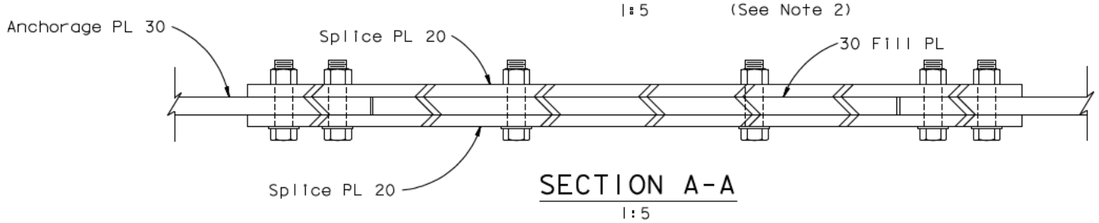

SECTION A-A

1:5

NOTES:

1. At the Contractor's option, access openings may be provided in the anchorage PL, subject to review and approval of the Engineer.
2. Anchorage PL WT stiffener may be omitted at the access opening splice PL, subject to the review and approval of the Engineer.

CONTRACT CHANGE ORDER NO. ____
SHEET ____ OF ____

REQUESTS FOR INFORMATION NOT ADDRESSED IN THIS CCO REMAIN IN FORCE

ALL DIMENSIONS ARE IN MILLIMETERS UNLESS OTHERWISE SHOWN

R. Vallzadeh/V. Toan/Y.L./W.L./F.C.
DESIGN OVERSIGHT
Roya Vallzadeh / Vong Toan / Y Liu
SIGN OFF DATE 09/01/11

MARK	DATE	DESCRIPTIONS	BY	CH'D	CCO#
		REVISIONS			
0	09/01/11	EAST END OBG	DT	GB	87

DESIGN	BY D. Turner	CHECKED G. Baker	PREPARED FOR THE STATE OF CALIFORNIA DEPARTMENT OF TRANSPORTATION
DETAILS	BY D. Turner	CHECKED G. Baker	
QUANTITIES	BY D. Turner	CHECKED G. Baker	

R. Manzanarez
PROJECT ENGINEER

BRIDGE NO.	KILOMETER POST
34-0006L/R	13.2/13.9

SAN FRANCISCO OAKLAND BAY BRIDGE
EAST SPAN SEISMIC SAFETY PROJECT
SELF-ANCHORED SUSPENSION BRIDGE
(SUPERSTRUCTURE & TOWER)

CROSSBEAM AT EAST ANCHORAGE NO. 2A

Rev. Date: 5-18-98

ORIGINAL SCALE IN MILLIMETERS FOR REDUCED PLANS 0 10 20 30 40 50 60 70 80 90 100

CU 04
EA 0120F1

DISREGARD PRINTS BEARING EARLIER REVISION DATES →

REVISION DATES (PRELIMINARY STAGE ONLY)	SHEET	OF
09/01/11	308S	

FILE -> I:\bb\04-012001\sas\contract plans and cco\cco\cco#87\1-original 09-01-11\dgn\agcrs11a.dgn

100 % PS&E
DATE PLOTTED -> 30 AUG 2011
TIME PLOTTED -> 10:25:57
USERNAME -> Ptom

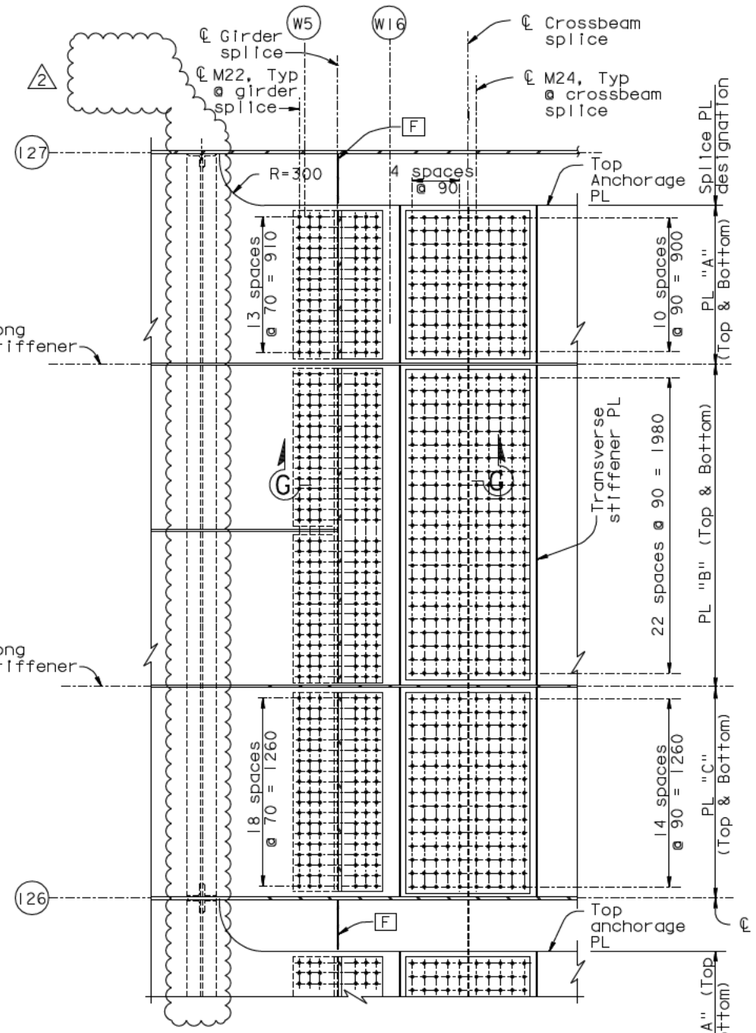

TOP ANCHORAGE PLATE SPLICES

DETAIL E

1:20

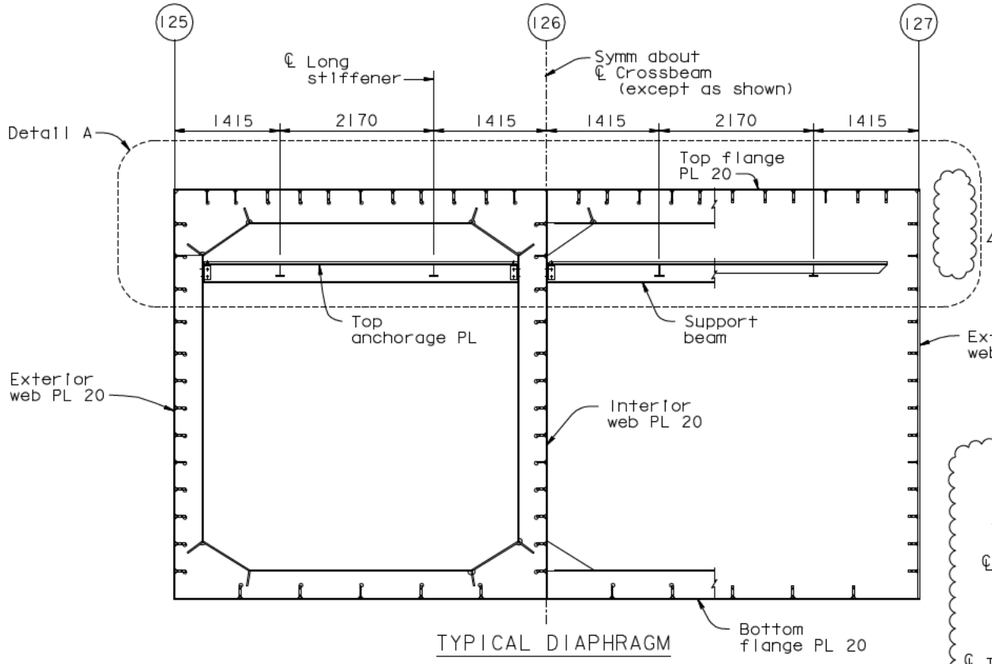

TYPICAL DIAPHRAGM

SECTION A-A

1:40

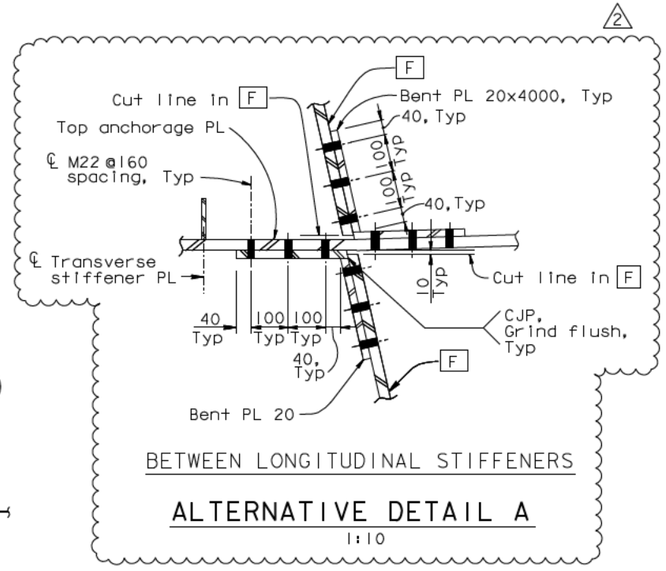

BETWEEN LONGITUDINAL STIFFENERS

ALTERNATIVE DETAIL A

1:10

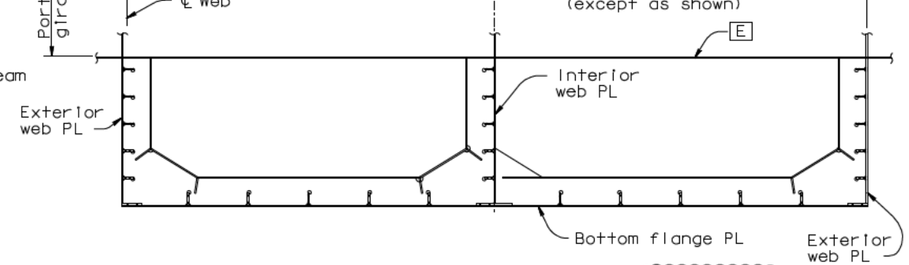

PARTIAL HEIGHT DIAPHRAGM (See Note 5)

SECTION C-C

1:40

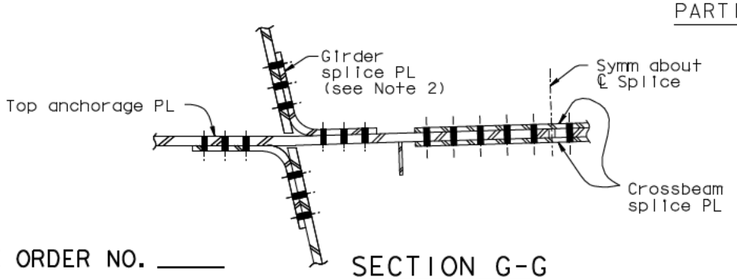

SECTION G-G

1:10

CROSSBEAM SPLICE PLATE TABLE	
Plate Type	Dimensions
PL "A"	PL 20x920x990
PL "B"	PL 20x920x2070
PL "C"	PL 20x920x1350

NOTES:

1. For details not shown, see "Typical Crossbeam Details" sheets.
2. For girder splice PL details, see Detail A on "Crossbeam At East Anchorage No. 2" sheet.
3. For Detail A, see "Crossbeam At East Anchorage No. 4" sheet.
2 4. At the Contractor's option, the orientation of the crossbeam diaphragms and PP126 web stiffeners may be reversed, subject to review and approval of the Engineer.
5. At the Contractor's option, WT345x62.5 and WT460x100.5 may be substituted with equivalent built-up sections, subject to review and approval of the Engineer.

DIST.	COUNTY	ROUTE	KILOMETER POST TOTAL PROJECT	SHEET NO.	TOTAL SHEETS
04	SF	80	13.2/13.9	726R2	1204

Caltrans Metric

George Baker
REGISTERED ENGINEER - CIVIL
12-6-04
PLANS APPROVAL DATE

REGISTERED PROFESSIONAL ENGINEER — George S. Baker — No. C 57112 — Exp. 12/31/05 — CIVIL — STATE OF CALIFORNIA

The State of California or its officers or agents shall not be responsible for the accuracy or completeness of electronic copies of this plan sheet.

T.Y. LIN / MOFFATT & NICHOL
825 BATTERY STREET
SAN FRANCISCO, CA 94111

Caltrans now has a web site! To get to the web site, go to: http://www.dot.ca.gov

Daniel J. Turner — REGISTERED PROFESSIONAL ENGINEER — No. C 65033 — Exp. 06/30/13 — CIVIL — STATE OF CALIFORNIA

FOR REVISIONS ONLY

CONTRACT CHANGE ORDER NO. ____
SHEET ___ OF ___

REQUESTS FOR INFORMATION NOT ADDRESSED IN THIS CCO REMAIN IN FORCE

ALL DIMENSIONS ARE IN MILLIMETERS UNLESS OTHERWISE SHOWN

MARK	DATE	REVISIONS	BY	CH'D	CCO#
2	09/01/11	EAST END OBG	DT	GB	87
1	04/02/07	CROSSBEAM KINK	GB	DT	38

R. Valizadeh/V. Toan/Y.L./W.L./F.C.
DESIGN OVERSIGHT
SIGN OFF DATE 09/01/11

	BY	CHECKED
DESIGN	G. Baker	P. Ritchie
DETAILS	D. Veytsman	T. McMeans
QUANTITIES	C. Mauch	M. Roberts

PREPARED FOR THE STATE OF CALIFORNIA DEPARTMENT OF TRANSPORTATION

R. Manzanarez
PROJECT ENGINEER

BRIDGE NO. 34-0006L/R
KILOMETER POST 13.2/13.9

CU 04
EA 0120F1

SAN FRANCISCO OAKLAND BAY BRIDGE
EAST SPAN SEISMIC SAFETY PROJECT
SELF-ANCHORED SUSPENSION BRIDGE
(SUPERSTRUCTURE & TOWER)

CROSSBEAM AT EAST ANCHORAGE NO. 3

Rev. Date: 5-18-98

ORIGINAL SCALE IN MILLIMETERS FOR REDUCED PLANS 0 10 20 30 40 50 60 70 80 90 100

DISREGARD PRINTS BEARING EARLIER REVISION DATES

REVISION DATES (PRELIMINARY STAGE ONLY): 08/27/99 05/31/01 04/08/02 07/09/02 12/19/02

SHEET 309R2 OF

FILE -> I:\bb\04-012001\sas\contract plans and cco\cco\cco#87\1-original 09-01-11\dgn\agcrs12.dgn

USERNAME -> PTom DATE PLOTTED -> 30 AUG 2011 TIME PLOTTED -> 10:27:30

100 % PS&E

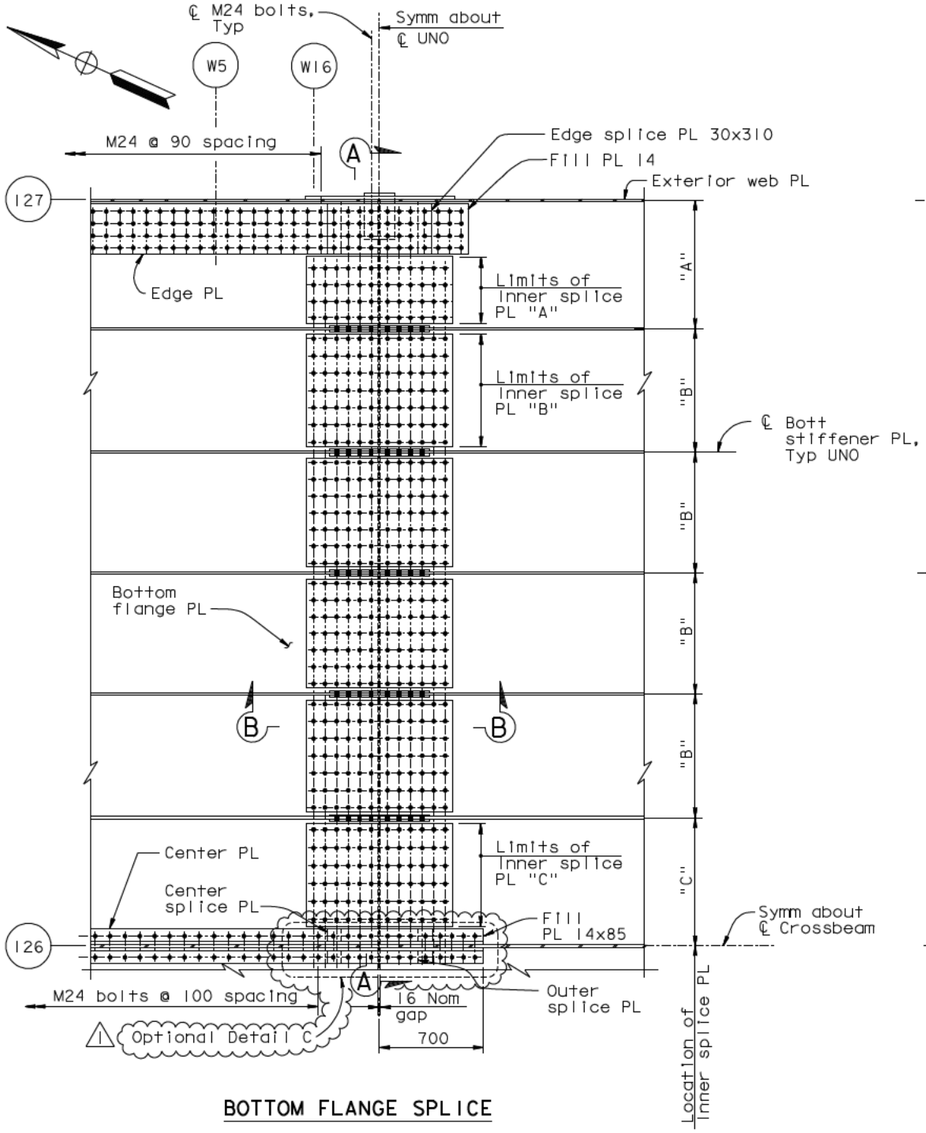

BOTTOM FLANGE SPLICE

DETAIL F

1:20

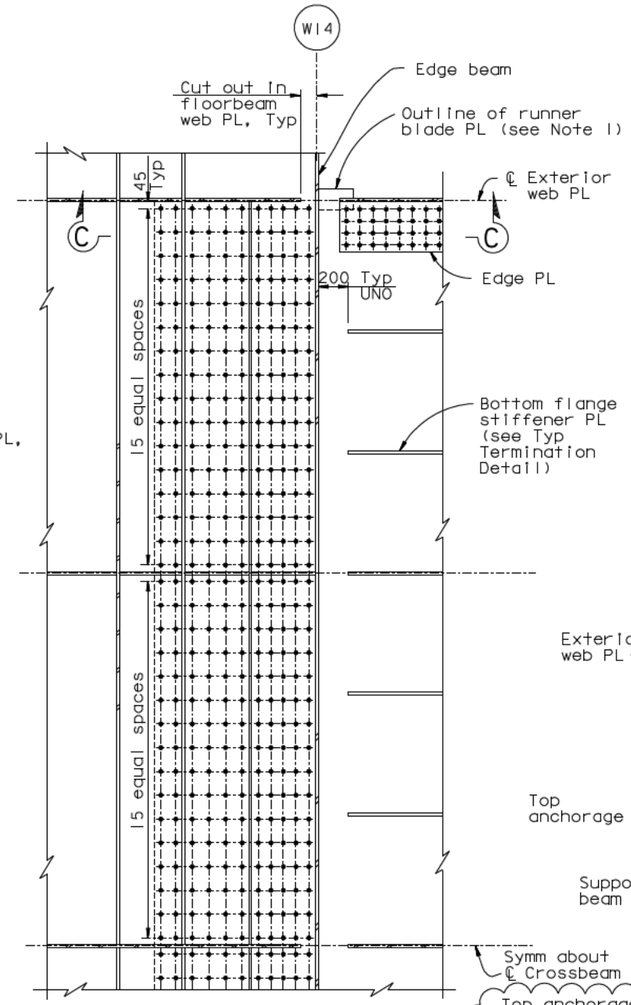

BOTTOM SPLICE TO GIRDER

DETAIL G

1:20

BOTTOM FLANGE SPLICE PLATE TABLE	
Plate Type	Dimensions
Inner PL "A"	PL 16x1000x420
Inner PL "B"	PL 16x1000x750
Inner PL "C"	PL 16x1000x690
Outer PL	PL 20x1000x9980

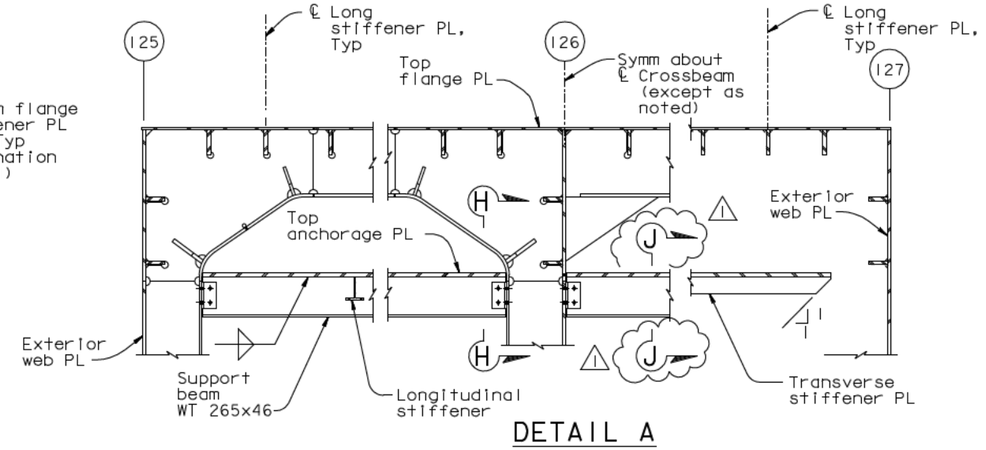

DETAIL A

1:20

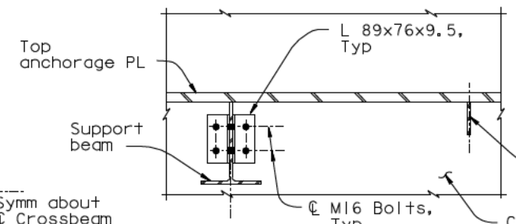

SECTION H-H

1:10

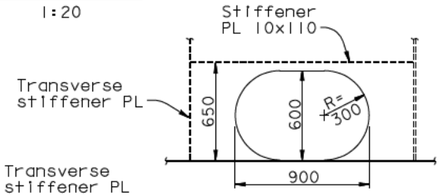

DETAIL B

1:20

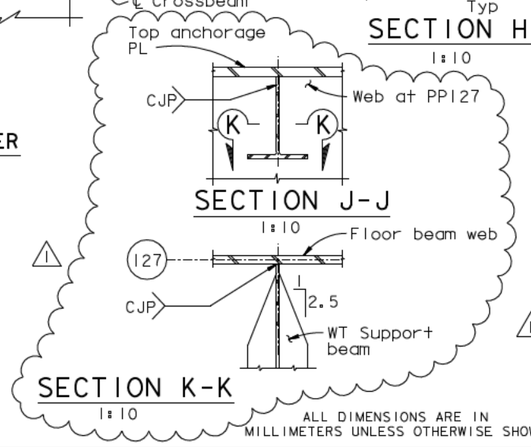

NOTES:

1. For Crossbeam details not shown, see "Typical Crossbeam Details" sheets.
2. For Section A-A, see "Typical Crossbeam Details No. 8" sheet.
3. For Section B-B, see "Crossbeam At Pier E2 No.5" sheet.
4. For Section C-C, see Section A-A on "Crossbeam At Pier E2 No.7" sheet.
5. For optional Detail C, see "Crossbeam At East Anchorage No.4A" sheet.

ALL DIMENSIONS ARE IN MILLIMETERS UNLESS OTHERWISE SHOWN

DIST.	COUNTY	ROUTE	KILOMETER POST TOTAL PROJECT	SHEET NO.	TOTAL SHEETS
04	SF	80	13.2/13.9	727R	1204

George Baker
REGISTERED ENGINEER - CIVIL
12-6-04
PLANS APPROVAL DATE

REGISTERED PROFESSIONAL ENGINEER George S. Baker No. C57112 Exp. 12/31/05 CIVIL STATE OF CALIFORNIA

The State of California or its officers or agents shall not be responsible for the accuracy or completeness of electronic copies of this plan sheet.

T.Y. LIN / MOFFATT & NICHOL
825 BATTERY STREET
SAN FRANCISCO, CA 94111

Caltrans now has a web site! To get to the web site, go to: http://www.dot.ca.gov

REGISTERED PROFESSIONAL ENGINEER Marwan N. Nader No. C 054426 Exp. 12/31/13 CIVIL STATE OF CALIFORNIA

FOR REVISIONS ONLY

CONTRACT CHANGE ORDER NO. ____
SHEET ____ OF ____

REQUESTS FOR INFORMATION NOT ADDRESSED IN THIS CCO REMAIN IN FORCE

R. Vallzadeh/V. Toan/Y.L./W.L./F.C.
DESIGN OVERSIGHT
SIGN OFF DATE 04/18/12

MARK	DATE	DESCRIPTIONS	BY	CH'D	CCO#
1	04/18/12	EAST END OBG	MN	GB	87

REVISIONS

	BY	CHECKED
DESIGN	G. Baker	P. Ritchie
DETAILS	S. Camo	T. McMeans
QUANTITIES	C. Mauch	M. Roberts

PREPARED FOR THE STATE OF CALIFORNIA DEPARTMENT OF TRANSPORTATION

R. Manzanarez
PROJECT ENGINEER

BRIDGE NO. 34-0006L/R
KILOMETER POST 13.2/13.9

SAN FRANCISCO OAKLAND BAY BRIDGE
EAST SPAN SEISMIC SAFETY PROJECT
SELF-ANCHORED SUSPENSION BRIDGE (SUPERSTRUCTURE & TOWER)

CROSSBEAM AT EAST ANCHORAGE NO. 4

Rev. Date: 5-18-98

ORIGINAL SCALE IN MILLIMETERS FOR REDUCED PLANS 0 10 20 30 40 50 60 70 80 90 100

CU 04
EA 0120F1

DISREGARD PRINTS BEARING EARLIER REVISION DATES

REVISION DATES (PRELIMINARY STAGE ONLY): 08/22/99 05/31/01 04/08/02 07/01/02 12/19/02

SHEET 310R1 OF

FILE -> I:\bb\04-0120I\sas\contract plans and cco\cco\cco#87\temp\aggrs19.dgn

USERNAME -> DWinrow DATE PLOTTED -> 18 APR 2012 TIME PLOTTED -> 11:25:11

100 % PS&E

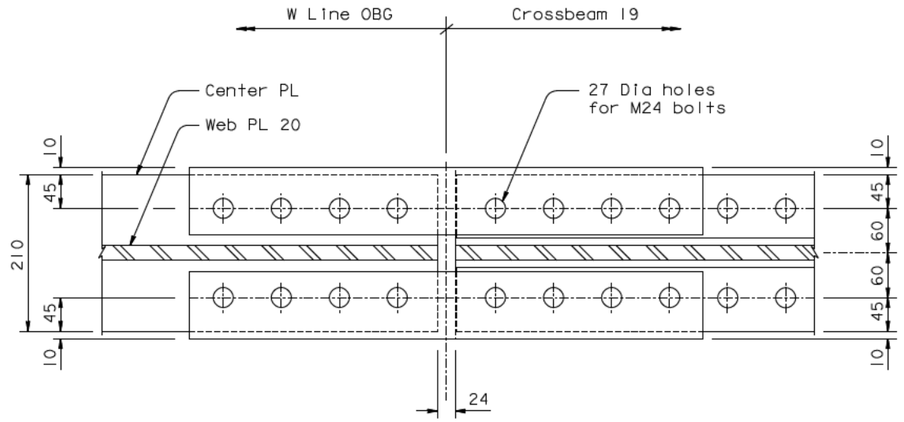

OPTIONAL DETAIL C (See Note 1)

1:4

NOTES:

1. At the Contractor's option, optional Detail C may be used to provide additional clearance in the case of crossbeam to OBG misalignment, subject to review and approval of the Engineer.

CONTRACT CHANGE ORDER NO. ____
SHEET ____ OF ____

REQUESTS FOR INFORMATION NOT ADDRESSED IN THIS CCO REMAIN IN FORCE

ALL DIMENSIONS ARE IN MILLIMETERS UNLESS OTHERWISE SHOWN

DIST.	COUNTY	ROUTE	KILOMETER POST TOTAL PROJECT	SHEET NO.	TOTAL SHEETS
04	SF	80	13.2/13.9	727S1	1204

Daniel J. Turner
REGISTERED ENGINEER - CIVIL

09-01-11
PLANS APPROVAL DATE

Daniel J. Turner, No. C 65033, Exp. 06/30/13, CIVIL, REGISTERED PROFESSIONAL ENGINEER, STATE OF CALIFORNIA

The State of California or its officers or agents shall not be responsible for the accuracy or completeness of electronic copies of this plan sheet.

T.Y. LIN / MOFFATT & NICHOL
825 BATTERY STREET
SAN FRANCISCO, CA 94111

Caltrans now has a web site! To get to the web site, go to: http://www.dot.ca.gov

MARK	DATE	REVISIONS	BY	CH'D	CCO#
0	09/01/11	EAST END OBG	DT	GB	87

	BY	CHECKED
DESIGN	D. Turner	G. Baker
DETAILS	D. Turner	G. Baker
QUANTITIES	D. Turner	G. Baker

R. Vallzadeh/V. Toan/Y.L./W.L./F.C.
DESIGN OVERSIGHT
SIGN OFF DATE 09/01/11

PREPARED FOR THE STATE OF CALIFORNIA DEPARTMENT OF TRANSPORTATION

R. Manzanarez
PROJECT ENGINEER

BRIDGE NO. 34-0006L/R
KILOMETER POST 13.2/13.9

SAN FRANCISCO OAKLAND BAY BRIDGE
EAST SPAN SEISMIC SAFETY PROJECT
SELF-ANCHORED SUSPENSION BRIDGE
(SUPERSTRUCTURE & TOWER)

CROSSBEAM AT EAST ANCHORAGE NO. 4A

Rev. Date: 5-18-98

ORIGINAL SCALE IN MILLIMETERS FOR REDUCED PLANS 0 10 20 30 40 50 60 70 80 90 100

CU 04
EA 0120F1

DISREGARD PRINTS BEARING EARLIER REVISION DATES →

REVISION DATES (PRELIMINARY STAGE ONLY): 09/01/11

SHEET 310S1 OF

FILE -> I:\bb\04-012001\sas\contract plans and cco\cco\cco#87\1-original 09-01-11\dgn\agcrs19a.dgn

100% PS&E
DATE PLOTTED -> 30 AUG 2011 TIME PLOTTED -> 10:43:15
USERNAME -> PTam

Caltrans now has a web site! To get to the web site, go to: http://www.dot.ca.gov

Caltrans Metric

DIST.	COUNTY	ROUTE	KILOMETER POST TOTAL PROJECT	SHEET NO.	TOTAL SHEETS
04	SF	80	13.2/13.9	732R3	1204

George Baker
REGISTERED ENGINEER - CIVIL

12-6-04
PLANS APPROVAL DATE

The State of California or its officers or agents shall not be responsible for the accuracy or completeness of electronic copies of this plan sheet.

REGISTERED PROFESSIONAL ENGINEER — George S. Baker — No. C57112 — Exp. 12/31/05 — CIVIL — STATE OF CALIFORNIA

T.Y. LIN / MOFFATT & NICHOL
825 BATTERY STREET
SAN FRANCISCO, CA 94111

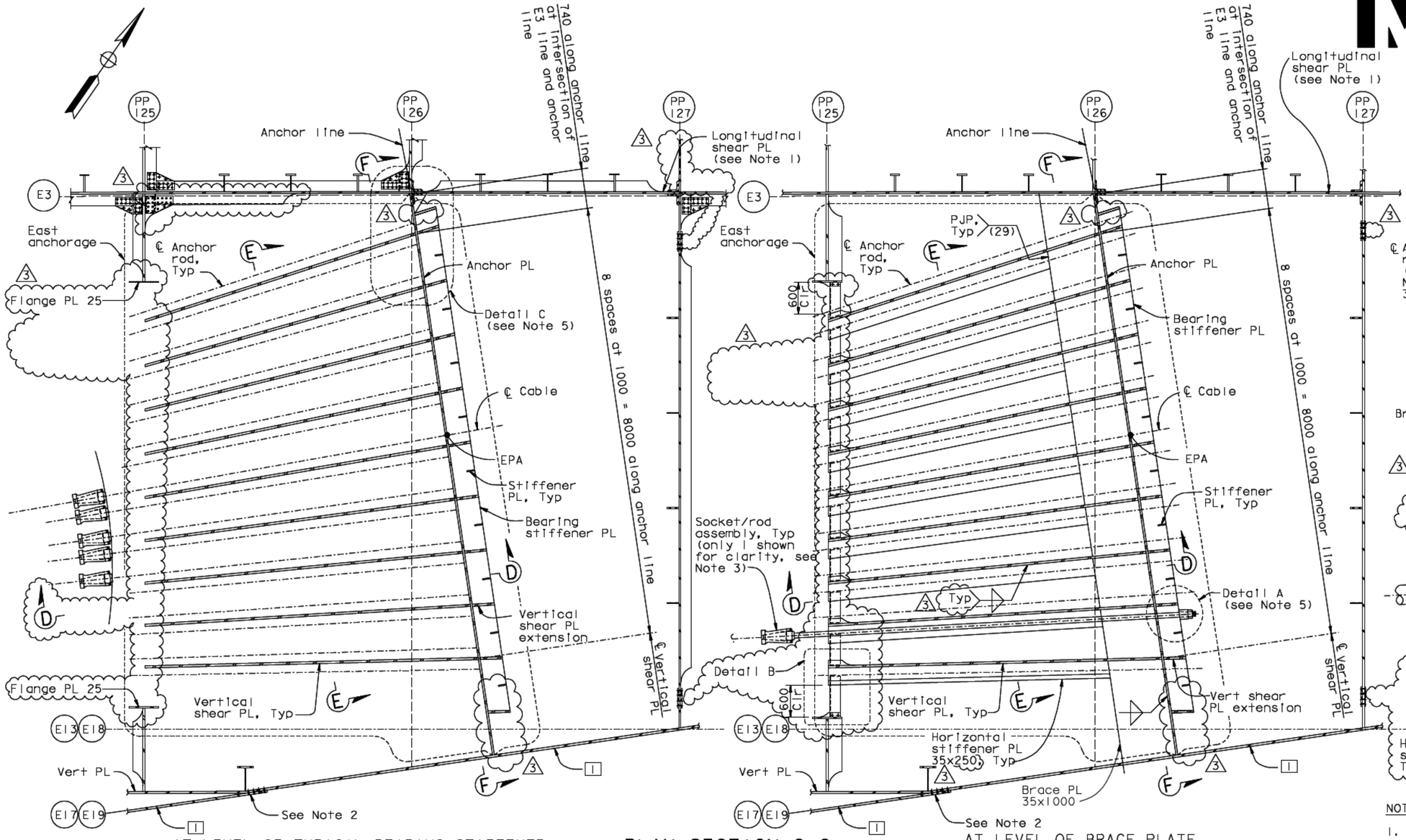

AT LEVEL OF TYPICAL BEARING STIFFENER

PLAN SECTION C-C
1:40

AT LEVEL OF BRACE PLATE

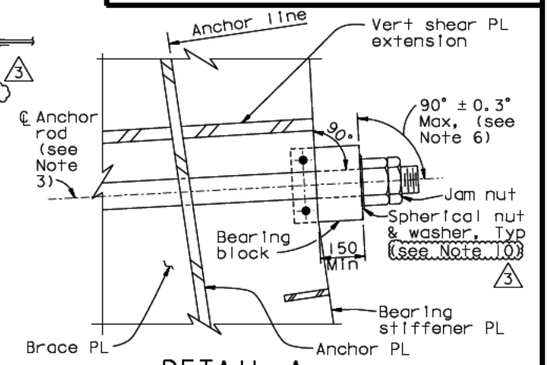

DETAIL A
1:10

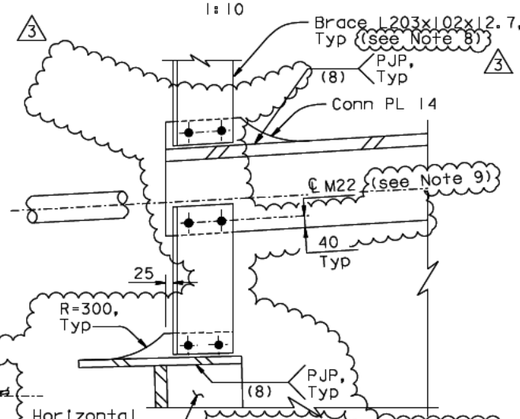

DETAIL B
1:10

NOTES:

1. For details of longitudinal shear PL between PP125 and PP127, see "Girder At East Transition No.16" sheet.
2. For details of splice connection at girder PL 1 and vertical PL convergence, see "Girder At East Transition Details" sheets.
3. For strand socket and anchor rod details, see "East Cable Anchorage Details" sheet.
4. For Detail C and Sections D-D, E-E and F-F, see "East Cable Anchorage "E" Line Layout No.3" sheet.
5. Machining of bearing stiffener not shown in plan view.
6. The bearing blocks shall be aligned with the bearing stiffener plates. The angle between the bearing block and the anchor rod may vary (up to 90° ± 0.3° Max) due to the averaging of the bearing stiffeners orientation across each row of anchors.
7. For Alternative Detail B, see "East Cable Anchorage "E" Line Layout No.2A" sheet.
8. At the Contractor's option, a PL 25x200 may be used in lieu of a L203x102x12.7.
9. At the Contractor's option, bolts may be moved to 50 mm from the face of the vertical shear PL, and the L203 or PL 25 extended, to provide additional clearance from the strands, subject to review and approval of the Engineer.
10. At the Contractor's option, the anchor rod spherical nut washer may be ground to allow a rotation of up to 2.8 degrees. Corresponding anchor rod angle correction shall not be larger than 1.0 degree.

ALL DIMENSIONS ARE IN MILLIMETERS UNLESS OTHERWISE SHOWN

100 % PS&E

Marwan N. Nader — No. C 054426 — Exp. 12/31/13 — CIVIL — REGISTERED PROFESSIONAL ENGINEER — STATE OF CALIFORNIA

FOR REVISIONS ONLY

CONTRACT CHANGE ORDER NO. _____
SHEET ___ OF ___

REQUESTS FOR INFORMATION NOT ADDRESSED IN THIS CCO REMAIN IN FORCE

MARK	DATE	DESCRIPTIONS	BY	CH'D	CCO#
3	03/09/12	EAST END OBG	MN	DT	87
2	04/08/11	SUSPENSION CABLE MISCELLANEOUS DETAILS	GB	MN	185
1	01/28/11	MISCELLANEOUS CABLE SYSTEM DETAILS	GB	MN	37SI

REVISIONS

R. Valizadeh/V. Toan/Y.L./W.L./F.C.
DESIGN OVERSIGHT
SIGN OFF DATE 03/09/12

	BY	CHECKED
DESIGN	G. Baker	J. Kultkt
DETAILS	M. Gulyas	T. McMeans
QUANTITIES	M. Gulyas	M. Roberts

PREPARED FOR THE STATE OF CALIFORNIA
DEPARTMENT OF TRANSPORTATION

R. Manzanarez
PROJECT ENGINEER

BRIDGE NO. 34-0006L/R
KILOMETER POST 13.2/13.9

SAN FRANCISCO OAKLAND BAY BRIDGE
EAST SPAN SEISMIC SAFETY PROJECT
SELF-ANCHORED SUSPENSION BRIDGE
(SUPERSTRUCTURE & TOWER)

EAST CABLE ANCHORAGE "E" LINE LAYOUT NO.2

Rev. Date: 5-18-98

ORIGINAL SCALE IN MILLIMETERS FOR REDUCED PLANS 0 10 20 30 40 50 60 70 80 90 100

CU 04
EA 0120F1

DISREGARD PRINTS BEARING EARLIER REVISION DATES →

REVISION DATES (PRELIMINARY STAGE ONLY): 01/15/99 05/15/99 08/02/99 05/31/01 04/08/02 07/01/02 12/18/02 11/13/05

SHEET 315R3 OF

FILE -> L:\BB\04-0120F1\SAS\Contract Plans and CCO\CCO\CCO#87\2-Update 03-09-12\DGN\agan105.dgn

USERNAME -> DWinrow DATE PLOTTED -> 09 MAR 2012 TIME PLOTTED -> 10:12:02

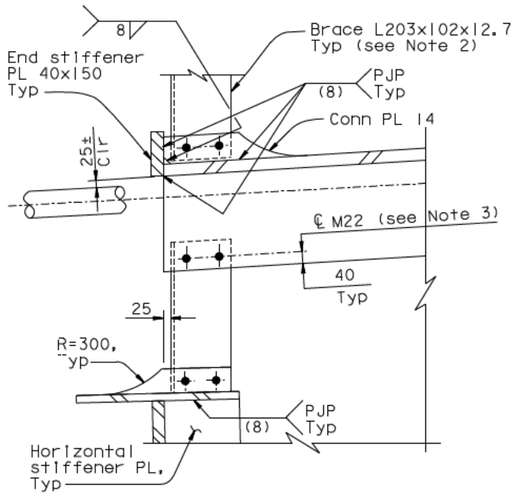

ALTERNATIVE DETAIL B

1:10

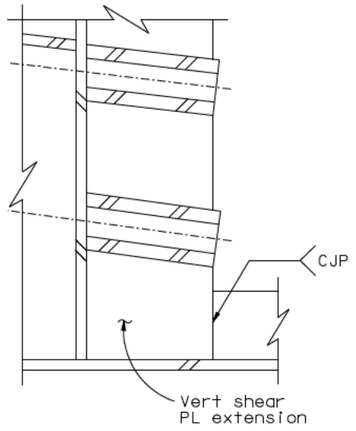

VIEW J-J Shown (View J'-J' Similar)

1:10

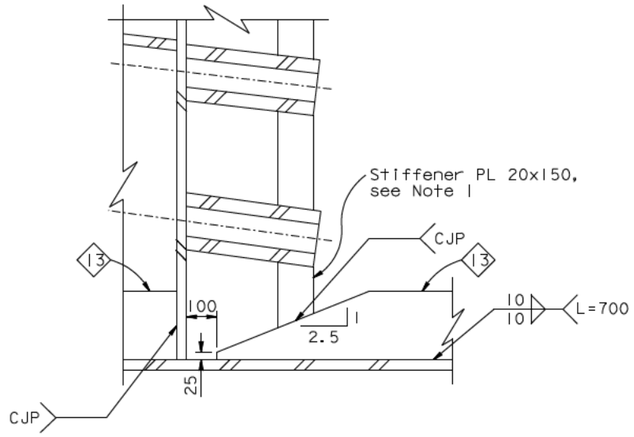

VIEW K-K Shown (View K'-K' Similar)

1:10

DIST.	COUNTY	ROUTE	KILOMETER POST TOTAL PROJECT	SHEET NO.	TOTAL SHEETS
04	SF	80	13.2/13.9	732S1	1204

REGISTERED ENGINEER - CIVIL

04-18-12

PLANS APPROVAL DATE

REGISTERED PROFESSIONAL ENGINEER
Marwan N. Nader
No. C 054426
Exp. 12/31/13
CIVIL
STATE OF CALIFORNIA

The State of California or its officers or agents shall not be responsible for the accuracy or completeness of electronic copies of this plan sheet.

T.Y. LIN / MOFFATT & NICHOL
825 BATTERY STREET
SAN FRANCISCO, CA 94111

Caltrans now has a web site! To get to the web site, go to: http://www.dot.ca.gov

NOTES:

1. Bottom stiffener PL 20x150 shall align with stiffener type 13.
2. At the Contractor's option, PL 25x200 may be used in lieu of the L203x102x12.7.
3. At the Contractor's option, bolts may be moved to 50 mm from the face of the vertical shear PL, and the L203 or PL 25 extended, to provide additional clearance from the strands, subject to the review and approval of the Engineer.

CONTRACT CHANGE ORDER NO. ____
SHEET ____ OF ____

REQUESTS FOR INFORMATION NOT ADDRESSED IN THIS CCO REMAIN IN FORCE

ALL DIMENSIONS ARE IN MILLIMETERS UNLESS OTHERWISE SHOWN

MARK	DATE	REVISIONS	BY	CH'D	CCO#
0	04/18/12	EAST END OBG	MN	GB	87

R. Vallizadeh/V. Toan/Y.L./W.L./F.C.
DESIGN OVERSIGHT
SIGN OFF DATE 04/18/12

DESIGN	BY G. Baker	CHECKED M. Nader
DETAILS	BY G. Baker	CHECKED D. Turner
QUANTITIES	BY G. Baker	CHECKED D. Turner

PREPARED FOR THE
STATE OF CALIFORNIA
DEPARTMENT OF TRANSPORTATION

R. Manzanarez
PROJECT ENGINEER

BRIDGE NO. 34-0006L/R
KILOMETER POST 13.2/13.9

SAN FRANCISCO OAKLAND BAY BRIDGE
EAST SPAN SEISMIC SAFETY PROJECT
SELF-ANCHORED SUSPENSION BRIDGE
(SUPERSTRUCTURE & TOWER)

EAST CABLE ANCHORAGE "E" LINE LAYOUT NO. 2A

Rev. Date: 5-18-98

ORIGINAL SCALE IN MILLIMETERS FOR REDUCED PLANS 0 10 20 30 40 50 60 70 80 90 100

CU 04
EA 0120F1

DISREGARD PRINTS BEARING EARLIER REVISION DATES →

REVISION DATES (PRELIMINARY STAGE ONLY): 04/18/12

SHEET 315S1 OF

FILE -> I:\bb\04-012001\sas\contract plans and cco\cco\cco#87\temp\agan105s1.dgn

USERNAME -> DWinrow DATE PLOTTED -> 18 APR 2012 TIME PLOTTED -> 11:26:21

100% PS&E

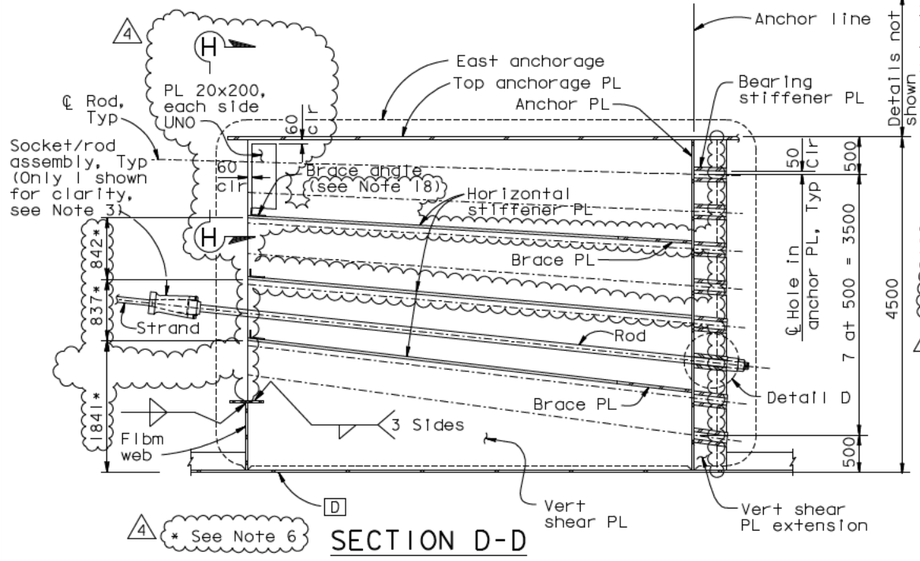

SECTION D-D

1:40

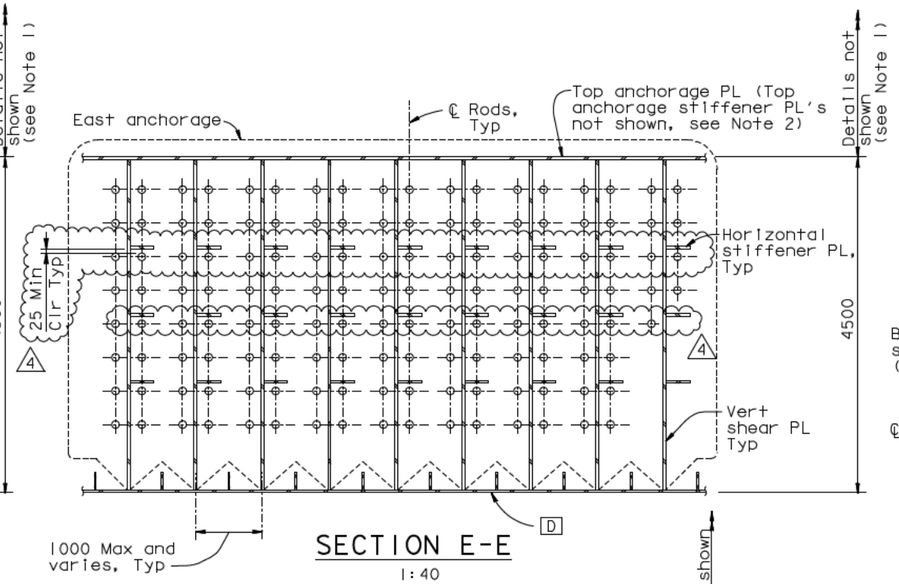

SECTION E-E

1:40

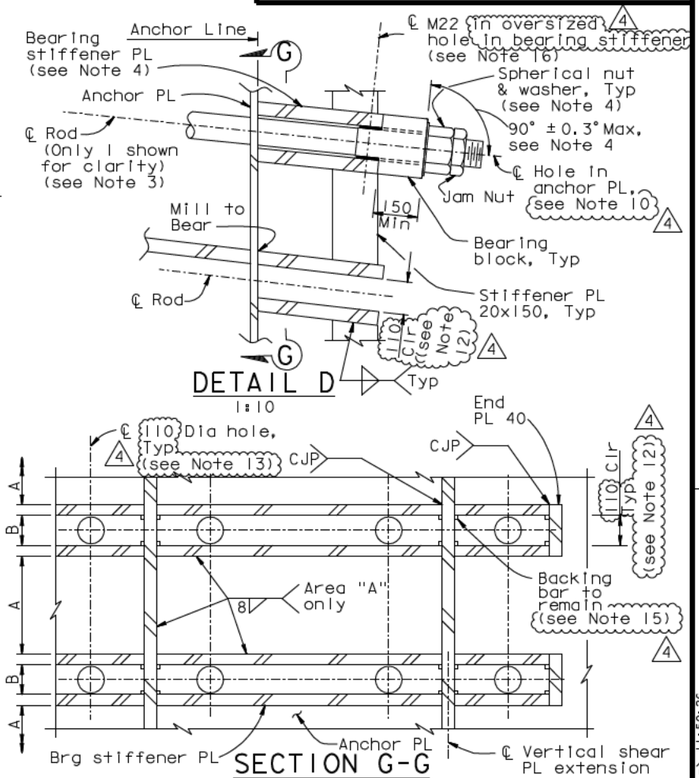

DETAIL D

1:10

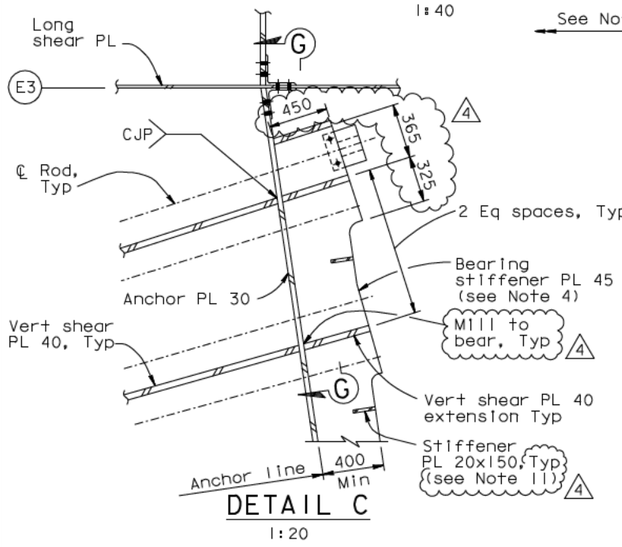

DETAIL C

1:20

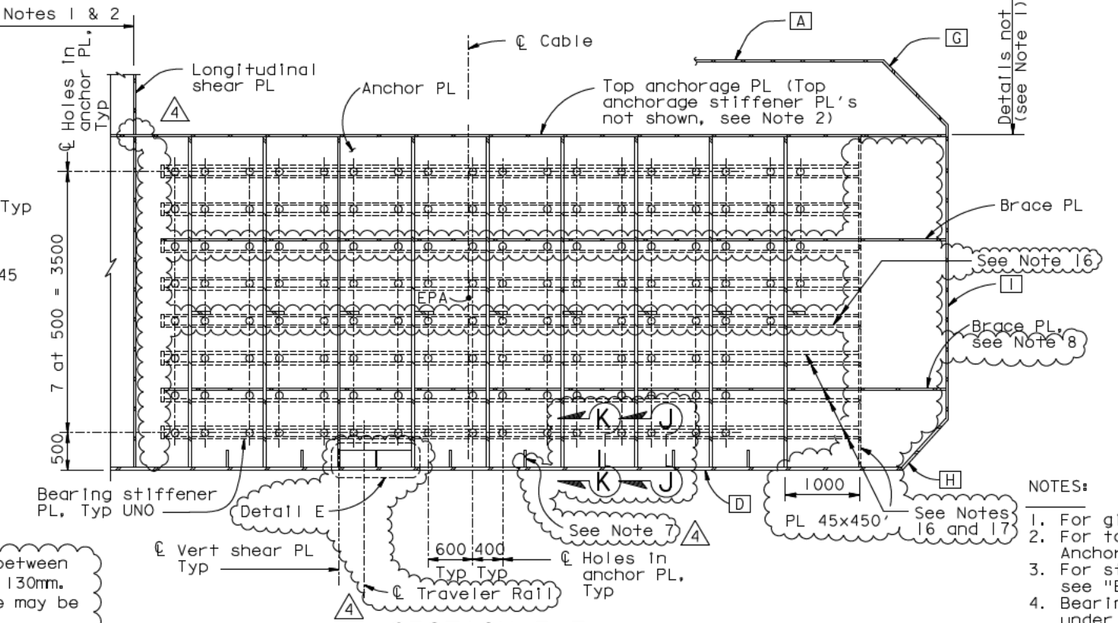

SECTION F-F

1:40

SECTION G-G

1:10

4 12. At the Contractor's option, clear spacing between bearing stiffener PL's may be increased to 130mm.
13. At the Contractor's option, anchor rod hole may be increased to 120mm Dia.
14. For Notes 15 and above, see "East Cable Anchorage "E" Line Layout No.3A" sheet.

4 9. For Views J-J and K-K, see "East Cable Anchorage "E" Line Layout No. 2A" sheet.
10. The Contractor may drill the 110 mm Dia holes in the anchor PL normal to the anchor PL instead of along the anchor rod axis.
11. In cases where the top most stiffener PL 20x150 would interfere with bolts in the top anchorage PL, the top most stiffener only shall be relocated to the nearest position that is 60 mm clear of bolt ℄.

NOTES:

1. For girder details not shown, see "Girder At East Transition" sheets.
2. For top anchorage PL details not shown, see "Crossbeam At East Anchorage" and "Girder At East Transition" sheets.
3. For strand socket, transition anchor rod and bearing block details, see "East Cable Anchorage Details" sheet.
4. Bearing stiffener PL shall be machined to level the bearing block under the nut. The installation tolerance for the bearing block/anchor rod angle is ±1°. Also see Note 6 on "East Cable Anchorage "E" Line Layout No.2" sheet.

4 5. For View H-H and Detail E, see "East Cable Anchorage "E" Line Layout No.3B" sheet.
6. Dimensions shown with an asterisk shall be adjusted as necessary to provide 25 mm Min clearance above the strand and 50 mm Min below the strand.
7. Type 13 stiffeners shall terminate at each face of anchor PL with CJP welds.
8. Face 1 stiffeners shall terminate 100 clear of brace PL as required. For stiffener termination details, see "Typical Girder Details No.16" sheet.

ALL DIMENSIONS ARE IN MILLIMETERS UNLESS OTHERWISE SHOWN

Caltrans Metric

DIST.	COUNTY	ROUTE	KILOMETER POST TOTAL PROJECT	SHEET NO.	TOTAL SHEETS
04	SF	80	13.2/13.9	733R4	1204

George Baker
REGISTERED ENGINEER - CIVIL

REGISTERED PROFESSIONAL ENGINEER — George S. Baker — No. C57112 — Exp. 12/31/05 — CIVIL — STATE OF CALIFORNIA

12-6-04
PLANS APPROVAL DATE

The State of California or its officers or agents shall not be responsible for the accuracy or completeness of electronic copies of this plan sheet.

T.Y. LIN / MOFFATT & NICHOL
825 BATTERY STREET
SAN FRANCISCO, CA 94111

Caltrans now has a web site! To get to the web site, go to: http://www.dot.ca.gov

REGISTERED PROFESSIONAL ENGINEER — Marwan N. Nader — No. C 054426 — Exp. 12/31/13 — CIVIL — STATE OF CALIFORNIA

FOR REVISIONS ONLY

CONTRACT CHANGE ORDER NO. ____
SHEET ___ OF ___

REQUESTS FOR INFORMATION NOT ADDRESSED IN THIS CCO REMAIN IN FORCE

MARK	DATE	DESCRIPTIONS	BY	CH'D	CCO#
4	03/21/12	EAST END OBG	GB	MN	87
3	03/25/11	SUSPENSION CABLE MISCELLANEOUS DETAILS	DT	GB	185
2	01/28/11	MISCELLANEOUS CABLE SYSTEM DETAILS	DT	GB	375I
1	08/28/09	BEARING BLOCKS	DT	GB	78

REVISIONS

R. Vallzadeh/V. Toan/Y.L./W.L./F.C.
DESIGN OVERSIGHT
SIGN OFF DATE 03/21/12

	BY	CHECKED
DESIGN	G. Baker	J. Kullke
DETAILS	M. Guylas	T. McMeans
QUANTITIES	M. Guylas	M. Roberts

PREPARED FOR THE STATE OF CALIFORNIA DEPARTMENT OF TRANSPORTATION

R. Manzanarez
PROJECT ENGINEER

BRIDGE NO. 34-0006L/R
KILOMETER POST 13.2/13.9

SAN FRANCISCO OAKLAND BAY BRIDGE
EAST SPAN SEISMIC SAFETY PROJECT
SELF-ANCHORED SUSPENSION BRIDGE
(SUPERSTRUCTURE & TOWER)

EAST CABLE ANCHORAGE "E" LINE LAYOUT NO.3

Rev. Date: 5-18-98

ORIGINAL SCALE IN MILLIMETERS FOR REDUCED PLANS 0 10 20 30 40 50 60 70 80 90 100

CU 04
EA 0120F1

DISREGARD PRINTS BEARING EARLIER REVISION DATES

REVISION DATES (PRELIMINARY STAGE ONLY)										SHEET	OF
01/15/99	05/15/99	08/02/99	05/31/01	04/30/02	07/01/02	12/18/02	11/13/05			316R4	

FILE -> I:\bb\04-0120I\sas\contract plans and cco\cco\cco#87\3-update 03-21-12\dgn\agan106.dgn

USERNAME -> DWinrow DATE PLOTTED -> 21 MAR 2012 TIME PLOTTED -> 11:50:26

100 % PS&E

Caltrans Metric

DIST.	COUNTY	ROUTE	KILOMETER POST TOTAL PROJECT	SHEET NO.	TOTAL SHEETS
04	SF	80	13.2/13.9	733S1	1204

REGISTERED ENGINEER - CIVIL

09-01-11
PLANS APPROVAL DATE

REGISTERED PROFESSIONAL ENGINEER
Marwan N. Nader
No. C 054426
Exp. 12/31/11
CIVIL
STATE OF CALIFORNIA

The State of California or its officers or agents shall not be responsible for the accuracy or completeness of electronic copies of this plan sheet.

T.Y. LIN / MOFFATT & NICHOL
825 BATTERY STREET
SAN FRANCISCO, CA 94111

Caltrans now has a web site! To get to the web site, go to: http://www.dot.ca.gov

NOTES:

15. At the Contractor's option, a PJP (E = 45 mm) may be used in lieu of a CJP with backing. The upper 50 mm portion of weld shall remain as a CJP.
16. At the Contractor's option, mill to bear requirement between bearing stiffener PL and anchor PL may be waived.
17. At the Contractor's option, the weld between bearing stiffener PL and vertical shear PL extension may be one-side 25 mm fillet weld.
18. At the Contractor's option, a PL 25x200 may be used in lieu of a brace angle.

CONTRACT CHANGE ORDER NO. ____
SHEET ____ OF ____

REQUESTS FOR INFORMATION NOT ADDRESSED IN THIS CCO REMAIN IN FORCE

ALL DIMENSIONS ARE IN MILLIMETERS UNLESS OTHERWISE SHOWN

R. Vallzadeh/V. Toan/Y.L./W.L./F.C.
DESIGN OVERSIGHT
SIGN OFF DATE 09/01/11

MARK	DATE	DESCRIPTIONS	BY	CH'D	CCO#
0	09/01/11	EAST END OBG	GB	MN	87

REVISIONS

	BY	CHECKED
DESIGN	G. Baker	M. Nader
DETAILS	G. Baker	M. Nader
QUANTITIES	G. Baker	M. Nader

PREPARED FOR THE STATE OF CALIFORNIA DEPARTMENT OF TRANSPORTATION

R. Manzanarez
PROJECT ENGINEER

BRIDGE NO. 34-0006L/R
KILOMETER POST 13.2/13.9

SAN FRANCISCO OAKLAND BAY BRIDGE
EAST SPAN SEISMIC SAFETY PROJECT
SELF-ANCHORED SUSPENSION BRIDGE
(SUPERSTRUCTURE & TOWER)

EAST CABLE ANCHORAGE "E" LINE LAYOUT NO. 3A

Rev. Date: 5-18-98

ORIGINAL SCALE IN MILLIMETERS FOR REDUCED PLANS 0 10 20 30 40 50 60 70 80 90 100

CU 04
EA 0120F1

DISREGARD PRINTS BEARING EARLIER REVISION DATES →

REVISION DATES (PRELIMINARY STAGE ONLY): 09/01/11

SHEET 316S1 OF

FILE -> I:\bb\04-012001\sas\contract plans and cco\cco\cco#87\1-original 09-01-11\dgn\agan106a.dgn

100% PS&E
DATE PLOTTED -> 30 AUG 2011 TIME PLOTTED -> 10:08:42
USERNAME -> PTam

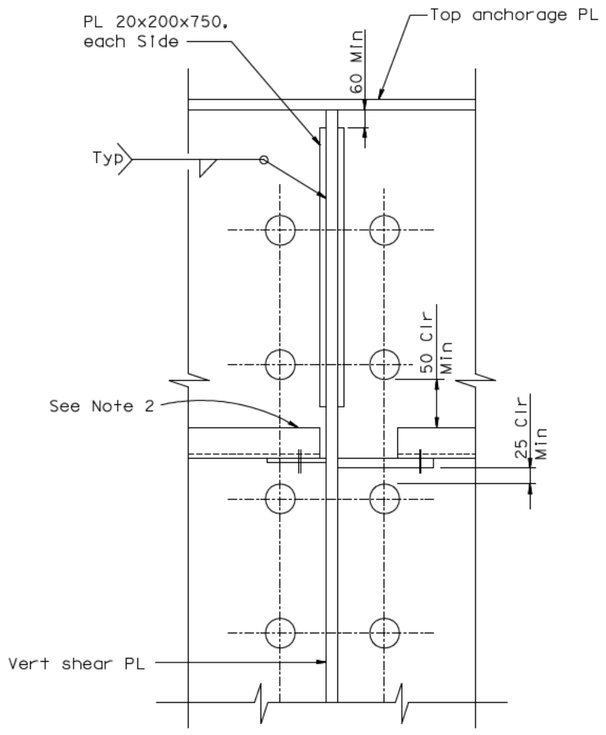

TYPE 1

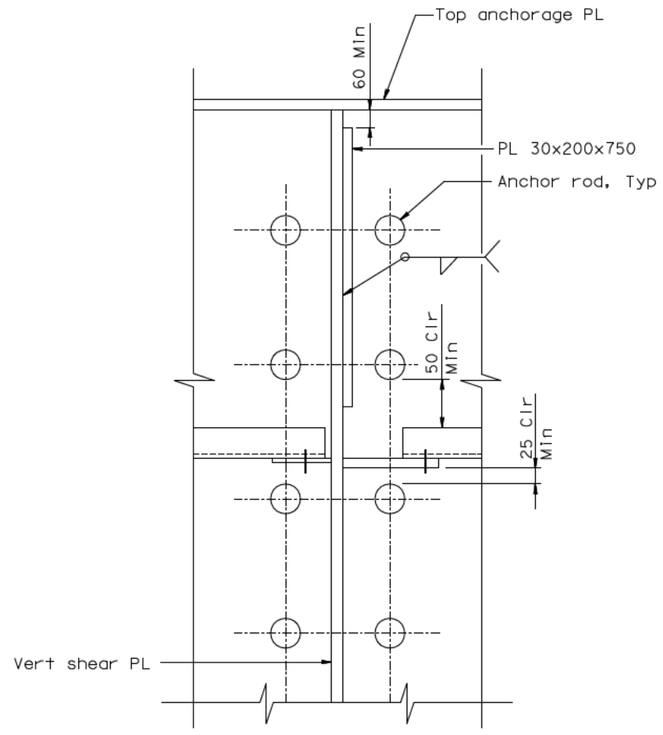

TYPE 2

VIEW H-H (See Note 1)
1:10

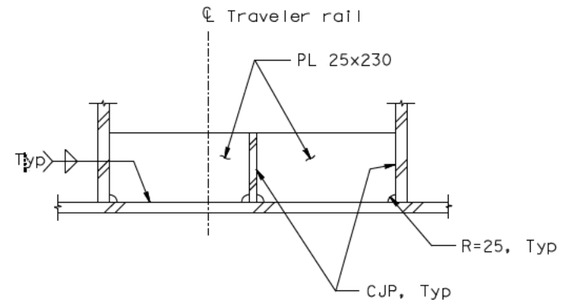

DETAIL E (Detail E' opposite hand)
1:10

DIST.	COUNTY	ROUTE	KILOMETER POST TOTAL PROJECT	SHEET NO.	TOTAL SHEETS
04	SF	80	13.2/13.9	733S2	1204

REGISTERED ENGINEER - CIVIL

Marwan N. Nader
No. C 054426
Exp. 12/31/13
CIVIL
REGISTERED PROFESSIONAL ENGINEER
STATE OF CALIFORNIA

04-18-12
PLANS APPROVAL DATE

The State of California or its officers or agents shall not be responsible for the accuracy or completeness of electronic copies of this plan sheet.

T.Y. LIN / MOFFATT & NICHOL
825 BATTERY STREET
SAN FRANCISCO, CA 94111

Caltrans now has a web site! To get to the web site, go to: http://www.dot.ca.gov

NOTES:

1. Use Type 1 layout at all vertical shear PL except for the two southernmost shear plates on the E-Line where Type 2 shall be used.
2. Trim angle as required to clear strand.

100% PS&E

USERNAME -> DWinrow DATE PLOTTED -> 18 APR 2012 TIME PLOTTED -> 11:27:10

CONTRACT CHANGE ORDER NO. _____
SHEET ____ OF ____
REQUESTS FOR INFORMATION NOT ADDRESSED IN THIS CCO REMAIN IN FORCE

ALL DIMENSIONS ARE IN MILLIMETERS UNLESS OTHERWISE SHOWN

R. Vallzadeh/V. Toan/Y.L./W.L./F.C.
DESIGN OVERSIGHT
SIGN OFF DATE 04/18/12

MARK	DATE	REVISIONS	BY	CH'D	CCO#
0	04/18/12	EAST END OBG	MN	GB	87

	BY	CHECKED
DESIGN	G. Baker	M. Nader
DETAILS	G. Baker	D. Turner
QUANTITIES	G. Baker	D. Turner

PREPARED FOR THE STATE OF CALIFORNIA DEPARTMENT OF TRANSPORTATION

R. Manzanarez
PROJECT ENGINEER

BRIDGE NO. 34-0006L/R
KILOMETER POST 13.2/13.9

SAN FRANCISCO OAKLAND BAY BRIDGE
EAST SPAN SEISMIC SAFETY PROJECT
SELF-ANCHORED SUSPENSION BRIDGE
(SUPERSTRUCTURE & TOWER)

EAST CABLE ANCHORAGE "E" LINE LAYOUT NO. 3B

Rev. Date: 5-18-98

ORIGINAL SCALE IN MILLIMETERS FOR REDUCED PLANS 0 10 20 30 40 50 60 70 80 90 100

CU 04
EA 0120F1

DISREGARD PRINTS BEARING EARLIER REVISION DATES →

REVISION DATES (PRELIMINARY STAGE ONLY): 04/18/12

SHEET 316S2 OF

FILE -> I:\bb\04-01200I\sas\contract plans and cco\cco\cco#87\temp\agan106b.dgn

NOTES:

1. For details of longitudinal shear plate between PI25 and PPI27, see "Girder At East Transition No. I6" sheet.
2. For details of splice connection at girder plate and vertical plate convergence, see "East Cable Anchorage Details" sheet.
3. For strand socket and anchor rod details, see "East Cable Anchorage Details" sheet.
4. For Detail C and Sections D-D, E-E and F-F, see "East Cable Anchorage "W" Line Layout No. 3" sheet.
5. Machining of bearing stiffener not shown in plan view.
6. The bearing blocks shall be aligned with the bearing stiffener plates. The angle between the bearing block and the anchor rod may vary (up to 90° ± 0.3° Max) due to the averaging of the bearing stiffeners orientation across each row of anchors.
7. At the Contractor's option, a PL 25x200 may be used in lieu of a brace angle.
8. At the Contractor's option, bolts may be moved to 50 mm from the face of the vertical shear PL, and the L203 or PL 25 extended, to provide additional clearance from the strands, subject to the review and approval of the Engineer.

Caltrans Metric

DIST.	COUNTY	ROUTE	KILOMETER POST TOTAL PROJECT	SHEET NO.	TOTAL SHEETS
04	SF	80	13.2/13.9	735R4	1204

George Baker
REGISTERED ENGINEER - CIVIL
12-6-04
PLANS APPROVAL DATE

REGISTERED PROFESSIONAL ENGINEER — George S. Baker — No. C 57112 — Exp. 12/31/05 — CIVIL — STATE OF CALIFORNIA

The State of California or its officers or agents shall not be responsible for the accuracy or completeness of electronic copies of this plan sheet.

T.Y. LIN / MOFFATT & NICHOL
825 BATTERY STREET
SAN FRANCISCO, CA 94111

Caltrans now has a web site! To get to the web site, go to: http://www.dot.ca.gov

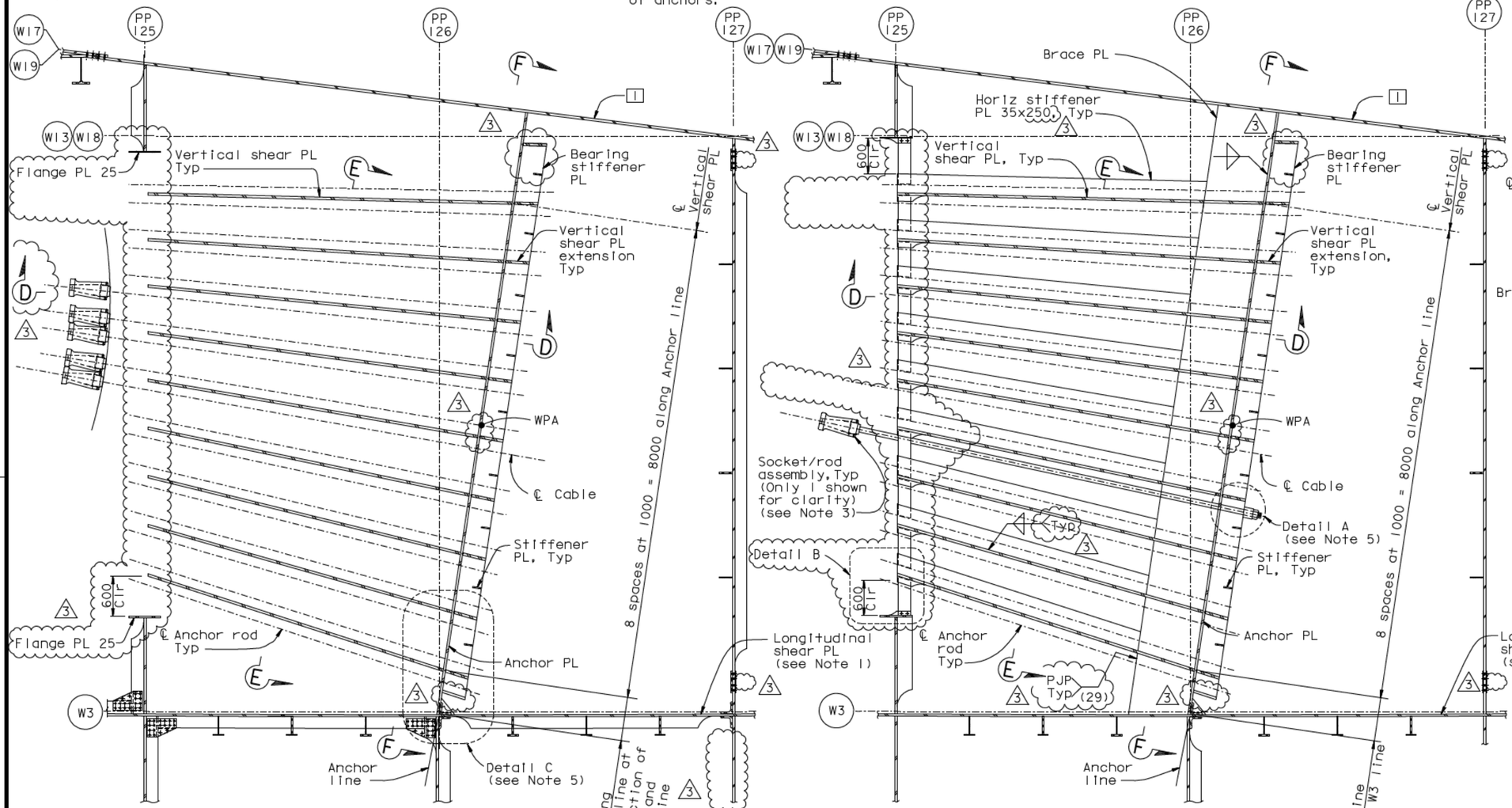

AT LEVEL OF TYPICAL BEARING STIFFENER

AT LEVEL OF BRACE PLATE

PLAN SECTION C-C
1:40

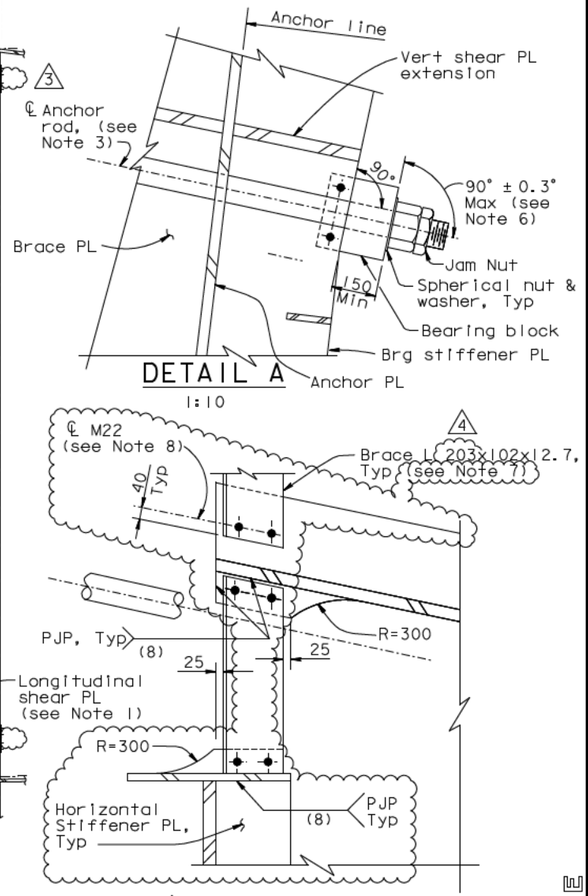

CONTRACT CHANGE ORDER NO. ____
SHEET ____ OF ____

REQUESTS FOR INFORMATION NOT ADDRESSED IN THIS CCO REMAIN IN FORCE

MARK	DATE	DESCRIPTIONS	BY	CH'D	CCO#
4	01/04/13	EAST END OBG	MN	DT	87
3	09/01/11	EAST END OBG	MN	DT	87
2	04/08/11	SUSPENSION CABLE MISCELLANEOUS DETAILS	GB	MN	185
1	01/28/11	MISCELLANEOUS CABLE SYSTEM DETAILS	GB	MN	37S1

REVISIONS

REGISTERED PROFESSIONAL ENGINEER — Marwan N. Nader — No. C 054426 — Exp. 12/31/13 — CIVIL — STATE OF CALIFORNIA

FOR REVISIONS ONLY

ALL DIMENSIONS ARE IN MILLIMETERS UNLESS OTHERWISE SHOWN

R. Valizadeh/V. Toan/Y.L./W.L./F.C.
DESIGN OVERSIGHT
SIGN OFF DATE 01/04/13

	BY	CHECKED
DESIGN	G. Baker	J. Kulfkl
DETAILS	M. Gulyas	T. McMeans
QUANTITIES	M. Gulyas	M. Roberts

PREPARED FOR THE STATE OF CALIFORNIA
DEPARTMENT OF TRANSPORTATION

R. Manzanarez
PROJECT ENGINEER

BRIDGE NO. 34-0006L/R
KILOMETER POST 13.2/13.9

SAN FRANCISCO OAKLAND BAY BRIDGE
EAST SPAN SEISMIC SAFETY PROJECT
SELF-ANCHORED SUSPENSION BRIDGE
(SUPERSTRUCTURE & TOWER)

EAST CABLE ANCHORAGE "W" LINE LAYOUT NO. 2

Rev. Date: 5-18-98

ORIGINAL SCALE IN MILLIMETERS FOR REDUCED PLANS 0 10 20 30 40 50 60 70 80 90 100

CU 04
EA 0120F1

DISREGARD PRINTS BEARING EARLIER REVISION DATES

REVISION DATES (PRELIMINARY STAGE ONLY): 01/15/99 | 05/13/99 | 08/02/99 | 05/31/01 | 04/08/02 | 07/01/02 | 12/15/02 | 11/13/05

SHEET 318R4 OF

FILE -> L:\BB\04-0120F1\SAS\Contract Plans and CCO\CCO\CCO#87\5-Revision 01-04-13\DGN\agan108.dgn

100% PS&E

DATE PLOTTED -> 04 JAN 2013 TIME PLOTTED -> 09:57:42

USERNAME -> DWinrow

Caltrans now has a web site! To get to the web site, go to: http://www.dot.ca.gov

DIST.	COUNTY	ROUTE	KILOMETER POST TOTAL PROJECT	SHEET NO.	TOTAL SHEETS
04	SF	80	13.2/13.9	736R5	1204

George Baker
REGISTERED ENGINEER - CIVIL
12-6-04
PLANS APPROVAL DATE

The State of California or its officers or agents shall not be responsible for the accuracy or completeness of electronic copies of this plan sheet.

REGISTERED PROFESSIONAL ENGINEER — George S. Baker — No. C 57112 — Exp. 12/31/05 — CIVIL — STATE OF CALIFORNIA

T.Y. LIN / MOFFATT & NICHOL
825 BATTERY STREET
SAN FRANCISCO, CA 94111

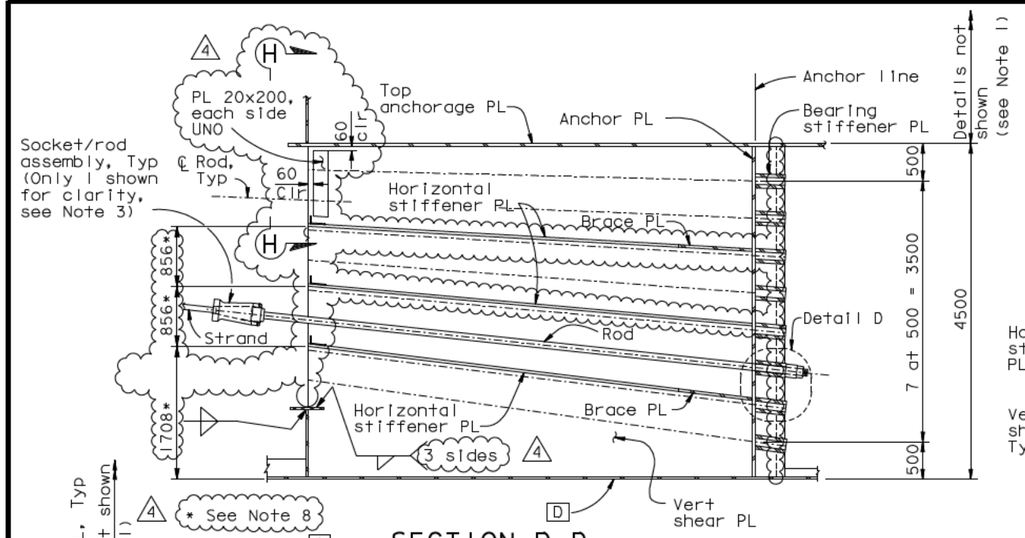

SECTION D-D
1:40

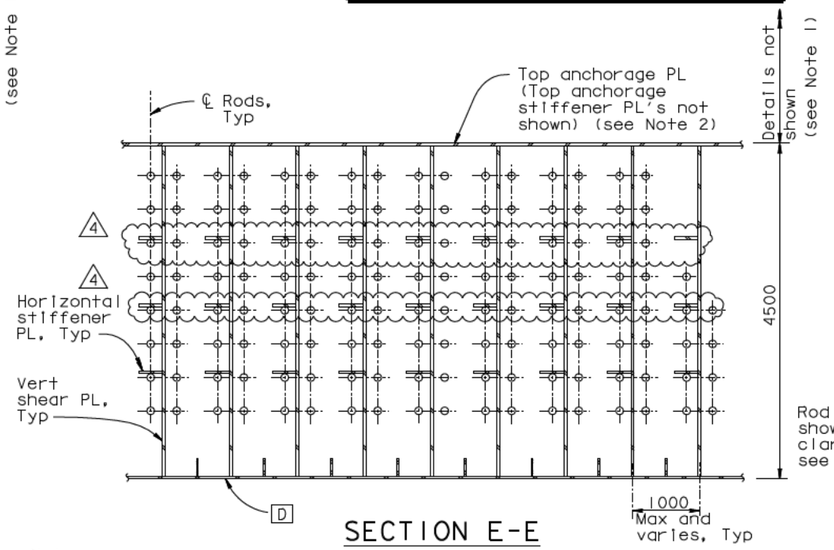

SECTION E-E
1:40

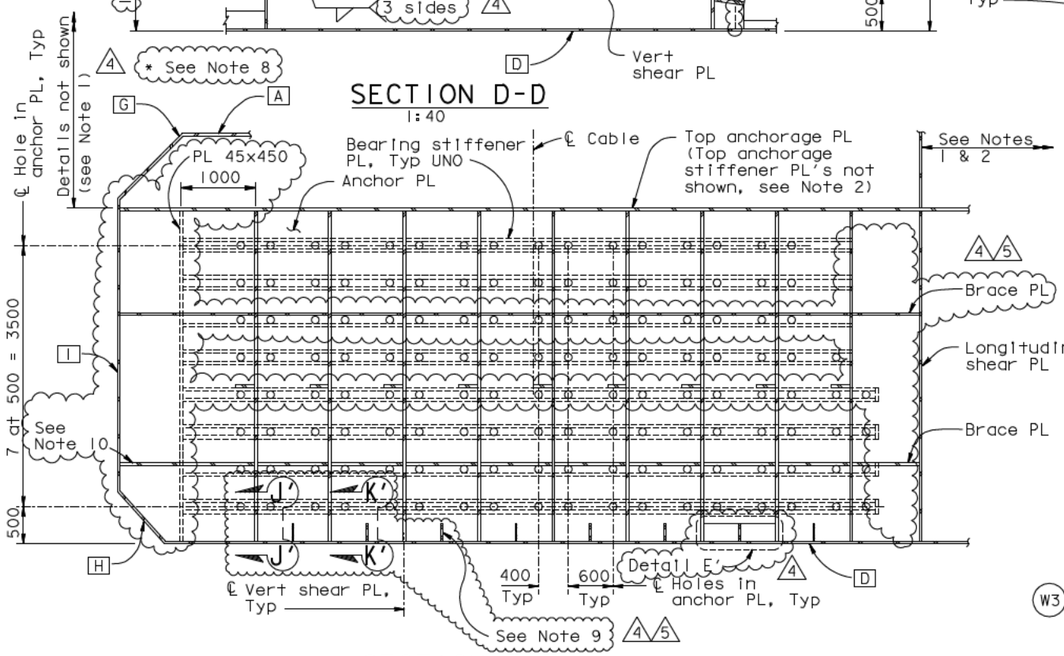

SECTION F-F
1:40

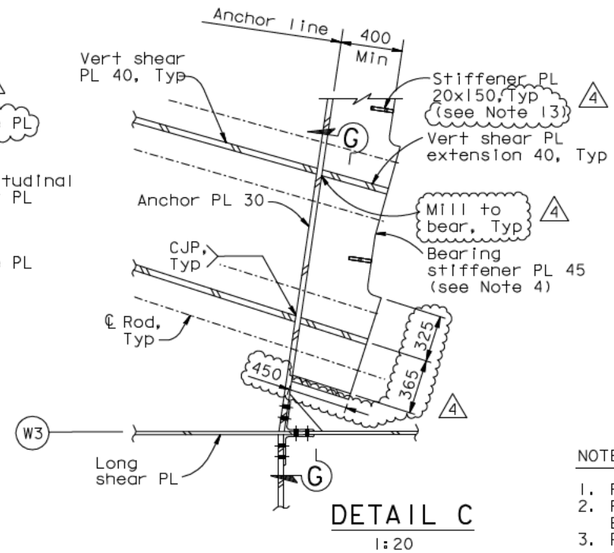

DETAIL C
1:20

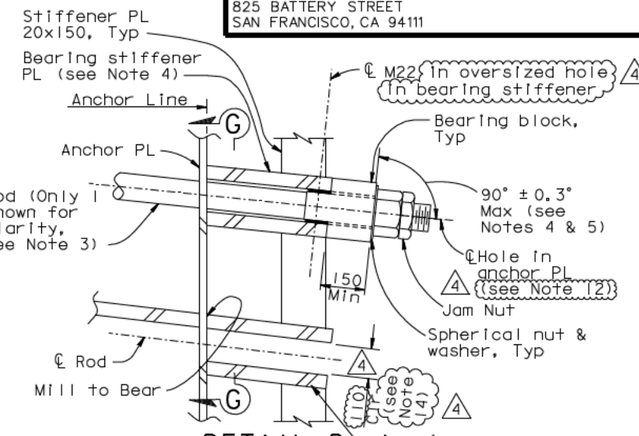

DETAIL D
1:10

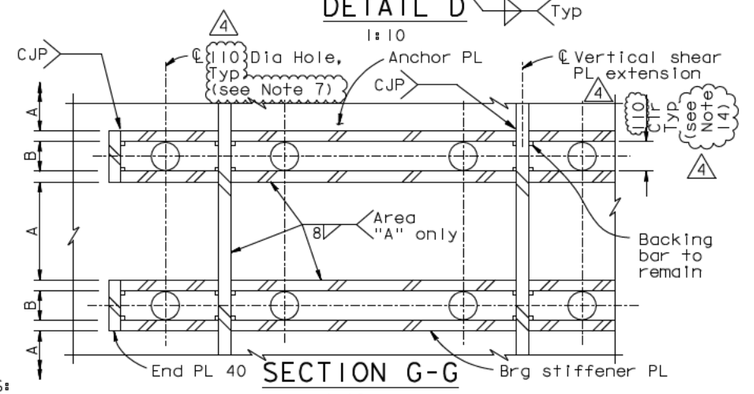

SECTION G-G
1:10

NOTES:

1. For girder details not shown, see "Girder At East Transition" sheets.
2. For top anchorage PL details not shown, see "Crossbeam At East Anchorage" and "Girder At East Transition" sheets.
3. For strand socket, transition anchor rod and bearing block details, see "East Cable Anchorage Details" sheet.
4. Bearing stiffeners plates shall be machined to level the bearing block under the nut. The installation tolerance for the bearing block/anchor rod angle is ±1°. Also see Note 6 on "East Cable Anchorage "W" Line Layout No.2" sheet.
5. The bearing blocks shall be aligned with the bearing stiffener plates. The angle between the bearing block and the anchor rod may vary (up to 90° ±0.3° Max) due to the averaging of the bearing stiffeners across each row of anchors.
6. For View H-H and Detail E', see "East Cable Anchorage "E" Line Layout No.3B" sheet.
7. At the Contractor's option, anchor rod hole may be increased to 120 mm Dia.
8. Dimensions shown with an asterisk shall be adjusted as necessary to provide 25 mm Min clearance above the strand and 50 mm Min below the strand.
9. All stiffeners shall terminate at each face of anchor PL with CJP welds.
10. Face 1 stiffeners shall terminate 100 clear of brace PL as required. For stiffener termination details, see "Typical Girder Details No.16" sheet.
11. For Views J'-J' and K'-K', see "East Anchorage "E" Line Layout No.2A" sheet.
12. The Contractor may drill the 110 mm Dia holes in the anchor PL normal to the anchor PL instead of along the anchor rod axis.
13. In cases where the top most stiffener PL 20x150 would interfere with bolts in the top anchorage PL, the top most stiffener only shall be relocated to the nearest position that is 60 mm clear of bolt ℄.
14. At the Contractor's option, clear spacing between bearing stiffener PL's may be increased to 130 mm.

ALL DIMENSIONS ARE IN MILLIMETERS UNLESS OTHERWISE SHOWN

REGISTERED PROFESSIONAL ENGINEER — Marwan N. Nader — No. C 054426 — Exp. 12/31/13 — CIVIL — STATE OF CALIFORNIA

FOR REVISIONS ONLY

CONTRACT CHANGE ORDER NO. _____
SHEET ___ OF ___

REQUESTS FOR INFORMATION NOT ADDRESSED IN THIS CCO REMAIN IN FORCE

MARK	DATE	DESCRIPTIONS	BY	CH'D	CCO#
5	01/04/13	EAST END OBG	GB	MN	87
4	09/01/11	EAST END OBG	GB	MN	87
3	03/25/11	SUSPENSION CABLE MISCELLANEOUS DETAILS	DT	GB	185
2	01/28/11	MISCELLANEOUS CABLE SYSTEM DETAILS	DT	GB	37SI
1	08/28/09	BEARING BLOCKS	DT	GB	78

REVISIONS

R. Vallzadeh/V. Toan/Y.L./W.L./F.C.
DESIGN OVERSIGHT
SIGN OFF DATE 01/04/13

	BY	CHECKED
DESIGN	G. Baker	J. Kulikl
DETAILS	M. Gulyas	T. McMeans
QUANTITIES	M. Gulyas	M. Roberts

PREPARED FOR THE STATE OF CALIFORNIA
DEPARTMENT OF TRANSPORTATION

R. Manzanarez
PROJECT ENGINEER

BRIDGE NO. 34-0006L/R
KILOMETER POST 13.2/13.9

SAN FRANCISCO OAKLAND BAY BRIDGE
EAST SPAN SEISMIC SAFETY PROJECT
SELF-ANCHORED SUSPENSION BRIDGE
(SUPERSTRUCTURE & TOWER)

EAST CABLE ANCHORAGE "W" LINE LAYOUT NO.3

Rev. Date: 5-18-98

ORIGINAL SCALE IN MILLIMETERS FOR REDUCED PLANS 0 10 20 30 40 50 60 70 80 90 100

CU 04
EA 0120F1

DISREGARD PRINTS BEARING EARLIER REVISION DATES

REVISION DATES (PRELIMINARY STAGE ONLY): 01/15/99 | 05/15/99 | 08/02/99 | 05/15/01 | 04/26/02 | 07/01/02 | 12/13/02 | 11/13/05

SHEET 319R5 OF

FILE -> L:\BB\04-012001\SAS\Contract Plans and CCO\CCO\CCO#87\5-Revision 01-04-13\DGN\agan109.dgn

100 % PS&E
DATE PLOTTED -> 04 JAN 2013
TIME PLOTTED -> 09:55:18
USERNAME -> DWinrow

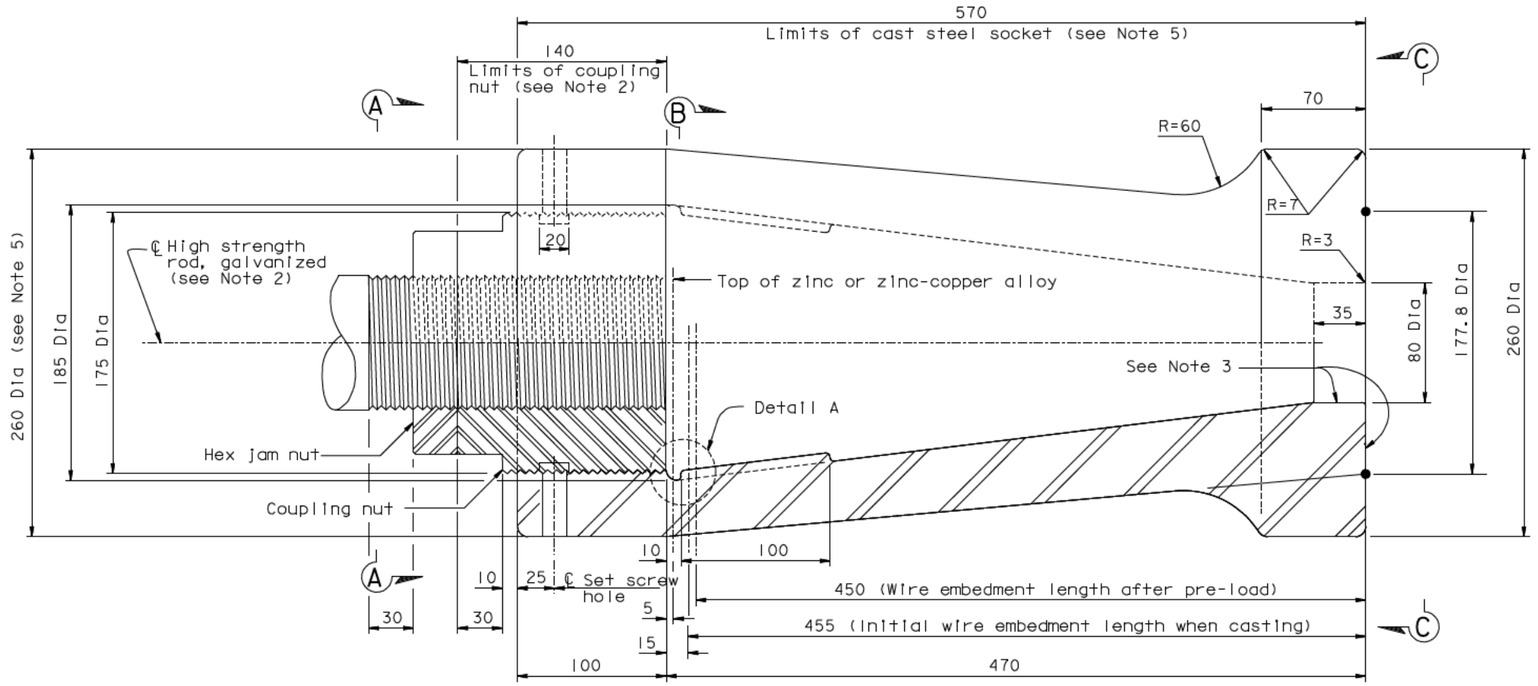

SOCKET DETAIL

1:2

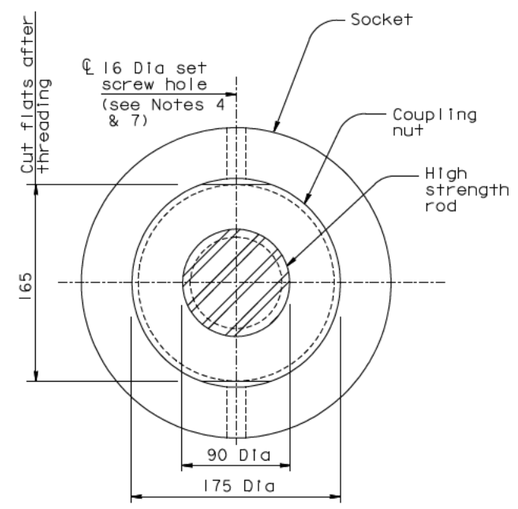

VIEW A-A

1:2.5

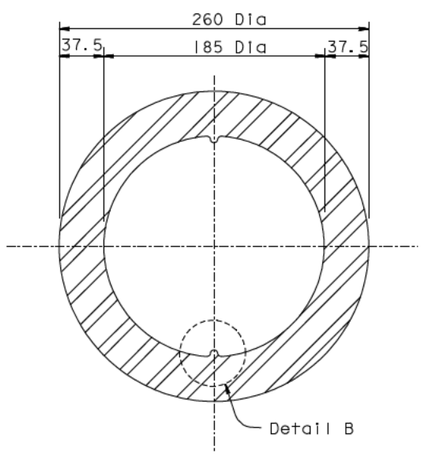

SECTION B-B

1:2.5

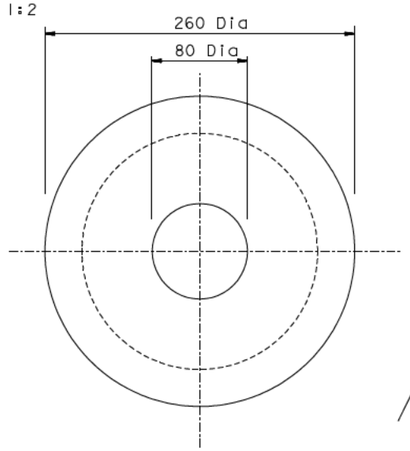

VIEW C-C

1:2.5

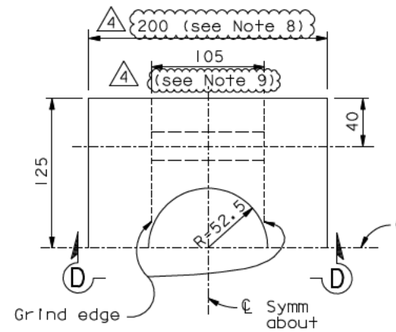

PLAN

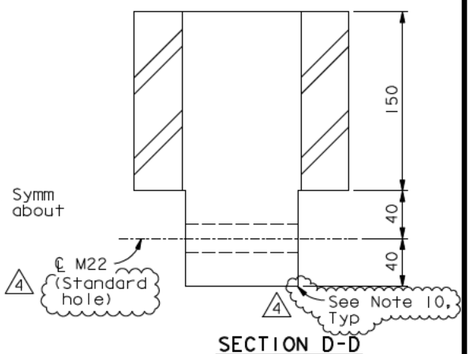

SECTION D-D

BEARING BLOCK DETAIL (See Note 6)

1:2.5

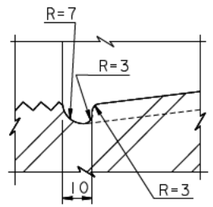

DETAIL A

1:1

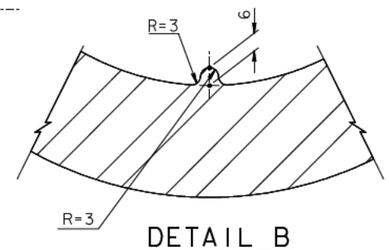

DETAIL B

1:1

NOTES:

1. Coupling nut and socket shall conform to ASTM A194 GR 7, with 4 threads per inch.
2. For main cable strand anchor rod and cable strand socket materials, see "General Notes" sheets.
3. Surface shall be finished to ANSI 500.
4. Provide 16 Dia stainless set screws in threaded hole.
5. All socket dimensions are for information only. The Contractor shall develop socket details consistent with his means and methods and the east cable anchorage geometry, and shall submit them to the Engineer for review and approval. The socket dimensions shall be such that adequate prestressing and erection clearance is provided.
6. Material for bearing blocks shall be ASTM A668 Grade F, or ASTM A148 Grade 550-345.
7. Thread locking compound shall be used to secure the coupling nut set screws.

4 8. Dimension shall be increased to 250 mm in the case when the clear spacing between Bearing stiffener PL's is 130 mm.
9. Dimension shall be increased to 118 mm in the case when the clear spacing between Bearing stiffener PL's is 130 mm.
10. At the Contractor's option, a 26x26 chamfer may be used.

Caltrans Metric

DIST.	COUNTY	ROUTE	KILOMETER POST TOTAL PROJECT	SHEET NO.	TOTAL SHEETS
04	SF	80	13.2/13.9	737R4	1204

George Baker
REGISTERED ENGINEER - CIVIL

12-6-04
PLANS APPROVAL DATE

REGISTERED PROFESSIONAL ENGINEER — George S. Baker — No. C 57112 — Exp. 12/31/05 — CIVIL — STATE OF CALIFORNIA

The State of California or its officers or agents shall not be responsible for the accuracy or completeness of electronic copies of this plan sheet.

T.Y. LIN / MOFFATT & NICHOL
825 BATTERY STREET
SAN FRANCISCO, CA 94111

Caltrans now has a web site! To get to the web site, go to: http://www.dot.ca.gov

REGISTERED PROFESSIONAL ENGINEER — Marwan N. Nader — No. C 054426 — Exp. 12/31/11 — CIVIL — STATE OF CALIFORNIA

FOR REVISIONS ONLY

CONTRACT CHANGE ORDER NO. _____
SHEET ___ OF ___

REQUESTS FOR INFORMATION NOT ADDRESSED IN THIS CCO REMAIN IN FORCE

MARK	DATE	DESCRIPTIONS	BY	CH'D	CCO#
		REVISIONS			
4	09/01/11	EAST END OBG	GB	MN	87
3	04/08/11	SUSPENSION CABLE MISCELLANEOUS DETAILS	DT	GB	185
2	02/18/11	MISCELLANEOUS CABLE SYSTEM DETAILS	DT	GB	375I
1	08/28/09	BEARING BLOCKS	DT	GB	78

	BY	CHECKED
DESIGN	G. Baker	J. Kulikl
DETAILS	M. Gulyas	T. McMeans
QUANTITIES	M. Gulyas	M. Roberts

PREPARED FOR THE STATE OF CALIFORNIA DEPARTMENT OF TRANSPORTATION

R. Vallzadeh/V. Toan/Y.L./W.L./F.C.
DESIGN OVERSIGHT
SIGN OFF DATE 09/01/11

R. Manzanarez
PROJECT ENGINEER

ALL DIMENSIONS ARE IN MILLIMETERS UNLESS OTHERWISE SHOWN

BRIDGE NO. 34-0006L/R
KILOMETER POST 13.2/13.9

SAN FRANCISCO OAKLAND BAY BRIDGE
EAST SPAN SEISMIC SAFETY PROJECT
SELF-ANCHORED SUSPENSION BRIDGE (SUPERSTRUCTURE & TOWER)

EAST CABLE ANCHORAGE DETAILS

Rev. Date: 5-18-98

ORIGINAL SCALE IN MILLIMETERS FOR REDUCED PLANS 0 10 20 30 40 50 60 70 80 90 100

CU 04
EA 0120F1

DISREGARD PRINTS BEARING EARLIER REVISION DATES →

REVISION DATES (PRELIMINARY STAGE ONLY): 08/02/99 | 05/31/01 | 04/08/02 | 07/01/02 | 12/19/02

SHEET 320R4 OF

FILE -> I:\bb\04-012001\sas\contract plans and cco\cco\cco#87\1-original 09-01-11\dgn\agand08a.dgn

USERNAME -> PTom
DATE PLOTTED -> 30 AUG 2011
TIME PLOTTED -> 09:34:57
100 % PS&E

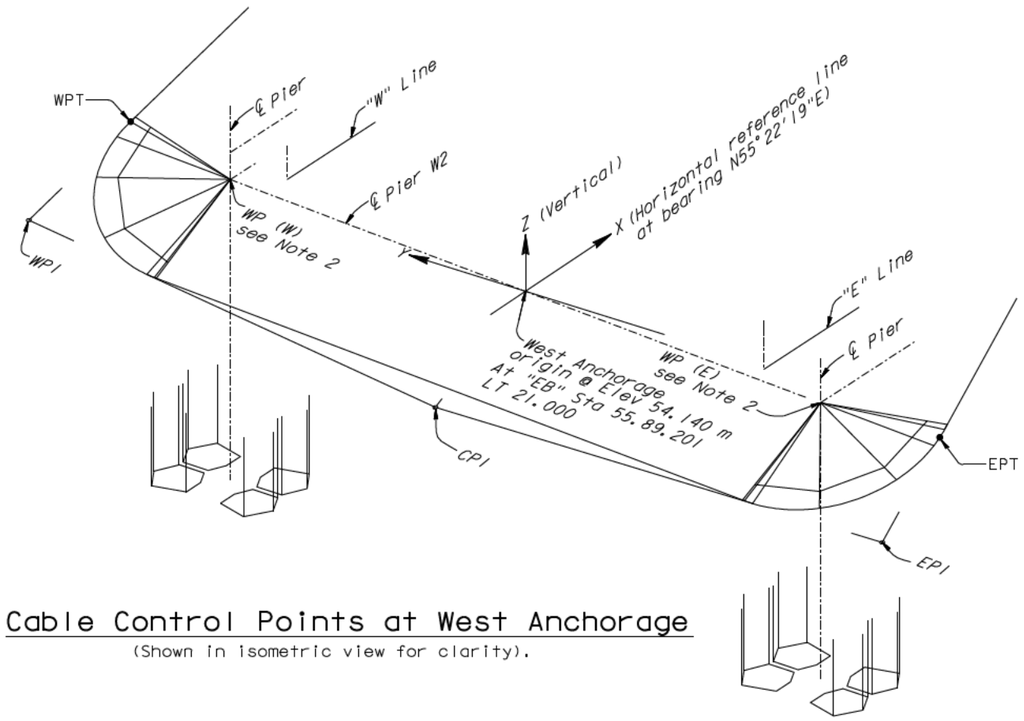

Cable Control Points at West Anchorage

(Shown in isometric view for clarity).

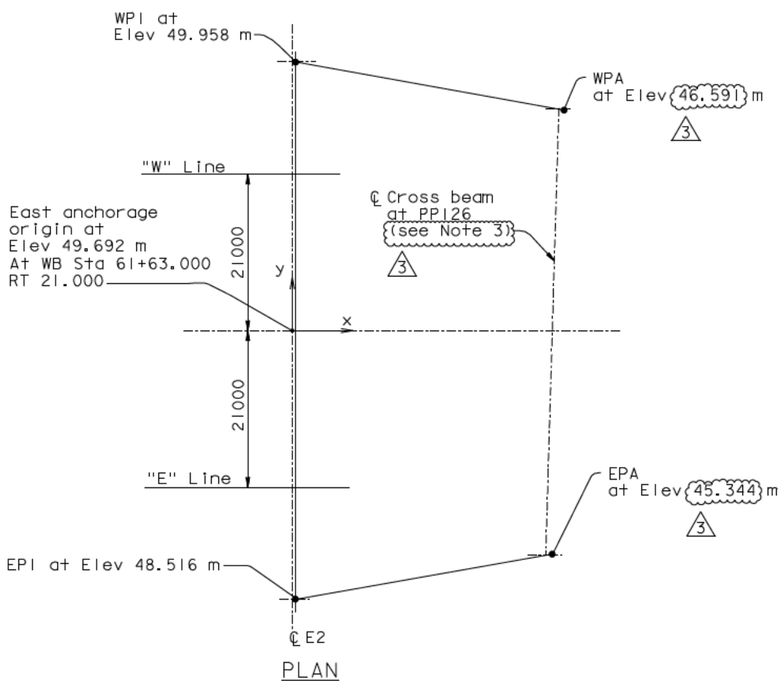

PLAN

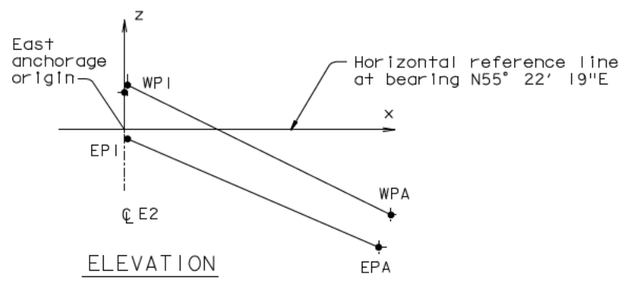

ELEVATION

Cable Control Points at East Anchorage

COORDINATES OF CONTROL POINTS OF WEST ANCHORAGE (WEST ANCHORAGE COORDINATE SYSTEM)							
	"W" Line Saddle WP	"E" Line Saddle WP	WPT	WPI	CPI	EPT	EPI
X	30	-7	1318	-8804	-11278	1587	-8804
Y	26024	-25978	36396	38086	101	-36352	-38084
Z	1057	-1059	2060	-2411	-5080	-765	-5530

COORDINATES OF CONTROL POINTS OF EAST ANCHORAGE (EAST ANCHORAGE COORDINATE SYSTEM)				
	WPI	WPA	EPI	EPA
X	393	36012	393	34281
Y	36045	29653	-36025	-30140
Z	266	-3101	-1176	-4348
		3		3

NOTES:

1. At the west anchorage the cable profile shall be determined from the EPT and WPT. Geometry of saddles shall conform to EPI, WPI and CPI.
2. WP(W) & WP(E) do not coincide with ℄ Pier W2, ℄ Pier W2E nor ℄ Pier W2W.
3. (3) WPA and EPA do not coincide with ℄ crossbeam at PP 126.

CONTRACT CHANGE ORDER NO. ____
SHEET ___ OF ___

REQUESTS FOR INFORMATION NOT ADDRESSED IN THIS CCO REMAIN IN FORCE

MARK	DATE	DESCRIPTIONS	BY	CH'D	CCO#
3	09/01/11	EAST END OBG	MN	DT	87
2	04/16/07	CABLE SYSTEM	GB	MN	37
1	01/31/07	WEST DEVIATION SADDLE GEOMETRY	AS	MN	15

REVISIONS

DESIGN	BY M. Nader	CHECKED S. Rodriguez
DETAILS	BY C. Mibelli	CHECKED S. Rodriguez
QUANTITIES	BY C. Mibelli	CHECKED G. Baker

R. Valizadeh/V. Toan/Y.L./W.L./F.C.
DESIGN OVERSIGHT
SIGN OFF DATE 09/01/11

PREPARED FOR THE STATE OF CALIFORNIA DEPARTMENT OF TRANSPORTATION

R. Manzanarez
PROJECT ENGINEER

BRIDGE NO. 34-0006L/R
KILOMETER POST 13.2/13.9

ALL DIMENSIONS ARE IN MILLIMETERS UNLESS OTHERWISE SHOWN

SAN FRANCISCO OAKLAND BAY BRIDGE
EAST SPAN SEISMIC SAFETY PROJECT
SELF-ANCHORED SUSPENSION BRIDGE
(SUPERSTRUCTURE & TOWER)

SUSPENSION CABLE LAYOUT NO. 3

Rev. Date: 5-18-98

ORIGINAL SCALE IN MILLIMETERS FOR REDUCED PLANS 0 10 20 30 40 50 60 70 80 90 100

CU 04
EA 0120F1

DISREGARD PRINTS BEARING EARLIER REVISION DATES

REVISION DATES (PRELIMINARY STAGE ONLY): 05/15/99 | 08/27/99 | 05/31/01 | 04/30/02 | 07/31/02 | 12/19/02

SHEET 323R3 OF

FILE -> I:\bb\04-012001\sas\contract plans and cco\cco\cco#87\1-original 09-01-11\dgn\agsc103.dgn

USERNAME -> Alishansky DATE PLOTTED -> 30 AUG 2011 TIME PLOTTED -> 13:30:15

100 % PS&E

DIST.	COUNTY	ROUTE	KILOMETER POST TOTAL PROJECT	SHEET NO.	TOTAL SHEETS
04	SF	80	13.2/13.9	740R3	1204

REGISTERED ENGINEER - CIVIL

12/19/02
PLANS APPROVAL DATE

Marwan N. Nader
No. C 054426
Exp. 12/31/11
CIVIL
REGISTERED PROFESSIONAL ENGINEER
STATE OF CALIFORNIA

The State of California or its officers or agents shall not be responsible for the accuracy or completeness of electronic copies of this plan sheet.

T.Y. LIN / MOFFATT & NICHOL
825 BATTERY STREET
SAN FRANCISCO, CA 94111

Caltrans now has a web site! To get to the web site, go to: http://www.dot.ca.gov

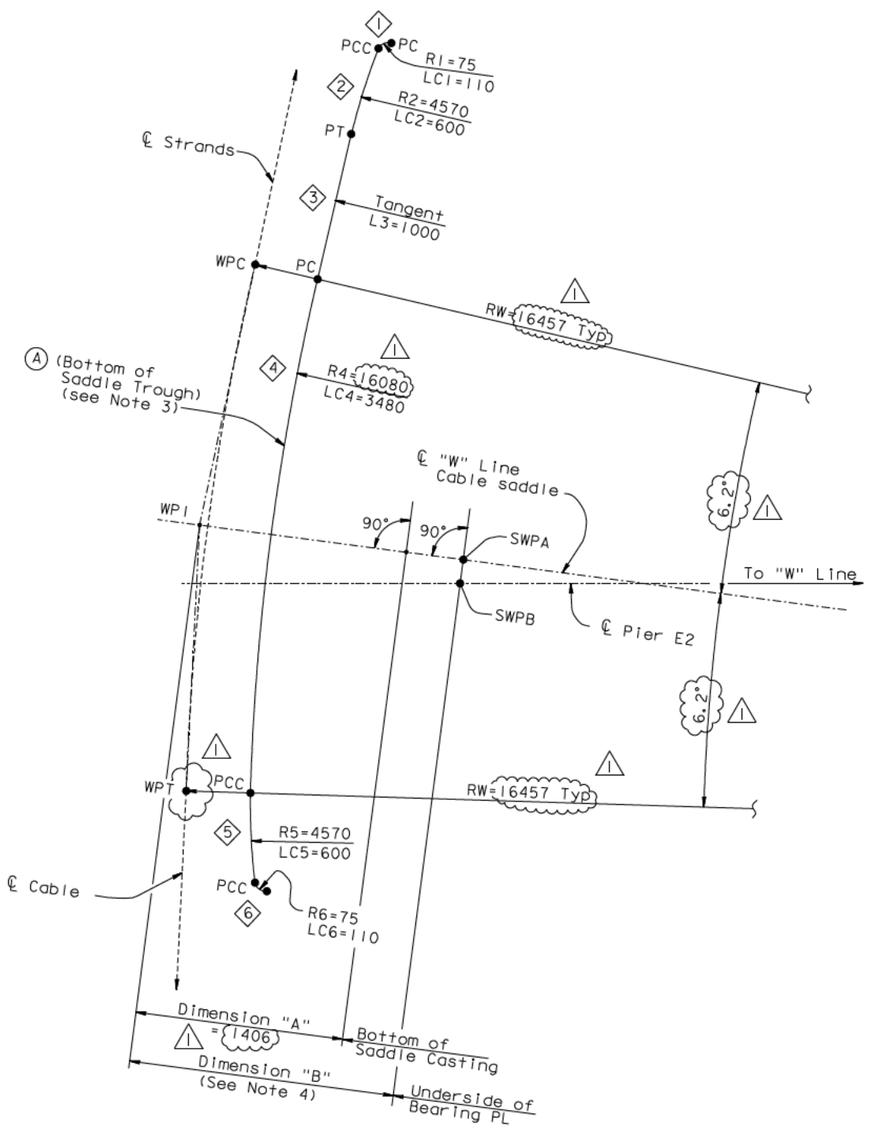

"W" LINE CABLE

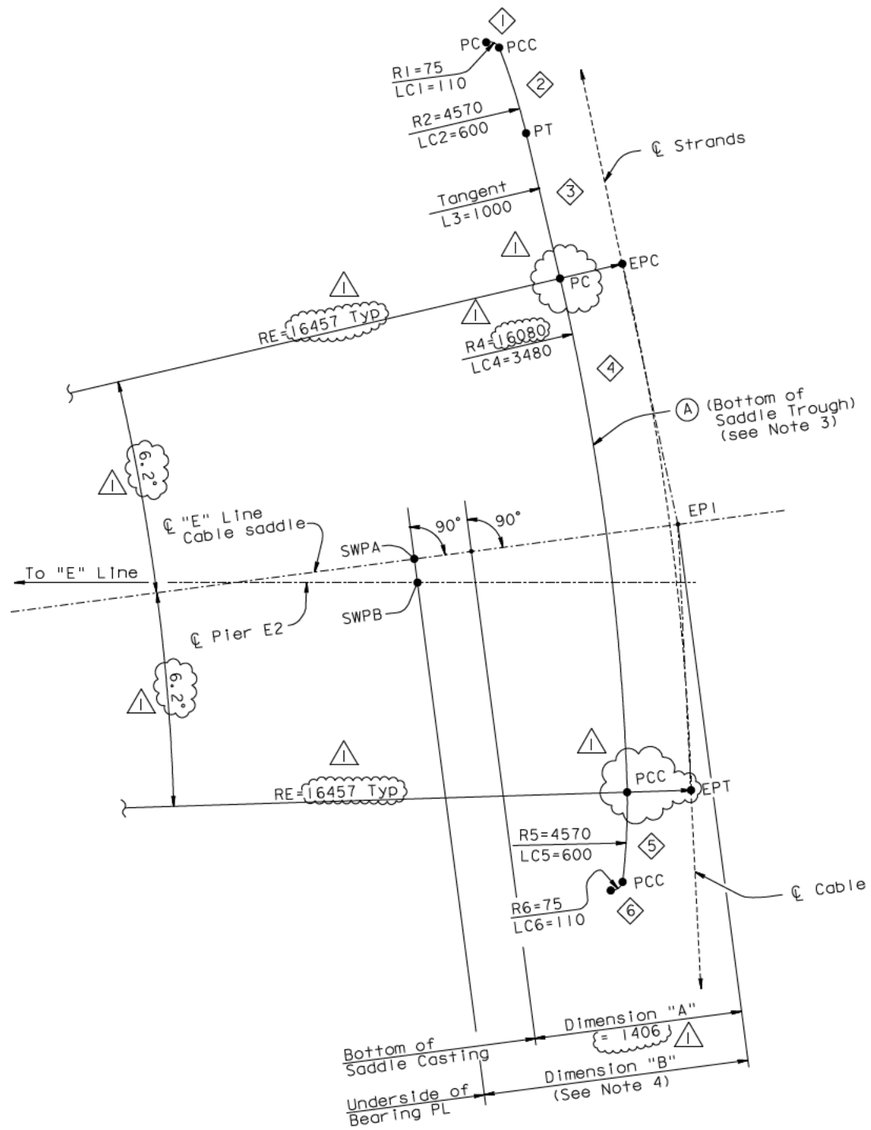

"E" LINE CABLE

EAST SADDLE TROUGH LAYOUT

1:20

CONTRACT CHANGE ORDER NO. ____
SHEET ___ OF ___

REQUESTS FOR INFORMATION NOT ADDRESSED IN THIS CCO REMAIN IN FORCE

FOR REVISIONS ONLY

Marwan N. Nader
No. C 054426
Exp. 12/31/13
CIVIL
REGISTERED PROFESSIONAL ENGINEER
STATE OF CALIFORNIA

ALL DIMENSIONS ARE IN MILLIMETERS UNLESS OTHERWISE SHOWN

DIST.	COUNTY	ROUTE	KILOMETER POST TOTAL PROJECT	SHEET NO.	TOTAL SHEETS
04	SF	80	13.2/13.9	785RI	1204

George Baker
REGISTERED ENGINEER - CIVIL

12-6-04
PLANS APPROVAL DATE

REGISTERED PROFESSIONAL ENGINEER
George S. Baker
No. C 57112
Exp. 12/31/05
CIVIL
STATE OF CALIFORNIA

The State of California or its officers or agents shall not be responsible for the accuracy or completeness of electronic copies of this plan sheet.

T.Y. LIN / MOFFATT & NICHOL
825 BATTERY STREET
SAN FRANCISCO, CA 94111

Caltrans now has a web site! To get to the web site, go to: http://www.dot.ca.gov

LEGEND:

(A) - Trough level A (Bottom of Trough)

◇3 - Trough segment No. 3

ABBREVIATIONS:

EPC - Point of curvature of "E" Line cable
EPI - Point of intersection of "E" Line cable
EPT - Point of tangency of "E" Line cable
L3 - Length, trough segment 3
LC4 - Length of curve, trough segment 4
NA - Not applicable
PC - Point of curvature
PCC - Point of compound curvature
PT - Point of tangency
RE - Radius for "E" Line cable
RW - Radius for "W" Line cable
RI - Radius for bottom of trough, trough segment 1
SWP - Working point
SWPA - Point of intersection of underside of bearing PL and CL East saddle
SWPB - Point of intersection of underside of bearing PL and CL Pier E2
WPC - Point of curvature of "W" Line cable
WPI - Point of intersection of "W" Line cable
WPT - Point of tangency of "W" Line cable

NOTES:

1. Geometry shown for "E" Line cable and saddle is in plane of cable at EPI. Geometry shown for "W" Line cable and saddle is in plane of cable at WPI.
2. For EPI and WPI control information, see "Suspension Cable Layout No. 3" sheet.
3. For details of trough layout , see "East Saddle Details No. 4" sheet.
4. For dimension "B", see "East Saddle Details No. 3" and "East Saddle Details No. 6" sheets.
5. The location of EPT and WPT can change with the cable profile. The Contractor shall determine EPT and WPT based on the actual constructed weight.

100 % PS&E
DATE PLOTTED -> 18 APR 2012 TIME PLOTTED -> 11:28:32
USERNAME -> DWinrow

MARK	DATE	DESCRIPTIONS	BY	CH'D	CCO#
1	04/18/12	EAST END OBG	MN	GB	87

REVISIONS

R. Vallzadeh/V. Toan/Y.L./W.L./F.C.
DESIGN OVERSIGHT
SIGN OFF DATE 04/18/12

	BY	CHECKED
DESIGN	G. Baker	J. Kullki
DETAILS	M. Gulyas	T. McMeans
QUANTITIES	D. Turner	D. Harrison

PREPARED FOR THE STATE OF CALIFORNIA DEPARTMENT OF TRANSPORTATION

R. Manzanarez
PROJECT ENGINEER

BRIDGE NO. 34-0006L/R
KILOMETER POST 13.2/13.9

CU 04
EA 0120F1

SAN FRANCISCO OAKLAND BAY BRIDGE
EAST SPAN SEISMIC SAFETY PROJECT
SELF-ANCHORED SUSPENSION BRIDGE
(SUPERSTRUCTURE & TOWER)

EAST SADDLE DETAILS NO. 2

Rev. Date: 5-18-98

ORIGINAL SCALE IN MILLIMETERS FOR REDUCED PLANS 0 10 20 30 40 50 60 70 80 90 100

DISREGARD PRINTS BEARING EARLIER REVISION DATES

REVISION DATES (PRELIMINARY STAGE ONLY): 08/02/99 05/31/01 04/08/02 07/01/02 12/19/02

SHEET 368RI OF

FILE -> I:\bb\04-012001\sas\contract plans and cco\cco\cco#87\temp\agsdd10.dgn

Caltrans now has a web site! To get to the web site, go to: http://www.dot.ca.gov

DIST.	COUNTY	ROUTE	KILOMETER POST TOTAL PROJECT	SHEET NO.	TOTAL SHEETS
04	SF	80	13.2/13.9	786RI	1204

Caltrans Metric

George Baker
REGISTERED ENGINEER - CIVIL

12-6-04
PLANS APPROVAL DATE

The State of California or its officers or agents shall not be responsible for the accuracy or completeness of electronic copies of this plan sheet.

REGISTERED PROFESSIONAL ENGINEER — George S. Baker — No. C 57112 — Exp. 12/31/05 — CIVIL — STATE OF CALIFORNIA

T.Y. LIN / MOFFATT & NICHOL
825 BATTERY STREET
SAN FRANCISCO, CA 94111

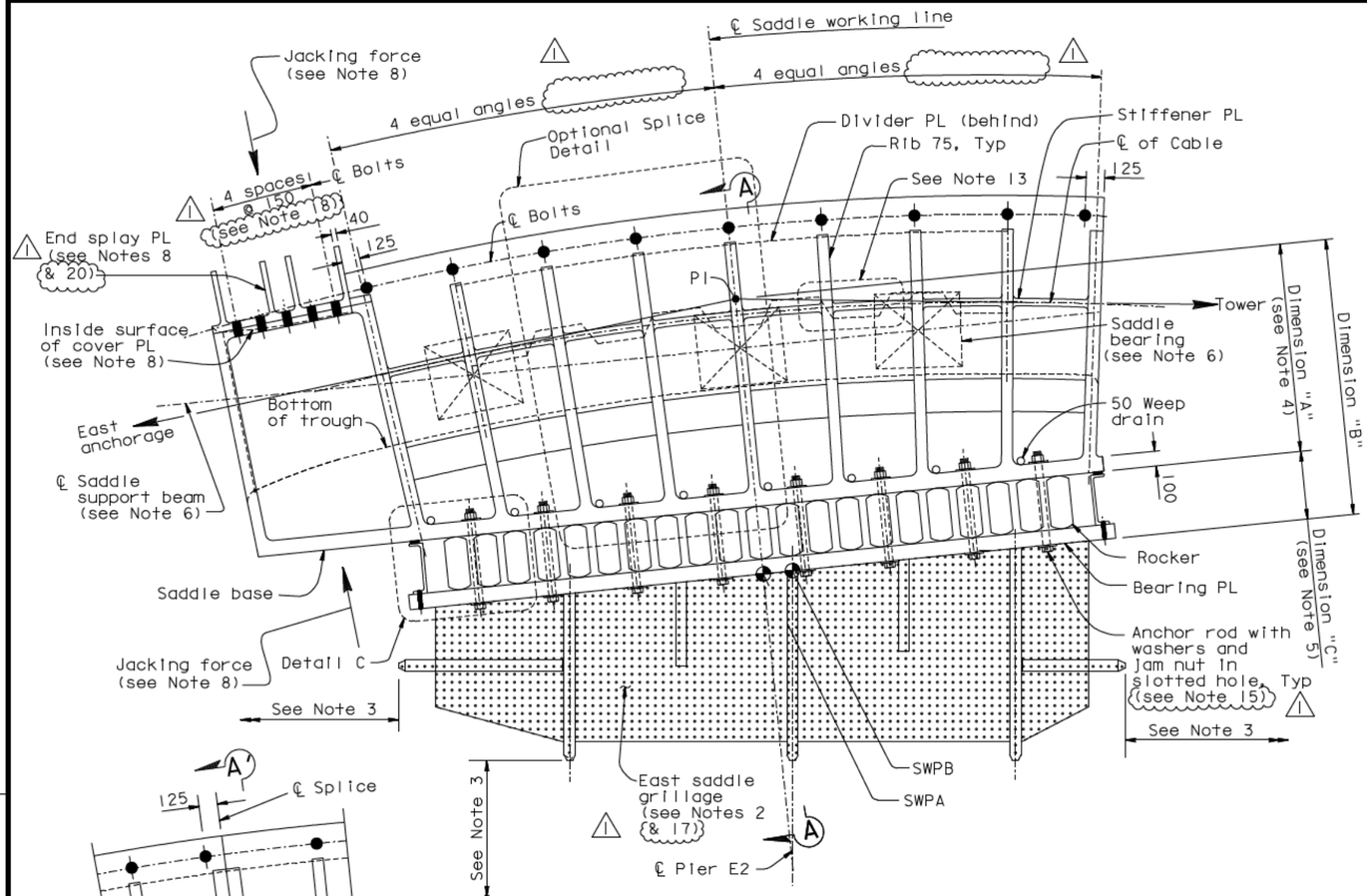

ELEVATION OF TYPICAL EAST SADDLE (IN THE PLANE OF CABLE) (See Note 6)

(Shown for south anchorage, north anchorage similar and opposite hand)

1:20

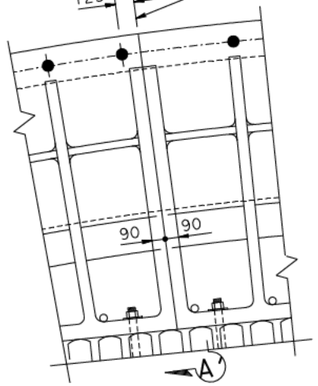

OPTIONAL SPLICE DETAIL

1:20

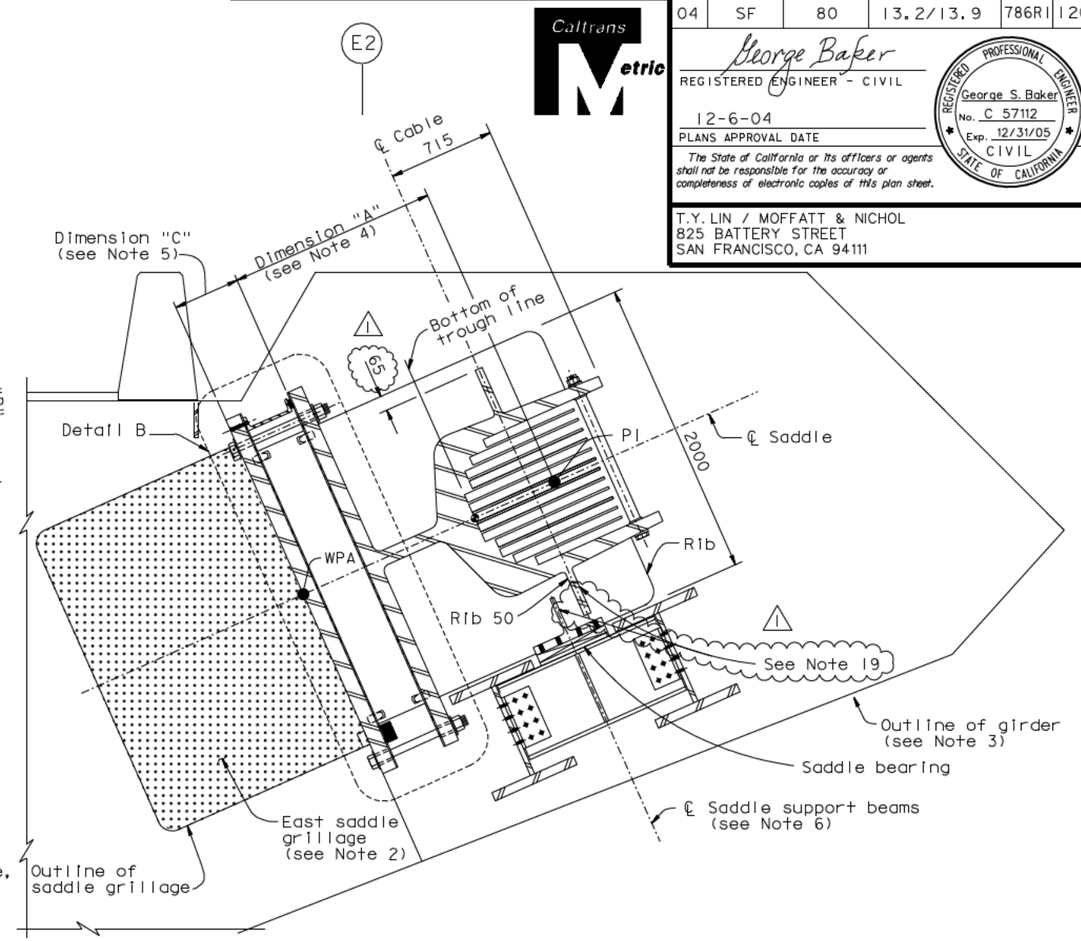

SECTION A-A

1:20

17. It is acceptable to align the ends of grillage plate A with a projection of the centerline of the outmost saddle ribs, subject to review and approval of the Engineer.
18. Spacing may be adjusted to accomodate jacking, subject to review and approval of the Engineer.
19. It is acceptable to extend the saddle rib to the saddle bearing plate in lieu of the bearing plate web extension subject to review and approval of the Engineer. Where the offset between the saddle rib and the support beam centerlines exceeds 60 mm, the bearing plate shall be thickened to 60 mm.
20. At the Contractor's option, it is acceptable to incorporate permanent diaphragm plates at the end splay plate, subject to review and approval of the Engineer.

10. All surfaces inside the trough shall be machined to ANSI 500 roughness. The geometric tolerance of the surfaces shall not exceed ±1.5 mm per meter of surfaces without sudden kinks.
11. The inside of the troughs shall be metallized with a coating thickness not less than 0.4 mm.
12. All divider plates shall be hot dip galvanized with Class A coating.
13. For detail of Divider PL joint, see "West Deviation Saddle Details No.3" sheet.
14. In the bolted splices the flatness of the faying surfaces shall be ±0.5 mm per meter, and the gap between them shall not exceed 0.5 mm per meter. The perimeters of faying surfaces shall be caulked.
15. Slotted holes may be placed in bearing PL or saddle base PL.
16. The Contractor may propose holes and attachments for erection, subject to review and approval of the Engineer. Upon erection completion, all holes shall be filled with bolts.

NOTES:

1. For Section A'-A', Details B and C, see "East Saddle Details No.6" sheet.
2. For east saddle grillage details, see "Girder At Pier E2 No.5" sheet.
3. For girder details at the east saddle, see "Girder At Pier E2" sheets.
4. For dimension "A", see "East Saddle Details No.2" sheet.
5. For dimension "C", see "East Saddle Details No.6" sheet.
6. For saddle bearings and saddle beam support details, see "East Saddle Details No.7" sheet.
7. For the plane of the cable, see "East Saddle Details No.1" and "East Saddle Details No.2" sheets.
8. End splay plate shall be pressed into place by jacking and bolted to the saddle after completion of cable erection and before load transfer to cable. Total jacking capacity shall be at least 1.9 MN. For end splay PL details, see "East Saddle Details No.5" sheet.
9. Bearing surfaces of rockers shall be finished to ANSI 250 surface roughness. Rocker bearing surfaces shall be finished to ANSI 250 and shall be finished flat to ±0.5 mm per meter of surface length.

REGISTERED PROFESSIONAL ENGINEER — Marwan N. Nader — No. C 054426 — Exp. 12/31/11 — CIVIL — STATE OF CALIFORNIA

FOR REVISIONS ONLY

CONTRACT CHANGE ORDER NO. _____
SHEET ___ OF ___

REQUESTS FOR INFORMATION NOT ADDRESSED IN THIS CCO REMAIN IN FORCE

ALL DIMENSIONS ARE IN MILLIMETERS UNLESS OTHERWISE SHOWN

R. Vallzadeh/V. Toan/Y.L./W.L./F.C.
DESIGN OVERSIGHT
SIGN OFF DATE 09/01/11

MARK	DATE	DESCRIPTIONS	BY	CH'D	CCO#
1	09/01/11	EAST END OBG	GB	MN	87

REVISIONS

DESIGN	BY G. Baker	CHECKED J. Kulikl	
DETAILS	BY R. Kanitkar	CHECKED T. McMeans	
QUANTITIES	BY D. Turner	CHECKED D. Harrison	

PREPARED FOR THE STATE OF CALIFORNIA
DEPARTMENT OF TRANSPORTATION

R. Manzanarez
PROJECT ENGINEER

BRIDGE NO. 34-0006L/R
KILOMETER POST 13.2/13.9

SAN FRANCISCO OAKLAND BAY BRIDGE
EAST SPAN SEISMIC SAFETY PROJECT
SELF-ANCHORED SUSPENSION BRIDGE
(SUPERSTRUCTURE & TOWER)

EAST SADDLE DETAILS NO.3

Rev. Date: 5-18-98

ORIGINAL SCALE IN MILLIMETERS FOR REDUCED PLANS 0 10 20 30 40 50 60 70 80 90 100

CU 04
EA 0120F1

DISREGARD PRINTS BEARING EARLIER REVISION DATES

REVISION DATES (PRELIMINARY STAGE ONLY): 05/15/98 08/28/98 05/27/01 04/08/02 07/01/02 12/19/02 11/18/05 12/07/05

SHEET 369RI OF

FILE -> I:\bb\04-012001\sas\contract plans and cco\cco\cco#87\I-original 09-01-11\dgn\agsddl1.dgn

USERNAME -> ALfshansky DATE PLOTTED -> 30 AUG 2011 TIME PLOTTED -> 13:33:47

100 % PS&E

11. At the Contractor's option, it is acceptable to use 8 mm fillet welds to connect the MC channels in lieu of the bolted L75x75x7.9, subject to review and approval of the Engineer.

12. At the Contractor's option, MC13x31.8 ASTM A709 grade 36 channels may be used in lieu of MC330x47.3 ASTM A709 grade 50 channels, subject to review and approval of the Engineer.

Caltrans Metric

DIST.	COUNTY	ROUTE	KILOMETER POST TOTAL PROJECT	SHEET NO.	TOTAL SHEETS
04	SF	80	13.2/13.9	789RI	1204

George Baker
REGISTERED ENGINEER - CIVIL

12-6-04
PLANS APPROVAL DATE

REGISTERED PROFESSIONAL ENGINEER — George S. Baker — No. C 57112 — Exp. 12/31/05 — CIVIL — STATE OF CALIFORNIA

The State of California or its officers or agents shall not be responsible for the accuracy or completeness of electronic copies of this plan sheet.

T.Y. LIN / MOFFATT & NICHOL
825 BATTERY STREET
SAN FRANCISCO, CA 94111

Caltrans now has a web site! To get to the web site, go to: http://www.dot.ca.gov

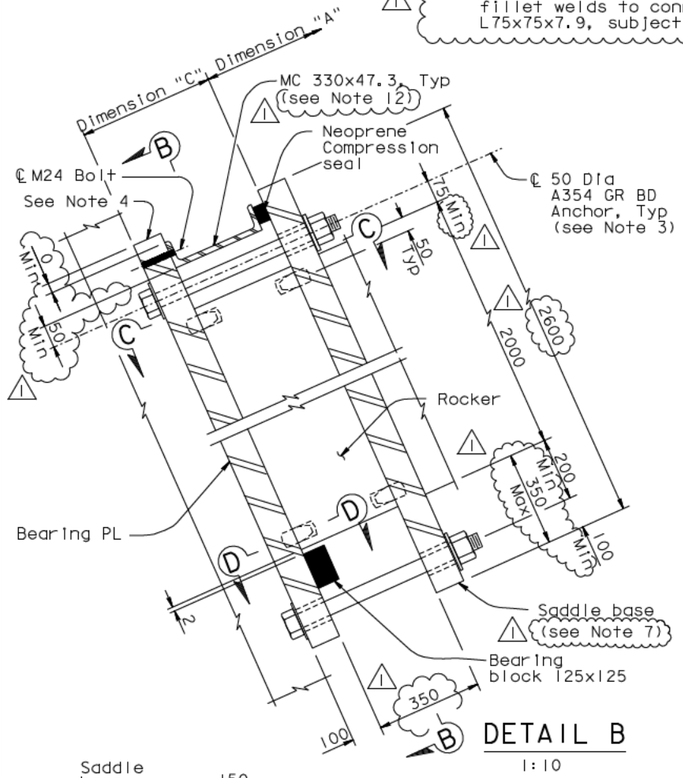

DETAIL B
1:10

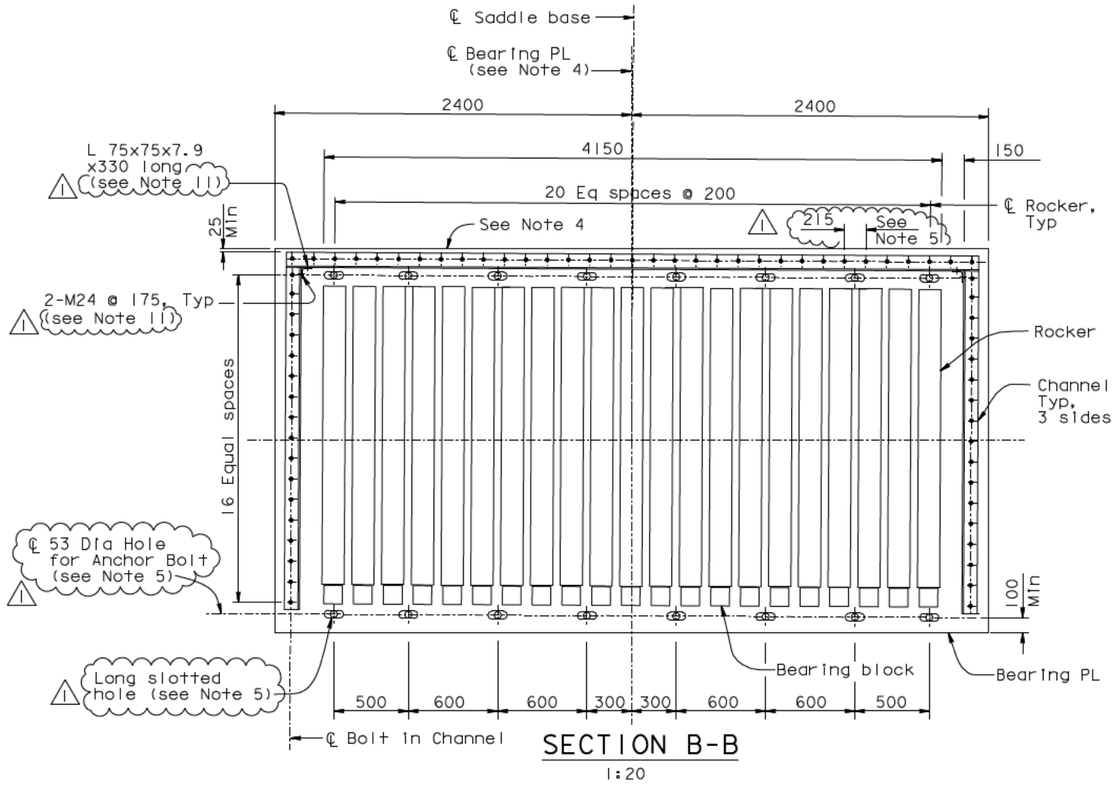

SECTION B-B
1:20

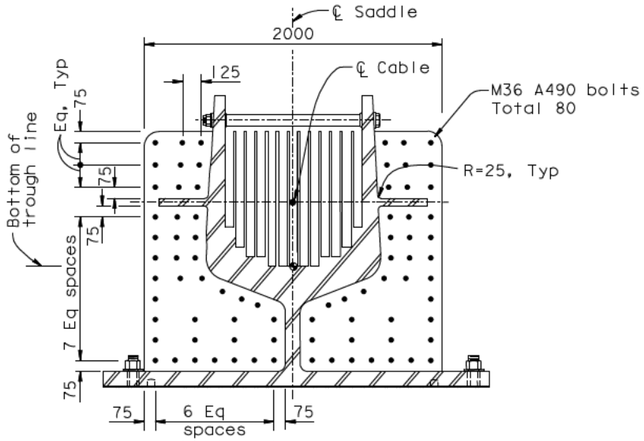

SECTION A'-A'
1:20

NOTES:

1. Rockers shall be ASTM A668 Class J.
2. Dowels shall be ASTM A276 Type 410 condition T.
1. Dowels of 50 Dia shall be press fit into holes of diameter 0.15 mm smaller than the dowel.
3. Each anchor rod shall hand wrench tightened.
4. 1. The saddle and rockers shall be oriented according to the saddle layout. See "East Saddle Details No.1" and "East Saddle Details No.2" sheets.
1. 5. Slotted holes shall be detailed to accommodate all saddle movements during erection, and after completion of the bridge shall accommodate a range of saddle movement of at least 50 mm in each direction. Slotted holes may be placed in the Bearing PL or the saddle base PL.
6. The shape of the dowel shall be a cycloid consistent with the radius of the rocker.
7. For slotted holes in the saddle base plate option the following shall apply: the anchor rods shall be threaded in both ends; two nuts and one washer shall be installed in the bearing plate to clamp the rod in the standard hole; a nominal gap (0.8 mm), a washer and a jam-nut (or other anti-loosening devise) shall be provided at the slotted holes in the saddle base plate.
8. The MC 330 may be welded, subject to approval of the Engineer.
9. PTFE tape (0.5mm thick), shall be applied to the neoprene compression seal.
10. It is acceptable to shift the MC 330 on the tower side 50 mm towards the east anchorage, subject to review and approval by the Engineer.

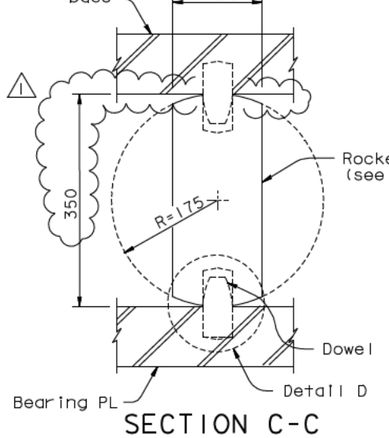

SECTION C-C
1:5

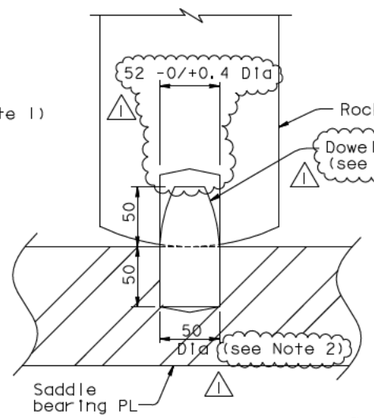

DETAIL D
1:2.5

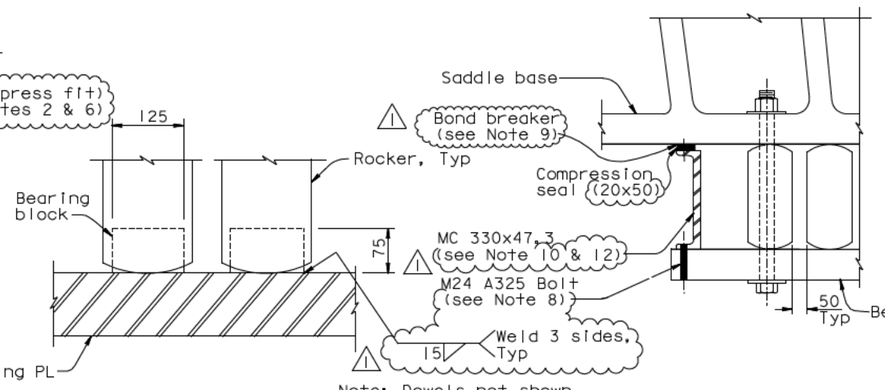

SECTION D-D
1:5

Note: Dowels not shown for clarity.

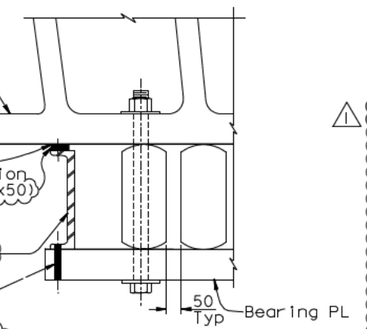

DETAIL C
1:10

Marwan N. Nader — REGISTERED PROFESSIONAL ENGINEER — No. C 054426 — Exp. 12/31/11 — CIVIL — STATE OF CALIFORNIA

FOR REVISIONS ONLY

CONTRACT CHANGE ORDER NO. ____
SHEET ____ OF ____

REQUESTS FOR INFORMATION NOT ADDRESSED IN THIS CCO REMAIN IN FORCE

ALL DIMENSIONS ARE IN MILLIMETERS UNLESS OTHERWISE SHOWN

R. Vallzadeh/V. Toan/Y.L./W.L./F.C.
DESIGN OVERSIGHT
Ryan Vallzadeh / Vona Toan / Y Liu
SIGN OFF DATE 09/01/11

MARK	DATE	DESCRIPTIONS	BY	CH'D	CCO#
1	09/01/11	EAST END OBG	GB	MN	87

REVISIONS

	BY	CHECKED
DESIGN	G. Baker	J. Kullki
DETAILS	R. Kanitkar	T. McMeans
QUANTITIES	D. Turner	D. Harrison

PREPARED FOR THE STATE OF CALIFORNIA DEPARTMENT OF TRANSPORTATION

R. Manzanarez
PROJECT ENGINEER

BRIDGE NO. 34-0006L/R
KILOMETER POST 13.2/13.9

SAN FRANCISCO OAKLAND BAY BRIDGE
EAST SPAN SEISMIC SAFETY PROJECT
SELF-ANCHORED SUSPENSION BRIDGE
(SUPERSTRUCTURE & TOWER)

EAST SADDLE DETAILS NO. 6

Rev. Date: 5-18-98

ORIGINAL SCALE IN MILLIMETERS FOR REDUCED PLANS 0 10 20 30 40 50 60 70 80 90 100

CU 04
EA 0120F1

DISREGARD PRINTS BEARING EARLIER REVISION DATES

REVISION DATES (PRELIMINARY STAGE ONLY)								SHEET	OF
05/15/99	08/02/99	05/31/01	04/08/02	07/01/02	12/19/02			372RI	

FILE -> I:\bb\04-0120I\sas\contract plans and cco\cco\cco#87\I-original 09-01-11\dgn\agsdd2.dgn

USERNAME -> ALishansky DATE PLOTTED -> 30 AUG 2011 TIME PLOTTED -> 13:35:35

100 % PS&E

9. It is acceptable to extend the saddle rib to the saddle bearing PL in lieu of the bearing PL web extension, subject to review and approval of the Engineer. Where the offset between the saddle rib and the support beam centerlines exceeds 60 mm, the bearing PL shall be thickened to 60 mm.
10. It is acceptable to replace the W530x150 crossbeams at the bearing locations with W310x253 or a built-up shape equivalent to a W310x253, subject to review and and approval of the Engineer. The W310x253 connection to the saddle support beam shall consist of L 203x203x19 and 6-M24 bolts at each faying surface (in lieu of 8-M22). At the Contractor's option, it is acceptable to use A992 Gr 345 or A572 Gr 345 in lieu of A709 Br 345 for W310x253.
11. For Section E-E, see "East Saddle Details No.7A" sheet.
12. At the Contractor's option, alternate detail using oversize holes may be used. For acceptable alternate details, see "East Saddle Details No.7B" sheet.
13. At the Contractor's option, longitudinal slotted holes may be provided in the saddle support beam flanges and web to facilitate alignment of the bearing beams with the saddle.
14. At the Contractor's option, elastomeric bearing pad and PL 25 may be reduced to 375x500.

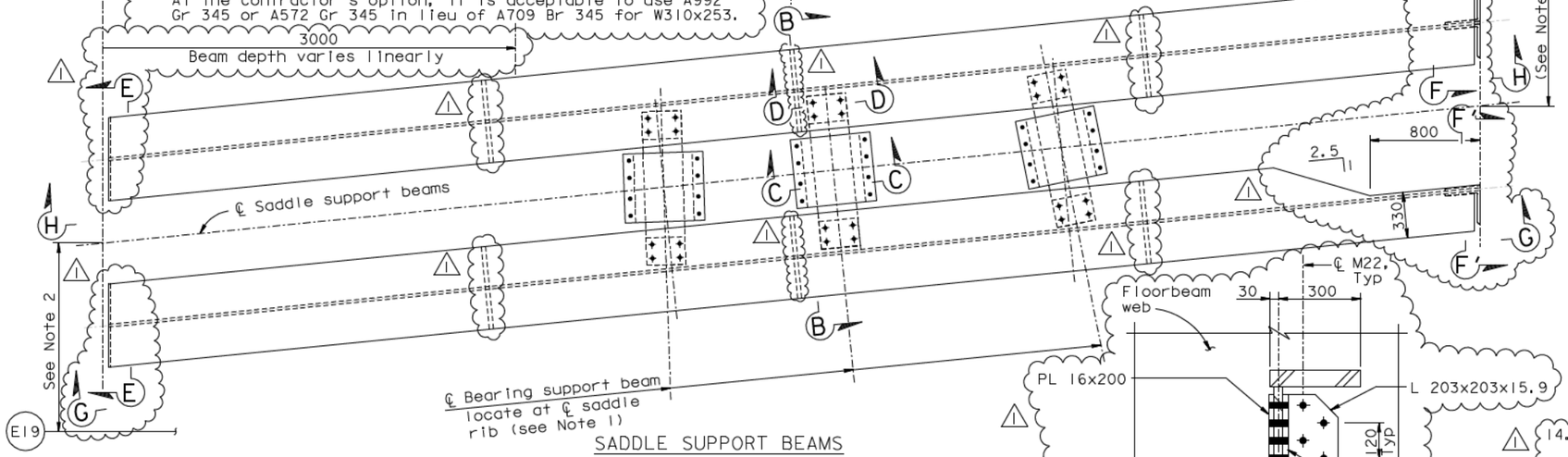

SADDLE SUPPORT BEAMS

PLAN SECTION A-A (See Key Section)

1:20

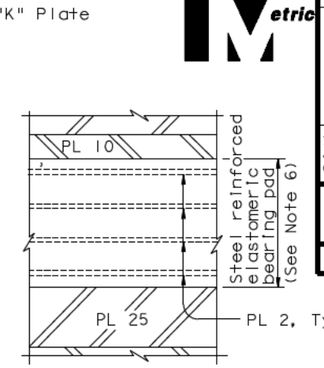

DETAIL E

NTS

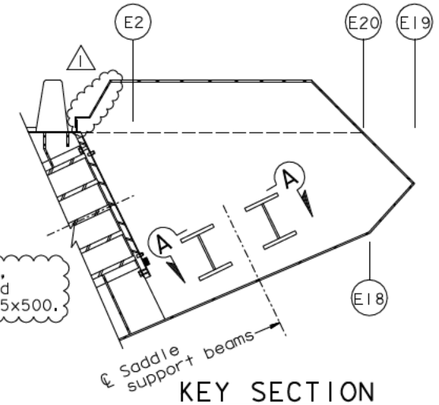

KEY SECTION

NTS

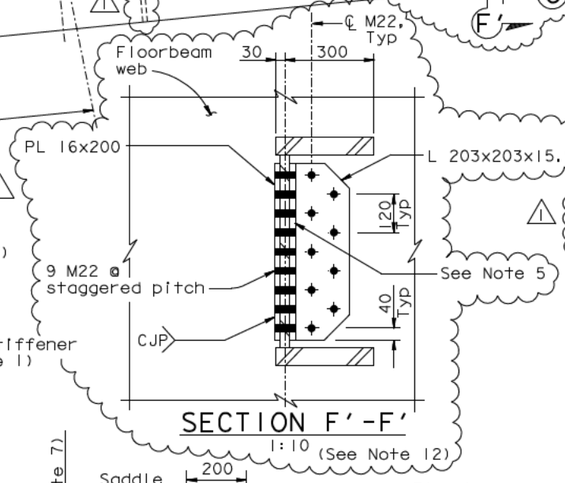

SECTION F'-F'

1:10 (See Note 12)

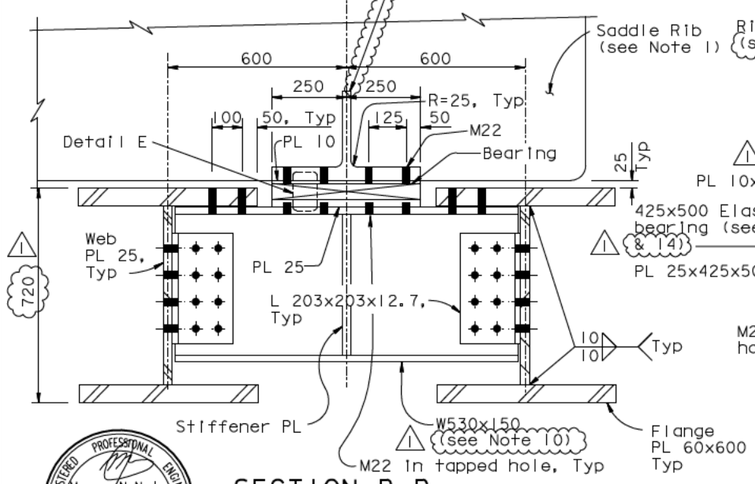

SECTION B-B

1:10

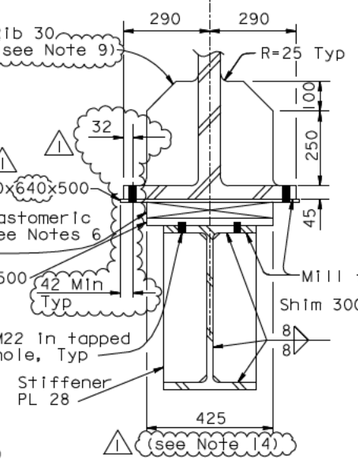

SECTION C-C

1:10

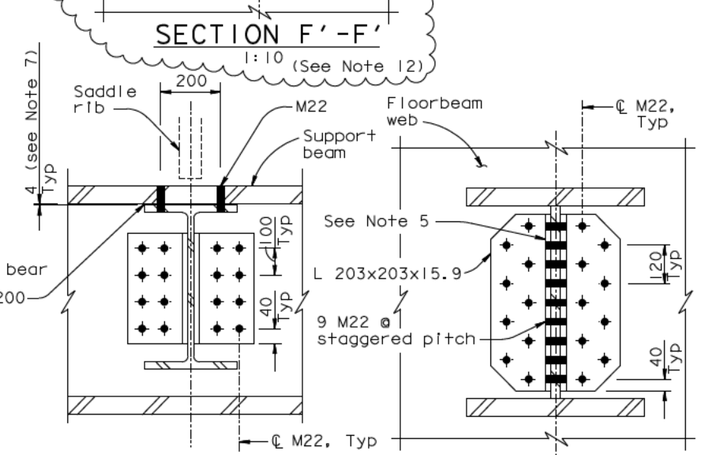

SECTION D-D

1:10 (See Note 13)

SECTION F-F

1:10 (See Note 12)

SADDLE SUPPORT BEAM DETAILS

NOTES:

1. For saddle geometry and details, see "East Saddle Details No.1" to "East Saddle Details No.6" sheets.
2. The saddle support beams shall be aligned with respect to the east saddle and shall be positioned so as to support the saddle during construction. For approximate location of saddle support beam connection to floorbeam, see "Floorbeam At East Transition No.2" sheet.
3. The Contractor shall provide temporary supports for the saddles and rockers during installation. The temporary supports shall accommodate all saddle movements during construction. During construction the Contractor shall support the saddle against unseating or uplift due to the cable movements.
4. The saddle support beams and elastomeric bearings shall be permanent. The support beams may be used by the Contractor for temporary support, subject to approval by the Engineer.
5. Angles shall be bent to lie flush against floorbeams webs.
6. The elastomeric bearing pad shall be vulcanized to both the PL 10 and the PL 25. It shall be installed without shear deformation.
7. Dimensions shown for information only. Gap shall be set as recommended by the elastomeric bearing pad manufacturer so that each bearing will be installed with a precompressed force of 500 kN.
8. For Section G-G, see "East Saddle Details No.7A" sheet.

DIST.	COUNTY	ROUTE	KILOMETER POST TOTAL PROJECT	SHEET NO.	TOTAL SHEETS
04	SF	80	13.2/13.9	790R1	1204

George Baker
REGISTERED ENGINEER - CIVIL
12-6-04
PLANS APPROVAL DATE

REGISTERED PROFESSIONAL ENGINEER — George S. Baker — No. C 57112 — Exp. 12/31/05 — CIVIL — STATE OF CALIFORNIA

The State of California or its officers or agents shall not be responsible for the accuracy or completeness of electronic copies of this plan sheet.

T.Y. LIN / MOFFATT & NICHOL
825 BATTERY STREET
SAN FRANCISCO, CA 94111

Caltrans now has a web site! To get to the web site, go to: http://www.dot.ca.gov

REGISTERED PROFESSIONAL ENGINEER — Marwan N. Nader — No. C 054426 — Exp. 12/31/11 — CIVIL — STATE OF CALIFORNIA

FOR REVISIONS ONLY

CONTRACT CHANGE ORDER NO. ____
SHEET ___ OF ___

REQUESTS FOR INFORMATION NOT ADDRESSED IN THIS CCO REMAIN IN FORCE

ALL DIMENSIONS ARE IN MILLIMETERS UNLESS OTHERWISE SHOWN

R. Vallzadeh/V. Toan/Y.L./W.L./F.C.
DESIGN OVERSIGHT
SIGN OFF DATE 09/01/11

MARK	DATE	REVISIONS	BY	CH'D	CCO#
1	09/01/11	EAST END OBG	GB	MN	87

	BY	CHECKED
DESIGN	G. Baker	J. Kulikl
DETAILS	R. Kanitkar	T. McMeans
QUANTITIES	D. Turner	D. Harrison

PREPARED FOR THE STATE OF CALIFORNIA DEPARTMENT OF TRANSPORTATION

R. Manzanarez
PROJECT ENGINEER

BRIDGE NO. 34-0006L/R
KILOMETER POST 13.2/13.9

CU 04
EA 0120F1

SAN FRANCISCO OAKLAND BAY BRIDGE
EAST SPAN SEISMIC SAFETY PROJECT
SELF-ANCHORED SUSPENSION BRIDGE
(SUPERSTRUCTURE & TOWER)

EAST SADDLE DETAILS NO.7

Rev. Date: 5-18-98

ORIGINAL SCALE IN MILLIMETERS FOR REDUCED PLANS 0 10 20 30 40 50 60 70 80 90 100

DISREGARD PRINTS BEARING EARLIER REVISION DATES → 05/15/98 08/28/99 05/31/01 04/08/02 07/01/02 12/18/02 11/15/05

SHEET 373R1 OF

FILE -> I:\bb\04-012001\sas\contract plans and cco\cco\cco#87\1-original 09-01-11\dgn\agsddl3a.dgn

USERNAME -> ALIshansk DATE PLOTTED -> 30 AUG 2011 TIME PLOTTED -> 13:37:18

100 % PS&E

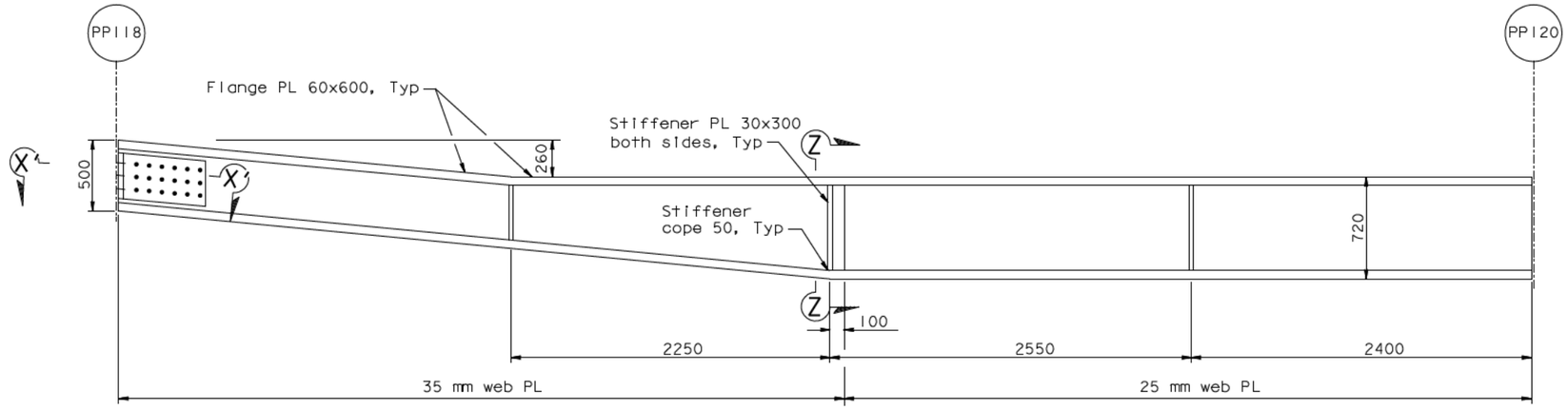

SECTION G-G
1:20

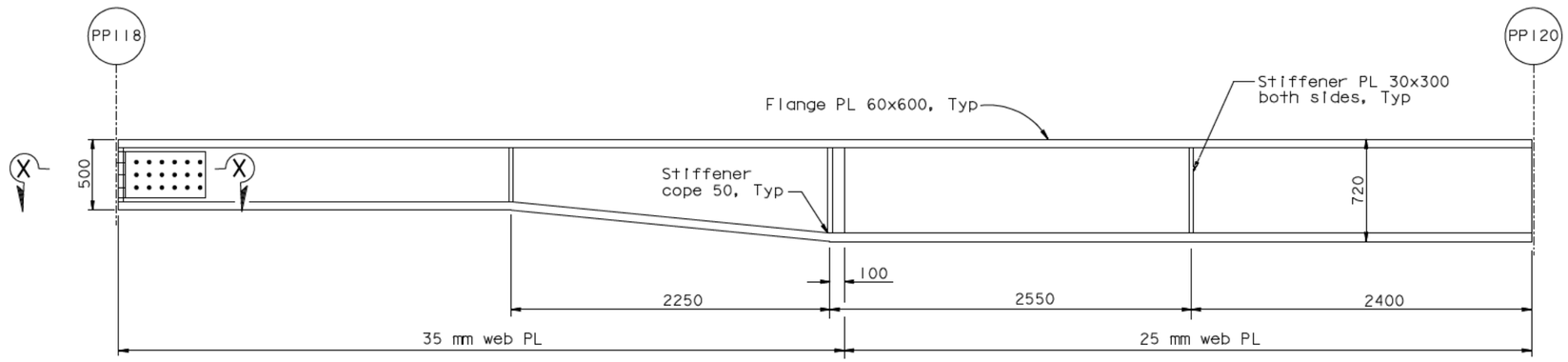

SECTION H-H
1:20

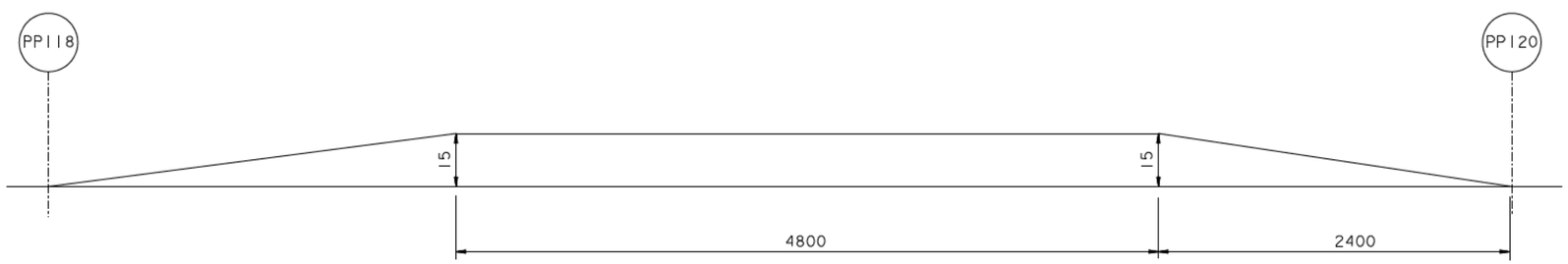

SADDLE SUPPORT BEAM CAMBER DIAGRAM
NTS

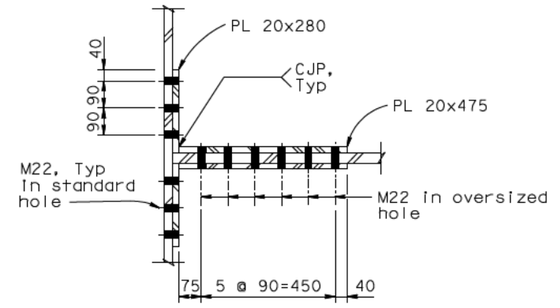

SECTION X-X (X'-X' Similar)
1:10

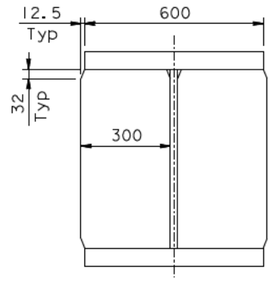

SECTION Z-Z
1:10

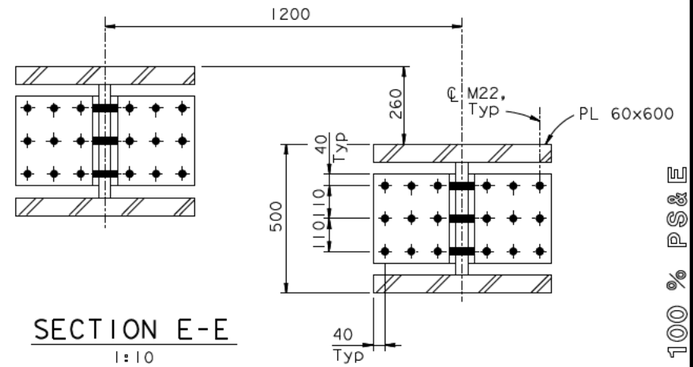

SECTION E-E
1:10

DIST.	COUNTY	ROUTE	KILOMETER POST TOTAL PROJECT	SHEET NO.	TOTAL SHEETS
04	SF	80	13.2/13.9	790S1	1204

REGISTERED ENGINEER - CIVIL

09-01-11
PLANS APPROVAL DATE

The State of California or its officers or agents shall not be responsible for the accuracy or completeness of electronic copies of this plan sheet.

REGISTERED PROFESSIONAL ENGINEER
Marwan N. Nader
No. C 054426
Exp. 12/31/11
CIVIL
STATE OF CALIFORNIA

T.Y. LIN / MOFFATT & NICHOL
825 BATTERY STREET
SAN FRANCISCO, CA 94111

Caltrans now has a web site! To get to the web site, go to: http://www.dot.ca.gov

CONTRACT CHANGE ORDER NO. ____
SHEET ____ OF ____

REQUESTS FOR INFORMATION NOT ADDRESSED IN THIS CCO REMAIN IN FORCE

ALL DIMENSIONS ARE IN MILLIMETERS UNLESS OTHERWISE SHOWN

R. Vallzadeh/V. Toan/Y.L./W.L./F.C.
DESIGN OVERSIGHT
SIGN OFF DATE 09/01/11

MARK	DATE	REVISIONS	BY	CH'D	CCO#
0	09/01/11	EAST END OBG	GB	MN	87

	BY	CHECKED
DESIGN	D. Turner	G. Baker
DETAILS	D. Turner	G. Baker
QUANTITIES	D. Turner	G. Baker

PREPARED FOR THE
STATE OF CALIFORNIA
DEPARTMENT OF TRANSPORTATION

R. Manzanarez
PROJECT ENGINEER

CU 04
EA 0120F1

BRIDGE NO. 34-0006L/R
KILOMETER POST 13.2/13.9

SAN FRANCISCO OAKLAND BAY BRIDGE
EAST SPAN SEISMIC SAFETY PROJECT
SELF-ANCHORED SUSPENSION BRIDGE
(SUPERSTRUCTURE & TOWER)

EAST SADDLE DETAILS NO. 7A

Rev. Date: 5-18-98

ORIGINAL SCALE IN MILLIMETERS FOR REDUCED PLANS 0 10 20 30 40 50 60 70 80 90 100

DISREGARD PRINTS BEARING EARLIER REVISION DATES →

REVISION DATES (PRELIMINARY STAGE ONLY): 09/01/11

SHEET 373S1 OF

FILE -> I:\bb\04-0120I\sas\contract plans and cco\cco\cco#87\I-original 09-01-11\dgn\agsdd13b.dgn

USERNAME -> ALTshansk DATE PLOTTED -> 30 AUG 2011 TIME PLOTTED -> 13:39:33

100 % PS&E

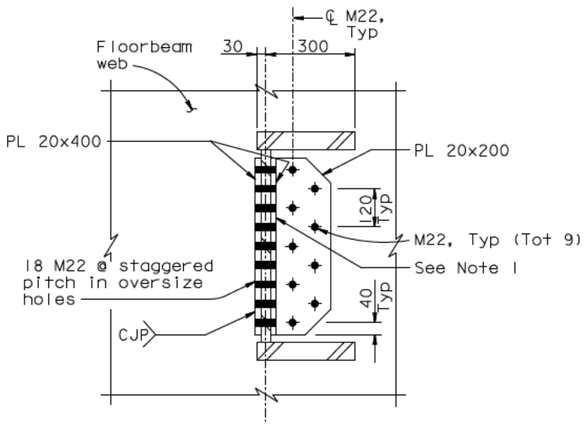

ALTERNATE SECTION F'-F'
1:10

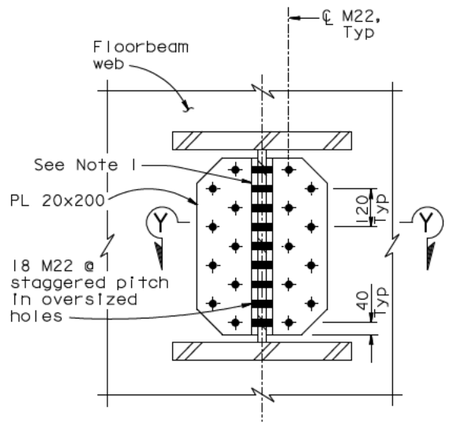

ALTERNATE SECTION F-F
1:10

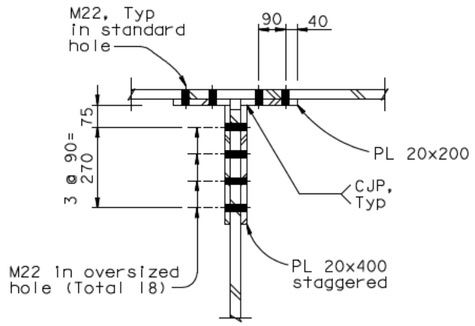

SECTION Y-Y
1:10

NOTES:

1. Plate shall lie flush against floorbeam webs.

CONTRACT CHANGE ORDER NO. _____
SHEET ____ OF ____

REQUESTS FOR INFORMATION NOT ADDRESSED IN THIS CCO REMAIN IN FORCE

ALL DIMENSIONS ARE IN MILLIMETERS UNLESS OTHERWISE SHOWN

DIST.	COUNTY	ROUTE	KILOMETER POST TOTAL PROJECT	SHEET NO.	TOTAL SHEETS
04	SF	80	13.2/13.9	790S2	1204

REGISTERED ENGINEER - CIVIL
09-01-11
PLANS APPROVAL DATE
The State of California or its officers or agents shall not be responsible for the accuracy or completeness of electronic copies of this plan sheet.

REGISTERED PROFESSIONAL ENGINEER — Marwan N. Nader — No. C 054426 — Exp. 12/31/11 — CIVIL — STATE OF CALIFORNIA

T.Y. LIN / MOFFATT & NICHOL
825 BATTERY STREET
SAN FRANCISCO, CA 94111

Caltrans now has a web site! To get to the web site, go to: http://www.dot.ca.gov

MARK	DATE	DESCRIPTIONS	BY	CH'D	CCO#
0	09/01/11	EAST END OBG	GB	MN	87

REVISIONS

	BY	CHECKED
DESIGN	D. Turner	G. Baker
DETAILS	D. Turner	G. Baker
QUANTITIES	D. Turner	G. Baker

PREPARED FOR THE STATE OF CALIFORNIA DEPARTMENT OF TRANSPORTATION

R. Manzanarez
PROJECT ENGINEER

BRIDGE NO. 34-0006L/R
KILOMETER POST 13.2/13.9

SAN FRANCISCO OAKLAND BAY BRIDGE
EAST SPAN SEISMIC SAFETY PROJECT
SELF-ANCHORED SUSPENSION BRIDGE
(SUPERSTRUCTURE & TOWER)

EAST SADDLE DETAILS NO. 7B

R. Vallzadeh/V. Toan/Y.L./W.L./F.C.
DESIGN OVERSIGHT
SIGN OFF DATE 09/01/11

Rev. Date: 5-18-98

ORIGINAL SCALE IN MILLIMETERS FOR REDUCED PLANS 0 10 20 30 40 50 60 70 80 90 100

CU 04
EA 0120F1

DISREGARD PRINTS BEARING EARLIER REVISION DATES →

REVISION DATES (PRELIMINARY STAGE ONLY): 09/01/11

SHEET 373S2 OF

FILE -> I:\bb\04-0120I\sas\contract plans and cco\cco\cco#87\I-orfginal 09-01-11\dgn\agsddl3c.dgn

100% PS&E
TIME PLOTTED -> 13:42:47
DATE PLOTTED -> 30 AUG 2011
USERNAME -> AIshansk

DIST.	COUNTY	ROUTE	KILOMETER POST TOTAL PROJECT	SHEET NO.	TOTAL SHEETS
04	SF	80	13.2/13.9	805R1	1204

George Baker
REGISTERED ENGINEER - CIVIL
12-6-04
PLANS APPROVAL DATE

The State of California or its officers or agents shall not be responsible for the accuracy or completeness of electronic copies of this plan sheet.

REGISTERED PROFESSIONAL ENGINEER — George S. Baker — No. C57112 — Exp. 12/31/05 — CIVIL — STATE OF CALIFORNIA

T.Y. LIN / MOFFATT & NICHOL
825 BATTERY STREET
SAN FRANCISCO, CA 94111

Caltrans now has a web site! To get to the web site, go to: http://www.dot.ca.gov

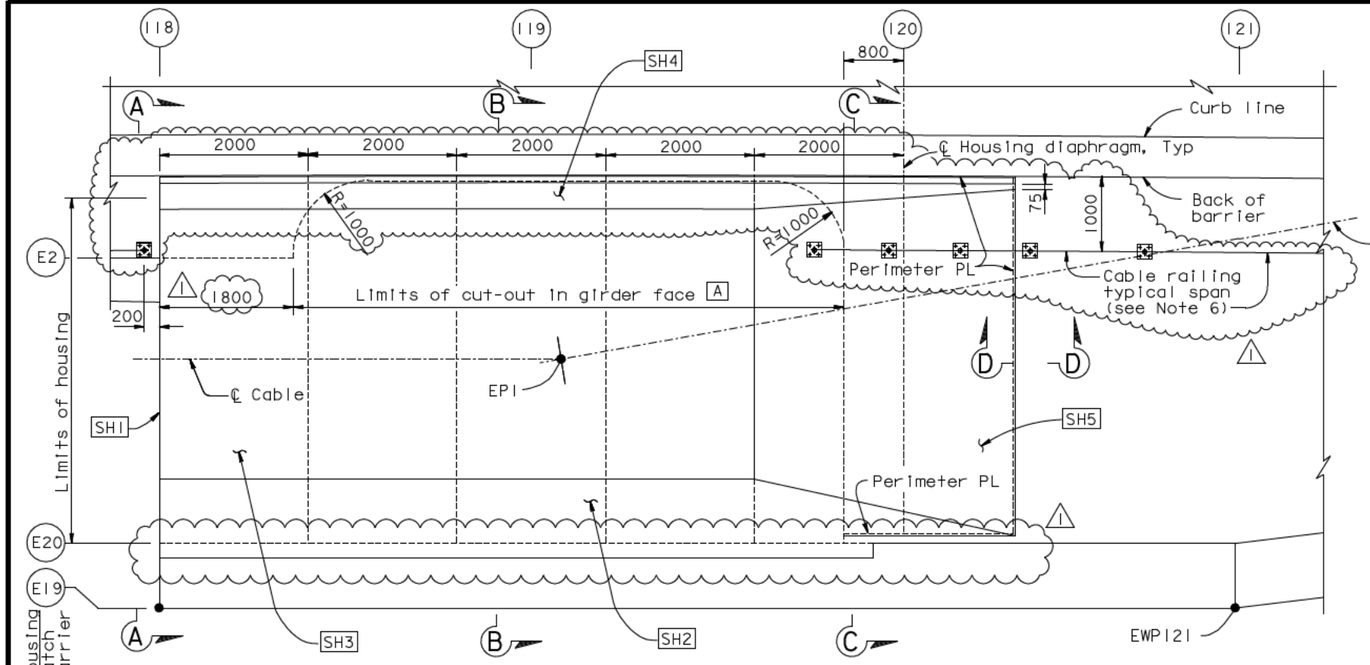

PLAN (See Note 2)

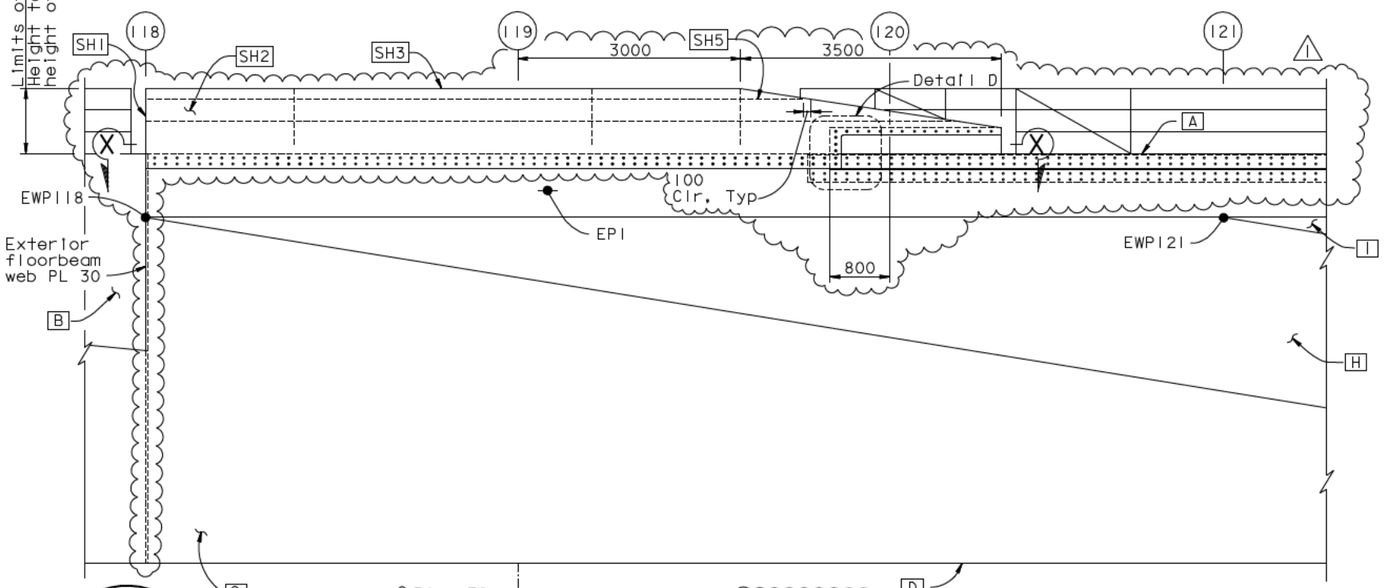

ELEVATION
EAST SADDLE HOUSING
1:40

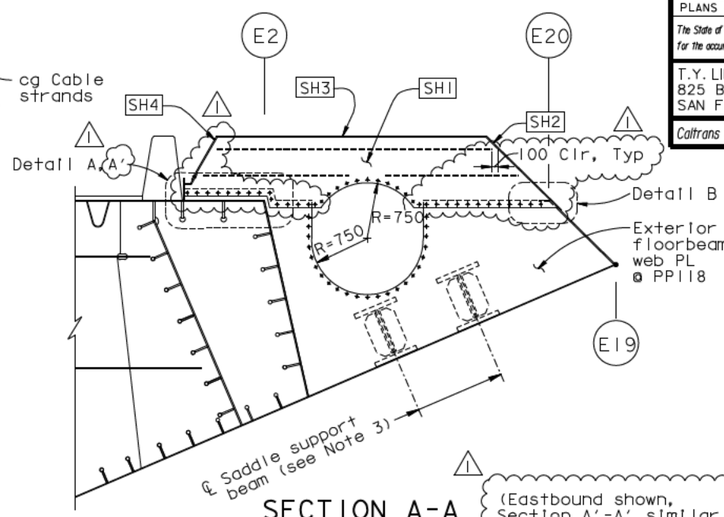

SECTION A-A
1:40
(Eastbound shown, Section A'-A' similar and opposite hand)

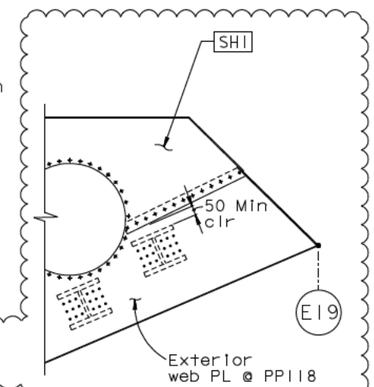

ALTERNATIVE SECTION A-A (See Note 7)
1:40

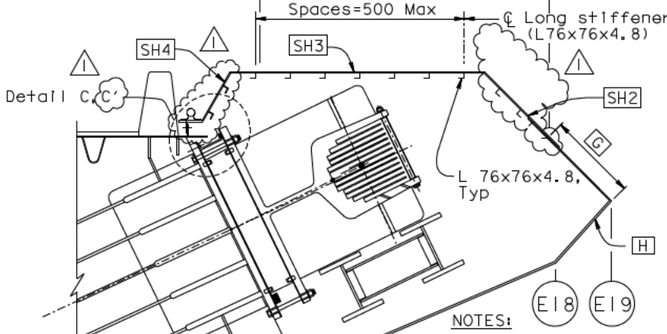

SECTION B-B
1:40
(Eastbound shown, Section B'-B' similar and opposite hand)

LEGEND:

SH5 Saddle housing PL 5

C Girder Face C

NOTES:

1. Saddle housing plates SH1 through SH5 and all perimeter plates shall be 10 mm thick and shall be sealed by welding against any entry of water from Girder Face A or from above.
2. Longitudinal stiffeners in saddle housing are not shown in plan for clarity.
3. For saddle support beam details, see "East Saddle Details No.7" sheet.
4. Bikepath not shown. For bikepath details, see "Bikepath Details" sheets.
5. For Sections C-C, D-D and Details A,B and C, see "East Saddle Housing Details No.2" sheet.
6. For B11-47 cable railing details see "Standard Plans".
7. At the Contractor's option, it is acceptable to use "Alternative Section A-A" in lieu of Section A-A".
8. For Detail D and Section X-X, see "East Saddle Housing Details No.1A" sheet.
9. For architectural splice details, see "Girder At East Transition Details No.3" sheet.
10. For Details A' and C', see "East Saddle Housing Details No.2" sheet.

ALL DIMENSIONS ARE IN MILLIMETERS UNLESS OTHERWISE SHOWN

REGISTERED PROFESSIONAL ENGINEER — Marwan N. Nader — No. C 054426 — Exp. 12/31/11 — CIVIL — STATE OF CALIFORNIA

FOR REVISIONS ONLY

CONTRACT CHANGE ORDER NO. ____
SHEET ____ OF ____

REQUESTS FOR INFORMATION NOT ADDRESSED IN THIS CCO REMAIN IN FORCE

R. Vallzadeh/V. Toan/Y.L./W.L./F.C.
DESIGN OVERSIGHT
SIGN OFF DATE 09/01/11

MARK	DATE	DESCRIPTIONS	BY	CH'D	CCO#
1	09/01/11	EAST END OBG	GB	MN	87

REVISIONS

DESIGN	BY G. Baker	CHECKED	T. McMeans
DETAILS	BY C. Mauch	CHECKED	T. McMeans
QUANTITIES	BY C. Mauch	CHECKED	D. Harrison

PREPARED FOR THE STATE OF CALIFORNIA
DEPARTMENT OF TRANSPORTATION

R. Manzanarez
PROJECT ENGINEER

BRIDGE NO. 34-0006L/R
KILOMETER POST 13.2/13.9

SAN FRANCISCO OAKLAND BAY BRIDGE
EAST SPAN SEISMIC SAFETY PROJECT
SELF-ANCHORED SUSPENSION BRIDGE
(SUPERSTRUCTURE & TOWER)

EAST SADDLE HOUSING DETAILS NO. 1

Rev. Date: 5-18-98

ORIGINAL SCALE IN MILLIMETERS FOR REDUCED PLANS 0 10 20 30 40 50 60 70 80 90 100

CU 04
EA 0120F1

DISREGARD PRINTS BEARING EARLIER REVISION DATES

REVISION DATES (PRELIMINARY STAGE ONLY): 5/15/99 | 08/02/99 | 05/31/01 | 04/08/02 | 07/31/02 | 12/19/02

SHEET 388R1 OF

FILE -> I:\bb\04-012001\sas\contract plans and cco\cco\cco#87\1-original 09-01-11\dgn\agshd05.dgn

USERNAME -> ALIshank DATE PLOTTED -> 30 AUG 2011 TIME PLOTTED -> 13:44:24

100 % PS&E

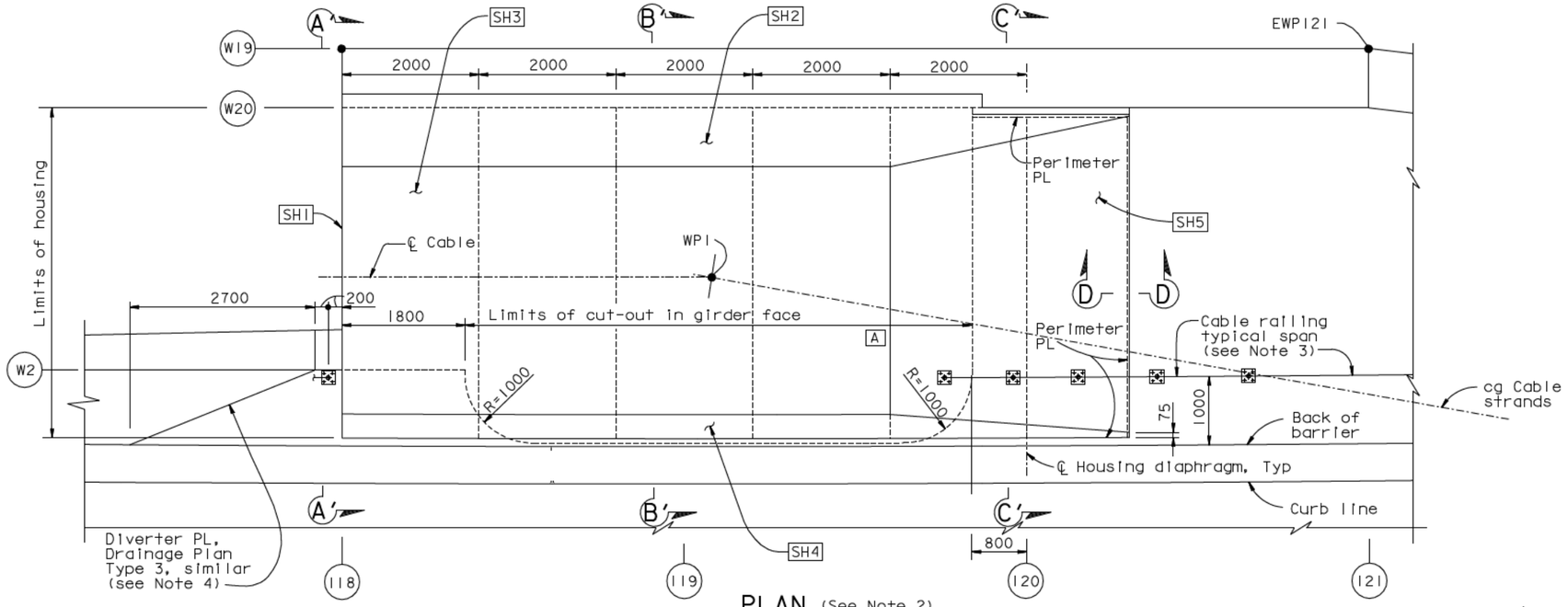

PLAN (See Note 2)

EAST SADDLE HOUSING (Westbound)

1:40

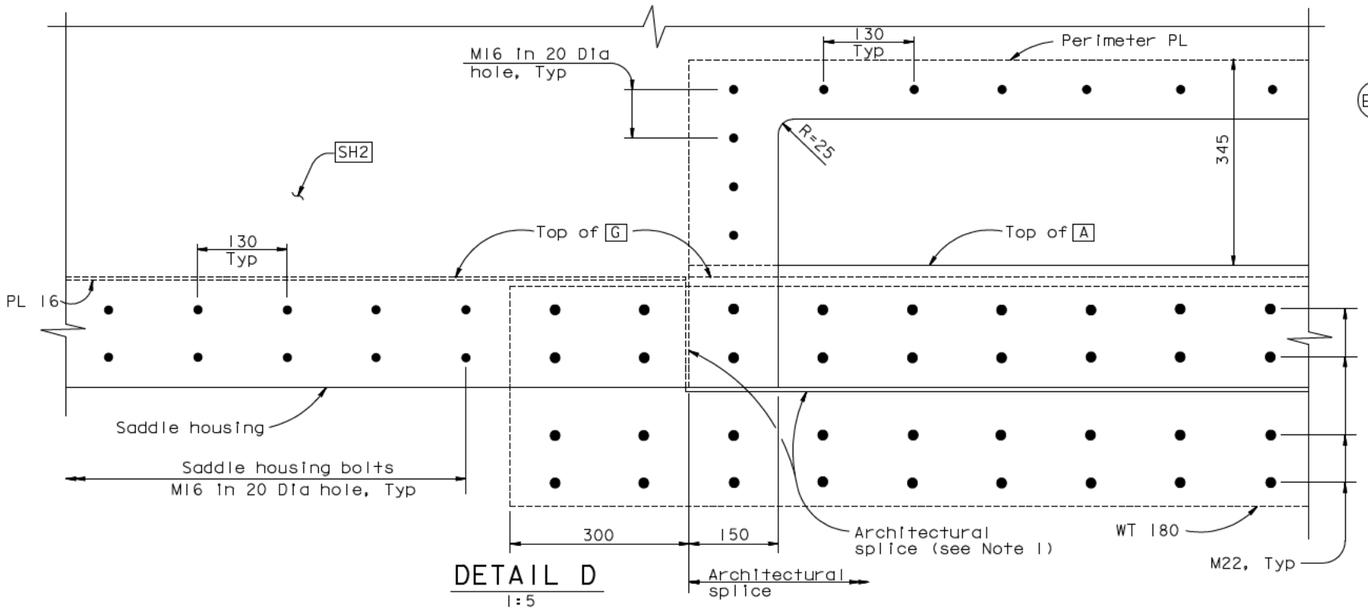

DETAIL D

1:5

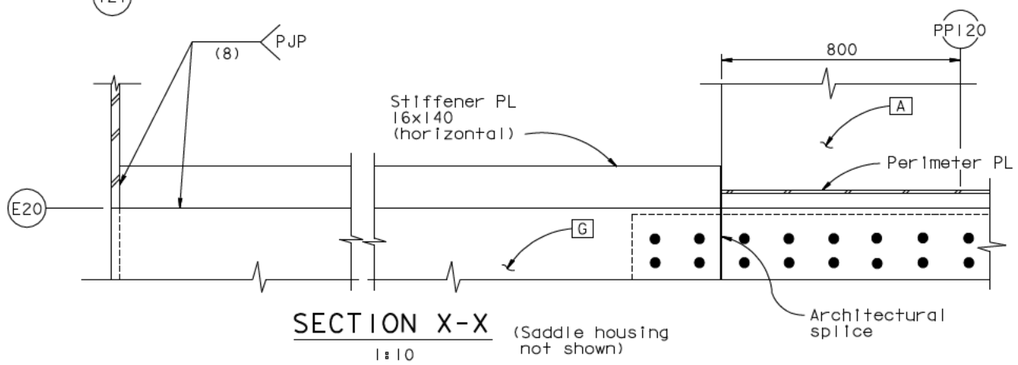

SECTION X-X (Saddle housing not shown)

1:10

NOTES:

1. For other architectural splice details, see "Girder at East Transition Details No.3" sheet.
2. Longitudinal stiffeners in saddle housing are not shown in plan for clarity.
3. For Bll-47 cable railing details, see "Standard Plans".
4. For diverter PL details, see "Deck Drainage Details No.1" sheet.
5. For Sections A'-A' and B'-B', see "East Saddle Housing Details No.1" sheet.
6. For Section C'-C', see "East Saddle Housing Details No.3" sheet.
7. For Section D-D, see "East Saddle Housing Details No.2" sheet.

CONTRACT CHANGE ORDER NO. ____

SHEET ____ OF ____

REQUESTS FOR INFORMATION NOT ADDRESSED IN THIS CCO REMAIN IN FORCE

ALL DIMENSIONS ARE IN MILLIMETERS UNLESS OTHERWISE SHOWN

DIST.	COUNTY	ROUTE	KILOMETER POST TOTAL PROJECT	SHEET NO.	TOTAL SHEETS
04	SF	80	13.2/13.9	805S	1204

REGISTERED ENGINEER - CIVIL

09-01-11

PLANS APPROVAL DATE

Marwan N. Nader, No. C 054426, Exp. 12/31/11, CIVIL, REGISTERED PROFESSIONAL ENGINEER, STATE OF CALIFORNIA

The State of California or its officers or agents shall not be responsible for the accuracy or completeness of electronic copies of this plan sheet.

T.Y. LIN / MOFFATT & NICHOL
825 BATTERY STREET
SAN FRANCISCO, CA 94111

Caltrans now has a web site! To get to the web site, go to: http://www.dot.ca.gov

R. Vallzadeh/V. Toan/Y.L./W.L./F.C.
DESIGN OVERSIGHT
SIGN OFF DATE 09/01/11

MARK	DATE	DESCRIPTIONS	BY	CH'D	CCO#
0	09/01/11	EAST END OBG	GB	MN	87

REVISIONS

	BY	CHECKED
DESIGN	D. Turner	G. Baker
DETAILS	D. Turner	G. Baker
QUANTITIES	D. Turner	G. Baker

PREPARED FOR THE STATE OF CALIFORNIA DEPARTMENT OF TRANSPORTATION

R. Manzanarez
PROJECT ENGINEER

BRIDGE NO. 34-0006L/R
KILOMETER POST 13.2/13.9

SAN FRANCISCO OAKLAND BAY BRIDGE
EAST SPAN SEISMIC SAFETY PROJECT
SELF-ANCHORED SUSPENSION BRIDGE (SUPERSTRUCTURE & TOWER)

EAST SADDLE HOUSING DETAILS NO. 1A

Rev. Date: 5-18-98

ORIGINAL SCALE IN MILLIMETERS FOR REDUCED PLANS 0 10 20 30 40 50 60 70 80 90 100

CU 04
EA 0120F1

DISREGARD PRINTS BEARING EARLIER REVISION DATES

REVISION DATES (PRELIMINARY STAGE ONLY): 09/01/11

SHEET 388S1 OF

FILE -> I:\bb\04-0120F1\sas\contract plans and cco\cco\cco#87\1-original 09-01-11\dgn\agshd05a.dgn

100 % PS&E

TIME PLOTTED -> 14:00:00

DATE PLOTTED -> 30 AUG 2011

USERNAME -> ALtshansk

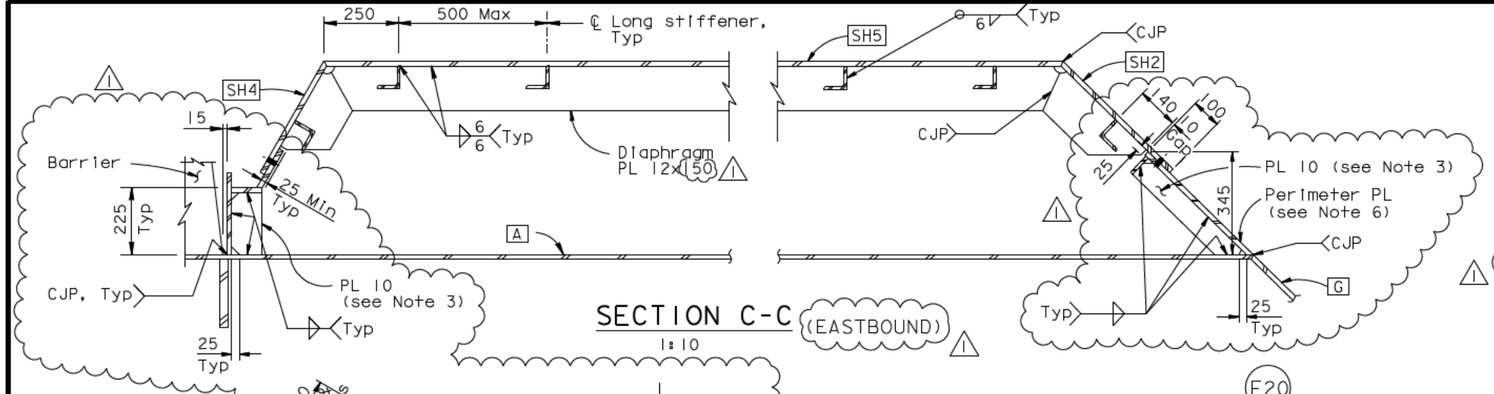

SECTION C-C (EASTBOUND)
1:10

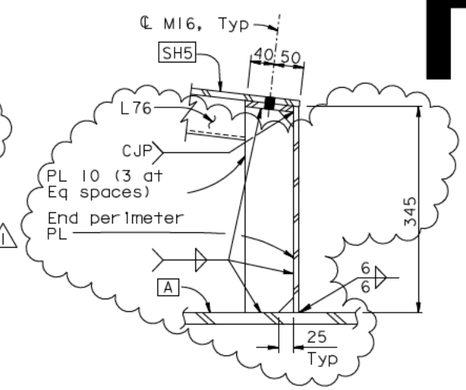

SECTION D-D
1:5

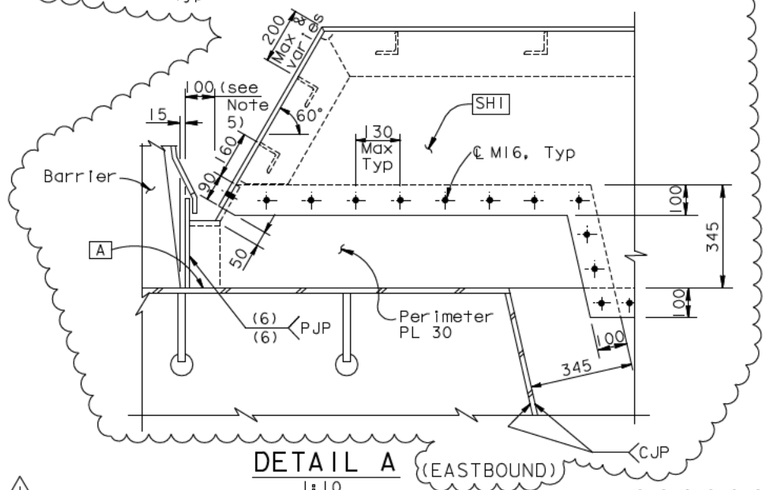

DETAIL A (EASTBOUND)
1:10

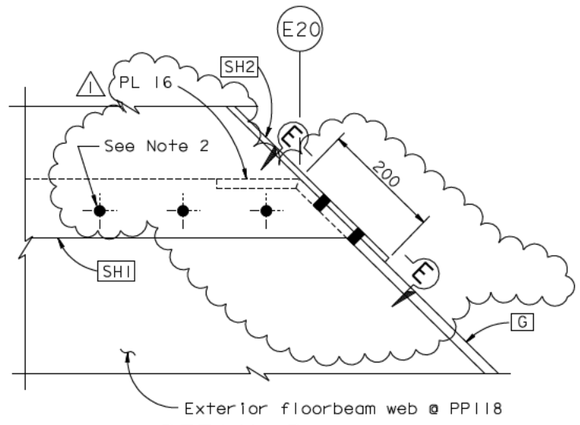

DETAIL B
1:5

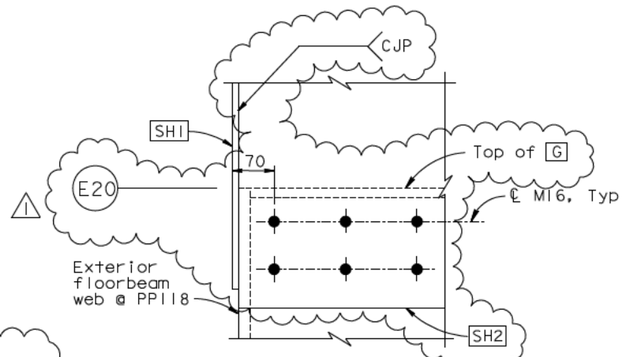

VIEW E-E
1:5

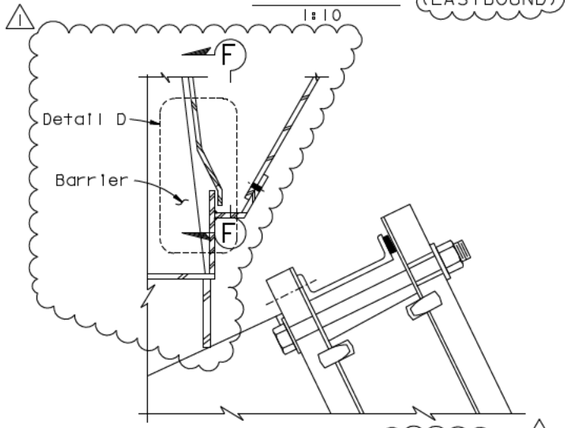

DETAIL C (EASTBOUND)
1:10

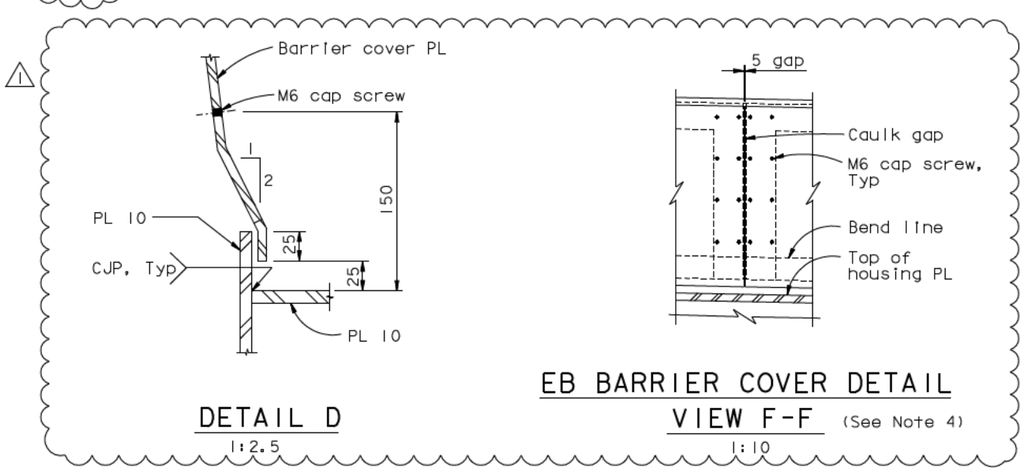

DETAIL D
1:2.5

EB BARRIER COVER DETAIL
VIEW F-F (See Note 4)
1:10

NOTES:

1. All horizontal dimensions are taken parallel to Girder face A.
2. At the Contractor's option, oversized holes may be used for MI6 bolts in housing and web PL.
3. Spacing of PL 10 to match spacing of PL 12 diaphragm.
4. For other barrier details not shown, see "Barrier Details" sheets.
5. The housing perimeter PL is fabricated straight. Dimension is 100 from PP118 to PP119 and thereafter varies.
6. At the segment splice, upstation from PP120, the saddle housing perimeter PL shall be cut to fit the deck contour. The top edge of the perimeter PL shall be straight and level with respect to the saddle housing.

Caltrans Metric

DIST.	COUNTY	ROUTE	KILOMETER POST TOTAL PROJECT	SHEET NO.	TOTAL SHEETS
04	SF	80	13.2/13.9	806R	1204

George Baker
REGISTERED ENGINEER - CIVIL
12-6-04
PLANS APPROVAL DATE

REGISTERED PROFESSIONAL ENGINEER George S. Baker No. C57112 Exp. 12/31/05 CIVIL STATE OF CALIFORNIA

The State of California or its officers or agents shall not be responsible for the accuracy or completeness of electronic copies of this plan sheet.

T.Y. LIN / MOFFATT & NICHOL
825 BATTERY STREET
SAN FRANCISCO, CA 94111

Caltrans now has a web site! To get to the web site, go to: http://www.dot.ca.gov

REGISTERED PROFESSIONAL ENGINEER Marwan N. Nader No. C 054426 Exp. 12/31/11 CIVIL STATE OF CALIFORNIA

FOR REVISIONS ONLY

CONTRACT CHANGE ORDER NO. ____
SHEET ___ OF ___

REQUESTS FOR INFORMATION NOT ADDRESSED IN THIS CCO REMAIN IN FORCE

ALL DIMENSIONS ARE IN MILLIMETERS UNLESS OTHERWISE SHOWN

R. Vallzadeh/V. Toan/Y.L./W.L./F.C.
DESIGN OVERSIGHT
SIGN OFF DATE 09/01/11

MARK	DATE	DESCRIPTIONS	BY	CH'D	CCO#
1	09/01/11	EAST END OBG	GB	MN	87

REVISIONS

	BY	CHECKED
DESIGN	G. Baker	T. McMeans
DETAILS	C. Mauch	T. McMeans
QUANTITIES	C. Mauch	D. Harrison

PREPARED FOR THE STATE OF CALIFORNIA DEPARTMENT OF TRANSPORTATION

R. Manzanarez
PROJECT ENGINEER

BRIDGE NO. 34-0006L/R
KILOMETER POST 13.2/13.9

SAN FRANCISCO OAKLAND BAY BRIDGE
EAST SPAN SEISMIC SAFETY PROJECT
SELF-ANCHORED SUSPENSION BRIDGE (SUPERSTRUCTURE & TOWER)

EAST SADDLE HOUSING DETAILS NO. 2

Rev. Date: 5-18-98

ORIGINAL SCALE IN MILLIMETERS FOR REDUCED PLANS 0 10 20 30 40 50 60 70 80 90 100

CU 04
EA 0120F1

DISREGARD PRINTS BEARING EARLIER REVISION DATES

REVISION DATES (PRELIMINARY STAGE ONLY): 05/18/99 08/02/99 05/31/01 04/08/02 07/01/02 12/19/02

SHEET 389R1 OF

FILE -> I:\bb\04-012001\sas\contract plans and cco\cco\cco#87\1-original 09-01-11\dgn\agshd06.dgn

USERNAME -> ALishansk DATE PLOTTED -> 30 AUG 2011 TIME PLOTTED -> 14:02:58

100 % PS&E

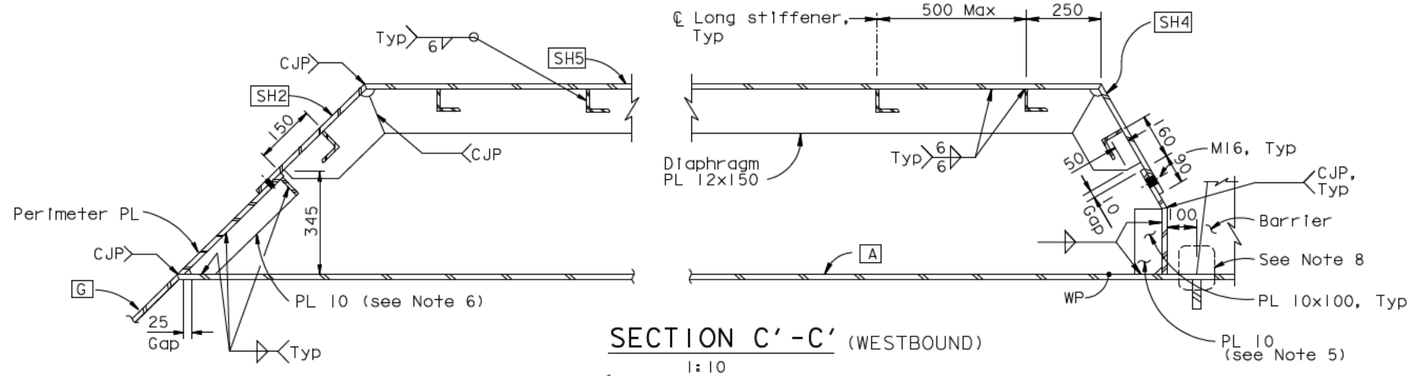

SECTION C'-C' (WESTBOUND)
1:10

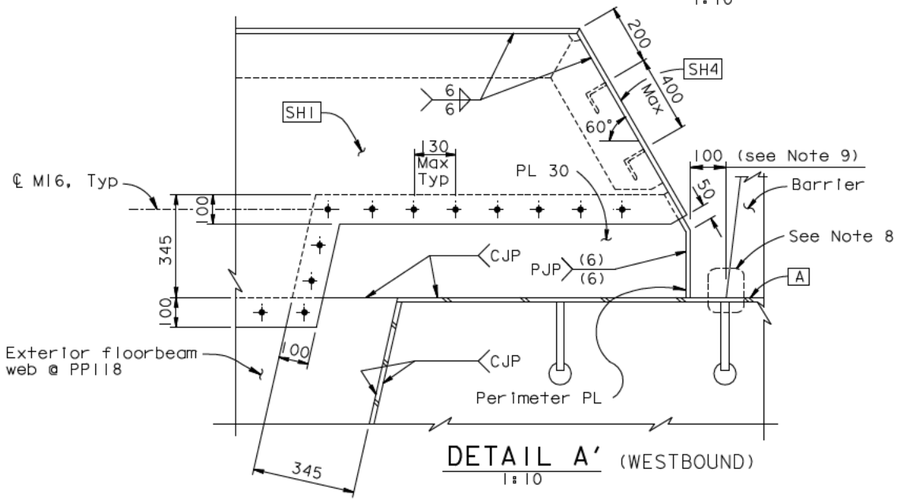

DETAIL A' (WESTBOUND)
1:10

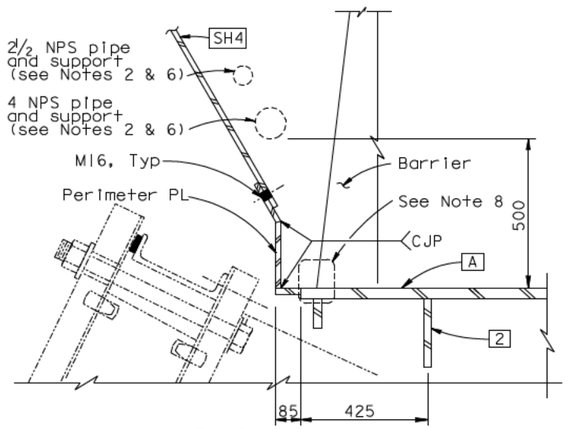

DETAIL C' (WESTBOUND)
1:10

CONTRACT CHANGE ORDER NO. ____
SHEET ___ OF ___

REQUESTS FOR INFORMATION NOT ADDRESSED IN THIS CCO REMAIN IN FORCE

NOTES:

1. All horizontal dimensions are taken parallel to girder Face A.
2. For pipe and pipe support locations and pipe support details, see "Road Plans".
3. At the Contractor's option, long slotted holes in the horizontal direction may be used in the perimeter PL only, subject to review and approval of the Engineer.
4. At the Contractor's option, oversized holes may be used in housing and web PL at PP118 only, subject to review and approval of the Engineer.
5. Spacing of PL 10 to match spacing of PL 12 diaphragm.
6. 4 NPS supports shall be offset from 2½ NPS supports downstation by 900 mm.
7. For barrier details, see "Barrier Details" sheet.
8. For barrier diverter PL details, see "Deck Drainage Details No.2" sheet.
9. The housing perimeter PL is fabricated straight. Dimension is 100 from PP118 to PP119 and thereafter varies.

ALL DIMENSIONS ARE IN MILLIMETERS UNLESS OTHERWISE SHOWN

DIST.	COUNTY	ROUTE	KILOMETER POST TOTAL PROJECT	SHEET NO.	TOTAL SHEETS
04	SF	80	13.2/13.9	806SI	1204

REGISTERED ENGINEER - CIVIL
09-01-11
PLANS APPROVAL DATE
The State of California or its officers or agents shall not be responsible for the accuracy or completeness of electronic copies of this plan sheet.

REGISTERED PROFESSIONAL ENGINEER — Marwan N. Nader — No. C 054426 — Exp. 12/31/11 — CIVIL — STATE OF CALIFORNIA

T.Y. LIN / MOFFATT & NICHOL
825 BATTERY STREET
SAN FRANCISCO, CA 94111

Caltrans now has a web site! To get to the web site, go to: http://www.dot.ca.gov

MARK	DATE	REVISIONS	BY	CH'D	CCO#
0	09/01/11	EAST END OBG	GB	MN	87

	BY		CHECKED
DESIGN	D. Turner		G. Baker
DETAILS	D. Turner		G. Baker
QUANTITIES	D. Turner		G. Baker

PREPARED FOR THE STATE OF CALIFORNIA DEPARTMENT OF TRANSPORTATION

R. Vallzadeh/V. Toan/Y.L./W.L./F.C.
DESIGN OVERSIGHT
SIGN OFF DATE 09/01/11

R. Manzanarez
PROJECT ENGINEER

BRIDGE NO. 34-0006L/R
KILOMETER POST 13.2/13.9

SAN FRANCISCO OAKLAND BAY BRIDGE
EAST SPAN SEISMIC SAFETY PROJECT
SELF-ANCHORED SUSPENSION BRIDGE
(SUPERSTRUCTURE & TOWER)

EAST SADDLE HOUSING DETAILS NO. 3

Rev. Date: 5-18-98

ORIGINAL SCALE IN MILLIMETERS FOR REDUCED PLANS 0 10 20 30 40 50 60 70 80 90 100

CU 04
EA 0120F1

DISREGARD PRINTS BEARING EARLIER REVISION DATES

REVISION DATES (PRELIMINARY STAGE ONLY) 09/01/11

SHEET 389SI OF

FILE -> I:\bb\04-012001\sas\contract plans and cco\cco\cco#87\1-original 09-01-11\dgn\agshd06a.dgn

100% PS&E
TIME PLOTTED -> 14:06:36
DATE PLOTTED -> 30 AUG 2011
USERNAME -> ALishansk

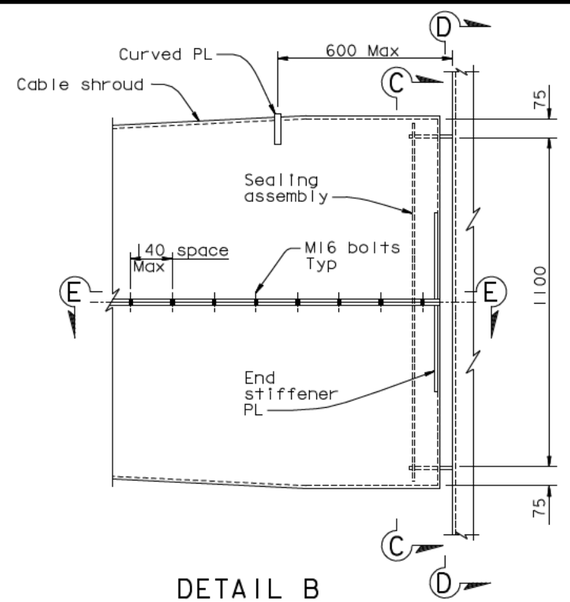

DETAIL B
1:10

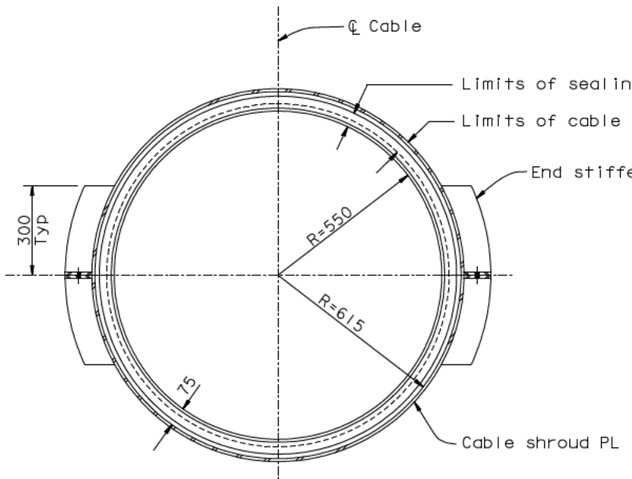

SECTION C-C
1:10

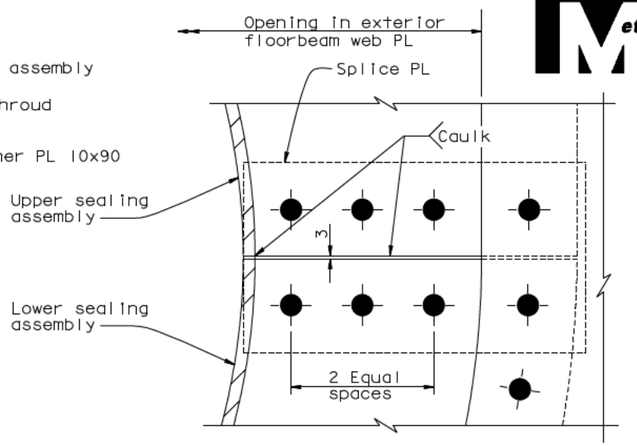

DETAIL D
1:2.5

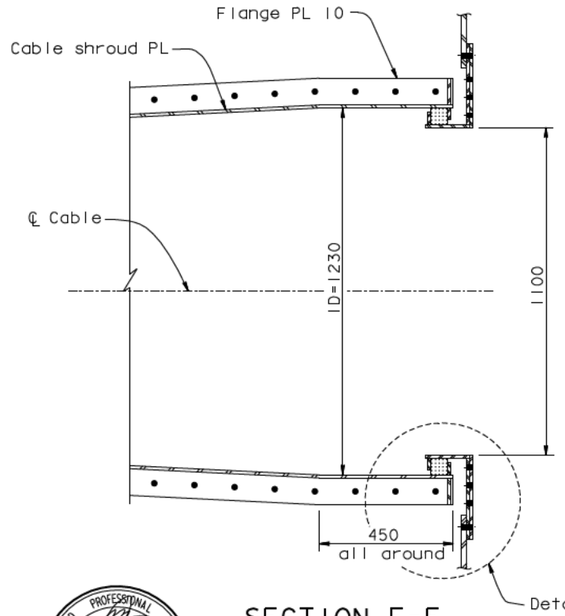

SECTION E-E
1:10

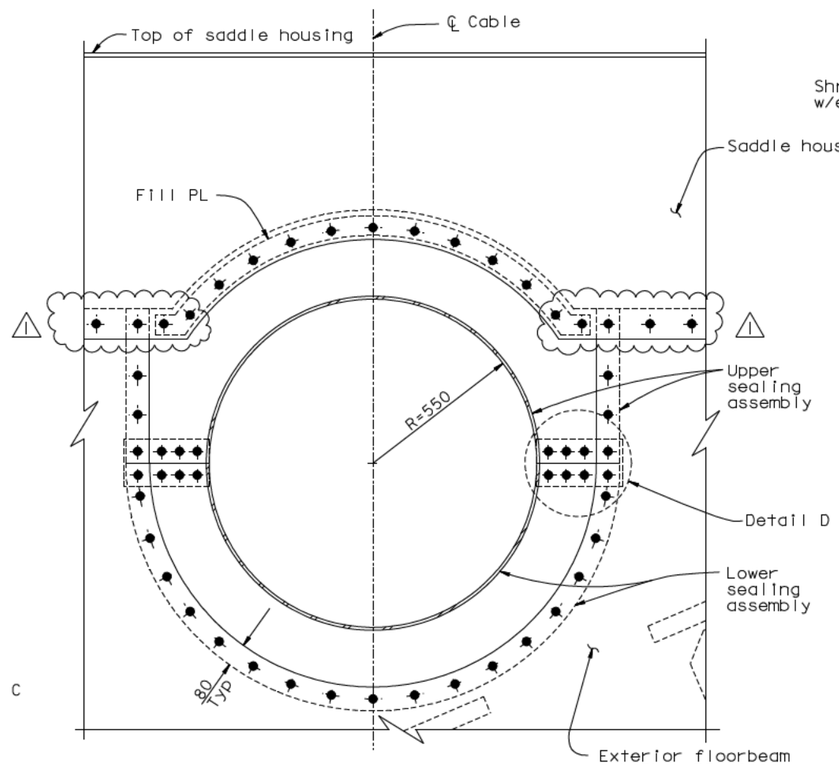

SECTION D-D
1:10

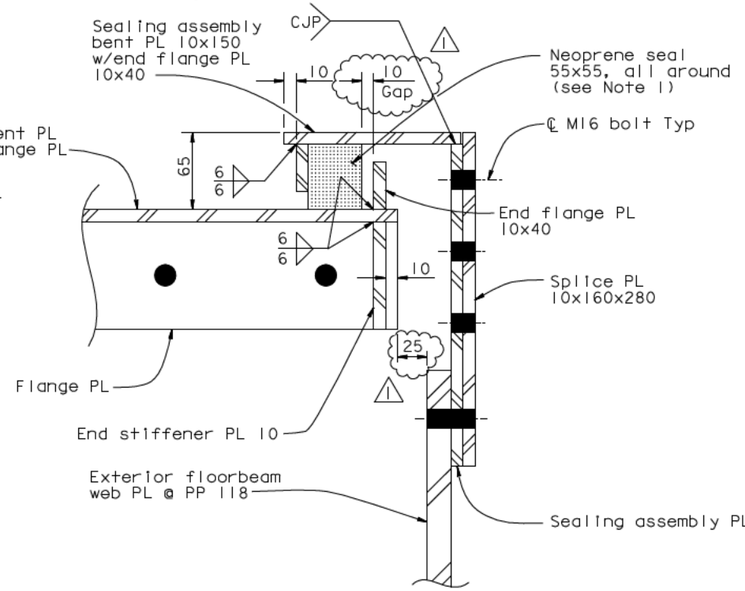

DETAIL C
1:2.5

NOTES:

1. Neoprene seal shall be wrapped around sealing assembly bent PL and shall have no gap around the perimeter. Seal shall be compressed to fit during shroud installation.

DIST.	COUNTY	ROUTE	KILOMETER POST TOTAL PROJECT	SHEET NO.	TOTAL SHEETS
04	SF	80	13.2/13.9	811R1	1204

George Baker
REGISTERED ENGINEER - CIVIL
12-6-04
PLANS APPROVAL DATE

REGISTERED PROFESSIONAL ENGINEER — George S. Baker — No. C 57112 — Exp. 12/31/05 — CIVIL — STATE OF CALIFORNIA

The State of California or its officers or agents shall not be responsible for the accuracy or completeness of electronic copies of this plan sheet.

T.Y. LIN / MOFFATT & NICHOL
825 BATTERY STREET
SAN FRANCISCO, CA 94111

Caltrans now has a web site! To get to the web site, go to: http://www.dot.ca.gov

REGISTERED PROFESSIONAL ENGINEER — Marwan N. Nader — No. C 054426 — Exp. 12/31/13 — CIVIL — STATE OF CALIFORNIA

FOR REVISIONS ONLY

CONTRACT CHANGE ORDER NO. ____
SHEET ___ OF ___

REQUESTS FOR INFORMATION NOT ADDRESSED IN THIS CCO REMAIN IN FORCE

ALL DIMENSIONS ARE IN MILLIMETERS UNLESS OTHERWISE SHOWN

MARK	DATE	DESCRIPTIONS	BY	CH'D	CCO#
1	04/18/12	EAST END OBG	MN	GB	87

REVISIONS

R. Vallzadeh/V. Toan/Y.L./W.L./F.C.
DESIGN OVERSIGHT
SIGN OFF DATE 04/18/12

	BY	CHECKED
DESIGN	G. Baker	T. McMeans
DETAILS	D. Turner	T. McMeans
QUANTITIES	C. Mauch	D. Harrison

PREPARED FOR THE STATE OF CALIFORNIA DEPARTMENT OF TRANSPORTATION

R. Manzanarez
PROJECT ENGINEER

BRIDGE NO. 34-0006L/R
KILOMETER POST 13.2/13.9

SAN FRANCISCO OAKLAND BAY BRIDGE
EAST SPAN SEISMIC SAFETY PROJECT
SELF-ANCHORED SUSPENSION BRIDGE (SUPERSTRUCTURE & TOWER)

EAST CABLE SHROUD DETAILS NO. 2

Rev. Date: 5-18-98

ORIGINAL SCALE IN MILLIMETERS FOR REDUCED PLANS 0 10 20 30 40 50 60 70 80 90 100

CU 04
EA 0120F1

DISREGARD PRINTS BEARING EARLIER REVISION DATES

REVISION DATES (PRELIMINARY STAGE ONLY): 05/15/99 08/02/99 05/31/01 04/08/02 07/01/02 12/19/02

SHEET 394R1 OF

FILE -> I:\bb\04-0120I\sas\contract plans and cco\cco\cco#87\temp\agshr06.dgn

USERNAME -> DWinrow DATE PLOTTED -> 18 APR 2012 TIME PLOTTED -> 11:32:09

100 % PS&E

DIST.	COUNTY	ROUTE	KILOMETER POST TOTAL PROJECT	SHEET NO.	TOTAL SHEETS
04	SF	80	13.2/13.9	877R3	1204

George Baker
REGISTERED ENGINEER - CIVIL
12-6-04
PLANS APPROVAL DATE

The State of California or its officers or agents shall not be responsible for the accuracy or completeness of electronic copies of this plan sheet.

T.Y. LIN / MOFFATT & NICHOL
825 BATTERY STREET
SAN FRANCISCO, CA 94111

Caltrans now has a web site! To get to the web site, go to: http://www.dot.ca.gov

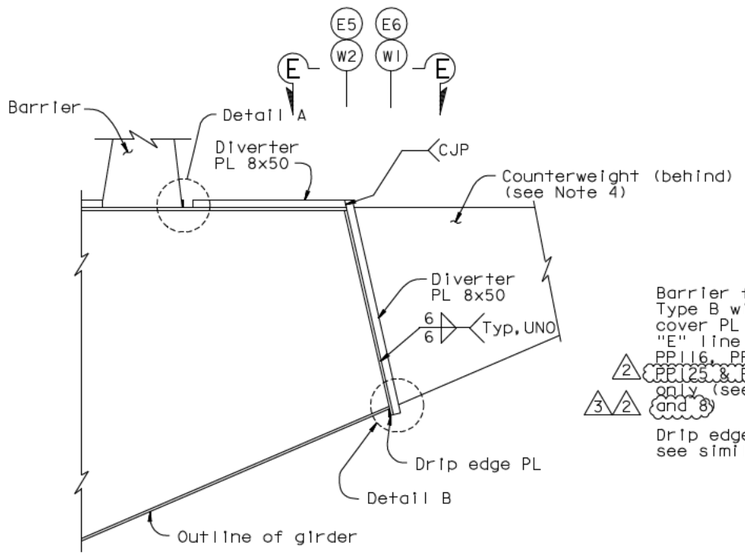

SECTION A-A
(SECTION A'-A' SIMILAR) (see Note 6)

1:20

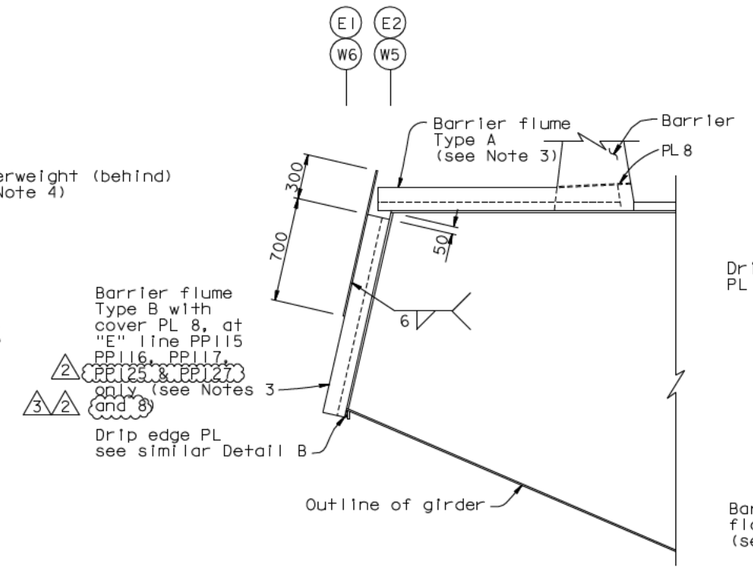

SECTION B-B

1:20

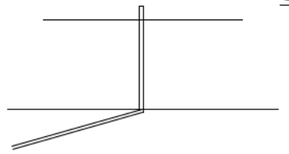

SECTION E-E

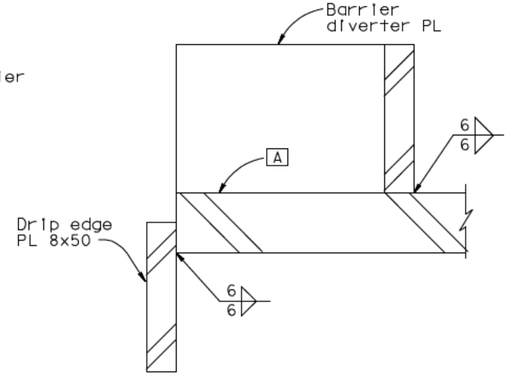

SECTION C-C

1:1

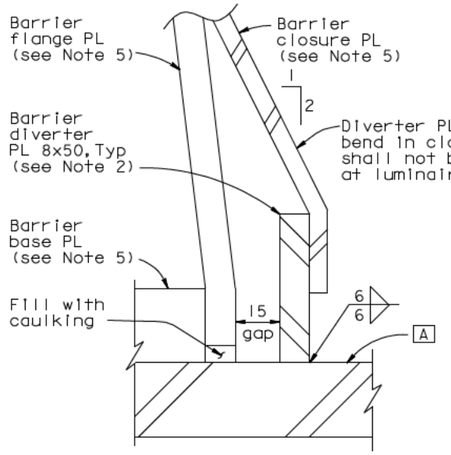

DETAIL A

1:1

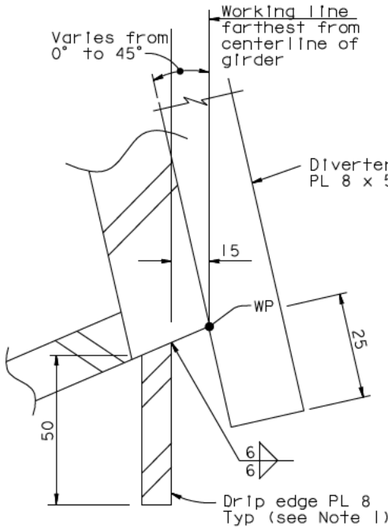

DETAIL B

1:1

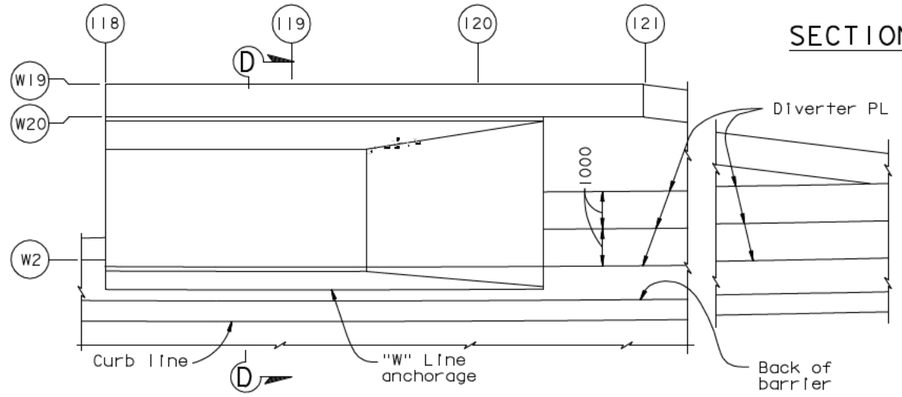

DRAINAGE PLAN AT "W" LINE ANCHORAGE

1:100

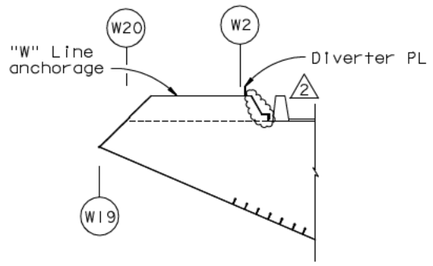

SECTION D-D

1:100

NOTES:

1. Drip edge plate shall be continuous along length of typical girder at working lines W1, W6, E1 and E6. For girder transitions at pier W2, tower and east approach, drip edge plate shall be continuous along bottom corner of working line farthest from the center line of girder.
2. Barrier diverter plate shall be continuous along barriers near working lines W2 and E5, unless otherwise shown.
3. For barrier flume details, see "Deck Drainage Details No.3" sheet.
4. For counterweight details, see "Typical Girder Details" sheets.
5. For barrier details, see "Barrier Details" sheets.
6. Use similar detail where diverter PLs meet edge of girder top face at "W" line anchorage and line E5 at PP 8.5.
7. At all drip edge and diverter plate terminations, the end 40 mm of weld shall be CJP.
2 8. Type B flume may be omitted at PP 125 and PP 127 if there is interference with the bikepath structure.

Daniel D. Turner
REGISTERED PROFESSIONAL ENGINEER
No. C 65033
Exp. 06/30/13
CIVIL
STATE OF CALIFORNIA

FOR REVISIONS ONLY

CONTRACT CHANGE ORDER NO. ____
SHEET ___ OF ___

REQUESTS FOR INFORMATION NOT ADDRESSED IN THIS CCO REMAIN IN FORCE

MARK	DATE	DESCRIPTIONS	BY	CH'D	CCO#
3	01/04/13	EAST END OBG	DT	GB	87
2	09/01/11	EAST END OBG	DT	GB	87
1	08/24/07	BARRIER MODIFICATIONS	GB	DT	44

REVISIONS

ALL DIMENSIONS ARE IN MILLIMETERS UNLESS OTHERWISE SHOWN

	BY	CHECKED
DESIGN	G. Baker	T. Ho
DETAILS	D. Turner	T. Ho
QUANTITIES	G. Baker	D. Harrison

PREPARED FOR THE STATE OF CALIFORNIA DEPARTMENT OF TRANSPORTATION

R. Manzanarez
PROJECT ENGINEER

BRIDGE NO. 34-0006L/R
KILOMETER POST 13.2/13.9

SAN FRANCISCO OAKLAND BAY BRIDGE
EAST SPAN SEISMIC SAFETY PROJECT
SELF-ANCHORED SUSPENSION BRIDGE (SUPERSTRUCTURE & TOWER)

DECK DRAINAGE DETAILS NO. 2

R. Valizadeh/V. Toan/Y.L./W.L./F.C.
DESIGN OVERSIGHT
SIGN OFF DATE 01/04/13

Rev. Date: 5-18-98

ORIGINAL SCALE IN MILLIMETERS FOR REDUCED PLANS 0 10 20 30 40 50 60 70 80 90 100

CU 04
EA 0120F1

DISREGARD PRINTS BEARING EARLIER REVISION DATES

REVISION DATES (PRELIMINARY STAGE ONLY): 01/15/99 | 05/15/99 | 09/02/99 | 05/31/01 | 09/28/02 | 07/01/02 | 12/13/02 | 11/13/05

SHEET 460R3 OF

FILE -> L:\BB\04-012001\SAS\Contract Plans and CCO\CCO\CCO#87\5-Revision 01-04-13\DGN\akdkd02.dgn

USERNAME -> DWinrow DATE PLOTTED -> 04 JAN 2013 TIME PLOTTED -> 10:03:13

100 % PS&E

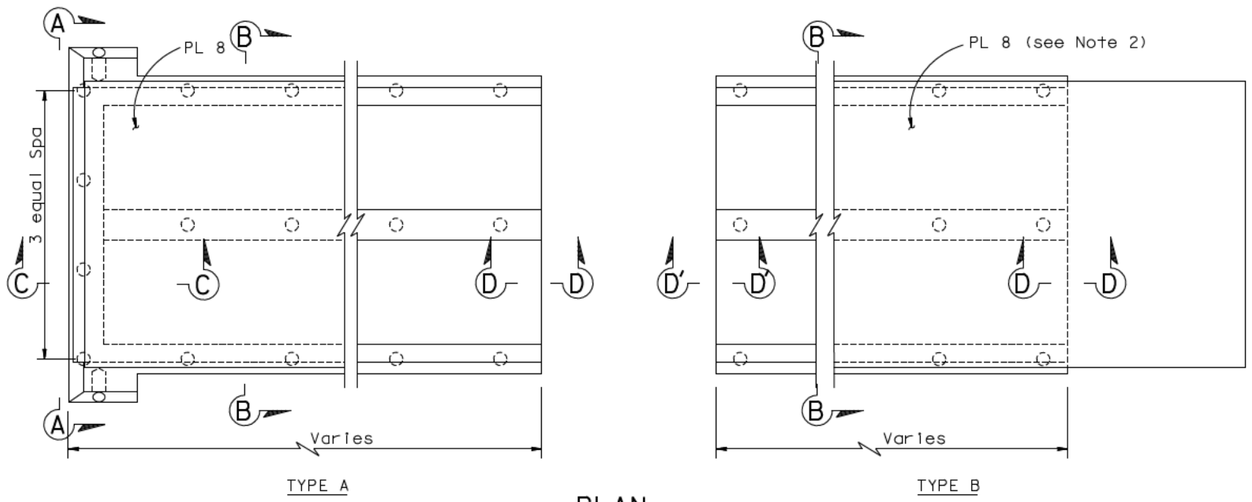

PLAN

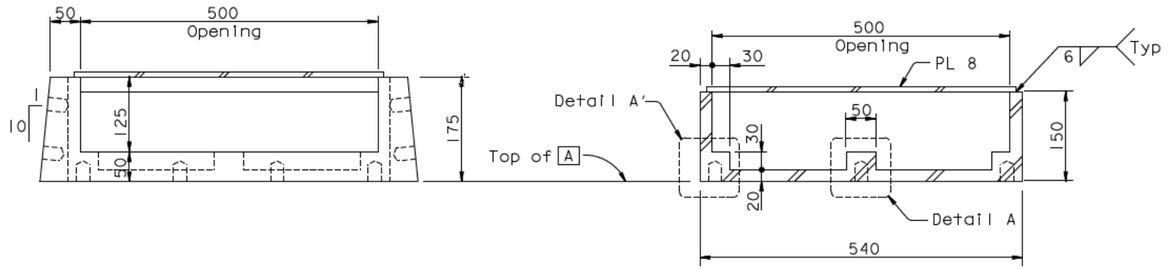

SECTION B-B

END VIEW A-A

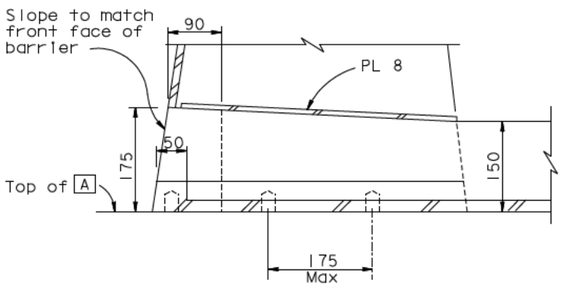

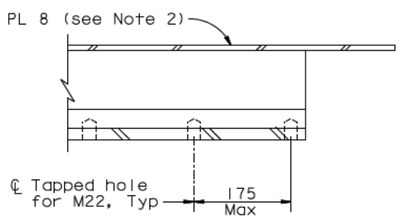

SECTION C-C

SECTION D-D (Section D'-D' similar)

BARRIER FLUME DETAILS (Drainage Type 2 only)
1:5

DRAINAGE TYPE LOCATION TABLE
See Note 1

PANEL POINT					
TYPE 1			TYPE 2		TYPE 3
W2		E5	W5	E2	E5
10	66	19	9	West of 11	16
12	68	25	12	19	22
14	70	31	18	25	28
16	72	37	23	29	34
18	74	49	25	35	46
20	76	55	30	39	52
22	78	61	35	45	58
24	80	67	37	49	64
26	82	73	46	55	70
28	84	79	48	59	76
30	86	85	53	65	82
32	88	91	55	69	88
34	90	97	61	75	94
36	92	103	66	79	100
38	94	108	71	85	106
40	96	115	73	89	112
42	98	117	78	95	120
44	100	124	84	99	127
46	102		89	105	
48	104		91	111	
50	106		96	115	
52	110		101	116	
54	112		103	117	
56	114		107	123	
58	116		113	125	
60	118		116	127	
62			117	128	
64			120.5		
			121		
			122		
			123		
			123.5		
			124		
			127		
			127.5		
			3		

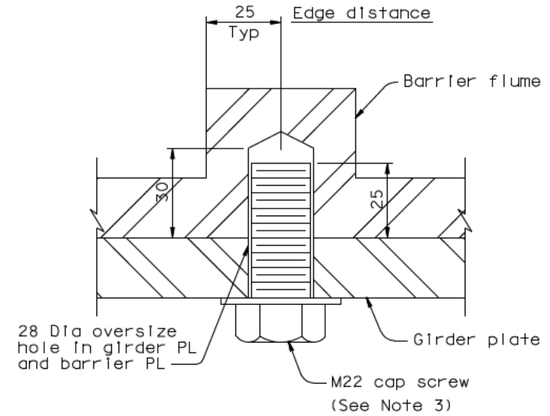

DETAIL A (A' similar)
1:1

NOTES:

1. Drainage types 1, 2 and 3 are located to the nearest working line indicated. Types 2 and 3 are located east of the panel point unless noted otherwise. Type 1 is located west of panel point.
2. For the extent of PL 8 at Type B Flume, see Section B-B, "Deck Drainage Details No.2" sheet.
3. Cap screws shall be galvanized A307 bolts and shall be used with a thread locking system.

Caltrans Metric

DIST.	COUNTY	ROUTE	KILOMETER POST TOTAL PROJECT	SHEET NO.	TOTAL SHEETS
04	SF	80	13.2/13.9	878R3	1204

George Baker
REGISTERED ENGINEER - CIVIL
12-6-04
PLANS APPROVAL DATE

REGISTERED PROFESSIONAL ENGINEER — George S. Baker — No. C57112 — Exp. 12/31/05 — CIVIL — STATE OF CALIFORNIA

The State of California or its officers or agents shall not be responsible for the accuracy or completeness of electronic copies of this plan sheet.

T.Y. LIN / MOFFATT & NICHOL
825 BATTERY STREET
SAN FRANCISCO, CA 94111

Caltrans now has a web site! To get to the web site, go to: http://www.dot.ca.gov

Daniel J. Turner — REGISTERED PROFESSIONAL ENGINEER — Daniel J. Turner — No. C 65033 — Exp. 06/30/13 — CIVIL — STATE OF CALIFORNIA

FOR REVISIONS ONLY

CONTRACT CHANGE ORDER NO. ____
SHEET ___ OF ___

REQUESTS FOR INFORMATION NOT ADDRESSED IN THIS CCO REMAIN IN FORCE

MARK	DATE	DESCRIPTIONS	BY	CH'D	CCO#
3	09/01/11	EAST END OBG	DT	GB	87
2	06/13/08	BARRIER MODIFICATIONS	GB	DT	44
1	08/24/07	BARRIER MODIFICATIONS	GB	DT	44

REVISIONS

R. Vallzadeh/V. Toan/Y.L./W.L./F.C.
DESIGN OVERSIGHT
SIGN OFF DATE 09/01/11

	BY	CHECKED
DESIGN	G. Baker	T. Ho
DETAILS	D. Turner	T. Ho
QUANTITIES	G. Baker	D. Harrison

PREPARED FOR THE STATE OF CALIFORNIA DEPARTMENT OF TRANSPORTATION

R. Manzanarez
PROJECT ENGINEER

ALL DIMENSIONS ARE IN MILLIMETERS UNLESS OTHERWISE SHOWN

BRIDGE NO. 34-0006L/R
KILOMETER POST 13.2/13.9

SAN FRANCISCO OAKLAND BAY BRIDGE
EAST SPAN SEISMIC SAFETY PROJECT
SELF-ANCHORED SUSPENSION BRIDGE
(SUPERSTRUCTURE & TOWER)

DECK DRAINAGE DETAIL NO. 3

Rev. Date: 5-18-98

ORIGINAL SCALE IN MILLIMETERS FOR REDUCED PLANS 0 10 20 30 40 50 60 70 80 90 100

G 04
EA 9120F1

DISREGARD PRINTS BEARING EARLIER REVISION DATES

REVISION DATES (PRELIMINARY STAGE ONLY): 05/15/99 08/02/99 05/31/01 04/08/02 07/01/02 12/15/02

SHEET 461R3 OF

FILE -> I:\bb\04-012001\sas\contract plans and cco\cco\cco#87\1-original 09-01-11\dgn\akdkd03.dgn

USERNAME -> ALishansk DATE PLOTTED -> 30 AUG 2011 TIME PLOTTED -> 14:41:57

100 % PS&E

DIST.	COUNTY	ROUTE	KILOMETER POST TOTAL PROJECT	SHEET NO.	TOTAL SHEETS
04	SF	80	13.2/13.9	943R3	1204

George Baker
REGISTERED ENGINEER - CIVIL
12-6-04
PLANS APPROVAL DATE

REGISTERED PROFESSIONAL ENGINEER — George S. Baker — No. C57112 — Exp. 12/31/05 — CIVIL — STATE OF CALIFORNIA

The State of California or its officers or agents shall not be responsible for the accuracy or completeness of electronic copies of this plan sheet.

T.Y. LIN / MOFFATT & NICHOL
825 BATTERY STREET
SAN FRANCISCO, CA 94111

Caltrans now has a web site! To get to the web site, go to: http://www.dot.ca.gov

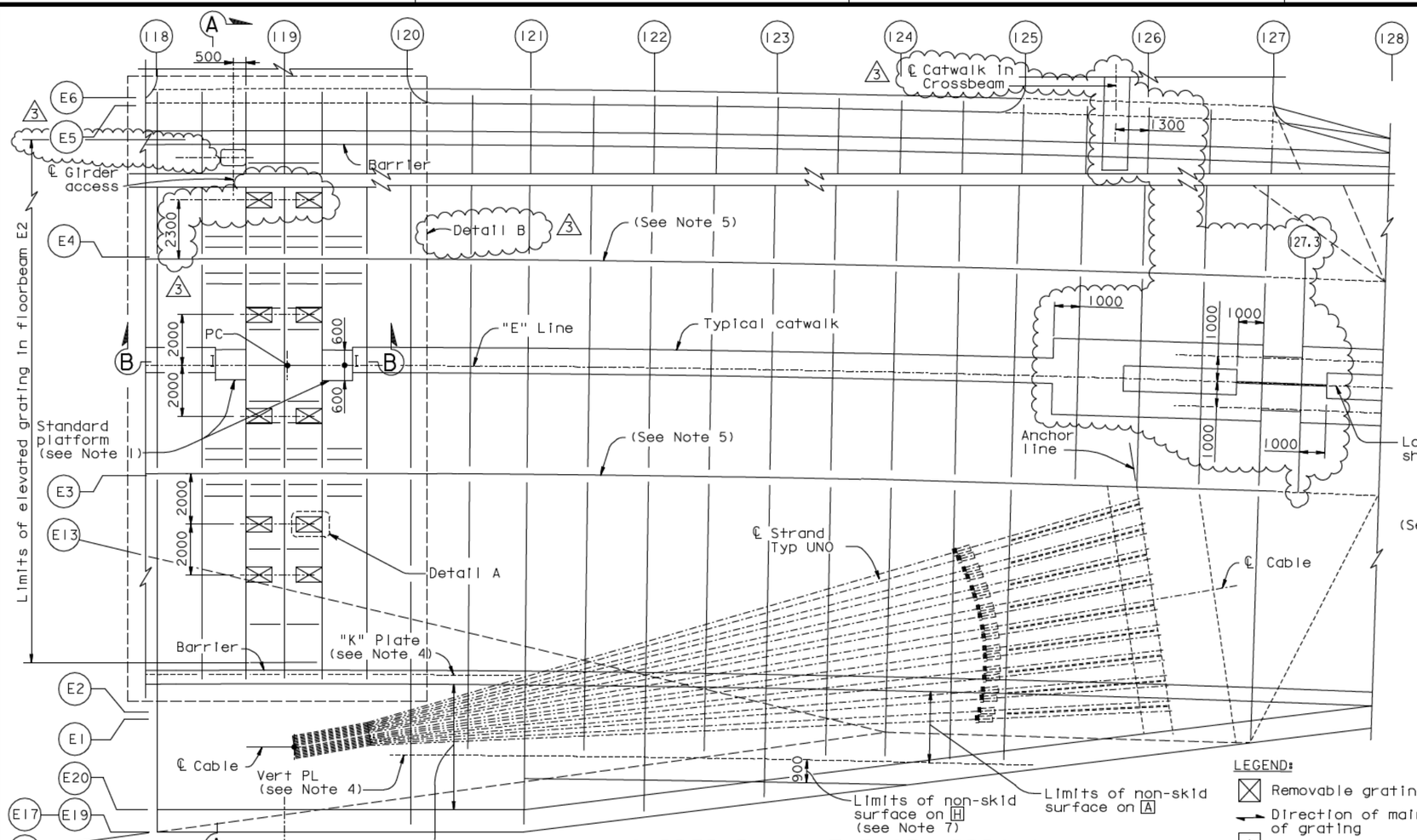

GIRDER PLAN AT EAST APPROACH
1:100

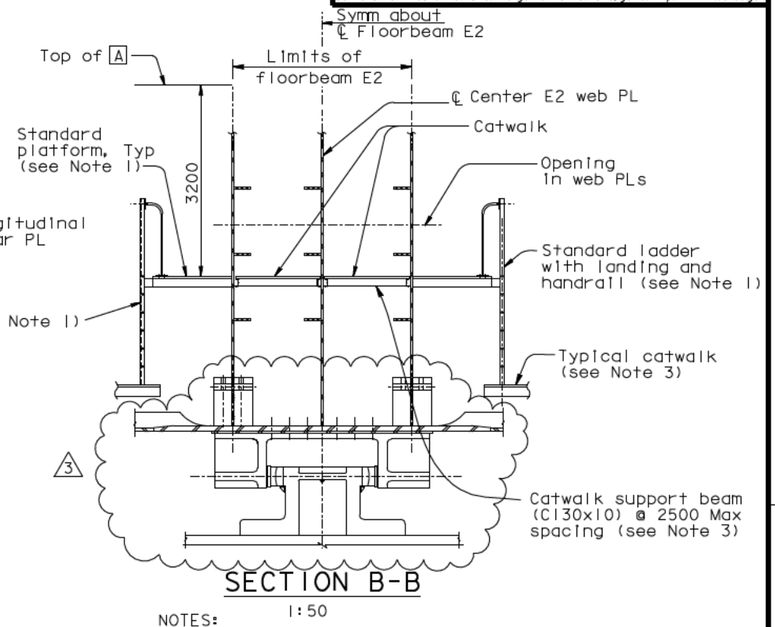

SECTION B-B
1:50

LEGEND:
- Removable grating access
- Direction of main reinforcement of grating
- A Girder Face designation A

NOTES:
1. For standard platform, ladder and railing, see "Tower Access Details" sheets. Channel 75 ladder rails shall be spaced at 500 mm back-to-back. Landing handrails shall be spaced at 500 mm clear or greater. At the contractor's option, it is acceptable to use A992 Gr 345 or A572 Gr 345 in lieu of A709 Gr 345 for channel 75.
2. For access openings and rungs, see "Typical Girder Details No.15", "Crossbeam At Pier E2", and "Girder At Pier E2" sheets.
3. For catwalk details not shown, see "Girder Access Details No.2" sheet.
4. For "K" plate and vertical plate access openings, see "Girder At East Transition Details" sheets.
5. For access openings in longitudinal shear plates, see "Typical Girder Details No.7" and "Girder At East Transition No.9" sheets.
6. For other access openings, see "Floorbeam At East Transition" sheets.
7. Within limits shown, apply non-skid surface to face H and the upper face of longitudinal stiffeners.
8. Locate crossbeam catwalk 1300 west of west side web.

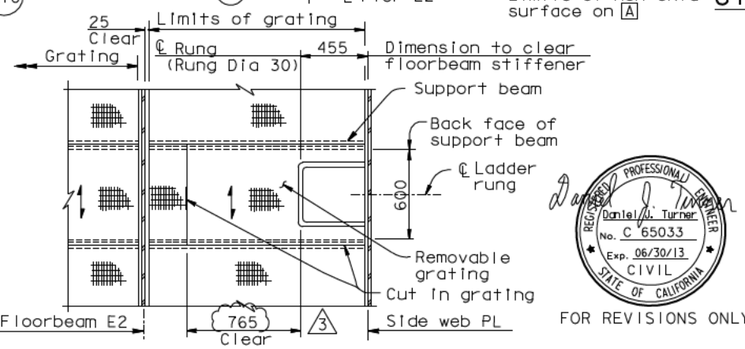

DETAIL A
1:20

CONTRACT CHANGE ORDER NO. ____
SHEET ____ OF ____

REQUESTS FOR INFORMATION NOT ADDRESSED IN THIS CCO REMAIN IN FORCE

Daniel J. Turner — REGISTERED PROFESSIONAL ENGINEER — Daniel J. Turner — No. C 65033 — Exp. 06/30/13 — CIVIL — STATE OF CALIFORNIA

FOR REVISIONS ONLY

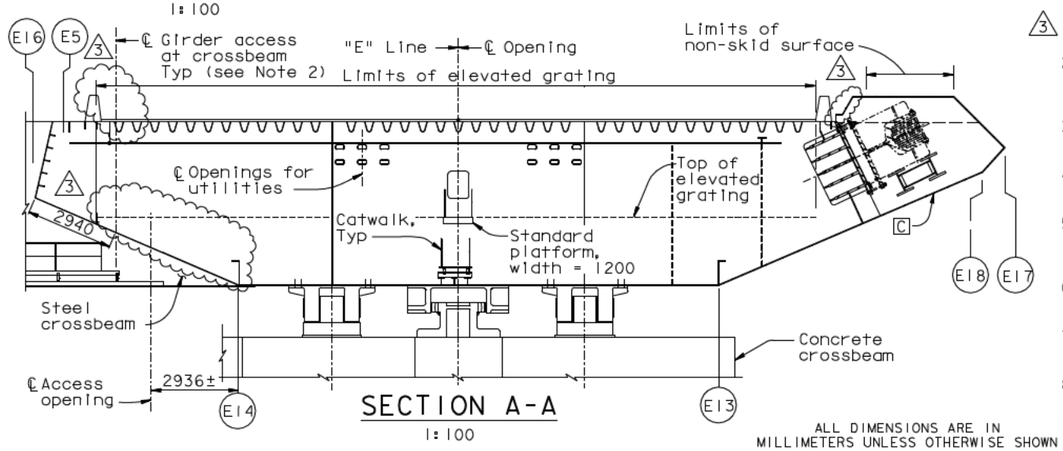

SECTION A-A
1:100

ALL DIMENSIONS ARE IN MILLIMETERS UNLESS OTHERWISE SHOWN

MARK	DATE	REVISIONS	BY	CH'D	CCO#
3	09/01/11	EAST END OBG	DT	GB	87
2	06/29/11	ADDITIONAL PAINTING	DT	JD	94
1	11/05/10	PP119 ACCESS & PP125 PLATES	GB	DT	86

DESIGN	BY G. Baker	CHECKED T. McMeans	
DETAILS	BY C. Mauch	CHECKED T. McMeans	
QUANTITIES	BY C. Mauch	CHECKED J. Leventini	

PREPARED FOR THE STATE OF CALIFORNIA DEPARTMENT OF TRANSPORTATION

R. Manzanarez
PROJECT ENGINEER

BRIDGE NO. 34-0006L/R
KILOMETER POST 13.2/13.9

SAN FRANCISCO OAKLAND BAY BRIDGE
EAST SPAN SEISMIC SAFETY PROJECT
SELF-ANCHORED SUSPENSION BRIDGE
(SUPERSTRUCTURE & TOWER)

GIRDER ACCESS DETAILS NO. 3

R. Vallzadeh/V. Toan/Y.L./W.L./F.C.
DESIGN OVERSIGHT
SIGN OFF DATE 09/01/11

Rev. Date: 5-18-98

ORIGINAL SCALE IN MILLIMETERS FOR REDUCED PLANS 0 10 20 30 40 50 60 70 80 90 100

CU 04
EA 0120F1

DISREGARD PRINTS BEARING EARLIER REVISION DATES

REVISION DATES (PRELIMINARY STAGE ONLY): 01/15/99 05/15/99 08/02/99 05/31/01 04/26/02 07/01/02 12/13/02 12/01/05

SHEET 526R3 OF

FILE -> I:\bb\04-012001\sas\contract plans and cco\cco\cco#87\1-original 09-01-11\dgn\akacc13.dgn

USERNAME -> ALishansk DATE PLOTTED -> 30 AUG 2011 TIME PLOTTED -> 14:16:14

100 % PS&E

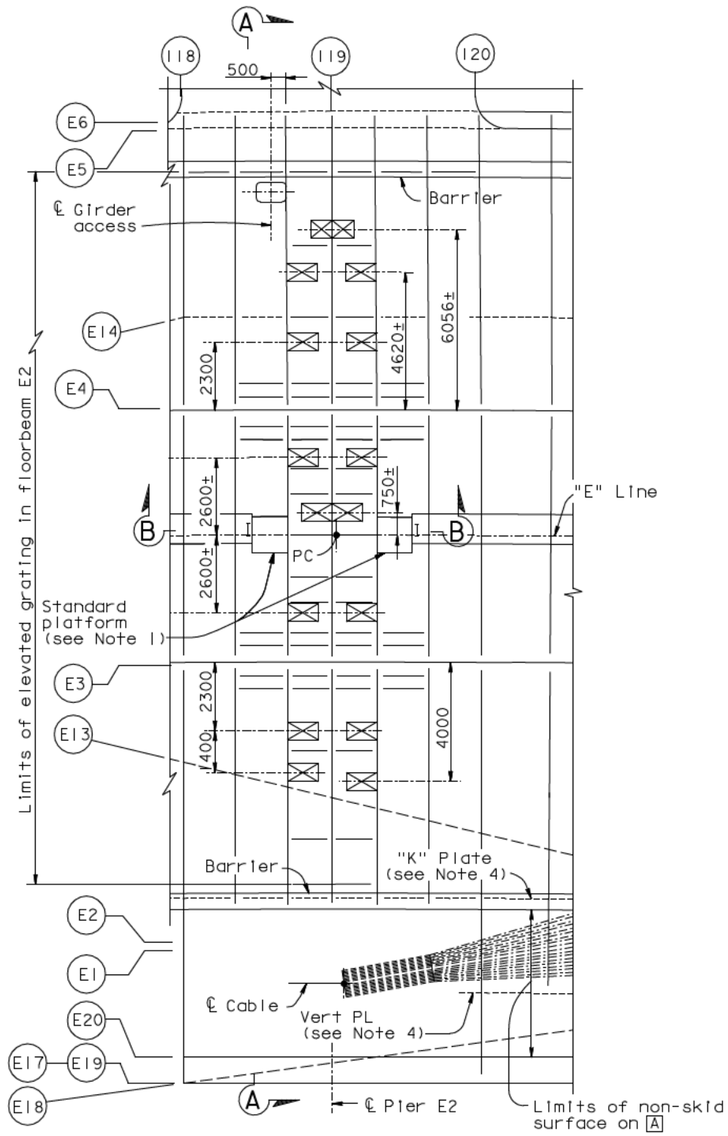

DETAIL B

1:100

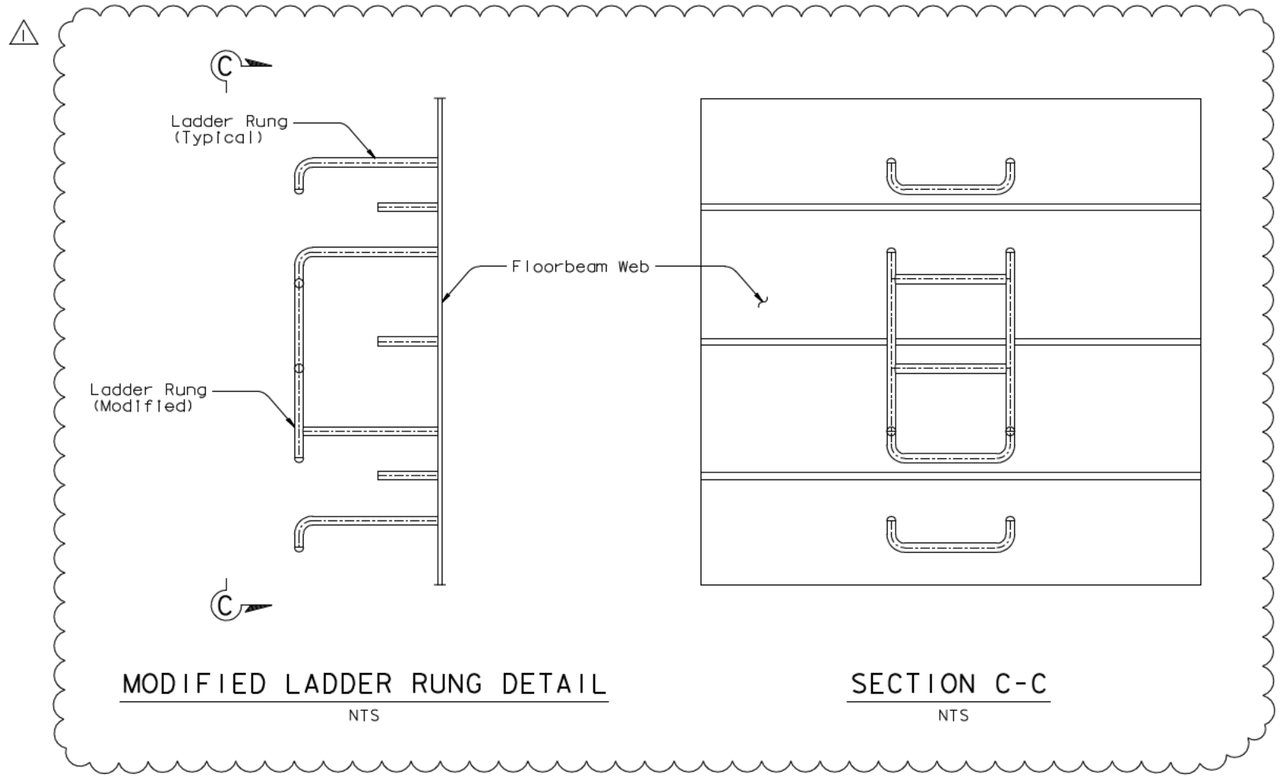

MODIFIED LADDER RUNG DETAIL

NTS

SECTION C-C

NTS

CONTRACT CHANGE ORDER NO. ____

SHEET ____ OF ____

REQUESTS FOR INFORMATION NOT ADDRESSED IN THIS CCO REMAIN IN FORCE

ALL DIMENSIONS ARE IN MILLIMETERS UNLESS OTHERWISE SHOWN

DIST.	COUNTY	ROUTE	KILOMETER POST TOTAL PROJECT	SHEET NO.	TOTAL SHEETS
04	SF	80	13.2/13.9	943SIR	1204

Caltrans Metric

Daniel J. Turner

REGISTERED ENGINEER - CIVIL

11-05-10

PLANS APPROVAL DATE

REGISTERED PROFESSIONAL ENGINEER — Daniel J. Turner — No. C 65033 — Exp. 06/30/13 — CIVIL — STATE OF CALIFORNIA

The State of California or its officers or agents shall not be responsible for the accuracy or completeness of electronic copies of this plan sheet.

T.Y. LIN / MOFFATT & NICHOL
825 BATTERY STREET
SAN FRANCISCO, CA 94111

Caltrans now has a web site! To get to the web site, go to: http://www.dot.ca.gov

MARK	DATE	DESCRIPTIONS	BY	CH'D	CCO#
1	09/01/11	EAST END OBG	DT	GB	87
0	11/05/10	PP119 ACCESS & PP125 PLATES	GB	DT	86

REVISIONS

	BY	CHECKED
DESIGN	G. Baker	D. Turner
DETAILS	G. Baker	D. Turner
QUANTITIES	G. Baker	D. Turner

PREPARED FOR THE STATE OF CALIFORNIA DEPARTMENT OF TRANSPORTATION

R. Manzanarez
PROJECT ENGINEER

BRIDGE NO. 34-0006L/R
KILOMETER POST 13.2/13.9

CU 04
EA 0120F1

R. Vallzadeh/V. Toan/Y.L./W.L./F.C.
DESIGN OVERSIGHT
Roya Vallzadeh / Vong Toan / Y. Liu
SIGN OFF DATE 09/01/11

Rev. Date: 5-18-98

ORIGINAL SCALE IN MILLIMETERS FOR REDUCED PLANS 0 10 20 30 40 50 60 70 80 90 100

DISREGARD PRINTS BEARING EARLIER REVISION DATES

REVISION DATES (PRELIMINARY STAGE ONLY): 11/05/10

SAN FRANCISCO OAKLAND BAY BRIDGE
EAST SPAN SEISMIC SAFETY PROJECT
SELF-ANCHORED SUSPENSION BRIDGE (SUPERSTRUCTURE & TOWER)

GIRDER ACCESS DETAILS NO. 3A

SHEET 526SIR1 OF

100 % PS&E

USERNAME -> AltshanskyDATE PLOTTED -> 30 AUG 2011 TIME PLOTTED -> 14:18:48

FILE -> I:\bb\04-012001\sas\contract plans and cco\cco\cco#87\1-original 09-01-11\dgn\akacc13a.dgn

DIST.	COUNTY	ROUTE	KILOMETER POST TOTAL PROJECT	SHEET NO.	TOTAL SHEETS
04	SF	80	13.2/13.9	949R2	1204

REGISTERED ENGINEER - CIVIL

12-6-04

PLANS APPROVAL DATE

The State of California or its officers or agents shall not be responsible for the accuracy or completeness of electronic copies of this plan sheet.

REGISTERED PROFESSIONAL ENGINEER — Marwan N. Nader — No. C 054426 — Exp. 12/31/11 — CIVIL — STATE OF CALIFORNIA

T.Y. LIN / MOFFATT & NICHOL
825 BATTERY STREET
SAN FRANCISCO, CA 94111

Caltrans now has a web site! To get to the web site, go to: http://www.dot.ca.gov

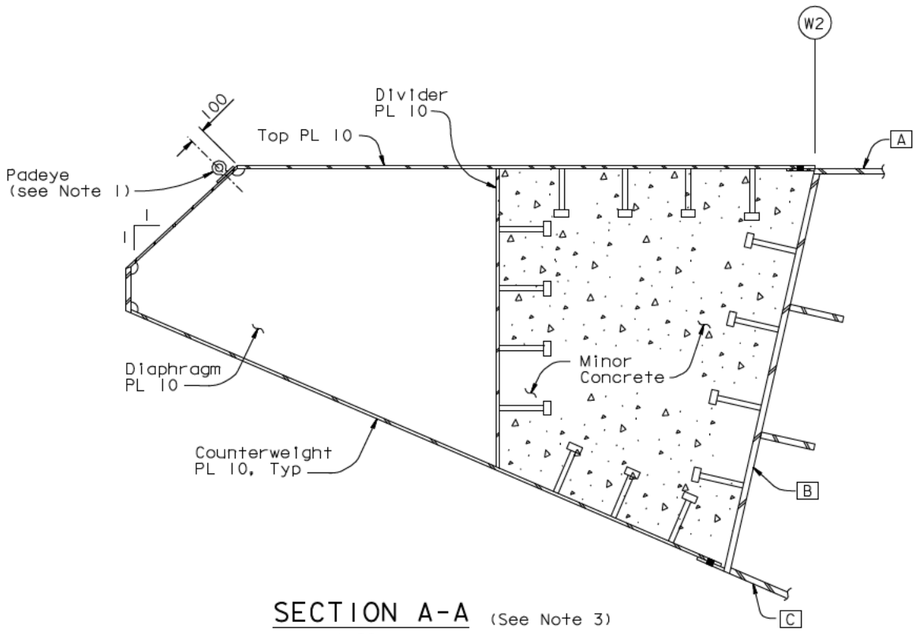

SECTION A-A (See Note 3)

1:20

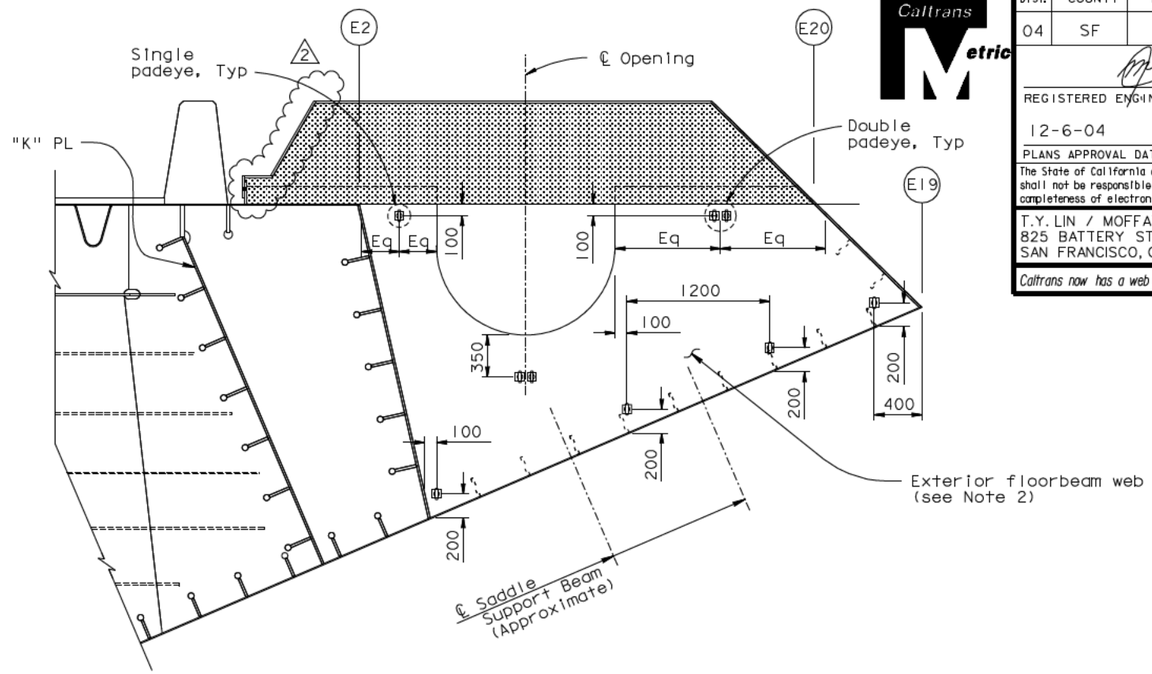

GIRDER ACCESS AT EXTERIOR PLATE AT PP118

("E" Line shown, "W" Line similar)

1:25

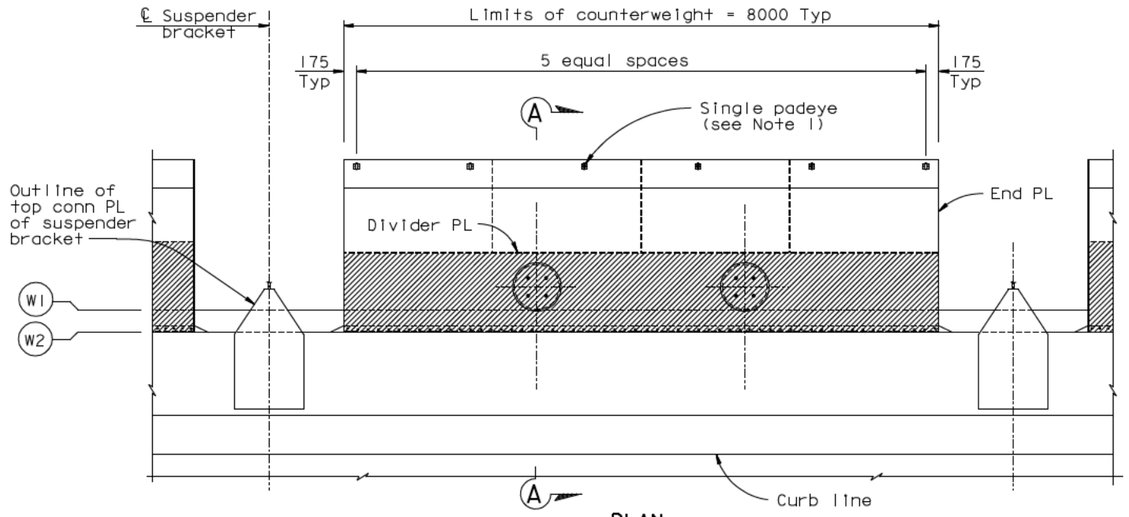

PLAN

COUNTERWEIGHT ACCESS LAYOUT

1:40

LEGEND:

Limits of minor concrete

Cable Saddle housing

NOTES:

1. For counterweight padeye use "Padeye At Bikepath Detail", see "Girder Access Details No.10" sheet.
2. For saddle housing details, see "East Saddle Housing Details" sheets.
3. For counterweight details, see "Typical Girder Details No.17" sheet.
4. Eliminate the detailed padeyes on the box girder, including the bikepath and the counterweights, unless directed otherwise by the Engineer.

CONTRACT CHANGE ORDER NO. ____
SHEET ___ OF ___

REQUESTS FOR INFORMATION NOT ADDRESSED IN THIS CCO REMAIN IN FORCE

ALL DIMENSIONS ARE IN MILLIMETERS UNLESS OTHERWISE SHOWN

MARK	DATE	REVISIONS	BY	CH'D	CCO#
2	09/01/11	EAST END OBG	MN	DT	87
1	05/01/09	PADEYE MODIFICATIONS	GB	MN	41

R. Vallzadeh/V. Toan/Y.L./W.L./F.C.
DESIGN OVERSIGHT
SIGN OFF DATE 09/01/11

	BY	CHECKED
DESIGN	M. Nader	N. Vo
DETAILS	M. Roberts	N. Vo
QUANTITIES	M. Roberts	N. Vo

PREPARED FOR THE STATE OF CALIFORNIA DEPARTMENT OF TRANSPORTATION

R. Manzanarez
PROJECT ENGINEER

BRIDGE NO. 34-0006L/R
KILOMETER POST 13.2/13.9

CU 04
EA 0120F1

SAN FRANCISCO OAKLAND BAY BRIDGE
EAST SPAN SEISMIC SAFETY PROJECT
SELF-ANCHORED SUSPENSION BRIDGE
(SUPERSTRUCTURE & TOWER)

GIRDER ACCESS DETAILS NO. 9

Rev. Date: 5-18-98

ORIGINAL SCALE IN MILLIMETERS FOR REDUCED PLANS 0 10 20 30 40 50 60 70 80 90 100

DISREGARD PRINTS BEARING EARLIER REVISION DATES

REVISION DATES (PRELIMINARY STAGE ONLY): 04/08/02 | 07/09/02 | 12/19/02

SHEET 532R2 OF

FILE -> I:\bb\04-0120I\sas\contract plans and cco\cco\cco#87\I-original 09-01-11\dgn\akacc09b.dgn

USERNAME -> AlIshanski DATE PLOTTED -> 30 AUG 2011 TIME PLOTTED -> 14:14:32

100 % PS&E

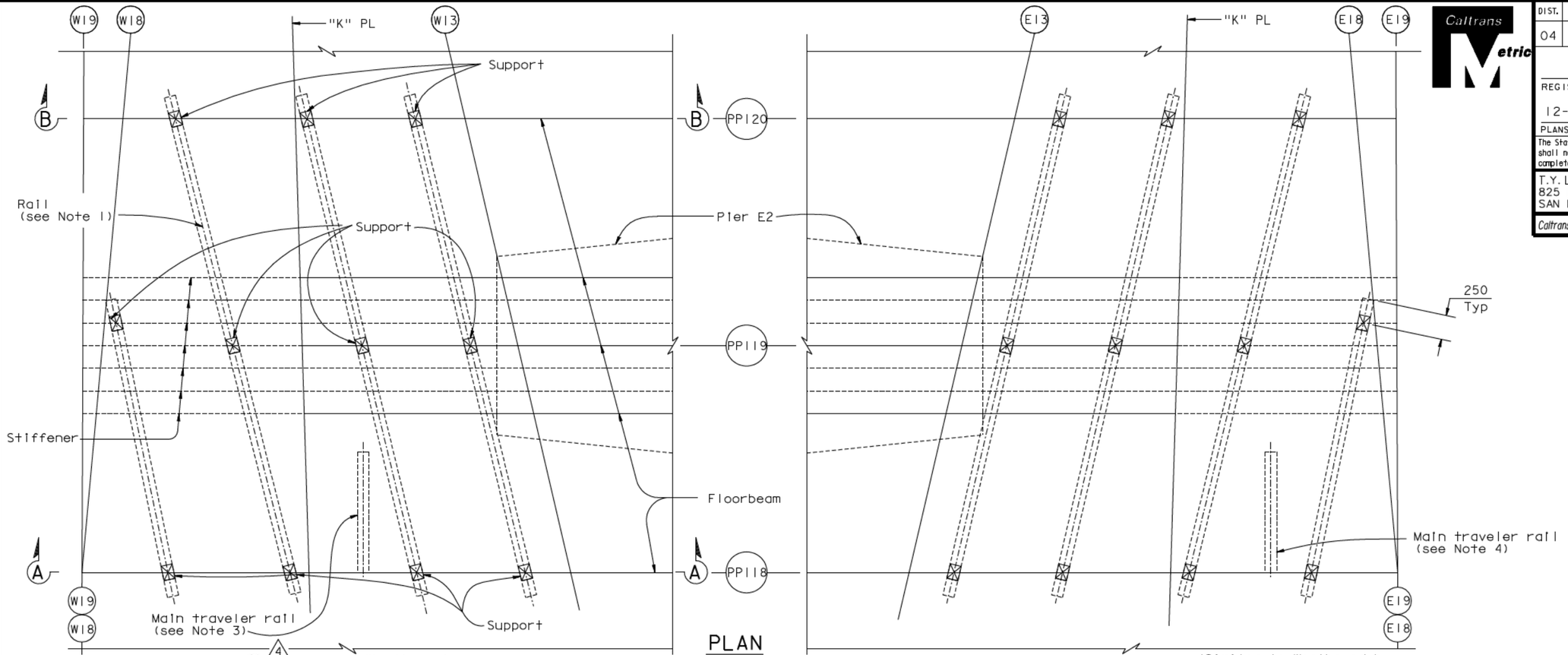

PLAN

GIRDER ACCESS AT PIER E2 (Not all stiffeners shown for clarity)

1:50

Westbound

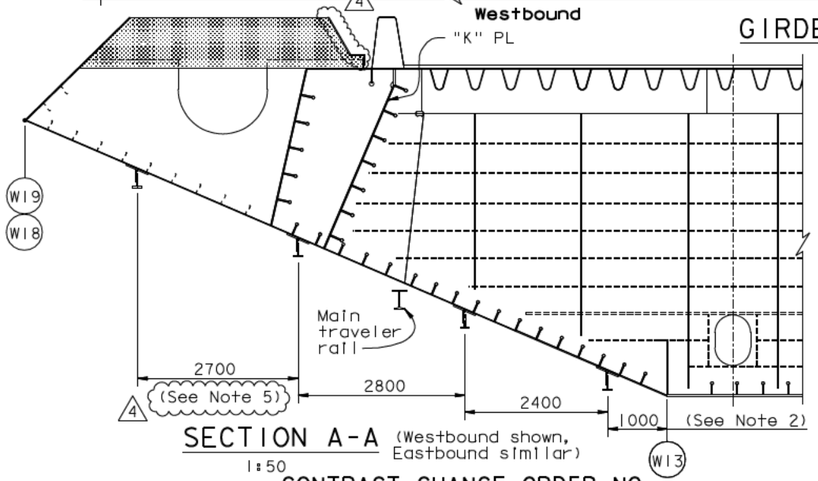

SECTION A-A (Westbound shown, Eastbound similar)

1:50

Eastbound (Similar to Westbound by opposite hand except as shown)

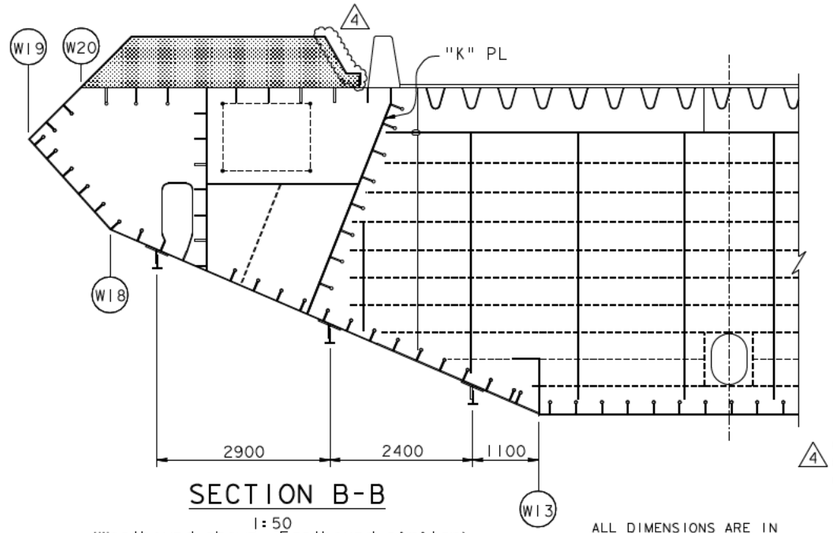

SECTION B-B

1:50

(Westbound shown, Eastbound similar)

ALL DIMENSIONS ARE IN MILLIMETERS UNLESS OTHERWISE SHOWN

LEGEND:

Cable Saddle housing

NOTES:

1. For rail details, see "Crossbeam Access Details No. 4" sheet.
2. Adjust support locations as neccessary to clear main traveler rail.
3. For main traveler rail layout, see "SAS-WB Traveler-Operating Ranges" sheets.
4. For main traveler rail layout, see "SAS-EB Traveler-Operating Ranges" sheets.
4. 5. Location of outermost rail shall be adjusted by one to two stiffener bays to clear the architectural splice.

CONTRACT CHANGE ORDER NO.___
SHEET ___ OF ___

REVISION 2
SUPERSEDES
REVISION 1

REQUESTS FOR INFORMATION NOT ADDRESSED IN THIS CCO REMAIN IN FORCE

MARK	DATE	DESCRIPTIONS	BY	CH'D	CCO#
		REVISIONS			
4	09/01/11	EAST END OBG	MN	DT	87
3	04/08/10	TRAVELER RAIL MODIFICATIONS	MN	NV	24S0
2	06/19/09	TRAVELER RAIL MODIFICATIONS	MN	NV	24S0
1	07/20/07	RAIL CHANGE & MISCELLANEOUS DETAILS	MN	NV	24

R. Vallzadeh/V. Toan/Y.L./W.L./F.C.
DESIGN OVERSIGHT
SIGN OFF DATE 09/01/11

	BY	CHECKED
DESIGN	M. Nader	N. Vo
DETAILS	G. Baker	N. Vo
QUANTITIES	G. Baker	N. Vo

PREPARED FOR THE STATE OF CALIFORNIA DEPARTMENT OF TRANSPORTATION

R. Manzanarez
PROJECT ENGINEER

BRIDGE NO. 34-0006L/R
KILOMETER POST 13.2/13.9

CU 04
EA 0120F1

DISREGARD PRINTS BEARING EARLIER REVISION DATES → 04/08/02 07/01/02 12/19/02

SAN FRANCISCO OAKLAND BAY BRIDGE
EAST SPAN SEISMIC SAFETY PROJECT
SELF-ANCHORED SUSPENSION BRIDGE
(SUPERSTRUCTURE & TOWER)

GIRDER ACCESS DETAILS NO. 11

SHEET 534R4 OF

Rev. Date: 5-18-98

ORIGINAL SCALE IN MILLIMETERS FOR REDUCED PLANS 0 10 20 30 40 50 60 70 80 90 100

FILE -> I:\bb\04-012001\sas\contract plans and cco\cco\cco#87\1-original 09-01-11\dgn\akacc17a.dgn

DIST.	COUNTY	ROUTE	KILOMETER POST TOTAL PROJECT	SHEET NO.	TOTAL SHEETS
04	SF	80	13.2/13.9	951R4	1204

REGISTERED ENGINEER - CIVIL

12-6-04
PLANS APPROVAL DATE

REGISTERED PROFESSIONAL ENGINEER — Marwan N. Nader — No. C 054426 — Exp. 12/31/11 — CIVIL — STATE OF CALIFORNIA

The State of California or its officers or agents shall not be responsible for the accuracy or completeness of electronic copies of this plan sheet.

T.Y. LIN / MOFFATT & NICHOL
825 BATTERY STREET
SAN FRANCISCO, CA 94111

Caltrans now has a web site! To get to the web site, go to: http://www.dot.ca.gov

100 % PS&E

USERNAME -> ALshansk DATE PLOTTED -> 30 AUG 2011 TIME PLOTTED -> 14:33:26

DIST.	COUNTY	ROUTE	KILOMETER POST TOTAL PROJECT	SHEET NO.	TOTAL SHEETS
04	SF	80	13.2/13.9	959RI	1204

George Baker
REGISTERED ENGINEER - CIVIL

12-6-04
PLANS APPROVAL DATE

The State of California or its officers or agents shall not be responsible for the accuracy or completeness of electronic copies of this plan sheet.

REGISTERED PROFESSIONAL ENGINEER — George S. Baker — No. C 57112 — Exp. 12/31/05 — CIVIL — STATE OF CALIFORNIA

T.Y. LIN / MOFFATT & NICHOL
825 BATTERY STREET
SAN FRANCISCO, CA 94111

Caltrans now has a web site! To get to the web site, go to: http://www.dot.ca.gov

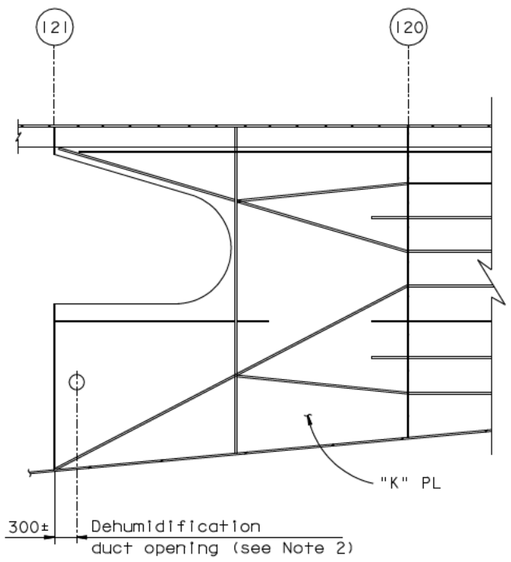

SECTION A-A
1:40

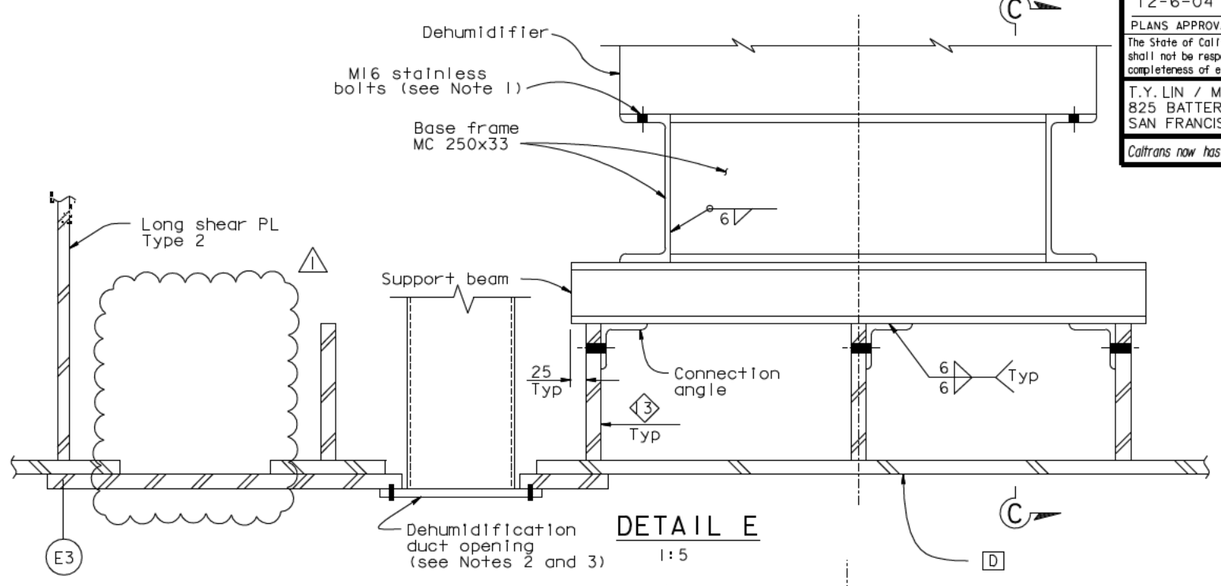

DETAIL E
1:5

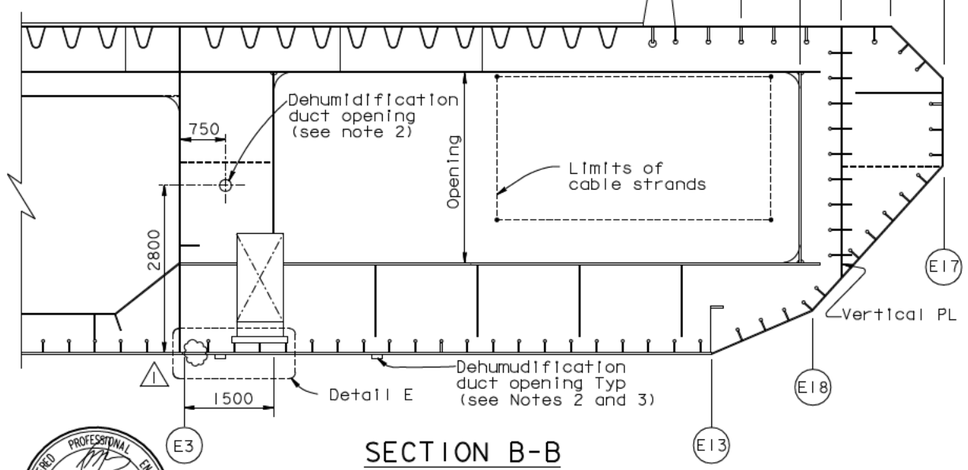

SECTION B-B
1:50

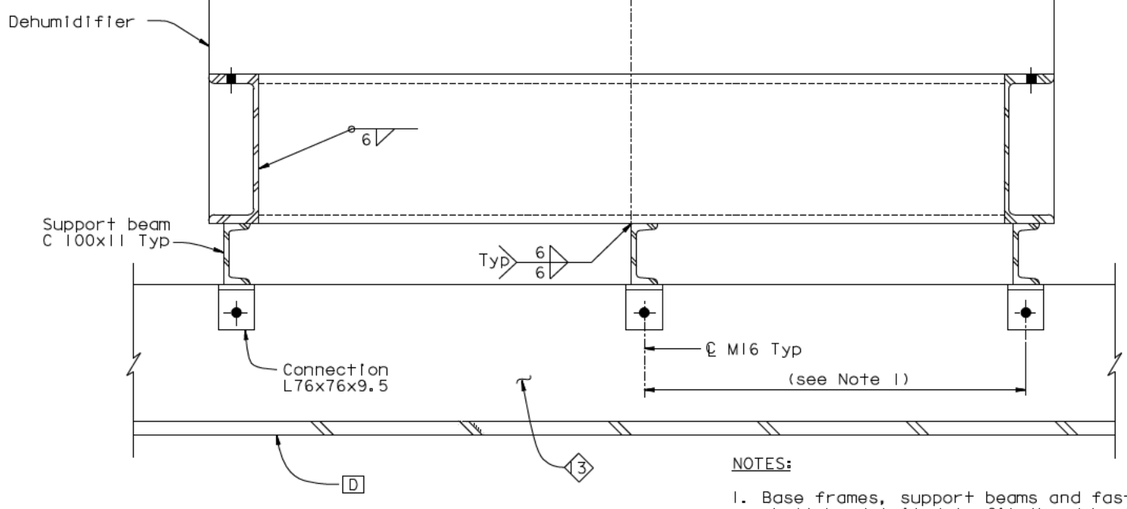

SECTION C-C
1:5

NOTES:

1. Base frames, support beams and fasteners shall be detailed to fit the dehumidifier.
2. For Duct opening details, see "Dehumidification Support Details No.5" sheet.
3. For location of duct openings, see "East Cable Anchorage Dehumidification Details" sheets.

Marwan N. Nader
REGISTERED PROFESSIONAL ENGINEER — No. C 054426 — Exp. 12/31/13 — CIVIL — STATE OF CALIFORNIA

FOR REVISIONS ONLY

CONTRACT CHANGE ORDER NO. ____
SHEET ___ OF ___

REQUESTS FOR INFORMATION NOT ADDRESSED IN THIS CCO REMAIN IN FORCE

ALL DIMENSIONS ARE IN MILLIMETERS UNLESS OTHERWISE SHOWN

MARK	DATE	DESCRIPTIONS	BY	CH'D	CCO#
1	04/18/12	EAST END OBG	MN	GB	87

REVISIONS

R. Vallzadeh/V. Toan/Y.L./W.L./F.C.
DESIGN OVERSIGHT
SIGN OFF DATE 04/18/12

	BY	CHECKED
DESIGN	G. Baker	T. Ho
DETAILS	C. Mauch	T. Ho
QUANTITIES	C. Mauch	D. Harrison

PREPARED FOR THE
STATE OF CALIFORNIA
DEPARTMENT OF TRANSPORTATION

R. Manzanarez
PROJECT ENGINEER

BRIDGE NO. 34-0006L/R
KILOMETER POST 13.2/13.9

CU 04
EA 0120F1

SAN FRANCISCO OAKLAND BAY BRIDGE
EAST SPAN SEISMIC SAFETY PROJECT
SELF-ANCHORED SUSPENSION BRIDGE
(SUPERSTRUCTURE & TOWER)

DEHUMIDIFICATION SUPPORT DETAILS NO. 3

DISREGARD PRINTS BEARING EARLIER REVISION DATES

REVISION DATES (PRELIMINARY STAGE ONLY): 05/15/99 | 08/02/99 | 05/31/01 | 04/08/02 | 07/01/02 | 12/19/02

SHEET 542RI OF

Rev. Date: 5-18-98

ORIGINAL SCALE IN MILLIMETERS FOR REDUCED PLANS 0 10 20 30 40 50 60 70 80 90 100

FILE -> I:\bb\04-012001\sas\contract plans and cco\cco\cco#87\temp\akdeh03.dgn

USERNAME -> DWinrow DATE PLOTTED -> 18 APR 2012 TIME PLOTTED -> 11:33:08

100% PS&E

DIST.	COUNTY	ROUTE	KILOMETER POST TOTAL PROJECT	SHEET NO.	TOTAL SHEETS
04	SF	80	13.2/13.9	986R1	1204

Caltrans Metric

George Baker
REGISTERED ENGINEER - CIVIL

12-6-04
PLANS APPROVAL DATE

The State of California or its officers or agents shall not be responsible for the accuracy or completeness of electronic copies of this plan sheet.

REGISTERED PROFESSIONAL ENGINEER — George S. Baker — No. C57112 — Exp. 12/31/05 — CIVIL — STATE OF CALIFORNIA

T.Y. LIN / MOFFATT & NICHOL
825 BATTERY STREET
SAN FRANCISCO, CA 94111

Caltrans now has a web site! To get to the web site, go to: http://www.dot.ca.gov

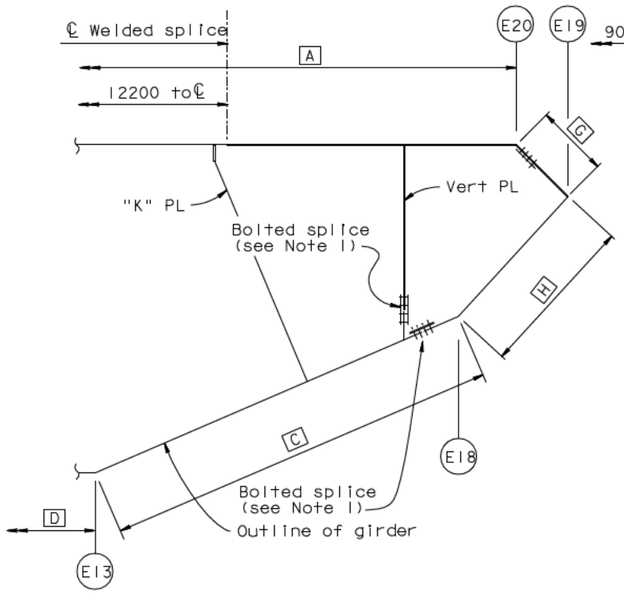

SECTION B-B

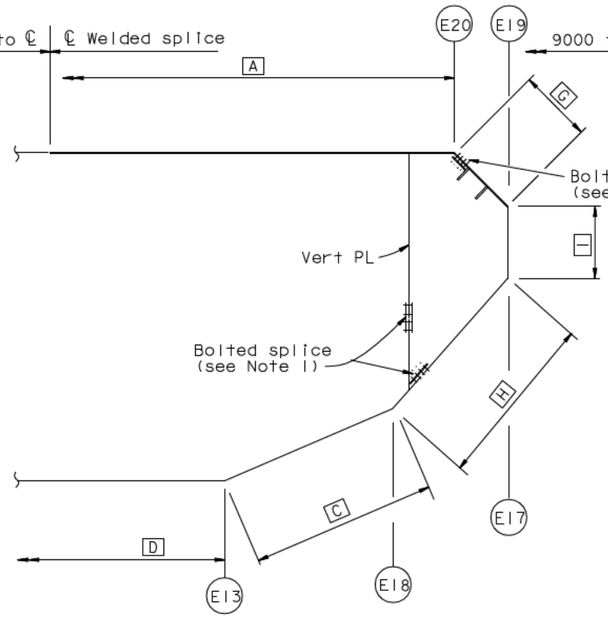

SECTION C-C

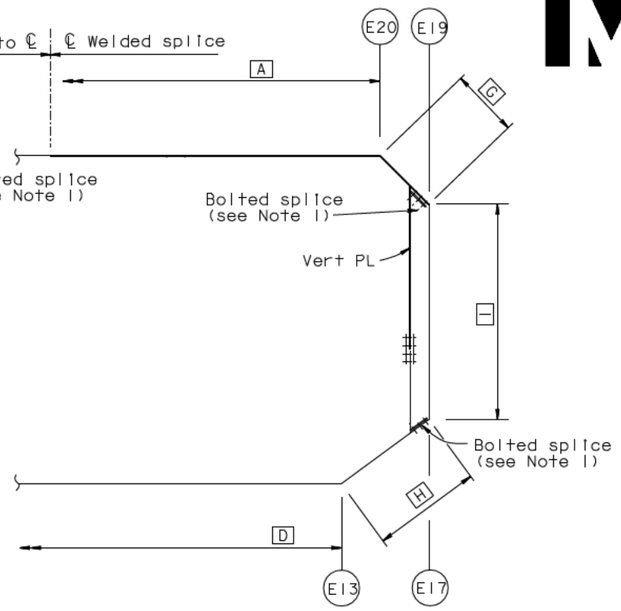

SECTION D-D

GIRDER SECTIONS (SCHEMATIC)

NTS

LEGEND FOR GIRDER PLATE SCHEMATIC:

——— Actual girder plate (main)

——— Actual girder plate (Closure)

NOTES:

1. Splice locations and patterns are shown for information only. Contractor shall be responsible for the design and detailing of splices suitable to his erection methods. All splices shall develop the full capacity of the connected parts, except for architectural splices shown in the plans. For design criteria see the "General Notes" sheets. The Contractor shall submit his design details for review and approval by the Engineer.

⚠1 Acceptable splice details are shown on "East Anchorage Construction Details No.3" sheet.

2. During field welding the cable strands shall be protected to the satisfaction of the Engineer.

3. For connections containing both welded and bolted parts, bolts shall be designed as "slip critical"

4. Stiffener across web splice may be installed in the field or spliced at web splice location.

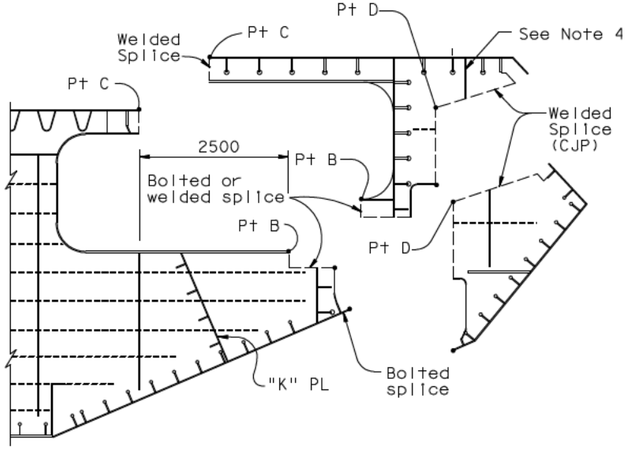

(PP 121 shown)

SECTION B'-B'

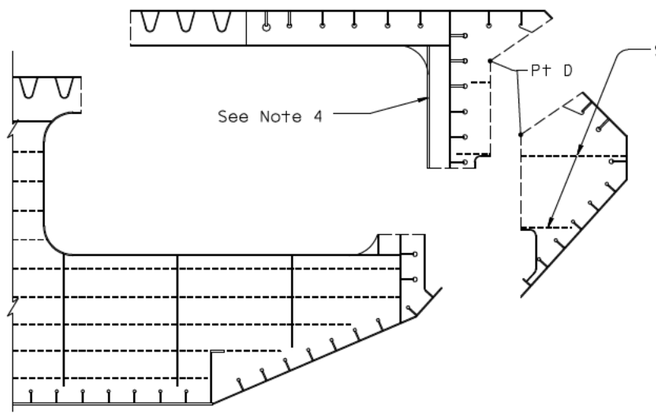

(PP 122 shown)

SECTION C'-C'

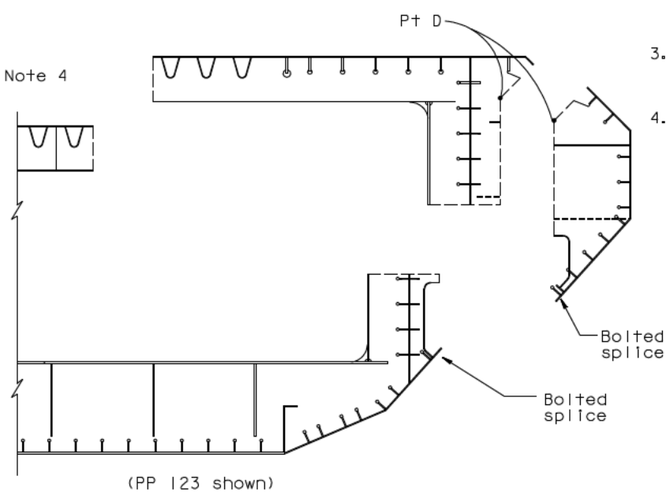

(PP 123 shown)

SECTION D'-D'

FLOORBEAM SECTIONS

Daniel J. Turner — REGISTERED PROFESSIONAL ENGINEER — No. C 65033 — Exp. 06/30/13 — CIVIL — STATE OF CALIFORNIA

FOR REVISIONS ONLY

CONTRACT CHANGE ORDER NO. ____
SHEET ___ OF ___

REQUESTS FOR INFORMATION NOT ADDRESSED IN THIS CCO REMAIN IN FORCE

ALL DIMENSIONS ARE IN MILLIMETERS UNLESS OTHERWISE SHOWN

MARK	DATE	DESCRIPTIONS	DT BY	GB CH'D	87 CCO#
⚠1	09/01/11	EAST END OBG			

REVISIONS

R. Vallzadeh/V. Toan/Y.L./W.L./F.C.
DESIGN OVERSIGHT
SIGN OFF DATE 09/01/11

	BY	CHECKED
DESIGN	G. Baker	C. Selm
DETAILS	M. Gulyas	C. Mibelli
QUANTITIES	M. Gulyas	C. Mibelli

PREPARED FOR THE STATE OF CALIFORNIA DEPARTMENT OF TRANSPORTATION

R. Manzanarez
PROJECT ENGINEER

BRIDGE NO. 34-0006L/R
KILOMETER POST 13.2/13.9

SAN FRANCISCO OAKLAND BAY BRIDGE
EAST SPAN SEISMIC SAFETY PROJECT
SELF-ANCHORED SUSPENSION BRIDGE
(SUPERSTRUCTURE & TOWER)

EAST ANCHORAGE CONSTRUCTION DETAILS NO. 2

Rev. Date: 5-18-98

ORIGINAL SCALE IN MILLIMETERS FOR REDUCED PLANS 0 10 20 30 40 50 60 70 80 90 100

CU 04
EA 0120F1

DISREGARD PRINTS BEARING EARLIER REVISION DATES →

REVISION DATES (PRELIMINARY STAGE ONLY): 01/15/99 | 05/15/99 | 08/02/99 | 05/31/01 | 04/08/02 | 07/01/02 | 12/19/02

SHEET 569R1 OF

FILE -> I:\bb\04-012001\sas\contract plans and cco\cco\cco#87\1-original 09-01-11\dgn\akcns13.dgn

USERNAME -> AlTshansk DATE PLOTTED -> 30 AUG 2011 TIME PLOTTED -> 14:35:23

100 % PS&E

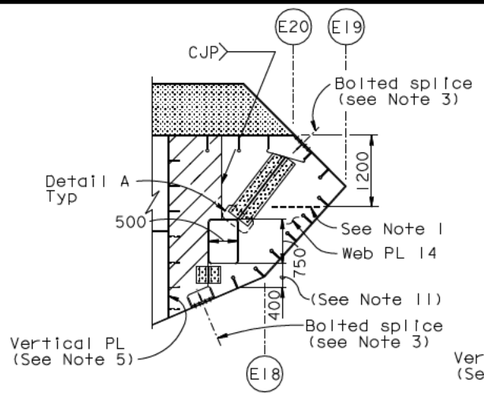

SPLICE AT PP 120

("E" Line Shown, "W" Line Similar)

1:50

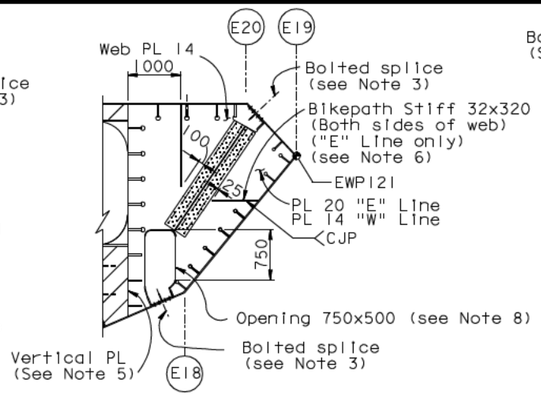

SPLICE AT PP 121

("E" Line Shown, "W" Line Similar)

1:50

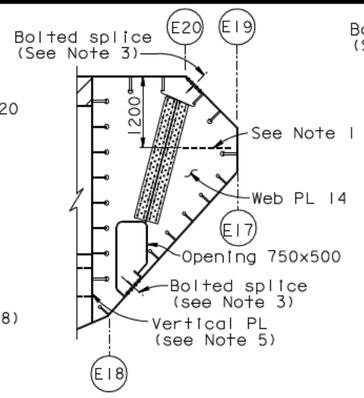

SPLICE AT PP 122

("E" Line Shown, "W" Line Similar)

1:50

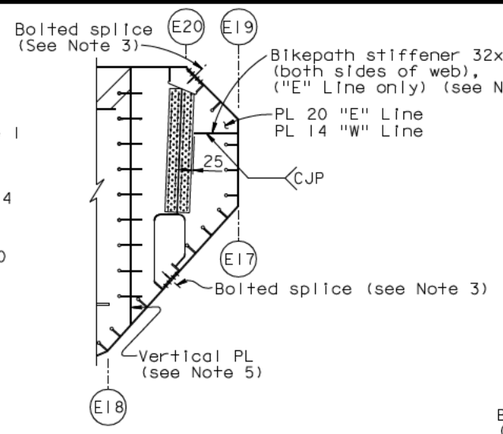

SPLICE AT PP 123

("E" Line Shown, "W" Line Similar)

1:50

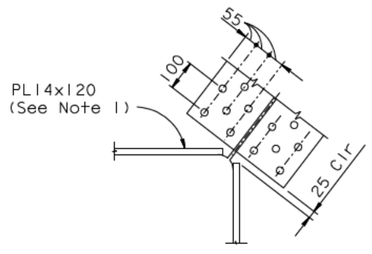

DETAIL A

1:10

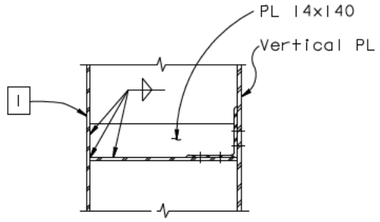

SECTION A-A

(Section A'-A' Similar)

1:10

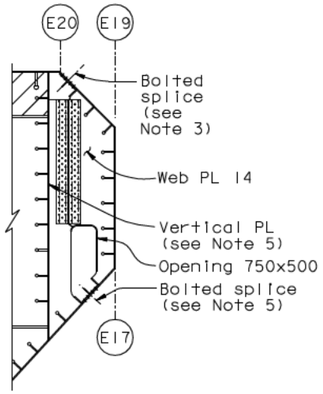

PP 124

("E" Line)

1:50

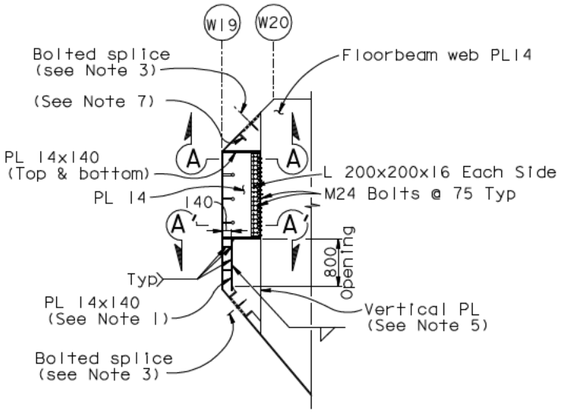

PP 124

("W" Line)

1:50

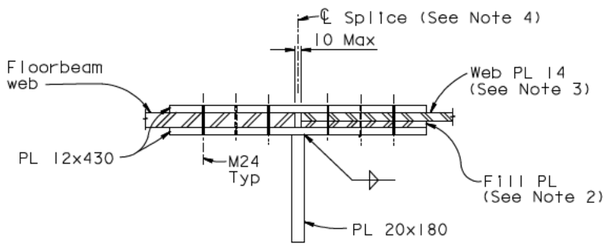

TYPICAL WEB SPLICE DETAIL

1:5

NOTES:

1. For stiffener termination details, see "Typical Stiffener Transition Detail" on "Typical Floorbeam Details No.4" sheet.
2. Use fill plate as required when webs do not align.
3. Girder faces G, H and I are architectural from PP118 to PP125. For bolted splices see "Girder At East Transition Details No.3" sheet. For splice locations see "Girder At East Transition Nos.11 to 14" sheets.
4. Splice ℄ may be adjusted.
5. For "K" plate and vertical plate details, see "Girder At East Transition Details" sheets.
6. Bikepath bearing stiffeners shall be welded to girder plate using PJP with 80% penetration welds. Girder stiffener plates shall be coped on either side of bikepath stiffener. Bikepath stiffeners shall align with the bottom flanges of the bikepath cantilever beams at PP121, PP123 and PP125. For locations of bikepath cantilever beams, see "Bikepath Details" sheets.
7. Terminate stiffener as required to access splice.
8. Web opening similar to Detail E, "Girder at East Transition Details No.3" sheet.

CONTRACT CHANGE ORDER NO. _____
SHEET ___ OF ___

REQUESTS FOR INFORMATION NOT ADDRESSED IN THIS CCO REMAIN IN FORCE

ALL DIMENSIONS ARE IN MILLIMETERS UNLESS OTHERWISE SHOWN

DIST.	COUNTY	ROUTE	KILOMETER POST TOTAL PROJECT	SHEET NO.	TOTAL SHEETS
04	SF	80	13.2/13.9	986SI	1204

Caltrans Metric

REGISTERED ENGINEER - CIVIL

04-18-12
PLANS APPROVAL DATE

REGISTERED PROFESSIONAL ENGINEER — Marwan N. Nader — No. C 054426 — Exp. 12/31/13 — CIVIL — STATE OF CALIFORNIA

The State of California or its officers or agents shall not be responsible for the accuracy or completeness of electronic copies of this plan sheet.

T.Y. LIN / MOFFATT & NICHOL
825 BATTERY STREET
SAN FRANCISCO, CA 94111

Caltrans now has a web site! To get to the web site, go to: http://www.dot.ca.gov

DESIGN OVERSIGHT	MARK	DATE	DESCRIPTIONS	BY	CH'D	CCO#
R. Vallzadeh/V. Toan/Y.L./W.L./F.C.	0	04/18/12	EAST END OBG	GB	MN	87
SIGN OFF DATE 04/18/12			REVISIONS			

	BY		CHECKED
DESIGN	G. Baker		M. Nader
DETAILS	G. Baker		D. Turner
QUANTITIES	G. Baker		D. Turner

PREPARED FOR THE STATE OF CALIFORNIA DEPARTMENT OF TRANSPORTATION

R. Manzanarez
PROJECT ENGINEER

BRIDGE NO.	KILOMETER POST
34-0006L/R	13.2/13.9

SAN FRANCISCO OAKLAND BAY BRIDGE
EAST SPAN SEISMIC SAFETY PROJECT
SELF-ANCHORED SUSPENSION BRIDGE
(SUPERSTRUCTURE & TOWER)

EAST ANCHORAGE CONSTRUCTION DETAILS NO.3

Rev. Date: 5-18-98

ORIGINAL SCALE IN MILLIMETERS FOR REDUCED PLANS 0 10 20 30 40 50 60 70 80 90 100

CU 04
EA 0120F1

DISREGARD PRINTS BEARING EARLIER REVISION DATES →

REVISION DATES (PRELIMINARY STAGE ONLY)										SHEET	OF
04/18/12										569SI	

FILE -> I:\bb\04-012001\sas\contract plans and cco\cco\cco#87\temp\akcns13a.dgn

100% PS&E

DATE PLOTTED -> 18 APR 2012 TIME PLOTTED -> 11:34:23

USERNAME -> DWinrow

STATE OF CALIFORNIA - DEPARTMENT OF TRANSPORTATION

CONTRACT CHANGE ORDER

Change Requested by: Engineer

CCO 88	Suppl. No. 0	Contract No. 04 - 0120F4	Road SF-80-13.2/13.9	FED. AID LOC.:

To: **AMERICAN BRIDGE/FLUOR ENTERPRISES INC A JOINT VENT**

You are directed to make the following changes from the plans and specifications or do the following described work not included in the plans and specifications for this contract. ***NOTE: This change order is not effective until approved by the Engineer.***

Description of work to be done, estimate of quantities and prices to be paid. (Segregate between additional work at contract price, agreed price and force account.) Unless otherwise stated, rates for rental of equipment cover only such time as equipment is actually used and no allowance will be made for idle time. This last percentage shown is the net accumulated increase or decrease from the original quantity in the Engineer's Estimate.

Adjustment of Compensation at Lump Sum:

Provide additional project management personnel to identify, coordinate, and propose resolutions to Mechanical, Electrical, and Piping (MEP) issues. Attachment A & B contains a list of MEP issues, from Contractor submitted RFI's, in which this extra work is required. This CCO also fully resolves Notice of Potential Claim 1, dated January 26, 2007.

For this work, the Contractor will be paid the sum of $437,000.00. This agreed lump sum constitutes full compensation including all mark-ups, all direct and indirect costs, all overhead expenses, and all associated project impacts associated with this change.

This agreed lump sum does not provide any payments for contract scope changes related to the resolution of individual MEP issues, from Contractor submitted RFI's. If required, contract scope changes resulting from the resolution of MEP issues including, but not limited to, those in Attachment A & B will be addressed in other change orders.

No extension of contract time is warranted for this change.

Estimated cost of Adjustment of Compensation at Lump Sum $437,000.00

Estimated Cost: Increase ☑ Decrease ☐ **$437,000.00**

By reason of this order the time of completion will be adjusted as follows: 0 days

Submitted by

Signature	Resident Engineer	Date
	Bill Shedd for Gary Pursell, P.E., Sup.T.E.	1-22-09

Approval Recommended by

Signature	Supervising Transportation Engineer	Date
Gary Pursell	Gary Pursell, Sup. TE	1/22/09

Engineer Approval by

Signature	Principal Transporation Engineer	Date
Gary Pursell	Peter Siegenthaler, Prin. TE	1/28/09

We the undersigned contractor, have given careful consideration to the change proposed and agree, if this proposal is approved, that we will provide all equipment, furnish the materials, except as may otherwise be noted above, and perform all services necessary for the work above specified, and will accept as full payment therefor the prices shown above.

NOTE: If you, the contractor, do not sign acceptance of this order, your attention is directed to the requirements of the specifications as to proceeding with the ordered work and filing a written protest within the time therein specified.

Contractor Acceptance by

Signature	(Print name and title)	Date
Michael D. Flowers	Michael D. Flowers Project Director	1-27-09

Attachment A

(Electrical RFIs)

RFI	REV		SUBJECT
98	0		Location of Pipe Brackets on Counterweight Box
104	0		Clearance Between Barrier and Luminaire Support Box
104	1		Clearance Between Barrier and Luminaire Support Box
139	2		Tower Work Points
156	0		Future Light Pipe Penetrations
157	0		Conduit Route Outside Metal Barrier
157	1		Conduit Route Outside Metal Barrier
158	0		Light Circuit A3009 and A3010
159	0		Manufacturer and Make for Lighting
159	1		Manufacturer and Make for Lighting
160	0		Undeground Conduit Duct Bank
160	1		Undeground Conduit Duct Bank
203	0		Location of Future Lamp Housing
210	0		Legend for Lighting Fixtures
211	0		Lighting Fixture MAT
212	0		Light Circuit A3009 and A3010
217	0		Location of PB-LTG and PB-Com
217	1		Location of PB-LTG and PB-Com
217	2		Location of PB-LTG and PB-Com
218	0		PS-6 Layout at Bike Path
218	1		PS-6 Layout at Bike Path
218	2		PS-6 Layout at Bike Path
222	0		Steel Barrier Diaphragm & Connection Plate Layout
223	0		Pipe support PS-14 and PS-7 Layout Along Main Span Barrier
228	0		Suspender Bracket Lighting
228	1		Suspender Bracket Lighting
228	2		Suspender Bracket Lighting
232	0		PS-7 Layout at the Traffic Barriers
233	0		Piping at Bikepath in Confilict with Light Post housing
233	1		Piping at Bikepath in Confilict with Light Post housing
233	2		Piping at Bikepath in Confilict with Light Post housing
233	3		Piping at Bikepath in Confilict with Light Post housing
242	0		Receptacle in Metal Barrier
244	0		Lighting Conduit in Crossbeam without service platform
249	0		Light Pipe Conduit at Pier W2 and at East Transition
249	1		Light Pipe Conduit at Pier W2 and at East Transition
252	0		Tower Shaft conduit Penetration Conflicts
261	0		Conduit in Luminaire Support Box and Barrier Rail
264	0		Duplex Receptacle in Metal Barrier
264	1		Duplex Receptacle in Metal Barrier
270	0		Suspension Cable Conduit Support
289	0		Detail at Tower Transition
290	0		Strong Motion Detection System
299	0		Conduits Through Eastbound OBG between PP40 and PP41
317	0		Service Platform Issues (Candraft Tensor)

Attachment A

(Electrical RFIs)

317	1		Service Platform Issues (Candraft Tensor)
317	2		Service Platform Issues
317	3		Service Platform Issues
326	0		Luminaire Support Box Pipe Sleeves
334	0		Conduit Penetrations Through Diaphragm Plates of Barrier Rail
334	1		Conduit Penetrations Through Diaphragm Plates of Barrier Rail
335	0		Light Pole Shims
374	0		Universal Concrete Insert
375	0		Cable Tray Support
376	0		Location of Seismic Sensor 29-2
377	0		Cable Trays at East Transition
378	0		Pipe Beam Conduits
379	0		Tower Conduit Penetrations at Elevation 89.950 m.
379	1		Tower Conduit Penetrations at Elevation 89.950 m.
387	0		Tower Conduit Penetrations Between Stiffeners A3 and A4
401	0		Pier 1 Tower Base Pylon Lights
402	0		Pier 1 Tower Conduit Penetration
402	1		Pier 1 Tower Conduit Penetration
431	0		Penetrations Through Tower Skin for Dehumification System @ Elev. 9M
432	0		Typical Utility Conduit/Pipe Penetration Detail
432	1		Typical Utility Conduit/Pipe Penetration Detail
450	0		Pipe Sleeve Identification
450	1		Pipe Sleeve Identification
451	0		Redesigned Conduit Routing
451	1		Redesigned Conduit Routing
453	0		Coordination of Electrical System Attachments to the OBG and Tower Steel
460	0		Mech Expansion Joint in Close Proximity to Cable Tray at Pier
460	1		Mech Expansion Joint in Close Proximity to Cable Tray at Pier
461	0		Fixture Visors
462	0		Seismic Boxes - Material Type
463	0		Seismic Sensor Enclosure 23-3 at Tower Base
464	0		Light and Sign Pole Pedestal Placement and Detail
466	0		Tower Aesthetic Lights Attached to Bike Path
467	0		Suspender Up-Lights Attached to OBG and Counterweight
472	0		15 kV Splice Box
472	1		15 kV Splice Box
472	2		15 kV Splice Box
472	3		15 kV Splice Box
474	0		Nema 4X Wireway
475	0		MVDS Conduit Routing
476	0		Cable Tray
476	1		Cable Tray
480	0		Bike Path Pipe Supports at Transition to Skyway
485	0		Pipe Conflicts at Tower South Access, and Platform Steel
485	1		Pipe Conflicts at Tower South Access, and Platform Steel
485	2		Pipe Conflicts at Tower South Access, and Platform Steel

Attachment A

(Electrical RFIs)

498	0		Pipe Support at Bike Path West of PP9
499	0		Revised Layout for Dehumidification Penetrations and Attachments at West Cable Anchorage
543	0		Electrical Penetrations and Conduit Support at Tower
561	0		Pull Boxes and Conduit at Barrier, West of PP10
563	0		Fog Detection System
564	0		Ground Cable Tower Base
565	0		Conduits Inside Steel Box Pedestal for Light Pole and Overhead Sign
565	1		Conduits Inside Steel Box Pedestal for Light Pole and Overhead Sign
565	2		Conduits Inside Steel Box Pedestal for Light Pole and Overhead Sign
565	3		Conduits Inside Steel Box Pedestal for Light Pole and Overhead Sign
565	4		Conduits Inside Steel Box Pedestal for Light Pole and Overhead Sign
573	0		4" and 2-1/2" Piping Drops to Underside of Bike Path
583	0		Interference between electrical conduits and standard platform inside crossbeam
584	0		Interference between Type VII cable tray support and catwalk to crossbeam access
584	1		Interference between Type VII cable tray support and catwalk to crossbeam access
585	0		Conflicts between pipe supports, drainage flumes and pole pedestals along OBG
591	0		Electrical work in area of bike path West of PP9
604	0		Fiber Optic Outside Plant Cable
611	0		Cable railing base plates and drainage diverter plates type 1 interference
612	0		Cable railing base plates and drainage diverter plates type 3 interference
613	0		Modification to Barrier (and related) details - Constructability issues
631	0		Temporary Power for Navigation Warning and Fog Detection Systems
675	0		Cable Tray Geometry and Supports
678	0		Call Box Mounting
678	1		Call Box Mounting
687	0		Dyson Corporation MFSQA
706	0		Pull Box PB-3A @ Tower Platform 53.85
707	0		Utility Panels and Pull Boxes @ Tower Platform Elev. 53.85
707	1		Utility Panels and Pull Boxes @ Tower Platform Elev. 53.85
707	2		Utility Panels and Pull Boxes @ Tower Platform Elev. 53.85
707	3		Utility Panels and Pull Boxes @ Tower Platform Elev. 53.85
707	4		Utility Panels and Pull Boxes @ Tower Platform Elev. 53.85
726	0		Pull Boxes A,B, C, D @ Tower Platform Elev. 53.85
726	1		Pull Boxes A,B, C, D @ Tower Platform Elev. 53.85
729	0		Design Review for Utility Platform @ Eastbound Structure between Crossbeam and Tower
734	0		Elevator General Arrangement
734	1		Elevator General Arrangement
734	2		Elevator General Arrangement
789	0		Conduit Routing @ West End
793	0		Cable Tray Supports @ West End OBG
794	0		Cable Tray Supports Type I, II, and III
794	1		Cable Tray Supports Type I, II, and III
811	0		Transverse Cable Tray Support Layout
811	1		Transverse Cable Tray Support Layout
814	0		Cable Tray Supports Inside OBG in Vicinity of PP117 to PP119

Attachment A

(Electrical RFIs)

834	0		Additional Pipe Sleeves for Electrical Penetrations in OBG Side Plates Near PPs 14, 32, 50, 80, 110
834	1		Additional Pipe Sleeves for Electrical Penetrations in OBG Side Plates Near PPs 14, 32, 50, 80, 110
839	0		Pole Pedestal Pipe Sleeve Arrangement
845	0		Cable Tray Supprts @ East End OBG, Vicinity of PP125 to PP127
857	0		Support for Conduits Routed to Platform at EB Structure
857	1		Support for Conduits Routed to Platform at EB Structure
861	0		Catwalk Interference and Obstruction
867	0		Catwalk Details at Xbeam
873	0		Navigation Light Mounting and Fixture Details
878	0		MEP Markups on Previously Returned Submittals 108, 115, 131, 139, 140, 143, 149, 169, 170
897	0		MEP/OBG Deck Level Conflicts Resolution
897	1		MEP/OBG Deck Level Conflicts Resolution
919	0		Cable Tray Location at PP114 and PP110
919	1		Cable Tray Location at PP114 and PP110
941	0		Tower Marker Lights Type MAP, at Tower Head
942	0		Aviation Light Type AV-1 @ Tower Head
949	0		Paint Requirements for all Exposed Electrical Conduits
968	0		Bike Path Light Fixture Quantity
969	0		Bike Path Lighting Metal Clad Cable Connector
969	1		Bike Path Lighting Metal Clad Cable Connector
1013	0		OBG-MEP Desk Penetrations-Pipe Sleeve Sizes & Locations
1026	0		Anchorage for cable tray in girders
1029	0		Electrical Penetrations and Attachments for Lifts 3 and 4
1029	1		Electrical Penetrations and Attachments for Lifts 3 and 4
1029	2		Electrical Penetrations and Attachments for Lifts 3 and 4
1029	3		Electrical Penetrations and Attachments for Lifts 3 and 4
1038	0		Penetrations on Design 964/1204
1064	0		Barrier Mounted Sign interferes with 2.5" Water Pipe
1065	0		CCTV cameras
1100	0		Fuse holder & Fuses for Luminaires MSR, MAU and MAD
1100	1		Fuse holder & Fuses for Luminaires MSR, MAU and MAD
1122	0		Confirmation of Cooper B-Line B22 and B22A for MEP Channel Struts
1133	0		Fiber Optic Manhole 27-Type P Cabinet
1134	0		Panels, Circuit Breakers, Transformer at Tower Elev 89.95
1136	0		Service platform equipment racks & interference with stairs
1161	0		Electrical Safety Switches
1166	0		Layout and detail for miscellaneous barrier attachments
1204	0		Level of Illumination for Roadway Lights
1219	0		Pipe Support Changes at Bikepath
1225	0		Misc. Service Platform Details
1237	0		Hand Stanchion Pad
1244	0		MEP Changes effecting the Cable Bands
1325	0		Luminaire Support at Crossbeam
1326	0		Additional MEP Penetrations

Attachment A

(Electrical RFIs)

1334	0		Fog Detection Panel
1334	1		Fog Detection Panel
1338	0		Catwalk Configuration and Cable Tray location Clarification in Lift OBE 13
1338	1		Catwalk Configuration and Cable Tray location Clarification in Lift OBE 13
1413	0		Light fixture F4 Layout in West and East Girders
1472	0		Tower Light Fixture Plates

Attachment B

(Mechanical RFIs)

RFI	REV		SUBJECT
9	0		Domestic Water Piping material
10	0		Compressed Air Piping material
11	0		Painting versus hot dip galvanized
43	0		Copies of Skyway Piping Submittal
102	0		Bolt Spacing at Barrier Connection to Deck plate
103	0		Plane of the top of the barrier
107	0		Log of Pre-1998 Test Borings and Foundation Details for the YBI Torpedo Building
116	0		Support Size for PS-3 with Bolted Connection
117	0		Height of Pipe off Deck with Detail as Drawn for PS-5
118	0		Intake Louvers
119	0		Diaphragm Penetrations
120	0		Duct Penetration Opening
120	1		Duct Penetration Opening
121	0		Penetration in Girders, Walls, or Structures within the Dehumidification Zone
122	0		Louver at Tower Skirt
122	1		Louver at Tower Skirt
123	0		PS-13 Connection to Structure
124	0		Dehumidification System Exhaust
125	0		Dehumidification System Humidistat
177	0		Section D-D Drawing M-12 and PS-2 Detail
180	0		Conduit Routing Dehumidifier #3
189	0		PS-20 Conflicts
202	0		Barrier Support-Bolt spacing at connection
207	0		OBG Longitudinal Trusses
224	0		Safety Railing and Handrail Controlling Dimensions and Details
225	0		Tower Access Safety Issues
225	1		Tower Access Safety Issues
238	0		Rods at Barrier Connection to Longitudinal Truss
239	0		Ladder Positioning at Tower Head
243	0		PS-17 Dimension Conflict With Details
245	0		Conflict with 6" CCSF Reclaimed Water and 12" CCSF Water
256	0		Service Platform Location Connection to Crossbeam
256	1		Service Platform Location Connection to Crossbeam
265	0		PS-1 Plate on Girder
276	0		Flex connectors on CCSF Risers
291	0		Base of West Pier Piping
292	0		Incorrect coordinates on Drawing 13/1204
301	0		Barrier Anchor Rod Tention
302	0		Concrete Luminaire Support Anchor Bolts
303	0		Light Pole Connection to Crossbeams
338	0		6" CCSF Reclaimed Water Reroute
356	0		Maintenance Traveler Warranty
373	0		Pipe Offsets in Conflict with Bridge Deck
373	1		Pipe Offsets in Conflict with Bridge Deck
389	0		PS-14 Location at Transition to Bridge Deck

Attachment B

(Mechanical RFIs)

403	0		Conflicts at W2
404	0		Support at Expansion Loops
433	0		Payment of Maintenance Travelers
452	0		Coordination of Mechanical System Attachments to the OBG and Tower Steel
465	0		Tower Aesthetic Lights attached to OBG, Crossbeam and Counterweight
468	0		Lighting Details No. 1, Deck Mounting Bracket Conflict
481	0		The Location and Elevation at Skyway for 2-1/2" CW and 4" CA
482	0		Pipe Offsets at Tower North Access
487	R0		Request for Under Bay Utility Infomation
488	0		Embed Plates at W2 Pier Cap
490	0		Barrier Diverter Plate Thickness
495	0		Pipe Support PS-18 at base of Pier W2E and W2W
511	0		Gap at Hinge A
530	0		Rolled Shapes material substitution for utility duct pipe sleeves
536	0		Elevator Options
538	0		Elevator Floor and Ceiling Materials
577	0		Elevator Landings, Safety Gates, and Enclosures
603	0		Pipe Support PS-13
605	1		Cable Railing Termination @ East and West ends of the Brdige
676	0		PS-22 Pipe Supports at OBG East End
681	0		Deck Drainage
710	0		Traveler Scaffold Mechanical Equipment Stop Order
738	0		Additional Pipe Support at W2 Cap Beam for 10 NPS Sewer Line
743	0		Pipe Sleeve Material Substitution
749	0		Anticipated Interferences for Pipe Support Embed Plates @ W2 Cap Beam
790	0		Cable Tray Transverse Beam Location
790	1		Cable Tray Transverse Beam Location
807	0		Barrier Flume Specifications
918	0		Elevator Buffer Support Detail
933	0		Oversized Bolt hole in steel barrier
933	1		Oversized Bolt hole in steel barrier
934	0		Alternate Fittings for Ductile Iron Pipe
954	0		Service Platform Angle Size Confirmation
993	0		No Cost or time impacts in the performance of our Work
1049	0		Traveler Suspension Connection
1050	0		Fixed Stair System for SAS Eastbound Travelers
1066	0		Traveler Details for Bikepath
1067	0		Access ladder Details for Bikepath Traveler
1091	0		P.E. stamp for traveler submittals
1091	1		Engineer's Stamp Requirment for Traveler Scaffold working/shop drawings.
1092	0		Cable rail interferences
1141	0		Pad eye interference with Mechanical piping
1160	0		PS-12 (anchor pipe support) clarification
1164	0		Pipe, fittings and valves welding quality control
1168	0		CCO 44 (Handrail Penetrations) in barrier at call boxes
1189	0		Tower Head Access Opening

Attachment B

(Mechanical RFIs)

1205	0		Paint Specification for Ductile Iron pipe
1249	0		Dehumidification Support Details for West Cable Anchorage
1404	0		Booster Pump and Expansion Tank Layout at 53m Platform
1404	1		Booster Pump and Expansion Tank Layout at 53m Platform
1404	2		Booster Pump and Expansion Tank Layout at 53m Platform
1404	3		Booster Pump and Expansion Tank Layout at 53m Platform
1414	0		Pipe Support Conflict at Bike Path PP121
1414	1		Pipe Support Conflict at Bike Path PP121
1417	1		Oversize Holes & Hole Spacing in OBG Deck Plates for Flumes
1426	0		Misc. Attachments for MEP Purpose
1433	0		Messenger Cable-eval by CABLE group
1439	0		conflicts between CCO 42S1 sheets and structural stiffener layout
1462	0		Existing Ground Cables at Pier E2
1471	0		East Cable Anchorage Dehumidification System Issue
1568	0		Suspension Cable

STATE OF CALIFORNIA - DEPARTMENT OF TRANSPORTATION

CONTRACT CHANGE ORDER MEMORANDUM

TO: Pete Siegenthaler, Prin. TE / Gary Pursell, P.E., Sup T.E.	FILE: E.A. 04 - 0120F4
FROM: Gary Pursell, P.E., Sup.T.E.	CO-RTE-PM SF-80-13.2/13.9
	FED. NO.

CCO#: 88	SUPPLEMENT#: 0	Category Code: FBAB	CONTINGENCY BALANCE (incl. this change) $124,402,270.40
COST: $437,000.00	INCREASE ☑	DECREASE ☐	HEADQUARTERS APPROVAL REQUIRED? ☐ YES ☑ NO
SUPPLEMENTAL FUNDS PROVIDED: $437,000.00			IS THIS REQUEST IN ACCORDANCE WITH ENVIRONMENTAL DOCUMENTS? ☑ YES ☐ NO

CCO DESCRIPTION:
Electrical Coordination

PROJECT DESCRIPTION:
CONSTRUCT SELF-ANCHORED SUSPENSION BRIDGE

Original Contract Time:	Time Adj. This Change:	Previously Approved CCO Time Adjustments:	Percentage Time Adjusted: (including this change)	Total # of Unreconciled Deferred Time CCO(s): (including this change)
2490 Day(s)	0 Day(s)	30 Day(s)	1 %	5

THIS CHANGE ORDER PROVIDES FOR:

Mitigating potential impacts to the project critical path caused by Mechanical, Electrical and Plumbing (MEP) conflicts in the specifications and plan sheets. Numerous Contractor submitted Requests for Information (RFI's), listed in change order attachment, have identified conflict issues needing immediate resolution so as not to disrupt the timely approval of MEP submittals. These Contractor generated RFI's are in response to deficiencies and conflicts in the contract documentation.

Additional Contractor and electrical subcontractor, Bleyco Incorporated, personnel will be utilized to identify conflicts, coordinate, and expedite conflict resolutions of MEP issues with the Department. This change order does not provide payments for contract scope changes related to the resolution of individual MEP issues. If required, contract scope changes resulting from the resolution of MEP issues will be addressed in other change orders.

This change order also fully resolves NOPC No. 1, which was filed on behalf of electrical subcontractor, Bleyco Incorporated.

This additional Contractor effort could not have been anticipated prior to contract bidding. Numerous RFI's have been generated by the Contractor in an effort to resolve issues in regards to conduit routing, conduit penetrations, electrical panels, light fixtures, seismic sensors, out-of-date specifications and technology, etc. Resolution of MEP issues is resulting in numerous revisions to the contract plans, shop drawings, and quantity take-offs which must be resolved in a timely manner so as not to impact the project critical path.

This additional work is not covered by any contract items. Therefore, payment for this work will be at Adjustment of Compensation at Lump Sum Price for the amount of $437,000.00, which can be financed from the contingency fund. A total of $1,614,000.00 in supplemental funds is allotted for "Electrical/Mechanical Coordination." This agreed lump sum constitutes full compensation, including all mark-ups, for all direct and indirect costs, all overhead expenses, and all associated project impacts. A detailed force account cost analysis is on file with the project records.

No time adjustment is warranted, as this change order does not affect the controlling operation. However, without this additional effort many of these RFI could become critical and potentially delay the project.

This change order was approved by Gary Pursell (Sup.TE) on 1/28/09.

ADA Notice: For individuals with sensory disabilities, this document is available in alternate formats. For information call: (916) 654-6410 or TDD (916) 654-3880 or write Records and Forms Management, 1120 N Street, MS-89, Sacramento, CA 95814.

CONCURRED BY:			
Construction Engineer:	Res. Eng., Gary Pursell, Sup. TE	Date	1/22/09
Bridge Engineer:	Struct Rep, Rick Morrow, Sup TE	Date	1/22/09
Project Engineer:		Date	
Project Manager:	Proj Manager, Ken Terpstra	Date	1/23/09
FHWA Rep.:		Date	
Environmental:		Date	
Other (specify):	PCE, Pete Siegenthaler, Prin TE	Date	1/23/09
Other (specify):		Date	
District Prior Approval By:		Date	
HQ (Issue Approve) By:		Date	
Resident Engineer's Signature:		Date	

Gary Pursell 1/28/09

ESTIMATE OF COST

	THIS REQUEST	TOTAL TO DATE
ITEMS	$0.00	$0.00
FORCE ACCOUNT	$0.00	$0.00
AGREED PRICE	$0.00	$0.00
ADJUSTMENT	$437,000.00	$437,000.00
TOTAL	$437,000.00	$437,000.00

FEDERAL PARTICIPATION

☐ PARTICIPATING ☐ PARTICIPATING IN PART ☑ NONE
☐ NON-PARTICIPATING (MAINTENANCE) ☐ NON-PARTICIPATING

FEDERAL SEGREGATION (if more than one Funding Source or P.I.P. type)
☐ CCO FUNDED PER CONTRACT ☐ CCO FUNDED AS FOLLOWS

FEDERAL FUNDING SOURCE	PERCENT

ADA Notice: For individuals with sensory disabilities, this document is available in alternate formats. For information call: (916) 654-6410 or TDD (916) 654-3880 or write Records and Forms Management, 1120 N Street, MS-89, Sacramento, CA 95814.

CONTRACT CHANGE ORDER

Change Requested by: Engineer

CCO: 89 Suppl. No. 0 Contract No. 04 – 0120F4 Road SF-80-13.2/13.9 FED. AID LOC.:

To: AMERICAN BRIDGE/FLUOR ENTERPRISES INC A JOINT VENTURE

You are directed to make the following changes from the plans and specifications or do the following described work not included in the plans and specifications for this contract. ***NOTE: This change order is not effective until approved by the Engineer.***

Description of work to be done, estimate of quantities and prices to be paid. (Segregate between additional work at contract price, agreed price and force account.) Unless otherwise stated, rates for rental of equipment cover only such time as equipment is actually used and no allowance will be made for idle time. This last percentage shown is the net accumulated increase or decrease from the original quantity in the Engineer's Estimate.

This change revises Special Provisions section 10-1.59, "Steel Structures," subsection "Shop Welding," subsection "Welding of Closed Ribs to Box Shell Plate."

Adjustment of Compensation at Lump Sum

Replace section 10-1.59, "Steel Structures," subsection "Shop Welding," subsection "Welding of Closed Ribs to Box Shell Plate," subsection "C. Monitoring of Production Welds," of the Special Provisions as follows:

C. Monitoring of Production Welds – During fabrication, conduct a weld monitoring test (WMT) for each operator and for each welding head to be used on each welding machine at the start of each work shift, or during the shift if the operator changes or the equipment is modified. Each test specimen shall consist of a continuous segment of a production panel sufficient to provide minimum test weld lengths of 500mm at the termination of the weld. Weld the rib to deck test segment with the same procedure as used in production panels including tack welds. Use Run-on and run-off tabs if used in the production panels. If multiple ribs are welded simultaneously in production, then weld the same number of ribs during the test, up to a maximum of three ribs, (six welds).

If a WMT does not meet the following acceptance criteria, the welding operator and equipment producing the failed WMT shall not fabricate panels until the cause of the deficiency has been determined, corrective action taken, and a passing WMT has been accepted by the Engineer. Deck panels fabricated, prior to evaluation of the WMT, will be rejected if the WMT fails to demonstrate the following:

1. Acceptance criteria for Visual Testing (VT) - Perform VT of 100% of each weld in accordance with AWS D1.5, The Special Provisions, and the acceptance criteria as follows:

   a. No Cracks
   b. Overlap $\leq$ 100mm in length.
   c. Undercut $\leq$ 0.25mm, except that undercut greater than 0.25mm but less than 1.0mm is acceptable for a maximum total length of 5mm in each weld.
   d. Undersized fillet reinforcement, up to 2mm undersized, less than 50mm total length in each weld, provided that a minimum of 80% weld penetration is provided locations of undersized reinforcement.
   e. Oversized fillet reinforcement resulting in up to 2mm over the maximum defined reinforcing fillet weld size.
   f. Incomplete fusion at the top of the weld in the welded position (weld toe at rib) for a maximum total length of 25mm in each weld.
   g. Surface porosity per AWS D1.5

   If a WMT is rejected due to failed VT, no further testing of the specimen is required.

2. Acceptance criteria for Ultrasonic Testing (UT) - Perform UT of 100% of each weld in accordance with the approved UT procedure. Each test weld must achieve a minimum joint penetration of 9.6mm, except that for a maximum of 5% of the weld length it is acceptable to achieve a minimum joint penetration of 8.4mm, provided that the effective weld size is at least 9.6mm. UT may begin prior to the completed weld cooling to ambient temperature. Air or Water cooling, (quenching), may be used to facilitate timely performance of UT. If a WMT is rejected due to failed UT, no further testing of the specimen is required.

3. Macro-Etch Testing - Provide five macro-etched samples from each u-rib as determined by the Engineer with samples taken 25 mm from each end of the test weld and at a tack weld, total three (3) on one weld; and two macro-etch samples selected from the other weld on the same rib. Macro-etch samples will be evaluated for lack of penetration and lack of fusion. Macro-etch samples will not to be used to re-evaluate weld profile criteria from VT. The following acceptance criteria apply to macro-etch testing:

    a. No Cracks.
    b. Joint Penetration $\geq$ 8.4 mm, provided the effective weld size is $\geq$ 9.6mm.
    c. No fusion type defect associated with a fusion boundary, i.e. fusions between weld and plate, between tack and root pass (GMAW), or between root pass (GMAW) and cover pass (SAW). No fusion type of discontinuity at the root of the weld may extend into the 9.6 mm depth of penetration.
    d. Inclusions $\leq$ 3mm unless associated with the fusion defects noted above.

Replace Section 10-1.59, "Steel Structures," Subsection "Shop Welding," Subsection "Welding of Closed Ribs to Box Shell Plate," subsection "D. Panel Production," with the following:

D. Panel Production – The dimensions of production panels of box shell plating shall be checked after welding. The welded panel, after straightening, if any, shall be flat within 5 mm in each 5 m length of box panels. Panels may be straightened using a written procedure that is in conformance to AWS D1.5 and is approved by the Engineer.

Ultrasonic technician shall be qualified using a mock-up weld with flaws that is approved by the Engineer.

If the flatness of more than one panel in five exceeds 6 in 1000 after welding, the Contractor shall propose a revised assembly procedure, such as a different amount of pre-bending, and shall demonstrate the revised method by welding a new panel in the presence of the Engineer.

Production panels shall be nondestructively tested at the rate specified in these special provisions except that ultrasonic testing of the first two production panels shall include 100% of the tack welds. Ultrasonic testing of tack weld areas shall continue until no more than one in ten tack welds are rejected, after which random ultrasonic testing shall proceed at the rate indicated in the table specified in these special provisions. In addition to random ultrasonic testing specified, ultrasonic testing shall be performed on 15% of all tack welds. Ultrasonic testing of the PJP weld shall be in accordance with a written procedure that is developed to measure the size of the incomplete joint penetration and approved by the Engineer. Approval of the UT procedure shall be contingent on a satisfactory comparison (+/- 0.2 mm) of the UT results with the measured incomplete joint penetration in the macrosections taken from the weld qualification trials. At a minimum, the UT procedure shall include reference blocks with notches that have depths of 90%, 80%, 70% and 60% of the rib thickness. For the 12 mm thick closed ribs, the notch depths are 1.3 mm (90%), 2.5 mm (80%), 3.8 mm (70%), and 5.0 mm (60%). The reference blocks shall be made available to the Engineer. The NDT reports for the UT testing of the PJP welds shall specify the length and magnitude of the incomplete joint penetration. Each of the Contractor's ultrasonic technicians shall be qualified using a mock-up weld with flaws that is approved by the Engineer.

The acceptance criteria for ultrasonic testing of rib to plate welds shall conform to the following:

1. Joint penetration $\geq$9.6mm except that, for no more than 5% of the length tested of each individual weld, joint penetration $\geq$ 8.4mm is permitted, provided the effective weld size is $\geq$ 9.6mm.
2. If more than 5% of the length tested of an individual weld has a joint penetration less than 9.6mm, UT 100% of that weld.
3. If 100% of the weld length is tested, then joint penetration $\geq$ 8.4mm is permitted for no more than 10% of the weld length, provided the effective weld size is $\geq$ 9.6mm.
4. The following shall be cause for repair:
    a. Any weld with less than a 70% Depth of Penetration (DOP)
    b. Any weld with more than 10% of the weld length that is between 70% and 80% DOP.

CONTRACT CHANGE ORDER

Change Requested by: Engineer

CCO: 89 **Suppl. No. 0** **Contract No. 04 – 0120F4** **Road** SF-80-13.2/13.9 **FED. AID LOC.:**

For production panels associated with a failing WMT, due to lack of penetration (LOP), perform UT on 30% of each weld including 100% of tack weld locations. Acceptance criteria for these panels are the same as indicated above for production panels.

Consideration of a time adjustment will be deferred until completion of the work specified herein. Determination of a commensurate time adjustment will be made in accordance with Section 10-1.13, "PROGRESS SCHEDULE (CRITICAL PATH METHOD)" and Section 10-1.14, "TIME-RELATED OVERHEAD" of the Special Provisions, as well as Section 8-1.07, "LIQUIDATED DAMAGES", of the Standard Specifications.

Cost of Adjustment of Compensation at Lump Sum $0.00

Estimated Cost: **Increase** ☐ **Decrease** ☐ **$0.00**

By reason of this order the time of completion will be adjusted as follows: DEF

Submitted by

Signature **Resident Engineer** for Gary Pursell, Sup.T.E. **Date** 11/3/08

Approval Recommended by

Signature **Supervising Bridge Engineer** Richard Morrow, Sup.B.E. **Date** 11/03/08

Engineer Approval by

Signature ~~**Principal Transportation Engineer**~~ RESIDENT ~~Peter Siegenthaler, Prin.T.E.~~ **Date** 2/5/09

We the undersigned contractor, have given careful consideration to the change proposed and agree, if this proposal is approved, that we will provide all equipment, furnish the materials, except as otherwise be noted above, and perform all services necessary for the work above specified, and will accept as full payment therefor the prices shown above.

NOTE: If you, the contractor, do not sign acceptance of this order, your attention is directed to the requirements of the specifications as to proceeding with the ordered work and filing a written protest within the time therein specified.

Contractor Acceptance by

Signature (Print name and title) Michael D. Flowers Project Director **Date** 2-4-09

STATE OF CALIFORNIA - DEPARTMENT OF TRANSPORTATION

CONTRACT CHANGE ORDER MEMORANDUM

TO: Mike Forner, Prin. TE / Gary Pursell, P.E., Sup T.E.	FILE: E.A. 04 - 0120F4
M: Gary Pursell, P.E., Sup.T.E.	CO-RTE-PM SF-80-13.2/13.9
	FED. NO.
CCO#: 89 SUPPLEMENT#: 0 Category Code: CHSA	CONTINGENCY BALANCE (incl. this change) $134,080,012.40
COST: $0.00 INCREASE ☐ DECREASE ☐	HEADQUARTERS APPROVAL REQUIRED? ☑ YES ☐ NO
SUPPLEMENTAL FUNDS PROVIDED: $0.00	IS THIS REQUEST IN ACCORDANCE WITH ENVIRONMENTAL DOCUMENTS? ☑ YES ☐ NO
CCO DESCRIPTION: Deck Panel Acceptance Criteria	**PROJECT DESCRIPTION:** CONSTRUCT SELF-ANCHORED SUSPENSION BRIDGE

Original Contract Time:	Time Adj. This Change:	Previously Approved CCO Time Adjustments:	Percentage Time Adjusted: (including this change)	Total # of Unreconciled Deferred Time CCO(s): (including this change)
2490 Day(s)	DEF Day(s)	30 Day(s)	1 %	2

THIS CHANGE ORDER PROVIDES FOR:

Revising Special Provisions section 10-1.59, "Steel Structures," subsection "Shop Welding," subsection "Welding of Closed Ribs to Box Shell Plate," subsection "C. Monitoring of Production Welds," and subsection "D. Panel Production."

The current Special Provisions account for weld quality, in part, by requiring that a test section of the U-rib weld be prepared at the beginning of each shift, referred to as a Weld Monitoring Tests (WMT). The WMT must show a "quality similar to those originally developed" (in the weld trials and mock ups). However, as welding operations began, the weld quality demonstrated during the weld trials, mockups, and early WMT's was found to be inconsistent, and it became evident the definition of "quality similar to those originally develop" was difficult to define, subjective, and impractical to apply as acceptance criteria to WMT's, and hence production panels.

This CCO modifies and clarifies weld acceptance criteria for both the WMT and production panels to provide clear and specific acceptance criteria, rather than referring to "quality originally developed." The clear and specific acceptance criteria provide positive assurance that the weld quality criteria contained in the contract documents is actually achieved in the completed U-rib panels.

Revisions to subsection "C. Monitoring of Production Welds" are included to clarify acceptance criteria for WMTs. This change indicates acceptance criteria for Visual Testing (VT), Ultrasonic Testing (UT) and Macro-etch sampling. These criteria will provide an objective basis for a passing or failing WMT, which currently is not adequately addressed in the specifications.

Revisions to subsection "D. Panel Production" are needed to provide more detailed ultrasonic testing acceptance criteria for deck panels. These additional requirements are included to be consistent with deck panel weld parameters and joint geometry tolerances requirements of the Special Provisions. Revisions also include provisions for performing ultrasonic testing on 15% of tack welds on production panels and acceptance criteria for production panels.

Adjustment of contract time is deferred pending completion of the work specified in this change as the work may impact the controlling operation.

Although there is agreement in concept with this no cost change order, a detailed cost analysis is in the project files, it is anticipated the Contractor will not sign the CCO because his fabricator wishes to reserve their rights. Absent the Contractor's signature, the CCO will be issued unilaterally since a clear and specific deck panel acceptance criteria is required in any event.

This change order received concurrences from Peter Siegenthaler (Principal Construction Engineer), Rick Morrow (Structure Representative), Ken Terpstra (Project Manager), Mike Forner (Principal Construction Engineer) and Jon Tapping (Division of Construction Coordinator), Marwan Nader (Design of Record, TYLin Moffett and Nichol), Design Oversight (Wenyi Long), and Jim Merrill (METS). Maintenance concurrence is not required for his change.

This CCO has received an Issue and Approve (I&A) with Deferred Time Adjustment from the Division of Construction on /08.

ADA Notice: For individuals with sensory disabilities, this document is available in alternate formats. For information call: (916) 654-6410 or TDD (916) 654-3880 or write Records and Forms Management, 1120 N Street, MS-89, Sacramento, CA 95814.

CONCURRED BY:			
Construction Engineer:	Res. Eng., Gary Pursell, Sup. TE	Date	9/19/08
Bridge Engineer:	Struct Rep, Rick Morrow, Sup TE	Date	9/19/08
Project Engineer:		Date	
Project Manager:	Proj Manager, Ken Terpstra	Date	9/19/08
FHWA Rep.:		Date	
Environmental:		Date	
Other (specify):	PCE, Pete Siegenthaler, Prin TE	Date	9/19/08
Other (specify):	Design of Record, Marwan Nader,	Date	9/19/08
District Prior Approval By:		Date	
HQ (Issue Approve) By:	HQ, Bob Molera	Date	11/3/08
Resident Engineer's Signature:	Gary Pursell	Date	11/7/08

ESTIMATE OF COST

	THIS REQUEST	TOTAL TO DATE
ITEMS	$0.00	$0.00
FORCE ACCOUNT	$0.00	$0.00
AGREED PRICE	$0.00	$0.00
ADJUSTMENT	$0.00	$0.00
TOTAL	$0.00	$0.00

FEDERAL PARTICIPATION

☐ PARTICIPATING ☐ PARTICIPATING IN PART ☑ NONE
☐ NON-PARTICIPATING (MAINTENANCE) ☐ NON-PARTICIPATING

FEDERAL SEGREGATION (if more than one Funding Source or P.I.P. type)
☐ CCO FUNDED PER CONTRACT ☐ CCO FUNDED AS FOLLOWS

FEDERAL FUNDING SOURCE	PERCENT

ADA Notice: For individuals with sensory disabilities, this document is available in alternate formats. For information call: (916) 654-6410 or TDD (916) 654-3880 or write Records and Forms Management, 1120 N Street, MS-89, Sacramento, CA 95814.

STATE OF CALIFORNIA - DEPARTMENT OF TRANSPORTATION

CONTRACT CHANGE ORDER

Change Requested by: Engineer

CCO: 89 Suppl. No. 1 Contract No. 04 – 0120F4 Road SF-80-13.2/13.9 FED. AID LOC.:

To: AMERICAN BRIDGE/FLUOR ENTERPRISES INC A JOINT VENTURE

You are directed to make the following changes from the plans and specifications or do the following described work not included in the plans and specifications for this contract. ***NOTE: This change order is not effective until approved by the Engineer.***

Description of work to be done, estimate of quantities and prices to be paid. (Segregate between additional work at contract price, agreed price and force account.) Unless otherwise stated, rates for rental of equipment cover only such time as equipment is actually used and no allowance will be made for idle time. This last percentage shown is the net accumulated increase or decrease from the original quantity in the Engineer's Estimate.

Adjustment of Compensation at Lump Sum Price:

Replace section 10-1.59, "Steel Structures," subsection "Shop Welding," subsection "Welding of Closed Ribs to Box Shell Plate," subsection "B. Weld Procedure Trials," item 6, of the Special Provisions as follows:

6. Tack welds shall be incorporated into the final weld and shall not result in hard spots; uneven transverse notches; cracks or tears; or excessive thickness that results in local weld thickness variations greater than 3 mm. However, defects identified at tack welds with NDT may be accepted provided the defect is remedied by excavating the weld to the minimum 80% depth of penetration (9.6mm) of the rib thickness, followed by repair of the weld with a repair welding method and procedure approved by the Engineer for the application.
   Hard spots shall be evaluated on the qualification test by Vickers hardness measurements taken at 2 mm centers in the tack weld heat affected zones of both base plate and rib on the tack weld macrosections specified above. Hardness testing of tack welds will be required for production monitoring tests if a macrosection appears to have a hard spot in the opinion of the Engineer. A hard spot shall be defined as a hardness value in the tack weld HAZ that exceeds 300HV.

For this work, the Contractor agrees to perform this work at no additional cost to the Department. This sum constitutes full compensation, including markups, for this change.

Consideration of a time adjustment will be deferred until completion of the work specified herein. Determination of a commensurate time adjustment will be made in accordance with Section 10-1.13, "PROGRESS SCHEDULE (CRITICAL PATH METHOD)" and Section 10-1.14, "TIME-RELATED OVERHEAD" of the Special Provisions, as well as Section 8-1.07, "LIQUIDATED DAMAGES", of the Standard Specifications.

Cost of Adjustment of Compensation at Lump Sum Price.....$0.00

Estimated Cost: Increase ☐ Decrease ☐ $0.00

By reason of this order the time of completion will be adjusted as follows: DEFERRED

Submitted by

Signature Gary Pursell **Resident Engineer** Gary Pursell, Sup.T.E. **Date** 12/3/08

Approval Recommended by

Signature [signature] **Supervising Bridge Engineer** Richard Morrow, Sup.T.E. **Date** 12/3/08

Engineer Approval by

Signature Gary Pursell **Supervising Transportation Engineer** for Peter Siegenthaler, Prin.T.E. **Date** 7/17/09

We the undersigned contractor, have given careful consideration to the change proposed and agree, if this proposal is approved, that we will provide all equipment, furnish the materials, except as otherwise be noted above, and perform all services necessary for the work above specified, and will accept as full payment therefor the prices shown above.

NOTE: If you, the contractor, do not sign acceptance of this order, your attention is directed to the requirements of the specifications as to proceeding with the ordered work and filing a written protest within the time therein specified.

Contractor Acceptance by

Signature (Print name and title) **Date**

STATE OF CALIFORNIA - DEPARTMENT OF TRANSPORTATION

CONTRACT CHANGE ORDER MEMORANDUM

TO: Pete Siegenthaler, Prin. TE / Gary Pursell, P.E., Sup T.E.

FROM: Gary Pursell, Sup.TE

FILE: E.A. 04 - 0120F4
CO-RTE-PM: SF-80-13.2/13.9
FED. NO.

CCO#: 89 SUPPLEMENT#: 1 Category Code: CHSA

COST: $0.00 INCREASE ☐ DECREASE ☐

SUPPLEMENTAL FUNDS PROVIDED: $0.00

CONTINGENCY BALANCE (incl. this change) $124,478,077.40

HEADQUARTERS APPROVAL REQUIRED? ☑ YES ☐ NO

IS THIS REQUEST IN ACCORDANCE WITH ENVIRONMENTAL DOCUMENTS? ☑ YES ☐ NO

CCO DESCRIPTION:
Tack Weld Repair

PROJECT DESCRIPTION:
CONSTRUCT SELF-ANCHORED SUSPENSION BRIDGE

Original Contract Time:	Time Adj. This Change:	Previously Approved CCO Time Adjustments:	Percentage Time Adjusted: (including this change)	Total # of Unreconciled Deferred Time CCO(s): (including this change)
2490 Day(s)	DEF Day(s)	30 Day(s)	1 %	5

THIS CHANGE ORDER PROVIDES FOR:

Providing repair criteria for U-rib to deck panel tack welds by replacing section 10-1.59, "Steel Structures," subsection "Shop Welding," subsection "Welding of Closed Ribs to Box Shell Plate," subsection "B. Weld Procedure Trials," Item 6 of the Special Provisions.

Non-destructive testing (NDT) indicates some tack welds, which connects the U-rib to the deck panel, develop cracks prior to being incorporated into the final weld. Additional NDT testing of the final weld revealed some tack weld cracks were not being re-melded during production welding. This condition does not meet the requirements of the Special Provisions and must be remedied. An investigation to remedy this condition was performed by the Department and a number of welding specialists, a fatigue and fracture analysis engineer and the project's Seismic Safety Peer Review Panel (SSPRP). The investigation determined that tack weld cracking is not detrimental provided an approved repair procedure achieves the design required 80 inimum weld penetration depth without defects.

Documentation in support of the above recommended acceptance criteria is in the project records.

The Contractor agrees to perform this work at no additional cost to the Department. A detailed cost estimate is in the project records. Cumulative total CCO 89 S0 and this supplement is $0.00.

Adjustment of contract time is deferred pending completion of the work specified in this change as the work may impact the controlling operation.

This change order received concurrences from Brian Maroney (Deputy Toll Program Manager) Peter Siegenthaler (Principal Construction Engineer), Richard Morrow (Structure Rep), Ken Terpstra (Project Manager), and Jon Tapping (Division of Construction Coordinator). Concurrences have also been obtained from Marwan Nader (Design Engineer, TYLin Moffett and Nichol), and Jim Merrill (METS). Maintenance concurrence is not required for his change.

The Resident Engineer received an Issue and Approve (I&A) from the Division of Construction for this change on 1/23/2009 (copy attached).

This change order was approved by the Engineer and processed unilaterally after it was returned unsigned by the Contractor. See attached Department letter dated 7/17/2009 for reference.

ADA Notice: For individuals with sensory disabilities, this document is available in alternate formats. For information call: (916) 654-6410 or TDD (916) 654-3880 or write Records and Forms Management, 1120 N Street, MS-89, Sacramento, CA 95814.

CONCURRED BY:			
Construction Engineer:	Res. Eng., Gary Pursell, Sup. TE	Date	11/7/08
Bridge Engineer:	Struct Rep, Rick Morrow, Sup TE	Date	11/7/08
Project Engineer:	Proj. Eng., Brian Maroney	Date	11/17/08
Project Manager:	Proj Manager, Ken Terpstra	Date	11/7/08
FHWA Rep.:	(METS) Jim Merrill	Date	11/7/08
Environmental:		Date	
Other (specify):	PCE, Pete Siegenthaler, Prin TE	Date	11/7/08
Other (specify):	HQ, Patrick Treacy	Date	11/7/08
District Prior Approval By:		Date	
HQ (Issue Approve) By:	HQ Bob Molera	Date	1/23/09
Resident Engineer's Signature:	Gary Pursell	Date	7/20/09

ESTIMATE OF COST		
	THIS REQUEST	TOTAL TO DATE
ITEMS	$0.00	$0.00
FORCE ACCOUNT	$0.00	$0.00
AGREED PRICE	$0.00	$0.00
ADJUSTMENT	$0.00	$0.00
TOTAL	$0.00	$0.00

FEDERAL PARTICIPATION

☐ PARTICIPATING ☐ PARTICIPATING IN PART ☑ NONE
☐ NON-PARTICIPATING (MAINTENANCE) ☐ NON-PARTICIPATING

FEDERAL SEGREGATION (if more than one Funding Source or P.I.P. type)
☐ CCO FUNDED PER CONTRACT ☐ CCO FUNDED AS FOLLOWS

FEDERAL FUNDING SOURCE PERCENT

ADA Notice: For individuals with sensory disabilities, this document is available in alternate formats. For information call: (916) 654-6410 or TDD (916) 654-3880 or write Records and Forms Management, 1120 N Street, MS-89, Sacramento, CA 95814.

STATE OF CALIFORNIA - DEPARTMENT OF TRANSPORTATION

CONTRACT CHANGE ORDER

Change Requested by: Engineer

CCO: 89 **Suppl. No. 2** **Contract No. 04 – 0120F4** **Road** SF-80-13.2/13.9 **FED. AID LOC.:**

To: **AMERICAN BRIDGE/FLUOR ENTERPRISES INC A JOINT VENTURE**

You are directed to make the following changes from the plans and specifications or do the following described work not included in the plans and specifications for this contract. ***NOTE: This change order is not effective until approved by the Engineer.***

Description of work to be done, estimate of quantities and prices to be paid. (Segregate between additional work at contract price, agreed price and force account.) Unless otherwise stated, rates for rental of equipment cover only such time as equipment is actually used and no allowance will be made for idle time. This last percentage shown is the net accumulated increase or decrease from the original quantity in the Engineer's Estimate.

Adjustment of Compensation at Lump Sum Price:

This change order shall close the deferred time element of change orders 89S0 and 89S1 excluding Orthotropic Box Girder (OBG) Lifts 12-14. Contract time is addressed in CCO 108S1 for the deferred time adjustments for change orders 89S0 and 89S1.

Adjustment of Compensation at Lump Sum.....$0

Estimated Cost: Increase ☐ Decrease ☐ $0.00

By reason of this order the time of completion will be adjusted as follows: 0 Days

Submitted by

Signature	**Resident Engineer** Kannu Balan, Senior T.E.	**Date**	8/3/10

Approval Recommended by

Signature	**Supervising Bridge Engineer** Richard Morrow, Sup. T.E.	**Date**	8/3/10

Engineer Approval by

Signature	**Supervising Transportation Engineer** for Gary Pursell, Sup. T.E.	**Date**	8/9/10

We the undersigned contractor, have given careful consideration to the change proposed and agree, if this proposal is approved, that we will provide all equipment, furnish the materials, except as otherwise be noted above, and perform all services necessary for the work above specified, and will accept as full payment therefor the prices shown above.

NOTE: If you, the contractor, do not sign acceptance of this order, your attention is directed to the requirements of the specifications as to proceeding with the ordered work and filing a written protest within the time therein specified.

Contractor Acceptance by

Signature	(Print name and title) Michael D. Flowers Project Director	**Date**	8.5.10

STATE OF CALIFORNIA - DEPARTMENT OF TRANSPORTATION

CONTRACT CHANGE ORDER MEMORANDUM

DATE: 7/27/2010 Page 1 of 1

TO: Pete Siegenthaler, Prin TE /	FILE: E.A. 04 - 0120F4
FROM: Gary Pursell, Sup. TE	CO-RTE-PM SF-80-13.2/13.9
	FED. NO.
CCO#: 89 SUPPLEMENT#: 2 Category Code: CHSA	CONTINGENCY BALANCE (incl. this change) $49,589,680.40
COST: $0.00 INCREASE ☐ DECREASE ☐	HEADQUARTERS APPROVAL REQUIRED? ☐ YES ☑ NO
SUPPLEMENTAL FUNDS PROVIDED: $0.00	IS THIS REQUEST IN ACCORDANCE WITH ENVIRONMENTAL DOCUMENTS? ☑ YES ☐ NO
CCO DESCRIPTION: Deck Panel and Tack Weld Days	**PROJECT DESCRIPTION:** CONSTRUCT SELF-ANCHORED SUSPENSION BRIDGE

Original Contract Time:	Time Adj. This Change:	Previously Approved CCO Time Adjustments:	Percentage Time Adjusted: (including this change)	Total # of Unreconciled Deferred Time CCO(s): (including this change)
2490 Day(s)	0 Day(s)	227 Day(s)	9 %	6

THIS CHANGE ORDER PROVIDES FOR:

Closing out the Deferred Time element for CCO 89S0 and 89S1.

The time adjustments were addressed in Contract Change Order 108 Supplement 1 (CCO 108S1) Claim Settlement Report No. 1.

This change order received concurrence from Gary Pursell (Resident Engineer), Rick Morrow (Sup. Structure Rep), Peter Siegenthaler (Principal TE), Rich Foley (HQ Oversight), and Ken Terpstra (Project Manager). Design and Maintenance concurrence are not required.

CONCURRED BY:		
Construction Engineer:	Res. Eng., Gary Pursell, Sup. TE	Date 7/29/10
Bridge Engineer:	Struct Rep, Rick Morrow, Sup TE	Date 7/29/10
Project Engineer:		Date
Project Manager:	Proj Manager, Ken Terpstra	Date 7/27/10
FHWA Rep.:		Date
Environmental:		Date
Other (specify):	PCE, Pete Siegenthaler, Prin TE	Date 7/27/10
Other (specify):	HQ, Rich Foley	Date 7/27/10
District Prior Approval By:		Date
HQ (Issue Approve) By:		Date
Resident Engineer's Signature:	for G Pursell	Date 7/29/10

ESTIMATE OF COST	THIS REQUEST	TOTAL TO DATE
ITEMS	$0.00	$0.00
FORCE ACCOUNT	$0.00	$0.00
AGREED PRICE	$0.00	$0.00
ADJUSTMENT	$0.00	$0.00
TOTAL	$0.00	$0.00

FEDERAL PARTICIPATION

☐ PARTICIPATING ☐ PARTICIPATING IN PART ☑ NONE
☐ NON-PARTICIPATING (MAINTENANCE) ☐ NON-PARTICIPATING

FEDERAL SEGREGATION (if more than one Funding Source or P.I.P. type)
☐ CCO FUNDED PER CONTRACT ☐ CCO FUNDED AS FOLLOWS

FEDERAL FUNDING SOURCE	PERCENT

ADA Notice: For individuals with sensory disabilities, this document is available in alternate formats. For information call: (916) 654-6410 or TDD (916) 654-3880 or write Records and Forms Management, 1120 N Street, MS-89, Sacramento, CA 95814.

STATE OF CALIFORNIA - DEPARTMENT OF TRANSPORTATION

CONTRACT CHANGE ORDER

Change Requested by: Engineer

CCO: 89 **Suppl. No. 3** **Contract No. 04 – 0120F4** **Road** SF-80-13.2/13.9 **FED. AID LOC.:**

To: **AMERICAN BRIDGE/FLUOR ENTERPRISES INC A JOINT VENTURE**

You are directed to make the following changes from the plans and specifications or do the following described work not included in the plans and specifications for this contract. ***NOTE: This change order is not effective until approved by the Engineer.***

Description of work to be done, estimate of quantities and prices to be paid. (Segregate between additional work at contract price, agreed price and force account.) Unless otherwise stated, rates for rental of equipment cover only such time as equipment is actually used and no allowance will be made for idle time. This last percentage shown is the net accumulated increase or decrease from the original quantity in the Engineer's Estimate.

Adjustment of Compensation at Lump Sum:

Repair tack welds of closed u-ribs to the box shell plates on Orthotropic Box Girder Lifts 12 through 14 as specified in CCO 89S1.

For this work, the Contractor will receive a lump sum price of $573,955.00. This sum constitutes full and complete compensation for furnishing all labor, material, tools and incidentals including all markups by reason of this change.

Adjustment of Compensation at Lump Sum..... $573,955.00

This Change order (CCO) closes all issues related to unilaterally issued CCO 89S1.

Estimated Cost: Increase ☒ **Decrease** ☐ **$573,955.00**

By reason of this order the time of completion will be adjusted as follows: 0 Days

Submitted by

Signature **Resident Engineer** Kannu Balan, Senior T.E. **Date** 1-10-12

Approval Recommended by

Signature **Supervising Transportation Engineer** William Casey, Sup. T.E. **Date** 1-11-12

Engineer Approval by

Signature **Supervising Transportation Engineer** William Casey, Sup. T.E. **Date** 1-18-12

We the undersigned contractor, have given careful consideration to the change proposed and agree, if this proposal is approved, that we will provide all equipment, furnish the materials, except as otherwise be noted above, and perform all services necessary for the work above specified, and will accept as full payment therefor the prices shown above.

NOTE: If you, the contractor, do not sign acceptance of this order, your attention is directed to the requirements of the specifications as to proceeding with the ordered work and filing a written protest within the time therein specified.

Contractor Acceptance by

Signature (Print name and title) BRIAN A. PETERSEN - PROJECT DIRECTOR **Date** 16 JAN 12

STATE OF CALIFORNIA - DEPARTMENT OF TRANSPORTATION

CONTRACT CHANGE ORDER MEMORANDUM

TO: Tony Anziano, Program Manager /	FILE: **E.A.** 04 - 0120F4
	CO-RTE-PM SF-80-13.2/13.9
FROM: Kannu Balan, Senior TE	**FED. NO.**
CCO#: **89** SUPPLEMENT#: **3** Category Code: **CHSA**	CONTINGENCY BALANCE (incl. this change) **$144,078,823.58**
COST: **$573,955.00** INCREASE ☑ DECREASE ☐	HEADQUARTERS APPROVAL REQUIRED? ☑ YES ☐ NO
SUPPLEMENTAL FUNDS PROVIDED: **$0.00**	IS THIS REQUEST IN ACCORDANCE WITH ENVIRONMENTAL DOCUMENTS? ☑ YES ☐ NO
CCO DESCRIPTION: Tack Weld Repair OBG Lifts 12-14	**PROJECT DESCRIPTION:** CONSTRUCT SELF-ANCHORED SUSPENSION BRIDGE

Original Contract Time:	Time Adj. This Change:	Previously Approved CCO Time Adjustments:	Percentage Time Adjusted: (including this change)	Total # of Unreconciled Deferred Time CCO(s): (including this change)
2490 Day(s)	**0** Day(s)	**501** Day(s)	**20** %	**3**

THIS CHANGE ORDER PROVIDES FOR:

Repairing tack welds of closed u-ribs to the box shell plates on Orthotropic Box Girder (OBG) Lifts 12 through 14 as specified in CCO 89S1.

Non-destructive testing (NDT) indicated some tack welds that connect the U-rib to the deck panel developed cracks prior to being incorporated into the final weld. Due to the fatigue sensitive issues with these completed welds, the Department solicited several expert recommendations and a thorough investigation was performed. This investigation involved a number of welding specialists, the performance of a fatigue and fracture mechanics analysis, and the consultation of the SFOBB Seismic Safety Peer Review Panel (SSPRP). Based on the results of this investigation along with the expert recommendations including that of the SSPRP, the Department determined that cracks remaining in the root of the tack weld would not be detrimental provided an approved testing and repair procedure achieved an acceptable 80% minimum weld penetration depth and the deposited weld has no defects beyond the root of the tack weld. CCO 89S1 revised Special Provisions Section 10-1.59 "Steel Structures" to accept properly repaired tack welds. The non-destructive testing (NDT) methods for determining the condition of the tack welds were specifically developed for and utilized throughout the project. The NDT methods included the use of Phase Array Ultrasonic Testing (PAUT), Gate-to-Gate Ultrasonic testing and conventional Ultrasonic Testing (UT). CCO 91 provided compensation for the performance of the additional NDT while CCO 108 S1 provided compensation for the deck panel tack weld repairs for OBG Lifts 1-11 resulting from the additional NDT. CCO 89 S3 will provide compensation for the deck panel tack weld repairs for OBG Lifts 12-14.

Originally, the Department issued CCO 89 S1 as a no cost/no credit change order which was processed unilaterally and protested by the Contractor. However, through subsequent negotiations and preparation of a Claims Settlement Report, merit was established with compensation for OBG Lifts 1-11 provided for in CCO 108 S1 as stated above. This supplemental CCO builds on that determination in providing compensation for OBG Lifts 12-14. It is also noted that compensation for this work was not included in CCO 160.

Risk Item #109 "CCO #89 Revised Acceptance Criteria for Welding" has been carried in the Risk Register. The cost of this change is within the ranges carried in the Register.

The total cost of this change order is $573,955.00, which can be financed from the contingency fund. A detailed cost analysis is on file. The cumulative total of CCO 89S0, 89S1, 89S2, and 89S3 is $573,955.00.

No time adjustment is warranted as this change order does not affect the controlling operation.

This change order has concurrence from William Casey (Supervising TE), Ken Terpstra (Proj. Manager), Rich Foley (HQ Oversight), Wenyi Long (Bridge Design), Lina Ellis (Maintenance), and Jing Chen (District Design).

ADA Notice: For individuals with sensory disabilities, this document is available in alternate formats. For information call: (916) 654-6410 or TDD (916) 654-3880 or write Records and Forms Management, 1120 N Street, MS-89, Sacramento, CA 95814.

CONTRACT CHANGE ORDER MEMORANDUM

CONCURRED BY:			
Construction Engineer:	William Casey, Sup TE	Date	1/9/12
Bridge Engineer:	CT Oversight, Wenyi Long, P.E.	Date	11/4/11
Project Engineer:	District Design, Jing Chen	Date	11/4/11
Project Manager:	Proj Manager, Ken Terpstra	Date	1/9/12
FHWA Rep.:		Date	
Environmental:		Date	
Other (specify):	HQ, Rich Foley	Date	1/9/12
Other (specify):	Struct. Maint, Lina Ellis	Date	11/4/11
District Prior Approval By:		Date	
HQ (Issue, Approve) By:		Date	
Resident Engineer's Signature:		Date	1-9-12

ESTIMATE OF COST

	THIS REQUEST	TOTAL TO DATE
ITEMS	$0.00	$0.00
FORCE ACCOUNT	$0.00	$0.00
AGREED PRICE	$0.00	$0.00
ADJUSTMENT	$573,955.00	$573,955.00
TOTAL	$573,955.00	$573,955.00

FEDERAL PARTICIPATION

☐ PARTICIPATING ☐ PARTICIPATING IN PART ☑ NONE
☐ NON-PARTICIPATING (MAINTENANCE) ☐ NON-PARTICIPATING

FEDERAL SEGREGATION (if more than one Funding Source or P.I.P. type)
☐ CCO FUNDED PER CONTRACT ☐ CCO FUNDED AS FOLLOWS

FEDERAL FUNDING SOURCE	PERCENT

ADA Notice: For individuals with sensory disabilities, this document is available in alternate formats. For information call: (916) 654-6410 or TDD (916) 654-3880 or write Records and Forms Management, 1120 N Street, MS-89, Sacramento, CA 95814.

STATE OF CALIFORNIA - DEPARTMENT OF TRANSPORTATION

CONTRACT CHANGE ORDER

Change Requested by: Engineer

CCO: 90 **Suppl. No. 0** **Contract No. 04 – 0120F4** **Road** SF-80-13.2/13.9 **FED. AID LOC.:**

To: **AMERICAN BRIDGE/FLUOR ENTERPRISES INC A JOINT VENTURE**

You are directed to make the following changes from the plans and specifications or do the following described work not included in the plans and specifications for this contract. ***NOTE: This change order is not effective until approved by the Engineer.***

Description of work to be done, estimate of quantities and prices to be paid. (Segregate between additional work at contract price, agreed price and force account.) Unless otherwise stated, rates for rental of equipment cover only such time as equipment is actually used and no allowance will be made for idle time. This last percentage shown is the net accumulated increase or decrease from the original quantity in the Engineer's Estimate.

Adjustment of Compensation at Lump Sum:

In Special Provisions Section 10-1.59, "STEEL STRUCTURES," subsection "WEIGHT CONTROL," revise the fourth paragraph as follows:

Weight reports shall be submitted using a format described in the approved weight control procedure. These reports shall include the weight of all installed components including utilities, platform barriers, counter weight and roadway wearing surfaces including the range of uncertainty in the estimated final weight. For Lifts 1 through 12 of the OBG t~~T~~he design weights used in the Contractor's erection analysis shall consist of the nominal weights taken off the fabrication drawings increased by 3%. For Lifts 13 and 14 of the OBG the weights shall be calculated from the contract plans, including known changes at the time that the calculations are prepared, increased by 3%. Upon completion of the fabrication drawings for Lifts 13 and 14 of the OBG, the Contractor shall calculate the final weights off the fabrication drawings and submit the final weights to the Engineer. An erection analysis using the final fabrication weights of Lifts 13 and 14 is not required.

Any additional work or changes that result from variations between the design weights and final weights calculated off the fabrication drawings for Lifts 13 and 14 of the OBG will be addressed in a Supplemental Contract Change Order by the Engineer.

There shall be no change in cost to the Department by reason of this Change Order.

Estimated Cost: **Increase** ☐ **Decrease** ☐ **$0.00**

By reason of this order the time of completion will be adjusted as follows: **0 Days**

Submitted by

Signature R Boal **Resident Engineer** Brian Boal, Actg. Sup. B.E. **Date** 19 Aug 2010

Approval Recommended by

Signature Gary Pursell **Supervising Bridge Engineer** Richard Morrow, Sup. B.E. **Date** 8/19/10

Engineer Approval by

Signature Gary Pursell **Supervising Transportation Engineer** Gary Pursell, Sup. T.E. **Date** 8/24/10

We the undersigned contractor, have given careful consideration to the change proposed and agree, if this proposal is approved, that we will provide all equipment, furnish the materials, except as otherwise be noted above, and perform all services necessary for the work above specified, and will accept as full payment therefor the prices shown above.

NOTE: If you, the contractor, do not sign acceptance of this order, your attention is directed to the requirements of the specifications as to proceeding with the ordered work and filing a written protest within the time therein specified.

Contractor Acceptance by

Signature Michael D. Flowers **(Print name and title)** Michael D. Flowers **Date** 8.23.10

Project Director